NOTICE OF REGULAR COUNCIL MEETING

In accordance with § 38-431.02 of the Arizona Revised Statutes of the State of Arizona, notice is hereby given to the Members of City Council and to the general public that the Mayor and Council of the City of San Luis, Arizona will hold a Regular City Council meeting at 6:00 p.m., Wednesday, June 10, 2026. The meeting will take place at the City Council Chambers, located at 1090 E. Union Street, San Luis, Arizona, 85349. The public is invited to attend the open meeting.

In accordance with the Americans with Disabilities Act (ADA) and Section 504 of the Rehabilitation Act of 1973, the City of San Luis does not discriminate on the basis of disability in the admission of or access to, or treatment or employment in its programs, activities, or services. For information regarding rights and provisions of the ADA or Section 504, or to request reasonable accommodations for participation in City programs, activities, or services contact: ADA/Section 504 Coordinator, City of San Luis Human Resources Department, 1090 E. Union Street, San Luis, Arizona, 85349; (928) 341-8520.

Notice is hereby given that pursuant to A.R.S. § 1-602.A.9, subject to certain specified statutory exceptions, parents have a right to consent before the State or any of its political subdivisions make a video or audio recording of a minor child. Meetings of the City Council are audio and/or video recorded, and, as a result, proceedings in which children are present may be subject to such recordings. Parents in order to exercise their rights may either file written consent with the City Clerk to such recordings or take personal action to ensure that their child or children are not present when a recording may be made. If a child is present at the time a recording is made, the City will assume that the rights afforded parents pursuant to A.R.S. § 1-602.A.9 have been waived.

THIS NOTICE IS GIVEN BY:

/s/ Sonia Cornelio, City Clerk

AVISO DE JUNTA REGULAR

De acuerdo con los Estatutos del Estado de Arizona A.R.S. § 38-431.02, se le informa a los miembros del Cabildo y al público en general que el Alcalde y el Cabildo, tendrán una Junta Regular a las 6:00 p.m., el día Miercoles, 10 de Junio del 2026. La junta se llevará a cabo en la Sala del Cabildo, ubicada en el 1090 E. Union Street, San Luis, Arizona, 85349. El público está invitado a la junta.

De acuerdo con el Acta de Americanos con Discapacidades y la Sección 504 del Acta de Rehabilitación del 1973, la Ciudad de San Luis, Arizona no discrimina por causa de discapacidad la admisión y acceso a sus programas, actividades, servicios o en el trato en cuanto a empleo. Para más información referente a derechos y provisiones del Acta de Americanos con Discapacidades o Sección 504, o para solicitar adaptaciones que sean razonables para la participación en programas, actividades o servicios de la Ciudad, contactar al: Coordinador del Acta de Americanos con Discapacidades/Sección 504, Departamento de Recursos Humanos de la Ciudad de San Luis, Arizona, ubicado en el 1090 E. Union Street, San Luis, Arizona, 85349; (928) 341-8520.

Por medio de este aviso y de acuerdo con los Estatutos del Estado de Arizona A.R.S § 1-602.A.9, sujeto a ciertas excepciones reglamentarias, los padres de familia tienen el derecho de dar el consentimiento ante el Estado o cualquiera de sus subdivisiones políticas para hacer una grabación de audio o video de su hijo menor de edad. Las juntas del Cabildo se graban en audio y/o video y como resultado, el hecho de que haya menores presentes puede ser sujeto a que sean grabados. Para que los padres de familia puedan ejercer sus derechos pueden dar el consentimiento por escrito con la Secretaria de la Ciudad a tal grabación, o tomar acción personal para asegurarse que su hijo menor no esté presente cuando la grabación se lleve a cabo. Si un menor de edad está presente en el momento de la grabación, la Ciudad asumirá que los padres de familia están cediendo los derechos sobre una posible grabación de acuerdo con los Estatutos del Estado de Arizona A.R.S. § 1-602.A.9.

ESTE AVISO ES DADO POR:

/f/ Sonia Cornelio, Actuaria de la Ciudad

AMENDED AGENDA 6/8/2026
REMOVED PREVIOUSLY ITEM NO. 9 AND
RE-NUMBERED ACCORDINGLY

AGENDA
Regular Meeting
San Luis City Council
Council Chambers
1090 E. Union Street
San Luis, AZ 85349
June 10, 2026
6:00 p.m.

PLEASE TAKE NOTICE THAT MEMBERS OF THE CITY COUNCIL WILL ATTEND EITHER IN PERSON, TELEPHONE, OR VIDEO CONFERENCE COMMUNICATION. THE MAYOR OR ACTING MAYOR FOR THIS MEETING MAY CHANGE THE ORDER OF THE ITEMS; IF AUTHORIZED BY LAW AND BY A MAJORITY VOTE OF A QUORUM OF CITY COUNCIL MEMBERS PRESENT, AN EXECUTIVE SESSION WILL BE HELD IMMEDIATELY FOLLOWING THE VOTE IN ACCORDANCE WITH A.R.S. § 38-431.03(A) AND THE MEETING WILL BE TEMPORARILY RECESSED WHILE THE CITY COUNCIL RETIRES TO EXECUTIVE SESSION WHICH WILL NOT BE OPEN TO THE PUBLIC.

TENGA EN CUENTA QUE LOS MIEMBROS DEL CABILDO DE LA CIUDAD ASISTIRÁN EN PERSONA, TELÉFONO O COMUNICACIÓN POR VIDEO CONFERENCIA. LA ALCALDESA O ALCALDE INTERINO DE ESTA REUNIÓN PUEDE CAMBIAR EL ORDEN DE LOS TEMAS; SI ESTÁ AUTORIZADO POR LA LEY Y POR MAYORÍA DE VOTOS DE UN QUÓRUM DE MIEMBROS DEL CABILDO PRESENTES, SE LLEVARÁ A CABO UNA SESIÓN EJECUTIVA INMEDIATAMENTE DESPUÉS DE LA VOTACIÓN DE ACUERDO CON LOS ESTATUTOS DEL ESTADO DE ARIZONA A.R.S. § 38-431.03 (A) Y LA REUNIÓN SERÁ TEMPORALMENTE RECESADA MIENTRAS EL CABILDO DE LA CIUDAD SE RETIRE A UNA SESIÓN EJECUTIVA QUE NO ESTARÁ ABIERTA AL PÚBLICO.

1. CALL TO ORDER/ROLL CALL

2. PLEDGE OF ALLEGIANCE

3. INVOCATION

Any opening invocation that is offered before the official start of the Council meeting shall be the voluntary offering of a private person, to and for the benefit of the Council. The views or beliefs expressed by the invocation speaker have not been previously reviewed or approved by the City Council or the city staff. The city is not allowed by law to endorse the religious or non-religious beliefs or views of such speakers. Any invitation to stand during the Pledge of Allegiance or invocation shall not be construed as a demand, order, or any other type of command. No person in attendance at the meeting shall be required to participate in any Pledge of Allegiance or an opening invocation that is offered.

Toda invocación inicial que se ofrezca antes del inicio oficial de la sesión del Cabildo será una ofrenda voluntaria de una persona particular, para beneficio del Cabildo. Las opiniones o creencias expresadas por quien haga la invocación no han sido revisadas ni aprobadas previamente por el Cabildo ni por el personal de la ciudad. La ley no permite a la ciudad respaldar las creencias o puntos de vista religiosos o no religiosos de dichos oradores. Cualquier invitación a ponerse de pie durante el Juramento a la Bandera o la invocación no se interpretará como una exigencia, orden ni ningún otro tipo de mandato. Ninguna persona presente en la sesión estará obligada a participar en el Juramento a la Bandera ni en ninguna invocación inicial que se ofrezca.

4. **CALL TO THE PUBLIC**

This is the time for the public to comment. Under A.R.S. § 38-431.01(I), Members of the City Council shall not discuss or take legal action on matters raised during an open call to the public that are not properly noticed on this agenda for discussion and legal action. At the conclusion of an open call to the public, individual Members of the City Council may respond to criticism made by those who have addressed the City Council, may ask staff to review a matter, or may ask that a matter be put on a future agenda.

5. **PROCLAMATIONS**

5. A. Proclamation on Waste and Recycling Workers Week June 15-20, 2026

5. B. Proclamation on Juneteenth Day - June 19, 2026

6. **CONSENT AGENDA**

All matters are considered to be routine by the City Council and will be enacted by one motion. If discussion is desired, that item will be removed from the Consent Agenda and will be considered separately.

6. A. **MINUTES OF**

- Regular Council meeting held May 13, 2026

6. B. **DISBURSEMENTS**

From May 20, 2026 to June 03, 2026

Total $2,465,679.94 (Two Million, Four Hundred Sixty-Five Thousand, Six Hundred Seventy-Nine Dollars and Ninety-Four Cents)

7. **DISCUSSION AND POSSIBLE ACTION ITEMS:**

7. A. Discussion and possible action on any and all matters regarding the Fiscal Year 2026-2027 for the 4FrontED annual contribution. **(Jenny Torres, City Manager)**

7. B. Discussion and possible action on any and all matters regarding the award of a construction contract to Filanc Construction Company, Inc. for the West Wastewater Treatment Plant Expansion project. **(Eulogio Vera, Director of Public Works)**

7. C. Discussion and possible action on any and all matters regarding the electrical distribution and streetlight services from Arizona Public Service (APS) for the Sidewinder Road Streetlight Project - Project No. 2026051. **(Manuel Hernandez, Assistant Director of Public Works)**

7. D. Discussion and possible action on any and all matters regarding the City of San Luis Public Works Yard Entrance - Parking Lot Paving. **(Manuel Hernandez, Assistant Director of Public Works)**

7. E. Discussion and possible action on any and all matters regarding the purchase of a new ambulance. **(Angel Ramirez, Fire Chief)**

7. F. Discussion and possible action on any and all matters regarding the acceptance and approval of the Tentative Budget for Fiscal Year 2026-2027. **(Roula Encinas, Director of Finance)**

7. G. Discussion and possible action on any and all matters regarding Resolution No. 2401. A Resolution of the Mayor and City Council of the City of San Luis, Arizona, declaring the following technical code documents public records, including the various tables, appendices and amendments thereto: The 2024 International Building Code; the 2024 International Residential Code; the 2018 International Mechanical Code; the 2018 International Plumbing Code; the 2024 International Property Maintenance Code; the 2020 National Electrical Code; and the 2018 International Fuel Gas Code; which publications shall remain on file with the City Clerk. **(Joaquin Campa, Building Official)**

7. H. Discussion and possible action on any and all matters regarding Ordinance No. 485. An Ordinance of the Mayor and City Council of the City of San Luis, Arizona, amending San Luis City Code, Chapter 15.10 Building Regulations to adopt the 2024 International Building Code, 2024 International Residential Code, 2018 International Mechanical Code, 2018 International Plumbing Code, 2024 International Property Maintenance Code, 2020 National Electrical Code, 2018 International Fuel Gas Code and the City of San Luis amendments to each of said Codes; Renumbering Section 15.10.110 "Construction Debris" to 15.10.120; Renumbering Section 15.10.120 "Adminsitrative Authority to 15.10.130; Renumbering Section 15.10.130 "Additional Regulations" to 15.10.140; Renumbering Section 15.10.140 "Conflict" to 15.10.150; providing for a September 14, 2026 effective date; repealing any conflicting provisions; and providing for severability. **(Joaquin Campa, Building Official)**

A. Action on reading of Ordinance No. 485 by title only
B. Action on Ordinance No. 485

7. I. Discussion and possible action on any and all matters regarding Resolution No. 2402 - Aerial Imagery Update. A Resolution of the Mayor and City Council of the City of San Luis, Arizona, approving and adopting an Intergovernmental Agreement with Yuma County for the Yuma Region-Imagery Acquisition Consortium Project. **(Jose A. Guzman, Director of Development Services)**

7. J. Discussion and possible action on any and all matters regarding Resolution No. 2403. A Resolution of the Mayor and City Council of the City of San Luis, Arizona, approving and adopting an Intergovernmental Agreement with the City of Yuma for the use of pre-approved residential standard plans. **(Jose A. Guzman, Director of Development Services)**

8. SUMMARY OF CURRENT EVENTS
Events by Mayor, Council Members and/or City Manager pursuant to A.R.S. § 38-431.02 (K).

9. ADJOURNMENT

PROCLAMATION

Regular City Council Meeting **5. A.**

Meeting Date: 06/10/2026

Title:

Proclamation on Waste and Recycling Workers Week June 15-20, 2026

Attachments

Proclamation

OFFICE OF THE
MAYOR
CITY OF SAN LUIS

Proclamation

WASTE AND RECYCLING WORKERS WEEK
June 15 - 20, 2026

WHEREAS, the citizens of San Luis recognize the often thankless job of waste and recycling workers; and

WHEREAS, John Arwood, second-generation owner of Arwood Site Services, began the annual observance of National Garbage Man Day on June 17, 2012, which was renamed to Waste and Recycling Workers Week in 2020; and

WHEREAS, the people employed by local refuse collection and hauling companies contracted by the City of San Luis make significant contributions to the safety, health, and welfare of our citizens; and

WHEREAS, according to the Centers for Disease Control and Prevention, the eradication of many diseases in the Western World is due in large part to higher public sanitation standards resulting from effective garbage disposal; and

WHEREAS, the City of San Luis values and celebrates our local sanitation industry employees for their commitment to our residents and businesses in keeping our neighborhoods and streets safe and clean.

NOW, THEREFORE, BE IT RESOLVED, that I, Nieves Riedel, Mayor of the City of San Luis, do hereby proclaim June 15-20, 2026, as **"Waste and Recycling Workers Week"** and invite everyone to recognize and celebrate men and women in the waste and recycling industry as front-line responders.

DATED this **10th** day of **June 2026**.

_____
Nieves Riedel, Mayor

ATTEST:

_____
Sonia Cornelio, City Clerk

PROCLAMATION

Regular City Council Meeting **5. B.**

Meeting Date: 06/10/2026

Title:

Proclamation on Juneteenth Day - June 19, 2026

Attachments

Proclamation

OFFICE OF THE
MAYOR
CITY OF SAN LUIS

Proclamation

JUNETEENTH DAY
June 19th, 2026

WHEREAS, the Civil War was fought to ensure that America's founding principles of freedom and justice for all were shared by all Americans; and

WHEREAS, on January 1, 1863, President Abraham Lincoln signed the Emancipation Proclamation, which granted freedom to all enslaved, although freedom did not become a reality for the enslaved people of Texas; and

WHEREAS, on June 19, 1865, Major General Gordon Granger led Union soldiers into Galveston, Texas, to enforce the Emancipation Proclamation and freed all remaining enslaved people in the state of Texas; and

WHEREAS, Juneteenth is the oldest celebration of the ending of slavery in the United States of America and is also known as Emancipation Day, Freedom Day, Jubilee Day, and Juneteenth Independence Day; and

WHEREAS, on March 17, 2016, Governor Doug Ducey signed HB2226, sponsored by Representative Reginald Bolding, recognizing June 19 as Juneteenth Day in Arizona, making Arizona the 45th State to recognize Juneteenth as a state holiday or special day of observance; and

WHEREAS, Juneteenth celebrations take place annually throughout Arizona and the nation, consisting of readings of the Emancipation Proclamation, prayer and worship services, cultural performances, community service events, ceremonial observances, food, and more.

NOW, THEREFORE, BE IT RESOLVED, that I, Nieves Riedel, Mayor of the City of San Luis, do hereby proclaim June 19th, 2026, as **"Juneteenth Day"** and encourage all San Luis residents to reflect upon the value of freedom and join in Juneteenth celebrations across Arizona.

DATED this **10th** day of **June 2026**.

_____
Nieves Riedel, Mayor

ATTEST:

_____
Sonia Cornelio, City Clerk

AGENDA ITEM REVIEW FORM

Regular City Council Meeting **6. A.**

Meeting Date: 06/10/2026

Summary

MINUTES OF

- Regular Council meeting held May 13, 2026

Attachments

5/13/2026 RCM

M I N U T E S
Regular Council Meeting
San Luis City Council
San Luis Council Chambers
1090 E. Union Street
San Luis, AZ 85349
May 13, 2026
6:00 p.m.

1. CALL TO ORDER/ROLL CALL

Mayor Nieves Riedel called the meeting to order at approximately 6:00 p.m.

PRESENT:
Council Member Luis E. Cabrera
Council Member Maria Cecilia Cruz
Council Member Azael De La Hoya
Council Member Esteban C. Rosales
Council Member Lizeth Servin
Vice Mayor Javier Vargas
Mayor Nieves Riedel

OTHERS PRESENT:
Jenny Torres, City Manager
Joe Estes, Interim City Attorney
Melissa Lopez, Deputy City Clerk
Adela Cortez, Director of Human Resources
Albert Moreno, IT Technician
Amanda Mahon Watlington, City Prosecutor
Angel Ramirez, Fire Chief
Angelica Roldan, Director of Parks & Recreation
Antonio Maldonado, Multimedia Production & Operations Specialist
Armando Esparza, Director of Economic Development
Claudia Montoya, Assistant Director of Parks & Recreation
Edgar Esparza, Billing & Collections Manager
Emmanuel Botello, Police Lieutenant
Eulogio Vera, Director of Public Works
Francia Alonso, Public Information Officer
Jose A. Guzman, Director of Development Services
Manuel Hernandez, Assistant Director of Public Works
Maria Barajas, Human Resources Manager
Miguel Ramirez, Finance Accounting Manager
Olivia Jenkins, Acting Assistant City Manager
Roula Encinas, Director of Finance
Tomas Sanchez, City Engineer
Victor De La Torre, Safety Officer
Yolanda Dueñas, Facilities Supervisor

Angela Delgado, Resident
Brian De La Hoya, Resident
Christian Cuevas, Meeting Interpreter
Fabher Sanchez, Resident
James Allen Jr., Resident
Luisa Arreola, Resident
Mark Concha Jr., Resident
Nicole Kulpepper, APS Public Affairs
Octavio Ramirez, Resident
Perla De La Hoya, Resident

2. PLEDGE OF ALLEGIANCE

Council Member Esteban C. Rosales led the Pledge of Allegiance.

3. INVOCATION

The invocation was performed by Ms. Elida Valenzuela – Police Chaplain.

Mayor Nieves Riedel extended her sincere appreciation to Ms. Valenzuela for graciously agreeing to deliver the invocation, noting that this responsibility has become an increasingly significant burden.

4. CALL TO THE PUBLIC

Mr. James Allen Jr., 1549 E. Babbitt Lane, San Luis, AZ, asked about the purpose of plots of land. Isn't there a perimeter or buffer area that sets the distance between houses and the state prison? He would like to find out how close it is and whether it is being monitored as the building goes up. He also asked when the last environmental study was conducted in the City of San Luis. As they may know, probably one has the highest rate of incidence of children and adults with disabilities, which can be targeted through either pollution, water contamination, or a lot of other things. He asked the Mayor and the City Council to look into conducting a study to determine whether these things are true, so that appropriate steps could be taken to protect the citizens. Lastly, he commented on when someone desires to run for office, he followed the letter of the law. He noted that many people's signs were already out before this Monday, which marked the start of political sign posting. He thinks that if they are going to do things, they need to do them decently and in order and follow the rule of law. If they are not going to follow the rule of law, there should be a price for those who do not.

Ms. Angelica Roldan, Director of Parks & Recreation, announced that the City of San Luis was the only city in the county selected to receive community beautification funding from Arizona Public Service (APS) as part of their 140th Anniversary celebration. This investment will allow the Parks & Recreation Department to make important improvements at Joe Orduño Park.

She further noted that the funding will help replace the metal shade structure at F1 Baseball Field and restore the tennis courts. She introduced Ms. Nicole Kulpepper from APS.

Ms. Kulpepper mentioned that they were happy to offer this grant to the Parks & Recreation Department for the beautification project, as they chose to give back in ways that serve the communities that have grown up with them.

Mr. Jose F. Garcia, a Yuma resident, commented that on the 20th of last month, he had to go to see the doctor in San Luis, Mexico, and that he parked in a handicap space on Main Street in San Luis, Arizona. Upon his return, he found a yellow envelope on the windshield of his vehicle, which resulted in a citation for parking in a handicap space, even though he held his handicap placard. He called the court to inquire about the citation and was informed that the fine is $150.00 and that, if he wanted a payment plan, an additional $20.00 would be added. He is unsure if it only happens in San Luis or in other places in the United States, where a handicapped person gets a ticket for parking in a handicap space.

Mayor Nieves Riedel asked Mr. Garcia to come to City Hall the following day, as she is interested in meeting with him to discuss this issue, which is very interesting and requires attention.

5. PROCLAMATION

5. A. Proclamation on National Public Works Week - May 17-23, 2026

Ms. Melissa Lopez, Deputy City Clerk, read the proclamation by title only.

6. CONSENT AGENDA

6. A. MINUTES OF
- Regular Council meeting held April 8, 2026

6. B. DISBURSEMENTS
From April 15, 2026 to May 4, 2026
Total $1,713,964.91
(One Million, Seven Hundred Thirteen Thousand, Nine Hundred Sixty-Four Dollars and Ninety-One Cents)

MOTION: Council Member Tadeo Azael De La Hoya/Vice Mayor Javier Vargas to approve the Consent Agenda as presented. The motion passed unanimously.

The vote was as follows:

Council Member Luis E. Cabrera	Aye
Council Member Maria Cecilia Cruz	Aye
Council Member Tadeo Azael De La Hoya	Aye
Council Member Esteban C. Rosales	Aye
Council Member Lizeth Servin	Aye
Vice Mayor Javier Vargas	Aye
Mayor Nieves Riedel	Aye

7. DISCUSSION AND POSSIBLE ACTION ITEMS:

7. A. Discussion and possible action on any and all matters regarding the purchase of a new Zoll Cardiac Monitor. (Angel Ramirez, Fire Chief)

Mr. Angel Ramirez, Fire Chief, stated that he is requesting authorization to purchase a Zoll Cardiac monitor, one of the most expensive pieces of equipment they must use daily. 80% of their calls are EMS calls, and they probably use this equipment on every single call. They do not have a spare cardiac monitor as they are very expensive, and are trying to upstaff another vehicle, as discussed during the budget retreat. This item was budgeted for this fiscal year. Staff would like to use Zoll Cardiac, as they are a sole source company and as allowed through the Procurement Code Section 3.05.020.

MOTION: Vice Mayor Javier Vargas/Council Member Tadeo Azael De La Hoya to approve the purchase of a new cardiac monitor through Zoll Medical Corporation for the amount of $53,191.70, as presented. The motion passed unanimously.

The vote was as follows:

Council Member Luis E. Cabrera	Aye
Council Member Maria Cecilia Cruz	Aye
Council Member Tadeo Azael De La Hoya	Aye
Council Member Esteban C. Rosales	Aye
Council Member Lizeth Servin	Aye
Vice Mayor Javier Vargas	Aye
Mayor Nieves Riedel	Aye

7. B. Discussion and possible action on any and all matters regarding the City of San Luis Business Center Electrical Service and Exhaust Project. (Eulogio Vera, Director of Public Works)

Mr. Eulogio Vera, Director of Public Works, explained that this contract adds electrical service and an exhaust system to half the building that lacks power, where the Call Center is located near San Luis Plaza Drive. Approximately half of that building, 20,000 square feet, is used by the city for storage by several departments and is currently a safety issue.

He pointed out that, with this project, there will be lighting, making it more useful for continued storage. The project was advertised, bids were received and Merrill Development was the lowest bidder at $104,00.00. This project will be completed before the end of the fiscal year.

MOTION: Council Member Luis E. Cabrera/Council Member Tadeo Azael De La Hoya to award the contract to Merrill Development, Inc., for the San Luis Business Center Electrical Project in the amount of $104,464.50 and approve the budget transfer as presented in the fiscal impact of this item. The motion passed unanimously.

The vote was as follows:

Council Member Luis E. Cabrera	Aye
Council Member Maria Cecilia Cruz	Aye
Council Member Tadeo Azael De La Hoya	Aye
Council Member Esteban C. Rosales	Aye
Council Member Lizeth Servin	Aye
Vice Mayor Javier Vargas	Aye
Mayor Nieves Riedel	Aye

7. C. Discussion and possible action on any and all matters regarding the approval of Amendment No. 1 to the Intergovernmental Agreement (IGA) between the City of San Luis and the Arizona Department of Transportation (ADOT) for the US 95 Raised Median Project. (Manuel Hernandez, Assistant Director of Public Works)

Mr. Manuel Hernandez, Assistant Director of Public Works, stated that Amendment No. 1 to the Intergovernmental Agreement (IGA) with the Arizona Department of Transportation (ADOT), approved in February 2024, is for the US Highway 95 raised median project. The amendment revises the project limits from the original segment from County 20 ½ Street to County 22nd Street, which was 1.5 miles, to the revised segment from County 21st Street to County 22nd Street, reducing it to approximately 1.1 miles. The adjustment was necessary because the final design cost estimate exceeded the programmed federal HSIP funding. The total project cost and funding structure remain unchanged, including the city's match. Additionally, all other terms of the original agreement remain the same.

MOTION: Council Member Esteban C. Rosales/Council Member Tadeo Azael De La Hoya to approve Amendment No. 1 to the Intergovernmental Agreement with the Arizona Department of Transportation for the US 95 Raised Median Project. The motion passed unanimously.

The vote was as follows:

Council Member Luis E. Cabrera	Aye
Council Member Maria Cecilia Cruz	Aye
Council Member Tadeo Azael De La Hoya	Aye
Council Member Esteban C. Rosales	Aye
Council Member Lizeth Servin	Aye
Vice Mayor Javier Vargas	Aye
Mayor Nieves Riedel	Aye

7. D. Discussion and possible action on any and all matters regarding the approval of additional funding for ADOT project administrative fees and right of way and environmental clearances for the Los Alamos Street & 10th Avenue Curve Realignment Project (ADOT Project No. T044201D/03D). (Manuel Hernandez, Assistant Director of Public Works)

Mr. Manuel Hernandez, Assistant Director of Public Works, requested approval of $37,456.00 in additional funding for the Los Alamos Street and 10th Avenue curve realignment project to cover Arizona Department of Transportation's (ADOT) administrative fees, third-party right-of-way services and environmental clearances. This important safety improvement project was originally approved by the Mayor and City Council in 2023 via an intergovernmental agreement (IGA) with ADOT. As design progressed, additional right-of-way requirements and environmental coordination have extended the timeline and increased cost beyond the original estimates. ADOT invoiced the city $37,456.00 to cover the necessary project advancement costs. Per the IGA, the city is responsible for all costs that exceed the initial estimates. The environmental clearance is to be completed by July 2026; the stage 4 submittal is due at the end of July, which is approximately 95% of the design. They expect to complete the entire design by December. The December right-of-way clearances are scheduled for completion by March 2027, at which point ADOT will begin bidding.

MOTION: Vice Mayor Javier Vargas/Council Member Tadeo Azael De La Hoya to approve $37,456.00 for ADOT project administrative fees and clearances for the Los Alamos curve realignment project and authorize a budget transfer as described in the fiscal impact statement. The motion passed unanimously.

The vote was as follows:

Council Member Luis E. Cabrera	Aye
Council Member Maria Cecilia Cruz	Aye
Council Member Tadeo Azael De La Hoya	Aye
Council Member Esteban C. Rosales	Aye
Council Member Lizeth Servin	Aye
Vice Mayor Javier Vargas	Aye
Mayor Nieves Riedel	Aye

7. E. Discussion and possible action on any and all matters regarding the award of a contract to DPE Construction, Inc. for Lakin Drive Subsidence Issue - Road Improvement Construction project. (Tomas Sanchez, City Engineer)

Mr. Tomas Sanchez, City Engineer, indicated that staff is seeking approval to award the construction contract to DPE Construction for the Lakin Drive subsidence roadway improvement construction project. He provided some background, adding that this project was advertised and two (2) bids were received by local contractors, DPE Construction and Gutierrez Canales Engineering. Bids were evaluated, and after review, DPE Construction was determined to be the lowest responsible bidder, capable of performing the work for $371,800.00. This will impact two (2) fiscal years, with $200,000.00 this fiscal year and approximately $175,000.00 next fiscal year to complete the project. The project's duration will be approximately three (3) months, and the contractor will mobilize as soon as the notice to proceed is given.

MOTION: Council Member Luis E. Cabrera/Council Member Tadeo Azael De La Hoya to approve the contract with DPE Construction, Inc., for the Lakin Drive subsidence issue-road improvement construction project in the amount of $371,800.00, as presented. The motion passed unanimously.

The vote was as follows:

Council Member Luis E. Cabrera	Aye
Council Member Maria Cecilia Cruz	Aye
Council Member Tadeo Azael De La Hoya	Aye
Council Member Esteban C. Rosales	Aye
Council Member Lizeth Servin	Aye
Vice Mayor Javier Vargas	Aye
Mayor Nieves Riedel	Aye

7. F. Discussion and possible action on any and all matters regarding the award of a contract to Kimley Horn and Associates, Inc. for environmental professional services for the 10th Avenue Widening Project - Cesar Chavez Boulevard to County 22nd Street. (Tomas Sanchez, City Engineer)

Mr. Tomas Sanchez, City Engineer, explained that the Engineering Department is seeking approval to award a contract to Kimley Horn and Associates for professional environmental services for the 10th Avenue widening project from Cesar Chavez Boulevard to County 22nd Street. He briefly described the scope of work, noting that these environmental studies are required by the bureau's regulations as part of the right-of-way acquisition process for the 10th Avenue road widening project and are not necessary to advance the project through the federal environmental review and right-of-way approval processes. Kimberly Horn will take approximately four (4) months from notice to proceed to complete these studies and submit them to the Bureau of Reclamation. Staff recommended approval of this contract to Kimley Horn in the amount of $89,500.00.

Questions, answers and discussion ensued amongst the City Council and Mr. Sanchez.

Mr. Sanchez stated that the reason the environmental assessments are needed is due to the entity required to work with the Bureau of Land Management (BLM) or the Bureau of Reclamation (BOR) when the city wants to obtain the right of way from federal land and to protect the environment, the owls, make sure one will not disturb archaeological sites and protect the flat horn lizard.

MOTION: Council Member Luis E. Cabrera/Vice Mayor Javier Vargas to approve the Professional Environmental Services Contract with Kimley Horn and Associates, Inc. for the 10th Avenue widening project in the amount of $89,500.00, as presented. The motion passed unanimously.

The vote was as follows:

Council Member Luis E. Cabrera	Aye
Council Member Maria Cecilia Cruz	Aye
Council Member Tadeo Azael De La Hoya	Aye
Council Member Esteban C. Rosales	Aye
Council Member Lizeth Servin	Aye
Vice Mayor Javier Vargas	Aye
Mayor Nieves Riedel	Aye

7. G. Discussion and possible action on any and all matters regarding Resolution No. 2398. A Resolution of the Mayor and City Council of the City of San Luis, Arizona, a Municipal Corporation of Arizona, authorizing the submission of an application for additional financial assistance from the Water Infrastructure Finance Authority of Arizona (WIFA) through the Clean Water State Revolving Fund program to support the expansion of the West Wastewater Treatment Plant. (Roula Encinas, Director of Finance)

Ms. Roula Encinas, Director of Finance, stated that in October 2024, the City Council authorized staff to apply for funding from the Water Infrastructure Finance Authority of Arizona (WIFA) to expand the west wastewater treatment plant. In December 2025, the city was approved for approximately $26.2 million through the Clean Water State Revolving Fund Program. After the project entered the bidding phase, the lowest responsive and responsible bid came in significantly higher than originally estimated at approximately $41 million. Due to increased construction costs, staff is requesting authorization to apply for approximately $12 million in additional WIFA funding to help close the remaining funding gap. The remaining $3 million balance would be funded from the wastewater utility reserve. This project remains a critical infrastructure investment for the city, supporting current and future wastewater capacity, regulatory compliance, and continued community growth. Additionally, the WIFA program continues to offer one of the most cost-effective financing options, with low interest rates and favorable repayment terms.

She mentioned that staff is requesting approval of Resolution No. 2398, which authorizes the submission of an application for additional financial assistance from WIFA. Final loan terms will be brought back to the City Council for approval at a future meeting.

Questions, answers, and discussion followed amongst the City Council, Ms. Encinas, and Mr. Eulogio Vera, Director of Public Works.

MOTION: Council Member Esteban C. Rosales/Council Member Tadeo Azael De La Hoya to approve and adopt Resolution No. 2398. The motion passed unanimously.

The vote was as follows:

Council Member Luis E. Cabrera	Aye
Council Member Maria Cecilia Cruz	Aye
Council Member Tadeo Azael De La Hoya	Aye
Council Member Esteban C. Rosales	Aye
Council Member Lizeth Servin	Aye
Vice Mayor Javier Vargas	Aye
Mayor Nieves Riedel	Aye

Mayor Nieves Riedel declared a conflict of interest on Items No. 7.H. and 7.I.

Ms. Melissa Lopez, Deputy City Clerk, stated that the applicant has requested that Items No. 7.H. and 7.I. be continued to the Regular Council meeting scheduled for August 12, 2026.

7. H. Public hearing followed by discussion and possible action on any and all matters regarding Minor Amendment Case No. 2026-0062 - Colibri Townhomes and Resolution No. 2397. A Resolution of the Mayor and City Council of the City of San Luis, Arizona, amending the 2040 General Plan to change the land use designation of lots 32 through 36 of the Plaza Colibri Commercial Subdivision totaling 6.71 acres from Commercial (C) to Medium Density Residential (MDR); Repealing any conflicting provisions; and providing for severability. (Jose A. Guzman, Director of Development Services)

A. Staff presentation
B. Open Public Hearing
C. Call to the public on this item
D. Close Public Hearing
E. Action on Resolution No. 2397

Mr. Joe D. Estes, Interim City Attorney, indicated to the Vice Mayor and City Council that a vote is needed to continue the items to the August 12th meeting as requested by the applicant.

Council Member Luis E. Cabrera asked whether there was a reason the applicant requested that the items be moved to the August 12th meeting and if it took staff time to prepare for this item to be posted on the agenda.

Mr. Jose Guzman, Director of Development Services, responded that staff received an email requesting that the items be continued and did not receive a reason for it. He added that staff had advertised the public hearing.

MOTION: Council Member Tadeo Azael De La Hoya/Council Member Maria Cecilia Cruz to continue the item as requested by the applicant. The motion passed with five (5) Ayes, one (1) Nay by Council Member Lizeth Servin, and one (1) Abstention by Mayor Nieves Riedel.

The vote was as follows:

Council Member Luis E. Cabrera	Aye
Council Member Maria Cecilia Cruz	Aye
Council Member Tadeo Azael De La Hoya	Aye
Council Member Esteban C. Rosales	Aye
Council Member Lizeth Servin	Nay
Vice Mayor Javier Vargas	Aye
Mayor Nieves Riedel	Abstained

7. I. Public Hearing followed by discussion and possible action on any and all matters regarding Rezoning Case No. 2026-0063 - Colibri Townhomes and Ordinance No. 483. An Ordinance of the Mayor and City Council of the City of San Luis, Arizona, amending the Official Zoning Map of the City of San Luis by changing the zoning classification of lots 32 through 36 of the Plaza Colibri Commercial Subdivision totaling 6.71 acres from Community Commercial (C-2) to Medium-High Density Residential (R-2); repealing any conflicting provisions; and providing for severability. (Jose A. Guzman, Director of Development Services)

A. Staff presentation
B. Open Public Hearing
C. Call to the public on this item
D. Close Public Hearing
E. Action on Ordinance No. 483 by title only
F. Action on Ordinance No. 483

MOTION: Council Member Tadeo Azael De La Hoya/Council Member Esteban C. Rosales to continue the item as requested by the applicant. The motion passed with six (6) Ayes and one (1) Abstention by Mayor Nieves Riedel.

The vote was as follows:

Council Member Luis E. Cabrera	Aye
Council Member Maria Cecilia Cruz	Aye
Council Member Tadeo Azael De La Hoya	Aye
Council Member Esteban C. Rosales	Aye
Council Member Lizeth Servin	Aye
Vice Mayor Javier Vargas	Aye
Mayor Nieves Riedel	Abstained

8. SUMMARY OF CURRENT EVENTS

Council Member Javier Vargas reported that this morning, he, along with Council Members Luis E. Cabrera, Maria Cecilia Cruz, and Lizeth Servin, attended the city's groundbreaking ceremony for the Merrill Avenue improvement project. He thanked all those involved in this project, adding that it will help with traffic, specifically with the construction of the new hospital. He asked the community for patience during this process as the construction is expected to continue through September 2026.

Mayor Nieves Riedel also thanked those involved in this project and apologized for missing it due to health issues.

Council Member Lizeth Servin reported that she saw a post on Facebook from a citizen thanking a city employee for returning her son's wallet. Although the employee's identity is unknown, she recognized and thanked the employee, as well as the citizen who thanked the employee. She also reminded citizens that if any households need utility assistance, Arizona Public Service (APS) will be at Comite De Bienestar on Friday, May 15, 2026, from 9:00 a.m. to 4:00 p.m. with its APS Assistance Program. More information ca be obtained from Chicanos Por La Causa.

Council Member Luis E. Cabrera commented that the community will have the opportunity to attend the "Conversations With The City Council" event on June 6, 2026. At least one (1) Council Member will be present to listen to the community's concerns. More information will be posted on the city's social media website for that event. He also mentioned that there is an opening on the Somerton School District board due to a resignation for those who live on the east side of the city. More information can be obtained from the Yuma County Superintendent's Office on this.

9. EXECUTIVE SESSION:

Discussion and possible action to hold an executive session pursuant to A.R.S. § 38-431.03(A)(1), (3) and (4) on any and all matters relating to the position of Magistrate to discuss or consider employment, assignment, appointment, including possible discussion of confirmation of appointment and/or discussion of approval of terms and/or conditions pursuant to San Luis City Code § 34.20, and consultation with the City Attorney or City's attorneys regarding the same. (Joe Estes, Interim City Attorney)

MOTION: Mayor Nieves Riedel/Council Member Tadeo Azael De La Hoya to go into executive session at approximately 7:12 p.m. The motion passed unanimously.

The vote was as follows:

Council Member Luis E. Cabrera	Aye
Council Member Maria Cecilia Cruz	Aye
Council Member Tadeo Azael De La Hoya	Aye
Council Member Esteban C. Rosales	Aye
Council Member Lizeth Servin	Aye
Vice Mayor Javier Vargas	Aye
Mayor Nieves Riedel	Aye

10. MOTION TO GO BACK TO REGULAR SESSION

MOTION: Mayor Nieves Riedel/Council Member Esteban C. Rosales to go back to regular session at approximately 7:28 p.m. The motion passed unanimously.

The vote was as follows:

Council Member Luis E. Cabrera	Aye
Council Member Maria Cecilia Cruz	Aye
Council Member Tadeo Azael De La Hoya	Aye
Council Member Esteban C. Rosales	Aye
Council Member Lizeth Servin	Aye
Vice Mayor Javier Vargas	Aye
Mayor Nieves Riedel	Aye

11. DISCUSSION AND POSSIBLE ACTION ITEM:

11. A. Discussion and possible action on any and all matters regarding an employment contract for a City Magistrate. (Jenny Torres, City Manager)

Ms. Jenny Torres, City Manager, mentioned that staff would like to recommend some changes to the contract to modify the retirement and salary as discussed and proposed.

MOTION: Council Member Esteban C. Rosales/Vice Mayor Javier Vargas to appoint Amanda M. Watlington as Magistrate and approve and adopt the proposed contract for magistrate, as presented. The motion passed unanimously.

The vote was as follows:

Council Member Luis E. Cabrera	Aye
Council Member Maria Cecilia Cruz	Aye
Council Member Tadeo Azael De La Hoya	Aye
Council Member Esteban C. Rosales	Aye
Council Member Lizeth Servin	Aye
Vice Mayor Javier Vargas	Aye
Mayor Nieves Riedel	Aye

12. ADJOURNMENT

MOTION: Mayor Nieves Riedel/ Council Member Esteban C. Rosales to adjourn the Regular Council meeting at approximately 7:29 p.m. The motion passed unanimously.

The vote was as follows:

Council Member Luis E. Cabrera	Aye
Council Member Maria Cecilia Cruz	Aye
Council Member Tadeo Azael De La Hoya	Aye
Council Member Esteban C. Rosales	Aye
Council Member Lizeth Servin	Aye
Vice Mayor Javier Vargas	Aye
Mayor Nieves Riedel	Aye

APPROVED:

_____
Nieves Riedel, Mayor

ATTEST:

_____
Sonia Cornelio, City Clerk

CERTIFICATION

I hereby certify that the foregoing minutes are a true and correct copy of the minutes of the Regular City Council meeting of the City Council of the City of San Luis, Arizona, held on May 13, 2026. I further certify that the meeting was duly called and held and that a quorum was present.

_____
Sonia Cornelio, City Clerk

AGENDA ITEM REVIEW FORM

Regular City Council Meeting **6. B.**

Meeting Date: 06/10/2026

Summary

DISBURSEMENTS
From May 20, 2026 to June 03, 2026
Total $2,465,679.94 (Two Million, Four Hundred Sixty-Five Thousand, Six Hundred Seventy-Nine Dollars and Ninety-Four Cents)

Attachments

Disbursements

City of San Luis
Finance Department

COUNCIL MEETING JUNE 10, 2026
Disbursement Report from 05/20/2026 TO 06/03/2026

Bank Accounts	Check Date	Amount	Schedule
Payroll Check Account	05/20/26	$ 584,061.95	Schedule A
Accounts Payable Check Account	05/21/2026	$ 390,609.57	Schedule B
Accounts Payable Check Account	05/29/2026	$ 729,657.16	Schedule C
Accounts Payable Check Account	06/03/2026	$ 761,351.26	Schedule D
	Total Disbursements:	**$ 2,465,679.94**	-

Please contact Ms. Roula Encinas or Mr. Miguel Ramirez prior to the meeting if additional information is needed.

Prepared by Guadalupe Canez: _____

Verified by Finance: Miguel Ramirez

For Council approval on: June 10, 2026

Mayor: _____

Council: _____

RECEIVED
JUN 03 2026
CITY CLERK'S OFFICE

Pay Day Register

Pay Date Range 05/02/26 - 05/15/26
Pay Batch 202611

Pay Batch 202611 Total
Employees in Pay Batch 353
Female Employees in Pay Batch 96

Hours Description	Hours	Gross
100 - REGULAR	26,757.2500	696,652.50
1001 - LEAVE WITHOUT PAY	71.7500	.00
1005 - BEREAVEMENT	24.0000	517.44
1007 - ON CALL WORKED HOURS	11.5000	270.60
1009 - PART TIME	56.7500	971.10
1010 - PART TIME FIREFIGHTERS	28.0000	622.55
1012 - LEAVE WITH PAY	48.0000	2,904.95
201 - OVERTIME	754.5000	31,240.80
202 - OP STONE GARDEN- O.T.	613.0000	31,653.96
2023 - FMLA - SICK LEAVE	165.3300	4,681.98
2024 - FMLA - VACATION LEAVE	63.3100	1,492.22
203 - DUI OVERTIME	20.0000	856.20
2036 - MARSHALS OT	27.5000	1,194.19
2037 - HSI OT	8.0000	369.96
210 - SRO	208.0000	5,998.68
300 - VACATION EARNED	1,463.7966	.00
301 - VACATION USED	1,055.5000	29,477.37
400 - SICK EARNED	1,408.3285	.00
405 - SCHEDULED SICK LEAVE	234.0000	7,830.02
406 - UNSCHEDULED SICK LEAVE	563.5000	13,837.38
501 - WC PUBLIC SAFETY USED	4.0000	125.36
502 - ON CALL PAY I.T.	.0000	100.00
503 - STAND-BY PAY	668.7000	1,337.40
703 - FIRE HOLIDAY USED	72.0000	2,340.00
809 - RETRO PAY	27.0336	688.64
900 - COMPENSATION EARNED	8.2500	.00
901 - COMPENSATION USED	42.7500	867.84
921 - STEP OVERTIME	10.0000	578.85
923 - BORDER FITNESS - GYM	.0000	350.00
932 - 24-7 GET FIT - GYM	.0000	1,647.00
965 - PD - STAND-BY PAY	.0000	1,239.00
967 - FD - SPECIAL ASSIGNEMNT	163.5000	327.00
Total	34,578.2487	$840,172.99

Withholdings and Deductions		Gross Base
Gross	840,172.99	
Imputed Income		
FEDERAL TAX WITHHOLDING	45,753.08	721,928.25
SOCIAL SECURITY TAX	52,090.61	840,172.99
MEDICARE	12,182.82	840,172.99
STATE WITHHOLDING	15,252.59	721,928.25
24-7 GET FIT- GYM	1,647.00	.00
AM. FIDELITY - HEALTH FSA	25.00	.00
AM. FIDELITY- ACCIDENT-POST	25.01	.00
AM. FIDELITY- ACCIDENT-PRE	471.55	.00
AM. FIDELITY- CANCER-POST	43.30	.00
AM. FIDELITY- CANCER-PRE TAX	157.40	.00
AM. FIDELITY- GCI -POST TAX	73.09	.00
AM. FIDELITY- GHI- PRE TAX	259.84	.00
AM. FIDELITY- LIFE -POST TAX	316.48	.00
AM. FIDELITY- TX LIFE -POST	178.44	.00
AZ COPS - SLPD	575.00	.00
AZ STATE RETIREMENT	58,533.01	493,534.37
BORDER GYM - GYM	350.00	.00
CHILD SUPPORT 2	234.46	.00
DEFERRED COMP - ROTH	1,360.00	.00
DEFERRED COMP - ROTH	240.94	8,397.91
DEFERRED COMPENSATION	2,635.00	.00
DEFERRED COMPENSATION	758.54	6,588.00
FOP/ALC	450.00	.00
GARNISHMENT - CHILD	2,231.38	.00
IAFF- FIRE DEPT	1,520.00	.00
LEGAL SHIELD	49.83	.00
LONG TERM DISABILITY	691.00	493,534.37
MANHATTANLIFE ASSURANCE	96.51	.00
MEX ONLY DENTAL - EE &	183.20	.00
MEX ONLY DENTAL - EE &	427.35	.00
MEX ONLY DENTAL - EE &	201.52	.00
MEX ONLY HEALTH - EE & CH	656.04	.00
MEX ONLY HEALTH = S	538.35	.00
MEXICO ONLY HEALTH - EE &	2,525.61	.00
MEXICO ONLY HEALTH - EE &	596.40	.00
MISCELLANEOUS	195.00	.00
PAC FUND- FIRE DEPT.	116.00	.00

Benefits		Gross Base
ASRS ALTERNATE	691.64	7,093.69
AZ STATE RETIREMENT	58,533.01	493,534.37
DENTAL = FAMILY	378.10	.00
LONG TERM DISABILITY	691.00	493,534.37
MEDICAL MEX ONLY - EE &	2,664.09	.00
MEDICAL MEX ONLY - EE &	10,256.14	.00
MEDICAL MEX ONLY - EE &	2,421.90	.00
MEDICAL MEX ONLY - EE ONLY	4,844.04	.00
MEX & US HEALTH = EE	59,281.20	.00
MEX ONLY DENTAL - EE &	142.40	.00
MEX ONLY DENTAL - EE &	332.15	.00
MEX ONLY DENTAL - EE &	156.64	.00
MEX ONLY DENTAL - EE ONLY	244.20	.00
PSPRS - ALTERNATE	263.35	3,291.89
PSPRS FIRE DB NORM - TIER 1	8,343.95	67,019.39
PSPRS FIRE DB NORM - TIER 2	706.44	5,674.17
PSPRS FIRE DB NORM - TIER 3	7,056.68	81,204.75
PSPRS FIRE DB UNFUND - TIER	1,530.90	67,144.75
PSPRS FIRE DB UNFUND - TIER	129.38	5,674.17
PSPRS FIRE DB UNFUND - TIER	2,022.07	81,204.75
PSPRS POLICE DB NORM - TIER	5,540.85	57,537.37
PSPRS POLICE DB NORM - TIER	1,163.98	12,087.00
PSPRS POLICE DB NORM - TIER	7,001.68	80,571.57
PSPRS POLICE DB UNFUND -	2,807.82	57,537.37
PSPRS POLICE DB UNFUND -	589.85	12,087.00
PSPRS POLICE DB UNFUND -	4,181.66	80,571.57
STANDARD LIFE	3,233.80	.00
STANDARD LTD	1,400.83	258,657.65
STANDARD STD	4,739.68	.00
U.S. MEX DENTAL - EE &	382.56	.00
U.S. MEX DENTAL - EE &	127.52	.00
US & MEX DENTAL - EE	3,210.24	.00
US & MEX HEALTH = C	26,588.80	.00
US & MEX HEALTH = FAMILY	26,437.58	.00
US & MEX HEALTH = SP	5,982.48	.00
VISION - SINGLE	1,285.94	.00
VSP- VISION	561.75	.00
WC PSPRS 20.10	25.20	125.36
Total	$255,951.50	

SCHEDULE A

Pay Day Register

Pay Date Range 05/02/26 - 05/15/26
Pay Batch 202611

PS DEFERRED COMP - ROTH	790.00	.00
PS DEFERRED COMP - ROTH	645.08	10,359.92
PS DEFERRED COMP TIAA -	478.80	10,905.03
PS DEFERRED COMPENSATION	1,795.00	.00
PSPRS FIRE DB RATE - TIER 1a	4,065.72	53,146.67
PSPRS FIRE DB RATE - TIER 1b	1,013.67	13,250.52
PSPRS FIRE DB RATE - TIER 2	434.08	5,674.17
PSPRS FIRE DB RATE - TIER 3	7,056.68	81,204.75
PSPRS POLICE DB RATE - TIER	2,803.53	36,647.61
PSPRS POLICE DB RATE - TIER	1,598.06	20,889.76
PSPRS POLICE DB RATE - TIER 2	924.66	12,087.00
PSPRS POLICE DB RATE - TIER 3	7,001.68	80,571.57
STANDARD LIFE ADDTNL	700.19	.00
TRANSWESTERN MEXICAN	141.00	.00
U.S. MEX DENTAL - EE &	492.72	.00
U.S. MEX DENTAL - EE &	164.24	.00
UNITED WAY	14.00	.00
US & MEX DENTAL= FAMILY	486.78	.00
US & MEX HEALTH = C	6,547.60	.00
US & MEX HEALTH = FAMILY	6,510.40	.00
US & MEX HEALTH = S	6,586.80	.00
US & MEX HEALTH = SP	1,473.21	.00
VSP - VISION CHILDREN	250.92	.00
VSP - VISION FAMILY	341.53	.00
VSP - VISION SPOUSE	153.34	.00
Net	$584,061.95	

Miguel Ramirez
05/21/2026

Employer Taxes		Gross Base
MEDICARE	12,182.82	840,172.99
SOCIAL SECURITY TAX	52,090.61	840,172.99
SUTA/UNEMPLOYMENT	4,836.55	806,099.33
Total	$69,109.98	

Workers' Comp		Gross Base
Ambulance EMT Search &	3,651.35	76,870.69
ANIMAL CONTROL OFFICERS	90.23	4,010.21
ATTORNEY- ALL & CLERICAL-	55.37	25,176.00
AUTO SERVICE/ REPAIR	332.43	11,914.86
BUILDING- NOC OPER BY	686.72	18,970.38
BUS COMPANY AND DRIVERS	87.14	1,578.66
CLERICAL OFFICE/ LIBRARY/	475.32	198,033.48
Electrician	73.78	2,349.60
FIREFIGHTERS & DRIVERS	4,478.38	94,281.59
GARBAGE/ ASH/ REFUSE	676.11	10,817.64
Homemaker Service	44.67	1,950.60
Motion Picture Production	16.44	2,529.63
MUNICIPAL/ TOWN/	1,001.25	57,214.81
PARKS- NOC ALL EMPLOYEES	844.76	27,249.90
POLICE OFFICERS	8,389.96	176,631.46
RECREATION- ALL EMPLOYEES/	309.08	22,560.33
SEWAGE DISPOSAL/ PLANT	1,412.85	41,071.63
Sewer Construction - All Operat	59.68	862.40
Street or Road Construction	3,071.23	34,781.75
WATERWORKS OPERATIONS	1,086.72	31,317.37
Total	$26,843.47	

Direct Deposits	Amount
1st Bank Yuma	35,938.42
ACADEMY BANK	2,390.70
Ally Bank	1,598.51
AVENIR FINANCIAL	45,860.42
Bank of America	6,369.16
Bank of America CA	1,204.08
Bankcorp	2,178.91
BANKCORP BANK	1,902.13
CAPITAL ONE	2,245.59
Charles Sch	350.00
Chase Bank	265,870.76
CHASE BANK CA	2,829.23

Pay Day Register

Pay Date Range 05/02/26 - 05/15/26
Pay Batch 202611

CHASE BANK MORGAN	1,725.34
CHASE BANK TX	1,500.00
chase centro	2,124.43
discover	400.00
EVOLVE BANK AND TRUST	40.26
FF CREDIT UNION	2,492.01
FIDELITY	395.23
FIREFIGHTER FIRST CREDIT UNION	14,348.04
HUGHES FCU	3,580.85
MECHNICS BANK	265.55
National Bank	1,315.82
National Police FCU	100.00
Navy Federal	37,398.78
NBKC Bank - Acorns	1,045.60
NetSpend Corporation DD	120.00
NORTH ISLAND CREDIT UNION	24.19
One Pay	600.00
OneAZ Credit Union	2,657.61
PATHWARD	1,906.03
SOFI BANK	2,137.78
Sunbank	1,889.65
THE FOOTHILLS BANK	2,317.34
US Bank	1,641.64
USAA FEDERAL SAVING	4,686.28
VANTAGE WEST	2,221.07
WASHINGTON FEDERAL	1,322.19
Wells Fargo	113,953.46
WELLS FARGO ARKANSAS	1,914.47
WELLS FARGO CA	5,492.15
WELLS FARGO CALE	1,276.96
Total	$579,630.64
Check	$4,431.31

City of San Luis

Payment Register

From Payment Date: 5/18/2026 - To Payment Date: 5/21/2026

Number	Date	Status	Void Reason	Reconciled/ Voided Date	Source	Payee Name	Transaction Amount	Reconciled Amount	Difference
1BYPAYABLE - 1st BY Accounts Payable									
Check									
115301	05/21/2026	Open			Accounts Payable	ADOT	$37,456.00		
115302	05/21/2026	Open			Accounts Payable	AGILE OCCUPATIONAL MEDICINE, PC	$275.00		
115303	05/21/2026	Open			Accounts Payable	ANGEL'S TOWING SERVICE/AUTO SALES	$390.00		
115304	05/21/2026	Open			Accounts Payable	ARIZONA DEPARTMENT OF ENVIRONMENTAL QUALITY	$30.76		
115305	05/21/2026	Open			Accounts Payable	ARIZONA WESTERN COLLEGE	$3,315.00		
115306	05/21/2026	Open			Accounts Payable	ARIZONA WESTERN COLLEGE	$175.00		
115307	05/21/2026	Open			Accounts Payable	ARVIZU VILLAR, GLORIA	$25.00		
115308	05/21/2026	Open			Accounts Payable	BALLESTEROS, BRIAN	$80.00		
115309	05/21/2026	Open			Accounts Payable	BEST BUY STORES, L.P.	$1,785.95		
115310	05/21/2026	Open			Accounts Payable	BOJORQUEZ, LEONARDO	$120.00		
115311	05/21/2026	Open			Accounts Payable	BOUND TREE MEDICAL, LLC.	$3,474.25		
115312	05/21/2026	Open			Accounts Payable	CAMPESINOS SIN FRONTERAS	$2,000.00		
115313	05/21/2026	Open			Accounts Payable	CANINE DEVELOPMENT GROUP, INC.	$140.00		
115314	05/21/2026	Open			Accounts Payable	CASTILLO URIBE, KYARA, ROBERTHA	$150.00		
115315	05/21/2026	Open			Accounts Payable	CENTURYLINK	$69.62		
115316	05/21/2026	Open			Accounts Payable	CONSTRUCTION SUPPLY HOLDINGS II, LLC	$70.56		
115317	05/21/2026	Open			Accounts Payable	DUARTE, YIGAL	$108.00		
115318	05/21/2026	Open			Accounts Payable	DURHAM'S FLEET SERVICES LLC	$4,703.09		
115319	05/21/2026	Open			Accounts Payable	DWD CONSTRUCTION	$4,950.00		
115320	05/21/2026	Open			Accounts Payable	EDS CUSTOM COATINGS LLC	$22,500.00		
115321	05/21/2026	Open			Accounts Payable	EMAZON, JESUS	$280.00		
115322	05/21/2026	Open			Accounts Payable	FACTOR SALES, INC.	$69.75		
115323	05/21/2026	Open			Accounts Payable	FAVELA, SOPHIE, ANN	$100.00		
115324	05/21/2026	Open			Accounts Payable	FELIX VALDEZ, GRISELDA, N	$50.00		
115325	05/21/2026	Open			Accounts Payable	FERGUSON WATERWORKS	$2,381.40		
115326	05/21/2026	Open			Accounts Payable	FIGUEROA, TERESA, MARIA	$150.00		
115327	05/21/2026	Open			Accounts Payable	FITZGIBBONS LAW OFFICES, P.L.C.	$3,470.00		
115328	05/21/2026	Open			Accounts Payable	FOXFURY, LLC	$1,835.89		
115329	05/21/2026	Open			Accounts Payable	GAMMAGE & BURNHAM, PLC	$480.00		
115330	05/21/2026	Open			Accounts Payable	GARCIA RENTERIA, JESUS, PEDRO	$200.00		
115331	05/21/2026	Open			Accounts Payable	GRAPHICSLAND INC	$615.92		
115332	05/21/2026	Open			Accounts Payable	HD SUPPLY, INC.	$1,048.16		
115333	05/21/2026	Open			Accounts Payable	HERRERA, JENNIFER	$480.00		
115334	05/21/2026	Open			Accounts Payable	HUGHES FIRE EQUIPMENT, INC.	$603.26		
115335	05/21/2026	Open			Accounts Payable	JAY'S ELECTRIK LLC	$1,169.65		
115336	05/21/2026	Open			Accounts Payable	LA BODEGA, LLC	$25.00		
115337	05/21/2026	Open			Accounts Payable	M & Y ELECTRICAL LLC	$2,895.17		
115338	05/21/2026	Open			Accounts Payable	MENDEZ CAMPA, CARLOS	$500.00		
115339	05/21/2026	Open			Accounts Payable	METRO FIRE EQUIPMENT INC	$343.00		
115340	05/21/2026	Open			Accounts Payable	PFVT MOTORS, INC	$52,220.16		
115341	05/21/2026	Open			Accounts Payable	PITNEY BOWES GLOBAL FINANCIAL SERVICES LLC	$236.96		

SCHEDULE B

City of San Luis

Payment Register

From Payment Date: 5/18/2026 - To Payment Date: 5/21/2026

Number	Date	Status	Void Reason	Reconciled/ Voided Date	Source	Payee Name	Transaction Amount	Reconciled Amount	Difference
115342	05/21/2026	Open			Accounts Payable	PREPAID LEGAL SERVICES	$99.65		
115343	05/21/2026	Open			Accounts Payable	PROACTIVE WORK HEALTH MEDICAL CENTER INC	$1,235.00		
115344	05/21/2026	Open			Accounts Payable	PUEBLO PIES LLC	$500.00		
115345	05/21/2026	Open			Accounts Payable	QUINONEZ, FRANCISCO	$945.00		
115346	05/21/2026	Open			Accounts Payable	REPUBLIC SERVICES, INC.	$249.59		
115347	05/21/2026	Open			Accounts Payable	RODRIGUEZ, JARMY	$266.17		
115348	05/21/2026	Open			Accounts Payable	STAGE ONE BUSINESS SOLUTIONS, LLC	$7,500.00		
115349	05/21/2026	Open			Accounts Payable	STANDARD INSURANCE CO.	$1,022.43		
115350	05/21/2026	Open			Accounts Payable	STUDIO CERO NUEVE DESIGNS	$422.87		
115351	05/21/2026	Open			Accounts Payable	TORRES, OMAR	$257.60		
115352	05/21/2026	Open			Accounts Payable	TRELLINT (A MODAXO COMPANY)	$208.70		
115353	05/21/2026	Open			Accounts Payable	VALENZUELA, ELIDA	$450.00		
115354	05/21/2026	Open			Accounts Payable	VALENZUELA EGURROLA, DARITZA	$420.00		
115355	05/21/2026	Open			Accounts Payable	VALLEJO, JORGE	$200.00		
115356	05/21/2026	Open			Accounts Payable	VENEGAS LLAMAS, FRANCISCO	$350.00		
115357	05/21/2026	Open			Accounts Payable	VILLA, CARLOS, ALBERTO	$335.00		
115358	05/21/2026	Open			Accounts Payable	VILLAPUDUA, LUIS, A	$350.00		
115359	05/21/2026	Open			Accounts Payable	VISION SERVICE PLAN OF ARIZONA	$24.48		
115360	05/21/2026	Open			Accounts Payable	WAL-MART	$60.00		
115361	05/21/2026	Open			Accounts Payable	ZARAGOZA, JOSE	$25.93		
115362	05/21/2026	Open			Accounts Payable	ARIZONA CONFERENCE OF POLICE & SHERIFFS	$575.00		
115363	05/21/2026	Open			Accounts Payable	FOP/ALC	$450.00		
115364	05/21/2026	Open			Accounts Payable	SUPPORT PAYMENT CLEARINGHOUSE	$2,465.84		
115365	05/21/2026	Open			Accounts Payable	UNITED WAY OF YUMA COUNTY INC.	$14.00		
115366	05/21/2026	Open			Accounts Payable	UNITED YUMA FIRE FIGHTERS ASSOC	$116.00		
115367	05/21/2026	Open			Accounts Payable	UNITED YUMA FIRE FIGHTERS-IAFF	$1,520.00		
Type Check Totals:					67 Transactions		$171,035.81		
EFT									
9699	05/21/2026	Open			Accounts Payable	AIRGAS, INC.	$88.41		
9700	05/21/2026	Open			Accounts Payable	AMBERLY'S PLACE	$12,500.00		
9701	05/21/2026	Open			Accounts Payable	ARIZONA POLICE PSYCHOLOGY, PLLC	$400.00		
9702	05/21/2026	Open			Accounts Payable	BILL ALEXANDER FORD	$677.69		
9703	05/21/2026	Open			Accounts Payable	BOWNET PROMOTIONS LLC	$685.00		
9704	05/21/2026	Open			Accounts Payable	BTE BODY COMPANY INC	$534.10		
9705	05/21/2026	Open			Accounts Payable	CDWG	$2,839.89		
9706	05/21/2026	Open			Accounts Payable	CHAPMAN CHEVROLET BUICK GMC YUMA LLC	$220.62		
9707	05/21/2026	Open			Accounts Payable	CHAPMAN DCJR YUMA LLC	$689.64		
9708	05/21/2026	Open			Accounts Payable	CORE ENGINEERING GROUP, PLLC	$7,684.00		
9709	05/21/2026	Open			Accounts Payable	CUEVAS, CHRISTIAN	$87.50		

City of San Luis

Payment Register

From Payment Date: 5/18/2026 - To Payment Date: 5/21/2026

Number	Date	Status	Void Reason	Reconciled/ Voided Date	Source	Payee Name	Transaction Amount	Reconciled Amount	Difference
9710	05/21/2026	Open			Accounts Payable	DESERT DOCUMENT SHREDDERS, LLC	$37.75		
9711	05/21/2026	Open			Accounts Payable	DESERT VALLEY SERVICES, INC	$1,238.07		
9712	05/21/2026	Open			Accounts Payable	DESERT WATER STORE INC	$293.98		
9713	05/21/2026	Open			Accounts Payable	DIGITAL ROOM LLC	$73.17		
9714	05/21/2026	Open			Accounts Payable	FRESH TERRA SERVICES LLC	$135.00		
9715	05/21/2026	Open			Accounts Payable	GARCIA, JESUS	$192.00		
9716	05/21/2026	Open			Accounts Payable	HANSBERGER REGRIGERATION & ELECTRIC CO	$2,757.00		
9717	05/21/2026	Open			Accounts Payable	JTB SUPPLY COMPANY. INC	$32,870.11		
9718	05/21/2026	Open			Accounts Payable	KIMLEY-HORN AND ASSOCIATES INC	$98,833.00		
9719	05/21/2026	Open			Accounts Payable	KTL&C, LLC.	$312.48		
9720	05/21/2026	Open			Accounts Payable	POLAR ICE LLC	$504.29		
9721	05/21/2026	Open			Accounts Payable	PURCHASE POWER	$3,006.25		
9722	05/21/2026	Open			Accounts Payable	R&M ELECTRIC SUPPLY LLC	$3,007.56		
9723	05/21/2026	Open			Accounts Payable	ROACH PEST CONTROL	$75.00		
9724	05/21/2026	Open			Accounts Payable	RUSH TRUCK CENTER	$2,675.82		
9725	05/21/2026	Open			Accounts Payable	SAM'S CLUB	$2,857.81		
9726	05/21/2026	Open			Accounts Payable	SAN DIEGO POLICE EQUIPMENT CO.	$5,057.33		
9727	05/21/2026	Open			Accounts Payable	SIMS MACKIN, LTD.	$600.00		
9728	05/21/2026	Open			Accounts Payable	SOUTHERN TIRE MART LLC	$6,527.04		
9729	05/21/2026	Open			Accounts Payable	SOUTHWEST MERCH LLC	$456.48		
9730	05/21/2026	Open			Accounts Payable	SPECIALTY SEWING SENTER, INC.	$1,918.68		
9731	05/21/2026	Open			Accounts Payable	TELEFLEX MEDICAL INCORPORATED	$6,371.47		
9732	05/21/2026	Open			Accounts Payable	THOMSON WEST PUBLISHING CO.	$2,626.09		
9733	05/21/2026	Open			Accounts Payable	TRUCKPRO HOLDING CORPORATION	$1,692.35		
9734	05/21/2026	Open			Accounts Payable	ULINE, INC.	$870.53		
9735	05/21/2026	Open			Accounts Payable	UNITED TACTICAL SYSTEMS, LLC	$840.00		
9736	05/21/2026	Open			Accounts Payable	WESCO DISTRIBUTION INC	$10,248.96		
9737	05/21/2026	Open			Accounts Payable	YUMA WINNELSON CO.	$7,088.69		
Type EFT Totals:					39 Transactions		$219,573.76		

1BYPAYABLE - 1st BY Accounts Payable Totals

Checks	Status	Count	Transaction Amount	Reconciled Amount
	Open	67	$171,035.81	$0.00
	Reconciled	0	$0.00	$0.00
	Voided	0	$0.00	$0.00
	Stopped	0	$0.00	$0.00
	Total	67	$171,035.81	$0.00

EFTs	Status	Count	Transaction Amount	Reconciled Amount
	Open	39	$219,573.76	$0.00
	Reconciled	0	$0.00	$0.00
	Voided	0	$0.00	$0.00
	Total	39	$219,573.76	$0.00

All	Status	Count	Transaction Amount	Reconciled Amount

City of San Luis

Payment Register

From Payment Date: 5/18/2026 - To Payment Date: 5/21/2026

Number	Date	Status	Void Reason	Reconciled/ Voided Date	Source		Payee Name	Transaction Amount	Reconciled Amount	Difference
					Open	106	$390,609.57		$0.00	
					Reconciled	0	$0.00		$0.00	
					Voided	0	$0.00		$0.00	
					Stopped	0	$0.00		$0.00	
					Total	106	$390,609.57		$0.00	

Grand Totals:

Checks	Status	Count	Transaction Amount	Reconciled Amount
	Open	67	$171,035.81	$0.00
	Reconciled	0	$0.00	$0.00
	Voided	0	$0.00	$0.00
	Stopped	0	$0.00	$0.00
	Total	67	$171,035.81	$0.00

EFTs	Status	Count	Transaction Amount	Reconciled Amount
	Open	39	$219,573.76	$0.00
	Reconciled	0	$0.00	$0.00
	Voided	0	$0.00	$0.00
	Total	39	$219,573.76	$0.00

All	Status	Count	Transaction Amount	Reconciled Amount
	Open	106	$390,609.57	$0.00
	Reconciled	0	$0.00	$0.00
	Voided	0	$0.00	$0.00
	Stopped	0	$0.00	$0.00
	Total	106	$390,609.57	$0.00

Guadalupe Canez

Digitally signed by: Guadalupe Canez
DN: CN = Guadalupe Canez email = gcanez@sanluisaz.gov C = AD
Date: 2026.05.21 18:02:01 -07'00'

City of San Luis

Payment Register

From Payment Date: 5/25/2026 - To Payment Date: 5/29/2026

Number	Date	Status	Void Reason	Reconciled/ Voided Date	Source	Payee Name	Transaction Amount	Reconciled Amount	Difference
1BYPAYABLE - 1st BY Accounts Payable									
Check									
115368	05/29/2026	Open			Accounts Payable	ALLO HOLDINGS, LLC	$1,433.42		
115369	05/29/2026	Open			Accounts Payable	APS	$80,911.87		
115370	05/29/2026	Open			Accounts Payable	ARIZONA MUNICIPAL CLERK'S ASSOCIATION	$370.00		
115371	05/29/2026	Open			Accounts Payable	ARIZONA WESTERN COLLEGE	$15,906.00		
115372	05/29/2026	Open			Accounts Payable	ARIZONA WESTERN COLLEGE FOUNDATION	$3,000.00		
115373	05/29/2026	Open			Accounts Payable	AT&T MOBILITY LLC	$8,506.08		
115374	05/29/2026	Open			Accounts Payable	BARCENA, ALMA	$45.00		
115375	05/29/2026	Open			Accounts Payable	CANON FINANCIAL SERVICES, INC	$1,276.70		
115376	05/29/2026	Open			Accounts Payable	CONSTRUCTION SUPPLY HOLDINGS II, LLC	$5,539.90		
115377	05/29/2026	Open			Accounts Payable	CONTRERAS, ALFONSO	$119.24		
115378	05/29/2026	Open			Accounts Payable	DAHL, ROBINS & ASSOCIATES, INC	$900.00		
115379	05/29/2026	Open			Accounts Payable	DESERT DOOR & BUILDING SUPPLY, LLC	$1,360.00		
115380	05/29/2026	Open			Accounts Payable	DIAZ, BRYAN	$383.00		
115381	05/29/2026	Open			Accounts Payable	EDWARDS & AMATO P.C.	$6,875.00		
115382	05/29/2026	Open			Accounts Payable	FX TACTICAL, LLC	$994.02		
115383	05/29/2026	Open			Accounts Payable	GAMMAGE & BURNHAM, PLC	$1,568.25		
115384	05/29/2026	Open			Accounts Payable	GARCIA, JESUS	$200.00		
115385	05/29/2026	Open			Accounts Payable	HAJOCA CORPORATION	$36.65		
115386	05/29/2026	Open			Accounts Payable	HD SUPPLY, INC.	$981.19		
115387	05/29/2026	Open			Accounts Payable	HEARTFIT FOR DUTY LLC	$10,013.80		
115388	05/29/2026	Open			Accounts Payable	HUGHES FIRE EQUIPMENT, INC.	$100.20		
115389	05/29/2026	Open			Accounts Payable	IMSA GARAGE DOORS LLC	$710.00		
115390	05/29/2026	Open			Accounts Payable	INTERNATIONAL ASSOC. FOR PROP/EVIDENCE	$65.00		
115391	05/29/2026	Open			Accounts Payable	JAMES COOKE & HOBSON INC.	$694.95		
115392	05/29/2026	Open			Accounts Payable	LOWE'S HIW, INC.	$1,828.94		
115393	05/29/2026	Open			Accounts Payable	MORENO, PEDRO	$200.00		
115394	05/29/2026	Open			Accounts Payable	MYERS TIRE SUPPLY DISTRIBUTION INC	$439.86		
115395	05/29/2026	Open			Accounts Payable	PRECISION UNIFORMS LLC	$3,115.85		
115396	05/29/2026	Open			Accounts Payable	SAFETY-KLEEN SYSTEMS, INC	$747.31		
115397	05/29/2026	Open			Accounts Payable	SOUTHWEST PLUMBING & AIR LLC	$6,500.00		
115398	05/29/2026	Open			Accounts Payable	STATUS CREATIVO LLC	$1,107.97		
115399	05/29/2026	Open			Accounts Payable	TORRES, OMAR	$161.00		
115400	05/29/2026	Open			Accounts Payable	VISION SERVICE PLAN OF ARIZONA	$5,495.25		
115401	05/29/2026	Open			Accounts Payable	YUMA COUNTY DEVELOPMENT SERVICES	$250.00		
115402	05/29/2026	Open			Accounts Payable	YUMA WINLECTRIC CO.	$331.20		
Type Check Totals:					35 Transactions		$162,167.65		
EFT									
9738	05/29/2026	Open			Accounts Payable	ANIMAL CARE EQUIPMENT AND SERVICES	$435.00		
9739	05/29/2026	Open			Accounts Payable	ARIZONA LAW ENFORCEMENT RADAR TECHNOLOGY	$7,396.66		

SCHEDULE C

City of San Luis

Payment Register

From Payment Date: 5/25/2026 - To Payment Date: 5/29/2026

Number	Date	Status	Void Reason	Reconciled/ Voided Date	Source	Payee Name	Transaction Amount	Reconciled Amount	Difference
9740	05/29/2026	Open			Accounts Payable	ARIZONA MEDICAL WASTE	$389.30		
9741	05/29/2026	Open			Accounts Payable	ARIZONA SUPREME COURT	$23,469.45		
9742	05/29/2026	Open			Accounts Payable	CDWG	$28,102.79		
9743	05/29/2026	Open			Accounts Payable	CHAPMAN DCJR YUMA LLC	$2,930.22		
9744	05/29/2026	Open			Accounts Payable	CITY OF YUMA	$788.16		
9745	05/29/2026	Open			Accounts Payable	CORE & MAIN LP	$3,914.77		
9746	05/29/2026	Open			Accounts Payable	CYBER MARKETING NETWORK, INC	$344.52		
9747	05/29/2026	Open			Accounts Payable	D & H ELECTRIC INC.	$315.00		
9748	05/29/2026	Open			Accounts Payable	DESERT WATER STORE INC	$46.50		
9749	05/29/2026	Open			Accounts Payable	FRESH TERRA SERVICES LLC	$2,690.00		
9750	05/29/2026	Open			Accounts Payable	FRUTH GROUP INC	$100.26		
9751	05/29/2026	Open			Accounts Payable	HANSBERGER REGRIGERATION & ELECTRIC CO	$3,770.00		
9752	05/29/2026	Open			Accounts Payable	HILL BROTHERS CHEMICAL CO.	$12,292.23		
9753	05/29/2026	Open			Accounts Payable	LESLIE'S POOLMART INC.	$693.18		
9754	05/29/2026	Open			Accounts Payable	MES SERVICE COMPANY, LLC	$415.17		
9755	05/29/2026	Open			Accounts Payable	MGC CONTRACTORS, INC	$397,846.50		
9756	05/29/2026	Open			Accounts Payable	PACIFIC ADVANCED CIVIL ENGINEERING INC	$28,996.59		
9757	05/29/2026	Open			Accounts Payable	PURCHASE POWER	$200.00		
9758	05/29/2026	Open			Accounts Payable	R&M ELECTRIC SUPPLY LLC	$974.58		
9759	05/29/2026	Open			Accounts Payable	REPUBLIC SERVICES, INC.	$32,825.85		
9760	05/29/2026	Open			Accounts Payable	SAN LUIS WALK IN CLINIC, INC	$175.00		
9761	05/29/2026	Open			Accounts Payable	SIMS MACKIN, LTD.	$2,575.00		
9762	05/29/2026	Open			Accounts Payable	SOUTHWEST MERCH LLC	$119.70		
9763	05/29/2026	Open			Accounts Payable	STRONG, CAMERON, T	$1,440.00		
9764	05/29/2026	Open			Accounts Payable	SWIFT GROUP LLC	$4,281.82		
9765	05/29/2026	Open			Accounts Payable	WAXIE SANITARY SUPPLY	$1,340.29		
9766	05/29/2026	Open			Accounts Payable	YUMA CO. AIRPORT AUTHORITY INC	$167.79		
9767	05/29/2026	Open			Accounts Payable	YUMA SIGN MASTERS LLC	$46.89		
9768	05/29/2026	Open			Accounts Payable	YUMA SUN INC	$324.00		
9769	05/29/2026	Open			Accounts Payable	ZOLL MEDICAL CORP	$456.55		
9770	05/29/2026	Open			Accounts Payable	AUTOZONE STORES, INC	$7,625.74		
Type EFT Totals:					33 Transactions		$567,489.51		

1BYPAYABLE - 1st BY Accounts Payable Totals

Checks	Status	Count	Transaction Amount	Reconciled Amount
	Open	35	$162,167.65	$0.00
	Reconciled	0	$0.00	$0.00
	Voided	0	$0.00	$0.00
	Stopped	0	$0.00	$0.00
	Total	35	$162,167.65	$0.00

EFTs	Status	Count	Transaction Amount	Reconciled Amount
	Open	33	$567,489.51	$0.00
	Reconciled	0	$0.00	$0.00
	Voided	0	$0.00	$0.00
	Total	33	$567,489.51	$0.00

City of San Luis

Payment Register

From Payment Date: 5/25/2026 - To Payment Date: 5/29/2026

Number	Date	Status	Void Reason	Reconciled/ Voided Date	Source	Payee Name	Transaction Amount	Reconciled Amount	Difference

All	Status	Count	Transaction Amount	Reconciled Amount
	Open	68	$729,657.16	$0.00
	Reconciled	0	$0.00	$0.00
	Voided	0	$0.00	$0.00
	Stopped	0	$0.00	$0.00
	Total	68	$729,657.16	$0.00

Grand Totals:

Checks	Status	Count	Transaction Amount	Reconciled Amount
	Open	35	$162,167.65	$0.00
	Reconciled	0	$0.00	$0.00
	Voided	0	$0.00	$0.00
	Stopped	0	$0.00	$0.00
	Total	35	$162,167.65	$0.00

EFTs	Status	Count	Transaction Amount	Reconciled Amount
	Open	33	$567,489.51	$0.00
	Reconciled	0	$0.00	$0.00
	Voided	0	$0.00	$0.00
	Total	33	$567,489.51	$0.00

All	Status	Count	Transaction Amount	Reconciled Amount
	Open	68	$729,657.16	$0.00
	Reconciled	0	$0.00	$0.00
	Voided	0	$0.00	$0.00
	Stopped	0	$0.00	$0.00
	Total	68	$729,657.16	$0.00

Guadalupe Canez

Digitally signed by: Guadalupe Canez
DN: CN = Guadalupe Canez email = gcanez@sanluisaz.gov
C = AD
Date: 2026.05.29 18:22:11 -07'00'

City of San Luis

Payment Register

From Payment Date: 6/1/2026 - To Payment Date: 6/3/2026

Number	Date	Status	Void Reason	Reconciled/ Voided Date	Source	Payee Name	Transaction Amount	Reconciled Amount	Difference
1BYPAYABLE - 1st BY Accounts Payable									
Check									
115403	06/02/2026	Open			Accounts Payable	PWW ADVISORY GROUP LLC	$5,700.00		
115404	06/02/2026	Open			Accounts Payable	RIVAS TOOL ENTERPRISES LLC	$3,143.95		
Type Check Totals:					2 Transactions		$8,843.95		
EFT									
9771	06/02/2026	Open			Accounts Payable	CITY OF SAN LUIS EMPLOYEE BENEFIT TRUST	$371,163.00		
9772	06/03/2026	Open			Accounts Payable	AUTOZONE STORES, INC	$5,771.09		
9773	06/03/2026	Open			Accounts Payable	CITY OF SAN LUIS EMPLOYEE BENEFIT TRUST	$371,738.00		

SCHEDULE D

City of San Luis

Payment Register

From Payment Date: 6/1/2026 - To Payment Date: 6/3/2026

Number	Date	Status	Void Reason	Reconciled/ Voided Date	Source	Payee Name	Transaction Amount	Reconciled Amount	Difference
9774	06/03/2026	Open			Accounts Payable	O'REILLY AUTO PARTS	$3,835.22		
Type EFT Totals:					4 Transactions		$752,507.31		
1BYPAYABLE - 1st BY Accounts Payable Totals									

Checks	Status	Count	Transaction Amount	Reconciled Amount
	Open	2	$8,843.95	$0.00
	Reconciled	0	$0.00	$0.00
	Voided	0	$0.00	$0.00
	Stopped	0	$0.00	$0.00
	Total	2	$8,843.95	$0.00

EFTs	Status	Count	Transaction Amount	Reconciled Amount
	Open	4	$752,507.31	$0.00
	Reconciled	0	$0.00	$0.00
	Voided	0	$0.00	$0.00
	Total	4	$752,507.31	$0.00

All	Status	Count	Transaction Amount	Reconciled Amount
	Open	6	$761,351.26	$0.00
	Reconciled	0	$0.00	$0.00
	Voided	0	$0.00	$0.00
	Stopped	0	$0.00	$0.00
	Total	6	$761,351.26	$0.00

Grand Totals:

Checks	Status	Count	Transaction Amount	Reconciled Amount
	Open	**2**	**$8,843.95**	**$0.00**
	Reconciled	**0**	**$0.00**	**$0.00**
	Voided	**0**	**$0.00**	**$0.00**
	Stopped	**0**	**$0.00**	**$0.00**
	Total	**2**	**$8,843.95**	**$0.00**

EFTs	Status	Count	Transaction Amount	Reconciled Amount
	Open	**4**	**$752,507.31**	**$0.00**
	Reconciled	**0**	**$0.00**	**$0.00**
	Voided	**0**	**$0.00**	**$0.00**
	Total	**4**	**$752,507.31**	**$0.00**

All	Status	Count	Transaction Amount	Reconciled Amount
	Open	**6**	**$761,351.26**	**$0.00**
	Reconciled	**0**	**$0.00**	**$0.00**
	Voided	**0**	**$0.00**	**$0.00**
	Stopped	**0**	**$0.00**	**$0.00**
	Total	**6**	**$761,351.26**	**$0.00**

Guadalupe Canez

Digitally signed by: Guadalupe Canez
DN: CN = Guadalupe Canez email = gcanez@sanluisaz.gov C = AD
Date: 2026.06.03 11:46:17 -07'00'

AGENDA ITEM REVIEW FORM

Regular City Council Meeting **7. A.**

Meeting Date: 06/10/2026
Department Head: Joe Estes, City Attorney, Attorney's Office
Submitted By: Justin Neuman, Paralegal, Attorney's Office
Action Requested: Motion

ITEM:

Discussion and possible action on any and all matters regarding the Fiscal Year 2026-2027 for the 4FrontED annual contribution. **(Jenny Torres, City Manager)**

SUMMARY:

IGA Organizational Structure: 4FrontED was created through an Intergovernmental Agreement ("IGA") that includes Yuma County and the municipalities within it. The Board consists of the mayors of each municipality in the county and a county supervisor. The staff is each community's economic development staff or designee. 4FrontED hires an Executive Director. The City of Yuma is the Fiscal Agent. The IGA was set to expire on February 13, 2024, but it was automatically renewed when the participating entities elected not to give thirty (30) days' notice.

Service: 4FrontED provides a binational program focused on education, economic development, infrastructure, and tourism in the U.S.-Mexico Border region, collaborating with California, Baja California Norte, Sonora, and Arizona to mutually uplift the region's economy.

Amount: 4FrontED Requested a contribution of $17,722.35 for FY 2026-2027 per $0.45 per capita for San Luis.

RECOMMENDATION / SUGGESTED MOTION:

I MOVE NOT TO APPROVE THE CONTRIBUTION TO 4FRONTED FOR THE FISCAL YEAR 2026-2027.

I MOVE TO APPROVE THE CONTRIBUTION TO 4FRONTED IN THE AMOUNT OF $_____ FOR THE FISCAL YEAR 2026-2027

Fiscal Impact

IS THERE FISCAL IMPACT ASSOCIATED WITH THIS ITEM:	Yes
CITY/STATE/FEDERAL FUNDS:	City
TOTAL:	$17,722.35
BUDGETED AMOUNT:	$0.00
AVAILABLE AMOUNT TO TRANSFER:	N/A

ACCT NAME & GL#/REMAINING BALANCE BEFORE PURCHASE: 100-110-80000 - Contractual Services

FISCAL IMPACT STATEMENT (IF THIS IS A BUDGET TRANSFER, YOU MUST ATTACH THE BUDGET ADJUSTMENT FORM):

This annual contribution was not included in the preliminary budget of FY 2026- 2027. A contribution would need to be allocated in the Council's contractual services for the FY 2026-2027.

Attachments

4FRONTED Funding Request

4FRONTED IGA

A Testament to Regional Leadership & Global Transformation

To: Honorable Mayor and Members of the City Council of San Luis, AZ

From: Dr. Victor Remigio Martínez Cantú, Executive Director, 4FrontED

Date: May 6, 2026

Subject: FY 2026-2027 Support Request: San Luis as a Premier Global Border Community

Executive Overview: A Landmark of Binational Cooperation

San Luis, Arizona, its community, elected representatives, and public servants have performed a transcendent task in consolidating sustained growth that now positions the city as the primary benchmark for binational synergy within the "Two Nations, Four States" mega-region.

The coordinated efforts of the City Council, the City Administration, and the Department of Economic Development have transformed this jurisdiction into an extraordinary example of how a young and vibrant community can achieve world-class standards in security and education through a strategic international commitment. Under this leadership, San Luis has successfully transformed one of its most critical assets: its border crossings.

The modernization of the San Luis I Port of Entry is not merely an infrastructure project; it is a milestone that redefines the City's vocation toward a prosperous and resilient community. We recognize that current technological and political conditions have evolved with unprecedented intensity, generating challenges where traditional industries give way to higher-value proposals. In this juncture, San Luis must not spare resources to maintain its pace of innovation and secure its social license to operate on the global stage.

Furthermore, it is essential to highlight the leading role the City plays in the social construction of the region. Through activities that foster coexistence, such as the **International Mayors' Bike Ride**—which celebrates a decade of success this year—the authorities of San Luis provide a clear example of political will and of how to build a safe and harmonious border between Mexico and the United States. This **paradiplomacy** effort is the foundation upon which 4FrontED continues to build a favorable and predictable business environment for all our strategic partners.

Milestone Success: The San Luis I Port Modernization

The City of San Luis stands as the prime example of effective relations with Mexican partners. The San Luis I Port of Entry Modernization—expanding from 8 to 16 lanes—is one of the most significant regional milestones in recent history. This facility optimizes the flow of binational talent and specialized services, serving as the logistics backbone that allows our integrated productive ecosystem to thrive.

Orderly Growth and Social License

The City's expertise in managing rapid, orderly growth while maintaining high safety and educational standards is a testament to its social license to operate. Through our advocacy in regional media and high-level political circles, 4FrontED has consistently highlighted San Luis as a "Safe Harbor" for international capital and a leader in workforce cultivation.

Strategic Continuity for FY 2026-2027

Driving Future Synergy: Moving forward, 4FrontED seeks to leverage the expertise of San Luis to drive our upcoming **Private Sector Regional Synergy Reunion**. This initiative will showcase your community's unique ability to bridge the gap between high-tech industrial requirements and a culturally agile workforce.

Fiscal Responsibility and Support Request: In recognition of the City's commitment to fiscal discipline and the ongoing regional budget constraints, 4FrontED is proposing a **zero-increase budget for FY 2026-2027**. We believe this approach demonstrates the same professional precision and coherence that defines the San Luis administration.

The total requested contribution remains at **$98,090.10**, with the specific allocation for your jurisdiction as follows:

Jurisdiction	**Contribution Rate**	**Proposed FY 2026-2027 Support**
City of San Luis	**$0.45 per capita**	**$17,722.35**

A Shared Binational Legacy

Your continued support of the 4FrontED initiative ensures that San Luis remains the permanent link to Mexico's industrial heartland. We are honored to serve as your strategic gateway, helping to project the expertise of San Luis across the border to ensure our mega-region remains a global leader in innovation and production.

Thank you for your time, your leadership, and your continued collaboration.

Best regards,

Dr. Victor Remigio Martínez Cantú

Executive Director, 4FrontED

CONFORMED COPY
2019-07687 RESOLUTION
03/28/2019 11:25:58 AM Pages: 32 Fees: $21.50
Requested By:SAN LUIS CITY OF
Recorded By: mlopez
Robyn Stallworth Pouquette County Recorder, YUMA County AZ

WHEN RECORDED MAIL TO:

CITY OF SAN LUIS
P.O. BOX 1170
SAN LUIS, ARIZONA
ATTN: CITY CLERK

The above area is to be reserved for recording information

****

CAPTION HEADING:

Resolution No. 2063

For the continued support of Economic Development in the Greater Yuma Region

OFFICE OF THE
MAYOR
CITY OF SAN LUIS

Resolution

No. 2063

A RESOLUTION OF THE MAYOR AND CITY COUNCIL OF THE CITY OF SAN LUIS, ARIZONA AUTHORIZING AND DIRECTING THE ENTERING INTO THE 4FRONTED BINATIONAL PROGRAM THROUGH AN AMENDED AND RESTATED INTERGOVERNMENTAL AGREEMENT WITH THE TOWN OF WELLTON, THE CITIES OF SOMERTON AND YUMA, AND YUMA COUNTY FOR THE CONTINUED SUPPORT OF ECONOMIC DEVELOPMENT OF THE GREATER YUMA REGION.

BE IT RESOLVED by the Mayor and City Council of the City of San Luis, Arizona, as follows:

Section 1. That it is deemed in the best interest of City of San Luis and its residents that the city enter into an Amended and Restated Intergovernmental Agreement with the Town of Wellton, the cities of Somerton and Yuma, and Yuma County for the continued support of economic development of the greater Yuma region;

Section 2. That a true copy of said Intergovernmental Agreement is incorporated herein as though fully set forth again in full;

Section 3. That the Mayor or City Manager and his designee are hereby authorized and directed to execute this Amended and Restated Intergovernmental Agreement on behalf of the City of San Luis and to take any and all actions as may be necessary to put the agreement into effect; and

Section 4. That the San Luis City Clerk and her designee are authorized and directed to maintain this Amended and Restated Intergovernmental Agreement in the official files of the City Clerk and to deliver it to the other Parties to said Agreement.

PASSED, ADOPTED and APPROVED by the Mayor and City Council of the City of San Luis, Yuma County, Arizona this 13th day of February 2019.

Gerardo Sanchez, Mayor

ATTEST:

Sonia Cornelio, City Clerk

APPROVED AS TO FORM:

Kay Marion Macuil, City Attorney

AMENDED AND RESTATED
INTERGOVERNMENTAL AGREEMENT OF THE
4FRONTED BINATIONAL PROGRAM
TO SUPPORT
ECONOMIC DEVELOPMENT IN THE GREATER YUMA REGION

This Amended and Restated Agreement (this "Agreement") is made as of the date of the last governing agencies' signature below, this 13th day of February, 2019, (the "Agreement Date").

This Agreement is made among the following governmental agencies:

City of San Luis, an Arizona municipal corporation
1090 East Union Street
San Luis, Arizona 85349 ("San Luis");

City of Somerton, an Arizona municipal corporation
110 North State Avenue
Somerton, Arizona 85350 ("Somerton");

Town of Wellton, an Arizona municipal corporation
28634 Oakland Avenue
Wellton, Arizona 85356 ("Wellton");

City of Yuma, an Arizona municipal corporation with Charter
One City Plaza
Yuma, Arizona 85364 ("Yuma") and

County of Yuma, a body corporate and politic of the State of Arizona
198 West Main Street
Yuma, Arizona 85364 (the "County").

The above governmental agencies may be referred to individually as a "Party," and collectively as the "Parties" or as the "Cities and County." The governmental agencies which are municipalities may be referred to collectively as the "Cities." The Cities and County comprise a funding committee of the area inside Yuma County for the sole purposes of this Agreement.

RECITALS

A. The Parties entered into an Intergovernmental Agreement dated September 19, 2016, to promote economic development of the Region (the "Original Agreement").

B. The County and the Cities joining in this Agreement wish to continue to have a formalized

multilateral relationship to promote growth and expand economic opportunities in Yuma County, Arizona, U.S.A.; Imperial County, California, U.S.A.; San Luis Rio Colorado, Sonora, Mexico; and regions within Baja California, Mexico.

C. Yuma County is authorized to participate in Economic Development activities pursuant to A.R.S. §§11-251(21), 11-254, and 11-254.04. The Cities are authorized to participate in Economic Development pursuant to A.R.S. §9-500.11.

D. The County and the Cities support the 4FrontED Binational Program objectives which include but are not limited to the following:

Binational Cluster Development

1. Identify, map, and define binational regional business clusters such as advanced manufacturing opportunities. Establish and strengthen relationships with companies in northern Mexico in aerospace, automotive, electronic, agribusiness, and electrical devices, and promote the Region's logistics/distribution and cost competitive advantages for potential advanced manufacturing opportunities. Sustain the momentum with the University of Arizona cluster work and the North American Research Partnership cluster mapping.

- Engage the Region's manufacturers in RevAZ (Arizona Commerce Authority's Manufacturing Extension Partnership program), particularly with the ExporTech Boot Camp.

- Further leverage the economic benefit of the agriculture trade moving through the San Luis II Port of Entry. Maintain and grow agribusiness trade by addressing binational infrastructure and transportation improvements from major growing regions in Mexico and strengthening relationships throughout western Mexico. Continue to expand value-added produce opportunities in packaged food.

- Work to attract foreign direct investment (FDI) projects within the transportation, tourism, and economic development sectors. Leverage the international and foreign investment partners working with the University of Arizona Yuma Center of Excellence for Desert Agriculture to develop a larger footprint in the Region.

- Focus on manufacturing industries to provide higher average wages, create more indirect economic activity for the Region, impact the regional tax base, and attract new revenues to the Region resulting in an expanded economy

through the following manufacturing sectors: perishable prepared food, storage battery, fluid milk, aircraft, fabricated structural metals, metal stamping, truck trailer, sign, unmanned vehicle and computerized numerical control machining.

- Continue to implement the Investing in Manufacturing Communities Partnership (IMCP) strategy working collaboratively to develop and promote advanced manufacturing.

- Work with existing industries to improve access and attract a supply chain of businesses to the 4FrontED Region.

- Actively engage the private sector and regional businesses to assist in the implementation of the 4FrontED initiative.

2. Strengthen Binational Workforce Development.

- Broaden the educational exchange among the Region's institutions and Mexico by establishing a binational education task force to ensure a stronger regional labor force that meets the current and future needs of regional businesses.

- Collaborate with Arizona Western College, Northern Arizona University, Arizona State University, University of Arizona and other institutions of higher learning to target advanced degrees to maquila managers or leadership.

3. Develop binational tourism.

- Work collaboratively to leverage existing tourism assets and further develop visitor destinations within the binational Region. Create and actively implement a binational tourism development and marketing program with a focus on recreation and culture.

- Implement a strategy to develop and attract medical tourism to the 4FrontED Region.

- Develop and promote a binational calendar of events.

4. Leverage port of entry and border infrastructure investments.

- Aggressively promote the San Luis commercial port of entry, San Luis II Port of Entry.

- Continue to pursue improvements to the ports of entry.

- Pursue increased ports of entry staffing to improve efficiencies of border crossings.

- Build cross-border public transportation, bicycling and pedestrian improvements.

5. Spur innovation and entrepreneurism.

- Leverage the San Luis Business Incubator to foster business growth in manufacturing, machining, distribution, and support businesses.

- Make the 4FrontED binational Region an entrepreneurial hub by leveraging the U.S. entrepreneurial visa program that can promote new business start-ups and innovation.

6. Maximize developable industrial land.

- Move forward with economic development strategies to ensure that the industrial border land is ready for manufacturing facilities. Focus on project readiness of industrial sites.

7. Continue to improve regional infrastructure.

- The Cities of San Luis, San Luis Rio Colorado, Somerton, Wellton, Yuma and Yuma County are committed to building a rail connection between the City of San Luis Rio Colorado and Yuma to support economic development.

- Work to implement project priorities identified in the Border Master Plans (2013)

- Prioritize regional infrastructure projects to support economic development efforts and pursue grant funding.

AGREEMENT

NOW, THEREFORE, in consideration of the foregoing introduction and recitals, and the mutual promises contained herein, the receipt and sufficiency of which are hereby acknowledged, the Parties hereby agree as follows:

SECTION ONE. DEFINITION OF TERMS

The following terms and expressions as used in this Agreement, unless the context clearly shows otherwise, shall have the following meaning:

1.1 "Binational Program" means the 4FrontED Binational Program for attracting businesses for

regional economic development and growth as described in this Agreement.

1.2 "Region" means Yuma County, Arizona, U.S.A.; Imperial County, California, U.S.A.; San Luis Rio Colorado, Sonora; and regions within Baja California, Mexico.

SECTION TWO. GENERAL PROVISIONS

2.1 San Luis is the "Fiscal Agent" responsible for administering the funds for the Binational Program. The Fiscal Agent is the Finance Director for the City of San Luis. San Luis shall only use the funds for the objectives stated in this Agreement's recitals, and the funds expended, shall not exceed the one-year budget as set forth in Exhibit A, attached hereto and incorporated herein by reference. The Fiscal Agent shall not distribute and expend any funds without the prior authorization from the Executive Director and or at least one other Party. The Fiscal Agent is responsible for the engagement of the services of the Executive Director, as defined in this section, along with the rest of the Cities and the County, and for preparing and providing expenses and budget reports to the other Cities and the County on a quarterly basis. The reports shall be prepared in accordance with generally accepted accounting principles.

2.2 Through their respective budgeting processes, the Parties shall budget for and contribute to the funding of services for a bilingual and bi-cultural executive director ("Executive Director") and related economic activities. Each Parties funding amount shall be based on twenty cents (20¢) per capita and using the Parties' 2017 population estimates from the Arizona Department of Revenue, attached hereto as a part of Exhibit A, and incorporated herein by reference. The 2017 population estimates and respective Parties contribution is as follows:

Location	Population	Contribution
San Luis, AZ	35,289	$ 7,058.00
Somerton	17,103	$ 3,421.00
Wellton	3,171	$ 634.00
Yuma City	101,620	$ 20,324.00
Yuma County[1]	64,465	$ 12,893.00
Total	**221,648**	**$ 44,330.00**

[1] Yuma County population only includes population not within an incorporated area.

The contributions shall be adjusted on an annual basis based on the Arizona Department of Revenue population estimates and on the recommendation of the 4FrontED staff and the approval of all of the Parties through their respective budgeting and procurement procedures.The funds should be submitted to the Fiscal Agent by August 1st of each year.

2.3 The County and the Cities may, through the Fiscal Agent, engage the services of an Executive Director to manage the Binational Program. The Executive Director responsibilities include, but are not limited to, maintaining websites and social media accounts for 4FrontED, preparing and giving presentations to large groups, promoting the binational Region and being the main link between organizations on both sides of the border.

2.4 The County and the Cities shall, through the Fiscal Agent, contract with any other contractor(s) or entity/entities to meet the goals as stated in this Agreement.

2.5 The County and the Cities shall work with San Luis Rio Colorado, Sonora, Mexico and other cities in Mexico as deemed appropriate.

SECTION THREE. FORCE MAJEURE

If by reason of force majeure any Party to this Agreement shall be rendered unable wholly or in part to carry out its obligations under this Agreement, then if such Party shall give notice and full particulars of such force majeure in writing to the other Parties within a reasonable time after occurrence of the event or cause relied on, the obligation of the Party giving such notice, so far as it is affected by such force majeure, shall be suspended during the continuance of the inability then claimed, but not for any longer period. Any such Party shall diligently endeavor to remove or overcome such inability with all reasonable dispatch. If a Party cannot remove or overcome its force majeure, then such Party may terminate its participation in this Agreement by providing 30 days of written notice to the other Parties. The term "force majeure" as used in this Agreement shall mean acts of God, strikes, lockouts, or other industrial disturbances, acts of public enemy, orders of any kind of the Government of the United States or the State of Arizona, or any civil or military authority, insurrection, riots, epidemics, landslides, lightning, earthquake, fires, hurricanes, storms, floods, washouts, droughts, arrests, restraint of government and people, civil disturbances, explosions, breakage or accidents to machines, pipelines or canals, and inability on the part of the County or the Cities to provide services under this Agreement on account of any other causes not reasonably within the control of the Party.

SECTION FOUR. TERM OF AGREEMENT; EXTENSION; RENEWAL

4.1 Original Agreement: The term of the Original Agreement was from September 19, 2016, to September 19, 2017. The Original Agreement is attached hereto at Exhibit B.

4.2 Extension: This Agreement extends the term of the Original Agreement retroactively. The term of Original Agreement shall terminate as of the Agreement Date of this Agreement.

4.3 Effective: This Agreement shall be effective upon the Agreement Date. The Agreement Date is the date the last Party signs this Agreement. There shall be no gap in time between the extension of the Original Agreement and the Agreement Date.

4.4 Term: The term of this Agreement shall be from the Agreement Date for a period of five years and shall automatically renew for up to five successive one-year terms (the "Renewal Terms") unless terminated by all of the Parties pursuant to the terms of this Subsection 4.6 below.

4.5 Termination by Individual Party: With or without cause, a Party may terminate its participation in this Agreement upon providing all the other Parties written notice of termination a minimum of thirty (30) days prior to the termination date. Following termination of participation by one or more Parties, this Agreement shall remain in full effect with respect to the remaining participating Parties. If an individual Party terminates its participation in the Agreement, such Party shall not receive a reimbursement of the funds it contributed pursuant to this Agreement except as set forth in Section 4.9.

4.6 Termination of Entire Agreement: If all Parties terminate this Agreement, this Agreement shall terminate within 30 days of termination. The Agreement terminates upon all but one of the Parties electing to terminate their participation in this Agreement pursuant to Section 4.5 above.

4.7 Termination by Failure to Contribute: If a Party fails to contribute the amount required pursuant to Subsection 2.2 above, the Fiscal Agent may request said contribution from the Party in breach. If within twelve months from the date of the request for contribution, the Party has not cured its breach, then the breaching Party shall be deemed to have terminated its participation in this Agreement. A Party may reinstate its participation in this Agreement by making its contribution pursuant to Subsection 2.2 above, in the amount applicable to the year the Party wishes to reinstate.

4.8 Continuation Subject to Appropriation: Each Party is obligated only to pay its obligations set forth in this Agreement as may lawfully be made from funds appropriated and budgeted for that purpose during such Party's then current fiscal year. Each Party's obligations under this Agreement are current expenses subject to the "budget law" and the unfettered legislative discretion of the Party concerning budgeted purposes and appropriations of funds. Should any Party elect not to appropriate and budget funds to pay its obligations, this Agreement shall be deemed terminated at the end of the then-current fiscal year term for which such funds were appropriated and budgeted for such purpose, and such Party shall be relieved of any subsequent obligation under this Agreement. The Parties agree that each Party has no obligation or duty of good faith to budget or appropriate the payment of the Party's obligations set forth in this Agreement in any budget in any fiscal year other than the fiscal year in which this Agreement is executed and delivered. Each Party shall be the sole judge and authority in determining the availability of funds for its obligations under this Agreement. The Parties shall keep each other informed as to the availability of funds for this Agreement. The obligation of any Party to make any payment pursuant to this Agreement is not a general obligation or indebtedness of such Party. The Parties hereby waive any and all rights to bring any claim against each other from or relating in any way to any Party's termination of this Agreement pursuant to Subsection 4.7.

4.9 Disposition of Funds: Upon termination or expiration of this Agreement, the Fiscal Agent shall return any and all remaining unexpended funds to the Cities and the County in a pro-rata proportion of the amounts originally contributed by each Party.

SECTION FIVE. SEVERABILITY

The Parties to this Agreement specifically agree that if any one or more of the sections, paragraphs, provisions, clauses, or words of this Agreement or the application of such section, paragraph, provision, clause or word to any situation or circumstance should be, or should be held to be, for any reason, invalid or unconstitutional, under the laws or constitutions of Arizona or the United States of America, or in contravention of any such laws or constitutions, then such invalidity, unconstitutionality, or contravention shall not affect any other section, paragraph, provision, clause or word of this Agreement or the application of such section, paragraph, provision, clause or word to any other situation or circumstance. It is intended that this Agreement shall be severable and shall be construed and applied as if any such invalid or unconstitutional section, paragraph, provision, clause or word had not been included in this Agreement. The rights and obligations of the Parties to this Agreement shall be construed and remain in force accordingly.

SECTION SIX. COUNTERPARTS

This Agreement may be executed in counterparts, and the counterparts may be exchanged by electronic transmission (including by email), each of which shall be deemed to be an original, but all of which together constitute one and the same instrument.

SECTION SEVEN. WORKERS' COMPENSATION

For purposes of workers' compensation, an employee of a Party to this Agreement, who works under the jurisdiction or control of, or who works within the jurisdictional boundaries of another Party pursuant to this Agreement, is deemed to be an employee of both the Party who is his primary employer and the Party under whose jurisdiction or control or within whose jurisdictional boundaries he is then working, as provided in A.R.S. § 23-1022(D). The primary employer Party of such employee shall be solely liable for payment of workers' compensation benefits for the purposes of this section. Each Party herein shall comply with the provisions of A.R.S. § 23-1022(E) by posting the public notice required.

///

///

SECTION EIGHT. INDEMNIFICATION

To the extent permitted by law, each Party to this Agreement agrees (as indemnitor) to indemnify, defend, and hold harmless every other Party (as indemnitee) from and against any and all claims, losses, fines, penalties, damages, judgments, liabilities, costs, or expenses (including reasonable attorney fees) (collectively, "Claims") arising out of bodily injury of any person (including death) or property damage, but only to the extent that such Claims are caused, in whole or in part, by the negligent acts, directives, errors, omissions, or misconduct, or other fault of the Indemnitor may be legally liable. The Indemnitee and Indemnitor shall cooperate with each other in fulfilling their obligations under this section. Within ten (10) day after indemnitee receives a notice of claim that is likely to become subject to this indemnity provision, such Party shall provide written notice to the indemnitor(s) ("Claim Notice"). Indemnitee's failure to provide a Claim Notice to indemnitor does not relieve indemnitor of any liability that indemnitor may have to indemnitee, but in no event shall indemnitor be liable for any Claims that result from a delay in providing a Claim Notice. Each Claim Notice must contain a description of the third-party claim and the nature and amount of the related Claims (to the extent that the nature and amount of the Claims are known at the time). Indemnitee shall furnish promptly to indemnitor copies of all papers and official documents received in respect of any Claims. The obligations under this Section Eight shall survive a Party's individual termination of its participation and the termination of this Agreement as a whole.

SECTION NINE. INSURANCE COVERAGE

The Parties shall have for the duration of their participation in this Agreement insurance coverage in the U.S. Dollar amounts listed in the below table, and shall provide proof to any other Party upon request. If a Party carries out the terms of this Agreement in Mexico, that Party shall obtain Mexican Insurance in sufficient amount to cover those activities.

General Liability per Occurrence	$2,000,000
General Liability in the Aggregate	$6,000,000
Auto combined single limit	$2,000,000
Workers' Compensation	Arizona Statutory Limits
All Workers' Compensation Employer Liability	$1,000,000

SECTION TEN. MISCELLANEOUS PROVISIONS

10.1 Compliance with the Law: The Parties agree to comply with all federal, state, and local statutes, laws, ordinances, rules, and regulation including but not limited to

conflicts of interest at A.R.S. § 38-511 and e-verify at A.R.S. §41-4401 and 23-214. The Parties certify by signing this Agreement that they do not participate in and agrees not to participate in during the term of this Agreement a boycott of Israel under A.R.S. § 35-393.01.

10.2 Notices: All notices to be given under this Agreement, or which may be given by any Party to the other Parties, shall be considered validly given and fully received when made in writing and delivered or refused delivery by means of prepaid service by: (i) deposit in the United States Postal Service by certified mail, return receipt requested, and postage prepaid, (ii) personal delivery by a process server or (iii) sent by a nationally recognized courier (e.g., Federal Express, UPS) and addressed to the City Manager and City Attorney or County Administrator and County Attorney of each respective Party at their official addresses.

10.3 Waiver: No delay in exercising any right or remedy shall constitute a waiver thereof, and no waiver by the Parties of the breach of any provision of this Agreement shall be construed as a waiver of any preceding or succeeding breach of the same or of any other provision of this Agreement.

10.4 Headings: The descriptive headings of the paragraphs of this Agreement are inserted for convenience only, and shall not control or affect the meaning or construction of the provisions of the Agreement.

10.5 Authority: The undersigned represent to each other that they have full power and authority to enter into this Agreement and that all necessary actions have been taken to give full force and effect to this Agreement.

10.6 Amendment of the Agreement: No changes or additions are to be made to this Agreement except by written amendment executed by all of the Parties.

10.7 Governing Law: The laws of the State of Arizona shall govern the interpretation and enforcement of this Agreement.

10.8 Venue:The Parties agree that venue for any action commenced in connection with this Agreement shall be proper only in a court of competent jurisdiction in Yuma County, Arizona or in the United State District Court for the District of Arizona at the election of the plaintiff in such legal action and the Parties waive any right to object to such venue. Nothing in this paragraph will be deemed to have authorized the bringing of any legal action in a court which does not otherwise have jurisdiction to adjudicate the legal action.

10.9 No Third-Party Beneficiaries: There are no third-party beneficiaries to this Agreement, and no person or entity not a Party shall have any right or cause of action under this Agreement.

10.10 No Agency Created: It is not intended by this Agreement to, and nothing contained in this Agreement shall create any partnership, joint venture or other similar arrangements among the Parties.

10.11 No Personal Liability: No member, official, or employee of the Parties shall be personally liable for any breach of this Agreement.

10.12 Time is of the essence: Time is of the essence in this Agreement.

10.13 Entire Agreement: This Agreement, including its Exhibits, which are incorporated herein by this reference, constitutes the entire Agreement among the Parties pertaining to the subject matter hereof. All prior and contemporaneous agreements, representations, and understandings of the Parties, oral or written, are superseded and merged in this Agreement.

The Parties have executed this Agreement in Yuma County, Arizona as of the date of their respective signatures set forth below.

[Intentionally left blank, signature pages follow.]

CITY OF SAN LUIS

Gerardo Sanchez, Mayor

Date: 2/13/2019

CERTIFICATION BY LEGAL COUNSEL

In accordance with the requirements ARIZ. REV. STAT. § 11-952(D), the undersigned Attorney acknowledges that (i) she has reviewed the above Agreement on behalf of her client and (ii) as to her client only, has determined that the Agreement is in proper form and is within the powers and authority granted under the laws of the State of Arizona.

Kay Marion Macuil, City Attorney

CITY OF SOMERTON

Gerardo Anaya, Mayor

Date: 2/5/19

CERTIFICATION BY LEGAL COUNSEL

In accordance with the requirements ARIZ. REV. STAT. § 11-952(D), the undersigned Attorney acknowledges that (i) he has reviewed the above Agreement on behalf of his client and (ii) as to his client only, has determined that the Agreement is in proper form and is within the powers and authority granted under the laws of the State of Arizona.

Jorge Lozano, City Attorney

TOWN OF WELLTON

Cecilia C. McCollough

Cecilia C. McCollough, Mayor

Date: 2/5/2019

CERTIFICATION BY LEGAL COUNSEL

In accordance with the requirements ARIZ. REV. STAT. § 11-952(D), the undersigned Attorney acknowledges that (i) she has reviewed the above Agreement on behalf of her client and (ii) as to her client only, has determined that the Agreement is in proper form and is within the powers and authority granted under the laws of the State of Arizona.

Nicholle Harris, Town Attorney

CITY OF YUMA

Douglas J. Nicholls, Mayor

Date: 3/20/2019

Gregory K. Wilkinson

Date: 3/20/2019

CERTIFICATION BY LEGAL COUNSEL

In accordance with the requirements ARIZ. REV. STAT. § 11-952(D), the undersigned Attorney acknowledges that (i) he has reviewed the above Agreement on behalf of his client and (ii) as to his client only, has determined that the Agreement is in proper form and is within the powers and authority granted under the laws of the State of Arizona.

Richard W. Files, City Attorney

Approved at the City Council Meeting of:
March 6, 2019
City Clerk:

COUNTY OF YUMA

_____ For

Marco Antonio Reyes, Chair of the Board of Supervisors

Date: 2/20/19

CERTIFICATION BY LEGAL COUNSEL

In accordance with the requirements ARIZ. REV. STAT. § 11-952(D), the undersigned Attorney acknowledges that (i) he has reviewed the above Agreement on behalf of his client and (ii) as to his client only, has determined that the Agreement is in proper form and is within the powers and authority granted under the laws of the State of Arizona.

_____

Jon R. Smith, Yuma County Attorney

EXHIBIT A
TO
AMENDED AND RESTATED
INTERGOVERNMENTAL AGREEMENT OF THE
4FrontED BINATIONAL PROGRAM
TO SUPPORT
ECONOMIC DEVELOPMENT IN THE GREATER YUMA REGION

[Budget and 2017 Population Estimates]

Location	Population	Contribution
San Luis, AZ	35,289	$ 7,058.00
Somerton	17,103	$ 3,421.00
Wellton	3,171	$ 634.00
Yuma City	101,620	$ 20,324.00
Yuma County[1]	64,465	$ 12,893.00
Total	**221,648**	**$ 44,330.00**

EXHIBIT B
TO
AMENDED AND RESTATED
INTERGOVERNMENTAL AGREEMENT OF THE
4FrontED BINATIONAL PROGRAM
TO SUPPORT
ECONOMIC DEVELOPMENT IN THE GREATER YUMA REGION

[Original Agreement]

INTERGOVERNMENTAL AGREEMENT OF THE
4FrontED BINATIONAL PROGRAM
TO SUPPORT
ECONOMIC DEVELOPMENT IN THE GREATER YUMA REGION

This AGREEMENT is made on this 25th day of October 2017 (the "Agreement Date"), among the following governing Agencies of the State of Arizona and in or of the County of Yuma:

the City of San Luis, an incorporated city under the laws of Arizona and having its administrative offices at
1090 East Union Street
San Luis, Arizona 85349 ("San Luis");

the City of Somerton, an incorporated city under the law of Arizona and having its administrative offices at
110 North State Avenue
Somerton, Arizona 85350 ("Somerton");

the Town of Wellton, an incorporated town under the laws of Arizona and having its administrative offices at
28634 Oakland Avenue
Wellton, Arizona 85356 ("Wellton");

the City of Yuma, a charter city under the laws of Arizona and having its administrative offices at
One City Plaza
Yuma, Arizona 85364 ("Yuma") and

the County of Yuma, a body corporate and politic of the State of Arizona and having its administrative offices at
198 South Main Street
Yuma, Arizona 85364 (the "County").

The above-listed cities are known collectively as (the "Cities" and" the "County"). The County and Cities comprise a funding committee of the Yuma area for the sole purposes of this Agreement.

RECITALS

A. The County and the Cities joining in this Agreement wish to formalize a bilateral relationship to promote growth and expand economic opportunities in Yuma County, Arizona, U.S.A.; regions within the State of California, U.S.A.; San Luis Rio Colorado; regions within Baja California, Mexico.

B. Yuma County is authorized to participate in Economic Development activities pursuant to A.R.S. §§11-251(21), 11-254, and 11-254.04. The Cities are authorized to participate in Economic Development pursuant to A.R.S. §9-500.11

C. The County and the Cities support the 4FrontED Binational Region program objectives which include but are not limited to the following:

Binational Cluster Development

- Identify, map, and define binational regional business clusters such as advanced manufacturing opportunities. Establish and/or strengthen relationships with companies in northern Mexico in aerospace, automotive, electronic, agribusiness, and electrical devices, and promote the region's logistics/distribution and cost competitive advantages for potential advanced manufacturing opportunities. Sustain the momentum with the University of Arizona cluster work and the North American Research Partnership cluster mapping.
- Engage the region's manufacturers in RevAZ(Arizona Commerce Authority's Manufacturing Extension Partnership program), particularly with the ExportTech Boot Camp.
- Further leverage the economic benefit of the agriculture trade moving through the San Luis Port of Entry. Maintain and grow agribusiness trade by addressing binational infrastructure and transportation improvements from major growing regions in Mexico and strengthening relationships throughout western Mexico. Continue to expand value-add produce opportunities in packaged food.
- Work to attract foreign direct investment (FDI) projects within the transportation, tourism, and economic development sectors. Leverage the international and foreign investment partners working with the University of Arizona Yuma Center of Excellence for Desert Agriculture to attract a larger footprint in the region.
- Focus on manufacturing industries to provide higher average wages, create more indirect economic activity for the region, impact the regional tax base, and attract new revenues to the region resulting in an expanded economy through the following manufacturing sectors: perishable prepared food, storage battery, fluid milk, aircraft, fabricated structural metals, metal stamping, truck trailer, sign, unmanned vehicle and computerized numerical control machining.

- Continue to implement the IMPC strategy working collaboratively to develop and promote advanced manufacturing.
- Work with existing industries to improve access and attract a supply chain of businesses to the 4FrontED region.
- Actively engage the private sector and regional businesses to assist in the implementation of the 4FrontED initiative.

Strengthen Binational Workforce Development

- Broaden the educational exchange between the region's institutions and Mexico by establishing a binational education task force to ensure a stronger regional labor force that meets the current and future needs of regional businesses.
- Collaborate with Arizona Western College, Northern Arizona University and other institutions of higher learning to target advanced degrees to maquila managers or leadership.

Develop Binational Tourism

- Work collaboratively to leverage existing tourism assets and further develop visitor destinations within the binational region. Create and actively implement a binational tourism development and marketing program with a focus on recreation and culture.
- Implement a strategy to develop and attract medical tourism to the 4FrontED region.
- Develop and promote a binational calendar of events.

Leverage Port of Entry and Border Infrastructure Investments

- Aggressively promote the San Luis commercial port of entry.
- Continue to pursue improvements to the port of entry.
- Pursue increased port of entry staffing to improve efficiencies of border crossings.
- Build cross-border public transportation, bicycling and pedestrian improvements.

Spur Innovation and Entrepreneurism

- Leverage the San Luis Business Incubator to foster business growth in manufacturing, machining, distribution, and support businesses.
- Make the 4FrontED binational region an entrepreneurial hub by leveraging the U.S. entrepreneurial visa program that can promote new business start-ups and innovation.

Maximize Developable Industrial Land

- Move forward with development strategies to ensure that the border industrial land is ready for manufacturing facilities. Focus on project readiness of industrial sites.

Continue to Improve Regional Infrastructure

- The cities of San Luis, San Luis Rio Colorado, Somerton, Wellton, and Yuma are committed to building a rail connection between the city of San Luis Rio Colorado and Yuma to support economic development.
- Work to implement project priorities identified in the Border Master Plans (2013)
- Prioritize regional infrastructure projects to support economic development efforts and pursue grant funding.

NOW THEREFORE, the parties agree as follows:

SECTION ONE. DEFINITION OF TERMS

The following terms and expressions as used in this Agreement, unless the context clearly shows otherwise, shall have the following meanings:

"Region" means Yuma County, Arizona, U.S.A.; San Luis Rio Colorado, Sonora, Mexico and regions within Baja California Norte, Mexico bordering the municipality of San Luis Rio Colorado, Sonora, Mexico and Yuma County, Arizona, U.S.A.

SECTION TWO. GENERAL PROVISIONS

A. The City of San Luis, Arizona is the fiscal agent responsible for administering the funds for the binational program. San Luis shall only use the funds for the objectives stated in the recitals, and the funds expended, not exceed the one-year budget as set forth in Exhibit A, attached and incorporated by reference to this Agreement. The fiscal agent will require at least one City and/or, County to approve expenses in writing. The fiscal agent will be responsible for the engagement of the services of the coordinator along with the rest of the Cities, expenses and budget reports to the other Cities.

B. The County and Cities shall contribute to the funding of services for a bi-lingual/bi-cultural coordinator and related economic activities based on twenty cents (20¢) per capita and using the Parties' 2015 population estimates as follows:

Location	Population	Contribution
San Luis, AZ	34,001	$ 6,800.00
Somerton	15,759	$ 3,152.00
Wellton	3,101	$ 620.00
Yuma City	97,950	$ 19,590.00
Yuma County[1]	64,180	$ 12,836.00
Total	**214,991**	**$ 42,998.00**

[1] Yuma County population only includes population not within an incorporated area.

C. The Binational program shall meet the goals in the border business case incorporated in this Agreement.

D. The County and the Cities shall, through the fiscal agent, engage the services of a bi-lingual/bi-cultural coordinator to manage the Binational program.

E. The County and the Cities shall, through the fiscal agent, contract with any other contractor (s) or entity to meet the goals as stated in this Agreement.

F. The County and the Cities shall work with San Luis Rio Colorado, Sonora, Mexico and other Mexico cities as deemed appropriate.

G. The recitals set forth in this Agreement, by this reference, are incorporated and deemed part of this Agreement.

SECTION THREE. FORCE MAJEURE

If by reason of force majeure any party to this Agreement shall be rendered unable wholly or in part to carry out its obligations under this Agreement, then if such party shall give notice and full particulars of such force majeure in writing to the other party within a reasonable time after occurrence of the event or cause relied on, the obligation of the party giving such notice, so far as it is affected by such force majeure, shall be suspended during the continuance of the inability then claimed, but not for any longer period, and any such party shall endeavor to remove or overcome such inability with all reasonable dispatch. The term "force majeure" as used in this Agreement shall mean acts of God, strikes, lockouts, or other industrial disturbances, acts of public enemy, orders of any kind of the Government of the United States or the State of Arizona, or any civil or military authority, insurrection, riots, epidemics, landslides, lightning, earthquake, fires, hurricanes, storms, floods, washouts, droughts, arrests, restraint of government and people, civil disturbances, explosions, breakage or accidents to machines, pipelines or canals, and inability on the part of the County or the Cities to provide services under this Agreement for any reason, or on account of any other causes not reasonably within the control of the party claiming such liability.

SECTION FOUR. TERM OF AGREEMENT; RENEWAL

This Agreement shall be effective as of the 25th day of October 2017 and shall have a term of one year, ending the 25th day of October 2018 unless a party provides the other parties with written notice of termination a minimum of 30 days prior to terminating. This Agreement may be terminated by any party with or without cause, provided that such party provides written notice of termination to all other parties as set forth above.

If this Agreement is terminated prior to the expiration date, the fiscal agent shall return any and all remaining unexpended funds to the Cities and the County in proportion to the amounts originally disbursed by each party.

SECTION FIVE. SEVERABILITY

The parties to this Agreement specifically agree that if any one or more of the sections, paragraphs, provisions, clauses, or words of this Agreement or the application of such section, paragraph, provision, clause or word to any situation or circumstance should be, or should be held to be, for any reason, invalid or unconstitutional, under the laws or constitutions of Arizona or the United States of America, or in contravention of any such laws or constitutions, then such invalidity, unconstitutionality, or contravention shall not affect any other section, paragraph, provision, clause or word of this Agreement or the application of such section, paragraph, provision, clause or word to any other situation or circumstance, and it is intended that this Agreement shall be severable and shall be construed and applied as if any such invalid or unconstitutional section, paragraph, provision, clause or word had not been included in this Agreement, and the rights and obligations of the parties to this Agreement shall be construed and remain in force accordingly.

SECTION SIX. COUNTERPARTS

This agreement may be executed in counterparts, any of which shall be deemed to be an original.

The parties have executed this Agreement in Yuma County, Arizona as follows:

The City of San Luis
By _____
Gerardo Sanchez
Mayor

This 28 day of December 2017

The City of Somerton
By: _____
Jose Yepez
Mayor

This 4 day of December 2017

The Town of Wellton
By: Cecilia C. McCullough
Cecilia C. McCullough
Mayor

This 2nd day of November 2017

The City of Yuma
By: _____
Douglas Nicholls
Mayor

This 1st day of November 2017

The County of Yuma
By: _____
Marco A. (Tony) Reyes
Chair of the County Board of Supervisors

This 16th day of October 2017

I hereby state that I am the attorney for the City of San Luis, State of Arizona, and pursuant to the provisions of A.R.S. 11-952(D) have determined that the foregoing agreement is in proper form and is within the powers and authority granted to the City of San Luis, Arizona under the laws of the State of Arizona.

Dated this 25 day of October, 2017

Kay Marion Macuil

Kay Marion Macuil
San Luis City Attorney

I hereby state that I am the attorney for the City of Somerton, State of Arizona, and pursuant to the provisions of A.R.S. 11-952(D) have determined that the foregoing agreement is in proper form and is within the powers and authority granted to the City of Somerton, Arizona under the laws of the State of Arizona.

Dated this 4th day of December, 2017

Jorge Lozano
Somerton City Attorney

I hereby state that I am an attorney for the Town of Wellton, State of Arizona, and pursuant to the provisions of A.R.S. 11-952(D) have determined that the foregoing agreement is in proper form and is within the powers and authority granted to the Town of Wellton, Arizona under the laws of the State of Arizona.

Dated this 31st day of Oct., 2017

Gary Verburg
Wellton Town Attorney

I hereby state that I am the attorney for the City of Yuma, State of Arizona, and pursuant to the provisions of A.R.S. 11-952(D) have determined that the foregoing agreement is in proper form and is within the powers and authority granted to the City of Yuma, Arizona under the laws of the State of Arizona.

Dated this 7 day of November, 2017

Richard W. Files

Richard W. Files
Yuma City Attorney

I hereby state that I am the attorney for the County of Yuma, State of Arizona, and pursuant to the provisions of A.R.S. 11-952(D) have determined that the foregoing agreement is in proper form and is within the powers and authority granted to the County of Yuma, Arizona under the laws of the State of Arizona.

Dated this 16th day of October, 2017

Jon R. Smith
Yuma County Attorney

EXHIBIT A
TO
AMENDED AND RESTATED
INTERGOVERNMENTAL AGREEMENT OF THE
4FrontED BINATIONAL PROGRAM
TO SUPPORT
ECONOMIC DEVELOPMENT IN THE GREATER YUMA REGION

[Budget and 2017 Population Estimates]

4frontED Binational 2017-2018 Budget

		Jul	Aug	Sep	Oct	Nov	Dec	Jan	Feb	Mar	Apr	May	June	Total
REVENUE														
Yuma County														$ 12,836.00
Town of Wellton														$ 620.00
City of Yuma														$ 19,590.00
City of Somerton														$ 3,152.00
City of San Luis														$ 6,800.00
2017-2018 carry over funds														$ 33,090.07
Donations														$ -
Total Revenue														$ 76,088.07
EXPENSES														
Office Supplies				$ 50.00			$ 50.00			$ 50.00			$ 50.00	$ 200.00
Other Supplies	drinks, coffee			$ 20.00			$ 20.00			$ 20.00			$ 20.00	$ 80.00
External Printing	letterhead, business cards			$ 300.00						$ 300.00				$ 600.00
Subscriptions	AMC							$ 250.00						$ 250.00
Postage				$ 50.00						$ 50.00				$ 100.00
Minor Tool/equiptment	laptop								$ 1,200.00					$ 1,200.00
Miscellaneous	catering			$ 100.00			$ 100.00			$ 100.00			$ 100.00	
Contractual Services	Executive Director	$ 4,166.00	$ 4,166.00	$ 4,166.00	$ 4,166.00	$ 4,166.00	$ 4,166.00	$ 4,166.00	$ 4,166.00	$ 4,166.00	$ 4,166.00	$ 4,166.00	$ 4,174.00	$ 50,000.00
Special services	website support/hosting	$ 70.00	$ 55.00	$ 100.00	$ 55.00	$ 55.00	$ 100.00	$ 55.00	$ 55.00	$ 100.00	$ 55.00	$ 55.00	$ 100.00	$ 855.00
Travel and Per Diem	AMC			$ 1,000.00			$ 1,000.00			$ 1,000.00			$ 1,000.00	$ 4,000.00
Conference/Registration				$ 300.00			$ 300.00			$ 300.00			$ 300.00	$ 1,200.00
Sponsorships										$ 2,000.00				$ 2,000.00
Total Expenses														$ 60,485.00
Total Budget														$ 15,603.07

JULY 1, 2017 POPULATION ESTIMATES
FOR ARIZONA'S COUNTIES, INCORPORATED PLACES AND UNINCORPORATED BALANCE OF COUNTIES

	ESTIMATE
APACHE COUNTY	72,713
Eagar	4,946
Saint Johns	3,534
Springerville	1,991
Unincorporated	62,242
COCHISE COUNTY	128,383
Benson	4,994
Bisbee	5,320
Douglas	16,588
Huachuca City	1,783
Sierra Vista	43,824
Tombstone	1,325
Willcox	3,612
Unincorporated	50,937
COCONINO COUNTY	144,057
Flagstaff	72,961
Fredonia	1,331
Page	7,665
Sedona *	2,926
Tusayan	590
Williams	3,256
Unincorporated	55,328
GILA COUNTY	54,947
Globe	7,562
Hayden *	648
Miami	1,828
Payson	15,944
Star Valley	2,346
Winkelman *	353
Unincorporated	26,266
GRAHAM COUNTY	38,275
Pima	2,548
Safford	9,915
Thatcher	5,217
Unincorporated	20,595
GREENLEE COUNTY	10,961
Clifton	4,870
Duncan	718
Unincorporated	5,373
LA PAZ COUNTY	21,598
Parker	3,201
Quartzsite	3,882
Unincorporated	14,515

	ESTIMATE
MARICOPA COUNTY	4,221,684
Apache Junction *	311
Avondale	81,621
Buckeye	69,947
Carefree	3,669
Cave Creek	5,676
Chandler	257,948
El Mirage	34,174
Fountain Hills	23,862
Gila Bend	2,010
Gilbert	246,423
Glendale	239,858
Goodyear	81,447
Guadalupe	6,332
Litchfield Park	6,452
Mesa	481,275
Paradise Valley	13,913
Peoria *	171,580
Phoenix	1,579,253
Queen Creek *	39,714
Scottsdale	242,540
Surprise	130,129
Tempe	179,794
Tolleson	6,992
Wickenburg *	6,903
Youngtown	6,575
Unincorporated	303,286
MOHAVE COUNTY	209,792
Bullhead City	40,551
Colorado City	4,872
Kingman	29,600
Lake Havasu City	54,801
Unincorporated	79,968
NAVAJO COUNTY	111,266
Holbrook	5,167
Pinetop-Lakeside	4,463
Show Low	11,377
Snowflake	5,882
Taylor	4,292
Winslow	9,567
Unincorporated	70,518

	ESTIMATE
PIMA COUNTY	1,026,099
Marana *	45,378
Oro Valley	44,517
Sahuarita	29,049
South Tucson	5,664
Tucson	537,634
Unincorporated	363,857
PINAL COUNTY	427,603
Apache Junction *	39,719
Casa Grande	54,866
Coolidge	12,485
Eloy	18,993
Florence	25,866
Hayden *	0
Kearny	2,077
Mammoth	1,519
Marana *	0
Maricopa	49,550
Queen Creek *	494
Superior	3,008
Winkelman *	0
Unincorporated	219,026
SANTA CRUZ COUNTY	51,507
Nogales	22,327
Patagonia	981
Unincorporated	28,199
YAVAPAI COUNTY	225,364
Camp Verde	11,083
Chino Valley	11,557
Clarkdale	4,282
Cottonwood	11,974
Dewey-Humboldt	4,015
Jerome	447
Peoria *	7
Prescott	42,300
Prescott Valley	43,950
Sedona *	7,393
Wickenburg *	350
Unincorporated	88,006
YUMA COUNTY	221,648
San Luis	35,289
Somerton	17,103
Wellton	3,171
Yuma	101,620
Unincorporated	64,465

ARIZONA	**6,965,897**

***POPULATION FOR PLACES IN TWO COUNTIES**

Apache Junction	Pinal & Maricopa	40,030
Hayden	Gila & Pinal	648
Marana	Pima & Pinal	45,378
Peoria	Maricopa & Yavapai	171,587
Queen Creek	Pinal & Maricopa	40,208
Sedona	Coconino & Yavapai	10,319
Wickenburg	Maricopa & Yavapai	7,253
Winkelman	Gila & Pinal	353

Arizona Office of Economic Opportunity (602) 771-2222 or (602) 771-1236

AGENDA ITEM REVIEW FORM

Regular City Council Meeting **7. B.**

Meeting Date: 06/10/2026

Department Head: Eulogio Vera, Director of Public Works, Public Works Department

Submitted By: Jorge Perez, Assistant Director of Public Works, Public Works Department

Action Requested: Motion

ITEM:

Discussion and possible action on any and all matters regarding the award of a construction contract to Filanc Construction Company, Inc. for the West Wastewater Treatment Plant Expansion project.
(Eulogio Vera, Director of Public Works)

SUMMARY:

The Department of Public Works provided an update to the City Council in January 2026, including the status of the project design and the efforts undertaken to procure a construction contractor. At that time, the city determined that a traditional design-bid-build delivery method would be utilized for the project.

During March and April 2026, city staff conducted a formal bidding process for the construction of the West Wastewater Treatment Plant Expansion Project, which had a budget of $26 million. Bids were received on April 9, 2026, from two (2) qualified contractors: Filanc Construction Company, Inc., and PERC Water Corporation. Both bids exceeded the established project budget, with Filanc Construction Company, Inc. submitting the lowest responsive and responsible bid in the amount of $41,163,578.00.

Prior to bidding, the city secured $26 million in funding through the Water Infrastructure Finance Authority of Arizona (WIFA). In efforts to keep the project moving forward, staff is currently working with Pacific Advanced Civil Engineering, Inc. (PACE), the city's engineer of record, to evaluate value engineering options aimed at reducing overall project costs. Concurrently, staff submitted a second application to WIFA for an additional $12 million in funding to support the project, with an anticipated completion of the WIFA review and approval process in August 2026.

Staff is requesting the City Council's approval to award a construction contract to Filanc Construction Company, Inc. for the West Wastewater Treatment Plant Expansion Project in the amount of $41,163,578.00 and authorize staff to proceed with contract execution. Staff further recommends that the City Council approve Change Order No. 1, negotiated with Filanc Construction Company, Inc., with a scope and cost reduction totaling $4,292,201.00, resulting in a revised contract amount of $36,871,377.00.

RECOMMENDATION / SUGGESTED MOTION:

I MOVE TO AWARD A CONSTRUCTION CONTRACT TO FILANC CONSTRUCTION COMPANY, INC. FOR THE WEST WASTEWATER TREATMENT PLANT EXPANSION PROJECT IN THE AMOUNT OF $41,163,578.00, AND TO APPROVE CHANGE ORDER NO. 1 AS PRESENTED BY STAFF.

Fiscal Impact

IS THERE FISCAL IMPACT ASSOCIATED WITH THIS ITEM:	No
CITY/STATE/FEDERAL FUNDS:	N/A
TOTAL:	$41,163,578
BUDGETED AMOUNT:	$26,000,000
AVAILABLE AMOUNT TO TRANSFER:	N/A
ACCT NAME & GL#/REMAINING BALANCE BEFORE PURCHASE:	N/A

FISCAL IMPACT STATEMENT (IF THIS IS A BUDGET TRANSFER, YOU MUST ATTACH THE BUDGET ADJUSTMENT FORM):

Staff recommends award of the construction contract utilizing secured funding in the amount of $26 million from the Water Infrastructure Finance Authority of Arizona (WIFA). Concurrently, staff has submitted a second application to WIFA requesting an additional $12 million in funding to support the project.

Staff has also worked with the contractor to achieve a cost reduction of $4,292,201.00 through value engineering efforts and scope adjustments. The project is anticipated to have a construction duration of 27 months. Staff anticipates that the review and approval process for the second WIFA funding application will be completed by August 2026.

Attachments

Project Bid Manual
Bid Tabulation
Notice of Award
Change Order No. 1
Contract

BID MANUAL

FOR
CITY OF SAN LUIS
WEST WWTP 3.0 MGD MBR UPGRADES
2025-050

City of San Luis

1090 East Union Street
P.O. Box 1170
San Luis, Arizona 85349

APPROVED BY:

Acting City Manager:
Jenny Torres

Mayor:
Nieves Riedel

Vice-Mayor:
Javier Vargas

Council Members:
Luis Cabrera
Maria Cecilia Cruz
Esteban C. Rosales
Lizeth Servin
Tadeo Azael De La Hoya

PREPARED BY:

Pacific Advanced Civil Engineering (PACE)
8723 E. Via de Commercio, #A-204
Scottsdale, AZ 85258
(480) 991-3595

Table of Contents

City of San Luis

West WWTP 3.0 MGD MBR Upgrade Project

THIS BID MANUAL CONTAINS:

ADVERTISEMENT FOR BIDS 3

INSTRUCTIONS FOR BIDDERS 4
PROJECT OVERVIEW & SCOPE OF WORK 11

BID KIT 12
- BID FORM 13
- BID SCHEDULE 14
- BID SURETY BOND 22
- NON-COLLUSION AFFIDAVIT 23
- BIDDER'S PARTICIPATION, SUBCONTRACTOR AND SUPPLIER LIST 24

CONTRACT KIT 25
- CONTRACT 26
- CONTRACT PERFORMANCE SURETY BOND 34
- LABOR AND MATERIALS SURETY BOND 35
- WARRANTY BOND 36
- CERTIFICATE OF INSURANCE 37
- CONTRACTOR'S AFFIDAVIT REGARDING SETTLEMENT OF CLAIMS 39

GENERAL CONDITIONS 40

WIFA CONTRACT PACKET FOR GOVERNMENTAL BORROWERS

WIFA WAGE RATE SHEET

TECHINICAL SPECIFICATIONS

CONSTRUCTION PLANS

MARICOPA ASSOCIATION OF GOVERNMENTS (MAG) UNIFORM STANDARD SPECIFICATIONS AND DETAILS FOR PUBLIC WORKS CONSTRUCTION - DATED JANUARY 2015 (Separate Publication) - UNIFORM STANDARD SPECIFICATIONS ONLY

CITY OF SAN LUIS SUPPLEMENTAL TO THE MAG UNIFORM STANDARD SPECIFICATIONS FOR PUBLIC WORKS CONSTRUCTION AND CITY OF YUMA CONSTRUCTION STANDARD DETAIL DRAWINGS - DATED OCTOBER 2016 (Separate Publication)

ADVERTISEMENT FOR BIDS

CITY OF SAN LUIS, ARIZONA
WEST WWTP 3.0 MGD MBR
2025-050

NOTICE IS HEREBY GIVEN THAT sealed bids will be received in the Office of the City Clerk, City Hall, 1090 E. Union Street, City of San Luis, Arizona until 3:00 P.M. Arizona Time on Thursday, April 9, 2026, for furnishing all labor, materials, equipment, tools and performing all services required for the construction of the **City of San Luis — West Wastewater Treatment Plant (WWTP) 3.0 MGD MBR** project and work incidental thereto. Bids will then be publicly opened and read aloud. Each Bid should be submitted on the Bid Form and be accompanied by a certified or cashiers check or bid bond in the amount of ten (10%) percent of the total amount of the bid.

The proposed work is located within the city limits of the City of San Luis, Arizona at its West Wastewater Treatment Plant site. Work consists of, but is not limited to, construction upgrades and conversion of the existing 1.5 MGD SBR treatment process to a 3.0 MGD Membrane Bioreactor (MBR) treatment process. Upgrades will include modifications to the headworks, secondary process, tertiary, disinfection, sludge storage & digestion, sludge dewatering, odor control, plant drains, and plant reuse & distribution processes, along with associated civil, mechanical, structural, and electrical/ Instrumentation & Controls works and all incidentals required by the project as specified in the Contract Document and Project Plans. Integration of Instrumentation and Controls shall be performed by the City.

Bidding Documents can be downloaded at www.questcdn.com under an individual login for a non-refundable charge of $22.00. Quest CDN Project number is 10050750. Registration with Quest CDN is required to be on plan holders list and receive project communications. Please contact QuestCDN.com at (952) 233-1632 or info@questcdn.com for assistance in free membership registration, downloading, and working with this digital project information. Any questions about obtaining documents can be forwarded to Andrea Jaycox at ajaycox@pacewater.com.

A mandatory Pre-Bid Conference will be held at the City of San Luis Pedro Julian Conference Room in City Hall on Thursday, March 5, 2025, at 10:00 AM Arizona Time to discuss requirements. A site visit to the WWTP will follow this pre-bid conference. The Pre-bid conference may also be attended virtually via the following link:

Pre-Bid Meeting West WWTP 3.0 MGD MBR - 2025-050
Meeting Link
MS Teams Meeting ID: 250 960 197 877 88
Passcode: 26Pp3km6

All bids must be submitted in a sealed envelope and plainly marked: "CITY OF SAN LUIS — WEST WWTP — WEST WWTP 3.0 MGD MBR — 2025-050."

The City of San Luis reserves the right to cancel this procurement, and/or to reject any or **all bids,** and/or to waive any informality in any bid. No bidder may withdraw his bid for a period of thirty (30) days after the date set for the bid opening thereof:

City of San Luis, Arizona

Jenny Torres
Acting City Manager
Yuma Sun: 02/08/26, 02/15/26

Instructions for Bidders

City of San Luis

Project Name: City of San Luis
West WWTP 3.0 MGD MBR Upgrade

To be considered, bids must be made in accordance with these Instructions to Bidders.

ARTICLE 1 - DEFINITIONS

1.1 All definitions set forth in the General Conditions are applicable to these Instructions to Bidders.

1.2 Bidding Documents include the Advertisement for Bids, Instructions to Bidders, Bid Form, Bid Bond Form, and the proposed Contract Documents, including any addenda issued prior to the receipt of bids.

1.3 Addenda are written or graphic instructions issued prior to the execution of the contract which modify or interpret the Bidding Documents, including Drawings, conditions of the Contract and Specifications, by additions, deletions, clarifications or corrections. Addenda will become part of the Contract Documents when the Construction Contract is executed.

1.4 The term "Owner" or "City" shall be interpreted to mean City of San Luis, Arizona.

ARTICLE 2 - BIDDER'S REPRESENTATION

2.1 Before submitting a bid, bidders shall carefully examine the Drawings, Bidding Requirements, Bid Document Contract Forms, General Conditions, Specifications, and Related Documents, visit the site of the work, and fully inform themselves as to all existing conditions and limitations and shall include in the bid a sum sufficient to cover the cost of all items included in the Contract. The Bidder, if awarded the Contract, shall not be allowed any extra compensation by reason of any matter or thing concerning the Project, which said Bidder might have fully informed himself prior to the building.

ARTICLE 3 - BIDDING DOCUMENTS

3.1 Bidders may obtain copies of the bidding Documents at:

Bidding Documents can be downloaded at www.questcdn.com under an individual login for a non-refundable charge of $22.00. Quest CDN Project number is 10050750. Registration with Quest CDN is required to be on plan holders list and receive project communications. Please contact QuestCDN.com at (952) 233-1632 or info@questcdn.com for assistance in free membership registration, downloading, and working with this digital project information. Any questions about obtaining documents can be forwarded to Andrea Jaycox at ajaycox@pacewater.com or (602) 502-9683.

ARTICLE 4 - INTERPRETATION OF BIDDING DOCUMENTS

4.1 Should a Bidder find discrepancies, inconsistencies, or obscurities in, or omissions from the bidding documents, or should he be in doubt as to their meaning, he shall, at once, notify the Engineer in writing via email, who will issue a written Addendum, clarifying the intent of the documents. Any such item not brought to the Engineer's attention during the bidding period shall be done in accordance with the Engineer's interpretation for the good of the work in accordance with the intent and meaning of the Contract

Documents. Neither owner nor Engineer will be responsible for oral instruction or information. Addenda may not be issued less than 5 Working Days before the time specified for receipt of bids. Questions received after the deadline noted in section 4.4 below cannot be answered in writing. Should any discrepancies not be clarified by Addendum, the Contractor shall use the most expensive condition shown or specified in bid.

4.2 Prior to the receipt of bids, each person or firm recorded by the Engineer as having received the bidding documents will be notified of any addendum. Addenda will also be available for Inspection wherever the bidding documents are made available for that purpose.

4.3 All Addenda issued by the Engineer during the time of bidding are to be included in the bid and shall become a part of the bidding documents (bidder's responsibility to check for addendums). Acknowledge receipt of Addenda on the Bid form in space provided.

4.4 Point of Contact for questions is: Nathan Tesch, PACE, ntesch@pacewater.com. The deadline for questions is Thursday, March 12, 2026.

ARTICLE 5 - SUBSTITUTIONS

5.1 When a specific manufacturer, trade name or material is specified, or indicated, it is to establish a standard of quality and shall not be construed as limiting competition. However, components of electrical systems shall be standard items and/or interchangeable with specified manufacturer to facilitate repairs and upkeep by the Owner.

5.2 It shall be the Contractor's responsibility to provide materials of equal standards to those specified. The Engineer shall be the sole judge as to whether or not the products meet the established standards. The Contractor MUST request written approval of equal materials from the Engineer prior to the bid date.

ARTICLE 6 - OWNER FURNISHED EQUIPMENT

6.1 The OWNER has pre-purchased several items of treatment process equipment. One piece of equipment is onsite, and two others need to be delivered. The Contractor shall be responsible for planning delivery of pending equipment in order to meet the construction schedule. All treatment process equipment will become the CONTRACTOR'S responsibility. The CONTRACTOR shall coordinate delivery and confirm that the shipments are complete and accurate for all equipment. Contract shall provide safe and secure storage, provide transportation from onsite storage to install location, install per the construction documents and manufacturer's requirements, and schedule the manufacturer's representative for construction, installation certification, start up, operational training, etc.

The following pieces of Equipment have been pre-purchased by the OWNER:

6.1.1 Membrane Bioreactor, (MBR) (Kubota) to include membranes, mixers, pumps, blowers, diffusers and control panels. See Appendices B & C of the Specifications for more complete information and shop drawings. Contractor must plan and coordinate delivery to meet the contractor schedule. Contractor will be required to pay the storage fees; allowance has been provided. The delivery date is to be scheduled directly with Kubota.

6.1.2 Sludge Dewatering Screw Press (KFC). Screw Press, Sludge Pump, polymer dosing flocculation tank, conveyors and control panels. See Appendices B & C of the Specifications for more complete information. (**On-site**)

6.1.3 Headworks Screen, grit removal and control panels (Hydro-Dyne) - Manufacturing completed and being stored at Hydro-Dyne, a waiting Contractor coordination for delivery. Contractor must plan and coordinate delivery to meet the contractor schedule. Contractor will be required to pay the storage fees; allowance has been provided. See Appendices B & C of the Specifications for complete information.

ARTICLE 7 - BIDDING PROCEDURES

7.1 A bid is invalid if it has not been deposited at the designated location prior to the time and date for receipt of bids indicated in the Invitation to Submit Proposals, or prior to any extension thereof issued to the bidders. No bid will be acceptable unless the entire PROPOSAL PAMPHLET is submitted with the appropriate forms provided and completed. [NO SUBSTITUTE FORMS SHALL BE SUBMITTED].

7.2 All bids must be prepared on the "Bid Form" with all blank spaces filled, the signature in longhand, and without alterations or erasures. Blank spaces requiring dollar amounts must be filled in with dollar amounts. If a line unit price is left blank the price will be considered as zero [$0.00] and extended as such. The total base bid amount must be in words as well as figures. Should any difference in words and figures occur, the amount stated in words shall govern. The form must be executed in either ink or type written. Where bidder is a corporation, the Bid Form must be signed by the legal name of the corporation followed by the name of state of incorporation, date of incorporation and the legal signature of an officer authorized to bind the corporation to a contract.

7.3 Bids shall be submitted as follows:

7.3.1 Submit one (1) original and one (1) copy in a ***sealed*** envelope. This is to be put inside a shipping envelope or box that is clearly marked “City of San Luis – Lift Station 300 Influent Sewer Force” on the outside and addressed as indicated immediately below:

- If submitter is sending the proposal by US Mail, the proposal package should be sent only to:

  Sonia Cornelio
  Office of City Clerk
  City of San Luis
  P.O. Box 1170
  San Luis, AZ 85349

- If submitter is sending the proposal package via a delivery service or hand delivered, the proposal should be sent only to:

  Sonia Cornelio
  Office of City Clerk
  City of San Luis
  City Hall
  1090 E. Union St.
  San Luis, AZ 85349

Deadline for receipt of proposals is at 3:00 P.M. Arizona Time on Thursday, April 9, 2026. Late proposals will be returned unopened.

FAX and Internet submissions are NOT acceptable and will be rejected.

7.3.2 The Bid envelope shall also contain the following:

- Bid Security
- Subcontractors list form

7.3.3 Bidders Contact Information - It is important that the City of San Luis keeps accurate records of potential bidders. It is the bidder's responsibility to complete registration with Quest CDN per the Advertisement for Bids to be on plan holders list, download bid package and receive project communications.

7.4 Bid Security:

7.4.1 Each bidder is required to submit, with his bid, a certified or cashier's check upon a solvent bank, or a surety bond for ten percent (10%) of the amount of the Base Bid made payable to the Owner.

7.4.1.1 If more than one proposal is submitted, only one Bid Security is required for the largest base Bid amount, however, this Bid Security shall apply to any and/or all bids submitted.

7.4.2 The Bid Security shall be given as a guarantee that the bidder will enter into a contract to perform the work, if awarded to him, and provide a satisfactory Performance Bond, Payment Bond, and Warranty Bond as required under the provisions of Title 34, Chapter 2, Article 2, Arizona Revised Statutes. Bid Security shall be declared forfeited as liquidated damages if the bidder refuses to enter into said contract upon request to do so by the Owner.

7.4.3 Bid Security will be returned to the unsuccessful bidders, and to the successful bidder upon the execution of a satisfactory Performance Bond, Payment Bond and Warranty Bond, and Construction Contract.

7.4.4 Bidders may withdraw their bid at any time prior to bid opening but may not resubmit them. No bid may be modified or withdrawn after the bid opening for a period of 120 days.

7.5 A mandatory Pre-Bid Conference will be held at the City of San Luis Pedro Julian Conference Room in City Hall on Thursday, March 5, 2026, at 10:00 AM Arizona Time to discuss specifications and any questions Bidders may have. The Pre-bid conference may also be attended virtually via the following link:

Pre-Bid Meeting West WWTP 3.0 MGD MBR - 2025-050
Meeting Link
MS Teams Meeting ID: 250 960 197 877 88
Passcode: 26Pp3km6

ARTICLE 8 - SUBCONTRACTOR LIST FORM

8.1 Complete the Subcontractor List Form, listing a single company, firm, or organization name only for each branch of the work.

8.2 If a change occurs in the list, brought about by the exercising of ANY of the alternates (if applicable) involved in the bidding, the bidder must show said changes on the list. If no name appears other than those listed under the Base Bid, adherence to those names shall be mandatory, no matter which alternate, if any, is exercised.

8.3 The competency and responsibility of bidders and their proposed subcontractors will be considered in making the award.

8.4 The Contractor shall pay the cost of all permits, changes, meters, connections, fees, etc., directly to governmental agencies having jurisdiction to comply with the law of the place of the Project in order to complete the work. The bidders' attention is directed to the fact that all applicable state laws, municipal ordinances, and the rules and regulations of all authorities having jurisdiction shall apply to the Contract.

ARTICLE 9 - REJECTION OF BIDS

9.1 The Bidder acknowledges the right of the Owner to reject any or all bids, to waive any informality or irregularity in any bid received, or to withhold the award for any reason he determines. In addition, the Bidder recognizes the right of the Owner to reject a bid if the Bidder failed to furnish any required Bid Security or to submit the data required by the Bidding Documents, or if the bid is in any way incomplete or irregular. Bidders shall understand that the Owner will not be responsible for any errors or omissions in the preparation of the bid.

ARTICLE 10 - AGREEMENT

10.1 The form of Agreement which the successful Bidder will be required to execute in four (4) original counterparts.

Progress payments will be made to the Contractor by the Owner in an amount equal to 90% of that due until substantial completion of the project. Payment of 95% of the due will be made upon substantial completion of the project. Payment of full payment due will be made upon Final Completion and acceptance of the project.

ARTICLE 11 - WARRANTY

11.1 The Contractor certifies by submitting his bid that he has familiarized himself with all specified products, materials, and systems which are proposed for inclusion in the required work, and that said materials, products, and systems are appropriate for the use(s) intended. He additionally certifies by submitting this bid that he shall, in fact, install said materials, products, and systems in the work properly and in rigid compliance with the terms and conditions of the Contract Documents, and shall issue his written warranty applicable to the work as required by the applicable General Conditions. If the Bidder determines that the proposed materials, products, and/or systems are not appropriate for the use(s) intended, he shall submit his written exceptions attached to the Bid Form.

The Contractor, by entering into this Contract, guarantees the Work against defective workmanship or materials for a period of two (2) years from the date established by the date of Substantial Completion.

ARTICLE 12 - PERFORMANCE, PAYMENT AND WARRANTY BONDS

12.1 The Contractor is hereby required to provide and pay for Performance, Payment and Warranty Bonds. Bonds shall secure the faithful performance (100%) of the Contract and the payment of all obligations (100%) arising there under, in such form as the Owner may prescribe and with such sureties that the Owner may approve. Bonds shall be active and held by the Owner for duration of the guaranty (warranty).

ARTICLE 13 - CONTRACTOR LICENSE LAW, ELIGIBILITY & PREFERENCE

13.1 The Contractor shall comply with and require all subcontractors to comply with State of Arizona and City Contractor's License Laws. Contractor shall comply with the provisions of "an Act to Regulate the Business of Contracting", Title 32, Chapter 10, Arizona Revised Statutes with latest adopted revisions and ‘Contractor's License Laws and Regulations" dated July, 1981, published by the Arizona State Registrar of

Contractors, or the latest revision thereof adopted under the provision of AIRS title 32, chapter 10, Articles 2 and 3.

The prime Contractor shall have a State of Arizona Classification "A" Contractor's license to perform the work. A bid submitted by any Contractor not properly licensed at the time of bid opening shall be considered non-responsive and will be rejected.

ARTICLE 14 - NONDISCRIMINATION

14.1 In connection with the performance of work under this Contract, the Contractor agrees (as prescribed in A.R.S. Section 23-373) not to discriminate against any employee or applicant for employment because of race, sex, religion, color, or national origin. The aforesaid provision shall include, but not be limited to, the following: employment upgrading, demotion, or transfer, recruitment or recruitment advertising, layoff or termination, rates of pay or other forms of compensations and selection for training, including apprenticeship. The Contractor agrees to post hereafter in conspicuous places, available for employees and applicants for employment, notices setting forth the provisions of the nondiscrimination clauses. The contractor further agrees to insert the foregoing provision in all subcontracts hereunder, except subcontracts for standard commercial supplies or raw materials.

ARTICLE 15 - COPIES OF DOCUMENTS FURNISHED

15.1 The Contractor shall be furnished three (3) sets of appropriate Construction Documents free of charge at the Pre-Construction meeting.

Additional copies may be obtained from the Engineer by paying cost of reproduction of same.

ARTICLE 16 - INSURANCE

16.1 The Contractor is required to provide and pay for insurance as provided for in the Contract Documents. Contractor shall file, with the Performance, Payment and Warranty Bonds, all required Certificates of Insurance outlined in the Contract.

16.2 The Contractor shall not commence work under this Contract until the Contractor has obtained all the insurance required under this paragraph and such insurance has been approved by the Owner, nor shall the Contractor allow any Subcontractor to commence work on a subcontract until the insurance require of the subcontractor has been so obtained and approved.

16.3 The Contractor shall procure and maintain during the life of this contract, Workmen's Compensation Insurance as required by applicable State or Territorial Law for all of his employees to be engaged in work at the site of the project under this Contract, and in any such work sublet, the Contractor shall require all Subcontractors similarly to provide Workmen's Compensation Insurance for all of the latter's employees to be engaged in such work unless such employees are covered by the protection afforded by the Contractors Workmen's Compensation Insurance. In case any class of the employees engaged in hazardous work on the project under this contract are not protected under the Workmen's Compensation Statute, the Contractor shall provide and shall cause each subcontractor to provide adequate employer's liability insurance for the protection of such of his employees as are not otherwise protected.

ARTICLE 17 - ADDITIONAL SERVICES

17.1 Contractor agrees to pay for additional testing services, additional Engineering services, and any similar related additional costs as designated in the Contract Documents.

ARTICLE 18 - SUMMARY OF THE WORK

18.1 Refer to the Project Overview & Scope of Work for description of the work.

ARTICLE 19 - SUBSTANTIAL COMPLETION

19.1 Substantial Completion will be accomplished no later than 488 days from dated letter "Notice to Proceed".

ARTICLE 20 - LIQUIDATED DAMAGES

20.1 The liquidated damages for this project shall be determined by the Schedule of Liquidated Damages in City of San Luis Supplemental to the MAG Uniform Standard Specifications. Provisions for liquidated damages, if any, for failure to timely attain a completion milestone, Substantial Completion, or completion of the Work in readiness for final payment, are set forth in the Contract and General Conditions.

ARTICLE 21 - EVALUATION AND AWARD

21.1 Bid opening will take place immediately after the close of the bidding.

21.2 City staff will convene in the Pedro Julian Conference Room at the San Luis City Hall, open the proposals, and read the bids into the record.

21.3 Award will be made to the lowest qualified responsive bidder.

21.4 Formal award of contract is intended to be at a City Council meeting within 120 days of the close of bidding.

ARTICLE 22 - PROTESTS

22.1 All responders will receive notification via e-mail regarding their status vis-a-vis the proposed contract award. Responders not selected have 5 days from e-mail sent date to initiate protest proceedings. To do this, a dissatisfied party must lodge a protest with Melissa Lopez, via receipted e-mail (mlopez@sanluisaz.gov) or by certified mail (Attn: Melissa Lopez/City of San Luis/P.O. Box 1170/San Luis, AZ 85349). In the absence of a successful protest, the contract will be awarded to the most responsive qualified bidder.

Project Overview & Scope of Work

City of San Luis

PROJECT NAME

The name of this project is **CITY OF SAN LUIS WEST WWTP 3.0 MGD MBR UPGRADES**. All correspondence and documents are to reference "CITY OF SAN LUIS WEST WWTP 3.0 MGD MBR UPGRADES".

OVERVIEW

This PROPOSAL PAMPHLET contains the bid documents necessary to respond to the Request for Bid for **CITY OF SAN LUIS WEST WWTP 3.0 MGD MBR UPGRADES**. This project is being undertaken by the City of San Luis, Arizona funds. This bid pertains to those activities described herein under the Scope of Work.

It is especially important that bidders are aware of the following:

1. This solicitation is open to general contractors and subcontractors licensed to operate in the State of Arizona.
2. Davis-Bacon wage rates **DO** apply.

SCOPE OF WORK

Scope of Work, **CITY OF SAN LUIS WEST WWTP 3.0 MGD MBR UPGRADES**.

The proposed work is located within the city limits of the City of San Luis, Arizona at its West Wastewater Treatment Plant site. The work consists of, but is not limited to, construction upgrades and conversion of the existing 1.5 MGD SBR treatment process to a 3.0 MGD Membrane Bioreactor (MBR) treatment process. Upgrades will include modifications to the headworks, secondary process, tertiary, disinfection, sludge storage & digestion, sludge dewatering, odor control, plant drains, and plant reuse & distribution processes, along with associated civil, mechanical, structural, and electrical/ Instrumentation & Controls works and all incidentals required by the project as specified in the Contract Document and Project Plans. Integration of Instrumentation and Controls shall be performed by the City.

Bid Kit

City of San Luis

West WWTP 3.0 MGD MBR Upgrades

BID FORM

TO: City of San Luis, Arizona
1090 East Union Street
P.O. Box 1170
San Luis, Arizona 85349

BIDDER:

Project Name: City of San Luis West WWTP 3.0 MGD MBR Upgrades

In compliance with the ADVERTISEMENT FOR BIDS:

Having examined the CONTRACT DOCUMENTS, site of work, and being familiar with the conditions to be met, hereby submits the following BID for furnishing the material, equipment, labor and everything necessary for the completion of the work listed and agrees to execute the CONTRACT DOCUMENTS and furnish the required CONTRACT AND LABOR AND MATERIAL SURETY BONDS and CERTIFICATES OF INSURANCE for the completion of said work, at the locations and for the prices set forth on the inside pages of this form;

Understands that construction of this PROJECT shall be in accordance with all applicable Maricopa Association of Governments (MAG) Uniform Standard Specifications and Details for Public Works Construction as adopted by the City of San Luis, the City of Yuma Construction Standard Detail Drawings – 2019 edition [details], the City of San Luis Supplemental to the MAG Uniform Standard Specifications and Details for Public Works Construction and the City of Yuma Construction Standard Detail Drawings, except as otherwise required by the PLANS, TECHNICAL SPECIFICATIONS and GENERAL CONDITIONS;

Understands that this BID for construction of this PROJECT shall be submitted with a proposal guarantee of cash, certified check, cashier's check or BID SURETY BOND for an amount not less than 10 percent of the amount bid;

Agrees that upon receipt of NOTICE OF AWARD, from the City of San Luis, Arizona, Bidder will execute the CONTRACT DOCUMENTS within ten (10) calendar days;

Understands that the work shall commence on day 1 of the Contract Time and be completed within **488 calendar days.**

Hereby acknowledges receipt of and agrees Bidder's PROPOSAL is based on the following Addenda listed by number and date issued):

Number	Date	Number	Date

(List any additional addenda on the back of this sheet)

And hereby submits the following BID SCHEDULE of units and quantities as a part of this BID KIT:

BID SCHEDULE

TO: City of San Luis, Arizona
1090 East Union Street, P.O. Box 1170
San Luis, Arizona 85349

BIDDER:

Project Name: City of San Luis West WWTP 3.0 MGD MBR

Bid Item	Description	Unit	Quantities	Unit Price	Total Cost
1	Mobilization / Demobilization	LS	1		
2	Earthworks for Grading, Cut, Fill, and Export	LS	1		
3	Asphalt Pavement	SF	38,413		
4	Yard Piping	LS	1		
5	Headworks Upgrades	LS	1		
6	FEB Conversion in SBR 4	LS	1		
7	Secondary Process Conversion in SBR 3 and Digesters 3&4	LS	1		
8	Installation of Feed Forward Pumps and Channel	LS	1		
9	MBR Conversion in SBRs 1 & 2 and Blower Gallery	LS	1		
10	Chemical Building Upgrades	LS	1		
11	Plant Drain Pump Station Upgrades	L	1		
12	Sludge Dewatering	LS	1		
13	Odor Control	LS	1		

Bid Item	Description	Unit	Quantities	Unit Price	Total Cost
14	Plant Process Water Booster Station	LS	1		
15	Installation of 24" PVC C900 Reuse Distribution Pipeline, Valves, Fittings and Appurtenances	LF	636		
16	Headwork Fabric Canopy	LS	1		
17	MBR Crane and Structure	LS	1		
18	MBR FRP Covers	Ft^2	2,400		
19	Handrails and Guardrails	LF	872		
20 a 20 b	Walkway Grating (Open) Walkway Grating (FRP/ Closed)	Ft^2 Ft^2	2,400 444		
21	Metal Stairways	LS	1		
22	Structural Canopies	LS	1		
23	Transition SBR 4 to Intensification Process	LS	1		
24	Electrical	LS	1		
25	Concrete and Concrete Structures	LS	1		
26	Coating and Painting	LS	1		
27	Digesters 1 & 2 Upgrades	LS	1		
28	Base Lump Sum	LS	1		
29	Hydro-dyne Storage Allowance	MO	10	$3,860	$38,600

NOTE: Detailed descriptions of bid items are on the following page.

TOTAL $ _____

5% CONTINGENCY SUBTOTAL $ _____

TOTAL BASE BID $ _____

TOTAL BASE BID AMOUNT IN WORDS

_____

Bid Item 1 - Mobilization / Demobilization

Payment shall be made for mobilization and demobilization to and from the site, for bonds and insurance. CONTRACTOR shall provide all the necessary mobilization requirements for the proper construction activities, include providing all the necessary accommodations for personnel and equipment as describe in these Specifications.

Bid Item 2 – Earthworks for Grading, Cut, Fill, and Export

Payment shall be made for the work associated with earthworks grading, cut, fill, and export of any excess material. Fill shall include screening, placement, and compaction of native material to meet the requirements of the Contract Documents. Excess material shall be screened and exported to a dedicated site per the contract. Excess material shall be spread evenly within the dedicated site by the CONTRACTOR. Screened material greater than 4" shall be disposed by the CONTRACTOR offsite. Payment shall be based on actual quantity and the unit price shown on the CONTRACTOR's schedule of values as the items are completed and accepted by the Representative.

Bid Item 3 – Asphalt Pavement

Payment shall be made for asphalt road pavement as described in the Contract Documents. This includes the labor, equipment, material for the preparation and placement of the hot-mix asphalt, binder, base course, etc. where required. Quantities shown are estimated. Payment shall be based on actual quantity and the unit price shown on the CONTRACTOR's schedule of values as the items are completed and accepted by the Representative.

Bid Item 4 – Yard Piping

Payment shall be made for site work associated with the installation of the yard piping as described in the Contract Documents. The work shall include all pipes, fitting, and associated labor and materials required for the proper trenching, installation, and backfill of the pipes. This shall also include any potholing, pavement restoration, wire tracing and surveying of the required work. Measurement and payment shall be made for each type of process yard pipe based on linear feet of pipe installed and the breakdown shown on the CONTRACTOR's schedule of values as the items are completed and accepted by the Representative.

Bid Item 5 – Headworks Upgrades

Payment shall be made for the furnish and mechanical installation of the Headworks and associated appurtenances as shown on the drawings, specified in the contract documents. The Headworks Equipment is a pre-purchased item by the City. This bid item is only to include items, components and equipment not supplied by the City. Payment shall be made based on the breakdown shown on the CONTRACTOR's schedule of values as the items are completed and accepted by the Representative.

Bid Item 6 – FEB Conversion in SBR 4

Payment shall be made for the furnish and mechanical installation associated with the conversion of SBR 4 to the new Flow Equalization Basin (FEB) with associated appurtenances as shown on the drawings, specified in the contract documents. Payment shall be made based on the breakdown shown on the CONTRACTOR's schedule of values as the items are completed and accepted by the Representative.

Bid Item 7 – Secondary Process Conversion in SBR 3 and Digesters 3&4

Payment shall be made for the furnish and mechanical installation associated with the conversion of SBR 3 and Digesters 3 & 4 into the new Secondary Treatment Process with associated appurtenances as shown on the drawings, specified in the contract documents. The Secondary Process contains equipment that are pre-purchased by the City. This bid item is only to include items, components and equipment not supplied by the City. Payment

shall be made based on the breakdown shown on the CONTRACTOR's schedule of values as the items are completed and accepted by the Representative.

Bid Item 8 – Installation of Feed Forward Pumps and Channel

Payment shall be made for the furnish and mechanical installation associated with the installation of the Feed Forward Pumps and Channel with associated appurtenances as shown on the drawings, specified in the contract documents. The Feed Forward Pumps System contains equipment that are pre-purchased by the City. This bid item is only to include items, components and equipment not supplied by the City. Payment shall be made based on the breakdown shown on the CONTRACTOR's schedule of values as the items are completed and accepted by the Representative.

Bid Item 9 – MBR Conversion in SBRs 1 & 2 and Blower Gallery

Payment shall be made for the furnish and mechanical installation associated with the conversion of SBRs 1 & 2 into the new MBR Basins and construction of the Blower Gallery with associated appurtenances as shown on the drawings, specified in the contract documents. The MBR Process and Blowers contain equipment that are pre-purchased by the City. This bid item is only to include items, components and equipment not supplied by the City. Payment shall be made based on the breakdown shown on the CONTRACTOR's schedule of values as the items are completed and accepted by the Representative.

Bid Item 10 – Chemical Building Upgrades

Payment shall be made for the furnish and mechanical installation associated with the upgrades to the chemical storage and metering within the existing Chemical Building along with associated appurtenances as shown on the drawings, specified in the contract documents. The chemical metering contains equipment that are pre-purchased by the City. This bid item is only to include items, components and equipment not supplied by the City. Payment shall be made based on the breakdown shown on the CONTRACTOR's schedule of values as the items are completed and accepted by the Representative.

Bid Item 11 – Plant Drain Pump Station Upgrades

Payment shall be made for the furnish and mechanical installation associated with the Plant Drain Pump Station with associated appurtenances as shown on the drawings, specified in the contract documents. Payment shall be made based on the breakdown shown on the CONTRACTOR's schedule of values as the items are completed and accepted by the Representative.

Bid Item 12 – Sludge Dewatering

Payment shall be made for the furnish and mechanical installation associated with the installation of the Sludge Dewatering System along with associated appurtenances as shown on the drawings, specified in the contract documents. The Sludge Dewatering System contains equipment that are pre-purchased by the City. This bid item is only to include items, components and equipment not supplied by the City. Payment shall be made based on the breakdown shown on the CONTRACTOR's schedule of values as the items are completed and accepted by the Representative.

Bid Item 13 – Odor Control

Payment shall be made for the furnish and mechanical installation associated with the Odor Control System with associated appurtenances as shown on the drawings, specified in the contract documents. Payment shall be made based on the breakdown shown on the CONTRACTOR's schedule of values as the items are completed and accepted by the Representative.

Bid Item 14 – Plant Process Water Booster Station

Payment shall be made for the furnish and mechanical installation associated with the Plant Process Water Booster Station with associated appurtenances as shown on the drawings, specified in the contract documents. Payment shall be made based on the breakdown shown on the CONTRACTOR's schedule of values as the items are completed and accepted by the Representative.

Bid Item 15 - Installation of 24" PVC C900 Reuse Distribution Pipeline , Valves, Fittings and Appurtenances

Payment shall be made for the civil and mechanical work associated with the installation of the new 24" Reuse Distribution Pipeline as described in the Contract Documents. The work shall include all pipes, fitting, and associated labor and materials required for the proper trenching, installation, and backfill of the pipes. This shall also include all incidentals including potholing, pavement restoration, wire tracing, surveying, etc. of the required work. Quantities shown are estimated. Payment shall be based on actual quantity and the unit price shown on the CONTRACTOR's schedule of values as the items are completed and accepted by the Representative.

Bid Item 16 – Headwork Fabric Canopy

Payment shall be made for the furnish and mechanical installation associated with the Headworks Fabric Canopy with associated appurtenances as shown on the drawings, specified in the contract documents. Payment shall be made based on the breakdown shown on the CONTRACTOR's schedule of values as the items are completed and accepted by the Representative.

Bid Item 17 – MBR Crane and Structure

Payment shall be made for the furnish and mechanical installation associated with the MBR Crane and Structure with associated appurtenances as shown on the drawings, specified in the contract documents. Payment shall be made based on the breakdown shown on the CONTRACTOR's schedule of values as the items are completed and accepted by the Representative.

Bid Item 18 – MBR FRP Covers

Payment shall be made for the furnish and mechanical installation associated with the MBR FRP Covers with associated appurtenances as shown on the drawings, specified in the contract documents. Quantities shown are estimated. Payment shall be based on actual quantity and the unit price shown on the CONTRACTOR's schedule of values as the items are completed and accepted by the Representative.

Bid Item 19 – Handrails and Guardrails

Payment shall be made for the furnish and mechanical installation associated with handrails and guardrails along with associated appurtenances as shown on the drawings, specified in the contract documents. Quantities shown are estimated. Payment shall be based on actual quantity and the unit price shown on the CONTRACTOR's schedule of values as the items are completed and accepted by the Representative.

Bid Item 20 – Walkway Grating

Payment shall be made for the furnish and mechanical installation associated with walkway grating (both open metal grating and closed FRP grating) along with associated appurtenances as shown on the drawings, specified in the contract documents. Quantities shown are estimated. Payment shall be based on actual quantity and the unit price shown on the CONTRACTOR's schedule of values as the items are completed and accepted by the Representative.

Bid Item 21 – Metal Stairways

Payment shall be made for the furnish and mechanical installation associated with metal stairways along with associated appurtenances as shown on the drawings, specified in the contract documents. Payment shall be made based on the breakdown shown on the CONTRACTOR's schedule of values as the items are completed and accepted by the Representative.

Bid Item 22 – Structural Canopies

Payment shall be made for the furnish and mechanical installation associated with Structural Canopies along with associated appurtenances as shown on the drawings, specified in the contract documents. Payment shall be made based on the breakdown shown on the CONTRACTOR's schedule of values as the items are completed and accepted by the Representative.

Bid Item 23 – Transition SBR 4 to Intensification Process

Payment shall be made for the furnish and mechanical installation associated with the intensification of SBR 4 using World Water Works Migrate MBC media along with associated appurtenances as shown on the drawings, specified in the contract documents. Payment shall be made based on monthly lease agreement with World Water Works and on the breakdown shown on the CONTRACTOR's schedule of values as the items are completed and accepted by the Representative.

Bid Item 24 – Electrical

Payment shall be made for the furnish and electrical installation associated with the all electrical components along with associated appurtenances as shown on the drawings, specified in the contract documents. Payment shall be made based on the breakdown shown on the CONTRACTOR's schedule of values as the items are completed and accepted by the Representative.

Bid Item 25 – Concrete and Concrete Structures

Payment shall be made for the furnish and structural installation associated with all concrete components and concrete structures along with associated appurtenances as shown on the drawings, specified in the contract documents. Payment shall be made based on the breakdown shown on the CONTRACTOR's schedule of values as the items are completed and accepted by the Representative.

Bid Item 26 – Coating and Painting

Payment shall be made for the furnish and application associated with the all coating and painting along with associated appurtenances as shown on the drawings, specified in the contract documents. Payment shall be made based on the breakdown shown on the CONTRACTOR's schedule of values as the items are completed and accepted by the Representative.

Bid Item 27 – Aerobic Digesters 1 & 2 Upgrades

Payment shall be made for the furnish and mechanical installation associated with the upgrades of Digesters 1 & 2 with associated appurtenances as shown on the drawings, specified in the contract documents. Payment shall be made based on the breakdown shown on the CONTRACTOR's schedule of values as the items are completed and accepted by the Representative.

Bid Item 28 – Base Lump Sum

Payment shall be made for the work associated with the portion of the project not specifically included in the above bid schedule but required to be completed as part of the project as shown on the drawings, specified in the contract documents, and as required by the District. This may include, but not limited, to general conditions, testing, startup and training, survey, construction management, equipment rental, safety, overhead, etc. Payment shall be made based on the breakdown shown on the CONTRACTOR's schedule of values as the items are completed and accepted by the Representative.

Bid Item 29 – Hydro-Dyne Storage Allowance

Hydro-dyne equipment package is 100% complete and ready to ship, it is being stored at Hydr-dyne's headquarters in Florida on behalf of the city. The City chose to delay delivery to ensure it would align with the contractor's schedule. The Contractor will be responsible for coordinating delivery and paying Hydro-dyne a storage fee of $3,860 a month. This storage is intended to be no longer than 10 months.

THIS BID IS SUBMITTED BY ,

a corporation organized under the laws of the State of _____ ,

or a partnership consisting of _____ ,

or individual trading as _____;

of the City of _____(City, State) and is the holder of Arizona State

Contractor's license(s): _____(type)

Classification _____ License No. _____ .

The Bidder hereby certifies that as of the below date, the bond amount posted with the Arizona Registrar of Contractors is

$ _____ and that the Bidder's actual volume of work has not exceeded the contemplated gross volume pursuant to Arizona Administrative Code, Title 4 Chapter 9 [Authority: ARS §32-1101 et seq.]

Respectfully Submitted,

Bidder _____

Address _____

_____

City, State, ZIP _____

E-mail _____

By:

[Signature] [Date]

Name _____

Title _____

ATTEST: [If Bidder is an Individual]

Witness:

[Signature] [Date]

Name and Title _____

BID SURETY BOND

Project Name: City of San Luis West WWTP 3.0 MGD MBR

For: City of San Luis, Arizona

KNOW ALL MEN BY THESE PRESENTS:

That we, _____, as Principal, (hereinafter called the Principal),

and the _____ , a corporation duly organized under the laws of the State of

_____ and duly licensed and possessing a certificate of authority to transact surety business in the State of Arizona, as Surety, (hereinafter called the Surety), are held and firmly bound unto City of San Luis, Arizona [hereinafter called City] as Obligee, in the sum of ten percent (10%) of the total amount of the bid of Principal, submitted by him to the City for the work described below, for the payment of which sum, well and truly to be made, the said Principal and the said Surety, bind ourselves, our heirs, executors, and administrators, successors, and assigns, jointly and severally, firmly by these presents, and in conformance with Arizona Revised Statutes [ARS].

WHEREAS, the said Principal is herewith submitting its PROPOSAL for the City of San Luis West WWTP 3.0 MGD MBR

NOW, THEREFORE, if the City shall accept the PROPOSAL of the Principal and the Principal shall enter into a CONTRACT with the City in accordance with the terms of the PROPOSAL and give the Bonds and Certificates of Insurance as specified in the Standard Specifications with good and sufficient Surety for the faithful performance of the CONTRACT and for the prompt payment of labor and materials furnished in the prosecution of the CONTRACT, or in the event of the failure of the Principal to enter into the CONTRACT and give the Bonds and Certificates of Insurance, if the Principal pays to the City the difference not to exceed the penalty of the bond between the amount specified in the PROPOSAL and such larger amount for which the Obligee may in good faith contract with another party to perform the work covered by the PROPOSAL then this obligation is void. Otherwise it remains in full force and effect provided, however, that this bond is executed pursuant to the provisions of Section 34-201, ARS, and all liabilities on this bond shall be determined in accordance with the provisions of the section to the extent as if it were copied at length herein.

Signed and sealed this _____ day of _____, 20____.

_____		_____	
Principal Firm	[Seal]	Surety Firm	[Seal]
_____		_____	
Principal Signature		Surety Signature	
_____		_____	
Name and Title		Name and Title	
		_____	
		Agency of Record	
		_____	
		Address	
		{NOTE: attach current power of attorney}	

NON-COLLUSION AFFIDAVIT

Project Name: City of San Luis West WWTP 3.0 MGD MBR

For: City of San Luis, Arizona

That pursuant to Section 1128 of Title 23 USC, the undersigned in submitting a PROPOSAL for performing the following work by CONTRACT, being duly sworn, disposes and says that he has not, nor anyone associated with the business identified below, either directly or indirectly, entered into any agreement, participated in any collusion or otherwise taken any action in restraint of free competitive bidding in connection with this CONTRACT.

Description of CONTRACT:

_____
Signature of Bidder

_____
Title

_____
Business Name

_____
Address

Subscribed and sworn to before me this _____ day of _____, 20_____.

_____
Notary Public

Notary Public in and for the County of _____, State .

My Commission Expires_____, 20_____.

BIDDER'S PARTICIPATION, SUBCONTRACTOR AND SUPPLIER LIST

Project Name: City of San Luis West WWTP 3.0 MGD MBR For: City of San Luis, Arizona
1090 East Union Street
P.O. Box 1170
San Luis, Arizona 85349

This form shall be submitted along with the BID in the same sealed envelope.

The BIDDER must list below the names and addresses of all qualified subcontractors and major suppliers to be employed on the various portions of the work indicated.

BIDDER AND ALL CONTRACTORS SHALL BE DULY LICENSED IN ACCORDANCE WITH ARIZONA REVISED STATUTES AT THE TIME OF THE BID OPENING.

	BIDDER,	
	SUB CONTRACTOR AND/OR SUPPLIER	**CURRENT AZ LICENSE [SUB CONTRACTOR]**
1.	_____	_____
2.	_____	_____
3.	_____	_____
4.	_____	_____
5.	_____	_____

Contract Kit

City of San Luis

West WWTP 3.0 MGD MBR Upgrades

CONTRACT

for the Construction of

CITY OF SAN LUIS WWTP
WEST WWTP 3.0 MGD MBR UPGRADES

This agreement ("Contract") is made and entered into this ____ day of _____ 2026, by and between:

Contractor Name and Address. An Arizona for-profit corporation ("Contractor") and	City of San Luis 1090 East Union Street (Physical Address) P.O. Box 3750 (Mailing Address) San Luis, Arizona 85349 An Arizona municipal corporation ("City")

The Contractor and City may be referred to individually as the "Party" and collectively as the "Parties."

WHEREAS, the scope of work requires the Contractor to furnish any and all labor, materials, equipment, transportation, utilities, services, and facilities required to perform all work for the City of San Luis – West WWTP 3.0 MGD MBR Upgrades ("Project"), per the Contractor's bid of 2025-050, ("Proposal"). and to completely and totally remove and install the materials therein for the City, in a good and workmanlike and substantial manner and to the satisfaction of the City through its engineers ("ENGINEERS"), or his properly authorized agents and strictly pursuant to and in conformity with the plans and specification prepared by the ENGINEERS, and with such modifications of the same and other documents that the OWNER may make through the ENGINEERS or his properly authorized agents, as provided herein; and

WHEREAS, San Luis City Council, at a properly noticed open meeting, awarded the Bid to the Contractor on ____ day of _____ 2026; and

WHEREAS, at the same meeting, San Luis City Council directed staff to finalize an agreement with _____, Inc.;

NOW, THEREFORE, the above recitals are incorporated into this Contract. In consideration of the City paying the sum of $_____ to the Contractor and the Contractor constructing an influent force main with appurtenances and other work incidental in the manner and at the time provided in this Contract, and in consideration of the other mutual benefits and obligations contained in this Contract the Parties agree as follows:

ARTICLE 1 - PARTICIPANTS AND PROJECT

City:	Jenny Torres, City Manager City of San Luis, Arizona Telephone: (928) 341-8520 E-mail: jtorres@sanluisaz.gov
City PROJECT MANAGER:	Jorge Perez, Assistant Director of Public Works City of San Luis Telephone: (928) 341-8577 E-mail: jperez@sanluisaz.gov
Contractor:	Contractor Representative Contractors Name. Telephone: E-mail:
Contractor MANAGER:	_____ Contractor Name. Telephone: _____ E-mail: _____
PROJECT ENGINEER / DESIGNER:	Duong Do, P.E., F.ASCE PACE Telephone: (714) 481-7223 E-mail: ddo@pacewater.com
PROJECT DESCRIPTION:	City of San Luis, West WWTP 3.0 MGD MBR Upgrades
PROJECT LOCATION:	West WWTP on Cesar Chavez Blvd in San Luis, Arizona

ARTICLE 2 - CONTRACT DOCUMENTS

The Contract between the City and the Contractor shall consist of the following items, collectively the "Contract Documents:"

1. this Contract;
2. Change Orders (if any);
3. Performance bond and payment bond (required by A.R.S. § 41-2574, also known as contract bond and labor & materials bond), bid bond, and other bonds;
4. Project General Requirements and Technical Specifications;
5. Construction Plans;
6. General Conditions of the Contract;
7. Bid documents {including but not limited to the advertisement for bids, bid schedule, addenda (if any), additive bid items (if any)}, and the Proposal;
8. 2016 City of San Luis Supplemental to the 2015 MAG Uniform Standard Specifications and Details for Public Works Construction and City of Yuma Construction Standard Detail Drawings, MAG Uniform Standard Specifications and Details for Public Works Construction, City of Yuma Construction Standard Detail Drawings – Edition 2019; and

9. Certificates of Insurance.

By this reference, the above Contract Documents are made a part of this Contract to the same extent as if set forth in full here.

In the event of a conflict of language between the items, the documents shall govern in the order listed above. The Contract Documents shall govern in all other matters not otherwise specified by the Contract between the Parties. All previous contracts (if any) between the Contractor and City are not applicable to this Contract or other resultant contracts.

ARTICLE 3 - DESIGN PHASE SERVICES

The Contractor is not required to provide design phase services to the City in relation to this Project.

ARTICLE 4 - CONSTRUCTION SERVICES

4.1 General.

4.1.1 The Contractor agrees, at its own cost and expense, to do all Work necessary and required to fully, timely, and properly complete the construction of the Project in strict accordance with the Contract Documents in a good and workmanlike manner, free and clear of all claims, liens, and charges whatsoever, in the manner and under the conditions specified, within the Project Schedule.

4.1.2 The Contractor shall provide all the labor and materials and perform the Work in accordance with Division 01 - General Requirements of the Specifications and Section 4 of the General Conditions. Below are some but not all of the major components of the construction services and the corresponding subsections of Division 01 - General Requirements of the Specifications and Section 4 of the General Conditions.

4.1.3 At all times relevant to this Contract and performance of the Work, the Contractor shall fully comply with all laws, regulations, or legal requirements applicable to the City, the Project, and the Contract, including, without limitation, those set forth in the General Conditions.

4.1.4 The Contractor shall perform the Work under this Contract using only those firms, team members, and individuals designated by Contractor consistent with the Contractor's accepted Bid, or otherwise, approved by the City pursuant to the General Conditions. No other entities or individuals may be used without the prior written approval of the Project Manager.

4.1.5 The Contractor shall comply with all terms and conditions of the General Conditions and the requirements of the Specifications.

4.1.6 The terms of this Contract shall control in the event of a conflict between it and the General Conditions, General Requirements of the Specifications, or any exhibit to the Contract or appendix to the General Conditions.

4.1.7 For purposes of this provision, "Work Product" shall include all designs, drawings, plans, specifications, ideas, renderings, and other information or matter in whatever form created (e.g., electronic or printed) and in all media now known or in the future created. All Work Product shall be considered Work Made for Hire as defined in the United States Copyright Act 17 U.S.C. § 101 (Copyright Act). If, for any reason, any such Work is found not to be a Work Made for Hire, the Contractor, by entering into this Contract, transfers and assigns ownership of the copyright in such

Work to the City. Notwithstanding anything to the contrary in this Contract, all Work Product prepared or otherwise created in connection with the performance of this Contract, including the Work, are to be and remain the property of the City. The rights in this Section are exclusive to the City in perpetuity.

4.2 The Contractor's Pre-Contract and Pre-Work Deliverables. The Contractor shall provide the deliverables in accordance with Division 01 - General Requirements of the Specifications and Section 4.2 of the General Conditions.

4.3 Pre-Construction Conference. The Contractor shall attend the pre-construction conference in accordance with Division 01 - General Requirements of the Specifications and Section 4.3 of the General Conditions.

4.4 Performance of the Work (Including Field Measurements, Subcontractors, and Suppliers). The Contractor shall control and maintain the Project site in accordance with Section 4.4 of the General Conditions and Division 01 - General Requirements of the Specifications.

4.5 Control of the Project Site. The Contractor shall control and maintain the Project site in accordance with Division 01 - General Requirements of the Specifications and Section 4.5 of the General Conditions.

4.6 Project Safety. The Contractor shall implement and enforce Project safety in accordance with Section Division 01 - General Requirements of the Specifications and 4.6 of the General Conditions.

4.7 Materials Quality, Substitutions, and Shop Drawings. The Contractor shall provide materials testing and submit substitute materials and shop drawings in accordance with Division 01 - General Requirements of the Specifications and Section 4.7 of the General Conditions.

4.8 Project Record Documents. The Contractor shall maintain and make available the Project Record Document in accordance with Division 01 - General Requirements of the Specifications and Section 4.8 of the General Conditions.

4.9 Warranty and Correction of Defect Work. The Contractor shall provide warranties and correct defective Work in accordance with Division 01 - General Requirements of the Specifications and Section 4.9 of the General Conditions.

4.10 The OWNER has pre-purchased several items of treatment process equipment. One piece of equipment is onsite, and two others need to be delivered. The Contractor shall be responsible for planning delivery of pending equipment in order to meet the construction schedule. All treatment process equipment will become the CONTRACTOR'S responsibility. The CONTRACTOR shall coordinate delivery and confirm that the shipments are complete and accurate for all equipment. Contract shall provide safe and secure storage, provide transportation from onsite storage to install location, install per the construction documents and manufacturer's requirements, and schedule the manufacturer's representative for construction, installation certification, start up, operational training, etc.

The following pieces of Equipment have been pre-purchased by the OWNER:

4.10.1 Membrane Bioreactor, (MBR) (Kubota) to include membranes, mixers, pumps, blowers, diffusers and control panels. See Appendices B & C of the Specifications for more complete information and shop drawings. Contractor must plan and coordinate delivery to meet the contractor schedule. Contractor will be required to pay the storage fees; allowance has been provided. The delivery date is to be scheduled directly with Kubota.

4.10.2 Sludge Dewatering Screw Press (KFC). Screw Press, Sludge Pump, polymer dosing flocculation tank, conveyors and control panels. See Appendices B & C of the Specifications for more complete information. (**On-site**)

4.10.3 Headworks Screen, grit removal and control panels (Hydro-Dyne) - Manufacturing completed and being stored at Hydro-Dyne, a waiting Contractor coordination for delivery. Contractor must plan and coordinate delivery to meet the contractor schedule. Contractor will be required to pay the storage fees; allowance has been provided. See Appendices B & C of the Specifications for complete information.

ARTICLE 5 - CITY'S RESPONSIBILITIES

5.1 The City shall have the responsibilities and provide the information specified in, and subject to, the conditions set forth in Section 5 of the General Conditions and Division 00 – Procurement and Contracting Requirements of the Specifications.

ARTICLE 6 - CONTRACT TIME

6.1 Contract Time.

The Contract Time shall start with the Notice to Proceed (NTP) and end with Final Acceptance, as set forth in Article 6.3 below. The Notice to Proceed cannot be issued prior to the City's approval and acceptance of the Bid.

6.1.1 The Contract Time shall be as set forth in the Project Schedule. The Contractor agrees that it will commence the performance of the Work and complete the Project within the Contract Time.

6.1.2 Time is of the essence of this Contract, for the Project, and for each phase and designated milestone of the Contract.

6.1.3 Failure on the part of the Contractor to adhere to the approved Project Schedule will be deemed a material breach and sufficient grounds for the City to terminate this Contract.

6.2 Project Schedule. The Project Schedule, as required by Division 01 - General Requirements of the Specifications and Section 6.2 of the General Conditions, shall be updated and maintained throughout the Contractor's performance under this Contract in accordance with Division 01 - General Requirements of the Specifications and Section 6.2 of the General Conditions.

6.3 Completion Milestones.

6.3.1 **Substantial Completion.** The Work will be substantially complete within **four hundred eighty-eight (488) calendar Days after the Notice to Proceed** when the Contract Times commence. The Contractor, by entering into this Contract, guarantees the Work against defective workmanship or materials for a period of two (2) years from the date established by the date of Substantial Completion.

6.3.2 **Final Completion**. Following established Substantial Completion date, Contractor must address punch list items to the City's satisfaction within **forty-five (45) calendar days.** The City and/or Engineer shall perform a Final Completion inspection for verification.

6.3.3 **Final Acceptance**. At **month twenty-three (23)** of the Warranty Period, the City and/or Engineer shall perform a Final Acceptance inspection to verify all warranty items have been addressed to the City's satisfaction. The City will then provide a written Final Acceptance notice.

6.4 Liquidated Damages.

6.4.1 The Contractor acknowledges and agrees that if the Contractor fails to obtain **Substantial Completion** or **Final Completion** of the Work within the Contract Time, the City will sustain extensive damages and serious loss as a result of such failure.

The Contractor agrees to commence Work within ten (10) Days of the date of the Notice to Proceed from the City and to achieve **Substantial Completion** within **four hundred eighty-eight (488) calendar Days after the Notice to Proceed.** The Contractor agrees to pay liquidated damages, the sum of $1,190.00, for each consecutive calendar Day thereafter.

6.4.2 The City may deduct liquidated damages described in Subsection 6.4.1 above from any unpaid amounts then or thereafter due to the Contractor under this Contract. Any liquidated damages not so deducted from any unpaid amounts due the Contractor shall be payable to the City at the demand of the City, together with interest from the date of the demand at the highest lawful rate of interest payable by the Contractor.

6.4.3 Nothing in this Contract shall be deemed to constitute a waiver of any other remedy available to the City in the event of the Contractor's default under this Contract prior to full performance of the Work, including, as applicable, specific performance or completion of the Work on behalf of the Contractor, the cost and expense of which shall be offset against any monies then or thereafter due to Contractor (if any) and otherwise immediately reimbursed to City by the Contractor.

ARTICLE 7 - CONTRACT PRICE

7.1 Contract Price.

7.1.1 In exchange for the Contractor's full, timely, and acceptable performance and construction of the Work under this Contract, and subject to all of the terms of this Contract, the City will pay the Contractor the Contract Price, which is $_____

7.1.2 The Contract Price is all-inclusive and specifically includes all fees, costs, insurance and bond premiums, and taxes of any type necessary to fully, properly, and timely perform and construct the Work.

ARTICLE 8 - PAYMENT

Payments shall be made to the Contractor in accordance with Division 01 - General Requirements of the Specifications and Article 8 of the General Conditions.

ARTICLE 9 - CHANGES TO THE CONTRACT

Changes to the Contract may be made in strict accordance with Division 01 - General Requirements of the Specifications and Section 9 of the General Conditions.

ARTICLE 10 - TERMINATION

The Contract may be terminated in accordance with Section 10 of the General Conditions.

ARTICLE 11 - INSURANCE AND BONDS

11.1 The Contractor shall provide Insurance as provided in the Insurance Requirements and in accordance with Section 11.1 of the General Conditions. The Contractor shall provide proof of such insurance and all required endorsements in forms acceptable to the City prior to commencing any Work under this Contract.

11.2 The Contractor shall provide performance, payment and warranty bonds to the City in accordance with Section 11.2 of the General Conditions and A.R.S. § 34-222.

11.3 The Contractor's failure to provide proof of insurance and the required endorsements, or the required bonds, in forms acceptable to the City will be a material breach and grounds for termination for cause under this Contract.

ARTICLE 12 - INDEMNIFICATION

The Contractor shall have and assume the indemnity obligations set forth in Section 12 of the General Conditions.

ARTICLE 13 - DISPUTE RESOLUTION

Any claims or disputes relating to this Contract shall be resolved according to the dispute resolution process set forth in Section 13 of the General Conditions.

ARTICLE 14 - MISCELLANEOUS PROVISIONS

The miscellaneous provisions set forth in Section 14 of the General Conditions shall apply to this Contract.

ARTICLE 15 - COUNTERPARTS

This Contract may be executed in one or more counterparts, each of which shall be deemed an original, but all of which together shall constitute one and the same instrument. The signature pages from one or more counterparts may be removed from such counterparts. Such signature pages may all be attached to a single instrument so that the signatures of all Parties may be physically attached to a single document.

ARTICLE 16 - AUTHORITY

Each Party represents and warrants to the other Party: (i) that such Party is duly organized and validly existing under the laws of the State of Arizona and has full corporate power and authority to enter into this AGREEMENT and to carry out the provisions of this AGREEMENT; (ii) such Party is duly authorized to execute and deliver this AGREEMENT and to perform its obligations under this AGREEMENT; (iii) the person executing this AGREEMENT on such Party's behalf has been duly authorized to do so by all requisite corporate action, and (iv) this AGREEMENT is a legal and valid obligation binding upon the Parties and enforceable in accordance with its terms.

The Parties have executed this Contract in Yuma County, Arizona, on the day and year set forth above, which is the day the last Party signed this Contract. The original Contract will be filed with the City of San Luis Clerk.

City of San Luis

_____
Nieves Riedel, Mayor

Date: _____

Attest:

_____
Sonia Cornelio, City Clerk

Approved As to Form

_____
Kay Marion Macuil, City Attorney

Contractor

_____
Contractor Representative

Date: _____

CONTRACT PERFORMANCE SURETY BOND

STATUTORY PERFORMANCE BOND PURSUANT TO
TITLE 34, CHAPTER 2, ARTICLE 2,
OF THE ARIZONA REVISED STATUTES
(Penalty of this Bond must be 100% of the Contract amount)

Project Name: City of San Luis West WWTP 3.0 MGD MBR

For: City of San Luis, Arizona

KNOW ALL MEN BY THESE PRESENTS:

That ,_____ , (hereinafter called the Principal), as Principal,

and _____ , a corporation organized and existing under the laws of the State of

_____and duly licensed and possessing a certificate of authority to transact surety business in the State of Arizona, with its principal office in the City of _____, (hereinafter called the Surety) as Surety, are held firmly bound unto City of San Luis, Arizona (hereinafter called Obligee) in the amount of

_____ Dollars ($ _____) for the payment whereof, the said Principal and Surety bind themselves, and their heirs, administrators, executors, successors and assigns, jointly and severally, firmly by these presents.

WHEREAS, the Principal has entered into a certain written CONTRACT with the Obligee, dated the _____day of _____20___, to construct the **City of San Luis West WWTP 3.0 MGD MBR**, which CONTRACT is hereby referred to and made a part hereof as fully and to the same extent as if copied at length herein.

NOW, THEREFORE, THE CONDITION OF THIS OBLIGATION IS SUCH, that if the said Principal shall faithfully perform and fulfill all the undertakings, covenants, terms, conditions and agreements of the CONTRACT during the original term of CONTRACT and any extension of the CONTRACT, with or without notice to the Surety, and during the life of any guaranty required under the CONTRACT, and also performs and fulfills all the undertakings, covenants, terms, conditions, and agreements of all duly authorized modifications of the CONTRACT that may hereafter be made, notice of which modifications to the Surety being hereby waived; then the above obligation is void. Otherwise to remain in full force and effect.

PROVIDED, HOWEVER, that this bond is executed pursuant to the provisions of Title 34, Chapter 2, Article 2, of the Arizona Revised Statutes, and all liabilities on this bond shall be determined in accordance with the provisions of Title 34, Chapter 2, Article 2, Arizona Revised Statutes, to the extent as if it were copied at length herein.

The prevailing party in a suit on this bond shall be entitled to such reasonable attorney's fees as may be fixed by a judge of the Court.

Witness our hands this _____ day of_____ , 20____.

_____
Agency of Record

_____
Agency Address

_____	_____
Surety Firm	Principal Firm [Seal]
Surety Signature	Principal Signature
By _____	By _____
Name and Title {Attach current power of attorney}	Name and Title
_____	_____

LABOR AND MATERIALS SURETY BOND

STATUTORY PAYMENT BOND PURSUANT TO
TITLE 34, CHAPTER 2, ARTICLE 2,
OF THE ARIZONA REVISED STATUTES
(Penalty of this Bond must be 100% of the Contract amount)

Project Name: City of San Luis West WWTP 3.0 MGD MBR

For: City of San Luis, Arizona

KNOWN BY ALL MEN THESE PRESENTS:

That , _____, (hereinafter called the Principal), as Principal,

and _____, a corporation organized and existing under the laws of the State of

_____ and duly licensed and possessing a certificate of authority to transact surety business in the State of Arizona, with its principal office in the City of , (hereinafter called the Surety) as Surety, are held firmly bound unto the City of San Luis, Arizona (hereinafter called Obligee) in the amount of _____ Dollars

($ _____) for the payment whereof, the said Principal and Surety bind themselves, and their heirs, administrators, executors, successors and assigns, jointly and severally, firmly by these presents.

WHEREAS, the Principal has entered into a certain written CONTRACT with the Obligee, dated the _____ day of

_____ , 20___, for **City of San Luis West WWTP 3.0 MGD MBR Project** which CONTRACT is hereby referred to and made a part hereof as fully and to the same extent as if copied at length herein.

NOW, THEREFORE, THE CONDITION OF THIS OBLIGATION IS SUCH, that if the Principal promptly pays all moneys due to all persons supplying labor or materials to the Principal or the Principal's subcontractors in the prosecution of the work provided for in the CONTRACT, this obligation is void, otherwise it remains in full force and effect.

PROVIDED, HOWEVER, that this bond is executed pursuant to the provisions of Title 34, Chapter 2, Article 2, of the Arizona Revised Statutes, and all liabilities on this bond shall be determined in accordance with the provisions, conditions and limitations of Title 34, Chapter 2, Article 2, Arizona Revised Statutes, to the same extent as if they were copied at length in this agreement.

The prevailing party in a suit on this bond shall recover as a part of the judgment reasonable attorney fees that may be fixed by a judge of the court.

Witness our hands this_____day of_____ , 20____.

_____
Agency of Record

_____
Agency Address

Surety Firm Principal Firm [Seal]

By _____ By_____

Surety Signature Principal Signature

Name and Title {Attach current power of attorney} Name and Title

_____ _____

BOND NO. PREMIUM NO.

WARRANTY BOND

(City of San Luis, Arizona)

West WWTP 3.0 MGD MBR

WHEREAS, the City of San Luis, Arizona (hereafter "City") and

_____ (hereafter "Principal") have entered into an

agreement ("Agreement") dated _____, 20____, whereby Principal agreed to install and complete certain designated public improvements as a condition of contract, relating to the project known as West WWTP 3.0 MGD MBR Upgrades, at Principal's own expense and which Agreement is hereby referred to and made a part hereof; and

WHEREAS, Principal is required under the terms of the Agreement to furnish warranty security for the Work performed and equipment supplied and installed pursuant to the Agreement in the amount of one hundred percent percent (100%) of the amount to be paid by City to Principal to guarantee replacement and repair of the improvements as described in the Agreement for a period of two years following substantial completion of said improvements.

NOW, THEREFORE, we, Principal, and _____

("Surety"), are held and firmly bound unto City in the penal sum of _____dollars ($_____) lawful money of the United States, for the payment of which we bind ourselves, our heirs, successors, executors, and administrators, jointly and severally. The condition of this obligation is such that if Principal shall indemnify City for all loss that City may sustain by reason of any defective materials, equipment, components, or workmanship which become apparent during the period of two years from and after substantial completion of the improvements, as provided by the terms of the Agreement, then this obligation shall be null and void; otherwise, this obligation shall remain in full force and effect.

As a part of the obligation secured hereby and in addition to the face amount specified, costs and reasonable expenses and fees shall be included, including reasonable attorneys' fees incurred by City in successfully enforcing the obligation, all to be taxed as costs and included in any judgment rendered.

Surety shall provide City with thirty (30) days' written notice of Principal's default prior to Surety terminating, suspending or revoking the bond.

Witness our hands this _____ day of _____, 2024.

_____	_____
Principal Seal	Surety Seal
By: _____	By: _____
Attorney in fact	Its: _____
_____	_____
Agency of Record	Agency Address

CERTIFICATE OF INSURANCE

(City of San Luis, Arizona)

Project Name: City of San Luis West WWTP 3.0 MGD MBR

The _____

Certifies that the following insurance policies have been issued on behalf of:

Name of Insured: _____

Address of Insured: _____

	Type of Insurance	Policy No.	Effective Date	Expiration Date	Amount	Limits of Liability
(1)	**Employer's Liability** **Disease**				$100,000 $100,000 $250,000	Each Accident Each Employee Policy Limit
(2)	Contractors General Liability Bodily Injury & Property Personal/Advertising Injury Products Completed Ops.				$6,000,000 $6,000,000 $2,000,000 $2,000,000	General Aggregate Each Occurrence Each Occurrence Aggregate
(3)	Professional Liability Errors and Omissions				$1,000,000	Each Occurrence
(3)	Contractual Bodily injury				$2,000,000 $2,000,000	Each Occurrence Aggregate
(3)	Contractual Property Damage				$2,000,000 $2,000,000	Each Accident Aggregate
(4)	Automobile Liability Bodily Injury Property Damage				 $1,000,000 $1,000,000	 Each Occurrence Each Occurrence

When the project includes construction of a new, or modification of an existing building [in addition to the above types]:

(0) Fire and extended coverage plus Vandalism and Malicious Mischief for the full amount of the CONTRACT, with the County of Yuma named as an additional insured.

		Policy No.	Expiration Date	Amount
(5)	Umbrella Coverage [if required within Special Provisions]			

Policy Includes coverage for:

(1) a. Damage caused by blasting
b. Damage caused by collapse or structural injury
c. Damage to underground utilities

(2) Liability assumed in construction agreements and other types of CONTRACTS or agreements in effect in connection with insured operations.

(3) All owned, hired or non-owned automotive equipment used in connection with the insured operation.

CERTIFICATE OF INSURANCE [CONTINUED]

(City of San Luis, Arizona)

Project Name: City of San Luis West WWTP 3.0 MGD MBR

It is agreed that none of these policies will be canceled or changed so as to affect this certificate until thirty (30) days written notice of such cancellation or change has been delivered to the City of San Luis, 1090 East Union Street, P.O. Box 1170, San Luis, Arizona 85349.

It is further agreed that:

(1) These policies shall not expire until all work has been completed and the PROJECT has been accepted in writing by the City of San Luis. A renewal Certificate of the required coverage must be sent to the City of San Luis not less than thirty (30) days prior to expiration date).

(2) the policy shall be endorsed to include the following additional insured language: "City of San Luis, Arizona" shall be named as an additional insured with respect to liability arising out of the activities performed by, or on behalf of the Contractor, including completed operations".

This certificate is not valid unless countersigned by an authorized representative of the Insurance Company.

Countersigned by: _____

_____
Date

_____
Signature

_____
Address

_____
Telephone Number

CONTRACTOR'S AFFIDAVIT REGARDING SETTLEMENT OF CLAIMS

(City of San Luis, Arizona)

PART 100, SECTION 109, GENERAL CONDITIONS

Project Name: City of San Luis
West WWTP 3.0 MGD MBR Project

To: City of San Luis, Arizona

Whom it may concern:

This is to certify that all lawful claims for materials, rental of equipment and labor used in connection with the construction of the above PROJECT, whether by subcontractor or claimant in person, have been duly discharged.

The undersigned, for the consideration of $_____ , as set out in the final pay estimate, as full and complete payment under the terms of the CONTRACT, hereby waives and relinquished any and all further claims or right of lien under, in connection with, or as a result of the above described PROJECT. The undersigned further agrees to indemnify and save harmless the City of San Luis, Arizona against any and all liens, claims of liens, suits, actions, damages, charges and expenses whatsoever, which said City may suffer arising out of the failure of the undersigned to pay for all labor performance and materials furnished for the performance of said installations.

Signed and dated at _____ , this _____ day of _____ 20_____.

CONTRACTOR

Signed_____ Name/Title

STATE OF ARIZONA)

) SS.

COUNTY OF_____)

THE FOREGOING INSTRUMENT WAS SUBSCRIBED AND SWORN TO BEFORE ME THIS _____ DAY OF

_____, 20____.

NOTARY PUBLIC _____

MY COMMISSION EXPIRES _____

GENERAL CONDITIONS OF THE CONTRACT

These terms will be the General Conditions for the Contract and are incorporated therein and shall be fully binding upon the Contractor.

ARTICLE 1 - SCOPE OF THESE GENERAL CONDITIONS

These General Conditions encompass provisions that apply and are incorporated into all construction contracts entered into by the City of San Luis unless otherwise specifically excluded in the executed Contract. Sections 2 through 14 of these General Conditions apply to all construction contracts, in whatever form, including without limitation, Fixed Price, Unit Price, Construction Manager at Risk (CM@Risk), Guaranteed Maximum Price (GMP) Cost-Based, and Job Order Contracts (JOC).

ARTICLE 2 - GENERAL DEFINITIONS

2.1 The Definitions in the Invitation for Bid (IFB), the Request for Proposals (RFP), the Request for Qualifications (RFQ), and/or the JOC Solicitation (JOC) giving rise to the Contract shall apply to these General Conditions and the Contract for the Project.

2.2 **Change Order –** A written instrument issued after execution of the Contract Documents signed by City and Contractor, stating their agreement upon all of the following: the addition, deletion, or revision in the scope of services or deliverables; the amount of the adjustment to the Contract Price, the extent of the adjustment to the Contract Time, or modifications of other contract terms. Only a Change Order allows the Contract Price or the Contract Time or both to be changed.

2.3 **City –** City of San Luis, Arizona, a municipal corporation, with whom the Contractor has entered into the Contract and for whom the Services and/or Work are to be provided pursuant to the Contract(s).

2.4 **Contract -** The written agreement executed between the City and Contractor, including all of the Contract Documents**.**

2.5 **Contract Documents -** The documents which together form the Contract between City and Contractor, as identified in Article 2 of the Contract, or are otherwise incorporated into the Contract, including the Contract, the exhibits and attachments to it, these General Conditions, any Notice to Proceed, and any Job Order (if applicable), the Plans and Specifications, Project Schedule, written and properly executed Change Orders, and any other documents so designated in the Contact.

2.6 **Contract Price -** The agreed-upon price to be paid to the Contractor for full, timely, and acceptable completion of the Services or Work under the terms of the Contract.

2.7 **Contract Time(s) -** The number of days or the dates related to the Completion Milestones as stated in Contract Documents. The Contract Time is set forth in the Contract and is based upon the Project Schedule agreed to by the City in writing.

2.8 **Contractor -** The person or corporation with whom the City has entered into a contract for construction-related work or services related to the Project at issue.

2.9 **Contractor Payment Request** - The form that is accepted by the City and used by the Contractor in requesting progress payments or final payment and which shall include such supporting documentation as is required by the Contract Documents and/or City.

2.10 **Construction Documents** - The plans, specifications, and drawings prepared and issued by the Design Professional and approved by the City for construction, meaning the documents are sealed by the Contractor (as required), acceptable for permitting, and incorporated into the Contract by reference. All amendments and modifications to the Construction Documents must be approved in writing by the City prior to incorporation into the Contract.

2.11 **Critical Path** - The critical path is the sequence of Project network activities that add up to the longest overall duration. Once established in the Project Schedule, the Critical Path for the Project shall not be changed without prior written approval of the City.

2.12 **Day** - Calendar day(s) unless otherwise specifically stated in the Contract Documents.

2.13 **Final Acceptance** - The written notice from the City to the Contractor that Final Acceptance has occurred following the end of the Warranty Period. At month twenty-three (23) of the Warranty Period, the City and/or Engineer shall perform a Final Acceptance inspection to verify all warranty items have been addressed to the City's satisfaction. The City will then provide a written Final Acceptance notice.

2.14 **Final Completion** - Following established Substantial Completion date, Contractor must address punch list items to the City's satisfaction. The City and/or Engineer shall perform a Final Completion inspection for verification. The date when, in the opinion of the City, all items of the Work, including punch list items, have been completed to the City's satisfaction in accordance with the Contract Documents, and delivery of all Close-Out Documents required by the Contract Documents and this Contract have been received by the City. The Final Completion date is the date on which the Warranty period commences.

2.15 **Float** - The number of Days by which an activity can be delayed without lengthening the Critical Path and extending the Contract Time. Unless otherwise expressly agreed in writing, all Float belongs to City.

2.16 **MAG Specifications** – The latest edition adopted by the City of the Uniform Standard Specifications for Public Works Construction published by Maricopa Association of Governments ("MAG"), or the latest revision published by MAG.

2.17 **MAG Standard Details** – The latest edition adopted by the City of the Uniform Standard Details for Public Works Construction published by Maricopa Association of Governments ("MAG"), or the latest revision published by MAG.

2.18 **Notice to Proceed (NTP)** - A written notice given by the City to the Contractor fixing the date on which the Contractor will start to perform the Contractor's obligations under the Contract. The Notice to Proceed shall not be issued until the Contract Price is approved and accepted by the City.

2.19 **Project** – The Project specified in the Contract (including the Job Order).

2.20 **Project Manager** - The Project Manager designated in Article 1 of the Contract, or any successor Project Manager the City designates. The Project Manager has the authority to act on behalf of the City, as delineated and limited by the Contract Documents and applicable law. The City shall communicate with the Contractor through the Project Manager. However, the Project Manager has no authority to bind the City or City Council in contravention of any City code, State or Federal statute or regulation, or these General Conditions.

2.21 **Project Schedule** - The schedule for the completion of the Project agreed to and/or required by the City and incorporated into the Contract.

2.22 **Project Specific Provisions** - Additional conditions that apply to the specific Project and/or Scope of Work.

2.23 **Proposal** - A Proposal submitted to the City by a Contractor in response to an Invitation for Bid (IFB), Request for Qualifications (RFQ), a Request for Proposals (RFP), or other solicitation or request by the City. Bids may be Fixed Price, Guaranteed Maximum Price (GMP), Unit Price, or other form as required or requested by the City in the Bid Schedule.

2.24 **Requests for Information (RFIs)** - Formal written request from the Contractor to the City and/or Contractor for the Project seeking clarification or additional information needed for the Contractor to properly complete the Work and/or Services under the Contract. The City may require RFI's to be submitted on a specific form or in a specified format.

2.25 **Schedule of Values (SOV)** - The specified document prepared by the Contractor and approved and accepted by the City, which divides the Contract Price into pay items, such that the sum of all pay items equals the Contract Price for the construction phase Work, or for any portion of the Work having a separate specified Contract Price.

2.26 **Scope of Work** - The scope of work agreed to and/or required by the City and incorporated into the Contract as set forth in the IFB and/or an Exhibit to the Contract.

2.27 **Subconsultant** - A person, firm, or corporation having a Contract with a Consultant/Contractor to furnish services required as its independent professional associate or consultant with respect to the Project.

2.28 **Subcontractor** - An individual or firm having a direct contract with the Contractor or any other individual or firm having a contract with the aforesaid contractors at any tier, who undertakes to perform a part of the pre-construction services or construction phase Work at the site for which Contractor is responsible. Subcontractors shall be selected through the Subcontractor selection process described in the Contract Documents, if any.

2.29 **Substantial Completion** - The Work will be substantially complete within the number of calendar days after the Notice to Proceed when the Contract Times commence according to Article 6.3 of the Contract. Substantial Completion shall be the date on which the construction services for the Work, or an agreed upon portion thereof, has progressed to the point where, in the opinion of the City, as evidenced by a Certificate of Substantial Completion and/or Certificate of Occupancy, such construction services are sufficiently complete in accordance with the Contract Documents so that the Work (or specified part) can be utilized for the purposes for which it is intended, without any outstanding concurrent Work at the site, except as may be required to complete or correct Punch List items. If no such certificate is issued, Substantial Completion takes place when the construction services Work or a Construction Phase is complete and ready for final payment as evidenced by the City's written recommendation of final payment. The terms "substantially complete" and "substantially completed" as applied to all or part of the construction Work refers to Substantial Completion thereof.

2.30 **Supplier -** Any person or entity providing materials or property for the Project.

2.31 **Total Float**. The number of Days by which the pre-construction services or construction phase Work or any part of the same may be delayed without necessarily extending a pertinent Contract Time or schedule milestone in the Project Schedule.

2.32 **Work** - The entire completion of construction or the various separately identifiable parts thereof, required to be furnished during the construction phase. Work includes and is the result of:

2.32.1 performing or furnishing labor;

2.32.2 furnishing and incorporating materials, resources, and equipment into the construction; and

2.32.3 performing or furnishing services and documents as required by the Contract Documents for the construction phase.

2.33 **Working Days** - Days exclusive of Saturday, Sunday and City recognized legal holidays.

ARTICLE 3 - STANDARD SPECIFICATIONS AND DETAILS

3.1 The City operates under the 2016 City of San Luis Supplement to the 2015 MAG Uniform Standard Specifications for Public Works Construction.

3.2 The City also operates under the 2009 City of Yuma Construction Standard Detail Drawings.

3.3 The City also operates under the 2006 Yuma County Public Works Standards – Volume III – Storm Drainage Facilities.

3.4 The above standard specifications and details may be viewed and downloaded at the City of San Luis website: https//www.sanluisaz.gov/DocumentCenter/Index/268.

3.5 The City may require particular sections of the revisions of the MAG Specifications and Standard Details after the 2015 revision that the City adopted.

3.6 Current and Historical MAG Specifications and Standard Details may be viewed at the Maricopa Association of Governments website at https://azmag.gov/Programs/Public-Works/Specifications-and-Details.

3.7 The MAG Specifications and Standard Details and the City's amendments to them are incorporated into the Contract.

ARTICLE 4 - CONTRACTOR'S RESPONSIBILITIES FOR CONSTRUCTION SERVICES

4.1 General

4.1.1 The Contractor shall construct the Work in accordance with the Contract Documents and as outlined in the Contract Documents to the satisfaction of the City, exercising the degree of professional care, skill, diligence, quality, and judgment that a professional Contractor engaged, experienced, and specializing in the construction of facilities of similar scope, function, size, quality, complexity, and detail in urban areas throughout the United States comparable to the City would exercise at such time, under similar conditions. The Contractor shall, at all times, perform the Work in conformance with sound and generally accepted engineering principles and construction management and construction contracting practices.

4.1.2 The Contractor shall comply with, and require all Subcontractors to comply with, the Arizona Contractors' license laws, including all requirements with respect to being duly registered and licensed.

4.1.3 Pursuant to A.R.S. §41-4401, the Contractor warrants to the City that the Contractor and all its Subcontractors are in compliance and will comply with all Federal Immigration laws and regulations that relate to their employees and with the E-Verify Program under A.R.S. § 23-214(A). The Contractor acknowledges that a breach of this warranty by the Contractor or any of its Subcontractors is a material breach of this Contract subject to penalties up to and including termination of the Contract or any subcontract. The City retains the legal right to inspect the papers of any employee related to this statute and of the Contractor or any Subcontractor who works on this Contract to ensure compliance with this warranty. The City may conduct random verification of the Contractor's employment records and any of its Subcontractors' employment records to ensure compliance with this warranty. The City will not consider the Contractor or any of its Subcontractors in material breach of the foregoing warranty if the Contractor and its Subcontractors establish that they have complied with the employment verification provisions prescribed by 8 USCA §1324(a)

and (b) of the Federal Immigration and Nationality Act and the e-verify requirements prescribed by Arizona Revised Statutes §23-214(A). The provisions of this Section must be included in any agreement the Contractor enters into with its Subcontractors who provide services under this Contract or any subcontract. “Services” are defined as furnishing labor, time, or effort in the State of Arizona by a contractor or Subcontractor. Services include construction or maintenance of any structure, building, or transportation facility or improvement to real property. Breach of this warranty shall constitute a material breach of the contract and shall subject the Contractor to penalties, including termination of the Contract at the sole discretion of the City.

4.1.4 The Contractor further understands and acknowledges the applicability of the Americans with Disabilities Act, the Immigration Reform and Control Act of 1986, and the Drug-Free Workplace Act of 1989 to the Contract. The Contractor understands and acknowledges that it must also comply with A.R.S. § 34-301, “Employment of Aliens on Public Works Prohibited,” and A.R.S. § 34-302, as amended, “Residence Requirements for Employees,” and A.R.S. § § 12-2701 through .12-704 “Immigration and Nationality Law Practice Act” as amended.

4.2 Contractor’s Pre-Contract and Pre-Work Deliverables

4.2.1 Before beginning any Work under the Contract, the Contractor shall execute the Contract and deliver to the City the items listed in Section 4.2.2 below within seven (7) days after the award of the Contract, and the City must execute the Contract. Failure to do so will be a material breach of the Contract, entitling the City to terminate the Contract for Cause.

4.2.2 When the Contractor delivers the executed Contract to the City, the Contractor shall also deliver to the City such bonds and certificates of insurance with endorsements in such amounts (and other evidence of insurance requested by the City) required under Article 11 of these General Conditions, and as the Contract requires.

4.2.3 The Contractor shall obtain all necessary permits for the Work and pay all applicable fees unless otherwise noted on the plans and in the specifications. The City has obtained the required ADEQ Aquifer Protection Permit. The City does not require a building, grading, or encroachment permit for the WWTP scope of work. The city does require a business license.

4.2.4 Copies of all permits and the associated notices must be provided to the City prior to starting the permitted activity.

4.3 Pre-Construction Conference

4.3.1 Prior to the commencement of any Work, the City may schedule a Pre-Construction Conference.

4.3.2 Prior to the Pre-construction Conference, the Contractor shall provide the Project Manager with a Schedule of Values reflecting the subcontracts and other categories that will be used to submit pay applications for the Work. The total amount of the Schedule of Values shall not be greater than the Contract Price. The Schedule of Values shall be reviewed at the Pre-Construction Conference and revised in response to comments and questions from the City. Once accepted by the City in writing, the Schedule of Values for the Project will not be changed without the City’s prior written approval.

4.4 Performance of the Work (Including Field Measurements, Subcontractors, and Suppliers)

4.4.1 Unless otherwise provided in the Contract Documents to be the responsibility of the City or a separate Contractor, the Contractor shall provide through itself or its Subcontractors the necessary

supervision, labor, inspection, testing, start-up, material, equipment, machinery, temporary utilities, and other temporary facilities to permit Contractor to complete the Work consistent with the Contract Documents.

4.4.2 The Contractor's Superintendent shall be present at the Project site at all times that material Work under this Contract is taking place. The Contractor's Superintendent or designee shall be present at the Project site at all times any other Work under this Contract is taking place. All elements of the Work shall be under the direct supervision of a foreman or his designated representative on the Project site, who shall have the authority to take actions required to carry out that particular element of the Work properly.

4.4.3 Before ordering materials or doing work, the Contractor and each Subcontractor shall verify measurements at the Project site and shall be responsible for the correctness of such measurements. No extra charge or compensation will be allowed because of differences between the actual dimensions and the dimensions indicated on the Contract Documents, including the drawings.

4.4.4 If the Contractor observes errors, discrepancies, or omissions in the Contract Documents, it shall promptly notify the Contractor and City and request clarification. The Contractor shall be liable to the City for damages resulting from errors, inconsistencies, or omissions in the Contract Documents or for differences between field measurements or conditions in the Contract Documents. If the Contractor, with the exercise of reasonable care, should have recognized such error, inconsistency, omission, or difference and fails to report it to the City, and if the Contractor proceeds with the Work affected by such observed errors, discrepancies, or omissions, without receiving such clarifications, it does so at its own risk.

4.4.5 In all cases of interconnection of its Work with existing or other work, the Contractor shall verify at the Project site all dimensions relating to such existing or other work. Any errors due to the Contractor's failure to so verify all such grades, elevations, locations, or dimensions shall be promptly rectified by the Contractor without any increase in the Contract Price. Any design errors or omissions noted by the Contractor during this review shall be reported promptly to the City.

4.4.6 The Contractor shall be responsible for the proper performance of the Work of Subcontractors and any acts and omissions in connection with such performance. Nothing in the Contract Documents is intended or deemed to create any legal or contractual relationship between the City and any Subcontractor or Sub-Subcontractor, including but not limited to any third-party beneficiary rights.

4.4.7 The Contractor will not substitute or change any Subcontractor or Supplier without the City's prior written approval. Any substitute or replacement Subcontractor or Supplier shall be required to meet the same qualifications and selection criteria and process as the original Subcontractor or supplier. If a Subcontract or Supplier selection plan has been approved by the City, the Contractor will follow that plan unless otherwise approved by the City in writing.

4.4.8 The Contractor shall not change or replace the Contractor's Project Manager or Superintendent on this Project without an explanation for the change being given to the City and receiving prior written approval of the change from the City, which approval will not be unreasonably withheld.

4.4.9 Subcontractors whose scope of work has a value greater than fifteen percent (15%) of the total Contract Price may be required to furnish performance and payment bonds to the Contractor if directed in writing by the City.

4.4.10 Owner Furnished Equipment - The OWNER has pre-purchased several items of the process equipment. One piece of equipment is onsite, and two others need to be delivered. The Contractor is responsible for planning delivery in order to meet the construction schedule. All the equipment will become the CONTRACTOR'S responsibility. The CONTRACTOR shall coordinate delivery and confirm that the shipments are complete and accurate for all equipment. Contract shall provide safe and secure storage, provide transportation from onsite storage to install location, install per the construction documents and the manufacture's requirements, and schedule manufacturer's representative for construction, installation certification, start up, operational training, etc. Specific equipment and details are noted in Article 4.10 of the Contract.

4.5 Control of the Project Site

Throughout all phases of construction, including suspension of Work, the Contractor shall keep the Project site reasonably free from debris, trash, and construction wastes to permit the Contractor to perform its construction services efficiently, safely, and without interfering with the use of adjacent land areas. Prior to the Final Acceptance of the Work, or a portion of the Work, the Contractor shall remove all debris, trash, construction wastes, materials, equipment, machinery, and tools arising from the Work or applicable portions thereof to permit the City to occupy the Project or a portion of the Project for its intended use.

4.5.1 The Contractor shall take whatever steps, procedures, or means necessary to prevent dust nuisance due to construction operations. The dust control measures shall be maintained at all times to the satisfaction of the City and in accordance with the requirements of the Yuma County dust control regulations.

4.5.2 The Contractor shall be responsible to the City for the acts and omissions of the Contractor's employees, Subcontractors and their agents and employees, and any other person performing any of the Work under a contract with Contractor, or claiming by, through, or under Contractor, for all damages, losses, costs, and expenses resulting from such acts or omissions.

4.6 Project Safety

4.6.1 The Contractor is responsible for the safety of the job site for the Contractor's employees as well as for members of the general public and others who may drive or walk through or be at the Project site.

4.6.2 The Contractor assumes responsibility for implementing and monitoring all safety precautions and programs related to the performance of the Work.

4.6.3 The Contractor shall provide a "competent person" as required by O.S.H.A. regulations. The "competent person" shall be identified at the Pre-Construction Conference, and the City will be advised in writing of any changes.

4.6.4 The Contractor and Subcontractors shall comply with all legal and regulatory requirements relating to safety, as well as any City-specific safety requirements set forth in the Contract Documents, provided that such City-specific requirements do not violate any applicable legal and regulatory requirements.

4.6.5 As between the City and the Contractor, the Contractor is responsible to the City for any and all the safety issues relating to the Work on the Project. The Contractor shall administer and manage the safety program. The safety program will include, but not necessarily be limited to, reviews of the safety programs of each Subcontractor. The Contractor shall monitor the establishment and

execution of compliance with all applicable regulatory and advisory agency construction safety standards.

4.6.6 The Contractor shall maintain and have sole responsibility for safety on the job site.

4.7 Materials Quality, Substitutions, and Shop Drawings

4.7.1 All construction materials to be used or incorporated in the Project are subject to inspection, quality control and quality assurance testing, and approval or rejection by the City. Any material rejected by the City shall be removed immediately and replaced in an acceptable manner to the City at no additional cost to the City. When quality control and quality assurance tests indicate noncompliance with the Contract Documents, retesting shall be performed by the same testing laboratory that performed the tests that indicated noncompliance.

4.7.2 A schedule of shop drawing submissions shall be submitted with the Project Schedule for City approval that avoids bulk submissions to the extent reasonably possible. Unless otherwise noted, shop drawings will not be required for items specified or detailed in the Uniform Standard Specifications and Details or the Technical Specifications. The schedule of shop drawing submissions shall include all of the items for which shop drawings are required by the Contract Documents, including the specifications.

4.7.3 Long Lead Time Items. The Contractor shall submit shop drawings, as required by the Project Engineer, on all long lead items to be furnished and installed as part of the Project within ten (10) days after execution of the Contract. In addition, the Contractor shall order all long lead items to be furnished and installed as part of this Project within (3) days after receiving approved shop drawings. For all long lead times for which shop drawings are not required, the Contractor shall order said long lead items within fifteen (15) days after execution of the Contract. Within two (2) days after ordering long lead items, the Contractor shall supply copies of all purchase orders, along with an accurate delivery schedule from the supplier.

4.8 Project Record Documents

The Contractor shall ensure that any and all changes or modifications done as a result of field changes are accurately reflected in red-lined markings. At the completion of construction, all red lines and markings shall be compiled to aid in the creation of “as-built” plans.

4.9 Warranty and Correction of Defect Work

4.9.1 The Contractor warrants to the City that the construction of the Work shall be of good and workmanlike quality and completed in strict conformance with all applicable laws, rules, and regulations and the plans and specifications and all other terms and conditions of the Contract Documents, including all materials and equipment furnished as part of the construction, shall be new unless otherwise specified in the Contract Documents, of good quality, in conformance with the Contract Documents and free of defects in materials and workmanship.

4.9.2 The date of **Final Completion** shall be the beginning of the Warranty Period, regardless of early completion by some Subcontractors of their work.

4.9.3 Unless otherwise specified in the Contract Documents, the Contractor and Subcontractors shall provide to the City all of the following written warranties that apply to the Work in a form acceptable to the City.

(i) General Warranty — Two (2) years

(ii) Mechanical Contractor — Two (2) years

(iii) Plumbing Contractor — Two (2) years

(iv) Electrical Contractor — Two (2) years

(v) Caulking — One (1) year

(vi) Steel Joists, Certificate of Manufacturer

(vii) Exterior Metal Wall System — Five (5) years

(viii) Painting — One (1) year

(ix) Termite — Five (5) years

(x) Sheet Metal: Zinc coating thickness on hot-dipped galvanized Metals — One (1) year

4.9.4 Nothing in the warranties contained in the Contract Documents are intended to limit any manufacturer's warranty, which provides the City with greater warranty rights than set forth in this Section or the Contract Documents. The Contractor will provide the City with all manufacturers' warranties prior to Final Acceptance.

4.9.5 A progress payment, or partial or entire use or occupancy of the Project by the City, shall not constitute Acceptance of Work not in accordance with the Contract Documents.

4.9.6 Without limiting the foregoing or anything in these General Conditions or the Contract to the contrary, the Contractor shall obtain and provide to the City all warranties for any portion of the Project offered by the manufacturer, installer, or provider thereof. The City and the user of the facility shall have the right to the full value and benefit of all such warranties. The Contractor will ensure all such warranties are fully transferrable to facilitate the full value of this Section.

ARTICLE 5 - CITY'S RESPONSIBILITIES

5.1 **City Project Manager** The Project Manager is responsible for providing City-supplied information and approvals in a timely manner to assist the Contractor to fulfill its obligations under the Contract Documents.

5.2 **Contract Services** The City may contract separately with one or more contractors to provide construction administration of the Project. The Contractor's Contract, as well as other firms hired by the City, shall be furnished to the Contractor. The contractor shall not have the right to limit, restrict, or reject any Contract modifications that are mutually acceptable to the City and the Contractor.

ARTICLE 6 - CONTRACT TIME

6.1 Contract Time

6.1.1 The Contract Time shall start with the Notice to Proceed ("NTP") and end with Final Completion, as set forth in Article 6.3 below.

6.1.2 The Contract Time shall be as set forth in the Project Schedule. The Contractor agrees that it will commence the performance of the Work and complete the Project within the Contract Time.

6.1.3 Time is of the essence of this Contract, for the Project, for the Work, and for each phase and/or designated milestone of the Project.

6.2 Project Schedule

6.2.1 The Project Schedule shall be updated and maintained throughout the Contract Time.

6.2.2 The Project Schedule shall be revised as required by conditions and progress of the Work. However, such revisions shall not relieve the Contractor of its obligations to complete the Work within the Contract Time, as adjusted in accordance with the Contract Documents. No modification to the Contract Documents or the Contract Time shall be effective unless approved in advance by the City.

6.2.3 An updated Project Schedule shall be submitted monthly to the City as part of the Payment Request.

6.2.4 The Contractor shall provide the City with a monthly status report with each Project Schedule detailing the progress of the Work, including:

6.2.5 Acceptance of a submitted schedule by the City should in no way be construed as an affirmation or admission that the schedule is reasonable or workable by the Contractor. The responsibility for completing the Work on the Project within the Contract Time remains the obligation of the Contractor. The City's review shall not relieve the Contractor from compliance with the requirements of the Contract Documents or be construed as relieving the Contractor of its complete and exclusive control over the means, methods, sequences, and techniques for executing the Work.

6.2.6 Critical Path Method (CPM)

6.2.6.1 Unless otherwise specified in the Contract, the Project Schedule shall include a Critical Path Method (CPM) diagram schedule showing the sequence of activities, the interdependence of each activity, and identifying the Critical Path.

6.2.6.2 The CPM diagram schedule shall be in calendar Days and indicate duration, earliest and latest start and finish dates for all activities, and total Float Times for all activities except critical activities. The CPM diagram shall be presented in a time-scaled graphical format for the Project as a whole.

6.2.7 Float Time

6.2.7.1 The total Float time within the overall schedule is for the exclusive use of the City. However, the City may approve the Contractor's use of Float time as needed to meet contract milestones and the Project completion date.

6.2.7.2 The Contractor shall not be allowed to sequence, hide, or reallocate Float time through such strategies as extending activity duration estimates to consume available Float, using preferential logic, or using extensive crew or resource sequencing. No time extensions will be granted nor delay damages paid until a delay occurs which extends the Work beyond the Contract Time.

6.2.7.3 Rain-Related Delays. In preparing the Project Schedule, The Contractor is required to take into account all relevant weather conditions, including normal rainfall and distribution. No

additional Compensation shall be given for any rain-related delays or impacts on the Work or the Project Schedule. The burden of documenting normal rainfall, excessive rainfall, and the impact on Critical Path activities is on the Contractor.

6.3 Final Completion and Final Acceptance

6.3.1 Unless otherwise expressly agreed to in writing by the City, Final Completion must be obtained by no later than **four hundred eighty-eight (488)** calendar days after the date of Notice to Proceed. Failure to timely obtain Final Completion will be a material breach of the Contract.

6.3.2 Upon receipt of written notice that the Work is ready for final inspection and Acceptance, the City and the Contractor will jointly inspect to verify that the remaining items of Work have been completed. There shall be no partial acceptance. Final Completion shall not occur until all items of Work, including punch list items, have been completed to the City's satisfaction as reflected in the written Final Completion notice.

6.3.3 Final Payment under Section 8.2 below shall not be due, owing, or paid by the City until the Final Completion is obtained.

6.4 Liquidated Damages

6.4.1 Liquidated Damages. The Contractor acknowledges and agrees that if the Contractor fails to obtain Final Completion of the Work within the Contract Time, the City will sustain extensive damages and serious loss as a result of such failure. The exact amount of such damages will be extremely difficult to ascertain. Therefore, the City and the Contractor agree that if Contractor fails to achieve Final Completion of the Work within the Contract Time, the City shall be entitled to retain or recover from the Contractor, as liquidated damages and not as a penalty, the applicable dollar sum amount in the Table 108-1 Schedule of Liquidated Damages in the 2016 City of San Luis Supplement to MAG Standard Specification and to City of Yuma Standard Details per calendar day, commencing from the Milestone Completion Dates required under Article 6.4 of the Contract.

6.4.2 The City may deduct liquidated damages described in this Section 6.4 from any unpaid amounts then or thereafter due Contractor under this Contract. Any liquidated damages not so deducted from any unpaid amounts due to the Contractor shall be payable to the City at the demand of the City, together with interest from the date of the demand at the highest lawful rate of interest payable by the Contractor.

6.4.3 Nothing herein shall be deemed to constitute a waiver of any other remedy available to the City in the event of Contractor's default under this Contract prior to the full performance of the Work, including, as applicable, specific performance or completion of the Work on behalf of Contractor, the cost and expense of which shall be offset against any monies then or thereafter due to Contractor (if any) and otherwise immediately reimbursed to City by Contractor.

ARTICLE 7 - CONTRACT PRICE

7.1 **Fixed Price Contracts** The Contract Price shall be the amount set forth in the Contract.

7.2 **City Sales Tax** The Contractor is required to pay Sales Taxes on any contracting activity done for the City, and this cost shall be included in all Contract Prices.

ARTICLE 8 - PAYMENT

8.1 Payment for Construction Services

8.1.1 Monthly progress payments for certified work and material delivered to the Project site for the preceding month shall be paid on or before fourteen (14) business days after the estimate of the Work is certified and approved. The submittal estimate shall be deemed certified and approved for payment after seven (7) days from the date of submission unless the City's Project Manager issues a written finding setting forth items not approved for payment.

8.1.2 The City shall retain ten percent (10%) of all progress payments, until **Substantial Completion** is achieved, as insurance of proper performance of the Contract or, at the option of the Contractor, a substitute security may be provided by the Contractor in an authorized form approved by the City.

8.1.3 Upon request of Contractor, and subject to the approval of the City in its sole discretion, the 10% retained by the City under this Article may be substituted for an irrevocable letter of credit issued by an approved financial institution equal to the amount that would otherwise be retained.

8.1.4 Unless the City Project Manager delivers specific written findings of deficiencies and expected cost to cure, any retention shall be paid, or substitute security shall be returned to the Contractor within sixty (60) Days after Final Completion and Acceptance of Work under the Contract. The City may withhold an amount from the progress payment sufficient to pay the expenses the City's Project Manager reasonably expects to incur in correcting the deficiency set forth in the written finding.

8.1.5 The Contractor, and all Subcontractors, shall pay to Subcontractors or material Suppliers within seven (7) days of receipt of each progress payment unless otherwise agreed in writing by the parties, the respective amounts allowed the Contractor or Subcontractor on account of the Work performed or materials delivered to the extent of each such Subcontractor's or material Supplier's interest therein. No agreement for construction may materially alter the rights of any Contractor, Subcontractor, or material Supplier to receive prompt and timely payment as provided under this Section. These monthly progress payments to Subcontractors or material Suppliers shall be passed on payments received pursuant to this Section. Any diversion by the Contractor or Subcontractor of payments received for Work performed or failure to reasonably account for the application or use of such payments constitutes grounds for disciplinary action by the Registrar of Contractors. The Subcontractor or material Supplier shall notify the Registrar of Contractors and the City in writing of any payment less than the amount or percentage approved for the class or item of work as set forth in this Section. The Subcontractor may notify the City's Project Manager in writing, requesting that the City notify the Subcontractor in writing within five (5) days from payment of each progress payment made to the Contractor. The Subcontractor's request remains in effect for the duration of the Subcontractor's work on the Project.

8.1.6 Nothing in this Section 8.1 prevents the Contractor at the time of application/certification to the City from withholding application or certification to the City for payment to the Subcontractor or material Supplier for unsatisfactory job progress, defective work, or materials not remedied, disputed work or materials, third party claims filed or reasonable evidence that claim will be filed, failure of a Subcontractor to make timely payment for labor, equipment and materials, the Subcontract.

8.2 **Final Payment** Subject to all of the City's rights to withhold or offset payment and other rights under the Contract, Final Payment, including remaining retainage, shall be paid only after:

8.2.1 The Work has been fully completed (including completion of all incorrect or incomplete work items), and the City has issued the written Final Completion notice and the required Warranty Bond has been submitted to the City;

8.2.2 necessary operating manuals, any excess materials and supplies necessary for matching materials and supplies incorporated into the Work, and complete "as-built" drawings (including the Building Information Model, if required by the Contact Documents), plans, and specifications have been delivered to City;

8.2.3 full and unconditional lien waivers and releases by Contractor and any person performing labor or supplying material, machinery, fixtures, or tools for the Work have been delivered to the City;

8.2.4 all conditions and requirements imposed by the City or any financing entity for the corresponding disbursement have been met; and

8.2.5 the Contractor delivers to the City a Contractor Payment Request Form requesting Final Payment.

8.3 **The City's Right to Withhold Payment** The City may withhold payment to such extent as may be necessary in the City's opinion to protect the City from loss for which the Contractor is responsible, including, without limitation:

8.3.1 Defective Work not remedied;

8.3.2 Third-party claims filed or reasonable evidence indicating probable filing of such claims unless Contractor provides security acceptable to the City;

8.3.3 Failure of Contractor to make payments properly to Subcontractors or for labor, materials, or equipment;

8.3.4 Reasonable evidence that the Work cannot be completed for the unpaid balance of the Contract Price;

8.3.5 Damage to the City or another Contractor or any third party for which the Contractor may have an obligation under Article 12 of the General Conditions;

8.3.6 Reasonable evidence that the Work will not be completed within the Contract Time and that the unpaid balance would not be adequate to cover actual or liquidated damages for the anticipated delay; or

8.3.7 Persistent failure to carry out the Work in accordance with the Contract Documents.

8.4 **Joint/Direct Checks** Payments to the Contractor may be made by checks payable jointly to the Contractor and its employees, agents, Subcontractors, and Suppliers, or any of them. When in the sole opinion of the City, it is advisable, payments may be made directly to the Contractor's Subcontractors. Any amount so paid shall be deducted from the amounts owed to the Contractor under this Contract.

8.5 **Payment Not A Waiver** No payment (nor use or occupancy of the Project by the City) shall be deemed Acceptance or approval of the Work or as a waiver of any claims, rights, or remedies of the City.

8.6 **Liens and Bond Claims** The Contractor shall make all payments, in the time required, of all labor and materials furnished to the Contractor in the course of the Work and shall promptly furnish evidence of such payments as the City may require. The Contractor shall pay when due all claims arising out of the

performance of the Work covered by this Contract for which a lien may be filed either against the real estate or leasehold interest of City, or against payments due from City to Contractor, or for which a claim may be made against any payment or performance bond or both. To the fullest extent permitted by law, Contractor agrees that no liens or other claims in the nature of a lien against the real estate, leasehold, or other interest of City, against payment due from City to Contractor, or against any payment or performance bond, shall be filed or made in connection with the Work by any party who has supplied professional services, labor, materials, machinery, fixtures, tools, or equipment used in or in connection with the performance of this Contract. The Contractor agrees to remove or to cause to be removed any such liens or claims in the nature of a lien or bond claim within ten (10) days upon receiving notice or obtaining actual knowledge of the existence of such liens or claims. In addition, the Contractor agrees to defend, indemnify, and hold harmless the City from and against any and all such liens and claims. This paragraph does not apply to claims and liens of Contractor due to non-payment for work performed by Contractor. The obligations under this Article 8.4 survive termination of this Contract.

8.7 Financial Record Keeping and City's Audit Right

8.7.1 Records for all Contracts between the City and the Contractor shall, upon reasonable notice, be open to inspection and subject to audit, scanning, and/or reproduction during normal business working hours. The City or its designee may conduct such audits or inspections throughout the term of this Contract and for a period of three years after Final Payment or longer if required by law.

8.7.2 The City, its authorized representative, and/or the appropriate agency reserve the right to audit the Contractor's records in compliance with local, state, or federal policies, statutes, or at the City's discretion within three (3) years of Final Acceptance of the Work.

ARTICLE 9 - CHANGES TO THE CONTRACT

9.1 Extra Work/Changes in the Work

9.1.1 The City reserves the right to make such changes in the plans and specifications for the Work as it may deem appropriate. Any such change as set forth in a written Change Order or Extra Work Order shall be deemed a part of this Contract as if originally incorporated into this Contract.

9.1.2 Not used

9.1.3 The Contractor shall not be entitled to payment for additional work unless a written Change Order or Extra Work Order, in form and content prescribed by the City, has been executed by the City prior to starting the additional work.

9.1.4 Any agreement that modifies the terms of the Contract (including Change Orders) shall be approved in writing by the Project Manager and approved by the San Luis City Council if necessary. Once properly executed by both Parties, these modifications to the Contract shall have the same effect as if they had been included in the original Contract.

9.2 **Accuracy of Change Order Pricing Information** Signature by the contracting Parties shall constitute full accord and satisfaction between the City and the Contractor for all costs, damages, and expenses of whatever kind of nature, including delay, impact, or acceleration damages, which may be occasioned by a Change Order or other modification of the Contract, the Parties agreed to in writing.

ARTICLE 10 - TERMINATION

10.1 Termination by the City for Cause

10.1.1 If, for any reason, the Contractor fails to fulfill in a timely and proper manner its obligations under the Contract Documents, or if the Contractor violates any of the covenants, agreements, or stipulations of this Contract, the City shall thereupon have the right to terminate the Contract by giving written notice to the Contractor of such termination and specifying the effective date of the termination. In such event, all finished or unfinished site or structural improvements, as well as all materials or equipment acquired or stored by the Contractor under this Contract, shall, at the option of the City, become the City's property. The Contractor shall be entitled to receive just and equitable compensation for any Work satisfactorily completed under this Contract.

10.1.2 Notwithstanding Section 10.1.1, the Contractor shall not be relieved of liability to the City for damages sustained by the City by virtue of any breach of this Contract by the Contractor, and the City may withhold any payments to the Contractor for the purpose of set-off until such time as the exact amount of damages due the City from the Contractor is determined.

10.2 **Termination by the City for Convenience** The City may also terminate the Contract at any time for its convenience upon seven (7) business days' written notice to the Contractor specifying the termination date. In the event of termination, which is not the fault, in whole or in part, of the Contractor, the City shall pay to the Contractor only such compensation, including reimbursable expenses, due for Work properly performed on the Project prior to the termination date. Upon any termination of the Contract, no further payments shall be due from the City to the Contractor.

10.3 **A.R.S. § 38-511 and Other Statutory Requirements** This Contract is subject to and may be terminated by the City in accordance with the conflict provisions of A.R.S. § 38-511. The Contractor certifies, to the extent permitted by law, that it is not currently engaged in and agrees that for the duration of this Contract, it will not engage in a boycott of Israel, as that term is defined in A.R.S. § 35-393. The Contractor certifies, to the extent permitted by law, that it does not currently, and agrees for the duration of this Contract, it will not use the forced labor of the ethnic Uyghurs in the People's Republic of China, nor use any goods or services produced by them, nor use any contractors, Subcontractors, or Suppliers that use them. If the Contractor becomes aware during the term of this Contract that the Contractor is not in compliance with this certification, it shall follow the notice procedures in A.R.S. § 35-393.

10.4 **Non-Appropriation** The City is a government agency that relies upon the appropriation of funds by its governing body to satisfy its obligations. If the City determines that it does not have funds to meet its obligations under the Contract, the City shall have the right to terminate the Contract without penalty on the last day of the fiscal period for which funds were legally available for the Project.

10.5 **Limited Liability** Under no circumstances shall the City have any liability for any costs, expenses, overhead, or profits in relation to any work not actually performed or for any future or anticipated profits, recovery, damages, expenses, or losses.

ARTICLE 11 - INSURANCE AND BONDS

11.1 Insurance Requirements

11.1.1 **Contractor's Obligation**: The Contractor shall secure and maintain, at the Contractor's expense, until the Final Completion of the Project, general liability and property insurance as shall protect the Contractor and the City from claims for bodily injury, personal injury, and property damage which may arise because of the nature of the work or from operations under this Contract. The Contractor's insurance coverage shall be primary insurance with respect to all other available

sources. Any coverage maintained by the City shall not contribute to any claims arising from the Contractor's performance of this Contract. The Contractor shall file these certificates with OWNER's Public Works Department within ten (10) days of execution of this Contract and prior to engaging in any operation or activities set forth in this AGREEMENT. The foregoing insurance policies shall provide that no cancellation, major change in coverage, or expiration by the insurance company or the insured.

11.1.2 **General Liability Coverage**: Contractor shall have general liability coverage on a per occurrence, and in comprehensive form. General liability coverage shall include Products, Completed Operations, Products Liability, Explosion, Underground and Collapse Hazard, Premises, Operations, Contractual, Independent Contractors, Broad Form Property Damage and Personal Injury. General Liability coverage shall include and eliminate the exclusion for property under the care, custody, and control of the Contractor.

11.1.3 **Coverage Amounts**: Contractor shall provide general liability and excess general liability coverage in the following amounts, at a minimum:

Employer's Liability	
a. Each Accident	$100,000
b. Disease for Each Employee	$100,000
c. Disease Policy Limit	$250,000
Contractors General Liability	
a. General Aggregate	$6,000,000
b. Products-Completed Operations Aggregate	$2,000,000
c. Each Occurrence (Bodily Injury and Property Damage)	$6,000,000
d. Personal Injury and Advertising Injury	$2,000,000
Property Damage liability insurance will provide Explosion, Collapse, and Underground coverages.	
Automobile Liability	
a. Bodily Injury:	
Each Person	$1,000,000
Each Accident	$1,000,000
b. Property Damage	
Each Accident	$1,000,000
c. Combined Single Limit	$1,000,000
Contractual Liability	
a. Bodily Injury:	
Each Accident	$2,000,000
Annual Aggregate	$2,000,000
b. Property Damage:	
Each Accident	$2,000,000
Annual Aggregate	$2,000,000
Each Accident	$2,000,000
Annual Aggregate	$2,000,000
Professional Liability Errors and Omissions	$1,000,000

11.1.4 Additional Provisions:

11.1.5 Additional Insured: Contractor shall name the **City of San Luis, Arizona (an Arizona municipal corporation) and its elected officials, officers, agents, and Pacific Advanced Civil Engineering, Inc. (a California Corporation registered in Arizona) as "Additional Insureds**" on all insurance policies, except Worker's Compensation and Errors and Omissions, and this shall be reflected on the Certificate(s) of Insurance, with corresponding endorsement relative to the additionally insured indemnification. Contractor shall name the City of San Luis as certificate holder.

11.1.6 Cancellation Notice of Material Change of Coverage: The Contractor shall keep all policies in force for the duration of the Contract and any possible extension thereof. Contractors' required insurance shall be endorsed to provide that the policies will not be canceled, reduced, discontinued, or otherwise materially altered during the period of performance without thirty (30) days prior written notice to the City of San Luis Public Workers Department.

11.1.7 Certificate(s) of Insurance: Certificates of Insurance shall be Project-specific. Prior to commencing work under the Contract, Certificates of Insurance shall be submitted and approved by the City. Contractor is responsible for obtaining Certificates of Insurance, establishing that the Contractor and all subcontractors have complied with insurance requirements previously stated. Copies of Certificates of Insurance shall be forwarded to the City Risk Manager for review and filing. Failure of the City to demand such Certificate or other evidence of full compliance with these insurance requirements or failure of the City to identify a deficiency from the evidence that is provided shall not be construed as a waiver of the Contractor's obligation to maintain such insurance. City shall have the right, but not the obligation, to prohibit Contractor or any of its subcontractors from entering the Project Site until such certificates or other evidence that insurance has been placed in complete compliance with these requirements is received and approved by City.

11.1.8 Rating of Insurance Companies: Any and all insurance companies supplying coverage to the Contractor shall be approved to write insurance in the State of Arizona and must possess no less than an "A" rating in accordance with the A.M. Best rating guide.

11.1.9 Deductible: Contractor shall be solely responsible to satisfy any deductible or self-insured retention with respect to any of the coverages required by the Contract Documents. Such deductibles or self-insured retention shall not be applicable with respect to the policy limits provided to the City of San Luis. The City of San Luis, at its option, may require the Contractor to secure payment of such deductible or self-insured retention by a surety bond or irrevocable and unconditional Letter of Credit.

11.1.10 Rental Equipment: In the event that rental of equipment is undertaken to complete and/or perform the Work, the Contractor agrees that it shall be solely responsible for such rental equipment. Such responsibility shall include, but not be limited to, theft, fire, vandalism, and use by unauthorized persons.

11.1.11 Personal Property: In the event that materials or any other type of personal property are acquired for the Project or delivered to the Project site, the Contractor agrees that it shall be solely responsible for such property until it becomes a fixture on the Project, or otherwise is installed and incorporated as a final part of the Project. Such responsibility shall include, but not be limited to, theft, fire, vandalism, and use by unauthorized persons. Contractor shall maintain "all risk" insurance on a replacement cost basis, covering loss or damage to personal property (for which it has title and/or risk of loss), which is to become a final part of the Project, during any time such personal property is in transit and while stored or worked upon away from the Project site. City and

its officials, officers, employees, and agents shall be named as additional insured under such insurance.

11.1.12 Waiver of Subrogation: City and Contractor waive all rights against each other and Architect/Engineer, and separate contractors for damages caused by fire or other perils covered by Builder's Risk or any other property insurance, except such rights as they may have to the proceeds of such insurance.

11.1.13 Right to Require Higher Limits: City reserves the right, in its sole discretion, to require higher limits of liability coverage if, in the City's opinion, operations by or on behalf of the Contractor create higher-than-normal hazards and to require the Contractor to name additional parties in interest to be Additional Insureds.

11.1.14 Waiver of Requirements: The City Manager, in consultation with the City Risk Manager and/or City Attorney, reserves the right to waive or reduce insurance requirements should it be in the best interest of the City.

11.2 Bonds and Other Performance Security

11.2.1 Prior to the execution of the Contract, the Contractor shall provide a Performance Bond and a Payment Bond, each in an amount equal to the full amount of the Contract Price.

11.2.2 Each such bond shall be executed by a surety company or companies holding a Certificate of Authority to transact surety business in the State of Arizona, issued by the Director of the Arizona Department of Insurance. A copy of the Certificate of Authority shall accompany the bonds.

11.2.3 The bonds shall be made payable and be acceptable to the City. The bond forms for the performance and payment bonds shall be in the forms required under A.R.S. § 34-221, et seq.

11.2.4 All bonds submitted for this Project shall be provided by a company that has been rated AM Best rating of B++6 or better for the prior four (4) quarters by the latest edition of the *Results Best's Key Rating Guide (Property/Casualty)*" published by the A.M. Best Company.

11.2.5 Personal or individual bonds are not acceptable.

11.2.6 Warranty Bond. Unless the surety issuing the Performance Bond specifically includes language that such bond covers the entire warranty period, Contractor shall provide a separate Warranty Bond for the Warranty Period. The Warranty Bond shall be in a minimum penal sum of 25% of the Contract Price.

ARTICLE 12 - INDEMNIFICATION

12.1 To the fullest extent permitted by law, the Contractor, its successors, and assigns shall defend, indemnify, and hold harmless the City and its agents, representatives, officers, elected officials, and employees from all demands, proceedings, suits, actions, claims, damages, or losses relating to, arising out of, resulting from or alleged to have resulted from the performance of the Work or failure to comply with Contractor's obligations under the Contract Documents or any laws, regulations, or legal requirements. The Contractors' duty to defend, indemnify, and hold harmless the City and its agents, representatives, officers, elected officials, and employees shall arise in connection with all demands, proceedings, suits, actions, claims, workers' compensation claims, unemployment claims, damages, losses or expenses (including but not limited to attorney's fees, expert fees, court costs, and the cost of appellate proceedings) that are attributable to personal or bodily injury, sickness, disease, death or injury to, impairment or destruction of

property including loss of use resulting therefrom, caused by any act or omission of Contractor, a Subcontractor, anyone directly or indirectly employed by them or anyone for whose acts they may be liable.

12.2 The Contractor shall also defend, indemnify, and hold harmless the City, any jurisdiction or agency issuing permits for any work involved in the Project and their consultants and each of their officers, officials, employees, representatives, directors, and agents from and against all losses, expenses, damages (including damages to the Work itself), attorney's fees and other costs including costs of defense, which any of them may incur with respect to the failure, neglect, or refusal of Contractor to faithfully perform the Work and all of the Work and all of Contractor's obligations under the Contract. Such costs, expenses, and damages shall include all costs, including attorney's fees, incurred by the indemnified parties in any lawsuit to which they are a party.

12.3 The indemnified party shall have the right to approve the legal counsel selected by the Contractor or the insurer of the liability, which approval shall not be unreasonably withheld.

12.4 The defense, indemnification, hold harmless provisions, and City's Liability Insurance set forth herein shall survive any termination of the Contract.

ARTICLE 13 - DISPUTE RESOLUTION

13.1 **Informal Dispute Resolution** The Parties to the Contract agree that time is of the essence in relation to the performance of the Contract and completion of the Project. Therefore, any and all disputes in relation to the Contract will initially be referred to the City Project Manager and Contractor Project Manager, as applicable to the dispute, for immediate resolution. If, after good faith efforts to reach a resolution, none is reached, any party to the dispute may submit the dispute to the Dispute Resolution Representative ("DRR") process set forth below, which is intended to be an expedited process.

13.2 Dispute Resolution Representative (DRR) Process

13.2.1 The Parties under the Contract agree that all claims and disputes in relation to the Project that are not resolved in the ordinary course of the Project ("Claim or Claims") shall, as a prerequisite to any mediation or litigation of the Claim, first be submitted for resolution between the designated Dispute Resolution Representatives of the Parties as set forth herein (the "DRR Process").

13.2.2 The DRR Process shall be initiated through the service of a DRR Notice as set forth below:

(xi) For claims by the Contractor, the DRR Process shall be initiated by the party asserting the claim serving written notice on the City setting forth in detail:

(a) the basis for the claim;

(b) the effect of the Claim upon the construction of, and/or Project Schedule for, the Project;

(c) the specific relief requested, the amount thereof, and how such was calculated;

(d) the parties involved in the Claim and how they are involved;

(e) the specific contract provisions in the Contract Documents (including, if applicable, drawings and specifications) which apply; and

(f) efforts made to date to resolve the Claim.

(xii) For claims by the City, the DRR process will be initiated by the City providing written notice to the other parties of the basis and amount of its claim, the parties involved in the Claim, and how they are involved, the provisions in the Contract Documents that apply, and the relief requested.

(xiii) The DRR Notice shall be hand-delivered and e-mailed to the other parties' designated Dispute Resolution Representatives.

13.2.3 The other parties shall respond in writing to the DRR Notice ("DRR Response") within ten (10) calendar days of receipt of the DRR Notice, setting forth those items set forth in the DRR Notice that they agree with, dispute, and/or have questions concerning. The DRR Response shall be hand-delivered and e-mailed to the other parties' Dispute Resolution Representatives.

13.2.4 The designated Dispute Resolution Representatives for the parties to the claim shall then meet as soon as possible and, in any event, within twenty (20) calendar Days of submission of the DRR Notice (regardless of whether a DRR Response has been submitted by all parties involved in the dispute), at a mutually agreed upon time and place, to attempt to resolve the Claim based upon the DRR Notice and DRR Response.

13.2.5 At any time after the first meeting required above, either party may terminate the DRR Process by written notice to the other party.

13.2.6 The parties may agree, in writing, to extend or modify the time limits or other provisions of the DRR process in relation to a specific pending Claim.

13.2.7 Unless otherwise designated in a written notice to the other parties, the Project Manager, the representatives of the Contractor, and of the Design Professional shall act as the parties' designated Dispute Resolution Representatives.

13.2.8 If a resolution of the Claim is reached, that resolution shall be set forth in writing. The resolution shall be signed by the Parties' designated Dispute Resolution Representatives. If the resolution involves a change in any Contract Documents, the Contract Price, the Project Schedule, or any other change requiring a written Change Order or Amendment, the parties shall execute an appropriate written Change Order or Amendment pursuant to the terms of the Contract Documents.

13.3 Mediation

13.3.1 Unless extended by written agreement of the parties involved in the dispute, any Claim not resolved through the DRR process set forth above within five (5) calendar days after the meeting required under 13.2.4 or after the DRR is terminated pursuant to 13.2.5 above, whichever is earlier, shall be submitted to mediation as a condition precedent to litigation by either party.

13.3.2 The mediation shall be commenced by written demand upon the other party for mediation. If the parties cannot agree upon a mediator within ten (10) calendar Days of the written demand, either party may make a request to the Civil Presiding Judge of the Yuma County Superior Court to appoint a mediator. The mediation shall occur within forty (40) calendar Days of the written demand for mediation unless the parties agree, in writing, to a longer period of time.

13.3.3 The qualifications for the mediator shall be that the mediator be:

(xiv) an experienced mediator, arbitrator, or litigator of construction disputes; and

(xv) having engaged a significant portion of their time involving and/or resolving construction disputes for at least the past five (5) years.

13.3.4 Each party shall provide to the other party and the mediator all of the information and documentation required under 13.2.2 and 13.2.3 above, together with any additional information and documentation that the party believes relevant. In addition, the parties shall exchange and provide to the mediator such additional memoranda, information, and/or documentation, as the mediator may request, and in the form and at such times as the mediator may direct.

13.3.5 The parties shall share the mediator's fee and any filing fees equally. The mediation shall be held in San Luis, Arizona unless another location is mutually agreed upon. Agreements reached in mediation shall be specifically enforceable in any court having jurisdiction over the dispute.

13.4 Arbitration

13.4.1 If the mediation is unsuccessful, the parties shall submit the dispute and/or claim to be resolved through binding arbitration conducted according to the then-current Construction Industry Arbitration Rules of the American Arbitration Association ("AAA") but not administrated or conducted by the AAA. The arbitration shall be held in Yuma County, Arizona, utilizing a single arbitrator selected by the parties unless the parties agree, in writing, to an alternative arbitration procedure.

13.4.2 If: (a) the parties cannot agree on a single arbitrator within two (2) weeks of the demand for arbitration; or (b) the parties at any time prior to the arbitrator being appointed or before the arbitrator has accepted the appointment, cannot agree upon any significant aspect of the arbitration, not already addressed herein, either party may submit the Claim directly to the AAA to select the arbitrator, and thereafter the arbitration shall be administered by the AAA.

13.4.3 The arbitrator shall be an attorney with at least fifteen (15) years of experience in construction-related practice and whose practice, for at least the last five (5) years, consists of at least 50% construction law.

13.4.4 At the request of either party, the arbitration may include as parties, through joinder, consolidation, or otherwise, additional persons or entities involved in the Project, involving claims and/or disputes with common issues and/or facts. The arbitrator shall promptly rule upon any request for joinder or consolidation.

13.4.5 In relation to claims in which the amount in controversy is less than $250,000, no discovery other than the exchange of documents, designation of witnesses, and detailed disclosure of claims and defenses (including specifically a detailed basis for calculating all claims) and no more than three (3) depositions and one (1) expert per issue per side, shall be allowed, subject to disclosure of such other information as approved by the arbitrator. Otherwise, discovery shall be allowed and/or limited as decided by the arbitrator.

13.4.6 The prevailing party in any arbitration or court proceeding under this Contract shall be entitled to an award of its attorneys' fees, costs, and expenses (including expert witness fees) incurred.

13.4.7 A demand for arbitration shall be made within the time limits specified in the Contract Documents as applicable, and in other cases within a reasonable time after the Claim has arisen, and in no event shall it be made after the date when the applicable statute of limitations would bar institution of legal or equitable proceedings based on such Claim.

13.4.8 The Parties agree to participate as a party, by joinder and/or consolidation, in any arbitration, litigation, or other dispute resolution involving as an issue, claim, or defense, any action, inaction, or service provided under this Contract or in relation to the Project or the Work, or any defect or deficiency in the Work.

13.4.9 The party filing a notice of demand for arbitration, or a counterclaim, must assert in the demand or counterclaim all Claims then known to that party on which arbitration is permitted to be demanded.

13.4.10 Any award by the arbitrator shall not include any consequential or punitive damages.

13.4.11 The award entered by the arbitrator shall be a reasoned award.

13.4.12 The award entered by the arbitrator shall be final, and judgment may be entered upon the award in the Arizona Superior Court.

ARTICLE 14 - MISCELLANEOUS PROVISIONS

14.1 **Assignment** Neither the Contractor nor the City shall, without the written consent of the other, assign, transfer, or sublet any portion of this Contract or part of the Work or the obligations required by the Contract Documents. Any such assignment will be void, will transfer no rights to the purported assignee, and would be a material breach of the Contract.

14.2 **Governing Law and Venue.** In the performance of the Contract, Contractor shall abide by and conform to any and all laws of the United States, State of Arizona, Yuma County, and the City, including but not limited to federal and state executive orders providing for equal opportunities, the Federal Occupational Safety and Health Act and any other federal, state, county, or local laws applicable to the Contract. This Contract shall be governed by and construed in accordance with the substantive and procedural laws of the State of Arizona, including choice of law and conflict of laws and principles. Exclusive jurisdiction and venue for any action brought to enforce or construe any provision of this Contract shall be proper in the Superior Court of Yuma County, Arizona. Both Parties consent to jurisdiction and venue in such court for such purposes. The Party prevailing in any such action or other proceeding to resolve a dispute shall be paid all reasonable costs, reasonable expert services fees, and reasonable attorney's fees by the other Party. In the event any judgment is secured by said prevailing Party, all such costs, expert fees, and attorney's fees shall be included in the judgment, such fees to be set by the court and not by jury.

14.3 **San Luis Business License** The Contractor shall obtain a San Luis Business License before commencing Work.

14.4 **Survival** All warranties, representations, and indemnifications by Contractor shall survive the completion or termination of this Contract.

14.5 **No Waiver** The failure of either Party to enforce any of the provisions of the Contract Documents or to require the performance of the other Party of any of the provisions under this Contract shall not be construed to be a waiver of such provisions, nor shall it affect the validity of the Contract Documents or any part them, or the right of either Party to thereafter enforce each and every provision. Unless otherwise specifically agreed to in writing by both Parties, any consent to delay in the Contractor's performance of its

obligation is applicable only to the particular transaction to which it relates and is not applicable to any other obligation or transaction.

14.6 Project Communications

14.6.1 All communications concerning the performance of the Work or the Project shall be provided to the designated Project Manager and Contractor's Representative set forth in Article 1 of the Contract.

14.6.2 Project communications may be exchanged by e-mail upon the written agreement of the Project Manager and Contractor Representative. However, e-mail communications are not binding upon the City. E-mail communications cannot change the terms of the Contract or the scope of work or effectuate any change that requires a written change order. The use of e-mails is for information only, and e-mails will have no legal or binding effect.

14.7 **Independent Contractor** The parties intend that this Contract will create an independent contractor relationship and not an employer-employee relationship. The City is interested only in the results to be achieved, and the conduct and control of the performance of the services contemplated under this Contract will be solely with the Contractor. Contractor's employees, agents, and Subcontractors shall not be considered to be employees or agents of the City for any purpose. They shall not be entitled to any of the benefits the City provides for its employees. The Contractor shall furnish at its own expense all materials and equipment necessary to carry out the terms of this Contract.

14.8 **No Partnership** Nothing in this Contract constitutes a partnership, joint venture or similar arrangement between the Parties. Neither Party is the principal or agent of the other.

14.9 **No Third-Party Beneficiaries** There are no third-party beneficiaries to this Contract and no person or entity, not a Party, shall have any right or cause of action under this Contract.

14.10 ***Force Majeure*** If the Contractor or the City or both are prevented or materially restricted from performing any of their obligations under this Contract by an event of *force majeure*, then the obligations of each Party shall be suspended or reduced to the extent made necessary by the event. As used in this section, "*force majeure*" means any act or cause not reasonably within the control of the Party whose ability to perform is impaired and which that Party could not have prevented by the exercise of reasonable diligence. *Force majeure* events include but are not limited to natural disasters, fire, flood, explosions, strikes (or labor disputes) over which the affected Party has no control, sabotage, riots, civil commotion, acts of civil or military authority, wars, public health emergencies, or material changes in applicable business laws (including but not limited to through statutes, regulations, executive orders, or. emergency declarations and proclamations).

14.11 **Notices** The notices under this Contract shall be validly given and fully received when in compliance with all of the following:

- In writing,
- Delivered or refused delivery,
- By personal delivery, or by major commercial delivery courier service which requires a signature of the recipient, or by registered or certified United States Postal Service mail, return receipt requested with the signature of the recipient, postage prepaid to the addresses in the first paragraph of this Contract.

14.11.1 Either Party may designate in writing and deliver notice of a different address in the same way as above. Any such change of address notice shall be delivered at least ten (10) Days before the date on which the change is to become effective.

14.11.2 Notices for delivery to the City shall be to the attention of the Public Works Director, copies to the City Manager, City Attorney, and City Clerk.

14.12 **Severability** If any terms, parts, or provisions of this Contract are for any reason invalid or unenforceable, the remaining terms, parts, or provisions are nevertheless valid and enforceable.

14.13 **Entire Agreement** This Contract (including the incorporated documents) contains the entire agreement between the Parties, and no oral or written statement, promise, or inducement made by either Party or its agents not contained or specifically referred to in this Contract is valid or binding. All modifications to this Contract must be in writing, signed, and endorsed by the Parties.

14.14 **Headings** The headings of this Contract are solely for the convenience of the Parties and shall not be used to explain, modify, simplify, or aid in the interpretation of the provisions of this Contract.

14.15 **Further Acts** Each of the Parties shall execute and deliver all such documents and perform all such acts as reasonably necessary, from time to time, to carry out the matters contemplated by this Contract.

BID TABULATION

COSL WEST WWTP 3.0 MGD MBR UPGRADES - 2025-050

April 9, 2026, 3:00 PM Local Time

				Low Bidder			
				Filanc		Perc Water Corporation	
Bid Item	**Description**	**Unit**	**Qty**	**Unit Price**	**Total Cost**	**Unit Price**	**Total Cost**
1	Mobilization / Demobilization	LS	1	$ 1,850,000	$ 1,850,000	$ 1,565,653	$ 1,565,653
2	Earthworks for Grading, Cut, Fill, and Export	LS	1	$ 3,383,000	$ 3,383,000	$ 283,635	$ 283,635
3	Asphalt Pavement	SF	38,413	$ 8	$ 307,304	$ 14	$ 538,166
4	Yard Piping	LS	1	$ 3,272,000	$ 3,272,000	$ 960,803	$ 960,803
5	Headworks Upgrades	LS	1	$ 1,200,000	$ 1,200,000	$ 1,563,136	$ 1,563,136
6	FEB Coversion in SBR 4	LS	1	$ 712,000	$ 712,000	$ 899,806	$ 899,806
7	Secondary Process Conversion in SBR 3 and digesters 3&4	LS	1	$ 2,027,000	$ 2,027,000	$ 2,584,895	$ 2,584,895
8	Installation of Feed Forward Pump and Channel	LS	1	$ 732,000	$ 732,000	$ 844,162	$ 844,162
9	MBR Conversion in SBRs 1 & 2 and Blower Gallery	LS	1	$ 3,400,000	$ 3,400,000	$ 12,732,998	$ 12,732,998
10	Chemical Building Upgrades	LS	1	$ 113,000	$ 113,000	$ 280,204	$ 280,204
11	Plant Drain Pump Station Upgrades	LS	1	$ 65,000	$ 65,000	$ 312,863.12	$ 312,863
12	Sludge Dewatering	LS	1	$ 165,000	$ 165,000	$ 1,326,154.35	$ 1,326,154
13	Odor Control	LS	1	$ 292,000	$ 292,000	$ 363,097.94	$ 363,098
14	Plant Process Water Booster Station	LS	1	$ 662,000	$ 662,000	$ 823,768.40	$ 823,768
15	Installation of 24" PVC C900 Reuse Distribution Pipeline, Values, Fittings and Appurtenances	LF	636	$ 590	$ 375,240	$ 558.94	$ 355,486
16	Headwork Fabric Canopy	LS	1	$ 96,000	$ 96,000	$ 96,658.86	$ 96,659
17	MBR Crane and Structure	LS	1	$ 680,000	$ 680,000	$ 468,061.24	$ 468,061
18	MBR FRP Covers	FT^2	2,400	$ 148	$ 355,200	$ 98.72	$ 236,928
19	Handrails and Guardrails	LF	872	$ 450	$ 392,400	$ 288.45	$ 251,528
20 a	Walking Grating (Open)	FT^2	2,400	$ 243	$ 583,200	$ 98.72	$ 236,928
20 b	Walking Grating (FRP/Closed)	FT^2	444	$ 206	$ 91,464	$ 169.62	$ 75,311
21	Metal Stairways	LS	1	$ 156,000	$ 156,000	$ 100,414.53	$ 100,415
22	Structural Canopies	LS	1	$ 503,000	$ 503,000	$ 331,959.05	$ 331,959
23	Transition SBR 4 to Intensification Process	LS	1	$ 1,638,000	$ 1,638,000	$ 1,167,519.34	$ 1,167,519
24	Electrical	LS	1	$ 11,506,000	$ 11,506,000	$ 10,241,120.34	$ 10,241,120
25	Concrete and Concrete Structures	LS	1	$ 3,317,000	$ 3,317,000	$ 8,253,454.97	$ 8,253,455
26	Coating and Painting	LS	1	$ 1,078,000	$ 1,078,000	$ 1,133,466.40	$ 1,133,466
27	Digesters 1 & 2 Upgrades	LS	1	$ 209,000	$ 209,000	$ 892,109.11	$ 892,109
28	Base Lump Sum	LS	1	$ 4,000	$ 4,000		$ -
29	Hydro-dyne Storage Allowance	MO	10	$ 3,860	$ 38,600	$ 3,860.00	$ 38,600
		Subtotal			$ 39,203,408.00		$ 48,958,887.59
		5% Contigency			$ 1,960,170.40		$ 2,447,944.38
		Total bid			**$ 41,163,578.40**		**$ 51,406,831.97**

NOTICE OF AWARD

Date of Issuance:	June 24, 2026		
Owner:	City of San Luis	Owner's Project No.:	2025-050
Engineer:	PACE	Engineer's Project No.:	B777
Project:	West WWTP 3.0 MGD MBR Upgrades		
Contract Name:	West WWTP 3.0 MGD MBR Upgrades		
Bidder:	Filanc		
Bidder's Address:	740 North Andreasen Drive, Escondido, California 92029		

You are notified that Owner has accepted your Bid dated **April 9, 2026** for the above Contract, and that you are the Successful Bidder and are awarded a Contract for: **West WWTP 3.0 MGD MBR Upgrades**

The Contract Price of the awarded Contract is **$41,163,578.00** Contract Price is subject to adjustment based on the provisions of the Contract, including but not limited to those governing changes, Unit Price Work, and Work performed on a cost-plus-fee basis, as applicable. This awarded Contract will be subject to the Change Order No. 1, deducting the Contract price by **$4,292,201.00** with the outlined reduction in scope, bringing the final Contract price to **$36,871,377.00**.

1 electronic copy of the unexecuted counterparts of the Agreement accompany this Notice of Award, and one copy of the Contract Documents accompanies will be transmitted or made available to Bidder electronically.

☒ Drawings will be delivered separately from the other Contract Documents.

You must comply with the following conditions precedent within 15 days of the date of receipt of this Notice of Award:

1. Deliver to Owner **1 electronic copy of the** counterparts of the Agreement, signed by Bidder (as Contractor).
2. Deliver with the signed Agreement(s) the Contract security and insurance documentation, as specified in the Instructions to Bidders and in the Contract.
3. Other conditions precedent (if any): **Include submittal of your pay application schedule of values and schedule.**

Failure to comply with these conditions within the time specified will entitle Owner to consider you in default, annul this Notice of Award, and declare your Bid security forfeited.

Within 10 days after you comply with the above conditions, Owner will return to you one fully signed counterpart of the Agreement, together with any additional copies of the Contract Documents as indicated in Paragraph 2.02 of the General Conditions.

Owner: **City of San Luis**

By *(signature)*: _____

Name *(printed)*: _____

Title: _____

Copy: Engineer

Copyright© 2018 National Society of Professional Engineers, American Council of Engineering Companies, and American Society of Civil Engineers. All rights reserved.

CHANGE ORDER NO.: 1

Owner:	City of San Luis	Owner's Project No.:	2025-050
Engineer:	PACE	Engineer's Project No.:	B777
Contractor:	Filanc	Contractor's Project No.:	
Project:	West WWTP 3.0 MGD MBR Upgrades		
Contract Name:	West WWTP 3.0 MGD MBR Upgrades		
Date Issued:	June 24, 2026	Effective Date of Change Order:	June 24, 2026

The Contract is modified as follows upon execution of this Change Order:

Description:

Scope reduction and schedule extension per PCO 001

Attachments:

PCO 001

Change in Contract Price	**Change in Contract Times**
Original Contract Price: $ 41,163,578.00	Original Contract Times: Substantial Completion: 488 Ready for final payment: 533
Decrease from previously approved Change Orders No. 0 to No. **0**: $ 0.00	**Increase** from previously approved Change Orders No.0 to No 0: Substantial Completion: 0 Ready for final payment: 0
Contract Price prior to this Change Order: $ 41,163,578.00	Contract Times prior to this Change Order: Substantial Completion: 488 Ready for final payment: 533
Decrease this Change Order: $ 4,292,201.00	**Increase** this Change Order: Substantial Completion: 83 Ready for final payment: 83
Contract Price incorporating this Change Order: $ 36,871,377.00	Contract Times with all approved Change Orders: Substantial Completion: 571 Ready for final payment: 616

Recommended by Engineer (if required)	Accepted by Contractor
By:	
Title:	
Date:	
Authorized by Owner	**Approved by Funding Agency (if applicable)**
By:	
Title:	
Date:	

DRAFT

Copyright© 2018 National Society of Professional Engineers, American Council of Engineering Companies and American Society of Civil Engineers. All rights reserved.

FILANC

PCO # 001
Potential Scope Adjustment Options

Filanc
21617 N 3rd Ave
Phoenix, Arizona 85027
Phone: (602) 544-3600

Project: WEST WWTP 3.0 MGD MBR UPGRADES
101 Cesar Chavez Blvd
San Luis, AZ 85349

CHANGE ORDER REQUEST

TO:	City of San Luis 1090 East Union Street San Luis, Arizona 85349	**FROM:**	Filanc 740 North Andreasen Drive Escondido California, 92029
PCO NUMBER/REVISION:	001 / 0	**PROJECT:**	WEST WWTP 3.0 MGD MBR UPGRADES
REQUEST RECEIVED FROM:	Eulogio Vera – City of San Luis	**CREATED BY:**	Klete Rogers - Filanc
STATUS:	In Review	**REFERANCE:**	
		TOTAL AMOUNT:	**($4,292,201)**

Below is our proposal to complete the following changes to our contract work:

CHANGE ORDER TITLE: Potential Scope Adjustment Options

CHANGE REASON: Owner / Engineer Request

CHANGE ORDER DESCRIPTION: *(The Contract Is Changed As Follows)*

This Change Order Request contains proposed scope and sequencing adjustments for the WEST WWTP 3.0 MGD MBR Upgrades project, developed in response to Owner and Engineer direction. The revisions include targeted reductions to electrical, civil/demolition, structural, process/equipment, and project controls scope, along with resequencing intended to maintain plant operations and improve overall project efficiency. The following items are provided below for the City's review and consideration.

Electrical Scope Revisions ($1,007,711)

The electrical scope shall be revised as follows:
- Remove rebar for conduit encasement per Details A-W, Plan Sheets E11.5, E11.20 through E11.24. No rebar shall be provided in any duct bank encasement as a result.
- Remove electrical work associated with the MBR overhead crane, including but not limited to conduit, wire, breakers, disconnects, and control instrumentation.
- Electrical scope shall be re-sequenced in conjunction with the changes made in the Process / Equipment and Sequencing Revisions.

See Attachment A for clarification and indication of electrical changes for the overhead crane.

Civil / Demolition Scope Revisions ($150,000)

The civil and demolition scopes shall be revised as follows:
- Remove from scope: Install 3" DG over compacted native per specifications on the road leading to the sludge beds (see Sheet C3.0, Note 8)
- Remove from scope: Contractor to demo all structures above concrete pads for abandoned DAF unit (See Attached D1.1)
- Remove from scope: Demo existing sludge pumps. Remove all above grade equipment, piping, and appurtenances of the Existing Sludge Pump. (See Attached D1.1)
- Remove from scope: Demo old odor control system (West unit). Remove all above grade structures, equipment, piping, and appurtenances. (See Attached D1.1)
- City shall provide total sufficient fill import to within 300 feet of the site entrance. City will coordinate with contractor on scheduling of fill.

See Attachment A for clarification and indication of civil and demo scope changes. Any specification requirements pertinent to the scope changes above shall be amended shall also be amended accordingly.

Structural Scope Revisions ($831,326)

The structural scope shall be revised as follows:
- Remove from scope: MBR FRP covers over the MBR basins shown on Sheet M2.0, Note 2.
- Remove from scope: MBR overhead crane structure shown on Sheet M2.3 (Note 1) and S2.2. Footing shall be provided as detailed in the structural plans for future overhead crane.
- Remove from scope: MBR overhead crane shown on Sheet M2.0 M2.3, M2.4
- Provide additional handrail in lieu of FRP covers at the MBR basins. Handrail to match other new handrailing provided in other areas as specified in project specifications and Sheet W11.0 Detail D.
- Remove from scope: Structural submittal requirements associated with the deleted structural scope items above.

See Attachment A for clarification and indication of structural scope changes. Any specification requirements pertinent to the scope changes above shall be amended shall also be amended accordingly.

DRAFT

FILANC

PCO # 001
Potential Scope Adjustment Options

Process / Equipment and Sequencing Revisions ($776,000)

The original sequence required the indensification process to be completed and operational prior to removing SBR 1, 2, and 3 from service, which would require indensifying for the entire duration of the project. Filanc has resequenced the work to reduce the intensification duration from 24 months to 12 months. This approach allows the project to begin with work at the headworks and Basins 1 and 2 while Basins 3 and 4 remain in service. Filanc will then complete the intensification installation and commissioning sequence in a manner that maintains operations and supports an overall reduction in project duration.

The detailed steps of the sequencing are as follows:

1) Headworks will be relocated and brought online
2) Basins 1 and 2 will be isolated and Basins 3 and 4 will continue to operate
3) Filanc will complete the work in Basins 1 and 2, the new headworks, and as much of the MLSS channel as possible.
4) Concurrently we will make all necessary modifications, install, and startup the indesification unit To be operational prior to begining work in basin 3
5) Once indensification is complete Filanc will complete work in basin 3 and begin the commissioning process of the headworks, basins 1, 2, and 3, MLSS Channel, and all other support systems making the MBR operationally complete.
6) Upon completion of MBR commissioning Filanc will remove indensification system and complete the modifications of Basin 4 to an Equalization Basin. Completing the project.

The resequencing work reduces the indensifer duration to 12 months in duration. The monthly rental of the indensification equipment is $48,000 per month for a total of $576,000. The remaining balance of $200,000 is a reduction in the overall schedule because of the resequencing. Any changes that require the equipment rental duration to be changed will be addressed through the change order process in accordance with the contract documents.

Project Controls Revisions Calculated Below

The project contingency has been reduced to reflect the current maturity of the project and the reduced level of remaining risk. The design is now substantially complete, and the major construction considerations, sequencing concerns, and constructability issues have been reviewed and addressed. In addition, a significant portion of the major equipment has already been purchased or committed, which further reduces exposure to future pricing volatility, procurement uncertainty, and scope development risk. Based on these factors, we suggest the remaining contingency be adjusted to 2.5%, a level more appropriate for the current stage of the project. The original contract scope total was $39,203,408 with a 5% contingency of $1,960,170 for a total bid price of $41,163,578. The new contract scope total is $35,972,075 making the 2.5% contingency $899,302 for a total contingency reduction of ($1,060,868).

Summary and Total

Subtotal of Scope Changes	($2,765,037)
Contractor Markup 10%	($276,504)
Sales Tax 6.24%	($189,792)
TOTAL SCOPE CHANGES	($3,231,333)
Contingency Reduction to 2.5% of Revised Contact Value	($1,060,868)
TOTAL DEDUCTION	**($4,292,201)**
CURRENT CONTRACT VALUE	$41,163,578
REVISED CONTRACT VALUE	**$36,871,377**

Clarifications and Conditions

This Change Order is based on the following clarifications:

- The deductive pricing is based on acceptance of the above scope revisions as a complete package. Partial acceptance may require repricing.
- Deleted work is excluded from the Contract Documents after execution of this Change Order. Any future requirement to restore, redesign, reinstall, or otherwise perform deleted work shall be treated as a separate change.
- City-provided fill import shall be suitable, available, and delivered to within 300 feet of the site entrance in a manner that does not delay Contractor's work.
- Final implementation of the scope revisions is subject to approval by the City and the design professional, including any required drawing, specification, permit, or regulatory revisions.
- Except as expressly modified by this Change Order, all other terms and conditions of the Contract remain unchanged.
- Process Equipment resequencing is subject to Engineer and owner approval as outlined above. Any additional rental of indensification system and associated costs, due to no fault of the contractor are subject to change order

DRAFT

FILANC

PCO # 001
Potential Scope Adjustment Options

DRAFT

ATTACHMENTS:

A - Plan Sheet Clarifications

Please sign and return this Change Order Request to indicate your approval to include the changes in a formal contract change order. This change order proposal is valid for 30 days. Please let me know if you have any questions or concerns.

Best Regards,

APPROVED
City of San Luis
1090 East Union Street
San Luis, Arizona 85349

By: _____
Signature **Date**

Name / Title: _____

REQUESTED
Filanc
21617 N 3rd Avenue
Phoenix, Arizona 85027

By: _____ 5/25/2026
Signature **Date**

Name / Title: Klete Rogers / General Manager

Attachment A
Plan Sheet Clarifications

DRAFT

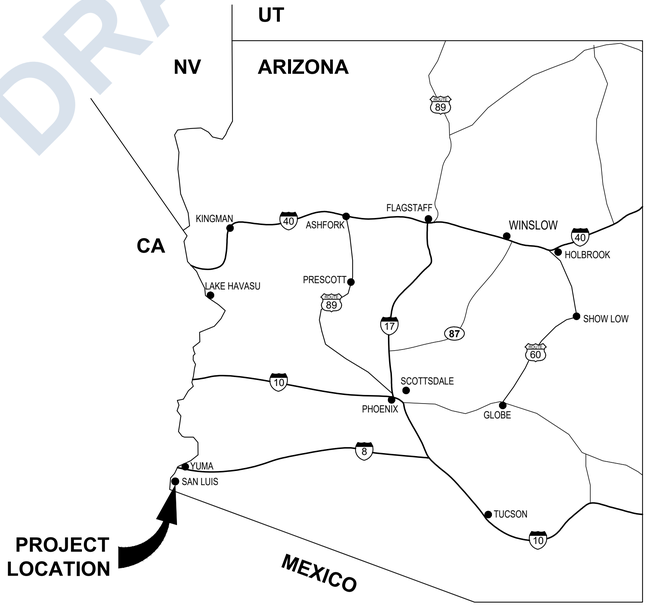

LOCATION MAP
N.T.S.

CITY OF SAN LUIS
YUMA COUNTY, ARIZONA
WEST WASTEWATER TREATMENT PLANT
3.0 MGD MBR UPGRADES

100% ISSUED FOR REVIEW

CITY OF SAN LUIS ARIZONA

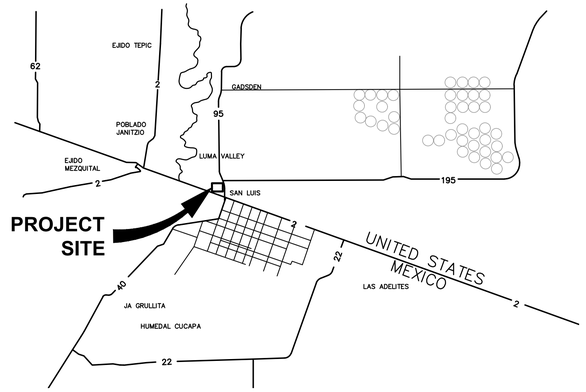

VICINITY MAP
N.T.S.

MAYOR:	NIEVES RIEDEL
VICE MAYOR:	TADEO AZAEL DE LA HOYA
CITY COUNCIL:	LUIS E. CABRERA MARIA CECILIA CRUZ ESTEBAN C. ROSALES LIZETH SERVIN JAVIER VARGAS
ACTING CITY MANAGER:	JENNY TORRES
PUBLIC WORKS DIRECTOR:	EULOGIO VERA

FINAL DESIGN APPROVAL:

BY: _____ DATE: _____

PUBLIC WORKS DIRECTOR

THE CITY APPROVES THESE PLANS FOR CONCEPT ONLY AND IS NOT LIABLE FOR ERRORS OR OMISSIONS

RECORD DRAWING:

THESE RECORD DRAWINGS HAVE BEEN PREPARED BASED ON INFORMATION PROVIDED BY THE CONSTRUCTION CONTRACTOR. THE ENGINEER HAS INSPECTED THE COMPLETED FACILITIES AND CERTIFIES THAT THEY ARE A SUBSTANTIALLY ACCURATE PRESENTATION OF THE LAYOUT AND CONDITION OF THE CONSTRUCTED PROJECT.

NAME _____(SEAL)

REGISTRATION NO. _____ DATE _____

REVD. BY: _____
FIELD ENGINEERING

CONSULTANTS:

ENGINEER OF RECORD

PACIFIC ADVANCED CIVIL ENGINEERING (PACE)
8723 E. VIA de COMMERICO, SUITE A-204
SCOTTSDALE, AZ 85258
BUSINESS LICENSE NO. 1006013
(480) 991-3595
CONTACT: DUONG DO, PE

GEOTECH

GEOTECHNICAL TESTING SERVICES, GTSI
1044 E. 21ST STREET
YUMA,AZ 85365
CONTACT: COURTNEY M. ARVISO, P.E.
(928) 329-4695

SURVEYOR

DAHL, ROBINS & ASSOCIATES, INC.
1560 S. 5TH AVENUE
YUMA, AZ 85364
CONTACT: KEVIN A. DAHL, R.L.S.
(928) 819-0825

STRUCTURAL ENGINEER

PK ASSOCIATES, LLC
7434 E McDONALD DRIVE
SCOTTSDALE, AZ 85250
CONTACT: JAMES APPLEYARD, P.E.
(480) 922-8854

SURVEYOR'S NOTES

THE SUBJECT PROPERTY IS LOCATED WITHIN AN AREA HAVING A FLOOD ZONE A DESIGNATION. ZONE A - THE 1% ANNUAL CHANCE FLOOD (100-YEAR FLOOD), ALSO KNOWN AS THE BASE FLOOD, IS THE FLOOD THAT HAS A 1% CHANCE OF BEING EQUALED OR EXCEEDED IN ANY GIVEN YEAR. THE SPECIAL FLOOD HAZARD AREA IS THE AREA SUBJECT TO FLOODING BY THE 1% ANNUAL CHANCE FLOOD. AREAS OF SPECIAL FLOOD HAZARD INCLUDE ZONES A, AE, AH, AO, AR, A99, V, AND VE. THE BASE FLOOD ELEVATION IS THE WATER-SURFACE ELEVATION OF THE 1% ANNUAL CHANCE FLOOD. REFERENCE - FLOOD INSURANCE RATE MAP (FIRM), MAP NUMBER 04027C2135F DATED JANUARY 16, 2014, WHICH IS THE FLOOD INSURANCE RATE MAP FOR THE COMMUNITY IN WHICH THIS PROJECT IS SITUATED. THE TITLE REPORT WITH A OUR NO. 91400359 ISSUED BY PIONEER TITLE AGENCY, INC AND COMMITMENT DATE JULY 22, 2024 AT 7:30 AM WAS REFERENCED DURING THE PREPARATION OF THIS ALTA SURVEY.

BASIS OF BEARING

BEARINGS ARE RELATIVE TO NAD 83 ARIZONA WEST STATE PLANE COORDINATE SYSTEM AS MEASURED BY GPS KINEMATIC SURVEY AS OBSERVED CONTROL POINTS.

LEGAL DESCRIPTION

LOTS 2 AND 3, SECTION 2, AND LOT 27, SECTION 11, ALL IN TOWNSHIP 11 SOUTH, RANGE 25 WEST OF THE GILA AND SALT RIVER BASE AND MERIDIAN, YUMA COUNTY, ARIZONA; EXCEPT ALL MINERAL DEPOSITS AS RESERVED IN THE PATENT FROM THE UNITED STATES OF AMERICA, RECORDED IN DOCUMENT NO. 2001-14799 AND IN DOCUMENT NO. 2004-39688, RECORDS OF YUMA COUNTY, ARIZONA.

SEISMIC DESIGN COEFFICIENTS

PARAMETER	VALUE
SITE CLASS	D
MAPPED SPECTRAL ACCELERATION - SHORT PERIOD S_S(g)	0.737
MAPPED SPECTRAL ACCELERATION - 1 SEC. PERIOD, S1(g)	0.304
SITE COEFFICIENT - SHORT PERIOD, Fa	1.21
MCE2 SPECTRAL RESPONSE ACCELERATION - SHORT PERIOD, S_{MS}(g)	1.19
DESIGN SPECTRAL RESPONSE ACCELERATION - SHORT PERIOD, SDS(g)	0.595
PGA	0.306
PGAm	0.396
F pga	1.294
Ie	1.0
Cv	1.169

CALCULATION USING USGS PROGRAM ASCE/SEI: 7-16
SITE COORDINATES ESTIMATED FROM GOOGLE EARTH: 32.493794; 114.797252, RISK CATEGORY II

CALL TWO WORKING DAYS BEFORE YOU DIG
602-263-1100
1-800-STAKE-IT
(OUTSIDE MARICOPA COUNTY)

NO	BY	DATE	REVISIONS	DATE	APP.

Registered Professional Engineer (Civil) — DUONG T. DO — 40050 — Date Signed 12/31/27 — ARIZONA, U.S.A. — Expires 12/31/27

THESE DRAWINGS ARE THE PROPERTY OF P.A.C.E. AND SHALL NOT BE REPRODUCED IN ANY MANNER NOR BE USED FOR CONSTRUCTION UNLESS STAMPED "ISSUED FOR CONSTRUCTION".

PREPARED BY: DUONG DO — PROJECT ENGINEER #40050 — R.C.E. NO. — EXP. DATE — SCALE — DRAWN: WW, MSA — DESIGNED: NT, NE — CHECKED: DD — DATE: FEB 2026

TITLE: TITLE SHEET

JOB: CITY OF SAN LUIS WEST WWTP 3.0 MGD MBR UPGRADES — SAN LUIS AZ.

PACE Advanced Water Engineering
8723 E. VIA de COMMERICO, SUITE A-204 | SCOTTSDALE, CA 85258
P: (408) 991-3595 | www.pacewater.com

SHEET G1.0
1 OF 209 SHEETS

JOB NO. B777

FINAL PLANS ISSUED FOR BID

W:\B777\Engineering\B777 - 3MGD Exp\3MGD FINAL ISSN\sheets\B777 - G1.0-TITLE SHEET.dwg - Tab: G1.0 - by ywright on 02/05/26 at 2:10:21 PM

CONSTRUCTION NOTES:

1. INSTALL 3" ASPHALT OVER 8" AGGREGATE BASE COARSE PER GEOTECHNICAL REPORT WITH TYPE A THICKENED EDGE PER PER DETAIL: C6.0
2. INSTALL CONCRETE RETAINING WALL PER STRUCTURAL PLANS.
3. INSTALL ACCESS GATE PER DETAIL: D C6.3
4. RELOCATE AND INSTALL NEW CHAIN LINK FENCE WHERE REQUIRED PER DETAIL F C6.0 MATCH EXISTING.
5. INSTALL 3' CONCRETE SWALE PER DETAIL: F C6.2
6. INSTALL PROTECTIVE BOLLARD PER DETAIL: D C6.2
7. INSTALL GATE CARD READER PER CITY SPECIFICATION.
8. INSTALL 3" DG OVER COMPACTED NATIVE PER SPECIFICATIONS.
9. REMOVE EXISTING RETAINING WALL.

EARTHWORK ESTIMATE

CUT	773	Cu. Yd.
FILL	7,180	Cu. Yd.
NET	6,407	Cu. Yd. <FILL> ADJUSTED FOR 20% SHRINKAGE

CONTRACTOR SHALL VERIFY EARTHWORK QUANTITIES
ESTIMATED FILL INCLUDES FILL FOR PROPOSED OPERATIONS BUILDING

Owner to provide suitable fill within 300ft of site entrance

Remove DG paving from scope

OPERATIONS BUILDING (SEE CITY OF SAN LUIS WEST WWTP NEW BUILDING, VEGA, AND VEGA, 2025) (NOT PART OF SCOPE)

SEE CONTINUATION (LEFT)

SEE CONTINUATION (RIGHT)

PROPOSED GRADING PLAN

SCALE: 1" = 30'

30 15 0 30 60

NORTH

DRAFT

NO	BY	DATE	REVISIONS	DATE	APP.

Registered Professional Engineer (Civil) DUONG T. DO 40050 Date Signed 3-5-26 ARIZONA, U.S.A. Expires 12/31/27

PREPARED BY DUONG DO
PROJECT ENGINEER #40050
R.C.E. NO. 1---
EXP. DATE
SCALE
DRAWN WW, MSA
DESIGNED NT, NE
CHECKED DD
DATE FEB 2026

TITLE: GRADING PLAN

JOB: CITY OF SAN LUIS WEST WWTP 3.0 MGD MBR UPGRADES — SAN LUIS AZ.

PACE Advanced Water Engineering
8723 E. VIA de COMMERCIO, SUITE A-204 | SCOTTSDALE, CA 85258
P: (408) 991-3595 | www.pacewater.com

SHEET C3.0
13 OF 209 SHEETS

JOB NO. B777

THESE DRAWINGS ARE THE PROPERTY OF P.A.C.E. AND SHALL NOT BE REPRODUCED IN ANY MANNER NOR BE USED FOR CONSTRUCTION UNLESS STAMPED 'ISSUED FOR CONSTRUCTION'.

FINAL PLANS ISSUED FOR BID

W:\B777\Engineering\B777 - 3MGD Exp\3MGD FINAL DS\Arkitekt\B777-C3.0 GRADING PLAN.dwg - Tab: C3.0 - by wwright on 01/28/26 at 2:54:49 PM

DRAFT

LEGEND:

DEMO

SEE SHEET D1.3 FOR DEMO

CUT AND CAP EXISTING 12" C900 INFLUENT LINE OUTSIDE OF VAULT (TYP.)

PROTECT IN PLACE - EXISTING 6" DRAIN LINES AND VALVES (TYP.)

ABANDON IN PLACE EXISTING 18" EFFLUENT LINE

SEE SHEET M6.0 FOR DEMO OF EXISTING EFFLUENT PUMP STATION AND CHLORINE BUILDING

CUT AND CAP EXISTING POTABLE WATER LINES FEEDING HEADWORKS AND ODOR CONTROL. REMOVE UNDERGROUND PIPING. (TYP.)

DEMO EXISTING STATIC SCREENS 5-8. REMOVE ALL EQUIPMENT, PIPING, AND APPURTENANCES. DEMO CONCRETE PADS, RETAINING WALL, AND STAIRS. RE-GRADE PER CIVIL SHEETS

Demo of headworks required for new headworks, demo is necessary to remain in contractors scope for scheduling and coordination

DEMO EXISTING HEADWORKS ODOR CONTROL SYSTEM. REMOVE ALL EQUIPMENT, CONCRETE, PIPING, DUCTING, AND APPURTENANCES. REGRADE PER CIVIL SHEETS

PROTECT IN PLACE EXISTING ANTENNA

CUT AND CAP EXISTING 3" FORCE MAIN AND CHEMICAL LINE OUTSIDE OF BASINS . REMOVE ALL UNDERGROUND PIPING BETWEEN BASINS AND ALL PIPING NEAR HEADWORKS

ABANDONED DAF UNIT. CONTRACTOR TO DEMO ALL STRUCTURES ABOVE CONCRETE PADS

DEMO OLD EFFLUENT PUMPS. REMOVE ALL ABOVE GRADE EQUIPMENT, PIPING, AND APPURTENANCES

DEMO EXISTING WET WELL, EQUIPMENT, AND SUBGRADE PIPING

DEMO EXISTING BOLLARDS (TYP.)

DEMO EXISTING STATIC SCREENS 1-4. REMOVE ALL EQUIPMENT, PIPING, AND APPURTENANCES. DEMO CONCRETE PADS, RETAINING WALL, AND STAIRS. RE-GRADE PER CIVIL SHEETS

DEMO OLD ODOR CONTROL SYSTEM. REMOVE ALL ABOVE GRADE STRUCTURES, EQUIPMENT, PIPING, AND APPURTENANCES

CUT AND CAP EXISTING 12" C900 INFLUENT LINE OUTSIDE OF BLOWER PAD. REMOVE PIPING TO HEADWORKS SCREENS 1-4

SEE SHEET D1.2 FOR DEMO

Remove from scope

DEMO EXISTING SLUDGE PUMPS. REMOVE ALL ABOVE GRADE EQUIPMENT, PIPING, AND APPURTENANCES

EXISTING SEQUENCING BATCH REACTOR No. 4

EXISTING SEQUENCING BATCH REACTOR No. 3

EXISTING SEQUENCING BATCH REACTOR No. 1

EXISTING SEQUENCING BATCH REACTOR No. 2

DEMO SITE PLAN

SCALE: 1/16" = 1'-0"

NOTES:

1. DEMO PLANS SHOWN ARE SUGGESTED FOR REFERENCE ONLY. CONTRACTOR TO PROVIDE DEMO PLAN FOR APPROVAL BY CITY PRIOR TO CONSTRUCTION.
2. ALL EQUIPMENT AND MATERIAL DEMO'D WILL BE OFFERED TO THE CITY FOR FIRST REFUSAL PRIOR TO CONTRACTOR'S DISPOSAL.

NO	BY	DATE	REVISIONS	DATE	APP.

Registered Professional Engineer (Civil) — DUONG T. DO — 40050 — Date Signed 12/31/25 — ARIZONA, U.S.A. — Expires 12/31/27

THESE DRAWINGS ARE THE PROPERTY OF P.A.C.E. AND SHALL NOT BE REPRODUCED IN ANY MANNER NOR BE USED FOR CONSTRUCTION UNLESS STAMPED "ISSUED FOR CONSTRUCTION".

PREPARED BY: DUONG DO — PROJECT ENGINEER — R.C.E. NO. 40050 — EXP. DATE 12/31/27

DRAWN: WW, MSA — DESIGNED: NT, NE — CHECKED: DD — SCALE — DATE: FEB 2026

TITLE: **DEMOLITION PLAN**

JOB: CITY OF SAN LUIS WEST WWTP 3.0 MGD MBR UPGRADES — SAN LUIS AZ.

PACE
Advanced Water Engineering
8723 E. VIA de COMMERCIO, SUITE A-204 | SCOTTSDALE, CA 85258
P: (408) 991-3595 | www.pacewater.com

FINAL PLANS ISSUED FOR BID

SHEET **D1.1**

22 OF 209 SHEETS

JOB NO. B777

W:\B777\Engineering\B777 - 3MGD Exp\3MGD FINAL DS\sheets\B777 - DEMOLITION.dwg - Tab: D1.1 - by wwright on 02/02/26 at 4:35:19 PM

DRAFT

LEGEND:

DEMO

REMOVE SUB-GRADE PIPING AND CAP EXISTING WALL PENETRATIONS AT EACH END OF BASIN WALL

REMOVE WALKWAY

18" FF

PLUG PIPE PENETRATION

PROTECT IN PLACE BASIN DRAIN LINES. CONTRACTOR TO VERIFY LOCATIONS OF LINES AND FLOOR DRAINS

REMOVE WALL

REMOVE EXISTING CONTROL PANELS

PROTECT IN PLACE EXISTING VAULT AND PIPING

REMOVE AND RELOCATE STARWAY SEE M8.0

CITY TO PROVIDE INPUT IF EXISTING SLABS ON GRADE ARE TO BE DEMO OR KEEP

REMOVE EXISTING CONTROL PANELS

PLUG WEIR OPENING IN TOP OF WALL (TYP.)

PROTECT IN PLACE EXISTING SLUDGE DRAIN LINES (TYP DIGESTERS 1 & 2)

CITY TO PROVIDE INPUT IF EXISTING SLABS ON GRADE ARE TO BE DEMO OR KEEP

Remove from scope

EXISTING SEQUENCING BATCH REACTOR No. 1

EXISTING SEQUENCING BATCH REACTOR No. 2

REMOVE CATWALK AND RAILING ABOVE BASIN

REMOVE EXISTING WALL ± 22' x 1' x 21' (L x W x H) (TYP OF 2)

REMOVE PORTION OF FULL WALL HEIGHT (TYP OF 3 SECTIONS FOR NEW PIPE GALLERYS), SEE STRUCTURAL AND MECHANICAL PLANS

REMOVE EXISTING EQUIPMENT, J-BOXES, AND INSTRUMENTS

REMOVE EXISTING MIXERS, GUIDE RAILS, BASE PLATE, AND APPURTENANCES - RETURN TO CITY

REMOVE EXISTING DECANTER W/ SUPPORTS AND PIPING (TYP EA. BASIN)

REMOVE EXISTING REMOVABLE DAVIT CRANE

REMOVE EXISTING SENSOR

REPAIR CONCRETE GAP IN WALL

EXISTING DIGESTER 1

EXISTING DIGESTER 2

REMOVE 4" SUPERNATANT PIPING

REMOVE EXISTING DIGESTER AIR PIPING, DIFFUSERS, AND APPURTENANCES (TYP OF DIGESTERS 1 & 2)

PLUG 12" INFLUENT PIPE PENETRATION INSIDE OF BASIN WALL (TYP OF SBR BASINS 1 & 2)

CUT DOWN PORTIONS OF EXISTING BASIN WALL HEIGHT, SEE STRUCTURAL AND MECHANICAL PLANS

REMOVE EXISTING DISCONNECT SWITCHES

CUT AND CAP EXISTING 12" C900 INFLUENT LINE OUSIDE OF EXISTING WALL. DEMO AND REMOVE PIPE TO HEADWORKS SCREENS 1-4

RELOCATE SHADE CANOPY POST PER STRUCTURAL PLANS

DEMO AND REMOVE STAIRS

REMOVE AND RELOCATE EXISTING BLOWERS, SEE SHEET M5.0. DEMO AND REMOVE ALL BLOWER PIPING AND APPURTENANCES.

MODIFY ELECTRICAL PANELS PER ELECTRICAL PLANS

CUT AND CAP EXISTING 12" C900 INFLUENT LINE OUTSIDE OF EXISTING BLOWER PAD

PROTECT IN PLACE EXISTING BLOWERS, PIPING, & APPURTENANCES

PROTECT IN PLACE EXISTING ELECTRICAL DISCONNECT PANEL

PROTECT IN PLACE STAIRS AND LANDING

PROTECT IN PLACE SUPERNATANT PUMP (TYP OF DIGESTERS 1 & 2)

PROTECT IN PLACE EXISTING TELESCOPING VALVE, DISCHARGE PIPE, AND MOTORIZED VALVE (TYP OF DIGESTERS 1 & 2)

PROTECT IN PLACE EXISTING CONTROL PANEL AND DISCONNECT SWITCH (TYP OF DIGESTERS 1 & 2)

12" INF

1" PW

6" WAS

3" FM

3" CHEM

NOTES:

1. DEMO PLAN SHOWN ARE SUGGESTED FOR REFERENCE ONLY. CONTRACTOR TO PROVIDE DEMO PLAN FOR APPROVAL BY CITY PRIOR TO CONSTRUCTION.
2. ALL EQUIPMENT AND MATERIAL DEMO'D WILL BE OFFERED TO THE CITY FOR FIRST REFUSAL PRIOR TO CONTRACTOR'S DISPOSAL.

EXISTING SBR & DIGESTER BASINS

SCALE:1/8" = 1'-0"

NORTH

NO	BY	DATE	REVISIONS	DATE	APP.

Registered Professional Engineer (Civil) — Duong T. Do — 40050 — Arizona, U.S.A. — Date Signed 12/31/25 — Expires 12/31/27

PREPARED BY: DUONG DO
PROJECT ENGINEER #40050
R.C.E. NO. 1—
EXP. DATE
SCALE
DRAWN WW, MSA
DESIGNED NT, NE
CHECKED DD
DATE FEB 2026

TITLE: EXISTING SBR BASIN 1 & 2

JOB: CITY OF SAN LUIS WEST WWTP 3.0 MGD MBR UPGRADES — SAN LUIS AZ.

PACE Advanced Water Engineering
8723 E. VIA de COMMERCIO, SUITE A-204 | SCOTTSDALE, CA 85258
P: (408) 991-3595 | www.pacewater.com

SHEET D1.2
23 OF 209 SHEETS

JOB NO. B777

THESE DRAWINGS ARE THE PROPERTY OF P.A.C.E. AND SHALL NOT BE REPRODUCED IN ANY MANNER NOR BE USED FOR CONSTRUCTION UNLESS STAMPED 'ISSUED FOR CONSTRUCTION'.

FINAL PLANS ISSUED FOR BID

W:\B777 Engineering\B777 - 3MGD Exp\3MGD FINAL DS\Arkitekts\B777 - DEMOLITION.dwg - Tab: D1.2 - by wwright on 02/02/26 at 4:35:19 PM

SUGGESTED SEQUENCE OF CONSTRUCTION FOR MAIN WWTP CONVERSION

STAGE 1 :
- a. COMPLETE INTENSIFICATION PROCESS IN SBR 4 (SEE D1.0)
- b. OPERATE EFFLUENT DISCHARGE AND EFFLUENT PUMP STATION AS IS
- c. ALL WASTE ACTIVATED SLUDGE WILL BE WASTED TO SLUDGE DRYING BEDS

STAGE 2 :
- a. REDUCE FLOW TO 1 MGD BY DIVERTING EXCESS FLOW TO EAST WWTP
- b. PROVIDE TEMPORARY PIPING FROM PLANT DRAIN PUMP STATION TO SCREENS 5-8
- c. INSTALL TEMPORARY CATCH BASIN AND SUMP PUMP AT SCREENS 5-8 WITH DRAIN LINE FROM EXISTING SCREEN

STAGE 3 :
- a. DIVERT ALL FLOW TO SCREENS 5-8 AND ONLY OPERATE SBR 4 (WITH INTENSIFICATION)

STAGE 4 : DEMO AND/OR REMOVE THE FOLLOWING:
- a. SCREENS 1-4
- b. SBRs 1 AND 2
- c. SBRs 1 AND 2 AERATION BLOWERS
- d. DIGESTERS 1 AND 2
- e. SLUDGE PUMPS, ODOR CONTROL, AND OLD EFFLUENT PUMPS
- f. EASTERN WALKWAY AND HANDRAIL ON SBR 3
- g. DEMO SBRs 3 AND 4 AERATION BLOWER CANOPY
- h. CLEAN OUT SBR3 AND DIGESTERS 3 &4 BUT KEEP AS EMERGENCY STORAGE WITH TEMPORARY TRANSFER PUMPS UNTIL STAGE 7

STAGE 5 :
- a. MOVE SBRs 1 AND 2 AERATION BLOWER AND INSTALLED AT FEB BASIN LOCATION PER PLAN
  - i. CONNECT NEW FEB BLOWER TO SBR 4 AIR MANIFOLD
  - ii. DEMO SBR AND DIGESTER PROCESS BLOWERS

STAGE 6 : CONSTRUCT AND INSTALL ALL STRUCTURAL, MECHANICAL, ELECTRICAL IN THE FOLLOWING PROCESS AREAS PER PLAN:
- a. MBR PROCESS
  - i. MBR BASINS
  - ii. BLOWER/PIPE GALLERIES
  - iii. DIGESTERS 1 AND 2
- b. NEW HEADWORKS AND HW ODOR CONTROL
- c. NON-POTABLE WATER PUMP STATION
- d. SLUDGE DEWATERING
- e. FEB PUMPS
- f. YARD PIPING

STAGE 7 :
- a. IMPROVEMENTS TO SBR 3 FOR CONVERSTION TO PROCESS TRAINS 1 AND 2
- b. CONSTRUCT MLSS CHANNEL
- c. CONSTRUCT AND INSTALL FEED FORWARD CHANNEL AND EQUIPMENT
- d. PLANT DRAIN PUMP STATION (DIVERT TEMPORARY WAS FROM INTENSIFICATION TO SLUDGE DEWATERING UNIT)
- e. IMPROVE CHEMICAL BUILDING AND CIP PIPING
- f. KEEP DIGESTERS 3 & 4 AS EMERGENCY STORAGE UNTIL STAGE 9

STAGE 8 : START UP MBR PROCESS
- a. SEEDING PROCESS TRAINS 1 AND 2
  - i. DIVERT PARTIAL INFLUENT FLOW TO NEW HEADWORKS AND PROCESS TRAINS 1 AND 2
  - ii. USE INTENSIFICATION WAS TO SEED PROCESS
    1. SEED MUST BE TEMPORARY PIPE TO NEW HEADWORKS SCREEN TO ENSURE SEED IS CLEAN FROM TRASH
  - iii. START MBR PROCESS - AS PROCESS MATURES, DIVERT MORE FLOW TO MBR PROCESS

STAGE 9
- a. IMPROVEMENTS TO DIGESTERS 3 AND 4
- b. REUSE DISTRIBUTION PIPE

STAGE 10 :
- a. REMOVE INTENSIFICATION PROCESS EQUIPMENT ONCE MBR PROCESS IS FULLY OPERATIONAL
- b. CONVERT SBR 4 TO FEB BASIN
- c. COMPLETE ALL REMAIN SCOPE INCLUDING ALL SITE WORK, DEMO, AND ALL UPGRADES REQUIRED BY THE CONTRACT DOCUMENTS

SUGGESTED ELECTRICAL SEQUENCE OF CONSTRUCTION

1. INSTALL TEMPORARY INTENSIFICATION PACKAGED PLANT SKID, ROUTE TEMPORARY 500W MULTICONDUCTOR CABLE PROTECTED IN HEAVY DUTY CABLE PROTECTOR (POWER RAMP) FROM MCC-N1 TO POWER SKID-MTD. MOTOR CONTROL PANEL. ALTERNATIVELY, USE A SPARE CONDUIT TO TEMPORARILY ROUTE THE FEEDER CABLE AND REMOVE THE CABLE ONCE THE INTENSIFICATION IS COMPLETED.
2. INSTALL FIELD PULLBOXES, DUCT BANKS, CONDUITS, CONDUCTORS, AND ALL FIELD PANELS/EQUIPMENT.
3. INSTALL NEW MCC-1, ACTIVE HARMONIC FILTER, XFMR-EA, PANEL-EA, MBR PLC PANEL, AND MAIN PLC PANEL INSIDE THE EXISTING ELECTRICAL ROOM.
4. REPLACE PANEL H1.
5. INSTALL AND COMMISSION NEW SERVICE ENTRANCE SECTION.
6. DECOMMISSION AND REMOVE EXISTING STANDBY GENERATOR 1.
7. RELOCATE EXISTING STANDBY GENERATOR, INSTALL TEMPORARY POWER CABLES FROM THE STANDBY GENERATOR 2 TO THE EXISTING ATSs/MTSs.
8. INSTALL THE AUTOMATIC TRANSFER SWITCH AND MAIN SWITCHGEAR.
9. INSTALL AND COMMISSION (2) NEW 500 KW STANDBY GENERATORS SOUTHWEST OF ELECTRICAL ROOM.
10. DECOMMISSION AND REMOVE EXISTING STANDBY GENERATOR 2.
11. RE-ROUTE FEEDER POWER FOR PANEL H1 FROM MCC-E2 TO MCC-1.
12. REPLACE EXISTING AC UNITS AT ELECTRICAL ROOM, POWER NEW AC UNITS FROM PANEL-EA.
13. DECOMMISSION AND REMOVE EXISTING MCC-E2 ONCE EXISTING LOADS HAVE BEEN DECOMMISSIONED AND RETURN TO CITY. INSTALL NEW MCC-2.
14. COMMISSION ALL NEW LOADS ON MCC-1 AND MCC-2.
15. DECOMMISSION AND REMOVE MCC-E1 AND MCC-N1.
16. REMOVE EXISTING SERVICE ENTRANCE SECTION, ATS #1/2, MTS #1/2, AND CONTROL PANELS INSIDE ELECTRICAL ROOM AND RETURN TO CITY.

Revised per CO1 Details

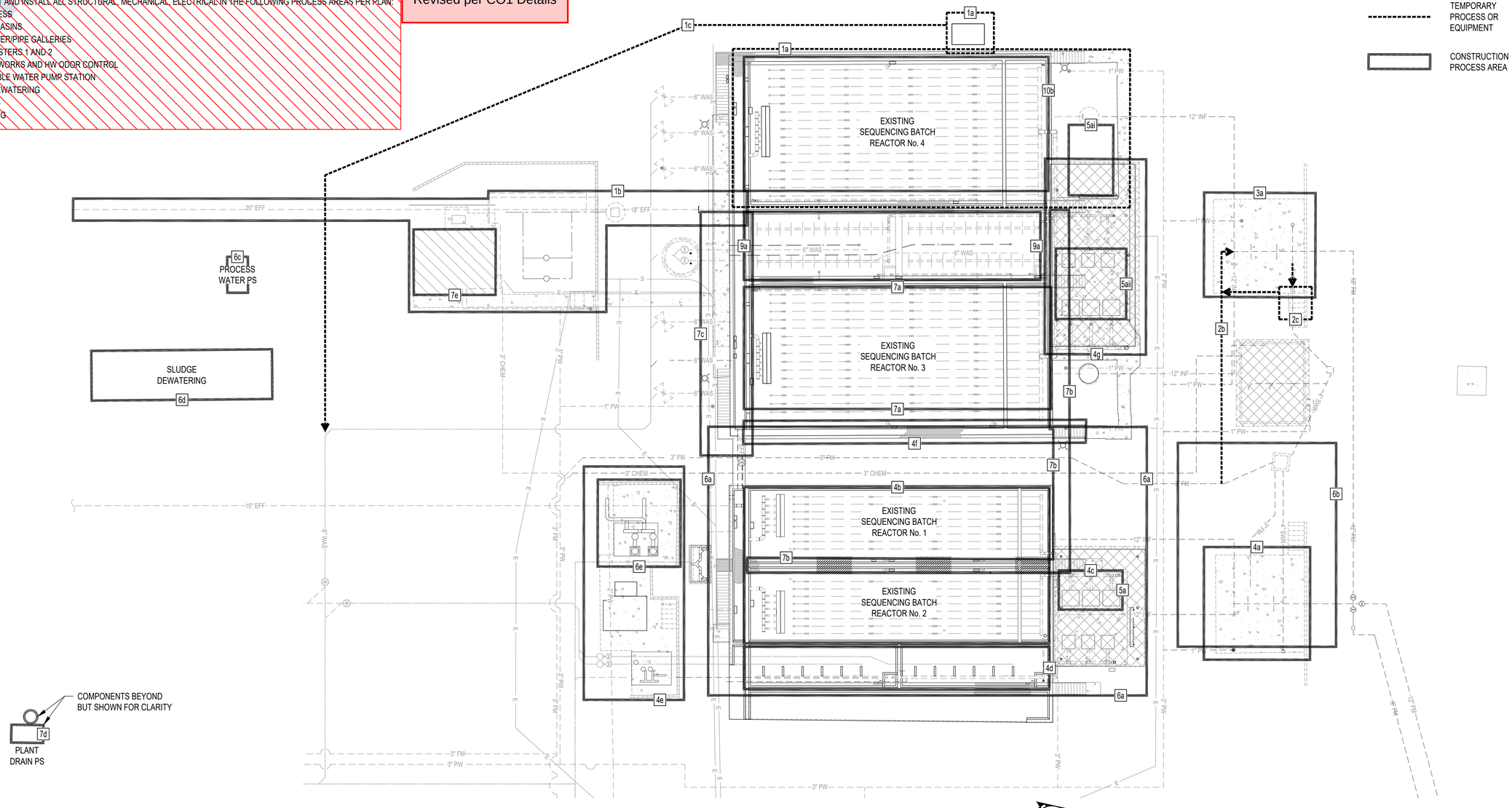

SEQUENCE SITE PLAN

SCALE: 1/16" = 1'-0"

NO	BY	DATE	REVISIONS	DATE	APP.

Registered Professional Engineer (Civil) — DUONG T. DO — 40050 — Arizona, U.S.A. — Expires 12/31/27

PREPARED BY: DUONG DO
PROJECT ENGINEER #40050
R.C.E. NO. / EXP. DATE: —
SCALE:
DRAWN: WW, MSA
DESIGNED: NT, NE
CHECKED: DD
DATE: FEB 2026

TITLE: SUGGESTED SEQUENCE OF CONSTRUCTION

JOB: CITY OF SAN LUIS WEST WWTP 3.0 MGD MBR UPGRADES — SAN LUIS AZ.

PACE Advanced Water Engineering
8723 E. VIA de COMMERCIO, SUITE A-204 | SCOTTSDALE, CA 85258
P: (408) 991-3595 | www.pacewater.com

SHEET D1.4
25 OF 209 SHEETS

JOB NO. B777

THESE DRAWINGS ARE THE PROPERTY OF P.A.C.E. AND SHALL NOT BE REPRODUCED IN ANY MANNER NOR BE USED FOR CONSTRUCTION UNLESS STAMPED 'ISSUED FOR CONSTRUCTION'.

FINAL PLANS ISSUED FOR BID

W:\B777\Engineering\B777 - 3MGD Exp\3MGD FINAL DSN\sheets\B777 - DEMOLITION.dwg - Tab: D1.4 - by wwright on 02/02/26 at 4:35:19 PM

CONSTRUCTION NOTES:

1. OVERHEAD CRANE FOOTING, SEE STRUCTURAL PLANS
2. INSTALL MBR FRP COVER (3'-0" WIDTH MAX) SEE SPECIFICATIONS
3. INSTALL 10" Ø SCH 10 STEEL MBR SCOUR AIR PIPE
4. INSTALL 3" Ø 304 SS MBR SCOUR AIR PIPE
5. INSTALL 3" LUG STYLE BUTTERFLY VALVE, SEE DETAIL: C / M11.3 (PROVIDED BY MBR VENDOR)
6. INSTALL 24" Ø DIP BLIND FLANGE
7. FUTURE MBR SCOUR AIR PIPE (SHOWN FOR REFERENCE)
8. INSTALL 3" Ø SCH 10 STEEL AIR PIPE AND FITTINGS FROM REGENERATIVE BLOWERS BELOW
9. INSTALL 3" Ø SCH 10 SS AIR PIPE
10. INSTALL 3" Ø 304 SS DROP AIR PIPE (PROCURED THROUGH DIFFUSER VENDOR)
11. INSTALL 2-1/2" THICK ALUMINUM OPEN GRATING (3FT WIDE PANELS) SEE SPECS
12. INSTALL NEW HANDRAIL WITH KICK PLATE PER DETAIL D / M11.0 (TYP.)
13. EXISTING 8" Ø STEEL DIGESTER AIR PIPE
14. INSTALL 6" Ø 304 SS DROP AIR PIPE WITH ISOLATION BFV
15. REPLACE EXISTING PVC SUPERNATANT PIPE WITH 3" Ø DIP
16. INSTALL 18" Ø SCH 10 STEEL MBR SCOUR AIR PIPE AND FITTINGS
17. INSTALL 10" BUTTERFLY VALVE
18. INSTALL 8" SCH. 10 STEEL WELDED TEE WITH 6" Ø BRANCH FLANGE ON EXISTING BLOWER PIPING
19. EXISTING TELESCOPING VALVE AND MOTORIZED VALVE (P.I.P.)
20. INSTALL 6" Ø DIP WAS PIPING FROM MLSS CHANNEL TO EXISTING DIGESTERS
21. INSTALL 24" Ø SCH. 10 COATED STEEL AIR PIPE AND FITTINGS
22. FUTURE 18" AIR PIPING LAYOUT - FOR FUTURE EXPANSION
23. INSTALL 3" LUGGED BUTTERFLY VALVE
24. INSTALL ELECTRICALLY ACTUATED 24" BUTTERFLY VALVE (LUGGED)
25. INSTALL 6" FLANGED MOTORIZED PLUG VALVE (PROVIDED BY MBR VENDOR)
26. CORED HOLE FOR PIPE PENETRATION, SIZE PER PLAN, SEE DETAIL: A / M11.1
27. INSTALL 6" DUCK BILL CHECK VALVE
28. CONTRACTOR TO INSTALL EVAP COOLER WITH CURB. VERIFY DISCHARGE OPENING TO BLOWER ROOM BELOW. CONNECT POTABLE WATER LINE WITH ISOLATION VALVE.
29. INSTALL PORTION OF REMOVABLE POST GUARD RAIL FOR MBR PASS THROUGH
30. INSTALL 6" PLUG VALVE (FLANGED)
31. INSTALL 6" MAG FLOW METER (PROVIDED BY MBR VENDOR)
32. INSTALL SS WEIR PLATE PER DETAIL A / M11.3 (TYP. OF 12)

Overhead Crane Footing to be provided for future overhead crane installation, Crane and structure to be removed from scope. (Typ)

Remove MBR FRP Covers from scope

Handrail to be provided around MBR basins where FRP Covers have been removed from scope. (Typical) Handrail to match other new handrail provided

PROPOSED MBR TRAIN 1
PROPOSED MBR TRAIN 2
PROPOSED MBR TRAIN 3
(FUTURE) MBR TRAIN 4
(FUTURE) MBR TRAIN 5
(FUTURE) MBR TRAIN 6
DIGESTER 1
DIGESTER 2
10" Ø DIP FROM F.E.B. SEE M8.0
RELOCATE EXISTING STAIRS (SHIFT TO EDGE OF BASIN)
10" Ø MBR AIR SCOUR HEADER SEE DETAIL F / M11.3 (TYP.)
43 MLSS CHANNEL FINE BUBBLE DIFFUSER ASSEMBLY (TYP)
HANDRAIL WITH REMOVABLE POSTS. SEE DETAIL A, SHEET M11.0
6'-0" (CENTER W/ MLSS CHANNEL)
NEW ROOF EXHAUST FAN (TYP. OF 4)
SEE M1.1 FOR STAIRWAY AND RETAINING WALL
INSTALL EXHAUST FAN 106
EXISTING OVERHEAD SHADE STRUCTURE
O2 SENSOR FOR EXHAUST FAN - TYPICAL
DIGESTER BLOWER CANOPY POST MODIFICATION PER STRUCTURAL DETAIL: 217 / S12.2
18 EXISTING DIGESTER SUPERNATANT PUMP
24 EXISTING DIGESTER BLOWERS AND PIPING - PROTECT IN PLACE (TYP)
26 DIGESTER FINE BUBBLE DIFFUSER ASSEMBLY
CI CAST IRON

MBR UPGRADES PLAN - LEVEL 3
SCALE: 1/4" = 1'-0"

NORTH

DRAFT

NO	BY	DATE	REVISIONS	DATE	APP.

Registered Professional Engineer (Civil) — DUONG T. DO — 40050 — Arizona, U.S.A. — Date Signed 12/31/27 — Expires 12/31/27

PREPARED BY: DUONG DO
PROJECT ENGINEER: DUONG DO #40050
R.C.E. NO.: 40050
EXP. DATE: 12/31/27
DRAWN: WW, MSA
DESIGNED: NT, NE
CHECKED: DD
SCALE:
DATE: FEB 2026

THESE DRAWINGS ARE THE PROPERTY OF P.A.C.E. AND SHALL NOT BE REPRODUCED IN ANY MANNER NOR BE USED FOR CONSTRUCTION UNLESS STAMPED "ISSUED FOR CONSTRUCTION".

TITLE: MBR UPGRADES PLAN - LEVEL 3

JOB: CITY OF SAN LUIS WEST WWTP 3.0 MGD MBR UPGRADES — SAN LUIS AZ.

PACE Advanced Water Engineering
8723 E. VIA de COMMERCIO, SUITE A-204 | SCOTTSDALE, CA 85258
P: (408) 991-3595 | www.pacewater.com

FINAL PLANS ISSUED FOR BID

SHEET: M2.0
34 OF 209 SHEETS

JOB NO. B777

W:\B777\Engineering\B777 - 3MGD Exp\3MGD FINAL DS\sheets\B777 - Mechanical Structure Plan.dwg - Tab: M2.0 - by wwright on 02/06/26 at 3:28:23 PM

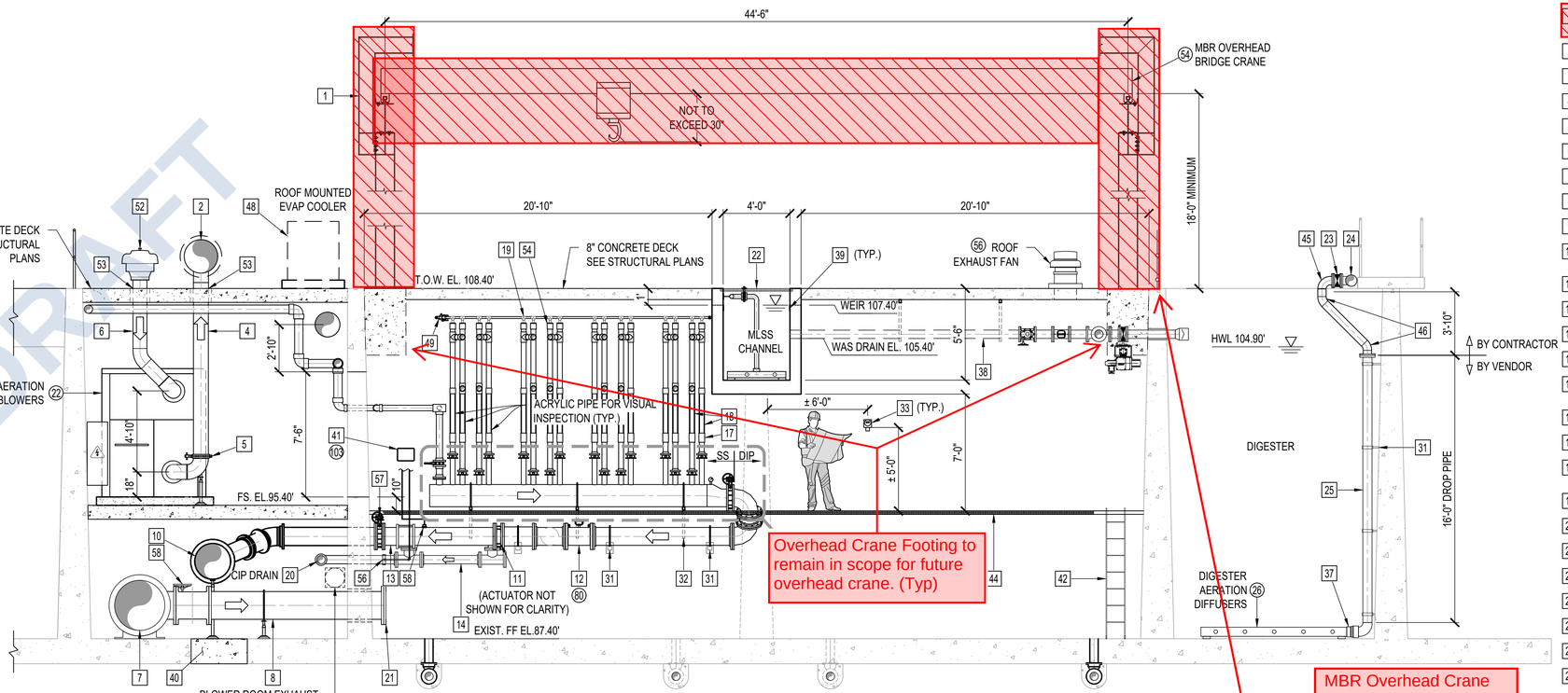

MBR SECTION - 1

SCALE: 1/4" = 1'-0"

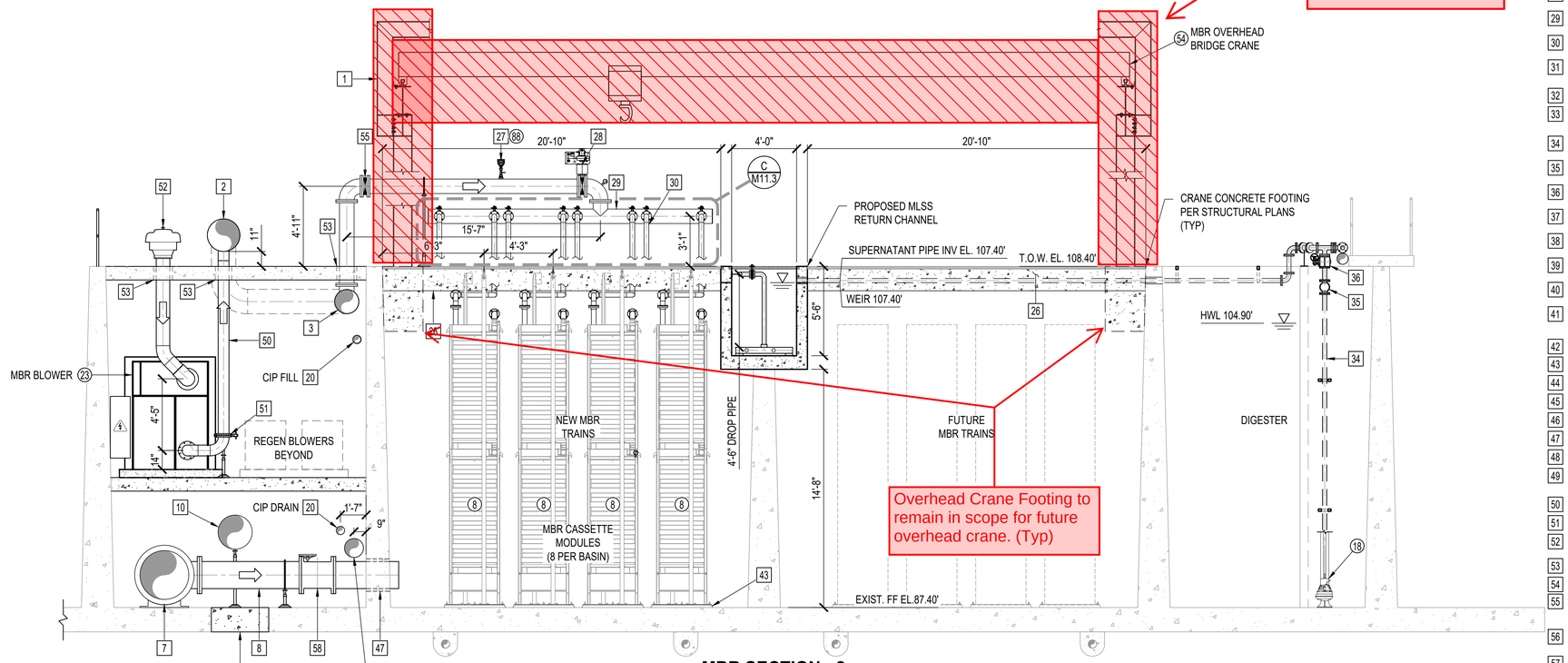

MBR SECTION - 2

SCALE: 1/4" = 1'-0"

CONSTRUCTION NOTES:

1. CONSTRUCT OVERHEAD CRANE BEAM AND SUPPORT COLUMN PER STRUCTURAL PLANS.
2. INSTALL 24" Ø SCH. 10 STEEL AIR PIPE AND FITTINGS
3. INSTALL 18" Ø SCH. 10 STEEL AIR PIPE AND FITTINGS
4. INSTALL 10" Ø SCH 10 STEEL PRE-AIR BLOWER DISCHARGE PIPE
5. INSTALL 10" BUTTERFLY VALVE LUGGED CONNECTION
6. INSTALL 10" Ø SCH. 10 STEEL AIR PIPE AND FITTINGS
7. INSTALL 36" x 20" DIP TEE
8. INSTALL 20" Ø D.I. PIPE AND FITTINGS FOR MBR FEED
9. INSTALL PRESSURE TRANSMITTER PER DETAIL: B/M11.1 (PROVIDED BY MBR VENDOR)
10. INSTALL 24" Ø DIP MBR PERMEATE/EFFLUENT PIPE AND FITTINGS W/ MECH. RESTRAINTS (TYP.)
11. INSTALL 12" BUTTERFLY VALVE WITH ELECTRIC ACTUATOR (PROVIDED BY MBR VENDOR)
12. INSTALL 12" MAG FLOW METER (PROVIDED BY MBR VENDOR)
13. INSTALL 12" Ø DIP MBR PERMEATE PIPE AND FITTINGS
14. INSTALL 6" Ø DIP CIP DRAIN PIPE AND FITTINGS (TYP)
15. INSTALL 16" Ø 304 SS PERMEATE PIPE MANIFOLD AND ALL REQUIRED FITTINGS AND APPURTENANCES (TYP.) SEE DETAIL: B/M11.3
16. INSTALL 12" LUG STYLE BUTTERFLY VALVE
17. INSTALL 3" TRANSITION COUPLING PVC TO ACRYLIC PIPE
18. INSTALL 3" Ø MBR PERMEATE LINE MINIMUM OF 2.5 FT. BELOW THE OUTLET TO BE CLEAR ACRYLIC PVC PIPING
19. INSTALL 1" Ø SCH. 80 PVC TEE
20. INSTALL 6" Ø C900 PVC FOR CIP PIPE AND FITTINGS
21. INSTALL 20" WITH SPOOL AND BLIND FLANGE
22. FRP OPEN GRATING ABOVE MLSS CHANNEL, SEE SPECIFICATIONS
23. INSTALL 6" BUTTERFLY VALVE (FLG'D)
24. INSTALL 8" SCH. 10 STEEL WELDED TEE W/ 6" BRANCH FLANGE ON EX. BLOWER PIPING
25. INSTALL 8" Ø 304 SS DROP PIPE AND FITTINGS (PROCURED THROUGH DIFFUSER VENDOR)
26. CONCRETE BEAM FOR MBR GUIDE RAIL SUPPORT
27. INSTALL PROCESS AIR FLOW METER (PROVIDED BY MBR VENDOR)
28. INSTALL 10" MODULATING BUTTERFLY VALVE (PROVIDED BY MBR VENDOR)
29. INSTALL 10" Ø SCH. 10 STEEL MBR AIR SCOUR HEADER AND PIPING, SEE DETAIL: C/M11.3
30. INSTALL 3" Ø 304 SS STEEL AIR DROP PIPE WITH ISOLATION BF VALVE
31. INSTALL PIPE SUPPORT (MIN. SPACING AS REQUIRED) PER DETAIL: S13/M10.4
32. INSTALL KNEE BRACE PIPE SUPPORT (MIN. SPACING AS REQUIRED) PER DETAIL: S5/M10.4
33. INSTALL OXYGEN SENSOR ATI TOXIC GAS SENSOR, MODEL D-12-F-G OR APPROVED EQUAL
34. INSTALL 3" DIP PIPE AND FITTINGS (TYP.) FOR DIGESTER SUPERNATANT LINE
35. INSTALL 3" SWING CHECK VALVE (FLG'D)
36. INSTALL 3" PLUG VALVE (FLG'D)
37. INSTALL TRANSITION FLANGE FROM STAINLESS STEEL TO SCH 80 PVC
38. INSTALL 6" DIP WAS PIPING FROM MLSS CHANNEL TO EXISTING DIGESTERS
39. INSTALL WEIR PLATES PER DETAIL: A/M11.3
40. NEW CONCRETE FOOTING TIED INTO EXISTING STRUCTURES
41. INSTALL TURBIDITY METER AND CONTROLLER TYPICAL PER DETAIL: A/M11.5 36"H ABOVE GRATING (PROVIDED BY MBR VENDOR)
42. INSTALL METAL LADDER TO ACCESS LEVEL BELOW
43. INSTALL 2" GROUT LAYER UNDER MBR EQUIPMENT
44. INSTALL 2-1/2" THICK ALUMINUM OPEN GRATING (3FT WIDTH MAX PANELS)
45. INSTALL 6" 304 SS 90° ELBOW (FLANGED AT VALVE CONNECTION)
46. INSTALL 6" 304 SS 45° ELBOW (FLANGED AT DROP PIPE CONNECTION)
47. INSTALL 20" DIP SPOOL (FLG x PE)
48. INSTALL EVAP COOLER PER SPECS, SEE ALSO ELECTRICAL PLANS
49. INSTALL 1" PERMEATE VENT WITH 1" SS BALL VALVE W/ ELECTRIC ACTUATOR (PROVIDED BY MBR VENDOR)
50. INSTALL 8" Ø SCH. 10 STEEL MBR BLOWER DISCHARGE PIPE
51. INSTALL 8" BUTTERFLY VALVE LUGGED CONNECTION
52. INSTALL OUTSIDE AIR INTAKE FILTER (PROVIDED BY BLOWER VENDOR) (TYP OF 5)
53. INSTALL PIPE PENETRATION SEAL (WET), SIZE PER PLAN, PER DETAIL: A/M11.1
54. INSTALL TRANSITION BUSHING FROM 3" TO 1"
55. INSTALL 10" BUTTERFLY VALVE. (LUGGED)
56. INSTALL 1/2" PIPE TAP PER DETAIL: C/M11.1 CONNECT 1/2" PVC SCH 40 PVC DRAIN PIPE FROM TURBIDITY METER PER DETAIL: A/M11.5
57. INSTALL 12" BUTTERFLY VALVE. (FLG'D)
58. INSTALL 20" PLUG VALVE WITH WORM GEAR AND HANDWHEEL ACTUATOR

NO	BY	DATE	REVISIONS	DATE	APP.

Registered Professional Engineer (Civil) — DUONG T. DO — 40050 — Date Signed 12/31/27 — Expires 12/31/27

PREPARED BY: DUONG DO
PROJECT ENGINEER #40050
R.C.E. NO.: —
EXP. DATE:
SCALE:
DRAWN: WW, MSA
DESIGNED: NT, NE
CHECKED: DD
DATE: FEB 2026

THESE DRAWINGS ARE THE PROPERTY OF P.A.C.E. AND SHALL NOT BE REPRODUCED IN ANY MANNER NOR BE USED FOR CONSTRUCTION UNLESS STAMPED 'ISSUED FOR CONSTRUCTION'.

TITLE: MBR SECTIONS 1

JOB: CITY OF SAN LUIS WEST WWTP 3.0 MGD MBR UPGRADES — SAN LUIS AZ.

PACE Advanced Water Engineering
8723 E. VIA de COMMERCIO, SUITE A-204 | SCOTTSDALE, CA 85258
P: (408) 991-3595 | www.pacewater.com

FINAL PLANS ISSUED FOR BID

SHEET M2.3
37 OF 209 SHEETS

JOB NO. B777

DRAFT

W:\B777\Engineering\B777 - 3MGD Exp\3MGD FINAL DSN\sheets\B777 - M2.3 MBR Sections.dwg - Tab: M2.3 - by wwright on 02/06/26 at 4:18:26 PM

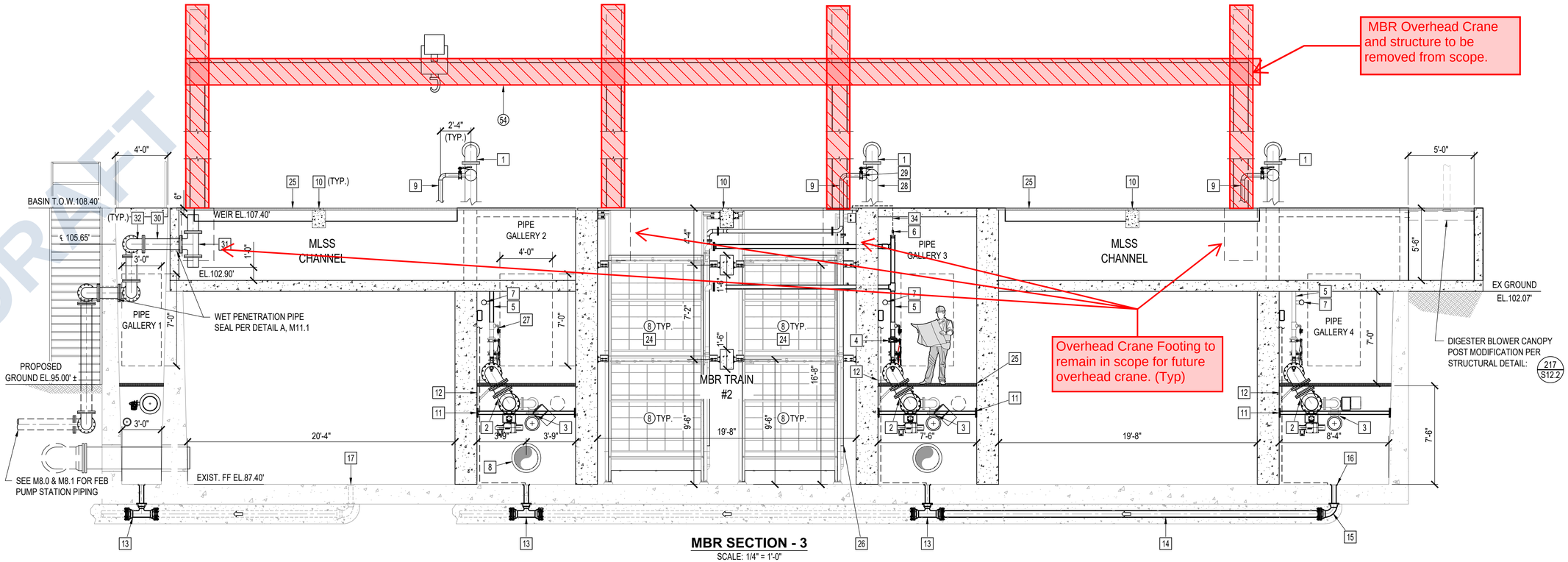

MBR SECTION - 3
SCALE: 1/4" = 1'-0"

CONSTRUCTION NOTES:

1. INSTALL 10" Ø SCH 10 STEEL AIR PIPE AND FITTING
2. INSTALL 12" Ø DIP MBR PERMEATE PIPE AND FITTINGS
3. INSTALL 6" Ø DIP CIP DRAIN PIPE AND FITTINGS
4. INSTALL 3" LUG STYLE BUTTERFLY VALVE
5. INSTALL 3" Ø MBR PERMEATE LINE MINIMUM OF 2.5 FT. BELOW THE OUTLET TO BE CLEAR ACRYLIC PVC PIPING
6. INSTALL 1" PERMEATE VENT WITH 1" SS BALL VALVE W/ ELECTRIC ACTUATOR (PROVIDED BY MBR VENDOR)
7. INSTALL 3" Ø SCH. 80 PVC CIP PIPE AND FITTINGS
8. INSTALL 20" BLIND FLANGE FOR FUTURE MBR EXPANSION
9. INSTALL 3" Ø 304 SS AIR DROP PIPE (PROVIDED BY AERATION VENDOR)
10. CONCRETE BEAM FOR MBR GUIDE RAIL SUPPORT, SEE STRUCTURAL PLANS
11. INSTALL PIPE SUPPORT (MIN. SPACING AS REQUIRED) PER DETAIL: S4 / M11.4
12. INSTALL KNEE BRACE PIPE SUPPORT (MIN. SPACING AS REQUIRED) PER DETAIL: S5 / M11.4
13. INSTALL 6" x 4" REDUCING TEE TIE-IN TO EXISTING CONCRETE ENCASED FLOOR DRAIN LINE
14. SAW CUT AND EXTEND EXISTING 6" FLOOR DRAIN LINE TO CENTER OF PIPE GALLERY 4
15. INSTALL 6" x 4" REDUCING ELBOW MJ CONNECTION
16. INSTALL 4" FLOOR DRAIN CONCRETE ENCASED
17. CAP AND ABANDON EXISTING FLOOR DRAIN
18. INSTALL 3" SS BUTTERFLY VALVE
19. INSTALL MLSS AERATION MANIFOLD (PROVIDED BY AERATION VENDOR)
20. INSTALL 3" Ø SCH 10 STEEL AIR PIPE FROM REGENERATIVE BLOWERS
21. INSTALL STEPPED FOOTING RETAINING WALL PER STRUCTURAL DETAILS
22. INSTALL HAND RAIL PER DETAIL: B / M11.3
23. INSTALL SHADE STRUCTURE AND ROOF OVERHANG PER STRUCTURAL DETAIL
24. CONTRACTOR TO INSTALL MBR MODULES WITH SUPPORT, GUIDES, AND APPURTENANCES PER MBR VENDOR'S REQUIREMENTS. SEE DETAIL ON M12.0 FOR EQUIPMENT DIMENSIONS
25. INSTALL 2-1/2" THICK ALUMINUM OPEN GRATING (3 FT WIDE MAX.) SEE SPECIFICATIONS
26. POINT OF CONNECTION OF MBR AIR SCOUR LINE
27. 1/2" SAMPLING PORT WITH BALL VALVE AND FITTINGS ON 3" Ø PERMEATE LATERAL PIPE
28. INSTALL 10" Ø MBR AIR SCOUR MANIFOLD PER DETAIL: F / M11.3
29. INSTALL 3" LUG STYLE BUTTERFLY VALVE
30. INSTALL 10" Ø DIP SPOOL
31. INSTALL 10" D.I. TEE
32. INSTALL 10" D.I. 90° ELBOW
33. INSTALL 24" LUGGED BUTTERFLY VALVE W/ ELECTRIC ACTUATOR
34. INSTALL 1" PVC DRAIN LINE TO MBR BASIN
35. INSTALL 14" Ø STEEL EXHAUST DUCTING (18 GAUGE MIN.)
36. INSTALL RECTANGULAR DUCT MOUNTED GRILL
37. INSTALL PIPE SUPPORT (MIN. SPACING AS REQUIRED) PER DETAIL: S6 / M11.4
38. INSTALL EXHAUST FAN WITH TRANSITION BASE FOR PIPE CONNECTION

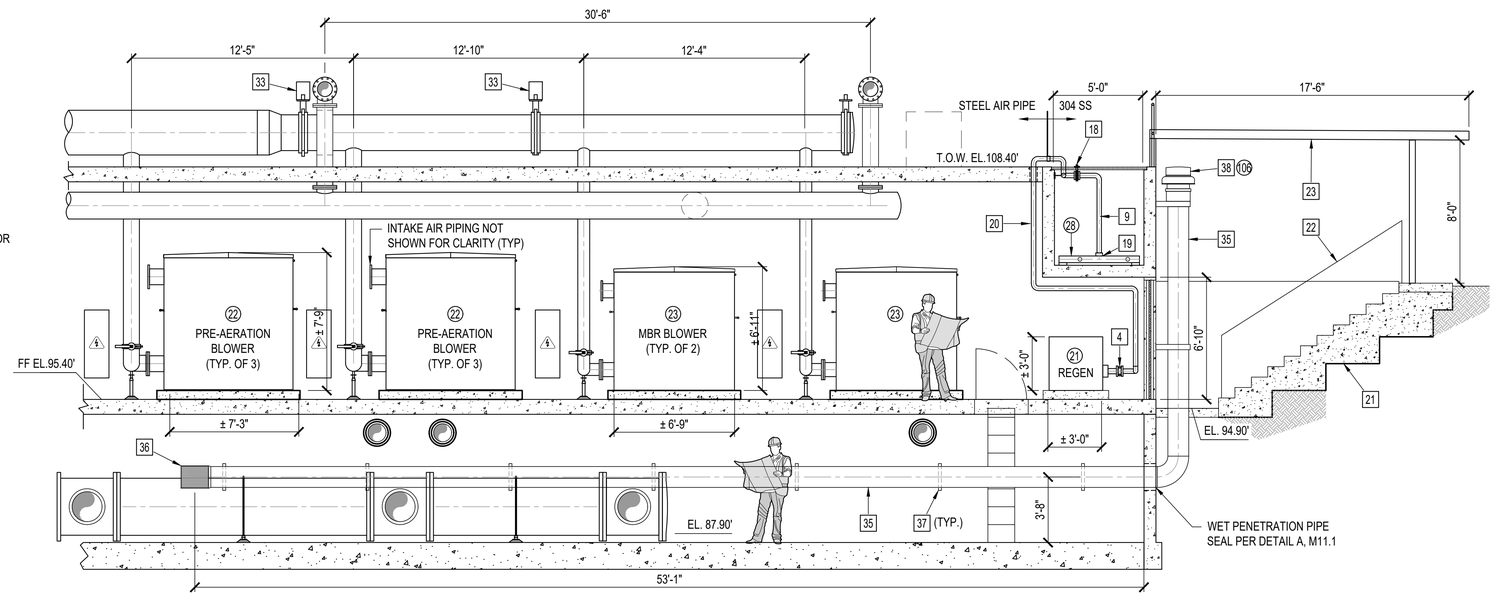

BLOWER ROOM SECTION - 4
SCALE: 1/4" = 1'-0"

DRAFT

W:\B777\Engineering\B777 - 3MGD Exp\3MGD FINAL DSN\sheets\B777 - M2.3 MBR Sections.dwg - Tab: M2.4 - by wwright on 02/26/26 at 14:29:23 PM

NO	BY	DATE	REVISIONS	DATE	APP.

Registered Professional Engineer (Civil) — DUONG T. DO — 40050 — Date Signed 12/31/27 — ARIZONA, U.S.A. — Expires 12/31/27

THESE DRAWINGS ARE THE PROPERTY OF P.A.C.E. AND SHALL NOT BE REPRODUCED IN ANY MANNER NOR BE USED FOR CONSTRUCTION UNLESS STAMPED 'ISSUED FOR CONSTRUCTION'.

PREPARED BY: DUONG DO
PROJECT ENGINEER #40050
R.C.E. NO. —
EXP. DATE
SCALE
DRAWN: WW, MSA
DESIGNED: NT, NE
CHECKED: DD
DATE: FEB 2026

TITLE: MBR SECTIONS 2

JOB: CITY OF SAN LUIS WEST WWTP
3.0 MGD MBR UPGRADES
AZ. SAN LUIS

PACE
Advanced Water Engineering
8723 E. VIA de COMMERCIO, SUITE A-204 | SCOTTSDALE, CA 85258
P: (408) 991-3595 | www.pacewater.com

FINAL PLANS ISSUED FOR BID

SHEET
M2.4
38 OF 209 SHEETS

JOB NO. B777

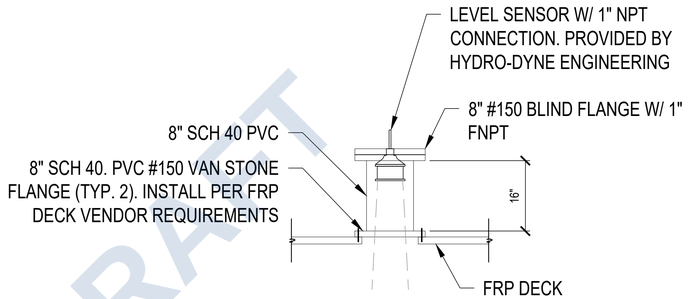

ABOVE DECK HYDRO-DYNE LEVEL SENSOR N.T.S. A

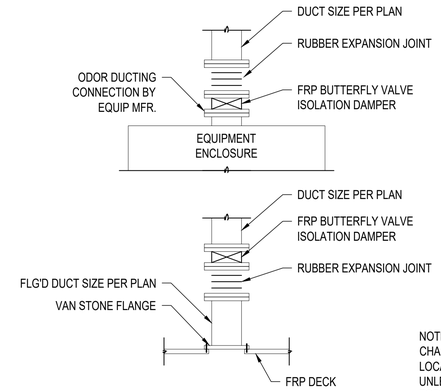

NOTE:
CHANNEL DAMPERS TO BE LOCATED +42" ABOVE CHANNELS, UNLESS OTHERWISE REQUIRED FOR CLEARANCES FROM OTHER EQUIPMENT/OBSTRUCTIONS.

ODOR CONTROL CONNECTION N.T.S. B

NOTES:
1. PIPE SHALL BE COLOR-CODED PER SPECIFICATIONS
2. ABOVE GROUND PIPING SHALL BE INSULATED PER SPECIFICATIONS. EXTEND INSULATION TO 12" BELOW GROUND.

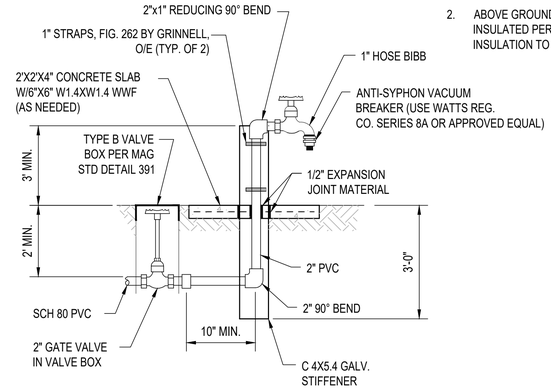

HOSE BIBB N.T.S. C

Handrail to be provided around MBR basins in lieu of FRP Covers. Handrail to match other new handrail provided

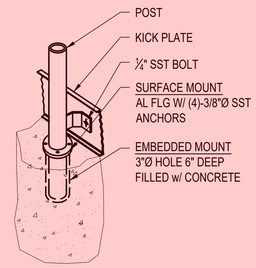

FIXED SURFACE OR EMBEDDED MOUNT

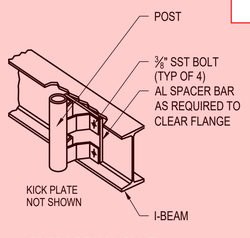

FIXED I-BEAM MOUNT
(CHANNEL MOUNT SIMILAR)

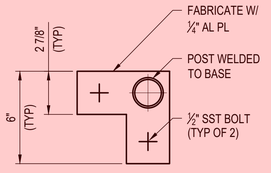

SURFACE CORNER MOUNT

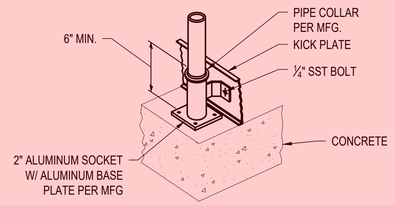

REMOVABLE POST SURFACE MOUNTED SOCKET

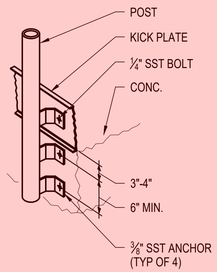

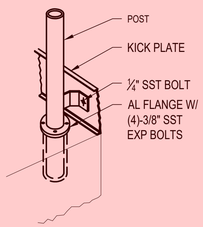

FIXED CORNER MOUNT

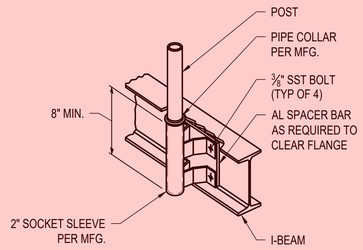

SIDE MOUNT SOCKET SLEEVE

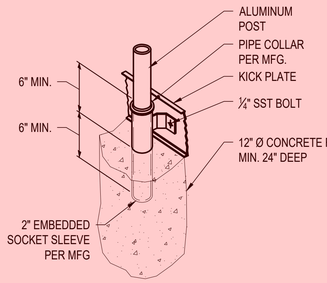

REMOVABLE POST EMBEDDED SOCKET SLEEVE

NOTE:
TYPICAL DETAILS SHOWN FOR REFERENCE ONLY. RAILING MFR/SUPPLIER TO PROVIDE SUBMITTAL WITH All REQUIRED CONNECTIONS FOR A COMPLETE SYSTEM, AS PART OF DEFERRED SUBMITTAL TYPICAL RAILING DETAILS

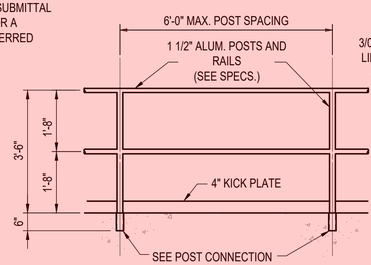

TYPICAL RAILING SECTION

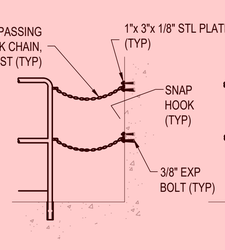

CHAIN GATE

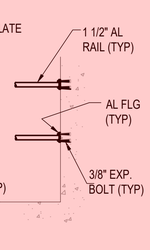

WALL MOUNT

HANDRAIL NOTES:
1. ALUM. TUBE (OR POST) TO BE SET IN CORED OR FORMED HOLES (REMOVABLE FORMS) AND SECURELY FIXED BY GROUT (SEE SPECS).
2. TOP RAIL AT END POST SHALL BEND DOWN ON 1" MAX. CENTER LINE RADIUS. TOP RAIL AT CORNERS SHALL BE A SIDE OUTLET ELBOW (OR OFFSET CORNER POST 6" AND USE 3" CENTER LINE RADIUS HORIZ. BEND IN ALL RAILS AND TOEBOARD).
3. VERTICAL MITERS, OFFSETS OR PROTRUSIONS IN THE TOP RAIL ARE NOT ACCEPTABLE. ALL SPLICES SHALL BE SMOOTH AND TIGHT. REFER TO ELECT. PLANS FOR LIGHT POST LOCATIONS AND DETAILS WHERE REQUIRED.
4. PROVIDE EXPANSION JOINTS IN HANDRAILING PER MANUFACTURER RECOMMENDATIONS.

RAILING AND MOUNTING DETAILS N.T.S. D

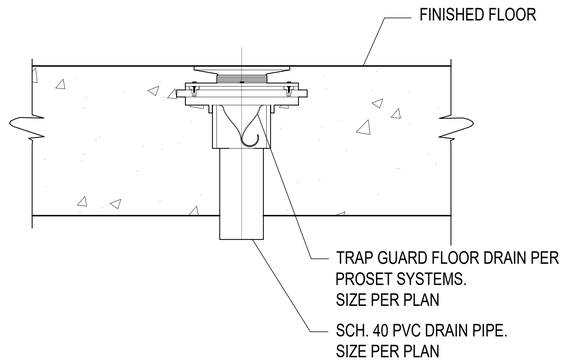

FLOOR DRAIN W/ TRAP GUARD N.T.S. E

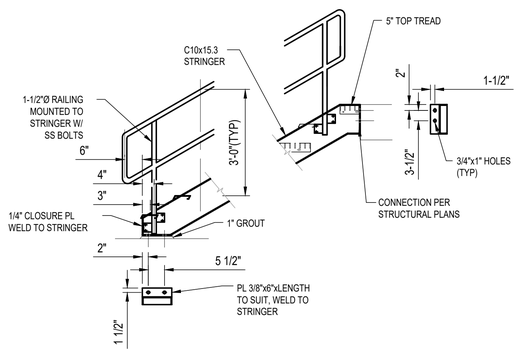

STAIR MOUNTING DETAIL N.T.S. F

NO	BY	DATE	REVISIONS	DATE	APP.

Registered Professional Engineer (Civil) — DUONG T. DO — 40050 — Date Signed 12/31/27 — Expires 12/31/27

PREPARED BY: DUONG DO
PROJECT ENGINEER #40050
R.C.E. NO. 1—
EXP. DATE
SCALE
DRAWN WW, MSA
DESIGNED NT, NE
CHECKED DD
DATE FEB 2026

TITLE: MECHANICAL DETAILS 1

JOB: CITY OF SAN LUIS WEST WWTP 3.0 MGD MBR UPGRADES — SAN LUIS AZ.

PACE Advanced Water Engineering
8723 E. VIA de COMMERCIO, SUITE A-204 | SCOTTSDALE, CA 85258
P: (408) 991-3595 | www.pacewater.com

SHEET M11.0
53 OF 209 SHEETS

JOB NO. B777

FINAL PLANS ISSUED FOR BID

THESE DRAWINGS ARE THE PROPERTY OF P.A.C.E. AND SHALL NOT BE REPRODUCED IN ANY MANNER NOR BE USED FOR CONSTRUCTION UNLESS STAMPED "ISSUED FOR CONSTRUCTION".

DRAFT

W:\B777\Engineering\B777 - 3MGD Exp\3MGD FINAL DS\Sheets\B777 - M11.0 DETAILS.dwg - Tab: M11.0 - by wwright on 02/04/26 at 3:22:08 PM

DRAFT

COLUMN (SC) SCHEDULE

NOTE: FOR ANCHOR BOLT PATTERN, SEE TYPICAL DETAIL

MARK	SIZE	BASE CONNECTION	REMARKS
SC1	W14x61	1"x22"x18" STEEL PLATE W/ 6– 1"ø GR36F1554 ANCHOR RODS.	REFERENCE DETAIL 216
SC2	W14x159	1 1/2"x30"x24" STEEL PLATE W/ W/ 6– 1"ø GR36F1554 ANCHOR RODS.	---
SC3	HSS8x8x1/2	1"x14"x14" STEEL PLATE W/ 4– 1"ø F1554GR36 ANCHOR RODS	---
SC4	HSS6x6x3/8	3/4"x12"x12" W/ 4– 3/4"ø F1554GR36 ANCHOR RODS	---

FRAMING PLAN KEYNOTES

11. 12" DEEP SAW CUTS.
12. #5 AT 8" O.C. BOTTOM AND #4 AT 18" O.C. TOP.
13. #4 AT 18" O.C. TOP AND BOTTOM.
14. HSS6x6x1/2" BRACES.
15. 18" DEEP x 12" WIDE BEAM W/ 3– ROWS OF 2– #7 AND #4 TIES AT 12" O.C. PROVIDE 3 BEAMS. ELEVATIONS OF BEAMS PER PACE PLANS.
16. HSS12x8x1/2" (LSH).
17. EXISTING CANOPY COLUMN.
18. 5–TON CRANE, RAIL, AND ATTACHMENTS PER CRANE SUPPLIER.
19. HSS4x4x3/8" POST AT TOP OF CONC. WALL. REFERENCE DETAIL 229 – TYP. OF 2.
20. 1 1/2"x20 GA. STEEL DECK ATTACH PER G.S.N.

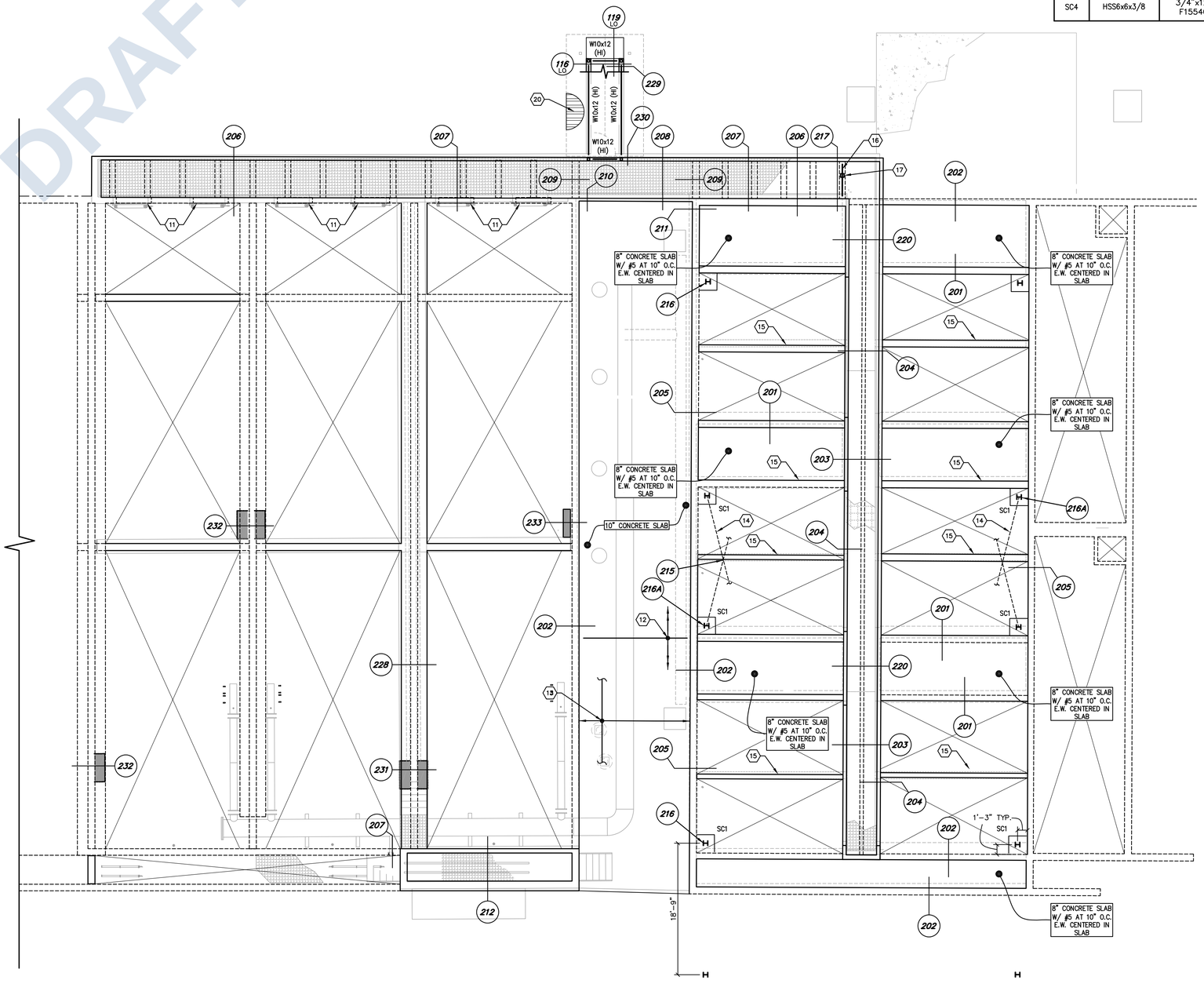

1 **FRAMING PLAN**
SCALE: 1/8"=1'-0"

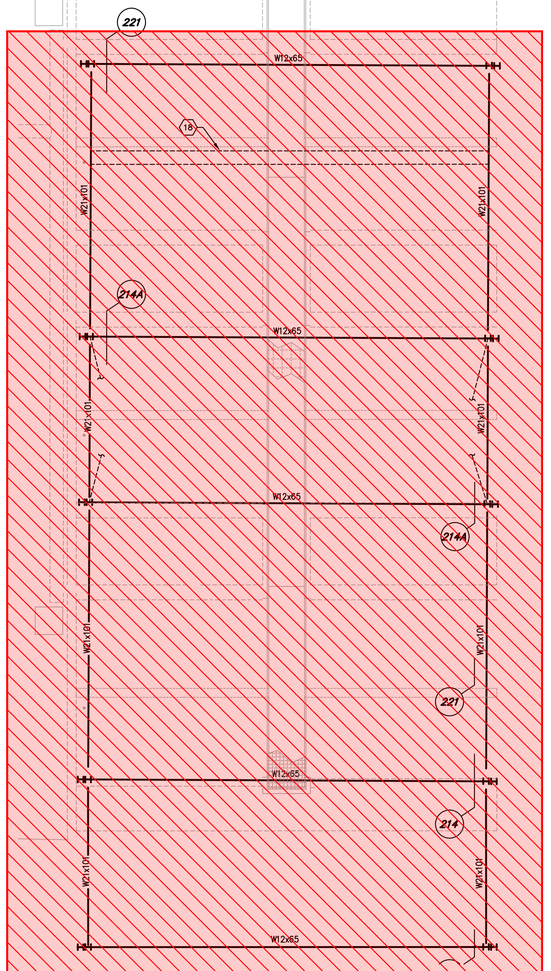

2 **CRANE FRAMING PLAN**
SCALE: 1/8"=1'-0"

PK ASSOCIATES, LLC
6900 E. Belleview Ave. #200
Greenwood Village, Colorado 80111
Phone: (720) 799–1058
Email: cadd@pkastructural.com
Website: www.pkastructural.com

NO	BY	DATE	REVISIONS	DATE	APP.

Registered Professional Engineer (Civil) CERTIFICATE NO. 70374 JAMES APPLEYARD Date Signed 2/6/26 ARIZONA, U.S.A.

PREPARED BY: DUONG DO
PROJECT ENGINEER
R.C.E. NO.: #40060
EXP. DATE: –
DRAWN: WW
DESIGNED: DD
CHECKED: DD
SCALE:
DATE: 5/16/2025

TITLE: **FRAMING PLAN**

JOB: CITY OF SAN LUIS WWTP IMPROVEMENTS
SAN LUIS AZ.

PACE
Advanced Water Engineering
8723 E. VIA de COMMERCIO, SUITE A-204 | SCOTTSDALE, CA 85258
P: (408) 991-3995 | www.pacewater.com

SHEET
S2.2
73 OF 209 SHEETS

JOB NO. B777

THESE DRAWINGS ARE THE PROPERTY OF P.A.C.E. AND SHALL NOT BE REPRODUCED IN ANY MANNER NOR BE USED FOR CONSTRUCTION UNLESS STAMPED "ISSUED FOR CONSTRUCTION".

FINAL PLANS ISSUED FOR BID

M:\PROJECTS\2024\PACE\SAN LUIS WWTP 3MGD EXPANSION (24291)\PLANS\S-FRAMING PLAN.dwg - Tab: S2.2 - by rstonaker on 01/26/26 at 4:17:54 PM

DRAFT

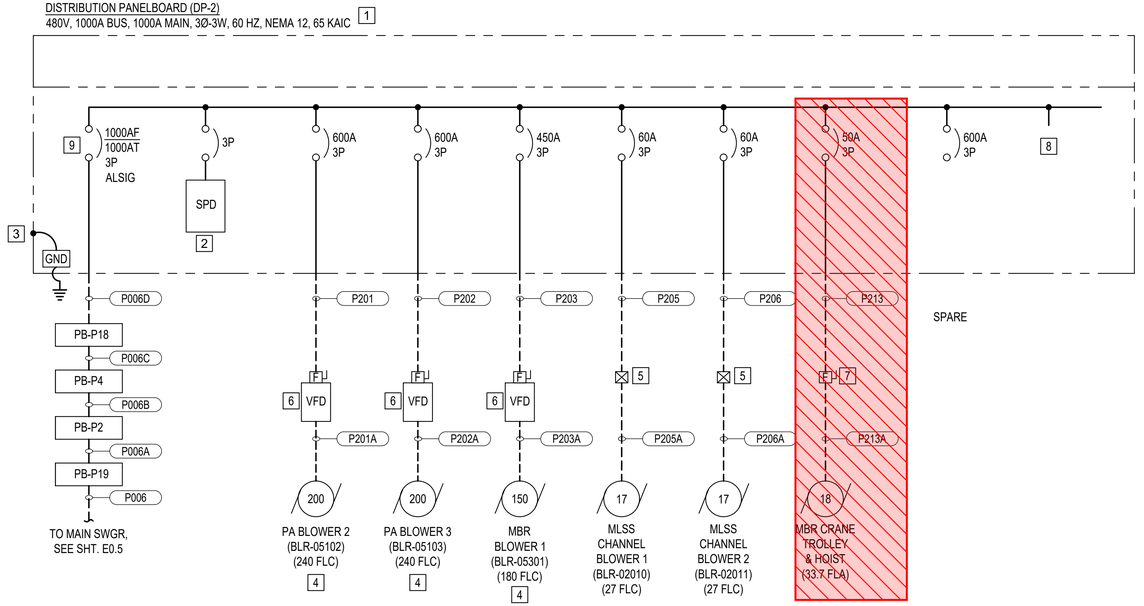

CONSTRUCTION NOTES:

1. DISTRIBUTION PANELBOARD (DP-2), 480V, 1000A BUS, 1000A MAIN, 3Ø-3W, 60 HZ, NEMA 12, 65 KAIC, PAD-MTD.
2. SURGE PROTECTION DEVICE, INTEGRAL WITH DP. CIRCUIT PROTECTION DEVICE TO BE 200 KA/PH MINIMUM.
3. GROUND AND BOND EQUIPMENT TO GROUND SYSTEM PER GROUNDING PLAN AND MANUFACTURER REQUIREMENTS.
4. PROVIDE LOCKABLE E-STOP LOCALLY AT BLOWERS.
5. COMBINATION FVNR MOTOR STARTER, WITH H-O-A SELECTOR SWITCH, NEMA 12, MF'R: EATON, TYPE FREEDOM FULL VOLTAGE CONTROLS (OR EQUAL).
6. VARIABLE FREQUENCY DRIVE WITH FUSED DISCONNECT SWITCH, 480V, 3PH, NEMA 12, WALL-MTD., MF'R: DANFOSS, PN: FC202 AQUA DRIVE (OR APPROVED EQUAL).
7. FUSED DISCONNECT SWITCH, 60A, 35A FUSES, NEMA 4X, EATON OR EQUAL.
8. PROVISION FOR FUTURE CIRCUIT BREAKERS (TYP 2).
9. CIRCUIT BREAKER EQUIPPED WITH ENERGY REDUCING MAIN SWITCH WITH LOCAL STATUS INDICATORS PER NEC 240.87(B)(3).

NOTES:

1. CONTRACTOR SHALL LABEL EQUIPMENT FOR ARC-FLASH HAZARD WARNINGS IN ACCORDANCE WITH NEC 110.16(A).
2. CONTRACTOR SHALL LABEL SERVICE ENTRANCE EQUIPMENT WITH AVAILABLE FAULT CURRENT IN ACCORDANCE WITH NEC 110.16 (B) AND 110.24 (A) (B).
3. GROUND AND BOND ALL ENCLOSURES PER GROUNDING PLANS AND MANUFACTURER/ CODE REQUIREMENTS.
4. NOT ALL EQUIPMENT AND WIRING IS SHOWN ON THIS DIAGRAM. REFERENCE DRAWINGS IN THE ELECTRICAL SET AND ENTIRE PROJECT TO COMPLETELY UNDERSTAND THE ELECTRICAL SCOPE OF WORK.
5. DRAWINGS ARE DIAGRAMMATIC AND DO NOT REFLECT ACTUAL ROUTING. CONTRACTOR SHALL INSTALL PULLPOINTS WHERE REQUIRED FOR PULLING TENSION AND MAINTAINING LESS THEN (4) 90 DEGREE BENDS.
6. CONTRACTOR SHALL PERFORM SAFE WORK IN ACCORDANCE WITH NFPA 70E STANDARDS.
7. WHEN REQUIRED CONTRACTOR SHALL PROVIDE STRUCTURAL DESIGN CALCULATIONS FOR MOUNTING AND ANCHORING OF FABRICATED ASSEMBLIES AND SUPPORT STRUCTURES, SIGNED AND SEALED BY A REGISTERED PROFESSIONAL ENGINEER (CIVIL/STRUCTURAL) CURRENTLY LICENSED IN THE SAME STATE AS THE FINAL INSTALLATION. CALCULATIONS SHALL INCLUDE SEISMIC CONSIDERATIONS FOR THE LOCATION OF INSTALLATION.
8. VFD'S SHALL MEET ALL REQUIREMENTS OF IEEE 519 WITH USE OF EQUIPMENT. SEE SPECIFICATIONS FOR FURTHER INFORMATION.

NO	BY	DATE	REVISIONS	DATE	APP.

Registered Professional Engineer (Electrical) CERTIFICATE NO. 56508 Bashar Shaq State of ARIZONA U.S.A. Expires 03/31/28

PREPARED BY: BASHAR ISHAQ
PROJECT ENGINEER
R.C.E. NO. E24590
EXP. DATE
SCALE
DRAWN: NC
DESIGNED: NC, BI
CHECKED: BI
DATE: FEB 2026

THESE DRAWINGS ARE THE PROPERTY OF P.A.C.E. AND SHALL NOT BE REPRODUCED IN ANY MANNER NOR BE USED FOR CONSTRUCTION UNLESS STAMPED "ISSUED FOR CONSTRUCTION".

TITLE
SINGLE LINE DIAGRAM 5 - PROPOSED

JOB
CITY OF SAN LUIS WEST WWTP
3.0 MGD MBR UPGRADES
SAN LUIS AZ.

PACE
Advanced Water Engineering
8723 E. VIA de COMMERCIO, SUITE A-204 | SCOTTSDALE, CA 85258
P: (408) 991-3595 | www.pacewater.com

SHEET
E0.9
95 OF 209 SHEETS

JOB NO. B777

FINAL PLANS ISSUED FOR BID

W:\B777\Engineering\B777 - 3MGD Exp\3MGD FINAL DS\Activebl\B777 - E0.5.dwg - Tab: E0.9 - by rchin on 01/30/26 at 2:47:07 PM

SERVICE SITE LOAD SUMMARY (MAIN BREAKER 3000A @ 480V)				
LOAD DESCRIPTION	HP	ACTIVE (A)	REDUNANT (A)	GENERATOR (A)
MCC-1	521	797.3	168	645
MCC-2	208	285.7	0	17.7
DP-1	377	488.1	27	308.1
DP-2	602	480.7	267	300.7
SUBTOTAL	1708	2051.8	462	1271.5
25% LARGEST MOTOR LOAD	-	60	-	-
GRAND TOTAL (AMPS)	-	2111.8	-	1271.5
% CAPACITY	-	70.4%	-	84.6%

MCC-1 LOAD SUMMARY (MAIN BREAKER 1600A @ 480V)				
LOAD DESCRIPTION	HP	ACTIVE (A)	REDUNDANT (A)	GENERATOR (A)
FLOW EQUALIZATION PUMP 1 (PMP-01601)	27	40	-	40
INTERNAL RECYLE PUMP 1 (PMP-02101)	4	6.7	-	-
INTERNAL RECYLE PUMP 2 (PMP-02201)	4	6.7	-	6.7
FEED FORWARD PUMP 1 (PMP-02404)	26	40	-	-
FEED FORWARD PUMP 2 (PMP-02403)	26	-	40	-
SLUDGE DEWATERING FEED PUMP 1 (PMP-07001)	15	21	-	21
SLUDGE DEWATERING FEED PUMP 2 (PMP-07002)	15	-	21	-
FLOC. TANK MIXER (M-07111)	1.5	3	-	3
SCREW PRESS (M-07112)	5	7.6	-	7.6
CONVEYOR DRIVE (M-07113)	5	7.6	-	7.6
PLANT PROC. WTR BOOST. PUMP 1 (PMP-04301A)	20	27	-	27
PLANT PROC. WTR BOOST. PUMP 2 (PMP-04301B)	20	27	-	27
PLANT PROC. WTR BOOST. PUMP 3 (PMP-04301C)	20	27	-	27
PLANT DRAIN PUMP 1 (PMP-07202)	7.5	11	-	11
PLANT DRAIN PUMP 2 (PMP-07203)	7.5	-	11	-
ANOXIC MIXER 1 (MXR-02110)	6	11	-	11
ANOXIC MIXER 2 (MXR-02210)	6	11	-	11
45 KVA XFMR-EA	-	54.1	-	54.1
15 KVA MPZ-DW	-	18	-	18
[1] FEQ BLOWER 1 (2011B)	75	96		-
[1] FEQ BLOWER 3 (2003B)	75	-	96	-
EXISTING DIGESTER BLOWER 1 (2008B)	50	65	-	65
EXISTING DIGESTER BLOWER 2 (2009B)	50	65		65
EXISTING LOWER DRYING BED PUMP STATION	2	3.4	-	3.4
EXISTING DIGESTER SUPERNATANT PUMP 1	3	4.8	-	-
EXISTING DIGESTER SUPERNATANT PUMP 2	3	4.8	-	-
EFFLUENT PUMP 1 (5001P)	20	27	-	27
PANEL-H1	-	172	-	172
EXISTING MIXER 4A (3003-MX)	7.5	11	-	11
EXISTING MIXER 4B (3004-MX)	7.5	11	-	11
EXISTING SLUDGE PUMP 4 (3008-SP)	5	7.6	-	7.6
EXISTING WELL PUMP (9004P)	7.5	11	-	11
SUBTOTAL	521	797.3	168	645
25% LARGEST MOTOR LOAD	-	24	-	-
GRAND TOTAL (AMPS)	-	821.3	-	-
% CAPACITY	-	51.3%	-	-

MCC-2 LOAD SUMMARY (MAIN BREAKER 600A @ 480V)				
LOAD DESCRIPTION	HP	ACTIVE (A)	REDUNDANT (A)	GENERATOR (A)
FLOW EQUALIZATION PUMP 2 (PMP-01602)	27	40	-	-
INTERNAL RECYLE PUMP 3 (PMP-02301)	4	6.7	-	6.7
FEED FORWARD PUMP 3 (PMP-02402)	26	40	-	-
ANOXIC MIXER 3 (MXR-02310)	6	11	-	11
[1] FEQ BLOWER 2 (2012B)	75	96	-	-
EXISTING DIGESTER BLOWER 6 (2006B)	50	65	-	-
EFFLUENT PUMP 2 (5002P)	20	27	-	-
SUBTOTAL	208	285.7	0	17.7
25% LARGEST MOTOR LOAD	-	24	-	-
GRAND TOTAL (AMPS)	-	309.7	-	-
% CAPACITY	-	51.6%	-	-

DP-1 LOAD SUMMARY (MAIN BREAKER 1000A @ 480V)				
LOAD DESCRIPTION	HP	ACTIVE (A)	REDUNDANT (A)	GENERATOR (A)
HEADWORKS CTRL PNL (HWCP-1)	12.25	27	-	27
HEADWORKS CTRL PNL (HWCP-2)	12.25	-	27	-
HEADWORKS ODOR CTRL UNIT (M-08001)	1.5	3	-	3
PA BLOWER 1 (BLR-05101)	200	240	-	240
MBR BLOWER 2 (BLR-05302)	150	180	-	-
30 KVA XFMR-EB	-	36	-	36
VALVE ACTUATOR (XV-01523)	1	2.1	-	2.1
SUBTOTAL	377	488.1	27	308.1
25% LARGEST MOTOR LOAD	-	60	-	-
GRAND TOTAL (AMPS)	-	548.1	-	-
% CAPACITY	-	54.8%	-	-

DP-2 LOAD SUMMARY (MAIN BREAKER 1000A @ 480V)				
LOAD DESCRIPTION	HP	ACTIVE (A)	REDUNDANT (A)	GENERATOR (A)
PA BLOWER 2 (BLR-05102)	200	240	-	240
PA BLOWER 3 (BLR-05103)	200	-	240	-
MBR BLOWER 1 (BLR-05301)	150	180	-	-
MLSS CHANNEL BLOWER 1 (BLR-02010)	17	27	-	27
MLSS CHANNEL BLOWER 2 (BLR-02011)	17	-	27	-
MBR CRANE TROLLEY & HOIST	18	33.7		33.7
SUBTOTAL	602	480.7	267	300.7
25% LARGEST MOTOR LOAD	-	60	-	-
GRAND TOTAL (AMPS)	-	540.7	-	-
% CAPACITY	-	54.1%	-	-

CONSTRUCTION NOTES:

[1] EXISTING AERATION BLOWERS TO BE RELOCATED AND NAME CHANGED TO "FEQ" BLOWERS.

DRAFT

NO	BY	DATE	REVISIONS	DATE	APP.

Registered Professional Engineer (Electrical) CERTIFICATE NO. 35958 BASHAR ISHAQ Date Signed 03/31/28 ARIZONA, U.S.A. Expires 03/31/28

PREPARED BY BASHAR ISHAQ
PROJECT ENGINEER
R.C.E. NO. E24590
EXP. DATE
DRAWN NC
DESIGNED NC, BI
CHECKED BI
SCALE
DATE FEB 2026

THESE DRAWINGS ARE THE PROPERTY OF P.A.C.E. AND SHALL NOT BE REPRODUCED IN ANY MANNER NOR BE USED FOR CONSTRUCTION UNLESS STAMPED 'ISSUED FOR CONSTRUCTION'.

TITLE
LOAD SUMMARIES

JOB
CITY OF SAN LUIS WEST WWTP
3.0 MGD MBR UPGRADES
SAN LUIS AZ.

PACE
Advanced Water Engineering
8723 E. VIA de COMMERCIO, SUITE A-204 | SCOTTSDALE, CA 85258
P: (408) 991-3595 | www.pacewater.com

SHEET
E0.13
99 OF 209 SHEETS

JOB NO. B777

FINAL PLANS ISSUED FOR BID

W:\B777\Engineering\B777 - 3MGD Exp\3MGD FINAL ISSN\sheets\B777 - E0.13.dwg - Tab: E0.13 - by rishin on 02/06/26 at 2:49:37 PM

DRAFT

POWER CONDUIT WIRE SCHEDULE						
CONDUIT		WIRE		FROM	TO	REMARKS
NO.	SIZE	POWER	GROUND			
P213	1"	3 - #8	1 - #8	DISTRIBUTION PANELBOARD (DP-2)	DISC SW - MBR CRANE TROLLEY & HOIST	
P213A	1"	3 - #8	1 - #8	DISC SW - MBR CRANE TROLLEY & HOIST	MBR CRANE TROLLEY & HOIST	
P230	1"	6 - #12	3 - #12	PANEL-EB (CKTS. 3, 9, 27)	JB-P230	
P230A	3/4"	2 - #12	1 - #12	JB-P230	XV-04024	
P230B	3/4"	2 - #12	1 - #12	JB-P230	XV-04027	
P230C	3/4"	2 - #12	1 - #12	JB-P230	XV-03028	
P231	1"	6 - #12	3 - #12	PANEL-EB (CKTS. 5, 11, 29)	JB-P231	
P231A	3/4"	2 - #12	1 - #12	JB-P231	XV-04025	
P231B	3/4"	2 - #12	1 - #12	JB-P231	XV-04028	
P231C	3/4"	2 - #12	1 - #12	JB-P231	XV-03128	
P232	1"	6 - #12	3 - #12	PANEL-EB (CKTS. 7, 13, 31)	JB-P232	
P232A	3/4"	2 - #12	1 - #12	JB-P232	XV-04026	
P232B	3/4"	2 - #12	1 - #12	JB-P232	XV-04029	
P232C	3/4"	2 - #12	1 - #12	JB-P232	XV-03228	
P233	3/4"	2 - #12	1 - #12	PANEL-EB (CKT. 15)	XV-05420	
P234	3/4"	2 - #12	1 - #12	PANEL-EB (CKT. 17)	XV-05421	
P235	3/4"	2 - #12	1 - #12	PANEL-EB (CKT. 19)	XV-05422	
P236	3/4"	2 - #12	1 - #12	LIGHTING CONTROL PANEL (LCP-A)	BLR BLDG OUTDOOR WALL PACK LIGHTS	
P237	3/4"	2 - #12	1 - #10	PANEL-EB (CKT. 1)	MAIN RIO PANEL	
P238	3/4"	2 - #12	1 - #10	PANEL-EB (CKT. 2)	MBR RIO PANEL	
P239	3/4"	2 - #12	1 - #12	PANEL-EB (CKT. 4)	MOTOR STARTER - EXH FAN 1	
P239A	3/4"	2 - #12	1 - #12	MOTOR STARTER - EXH FAN 1	EXH FAN 1 (M-04110)	
P240	3/4"	2 - #12	1 - #12	PANEL-EB (CKT. 52)	MOTOR STARTER - EXH FAN 2	
P240A	3/4"	2 - #12	1 - #12	MOTOR STARTER - EXH FAN 2	EXH FAN 2 (M-04111)	
P241	3/4"	2 - #12	1 - #12	PANEL-EB (CKT. 8)	MOTOR STARTER - EXH FAN 3	
P241A	3/4"	2 - #12	1 - #12	MOTOR STARTER - EXH FAN 3	EXH FAN 3 (M-04112)	
P242	3/4"	2 - #12	1 - #12	PANEL-EB (CKT. 10)	MOTOR STARTER - EXH FAN 4	
P242A	3/4"	2 - #12	1 - #12	MOTOR STARTER - EXH FAN 4	EXH FAN 4 (M-04113)	
P243	1"	2 - #8	1 - #8	PANEL-EB (CKT. 12)	MOTOR STARTER - EVAP COOLER 1	
P243A	1"	2 - #8	1 - #8	MOTOR STARTER - EVAP COOLER 1	EVAP COOLER 1 (EC-1)	
P243B	1"	2 - #8	1 - #8	PANEL-EB (CKT. 16)	MOTOR STARTER - EVAP COOLER 2	
P243C	1"	2 - #8	1 - #8	MOTOR STARTER - EVAP COOLER 2	EVAP COOLER 2 (EC-2)	
P244	3/4"	2 - #10	1 - #10	PANEL-EB (CKT. 18)	BLOWER RM LIGHT SWITCH	
P245	3/4"	2 - #12	1 - #12	PANEL-EB (CKT. 20)	PIPE GALLERY 1 LIGHT SWITCH	
P246	3/4"	2 - #12	1 - #12	PANEL-EB (CKT. 22)	PIPE GALLERY 2 LIGHT SWITCH	
P247	3/4"	2 - #12	1 - #12	PANEL-EB (CKT. 24)	PIPE GALLERY 3 LIGHT SWITCH	
P248	3/4"	2 - #12	1 - #12	PANEL-EB (CKT. 26)	PIPE GALLERY 4 LIGHT SWITCH	
P249	3/4"	2 - #12	1 - #10	PANEL-EB (CKT. 28)	BLOWER RM RECEPTACLES	
P250	3/4"	2 - #12	1 - #10	PANEL-EB (CKT. 30)	PIPE GALLERY 1 RECEPTACLES	

NO	BY	DATE	REVISIONS	DATE	APP.

Registered Professional Engineer (Electrical) CERTIFICATE NO. 82958 Basher Ishaq Ishaq State of ARIZONA U.S.A. Expires 03/31/28

PREPARED BY BASHAR ISHAQ | PROJECT ENGINEER | R.C.E. NO. E24580 | EXP. DATE | DRAWN NC | DESIGNED NC, BI | CHECKED BI | SCALE | DATE FEB 2026

THESE DRAWINGS ARE THE PROPERTY OF P.A.C.E. AND SHALL NOT BE REPRODUCED IN ANY MANNER NOR BE USED FOR CONSTRUCTION UNLESS STAMPED 'ISSUED FOR CONSTRUCTION'.

TITLE
POWER CABLE & CONDUIT SCHEDULE 4

JOB
CITY OF SAN LUIS WEST WWTP
3.0 MGD MBR UPGRADES
SAN LUIS AZ.

PACE
Advanced Water Engineering
8723 E. VIA de COMMERCIO, SUITE A-204 | SCOTTSDALE, CA 85258
P: (408) 991-3595 | www.pacewater.com

FINAL PLANS ISSUED FOR BID

SHEET
E0.23
105 OF 209 SHEETS

JOB NO. B777

W:\B777\Engineering\B777 - 3MGD Exp\3MGD FINAL DSN\sheets\B777 - E0.23.dwg - Tab: E0.23 - by rschi on 02/06/26 at 3:17:49 PM

FILANC

WEST WWTP 3.0 MGD MBR UPGRADES

ID	Task Name	Duration	Start	Finish
1	Bids Due	0 days	Thu 4/9/26	Thu 4/9/26
2	Notice of Intent to Award	0 days	Fri 5/1/26	Fri 5/1/26
3	Notice of Award, Council	0 days	Wed 5/13/26	Wed 5/13/26
4	Notice of Award	0 days	Wed 6/24/26	Wed 6/24/26
5	**Project Duration**	**571 days**	**Wed 6/24/26**	**Fri 9/22/28**
6	**Procurment**	**289 days**	**Wed 6/24/26**	**Fri 8/13/27**
7	**Notice to Proceed**	**289 days**	**Wed 6/24/26**	**Fri 8/13/27**
8	Notice to Proceed	0 days	Wed 6/24/26	Wed 6/24/26
9	Baseline Schedule	0 days	Fri 8/7/26	Fri 8/7/26
10	Mobilization	5 days	Mon 7/20/26	Fri 7/24/26
11	**Intensification System, per Addendum**	**97 days**	**Thu 6/25/26**	**Mon 11/9/26**
17	**Procurement**	**289 days**	**Thu 6/25/26**	**Fri 8/13/27**
18	**40 0560 Gates**	**141 days**	**Thu 6/25/26**	**Thu 1/14/27**
21	4122000 Crane & Hoist	280 days	Thu 6/25/26	Mon 8/2/27
22	43 1134 Regenerative Rotary Blowers [BLR-02010,-02011]	289 days	Thu 6/25/26	Fri 8/13/27
23	43 2313.19 Plant Drain Pumps [PMP-7202,-7203]	163 days	Thu 6/25/26	Wed 2/17/27
24	43 2331.15 Process Wtr Pckg Booster Pump Skid	247 days	Thu 6/25/26	Wed 6/16/27
25	43 2358.23 Flow Equal. Pumps [PMP-1601,-1602]	143 days	Thu 6/25/26	Tue 1/19/27
26	432550.10 Internal Recycle Pumps [PMP-02101,-02201,-02301]	143 days	Thu 6/25/26	Tue 1/19/27
27	443119 Odor Control System	212 days	Thu 6/25/26	Tue 4/27/27
28	CitricAcid Citric Acid Tote & Spill Cont	118 days	Thu 6/25/26	Thu 12/10/26
29	**City-Purchased Equipment**	**140 days**	**Thu 6/25/26**	**Wed 1/13/27**
51	**Construction**	**571 days**	**Thu 6/25/26**	**Fri 9/22/28**
52	Demo/ Earthwork	65 days	Thu 6/25/26	Thu 9/24/26
53	Yard Piping	120 days	Fri 9/25/26	Fri 3/19/27
54	**Headworks Upgrades**	**332 days**	**Thu 6/25/26**	**Thu 10/14/27**
80	**Basins 1 & 2**	**351 days**	**Thu 6/25/26**	**Wed 11/10/27**
81	Reroute all Flows to Basin 3 & 4	40 days	Thu 6/25/26	Wed 8/19/26
82	Temporary Piping	5 days	Thu 8/20/26	Wed 8/26/26
83	Drain and Clean 1 & 2	5 days	Thu 8/27/26	Wed 9/2/26
84	Demo all Equipment	20 days	Thu 9/3/26	Thu 10/1/26
85	Sawcut Concrete	10 days	Fri 10/2/26	Thu 10/15/26
86	Demo Concrete	20 days	Fri 10/16/26	Fri 11/13/26
87	Patching and New Openings	10 days	Mon 11/16/26	Mon 11/30/26
88	Construct MISC Walls	60 days	Mon 11/16/26	Thu 2/11/27

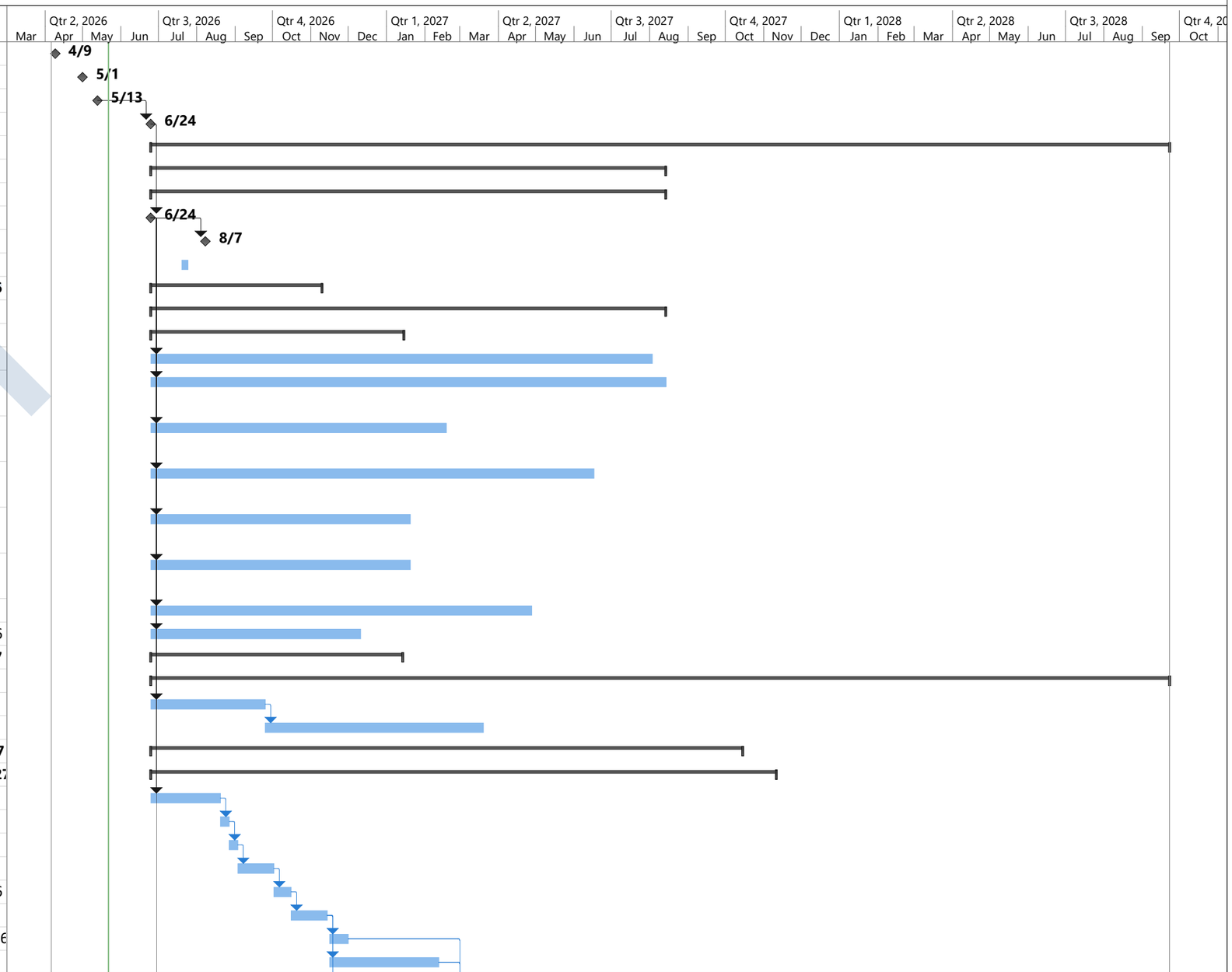

Project: San Luis WWTP Draft Proposal Schedule 20260430ALMFTR
Date: Fri 5/22/26

Task | Project Summary | Manual Task | Start-only | Deadline
Split | Inactive Task | Duration-only | Finish-only | Progress
Milestone | Inactive Milestone | Manual Summary Rollup | External Tasks | Manual Progress
Summary | Inactive Summary | Manual Summary | External Milestone

Preliminary Schedule
Filanc will submit a revised baseline CPM schedule after project award.

DRAFT

FILANC

WEST WWTP 3.0 MGD MBR UPGRADES

ID	Task Name	Duration	Start	Finish
89	Construct Elevated Channel	70 days	Mon 11/16/26	Fri 2/26/27
90	Install new MBR Equipment	60 days	Mon 3/1/27	Fri 5/21/27
91	Install MISC Gates	10 days	Mon 3/1/27	Fri 3/12/27
92	Install Above Grade Pipe	63 days	Mon 5/24/27	Thu 8/19/27
93	Electrical Install	91 days	Mon 5/24/27	Wed 9/29/27
94	Install MISC Metals	10 days	Mon 5/24/27	Mon 6/7/27
95	Startup	30 days	Thu 9/30/27	Wed 11/10/27
96	**Work Between Basins 2 & 3**	**135 days**	**Thu 6/25/26**	**Wed 1/6/27**
97	Demo Pipe at area between 2 & 3	5 days	Thu 6/25/26	Wed 7/1/26
98	Construct Foundation at 2 & 3	10 days	Thu 7/2/26	Wed 7/15/26
99	Construct Mid Level Deck at Between 2 & 3 along with stair access	30 days	Thu 7/16/26	Wed 8/26/26
100	Construct Upper Deck	30 days	Thu 8/27/26	Thu 10/8/26
101	Install Blowers	20 days	Fri 10/9/26	Thu 11/5/26
102	Install Above Ground Piping	60 days	Fri 10/9/26	Wed 1/6/27
103	Install Electrical	20 days	Fri 11/6/26	Mon 12/7/26
104	Startup	20 days	Tue 12/8/26	Wed 1/6/27
105	**MLSS Channell**	**135 days**	**Fri 9/25/26**	**Fri 4/9/27**
111	**Consruction at basins 3**	**250 days**	**Wed 8/4/27**	**Thu 7/27/28**
112	**Install Indensifier**	**40 days**	**Wed 8/4/27**	**Wed 9/29/27**
113	Concrete Pad	10 days	Wed 8/4/27	Tue 8/17/27
114	Install Indensifier	5 days	Wed 8/18/27	Tue 8/24/27
115	Piping	10 days	Wed 8/25/27	Wed 9/8/27
116	Electrical	10 days	Thu 9/9/27	Wed 9/22/27
117	Startup Indensifier	5 days	Thu 9/23/27	Wed 9/29/27
118	Indensification Process Complete	30 days	Fri 11/12/27	Fri 12/24/27
119	Remove Basins 3 from Service	25 days	Mon 12/27/27	Mon 1/31/28
120	Demo at Basin 3	40 days	Tue 2/1/28	Tue 3/28/28
121	Install Air System	20 days	Wed 3/29/28	Tue 4/25/28
122	Install Gates	25 days	Wed 3/29/28	Tue 5/2/28
123	Install Recycle Pumps	65 days	Wed 3/29/28	Wed 6/28/28
124	Install AG Pipe	65 days	Tue 2/1/28	Tue 5/2/28
125	Install BG Pipe	40 days	Tue 2/1/28	Tue 3/28/28
126	Complete Electrical	40 days	Wed 4/26/28	Wed 6/21/28
127	Startup	25 days	Thu 6/22/28	Thu 7/27/28
128	**Convert Basin 4 t EQ Basin**	**40 days**	**Fri 7/28/28**	**Fri 9/22/28**
129	Concert Basin to EQ	40 days	Fri 7/28/28	Fri 9/22/28
130	**Commissioning**	**40 days**	**Fri 7/28/28**	**Fri 9/22/28**
131	Commisioning	40 days	Fri 7/28/28	Fri 9/22/28

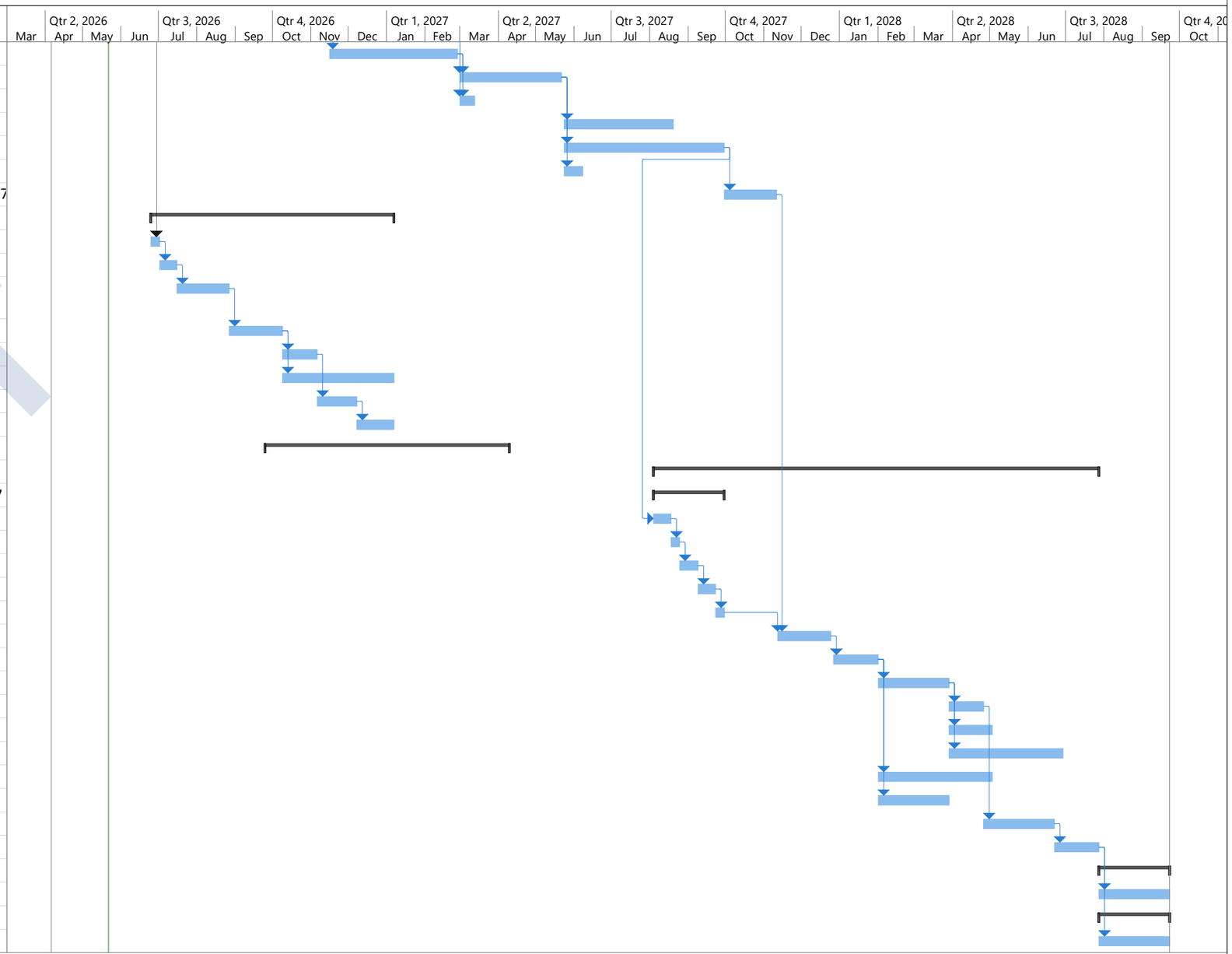

Project: San Luis WWTP Draft Proposal Schedule 20260430ALMFTR
Date: Fri 5/22/26

Task
Split
Milestone
Summary
Project Summary
Inactive Task
Inactive Milestone
Inactive Summary
Manual Task
Duration-only
Manual Summary Rollup
Manual Summary
Start-only
Finish-only
External Tasks
External Milestone
Deadline
Progress
Manual Progress

Preliminary Schedule
Filanc will submit a revised baseline CPM schedule after project award.

DRAFT

CONSTRUCTION CONTRACT

FOR
CITY OF SAN LUIS
WEST WWTP 3.0 MGD MBR UPGRADES
2025-050

DRAFT

City of San Luis
1090 East Union Street
P.O. Box 1170
San Luis, Arizona 85349

APPROVED BY:

Acting City Manager:
Jenny Torres

Mayor:
Nieves Riedel

Vice-Mayor:
Javier Vargas

Council Members:
Luis Cabrera
Maria Cecilia Cruz
Esteban C. Rosales
Lizeth Servin
Tadeo Azael De La Hoya

PREPARED BY:

Pacific Advanced Civil Engineering (PACE)
8723 E. Via de Commercio, #A-204
Scottsdale, AZ 85258
(480) 991-3595

Table of Contents

City of San Luis

West WWTP 3.0 MGD MBR Upgrade Project

THIS CONSTRUCTION CONTRACT CONTAINS:

CONTRACT....4
CONTRACT PERFORMANCE SURETY BOND....12
LABOR AND MATERIALS SURETY BOND....13
WARRANTY BOND....14
CERTIFICATE OF INSURANCE....15
CONTRACTOR'S AFFIDAVIT REGARDING SETTLEMENT OF CLAIMS....17

GENERAL CONDITIONS....18

WIFA CONTRACT PACKET FOR GOVERNMENTAL BORROWERS

WIFA WAGE RATE SHEET

CONTRACTOR'S BID (FILANC)

TECHNICAL SPECIFICATIONS

CONSTRUCTION PLANS

MARICOPA ASSOCIATION OF GOVERNMENTS (MAG) UNIFORM STANDARD SPECIFICATIONS AND DETAILS FOR PUBLIC WORKS CONSTRUCTION - DATED JANUARY 2015 (Separate Publication) - UNIFORM STANDARD SPECIFICATIONS ONLY

CITY OF SAN LUIS SUPPLEMENTAL TO THE MAG UNIFORM STANDARD SPECIFICATIONS FOR PUBLIC WORKS CONSTRUCTION AND CITY OF YUMA CONSTRUCTION STANDARD DETAIL DRAWINGS - DATED OCTOBER 2016 (Separate Publication)

DRAFT

Contract Kit

City of San Luis

West WWTP 3.0 MGD MBR Upgrades

DRAFT

CONTRACT

for the Construction of

CITY OF SAN LUIS WWTP
WEST WWTP 3.0 MGD MBR UPGRADES

This agreement ("Contract") is made and entered into this 27th day of May 2026, by and between:

Contractor Name and Address. Filanc 740 North Andreasen Drive Escondido, California 92029 An Arizona for-profit corporation ("Contractor") and	City of San Luis 1090 East Union Street (Physical Address) P.O. Box 3750 (Mailing Address) San Luis, Arizona 85349 An Arizona municipal corporation ("City")

The Contractor and City may be referred to individually as the "Party" and collectively as the "Parties."

WHEREAS, the scope of work requires the Contractor to furnish any and all labor, materials, equipment, transportation, utilities, services, and facilities required to perform all work for the City of San Luis – West WWTP 3.0 MGD MBR Upgrades ("Project"), per the Contractor's bid of 2025-050, ("Proposal"). and to completely and totally remove and install the materials therein for the City, in a good and workmanlike and substantial manner and to the satisfaction of the City through its engineers ("ENGINEERS"), or his properly authorized agents and strictly pursuant to and in conformity with the plans and specification prepared by the ENGINEERS, and with such modifications of the same and other documents that the OWNER may make through the ENGINEERS or his properly authorized agents, as provided herein; and

WHEREAS, San Luis City Council, at a properly noticed open meeting, awarded the Bid to the Contractor on 24th day of June 2026; and

WHEREAS, at the same meeting, San Luis City Council directed staff to finalize an agreement with Filanc;

NOW, THEREFORE, the above recitals are incorporated into this Contract. In consideration of the City paying the sum of $41,163,578.00 to the Contractor and the Contractor constructing an influent force main with appurtenances and other work incidental in the manner and at the time provided in this Contract, and in consideration of the other mutual benefits and obligations contained in this Contract the Parties agree as follows:

DRAFT

ARTICLE 1 - PARTICIPANTS AND PROJECT

City:	Jenny Torres, City Manager City of San Luis, Arizona Telephone: (928) 341-8520 E-mail: jtorres@sanluisaz.gov
City PROJECT MANAGER:	Jorge Perez, Assistant Director of Public Works City of San Luis Telephone: (928) 341-8577 E-mail: jperez@sanluisaz.gov
Contractor:	Contractor Representative Contractors Name. Telephone: E-mail:
Contractor MANAGER:	_____ Filanc Telephone: _____ E-mail: _____
PROJECT ENGINEER / DESIGNER:	Duong Do, P.E., F.ASCE PACE Telephone: (714) 481-7223 E-mail: ddo@pacewater.com
PROJECT DESCRIPTION:	City of San Luis, West WWTP 3.0 MGD MBR Upgrades
PROJECT LOCATION:	West WWTP on Cesar Chavez Blvd in San Luis, Arizona

ARTICLE 2 - CONTRACT DOCUMENTS

The Contract between the City and the Contractor shall consist of the following items, collectively the "Contract Documents:"

1. this Contract;
2. Change Orders (if any);
3. Performance bond and payment bond (required by A.R.S. § 41-2574, also known as contract bond and labor & materials bond), bid bond, and other bonds;
4. Project General Requirements and Technical Specifications;
5. Construction Plans;
6. General Conditions of the Contract;
7. Bid documents {including but not limited to the advertisement for bids, bid schedule, addenda (if any), additive bid items (if any)}, and the Proposal;
8. 2016 City of San Luis Supplemental to the 2015 MAG Uniform Standard Specifications and Details for Public Works Construction and City of Yuma Construction Standard Detail Drawings, MAG Uniform Standard Specifications and Details for Public Works Construction, City of Yuma Construction Standard Detail Drawings – Edition 2019; and
9. Certificates of Insurance.

DRAFT

By this reference, the above Contract Documents are made a part of this Contract to the same extent as if set forth in full here.

In the event of a conflict of language between the items, the documents shall govern in the order listed above. The Contract Documents shall govern in all other matters not otherwise specified by the Contract between the Parties. All previous contracts (if any) between the Contractor and City are not applicable to this Contract or other resultant contracts.

ARTICLE 3 - DESIGN PHASE SERVICES

The Contractor is not required to provide design phase services to the City in relation to this Project.

ARTICLE 4 - CONSTRUCTION SERVICES

4.1 General.

4.1.1 The Contractor agrees, at its own cost and expense, to do all Work necessary and required to fully, timely, and properly complete the construction of the Project in strict accordance with the Contract Documents in a good and workmanlike manner, free and clear of all claims, liens, and charges whatsoever, in the manner and under the conditions specified, within the Project Schedule.

4.1.2 The Contractor shall provide all the labor and materials and perform the Work in accordance with Division 01 - General Requirements of the Specifications and Section 4 of the General Conditions. Below are some but not all of the major components of the construction services and the corresponding subsections of Division 01 - General Requirements of the Specifications and Section 4 of the General Conditions.

4.1.3 At all times relevant to this Contract and performance of the Work, the Contractor shall fully comply with all laws, regulations, or legal requirements applicable to the City, the Project, and the Contract, including, without limitation, those set forth in the General Conditions.

4.1.4 The Contractor shall perform the Work under this Contract using only those firms, team members, and individuals designated by Contractor consistent with the Contractor's accepted Bid, or otherwise, approved by the City pursuant to the General Conditions. No other entities or individuals may be used without the prior written approval of the Project Manager.

4.1.5 The Contractor shall comply with all terms and conditions of the General Conditions and the requirements of the Specifications.

4.1.6 The terms of this Contract shall control in the event of a conflict between it and the General Conditions, General Requirements of the Specifications, or any exhibit to the Contract or appendix to the General Conditions.

4.1.7 For purposes of this provision, "Work Product" shall include all designs, drawings, plans, specifications, ideas, renderings, and other information or matter in whatever form created (e.g., electronic or printed) and in all media now known or in the future created. All Work Product shall be considered Work Made for Hire as defined in the United States Copyright Act 17 U.S.C. § 101 (Copyright Act). If, for any reason, any such Work is found not to be a Work Made for Hire, the Contractor, by entering into this Contract, transfers and assigns ownership of the copyright in such Work to the City. Notwithstanding anything to the contrary in this Contract, all Work Product prepared or otherwise created in connection with the performance of this Contract, including the

DRAFT

Work, are to be and remain the property of the City. The rights in this Section are exclusive to the City in perpetuity.

4.2 The Contractor's Pre-Contract and Pre-Work Deliverables. The Contractor shall provide the deliverables in accordance with Division 01 - General Requirements of the Specifications and Section 4.2 of the General Conditions.

4.3 Pre-Construction Conference. The Contractor shall attend the pre-construction conference in accordance with Division 01 - General Requirements of the Specifications and Section 4.3 of the General Conditions.

4.4 Performance of the Work (Including Field Measurements, Subcontractors, and Suppliers). The Contractor shall control and maintain the Project site in accordance with Section 4.4 of the General Conditions and Division 01 - General Requirements of the Specifications.

4.5 Control of the Project Site. The Contractor shall control and maintain the Project site in accordance with Division 01 - General Requirements of the Specifications and Section 4.5 of the General Conditions.

4.6 Project Safety. The Contractor shall implement and enforce Project safety in accordance with Section Division 01 - General Requirements of the Specifications and 4.6 of the General Conditions.

4.7 Materials Quality, Substitutions, and Shop Drawings. The Contractor shall provide materials testing and submit substitute materials and shop drawings in accordance with Division 01 - General Requirements of the Specifications and Section 4.7 of the General Conditions.

4.8 Project Record Documents. The Contractor shall maintain and make available the Project Record Document in accordance with Division 01 - General Requirements of the Specifications and Section 4.8 of the General Conditions.

4.9 Warranty and Correction of Defect Work. The Contractor shall provide warranties and correct defective Work in accordance with Division 01 - General Requirements of the Specifications and Section 4.9 of the General Conditions.

4.10 The OWNER has pre-purchased several items of treatment process equipment. One piece of equipment is onsite, and two others need to be delivered. The Contractor shall be responsible for planning delivery of pending equipment in order to meet the construction schedule. All treatment process equipment will become the CONTRACTOR'S responsibility. The CONTRACTOR shall coordinate delivery and confirm that the shipments are complete and accurate for all equipment. Contract shall provide safe and secure storage, provide transportation from onsite storage to install location, install per the construction documents and manufacturer's requirements, and schedule the manufacturer's representative for construction, installation certification, start up, operational training, etc.

The following pieces of Equipment have been pre-purchased by the OWNER:

4.10.1 Membrane Bioreactor, (MBR) (Kubota) to include membranes, mixers, pumps, blowers, diffusers and control panels. See Appendices B & C of the Specifications for more complete information and shop drawings. Contractor must plan and coordinate delivery to meet the contractor schedule. Contractor will be required to pay the storage fees; allowance has been provided. The delivery date is to be scheduled directly with Kubota.

4.10.2 Sludge Dewatering Screw Press (KFC). Screw Press, Sludge Pump, polymer dosing flocculation tank, conveyors and control panels. See Appendices B & C of the Specifications for more complete information. (**On-site**)

DRAFT

4.10.3 Headworks Screen, grit removal and control panels (Hydro-Dyne) - Manufacturing completed and being stored at Hydro-Dyne, a waiting Contractor coordination for delivery. Contractor must plan and coordinate delivery to meet the contractor schedule. Contractor will be required to pay the storage fees; allowance has been provided. See Appendices B & C of the Specifications for complete information.

ARTICLE 5 - CITY'S RESPONSIBILITIES

5.1 The City shall have the responsibilities and provide the information specified in, and subject to, the conditions set forth in Section 5 of the General Conditions and Division 00 – Procurement and Contracting Requirements of the Specifications.

ARTICLE 6 - CONTRACT TIME

6.1 Contract Time.

The Contract Time shall start with the Notice to Proceed (NTP) and end with Final Acceptance, as set forth in Article 6.3 below. The Notice to Proceed cannot be issued prior to the City's approval and acceptance of the Bid.

6.1.1 The Contract Time shall be as set forth in the Project Schedule. The Contractor agrees that it will commence the performance of the Work and complete the Project within the Contract Time.

6.1.2 Time is of the essence of this Contract, for the Project, and for each phase and designated milestone of the Contract.

6.1.3 Failure on the part of the Contractor to adhere to the approved Project Schedule will be deemed a material breach and sufficient grounds for the City to terminate this Contract.

6.2 Project Schedule. The Project Schedule, as required by Division 01 - General Requirements of the Specifications and Section 6.2 of the General Conditions, shall be updated and maintained throughout the Contractor's performance under this Contract in accordance with Division 01 - General Requirements of the Specifications and Section 6.2 of the General Conditions.

6.3 Completion Milestones.

6.3.1 **Substantial Completion.** The Work will be substantially complete within **four hundred eighty-eight (488) calendar Days after the Notice to Proceed** when the Contract Times commence. The Contractor, by entering into this Contract, guarantees the Work against defective workmanship or materials for a period of two (2) years from the date established by the date of Substantial Completion.

6.3.2 **Final Completion**. Following established Substantial Completion date, Contractor must address punch list items to the City's satisfaction within **forty-five (45) calendar days.** The City and/or Engineer shall perform a Final Completion inspection for verification.

6.3.3 **Final Acceptance**. At **month twenty-three (23)** of the Warranty Period, the City and/or Engineer shall perform a Final Acceptance inspection to verify all warranty items have been addressed to the City's satisfaction. The City will then provide a written Final Acceptance notice.

6.4 Liquidated Damages.

DRAFT

6.4.1 The Contractor acknowledges and agrees that if the Contractor fails to obtain **Substantial Completion** or **Final Completion** of the Work within the Contract Time, the City will sustain extensive damages and serious loss as a result of such failure.

6.4.2 The Contractor agrees to commence Work within ten (10) Days of the date of the Notice to Proceed from the City and to achieve Substantial Completion within four hundred eighty-eight (488) calendar Days after the Notice to Proceed. The Contractor agrees to pay liquidated damages, the sum of $1,190.00, for each consecutive calendar Day thereafter.

6.4.3 The City may deduct liquidated damages described in Subsection 6.4.1 above from any unpaid amounts then or thereafter due to the Contractor under this Contract. Any liquidated damages not so deducted from any unpaid amounts due the Contractor shall be payable to the City at the demand of the City, together with interest from the date of the demand at the highest lawful rate of interest payable by the Contractor.

6.4.4 Nothing in this Contract shall be deemed to constitute a waiver of any other remedy available to the City in the event of the Contractor's default under this Contract prior to full performance of the Work, including, as applicable, specific performance or completion of the Work on behalf of the Contractor, the cost and expense of which shall be offset against any monies then or thereafter due to Contractor (if any) and otherwise immediately reimbursed to City by the Contractor.

ARTICLE 7 - CONTRACT PRICE

7.1 Contract Price.

7.1.1 In exchange for the Contractor's full, timely, and acceptable performance and construction of the Work under this Contract, and subject to all of the terms of this Contract, the City will pay the Contractor the Contract Price, which is $41,163,578.00.

7.1.2 The Contract Price is all-inclusive and specifically includes all fees, costs, insurance and bond premiums, and taxes of any type necessary to fully, properly, and timely perform and construct the Work.

ARTICLE 8 - PAYMENT

Payments shall be made to the Contractor in accordance with Division 01 - General Requirements of the Specifications and Article 8 of the General Conditions.

ARTICLE 9 - CHANGES TO THE CONTRACT

Changes to the Contract may be made in strict accordance with Division 01 - General Requirements of the Specifications and Section 9 of the General Conditions.

ARTICLE 10 - TERMINATION

The Contract may be terminated in accordance with Section 10 of the General Conditions.

ARTICLE 11 - INSURANCE AND BONDS

11.1 The Contractor shall provide Insurance as provided in the Insurance Requirements and in accordance with Section 11.1 of the General Conditions. The Contractor shall provide proof of such insurance and all required endorsements in forms acceptable to the City prior to commencing any Work under this Contract.

DRAFT

11.2 The Contractor shall provide performance, payment and warranty bonds to the City in accordance with Section 11.2 of the General Conditions and A.R.S. § 34-222.

11.3 The Contractor's failure to provide proof of insurance and the required endorsements, or the required bonds, in forms acceptable to the City will be a material breach and grounds for termination for cause under this Contract.

ARTICLE 12 - INDEMNIFICATION

The Contractor shall have and assume the indemnity obligations set forth in Section 12 of the General Conditions.

ARTICLE 13 - DISPUTE RESOLUTION

Any claims or disputes relating to this Contract shall be resolved according to the dispute resolution process set forth in Section 13 of the General Conditions.

ARTICLE 14 - MISCELLANEOUS PROVISIONS

The miscellaneous provisions set forth in Section 14 of the General Conditions shall apply to this Contract.

ARTICLE 15 - COUNTERPARTS

This Contract may be executed in one or more counterparts, each of which shall be deemed an original, but all of which together shall constitute one and the same instrument. The signature pages from one or more counterparts may be removed from such counterparts. Such signature pages may all be attached to a single instrument so that the signatures of all Parties may be physically attached to a single document.

ARTICLE 16 - AUTHORITY

Each Party represents and warrants to the other Party: (i) that such Party is duly organized and validly existing under the laws of the State of Arizona and has full corporate power and authority to enter into this AGREEMENT and to carry out the provisions of this AGREEMENT; (ii) such Party is duly authorized to execute and deliver this AGREEMENT and to perform its obligations under this AGREEMENT; (iii) the person executing this AGREEMENT on such Party's behalf has been duly authorized to do so by all requisite corporate action, and (iv) this AGREEMENT is a legal and valid obligation binding upon the Parties and enforceable in accordance with its terms.

The Parties have executed this Contract in Yuma County, Arizona, on the day and year set forth above, which is the day the last Party signed this Contract. The original Contract will be filed with the City of San Luis Clerk.

DRAFT

City of San Luis

_____
Nieves Riedel, Mayor

Date: _____

Attest:

_____
Sonia Cornelio, City Clerk

Approved As to Form

_____
Kay Marion Macuil, City Attorney

Contractor

_____
Contractor Representative

Date: _____

DRAFT

CONTRACT PERFORMANCE SURETY BOND

STATUTORY PERFORMANCE BOND PURSUANT TO
TITLE 34, CHAPTER 2, ARTICLE 2,
OF THE ARIZONA REVISED STATUTES
(Penalty of this Bond must be 100% of the Contract amount)

Project Name: City of San Luis West WWTP 3.0 MGD MBR

For: City of San Luis, Arizona

KNOW ALL MEN BY THESE PRESENTS:

That , _____, (hereinafter called the Principal), as Principal,

and _____, a corporation organized and existing under the laws of the State of _____and duly licensed and possessing a certificate of authority to transact surety business in the State of Arizona, with its principal office in the City of _____, (hereinafter called the Surety) as Surety, are held firmly bound unto City of San Luis, Arizona (hereinafter called Obligee) in the amount of _____Dollars ($_____) for the payment whereof, the said Principal and Surety bind themselves, and their heirs, administrators, executors, successors and assigns, jointly and severally, firmly by these presents.

WHEREAS, the Principal has entered into a certain written CONTRACT with the Obligee, dated the _____day of _____20___, to construct the **City of San Luis West WWTP 3.0 MGD MBR**, which CONTRACT is hereby referred to and made a part hereof as fully and to the same extent as if copied at length herein.

NOW, THEREFORE, THE CONDITION OF THIS OBLIGATION IS SUCH, that if the said Principal shall faithfully perform and fulfill all the undertakings, covenants, terms, conditions and agreements of the CONTRACT during the original term of CONTRACT and any extension of the CONTRACT, with or without notice to the Surety, and during the life of any guaranty required under the CONTRACT, and also performs and fulfills all the undertakings, covenants, terms, conditions, and agreements of all duly authorized modifications of the CONTRACT that may hereafter be made, notice of which modifications to the Surety being hereby waived; then the above obligation is void. Otherwise to remain in full force and effect.

PROVIDED, HOWEVER, that this bond is executed pursuant to the provisions of Title 34, Chapter 2, Article 2, of the Arizona Revised Statutes, and all liabilities on this bond shall be determined in accordance with the provisions of Title 34, Chapter 2, Article 2, Arizona Revised Statutes, to the extent as if it were copied at length herein.

The prevailing party in a suit on this bond shall be entitled to such reasonable attorney's fees as may be fixed by a judge of the Court.

Witness our hands this _____day of _____, 20____.

_____
Agency of Record

_____
Agency Address

_____	_____
Surety Firm	Principal Firm [Seal]
Surety Signature	Principal Signature
By _____	By _____
Name and Title {Attach current power of attorney}	Name and Title
_____	_____

DRAFT

LABOR AND MATERIALS SURETY BOND

STATUTORY PAYMENT BOND PURSUANT TO
TITLE 34, CHAPTER 2, ARTICLE 2,
OF THE ARIZONA REVISED STATUTES
(Penalty of this Bond must be 100% of the Contract amount)

Project Name: City of San Luis West WWTP 3.0 MGD MBR

For: City of San Luis, Arizona

KNOWN BY ALL MEN THESE PRESENTS:

That , _____, (hereinafter called the Principal), as Principal,

and _____, a corporation organized and existing under the laws of the State of

_____and duly licensed and possessing a certificate of authority to transact surety business in the State of Arizona, with its principal office in the City of , (hereinafter called the Surety) as Surety, are held firmly bound unto the City of San Luis, Arizona (hereinafter called Obligee) in the amount of _____Dollars

($ _____) for the payment whereof, the said Principal and Surety bind themselves, and their heirs, administrators, executors, successors and assigns, jointly and severally, firmly by these presents.

WHEREAS, the Principal has entered into a certain written CONTRACT with the Obligee, dated the _____day of

_____, 20___, for **City of San Luis West WWTP 3.0 MGD MBR Project** which CONTRACT is hereby referred to and made a part hereof as fully and to the same extent as if copied at length herein.

NOW, THEREFORE, THE CONDITION OF THIS OBLIGATION IS SUCH, that if the Principal promptly pays all moneys due to all persons supplying labor or materials to the Principal or the Principal's subcontractors in the prosecution of the work provided for in the CONTRACT, this obligation is void, otherwise it remains in full force and effect.

PROVIDED, HOWEVER, that this bond is executed pursuant to the provisions of Title 34, Chapter 2, Article 2, of the Arizona Revised Statutes, and all liabilities on this bond shall be determined in accordance with the provisions, conditions and limitations of Title 34, Chapter 2, Article 2, Arizona Revised Statutes, to the same extent as if they were copied at length in this agreement.

The prevailing party in a suit on this bond shall recover as a part of the judgment reasonable attorney fees that may be fixed by a judge of the court.

Witness our hands this_____day of _____, 20____.

_____
Agency of Record

_____
Agency Address

Surety Firm Principal Firm [Seal]

By _____By_____

Surety Signature Principal Signature

Name and Title {Attach current power of attorney} Name and Title

_____ _____

DRAFT

BOND NO. PREMIUM NO.

WARRANTY BOND

(City of San Luis, Arizona)

West WWTP 3.0 MGD MBR

WHEREAS, the City of San Luis, Arizona (hereafter "City") and

_____(hereafter "Principal") have entered into an

agreement ("Agreement") dated _____, 20____, whereby Principal agreed to install and complete certain designated public improvements as a condition of contract, relating to the project known as West WWTP 3.0 MGD MBR Upgrades, at Principal's own expense and which Agreement is hereby referred to and made a part hereof; and

WHEREAS, Principal is required under the terms of the Agreement to furnish warranty security for the Work performed and equipment supplied and installed pursuant to the Agreement in the amount of one hundred percent percent (100%) of the amount to be paid by City to Principal to guarantee replacement and repair of the improvements as described in the Agreement for a period of two years following substantial completion of said improvements.

NOW, THEREFORE, we, Principal, and _____

("Surety"), are held and firmly bound unto City in the penal sum of _____dollars ($_____) lawful money of the United States, for the payment of which we bind ourselves, our heirs, successors, executors, and administrators, jointly and severally. The condition of this obligation is such that if Principal shall indemnify City for all loss that City may sustain by reason of any defective materials, equipment, components, or workmanship which become apparent during the period of two years from and after substantial completion of the improvements, as provided by the terms of the Agreement, then this obligation shall be null and void; otherwise, this obligation shall remain in full force and effect.

As a part of the obligation secured hereby and in addition to the face amount specified, costs and reasonable expenses and fees shall be included, including reasonable attorneys' fees incurred by City in successfully enforcing the obligation, all to be taxed as costs and included in any judgment rendered.

Surety shall provide City with thirty (30) days' written notice of Principal's default prior to Surety terminating, suspending or revoking the bond.

Witness our hands this _____ day of _____, 2024.

_____	_____
Principal Seal	Surety Seal
By: _____	By: _____
Attorney in fact	Its: _____
_____	_____
Agency of Record	Agency Address

DRAFT

CERTIFICATE OF INSURANCE

(City of San Luis, Arizona)

Project Name: City of San Luis West WWTP 3.0 MGD MBR

The _____

Certifies that the following insurance policies have been issued on behalf of:

Name of Insured: _____

Address of Insured:_____

	Type of Insurance	Policy No.	Effective Date	Expiration Date	Amount	Limits of Liability
(1)	Workmen's Compensation					Statutory
(2)	Contractors Protective Bodily Injury				$1,000,000	Each Occurrence
(3)	Contractor's Protective Property Damage				$1,000,000 $2,000,000	Each Accident Aggregate
(3)	Contractual Bodily injury				$1,000,000	Each Occurrence
(3)	Contractual Property Damage				$1,000,000 $2,000,000	Each Accident Aggregate
(4)	Automobile Bodily Injury & Property Damage				$1,000,000	Each Occurrence

When the project includes construction of a new, or modification of an existing building [in addition to the above types]:

(0) Fire and extended coverage plus Vandalism and Malicious Mischief for the full amount of the CONTRACT, with the County of Yuma named as an additional insured.

		Policy No.	Expiration Date	Amount
(5)	Umbrella Coverage [if required within Special Provisions]			

Policy Includes coverage for:

(1) a. Damage caused by blasting
b. Damage caused by collapse or structural injury
c. Damage to underground utilities

(2) Liability assumed in construction agreements and other types of CONTRACTS or agreements in effect in connection with insured operations.

(3) All owned, hired or non-owned automotive equipment used in connection with the insured operation.

DRAFT

CERTIFICATE OF INSURANCE [CONTINUED]

(City of San Luis, Arizona)

Project Name: City of San Luis West WWTP 3.0 MGD MBR

It is agreed that none of these policies will be canceled or changed so as to affect this certificate until thirty (30) days written notice of such cancellation or change has been delivered to the City of San Luis, 1090 East Union Street, P.O. Box 1170, San Luis, Arizona 85349.

It is further agreed that:

(1) These policies shall not expire until all work has been completed and the PROJECT has been accepted in writing by the City of San Luis. A renewal Certificate of the required coverage must be sent to the City of San Luis not less than thirty (30) days prior to expiration date).

(2) the policy shall be endorsed to include the following additional insured language: "City of San Luis, Arizona" shall be named as an additional insured with respect to liability arising out of the activities performed by, or on behalf of the Contractor, including completed operations".

This certificate is not valid unless countersigned by an authorized representative of the Insurance Company.

Countersigned by: _____

_____
Date

_____
Signature

_____
Address

_____
Telephone Number

DRAFT

CONTRACTOR'S AFFIDAVIT REGARDING SETTLEMENT OF CLAIMS

(City of San Luis, Arizona)

PART 100, SECTION 109, GENERAL CONDITIONS

Project Name: City of San Luis
West WWTP 3.0 MGD MBR Project

To: City of San Luis, Arizona

Whom it may concern:

This is to certify that all lawful claims for materials, rental of equipment and labor used in connection with the construction of the above PROJECT, whether by subcontractor or claimant in person, have been duly discharged.

The undersigned, for the consideration of $_____, as set out in the final pay estimate, as full and complete payment under the terms of the CONTRACT, hereby waives and relinquished any and all further claims or right of lien under, in connection with, or as a result of the above described PROJECT. The undersigned further agrees to indemnify and save harmless the City of San Luis, Arizona against any and all liens, claims of liens, suits, actions, damages, charges and expenses whatsoever, which said City may suffer arising out of the failure of the undersigned to pay for all labor performance and materials furnished for the performance of said installations.

Signed and dated at _____, this_____day of _____20_____.

CONTRACTOR

Signed _____ Name/Title

STATE OF ARIZONA)

) SS.

COUNTY OF _____)

THE FOREGOING INSTRUMENT WAS SUBSCRIBED AND SWORN TO BEFORE ME THIS _____DAY OF

_____, 20____.

NOTARY PUBLIC _____

MY COMMISSION EXPIRES _____

DRAFT

GENERAL CONDITIONS OF THE CONTRACT

These terms will be the General Conditions for the Contract and are incorporated therein and shall be fully binding upon the Contractor.

ARTICLE 1 - SCOPE OF THESE GENERAL CONDITIONS

These General Conditions encompass provisions that apply and are incorporated into all construction contracts entered into by the City of San Luis unless otherwise specifically excluded in the executed Contract. Sections 2 through 14 of these General Conditions apply to all construction contracts, in whatever form, including without limitation, Fixed Price, Unit Price, Construction Manager at Risk (CM@Risk), Guaranteed Maximum Price (GMP) Cost-Based, and Job Order Contracts (JOC).

ARTICLE 2 - GENERAL DEFINITIONS

2.1 The Definitions in the Invitation for Bid (IFB), the Request for Proposals (RFP), the Request for Qualifications (RFQ), and/or the JOC Solicitation (JOC) giving rise to the Contract shall apply to these General Conditions and the Contract for the Project.

2.2 **Change Order –** A written instrument issued after execution of the Contract Documents signed by City and Contractor, stating their agreement upon all of the following: the addition, deletion, or revision in the scope of services or deliverables; the amount of the adjustment to the Contract Price, the extent of the adjustment to the Contract Time, or modifications of other contract terms. Only a Change Order allows the Contract Price or the Contract Time or both to be changed.

2.3 **City –** City of San Luis, Arizona, a municipal corporation, with whom the Contractor has entered into the Contract and for whom the Services and/or Work are to be provided pursuant to the Contract(s).

2.4 **Contract -** The written agreement executed between the City and Contractor, including all of the Contract Documents**.**

2.5 **Contract Documents -** The documents which together form the Contract between City and Contractor, as identified in Article 2 of the Contract, or are otherwise incorporated into the Contract, including the Contract, the exhibits and attachments to it, these General Conditions, any Notice to Proceed, and any Job Order (if applicable), the Plans and Specifications, Project Schedule, written and properly executed Change Orders, and any other documents so designated in the Contact.

2.6 **Contract Price -** The agreed-upon price to be paid to the Contractor for full, timely, and acceptable completion of the Services or Work under the terms of the Contract.

2.7 **Contract Time(s) -** The number of days or the dates related to the Completion Milestones as stated in Contract Documents. The Contract Time is set forth in the Contract and is based upon the Project Schedule agreed to by the City in writing.

2.8 **Contractor -** The person or corporation with whom the City has entered into a contract for construction-related work or services related to the Project at issue.

DRAFT

2.9 **Contractor Payment Request** - The form that is accepted by the City and used by the Contractor in requesting progress payments or final payment and which shall include such supporting documentation as is required by the Contract Documents and/or City.

2.10 **Construction Documents** - The plans, specifications, and drawings prepared and issued by the Design Professional and approved by the City for construction, meaning the documents are sealed by the Contractor (as required), acceptable for permitting, and incorporated into the Contract by reference. All amendments and modifications to the Construction Documents must be approved in writing by the City prior to incorporation into the Contract.

2.11 **Critical Path** - The critical path is the sequence of Project network activities that add up to the longest overall duration. Once established in the Project Schedule, the Critical Path for the Project shall not be changed without prior written approval of the City.

2.12 **Day** - Calendar day(s) unless otherwise specifically stated in the Contract Documents.

2.13 **Final Acceptance** - The written notice from the City to the Contractor that Final Acceptance has occurred following the end of the Warranty Period. At month twenty-three (23) of the Warranty Period, the City and/or Engineer shall perform a Final Acceptance inspection to verify all warranty items have been addressed to the City's satisfaction. The City will then provide a written Final Acceptance notice.

2.14 **Final Completion** - Following established Substantial Completion date, Contractor must address punch list items to the City's satisfaction. The City and/or Engineer shall perform a Final Completion inspection for verification. The date when, in the opinion of the City, all items of the Work, including punch list items, have been completed to the City's satisfaction in accordance with the Contract Documents, and delivery of all Close-Out Documents required by the Contract Documents and this Contract have been received by the City. The Final Completion date is the date on which the Warranty period commences.

2.15 **Float** - The number of Days by which an activity can be delayed without lengthening the Critical Path and extending the Contract Time. Unless otherwise expressly agreed in writing, all Float belongs to City.

2.16 **MAG Specifications** – The latest edition adopted by the City of the Uniform Standard Specifications for Public Works Construction published by Maricopa Association of Governments ("MAG"), or the latest revision published by MAG.

2.17 **MAG Standard Details** – The latest edition adopted by the City of the Uniform Standard Details for Public Works Construction published by Maricopa Association of Governments ("MAG"), or the latest revision published by MAG.

2.18 **Notice to Proceed (NTP)** - A written notice given by the City to the Contractor fixing the date on which the Contractor will start to perform the Contractor's obligations under the Contract. The Notice to Proceed shall not be issued until the Contract Price is approved and accepted by the City.

2.19 **Project** – The Project specified in the Contract (including the Job Order).

2.20 **Project Manager** - The Project Manager designated in Article 1 of the Contract, or any successor Project Manager the City designates. The Project Manager has the authority to act on behalf of the City, as delineated and limited by the Contract Documents and applicable law. The City shall communicate with the Contractor through the Project Manager. However, the Project Manager has no authority to bind the City or City Council in contravention of any City code, State or Federal statute or regulation, or these General Conditions.

DRAFT

2.21 **Project Schedule** - The schedule for the completion of the Project agreed to and/or required by the City and incorporated into the Contract.

2.22 **Project Specific Provisions** - Additional conditions that apply to the specific Project and/or Scope of Work.

2.23 **Proposal** - A Proposal submitted to the City by a Contractor in response to an Invitation for Bid (IFB), Request for Qualifications (RFQ), a Request for Proposals (RFP), or other solicitation or request by the City. Bids may be Fixed Price, Guaranteed Maximum Price (GMP), Unit Price, or other form as required or requested by the City in the Bid Schedule.

2.24 **Requests for Information (RFIs)** - Formal written request from the Contractor to the City and/or Contractor for the Project seeking clarification or additional information needed for the Contractor to properly complete the Work and/or Services under the Contract. The City may require RFI's to be submitted on a specific form or in a specified format.

2.25 **Schedule of Values (SOV)** - The specified document prepared by the Contractor and approved and accepted by the City, which divides the Contract Price into pay items, such that the sum of all pay items equals the Contract Price for the construction phase Work, or for any portion of the Work having a separate specified Contract Price.

2.26 **Scope of Work** - The scope of work agreed to and/or required by the City and incorporated into the Contract as set forth in the IFB and/or an Exhibit to the Contract.

2.27 **Subconsultant** - A person, firm, or corporation having a Contract with a Consultant/Contractor to furnish services required as its independent professional associate or consultant with respect to the Project.

2.28 **Subcontractor** - An individual or firm having a direct contract with the Contractor or any other individual or firm having a contract with the aforesaid contractors at any tier, who undertakes to perform a part of the pre-construction services or construction phase Work at the site for which Contractor is responsible. Subcontractors shall be selected through the Subcontractor selection process described in the Contract Documents, if any.

2.29 **Substantial Completion** - The Work will be substantially complete within the number of calendar days after the Notice to Proceed when the Contract Times commence according to Article 6.3 of the Contract. Substantial Completion shall be the date on which the construction services for the Work, or an agreed upon portion thereof, has progressed to the point where, in the opinion of the City, as evidenced by a Certificate of Substantial Completion and/or Certificate of Occupancy, such construction services are sufficiently complete in accordance with the Contract Documents so that the Work (or specified part) can be utilized for the purposes for which it is intended, without any outstanding concurrent Work at the site, except as may be required to complete or correct Punch List items. If no such certificate is issued, Substantial Completion takes place when the construction services Work or a Construction Phase is complete and ready for final payment as evidenced by the City's written recommendation of final payment. The terms "substantially complete" and "substantially completed" as applied to all or part of the construction Work refers to Substantial Completion thereof.

2.30 **Supplier -** Any person or entity providing materials or property for the Project.

2.31 **Total Float**. The number of Days by which the pre-construction services or construction phase Work or any part of the same may be delayed without necessarily extending a pertinent Contract Time or schedule milestone in the Project Schedule.

DRAFT

2.32 **Work** - The entire completion of construction or the various separately identifiable parts thereof, required to be furnished during the construction phase. Work includes and is the result of:

2.32.1 performing or furnishing labor;

2.32.2 furnishing and incorporating materials, resources, and equipment into the construction; and

2.32.3 performing or furnishing services and documents as required by the Contract Documents for the construction phase.

2.33 **Working Days** - Days exclusive of Saturday, Sunday and City recognized legal holidays.

ARTICLE 3 - STANDARD SPECIFICATIONS AND DETAILS

3.1 The City operates under the 2016 City of San Luis Supplement to the 2015 MAG Uniform Standard Specifications for Public Works Construction.

3.2 The City also operates under the 2009 City of Yuma Construction Standard Detail Drawings.

3.3 The City also operates under the 2006 Yuma County Public Works Standards – Volume III – Storm Drainage Facilities.

3.4 The above standard specifications and details may be viewed and downloaded at the City of San Luis website: https//www.sanluisaz.gov/DocumentCenter/Index/268.

3.5 The City may require particular sections of the revisions of the MAG Specifications and Standard Details after the 2015 revision that the City adopted.

3.6 Current and Historical MAG Specifications and Standard Details may be viewed at the Maricopa Association of Governments website at https://azmag.gov/Programs/Public-Works/Specifications-and-Details.

3.7 The MAG Specifications and Standard Details and the City's amendments to them are incorporated into the Contract.

ARTICLE 4 - CONTRACTOR'S RESPONSIBILITIES FOR CONSTRUCTION SERVICES

4.1 General

4.1.1 The Contractor shall construct the Work in accordance with the Contract Documents and as outlined in the Contract Documents to the satisfaction of the City, exercising the degree of professional care, skill, diligence, quality, and judgment that a professional Contractor engaged, experienced, and specializing in the construction of facilities of similar scope, function, size, quality, complexity, and detail in urban areas throughout the United States comparable to the City would exercise at such time, under similar conditions. The Contractor shall, at all times, perform the Work in conformance with sound and generally accepted engineering principles and construction management and construction contracting practices.

4.1.2 The Contractor shall comply with, and require all Subcontractors to comply with, the Arizona Contractors' license laws, including all requirements with respect to being duly registered and licensed.

DRAFT

4.1.3 Pursuant to A.R.S. §41-4401, the Contractor warrants to the City that the Contractor and all its Subcontractors are in compliance and will comply with all Federal Immigration laws and regulations that relate to their employees and with the E-Verify Program under A.R.S. § 23-214(A). The Contractor acknowledges that a breach of this warranty by the Contractor or any of its Subcontractors is a material breach of this Contract subject to penalties up to and including termination of the Contract or any subcontract. The City retains the legal right to inspect the papers of any employee related to this statute and of the Contractor or any Subcontractor who works on this Contract to ensure compliance with this warranty. The City may conduct random verification of the Contractor's employment records and any of its Subcontractors' employment records to ensure compliance with this warranty. The City will not consider the Contractor or any of its Subcontractors in material breach of the foregoing warranty if the Contractor and its Subcontractors establish that they have complied with the employment verification provisions prescribed by 8 USCA §1324(a) and (b) of the Federal Immigration and Nationality Act and the e-verify requirements prescribed by Arizona Revised Statutes §23-214(A). The provisions of this Section must be included in any agreement the Contractor enters into with its Subcontractors who provide services under this Contract or any subcontract. "Services" are defined as furnishing labor, time, or effort in the State of Arizona by a contractor or Subcontractor. Services include construction or maintenance of any structure, building, or transportation facility or improvement to real property. Breach of this warranty shall constitute a material breach of the contract and shall subject the Contractor to penalties, including termination of the Contract at the sole discretion of the City.

4.1.4 The Contractor further understands and acknowledges the applicability of the Americans with Disabilities Act, the Immigration Reform and Control Act of 1986, and the Drug-Free Workplace Act of 1989 to the Contract. The Contractor understands and acknowledges that it must also comply with A.R.S. § 34-301, "Employment of Aliens on Public Works Prohibited," and A.R.S. § 34-302, as amended, "Residence Requirements for Employees," and A.R.S. § § 12-2701 through .12-704 "Immigration and Nationality Law Practice Act" as amended.

4.2 Contractor's Pre-Contract and Pre-Work Deliverables

4.2.1 Before beginning any Work under the Contract, the Contractor shall execute the Contract and deliver to the City the items listed in Section 4.2.2 below within seven (7) days after the award of the Contract, and the City must execute the Contract. Failure to do so will be a material breach of the Contract, entitling the City to terminate the Contract for Cause.

4.2.2 When the Contractor delivers the executed Contract to the City, the Contractor shall also deliver to the City such bonds and certificates of insurance with endorsements in such amounts (and other evidence of insurance requested by the City) required under Article 11 of these General Conditions, and as the Contract requires.

4.2.3 The Contractor shall obtain all necessary permits for the Work and pay all applicable fees unless otherwise noted on the plans and in the specifications. The City has obtained the required ADEQ Aquifer Protection Permit. The City does not require a building, grading, or encroachment permit for the WWTP scope of work. The city does require a business license.

4.2.4 Copies of all permits and the associated notices must be provided to the City prior to starting the permitted activity.

4.3 Pre-Construction Conference

4.3.1 Prior to the commencement of any Work, the City may schedule a Pre-Construction Conference.

DRAFT

4.3.2 Prior to the Pre-construction Conference, the Contractor shall provide the Project Manager with a Schedule of Values reflecting the subcontracts and other categories that will be used to submit pay applications for the Work. The total amount of the Schedule of Values shall not be greater than the Contract Price. The Schedule of Values shall be reviewed at the Pre-Construction Conference and revised in response to comments and questions from the City. Once accepted by the City in writing, the Schedule of Values for the Project will not be changed without the City's prior written approval.

4.4 Performance of the Work (Including Field Measurements, Subcontractors, and Suppliers)

4.4.1 Unless otherwise provided in the Contract Documents to be the responsibility of the City or a separate Contractor, the Contractor shall provide through itself or its Subcontractors the necessary supervision, labor, inspection, testing, start-up, material, equipment, machinery, temporary utilities, and other temporary facilities to permit Contractor to complete the Work consistent with the Contract Documents.

4.4.2 The Contractor's Superintendent shall be present at the Project site at all times that material Work under this Contract is taking place. The Contractor's Superintendent or designee shall be present at the Project site at all times any other Work under this Contract is taking place. All elements of the Work shall be under the direct supervision of a foreman or his designated representative on the Project site, who shall have the authority to take actions required to carry out that particular element of the Work properly.

4.4.3 Before ordering materials or doing work, the Contractor and each Subcontractor shall verify measurements at the Project site and shall be responsible for the correctness of such measurements. No extra charge or compensation will be allowed because of differences between the actual dimensions and the dimensions indicated on the Contract Documents, including the drawings.

4.4.4 If the Contractor observes errors, discrepancies, or omissions in the Contract Documents, it shall promptly notify the Contractor and City and request clarification. The Contractor shall be liable to the City for damages resulting from errors, inconsistencies, or omissions in the Contract Documents or for differences between field measurements or conditions in the Contract Documents. If the Contractor, with the exercise of reasonable care, should have recognized such error, inconsistency, omission, or difference and fails to report it to the City, and if the Contractor proceeds with the Work affected by such observed errors, discrepancies, or omissions, without receiving such clarifications, it does so at its own risk.

4.4.5 In all cases of interconnection of its Work with existing or other work, the Contractor shall verify at the Project site all dimensions relating to such existing or other work. Any errors due to the Contractor's failure to so verify all such grades, elevations, locations, or dimensions shall be promptly rectified by the Contractor without any increase in the Contract Price. Any design errors or omissions noted by the Contractor during this review shall be reported promptly to the City.

4.4.6 The Contractor shall be responsible for the proper performance of the Work of Subcontractors and any acts and omissions in connection with such performance. Nothing in the Contract Documents is intended or deemed to create any legal or contractual relationship between the City and any Subcontractor or Sub-Subcontractor, including but not limited to any third-party beneficiary rights.

4.4.7 The Contractor will not substitute or change any Subcontractor or Supplier without the City's prior written approval. Any substitute or replacement Subcontractor or Supplier shall be required to meet

DRAFT

the same qualifications and selection criteria and process as the original Subcontractor or supplier. If a Subcontract or Supplier selection plan has been approved by the City, the Contractor will follow that plan unless otherwise approved by the City in writing.

4.4.8 The Contractor shall not change or replace the Contractor's Project Manager or Superintendent on this Project without an explanation for the change being given to the City and receiving prior written approval of the change from the City, which approval will not be unreasonably withheld.

4.4.9 Subcontractors whose scope of work has a value greater than fifteen percent (15%) of the total Contract Price may be required to furnish performance and payment bonds to the Contractor if directed in writing by the City.

4.4.10 Owner Furnished Equipment - The OWNER has pre-purchased several items of the process equipment. One piece of equipment is onsite, and two others need to be delivered. The Contractor is responsible for planning delivery in order to meet the construction schedule. All the equipment will become the CONTRACTOR'S responsibility. The CONTRACTOR shall coordinate delivery and confirm that the shipments are complete and accurate for all equipment. Contract shall provide safe and secure storage, provide transportation from onsite storage to install location, install per the construction documents and the manufacture's requirements, and schedule manufacturer's representative for construction, installation certification, start up, operational training, etc. Specific equipment and details are noted in Article 4.10 of the Contract.

4.5 Control of the Project Site

Throughout all phases of construction, including suspension of Work, the Contractor shall keep the Project site reasonably free from debris, trash, and construction wastes to permit the Contractor to perform its construction services efficiently, safely, and without interfering with the use of adjacent land areas. Prior to the Final Acceptance of the Work, or a portion of the Work, the Contractor shall remove all debris, trash, construction wastes, materials, equipment, machinery, and tools arising from the Work or applicable portions thereof to permit the City to occupy the Project or a portion of the Project for its intended use.

4.5.1 The Contractor shall take whatever steps, procedures, or means necessary to prevent dust nuisance due to construction operations. The dust control measures shall be maintained at all times to the satisfaction of the City and in accordance with the requirements of the Yuma County dust control regulations.

4.5.2 The Contractor shall be responsible to the City for the acts and omissions of the Contractor's employees, Subcontractors and their agents and employees, and any other person performing any of the Work under a contract with Contractor, or claiming by, through, or under Contractor, for all damages, losses, costs, and expenses resulting from such acts or omissions.

4.6 Project Safety

4.6.1 The Contractor is responsible for the safety of the job site for the Contractor's employees as well as for members of the general public and others who may drive or walk through or be at the Project site.

4.6.2 The Contractor assumes responsibility for implementing and monitoring all safety precautions and programs related to the performance of the Work.

DRAFT

4.6.3 The Contractor shall provide a “competent person” as required by O.S.H.A. regulations. The “competent person” shall be identified at the Pre-Construction Conference, and the City will be advised in writing of any changes.

4.6.4 The Contractor and Subcontractors shall comply with all legal and regulatory requirements relating to safety, as well as any City-specific safety requirements set forth in the Contract Documents, provided that such City-specific requirements do not violate any applicable legal and regulatory requirements.

4.6.5 As between the City and the Contractor, the Contractor is responsible to the City for any and all the safety issues relating to the Work on the Project. The Contractor shall administer and manage the safety program. The safety program will include, but not necessarily be limited to, reviews of the safety programs of each Subcontractor. The Contractor shall monitor the establishment and execution of compliance with all applicable regulatory and advisory agency construction safety standards.

4.6.6 The Contractor shall maintain and have sole responsibility for safety on the job site.

4.7 Materials Quality, Substitutions, and Shop Drawings

4.7.1 All construction materials to be used or incorporated in the Project are subject to inspection, quality control and quality assurance testing, and approval or rejection by the City. Any material rejected by the City shall be removed immediately and replaced in an acceptable manner to the City at no additional cost to the City. When quality control and quality assurance tests indicate noncompliance with the Contract Documents, retesting shall be performed by the same testing laboratory that performed the tests that indicated noncompliance.

4.7.2 A schedule of shop drawing submissions shall be submitted with the Project Schedule for City approval that avoids bulk submissions to the extent reasonably possible. Unless otherwise noted, shop drawings will not be required for items specified or detailed in the Uniform Standard Specifications and Details or the Technical Specifications. The schedule of shop drawing submissions shall include all of the items for which shop drawings are required by the Contract Documents, including the specifications.

4.7.3 Long Lead Time Items. The Contractor shall submit shop drawings, as required by the Project Engineer, on all long lead items to be furnished and installed as part of the Project within ten (10) days after execution of the Contract. In addition, the Contractor shall order all long lead items to be furnished and installed as part of this Project within (3) days after receiving approved shop drawings. For all long lead times for which shop drawings are not required, the Contractor shall order said long lead items within fifteen (15) days after execution of the Contract. Within two (2) days after ordering long lead items, the Contractor shall supply copies of all purchase orders, along with an accurate delivery schedule from the supplier.

4.8 Project Record Documents

The Contractor shall ensure that any and all changes or modifications done as a result of field changes are accurately reflected in red-lined markings. At the completion of construction, all red lines and markings shall be compiled to aid in the creation of “as-built” plans.

4.9 Warranty and Correction of Defect Work

DRAFT

4.9.1 The Contractor warrants to the City that the construction of the Work shall be of good and workmanlike quality and completed in strict conformance with all applicable laws, rules, and regulations and the plans and specifications and all other terms and conditions of the Contract Documents, including all materials and equipment furnished as part of the construction, shall be new unless otherwise specified in the Contract Documents, of good quality, in conformance with the Contract Documents and free of defects in materials and workmanship.

4.9.2 The date of **Final Completion** shall be the beginning of the Warranty Period, regardless of early completion by some Subcontractors of their work.

4.9.3 Unless otherwise specified in the Contract Documents, the Contractor and Subcontractors shall provide to the City all of the following written warranties that apply to the Work in a form acceptable to the City.

(i) General Warranty — Two (2) years

(ii) Mechanical Contractor — Two (2) years

(iii) Plumbing Contractor — Two (2) years

(iv) Electrical Contractor — Two (2) years

(v) Caulking — One (1) year

(vi) Steel Joists, Certificate of Manufacturer

(vii) Exterior Metal Wall System — Five (5) years

(viii) Painting — One (1) year

(ix) Termite — Five (5) years

(x) Sheet Metal: Zinc coating thickness on hot-dipped galvanized Metals — One (1) year

4.9.4 Nothing in the warranties contained in the Contract Documents are intended to limit any manufacturer's warranty, which provides the City with greater warranty rights than set forth in this Section or the Contract Documents. The Contractor will provide the City with all manufacturers' warranties prior to Final Acceptance.

4.9.5 A progress payment, or partial or entire use or occupancy of the Project by the City, shall not constitute Acceptance of Work not in accordance with the Contract Documents.

4.9.6 Without limiting the foregoing or anything in these General Conditions or the Contract to the contrary, the Contractor shall obtain and provide to the City all warranties for any portion of the Project offered by the manufacturer, installer, or provider thereof. The City and the user of the facility shall have the right to the full value and benefit of all such warranties. The Contractor will ensure all such warranties are fully transferrable to facilitate the full value of this Section.

ARTICLE 5 - CITY'S RESPONSIBILITIES

5.1 **City Project Manager** The Project Manager is responsible for providing City-supplied information and approvals in a timely manner to assist the Contractor to fulfill its obligations under the Contract Documents.

DRAFT

5.2 **Contract Services** The City may contract separately with one or more contractors to provide construction administration of the Project. The Contractor's Contract, as well as other firms hired by the City, shall be furnished to the Contractor. The contractor shall not have the right to limit, restrict, or reject any Contract modifications that are mutually acceptable to the City and the Contractor.

ARTICLE 6 - CONTRACT TIME

6.1 Contract Time

6.1.1 The Contract Time shall start with the Notice to Proceed ("NTP") and end with Final Completion, as set forth in Article 6.3 below.

6.1.2 The Contract Time shall be as set forth in the Project Schedule. The Contractor agrees that it will commence the performance of the Work and complete the Project within the Contract Time.

6.1.3 Time is of the essence of this Contract, for the Project, for the Work, and for each phase and/or designated milestone of the Project.

6.2 Project Schedule

6.2.1 The Project Schedule shall be updated and maintained throughout the Contract Time.

6.2.2 The Project Schedule shall be revised as required by conditions and progress of the Work. However, such revisions shall not relieve the Contractor of its obligations to complete the Work within the Contract Time, as adjusted in accordance with the Contract Documents. No modification to the Contract Documents or the Contract Time shall be effective unless approved in advance by the City.

6.2.3 An updated Project Schedule shall be submitted monthly to the City as part of the Payment Request.

6.2.4 The Contractor shall provide the City with a monthly status report with each Project Schedule detailing the progress of the Work, including:

6.2.5 Acceptance of a submitted schedule by the City should in no way be construed as an affirmation or admission that the schedule is reasonable or workable by the Contractor. The responsibility for completing the Work on the Project within the Contract Time remains the obligation of the Contractor. The City's review shall not relieve the Contractor from compliance with the requirements of the Contract Documents or be construed as relieving the Contractor of its complete and exclusive control over the means, methods, sequences, and techniques for executing the Work.

6.2.6 Critical Path Method (CPM)

6.2.6.1 Unless otherwise specified in the Contract, the Project Schedule shall include a Critical Path Method (CPM) diagram schedule showing the sequence of activities, the interdependence of each activity, and identifying the Critical Path.

6.2.6.2 The CPM diagram schedule shall be in calendar Days and indicate duration, earliest and latest start and finish dates for all activities, and total Float Times for all activities except critical activities. The CPM diagram shall be presented in a time-scaled graphical format for the Project as a whole.

DRAFT

6.2.7 Float Time

6.2.7.1 The total Float time within the overall schedule is for the exclusive use of the City. However, the City may approve the Contractor's use of Float time as needed to meet contract milestones and the Project completion date.

6.2.7.2 The Contractor shall not be allowed to sequence, hide, or reallocate Float time through such strategies as extending activity duration estimates to consume available Float, using preferential logic, or using extensive crew or resource sequencing. No time extensions will be granted nor delay damages paid until a delay occurs which extends the Work beyond the Contract Time.

6.2.7.3 Rain-Related Delays. In preparing the Project Schedule, The Contractor is required to take into account all relevant weather conditions, including normal rainfall and distribution. No additional Compensation shall be given for any rain-related delays or impacts on the Work or the Project Schedule. The burden of documenting normal rainfall, excessive rainfall, and the impact on Critical Path activities is on the Contractor.

6.3 Final Completion and Final Acceptance

6.3.1 Unless otherwise expressly agreed to in writing by the City, Final Completion must be obtained by no later than **four hundred eighty-eight (488)** calendar days after the date of Notice to Proceed. Failure to timely obtain Final Completion will be a material breach of the Contract.

6.3.2 Upon receipt of written notice that the Work is ready for final inspection and Acceptance, the City and the Contractor will jointly inspect to verify that the remaining items of Work have been completed. There shall be no partial acceptance. Final Completion shall not occur until all items of Work, including punch list items, have been completed to the City's satisfaction as reflected in the written Final Completion notice.

6.3.3 Final Payment under Section 8.2 below shall not be due, owing, or paid by the City until the Final Completion is obtained.

6.4 Liquidated Damages

6.4.1 Liquidated Damages. The Contractor acknowledges and agrees that if the Contractor fails to obtain Final Completion of the Work within the Contract Time, the City will sustain extensive damages and serious loss as a result of such failure. The exact amount of such damages will be extremely difficult to ascertain. Therefore, the City and the Contractor agree that if Contractor fails to achieve Final Completion of the Work within the Contract Time, the City shall be entitled to retain or recover from the Contractor, as liquidated damages and not as a penalty, the applicable dollar sum amount in the Table 108-1 Schedule of Liquidated Damages in the 2016 City of San Luis Supplement to MAG Standard Specification and to City of Yuma Standard Details per calendar day, commencing from the Milestone Completion Dates required under Article 6.4 of the Contract.

6.4.2 The City may deduct liquidated damages described in this Section 6.4 from any unpaid amounts then or thereafter due Contractor under this Contract. Any liquidated damages not so deducted from any unpaid amounts due to the Contractor shall be payable to the City at the demand of the City, together with interest from the date of the demand at the highest lawful rate of interest payable by the Contractor.

DRAFT

6.4.3 Nothing herein shall be deemed to constitute a waiver of any other remedy available to the City in the event of Contractor's default under this Contract prior to the full performance of the Work, including, as applicable, specific performance or completion of the Work on behalf of Contractor, the cost and expense of which shall be offset against any monies then or thereafter due to Contractor (if any) and otherwise immediately reimbursed to City by Contractor.

ARTICLE 7 - CONTRACT PRICE

7.1 **Fixed Price Contracts** The Contract Price shall be the amount set forth in the Contract.

7.2 **City Sales Tax** The Contractor is required to pay Sales Taxes on any contracting activity done for the City, and this cost shall be included in all Contract Prices.

ARTICLE 8 - PAYMENT

8.1 Payment for Construction Services

8.1.1 Monthly progress payments for certified work and material delivered to the Project site for the preceding month shall be paid on or before fourteen (14) business days after the estimate of the Work is certified and approved. The submittal estimate shall be deemed certified and approved for payment after seven (7) days from the date of submission unless the City's Project Manager issues a written finding setting forth items not approved for payment.

8.1.2 The City shall retain ten percent (10%) of all progress payments, until **Substantial Completion** is achieved, as insurance of proper performance of the Contract or, at the option of the Contractor, a substitute security may be provided by the Contractor in an authorized form approved by the City.

8.1.3 Upon request of Contractor, and subject to the approval of the City in its sole discretion, the 10% retained by the City under this Article may be substituted for an irrevocable letter of credit issued by an approved financial institution equal to the amount that would otherwise be retained.

8.1.4 Unless the City Project Manager delivers specific written findings of deficiencies and expected cost to cure, any retention shall be paid, or substitute security shall be returned to the Contractor within sixty (60) Days after Final Completion and Acceptance of Work under the Contract. The City may withhold an amount from the progress payment sufficient to pay the expenses the City's Project Manager reasonably expects to incur in correcting the deficiency set forth in the written finding.

8.1.5 The Contractor, and all Subcontractors, shall pay to Subcontractors or material Suppliers within seven (7) days of receipt of each progress payment unless otherwise agreed in writing by the parties, the respective amounts allowed the Contractor or Subcontractor on account of the Work performed or materials delivered to the extent of each such Subcontractor's or material Supplier's interest therein. No agreement for construction may materially alter the rights of any Contractor, Subcontractor, or material Supplier to receive prompt and timely payment as provided under this Section. These monthly progress payments to Subcontractors or material Suppliers shall be passed on payments received pursuant to this Section. Any diversion by the Contractor or Subcontractor of payments received for Work performed or failure to reasonably account for the application or use of such payments constitutes grounds for disciplinary action by the Registrar of Contractors. The Subcontractor or material Supplier shall notify the Registrar of Contractors and the City in writing of any payment less than the amount or percentage approved for the class or item of work as set forth in this Section. The Subcontractor may notify the City's Project Manager in writing, requesting that the City notify the Subcontractor in writing within five (5) days from payment

DRAFT

of each progress payment made to the Contractor. The Subcontractor's request remains in effect for the duration of the Subcontractor's work on the Project.

8.1.6 Nothing in this Section 8.1 prevents the Contractor at the time of application/certification to the City from withholding application or certification to the City for payment to the Subcontractor or material Supplier for unsatisfactory job progress, defective work, or materials not remedied, disputed work or materials, third party claims filed or reasonable evidence that claim will be filed, failure of a Subcontractor to make timely payment for labor, equipment and materials, the Subcontract.

8.2 **Final Payment** Subject to all of the City's rights to withhold or offset payment and other rights under the Contract, Final Payment, including remaining retainage, shall be paid only after:

8.2.1 The Work has been fully completed (including completion of all incorrect or incomplete work items), and the City has issued the written Final Completion notice and the required Warranty Bond has been submitted to the City;

8.2.2 necessary operating manuals, any excess materials and supplies necessary for matching materials and supplies incorporated into the Work, and complete "as-built" drawings (including the Building Information Model, if required by the Contact Documents), plans, and specifications have been delivered to City;

8.2.3 full and unconditional lien waivers and releases by Contractor and any person performing labor or supplying material, machinery, fixtures, or tools for the Work have been delivered to the City;

8.2.4 all conditions and requirements imposed by the City or any financing entity for the corresponding disbursement have been met; and

8.2.5 the Contractor delivers to the City a Contractor Payment Request Form requesting Final Payment.

8.3 **The City's Right to Withhold Payment** The City may withhold payment to such extent as may be necessary in the City's opinion to protect the City from loss for which the Contractor is responsible, including, without limitation:

8.3.1 Defective Work not remedied;

8.3.2 Third-party claims filed or reasonable evidence indicating probable filing of such claims unless Contractor provides security acceptable to the City;

8.3.3 Failure of Contractor to make payments properly to Subcontractors or for labor, materials, or equipment;

8.3.4 Reasonable evidence that the Work cannot be completed for the unpaid balance of the Contract Price;

8.3.5 Damage to the City or another Contractor or any third party for which the Contractor may have an obligation under Article 12 of the General Conditions;

8.3.6 Reasonable evidence that the Work will not be completed within the Contract Time and that the unpaid balance would not be adequate to cover actual or liquidated damages for the anticipated delay; or

8.3.7 Persistent failure to carry out the Work in accordance with the Contract Documents.

DRAFT

8.4 **Joint/Direct Checks** Payments to the Contractor may be made by checks payable jointly to the Contractor and its employees, agents, Subcontractors, and Suppliers, or any of them. When in the sole opinion of the City, it is advisable, payments may be made directly to the Contractor's Subcontractors. Any amount so paid shall be deducted from the amounts owed to the Contractor under this Contract.

8.5 **Payment Not A Waiver** No payment (nor use or occupancy of the Project by the City) shall be deemed Acceptance or approval of the Work or as a waiver of any claims, rights, or remedies of the City.

8.6 **Liens and Bond Claims** The Contractor shall make all payments, in the time required, of all labor and materials furnished to the Contractor in the course of the Work and shall promptly furnish evidence of such payments as the City may require. The Contractor shall pay when due all claims arising out of the performance of the Work covered by this Contract for which a lien may be filed either against the real estate or leasehold interest of City, or against payments due from City to Contractor, or for which a claim may be made against any payment or performance bond or both. To the fullest extent permitted by law, Contractor agrees that no liens or other claims in the nature of a lien against the real estate, leasehold, or other interest of City, against payment due from City to Contractor, or against any payment or performance bond, shall be filed or made in connection with the Work by any party who has supplied professional services, labor, materials, machinery, fixtures, tools, or equipment used in or in connection with the performance of this Contract. The Contractor agrees to remove or to cause to be removed any such liens or claims in the nature of a lien or bond claim within ten (10) days upon receiving notice or obtaining actual knowledge of the existence of such liens or claims. In addition, the Contractor agrees to defend, indemnify, and hold harmless the City from and against any and all such liens and claims. This paragraph does not apply to claims and liens of Contractor due to non-payment for work performed by Contractor. The obligations under this Article 8.4 survive termination of this Contract.

8.7 Financial Record Keeping and City's Audit Right

8.7.1 Records for all Contracts between the City and the Contractor shall, upon reasonable notice, be open to inspection and subject to audit, scanning, and/or reproduction during normal business working hours. The City or its designee may conduct such audits or inspections throughout the term of this Contract and for a period of three years after Final Payment or longer if required by law.

8.7.2 The City, its authorized representative, and/or the appropriate agency reserve the right to audit the Contractor's records in compliance with local, state, or federal policies, statutes, or at the City's discretion within three (3) years of Final Acceptance of the Work.

ARTICLE 9 - CHANGES TO THE CONTRACT

9.1 Extra Work/Changes in the Work

9.1.1 The City reserves the right to make such changes in the plans and specifications for the Work as it may deem appropriate. Any such change as set forth in a written Change Order or Extra Work Order shall be deemed a part of this Contract as if originally incorporated into this Contract.

9.1.2 Not used

9.1.3 The Contractor shall not be entitled to payment for additional work unless a written Change Order or Extra Work Order, in form and content prescribed by the City, has been executed by the City prior to starting the additional work.

DRAFT

9.1.4 Any agreement that modifies the terms of the Contract (including Change Orders) shall be approved in writing by the Project Manager and approved by the San Luis City Council if necessary. Once properly executed by both Parties, these modifications to the Contract shall have the same effect as if they had been included in the original Contract.

9.2 **Accuracy of Change Order Pricing Information** Signature by the contracting Parties shall constitute full accord and satisfaction between the City and the Contractor for all costs, damages, and expenses of whatever kind of nature, including delay, impact, or acceleration damages, which may be occasioned by a Change Order or other modification of the Contract, the Parties agreed to in writing.

ARTICLE 10 - TERMINATION

10.1 Termination by the City for Cause

10.1.1 If, for any reason, the Contractor fails to fulfill in a timely and proper manner its obligations under the Contract Documents, or if the Contractor violates any of the covenants, agreements, or stipulations of this Contract, the City shall thereupon have the right to terminate the Contract by giving written notice to the Contractor of such termination and specifying the effective date of the termination. In such event, all finished or unfinished site or structural improvements, as well as all materials or equipment acquired or stored by the Contractor under this Contract, shall, at the option of the City, become the City's property. The Contractor shall be entitled to receive just and equitable compensation for any Work satisfactorily completed under this Contract.

10.1.2 Notwithstanding Section 10.1.1, the Contractor shall not be relieved of liability to the City for damages sustained by the City by virtue of any breach of this Contract by the Contractor, and the City may withhold any payments to the Contractor for the purpose of set-off until such time as the exact amount of damages due the City from the Contractor is determined.

10.2 **Termination by the City for Convenience** The City may also terminate the Contract at any time for its convenience upon seven (7) business days' written notice to the Contractor specifying the termination date. In the event of termination, which is not the fault, in whole or in part, of the Contractor, the City shall pay to the Contractor only such compensation, including reimbursable expenses, due for Work properly performed on the Project prior to the termination date. Upon any termination of the Contract, no further payments shall be due from the City to the Contractor.

10.3 **A.R.S. § 38-511 and Other Statutory Requirements** This Contract is subject to and may be terminated by the City in accordance with the conflict provisions of A.R.S. § 38-511. The Contractor certifies, to the extent permitted by law, that it is not currently engaged in and agrees that for the duration of this Contract, it will not engage in a boycott of Israel, as that term is defined in A.R.S. § 35-393. The Contractor certifies, to the extent permitted by law, that it does not currently, and agrees for the duration of this Contract, it will not use the forced labor of the ethnic Uyghurs in the People's Republic of China, nor use any goods or services produced by them, nor use any contractors, Subcontractors, or Suppliers that use them. If the Contractor becomes aware during the term of this Contract that the Contractor is not in compliance with this certification, it shall follow the notice procedures in A.R.S. § 35-393.

10.4 **Non-Appropriation** The City is a government agency that relies upon the appropriation of funds by its governing body to satisfy its obligations. If the City determines that it does not have funds to meet its obligations under the Contract, the City shall have the right to terminate the Contract without penalty on the last day of the fiscal period for which funds were legally available for the Project.

DRAFT

10.5 **Limited Liability** Under no circumstances shall the City have any liability for any costs, expenses, overhead, or profits in relation to any work not actually performed or for any future or anticipated profits, recovery, damages, expenses, or losses.

ARTICLE 11 - INSURANCE AND BONDS

11.1 Insurance Requirements

11.1.1 The Contractor shall obtain, maintain, and provide verification of insurance coverage set forth in the City's Insurance Requirements set forth on Attachment 1 of the Contract.

11.1.2 In the Contract Documents, the City may designate additional insured(s) along with the City (and their respective employees, members, representatives, agents, and affiliates) on all required insurance policies and all coverage applicable to the City under this Section 11.1 and the Insurance Requirements shall apply to such designated additional insured(s) as well.

11.1.3 Failure to maintain the insurance policies as required by this Contract or to provide evidence of renewal is a material breach of this Contract.

11.1.4 Subcontractors. The Contractor's certificate(s) of insurance and policy endorsements shall include all Subcontractors as additional insureds under its policies, or the Contractor shall furnish to the City separate certificates and endorsements for each Subcontractor. All coverages for Subcontractors shall be subject to the minimum requirements set forth in the Contract Documents, including the City Insurance Requirements.

11.2 Bonds and Other Performance Security

11.2.1 Prior to the execution of the Contract, the Contractor shall provide a Performance Bond and a Payment Bond, each in an amount equal to the full amount of the Contract Price.

11.2.2 Each such bond shall be executed by a surety company or companies holding a Certificate of Authority to transact surety business in the State of Arizona, issued by the Director of the Arizona Department of Insurance. A copy of the Certificate of Authority shall accompany the bonds.

11.2.3 The bonds shall be made payable and be acceptable to the City. The bond forms for the performance and payment bonds shall be in the forms required under A.R.S. § 34-221, et seq.

11.2.4 All bonds submitted for this Project shall be provided by a company that has been rated AM Best rating of B++6 or better for the prior four (4) quarters by the latest edition of the *Results Best's Key Rating Guide (Property/Casualty)*" published by the A.M. Best Company.

11.2.5 Personal or individual bonds are not acceptable.

11.2.6 Warranty Bond. Unless the surety issuing the Performance Bond specifically includes language that such bond covers the entire warranty period, Contractor shall provide a separate Warranty Bond for the Warranty Period. The Warranty Bond shall be in a minimum penal sum of 25% of the Contract Price.

ARTICLE 12 - INDEMNIFICATION

12.1 To the fullest extent permitted by law, the Contractor, its successors, and assigns shall defend, indemnify, and hold harmless the City and its agents, representatives, officers, elected officials, and employees from

DRAFT

all demands, proceedings, suits, actions, claims, damages, or losses relating to, arising out of, resulting from or alleged to have resulted from the performance of the Work or failure to comply with Contractor's obligations under the Contract Documents or any laws, regulations, or legal requirements. The Contractors' duty to defend, indemnify, and hold harmless the City and its agents, representatives, officers, elected officials, and employees shall arise in connection with all demands, proceedings, suits, actions, claims, workers' compensation claims, unemployment claims, damages, losses or expenses (including but not limited to attorney's fees, expert fees, court costs, and the cost of appellate proceedings) that are attributable to personal or bodily injury, sickness, disease, death or injury to, impairment or destruction of property including loss of use resulting therefrom, caused by any act or omission of Contractor, a Subcontractor, anyone directly or indirectly employed by them or anyone for whose acts they may be liable.

12.2 The Contractor shall also defend, indemnify, and hold harmless the City, any jurisdiction or agency issuing permits for any work involved in the Project and their consultants and each of their officers, officials, employees, representatives, directors, and agents from and against all losses, expenses, damages (including damages to the Work itself), attorney's fees and other costs including costs of defense, which any of them may incur with respect to the failure, neglect, or refusal of Contractor to faithfully perform the Work and all of the Work and all of Contractor's obligations under the Contract. Such costs, expenses, and damages shall include all costs, including attorney's fees, incurred by the indemnified parties in any lawsuit to which they are a party.

12.3 The indemnified party shall have the right to approve the legal counsel selected by the Contractor or the insurer of the liability, which approval shall not be unreasonably withheld.

12.4 The defense, indemnification, hold harmless provisions, and City's Liability Insurance set forth herein shall survive any termination of the Contract.

ARTICLE 13 - DISPUTE RESOLUTION

13.1 **Informal Dispute Resolution** The Parties to the Contract agree that time is of the essence in relation to the performance of the Contract and completion of the Project. Therefore, any and all disputes in relation to the Contract will initially be referred to the City Project Manager and Contractor Project Manager, as applicable to the dispute, for immediate resolution. If, after good faith efforts to reach a resolution, none is reached, any party to the dispute may submit the dispute to the Dispute Resolution Representative ("DRR") process set forth below, which is intended to be an expedited process.

13.2 Dispute Resolution Representative (DRR) Process

13.2.1 The Parties under the Contract agree that all claims and disputes in relation to the Project that are not resolved in the ordinary course of the Project ("Claim or Claims") shall, as a prerequisite to any mediation or litigation of the Claim, first be submitted for resolution between the designated Dispute Resolution Representatives of the Parties as set forth herein (the "DRR Process").

13.2.2 The DRR Process shall be initiated through the service of a DRR Notice as set forth below:

(xi) For claims by the Contractor, the DRR Process shall be initiated by the party asserting the claim serving written notice on the City setting forth in detail:

(a) the basis for the claim;

(b) the effect of the Claim upon the construction of, and/or Project Schedule for, the Project;

(c) the specific relief requested, the amount thereof, and how such was calculated;

(d) the parties involved in the Claim and how they are involved;

(e) the specific contract provisions in the Contract Documents (including, if applicable, drawings and specifications) which apply; and

(f) efforts made to date to resolve the Claim.

(xii) For claims by the City, the DRR process will be initiated by the City providing written notice to the other parties of the basis and amount of its claim, the parties involved in the Claim, and how they are involved, the provisions in the Contract Documents that apply, and the relief requested.

(xiii) The DRR Notice shall be hand-delivered and e-mailed to the other parties' designated Dispute Resolution Representatives.

13.2.3 The other parties shall respond in writing to the DRR Notice ("DRR Response") within ten (10) calendar days of receipt of the DRR Notice, setting forth those items set forth in the DRR Notice that they agree with, dispute, and/or have questions concerning. The DRR Response shall be hand-delivered and e-mailed to the other parties' Dispute Resolution Representatives.

13.2.4 The designated Dispute Resolution Representatives for the parties to the claim shall then meet as soon as possible and, in any event, within twenty (20) calendar Days of submission of the DRR Notice (regardless of whether a DRR Response has been submitted by all parties involved in the dispute), at a mutually agreed upon time and place, to attempt to resolve the Claim based upon the DRR Notice and DRR Response.

13.2.5 At any time after the first meeting required above, either party may terminate the DRR Process by written notice to the other party.

13.2.6 The parties may agree, in writing, to extend or modify the time limits or other provisions of the DRR process in relation to a specific pending Claim.

13.2.7 Unless otherwise designated in a written notice to the other parties, the Project Manager, the representatives of the Contractor, and of the Design Professional shall act as the parties' designated Dispute Resolution Representatives.

13.2.8 If a resolution of the Claim is reached, that resolution shall be set forth in writing. The resolution shall be signed by the Parties' designated Dispute Resolution Representatives. If the resolution involves a change in any Contract Documents, the Contract Price, the Project Schedule, or any other change requiring a written Change Order or Amendment, the parties shall execute an appropriate written Change Order or Amendment pursuant to the terms of the Contract Documents.

13.3 Mediation

13.3.1 Unless extended by written agreement of the parties involved in the dispute, any Claim not resolved through the DRR process set forth above within five (5) calendar days after the meeting required under 13.2.4 or after the DRR is terminated pursuant to 13.2.5 above, whichever is earlier, shall be submitted to mediation as a condition precedent to litigation by either party.

13.3.2 The mediation shall be commenced by written demand upon the other party for mediation. If the parties cannot agree upon a mediator within ten (10) calendar Days of the written demand, either

DRAFT

party may make a request to the Civil Presiding Judge of the Yuma County Superior Court to appoint a mediator. The mediation shall occur within forty (40) calendar Days of the written demand for mediation unless the parties agree, in writing, to a longer period of time.

13.3.3 The qualifications for the mediator shall be that the mediator be:

(xiv) an experienced mediator, arbitrator, or litigator of construction disputes; and

(xv) having engaged a significant portion of their time involving and/or resolving construction disputes for at least the past five (5) years.

13.3.4 Each party shall provide to the other party and the mediator all of the information and documentation required under 13.2.2 and 13.2.3 above, together with any additional information and documentation that the party believes relevant. In addition, the parties shall exchange and provide to the mediator such additional memoranda, information, and/or documentation, as the mediator may request, and in the form and at such times as the mediator may direct.

13.3.5 The parties shall share the mediator's fee and any filing fees equally. The mediation shall be held in San Luis, Arizona unless another location is mutually agreed upon. Agreements reached in mediation shall be specifically enforceable in any court having jurisdiction over the dispute.

13.4 Arbitration

13.4.1 If the mediation is unsuccessful, the parties shall submit the dispute and/or claim to be resolved through binding arbitration conducted according to the then-current Construction Industry Arbitration Rules of the American Arbitration Association ("AAA") but not administrated or conducted by the AAA. The arbitration shall be held in Yuma County, Arizona, utilizing a single arbitrator selected by the parties unless the parties agree, in writing, to an alternative arbitration procedure.

13.4.2 If: (a) the parties cannot agree on a single arbitrator within two (2) weeks of the demand for arbitration; or (b) the parties at any time prior to the arbitrator being appointed or before the arbitrator has accepted the appointment, cannot agree upon any significant aspect of the arbitration, not already addressed herein, either party may submit the Claim directly to the AAA to select the arbitrator, and thereafter the arbitration shall be administered by the AAA.

13.4.3 The arbitrator shall be an attorney with at least fifteen (15) years of experience in construction-related practice and whose practice, for at least the last five (5) years, consists of at least 50% construction law.

13.4.4 At the request of either party, the arbitration may include as parties, through joinder, consolidation, or otherwise, additional persons or entities involved in the Project, involving claims and/or disputes with common issues and/or facts. The arbitrator shall promptly rule upon any request for joinder or consolidation.

13.4.5 In relation to claims in which the amount in controversy is less than $250,000, no discovery other than the exchange of documents, designation of witnesses, and detailed disclosure of claims and defenses (including specifically a detailed basis for calculating all claims) and no more than three (3) depositions and one (1) expert per issue per side, shall be allowed, subject to disclosure of such other information as approved by the arbitrator. Otherwise, discovery shall be allowed and/or limited as decided by the arbitrator.

DRAFT

13.4.6 The prevailing party in any arbitration or court proceeding under this Contract shall be entitled to an award of its attorneys' fees, costs, and expenses (including expert witness fees) incurred.

13.4.7 A demand for arbitration shall be made within the time limits specified in the Contract Documents as applicable, and in other cases within a reasonable time after the Claim has arisen, and in no event shall it be made after the date when the applicable statute of limitations would bar institution of legal or equitable proceedings based on such Claim.

13.4.8 The Parties agree to participate as a party, by joinder and/or consolidation, in any arbitration, litigation, or other dispute resolution involving as an issue, claim, or defense, any action, inaction, or service provided under this Contract or in relation to the Project or the Work, or any defect or deficiency in the Work.

13.4.9 The party filing a notice of demand for arbitration, or a counterclaim, must assert in the demand or counterclaim all Claims then known to that party on which arbitration is permitted to be demanded.

13.4.10 Any award by the arbitrator shall not include any consequential or punitive damages.

13.4.11 The award entered by the arbitrator shall be a reasoned award.

13.4.12 The award entered by the arbitrator shall be final, and judgment may be entered upon the award in the Arizona Superior Court.

ARTICLE 14 - MISCELLANEOUS PROVISIONS

14.1 **Assignment** Neither the Contractor nor the City shall, without the written consent of the other, assign, transfer, or sublet any portion of this Contract or part of the Work or the obligations required by the Contract Documents. Any such assignment will be void, will transfer no rights to the purported assignee, and would be a material breach of the Contract.

14.2 **Governing Law and Venue.** In the performance of the Contract, Contractor shall abide by and conform to any and all laws of the United States, State of Arizona, Yuma County, and the City, including but not limited to federal and state executive orders providing for equal opportunities, the Federal Occupational Safety and Health Act and any other federal, state, county, or local laws applicable to the Contract. This Contract shall be governed by and construed in accordance with the substantive and procedural laws of the State of Arizona, including choice of law and conflict of laws and principles. Exclusive jurisdiction and venue for any action brought to enforce or construe any provision of this Contract shall be proper in the Superior Court of Yuma County, Arizona. Both Parties consent to jurisdiction and venue in such court for such purposes. The Party prevailing in any such action or other proceeding to resolve a dispute shall be paid all reasonable costs, reasonable expert services fees, and reasonable attorney's fees by the other Party. In the event any judgment is secured by said prevailing Party, all such costs, expert fees, and attorney's fees shall be included in the judgment, such fees to be set by the court and not by jury.

14.3 **San Luis Business License** The Contractor shall obtain a San Luis Business License before commencing Work.

14.4 **Survival** All warranties, representations, and indemnifications by Contractor shall survive the completion or termination of this Contract.

14.5 **No Waiver** The failure of either Party to enforce any of the provisions of the Contract Documents or to require the performance of the other Party of any of the provisions under this Contract shall not be construed to be a waiver of such provisions, nor shall it affect the validity of the Contract Documents or any

DRAFT

part them, or the right of either Party to thereafter enforce each and every provision. Unless otherwise specifically agreed to in writing by both Parties, any consent to delay in the Contractor's performance of its obligation is applicable only to the particular transaction to which it relates and is not applicable to any other obligation or transaction.

14.6 Project Communications

14.6.1 All communications concerning the performance of the Work or the Project shall be provided to the designated Project Manager and Contractor's Representative set forth in Article 1 of the Contract.

14.6.2 Project communications may be exchanged by e-mail upon the written agreement of the Project Manager and Contractor Representative. However, e-mail communications are not binding upon the City. E-mail communications cannot change the terms of the Contract or the scope of work or effectuate any change that requires a written change order. The use of e-mails is for information only, and e-mails will have no legal or binding effect.

14.7 **Independent Contractor** The parties intend that this Contract will create an independent contractor relationship and not an employer-employee relationship. The City is interested only in the results to be achieved, and the conduct and control of the performance of the services contemplated under this Contract will be solely with the Contractor. Contractor's employees, agents, and Subcontractors shall not be considered to be employees or agents of the City for any purpose. They shall not be entitled to any of the benefits the City provides for its employees. The Contractor shall furnish at its own expense all materials and equipment necessary to carry out the terms of this Contract.

14.8 **No Partnership** Nothing in this Contract constitutes a partnership, joint venture or similar arrangement between the Parties. Neither Party is the principal or agent of the other.

14.9 **No Third-Party Beneficiaries** There are no third-party beneficiaries to this Contract and no person or entity, not a Party, shall have any right or cause of action under this Contract.

14.10 ***Force Majeure*** If the Contractor or the City or both are prevented or materially restricted from performing any of their obligations under this Contract by an event of *force majeure*, then the obligations of each Party shall be suspended or reduced to the extent made necessary by the event. As used in this section, "*force majeure*" means any act or cause not reasonably within the control of the Party whose ability to perform is impaired and which that Party could not have prevented by the exercise of reasonable diligence. *Force majeure* events include but are not limited to natural disasters, fire, flood, explosions, strikes (or labor disputes) over which the affected Party has no control, sabotage, riots, civil commotion, acts of civil or military authority, wars, public health emergencies, or material changes in applicable business laws (including but not limited to through statutes, regulations, executive orders, or. emergency declarations and proclamations).

14.11 **Notices** The notices under this Contract shall be validly given and fully received when in compliance with all of the following:

- In writing,
- Delivered or refused delivery,
- By personal delivery, or by major commercial delivery courier service which requires a signature of the recipient, or by registered or certified United States Postal Service mail, return receipt requested with the signature of the recipient, postage prepaid to the addresses in the first paragraph of this Contract.

DRAFT

14.11.1 Either Party may designate in writing and deliver notice of a different address in the same way as above. Any such change of address notice shall be delivered at least ten (10) Days before the date on which the change is to become effective.

14.11.2 Notices for delivery to the City shall be to the attention of the Public Works Director, copies to the City Manager, City Attorney, and City Clerk.

14.12 **Severability** If any terms, parts, or provisions of this Contract are for any reason invalid or unenforceable, the remaining terms, parts, or provisions are nevertheless valid and enforceable.

14.13 **Entire Agreement** This Contract (including the incorporated documents) contains the entire agreement between the Parties, and no oral or written statement, promise, or inducement made by either Party or its agents not contained or specifically referred to in this Contract is valid or binding. All modifications to this Contract must be in writing, signed, and endorsed by the Parties.

14.14 **Headings** The headings of this Contract are solely for the convenience of the Parties and shall not be used to explain, modify, simplify, or aid in the interpretation of the provisions of this Contract.

14.15 **Further Acts** Each of the Parties shall execute and deliver all such documents and perform all such acts as reasonably necessary, from time to time, to carry out the matters contemplated by this Contract.

DRAFT

Katie Hobbs, Governor
Chuck Podolak, Director

Contract Packet

Governmental

DRAFT

Includes:

1. Contract Packet
2. AIS Sample Certification Letters
3. AIS and De Minimis Worksheet
4. Project Wage Rate Worksheet
5. Request for Authorization of Additional Classification and Rate (Wage Determination Request) form (SF1444) and instructions
6. Davis-Bacon poster (WH-1321) – English and Spanish versions
7. Payroll certification form (WH-347)
8. Employee Interview form and instructions

A digital version of this packet is available for download at: https://www.azwifa.gov/contract-packet/

Water Infrastructure Finance Authority of Arizona
Clean Water Revolving Fund
Drinking Water Revolving Fund

CONTRACT PACKET for Governmental Borrowers

This packet lists required contract conditions that apply to all Clean Water and Drinking Water Revolving Fund projects and contains forms that must be used in the procurement process. Please review this packet prior to bidding.

PLEASE NOTE

- **This packet, in its entirety, must be physically included in all bidding, solicitation and contract documents.**
- Use of American Iron and Steel (AIS) applies to this project.:
    - AIS includes the following products made primarily of iron or steel: lined or unlined pipes and fittings, manhole covers and other municipal castings, hydrants, tanks, flanges, pipe clamps and restraints, valves, structural steel, reinforced precast concrete, and construction materials.
- Federal Davis-Bacon prevailing wages apply to this project.
    - Payment of the wages, fringe benefits and overtime rates is required.
    - The appropriate Federal (Davis-Bacon) Prevailing Wage Decision must be physically incorporated into the bidding and contract documents.
    - The construction category of Heavy (excluding dam construction) should typically be applied to all projects funded by WIFA. If you believe that a different category of wages, such as Building, should be applied to your project or portions of your project, please contact WIFA in advance.
    - Weekly certified payroll submittal is required under the Federal Davis-Bacon laws.
- Compliance with the Civil Rights Act and Equal Employment Opportunity is required.
- Promotion of Small, Minority and Women-owned Businesses and participation in EPA's Disadvantaged Business Enterprise (DBE) Program is required.
- Prohibition on Certain Telecommunication and Video Surveillance Services or Equipment.

DRAFT

Water Infrastructure Finance Authority of Arizona
Clean Water Revolving Fund
Drinking Water Revolving Fund

Required Contract Conditions

This project is being financed in whole or in part by the Water Infrastructure Finance Authority of Arizona through the Clean Water or Drinking Water Revolving Fund. The loan recipient is required to comply with the following federal and state laws, rules and regulations and must ensure that their contractor(s) also comply(ies) with these regulations, laws and rules.

1. (i) Title VI of the Civil Rights Act of 1964 (Pub. L. 88-352, 42 U.S.C. Sec. 2000d), (ii) the Rehabilitation Act of 1973 (Pub. L. 93-1123, 87 Stat. 355, 29 U.S.C. Sec. 794), (iii) the Age Discrimination Act of 1975 (Pub. L. 94-135 Sec. 303, 89 Stat. 713, 728, 42 U.S.C. Sec. 6102), (iv) Section 13 of the Federal Water Pollution Control Act (Pub. L. 92-500, 33 U.S.C. Sec. 1251), and subsequent regulations, ensures access to facilities or programs regardless of race, color, national origin, sex, age or handicap.

2. Equal Employment Opportunity (Executive Order 11246, as amended by Executive Orders 11375 and 12086 and subsequent regulations). Prohibits employment discrimination on the basis of race, color, religion, sex or national origin. Inclusion of the seven clauses in Section 202 of Executive Order 11246 as amended by Executive Orders 11375 and 12086 are required in all project related contracts and subcontracts over $10,000.

3. (i) Promoting the use of Small, Minority, and Women-owned Businesses (Executive Orders 11625, 12138 and 12432), (ii) Small Businesses Reauthorization & Amendment Act of 1988 (Section 129 of Pub. L. 100-590), (iii) Department of Veterans Affairs and Housing and Urban Development, and Independent Agencies Appropriations Act, 1993 (Pub. L. 102-389, 42 U.S.C. Sec. 437d), and (iv) Title X of the Clean Air Acts Amendments of 1990 (Pub. L. 101-549, 42 U.S.C. Sec. 7601 note) ("EPA's 10% statute"). Encourages recipients to award construction, supply and professional service contracts to minority and women's business enterprises (MBE/WBE) and small businesses and requires recipients to utilize affirmative steps in procurement.

4. Participation by Disadvantaged Business Enterprises in Procurement under Environmental Protection Agency (EPA) Financial Assistance Agreements (40 C.F.R. Part 33).

5. Debarment and Suspension (Executive Order 12549). Prohibits entering into contracts or sub-contracts with individuals or businesses who are debarred or suspended. Borrowers are required to check the status of all contractors (construction and professional services) and must require contractors to check the status of subcontractors for contracts expected to be equal to or over $25,000 via this Internet address: https://www.sam.gov/SAM/.

DRAFT

6. E-Verify (A.R.S. § 41-4401). A governmental entity shall not award a contract to any contractor or subcontractor that fails to comply with A.R.S. § 23-214(A). Every government entity shall (i) ensure that every government entity contractor and subcontractor complies with the federal immigration laws and regulations that relate to their employees and A.R.S. § 23-214(A); (ii) require that every government entity contract include the required provisions listed under A.R.S. § 41-4401(A); and (iii) establish procedures to conduct random verification of the employment records of government entity contractors and subcontractors.

DRAFT

Water Infrastructure Finance Authority of Arizona
Clean Water Revolving Fund
Drinking Water Revolving Fund

Use of American Iron and Steel

Public Law 113-76, enacted January 17, 2014

SEC. 436. (a)(1) None of the funds made available by a State water pollution control revolving fund as authorized by title VI of the Federal Water Pollution Control Act (33 U.S.C. 1381 et seq.) or made available by a drinking water treatment revolving loan fund as authorized by section 1452 of the Safe Drinking Water Act (42 U.S.C. 300j–12) shall be used for a project for the construction, alteration, maintenance, or repair of a public water system or treatment works unless all of the iron and steel products used in the project are produced in the United States.

(2) In this section, the term ''iron and steel products'' means the following products made primarily of iron or steel: lined or unlined pipes and fittings, manhole covers and other municipal castings, hydrants, tanks, flanges, pipe clamps and restraints, valves, structural steel, reinforced precast concrete, and construction materials.

(b) Subsection (a) shall not apply in any case or category of cases in which the Administrator of the Environmental Protection Agency (in this section referred to as the ''Administrator'') finds that—

(1) applying subsection (a) would be inconsistent with the public interest;

(2) iron and steel products are not produced in the United States in sufficient and reasonably available quantities and of a satisfactory quality; or

(3) inclusion of iron and steel products produced in the United States will increase the cost of the overall project by more than 25 percent.

(c) If the Administrator receives a request for a waiver under this section, the Administrator shall make available to the public on an informal basis a copy of the request and information available to the Administrator concerning the request, and shall allow for informal public input on the request for at least 15 days prior to making a finding based on the request. The Administrator shall make the request and accompanying information available by electronic means, including on the official public Internet Web site of the Environmental Protection Agency.

(d) This section shall be applied in a manner consistent with United States obligations under international agreements.

(e) The Administrator may retain up to 0.25 percent of the funds appropriated in this Act for the Clean and Drinking Water State Revolving Funds (CWSRF and DWSRF) for carrying out the provisions described in subsection (a)(1) for management and oversight of the requirements of this section.

(f) This section does not apply with respect to a project if a State agency approves the engineering plans and specifications for the project, in that agency's capacity to approve such plans and specifications prior to a project requesting bids, prior to the date of the enactment of this Act.

DRAFT

Highlights from EPA Guidance on Use of American Iron and Steel

Complete document available at http://water.epa.gov/grants_funding/aisrequirement.cfm

What is considered American Iron and Steel?

What is an iron or steel product?

For purposes of the CWSRF and DWSRF projects that must comply with the AIS requirement, an iron or steel product is one of the following made primarily of iron or steel that is permanently incorporated into the public water system or treatment works: lined or unlined pipes and fittings, manhole covers and other municipal castings, hydrants, tanks, flanges, pipe clamps and restraints, valves, structural steel, reinforced precast concrete, and construction materials.

What is a 'construction material' for purposes of the AIS requirement?

Construction materials are those articles, materials, or supplies made primarily of iron and steel, that are permanently incorporated into the project, not including mechanical and/or electrical components, equipment and systems. Some of these products may overlap with what is also considered "structural steel". This includes, but is not limited to, the following products: wire rod, bar, angles, concrete reinforcing bar, wire, wire cloth, wire rope and cables, tubing, framing, joists, trusses, fasteners (i.e., nuts and bolts), welding rods, decking, grating, railings, stairs, access ramps, fire escapes, ladders, wall panels, dome structures, roofing, ductwork, surface drains, cable hanging systems, manhole steps, fencing and fence tubing, guardrails, doors, and stationary screens.

What is NOT considered American Iron and Steel?

What is NOT considered a 'construction material' for purposes of the AIS requirement?

Mechanical and electrical components, equipment and systems are NOT considered construction materials. Mechanical equipment is typically that which has motorized parts and/or is powered by a motor. Electrical equipment is typically any machine powered by electricity and includes components that are part of the electrical distribution system. The following examples (including their appurtenances necessary for their intended use and operation) are NOT considered construction materials: pumps, motors, gear reducers, drives (including variable frequency drives (VFDs)), electric/pneumatic/manual accessories used to operate valves (such as electric valve actuators), mixers, gates, motorized screens (such as traveling screens), blowers/aeration equipment, compressors, meters, sensors, controls and switches, supervisory control and data acquisition (SCADA), membrane bioreactor systems, membrane filtration systems, filters, clarifiers and clarifier mechanisms, rakes, grinders, disinfection systems, presses (including belt presses), conveyors, cranes, HVAC (excluding ductwork), water heaters, heat exchangers, generators, cabinetry and housings (such as electrical boxes/enclosures), lighting fixtures, electrical conduit, emergency life systems, metal office furniture, shelving, laboratory equipment, analytical instrumentation, and dewatering equipment.

DRAFT

Water Infrastructure Finance Authority of Arizona
Clean Water Revolving Fund
Drinking Water Revolving Fund

Use of American Iron and Steel - De Minimis Waiver

Every water infrastructure project involves the use of thousands of miscellaneous, generally low-cost components that are essential for, but incidental to, the construction and are incorporated into the physical structure of the project. For many of these incidental components, the country of manufacture and the availability of alternatives is not always readily or reasonably identifiable prior to procurement in the normal course of business; for other incidental components, the county of manufacture may be known but the miscellaneous character in conjunction with the low cost, individually and (in total) as typically procured in bulk, mark them as properly incidental.

Examples of incidental components could include small washers, screws, fasteners (i.e., nuts and bolts), miscellaneous wire, corner bead, ancillary tube, etc.

Example of items that are clearly not incidental include significant process fittings (i.e., tees, elbows, flanges, and brackets), distribution system fittings and valves, force main valves, pipes for sewer collection and/or water distribution, treatment and storage tanks, large structural support structures, etc.

EPA has established a public interest waiver for de minimis incidental components. This action permits the use of products when they occur in de minimis incidental components of such projects.

- Funds used for such de minimis incidental components cumulatively may comprise no more than a total of 5% of the total cost of the materials used in and incorporated into a project.
- The cost of an individual item may not exceed 1% of the total cost of the materials used in and incorporated into a project.

Assistance recipients who wish to use this waiver should in consultation with their contractors determine the items to be covered by this waiver and must retain relevant documentation (i.e., invoices) as to those items in their project files.

DRAFT

Water Infrastructure Finance Authority of Arizona
Clean Water Revolving Fund
Drinking Water Revolving Fund

Davis-Bacon Contract Conditions (Federal Prevailing Wages)

PLEASE NOTE: Federal Davis-Bacon prevailing wages apply to this project. Payment of the wages, fringe benefits and overtime rates is required.

The "subrecipient" referred to throughout the Davis-Bacon contract conditions is the WIFA Borrower.

"WIFA" is the Water Infrastructure Finance Authority of Arizona, State Capitalization Grant recipient, recipient, or the Authority.

DRAFT

Wage Rate Requirements
(Also referred to as Attachment 6)

Preamble

With respect to the Clean Water and Drinking Water State Revolving Funds, EPA provides capitalization grants to each State which in turn provides subgrants or loans to eligible entities within the State. Although EPA and the State remain responsible for ensuring subrecipients' compliance with the wage rate requirements set forth herein, those subrecipients shall have the primary responsibility to maintain payroll records as described in Section 3(3)(ii)(A) below and for compliance as described in Section 5.

Requirements for Subrecipients That Are Governmental Entities:
The following terms and conditions specify how recipients will assist EPA in meeting its Davis-Bacon (DB) responsibilities with respect to State recipients and subrecipients that are governmental entities. If a subrecipient has questions regarding when DB applies, obtaining the correct DB wage determinations, DB provisions, or compliance monitoring, it may contact the State recipient. If a State recipient needs guidance, the recipient will contact EPA. The recipient or subrecipient may also obtain additional guidance from DOL's web site at https://www.dol.gov/agencies/whd/government-contracts/construction.

1. Applicability of the Davis-Bacon prevailing wage requirements.
Davis-Bacon prevailing wage requirements apply to the construction, alteration, and repair of treatment works carried out in whole or in part with assistance made available by a Clean Water Revolving Fund and to any construction project carried out in whole or in part by assistance made available by a Drinking Water Revolving Fund. If a subrecipient encounters a unique situation at a site that presents uncertainties regarding DB applicability, the subrecipient must discuss the situation with the State recipient before authorizing work on that site.

2. Obtaining Wage Determinations.

(a) Subrecipients shall obtain the wage determination for the locality in which a covered activity subject to DB will take place prior to issuing requests for bids, proposals, quotes or other methods for soliciting contracts (solicitation) for activities subject to DB. These wage determinations shall be incorporated into solicitations and any subsequent contracts. Prime contracts must contain a provision requiring that subcontractors follow the wage determination incorporated into the prime contract.

(i) While the solicitation remains open, the subrecipient shall monitor https://beta.sam.gov/ weekly to ensure that the wage determination contained in the solicitation remains current. The subrecipient shall amend the solicitation if DOL issues a modification more than 10 days prior to the closing date (i.e. bid opening) for the solicitation. If DOL modifies or supersedes the applicable wage determination 10 days or less prior to the closing date, the subrecipient may request a finding from the State recipient that there is not a reasonable time to notify interested contractors of the modification of the wage determination. The State recipient will provide a report of its findings to the subrecipient.

(ii) If the subrecipient does not award the contract within 90 days of the closure of the solicitation, any modifications or supersedes DOL makes to the wage

determination contained in the solicitation shall be effective unless the State recipient, at the request of the subrecipient, obtains an extension of the 90 day period from DOL pursuant to 29 CFR 1.6(c)(3)(iv). The subrecipient shall monitor https://beta.sam.gov/ on a weekly basis if it does not award the contract within 90 days of closure of the solicitation to ensure that wage determinations contained in the solicitation remain current.

(b) If the subrecipient carries out activity subject to DB by issuing a task order, work assignment or similar instrument to an existing contractor (ordering instrument) rather than by publishing a solicitation, the subrecipient shall insert the appropriate DOL wage determination from https://beta.sam.gov/ into the ordering instrument. Typically, the appropriate wage determination would be the one in effect on the date the task order, work assignment or similar instrument is awarded.

(c) Subrecipients shall review all subcontracts subject to DB entered into by prime contractors to verify that the prime contractor has required its subcontractors to include the applicable wage determinations.

(d) As provided in 29 CFR 1.6(f), DOL may issue a revised wage determination applicable to a subrecipient's contract after the award of a contract or the issuance of an ordering instrument if DOL determines that the subrecipient has failed to incorporate a wage determination or has used a wage determination that clearly does not apply to the contract or ordering instrument. If this occurs, the subrecipient shall either terminate the contract or ordering instrument and issue a revised solicitation or ordering instrument or incorporate DOL's wage determination retroactive to the beginning of the contract or ordering instrument by change order. The subrecipient's contractor must be compensated for any increases in wages resulting from the use of DOL's revised wage determination.

3. Contract and Subcontract provisions.

The recipient shall insure that the subrecipient(s) shall insert in full in any contract in excess of $2,000 which is entered into for the actual construction, alteration and/or repair, including painting and decorating, of a treatment work under the CWSRF or a construction project under the DWSRF financed in whole or in part from Federal funds or in accordance with guarantees of a Federal agency or financed from funds obtained by pledge of any contract of a Federal agency to make a loan, grant or annual contribution (except where a different meaning is expressly indicated), and which is subject to the labor standards provisions of any of the acts listed in 29 CFR § 5.1, the following clauses:

(1) Minimum wages.

(i) All laborers and mechanics employed or working upon the site of the work will be paid unconditionally and not less often than once a week, and without subsequent deduction or rebate on any account (except such payroll deductions as are permitted by regulations issued by the Secretary of Labor under the Copeland Act (29 CFR part 3)), the full amount of wages and bona fide fringe benefits (or cash equivalents thereof) due at time of payment computed at rates not less than those contained in the wage determination of the Secretary of Labor which is attached hereto and made a part hereof, regardless of any contractual relationship which may be alleged to exist between the contractor and such laborers and mechanics.

DRAFT

Contributions made or costs reasonably anticipated for bona fide fringe benefits under section 1(b)(2) of the Davis-Bacon Act on behalf of laborers or mechanics are considered wages paid to such laborers or mechanics, subject to the provisions of paragraph (a)(1)(iv) of this section; also, regular contributions made or costs incurred for more than a weekly period (but not less often than quarterly) under plans, funds, or programs which cover the particular weekly period, are deemed to be constructively made or incurred during such weekly period. Such laborers and mechanics shall be paid the appropriate wage rate and fringe benefits on the wage determination for the classification of work actually performed, without regard to skill, except as provided in 29 CFR § 5.5(a)(4). Laborers or mechanics performing work in more than one classification may be compensated at the rate specified for each classification for the time actually worked therein: provided that the employer's payroll records accurately set forth the time spent in each classification in which work is performed. The wage determination (including any additional classification and wage rates conformed under paragraph (a)(1)(ii) of this section) and the Davis-Bacon poster (WH-1321) shall be posted at all times by the contractor and its subcontractors at the site of the work in a prominent and accessible place where it can be easily seen by the workers.

Subrecipients may obtain wage determinations from the U.S. Department of Labor's web site, https://beta.sam.gov/.

(ii)(A) The subrecipient(s), on behalf of EPA, shall require that any class of laborers or mechanics, including helpers, which is not listed in the wage determination and which is to be employed under the contract shall be classified in conformance with the wage determination. The State award official shall approve a request for an additional classification and wage rate and fringe benefits therefore only when the following criteria have been met:

(1) The work to be performed by the classification requested is not performed by a classification in the wage determination; and

(2) The classification is utilized in the area by the construction industry; and

(3) The proposed wage rate, including any bona fide fringe benefits, bears a reasonable relationship to the wage rates contained in the wage determination.

(B) If the contractor and the laborers and mechanics to be employed in the classification (if known), or their representatives, and the subrecipient(s) agree on the classification and wage rate (including the amount designated for fringe benefits where appropriate), documentation of the action taken and the request, including the local wage determination shall be sent by the subrecipient(s) to the State award official. The State award official will transmit the request, to the Administrator of the Wage and Hour Division, Employment Standards Administration, U.S. Department of Labor, Washington, DC 20210 and to the EPA DB Regional Coordinator concurrently. The Administrator, or an authorized representative, will approve, modify, or disapprove every additional classification request within 30 days of receipt and so advise the State award official or will notify the State award official within the 30-day period that additional time is necessary.

(C) In the event the contractor, the laborers or mechanics to be employed in the classification or their representatives, and the subrecipient(s) do not agree on the proposed classification and wage rate (including the amount designated for fringe benefits, where appropriate), the award official shall refer the request and the local wage determination, including the views of

DRAFT

all interested parties and the recommendation of the State award official, to the Administrator for determination. The request shall be sent to the EPA DB Regional Coordinator concurrently. The Administrator, or an authorized representative, will issue a determination within 30 days of receipt of the request and so advise the contracting officer or will notify the contracting officer within the 30-day period that additional time is necessary.

(D) The wage rate (including fringe benefits where appropriate) determined pursuant to paragraphs (a)(1)(ii)(B) or (C) of this section, shall be paid to all workers performing work in the classification under this contract from the first day on which work is performed in the classification.

(iii) Whenever the minimum wage rate prescribed in the contract for a class of laborers or mechanics includes a fringe benefit which is not expressed as an hourly rate, the contractor shall either pay the benefit as stated in the wage determination or shall pay another bona fide fringe benefit or an hourly cash equivalent thereof.

(iv) If the contractor does not make payments to a trustee or other third person, the contractor may consider as part of the wages of any laborer or mechanic the amount of any costs reasonably anticipated in providing bona fide fringe benefits under a plan or program, provided that the Secretary of Labor has found, upon the written request of the contractor, that the applicable standards of the Davis-Bacon Act have been met. The Secretary of Labor may require the contractor to set aside in a separate account assets for the meeting of obligations under the plan or program.

(2) Withholding. The subrecipient(s), shall upon written request of the EPA Award Official or an authorized representative of the Department of Labor, withhold or cause to be withheld from the contractor under this contract or any other Federal contract with the same prime contractor, or any other federally-assisted contract subject to Davis-Bacon prevailing wage requirements, which is held by the same prime contractor, so much of the accrued payments or advances as may be considered necessary to pay laborers and mechanics, including apprentices, trainees, and helpers, employed by the contractor or any subcontractor the full amount of wages required by the contract. In the event of failure to pay any laborer or mechanic, including any apprentice, trainee, or helper, employed or working on the site of the work, all or part of the wages required by the contract, the recipient may, after written notice to the contractor, sponsor, applicant, or owner, take such action as may be necessary to cause the suspension of any further payment, advance, or guarantee of funds until such violations have ceased.

(3) Payrolls and basic records.

(i) Payrolls and basic records relating thereto shall be maintained by the contractor during the course of the work and preserved for a period of three years thereafter for all laborers and mechanics working at the site of the work. Such records shall contain the name, address, and social security number of each such worker, his or her correct classification, hourly rates of wages paid (including rates of contributions or costs anticipated for bona fide fringe benefits or cash equivalents thereof of the types described in section 1(b)(2)(B) of the Davis-Bacon Act), daily and weekly number of hours worked, deductions made and actual wages paid. Whenever the Secretary of Labor has found under 29 CFR 5.5(a)(1)(iv) that the wages of any laborer or mechanic include the amount of any costs reasonably anticipated in providing benefits under a plan or program described in section 1(b)(2)(B) of the Davis-Bacon Act, the

DRAFT

contractor shall maintain records which show that the commitment to provide such benefits is enforceable, that the plan or program is financially responsible, and that the plan or program has been communicated in writing to the laborers or mechanics affected, and records which show the costs anticipated or the actual cost incurred in providing such benefits. Contractors employing apprentices or trainees under approved programs shall maintain written evidence of the registration of apprenticeship programs and certification of trainee programs, the registration of the apprentices and trainees, and the ratios and wage rates prescribed in the applicable programs.

(ii)(A) The contractor shall submit weekly, for each week in which any contract work is performed, a copy of all payrolls to the subrecipient, that is, the entity that receives the sub-grant or loan from the State capitalization grant recipient. Such documentation shall be available on request of the State recipient or EPA. As to each payroll copy received, the subrecipient shall provide written confirmation in a form satisfactory to the State indicating whether or not the project is in compliance with the requirements of 29 CFR 5.5(a)(1) based on the most recent payroll copies for the specified week. The payrolls shall set out accurately and completely all of the information required to be maintained under 29 CFR 5.5(a)(3)(i), except that full social security numbers and home addresses shall not be included on the weekly payrolls. Instead the payrolls shall only need to include an individually identifying number for each employee (e.g., the last four digits of the employee's social security number). The required weekly payroll information may be submitted in any form desired. Optional Form WH-347 is available for this purpose from the Wage and Hour Division Web site at www.dol.gov/whd/forms/wh347instr.htm or its successor site. The prime contractor is responsible for the submission of copies of payrolls by all subcontractors. Contractors and subcontractors shall maintain the full social security number and current address of each covered worker, and shall provide them upon request to the subrecipient(s) for transmission to the State or EPA if requested by EPA, the State, the contractor, or the Wage and Hour Division of the Department of Labor for purposes of an investigation or audit of compliance with prevailing wage requirements. It is not a violation of this section for a prime contractor to require a subcontractor to provide addresses and social security numbers to the prime contractor for its own records, without weekly submission to the subrecipient(s).

(B) Each payroll submitted shall be accompanied by a "Statement of Compliance," signed by the contractor or subcontractor or his or her agent who pays or supervises the payment of the persons employed under the contract and shall certify the following:

(1) That the payroll for the payroll period contains the information required to be provided under § 5.5 (a)(3)(ii) of Regulations, 29 CFR part 5, the appropriate information is being maintained under § 5.5 (a)(3)(i) of Regulations, 29 CFR part 5, and that such information is correct and complete;

(2) That each laborer or mechanic (including each helper, apprentice, and trainee) employed on the contract during the payroll period has been paid the full weekly wages earned, without rebate, either directly or indirectly, and that no deductions have been made either directly or indirectly from the full wages earned, other than permissible deductions as set forth in Regulations, 29 CFR part 3;

(3) That each laborer or mechanic has been paid not less than the applicable wage rates and fringe benefits or cash equivalents for the classification of work performed, as specified in the applicable wage determination incorporated into the contract.

DRAFT

(C) The weekly submission of a properly executed certification set forth on the reverse side of Optional Form WH-347 shall satisfy the requirement for submission of the "Statement of Compliance" required by paragraph (a)(3)(ii)(B) of this section.

(D) The falsification of any of the above certifications may subject the contractor or subcontractor to civil or criminal prosecution under section 1001 of title 18 and section 231 of title 31 of the United States Code.

(iii) The contractor or subcontractor shall make the records required under paragraph (a)(3)(i) of this section available for inspection, copying, or transcription by authorized representatives of the State, EPA or the Department of Labor, and shall permit such representatives to interview employees during working hours on the job. If the contractor or subcontractor fails to submit the required records or to make them available, the Federal agency or State may, after written notice to the contractor, sponsor, applicant, or owner, take such action as may be necessary to cause the suspension of any further payment, advance, or guarantee of funds. Furthermore, failure to submit the required records upon request or to make such records available may be grounds for debarment action pursuant to 29 CFR 5.12.

(4) Apprentices and trainees -

(i) Apprentices. Apprentices will be permitted to work at less than the predetermined rate for the work they performed when they are employed pursuant to and individually registered in a bona fide apprenticeship program registered with the U.S. Department of Labor, Employment and Training Administration, Office of Apprenticeship Training, Employer and Labor Services, or with a State Apprenticeship Agency recognized by the Office, or if a person is employed in his or her first 90 days of probationary employment as an apprentice in such an apprenticeship program, who is not individually registered in the program, but who has been certified by the Office of Apprenticeship Training, Employer and Labor Services or a State Apprenticeship Agency (where appropriate) to be eligible for probationary employment as an apprentice. The allowable ratio of apprentices to journeymen on the job site in any craft classification shall not be greater than the ratio permitted to the contractor as to the entire work force under the registered program. Any worker listed on a payroll at an apprentice wage rate, who is not registered or otherwise employed as stated above, shall be paid not less than the applicable wage rate on the wage determination for the classification of work actually performed. In addition, any apprentice performing work on the job site in excess of the ratio permitted under the registered program shall be paid not less than the applicable wage rate on the wage determination for the work actually performed. Where a contractor is performing construction on a project in a locality other than that in which its program is registered, the ratios and wage rates (expressed in percentages of the journeyman's hourly rate) specified in the contractor's or subcontractor's registered program shall be observed. Every apprentice must be paid at not less than the rate specified in the registered program for the apprentice's level of progress, expressed as a percentage of the journeymen hourly rate specified in the applicable wage determination. Apprentices shall be paid fringe benefits in accordance with the provisions of the apprenticeship program. If the Apprenticeship program does not specify fringe benefits, apprentices must be paid the full amount of fringe benefits listed on the wage determination for the applicable classification. If the Administrator determines that a different practice prevails for the applicable apprentice classification, fringes shall be paid in accordance with that determination. In the event the Office of Apprenticeship Training, Employer and Labor Services, or a State Apprenticeship Agency

DRAFT

recognized by the Office, withdraws approval of an apprenticeship program, the contractor will no longer be permitted to utilize apprentices at less than the applicable predetermined rate for the work performed until an acceptable program is approved.

(ii) Trainees. Except as provided in 29 CFR 5.16, trainees will not be permitted to work at less than the predetermined rate for the work performed unless they are employed pursuant to and individually registered in a program which has received prior approval, evidenced by formal certification by the U.S. Department of Labor, Employment and Training Administration. The ratio of trainees to journeymen on the job site shall not be greater than permitted under the plan approved by the Employment and Training Administration. Every trainee must be paid at not less than the rate specified in the approved program for the trainee's level of progress, expressed as a percentage of the journeyman hourly rate specified in the applicable wage determination. Trainees shall be paid fringe benefits in accordance with the provisions of the trainee program. If the trainee program does not mention fringe benefits, trainees shall be paid the full amount of fringe benefits listed on the wage determination unless the Administrator of the Wage and Hour Division determines that there is an apprenticeship program associated with the corresponding journeyman wage rate on the wage determination which provides for less than full fringe benefits for apprentices. Any employee listed on the payroll at a trainee rate who is not registered and participating in a training plan approved by the Employment and Training Administration shall be paid not less than the applicable wage rate on the wage determination for the classification of work actually performed. In addition, any trainee performing work on the job site in excess of the ratio permitted under the registered program shall be paid not less than the applicable wage rate on the wage determination for the work actually performed. In the event the Employment and Training Administration withdraws approval of a training program, the contractor will no longer be permitted to utilize trainees at less than the applicable predetermined rate for the work performed until an acceptable program is approved.

(iii) Equal employment opportunity. The utilization of apprentices, trainees and journeymen under this part shall be in conformity with the equal employment opportunity requirements of Executive Order 11246, as amended, and 29 CFR part 30.

(5) Compliance with Copeland Act requirements. The contractor shall comply with the requirements of 29 CFR part 3, which are incorporated by reference in this contract.

(6) Subcontracts. The contractor or subcontractor shall insert in any subcontracts the clauses contained in 29 CFR 5.5(a)(1) through (10) and such other clauses as the EPA determines may by appropriate, and also a clause requiring the subcontractors to include these clauses in any lower tier subcontracts. The prime contractor shall be responsible for the compliance by any subcontractor or lower tier subcontractor with all the contract clauses in 29 CFR 5.5.

(7) Contract termination; debarment. A breach of the contract clauses in 29 CFR 5.5 may be grounds for termination of the contract, and for debarment as a contractor and a subcontractor as provided in 29 CFR 5.12.

(8) Compliance with Davis-Bacon and Related Act requirements. All rulings and interpretations of the Davis-Bacon and Related Acts contained in 29 CFR parts 1, 3, and 5 are herein incorporated by reference in this contract.

DRAFT

(9) Disputes concerning labor standards. Disputes arising out of the labor standards provisions of this contract shall not be subject to the general disputes clause of this contract. Such disputes shall be resolved in accordance with the procedures of the Department of Labor set forth in 29 CFR parts 5, 6, and 7. Disputes within the meaning of this clause include disputes between the contractor (or any of its subcontractors) and subrecipient(s), the State recipient, EPA, the U.S. Department of Labor, or the employees or their representatives.

(10) Certification of eligibility.

(i) By entering into this contract, the contractor certifies that neither it (nor he or she) nor any person or firm who has an interest in the contractor's firm is a person or firm ineligible to be awarded Government contracts by virtue of section 3(a) of the Davis-Bacon Act or 29 CFR 5.12(a)(1).

(ii) No part of this contract shall be subcontracted to any person or firm ineligible for award of a Government contract by virtue of section 3(a) of the Davis-Bacon Act or 29 CFR 5.12(a)(1).

(iii) The penalty for making false statements is prescribed in the U.S. Criminal Code, 18 U.S.C. 1001.

4. Contract Provision for Contracts in Excess of $100,000.

(a) Contract Work Hours and Safety Standards Act. The subrecipient shall insert the following clauses set forth in paragraphs (a)(1), (2), (3), and (4) of this section in full in any contract in an amount in excess of $100,000 and subject to the overtime provisions of the Contract Work Hours and Safety Standards Act. These clauses shall be inserted in addition to the clauses required by Item 3 above or 29 CFR 4.6. As used in this paragraph, the terms laborers and mechanics include watchmen and guards.

(1) Overtime requirements. No contractor or subcontractor contracting for any part of the contract work which may require or involve the employment of laborers or mechanics shall require or permit any such laborer or mechanic in any workweek in which he or she is employed on such work to work in excess of 40 hours in such workweek unless such laborer or mechanic receives compensation at a rate not less than one and one-half times the basic rate of pay for all hours worked in excess of 40 hours in such workweek.

(2) Violation; liability for unpaid wages; liquidated damages. In the event of any violation of the clause set forth in paragraph (a)(1) of this section the contractor and any subcontractor responsible therefore shall be liable for the unpaid wages. In addition, such contractor and subcontractor shall be liable to the United States (in the case of work done under contract for the District of Columbia or a territory, to such District or to such territory), for liquidated damages. Such liquidated damages shall be computed with respect to each individual laborer or mechanic, including watchmen and guards, employed in violation of the clause set forth in paragraph (a)(1) of this section, in the sum of $10 for each calendar day on which such individual was required or permitted to work in excess of the standard workweek of 40 hours without payment of the overtime wages required by the clause set forth in paragraph (a)(1) of this section.

DRAFT

(3) Withholding for unpaid wages and liquidated damages. The subrecipient**,** upon written request of the EPA Award Official or an authorized representative of the Department of Labor, shall withhold or cause to be withheld, from any moneys payable on account of work performed by the contractor or subcontractor under any such contract or any other Federal contract with the same prime contractor, or any other federally-assisted contract subject to the Contract Work Hours and Safety Standards Act, which is held by the same prime contractor, such sums as may be determined to be necessary to satisfy any liabilities of such contractor or subcontractor for unpaid wages and liquidated damages as provided in the clause set forth in paragraph (b)(2) of this section.

(4) Subcontracts. The contractor or subcontractor shall insert in any subcontracts the clauses set forth in paragraph (a)(1) through (4) of this section and also a clause requiring the subcontractors to include these clauses in any lower tier subcontracts. The prime contractor shall be responsible for compliance by any subcontractor or lower tier subcontractor with the clauses set forth in paragraphs (a)(1) through (4) of this section.

(b) In addition to the clauses contained in Item 3 above, in any contract subject only to the Contract Work Hours and Safety Standards Act and not to any of the other statutes cited in 29 CFR 5.1, the subrecipient shall insert a clause requiring that the contractor or subcontractor shall maintain payrolls and basic payroll records during the course of the work and shall preserve them for a period of three years from the completion of the contract for all laborers and mechanics, including guards and watchmen, working on the contract. Such records shall contain the name and address of each such employee, social security number, correct classifications, hourly rates of wages paid, daily and weekly number of hours worked, deductions made, and actual wages paid. Further, the subrecipient shall insert in any such contract a clause providing that the records to be maintained under this paragraph shall be made available by the contractor or subcontractor for inspection, copying, or transcription by authorized representatives of the recipient and the Department of Labor, and the contractor or subcontractor will permit such representatives to interview employees during working hours on the job.

5. Compliance Verification

(a) The subrecipient shall periodically interview a sufficient number of employees entitled to DB prevailing wages (covered employees) to verify that contractors or subcontractors are paying the appropriate wage rates. As provided in 29 CFR 5.6(a)(6), all interviews must be conducted in confidence. The subrecipient must use WIFA's interview form, Department of Labor's Standard Form 1445, or equivalent documentation to memorialize the interviews. WIFA's interview form and instructions are included with this packet.

(b) The subrecipient shall establish and follow an interview schedule based on its assessment of the risks of noncompliance with DB posed by contractors or subcontractors and the duration of the contract or subcontract. Subrecipients must conduct more frequent interviews if the initial interviews or other information indicated that there is a risk that the contractor or subcontractor is not complying with DB. Subrecipients shall immediately conduct interviews in response to an alleged violation of the prevailing wage requirements. All interviews shall be conducted in confidence.

(c) The subrecipient shall periodically conduct spot checks of a representative sample of weekly payroll data to verify that contractors or subcontractors are paying the appropriate

DRAFT

wage rates. The subrecipient shall establish and follow a spot check schedule based on its assessment of the risks of noncompliance with DB posed by contractors or subcontractors and the duration of the contract or subcontract. At a minimum, if practicable, the subrecipient should spot check payroll data within two weeks of each contractor or subcontractor's submission of its initial payroll data and two weeks prior to the completion date the contract or subcontract. Subrecipients must conduct more frequent spot checks if the initial spot check or other information indicates that there is a risk that the contractor or subcontractor is not complying with DB. In addition, during the examinations the subrecipient shall verify evidence of fringe benefit plans and payments thereunder by contractors and subcontractors who claim credit for fringe benefit contributions.

(d) The subrecipient shall periodically review contractors and subcontractors use of apprentices and trainees to verify registration and certification with respect to apprenticeship and training programs approved by either the U.S Department of Labor or a state, as appropriate, and that contractors and subcontractors are not using disproportionate numbers of laborers, trainees and apprentices. These reviews shall be conducted in accordance with the schedules for spot checks and interviews described in Item 5(b) and (c) above.

(e) Subrecipients must immediately report potential violations of the DB prevailing wage requirements to the EPA DB contact listed below and to the appropriate DOL Wage and Hour District Office listed at www.dol.gov/whd.

Joe Ochab, EPA Region 9, 75 Hawthorne St. (P-22), San Francisco, CA 94105

DRAFT

Clean Water Revolving Fund
Drinking Water Revolving Fund

Equal Employment

Inclusion of these seven clauses (excerpt from Executive Order No. 11246, Section 202 as amended by Executive Order 11375 and 12086) is required in all CWRF and DWRF project related contracts and subcontracts over $10,000:

During the performance of this contract, the contractor agrees as follows:

(1) The contractor will not discriminate against any employee or applicant for employment because of race, color, religion, sex or national origin. The contractor will take affirmative action to ensure that applicants are employed, and that employees are treated during employment, without regard to their race, color, religion, sex, or national origin. Such action shall include, but not be limited to the following: employment, upgrading, demotion, or transfer; recruitment or recruitment advertising; layoff or termination; rates of pay or other forms of compensation; and selection for training, including apprenticeship. The contractor agrees to post in conspicuous places, available to employees and applicants for employment, notices to be provided by the contracting officer setting forth the provisions of this nondiscrimination clause.

(2) The contractor will, in all solicitations or advertisements for employees placed by or on behalf of the contractor, state that all qualified applicants will receive consideration for employment without regard to race, color, religion, sex, or national origin.

(3) The contractor will send to each labor union or representative of workers with which he has a collective bargaining agreement or other contract or understanding, a notice, to be provided by the agency contracting officer, advising the labor union or worker's representative of the contractor's commitments under Section 202 of Executive Order No. 11246 of September 24, 1965, and shall post copies of the notice in conspicuous places available to employees and applicants for employment.

(4) The contractor will comply with all provisions of Executive Order No. 11246 of Sept. 24, 1965, and all of the rules, regulations, and relevant orders of the Secretary of Labor.

(5) The contractor will furnish all information and reports required by Executive Order No. 11246 of Sept. 24, 1965, and by the rules, regulations and orders of the Secretary of Labor, or pursuant thereto, and will permit access to his books, records, and accounts by the contracting agency and the Secretary of Labor for purposes of investigation to ascertain compliance with such rules, regulations, and orders.

(6) In the event of the contractor's noncompliance with the nondiscrimination clauses of this contract or with any of such rules, regulations, or orders, this contract may be cancelled, terminated or suspended in whole or in part and the contractor may be declared ineligible for further Government contracts in accordance with procedures authorized in

DRAFT

Executive Order No. 11246 of Sept. 24, 1965, and such other sanctions may be imposed and remedies invoked as provided in Executive Order No. 11246 of Sept. 24, 1965, or by rule, regulation, or order of the Secretary of Labor, or as otherwise provided by law.

(7) The contractor will include the provisions of paragraphs (1) through (7) in every subcontract or purchase order unless exempted by rules, regulations, or orders of the Secretary of Labor issued pursuant to Section 204 of Executive Order No. 11246 of Sept. 24, 1965, so that such provisions will be binding upon each subcontractor or vendor. The contractor will take such action with respect to any subcontract or purchase order as may be directed by the Secretary of Labor as a means of enforcing such provisions including sanctions for noncompliance: provided, however, that in the event the contractor becomes involved in, or is threatened with, litigation with a subcontractor or vendor as a result of such direction, the contractor may request the United States to enter into such litigation to protect the interests of the United States.

DRAFT

Water Infrastructure Finance Authority of Arizona
Clean Water Revolving Fund
Drinking Water Revolving Fund

Disadvantaged Business Enterprises (DBE)

Good Faith Efforts

Borrowers and their prime contractors must follow, document, and maintain documentation of their good faith efforts as listed below to ensure that Certified Disadvantaged Business Enterprises* (DBEs) have the opportunity to participate in the project by increasing DBE awareness of procurement efforts and outreach.

1. Ensure DBEs are made aware of contracting opportunities to the fullest extent practicable through outreach and recruitment activities; including placing DBEs on solicitation lists and soliciting them whenever they are potential sources.
2. Make information on forthcoming opportunities available to DBEs and arrange time frames for contracts and establish delivery schedules, where the requirements permit, in a way that encourages and facilitates participation by DBEs in the competitive process. This includes, whenever possible, posting solicitation for bids or proposals for a minimum of 30 calendar days before the bid or proposal closing date.
3. Consider in the contracting process whether firms competing for large contracts could be subcontracted with DBEs. This will include dividing total requirements when economically feasible into smaller tasks or quantities to permit maximum participation by DBEs in the competitive process.
4. Encourage contracting with a consortium of DBEs when a contract is too large for one of these firms to handle individually.
5. Use the services and assistance of the Small Business Administration and the Minority Business Development Agency of the U. S. Department of Commerce.
6. If the prime contractor awards subcontracts, require the prime contractor to take the steps in numbers 1 through 5 above.

Required Contract Conditions

These conditions must be included in all procurement contracts entered into by the Borrower for all DWRF and CWRF projects:

1. The prime contractor must pay its subcontractor for satisfactory performance no more than 30 days from the prime contractor's receipt of payment from the owner.
2. The prime contractor must notify the owner in writing prior to the termination of any Disadvantaged Business Enterprise subcontractor for convenience by the prime contractor.
3. If a Disadvantaged Business Enterprise contractor fails to complete work under the subcontract for any reason, the prime contractor must employ the six good faith efforts if soliciting a replacement contractor.
4. The prime contractor must continue to employ the six good faith efforts even if the prime contractor has achieved its fair share objectives.

DRAFT

5. A Borrower must ensure that each procurement contract it awards contains the following terms and conditions:

> The contractor shall not discriminate on the basis of race, color, national origin or sex in the performance of this contract. The contractor shall carry out applicable requirements of 40 CFR Part 33 in the award and administration of contracts awarded under EPA financial assistance agreements. Failure by the contractor to carry out these requirements is a material breach of this contract which may result in the termination of this contract or other legally available remedies.

** A DBE is a Disadvantaged, Minority, or Woman Business Enterprise that has been certified by an entity from which EPA accepts certifications as described in 40 CFR 33.204-33.205 or certified by EPA. EPA accepts certifications from entities that meet or exceed EPA certification standards as described in 40 CFR 33.202.*

*** More information about DBE requirements can be found at https://www.epa.gov/grants/frequently-asked-questions-disadvantaged-business-enterprises*

DRAFT

Water Infrastructure Finance Authority of Arizona
Clean Water Revolving Fund
Drinking Water Revolving Fund

Prohibition on Certain Telecommunication and Video Surveillance Equipment

Public Law 115-232, enacted August 13, 2020

WIFA borrowers must comply with regulations at 2 CFR 200.216, *Prohibition on certain telecommunication and video surveillance services or equipment*, implementing section 889 of Public Law 115-232. The regulation prohibits the use of Federal funds to procure (enter into, extend, or renew contracts) or obtain equipment, systems, or services that use "covered telecommunications equipment or services" identified in the regulation as a substantial or essential component of any system, or as critical technology as part of any system. Prohibitions extend to the use of Federal funds by recipients and subrecipients to enter into a contract with an entity that "uses any equipment, system, or service that uses covered telecommunications equipment or services" as a substantial or essential component of any system, or as critical technology as part of any system. Certain equipment, systems, or services, including equipment, systems, or services produced or provided by entities subject to the prohibition are recorded in the System for Award Management exclusion list (*https://sam.gov/SAM/*).

As described in section 889 of Public Law 115-232, covered telecommunications equipment or services includes:

- **Telecommunications equipment produced by Huawei Technologies Company or ZTE Corporation (or any subsidiary or affiliate of such entities).**
- For the purpose of public safety, security of government facilities, physical security surveillance of critical infrastructure, and other security purposes, **video surveillance and telecommunications equipment produced by Hytera Communications Corporation, Hangzhou Hikvision Digital Technology Company, or Dahua Technology Company (or any subsidiary or affiliate of such entities).**
- Telecommunications or video surveillance services provided by such entities or using such equipment.
- Telecommunications or video surveillance equipment or services produced or provided by an entity that the Secretary of Defense, in consultation with the Director of the National Intelligence or the Director of the Federal Bureau of Investigation, reasonably believes to be an entity owned or controlled by, or otherwise connected to, the government of a covered foreign country.

There is no exhaustive list of components and services that fall under the prohibition. Borrowers and contractors should be particularly mindful of project components with internet or cellular connections. For example, automatic meter reading (AMR) technology and advanced metering infrastructure (AMI), instrumentation control systems (e.g. process control systems, distributed control systems and programmable logic controls), and security cameras and other electronic security measures. Items included in the prohibition are not eligible costs, and WIFA cannot reimburse borrowers for these costs.

DRAFT

SAMPLE Step Certification Letter (Processed/Manufactured)
Use of American Iron and Steel
Water Infrastructure Finance Authority of Arizona
CWSRF and DWSRF Funded Projects

The following information is provided as a sample letter of certification for AIS compliance (From March 20, 2014 EPA Memorandum American Iron and Steel Requirement Guidance).

Documentation must be provided on company letterhead.

Documentation should include the following five items:

- *Project name*
- *Product identification*
- *City and state where process took place*
- *Reference to American Iron and Steel Requirements as mandated by the EPA State Revolving Fund Programs.*
- *Signature*

Date

Company Name

Company Address

City, State Zip

Subject: American Iron and Steel Step Certification for Project (XXXXX)

I, (company representative), certify that the (melting, bending, coating, galvanizing, cutting, etc.) process for (manufacturing or fabricating) the following products and/or materials shipped or provided for the subject project is in full compliance with the American Iron and Steel requirement as mandated in EPA's State Revolving Fund Programs.

Item, Products and/or Materials:

1. XXXX
2. XXXX
3. XXXX

Such process took place at the following location: _CITY AND STATE_____

If any of the above compliance statements change while providing material to this project we will immediately notify the prime contractor and the engineer.

Signed by company representative

DRAFT

SAMPLE Step Certification Letter (Shipped/Provided)
Use of American Iron and Steel
Water Infrastructure Finance Authority of Arizona
CWSRF and DWSRF Funded Projects

The following information is provided as a sample letter of certification for AIS compliance (From March 20, 2014 EPA Memorandum American Iron and Steel Requirement Guidance).

Documentation must be provided on company letterhead.

Documentation should include the following five items:

- *Project name*
- *Product identification*
- *City and state where process took place*
- *Reference to American Iron and Steel Requirements as mandated by the EPA State Revolving Fund Programs.*
- *Signature*

Date

Company Name

Company Address

City, State Zip

Subject: American Iron and Steel Certification for Project (XXXXX)

I, (company representative), certify that the following products and/or materials shipped/provided to the subject project are in full compliance with the American Iron and Steel requirement as mandated in EPA's State Revolving Fund Programs.

Item, Products and/or Materials:
1. XXXX
2. XXXX
3. XXXX

Such process took place at the following location: _CITY AND STATE_____

If any of the above compliance statements change while providing material to this project we will immediately notify the prime contractor and the engineer.

Signed by company representative

DRAFT

American Iron and Steel Materials and De Minimis Worksheet

Rev: 03/2020

Water Infrastructure Finance Authority of Arizona

CWSRF and DWSRF Funded Projects

Visit EPA's Guidance Document for more information on American Iron and Steel Covered Products and De Minimis items.

Project:	
Total Materials Cost:	**$0.00**
Total Amount Covered Under De Minimis Waiver (incidental items):	**$0.00**
Percent (must be 5% or less of total materials cost):	**#DIV/0!**

Covered products include: Lined or unlined pipes or fittings; manhole covers; municipal castings; pipe clamps and restraints; valves; structural steel; hydrants, tanks; flanges; reinforced precast concrete; construction materials.

Products not subject to American Iron and Steel include mechanical and electrical equipment and related appurtances.

Incidental items are miscellaneous, generally low-cost items, often procured in bulk, such as washers, screws, fasteners, small amounts of wire, etc.

Product Classification ***(select from drop-down)***	**Product Description**	**Dollar Amount**	**Date Purchased**	**Supplier**	**AIS Documentation Received (covered products only)**

DRAFT

WIFA Project Wage Rate Worksheet

The construction category of Heavy (excluding dam construction) should typically be applied to all projects funded by WIFA. If you believe that a different category of wages, such as Building, should be applied to your project or portions of your project, please contact WIFA in advance.

Project Name:	Wage Decision Number and Date:
WIFA Project Number:	Project County:

Work Classification	Basic Hourly Rate	Fringe Benefits	Total Hourly Wage Rate

Additional Classifications Needed (DOL Form SF-1444)

Work Classification	Basic Hourly Rate	Fringe Benefits	Total Hourly Wage Rate	Date of WIFA Submission to DOL	Date of DOL Approval

DRAFT

SF 1444 Instructions
Request for Additional Classification and Wage Rate Form

Attached is a copy of the federal standard form 1444, Request for Authorization of Additional Classification and Wage Rate. This form must be submitted when a wage classification is not listed on the applicable wage decision. The classification and wage rate submitted on the form should bear a reasonable likeness to similar skill classifications listed in the federal wage determination.

The prime contractor is responsible for the completion and submission of this form. The following are the procedures for the completion and submission of the form:

1.	Check "Construction Contract" in the upper right-hand corner.
Box 2.	Insert the following information: **Water Infrastructure Finance Authority of Arizona** **(WIFA) 100 N. 7th Ave., Ste. 130** **Phoenix, AZ 85007**
Box 3.	Prime contractor's name.
Box 4.	Date the prime contractor submitted the form to WIFA.
Box 5.	Contract number.
Box 6.	Date the bid was opened, if applicable.
Box 7.	Date the contract was awarded.
Box 8.	Actual date the contractor will be starting or started work.
Box 9.	(This box is not applicable.)
Box 10.	List all subcontractors that will utilize the labor classification listed in box 13a. If none, enter "N/A."
Box 11.	Project title and a brief description of the project.
Box 12.	Include both the city and county, as well as Arizona.
Box 13.	Federal "General Decision Number" (e.g. AZ00009) and the date.
Box 13a.	List all classifications not covered by the federal wage determination, which are utilized by either the prime or the subcontractor(s).
Box13b.	The wage rate should bear a reasonable likeness to the category classification wage rates (equipment operators, laborers, truck drivers, etc.) listed in the federal wage determination.
Box 13c.	The fringe rate should bear a reasonable likeness to the category classification fringe rates (equipment operators, laborers, truck drivers, etc.) listed in the federal wage determination.
Box 14.	If there is a subcontractor listed on line 10, its representative signs on this line.
Box 15.	The prime contractor's representative must sign on this line.
Box 16.	If the contractor has a specific employee who will be performing the labor classification(s) listed in box 13a, or if the employees' have legal representation (union, etc.), they should sign this line and include their title. If no specific employee is identified to perform work under the listed classification(s), then write "unknown" in the box. The "Agree" or "Disagree" boxes are checked by anyone signing in boxes 14, 15, and 16.

The contractor will make a copy of the completed signed form and submit the original to WIFA (not required to be in quadruplicate).

WIFA will complete the section below the heavy line TO BE COMPLETED BY CONTRACTING OFFICER and submit it to DOL and EPA. Typically DOL responds in 30 days. WIFA will send the borrower a copy of the approved wage classification.

DRAFT

REQUEST FOR AUTHORIZATION OF ADDITIONAL CLASSIFICATION AND RATE

CHECK APPROPRIATE BOX
☐ SERVICE CONTRACT
☐ CONSTRUCTION CONTRACT

OMB Control Number: 9000-0066
Expiration Date: 4/30/2022

Paperwork Reduction Act Statement - This information collection meets the requirements of 44 U.S.C. § 3507, as amended by section 2 of the Paperwork Reduction Act of 1995. You do not need to answer these questions unless we display a valid Office of Management and Budget (OMB) control number. The OMB control number for this collection is 9000-0066. We estimate that it will take .5 hours to read the instructions, gather the facts, and answer the questions. Send only comments relating to our time estimate, including suggestions for reducing this burden, or any other aspects of this collection of information to: U.S. General Services Administration, Regulatory Secretariat Division (M1V1CB), 1800 F Street, NW, Washington, DC 20405.

INSTRUCTIONS: THE CONTRACTOR SHALL COMPLETE ITEMS 3 THROUGH 16, KEEP A PENDING COPY, AND SUBMIT THE REQUEST, IN QUADRUPLICATE, TO THE CONTRACTING OFFICER.

1. **TO:** ADMINISTRATOR, WAGE AND HOUR DIVISION U.S. DEPARTMENT OF LABOR WASHINGTON, DC 20210	2. **FROM:** *(REPORTING OFFICE)*
3. CONTRACTOR	4. DATE OF REQUEST

5. CONTRACT NUMBER	6. DATE BID OPENED *(SEALED BIDDING)*	7. DATE OF AWARD	8. DATE CONTRACT WORK STARTED	9. DATE OPTION EXERCISED (If *APPLICABLE) (SERVICE CONTRACT ONLY)*

10. SUBCONTRACTOR *(IF ANY)*

11. PROJECT AND DESCRIPTION OF WORK *(ATTACH ADDITIONAL SHEET IF NEEDED)*

12. LOCATION (*CITY, COUNTY, AND STATE)*

13. IN ORDER TO COMPLETE THE WORK PROVIDED FOR UNDER THE ABOVE CONTRACT, IT IS NECESSARY TO ESTABLISH THE FOLLOWING RATE(S) FOR THE INDICATED CLASSIFICATION(S) NOT INCLUDED IN THE DEPARTMENT OF LABOR DETERMINATION

NUMBER: _____ DATED: _____

a. LIST IN ORDER: PROPOSED CLASSIFICATION TITLE(S); JOB DESCRIPTION(S); DUTIES; AND RATIONALE FOR PROPOSED CLASSIFICATIONS *(Service contracts only)* *(Use reverse or attach additional sheets, if necessary)*	b. WAGE RATE(S)	c. FRINGE BENEFITS PAYMENTS

14. SIGNATURE AND TITLE OF SUBCONTRACTOR REPRESENTATIVE *(IF ANY)*	15. SIGNATURE AND TITLE OF PRIME CONTRACTOR REPRESENTATIVE	
16. SIGNATURE OF EMPLOYEE OR REPRESENTATIVE	TITLE	CHECK APPROPRIATE BOX-REFERENCING BLOCK 13. ☐ **AGREE** ☐ **DISAGREE**

TO BE COMPLETED BY CONTRACTING OFFICER *(CHECK AS APPROPRIATE - SEE FAR 22.1019 (SERVICE CONTRACT LABOR STANDARDS) OR FAR 22.406-3 (CONSTRUCTION WAGE RATE REQUIREMENTS))*

☐ THE INTERESTED PARTIES AGREE AND THE CONTRACTING OFFICER RECOMMENDS APPROVAL BY THE WAGE AND HOUR DIVISION. AVAILABLE INFORMATION AND RECOMMENDATIONS ARE ATTACHED.

☐ THE INTERESTED PARTIES CANNOT AGREE ON THE PROPOSED CLASSIFICATION AND WAGE RATE. A DETERMINATION OF THE QUESTION BY THE WAGE AND HOUR DIVISION IS THEREFORE REQUESTED. AVAILABLE INFORMATION AND RECOMMENDATIONS ARE ATTACHED.

(Send 3 copies to the Department of Labor)

SIGNATURE OF CONTRACTING OFFICER OR REPRESENTATIVE	TITLE AND COMMERCIAL TELEPHONE NUMBER	DATE SUBMITTED

DRAFT

EMPLOYEE RIGHTS

UNDER THE DAVIS-BACON ACT

FOR LABORERS AND MECHANICS EMPLOYED ON FEDERAL OR FEDERALLY ASSISTED CONSTRUCTION PROJECTS

DRAFT

PREVAILING WAGES

You must be paid not less than the wage rate listed in the Davis-Bacon Wage Decision posted with this Notice for the work you perform.

OVERTIME

You must be paid not less than one and one-half times your basic rate of pay for all hours worked over 40 in a work week. There are few exceptions.

ENFORCEMENT

Contract payments can be withheld to ensure workers receive wages and overtime pay due, and liquidated damages may apply if overtime pay requirements are not met. Davis-Bacon contract clauses allow contract termination and debarment of contractors from future federal contracts for up to three years. A contractor who falsifies certified payroll records or induces wage kickbacks may be subject to civil or criminal prosecution, fines and/or imprisonment.

APPRENTICES

Apprentice rates apply only to apprentices properly registered under approved Federal or State apprenticeship programs.

PROPER PAY

If you do not receive proper pay, or require further information on the applicable wages, contact the Contracting Officer listed below:

Water Infrastructure Finance Authority of Arizona
100 N. 7th Ave. Suite 130
Phoenix, AZ 85007

Tel: (602) 364-1310
Fax: (602) 364-1327

or contact the U.S. Department of Labor's Wage and Hour Division.

WAGE AND HOUR DIVISION
UNITED STATES DEPARTMENT OF LABOR

1-866-487-9243
TTY: 1-877-889-5627
www.dol.gov/whd

WH1321 REV 10/17

DERECHOS DEL EMPLEADO
BAJO LA LEY DAVIS-BACON

PARA OBREROS Y MECÁNICOS EMPLEADOS EN PROYECTOS DE CONSTRUCCIÓN FEDERAL O CON ASISTENCIA FEDERAL

SALARIOS PREVALECIENTES

No se le puede pagar menos de la tasa de pago indicada en la Decisión de Salarios Davis-Bacon fijada con este Aviso para el trabajo que Ud. desempeña.

SOBRETIEMPO

Se le ha de pagar no menos de tiempo y medio de su tasa básica de pago por todas las horas trabajadas en exceso de 40 en una semana laboral. Existen pocas excepciones.

CUMPLIMIENTO

Se pueden retener pagos por contratos para asegurarse que los obreros reciban los salarios y el pago de sobretiempo debidos, y se podría aplicar daños y perjuicios si no se cumple con las exigencias del pago de sobretiempo. Las cláusulas contractuales de Davis-Bacon permiten la terminación y exclusión de contratistas para efectuar futuros contratos federales hasta tres años. El contratista que falsifique los registros certificados de las nóminas de pago o induzca devoluciones de salarios puede ser sujeto a procesamiento civil o criminal, multas y/o encarcelamiento.

APRENDICES

Las tasas de aprendices sólo se aplican a aprendices correctamente inscritos bajo programas federales o estatales aprobados.

PAGO APROPIADO

Si Ud. no recibe el pago apropiado, o precisa de información adicional sobre los salarios aplicables, póngase en contacto con el Contratista Oficial que aparece abajo:

Water Infrastructure Finance Authority of Arizona
100 N. 7th Ave. Suite 130
Phoenix, AZ 85007

Tel: (602) 364-1310
Fax: (602) 364-1327

o póngase en contacto con la División de Horas y Salarios del Departamento de Trabajo de los EE.UU.

DIVISIÓN DE HORAS Y SALARIOS
DEPARTAMENTO DE TRABAJO DE LOS EE.UU.

1-866-487-9243
TTY: 1-877-889-5627
www.dol.gov/whd

WH1321 SPA REV 10/17

U.S. Department of Labor
Wage and Hour Division

PAYROLL

(For Contractor's Optional Use; See Instructions at www.dol.gov/whd/forms/wh347instr.htm)

Persons are not required to respond to the collection of information unless it displays a currently valid OMB control number.

U.S. Wage and Hour Division

Rev. Dec. 2008

OMB No.:1235-0008
Expires: 04/30/2021

NAME OF CONTRACTOR ☐ OR SUBCONTRACTOR ☐	ADDRESS	
PAYROLL NO.	FOR WEEK ENDING	PROJECT AND LOCATION / PROJECT OR CONTRACT NO.

(1) NAME AND INDIVIDUAL IDENTIFYING NUMBER (e.g., LAST FOUR DIGITS OF SOCIAL SECURITY NUMBER) OF WORKER	(2) NO. OF WITHHOLDING EXEMPTIONS	(3) WORK CLASSIFICATION	OT. OR ST.	(4) DAY AND DATE — HOURS WORKED EACH DAY	(5) TOTAL HOURS	(6) RATE OF PAY	(7) GROSS AMOUNT EARNED	(8) DEDUCTIONS: FICA	WITH-HOLDING TAX			OTHER	TOTAL DEDUCTIONS	(9) NET WAGES PAID FOR WEEK
			O											
			S											
			O											
			S											
			O											
			S											
			O											
			S											
			O											
			S											
			O											
			S											
			O											
			S											
			O											
			S											

While completion of Form WH-347 is optional, it is mandatory for covered contractors and subcontractors performing work on Federally financed or assisted construction contracts to respond to the information collection contained in 29 C.F.R. §§ 3.3, 5.5(a). The Copeland Act (40 U.S.C. § 3145) contractors and subcontractors performing work on Federally financed or assisted construction contracts to "furnish weekly a statement with respect to the wages paid each employee during the preceding week." U.S. Department of Labor (DOL) regulations at 29 C.F.R. § 5.5(a)(3)(ii) require contractors to submit weekly a copy of all payrolls to the Federal agency contracting for or financing the construction project, accompanied by a signed "Statement of Compliance" indicating that the payrolls are correct and complete and that each laborer or mechanic has been paid not less than the proper Davis-Bacon prevailing wage rate for the work performed. DOL and federal contracting agencies receiving this information review the information to determine that employees have received legally required wages and fringe benefits.

Public Burden Statement

We estimate that is will take an average of 55 minutes to complete this collection, including time for reviewing instructions, searching existing data sources, gathering and maintaining the data needed, and completing and reviewing the collection of information. If you have any comments regarding these estimates or any other aspect of this collection, including suggestions for reducing this burden, send them to the Administrator, Wage and Hour Division, U.S. Department of Labor, Room S3502, 200 Constitution Avenue, N.W. Washington, D.C. 20210

DRAFT

(over)

Date _____

I, _____ _____
(Name of Signatory Party) (Title)

do hereby state:

(1) That I pay or supervise the payment of the persons employed by

_____ on the
(Contractor or Subcontractor)

_____; that during the payroll period commencing on the
(Building or Work)

_____ day of _____, _____, and ending the _____ day of _____, _____,

all persons employed on said project have been paid the full weekly wages earned, that no rebates have been or will be made either directly or indirectly to or on behalf of said

_____ from the full
(Contractor or Subcontractor)

weekly wages earned by any person and that no deductions have been made either directly or indirectly from the full wages earned by any person, other than permissible deductions as defined in Regulations, Part 3 (29 C.F.R. Subtitle A), issued by the Secretary of Labor under the Copeland Act, as amended (48 Stat. 948, 63 Stat. 108, 72 Stat. 967; 76 Stat. 357; 40 U.S.C. § 3145), and described below:

_____

_____

_____

_____

(2) That any payrolls otherwise under this contract required to be submitted for the above period are correct and complete; that the wage rates for laborers or mechanics contained therein are not less than the applicable wage rates contained in any wage determination incorporated into the contract; that the classifications set forth therein for each laborer or mechanic conform with the work he performed.

(3) That any apprentices employed in the above period are duly registered in a bona fide apprenticeship program registered with a State apprenticeship agency recognized by the Bureau of Apprenticeship and Training, United States Department of Labor, or if no such recognized agency exists in a State, are registered with the Bureau of Apprenticeship and Training, United States Department of Labor.

(4) That:

(a) WHERE FRINGE BENEFITS ARE PAID TO APPROVED PLANS, FUNDS, OR PROGRAMS

☐ – in addition to the basic hourly wage rates paid to each laborer or mechanic listed in the above referenced payroll, payments of fringe benefits as listed in the contract have been or will be made to appropriate programs for the benefit of such employees, except as noted in section 4(c) below.

(b) WHERE FRINGE BENEFITS ARE PAID IN CASH

☐ – Each laborer or mechanic listed in the above referenced payroll has been paid, as indicated on the payroll, an amount not less than the sum of the applicable basic hourly wage rate plus the amount of the required fringe benefits as listed in the contract, except as noted in section 4(c) below.

(c) EXCEPTIONS

EXCEPTION (CRAFT)	EXPLANATION

REMARKS:

NAME AND TITLE	SIGNATURE

THE WILLFUL FALSIFICATION OF ANY OF THE ABOVE STATEMENTS MAY SUBJECT THE CONTRACTOR OR SUBCONTRACTOR TO CIVIL OR CRIMINAL PROSECUTION. SEE SECTION 1001 OF TITLE 18 AND SECTION 231 OF TITLE 31 OF THE UNITED STATES CODE.

DRAFT

WATER INFRASTRUCTURE FINANCE AUTHORITY OF ARIZONA

EMPLOYEE INTERVIEW FOR DAVIS-BACON LABOR STANDARDS INSTRUCTIONS

The Davis-Bacon Act requires interviews to determine if the contractor is complying with the Federal Davis-Bacon prevailing wages. Interviewers must use WIFA's interview form, Department of Labor's Standard Form 1445, or equivalent documentation. WIFA's form may be downloaded from WIFA's website: www.azwifa.gov/resources/contract-packet. See Section 5: Compliance Verification of the WIFA Contract Packet for the interview requirements.

Interviews should be conducted in the following manner:

Interviewer: Each borrower is required to conduct interviews. The interviewer must be someone unaffiliated with the contractors and on site regularly (i.e., project manager, or consultant, etc.).

Purpose: The purpose of the interview is to ensure that the work actually being done by construction workers and mechanics is consistent with the corresponding job titles and wages being reported on the certified payrolls. The payroll checker must compare the interviews to the payrolls to identify inconsistencies. Any inconsistencies must be addressed. Keep in mind that both the interview and the information on the interview form are considered confidential. Interviews should be conducted individually and in private. All employees on the work site should be available for an interview if requested by the interviewer; however, the employee's participation is voluntary.

Number of Interviews: A representative sample of interviews is required. The interviewer must interview at least one person from every contractor and subcontractor company on the job site.

Timing: Interviews should be done, at minimum, on two different occasions. One should be within the first two weeks after construction begins and whenever a new subcontractor begins work on the project. The second round should be done closer to substantial completion while workers are still on site. Additional interviews should be done when issues or discrepancies arise and should be targeted at the contractor in question.

Records: Interview forms should be kept by the borrower with the rest of the project records at least three years after the contract is completed. The interview forms have employee information that should be kept confidential from contractors generally, but the project folders must be available for inspection by WIFA, EPA, or Department of Labor upon request.

Item	**INTERVIEW**
2b. - 2c.	This information is required in case it is necessary to follow up with the employee.
3a.	The interviewer should make it clear to the employee that these items relate only to work on this project, not necessarily to other projects.
3b.	Employees should be encouraged (but not required) to produce pay stubs or pay envelopes which document the wages received.
5. - 6.	If the employee does not know where the wage rate decision and Davis-Bacon poster are posted, the interviewer should inform the person of the location(s) and encourage them to look at the documents.
8.	Many employees will not be familiar with the term "fringe benefits." The interviewer should explain to the employee that fringe can be paid as part of their hourly rate, or can be in the form of benefits such as vacation, medical, etc.
9a. -9c.	The interviewer should make it clear to the employee that these items relate only to work on this project, not necessarily to other projects.

DRAFT

11. - 13.	Be certain that the employee's responses are specific. The employee may not be familiar with the classifications used on the wage determination and thus may use a term which may not be found on the determination. The answers to questions 12 and 13 should elicit enough information to identify the appropriate wage classification. Confirm the presumed wage classification with the employee.

INTERVIEWER'S COMMENTS	
16.	This represents some of the most important information gathered while conducting on-site interviews. Be specific about the duties the employee was observed performing. It may be easiest to make these observations before the interview. Comments in this section should include whether observed duties and tools used were the same as those described by the employee during the interview.
19. - 20.	This refers to the wage decision and date as posted on the job site. This information should be consistent with the contract documents.

FOR USE BY PAYROLL CHECKER	
21. - 22.	The payroll checker can be the same person as the interviewer. If not, it should be someone familiar with the wage rate decision, labor standards provisions and the construction project. This part of the form is completed *after* receipt of the payroll reports covering the week during which the interview was conducted. It is important that the payroll reports are received in a timely manner so that the payroll checker can compare and verify the interview information and investigate discrepancies. Once the corresponding payroll reports are received, the information on the interview form must be compared to the payroll reports. Specifically, the payroll checker must check that: • the payroll report is consistent with the dates and hours the employee worked (Items 9a.-9c.). • the payroll report indicates that the employee's job classification is the same as that indicated by the employee in Items 11 - 13. • the payroll report indicates that the employee received the wages as s/he stated in Item 3a. • the payroll report indicates that the employee received the fringe benefits in the amount and as stated in Item 8. • the wages/fringes paid agree with the wage rate decision in the contract and any additional classification requests approved by DOL (SF1444). Any discrepancies noted between the interview form and payroll reports shall be reported in Item 22. <u>If discrepancies are noted, follow-up actions to resolve the discrepancies must be taken</u>. For example, if the payroll indicates that the employee worked a different number of hours than the employee indicated, the payroll checker must: a) contact the employee and ask for clarification; and b) request the contractor's actual time records. This should be done without revealing the identity of the employee, e.g. by asking for all employee records for one work week.

DRAFT

WATER INFRASTRUCTURE FINANCE AUTHORITY OF ARIZONA

EMPLOYEE INTERVIEW FOR DAVIS-BACON LABOR STANDARDS

1a. Project Name		2a. Employee Name	
1b. Contract Number	Wage Decision and Date	2b. Employee Phone Number	
1c. Name of Prime Contractor		2c. Employee Home Address and Zip Code	
1d. Name of Employer and Supervisor			

3a. Hourly rate of pay on this project: 3b. Do you have your most recent paystub? Y ☐ N ☐	4. Do you know that you are working on a federally-funded project and that you are to be paid wages set by DOL (Davis-Bacon wages)? Y ☐ N ☐	5. Do you know where the Davis-Bacon Wage Rate Decision for this project is posted? Y ☐ N ☐	6. Do you know where the "Employee Rights under the Davis-Bacon Act" poster is posted? Y ☐ N ☐
7a. Do you ever work over 8 hours per day? Y ☐ N ☐	7b. Do you ever work over 40 hours per week? Y ☐ N ☐	7c. Are you paid at least time and a half for overtime hours? Y ☐ N ☐ N/A ☐	8. Do you receive Fringe Benefits? Vacation Y ☐ N ☐ Medical Y ☐ N ☐ Pension Y ☐ N ☐ Cash/pay Y ☐ N ☐ Other:
9a. Date you began work on this project:	9b. Date of last work day on this project before interview:	9c. How many hours did you work on your last work day before this interview on this job?	
10. What deductions other than taxes and social security are made from your pay?		11. Work Classification (list all on this project):	
12. Your duties on this project:		13. Tools and equipment you use on this project:	

THE ABOVE IS CORRECT TO THE BEST OF MY KNOWLEDGE

14. Employee Signature	Date	
15. Interviewer Signature	Interviewer Name	Date

INTERVIEWER'S COMMENTS

16. Work employee was doing/tools employee was using when interviewed:	17. Is employee properly classified and paid? Y ☐ N ☐	18. Are wage rate and poster displayed? Y ☐ N ☐
	19. Wage Rate Decision Number:	20. Wage Rate Decision Date:

FOR USE BY PAYROLL CHECKER

21. Is above information in agreement with payroll data? Y ☐ N ☐	22. If no, provide explanation and resolution:	
23. Payroll Checker Signature	Payroll Checker Name	Date

DRAFT

"General Decision Number: AZ20250062 12/12/2025

Superseded General Decision Number: AZ20240062

State: Arizona

Construction Type: Heavy

County: Yuma County in Arizona.

Modification Number	Publication Date
0	01/03/2025
1	06/06/2025
2	06/20/2025
3	09/12/2025
4	12/12/2025

ELEC0570-014 06/01/2025

	Rates	Fringes
Electrician	$ 33.00	21.33%+6.00

ELEC0769-001 08/04/2025

	Rates	Fringes
Electrician: Lineperson	$ 62.08	21.5%+9.14

ELEC0769-003 08/04/2025

	Rates	Fringes
Electrician: Groundperson	$ 36.00	21.5%+9.14

ELEC0769-004 08/04/2025

	Rates	Fringes
Electrician: Line Equipment Operator	$ 46.56	21.5%+9.14

ENGI0012-035 12/01/2024

	Rates	Fringes
POWER EQUIPMENT OPERATOR:		
Oiler	$ 32.29	18.12

ENGI0012-037 12/01/2024

DRAFT

	Rates	Fringes
POWER EQUIPMENT OPERATOR:		
Field Equipment Serviceperson	$ 35.56	18.12

ENGI0012-042 12/01/2024

	Rates	Fringes
POWER EQUIPMENT OPERATOR:		
Crane/Derrick	$ 36.64	18.12

ENGI0012-043 12/01/2024

	Rates	Fringes
POWER EQUIPMENT OPERATOR:		
Mechanic	$ 37.67	18.12

ENGI0012-044 12/01/2024

	Rates	Fringes
POWER EQUIPMENT OPERATOR:		
Bobcat/Skid Steer/Skid Loader	$ 32.29	18.12

ENGI0012-045 12/01/2024

	Rates	Fringes
POWER EQUIPMENT OPERATOR:		
Backhoe/Backhoe & Loader Combo/Track Backhoe	$ 35.56	18.12

ENGI0012-046 12/01/2024

	Rates	Fringes
POWER EQUIPMENT OPERATOR:		
Bulldozer	$ 35.56	18.12

ENGI0012-047 12/01/2024

	Rates	Fringes
POWER EQUIPMENT OPERATOR:		
Compactor/Roller	$ 35.56	18.12

DRAFT

ENGI0012-048 12/01/2024

	Rates	Fringes
POWER EQUIPMENT OPERATOR:		
Drill Rig/Auger	$ 35.56	18.12

ENGI0012-054 12/01/2024

	Rates	Fringes
POWER EQUIPMENT OPERATOR:		
Trencher	$ 35.56	18.12

ENGI0012-055 12/01/2024

	Rates	Fringes
TRUCK DRIVER		
Hydrovac	$ 35.56	18.12

ENGI0012-059 12/01/2024

	Rates	Fringes
POWER EQUIPMENT OPERATOR:		
Grade Checker	$ 36.64	18.12

ENGI0012-060 12/01/2024

	Rates	Fringes
Power Equipment Operator:		
Loader/Front End Loader		
All types rated capacity 3 cubic yds or less	$ 32.29	18.12
All types rated capacity over 3, less than 6 cubic yds	$ 35.56	18.12
Rated capacity 6, less than 10 cubic yds	$ 36.64	18.12

ENGI0012-061 12/01/2024

	Rates	Fringes
POWER EQUIPMENT OPERATOR:		
Motor Grader/Blade	$ 36.64	18.12

DRAFT

ENGI0012-076 12/01/2024

	Rates	Fringes
Power Equipment Operator: Excavator/Trackhoe		
1/2 cubic yard or smaller	$ 35.56	18.12
Greater than 1/2 cubic yard	$ 36.64	18.12

LABO1184-013 06/01/2025

	Rates	Fringes
Laborer: Jackhammer	$ 29.05	9.26

LABO1184-015 06/01/2025

	Rates	Fringes
Power Equipment Operator: Forklift	$ 30.88	9.26

LABO1184-016 06/01/2025

	Rates	Fringes
Power Equipment Operator: Horizontal Directional Drill	$ 31.98	9.26

LABO1184-019 06/01/2025

	Rates	Fringes
LABORER: Mason Tender	$ 27.41	9.26

LABO1184-020 06/01/2025

	Rates	Fringes
Laborer: Pipelayer	$ 27.41	9.26

LABO1184-022 06/01/2025

	Rates	Fringes
Laborer: Asphalt, Includes Raker, Shoveler, Spreader and Distributor	$ 29.05	9.26

DRAFT

LABO1184-034 06/01/2025

	Rates	Fringes
Truck Driver:		
Concrete	$ 30.88	9.26

LABO1184-035 06/01/2025

	Rates	Fringes
Truck Driver:		
Dump	$ 30.88	9.26

LABO1184-036 06/01/2025

	Rates	Fringes
Truck Driver:		
Water	$ 30.88	9.26

LABO1184-042 06/01/2025

	Rates	Fringes
Traffic Control	$ 27.41	9.26

LABO1184-050 06/01/2025

	Rates	Fringes
Carpenter: Formwork Concrete	$ 31.98	9.26

SUAZ2023-012 11/19/2024

	Rates	Fringes
Laborer: General	$ 21.54	0.00
Power Equipment Operator:		
Scraper	$ 32.30	0.00

WELDERS - Receive rate prescribed for craft performing operation to which welding is incidental.

==========

Note: Executive Order (EO) 13706, Establishing Paid Sick Leave for Federal Contractors applies to all contracts subject to the

DRAFT

Davis-Bacon Act for which the contract is awarded (and any solicitation was issued) on or after January 1, 2017. If this contract is covered by the EO, the contractor must provide employees with 1 hour of paid sick leave for every 30 hours they work, up to 56 hours of paid sick leave each year. Employees must be permitted to use paid sick leave for their own illness, injury or other health-related needs, including preventive care; to assist a family member (or person who is like family to the employee) who is ill, injured, or has other health-related needs, including preventive care; or for reasons resulting from, or to assist a family member (or person who is like family to the employee) who is a victim of, domestic violence, sexual assault, or stalking. Additional information on contractor requirements and worker protections under the EO is available at https://www.dol.gov/agencies/whd/government-contracts.

Note: Executive Order 13658 generally applies to contracts subject to the Davis-Bacon Act that were awarded on or between January 1, 2015 and January 29, 2022, and that have not been renewed or extended on or after January 30, 2022. Executive Order 13658 does not apply to contracts subject only to the Davis-Bacon Related Acts regardless of when they were awarded. If a contract is subject to Executive Order 13658, the contractor must pay all covered workers at least $13.30 per hour (or the applicable wage rate listed on this wage determination, if it is higher) for all hours spent performing on the contract in 2025. The applicable Executive Order minimum wage rate will be adjusted annually. Additional information on contractor requirements and worker protections under Executive Order 13658 is available at www.dol.gov/whd/govcontracts.

Unlisted classifications needed for work not included within the scope of the classifications listed may be added after award only as provided in the labor standards contract clauses (29CFR 5.5 (a) (1) (iii)).

The body of each wage determination lists the classifications and wage rates that have been found to be prevailing for the type(s) of construction and geographic area covered by the wage determination. The classifications are listed in alphabetical order under rate identifiers indicating whether the particular rate is a union rate (current union negotiated rate), a survey rate, a weighted union average rate, a state adopted rate, or a supplemental classification rate.

DRAFT

Union Rate Identifiers

A four-letter identifier beginning with characters other than ""SU"", ""UAVG"", ?SA?, or ?SC? denotes that a union rate was prevailing for that classification in the survey. Example: PLUM0198-005 07/01/2024. PLUM is an identifier of the union whose collectively bargained rate prevailed in the survey for this classification, which in this example would be Plumbers. 0198 indicates the local union number or district council number where applicable, i.e., Plumbers Local 0198. The next number, 005 in the example, is an internal number used in processing the wage determination. The date, 07/01/2024 in the example, is the effective date of the most current negotiated rate.

Union prevailing wage rates are updated to reflect all changes over time that are reported to WHD in the rates in the collective bargaining agreement (CBA) governing the classification.

Union Average Rate Identifiers

The UAVG identifier indicates that no single rate prevailed for those classifications, but that 100% of the data reported for the classifications reflected union rates. EXAMPLE: UAVG-OH-0010 01/01/2024. UAVG indicates that the rate is a weighted union average rate. OH indicates the State of Ohio. The next number, 0010 in the example, is an internal number used in producing the wage determination. The date, 01/01/2024 in the example, indicates the date the wage determination was updated to reflect the most current union average rate.

A UAVG rate will be updated once a year, usually in January, to reflect a weighted average of the current rates in the collective bargaining agreements on which the rate is based.

Survey Rate Identifiers

The ""SU"" identifier indicates that either a single non-union rate prevailed (as defined in 29 CFR 1.2) for this classification in the survey or that the rate was derived by computing a weighted average rate based on all the rates reported in the survey for that classification. As a weighted average rate includes all rates reported in the survey, it may include both union and non-union rates. Example: SUFL2022-007 6/27/2024. SU indicates the rate is a single non-union prevailing rate or a weighted average of survey data for that classification. FL indicates the State of Florida. 2022 is the year of the survey on which these classifications and rates are based. The next number, 007 in the example, is an internal

DRAFT

number used in producing the wage determination. The date, 6/27/2024 in the example, indicates the survey completion date for the classifications and rates under that identifier.

?SU? wage rates typically remain in effect until a new survey is conducted. However, the Wage and Hour Division (WHD) has the discretion to update such rates under 29 CFR 1.6(c)(1).

State Adopted Rate Identifiers

The ""SA"" identifier indicates that the classifications and prevailing wage rates set by a state (or local) government were adopted under 29 C.F.R 1.3(g)-(h). Example: SAME2023-007 01/03/2024. SA reflects that the rates are state adopted. ME refers to the State of Maine. 2023 is the year during which the state completed the survey on which the listed classifications and rates are based. The next number, 007 in the example, is an internal number used in producing the wage determination. The date, 01/03/2024 in the example, reflects the date on which the classifications and rates under the ?SA? identifier took effect under state law in the state from which the rates were adopted.

WAGE DETERMINATION APPEALS PROCESS

1) Has there been an initial decision in the matter? This can be:

a) a survey underlying a wage determination
b) an existing published wage determination
c) an initial WHD letter setting forth a position on a wage determination matter
d) an initial conformance (additional classification and rate) determination

On survey related matters, initial contact, including requests for summaries of surveys, should be directed to the WHD Branch of Wage Surveys. Requests can be submitted via email to davisbaconinfo@dol.gov or by mail to:

Branch of Wage Surveys
Wage and Hour Division
U.S. Department of Labor
200 Constitution Avenue, N.W.
Washington, DC 20210

Regarding any other wage determination matter such as conformance decisions, requests for initial decisions should be

DRAFT

directed to the WHD Branch of Construction Wage Determinations. Requests can be submitted via email to BCWD-Office@dol.gov or by mail to:

Branch of Construction Wage Determinations
Wage and Hour Division
U.S. Department of Labor
200 Constitution Avenue, N.W.
Washington, DC 20210

2) If an initial decision has been issued, then any interested party (those affected by the action) that disagrees with the decision can request review and reconsideration from the Wage and Hour Administrator (See 29 CFR Part 1.8 and 29 CFR Part 7). Requests for review and reconsideration can be submitted via email to dba.reconsideration@dol.gov or by mail to:

Wage and Hour Administrator
U.S. Department of Labor
200 Constitution Avenue, N.W.
Washington, DC 20210

The request should be accompanied by a full statement of the interested party's position and any information (wage payment data, project description, area practice material, etc.) that the requestor considers relevant to the issue.

3) If the decision of the Administrator is not favorable, an interested party may appeal directly to the Administrative Review Board (formerly the Wage Appeals Board). Write to:

Administrative Review Board
U.S. Department of Labor
200 Constitution Avenue, N.W.
Washington, DC 20210.

DRAFT

==========

END OF GENERAL DECISION"

Bid Kit

City of San Luis

West WWTP 3.0 MGD MBR Upgrades

DRAFT

BID FORM

TO: City of San Luis, Arizona
1090 East Union Street
P.O. Box 1170
San Luis, Arizona 85349

BIDDER: **Filanc**
740 North Andreasen Drive
Escondido, CA 92029

Project Name: City of San Luis West WWTP 3.0 MGD MBR Upgrades

In compliance with the ADVERTISEMENT FOR BIDS:

Having examined the CONTRACT DOCUMENTS, site of work, and being familiar with the conditions to be met, hereby submits the following BID for furnishing the material, equipment, labor and everything necessary for the completion of the work listed and agrees to execute the CONTRACT DOCUMENTS and furnish the required CONTRACT AND LABOR AND MATERIAL SURETY BONDS and CERTIFICATES OF INSURANCE for the completion of said work, at the locations and for the prices set forth on the inside pages of this form;

Understands that construction of this PROJECT shall be in accordance with all applicable Maricopa Association of Governments (MAG) Uniform Standard Specifications and Details for Public Works Construction as adopted by the City of San Luis, the City of Yuma Construction Standard Detail Drawings – 2019 edition [details], the City of San Luis Supplemental to the MAG Uniform Standard Specifications and Details for Public Works Construction and the City of Yuma Construction Standard Detail Drawings, except as otherwise required by the PLANS, TECHNICAL SPECIFICATIONS and GENERAL CONDITIONS;

Understands that this BID for construction of this PROJECT shall be submitted with a proposal guarantee of cash, certified check, cashier's check or BID SURETY BOND for an amount not less than 10 percent of the amount bid;

Agrees that upon receipt of NOTICE OF AWARD, from the City of San Luis, Arizona, Bidder will execute the CONTRACT DOCUMENTS within ten (10) calendar days;

Understands that the work shall commence on day 1 of the Contract Time and be completed within **488 calendar days.**

Hereby acknowledges receipt of and agrees Bidder's PROPOSAL is based on the following Addenda listed by number and date issued):

Number	Date	Number	Date
Addendum #1	February 19, 2026		
Addendum #2	March 11, 2026		
Addendum #3	March 18, 2026		
Addendum #4	March 25, 2026		
Addendum #5	April 1, 2026		

(List any additional addenda on the back of this sheet)

And hereby submits the following BID SCHEDULE of units and quantities as a part of this BID KIT:

DRAFT

BID SCHEDULE

TO: City of San Luis, Arizona
1090 East Union Street, P.O. Box 1170
San Luis, Arizona 85349

BIDDER: FILANC

Project Name: City of San Luis West WWTP 3.0 MGD MBR

Bid Item	Description	Unit	Quantities	Unit Price	Total Cost
1	Mobilization / Demobilization	LS	1	1,850,000	1,850,000
2	Earthworks for Grading, Cut, Fill, and Export	LS	1	3,383,000	3,383,000
3	Asphalt Pavement	SF	38,413	8.00	307,304
4	Yard Piping	LS	1	3,272,000	3,272,000
5	Headworks Upgrades	LS	1	1,200,000	1,200,000
6	FEB Conversion in SBR 4	LS	1	712,000	712,000
7	Secondary Process Conversion in SBR 3 and Digesters 3&4	LS	1	2,027,000	2,027,000
8	Installation of Feed Forward Pumps and Channel	LS	1	732,000	732,000
9	MBR Conversion in SBRs 1 & 2 and Blower Gallery	LS	1	3,400,000	3,400,000
10	Chemical Building Upgrades	LS	1	113,000	113,000
11	Plant Drain Pump Station Upgrades	L	1	65,000	65,000
12	Sludge Dewatering	LS	1	165,000	165,000
13	Odor Control	LS	1	292,000	292,000

DRAFT

Bid Item	Description	Unit	Quantities	Unit Price	Total Cost
14	Plant Process Water Booster Station	LS	1	662,000	662,000
15	Installation of 24" PVC C900 Reuse Distribution Pipeline, Valves, Fittings and Appurtenances	LF	636	590.00	375,240
16	Headwork Fabric Canopy	LS	1	96,000	96,000
17	MBR Crane and Structure	LS	1	680,000	680,000
18	MBR FRP Covers	Ft^2	2,400	148.00	355,200
19	Handrails and Guardrails	LF	872	450.00	392,400
20 a	Walkway Grating (Open)	Ft^2	2,400	243.00	583,200
20 b	Walkway Grating (FRP/ Closed)	Ft^2	444	206.00	91,464
21	Metal Stairways	LS	1	156,000	156,000
22	Structural Canopies	LS	1	503,000	503,000
23	Transition SBR 4 to Intensification Process	LS	1	1,638,000	1,638,000
24	Electrical	LS	1	11,506,000	11,506,000
25	Concrete and Concrete Structures	LS	1	3,317,000	3,317,000
26	Coating and Painting	LS	1	1,078,000	1,078,000
27	Digesters 1 & 2 Upgrades	LS	1	209,000	209,000
28	Base Lump Sum	LS	1	4,000	4,000
29	Hydro-dyne Storage Allowance	MO	10	$3,860	$38,600

NOTE: Detailed descriptions of bid items are on the following page.

TOTAL $ 39,203,408

5% CONTINGENCY SUBTOTAL $ 1,960,170

TOTAL BASE BID $ 41,163,578

TOTAL BASE BID AMOUNT IN WORDS, forty one Million, Nine hundred Sixty three thousand, five hundred seventy eight

DRAFT

Bid Item 1 - Mobilization / Demobilization

Payment shall be made for mobilization and demobilization to and from the site, for bonds and insurance. CONTRACTOR shall provide all the necessary mobilization requirements for the proper construction activities, include providing all the necessary accommodations for personnel and equipment as describe in these Specifications.

Bid Item 2 – Earthworks for Grading, Cut, Fill, and Export

Payment shall be made for the work associated with earthworks grading, cut, fill, and export of any excess material. Fill shall include screening, placement, and compaction of native material to meet the requirements of the Contract Documents. Excess material shall be screened and exported to a dedicated site per the contract. Excess material shall be spread evenly within the dedicated site by the CONTRACTOR. Screened material greater than 4" shall be disposed by the CONTRACTOR offsite. Payment shall be based on actual quantity and the unit price shown on the CONTRACTOR's schedule of values as the items are completed and accepted by the Representative.

Bid Item 3 – Asphalt Pavement

Payment shall be made for asphalt road pavement as described in the Contract Documents. This includes the labor, equipment, material for the preparation and placement of the hot-mix asphalt, binder, base course, etc. where required. Quantities shown are estimated. Payment shall be based on actual quantity and the unit price shown on the CONTRACTOR's schedule of values as the items are completed and accepted by the Representative.

Bid Item 4 – Yard Piping

Payment shall be made for site work associated with the installation of the yard piping as described in the Contract Documents. The work shall include all pipes, fitting, and associated labor and materials required for the proper trenching, installation, and backfill of the pipes. This shall also include any potholing, pavement restoration, wire tracing and surveying of the required work. Measurement and payment shall be made for each type of process yard pipe based on linear feet of pipe installed and the breakdown shown on the CONTRACTOR's schedule of values as the items are completed and accepted by the Representative.

Bid Item 5 – Headworks Upgrades

Payment shall be made for the furnish and mechanical installation of the Headworks and associated appurtenances as shown on the drawings, specified in the contract documents. The Headworks Equipment is a pre-purchased item by the City. This bid item is only to include items, components and equipment not supplied by the City. Payment shall be made based on the breakdown shown on the CONTRACTOR's schedule of values as the items are completed and accepted by the Representative.

Bid Item 6 – FEB Conversion in SBR 4

Payment shall be made for the furnish and mechanical installation associated with the conversion of SBR 4 to the new Flow Equalization Basin (FEB) with associated appurtenances as shown on the drawings, specified in the contract documents. Payment shall be made based on the breakdown shown on the CONTRACTOR's schedule of values as the items are completed and accepted by the Representative.

Bid Item 7 – Secondary Process Conversion in SBR 3 and Digesters 3&4

Payment shall be made for the furnish and mechanical installation associated with the conversion of SBR 3 and Digesters 3 & 4 into the new Secondary Treatment Process with associated appurtenances as shown on the drawings, specified in the contract documents. The Secondary Process contains equipment that are pre-purchased by the City. This bid item is only to include items, components and equipment not supplied by the City. Payment

DRAFT

shall be made based on the breakdown shown on the CONTRACTOR's schedule of values as the items are completed and accepted by the Representative.

Bid Item 8 – Installation of Feed Forward Pumps and Channel

Payment shall be made for the furnish and mechanical installation associated with the installation of the Feed Forward Pumps and Channel with associated appurtenances as shown on the drawings, specified in the contract documents. The Feed Forward Pumps System contains equipment that are pre-purchased by the City. This bid item is only to include items, components and equipment not supplied by the City. Payment shall be made based on the breakdown shown on the CONTRACTOR's schedule of values as the items are completed and accepted by the Representative.

Bid Item 9 – MBR Conversion in SBRs 1 & 2 and Blower Gallery

Payment shall be made for the furnish and mechanical installation associated with the conversion of SBRs 1 & 2 into the new MBR Basins and construction of the Blower Gallery with associated appurtenances as shown on the drawings, specified in the contract documents. The MBR Process and Blowers contain equipment that are pre-purchased by the City. This bid item is only to include items, components and equipment not supplied by the City. Payment shall be made based on the breakdown shown on the CONTRACTOR's schedule of values as the items are completed and accepted by the Representative.

Bid Item 10 – Chemical Building Upgrades

Payment shall be made for the furnish and mechanical installation associated with the upgrades to the chemical storage and metering within the existing Chemical Building along with associated appurtenances as shown on the drawings, specified in the contract documents. The chemical metering contains equipment that are pre-purchased by the City. This bid item is only to include items, components and equipment not supplied by the City. Payment shall be made based on the breakdown shown on the CONTRACTOR's schedule of values as the items are completed and accepted by the Representative.

Bid Item 11 – Plant Drain Pump Station Upgrades

Payment shall be made for the furnish and mechanical installation associated with the Plant Drain Pump Station with associated appurtenances as shown on the drawings, specified in the contract documents. Payment shall be made based on the breakdown shown on the CONTRACTOR's schedule of values as the items are completed and accepted by the Representative.

Bid Item 12 – Sludge Dewatering

Payment shall be made for the furnish and mechanical installation associated with the installation of the Sludge Dewatering System along with associated appurtenances as shown on the drawings, specified in the contract documents. The Sludge Dewatering System contains equipment that are pre-purchased by the City. This bid item is only to include items, components and equipment not supplied by the City. Payment shall be made based on the breakdown shown on the CONTRACTOR's schedule of values as the items are completed and accepted by the Representative.

Bid Item 13 – Odor Control

Payment shall be made for the furnish and mechanical installation associated with the Odor Control System with associated appurtenances as shown on the drawings, specified in the contract documents. Payment shall be made based on the breakdown shown on the CONTRACTOR's schedule of values as the items are completed and accepted by the Representative.

DRAFT

Bid Item 14 – Plant Process Water Booster Station

Payment shall be made for the furnish and mechanical installation associated with the Plant Process Water Booster Station with associated appurtenances as shown on the drawings, specified in the contract documents. Payment shall be made based on the breakdown shown on the CONTRACTOR's schedule of values as the items are completed and accepted by the Representative.

Bid Item 15 - Installation of 24" PVC C900 Reuse Distribution Pipeline , Valves, Fittings and Appurtenances

Payment shall be made for the civil and mechanical work associated with the installation of the new 24" Reuse Distribution Pipeline as described in the Contract Documents. The work shall include all pipes, fitting, and associated labor and materials required for the proper trenching, installation, and backfill of the pipes. This shall also include all incidentals including potholing, pavement restoration, wire tracing, surveying, etc. of the required work. Quantities shown are estimated. Payment shall be based on actual quantity and the unit price shown on the CONTRACTOR's schedule of values as the items are completed and accepted by the Representative.

Bid Item 16 – Headwork Fabric Canopy

Payment shall be made for the furnish and mechanical installation associated with the Headworks Fabric Canopy with associated appurtenances as shown on the drawings, specified in the contract documents. Payment shall be made based on the breakdown shown on the CONTRACTOR's schedule of values as the items are completed and accepted by the Representative.

Bid Item 17 – MBR Crane and Structure

Payment shall be made for the furnish and mechanical installation associated with the MBR Crane and Structure with associated appurtenances as shown on the drawings, specified in the contract documents. Payment shall be made based on the breakdown shown on the CONTRACTOR's schedule of values as the items are completed and accepted by the Representative.

Bid Item 18 – MBR FRP Covers

Payment shall be made for the furnish and mechanical installation associated with the MBR FRP Covers with associated appurtenances as shown on the drawings, specified in the contract documents. Quantities shown are estimated. Payment shall be based on actual quantity and the unit price shown on the CONTRACTOR's schedule of values as the items are completed and accepted by the Representative.

Bid Item 19 – Handrails and Guardrails

Payment shall be made for the furnish and mechanical installation associated with handrails and guardrails along with associated appurtenances as shown on the drawings, specified in the contract documents. Quantities shown are estimated. Payment shall be based on actual quantity and the unit price shown on the CONTRACTOR's schedule of values as the items are completed and accepted by the Representative.

Bid Item 20 – Walkway Grating

Payment shall be made for the furnish and mechanical installation associated with walkway grating (both open metal grating and closed FRP grating) along with associated appurtenances as shown on the drawings, specified in the contract documents. Quantities shown are estimated. Payment shall be based on actual quantity and the unit price shown on the CONTRACTOR's schedule of values as the items are completed and accepted by the Representative.

DRAFT

Bid Item 21 – Metal Stairways

Payment shall be made for the furnish and mechanical installation associated with metal stairways along with associated appurtenances as shown on the drawings, specified in the contract documents. Payment shall be made based on the breakdown shown on the CONTRACTOR's schedule of values as the items are completed and accepted by the Representative.

Bid Item 22 – Structural Canopies

Payment shall be made for the furnish and mechanical installation associated with Structural Canopies along with associated appurtenances as shown on the drawings, specified in the contract documents. Payment shall be made based on the breakdown shown on the CONTRACTOR's schedule of values as the items are completed and accepted by the Representative.

Bid Item 23 – Transition SBR 4 to Intensification Process

Payment shall be made for the furnish and mechanical installation associated with the intensification of SBR 4 using World Water Works Migrate MBC media along with associated appurtenances as shown on the drawings, specified in the contract documents. Payment shall be made based on monthly lease agreement with World Water Works and on the breakdown shown on the CONTRACTOR's schedule of values as the items are completed and accepted by the Representative.

Bid Item 24 – Electrical

Payment shall be made for the furnish and electrical installation associated with the all electrical components along with associated appurtenances as shown on the drawings, specified in the contract documents. Payment shall be made based on the breakdown shown on the CONTRACTOR's schedule of values as the items are completed and accepted by the Representative.

Bid Item 25 – Concrete and Concrete Structures

Payment shall be made for the furnish and structural installation associated with all concrete components and concrete structures along with associated appurtenances as shown on the drawings, specified in the contract documents. Payment shall be made based on the breakdown shown on the CONTRACTOR's schedule of values as the items are completed and accepted by the Representative.

Bid Item 26 – Coating and Painting

Payment shall be made for the furnish and application associated with the all coating and painting along with associated appurtenances as shown on the drawings, specified in the contract documents. Payment shall be made based on the breakdown shown on the CONTRACTOR's schedule of values as the items are completed and accepted by the Representative.

Bid Item 27 – Aerobic Digesters 1 & 2 Upgrades

Payment shall be made for the furnish and mechanical installation associated with the upgrades of Digesters 1 & 2 with associated appurtenances as shown on the drawings, specified in the contract documents. Payment shall be made based on the breakdown shown on the CONTRACTOR's schedule of values as the items are completed and accepted by the Representative.

DRAFT

THIS BID IS SUBMITTED BY ,

a corporation organized under the laws of the State of California ,

or a partnership consisting of N/A ,

or individual trading as N/A ;

of the City of Escondido, California (City, State) and is the holder of Arizona State Contractor's license(s): General Engineeering (type)

Classification A License No. ROC 088901 .

The Bidder hereby certifies that as of the below date, the bond amount posted with the Arizona Registrar of Contractors is

$ 10% of Bid Amount and that the Bidder's actual volume of work has not exceeded the contemplated gross volume pursuant to Arizona Administrative Code, Title 4 Chapter 9 [Authority: ARS §32-1101 et seq.]

Respectfully Submitted,

Bidder Filanc

Address 740 North Andreasen Drive

City, State, ZIP Escondido, California 92029

E-mail dkiess@filanc.com

By: [Signature] 4/06/2026 [Date]

Name David J. Kiess

Title Vice President

ATTEST: [If Bidder is an Individual]

Witness: [Signature] 4/06/2026 [Date]

Name and Title Adriana Iglesias, Project Coordinator

DRAFT

BID SURETY BOND

Project Name: City of San Luis West WWTP 3.0 MGD MBR

For: City of San Luis, Arizona

KNOW ALL MEN BY THESE PRESENTS:

That we, Filanc, as Principal, (hereinafter called the Principal),

and the Travelers Casualty and Surety Company of America, a corporation duly organized under the laws of the State of Connecticut ~~California~~ and duly licensed and possessing a certificate of authority to transact surety business in the State of Arizona, as Surety, (hereinafter called the Surety), are held and firmly bound unto City of San Luis, Arizona [hereinafter called City] as Obligee, in the sum of ten percent (10%) of the total amount of the bid of Principal, submitted by him to the City for the work described below, for the payment of which sum, well and truly to be made, the said Principal and the said Surety, bind ourselves, our heirs, executors, and administrators, successors, and assigns, jointly and severally, firmly by these presents, and in conformance with Arizona Revised Statutes [ARS].

WHEREAS, the said Principal is herewith submitting its PROPOSAL for the City of San Luis West WWTP 3.0 MGD MBR

NOW, THEREFORE, if the City shall accept the PROPOSAL of the Principal and the Principal shall enter into a CONTRACT with the City in accordance with the terms of the PROPOSAL and give the Bonds and Certificates of Insurance as specified in the Standard Specifications with good and sufficient Surety for the faithful performance of the CONTRACT and for the prompt payment of labor and materials furnished in the prosecution of the CONTRACT, or in the event of the failure of the Principal to enter into the CONTRACT and give the Bonds and Certificates of Insurance, if the Principal pays to the City the difference not to exceed the penalty of the bond between the amount specified in the PROPOSAL and such larger amount for which the Obligee may in good faith contract with another party to perform the work covered by the PROPOSAL then this obligation is void. Otherwise it remains in full force and effect provided, however, that this bond is executed pursuant to the provisions of Section 34-201, ARS, and all liabilities on this bond shall be determined in accordance with the provisions of the section to the extent as if it were copied at length herein.

Signed and sealed this 9th day of April, 20 26.

Filanc
Principal Firm [Seal]

Melinda Young
Principal Signature

Melinda Young
Name and Title VP, Risk Mgmt

Travelers Casualty and Surety Company of America
Surety Firm [Seal]

Cheryl L McAleenan
Surety Signature

Cheryl L McAleenan, Attorney-in-Fact
Name and Title

Chrystal Renee Hedges
Agency of Record

7220 N 16th St, Bldg K, Phoenix, AZ 85020
Address
{NOTE: attach current power of attorney}

DRAFT

TRAVELERS

Travelers Casualty and Surety Company of America
Travelers Casualty and Surety Company
St. Paul Fire and Marine Insurance Company

POWER OF ATTORNEY

Travelers Casualty and Surety Company of America, Travelers Casualty and Surety Company, and St. Paul Fire and Marine Insurance Company are corporations duly organized under the laws of the State of Connecticut (herein collectively called the "Companies"), and the Companies do hereby make, constitute and appoint **Cheryl L McAleenan** of **Maryland Heights**, **Missouri**, their true and lawful Attorney(s)-in-Fact to sign, execute, seal and acknowledge any and all bonds, recognizances, conditional undertakings and other writings obligatory in the nature thereof on behalf of the Companies in their business of guaranteeing the fidelity of persons, guaranteeing the performance of contracts and executing or guaranteeing bonds and undertakings required or permitted in any actions or proceedings allowed by law.

IN WITNESS WHEREOF, the Companies have caused this instrument to be signed, and their corporate seals to be hereto affixed, this **16th** day of **February, 2024.**

SEAL SEAL SEAL

State of Connecticut

By: _____
Bryce Grissom, Senior Vice President

City of Hartford ss.

On this the **16th** day of **February, 2024**, before me personally appeared **Bryce Grissom**, who acknowledged himself to be the Senior Vice President of each of the Companies, and that he, as such, being authorized so to do, executed the foregoing instrument for the purposes therein contained by signing on behalf of said Companies by himself as a duly authorized officer.

IN WITNESS WHEREOF, I hereunto set my hand and official seal.

My Commission expires the **30th** day of **June, 2026**

ANNA P NOWIK NOTARY PUBLIC CONNECTICUT

_____
Anna P. Nowik, Notary Public

This Power of Attorney is granted under and by the authority of the following resolutions adopted by the Boards of Directors of each of the Companies, which resolutions are now in full force and effect, reading as follows:

RESOLVED, that the Chairman, the President, any Vice Chairman, any Executive Vice President, any Senior Vice President, any Vice President, any Second Vice President, the Treasurer, any Assistant Treasurer, the Corporate Secretary or any Assistant Secretary may appoint Attorneys-in-Fact and Agents to act for and on behalf of the Company and may give such appointee such authority as his or her certificate of authority may prescribe to sign with the Company's name and seal with the Company's seal bonds, recognizances, contracts of indemnity, and other writings obligatory in the nature of a bond, recognizance, or conditional undertaking, and any of said officers or the Board of Directors at any time may remove any such appointee and revoke the power given him or her; and it is

FURTHER RESOLVED, that the Chairman, the President, any Vice Chairman, any Executive Vice President, any Senior Vice President or any Vice President may delegate all or any part of the foregoing authority to one or more officers or employees of this Company, provided that each such delegation is in writing and a copy thereof is filed in the office of the Secretary; and it is

FURTHER RESOLVED, that any bond, recognizance, contract of indemnity, or writing obligatory in the nature of a bond, recognizance, or conditional undertaking shall be valid and binding upon the Company when (a) signed by the President, any Vice Chairman, any Executive Vice President, any Senior Vice President or any Vice President, any Second Vice President, the Treasurer, any Assistant Treasurer, the Corporate Secretary or any Assistant Secretary and duly attested and sealed with the Company's seal by a Secretary or Assistant Secretary; or (b) duly executed (under seal, if required) by one or more Attorneys-in-Fact and Agents pursuant to the power prescribed in his or her certificate or their certificates of authority or by one or more Company officers pursuant to a written delegation of authority; and it is

FURTHER RESOLVED, that the signature of each of the following officers: President, any Executive Vice President, any Senior Vice President, any Vice President, any Assistant Vice President, any Secretary, any Assistant Secretary, and the seal of the Company may be affixed by facsimile to any Power of Attorney or to any certificate relating thereto appointing Resident Vice Presidents, Resident Assistant Secretaries or Attorneys-in-Fact for purposes only of executing and attesting bonds and undertakings and other writings obligatory in the nature thereof, and any such Power of Attorney or certificate bearing such facsimile signature or facsimile seal shall be valid and binding upon the Company and any such power so executed and certified by such facsimile signature and facsimile seal shall be valid and binding on the Company in the future with respect to any bond or understanding to which it is attached.

I, **Kevin E. Hughes**, the undersigned, Assistant Secretary of each of the Companies, do hereby certify that the above and foregoing is a true and correct copy of the Power of Attorney executed by said Companies, which remains in full force and effect.

Dated this **9th** day of **April**, **2026**.

SEAL SEAL SEAL

_____
Kevin E. Hughes, Assistant Secretary

To verify the authenticity of this Power of Attorney, please call us at 1-800-421-3880.
Please refer to the above-named Attorney(s)-in-Fact and the details of the bond to which this Power of Attorney is attached.

DRAFT

MISSOURI NOTARY ACKNOWLEDGMENT

State of Missouri)
County of St. Louis) ss.

On this 9th day of April, 2026, before me, the undersigned Notary Public, personally appeared Melinda Young, known to me to be the person whose name is signed on the preceding or attached document, and acknowledged to me that he/she signed it voluntarily for its stated purpose.

IN WITNESS WHEREOF, I have hereunto set my hand and affixed my official seal in the County and State aforesaid on the day and year above written.

Susan R. Zellers
Notary Public Signature
Printed Name: Susan R. Zellers
My Commission Expires: 7-2-2029

SUSAN R. ZELLERS
Notary Public - Notary Seal
STATE OF MISSOURI
St. Louis County
My Commission Expires: July 2, 2029
Commission # 13769613

(Seal)

DRAFT

NON-COLLUSION AFFIDAVIT

Project Name: City of San Luis West WWTP 3.0 MGD MBR

For: City of San Luis, Arizona

That pursuant to Section 1128 of Title 23 USC, the undersigned in submitting a PROPOSAL for performing the following work by CONTRACT, being duly sworn, disposes and says that he has not, nor anyone associated with the business identified below, either directly or indirectly, entered into any agreement, participated in any collusion or otherwise taken any action in restraint of free competitive bidding in connection with this CONTRACT.

Description of CONTRACT:

David J. Kiess
Signature of Bidder

Vice President
Title

Filanc
Business Name

740 North Andreasen Drive Escondido, California 92029
Address

Subscribed and sworn to before me this _____ day of _____, 20_____.

SEE ATTACHED
Notary Public

Notary Public in and for the County of _____, State

My Commission Expires_____, 20_____.

DRAFT

A notary public or other officer completing this certificate verifies only the identity of the individual who signed the document to which this certificate is attached, and not the truthfulness, accuracy, or validity of that document.

State of California
County of San Diego

Subscribed and sworn to (or affirmed) before me on this _____ day of April 6th, 20 26, by David Kiess

_____,

proved to me on the basis of satisfactory evidence to be the person(s) who appeared before me.

ADRIANA Y. IGLESIAS
Notary Public - California
San Diego County
Commission # 2535761
My Comm. Expires Oct 18, 2029

(Seal) Signature _____

DRAFT

BIDDER'S PARTICIPATION, SUBCONTRACTOR AND SUPPLIER LIST

Project Name: City of San Luis West WWTP 3.0 MGD MBR

For: City of San Luis, Arizona
1090 East Union Street
P.O. Box 1170
San Luis, Arizona 85349

This form shall be submitted along with the BID in the same sealed envelope.

The BIDDER must list below the names and addresses of all qualified subcontractors and major suppliers to be employed on the various portions of the work indicated.

BIDDER AND ALL CONTRACTORS SHALL BE DULY LICENSED IN ACCORDANCE WITH ARIZONA REVISED STATUTES AT THE TIME OF THE BID OPENING.

BIDDER,	
SUB CONTRACTOR AND/OR SUPPLIER	**CURRENT AZ LICENSE [SUB CONTRACTOR]**
1. ~~Sunland Asphalt~~	~~ROC 111922 & 095189~~ DK
2. ~~Gonzalez Asphalt~~	~~ROC 283318~~ DK
3. ~~Camblin Steel~~	~~ROC 338462~~ DK
4. ~~Tyler Reinforcing~~	~~ROC 296786~~ DK
5. CMC Rebar	ROC 189156
6. ~~Dickens Quality Demolition~~	~~ROC 123622~~ DK
7. USA Shade	ROC 289388
8. SH Engineering	ROC 202150
9. Echols Construction	ROC 330992
10. AO Painting	ROC 095603 & 129492
11. ~~K & H Electric~~	~~ROC 296585 & 067968~~ DK
12. AME Electric	ROC 071834 & 315758
13. Axis Mechanical LLC	ROC 327501
14. ~~Comstock Air~~	~~ROC 227132~~ DK
15. ~~Techno Coatings~~	~~ROC 085955~~ DK

DRAFT

TECHNICAL SPECIFICATIONS – 100% ISSUED FOR REVIEW

City of San Luis
City of San Luis West WWTP 3.0 MGD MBR Upgrades

February 2026

DRAFT

Prepared For:

CITY OF SAN LUIS ARIZONA

City of San Luis
1090 East Union Street
San Luis, AZ 85349

Prepared by:

PACE Advanced Water Engineering

Pacific Advanced Civil Engineering, Inc.
8723 E. Via de Commercio, #A-204
Scottsdale, AZ 85258



Contact Person:
Duong Do, P.E., F.ASCE
Mike Krebs, PE

PACE JN #B777

SECTION 00 0110 – CONTRACT DOCUMENTS TABLE OF CONTENTS

TECHNICAL SPECIFICATIONS

DIVISION 00 – PROCUREMENT AND CONTRACTING REQUIREMENTS

00 0110 Table of Contents
00 7000 Conditions of the Contract

DIVISION 01 – GENERAL REQUIREMENTS

01 1100 Summary of Work
01 1400 Work Restrictions
01 2000 Price and Payment Procedures
01 3216 Construction Progress Schedules
01 3300 Submittal Procedures
01 3529 Health, Safety, and Emergency Response Procedures
01 4219 Reference Standards
01 4333 Manufacturer's Field Services
01 4500 Quality Control
01 5626 Temporary Fencing
01 5713 Temporary Erosion and Sediment Control
01 5719 Temporary Environmental Controls
01 5726 Site Watering for Dust Control
01 7113 Mobilization
01 7123 Field Engineering
01 7700 Closeout Procedures
01 7823 Operation and Maintenance Data
01 7839 Project Record Documents
01 7900 Demonstration and Training

DIVISION 02 – EXISTING CONDITIONS

02 0100 Maintenance of Existing Conditions
02 4000 Demolition and Structure Moving

DIVISION 03 – CONCRETE

03 0900 Water Leakage Test for Concrete Structures
03 1500 Concrete Accessories
03 1516 Concrete Construction Joints
03 2000 Concrete Reinforcing
03 3000 Cast-In-Place Concrete
03 4100 Precast Concrete Utility Structures
03 6000 Grouting
03 6423 Epoxy Injection Grouting

DRAFT

SECTION 00 0110 – CONTRACT DOCUMENTS TABLE OF CONTENTS

DIVISION 05 – METALS

05 1200 Structural Steel Framing
05 3123 Metal Roof Decking
05 5000 Metal Fabrications
05 5213 Pipe and Tube Railings
05 5300 Metal Gratings

DIVISION 06 – WOOD, PLASTICS, AND COMPOSITES

06 7413 FRP Grating
06 8316 FRP Paneling

DIVISION 07 – THERMAL AND MOISTURE PROTECTION

07 6100 Sheet Metal Roofing
07 9200 Joint Sealants

DIVISION 08 – OPENINGS

08 1100 Metal Doors and Frames
08 3113 Safety Access Hatches
08 3300 Coil Doors
08 9100 Louvers

DIVISION 09 – FINISHES

09 9100 Painting
09 9700 Special Coatings

DIVISION 10 – SPECIALTIES

10 7316.23 Fabric Canopies

DIVISION 13 – SPECIAL CONSTRUCTION

13 4613 Lightning Protection for Structures

DIVISION 22 – PLUMBING

22 0529 Hangers and Supports for Plumbing Piping and Equipment
22 1000 Plumbing Piping

DRAFT

DIVISION 23 – HEATING, VENTILATING, AND AIR CONDITIONING

23 0000 Ventilating, Heating, and Air Conditioning

DIVISION 26 – ELECTRICAL

26 0126 Maintenance Testing of Electrical Systems
26 0500 Common Work Results for Electrical
26 0519 Low-Voltage Electrical Power Cables
26 0523 Instrumentation and Communication Cables
26 0526 Grounding and Bonding for Electrical Systems
26 0529 Hangers and Supports for Electrical Systems
26 0533.13 Conduit for Electrical Systems
26 0533.16 Boxes for Electrical Systems
26 0553 Identification for Electrical Systems
26 0583 Wiring Connections
26 0916 Electrical Controls, Relays, and Alarms
26 2100 Electrical Service Entrance
26 2200 Low-Voltage Transformers
26 2413 Switchboards
26 2416 Panelboards
26 2716 Electrical Cabinets and Enclosures
26 2726 Wiring Devices
26 2813 Fuses
26 2816 Enclosed Switches and Circuit Breakers
26 2913 Enclosed Motor Controllers
26 2923 Variable Frequency Drives
26 3213 Generator Set – Diesel
26 3353 Static Uninterruptible Power Supply
26 3623 Automatic Transfer Switches
26 4313 Surge Protective Devices for Low-Voltage Electrical Power Circuits
26 5000 Lighting

DIVISION 31 – EARTHWORK

31 0000 Earthwork
31 1000 Site Clearing
31 2333 Trenching and Backfilling

DIVISION 32 – EXTERIOR IMPROVEMENTS

32 1216 Asphalt Paving
32 1600 Curbs, Gutters, Sidewalks, and Driveways
32 3113 Chain Link Fences and Gates
32 3219 Reinforced Concrete Block Masonry

DRAFT

DIVISION 33 – UTILITIES

33 0505.31 Pipeline Hydrostatic Testing
33 0519 Ductile-Iron Utility Pipe (Yard Piping)
33 0531 Polyvinyl Chloride Pipe (Yard Piping)
33 0536.13 FRP Duct Pipe
33 0561 Concrete Manholes

DIVISION 40 – PROCESS INTERCONNECTIONS

40 0500.13 Common Work Results for Process Piping
40 0519 Ductile Iron Process Pipe
40 0523 Stainless Steel Process Piping
40 0524 Steel Process Piping
40 0531 Plastic Pipe and Tubing
40 0551 Common Work Results for Process Valves
40 0557 Actuators for Process Valves and Gates
40 0560.10 Sluice, Weir, and Channel Stop Gates
40 0561 Gate Valves
40 0562 Plug Valves
40 0563 Ball Valves
40 0564 Butterfly Valves
40 0565 Check Valves
40 0567 Specialized Pressure and Flow-Control Valves
40 0573 Miscellaneous Process Valves
40 0597 Identification for Process Piping
40 4200 Process Piping and Equipment Insulation
40 6700 Local Control Panels
40 7000 Instrumentation for Process Systems

DIVISION 41 – MATERIAL PROCESSING AND HANDLING EQUIPMENT

41 2200 Cranes and Hoists

DIVISION 43 – PROCESS HANDLING AND STORAGE EQUIPMENT

43 1134 Regenerative Blower
43 2313.19 Horizontal Self-Priming Centrifugal Pump
43 2331.15 Process Water Package Booster Pump Skid
43 2358.23 Positive Displacement Rotary Lobe Pump
43 2550.10 Submersible Horizontal Propeller Pump

DIVISION 44 – POLLUTION AND WASTE

44 3119 Odor Control System

DRAFT

DIVISION 46 – WATER AND WASTEWATER EQUIPMENT

46 5143 Fine Bubble Membrane Diffuser

APPENDICES

Appendix A – Geotechnical Report

Appendix B – Referenced Specifications for City-Purchased Equipment
41 1213.37 Shaftless Screw Conveyor
43 1133 Rotary Lobe Blowers
43 2413.33 Submersible Axial Column Pump
46 2158 Headworks Fine Screen System
46 2316 Vortex Grit Removal and Handling System
46 3323 Polymer Blending and Feed Equipment
46 4121 Submersible Mixers
46 5143 Fine Bubble Membrane Diffuser - MBR PreAir
46 5349 Membrane Bioreactor (MBR) System
46 7626 Sludge Dewatering Screw Press

Appendix C – City-Purchased Equipment Shop Drawings
FKC Dewatering
HydroDyne Headworks
Kubota MBR Process Equipment

END OF SECTION

DRAFT

SECTION 00 7000 – SPECIAL CONDITIONS OF THE CONTRACT

PART 1 – GENERAL

1.01 CONTRACT DOCUMENTS

The Contract Documents which constitute the contract between the OWNER and the CONTRACTOR with regard to the subject matter as set forth in Section I of such contract ("Contract Agreement") and include the Contract Agreement, plans, drawings, and the technical specifications.

All terms and conditions established in the Contract Agreement shall supersede all general conditions of these specifications to be followed in the event of any conflict or discrepancies.

1.02 DEFINITIONS AND MEANINGS OF TERMS

Whenever in the Contract Documents the following terms or pronouns referring to them are used, the intent and meaning shall be interpreted as follows which shall be applicable to both the singular and plural thereof:

A. The Contract shall mean the Contract executed by the OWNER and the CONTRACTOR, of which these General Conditions form a part; the terms Contract and Agreement are synonymous.

B. The term OWNER shall mean the respective party to the Contract; the OWNER being the City of San Luis. The term OWNER may also mean consultants, engineers, or other professionals contracted by the OWNER to review, supervise, or consult on the project.

C. The term County shall mean Yuma County, AZ.

D. The term CONTRACTOR shall mean the respective party to the contract.

E. The term SUBCONTRACTOR shall mean any individual, partnership or corporation having a direct contract with the CONTRACTOR to perform any part of the WORK.

F. The term ENGINEER shall mean Pacific Advanced Civil Engineering, Inc. (PACE).

G. Addenda shall mean written or graphic instruments issued prior to the execution of the Agreement which modify or interpret the Contract Documents, Final Design Plans, by additions, deletions, clarifications, or corrections.

H. Bonds shall mean Performance and Payment Bonds and other instruments of security, furnished by the CONTRACTOR and its surety in accordance with the Contract Documents.

I. Change Order shall mean a written order to the CONTRACTOR authorizing an addition, deletion, or revision in the WORK within the general scope of the Contract Documents, or authorizing an adjustment in the Contract price or Contract time.

J. Contractual Agreement shall mean the signed agreement between the OWNER and the CONTRACTOR for the WORK intended.

K. Contract Documents shall have the meaning described in Section 1.01 herein.

L. Contract price shall mean the total monies payable to the CONTRACTOR under the terms and conditions of the Contract Documents.

M. Contract time in days shall mean the number of consecutive calendar days stated in the Contract Documents for the completion of the WORK.

N. Drawings shall mean the part of the Contract Documents, which show the characteristics and scope of the WORK to be performed and which have been prepared or approved by the ENGINEER.

DRAFT

O. Notice to proceed shall mean written communication issued by the OWNER to the CONTRACTOR authorizing him to proceed with the WORK and establishing the date of commencement of the WORK.

P. Project shall mean the undertaking to be performed as provided in the Contract Documents.

Q. Submittals shall mean all drawings, diagrams, illustrations, brochures, schedules, and other data which are prepared by the CONTRACTOR, a SUBCONTRACTOR, manufacturer, supplier, or distributor, which illustrate how specific portions of the WORK shall be fabricated or installed; the terms shop drawings and submittals are synonymous.

R. Specifications shall mean a part of the Contract Documents consisting of written descriptions of a technical nature of materials, equipment, construction systems, standards, and workmanship.

S. Substantial completion shall have the meaning defined in the Contract Agreement.

T. Suppliers shall mean any person, supplier or organization who supplies materials or equipment for the WORK, including that fabricated to a special design, but who does not perform labor at the site.

U. WORK shall mean all (1) obligations, responsibilities and duties undertaken by the CONTRACTOR in order to successfully construct, complete, and operate (for Startup Completion) the Project, including all labor, materials, equipment and other incidentals, and the furnishing thereof, (2) Design and Engineering Services, (3) Training Services, and (4) Initial Operations, pursuant to the Contract Documents.

V. Written notice shall mean any notice to any party of the Agreement relative to any part of this Agreement in writing and considered delivered and the service thereof completed, when posted by certified or registered mail to the said party at his last given address, or delivered in person to said party of his authorized representative on the WORK.

W. Engineering Supplemental Information (ESI) shall mean written communications issued by the ENGINEER to the CONTRACTOR providing the CONTRACTOR with additional clarifications of the Contract Documents that the ENGINEER deem necessary to ensure the design intent.

X. Request for Information (RFI) shall mean written communications issued by the CONTRACTOR to the ENGINEER requesting additional information or clarification regarding a specific item in the Contract Documents.

1.03 CONTRACTOR'S RESPONSIBILITY

A. General: It is the responsibility of the CONTRACTOR and each SUBCONTRACTOR to visit the site and satisfy himself as to the various existing conditions affecting the WORK as required.

B. The CONTRACTOR shall coordinate the WORK of all crafts, trades, and SUBCONTRACTORS engaged in the WORK, and he shall have final responsibility in regard to the Schedule, workmanship, and completeness of each and all parts of the WORK.

C. All crafts, trades and SUBCONTRACTORS shall cooperate with each other and with others, as they may be involved in the installation of WORK, which adjoins, incorporates, precedes, or follows the WORK of another. It shall be the CONTRACTOR's responsibility to point out areas of cooperation prior to execution of SUBCONTRACTORS Agreements and the assignment of the parts of the WORK. Each craft, trade, and SUBCONTRACTOR shall be responsible to the CONTRACTOR for furnishing embedded items, giving directions for doing all cutting and fitting, making all provisions for accommodating the

DRAFT

WORK, and for protecting, patching, repairing, and cleaning as required to satisfactorily perform the WORK.

D. The CONTRACTOR shall be responsible for supervising all cutting, digging and other action of his SUBCONTRACTORS and workers. Where such action impairs the safety or function of any structure or component of the Project as determined by the ENGINEER, the CONTRACTOR shall make such repairs, alterations, and additions as will bring said structure or component back to its original design condition at no additional cost to the OWNER.

E. The CONTRACTOR is expected to be familiar with the General Requirements and all Sections of the detailed Specifications for all other trades and to study all Drawings applicable to his WORK to the end that complete coordination between the trades will be affected. CONTRACTOR shall submit the Request for Information (RFI) to the ENGINEER if conflicts exist within the Contract Documents.

F. Underground Utilities: The information shown on the drawings was obtained from drawings furnished by the OWNER, and surveys furnished to the OWNER. The CONTRACTOR shall make such investigation as deemed necessary to be satisfied as to the actual location, size, type of material, buried depth, and other factors relating to these services.

1.04 HOURS OF WORK

A. The hour of WORK shall be as defined in the Contract Documents.

1.05 PERMITS, FEES, AND SALES TAX

A. The CONTRACTOR shall submit the required fees, drawings, and application for the applicable permits prior to commencement of WORK.

B. A summary of potential permits are as follows:
1. City of San Luis Building Permit
2. SWPPP – NOI, BMP Plan & Monitoring Plan (State)
3. Encroachment Permits (City.)
4. City of San Luis Business License

C. CONTRACTOR shall pay all sales tax applicable to the WORK.

1.06 PROTECTION OF WORK

A. CONTRACTOR shall provide all protection required to ensure that all WORK completed will not be harmed.

B. The CONTRACTOR may, at his option and expense, install any lawful security measures he deems necessary to protect his materials, equipment, or finished WORK. The type of security devices or quantity shall be the sole responsibility of the CONTRACTOR. The CONTRACTOR is to provide security and protect the project until the OWNER has occupied the space or the OWNER has accepted the space.

DRAFT

C. Protection:
   1. The CONTRACTOR shall be solely responsible for the protection of all materials and WORK.
   2. The CONTRACTOR shall include in his proposal the cost of any temporary partitions, sheathing, plastic covering, etc., as may be required to maintain affected areas. Remove all such temporary WORK at the proper time during the construction period and repair all damage related to same.
   3. The CONTRACTOR is solely responsible for the protection of the area in which WORK is being performed.
   4. Provide construction fencing as required in the Contract documents to secure the site.

1.07 PRIOR APPROVALS

A. If the CONTRACTOR wishes to use items of equipment and/or materials other than those identified in the drawings or specifications, a written request for approval shall be submitted to the ENGINEER prior to the confirmation of contract price. Any request submitted after this time are not under obligation to be accepted. Request from SUBCONTRACTORS will not be considered.

B. Proposed substitutions that have not received prior approval are undertaken at the CONTRACTOR's risk to be deemed equivalent during the construction submittal process.

C. Each request shall include all basic data and characteristics clearly legible. The specified item as well as the proposed item shall be formatted in such manner that a direct comparison can be readily made. ENGINEER shall not be required to perform research to accomplish the comparison. It is the bidder's responsibility to submit complete descriptive and technical information for the ENGINEER and OWNER to perform a complete and proper appraisal.
   a. For each equipment, the CONTRACTOR shall submit a Submittal Review Deposit, in the form of a certified bank check in the amount of $2,000 made payable to the OWNER. This deposit will be used for ENGINEER's review of substitute equipment. The ENGINEER's review time will be deducted at a rate of $170.00 per hour for reviewing substitution requests, regardless of whether the substitution is approved or rejected. The OWNER will return any unused funds to the petitioner within 30 days of the bid date.

D. If alternate manufacturers are accepted, the CONTRACTOR shall be responsible for any and all re-design or re-engineering required to accommodate alternate products. Wherever multiple acceptable products or manufacturers are listed in the Contract Documents, the first named product will constitute the design. Change order proposals that add cost to the project as the result of redesign requirements for alternate manufacturers, or as the result of alternate manufacturers that do not meet the requirements of the construction documents, will not be accepted.

1.08 FINAL DESIGN PLANS

A. The intent of the Final Design Plans is that the CONTRACTOR shall furnish all labor, materials, tools, equipment, and transportation necessary for the proper execution of the WORK in accordance with the Contract Documents and all incidental WORK necessary to complete the project in an acceptable manner, ready for use, occupancy, or operation by the OWNER.

B. The CONTRACTOR shall keep one set of the Final Design Plans on the site of the work. This set shall be kept current by the addition of all reviewed changes, addenda, and amendments thereto.

DRAFT

C. The Final Design Plans are intended to be explanatory to each other, but should any discrepancy appear or any misunderstanding arise as to the importance of anything contained in either, the CONTRACTOR shall obtain the necessary interpretation from the ENGINEER. Corrections of errors or omissions in the Final Design Plans may be made by the CONTRACTOR; when such corrections are necessary for the proper fulfillment of their intention. However, any changes or corrections to be performed after Notice to Proceed shall require the approval of both the ENGINEER and the CONTRACTOR.

D. All WORK or materials shown on the Plans and not mentioned in the Specifications, or any WORK specified and not shown on the Plans, shall be furnished, performed, and done by the CONTRACTOR as if same were both mentioned in the Specifications and shown on the Drawings. Conflicts or discrepancies within the plans and/or specifications and between the plans and specifications, the stricter interpretation shall apply unless approved by the ENGINEER of Record.

1.09 SUBMITTAL/SHOP DRAWINGS

A. See Section 01 3300 – Submittal Procedures

1.10 STANDARD SPECIFICATIONS

A. See Section 01 4219 – Reference Standards

1.11 SPECIFIC BRANDS, MAKERS OR MANUFACTURERS

A. Wherever in the Specifications one or more specific brands, makers or manufacturers are set out and qualified by the "or equal" clause, it is intended to denote the quality standard of the article desired, but unless otherwise noted does not restrict the CONTRACTOR to the specific brand, make or manufacturer.

1.12 "OR EQUAL" CLAUSE

A. Whenever the words "or approved equal," or "or equal," or "similar to," etc., appear in the Specifications, they shall be interpreted to mean an item of material or equipment that, in the opinion of the ENGINEER is similar to that named, suited to the same use, capable of performing the same function as that named, has a record of service equal to that named, and is equal in quality, capacity and/or efficiency to that named.

1.13 SAFETY

A. The CONTRACTOR shall take all necessary precautions and provide all necessary safeguards to prevent personal injury and property damage. The CONTRACTOR shall provide protection for all persons including but not limited to his employees and employees of other contractors or subcontractors; members of the public; and employees, agents, and representatives of the OWNER, and regulatory agencies that may be on or about the WORK. The CONTRACTOR shall provide protection for all public and private property including but not limited to structures, pipes, and utilities, above and below the ground.

B. The CONTRACTOR shall provide and maintain all necessary safety equipment such as fences, barriers, signs, lights, walkways, guards and fire prevention and fire-fighting equipment and shall take such other action as is required to fulfill his obligations under this Subsection and Contract documents.

C. The CONTRACTOR shall comply with all federal, state, and local laws, ordinances, rules and regulations and lawful orders of authorities having jurisdiction for the safety of persons and protection of property.

D. The CONTRACTOR shall designate a responsible member of his organization at the site whose duty shall be the prevention of accidents. This responsible person shall have the authority to take immediate action to correct unsafe or hazardous conditions and to enforce safety precautions and programs.

DRAFT

E. The CONTRACTOR shall submit a Construction Safety Plan as required by the Contract Documents.

1.14 MATERIALS REVIEW

A. Unless otherwise expressly provided on the Drawings or in any of the other Contract Documents, only new materials and equipment shall be incorporated in the WORK. All materials and equipment furnished by the CONTRACTOR to be incorporated in the WORK shall be subject to the review of the ENGINEER. No material shall be processed or fabricated for the WORK or delivered to the WORK site without prior concurrence of the ENGINEER.

B. Facilities and labor for the storage, handling, and inspection of all materials and equipment shall be the responsibility of the CONTRACTOR. Defective materials and equipment shall be identified to the ENGINEER and removed immediately from the site of the WORK.

C. If the ENGINEER so requires, either prior to or after commencement of the WORK, the CONTRACTOR shall submit samples of materials for such special tests, as the ENGINEER deems necessary to demonstrate that they conform to the Specifications.

1.15 FINAL CLEAN-UP

A. The WORK will not be considered as completed until all final clean-up has been done by the CONTRACTOR.

1.16 SEQUENCE OF CONSTRUCTION

A. See Section 01 1100 – Summary of Work.

1.17 SPECIAL TRAINING AND ACCESS REQUIREMENTS

A. Where required, the CONTRACTOR shall provide special training for employees and SUBCONTRACTORS working on the project within the limits of local jurisdiction or private entities.

PART 2 – PRODUCTS (Not Used)

PART 3 – EXECUTION (Not Used)

END OF SECTION

DRAFT

SECTION 01 1100 – SUMMARY OF WORK

PART 1 – GENERAL

1.01 THE REQUIREMENT

A. The WORK to be performed under this Contract shall consist of furnishing parts, tools, equipment, materials, supplies and manufactured articles, and furnishing all labor, transportation, and services, including fuel, power, water, and essential communications, and performing all work or other operations required for the fulfillment of the Contract in strict accordance with the Contract Documents. The WORK shall require that all work, materials, and services not expressly indicated or called for in the Contract Documents, which may be necessary for the complete and proper construction of the WORK in good faith shall be provided.

B. The WORK will conform to 2016 City of San Luis Supplemental to the 2015 MAG Uniform Standard Specifications and Details for Public Works Construction; City of Yuma Construction Standard Detail Drawings; MAG Uniform Standard Specifications and Details for Public Works Construction; and the City of Yuma Construction Standard Detail Drawings – Edition 2019. The most stringent will govern.

1.02 WORK COVERED BY CONTRACT DOCUMENTS

A. The WORK of this Contract comprises construction, installation, and/or modifying the City of San Luis West Wastewater Treatment Plant (WWTP) and associated process. The modifications and improvements shall include, but are not limited to the following:

1. The work shall include civil, architectural, mechanical, structural, and electrical and control work shown in the construction documents.
2. All work on this project will be coordinated with the City's Engineering, Public Works, and the WWTP Operational staff;
3. Modifications and expansion of the City of San Luis West WWTP include increasing the treatment capacity from 1.5 MGD to 3.0 MGD by installing a Membrane Bioreactor (MBR) activated sludge treatment process. Major components of the WWTP 3 MGD MBR process upgrades include:
    - Site civil, including grading, trenching, shoring, drainage, and earthworks;
    - Site access and pavements;
    - Site yard piping and associated appurtenances;
    - All structural improvements, including process tanks, canopies, equipment slabs, access walkways, etc.;
    - Installation of new complete headworks system with 6mm fine screening, grit removal, and 2mm fine screening and associated equipment, controls, instrumentation and appurtenances;
    - Installation of headworks odor control system, piping, valves, and appurtenances;
    - Installation of the Intensification Process within SBR Basin 4 and provide all required intensification equipment and bypass line;
    - Conversion of Sequencing Batch Reactor (SBR) 4 to the new FEB;
    - Installation of new FEB pumps, process piping, valves, and appurtenances;
    - Conversion of the existing SBR 3 and digesters into MBR Secondary Process trains along with all the required structural modifications, equipment, process piping, controls and appurtenances;
    - Conversion of the existing SBRs 1 & 2 into the MBR Basins, along with installation of MBR basins and MBR Equipment. This include all the required

DRAFT

structural modifications, equipment, process piping, controls, and appurtenances;

- Process modification to the existing effluent pump station;
- Process modification to the chemical storage and cleaning in-place (CIP) chemical injection;
- Process modification to the existing aerobic digesters;
- Construction of new sludge dewatering system, associated equipment, controls, process piping, and appurtenances;
- Process pipe modification to the existing chlorination;
- Installation of a new onsite reuse pump station, process piping, controls, and appurtenances;
- Installation of new Reuse Pipeline within the WWTP site, including fitting, valves, and appurtenances;
- Modification and improvements to the existing plant drain lift station;
- Modification to the existing MCC and PLC;
- Installation of new electrical gears, panels, and appurtenances;
- Replacement and install electrical conductors/ wiring to existing and new equipment and process;
- Modification of the existing MCC building;
- Installation of new emergency generators;
- Construction of the new blower room and MBR galleries, including lighting, ventilation, and electrical;
- Installation of aeration blowers, process piping, valves, controls and appurtenances;
- Perform civil work for the construction of new Administration/Operations Building with all associated requirements. Construction of the new Administration/ Operation Building is under a separate contract and is not part of this scope;
- Providing all controls and instrumentation equipment with the exception of controls and instrumentation equipment provided by vendors;
- Install, wire, terminate and test all electrical and controls instrumentation equipment;
- Storm drain site work including curbs, piping, etc;
- Coordination of seeding process with operators for WWTP. This includes providing pump equipment and temporary piping to transfer seed sludge from SBR basins and for screening of the seed sludge;
- Provide all equipment and labor for all bypass work.
- Provide labor, equipment, pumps, piping, controls, etc. as required for draining and cleaning of the basins.
- Testing, commissioning, and start-up of the WWTP system and process equipment.

4. Sequencing of Construction

CONTRACTOR shall submit a formal shop drawing review submittal for the Sequence of Construction Schedule to the OWNER & ENGINEER for their approval prior to the start of construction. The submittal shall indicate proposed methods and operations of all WORK, provide a detailed sequence of construction, expect number of working days to complete each sequence, and the required shut-off of existing equipment with the expected number of working days. The sequence of construction shall allow for the CONTRACTOR to conduct the WORK while ensure uninterrupted

DRAFT

operation of the existing facility. The sequence of construction shall be updated weekly and presented at the weekly construction meeting.

The CONTRACTOR shall incorporate the World Water Works–developed Activated Sludge Intensification Process into the construction sequencing to increase the treatment capacity of existing SBR Tank No. 4 from 0.5 MGD to 1.4 MGD. This enhancement will allow the remaining SBR tanks and associated treatment processes to be taken out of service during construction. The CONTRACTOR shall coordinate with World Water Works and shall furnish and install all required equipment and piping necessary to implement the intensification process. The CONTRACTOR will furnish the required equipment for the intensification as indicated on the plan. City Operations staff shall be responsible for operation of the intensification process. The CONTRACTOR shall coordinate closely with City Operations staff to ensure a smooth and effective transition. A suggested Sequence of Construction for the intensification process is provided in the Contract Documents.

5. Process Control programming and integration shall be performed by the City's Instrumentation and Control INTEGRATOR (I&C INTEGRATOR). The CONTRACTOR shall work and coordinate closely with the I&C INTEGRATOR. The CONTRACTOR shall furnish all field instrumentation and controls as identified and listed in the applicable Sections of Division 40 – Process Integration. The CONTRACTOR shall be responsible for the installation of conduits, wires, loop-testing, and all required tags. The CONTRACTOR shall also be responsible for the installation of the instruments and landing all field wiring to the instruments. All Vendor-provided equipment and packages shall be pre-wired, programmed, and factory tested.
6. The work shall include all construction sequencing to maintain operation of the existing treatment capacity, including all by-pass pumping for temporary or standby conditions.

B. The WORK includes obtaining any permits related or required by the Contract.

1.03 WORK BY OTHERS

A. Where two (2) or more Contracts are being performed at one time on the same Site or adjacent land in such manner that work under one (1) Contract may interfere with work under another, the sequence and order of the WORK in either or both Contracts to the agreement of both contracting entities shall be determined. When the Site of one (1) Contract is the necessary or convenient means of access for performance of work under another, the privilege of access or other reasonable privilege to the CONTRACTOR so desiring may be granted, to the extent, amount, and in manner and at a time that shall be determined. Conduct its operations to cause a minimum of interference with the work of such other contractors, and shall cooperate fully with such contractors to allow continued safe access to their respective portions of the Site, as required to perform work under their respective contracts.

B. Interference with Work on Utilities: Cooperate fully with all utility forces or forces of other public or private agencies engaged in the relocation, altering, or otherwise rearranging of any facilities, which interfere with the progress of the WORK, and shall schedule the WORK to minimize interference with said relocation, altering or other rearranging of facilities. Any delays, reduction in work efficiency or hardships incurred shall be identified and resolved to the satisfaction of both parties.

DRAFT

PART 2 – PRODUCTS (NOT USED)

PART 3 – EXECUTION (NOT USED)

END OF SECTION

DRAFT

SECTION 01 1400 – WORK RESTRICTIONS

PART 1 – GENERAL

1.01 LAND FOR WORK AND STORAGE

A. The OWNER will provide the lands upon which the work under this Contract is to be done or the necessary easements over said lands to include sufficient space for the proper execution of the work, together with right of access to same. The OWNER will provide the CONTRACTOR with information, which delineates and describes the lands owned and rights-of-way acquired. The OWNER shall provide land required for storage of construction materials and for any temporary construction facilities for the storage of equipment. The CONTRACTOR will furnish his own power and water supply unless otherwise specifically set out herein or in the contract documents.

B. CONTRACTOR shall designate and arrange for the use, a portion of the property adjacent to the WORK for its exclusive use during the term of the Contract as storage and shop area for its construction operations relative to this Contract.

C. Use of the Site shall be limited to its construction operations, including on-site storage of materials, on-site fabrication facilities and field offices.

D. All or part of the existing Site may be utilized during the entire period of construction for the conduct of normal operations. Cooperate and coordinate to facilitate operations and to minimize interference with the operations at the same time. In any event, access to the site during the period of construction shall be allowed.

E. All access to the site by the CONTRACTOR, SUBCONTRACTORS, workmen, material/equipment suppliers, etc., shall be via approved access locations as designated by the OWNER. All vehicular or equipment activity shall be strictly confined to the construction limits as indicated by OWNER.

F. Remove all temporary construction and temporary facilities at close of the job or when no longer needed.

1.02 WORK ON "PRIVATE PROPERTY"

A. Private property is defined as property other than that belonging to the OWNER. Highway and railroad rights-of-way, public parks, school yards and other such properties shall be considered "private properties" for the purpose of this Paragraph.

B. In connection with water line, sewer line, gas line or similar work performed on "private property," the CONTRACTOR shall confine his equipment, the storage of materials and the operations of his workman to the limits indicated on the Drawings, or to lands and rights-of-way provided for the Project by the OWNER, and shall take every precaution to avoid damage to the buildings, grounds and facilities of the OWNER or private property.

C. Fences, walls, hedges, shrubs, etc., shall be carefully removed, preserved, and replaced when the construction is completed. Grassed areas, other than lawns, shall be graded, fertilized, and seeded when construction is completed and in accordance with the requirements of the Technical Specifications. Where ditches or excavations cross lawns, the sod shall be removed carefully and replaced when the backfilling has been completed. If sod is damaged or not handled properly, it shall be replaced with new sod equal to existing sod at the CONTRACTOR’s expense. When construction is completed, the facilities and grounds of the OWNER’s property shall be restored to as good or better condition than found as quickly as possible at the CONTRACTOR’s expense.

DRAFT

D. When directed by the OWNER, large trees or other facilities that cannot be preserved and replaced shall be removed by the CONTRACTOR. The OWNER will assume the responsibility for settling with the property OWNER for the loss of said trees or facilities. The CONTRACTOR shall be solely and entirely responsible for any damage to all other trees or facilities.

E. Foundations, adjacent to where an excavation is to be made below the bottom of the foundation, shall be supported by shoring, bracing or underpinning as long as the excavation shall remain open, or thereafter if required to insure the stability of the foundation and the CONTRACTOR shall be held strictly responsible for any damage to said foundations.

F. All excavated materials and equipment to be incorporated in the Work shall be placed so as not to injure any part of the Work or existing facilities and so that free access can be had at all times to all parts of the Work and to all public utility installations in the vicinity of the Work. Materials and equipment shall be kept neatly piled and compactly stored in such locations as will cause a minimum of inconvenience to public travel and adjoining OWNERs, tenants, and occupants.

1.03 EXISTING UTILITIES

A. Special precautions shall be taken by the CONTRACTOR to avoid damage to existing overhead and underground utilities owned and operated by the OWNER or by other public or private utility companies.

B. Before proceeding with the Work, the CONTRACTOR shall confer with all public or private companies, agencies or departments that own and operate utilities in the vicinity of the Construction WORK. The purpose of the conference, or conferences, shall be to notify said companies, agencies, or departments of the proposed construction schedule, verify the location of, and possible interference with, the existing utilities that are shown on the Drawings, arrange for necessary suspension of service, and arrange to locate and avoid interference with all utilities (including house and any building connections) that are not shown on the Drawings.

C. Where existing utilities or appurtenant structures, either underground or above-ground, are encountered, they shall not be displaced or molested unless necessary, and in such case shall be replaced in as good or better condition than found as quickly as possible. Relocation and/or replacement of all utilities and appurtenant structures to accommodate the construction work shall be at cost to the OWNER, unless such relocation and/or replacement is by statute or agreement the responsibility of the CONTRACTOR.

1.04 TRAFFIC CONTROL

A. Traffic Control Plan: Where work occurs on public streets, CONTRACTOR shall develop and a submit a Traffic Control Plan for the protection of traffic in public or private streets and ways, provide, place, and maintain all necessary barricades, traffic cones, warning signs, lights, and other safety devices.

1. Traffic Control Plan shall conform to County and ADOT requirements. Traffic control plans shall be approved by the OWNER and the governing agencies prior to construction commencement.

DRAFT

2. Take all necessary precautions for the protection of the WORK and the safety of the public. Barricades and obstructions shall be illuminated at night and all lights shall be kept burning from sunset until sunrise. Station guards or flaggers may be required by the public authorities within their respective jurisdictions in order to conform to such special safety regulations relating to traffic control Signs, signals and barricades shall conform to the requirements Subpart G, Part 1926, of the OSHA Safety and Health Standards for Construction.

B. HIGHWAY LIMITATIONS

Make investigation of the condition of available public and private roads and of clearances, restrictions, bridge load limits, and other limitations affecting transportation and ingress and egress to the site of the WORK.

C. TEMPORARY CROSSINGS

General: Continuous, unobstructed, safe, and adequate pedestrian and vehicular access shall be provided. Vehicular access to residential driveways shall be maintained to the property line.

D. STREET USE

Nothing herein shall be construed to entitle any entity to the exclusive use of any public street, alleyway, or parking area during the performance of the WORK hereunder, and it shall so conduct its operations as not to interfere unnecessarily with the authorized work of utility companies or other agencies in such streets, alleyways, or parking areas. No streets shall be closed to the public without first obtaining permission from the proper governmental authority. Where excavation is being performed in primary streets or highways, one lane in each direction shall be kept open to traffic at all times unless otherwise indicated. Toe boards shall be provided to retain excavated material if required by the ENGINEER or the agency having jurisdiction over the street or highway. Fire hydrants on or adjacent to the WORK shall be kept accessible to fire-fighting equipment at all times. Temporary provisions shall be made to assure the use of sidewalks and the proper functioning of all gutters, storm drain inlets and other drainage facilities.

PART 2 – PRODUCTS (NOT USED)

PART 3 – EXECUTION (NOT USED)

END OF SECTION

DRAFT

SECTION 01 2000 – PRICE AND PAYMENT PROCEDURES

PART 1 – GENERAL

1.01 SECTION INCLUDES

A. Requirements for preparation, format, and submittal of Schedule of Values.

B. Procedures for preparation and submittal of applications for progress payments.

C. Documentation of changes in Contract Price and Contract Time.

D. Change procedures.

E. Correlation of CONTRACTOR submittals based on changes.

F. Procedures for preparation and submittal of application for final payment.

1.02 SCHEDULE OF VALUES

A. Prepare Schedule of Values identifying costs of Major Items of WORK and other costs shown in sample included at end of this Section.

B. Divide the Work into following Major Items of WORK and subdivide the Major Items that will complement not only the scope of the work, but the progress of work as well.

C. Assign prices and unit price to Items of Work which aggregate the Contract Price. Separate all major items with unit prices. Total of Schedule of Values shall match total Contract Value.

D. Submit preliminary schedule of values for ENGINEER's approval.

E. Submit corrected schedule of values within 10 days upon receipt of reviewed Schedule of Values, but no later than 10 days prior to anticipated submittal of first Application for Payment.

1.03 APPLICATIONS FOR PROGRESS PAYMENTS

A. Submit template for progress payment for Engineer's approval.

B. Payment Period: Submit at intervals stipulated in the Agreement.

C. Electronic media printout including equivalent information will be considered in lieu of standard form specified; submit sample to ENGINEER for approval. Forms filled out by hand will not be accepted.

D. For each item, provide a column for listing each of the following:
   1. Item Number
   2. Description of WORK
   3. Scheduled Values
   4. Previous Applications
   5. Work in Place and Stored Materials under this Application
   6. Authorized Change Orders
   7. Total Completed and Stored to Date of Application
   8. Percentage of Completion
   9. Balance to Finish
   10. Retainage

E. Execute certification by signature of authorized officer.

F. Use data from approved Schedule of Values. Provide dollar value in each column for each line item for portion of work performed and for stored products.

G. List each authorized Change Order as a separate line item, listing Change Order number and dollar amount as for an original item of Work.

DRAFT

H. Submit three copies of each Application for Payment.

I. Include the following with the application:
   1. Transmittal letter as specified for Submittals in Section 01 3300 – Submittal Procedures.
   2. Construction progress schedule, revised and current as specified in applicable Sections of Division 01 – General Requirements.
   3. Current construction photographs specified in in applicable Sections of Division 01 – General Requirements.
   4. Partial release of liens from major SUBCONTRACTORS and vendors.
   5. Sustainable design documentation applicable to work for which application is being made.
   6. Project record documents as specified in in applicable Sections of Division 01 – General Requirements, for review by OWNER which will be returned to the CONTRACTOR.
   7. Affidavits attesting to off-site stored products.

J. When ENGINEER requires substantiating information, submit data justifying dollar amounts in question. Provide one copy of data with cover letter for each copy of submittal. Show application number and date, and line item by number and description.

1.04 MODIFICATION PROCEDURES

A. Submit name of the individual authorized to receive change documents and who will be responsible for informing others in CONTRACTOR's employ or SUBCONTRACTOR of changes to the Contract Documents.

B. For minor changes not involving an adjustment to the Contract Price or Contract Time, ENGINEER will issue instructions directly to CONTRACTOR.

C. For other required changes, ENGINEER will issue a document signed by OWNER instructing CONTRACTOR to proceed with the change, for subsequent inclusion in a Change Order.
   1. The document will describe the required changes and will designate method of determining any change in Contract Price or Contract Time.
   2. Promptly execute the change.

D. For changes for which advance pricing is desired, ENGINEER will issue a document that includes a detailed description of a proposed change with supplementary or revised drawings and specifications, a change in Contract Time for executing the change with a stipulation of any overtime work required and the period of time during which the requested price will be considered valid. CONTRACTOR shall prepare and submit a fixed price quotation within 14 days.

E. CONTRACTOR may propose a change by submitting a request for change to ENGINEER, describing the proposed change and its full effect on the Work, with a statement describing the reason for the change, and the effect on the Contract Price and Contract Time with full documentation and a statement describing the effect on WORK by separate or other contractors. Document any requested substitutions.

F. Computation of Change in Contract Amount: As specified in the Agreement and Conditions of the Contract.
   1. For change requested by ENGINEER for work falling under a fixed price contract, the amount will be based on CONTRACTOR 's price quotation.
   2. For change requested by CONTRACTOR, the amount will be based on the CONTRACTOR 's request for a Change Order as approved by ENGINEER.
   3. For pre-determined unit prices and quantities, the amount will be based on the fixed unit prices.

4. For change ordered by ENGINEER without a quotation from CONTRACTOR, the amount will be determined by ENGINEER based on the CONTRACTOR's substantiation of costs as specified for Time and Material work.

G. Substantiation of Costs: Provide full information required for evaluation.
   1. On request, provide following data:
      a. Quantities of products, labor, and equipment
      b. Taxes, insurance, and bonds
      c. Overhead and profit
      d. Justification for any change in Contract Time
      e. Credit for deletions from Contract, similarly documented
   2. Support each claim for additional costs with additional information:
      a. Origin and date of claim
      b. Dates and times that work was performed, and by whom
      c. Time records and wage rates paid
      d. Invoices and receipts for products, equipment, and subcontracts, similarly documented
   3. For Time and Material work, submit itemized account and supporting data after completion of change, within time limits indicated in the Conditions of the Contract.

H. Execution of Change Orders: ENGINEER will issue Change Orders for signatures of parties as provided in the Conditions of the Contract.

I. After execution of Change Order, promptly revise Schedule of Values and Application for Payment forms to record each authorized Change Order as a separate line item and adjust the Contract Price.

J. Promptly revise progress schedules to reflect any change in Contract Time, revise sub-schedules to adjust times for other items of work affected by the change, and resubmit.

K. Promptly enter changes in Project Record Documents.

1.05 APPLICATION FOR FINAL PAYMENT

A. Prepare Application for Final Payment as specified for progress payments, identifying total adjusted Contract Price, previous payments, and sum remaining due.

B. Application for Final Payment will not be considered until the following have been accomplished:
   1. All closeout procedures specified in in applicable Sections of Division 01 – General Requirements.

DRAFT

SCHEDULE OF VALUES (Sample Only – Modify per project needs)							
No.	**Item**	**Payment**	**Measurement**	Est. Qty	Unit	Unit $	Value
1	Mobilization/ Demobilization/Bond/ Insurance	Payment shall be made for mobilization and demobilization to and from the site, for bonds and insurance. CONTRACTOR shall provide all the necessary mobilization requirements for the proper construction activities, include providing all the necessary accommodations for personnel and equipment as describe in these Specification. Bonds and insurance requirements shall meet the requirements of the Contract Documents.	Based on Representative Opinion that the item is complete.	#	LS	$_____	$_____
2	Earthwork for Grading, cut, fill, and export	Payment shall be made for the work associated with earthworks grading, cut, fill, and export of any excess material. Fill shall include screening, placement, and compaction of native material to meet the requirements of the Contract Documents. Excess material shall be screened and exported to a dedicated site per the contract. Excess material shall be spread evenly within the dedicated site by the CONTRACTOR. Screened material greater than 4" shall be disposed by the CONTRACTOR offsite.	Measurement shall be based on a cubic yard basis of material placed or excavated as shown on the drawings, specified in the contract documents. Original delivery tickets shall be delivered to the Representative at the end of each day. The Representative will create a chronological spreadsheet of the quantities and reconcile them with the CONTRACTOR after each weekly progress meeting. Requests for payment shall only include quantities that have been reconciled.	#	CY	$_____	$_____

DRAFT

3	Yard Piping	Payment shall be made for site work associated with the installation of the yard piping as described in the Contract Documents. The work shall include all pipes, fitting, and associated labor and materials required for the proper trenching, installation, and backfill of the pipes. This shall also include any potholing, pavement restoration, wire tracing and surveying of the required work.	Measurement shall be made based on linear feet of pipe installed and the breakdown shown on the CONTRACTOR's schedule of values as the items are completed and accepted by the Representative.	#	LF	$_____	$_____
4	Asphalt Pavement	Payment shall be made for asphalt road pavement as described in the Contract Documents. This includes the preparation and place of the hot-mix asphalt, binder, and base course where required.	Measurement shall be based on a cubic yard basis of material placed or excavated as shown on the drawings, specified in the contract documents. Original delivery tickets shall be delivered to the Representative at the end of each day. The Representative will create a chronological spreadsheet of the quantities and reconcile them with the CONTRACTOR after each weekly progress meeting. Requests for payment shall only include quantities that have been reconciled.	#	CY or Ton	$_____	$_____
5	Headworks	Payment shall be made for the work associated with the installation of the Headworks, and associated appurtenances as shown on the drawings, specified in the contract documents. This bid item is only to include items, components and equipment not supplied by the HW manufacturer.	Measurement shall be made based on the breakdown shown on the CONTRACTOR's schedule of values as the items are completed and accepted by the Representative.	#	EA	$_____	$_____

DRAFT

6	MBR Process	Payment shall be made for the work associated with the installation of the MBR Equipment, blowers, and associated appurtenances as shown on the drawings, specified in the contract documents. This bid item is only to include items, components and equipment not supplied by the MBR manufacturer.	Measurement shall be made based on the breakdown shown on the CONTRACTOR's schedule of values as the items are completed and accepted by the Representative.	#	EA	$_____	$_____
7	Aerobic Digester	Payment shall be made for the work associated with the upgrading the aerobic digesters and associated appurtenances as shown on the drawings, specified in the contract documents.	Measurement shall be made based on the breakdown shown on the CONTRACTOR's schedule of values as the items are completed and accepted by the Representative.	#	EA	$_____	$_____
8	Sludge Dewatering	Payment shall be made for the work associated with the installation of the Sludge Dewatering and associated appurtenances as shown on the drawings, specified in the contract documents. This bid item is only to include items, components and equipment not supplied by the sludge dewatering manufacturer.	Measurement shall be made based on the breakdown shown on the CONTRACTOR's schedule of values as the items are completed and accepted by the Representative.	#	EA	$_____	$_____
9	Admin Building	Payment shall be made for the work associated with the construction of the Admin bldg and associated appurtenances as shown on the drawings, specified in the contract documents.	Measurement shall be made based on the breakdown shown on the CONTRACTOR's schedule of values as the items are completed and accepted by the Representative.	#	EA	$_____	$_____

DRAFT

10	Structural Tank Modifications	Payment shall be made for the work associated with the structural tank modification and associated appurtenances as shown on the drawings, specified in the contract documents.	Measurement shall be made based on the breakdown shown on the CONTRACTOR's schedule of values as the items are completed and accepted by the Representative.	#	EA	$_____	$_____
11	WWTP Operation during Construction	Payment shall be made for the work associated with by-passing, installation of temporary treatment facilities and equipment, and/ or any associated work needed to maintain operation and treatment capacity of the facility as specified in the contract documents.	Measurement shall be made based on the breakdown shown on the CONTRACTOR's schedule of values as the items are completed and accepted by the Representative.	#	EA	$_____	$_____
12	Influent Force Main Replacement	Payment shall be made for site work associated with the installation of the new influent FM as described in the Contract Documents. The work shall include all pipes, fitting, and associated labor and materials required for the proper trenching, installation, and backfill of the pipes. This shall also include any potholing, pavement restoration, wire tracing and surveying of the required work.	Measurement shall be made based on linear feet of pipe installed and the breakdown shown on the CONTRACTOR's schedule of values as the items are completed and accepted by the Representative.	#	LF	$_____	$_____
13	Electrical and Controls	Payment shall be made for the work associated with the furnish, installation and wiring of the electrical and controls component of the project as shown on the drawings, specified in the contract documents. This includes all electrical and controls equipment and components, as well as all field instrumentation with the exception of the electrical and instrumentation to be provided by the tank manufacturer.	Measurement shall be made based on the breakdown shown on the CONTRACTOR's schedule of values as the items are completed and accepted by the Representative.	#	LS	$_____	$_____

DRAFT

		Programming of the PLC and system controls integration shall be a separate bid item if required by the contract documents.					
14	Base Lump Sum	Payment shall be made for the work associated with the portion of the project not specifically included in the above bid schedule but required to be completed as part of the project as shown on the drawings, specified in the contract documents, and as required by the District. This includes all general conditions, civil, mechanical, structural, architectural, and electrical & controls work.	Measurement shall be made based on the breakdown shown on the CONTRACTOR's schedule of values as the items are completed and accepted by the Representative.	#	LS	$_____	$_____
15	**Total Lump Sum**						**$_____**

DRAFT

PART 2 – PRODUCTS – NOT USED

PART 3 – EXECUTION – NOT USED

END OF SECTION

DRAFT

SECTION 01 3216 – CONSTRUCTION PROGRESS SCHEDULES

PART 1 – GENERAL

1.01 SUMMARY

A. **Section Includes**: Preparation, submittal and maintenance of computerized progress schedule and reports, contract time adjustments and payment requests, including the following:

1. Preliminary Schedule
2. Baseline Schedule
3. Schedule Updates
4. Schedule Revisions

1.02 PRECONSTRUCTION SCHEDULING MEETING

A. General: Before issuance of Notice to Proceed, a pre-construction meeting shall be held at the location, date and time designated by ENGINEER and OWNER. This meeting shall be conducted by the ENGINEER and OWNER. Attendees shall include the ENGINEER, OWNER's representatives, General CONTRACTOR's project manager and field superintendent, and representatives from each subcontractor for the project as appropriate.

B. At the meeting, scheduling requirements shall be reviewed with CONTRACTOR. These include schedule preparation, reporting requirements, updates, revisions, and schedule delay analysis. CONTRACTOR shall present their schedule methodology, planned sequence of operations, and present their proposed activity coding structure.

1.03 CONSTRUCTION PROGRESS MEETINGS AND SCHEDULES

A. Weekly Progress meetings shall be held by the CONTRACTOR. All matters bearing on progress and performance of the work since preceding progress meeting shall be discussed and resolved including, without limitation, any previously unresolved matters, deficiencies in the work or methods being employed for the work, and problems, difficulties, or delays which may be encountered. CONTRACTOR shall keep records of the meetings and distribute to all party.

B. CONTRACTOR shall submit a Baseline Construction Schedule for ENGINEER and OWNER approval 14 days after Notice to Proceed. CONTRACTOR shall maintain a progress schedule based on the approved Baseline Construction Schedule that is updated weekly and shows progress and execution of work.

PART 2 – PRODUCTS (NOT USED)

PART 3 – EXECUTION (NOT USED)

END OF SECTION

DRAFT

SECTION 01 3300 – SUBMITTAL PROCEDURES

PART 1 – GENERAL

1.01 WORK INCLUDED

A. Shop Drawing, Descriptive Literature, Project Data, and Samples (specifically, when Samples are requested) for all manufactured or fabricated items shall be Submitted by the CONTRACTOR. CONTRACTOR shall examine and review the Submittal to ensure that the information is in the form and in the manner required by the ENGINEER. The review of the Submittal by the ENGINEER shall not be construed as a complete check or approval, but will only indicate that the general method of construction and detailing is satisfactory. Review of such Submittal will not relieve the CONTRACTOR of the responsibility for any errors, which may exist. The CONTRACTOR shall be responsible for the dimensions and design of adequate connections, details and satisfactory of all WORK.

1.02 DEFINITIONS

A. The term "Submittals" shall mean shop drawings, manufacturer's drawings, catalog sheets, brochures, descriptive literature, diagrams, schedules, calculations, material lists, performance charts, test reports, office and field samples and items of similar nature, which are normally Submitted for the ENGINEER's review for conformance with the Design Concept and compliance with the Contract Documents.

1.03 GENERAL CONDITIONS

A. Review by the ENGINEER of shop drawings or submittals of material and equipment shall not relieve the CONTRACTOR from the responsibilities of furnishing proper dimension, size, quantity, materials, and all performance characteristics to, efficiently perform the Requirements and intent of the Contract Documents. Review shall not relieve the CONTRACTOR responsibility for errors of any kind on the shop drawings. Review is intended only to assure conformance with the design concept of the Project and compliance with the information given in the Contract Documents. Review of shop drawings shall not be construed as releasing the CONTRACTOR from the responsibility of complying with the Contract Documents.

B. Do not consider Submittals as Contract Documents. Purpose of Submittals is to demonstrate how CONTRACTOR, to conform to the design concepts.

1.04 GENERAL REQUIREMENTS FOR SUBMITTALS

A. Shop drawings shall be prepared by a qualified detailer. Details shall be identified by reference to sheet and detail numbers shown on Contract Documents. Where applicable, show fabrication, layout, setting and erection details. Shop drawings are defined as original drawings prepared by the CONTRACTOR, SUBCONTRACTOR, vendor, suppliers, or distributors performing WORK under this Contract. Shop drawings illustrate some portion of the WORK and show fabrication, layout, setting or erection details of equipment, materials, and components. Shop drawings shall be folded to an approximate size of 8½-inch x 11-inch and in such manner that the title block will be located in the lower right-hand corner of the exposed surface.

B. Project data shall include manufacturer's standard schematic drawings modified to delete information, which is not applicable to the Project and shall be supplemented to provide additional information applicable to the Project. Each copy of descriptive literature shall be clearly marked to identify pertinent information as it applies to the Project.

DRAFT

C. Where samples are required, they shall be adequate to illustrate materials, equipment, or workmanship and to establish Standards by which completed WORK is judged. Provide sufficient size and quantity to clearly illustrate functional characteristics of product and material, with integrally related parts and attachment devices, along with a full range of color samples.

D. The CONTRACTOR shall review and check Submittals, indicating his review by initials and date.

E. If the Submittals deviate from the Contract Drawings and/or Specifications, the CONTRACTOR shall clearly identify the deviation and state any reasons for the deviation. The ENGINEER may approve a change. Any costs resulting from a change will be the responsibility of the CONTRACTOR.

F. Additional information on particular items, such as special drawings, schedules, calculations, performance curves and material details, shall be provided when specifically requested by the Technical Specifications.

G. Submittals for all electrically operated items (including instrumentation and controls) shall include complete wiring diagrams showing lead, runs, number of wires, wire size, color coding, all terminations and connections and coordination with related equipment.

H. Equipment shop drawings shall indicate all factory or shop paint coatings applied by suppliers, manufacturers, and fabricators; the CONTRACTOR shall be responsible for insuring the compatibility of such coatings with the field applied paint products and systems.

I. Fastener Specifications of manufacturer shall be indicated on equipment shop drawings.

J. No material shall be fabricated or shipped unless the applicable drawings or Submittals have been reviewed and approved by the CONTRACTOR and ENGINEER.

K. All bulletins, brochures, instructions, parts lists, and warranties packaged with and accompanying materials and products delivered to and installed in the Project shall be saved and transmitted to the ENGINEER for safe keeping and preparations of the Operation &Maintenance Manuals.

L. Quantity of the Vendor's Submittals shall be as required by the CONTRACTOR. At a minimum, a Vendor shall provide one (1) electronic PDF copy to the CONTRACTOR.

1.05 SUBCONTRACTOR or VENDOR RESPONSIBILITIES

A. Verify field measurements, field construction criteria, catalog numbers and similar data.

B. Coordinate each Submittal with requirements of WORK and Contract Documents.

C. Quantity of the SUBCONTRACTOR or Vendor's Submittals shall be as required by the CONTRACTOR. At a minimum, one (1) electronic PDF copy shall be provided to the CONTRACTOR.

1.06 CONTRACTOR RESPONSIBILITIES

A. Submit complete listing of all required shop drawing submittals by Specification Section to the ENGINEER.

B. Submit shop drawings, product data, samples, and other pertinent information in sufficient detail to show compliance with specified requirements.

C. Check, verity and revise Submittals as necessary to bring them into conformance with Contract Documents and actual field conditions.

1. Determine and verify quantities, dimensions, specified design and performance criteria, materials, catalog numbers and similar data.

DRAFT

2. Determine and verify that the equipment or product meets all aspect of the contract documents.
3. Coordinate Submittal with other Submittals and with the requirements of the Contract Documents.

D. After completion of checking, verification and revising, stamp, sign and date Submittals indicating review and approval and submit to ENGINEER.
1. Attach a copy of the corresponding specifications for the equipment or product and identify all deviations from the specifications, along with proposed corrective actions, clarifications, exemptions, etc. Submittals without accompanying specifications shall be rejected.
2. Stamp and signature indicate CONTRACTOR has satisfied shop drawing review responsibilities and constitutes written review of shop drawing with general conformance with the Contract Documents.
3. Shop drawings without CONTRACTOR written reviewed stamp and signature will be returned for resubmission.

E. **Shop Drawings:** Submit one electronic copy in PDF format. A PDF copy of the submittal will be returned with reviewer's comments.

F. **Product Data and Manufacturer's Instructions:** Submit on electronic copy in PDF format. Excise or cross out non-applicable information and clearly mark applicable information with citations to and terminology consistent with Contract Documents.
1. A PDF copy will be returned with reviewer's comments.

G. **Samples:** Submit two (2) samples labeled with reference to applicable Contract Documents. Label will be returned with reviewer's selection when appropriate, comments and stamp. Samples will not be returned unless return is requested in writing and additional samples are submitted.

H. **Special Samples:** Submit one (1) sample labeled with reference to applicable Contract Documents. Sample and one (1) label will be returned for installation in the WORK.

I. Assume risk expense and delays when proceeding with WORK related to required Submittals without review and acceptance.

J. **Deferred Submittals:** Submit any and all requested deferred submittals as required by the project or regulatory agencies. The deferred submittals shall include layout, design, performance data, design and structural calculations with registered engineer's stamp, , and all other relevant information required for review.

Deferred submittal shall be required for the following in addition to those identified in the Contract Documents:

- Guardrails and handrails
- Grating and covers
- Anchoring and seismic bracing
- Shoring and formwork
- Metal stairs
- Pipe supports
- Pre-fab metal building or structures
- Precast concrete structures
- Tanks
- Specialty Equipment

1.07 ENGINEER'S RESPONSIBILITY

DRAFT

A. ENGINEER's review of shop drawings, samples or test procedures will be only for conformance with design concepts and for compliance with information given in Contract Documents.
   1. ENGINEER's review does not extend to:
      a. Accuracy of dimensions, quantities or performance of equipment and systems designed by CONTRACTOR, subcontractor, or Vendor.
      b. CONTRACTOR or SUBCONTRACTOR means, methods, techniques, sequences, or procedures, except when specified, indicated on the Drawings, or required by Contract Documents.
      c. Safety precautions or programs related to safety, which shall remain the sole responsibility of the CONTRACTOR and the SUBCONTRACTOR.

B. Except as may be provided in subsequent Specifications, a submittal will be returned within 30 days. When a Submittal cannot be returned within that period, ENGINEER will, within a reasonable time after receipt of the Submittals, give notice of the date by which that submittal will be returned.

C. For Submittals returned No Exceptions Taken – Submittal is considered in conformance with the design concept.

D. For Submittals returned Accepted with Correction Noted – Make Correction Noted/See all Comments, CONTRACTOR shall incorporate all review comments into the WORK, but resubmittal of an amended Submittal is not required.

E. For Submittals returned Submit Specific Item – CONTRACTOR shall develop a new Submittal package with materials, equipment, methods, etc. that meet the requirements of the Contract Documents for that specific item.

F. For Submittals returned Revised and Resubmit – Make Corrections Note/See All Comments, CONTRACTOR shall incorporate the review comments into a complete revised package and resubmit it for review.

G. For Submittals returned Rejected – See All Comments, CONTRACTOR shall develop a new Submittal package with materials, equipment, methods, etc. that meet the requirements of the Contract Documents.

H. For Submittals returned Submittal Not Reviewed, Filed for Record, no further action is required by the CONTRACTOR for this Submittal.

I. ENGINEER will be entitled to rely upon the accuracy or completeness of designs, calculations or certification made by licensed professionals accompanying a particular Submittal whether or not a stamp or seal is required by Contract Documents or Laws and Regulations.

J. Costs incurred by the ENGINEER, as a result, of additional reviews of a particular Submittal after the second time it has been reviewed shall be borne by CONTRACTOR. Reimbursement to ENGINEER will be made by issuance of a Change Order.

1.08 MINOR OR INCIDENTAL PRODUCTS AND EQUIPMENT SCHEDULES

A. Shop Drawings of minor or incidental fabricated products will not be required, unless requested.

B. Submit tabulated lists of minor or incidental products showing the names of the manufactures and catalog numbers, with Product Data and Samples, as required to, determine acceptability.

1.09 SUBMITTALS FOR INFORMATION OR RECORD ONLY

A. Submit three (3) copies of each. None will be returned.

B. **Mill Test Reports**:

DRAFT

1. Submit three (3) certified copies of factory and mill test reports for record only. No copies will be returned.
2. Do not incorporate Products in the WORK, which have not passed testing and inspection satisfactorily.
3. Pay for mill and factory tests.

C. **Reinforcing Steel**:
1. Submit reinforcing steel fabrication and setting drawings for information or record only. No copies will be returned.
2. Note deviations and variations as specified for shop drawings.

PART 2 – PRODUCTS (Not Used)

PART 3 – EXECUTION (Not Used)

END OF SECTION

DRAFT

SECTION 01 3529 – HEALTH, SAFETY, AND EMERGENCY RESPONSE PROCEDURES

PART 1 – GENERAL

1.01 SUMMARY

A. Section Includes: Development and maintenance of a Construction Safety Plan.

1.02 REFERENCES

A. OSHA.

1.03 CONSTRUCTION SAFETY PLAN

A. Detail the Methods and Procedures to comply with Federal, State, and Local Health and Safety Laws, Rules and Requirements for the duration of the Contract Times. Include the following:
   1. Identification of the Certified or Licensed Safety Consultant who will prepare, initiate, maintain and supervise safety programs, and procedures.
   2. Procedures for providing workers with an awareness of safety and health hazards expected to be encountered in the course of construction.
   3. Safety equipment appropriate to the safety and health hazards expected to be encountered during construction. Include warning devices, barricades, safety equipment in public right-of-way and protected areas, and safety equipment used in multi-level structures.
   4. Methods for minimizing employees' exposure to safety and health hazards expected during construction.
   5. Procedures for reporting safety or health hazards.
   6. Procedures to follow to correct a recognized safety and health hazard.
   7. Procedures for investigation of accidents, injuries, illnesses and unusual events that have occurred at the construction site.
   8. Periodic and scheduled inspections of general work areas and specific work stations.
   9. Training for employees and workers at the jobsite.
   10. Methods of communication of safe working conditions, work practices and required personal protection equipment.

B. Assume responsibility for every aspect of Health and Safety on the jobsite, including the health and safety of SUBCONTRACTORS, suppliers, and other persons on the jobsite.
   1. Forward available information and reports to the Safety Consultant who shall make the necessary recommendations concerning worker health and safety at the jobsite.
   2. Employ additional health and safety measures specified by the Safety Consultant, as necessary, for workers in accordance with OSHA guidelines.

C. Transmit to OWNER and ENGINEER copies of reports and other documents related to accidents or injuries encountered during construction.

PART 2 – PRODUCTS (NOT USED)

PART 3 – EXECUTION (NOT USED)

END OF SECTION

DRAFT

SECTION 01 4219 – REFERENCE STANDARDS

PART 1 – GENERAL

1.01 GENERAL

A. Titles of Sections and Paragraphs: Titles and Subtitles accompanying Specification Sections and paragraphs are for convenience and Reference only and do not form a part of the Specifications.

B. Applicable Publications: Whenever in these Specifications References are made to Published Specifications, Codes, Standards or other Requirements, it shall be understood that wherever no date is specified, only the latest Specifications, Standards or Requirements of the respective issuing agencies, which have been published as of the date that the Contract shall apply; except to the extent that said Standards or Requirements may be in conflict with applicable Laws, Ordinances or Governing Codes. No Requirements set forth in the Specifications or shown on the Drawings will be waived because of any provision of, or omission from, said Standards or Requirements.

C. Specialists, Assignments: In certain instances, Specification text requires (or implies) that specific WORK is to be assigned to specialists or expert entities, who must be engaged for the performance of that WORK. Such assignments shall be recognized as Special Requirements. These Requirements shall not be interpreted so as to conflict with the enforcement of Building Codes and similar Regulations Governing the WORK; also, they are not intended to interfere with Local Union Jurisdiction Settlements and similar conventions. Such assignments are intended to establish which party or entity involved in a specific unit of work is recognized as "Expert" for the indicated construction processes or operations. Nevertheless, the final responsibility for fulfillment of the entire set of Contract Requirements remains.

1.02 REFERENCE SPECIFICATIONS, CODES AND STANDARDS

A. Construct the WORK in accordance with the Contract Documents and the referenced portions of those Referenced Codes, Standards and Specifications.

B. Verify the following references agree with the plans and local requirements. All references listed are to the most recently approved and published edition.

References herein to "Building Code" shall mean International Building Code (IBC). Similarly, references to "Mechanical Code" or "International Mechanical Code," "Plumbing Code" or "Uniform Plumbing Code," "Fire Code" or "International Fire Code," shall mean International Mechanical Code (IMC), Uniform Plumbing Code (UPC) and International Fire Code (IFC). "Electric Code" or "National Electric Code (NEC)" shall mean the National Electric Code of the National Fire Protection Association (NFPA). The latest edition of the codes as approved by the Municipal Code and used by the local agency as of the date that the WORK is advertised for bids, as adopted by the agency having jurisdiction, shall apply to the WORK herein, including all Addenda, Modifications, Amendments, or other Lawful changes thereto.

C. In case of conflict between Codes, Reference Standards, Drawings, and the other Contract Documents, the most stringent Requirements shall govern. All conflicts shall be brought to the attention of the ENGINEER for clarification and directions prior to ordering or providing any materials or furnishing labor through the RFI process. The most stringent Requirements may be bid on.

D. All equipment and materials used on this project shall comply with the standards set forth in the American Iron and Steel Institute (AISI).

DRAFT

E. References herein to "OSHA Regulations for Construction" shall mean Title 29, Part 1926, Construction Safety and Health Regulations, Code of Federal Regulations (OSHA), including all changes and amendments thereto.

F. References herein to "OSHA Standards" shall mean Title 29, Part 1910, Occupational Safety and Health Standards (OSHA), Code of Federal Regulations, including all changes and Amendments thereto.

G. Applicable Standard Specifications: References in the Contract Documents to "Standard Specifications" or SSPWC shall mean the Standard Specifications for Public Works Construction.

1.03 REGULATIONS RELATED TO HAZARDOUS MATERIALS

A. Responsibility for all work included in the Contract Documents, regardless if shown or not, shall comply with all EPA, OSHA, RCRA, NFPA, and any other Federal, State, and Local Regulations governing the storage and conveyance of hazardous materials, including petroleum products.

PART 2 – PRODUCTS (NOT USED)

PART 3 – EXECUTION (NOT USED)

END OF SECTION

DRAFT

SECTION 01 4333 – MANUFACTURER'S FIELD SERVICES

PART 1 – GENERAL

1.01 THE REQUIREMENT

A. General: Provide a qualified service representative from each equipment company manufacturing or supplying equipment to perform the duties herein described and as required by the various Sections of the Specifications. All costs to perform these services shall be included in the supplier's proposal in accordance with the scope of work.

B. Supervision of Installation: The supplier shall provide direct and/or indirect supervision of the workers and ENGINEER, in accordance with the scope of work, to ensure that proper procedures are followed during equipment installation.

1.01 EQUIPMENT CHECK OUT:

A. After installation of the equipment has been completed and the equipment is presumably ready for operation but before it is operated by others, the representative shall inspect, operate, test and adjust the equipment. The inspection shall include but shall not be limited to, the following points as applicable:

1. Soundness (without cracked or otherwise damaged parts)
2. Completeness in all details as specified
3. Correctness of setting, alignment and relative arrangement of various parts
4. Adequacy and correctness of packing, sealing and lubricants
5. Completeness in electrical and controls
6. The operation, testing and adjustment shall be as required to prove that the equipment has been installed properly and is capable of satisfactory operation under the conditions specified. On completion of his WORK, the CONTRACTOR, manufacturer or supplier's representatives shall submit a complete signed report of the result of his inspection, operation, adjustments and tests. The report shall include descriptions of the points inspected, tests and adjustments made, quantitative results obtained if such are specified and suggestions for precautions to be taken to ensure proper maintenance. The report also shall include a certificate that the equipment conforms to the requirements of the Contract Documents and is ready for permanent operation and that nothing in the installation will render the manufacturer's warranty null and void.

B. Field Tests: As required by the individual Specification Sections, the manufacturer's representative shall be present when the field tests are made.

C. Operator Training: As required by the individual Specification Sections, the manufacturer's representative shall provide hands-on training to maintenance personnel in the proper operation and maintenance of the equipment prior to placing the equipment in full operation.

D. Post-startup Services: As required by the individual Specification Sections, the manufacturer's representative shall provide services beyond the startup of the equipment. Services may include assistance in the calibration, tuning and troubleshooting, plus any additional training, which may be required during the agreed time after the equipment, is accepted.

E. The CONTRACTOR shall be the supplier for items not specifically included in the supplier's scope of work.

DRAFT

PART 2 – PRODUCTS (NOT USED)

PART 3 – EXECUTION

3.01 EXECUTION

A. The CONTRACTOR shall submit one (1) electronic copy and two (2) hard copies of all equipment field service certification documents and certificates of warranty to the ENGINEER in accordance with applicable Sections of Division 01 – General Requirements.

END OF SECTION

DRAFT

SECTION 01 4500 – QUALITY CONTROL

PART 1 – GENERAL

1.01 THE REQUIREMENT

A. The Specific Quality Control Requirements for the WORK are indicated throughout the Contract Documents. The Requirements of this Section are primarily related to performance of the WORK beyond furnishing of manufactured products. The term "Quality Control" includes pre-activity inspection, follow up meetings, sampling and testing, and associated requirements.

B. All materials to be incorporated into the work shall be subject to sampling, testing, and approval as required by specifications.

1.02 INSPECTION AT PLACE OF MANUFACTURE

A. Unless otherwise indicated, all products, materials, and equipment shall be subject to inspection by the ENGINEER at the place of manufacture.

B. Unless noted otherwise, the presence of the ENGINEER at the place of manufacturer is not required; however, this shall not relieve responsibility for providing products, materials and equipment that comply with all requirements of the Contract Documents.

1.03 SAMPLING AND TESTING

A. Unless otherwise specified, samples and tests shall be made in accordance with either: The Standard Methods of AASHTO, ASTM, and/or ASME, which were in effect and published at the time of advertising for bids. The laboratory responsible for the test(s) shall furnish at least one copy of the test results to the CONTRACTOR, the ENGINEER, and to the appropriate material supplier.

1.04 INSPECTION AND TESTING SERVICE

A. Independent inspection and testing laboratory service shall comply with the following:
   1. Unless noted otherwise by the Specifications, an independent firm will be appointed and employed by the CONTRACTOR to perform inspection and testing, including soils and concrete testing.
   2. Perform inspections, testing, and other services as required.
   3. Submit Reports of Testing to the ENGINEER, CONTRACTOR and OWNER if required in duplicate, indicating observations and results of tests, and indicating compliance or non-compliance with Contract Documents.
   4. CONTRACTOR to notify 48 hours prior to the expected time for operations requiring inspection and laboratory testing services is required.
   5. The same independent firm on instructions shall perform retesting required because of non-conformance to requirements.
   6. For tests and samples required, arrangements shall be made with an independent firm for payment and scheduling of testing. Responsibility shall be taken for the cost of sampling and testing.
   7. Provide an overall report on inspection and test results for project closeout.
   8. All materials and/or equipment not conforming to the requirements of the Specifications, whether in place or not, will be rejected. Rejected materials and/or equipment shall be removed immediately from the site of work unless otherwise permitted by the ENGINEER. No rejected material and/or equipment, the defects of which have been subsequently corrected, shall be used until approved in writing by the ENGINEER. CONTRACTOR shall be responsible for re-testing of all rejected materials.

DRAFT

1.05 SPECIAL INSPECTION

A. Various categories for special inspection/ observation of work progress during the course of construction are listed, but not limited to specifications and notes in the drawings. The OWNER requires on-site observation of the work at these various stages prior to covering the work. A list of such special inspections will be reviewed at the Pre-Construction Conference and subsequent job meetings, and it is understood that the CONTRACTOR will not cover work until such observation has been completed. The OWNER and OWNER representatives will be responsible for reasonable cooperation with CONTRACTOR requests for observation of the work. The CONTRACTOR shall include anticipated observation requests at weekly update of scheduled activities. OWNER shall be responsible for retaining the services of an independent testing agency for special inspections.

PART 2 – PRODUCTS (NOT USED)

PART 3 – EXECUTION

3.01 INSTALLATION

A. Inspection: Inspect materials or equipment upon arrival on the job site, prior to installation and reject damaged and defective items.

B. Measurements: Verify measurements and dimensions of the WORK, as an integral step of starting each installation.

C. Manufacturer's Instructions: Where installations include manufactured products, compliance with manufacturer's applicable instructions and recommendations for installation, to whatever extent these are more explicit or more stringent than applicable requirements indicated in Contract Documents is required.

END OF SECTION

DRAFT

SECTION 01 5626 – TEMPORARY FENCING

PART 1 – GENERAL

1.01 SUMMARY

A. CONTRACTOR shall determine temporary fence type, layout, and location of gates. Construction and maintenance of temporary fencing shall be provided by the contractor.

B. In general, the overall site of the existing Wastewater Facility is already fenced. It will be the CONTRACTOR's responsibility to determine there needs to secure there yard/staging areas as well as any and all construction sites or activities within the project. It is the OWNERS opinion that the plastic orange fence will be sufficient to provide safety and security surrounding the work activities; however, it is the contractor's responsibility to make the final determination. The OWNER will not be responsible in any manner for any missing, stolen, or damaged to any and all contractor property, yard, equipment or construction activity, this is the contractor's responsibility.

1.02 SUBMITTALS

A. Submit in accordance with Section 01 3300 – Submittal Procedures.
   1. Shop drawing indicating layout of temporary fencing, location and size of gates, existing pavement and roads, access to fire hydrants and hose connections, and other site-specific conditions. Prepare drawing after site observation and verification of existing conditions.

PART 2 – PRODUCTS

2.01 TEMPORARY CHAIN LINK FENCING

A. Unless otherwise indicated, type of temporary chain link fencing shall be CONTRACTOR's option. Following types are acceptable:
   1. New Materials or previously used salvage chain link fencing in good condition.
   2. Posts: Galvanized steel pipe of diameter to provide rigidity. Post shall be suitable for setting in concrete footings, driving into ground, anchoring with base plates, or inserting in precast concrete blocks.
   3. Fabric: Woven galvanized steel wire mesh. Provide in continuous lengths to be wire tied to fence posts or prefabricated into modular pipe-framed fence panels.

B. Gates: Provide personnel and vehicle gates of the quantity and size required for functional access to site.
   1. Fabricate of same material as used for fencing
   2. Vehicle gates:
      a. Minimum width: 20 feet to allow access for emergency vehicles
      b. Capable of manual operation by one person.

2.02 PLASTIC MESH FENCING

A. Where required to provide visual warning and control, provide plastic mesh fencing supported by steel posts driven into ground or set in precast concrete blocks

B. Height: 36 inches minimum

C. Color: Safety orange

DRAFT

PART 3 – EXECUTION

3.01 LAYOUT

A. Access: Provide gates for personnel, delivery of materials, and access by emergency vehicles.

3.02 INSTALLATION

A. Plastic mesh fencing: Space steel support posts to ensure mesh remains vertical and at proper height. Securely tie mesh to posts.

3.03 MAINTENANCE AND REMOVAL

A. Maintain fencing in good condition. If damaged, immediately repair.

B. Remove temporary fencing upon completion of Work or when no longer required for security or control. Backfill holes and compact. Holes in pavement shall be surfaced to match existing paving. Repair damage caused by installation of temporary fencing.

END OF SECTION

DRAFT

SECTION 01 5713 – TEMPORARY EROSION AND SEDIMENT CONTROL

PART 1 – GENERAL

1.01 SECTION INCLUDES

A. Prevention of erosion due to construction activities.

B. Prevention of sedimentation of waterways, open drainage ways, and storm and sanitary sewers due to construction activities.

C. Restoration of areas eroded due to insufficient preventive measures.

1.02 REFERENCE STANDARDS: Most recently approved and published editions of:

ASTM D4355	Deterioration of Geotextiles by Exposure to Light, Moisture, and Heat in a Xenon Arc Type Apparatus
ASTM D4491	Water Permeability of Geotextiles by Permittivity
ASTM D4533	Trapezoid Tearing Strength of Geotextiles
ASTM D4632	Grab Breaking Load and Elongation of Geotextiles
ASTM D4751	Determining Apparent Opening Size of a Geotextile
ASTM D4873	Identification, Storage, and Handling of Geosynthetic Rolls and Samples
EPA (NPDES)	National Pollutant Discharge Elimination System (NPDES), Construction General Permit
FHWA FLP-94-005	Best Management Practices for Erosion and Sediment Control; Federal Highway Administration
USDA TR-55	Urban Hydrology for Small Watersheds; USDA Natural Resources Conservation Service

1.03 PERFORMANCE REQUIREMENTS

A. Perform all work and take all measures necessary to control soil erosion resulting from construction operations to prevent the flow of sediment from the site, to contain construction materials (including excavation and backfill), and to stabilize soil banks from erosion caused by stormwater flood zones so as to prevent damage to the adjacent water courses and to the project site.

B. Do not employ any construction method that violates a rule, regulation, guideline, or procedure established by Federal, State, or local agencies having jurisdiction over the environmental effects of construction.

C. Pollutants such as chemicals, fuels, lubricants, bitumen, raw sewage, and other harmful waste shall not be discharged into or alongside of any body of water or into natural or man-made channels leading thereto.

D. Prepare and submit a Stormwater Pollution Prevention Plan (SWPPP) to the ENGINEER for his records in accordance with ADEQ and with the plans as provided within the Construction Documents. The CONTRACTOR is responsible for all aspects of this plan, its monitoring, maintaining of the reports and keeping a copy of documents on site as required by ADEQ.

E. Prepare and submit a monitoring program and reporting plan to the ENGINEER for his records in accordance with ADEQ. Submit to the ENGINEER for his records on a monthly basis copies of the monitoring reports taken throughout the month.

F. Prepare and submit the Notice of Intent (NOI) as required by ADEQ. Submit Copy of NOI to the ENGINEER for his records.

DRAFT

G. Comply with all requirements of US Environmental Protection Agency for erosion and sedimentation control, as specified for the National Pollutant Discharge Elimination System (NPDES), Phases I and II, under requirements for the Construction General Permit (CGP), whether the project is required by law to comply or not.

H. Timing: Put preventive measures in place as soon as possible after disturbance of surface cover and before precipitation occurs.

I. Storm Water Runoff: Control increased storm water runoff due to disturbance of surface cover due to construction activities for this project.
   1. Prevent runoff into storm and sanitary sewer systems, including open drainage channels, in excess of actual capacity or amount allowed by authorities having jurisdiction, whichever is less.
   2. Anticipate runoff volume due to the most extreme short term and 24-hour rainfall events that might occur in 25 years.

J. Erosion on Site: Minimize wind, water, and vehicular erosion of soil on project site due to construction activities for this project.
   1. Control movement of sediment and soil from temporary stockpiles of soil.
   2. Prevent development of ruts due to equipment and vehicular traffic.
   3. If erosion occurs due to non-compliance with these requirements, restore eroded areas at no cost to OWNER.

K. Erosion Off Site: Prevent erosion of soil and deposition of sediment on other properties caused by water leaving the project site due to construction activities for this project.
   1. Prevent windblown soil from leaving the project site.
   2. Prevent tracking of mud onto public roads outside site.
   3. Prevent mud and sediment from flowing onto sidewalks and pavements.
   4. If erosion occurs due to non-compliance with these requirements, restore eroded areas at no cost to OWNER.

L. Sedimentation of Waterways on Site: Prevent sedimentation of waterways on the project site, including rivers, streams, lakes, ponds, open drainage ways, storm sewers, and sanitary sewers.
   1. If sedimentation occurs, install or correct preventive measures immediately at no cost to OWNER; remove deposited sediments; comply with requirements of authorities having jurisdiction.
   2. If sediment basins are used as temporary preventive measures, pump dry and remove deposited sediment after each storm.

M. Sedimentation of Waterways Off Site: Prevent sedimentation of waterways off the project site, including rivers, streams, lakes, ponds, open drainage ways, storm sewers, and sanitary sewers.
   1. If sedimentation occurs, install or correct preventive measures immediately at no cost to OWNER; remove deposited sediments; comply with requirements of authorities having jurisdiction.

N. Open Water: Prevent standing water that could become stagnant.

O. Maintenance: Maintain temporary preventive measures until permanent measures have been established.

1.04 SUBMITTALS

A. See Section 01 3300 – Submittal Procedures.

B. Stormwater Prevention Plan:
   1. Submit not less than 30 days prior to anticipated start of clearing, grading, or other work involving disturbance of ground surface cover.

DRAFT

2. Include:
    a. Site plan identifying soils and vegetation, existing erosion problems, and areas vulnerable to erosion due to topography, soils, vegetation, or drainage.
    b. Site plan identifying soils and vegetation, existing erosion problems, and areas vulnerable to erosion due to topography, soils, vegetation, or drainage.
    c. Site plan showing grading; new improvements; temporary roads, traffic accesses, and other temporary construction; and proposed preventive measures.
    d. Where extensive areas of soil will be disturbed, include storm water flow and volume calculations, soil loss predictions, and proposed preventive measures.
    e. Schedule of temporary preventive measures, in relation to ground disturbing activities.
    f. Other information required by law.
    g. Format required by law is acceptable, provided any additional information specified is also included.
    h. Obtain the approval of the Plan by authorities having jurisdiction.
    i. Obtain the approval of the Plan by OWNER.

C. Certificate: Mill certificate for silt fence fabric attesting that fabric and factory seams comply with specified requirements, signed by legally authorized official of manufacturer; indicate actual minimum average roll values; identify fabric by roll identification numbers.

D. Inspection Reports: Submit report of each inspection; identify each preventive measure, indicate condition, and specify maintenance or repair required and accomplished.

E. Maintenance Instructions: Provide instructions covering inspection and maintenance for temporary measures that must remain after Substantial Completion.

PART 2 – PRODUCTS

2.01 MATERIALS

A. Mulch: Use one of the following:
1. Straw or hay
2. Wood waste, chips, or bark
3. Erosion control matting or netting
4. Cutback asphalt
5. Polyethylene film, where specifically indicated only

B. Grass Seed for Temporary Cover: Select a species appropriate to climate, planting season, and intended purpose. If same area will later be planted with permanent vegetation, do not use species known to be excessively competitive or prone to volunteer in subsequent seasons.

C. Bales: Air dry, rectangular straw bales.
1. Cross Section: 14 by 18 inches, minimum.
2. Bindings: Wire or string, around long dimension.

D. Bale Stakes: One of the following, minimum 3 feet long:
1. Steel U- or T-section, with minimum mass of 1.33 lb. per linear foot.
2. Wood, 2 by 2 inches in cross section.

E. Silt Fence Fabric: Polypropylene geotextile resistant to common soil chemicals, mildew, and insects; non-biodegradable; in longest lengths possible; fabric including seams with the following minimum average roll lengths:
1. Average Opening Size: 30 US Std. Sieve, maximum, when tested in accordance with ASTM D4751.
2. Permittivity: 0.05 sec^-1, minimum, when tested in accordance with ASTM D4491.

DRAFT

3. Ultraviolet Resistance: Retaining at least 70 percent of tensile strength, when tested in accordance with ASTM D4355 after 500 hours exposure.
4. Tensile Strength: 100 lb-f, minimum, in cross-machine direction; 124 lb-f, minimum, in machine direction; when tested in accordance with ASTM D4632.
5. Elongation: 15 to 30 percent, when tested in accordance with ASTM D4632.
6. Tear Strength: 55 lb-f, minimum, when tested in accordance with ASTM D4533.
7. Color: Manufacturer's standard, with embedment and fastener lines preprinted.
8. Manufacturers:
   a. TenCate: www.tencate.com.
   b. North American Green: www.nagreen.com.
   c. Propex Geosynthetics: www.geotextile.com

F. Silt Fence Posts: One of the following, minimum 5 feet long:
1. Steel U- or T-section, with minimum mass of 1.33 lb per linear foot.
2. Softwood, 4 by 4 inches in cross section.
3. Hardwood, 2 by 2 inches in cross section.
4. Bank stabilization shall be durable UV resistant high performance turf reinforcement mats (HP TRMs). Tensile strength of 4000 lb/ft meets US EPA definition of a high performance TRM. Acceptable products are Pyramat or ENGINEER-approved equal.

PART 3 – EXECUTION

3.01 EXAMINATION

A. Examine site and identify existing features that contribute to erosion resistance; maintain such existing features to greatest extent possible.

3.02 PREPARATION

A. Schedule work so that soil surfaces are left exposed for the minimum amount of time.

3.03 SCOPE OF PREVENTIVE MEASURES

A. In all cases, if permanent erosion resistant measures have been installed temporary preventive measures are not required.

B. Construction Entrances: Traffic-bearing aggregate surface.
1. Width: As required; 20 feet, minimum.
2. Length: 50 feet, minimum.
3. Provide at each construction entrance from public right-of-way.
4. Where necessary to prevent tracking of mud onto right-of-way, provide wheel washing area out of direct traffic lane, with drain into sediment trap or basin.

C. Linear Sediment Barriers: Made of silt fences.
1. Provide linear sediment barriers:
   a. Along downhill perimeter edge of disturbed areas, including soil stockpiles.
   b. Along the top of the slope or top bank of drainage channels and swales that traverse disturbed areas.
   c. Along the toe of cut slopes and fill slopes.
   d. Perpendicular to flow across the bottom of existing and new drainage channels and swales that traverse disturbed areas or carry runoff from disturbed areas; space at maximum of 200 feet apart.
   e. Across the entrances to culverts that receive runoff from disturbed areas.
   f. Space sediment barriers with the following maximum slope length upslope from barrier:
      1) Slope of Less Than 2 Percent: 100 feet.
      2) Slope Between 2 and 5 Percent: 75 feet.

DRAFT

3) Slope Between 5 and 10 Percent: 50 feet.
4) Slope Between 10 and 20 Percent: 25 feet.
5) Slope Over 20 Percent: 15 feet.

D. Storm Drain Curb Inlet Sediment Trap: Protect each curb inlet using one of the following measures:
1. Filter fabric wrapped around hollow concrete blocks blocking entire inlet face area; use one piece of fabric wrapped at least 1-1/2 times around concrete blocks and secured to prevent dislodging; orient cores of blocks so runoff passes into inlet.
2. Straw bale row blocking entire inlet face area; anchor into pavement.

E. Storm Drain Drop Inlet Sediment Traps: As detailed on drawings.

F. Temporary Splash Pads: Stone aggregate over filter fabric; size to suit application; provide at downspout outlets and storm water outlets.

G. Soil Stockpiles: Protect using one of the following measures:
1. Cover with polyethylene film, secured by placing soil on outer edges.
2. Cover with mulch at least 4 inches thickness of pine needles, sawdust, bark, wood chips, or shredded leaves, or 6 inches of straw or hay.

H. Mulching: Use only for areas that may be subjected to erosion for less than 6 months.
1. Wood Waste: Use only on slopes 3:1 or flatter; no anchoring required.
2. Asphalt: Use only where no traffic, either vehicular or pedestrian, is anticipated.

I. Temporary Seeding: Use where temporary vegetated cover is required.

3.04 INSTALLATION

A. Traffic-Bearing Aggregate Surface:
1. Excavate minimum of 6 inches.
2. Place geotextile fabric full width and length, with minimum 12 inch overlap at joints.
3. Place and compact at least 6 inches of 1.5 to 3.5 inch diameter stone.

B. Silt Fences:
1. Store and handle fabric in accordance with ASTM D4873.
2. Where slope gradient is less than 3:1 or barriers will be in place less than 6 months, use nominal 16 inch high barriers with minimum 36-inch-long posts spaced at 6 feet maximum, with fabric embedded at least 4 inches in ground.
3. Where slope gradient is steeper than 3:1 or barriers will be in place over 6 months, use nominal 28-inch-high barriers, minimum 48-inch-long posts spaced at 6 feet maximum, with fabric embedded at least 6 inches in ground.
4. Where slope gradient is steeper than 3:1 and vertical height of slope between barriers is more than 20 feet, use nominal 32-inch-high barriers with woven wire reinforcement and steel posts spaced at 4 feet maximum, with fabric embedded at least 6 inches in ground.
5. Install with top of fabric at nominal height and embedment as specified.
6. Embed bottom of fabric in a trench on the upslope side of fence, with 2 inches of fabric laid flat on bottom of trench facing upslope; backfill trench and compact.
7. Do not splice fabric width; minimize splices in fabric length; splice at post only, overlapping at least 18 inches, with extra post.
8. Fasten fabric to wood posts using one of the following:
a. Four ¾-inch diameter, 1-inch long, 14-gauge nails.
b. Five 17-gauge staples with ¾-inch-wide crown and ½-inch legs.
c. Fasten fabric to steel posts using wire, nylon cord, or integral pockets.

DRAFT

d. Wherever runoff will flow around end of barrier or over the top, provide temporary splash pad or other outlet protection; at such outlets in the run of the barrier, make barrier not more than 12 inches high with post spacing not more than 4 feet.

C. Straw Bale Rows:
1. Install bales in continuous rows with ends butting tightly, with one bale at each end of row turned uphill.
2. Install bales so that bindings are not in contact with the ground.
3. Embed bales at least 4 inches in the ground.
4. Anchor bales with at least two stakes per bale, driven at least 18 inches into the ground; drive first stake in each bale toward the previously placed bale to force bales together.
5. Fill gaps between ends of bales with loose straw wedged tightly.
6. Place soil excavated for trench against bales on the upslope side of the row, compacted.

D. Mulching Over Large Areas:
1. Dry Straw and Hay: Apply 2-1/2 tons per acre; anchor using dull disc harrow or emulsified asphalt applied using same spraying machine at 100 gallons of water per ton of mulch.
2. Wood Waste: Apply 6 to 9 tons per acre.
3. Asphalt: Apply at 1200 gallons per acre.
4. Erosion Control Matting: Comply with manufacturer's instructions.

E. Mulching Over Small and Medium Areas:
1. Dry Straw and Hay: Apply 4 to 6 inches depth.
2. Wood Waste: Apply 2 to 3 inches depth.
3. Pine Needles: Apply 2 to 3 inches depth.
4. Asphalt: Apply ¼-gallon per square yard.
5. Erosion Control Matting: Comply with manufacturer's instructions.

F. Temporary Seeding:
1. When hydraulic seeder is used, seedbed preparation is not required.
2. When surface soil has been sealed by rainfall or consists of smooth undisturbed cut slopes, and conventional or manual seeding is to be used, prepare seedbed by scarifying sufficiently to allow seed to lodge and germinate.
3. If temporary mulching was used on planting area but not removed, apply nitrogen fertilizer at 1 pound per 1000 sq. ft.
4. On soils of very low fertility, apply 10-10-10 fertilizer at rate of 12 to 16 pounds per 1000 sq. ft.
5. Incorporate fertilizer into soil before seeding.
6. Apply seed uniformly; if using drill or cultipacker seeders place seed 1/2 to 1 inch deep.
7. Irrigate as required to thoroughly wet soil to depth that will ensure germination, without causing runoff or erosion.
8. Repeat irrigation as required until grass is established.

3.05 MAINTENANCE

A. Inspect preventive measures weekly, within 24 hours after the end of any storm that produces 0.5 inches or more rainfall at the project site, and daily during prolonged rainfall.

B. Repair deficiencies immediately.

DRAFT

C. Silt Fences:
   1. Promptly replace fabric that deteriorates unless need for fence has passed.
   2. Remove silt deposits that exceed one-third of the height of the fence.
   3. Repair fences that are undercut by runoff or otherwise damaged, whether by runoff or other causes.

D. Straw Bale Rows:
   1. Promptly replace bales that fall apart or otherwise deteriorate unless need has passed.
   2. Remove silt deposits that exceed one-half of the height of the bales.
   3. Repair bale rows that are undercut by runoff or otherwise damaged, whether by runoff or other causes.

E. Clean out temporary sediment control structures weekly and relocate soil on site.

F. Place sediment in appropriate locations on site; do not remove from site.

3.06 CLEAN UP

A. Remove temporary measures after permanent measures have been installed, unless permitted to remain by ENGINEER.

B. Clean out temporary sediment control structures that are to remain as permanent measures.

C. Where removal of temporary measures would leave exposed soil, shape surface to an acceptable grade and finish to match adjacent ground surfaces.

END OF SECTION

DRAFT

SECTION 01 5719 – TEMPORARY ENVIRONMENTAL CONTROLS

PART 1 – GENERAL

1.01 EXPLOSIVES AND BLASTING

A. The use of explosives on the WORK will not be permitted.

1.02 RUBBISH CONTROL

A. During the progress of the WORK, the CONTRACTOR shall keep the Site and other areas used by it in a neat and clean condition, and free from any accumulation of rubbish. Dispose of all rubbish and waste materials of any nature occurring at the Site, and shall establish regular intervals of collection and disposal of such materials and waste. Keep its haul roads free from dirt, rubbish and unnecessary obstructions resulting from its operations. Disposal of all rubbish and surplus materials shall be off the Site in accordance with local codes and ordinances governing locations and methods of disposal, and in conformance with all applicable safety laws, and to the particular requirements of Part 1926 of the OSHA Safety and Health Standards for Construction.

1.03 SANITATION

A. The CONTRACTOR shall provide adequate sanitary facilities for the use of those employed on the WORK. Such facilities shall be made available when the first employees arrive on the site of the WORK, shall be properly secluded from public observation, and shall be constructed and maintained during the progress of the Work in suitable numbers and at such points and in such manner as may be required.

B. The CONTRACTOR shall maintain the sanitary facilities in a satisfactory and sanitary condition at all times and shall enforce their use. He shall rigorously prohibit the committing of nuisances on the site of the WORK, on the lands of the OWNER, or on adjacent property.

C. Toilet Facilities: The CONTRACTOR shall provide fixed or portable chemical toilets wherever needed for the use of employees. Toilets at construction job sites shall conform to the requirements of Part 1926 of the OSHA Standards for Construction.

D. Sanitary and Other Organic Wastes: The CONTRACTOR shall establish a regular daily collection of all sanitary and organic wastes. All wastes and refuse from sanitary facilities provided or organic material wastes from any other source related to operations shall be disposed of away from the Site in accordance with all laws and regulations pertaining thereto.

1.04 CHEMICALS

A. All chemicals used or furnished by the CONTRACTOR for or during project construction, whether defoliant, soil sterilant, herbicide, pesticide, disinfectant, polymer, reactant or of other classification, shall show approval of either the U.S. Environmental Protection Agency or the U.S. Department of Agriculture. Use of all such chemicals and disposal of residues shall be in strict accordance with the printed instructions of the manufacturer.

1.05 CULTURAL RESOURCES

A. Attention is directed to the National Historic Preservation Act of 1966 (16 USC 470) and 36 CFR 800, which provides for the preservation of potential historical architectural, archaeological, or cultural resources (hereinafter called "cultural resources").

B. Conform to the applicable requirements of the National Historic Preservation Act of 1966 as it relates to the preservation of cultural resources.

DRAFT

C. In the event potential cultural resources are discovered during subsurface excavations at the site of construction, the following procedures shall be instituted:
   1. The CONTRACTOR shall issue a Field Order directive to cease all construction operations at the location of such potential cultural resources find.
   2. Such Field Order shall be effective until such time as a qualified archaeologist can be called to assess the value of these potential cultural resources and make recommendations to the State Historic Preservation Office.

D. If the archaeologist determines that the potential find is a bona fide cultural resource, at the direction of the State Historic Preservation Office, WORK shall be suspended at the location of the find under the provisions for changes contained in the Contractual Agreement.

PART 2 – PRODUCTS (NOT USED)

PART 3 – EXECUTION (NOT USED)

END OF SECTION

DRAFT

SECTION 01 5726 – SITE WATERING FOR DUST CONTROL

PART 1 – GENERAL

1.01 DUST ABATEMENT

A. Preventative measures to limit the production of dust in amounts damaging to property, cultivated vegetation or domestic animals, or causing a nuisance to persons living in or occupying buildings in the vicinity shall be taken in to account. Responsibility for any damage resulting from dust originating from its operations shall be the CONTRACTOR's. The dust abatement measures shall be maintained at all times during construction of the project, in accordance with the requirements of Yuma County.

PART 2 – PRODUCTS (NOT USED)

PART 3 – EXECUTION

3.01 GENERAL

A. The CONTRACTOR shall take necessary measures to control any and all dust related to or as a result of construction activities under this Contract. The water necessary for the dust control operation will be Owner furnished, beyond that the CONTRACTOR shall be responsible to provide whatever means necessary to accomplish the task of Dust Control. The CONTRACTOR shall be responsible for any damage resulting from dust originating from construction activities under this Contract.

END OF SECTION

DRAFT

SECTION 01 7113 – MOBILIZATION

PART 1 – GENERAL

1.01 THE REQUIREMENT

A. Mobilization shall include verification by the CONTRACTOR that all permits have been obtained; moving onto the site of all plant and equipment; furnishing and erecting plants, temporary buildings, and other construction facilities; and implementing security requirements; all as required for the proper performance and completion of the WORK. Mobilization shall include the following principal items:

1. Moving onto the site all materials and equipment required for first month operations
2. Installing temporary construction power, wiring and lighting facilities if applicable
3. Establishing a fire protection system as required.
4. Developing a construction water supply as required.
5. Providing field office trailers, complete with all specified furnishings and office supplies, including printer, scanner, and copying machine
6. Providing all on-site communication facilities including internet services with a minimum of 50 Mbps download and 5 Mbps upload speed.
7. Providing on-site sanitary facilities and potable water facilities
8. Arranging for and erection of work and storage yard
9. Obtaining all required permits for the project.
10. Comply with all OSHA required notices and establish a safety program
11. Having the superintendent or authorized representatives at the job site as required for execution of the work
12. Provide and implement an on-site Dust Control Plan.
13. Upon start of construction, the CONTRACTOR shall furnish and install a Project Identification Sign. The sign shall be painted by a professional experienced in sign painting. The paint used shall resist weathering and fading for the scheduled construction project duration. Two, 4”X4”X8’ supports shall be supplied by the CONTRACTOR. The project identification sign shall be securely bolted to the supports and shall be installed and located as directed by the OWNER. The CONTRACTOR shall repair the sign structure and supports as necessary for the duration of the project. The sign and supports shall be maintained in a neat and clean condition. The CONTRACTOR shall remove and properly dispose of the sign upon completion of the project. Costs associated with supplying, erecting, and maintaining the project identification sign shall be considered incidental to the contract and no separate payment will be allowed.

PART 2 – PRODUCTS (NOT USED)

PART 3 – EXECUTION (NOT USED)

END OF SECTION

DRAFT

SECTION 01 7123 – FIELD ENGINEERING

PART 1 – GENERAL

1.01 SUMMARY

A. Section Includes: Field engineering to establish lines and grades for the WORK.

1.02 THE REQUIREMENT

A. The CONTRACTOR shall provide the surveying and staking control for the project. In addition, the CONTRACTOR shall provide the staking of the property and easement limits, clearing limits, influent and effluent lines, utilities, and excavation limits staking of structure corners with offsets as necessary for construction.

B. The CONTRACTOR shall provide all necessary staking following the OWNER initial staking as completed during the design of this project, as required to construct all items included in the plans and Scope of Work.

C. The CONTRACTOR shall survey the location of any underground utility line that the CONTRACTOR installs prior to backfilling. This shall include all joints, valves, structure, hydrants and services.

1.03 QUALITY ASSURANCE

A. Qualifications of Surveyor or Engineer: Registered civil engineer or land surveyor in state where Project is located.

B. Accuracy of stakes, alignments, and grades may be checked randomly by ENGINEER.
   1. Notice of when checking will be conducted will be given.
   2. When notice of checking is given, postpone parts of the Work affected by stakes, alignments or grades to be checked until checked.
   3. Do not assume that ENGINEER's check substitutes or complements required field quality control procedures.

1.04 CONSTRUCTION STAKES, LINES, AND GRADES

A. Execute the Work in accordance with the lines and grades indicated.

B. Make distances and measurements on horizontal planes, except elevations and structural dimensions.

1.05 SURVEY REFERENCE POINTS

A. Basic reference line, a beginning point on basic reference line, and a bench mark will be provided, by OWNER as defined in the Contract.

B. From these reference points, establish other control and reference points as required to properly lay out the Work.

C. Locate and protect control points prior to starting sitework, and preserve permanent reference points during construction.
   1. Make no changes or relocations without prior written notice.
   2. Replace Project control point, when lost or destroyed, in accordance with original survey control.

D. Set monuments for principal control points and protect them from being disturbed and displaced.
   1. Re-establish disturbed monuments.
   2. When disturbed, postpone parts of the Work that are governed by disturbed monuments until such monuments are re-established.

DRAFT

1.06 PROJECT SURVEY REQUIREMENTS

A. Assume responsibility for accuracy of stakes, alignments, and grades by performing verifications and checking in accordance with standard surveying practice.

B. Locate all utilities installed within the project prior to backfilling. Make a complete survey at the line, hub, or joint locations.

1.07 RECORD DOCUMENTS

A. Once the CONTRACTOR has reached substantial completion the CONTRACTOR will survey the site in preparation of Record Documents in conjunction with the CONTRACTORS supplied as-built as specified in the applicable Sections of Division 01 – General Requirements.

B. Carefully note all deviations or changes from the original drawings and maintain complete, accurate log of control points and survey.

C. Submit all utility locate information and surveyed information in hard copy and AutoCAD format.

D. Affix civil engineer's or land surveyor's signature and registration number to Record Drawing to certify accuracy of information shown.

PART 2 – PRODUCTS (NOT USED)

PART 3 – EXECUTION

3.01 GENERAL

A. The CONTRACTOR shall provide the initial surveying and staking control for the project. In addition, the CONTRACTOR shall provide the initial staking of the property and easement limits, clearing limits, influent and effluent lines, utilities, and excavation limits staking of structure corners with offsets as necessary for construction.

B. The CONTRACTOR shall provide all required field survey as necessary to complete the work as defined in the contract.

END OF SECTION

DRAFT

SECTION 01 7700 – CLOSEOUT PROCEDURES

PART 1 – GENERAL

1.01 SUBSTANTIAL COMPLETION

A. Substantial completion is based on the guideline established in the Contract Documents.

B. CONTRACTOR shall submit written certification that the project construction phase is entering the substantial completion phase.

C. CONTRACTOR to submit all applicable certification and test results, including but not limited to:
   1. Hydrostatic Test for Concrete Structures
   2. Pipe line pressure tests
   3. Geotechnical test
   4. Concrete Tests
   5. Equipment Field Service Installation, Certification, Certificate of Warranty, and Evidence of Training per applicable sections of Division 01 – General Requirements
   6. Certifications of all special inspections
   7. Clean water testing
   8. Electrical testing and inspection certification
   9. Equipment and process instrumentation program testing and certification
   10. And any applicable test required by the contract documents

D. Submit list of major items to be completed or corrected but will not impact substantial completion.

E. Engineer will inspect within seven days after receipt of certification, together with a representative.

F. Should ENGINEER consider that work is substantially complete:
   1. Prepare, and submit to ENGINEER, a list of the items to be completed or corrected, as determined by on-site observation.
   2. Engineer will prepare and issue a Certificate of Substantial Completion, containing:
      a. Date of Substantial Completion.
      b. List of items to be completed or corrected, verified, and amended.
      c. The time required to complete or correct work of listed items.
      d. Responsibilities for:
         1) Insurance
         2) Utilities
         3) Operation of mechanical, electrical, and other systems
         4) Maintenance and cleaning
         5) Security
      e. Signatures of: ENGINEER
   3. Complete work listed for completion or correction, within designated time.

G. Should ENGINEER consider that work is not substantially complete:
   1. He shall immediately notify, in writing, stating reasons.
   2. Complete work, and send second written notice to ENGINEER, certifying that Project, or designated portion of project of substantially complete.
   3. ENGINEER will re-review work.

1.02 FINAL INSPECTION

A. Submit written certification that:
   1. Contract Documents have been reviewed.

DRAFT

2. Project has been inspected for compliance with Contract Documents.
3. Work has been completed in accordance with Contract Documents.
4. Equipment and systems have been tested in presence of ENGINEER and are operational.
5. Project is completed and ready for final inspection.

B. ENGINEER will make final on-site observation/review within seven (7) days after receipt of certification.

C. Should ENGINEER consider that work is finally complete in accordance with requirements of Contract Documents, he shall prepare and issue the following:
1. Certificate of Completion;
2. Complete sets of As-Builts received; and
3. A Request to make Project Closeout submittals.

D. Should ENGINEER consider that work is not finally complete:
1. He shall notify, in writing, stating reasons.
2. Take immediate steps to remedy the stated deficiencies, and send second written notice to ENGINEER certifying that work is complete.
3. ENGINEER will re-review the work.

1.03 FINAL CLEANING UP

A. The work will not be considered as completed and final payment made until all final cleanup has been done in a satisfactory manner. Reference applicable sections of Division 01 – General Requirements.

1.04 CLOSEOUT SUBMITTALS

A. Submit the following Closeout Submittals upon completion of the Work and at least 7 days prior to submitting Application for Final Payment:
1. Evidence of Compliance and Closeout with Requirements of Governing Authorities
2. Project Record Documents (As-built Drawings and Documentation)
3. Operation and Maintenance Manuals
4. Warranties and Bonds
5. Keys and Keying Schedule
6. Evidence of Payment and Release of Liens as outlined in Conditions of the Contract
7. Release of claims as outlined in Conditions of the Contract
8. Certificate of Final Completion

1.05 EVIDENCE OF COMPLIANCE WITH REQUIREMENTS OF GOVERNING AUTHORITIES

A. Submit the following:
1. Authorization of Construction (by OWNER)
2. APP Permit (by OWNER)
3. 4.01 Permit (by OWNER)
4. Yuma County Building Permit

1.06 PROJECT RECORD DOCUMENTS

A. Deliver record documents with the transmittal letter containing date, Project title, list of documents, and signature of the CONTRACTOR.

1.07 WARRANTIES AND BONDS

A. Provide executed Warranty or Guaranty Form if required by Contract Documents.

B. Provide specified additional warranties, guarantees, and bonds form manufacturers and suppliers.

DRAFT

1.08 CERTIFICATE OF FINAL COMPLETTION

A. When 7-day operational test has been successfully completed, ENGINEER will certify that new facilities are operationally complete. ENGINEER will submit a list of known items (punch list) still to be completed or corrected prior to contract completion.

B. List of items to be completed or corrected will be amended as items are resolved by Contractor.

C. When all items have been completed or corrected, submit written certification that the entire work is complete in accordance with the Contract Documents and request final inspection.

D. Upon completion of final inspection, ENGINEER will either prepare a written acceptance of the entire work or advise the Contractor of work not complete. If necessary, inspection procedures will be repeated.

1.09 FINAL APPLICATION FOR PAYMENT

A. Submit final applications in accordance with requirements of Contractual Agreement.

1.10 FINAL CERTIFICATE FOR PAYMENT

A. ENGINEER will issue final certificate in accordance with provisions of Contractual Agreement.

PART 2 – PRODUCTS (NOT USED)

PART 3 – EXECUTION (NOT USED)

END OF SECTION

DRAFT

SECTION 01 7823 – OPERATION AND MAINTENANCE DATA

PART 1 – GENERAL

1.01 THE REQUIREMENT

A. Compile product data and related information appropriate for maintenance and operation of equipment furnished under the Contract. Prepare Operating and Maintenance Manual as specified.

B. Instruct OWNER's personnel in the maintenance and operation of equipment and systems as outlined herein.

C. In addition to Operating and Maintenance Data, the Manufacturer's printed recommended Installation Practice shall be included. If not part of the Operating and Maintenance Manual, separate written installation instructions shall be provided, serving to assist the CONTRACTOR in equipment installation.

1.02 OPERATING AND MAINTENANCE MANUAL

A. Every piece of equipment furnished and installed shall be provided with complete maintenance and operations manuals, unless noted otherwise. These shall be detailed in instructions to the OWNER's personnel. After approval, the CONTRACTOR shall store all manuals until the completion of the project or until requested by the ENGINEER. The manuals will be stored and delivered to the OWNER in an organized format.

B. Provide two hard copies and one (1) electronic version in PDF format. The hard copy shall be delivered to the jobsite shipped with the equipment and one (1) copies shall be delivered to the CONTRACTOR's main office. The PDF copy shall be electronically delivered to the OWNER, the ENGINEER, and the CONTRACTOR.

1.03 SUBMITTALS

A. Submittals shall be made in accordance with Section 01 3300 – Submittal Procedures.

1.04 CONTENT OF MANUAL

A. Neatly typewritten table of contents for each volume, arranged in systematic order.
   1. CONTRACTOR, name of responsible principal, address and telephone number.
   2. A list of each product required to be included, indexed to the content of the volume.
   3. List, with each product, the name, address and telephone number of:
      a. Subcontractor or installer.
      b. Maintenance contractor, as appropriate.
      c. Identify the area of responsibility of each.
      d. Local source of supply for parts and replacement.
   4. Identify each product, by product name and other identifying symbols as set forth in Contract Documents.

B. Product Data:
   1. Include only those sheets, which are pertinent to the specific product. References to other sizes and types or models of similar equipment shall be deleted or lined out.
   2. Annotate each sheet to:
      a. Clearly identify the specific product or part installed.
      b. Clearly identify the data applicable to the installation.
      c. Provide a parts list for all new equipment items, with catalog numbers and other data necessary for ordering replacement parts.
      d. Delete references to inapplicable information.

DRAFT

3. Clear and concise instructions for the operation, adjustment, lubrication, and other maintenance of the equipment including a lubrication chart and maintenance schedule or frequency.

C. Drawings:
   1. Supplement product data with drawings as necessary to clearly illustrate:
      a. Relations of component parts of equipment and systems.
      b. Control and flow diagrams.
   2. Coordinate drawings with information in Project Record Documents to assure correct illustration of complete installation.

D. Written text, as required to supplement product data for the particular installation:
   1. Organize in a consistent format under separate headings for different procedures.
   2. Provide a logical sequence of instructions for each procedure.

E. Copy of each warranty, bond and service contract issued: Provide information sheet for OWNER's personnel.
   1. Proper procedures in the event of failure.
   2. Instances which might affect the validity of warranties or bonds.

F. The manuals must be approved by the OWNER before final payment on the equipment is made.

PART 2 – PRODUCTS (NOT USED)

PART 3 – EXECUTION (NOT USED)

END OF SECTION

DRAFT

SECTION 01 7839 – PROJECT RECORD DOCUMENTS

PART 1 – GENERAL

1.01 RECORD DRAWINGS

A. The CONTRACTOR and its Subcontractors at the start of the project shall provide a clean set of Drawings and mark on them, in large writing “As Built.” This set of drawings will be kept at the job site trailer and used to indicate with a red pencil, pen or marker the “As Built” conditions of the project. These drawings will be updated as the work progresses to reflect the “As Built” conditions.

B. The CONTRACTOR shall be responsible to ensure that the “As Built” drawings are being kept up to date.

C. Upon substantial completion the CONTRACTOR shall obtain all “As Built” drawings and review them for accuracy and completeness, this includes surveying of utilities as required by applicable Sections of Division 01 – General Requirements. After the CONTRACTOR has reviewed and confirmed accuracy and completeness of the “As Built” drawings the CONTRACTOR shall submit the drawings and survey information to the ENGINEER of record.

1. All survey as-built information shall be submitted to the ENGINEER in AutoCAD format.

D. Upon receipt of the “As Built” drawings the ENGINEER shall make all necessary changes to the documents and provide a Record Drawing set to the CONTRACTOR for their use and distribution as required for project closeout, as required by applicable Sections of Division 01 – General Requirements.

1.02 PHOTO DOCUMENTATION

A. Images must be created using only digital photographic equipment. Camera should be capable of utilizing a moderate wide-angle lens system and have electronic flash capable of properly illuminating a large interior space. Digital images shall be saved in JPEG format and properly labeled.

B. Digital copies shall be provided for OWNER and ENGINEER by CONTRACTOR at each weekly progress meeting.

C. Saved images shall include detailed photograph description along with month, day, and year and separated by treatment process.

PART 2 – PRODUCTS (NOT USED)

PART 3 – EXECUTION (NOT USED)

END OF SECTION

DRAFT

SECTION 01 7900 – DEMONSTRATION AND TRAINING

PART 1 – GENERAL

1.01 THE REQUIREMENT

A. Description of Work:
   1. The equipment vendor shall provide formal training of OWNER's personnel. Training shall commence after the successful installation and testing of the equipment.
      a. Training of OWNER's personnel shall commence within a period of 14 days after the equipment installation and startup as mutually agreed to by OWNER, Engineer, and Contractor.
      b. Training shall be completed within the time allocated in the Agreement.
      c. The Engineer shall document the time when the facilities are substantially unavailable for use by the equipment vendor to perform training due to circumstances beyond the control of the equipment vendor including but not limited to power outages, lack of feed water, inability to transfer product water or feed water due to factors beyond the control of the equipment vendor, not having adequate staff from the Contractor or OWNER. If in the sole opinion of the Engineer the facilities are substantially unavailable to the equipment vendor, equivalent additional time for training will be granted.
      d. Failure of the equipment vendor to complete the Training as required by this Section within the allocated time, shall constitute a failure of the equipment vendor to provide Special Services in accordance with the requirements of the Contract.
      e. Upon successful completion of the Training required by this Section, the OWNER will issue a "Notice of Completed Training".
      f. The equipment vendor shall maintain record of the individuals that have completed training and provide information required for the documentation of Professional Development Hours required for OWNER's personnel.
   2. The equipment vendor shall provide the services of factory-trained specialists to train OWNER's personnel in the recommended operation and the preventive maintenance procedures for all equipment provided by the Contract Documents.
   3. The equipment vendor shall coordinate training location and provide hands-on training as required for proper training.
   4. The equipment vendor shall be responsible for all costs associated with training and shall provide required materials, texts, and supplies.
   5. Training shall be conducted in normal eight (8) hour working days until conclusion of the training course.
   6. Training sessions may be videotaped by OWNER at OWNER's expense.
   7. Training material shall be provided to OWNER in written and/or electronic format.

PART 2 – PRODUCTS (NOT USED)

PART 3 – EXECUTION

3.01 OPERATOR TRAINING

A. Training: The instruction lesson plan shall include the following as a minimum:
   1. Equipment Operation:
      a. Describe equipment's operating (process) function. Describe equipment's fundamental operating principals and dynamics.
      b. Identify equipment's mechanical, electrical, and electronic components and features.

DRAFT

c. Identify all support equipment associated with the operation of subject equipment (e.g., valve actuators, motors).
d. Recommend standard operating procedures to address start-up, routine monitoring, and shutdown of the equipment.

2. Detailed Component Description:
   a. Identify and describe in detail each component's function.
   b. Group related components into subsystems, where applicable. Describe subsystem functions and their interaction with other subsystems.
   c. Identify and describe in detail equipment safeties and control interlocks.
3. Equipment Preventative Maintenance (PM):
   a. Describe PM inspection procedures required to:
      1) Perform an inspection of the equipment in operation.
      2) Spot potential trouble symptoms and anticipate breakdowns.
      3) Forecast maintenance requirements (predictive maintenance).
   b. Define the recommended PM intervals for each component.
   c. Provide lubricant and replacement part recommendations and limitations.
   d. Describe appropriate cleaning practices and recommend intervals.
   e. Identify and describe the use of special tools required for maintenance of the equipment.
   f. Describe component removal/installation and disassembly/assembly procedures.
   g. Perform "hands-on" demonstrations of preventive maintenance procedures.
   h. Describe recommended measuring instruments and procedures, and provide instruction on interpreting alignment measurements, as appropriate. Define recommended torque, mounting, calibration, and/or alignment procedures and settings, as appropriate.
   i. Describe recommended procedures to check/test equipment following a corrective repair.
4. Equipment Troubleshooting:
   a. Define recommended systematic troubleshooting procedures.
   b. Provide component specific troubleshooting checklists.
   c. Describe applicable equipment testing and diagnostic procedures to facilitate troubleshooting.

END OF SECTION

DRAFT

SECTION 02 0100 – MAINTENANCE OF EXISTING CONDITIONS

PART 1 – GENERAL

1.01 THE REQUIREMENT

A. The WORK of this Section, as defined in the Contract, includes all work necessary to satisfactorily prepare the site as shown on the accepted drawings and as specified herein. Following this preparation, the site shall be in such a condition as to easily continue with the next operation whether it be excavating, backfilling, or any other operations that are a part of the project. Site preparation includes clearing, grubbing, grading, tree and shrub removal, native grass stripping and removing and disposing of all debris within the limits of the project and such other areas as may be indicated on the plans or required work, except such objects as are designated to remain or are to be removed in accordance with the plans. This work shall also include the preservation from injury or defacement of all vegetation and objects designated to remain.

B. Related Sections: The work shall conform to the applicable Sections of the Divisions in these Specifications:
   1. Division 01 – General Requirements
   2. Division 31 – Earthwork

C. Soils Report: This work shall conform to the requirements of the latest Geotechnical Evaluation.

1.02 SUBMITTALS

A. Submittals shall be made in accordance with Section 01 3300 – Submittal Procedures.

B. Shop Drawings: Submit clearing limits, staging, and site access plans and limits.

1.03 SITE SURVEY AND LAYOUT

A. The CONTRACTOR shall establish construction, and clearing limits by providing the initial site survey and field staking. The initial staking will include property line limits, casements and access points and structure locations with 100-ft. offsets. The OWNER shall provide the contractor the survey data for the project to include the survey control points, hubs, etc., and benchmarks for the site. The contractor shall layout required construction staking as defined in the applicable Sections of Division 01 – General Requirements.

1.04 PERMITS

A. Verify all required permits have been secured for this work. Comply with applicable local Air Pollution Control requirements. In the absence of specific ordinances, periodic watering shall be done to control dust throughout the work. Make all necessary arrangements for water required for this work.

PART 2 – PRODUCTS (NOT USED)

PART 3 – EXECUTION

3.01 PRIMARY SITE ACCESS

A. The CONTRACTOR shall provide clearing, grubbing, and stripping as defined in the contract.

B. The CONTRACTOR shall develop any necessary access to the Site, including access entrance barriers to prohibit entry of unauthorized persons as defined in the Contract. The contractor shall provide at the project site access barriers to prohibit entry of unauthorized persons as defined in the Contract.

DRAFT

C. Adequately support existing structures, sidewalks, slabs, pavements, utilities, and other facilities that may be affected by the proposed construction as defined in the Contract.

D. Utility Interference: Where existing utilities interfere with the WORK, notify the utility owner before proceeding in accordance with the General Conditions.

3.02 CLEARING, GRUBBING AND STRIPPING

A. The CONTRACTOR shall perform this work as defined in the Geotechnical Evaluation and or Soils Report.

B. Construction areas shall be cleared of grass and weeds to at least a depth of 1 inch and cleared of structures, pavement, sidewalks, concrete or masonry debris, trees, logs, upturned stumps, loose boulders, and any other objectionable material of any kind which would interfere with the performance or completion of the WORK, create a hazard to safety, or impair the subsequent usefulness of the WORK, or obstruct its operation. Trees and other natural vegetation outside the actual lines of construction shall be protected from damage during construction.

C. Within the limits of clearing, the areas below the natural ground surface shall be grubbed to a depth necessary to remove all stumps, roots, buried logs and all other objectionable material. Septic tanks, drain fields, and connection lines and any other underground structures, debris or waste shall be removed if found on the Site. All objectionable material from the clearing and grubbing process shall be removed from the Site and wasted in approved safe locations.

3.03 OVEREXCAVATION, REGRADING AND BACKFILL UNDER FILL AREAS

A. All grading and excavation shall conform to the requirements of the Geotechnical Evaluation and or Soils Report.

3.04 EXISTING UTILITY SERVICES

A. At start of work, CONTRACTOR shall locate and identify all utility services within the construction limits (both underground and overhead). Utilize underground utilities locating services as required, including potholing if necessary.

B. CONTRACTOR shall disconnect or reroute all existing services, where such services will be affected by construction operations. Comply with all instructions issued during the pre-construction conference regarding coordination, advance notice, emergency repairs, etc.

C. All DISCONNECTIONS OR TERMINATIONS SHALL BE PERFORMED IN SAFE MANNER, IN ACCORDANCE WITH APPLICABLE CODES AND REGULATIONS. PROVIDE ANY DISCONNECTS SWITCHES, VALVES, PLUGS, TEES, ETC., AS REQUIRED FOR THE VARIOUS LOCATIONS.

END OF SECTION

DRAFT

SECTION 02 4000 – DEMOLITION AND STRUCTURE MOVING

PART 1 – GENERAL

1.01 REQUIREMENT

A. Items required to be removed:
   1. Reference plans for existing items to be removed. Removable items may include, but are not limited to concrete paving, asphaltic concrete pavement, base courses, manholes, and pipes.

1.02 REGULATORY REQUIREMENTS

A. Conform to applicable codes for disposal of debris.

B. Coordinate removal work with utility companies or appropriate party.

PART 2 – PRODUCTS – NOT USED

PART 3 – EXECUTION

3.01 PREPARATION

A. Obtain advance approval from ENGINEER for dimensions and limits of removal work.

B. Identify known utilities below grade. Stake and flag locations.

3.02 PROTECTION

A. Protect following from damage or displacement:
   1. Adjacent public and private property.
   2. Trees, plants, and other landscape features designated to remain.
   3. Utilities designated to remain.
   4. Pavement and utility structures designated to remain.
   5. Bench marks, monuments, and existing structures designated to remain.

3.03 REMOVALS

A. Remove pavements and structures by methods that will not damage underground utilities. Do not use drop hammer near existing underground utilities.

B. Minimize amount of earth loaded during removal operations.

C. Where existing pavement is to remain, make straight saw cuts in existing pavement to provide clean breaks prior to removal. Do not break concrete pavement or base with drop hammer unless concrete or base has been saw cut to minimum depth of 2 inches.

D. When street and driveway saw cut location is greater than one-half of pavement lane width, remove pavement for full lane width or to nearest longitudinal joint as directed by ENGINEER.

E. Remove sidewalks and curbs to nearest existing dummy, expansion, or construction joint.

F. Unless noted otherwise or indicated in the Contract Documents, existing ends of pipe culverts or end of sewers which are to remain, shall have an 8-inch-thick masonry plug in pipe installed in the end of the pipe prior to backfill, with the backfill constructed in accordance with requirements of the applicable Sections of Division 31 – Earthwork.

3.04 BACKFILL

A. Backfill of removal areas shall be in accordance with requirements of these Specifications.

DRAFT

3.05 DISPOSAL

A. Inlet frames, grates, and plates; and manhole frames and covers, may remain City property. Disposal shall be in accordance with requirements these Specifications.

B. Remove from site, debris resulting from work under this section in accordance with requirements of these Specifications.

END OF SECTION

DRAFT

SECTION 03 0900 – WATER LEAKAGE TEST FOR CONCRETE STRUCTURES

PART 1 – GENERAL

1.01 THE REQUIREMENT

A. The CONTRACTOR shall clean, flush, and test hydraulic structures and appurtenant piping, in accordance with ACI 350.1/350.1R Tightness Testing of Environmental Concrete Structures. However, if any local or state ordinances/regulations exist regarding this test procedure the ENGINEER should be notified immediately. The ENGINEER shall review the regulation and determine if it is applicable to the project prior to commencement of construction. Following the review, the most stringent will govern.

B. The ACI 350.1/350.1R standard hydrostatic test (HST) criteria for these hydraulic structures are expressed as the maximum allowable percent loss per day of the test water volume. The designation for these structures is HST-050 or 0.050% per day of volume loss for all the structures.

C. It is the intent of this specifications section to compliment the requirements of ACI 350.1/350.1R not to override them. All testing requirements shall be per Section 1.01A.

1.02 SUBMITTALS

A. Furnish per Section 01 3300 – Submittal Procedures.

B. Testing Plan, Methods & Schedule for preliminary & final testing

C. Testing Documentation Recording Forms for preliminary & final testing

D. Methods of leak repair and product information

E. Upon completion of the test submit the completed Testing Documentation Recording Form showing results of test, dates etc. as required by the form for preliminary & final testing.

PART 2 – PRODUCTS

2.01 MATERIALS REQUIREMENTS

A. Temporary valves, bulkheads, or other water control equipment and materials shall be as determined by the CONTRACTOR subject to the ENGINEER's review. No materials shall be used which would be injurious to the facility or its future function.

PART 3 – EXECUTION

3.01 GENERAL

A. The CONTRACTOR shall develop and submit for review a form that will be used to record and document the testing as required in this section. At a minimum, the form shall include the project name, tank description, tank size, width, height, max operating depth, total volume in gallons of water required for testing, calculating allowable loss without evaporation, recorded readings with applicable reading dates, daily weather conditions, water temperature at 18 inches, recorded evaporations and signature and date blocks for the person recording the readings and a witness. In addition, the preliminary testing form shall include space for documentation of the visual inspection of each tank wall, which shall describe any leaks. The description of the leaks shall define the type of leak and methods of resolution.

DRAFT

B. Water for testing will be furnished by the OWNER; however, the CONTRACTOR shall make all necessary provisions for conveying the water from the OWNER designated source to the points of use as per the Contract.

C. The initial filling of a new tank shall not exceed a rate of 4ft/hr. Filling shall be continued until the water surface is at the design maximum liquid level or 4 inches below any fixed overflow level, whichever is lower.

D. All hydraulic structures and appurtenant pressure piping shall be tested; those for potable water shall also be disinfected. Disinfection shall be accomplished by chlorination. All chlorinating and testing operations shall be done in the presence of the ENGINEER.

E. If industrial paint finishes or other protective coatings are to be applied to the interior surfaces of the hydraulic structure, such coatings shall be applied after all testing operations have been completed, unless approved by the ENGINEER. However, all construction joints in the tanks shall be caulked as per these Specifications.

3.02 PRELIMINARY HYDRAULIC TESTING

A. Preliminary hydraulic testing shall conform to the following procedure:
   1. All hydraulic structures shall be cleaned by thoroughly hosing down all surfaces with a high-pressure hose and nozzle of sufficient size to deliver a minimum flow of 50 GPM. All water, dirt and foreign material accumulated in this cleaning operation shall be discharged from the structure or otherwise removed.
   2. A thorough visual inspection of the tank foundation and walls for cracks shall be performed by the ENGINEER. Repairs shall be done in accordance with these Specifications.
   3. Testing shall be performed in accordance with ACI 350.1/350.1R and prior to structure backfilling. The test shall not be performed sooner than 14 days after all portions of structure walls have been completed or at least 85% of design strength for all concrete elements. All pressure relief valves and wall penetrations shall be properly plugged prior to the hydrostatic test as to prevent leakage through the valve during testing. The tank shall be filled to an appropriate level as specified by the ENGINEER and a visual inspection of the outside walls shall be performed to determine any leaks over a 72-hour period. All observation shall be documented and recorded on a daily basis as specified. If leaks are observed, remove all water, repair the necessary areas and retest. The tanks shall have failed the test if water is observed flowing or seeping from the tank or if moisture can be transferred from the exterior surface to the dry hand.

3.03 TESTING OF HYDRAULIC STRUCTURES

A. General: Testing shall conform to American Concrete Institute (ACI) Standard 350.1/350.1R Tightness Testing of Environmental Engineering Concrete Structures. Tank structure testing and backfilling shall not be performed sooner than 14 days after all associated tank structural roof systems have been completed or at least 85% of design strength for all concrete elements. All pressure relief valves and wall penetrations shall be properly plugged prior to the hydrostatic test as to prevent leakage through the valve during testing. The test shall consist of filling the structure with water to the maximum operating water surface.

B. Leakage Test and Repairs:
   1. After the structure has been filled to the test level, the water loss leakage test shall be performed as follows: an initial water level reading shall be made and recorded every 24 hours until the test has been completed. Concrete will be allowed to saturate for three days. After which the actual test shall begin. Measurements shall be taken every 24 hours at 2 separate locations if possible. The test period shall be at least the theoretical time required to lower the water surface 3/8 inches, assuming a loss of water at the maximum allowable rate. The test period need not be longer than five

DRAFT

days. In uncovered or well-ventilated covered tanks evaporation and precipitation shall be measured. At the end of the test period, the water surface, temperature, evaporation, and precipitation measurements shall be recorded at the previous locations. The structure shall be considered to have passed the test if the calculated change in water volume in the tank is less that or equal to the HST-050 criteria or 0.05% of the total volume of the tank. The volume loss if necessary can be corrected for evaporation, precipitation, and temperature. The tank has failed if the loss is greater than the required criteria.

2. A restart of the test shall be required when test measurement become unreliable due to unusual precipitation or other external factors.
3. The CONTRACTOR shall be permitted to immediately retest a tank failing the test when no visible leakage is exhibited. If the tank fails the second time then the CONTRACTOR shall take other methods to determine the probable area(s) of leakage. The tank shall only be retested after the most probable area(s) of leakage are repaired. Any cracks shall be repaired before each test in accordance with these Specifications. The tanks shall be retested until they meet the required criterion.

3.04 TESTING OF APPURTENANT PIPING

A. Piping appurtenant to hydraulic structures shall be tested in accordance with these Specifications.

END OF SECTION

DRAFT

SECTION 03 1500 – CONCRETE ACCESSORIES

PART 1 – GENERAL

1.01 SECTION INCLUDES

A. Provision of waterstops embedded in concrete and spanning control, expansion, and/or construction joints to create a continuous diaphragm to prevent fluid migration.

B. Provision of strip applied expanding waterstop, embedded in concrete and spanning pipe penetrations, to create a continuous diaphragm for prevention of fluid migration.

1.02 REFERENCES

A. PVC Waterstop:
   1. Corps of Engineers: CRD-C 572-74
   2. American Society for Testing Materials (ASTM)
   3. Bureau of Reclamation: C-902

B. Hydrophilic Waterstop: American Society for Testing Materials (ASTM)

C. Related Sections: Work shall conform to the applicable Sections of Division 03 – Concrete.

1.03 SUBMITTALS

A. Submittals shall be furnished in accordance with Section 01 3300 – Submittal Procedures.

B. Product Data:
   1. Polyvinyl chloride waterstop: data of complete physical properties.
   2. Stripped applied waterstop: data of complete physical properties.

C. Samples:
   1. Polyvinyl chloride waterstop.
   2. Strip applied waterstop.

1.04 DELIVERY, STORAGE, AND HANDLING

A. PVC waterstops, Store waterstops under tarps to protect from oil, dirt, sunlight, and premature exposure to water.

B. Strip applied waterstop:
   1. Protect waterstops from exposure to moisture that may cause premature waterstop expansion.
   2. Store waterstops under cover to protect from oil, dirt, and sunlight.

PART 2 – PRODUCTS

2.01 PVC WATERSTOPS FOR JOINTS

A. Provide flexible PVC (polyvinyl chloride) ribbed waterstop with centerbulb. Use 6” waterstop for structures with hydrostatic pressure less than 65 ft, and 9” water stop for 65 ft and greater. Greenstreak or ENGINEER-approved equal.

B. The PVC waterstop shall be extruded from an elastomeric plastic material of which the basic resin is prime virgin polyvinyl chloride. The PVC compound shall not contain any scrapped or reclaimed material or pigment whatsoever.

DRAFT

C. Performance Requirements as Follows:

Property	Test Method	Required Limits
Water Absorption	ASTM D570	0.15% max
Tear Resistance	ASTM D624	200 lb./in (35kN/m) min
Ultimate Elongation	ASTM D638	350% min
Tensile Strength	ASTM D638	200 psi (13.78 Mpa) min
Low Temperature Brittleness	ASTM D746	No Failure @ -35°F (-37°C)
Stiffness in Flexure	ASTM D747	600 psi (4.13 Mpa) min
Specific Gravity	ASTM D792	1.45 max
Hardness, Shore A	ASTM D2240	79 +/- 3
Tensile Strength After Accelerated Extraction	CRD-C 572	1850 psi (11.03 Mpa) min
Elongation After Accelerated Extraction	CRD-C 572	300% min
Effect of Alkalis after 7 days:	CRD-C 572	
Weight Change		b/t -0.10% and +0.25%
Hardness Change		+/- 5 points

2.02 STRIP APPLIED WATERSTOP FOR CONCRETE CAST AGAINST EXISTING CONCRETE STRUCTURES

A. Provide strip applied expanding waterstop comprised of modified chloroprene rubber. Product shall be “HYDROTITE”, as supplied by Greenstreak, Inc. 3400 Tree Court Industrial Blvd., St. Louis, MO 63122, Phone: 800-325-9400, Fax: 800-551-5145, or ENGINEER-approved equal.

B. The waterstop shall be a combination of chloroprene rubber and chloroprene rubber modified to impart hydrophilic properties.

C. The waterstop shall have a delay coating to inhibit initial expansion due to moisture present in fresh concrete.

D. Performance Requirements as follows:

1. Chloroprene Rubber:

Property	Test Method	Required Limits
Tensile Strength	ASTM D412	1300 PSI min
Ultimate Elongation	ASTM D412	400% min
Hardness (Shore A)	ASTM D2240	50 +/- 5
Tear Resistance	ASTM D624	100 lb./in min

2. Modified Chloroprene (Hydrophilic) Rubber:

Property	Test Method	Required Limits
Tensile Strength	ASTM D412	350 PSI min
Ultimate Elongation	ASTM D412	600% min
Hardness (Shore A)	ASTM D2240	52 +/- 5
Tear Resistance	ASTM D624	50 lb./in
Expansion Ration	Volumetric Change-Distilled Water @ 70°F	3 to 1 min

2.03 ACCESSORIES

A. PVC Waterstops:

1. Provide factory made waterstop fabrications for all changes of direction, intersections, and transitions leaving only straight butt joint splices for the field.

DRAFT

2. Provide hog rings or grommets spaced at 12 inches on center along length of waterstop.
3. Provide Teflon coated thermostatically controlled waterstop splicing irons for field butt splices.

B. Strip Applied Waterstops:
1. Provide SWELLSTOP Primer Adhesive to continuously secure SWELLSTOP to concrete or ENGINEER-approved equal.
2. Provide concrete nails as required to secure SWELLSTOP and HYDROTITE in vertical or overhead applications or ENGINEER-approved equal.
3. On rough concrete surfaces apply LEAKMASTER to smooth surfaces and adhere to HYDROTITE.

PART 3 – EXECUTION

3.01 INSTALLATION

A. PVC Waterstop:
1. Refer to manufacturer installation recommendations.
2. Field butt splices shall be heat fused welded using a Teflon-covered thermostatically-controlled waterstop splicing iron at approximately 380°F. Follow approved manufacturer recommendations.
3. Lapping of waterstop, use of adhesives, or solvents shall not be allowed.
4. Center waterstop in joint and secure waterstop in correct position using hog rings or grommets spaced at 12” on centers along the length of the waterstop and wire tie to adjacent reinforcing steel.

B. Strip Applied Waterstop:
1. Refer to manufacturer installation recommendations.
2. Apply primer/adhesive to dry pipe or pipe sleeve surface, 2 inches wide continuously along the joint, maintaining a minimum of 2 inches clear cover to concrete face.
3. Primer adhesive shall be allowed to “dry to the touch” (typically 30 minutes to several hours; dependent on-site conditions) prior to application of waterstop.
4. Continuously adhere waterstop to pipe or pipe sleeve utilizing primer adhesive and maintaining a minimum of 2 inches clear cover to concrete face.
5. Apply waterstop the same day as primer adhesive.
6. Waterstop shall be butt spliced pressing ends together ensuring no separation or air pockets
7. Protect waterstop from moisture, dirt, oil, and sunlight during the progress of the work
8. Remove release paper from waterstop immediately prior to concrete placement.
9. Inspect waterstop for premature swelling, discontinuity, and debris contamination prior to concrete pour. Replace unacceptable waterstop.
10. Place and thoroughly vibrate concrete, taking care not to disturb or displace the waterstop. Do not allow vibrator to contact the waterstop.

END OF SECTION

DRAFT

SECTION 03 1516 – CONCRETE CONSTRUCTION JOINTS

PART 1 – GENERAL

1.01 THE REQUIREMENT

A. Construct all joints in concrete at the locations shown. Joints required in concrete structures are of various types and will be permitted only where shown, unless specifically accepted by the ENGINEER.

A. Commercial Standards (ASTM):

C920	Elastomeric Joint Sealants
D412	Rubber Properties in Tension
D624	Rubber Property - Tear Resistance
D638	Tensile Properties of Plastics
D746	Brittleness Temperature of Plastics and Elastomers by Impact
D747	Apparent Bending Modulus of Plastics by Means of a Cantilever Beam
D1056	Flexible Cellular Materials - Sponge or Expanded Rubber
D1752	Preformed Sponge Rubber and Cork Expansion Joint Fillers for Concrete Paving and Structural Construction
D2240	Rubber Property - Durometer Hardness
D2241	Poly (Vinyl Chloride) (PVC) Pressure-Rated Pipe (SDR-Series)

1.02 TYPES OF JOINTS

A. Construction Joints: Provide where shown on the plans. When fresh concrete is placed against a hardened concrete surface, the joint between the two (2) pours is called a construction joint. Unless otherwise specified, all joints in water bearing members shall be provided with a waterstop and sealant groove of the shape specified and shown. The space so formed shall be filled with a joint sealant material as specified in these Specifications.

B. Contraction Joints: Provide where shown on the plans. Contraction joints are similar to construction joints except that the fresh concrete shall not bond to the hardened surface of the first pour, which shall be coated with a bond breaker. The slab reinforcement shall be stopped 4½ inches from the joint; which is provided with a sleeve-type dowel, to allow shrinkage of the concrete of the second pour. Waterstop and/or sealant groove shall also be provided when specified or shown.

C. Expansion Joints: Provide where shown on the plans. To allow the concrete to expand freely, a space is provided between the two pours, the joint shall be formed as shown. This space is obtained by placing a filler joint material against the first pour, which acts as a form for the second pour. Unless otherwise specified, all expansion joints in water bearing members shall be provided with a waterstop as shown.

D. The space so formed shall be filled with a joint sealant material as specified in these Specifications. In order to keep the two (2) walls or slab elements in line the joint shall also be provided with a sleeve-type dowel as shown.

E. Control Joints: The function of the control joint is to provide a weaker plane in the concrete, where shrinkage cracks will probably occur. A groove, of the shape and dimensions shown, is formed or saw-cut in the concrete. This groove is afterward filled with a joint sealant material as specified in these Specifications.

1.03 SUBMITTALS

A. Submittals shall be furnished in accordance with Section 01 3300 – Submittal Procedures.

DRAFT

B. Waterstops: Prior to production of the material required under this contract, qualification samples shall be submitted. Such samples shall consist of extruded or molded sections of each size or shape to be used, and shall be accomplished so that the material and workmanship represents in all respects the material to be furnished under this contract. The balance of the material to be used under this contract shall not be produced until after the ENGINEER has reviewed the qualification samples as defined in these Specifications.

C. Joint Location: Submit placement shop drawings showing the location and type of all joints for each structure, along with the associated pour sequence.

1.04 QUALITY ASSURANCE

A. Waterstop Inspection: It is required that all waterstop field joints shall be subject to rigid inspection, and no such work shall be scheduled or started without having made prior arrangements with the ENGINEER to provide for the required inspections. Not less than 24-hour notice shall be provided to the ENGINEER for scheduling such inspections.

B. All field joints in waterstops shall be subject to rigid inspection for misalignment, bubbles, inadequate bond, porosity, cracks, offsets, and other defects, which would reduce the potential resistance of the material to water pressure at any point. All defective joints shall be replaced with material, which shall pass said inspection, and all faulty material shall be removed from the site and disposed of at no additional cost.

C. The following waterstop defects represent a partial list of defects, which shall be grounds for rejection:
   1. Offsets at joints greater than 1/16-inch or 15% of material thickness, at any point, whichever is less.
   2. Exterior crack at joint, due to incomplete bond, which is deeper than 1/16-inch or 15% of material thickness, at any point, whichever is less.
   3. Any combination of offset or exterior crack which will result in a net reduction in the cross section of the waterstop in excess of 1/16-inch or 15% of material thickness at any point, whichever is less.
   4. Misalignment of joint, which result in misalignment of the waterstop in excess of ½-inch in 10 feet.
   5. Porosity in the welded joint as evidenced by visual inspection.
   6. Bubbles or inadequate bonding which can be detected with a penknife test. (If, while prodding the entire joint with the point of a pen knife, the knife breaks through the outer portion of the weld into a bubble, the joint shall be considered defective.)

D. Waterstop Samples: Prior to use of the waterstop material in the field, a sample of each size or shape of material to be used shall be submitted to the ENGINEER for review. These samples shall be fabricated so that the material and workmanship represent in all respects the fittings to be furnished under this contract. Field samples of fabricated fittings (crosses, tees, etc.) may be selected at random by the ENGINEER for testing by a laboratory at no additional expense to the ENGINEER. When tested, they shall have a tensile strength across the joints equal to at least 600 psi.

E. Construction Joint Sealant: As per these Specifications.

PART 2 – PRODUCTS

2.01 PVC AND HYDROPHILIC WATERSTOP

A. General: As defined in these Specifications.

DRAFT

2.02 BACKING ROD

A. Backing rod shall be an extruded closed-cell, polyethylene foam rod. The material shall be compatible with the joint sealant material used and shall have a tensile strength of not less than 40 psi and a compression deflection of approximately 25% at 8 psi. The rod shall be 1/8-inch larger in diameter than the joint width except that a 1-inch diameter rod shall be used for a ¾-inch wide joint.

2.03 BOND BREAKER

A. Bond breaker shall be Super Bond Breaker as manufactured by Burke Company, San Mateo, California; Select Cure CRB as manufactured by Select Products Co., Upland, California; or ENGINEER-approved equal. It shall contain a fugitive dye so that areas of application will be readily distinguishable. Provide where shown on the plans.

2.04 SLIP DOWELS

A. Slip dowels in joints shall be A36 smooth epoxy-coated bars, conforming to ASTM A775. Provide where shown on the plans.

PART 3 – EXECUTION

3.01 GENERAL

A. Waterstops of the type specified herein shall be embedded in the concrete across joints as shown. All waterstops shall be fully continuous for the extent of the joint. Splices necessary to provide such continuity shall be accomplished in conformance to printed instructions of manufacturer of the waterstops. Suitable precautions and means to support and protect the waterstops during the progress of the work and shall repair or replace at its own expense any waterstops damaged during the progress of the work shall be taken. All waterstops shall be stored so as to permit free circulation of air around the waterstop material.

B. When any waterstop is installed in the concrete on one side of a joint, while the other half or portion of the waterstop remains exposed to the atmosphere for more than 2 days, suitable precautions shall be taken to shade and protect the exposed waterstop from direct rays of the sun during the entire exposure and until the exposed portion of the waterstop is embedded in concrete.

3.02 SPLICES IN WATERSTOPS

A. When applicable, splices in waterstops shall be performed by heat-sealing the adjacent waterstop sections in accordance with the manufacturer's printed recommendations. It is essential that:
   1. The material not be damaged by heat sealing.
   2. The splices have a tensile strength of not less than 60 percent of the unspliced materials tensile strength.
   3. The continuity of the waterstop ribs and of its tubular center axis be maintained.

B. Butt joints of the ends of two (2) identical waterstop sections may be made while the material is in the forms.

C. All joints with waterstops involving more than two (2) ends to be jointed together, and all joints which involve an angle cut, alignment change, or the joining of two (2) dissimilar waterstop strips of waterstop material beyond the joint. Upon being inspected and approved, such prefabricated waterstop joint assemblies shall installed in the forms and the ends of the 24-inch sections shall be prefabricated prior to placement in the forms, allowing not less than 24-inch-long strips shall be butt welded to the straight run portions of waterstop in place in the forms.

DRAFT

D. Where a centerbulb waterstop intersects and is jointed with a non-centerbulb waterstop, care shall be taken to seal the end of the centerbulb, using additional PVC material if needed.

3.03 JOINT CONSTRUCTION

A. Setting Waterstops: In order to eliminate faulty installation that may result in joint leakage, particular care shall be taken of the correct positioning of the waterstops during installation. Adequate provisions must be made to support and anchor the waterstops during progress and to insure the proper placement and or embedment in the concrete. The symmetrical halves of the waterstops shall be equally divided between the concrete pours at the joints. The center axis of the waterstops shall be coincident with the joint openings. Maximum density and imperviousness of the concrete shall be insured by thoroughly working it near all joints.

B. In placing flat-strip hydrotite waterstops in the forms, means shall be provided to prevent them from being folded over by the concrete as it is placed. Unless otherwise shown, all hydrotite waterstops shall be held in place with light wire ties on 12-inch centers, which shall be passed through the edge of the hydrotite waterstop and tied to the curtain of reinforcing steel. Horizontal hydrotite waterstops, with their flat face in a vertical plane, shall be held in place with continuous supports to which the top edge of the hydrotite waterstop shall be tacked. In placing concrete around horizontal hydrotite waterstops, with their flat face in a horizontal plane, concrete shall be worked under the hydrotite waterstops by hand so, as to avoid the formation of air and rock pockets.

C. In placing centerbulb waterstops in expansion joints, the centerbulb shall be centered on the joint filler material.

D. Waterstop in vertical wall joints shall stop 6 inches from the top of the wall where such waterstop does not connect with any other waterstop and is not to be connected to for a future concrete placement.

E. Joint Location: Construction joints, and other types of joints, shall be provided where shown. When not shown, construction joints shall be provided at 25-foot maximum spacing for all concrete construction, unless noted otherwise. Where joints are shown spaced greater than 40-feet apart, additional joints shall be provided to maintain the 25-foot maximum spacing. The location of all joints, of any type, shall be submitted for acceptance by the ENGINEER.

F. Joint Preparation: Special care shall be used in preparing concrete surfaces at joints where bonding between two (2) sections of concrete is required. Unless otherwise shown, such bonding will be required at all horizontal joints in walls. Surfaces shall be prepared in accordance with the requirements of the applicable Sections of Division 03 – Concrete. Except on horizontal wall construction joints, wall to slab joints or where otherwise shown or specified, at all joints where waterstops are required, the joint face of the first pour shall be coated with a bond breaker as shown on the plans.

DRAFT

G. Construction Joint Sealant: Construction joints in water-bearing floor slabs, and elsewhere as shown, shall be provided with tapered grooves, which shall be filled with a construction joint sealant. The material used for forming the tapered grooves shall be left in the grooves until just before the grooves are cleaned and filled with joint sealant. After removing the forms from the grooves, all laitance and fins shall be removed, and the grooves shall be sandblasted. The grooves shall be allowed to become thoroughly dry, after which they shall be blown out; immediately thereafter, install the joint sealant per these Specifications, they shall be primed, bond breaker tape placed in the bottom of the groove, and filled with the construction joint sealant. The primer used shall be supplied by the same manufacturer supplying the sealant. No sealant will be permitted to be used without a primer. Care shall be used to completely fill the sealant grooves. Areas designated to receive a sealant fillet shall be thoroughly cleaned, as outlined for the tapered grooves, prior to application of the sealant.

END OF SECTION

DRAFT

SECTION 03 2000 – CONCRETE REINFORCING

PART 1 – GENERAL

1.01 THE REQUIREMENT

A. Furnish, fabricate, and place all concrete reinforcement steel, welded wire fabric, couplers, and concrete inserts for use in reinforced concrete construction and perform all appurtenant work, including installation of all the wires, clips, supports, chairs, spacers, and other accessories, all in accordance with the Contract Documents.

B. American Iron and Steel (AIS) requirement applies to this section. All iron and steel products used in this project must be produced in the United States.

1.02 REFERENCE SPECIFICATIONS, CODES AND STANDARDS

A. Codes: Codes: All codes, as referenced herein are specified in applicable Sections of Division 01 – General Requirements.

B. Commercial Standards:

ACI 315	Details and Detailing of Concrete Reinforcement
ACI 318	Building Code Requirements for Reinforced Concrete
CRSI MSP-1	Concrete Reinforcing Steel Institute Manual of Standard Practice
AWS D1.4	Structural Welding Code - Reinforcing Steel
ASTM A82	Steel Wire, Plain, for Concrete Reinforcement
ASTM A615	Deformed and Plain Billet-Steel Bars for Concrete Reinforcement
ASTM A775	Epoxy-Coated Reinforcing Steel Bars

1.03 SUBMITTALS

A. Submittals shall be furnished in accordance with Section 01 3300 – Submittal Procedures.

B. Submittals shall include shop bending diagrams, placing lists, drawings of all reinforcement steel prior to fabrication and mill test reports.

C. Details of the concrete reinforcement steel and concrete inserts shall be submitted at the earliest possible date after receipt by the CONTRACTOR of the Notice to Proceed. Said details of reinforcement steel for fabrication and erection shall conform to ACI 315 and the requirements specified and shown. The shop bending diagrams shall show the actual lengths of bars, to the nearest inch measured to the intersection of the extensions (tangents for bars of circular cross-section) of the outside surface. The shop drawings shall include bar placement diagrams, which clearly indicate the dimensions of each bar splice.

D. Where mechanical couplers are required or permitted to be used to splice reinforcement steel, submit manufacturer's literature which contains instructions and recommendations for installation for each type of coupler used; certified test reports which verify the load capacity of each type and size of coupler used; and shop drawings which show the location of each coupler with details of how they are to be installed in the formwork.

E. If reinforcement steel is spliced by welding at any location, submit mill test reports, which shall contain the information necessary for the determination of the carbon equivalent as specified in AWS D1.4. Submit a written welding procedure for each type of weld for each size of bar which is to be spliced by welding; merely a statement that AWS procedures will be followed is not acceptable.

F. Submit all reinforcing product mill certificates.

DRAFT

1.04 QUALITY ASSURANCE

A. If requested by the ENGINEER, the CONTRACTOR shall provide samples from each heat of reinforcement steel delivered in a quantity adequate for testing. Costs of all tests will be paid by the CONTRACTOR.

B. If reinforcement steel is spliced by welding at any location, the CONTRACTOR shall submit certifications of procedure qualifications for each welding procedure used and certification of welder qualifications, for each welding procedure, and for each welder performing the work. Such qualifications shall be as specified in AWS D1.4.

C. If requested by the ENGINEER, the CONTRACTOR shall provide samples of each type of welded splice used in the WORK in a quantity and of dimensions adequate for testing. At the discretion of the ENGINEER, radiographic testing of direct butt-welded splices will be performed. The CONTRACTOR shall assist as necessary to facilitate testing. The CONTRACTOR shall repair any weld, which fails to meet the requirements of AWS D1.4. The costs of testing will be paid by the CONTRACTOR.

PART 2 – PRODUCTS

2.01 REINFORCEMENT STEEL

A. Reinforcement Steel for all cast-in-place reinforced concrete construction shall conform to the following requirements:
   1. Bar reinforcement shall conform to the requirements of ASTM A615 for Grade 60 Billet Steel Reinforcement or as otherwise shown.
   2. Welded wire fabric reinforcement shall conform to the requirements of ASTM A185 and the details shown; provided, that welded wire fabric with longitudinal wire of W4 size wire and smaller shall be either furnished in flat sheets or in rolls with a core diameter of not less than 10 inches; and provided further, that welded wire fabric with longitudinal wires larger than W4 size shall be furnished in flat sheets only.
   3. Spiral reinforcement shall be cold-drawn steel wire conforming to the requirements of ASTM A82.

B. Accessories:
   1. Accessories shall include all necessary chairs, slab bolsters, concrete blocks, tie wires, dips, supports, spacers, and other devices to position reinforcement during concrete placement. All bar supports shall meet the requirements of the CRSI Manual of Standard Practice including special requirements for supporting epoxy coated reinforcing bars. Wire bar supports shall be CRSI Class 1 for maximum protection with a 1/8-inch minimum thickness of plastic coating, which extends at least ½-inch from the concrete surface. Plastic shall be gray in color.
   2. Concrete blocks (dobies), used to support and position reinforcement steel, shall have the same or higher compressive strength as specified for the concrete in which it is located. Wire ties shall be embedded in concrete block bar supports.

C. Epoxy coating for reinforcing and accessories, where specified or shown, shall conform to ASTM A775.

2.02 MECHANICAL COUPLERS

A. Mechanical couplers shall be provided where shown and where approved by the ENGINEER. The couplers shall develop a tensile strength, which exceeds 125% of the yield strength of the reinforcement bars being spliced at each splice.

B. Where the type of coupler used is composed of more than one component, all components required for a complete splice shall be supplied. This shall apply to all mechanical splices, including those splices intended for future connections.

DRAFT

C. The reinforcement steel and coupler used shall be compatible for obtaining the required strength of the connection. Straight threaded type couplers shall require the use of the next larger size reinforcing bar or shall be used with reinforcing bars with specially forged ends which provide upset threads which do not decrease the basic cross section of the bar.

D. Couplers shall be Lenton Form Saver as manufactured by Erico Products; Dowel Bar Splicer System as manufactured by Richmond Screw Anchor Company; or ENGINEER-approved equal.

2.03 WELDED SPLICES

A. Welded splices shall be provided where shown and where approved by the ENGINEER. All welded splices of reinforcement steel shall develop a tensile strength, which exceeds 125% of the yield strength of the reinforcement bars, which are connected.

B. All materials required to conform the welded splices to the requirements of AWS D1.4 shall be provided.

2.04 EPOXY GROUT

A. Epoxy for grouting reinforcing bars shall be specifically formulated for such application, for the moisture condition, application temperature and orientation of the hole to be filled. Epoxy grout shall meet the requirements of these Specifications.

PART 3 – EXECUTION

3.01 GENERAL

A. All reinforcement steel, welded wire fabric, couplers and other appurtenances shall be fabricated, and placed in accordance with the requirements of the Building Code and the Supplementary Requirements specified herein.

3.02 FABRICATION

A. General:
1. Reinforcement steel shall be accurately formed to the dimensions and shapes shown, and the fabricating details shall be prepared in accordance with ACI 315 and ACI 318, except as modified by the Contract Drawings. Stirrups and tie bars shall be bent around a pin having a diameter not less than 1½-inch for No. 3 bars, 2-inch for No. 4 bars, and 2½-inch for No. 5 bars. Bends for other bars shall be made around a pin having a diameter not less than 6 times the bar diameter, except for bars larger than 1-inch, in which case the bends shall be made around a pin of 8 bar diameters. Bars shall be bent cold.
2. The CONTRACTOR shall fabricate reinforcement bars for structures in accordance with bending diagrams, placing lists, and placing drawings. Said drawings, diagrams and lists shall be prepared by the CONTRACTOR as specified under Section 01 3300 – Submittal Procedures.

B. Fabricating Tolerances: Bars used for concrete reinforcement shall meet the following requirements for fabricating tolerances:
1. Sheared length: +/- 1-inch
2. Depth of truss bars: + 0, - ½-inch
3. Stirrups, ties, and spirals: +/- ½-inch
4. All other bends: +/- 1-inch

DRAFT

3.03 PLACING

A. Reinforcement steel shall be accurately positioned as shown, and shall be supported and wired together to prevent displacement, using annealed iron wire ties or suitable clips at intersections. All reinforcement steel shall be supported by concrete, plastic or metal supports, spacers or metal hangers, which are strong and rigid enough to prevent any displacement of the reinforcement steel. Where concrete is to be placed on the ground, supporting concrete blocks (or dobies) shall be used, in sufficient numbers to support the bars without settlement, but in no case shall such support be continuous. All concrete blocks used to support, reinforcement steel shall be tied to the steel with wire ties, which are embedded in the blocks. For concrete over formwork, the CONTRACTOR shall furnish concrete, metal, plastic or other acceptable bar chairs and spacers.

B. Limitations on the use of bar support materials shall be as follows:
   1. Concrete Dobies: Permitted at all locations except where architectural finish is required.
   2. Wire Bar Supports: Permitted only at slabs over dry areas, interior dry wall surfaces and exterior wall surfaces.
   3. Plastic Bar Supports: Permitted at all locations except on grade.

C. Tie wires shall be bent away from the forms in order to provide the specified concrete coverage.

D. Bars additional to those shown which may be found necessary or desirable by the ENGINEER for the purpose of securing reinforcement in position shall be provided by the CONTRACTOR at its own expense.

E. Unless otherwise specified, reinforcement placing tolerances shall be within the limits specified in Section 7.5 of ACI 318 except where in conflict with the requirements of the Building Code.

F. Bars may be moved as necessary to avoid interference with other reinforcement steel, conduits, or embedded items. If bars are moved more than one bar diameter, or enough to exceed the above tolerances, the resulting arrangement of bars shall be as acceptable to the ENGINEER.

G. Accessories supporting reinforcing bars shall be spaced such that there is no deflection of the accessory from the weight of the supported bars. When used to space the reinforcing bars from wall forms, the forms and bars shall be located so that there is no deflection of the accessory when the forms are tightened into position.

3.04 SPACING OF BARS

A. The clear distance between parallel bars (except in columns and between multiple layers of bars in beams) shall be not less than the nominal diameter of the bars nor less than 1-1/3 times the maximum size of the coarse aggregate, nor less than 1-inch.

B. Where reinforcement in beams or girders is placed in two (2) or more layers, the clear distance between layers shall be not less than one inch.

C. In columns, the clear distance between longitudinal bars shall be not less than 1½ times the bar diameter, nor less than 1½ times the maximum size of the coarse aggregate, nor less than 1½ inches.

D. The clear distance between bars shall also apply to the distance between a contact splice and adjacent splices or bars.

DRAFT

3.05 SPLICING

A. General:
   1. Reinforcement bar splices shall only be used at locations shown. When it is necessary to splice reinforcement at points other than where shown, the character of the splice shall be as acceptable to the ENGINEER.
   2. Unless, otherwise indicated, dowels shall match the size and spacing of the spliced bar.

B. Splices of Reinforcement:
   1. The length of lap for reinforcement bars, unless otherwise shown shall be in accordance with ACI 318-89, Section 12.15.1 for a Class B splice.
   2. Splices in column spiral reinforcement, when necessary, shall be made by welding or by a lap of 1½ turns.

C. Bending or Straightening: Reinforcement shall not be straightened or re-bent in a manner, which will injure the material. Bars with kinks or bends not shown shall not be used. All bars shall be bent cold, unless otherwise permitted by the ENGINEER. No bars partially embedded in concrete shall be field-bent except as shown or specifically permitted by the ENGINEER.

D. Couplers, which are located at a joint face, shall be a type, which can be set either flush or recessed from the face. The couplers shall be sealed during concrete placement to completely eliminate concrete or cement paste from entering. Couplers intended for future connections shall be recessed a minimum of ½-inch from the concrete surface. After the concrete is placed, the coupler shall be plugged with plastic plugs, which have an O-ring seal and the recess filled with sealant to prevent any contact with water or other corrosive materials. Threaded couplers shall be plugged.

E. Unless noted otherwise, mechanical coupler spacing and capacity shall match the spacing and capacity of the reinforcing shown for the adjacent section.

3.06 CLEANING AND PROTECTION

A. Reinforcement steel shall at all times be protected from conditions conducive to corrosion until concrete is placed around it.

B. The surfaces of all reinforcement steel and other metalwork to be in contact with concrete shall be thoroughly cleaned of all dirt, grease, loose scale and rust, grout, mortar, and other foreign substances immediately before the concrete is placed. Where there is delay in depositing concrete, reinforcement shall be reinserted and, if necessary recleaned.

3.07 EMBEDMENT OF DRILLED REINFORCING STEEL DOWELS

A. Hole Preparation:
   1. The hole diameter shall be as recommended by the epoxy manufacturer but shall be no larger than 0.25-inch greater than the diameter of the outer surface of the reinforcing bar deformations.
   2. The depth of the hole shall be as recommended by the epoxy manufacturer to fully develop the bar but shall not be less than 12 bar diameters, unless noted otherwise.
   3. The hole shall be drilled by methods, which do not interfere with the proper bonding of epoxy.
   4. Existing reinforcing steel in the vicinity, of proposed holes shall be located prior to drilling. The location of holes to be drilled shall be adjusted to avoid drilling through or nicking any existing reinforcing bars.
   5. The hole shall be blown clean with clean, dry compressed air to remove all dust and loose particles.

DRAFT

6. Epoxy shall be injected into the hole through a tube placed to the bottom of the hole. The tube shall be withdrawn as epoxy is placed but kept immersed to prevent formation of air pockets. The hole shall be filled to a depth that insures that excess material will be expelled from the hole during dowel placement.
7. Dowels shall be twisted during insertion into the partially filled hole so as to guarantee full wetting of the bar surface with epoxy. The bar shall be inserted slowly enough to avoid developing air pockets.

END OF SECTION

DRAFT

SECTION 03 3000 – CAST-IN-PLACE CONCRETE

PART 1 – GENERAL

1.01 THE REQUIREMENT

A. Furnish all materials for concrete in accordance with the provisions of this Section and form, mix, place, cure, repair, finish, and do all other work as required to produce finished concrete, in accordance with the requirements of the Contract Documents.

B. Soils Report: This work shall conform to the requirements of the latest Geotechnical Evaluation and or Soils Report.

C. The following types of concrete are covered in this Section:
   1. Structural Concrete: Concrete to be used in all cases except where indicated otherwise in the Contract Documents.
   2. Sitework Concrete: Concrete to be used for curbs, gutters, catch basins, sidewalks, pavements, fence and guard post embedment, underground duct bank encasement and all other concrete appurtenant to electrical facilities unless otherwise indicated.
   3. Lean Concrete: Concrete to be used for thrust blocks, pipe trench cut-off blocks and cradles that are detailed on the Drawings as un-reinforced. Lean concrete shall be used as protective cover for dowels intended for future connection.

D. The term "hydraulic structure" used in these specifications means environmental engineering concrete structures for the containment, treatment or transmission of water, wastewater, or other fluids.

E. American Iron and Steel (AIS) requirement applies to this section. All iron and steel products used in this project must be produced in the United States.

1.02 REFERENCE SPECIFICATIONS, CODES AND STANDARDS

A. The work shall conform to the requirements of the applicable Sections of these Specifications Divisions:
   1. 01 – General Requirements
   2. 03 – Concrete

B. Commercial Standards:

ACI 117	Concrete Construction and Materials
ACI 214	Evaluation of Strength Test Results of Concrete
ACI 301	Structural Concrete for Buildings
ACI 306.1	Cold Weather Concreting
ACI 309	Consolidation of Concrete
ACI 315	Details and Detailing of Concrete Reinforcement
ACI 318	Building Code Requirements for Reinforced Concrete
ACI 350R	Environmental Engineering Concrete Structures
ASTM C31	Making and Curing Concrete Test Specimens in the Field
ASTM C33	Concrete Aggregates
ASTM C39	Compressive Strength of Cylindrical Concrete Specimens
ASTM C94	Ready-Mixed Concrete
ASTM C136	Sieve Analysis of Fine and Coarse Aggregates
ASTM C143	Slump of Hydraulic Cement Concrete
ASTM C150	Portland Cement
ASTM C156	Water Retention by Concrete Curing Materials
ASTM C157	Length Change of Hardened Hydraulic Cement Mortar and Concrete

DRAFT

ASTM C192	Making and Curing Concrete Test Specimens in the Laboratory
ASTM C260	Air-Entraining Admixtures for Concrete
ASTM C309	Liquid Membrane-Forming Compounds for Curing Concrete
ASTM C494	Chemical Admixtures for Concrete
ASTM C1077	Laboratories Testing Concrete and Concrete Aggregates for use in Construction & Criteria for Laboratory Evaluation
ASTM D175	Preformed Expansion Joint Fillers for Concrete Paving and Structural Construction (Non-extruding and Resilient Bituminous Types)
ASTM D448	Sizes of Aggregate for Road and Bridge Construction
ASTM D2419	Sand Equivalent Value of Soils and Fine Aggregate
ASTM E119	Fire Tests of Building Construction and Materials

1.03 SYSTEM DESCRIPTIONS

A. Performance Requirements:

1. General:
   a. Except as otherwise specified, provide concrete composed of Portland cement, aggregate, and water so proportioned and mixed as to produce plastic, cohesive workable mixture in accordance with requirements as specified in this Section and suitable to specific conditions of placement.
   b. Due to the corrosivity of the soil and recommendations from the Geotechnical Evaluation, concrete shall be made with cement that provides sulfate resistance and that has a maximum water-cementitious materials ratio and minimum compressive strength set forth in 2006 IBC and ACI 318. See also the Geotechnical Evaluation.
   c. Proportion fine and coarse aggregates in a manner such as not to produce harshness in placing nor honeycombing in structures.
2. Water tightness of Concrete Work: It is intent of this Section to secure for every part of the Work concrete and grout of homogeneous structure, which when hardened will have required strength, water tightness, and durability. As provided in ACI 350.1/350.1R Concrete for Environmental Structures.
   a. It is recognized that some surface hairline cracks and crazing will develop in concrete surfaces.
   b. Construction, contraction, and expansion joints have been positioned in structures as indicated on the Drawings, and curing methods specified, for purpose of reducing number and size of these expected from specified concrete mixes.
   c. Watertight: Repair cracks as described in this Section which develop in walls or slabs and repair cracks which show any signs of leakage until all leakage is stopped.
   d. If patching does not stop the leakage and at the engineer's discretion the installing CONTRACTOR shall pressure inject visible cracks, other than hairline cracks and crazing, in following areas with epoxy as specified in applicable Sections of Division 03 – Concrete.
      1) Floors and walls of water bearing structures.
      2) Walls and overhead slabs of passageways or occupied spaces, outsides of which are exposed to weather or may be washed down and are not specified to receive separate waterproof membrane.
      3) Other Items Not Specified to Receive Separate Waterproof Membrane: Slabs over water channels, wet walls, reservoirs, and other similar surfaces.

DRAFT

3. Workmanship and Methods: Provide concrete work, including detailing of reinforcing, conforming with best standard practices, and as set forth in ACI 318, Manuals, and Recommended Practices.

1.04 SUBMITTALS

A. Submittals shall be furnished in accordance with Section 01 3300 – Submittal Procedures.

B. Product Data: Submit data completely describing products.

C. Information on Heating Equipment to Be Used for Cold Weather Concreting: Submit information on type of equipment to be used for heating materials and/or new concrete in process of curing during excessively cold weather.

D. For conditions that promote rapid drying of freshly placed concrete such as low humidity, high temperature, and wind: Submit corrective measures proposed for use prior to placing concrete.

E. Copies of Tests of Concrete Aggregates: Submit certified copies in triplicate of commercial laboratory tests not more than 90 days old of all samples of concrete aggregates.
   1. Fine Aggregate:
      a. Clay lumps
      b. Reactivity
      c. Shale and chert
      d. Soundness
      e. Color
      f. Decantation
   2. Coarse Aggregate:
      a. Clay lumps and friable particles
      b. Reactivity
      c. Shale and chert
      d. Soundness.
      e. Abrasion loss
      f. Coal and lignite
      g. Materials finer than 200 sieve

F. Sieve Analysis: Submit sieve analysis of fine and coarse aggregates being used in triplicate at least every 3 weeks and at any time there is significant change in grading of materials.

G. Concrete Mixes: Submit full details, including mix design calculations for concrete mixes proposed for use for each class of concrete.
   1. Include information on correction of batching for varying moisture contents of fine aggregate.
   2. Submit source quality test records with mix design submittal.

H. If There is Change in Aggregate Source, Aggregate Quality from Same Source: Submit new set of design mixes covering each class of concrete.

I. If Either Fine or Coarse Aggregate Is Batched from More than One Bin: Submit analyses for each bin, and composite analysis made up from these, using proportions of materials to be used in mix.

J. Cement Mill Tests: Include alkali content, representative of each shipment of cement for verification of compliance with specified requirements.

DRAFT

K. Pozzolan Certificate of Compliance: Identify source of pozzolan and certify compliance with requirements of ASTM C618.

L. Information on mixing equipment.

M. Drying shrinkage test data.

N. Packing and Shipping:
   1. Deliver, store, and handle concrete materials in manner as to prevent damage and inclusion of foreign substances.
   2. Deliver and store packaged materials in original containers until ready for use.
   3. Deliver aggregate to mixing site and handle in such a manner that variations in moisture content will not interfere with steady production of concrete of specified degree of uniformity and slump.

O. Acceptance at Site: Reject material containers or materials showing evidence of water or other damage.

P. Test Batch Test Data:
   1. Submit data for each test cylinder.
   2. Submit data that identifies mix and slump for each test cylinder.

Q. Sequence of Concrete Placing: Submit proposed sequence of placing concrete showing proposed beginning and ending of individual placements.

R. Ties to be used and the tie hole patching procedure and methods and materials.

S. Curing Compound Other than Specified Compound: Submit complete data on proposed compound.

T. Repair of Defective Concrete: Submit mix design for grout or product data if mixed onsite.

U. Acceptance of Method of Concrete Repair: Make no repair until the ENGINEER has accepted method.

1.05 QUALITY ASSURANCE

A. General
   1. Manufacturer Qualifications: A firm experienced in manufacturing ready-mixed concrete products and that complies with ASTM C94/C94M requirements for production facilities and equipment.
   2. Tests for compressive strength and shrinkage of concrete shall be performed as indicated herein. Test for determining slump will be in accordance with the requirements of ASTM C143.
   3. The cost of all laboratory tests on concrete will be borne by the CONTRACTOR. The laboratory will meet or exceed the requirements of ASTM C1077.
   4. Concrete for testing shall be supplied by the CONTRACTOR at no additional cost to the OWNER, and the CONTRACTOR shall assist the ENGINEER in obtaining samples, and disposal and cleanup of excess material.

B. Field Testing of Concrete:
   1. During progress of construction, the CONTRACTOR will have tests made to determine whether the concrete, as being produced, complies with requirements specified.
   2. Tests will be performed in accordance with ASTM C31, ASTM C39, and ASTM C172.
   3. The testing company will make and deliver test cylinders to the laboratory and testing expense will be borne by the CONTRACTOR.

DRAFT

4. Required Number Cylinders:
    a. Not less than 3 cylinder specimens, 6 inches in diameter by 12 inches long, will be tested for each 150 cubic yards of each class of concrete placed and not less than 3 specimens for each half day's placement.
    b. One cylinder will be broken at 7 days and 2 at 28 days.
5. The Testing Agency shall:
    a. Test slump of concrete using slump cone in accordance with the requirements of ASTM C143.
    b. Furnish test equipment.
    c. Do not use the concrete that does not meet specification requirements in regards to slump, but remove such concrete from project site.
    d. Test slump at the beginning of each placement, as often as necessary to keep slump within the specified range, and when requested to do so by the ENGINEER.
    e. Make provisions for and furnish concrete for test specimens, and provide manual assistance to the ENGINEER in preparing said specimens.
    f. Assume responsibility for care of and providing of curing conditions for test specimens in accordance with ASTM C31.

C. Enforcement of Strength Requirement:
1. Concrete is expected to reach higher compressive strength than that which is indicated on the drawings and herein as specified compressive strength f'c.
2. Strength Level of Concrete: Will be considered acceptable if the following conditions are satisfied.
    a. Average of all sets of 3 consecutive test results is greater or equal to specified compressive strength f'c.
    b. No individual strength test (average of 2 cylinders) falls below specified compressive strength f'c by more than 500 pounds per square inch.
    c. Whenever one, or both, of 2 conditions stated above is not satisfied, provide additional curing of affected portion followed by cores taken in accordance with ASTM C42 and ACI 318 and comply with the following requirements.
        1) If additional curing does not bring average of 3 cores taken in affected area to at least specified compressive strength f'c, designate such concrete in affected area as defective.
        2) The ENGINEER may require the CONTRACTOR to strengthen defective concrete by means of additional concrete, all at the CONTRACTOR's expense.

D. Construction Tolerances: The CONTRACTOR shall set and maintain concrete forms and perform finishing operations to ensure that the completed WORK is within tolerances. Surface defects and irregularities are defined as finishes and are to be distinguished from tolerances. Tolerance is the permissible variation from lines, grades, or dimensions indicated on the Drawings. Where tolerances are not stated in the specifications, permissible deviations will be in accordance with ACI 117.

DRAFT

1. The following construction tolerances apply to finished walls and slab unless otherwise indicated:

Item	Tolerance
Variation of the Constructed Linear Outline from the Established Position in Plan	In 10 feet: ¼ in. In 20 feet or more: ½ in.
Variation from the Level or from the Grades Shown	In 10 feet: ¼ in. In 20 feet or more: ½ in.
Variation from the Plumb	In 10 feet: ¼ in. In 20 feet or more: ½ in.
Variation in the Thickness of Slabs and Walls	Minus ¼ in. Plus ½ in.
Variation in the Locations and Sizes of Slabs and Wall Openings	Plus or minus ¼ in.
Variation in Weirs Hydraulic Control Structures	Max deviation in elevation ¼ in. (total)

1.06 PROJECT CONDITIONS

A. Environmental Requirements:
   1. Hot weather concreting:
      a. When Ambient Air Temperature Is Above 90°F: Prior to placing concrete, cool forms and reinforcing steel by water cooling to below 90°F.
      b. Temperature of Concrete Mix at Time of Placement: Keep temperature below 90°F by methods which do not impair quality of concrete.
   2. Cold Weather Concreting:
      a. Concrete placed below ambient air temperature of 45°F and falling or below 40°F: Make provision for heating water.
      b. If materials have been exposed to freezing temperatures to degree that any material is below 35°F: Heat such materials.
      c. Heating Water, Cement, or Aggregate Materials:
         1) Do not heat in excess of 160°F.
      d. Protection of Concrete in Forms:
         1) Protect by means of covering with tarpaulins, or other acceptable covering.
         2) Provide means for circulating warm moist air around forms in manner to maintain temperature of 50°F for at least 5 days.
   3. For conditions that promote rapid drying of freshly placed concrete such as low humidity, high temperature, and wind: Take corrective measures to minimize rapid water loss from concrete.
      a. Furnish and use sufficient number of maximum and minimum self-recording thermometers to adequately measure temperature around concrete.

1.07 SEQUENCING AND SCHEDULING

A. Schedule placing of concrete in such a manner as to complete any single placing operation to construction, contraction, or expansion joint.

DRAFT

PART 2 – PRODUCTS

2.01 CONCRETE MATERIALS

A. Aggregate
   1. General:
      a. Provide concrete aggregates that are sound, uniformly graded, and free of deleterious material in excess of allowable amounts specified.
      b. Grade aggregate in accordance with ASTM D75 and C136.
      c. Provide unit weight of fine and coarse aggregate which produces in place concrete with weight of not less than 140 pounds per cubic foot.

B. Fine Aggregate:
   1. Provide fine aggregate for concrete or mortar consisting of clean, natural sand or of sand prepared from crushed stone or crushed gravel.
   2. Do not provide aggregate having deleterious substances in excess of the following percentages by weight of contaminating substances. In no case shall total exceed percent listed.

Item	Test Method	Percent
Removed by Decantation (dirt, silt, etc.)	ASTM C117	3
Shale or Chert	ASTM C295	1
Clay Lumps	ASTM C142	1

   1. Except as otherwise specified, grade fine aggregate from coarse to fine in accordance with requirements of ASTM C33.

C. Coarse Aggregate:
   1. General: Provide coarse aggregate consisting of gravel or crushed stone made up of clean, hard, durable particles free from calcareous coatings, organic matter, or other foreign substances.
   2. Weight: Not exceeding 15 percent, for thin or elongated pieces having length greater than 5 times average thickness.
   3. Deleterious Materials: Not in excess of following percentages by weight, and in no case having total of all deleterious substances exceeding 2 percent.

Item	Test Method	Percent
Shale or Chert	ASTM C295	1
Coal and Lignite	ASTM C123	1/4
Clay Lumps and Friable Particles	ASTM C142	1/4
Materials Finer than Number 200 Sieve	ASTM C117	1/2*

NOTE: (*) Except when material finer than Number 200 sieve consists of crusher dust, maximum amount shall be 1 percent>

   4. Grading:
      a. Aggregate: As specified in ASTM C33, Size Number 57, except as otherwise specified or authorized in writing by the ENGINEER.
      b. Aggregate for Concrete for Encasement of Electrical Conduits:
         1) Graded as specified in ASTM C33, Size Number 8.
         2) Provide concrete utilizing this aggregate equal to 2500 psi concrete in all other respects, and is designated as Class CE.

D. Portland Cement:
   1. General: Conform to specifications and tests for ASTM C150, except as specified otherwise.
   2. Low Alkali Portland: Have total alkali containing not more than 0.60 percent, unless specified otherwise, and or where soil conditions permit such use.

DRAFT

3. Exposed Concrete in Any Individual Structure: Use only one brand of Portland cement.
4. Cement for Finishes: Provide cement from the same source and of same type as concrete to be finished.

E. Admixtures:
1. General:
   a. Do not use admixtures of any type, except as specified, unless written authorization has been obtained from the ENGINEER.
   b. Compatible with concrete and other admixtures.
   c. Do not use admixtures containing chlorides calculated as chloride ion in excess of 0.5 percent by weight.
   d. Use in accordance with manufacturer's recommendations and add each admixture to concrete mix separately.
2. Water Reducing Admixture:
   a. May be used at the CONTRACTOR's option.
   b. Conform to ASTM C494, Type A or Type D.
   c. Not contain air entraining agents.
   d. Liquid form before adding to the concrete mix.
   e. No decrease in cement is permitted as result of use of water reducing admixture.
3. Superplasticizers or Flyash: Are not to be used without acceptance by ENGINEER.

F. Water:
1. Water for Concrete, Washing Aggregate, and Curing Concrete: Clean and free from oil and deleterious amounts of alkali, acid, organic matter, or other substances.
2. Chlorides and Sulfate Ions:
   a. Water for Conventional Reinforced Concrete: Use water not containing more than 1,000 (mg/L) of chlorides calculated as chloride ion, no more than 1,000 (mg/L) of sulfates calculated as sulfate ion.
   b. Water for Pre-stressed or Post-tensioned Concrete: Use water not containing more than 650 (mg/L) milligrams per liter of chlorides calculated as chloride ion, nor more than 800 (mg/l) of sulfates calculated as sulfate ion.

G. Conduit Encasement Coloring Agent:
1. Color: Red color concrete used for encasement of electrical ducts, conduits, and similar type items.
2. Manufacturers: One of the following or ENGINEER-approved equal.
   a. Frank D, Davis Company, Red Oxide Number 117.
   b. I. Reiss Company, Inc., equivalent product.
3. Conduit Encasement Concrete: Mix into each cubic yard of concrete 10 pounds of coloring agent.

H. Keyway Material: Lumber.

I. All curing compounds shall be white pigmented and resin based conforming to ASTM C309, Type D. Sodium silicate compounds shall not be allowed. Concrete curing compound shall be Kurez by Euclid Chemical Company; MB-429 as manufactured by Mater Builders; L&M Cure R; or ENGINEER-approved equal. Water based resin curing compounds shall be used only where local air quality regulations prohibit the use of a solvent based compound. Water based curing compounds shall be Aqua-Cure by Euclid Chemical Company; Masterkure-W by Master Builders; L&M Cure R-2; or ENGINEER-approved equal.

J. Manufacturers: One of the following or ENGINEER-approved equal.
1. WR Meadows

DRAFT

2. CGM Incorporated

K. Plastic Membrane Curing: Use polyethylene film.
1. Color: White
2. Thickness: Minimum 6 mils.
3. Loss of Moisture: Not to exceed 0.055 grams per square centimeter of surface when tested in accordance with ASTM C156.

2.02 CONCRETE DESIGN REQUIREMENTS

A. General: Concrete shall be composed of cement, admixtures, aggregates, and water of the qualities indicated. The exact proportions in which these materials are to be used for different parts of the work will be determined during the trial batch. In general, the mix shall be designed to produce a concrete capable of being deposited so as to obtain maximum density and minimum shrinkage, and, where deposited in forms, to have good consolidation properties and maximum smoothness of surface. The aggregate gradations shall be formulated to provide fresh concrete that will not promote rock pockets around reinforcing steel or embedded items. The proportions shall be changed whenever necessary or desirable to meet the required results at no additional cost to the OWNER. All changes shall be subject to review by the ENGINEER.

B. Fine Aggregate Composition: In mix designs for structural concrete, the percentage of fine aggregate in total aggregate by weight, shall be as indicated in the following table.

Fineness Modulus	Maximum Percent
2.7 or less	41
2.7 to 2.8	42
2.8 to 2.9	43
2.9 to 3.0	44

For other concrete, the maximum percentage of fine aggregate of total aggregate, by weight, shall not exceed 50.

C. Water-Cement Ratio and Compressive Strength: Concrete shall have the following minimum properties unless noted otherwise on the plans:

Type of Work	Min 28-Day Compr. Strength (psi)	Max Size Aggregate (in)	Minimum Cement per cubic yard (lbs)	Non Air Max W/C Ratio (by weight)
Structural Concrete	5,000	1	564	*
	4,500	1	564	0.38
	4,000	1	564	0.45
Pea Gravel Mix	4,000	3/8	752	0.40
Sitework Concrete	3,000	1	470	0.50
Lean Concrete	2,000	1	376	0.60

*__NOTES__: W/C ratio shall be based upon the Geotechnical Evaluation and or Soils Report - Refer to the Evaluation for W/C, and other site dependent concrete recommendations. See the Structural Plan notes for strength application and location.

The CONTRACTOR is cautioned that the limiting parameters above are not a mix design. Additional cement or water reducing agent may be required to achieve workability required by the CONTRACTOR's construction methods and aggregates. The CONTRACTOR is responsible for providing concrete with the required workability.

For strengths above 4500 psi (non-air) concrete proportions shall be established from either existing field data or trial mixes. This information shall be submitted by the ready mix company through the CONTRACTOR for review by the ENGINEER before it will be

DRAFT

approved. The average compressive strength from the test record must equal or exceed the ACI 318 requirements for average compressive strength.

D. Adjustments to Mix Design: The mixes shall be changed whenever such change is necessary or desirable to secure the required strength, density, workability, and surface finish, and the CONTRACTOR shall be entitled to no additional compensation because of such changes.

2.03 CONSISTENCY

A. The quantity of water in a batch of concrete shall be just sufficient, with a normal mixing period, to produce a concrete which can be worked properly into place without segregation and which can be compacted by vibratory methods to give the desired density, impermeability, and smoothness of surface. The quantity of water shall be changed as necessary, with variations in the nature or moisture content of the aggregates, to maintain uniform production of a desired consistency. The consistency of the concrete in successive batches shall be determined by slump tests in accordance with ASTM C143. The slumps shall be as follows:

Part of Work	**Slump (in)**
All concrete, unless indicated otherwise	3 inches plus or minus 1 inch
With high range water reducer added	7 inches plus or minus 2 inches
Pea gravel mix	7 inches plus or minus 2 inches
Ductbanks	5 inches plus or minus 1 inch

2.04 MIXES

A. Measurements of Materials:
1. Measure materials by weighing, except as otherwise specified or where other methods are specifically authorized in writing by the ENGINEER.
2. Furnish apparatus for weighing aggregates and cement that is suitably designed and constructed for this purpose.
3. Accuracy of Weighing Devices: Furnish devices that have capability of providing successive quantities of individual material that can be measured to within one percent of desired amount of that material.
4. Measuring or Weighing Devices: Subject to review by the ENGINEER, and bear valid seal of the Sealer of Weights and Measures having jurisdiction.
5. Weighing Cement:
   a. Weigh cement separately.
   b. Cement in Unbroken Standard Packages (Sacks): Need not be weighed.
   c. Bulk Cement and Fractional Packages: Weigh such cement.
6. Mixing Water: Measured by volume or by weight.

B. Concrete Proportions and Consistency:
1. Concrete Consistency and Composition:
   a. Provide concrete that can be worked readily into corners and angles of forms and around reinforcement without excessive vibration and without permitting materials to segregate or free water to collect on surface.
   b. Prevent unnecessary or haphazard changes in consistency of concrete.
2. Ratio of Coarse Aggregate to Fine Aggregate: Not less than 1.0 nor more than 2.0 for all concrete Classes, with exception of Class CE.

DRAFT

3. Aggregate:
    a. Obtain aggregate from source which is capable of providing uniform quality, moisture content, and grading during any single day's operation.
4. Concrete Mix Water to Cement Ratio, Cement Content, and Slump Range: Conform to values specified in Section 2.02.C and per the Geotechnical Evaluation.
5. Concrete Batch Weighs: Control and adjust so as to secure maximum yield, and at all times maintain proportions of concrete mix within specified limits.
6. Mixture Modification: If required, by the ENGINEER, modify mixture within limits set forth in this Section.

C. Concrete Mixes:
1. Proportioning of Concrete Mix: Proportion mixes on required average on compressive strength f'c as defined in the contract documents.
2. Mixes:
    a. Adjusting of Water: After acceptance, do not change mixes without acceptance by ENGINEER, except that at all times adjust batching of water to compensate for free moisture content of fine aggregate.
    b. Total Water Content of Each Concrete Class: Not exceed those specified in Section 2.02.C, unless noted otherwise or specified in the Geotechnical Evaluation.
    c. Checking Moisture Content of Fine Aggregate: Furnish satisfactory means at batching plant for checking moisture content of fine aggregate.
3. Change in Mixes: Undertake new trial batch and test program as specified in this Section.

D. Hand Mixed Concrete:
1. Hand mix concrete only when acceptable to the ENGINEER.
2. Prepare hand mixed concrete on watertight, level platform in batches not to exceed 1/3 cubic yard each.
3. Aggregate:
    a. First spread required amount of coarse aggregate on platform in an even and uniform layer, and then over such aggregate spread proper proportion of fine aggregate.
    b. Combined Depth of Both Such Layers: Not be greater than one foot.
4. Cement:
    a. First evenly spread required quantity of cement over fine aggregate.
    b. Then turn entire batch with shovels at least twice before adding water.
5. Water:
    a. Then uniformly sprinkle or spray proper amount of water over batched materials.
    b. Then turn with shovels not less than three times before being removing from platform.

2.05 SOURCE QUALITY CONTROL

A. Tests:
1. Concrete Mixes:
    a. After concrete mixes have been accepted by ENGINEER, have trial batches of the accepted mix designs prepared by testing laboratory acceptable to the ENGINEER.
    b. Prepare trial batches by using specified cement and aggregates proposed to be use for the work.
    c. Trial Batches: Provide batches of sufficient quantity to determine slump, workability, consistency, and finishing characteristics, and to provide sufficient test cylinders.

DRAFT

d. Test Cylinders: Provide cylinders having six-inch diameter by 12-inch length and that are prepared in accordance with ASTM C31 for tests specified in this Section.
e. Determine slump in accordance with ASTM C143.
f. Test Cylinders from Trial Batch:
    1) Test 8 cylinders for compressive strength in accordance with ASTM C39.
        a) Test 4 cylinders at 7 days and 4 at 28 days.
        b) Establish ratio between 7-day and 28-day strength for mix. Seven-day strength may be taken as satisfactory indication of 28-day strength provided effects on concrete of temperature and humidity between 7-day and 28-day are considered.
    2) Average Compressive Strength of 4 Test Cylinders Tested at 28 Days: Equal to or greater than required average compressive strength f'c on which concrete mix design is based.
g. Drying Shrinkage:
    1) Prepare 5 drying shrinkage specimens in accordance with ASTM C157, except as modified herein.
    2) Remove drying shrinkage specimens from molds at age of 23 hours plus or minus 1 hour after trial batching, then immediately place them in water at 73°F plus or minus 3 degrees for at least 30 minutes and then measure specimens within 30 minutes thereafter to determine original length. Then submerge specimens in saturated lime water at 73°F plus or minus three degrees for moist curing.
    3) Make measurements to determine expansion expressed as percentage of original length at age 7 days. Use length at age 7 days as base length for drying shrinking calculations.
    4) Immediately store specimens in humidity controlled room maintained at 73°F plus or minus 3 degrees and 50 percent plus or minus 4 relative humidity for remainder of the test.
    5) Make and report measurements to determine shrinkage expressed as percentage of base length separately for 7, 14, 21, and 28 days of drying after 7 days of moist curing.
    6) Drying Shrinkage Deformation:
        a) Measure drying shrinkage deformation of each specimen as difference between base length and length after drying at each test age.
        b) Measure average drying shrinkage deformation of specimens to nearest 0.0001 inch at each test age.
        c) If drying shrinkage of any specimen departs from average of test age by more than 0.0004 inch, disregard results obtained from that specimen and test another specimen.
        d) Shrinkage of trial batch concrete at 28 days drying age shall not exceed 0.045 percent maximum.
h. If trial batch tests do not meet specified requirements for slump, strength, workability, consistency, drying shrinkage, and finishing, change concrete mix design proportions and, if necessary, source of aggregate. Make additional trial batches and tests until an acceptable trial batch is produced that meets requirements of this Section.
i. Perform test batches and tests required to establish trial batches and acceptability of materials without change in Contract Price.
j. Do not place concrete until the concrete mix design and trial batch have been accepted by ENGINEER.

DRAFT

2. Required Average Compressive Strength:
   a. Determine required average compressive strength (f'c) for selection of concrete proportions for mix design, for each class of concrete, using calculated standard deviation and its corresponding specified compressive strength f'c, in accordance with ACI 318, Part 3, Chapter 5.
   b. When test records of at least 30 consecutive tests that span period of not less than 45 calendar days are available, establish standard deviation as described in ACI 318, Part 3, Chapter 5 and as modified as follows herein.
   c. Provide test records from which to calculate standard deviation that represent materials, quality control procedures, and conditions similar to materials, quality control procedures, and conditions expected to apply in preparation of concrete for the Work.
   d. Provide changes in materials and proportions within test records that are more restricted than those for the Work.
   e. Specified Compressive Strength (f'c) of Concrete Used in Test Records: Within 1,000 pounds per square inch of that specified for the Work.
   f. When lacking adequate test records for calculation of standard deviation meeting requirements, determine required average compressive strength f'c from the following table.

Specified Compressive Strength f'c (pounds per square inch)	Required Average Compressive Strength f'c (pounds per square inch)
Less than 3,000	f'c + 1,000
3,000 to 5,000	f'c + 1,200
Over 5,000	f'c + 1,400

3. Pozzolan:
   a. Sampling and Testing:
      1) Sample and test pozzolan in accordance with ASTM C311.
      2) In Computing Water to Cement Ratio and Cement Content per Cubic Yard of Concrete: Consider cement weight to be weight of Portland cement plus 100 percent of weight of fly ash.
4. Aggregate:
   a. Testing of concrete aggregate is at CONTRACTOR's expense.
   b. Sieves:
      1) Use sieves with square openings for testing grading or aggregates.
      2) Sieve Analysis: If sieve analysis indicates significant change in materials, the ENGINEER may require that new mix design be submitted and accepted before further placing of concrete.
   c. Sample aggregate in accordance with ASTM D75 and C136.
   d. Fine Aggregate:
      1) Provide fine aggregate not containing strong alkali nor organic matter which gives color darker than standard color when tested in accordance with ASTM C40.
      2) Provide aggregate having soundness complying with requirements of ASTM C33 when tested in accordance with ASTM C88.
      3) Provide aggregate complying with reactivity requirements of ASTM C33 when tested in accordance with ASTM C289.
   e. Coarse Aggregate:
      1) Soundness when tested in accordance with ASTM C88: Have loss not greater than 10 percent when tested with sodium sulfate.

DRAFT

2) Abrasion Loss: Not exceed 45 percent after 500 revolutions when tested in accordance with ASTM C131.
3) Reactivity: Not exceed limits specified in Appendix of ASTM C33 when tested in accordance with ASTM C289.

f. Portland Cement:
1) Determination Alkali Content: Determine by method set forth in ASTM C114.

PART 3 – EXECUTION

3.01 PROPORTIONING AND MIXING

A. Proportioning: Proportioning of the mix shall conform to the requirements of Chapter 3 "Proportioning" of ACI 301.

B. Mixing: Mixing shall conform to the requirements of Chapter 7 of said ACI 301 Specifications.

C. Slump: Slumps shall be as indicated herein.

D. Retempering: Retempering of concrete or mortar which has partially hardened shall not be permitted.

3.02 PREPARATION OF SURFACES FOR CONCRETING

A. General: Earth surfaces shall be thoroughly wetted by sprinkling prior to the placing of any concrete, and these surfaces shall be kept moist by frequent sprinkling up to the time of placing concrete thereon. The surface shall be free from standing water, mud, and debris at the time of placing concrete.

B. Joints in Concrete: Concrete surfaces upon or against which concrete is to be placed, where the placement of the concrete has been stopped or interrupted so that, as determined by the ENGINEER, the new concrete cannot be incorporated integrally with that previously placed, are defined as construction joints. The surfaces of horizontal joints shall be given a compacted, roughened surface for good bonding. Except where the Drawings call for joint surfaces to be coated, the joint surfaces shall be cleaned of all laitance, loose or defective concrete, foreign material, and be roughened to a minimum ¼-inch amplitude. Such cleaning and roughening shall be accomplished by hydroblasting or sandblasting (exposing aggregate) followed by thorough washing. All pools of water shall be removed from the surface of construction joints before the new concrete is placed.

C. After the surfaces have been prepared, all approximately horizontal construction joints shall be covered with a 6-inch lift of a pea gravel mix. The mix shall be placed and spread uniformly. Wall concrete shall follow immediately and shall be placed upon the fresh pea gravel mix.

D. Placing Interruptions: When placing of concrete is to be interrupted long enough for the concrete to take a set, the working face shall be given a shape by the use of forms or other means, that will secure proper union with subsequent work; provided that construction joints shall be made only where acceptable to the ENGINEER.

DRAFT

E. Embedded Items: No concrete shall be placed until all formwork, installation of parts to be embedded, reinforcement steel, and preparation of surfaces involved in the placing have been completed and accepted by the ENGINEER at least 4 hours before placement of concrete. All surfaces of forms and embedded items that have become encrusted with dried grout from previous work shall be cleaned before the surrounding or adjacent concrete is placed.

F. All inserts or other embedded items shall conform to the requirements herein.

G. All reinforcement, anchor bolts, sleeves, inserts, and similar items shall be set and secured in the forms at locations indicated on the Drawings or shown by shop drawings and shall be acceptable to the ENGINEER before any concrete is placed. Accuracy of placement is the responsibility of the CONTRACTOR.

H. Casting New Concrete Against Old: Where concrete is to be cast against old concrete (any concrete which is greater than 180 days of age), the surface of the old concrete shall be thoroughly cleaned and roughened by hydro-blasting or sandblasting (exposing aggregate). The joint surface shall be coated with an epoxy bonding agent unless indicated otherwise by the ENGINEER.

I. No concrete shall be placed in any structure until all water entering the space to be filled with concrete has been properly cut off or has been diverted by pipes, or other means, and carried out of the forms, clear of the WORK. No concrete shall be deposited underwater nor shall the CONTRACTOR allow still water to rise on any concrete until the concrete has attained its initial set. Water shall not be permitted to flow over the surface of any concrete in such manner and at such velocity as will injure the surface finish of the concrete. Pumping or other necessary dewatering operations for removing ground water, if required, shall be subject to the review of the ENGINEER.

J. Corrosion Protection: Pipe, conduit, dowels, and other ferrous items required to be embedded in concrete construction shall be so positioned and supported prior to placement of concrete that there will be a minimum of 2 inches clearance between said items and any part of the concrete reinforcement. Securing such items in position by wiring or welding them to the reinforcement will not be permitted.

K. Openings for pipes, inserts for pipe hangers and brackets, and anchors shall, where practicable, be provided during the placing of concrete.

L. Anchor bolts shall be accurately set and shall be maintained in position by templates while being embedded in concrete.

M. Cleaning: The surfaces of all metalwork to be in contact with concrete shall be thoroughly cleaned of all dirt, grease, loose scale and rust, grout, mortar, and other foreign substances immediately before the concrete is placed.

3.03 HANDLING, TRANSPORTING, AND PLACING

A. General: Placing of concrete shall conform to the applicable requirements of Chapter 8 of ACI 301 and the requirements of this Section. No aluminum materials shall be used in conveying any concrete.

B. Non-Conforming Work or Materials: Concrete which during or before placing is found not to conform to the requirements indicated herein shall be rejected and immediately removed from the work. Concrete which is not placed in accordance with these Specifications, or which is of inferior quality, shall be removed and replaced by the CONTRACTOR at no additional cost to the OWNER.

C. Unauthorized Placement: No concrete shall be placed except in the presence of a duly authorized representative of the ENGINEER. The CONTRACTOR shall notify the ENGINEER in writing at least 24 hours in advance of placement of any concrete.

D. Placement in Wall and Column Forms: Concrete shall not be dropped through reinforcement steel or into any deep form, nor shall concrete be placed in any form in such a manner as to leave accumulation of mortar on the form surfaces above the placed concrete. In such cases, means such as hoppers and, if necessary, vertical ducts of canvas, rubber, or metal shall be used for placing concrete in the forms in a manner that it may reach the place of final deposit without separation. In no case shall the free fall of concrete exceed 4 feet in walls and 8 feet in columns below the ends of ducts, chutes, or buggies. Concrete shall be uniformly distributed during the process of depositing and in no case after depositing shall any portion be displaced in the forms more than 6 feet in horizontal direction. Concrete in wall forms shall be deposited in uniform horizontal layers not deeper than 2 feet; and care shall be taken to avoid inclined layers or inclined construction joints except where such are required for sloping members. Each layer shall be placed while the previous layer is still soft. The rate of placing concrete in wall forms shall not exceed 5 feet of vertical rise per hour. Sufficient illumination shall be provided in the interior of all forms so that the concrete at the places of deposit is visible from the deck or runway.

E. Casting New Concrete Against Old: Epoxy adhesive bonding agent shall be applied to the old surfaces according to the manufacturer's written recommendations. This provision shall not apply to joints where hydrotite waterstop is provided.

F. Conveyor Belts and Chutes: All ends of chutes, hopper gates, and all other points of concrete discharge throughout the CONTRACTOR'S conveying, hoisting, and placing system shall be designed and arranged so that concrete passing from them will not fall separated into whatever receptacle immediately receives it. Conveyor belts, if used, shall be of a type acceptable to the ENGINEER. Chutes longer than 50 feet will not be permitted. Minimum slopes of chutes shall be such that concrete of the indicated consistency will readily flow in them. If a conveyor belt is used, it shall be wiped clean by a device operated in such a manner that none of the mortar adhering to the belt will be wasted. All conveyor belts and chutes shall be covered.

G. Placement in Slabs: Concrete placed in sloping slabs shall proceed uniformly from the bottom of the slab to the top, for the full width of the placement. As the work progresses, the concrete shall be vibrated and carefully worked around the slab reinforcement, and the surface of the slab shall be screeded in an up-slope direction.

H. Temperature of Concrete: The temperature of concrete when it is being placed shall be not more than 90°F nor less than 55°F for sections less than 12 inches thick nor less than 50°For all other sections. Concrete ingredients shall not be heated to a temperature higher than that necessary to keep the temperature of the mixed concrete, as placed, from falling below the minimum temperature. When the temperature of the concrete is 85°F or above, the time between the introduction of the cement to the aggregates and discharge shall not exceed 45 minutes. If concrete is placed when the weather is such that the temperature of the concrete would exceed 90°F, the CONTRACTOR shall employ effective means, such as pre-cooling of aggregates and mixing water using ice or placing at night, as necessary to maintain the temperature of the concrete, as it is placed, below 90°F. The CONTRACTOR shall not be entitled to any additional compensation on account of the foregoing requirements.

I. Cold Weather Placement:
   1. Placement of concrete shall conform to ACI 306.1 - Cold Weather Concreting, and the following.
   2. Remove all snow, ice, and frost from the surfaces, including reinforcement, against which concrete is to be placed. Before beginning concrete placement, thaw the subgrade to a minimum depth of 6 inches. All reinforcement and embedded items shall be warmed to above 32°F prior to concrete placement.

DRAFT

3. Maintain the concrete temperature above 50°F for at least 5 days after placement.

3.04 PUMPING OF CONCRETE

A. General: If the pumped concrete does not produce satisfactory end results, the CONTRACTOR shall discontinue the pumping operation and proceed with the placing of concrete using conventional methods.

B. Pumping Equipment: The pumping equipment shall have two (2) cylinders and be designed to operate with one cylinder in case the other one is not functioning. In lieu of this requirement, the CONTRACTOR may have a standby pump on the site during pumping.

C. The minimum diameter of the hose conduits shall be in accordance with ACI 304.2R.

D. Pumping equipment and hose conduits that are not functioning properly shall be replaced.

E. Aluminum conduits for conveying the concrete shall not be permitted.

F. Field Control: Concrete samples for slump and test cylinders will be taken at the placement end of the hose.

3.05 ORDER OF PLACING CONCRETE

A. The order of placing concrete in all parts of the WORK shall be acceptable to the ENGINEER. In order to minimize the effects of shrinkage, the concrete shall be placed in units as bounded by construction joints at the indicated locations. The placing of units shall be done by placing alternate units in a manner such that each unit placed shall have cured at least 5 days for hydraulic structures and 2 days for all other structures before the contiguous unit or units are placed, except that the corner sections of vertical walls shall not be placed until the two (2) adjacent wall panels have cured at least 10 days for hydraulic structures and 4 days for all other structures.

B. The surface of the concrete shall be level whenever a run of concrete is stopped. To insure a level, straight joint on the exposed surface of walls, a wood strip at least ¾-inch thick shall be tacked to the forms on these surfaces. The concrete shall be carried about ½-inch above the underside of the strip. About one hour after the concrete is placed, the strip shall be removed and any irregularities in the edge formed by the strip shall be leveled with a trowel and all laitance shall be removed.

3.06 TAMPING AND VIBRATING

A. As concrete is placed in the forms or in excavations, it shall be thoroughly settled and compacted, throughout the entire depth of the layer which is being consolidated, into a dense, homogeneous mass, filling all corners and angles, thoroughly embedding the reinforcement, eliminating rock pockets, and bringing only a slight excess of water to the exposed surface of concrete. Vibrators shall be Group 3 per ACI 309, high speed power vibrators (8,000 to 12,000 rpm) of an immersion type in sufficient number and with at least one standby unit as required. Group 2 vibrators may be used only at specific locations when accepted by the ENGINEER.

B. Care shall be used in placing concrete around hydrotite waterstops. The concrete shall be carefully worked by rodding and vibrating to make sure that all air and rock pockets have been eliminated. Where flat-strip type hydrotite waterstops are placed horizontally, the concrete shall be worked under the hydrotite waterstops by hand, making sure that all air and rock pockets have been eliminated. Concrete surrounding the hydrotite waterstops shall be given additional vibration over and above that used for adjacent concrete placement to assure complete embedment of the hydrotite waterstops in the concrete.

DRAFT

C. Concrete in walls shall be internally vibrated and at the same time rammed, stirred or worked with suitable appliances, tamping bars, shovels, or forked tools until it completely fills the forms or excavations and closes snugly against all surfaces. Subsequent layers of concrete shall not be placed until the layers previously placed have been worked thoroughly. Vibrators shall be provided in sufficient numbers, with standby units as required, to accomplish the required results within 15 minutes after concrete of the prescribed consistency is placed in the forms. The vibrating head shall not contact the surfaces of the forms. Care shall be taken not to vibrate concrete excessively or to work it in any manner that causes segregation of its constituents.

3.07 FINISHING CONCRETE SURFACES

A. General: Surfaces shall be free from fins, bulges, ridges, offsets, honeycombing or roughness of any kind, and shall present a finished, smooth, continuous hard surface. Allowable deviations from plumb or level and from the alignment, profiles and dimensions shown are defined as tolerances and are indicated in Part 1, above. These tolerances are to be distinguished from irregularities in finish as described herein. Aluminum finishing tools shall not be used.

B. Formed Surfaces: No treatment is required after form removal except for curing, repair of defective concrete, and treatment of surface defects. Where architectural finish is required, it shall be as indicated. Surface holes larger than ½-inch in diameter or deeper than ¼-inch are defined as surface defects in basins and exposed walls and shall be patched per Section 3.11 Treatment of Surface Defects.

C. Unformed Surfaces: After proper and adequate vibration and tamping, all unformed top surfaces of slabs, floors, walls, and curbs shall be brought to a uniform surface with suitable tools. Immediately after the concrete has been screeded, it shall be treated with a liquid evaporation retardant. The retardant shall be used again after each work operation as necessary to prevent drying shrinkage cracks. The classes of finish specified for unformed concrete surfaces are designated and defined as follows:
   1. Finish U1 - Sufficient leveling and screeding to produce an even, uniform surface with surface irregularities not to exceed 3/8-inch. No further special finish is required.
   2. Finish U2 - After sufficient stiffening of the screeded concrete, surfaces shall be float finished with wood or metal floats or with a finishing machine using float blades. Excessive floating of surfaces while the concrete is plastic and dusting of dry cement and sand on the concrete surface to absorb excess moisture will not be permitted. Floating shall be the minimum necessary to produce a surface that is free from screed marks and is uniform in texture. Surface irregularities shall not exceed ¼-inch. Joints and edges shall be tooled where indicated or as determined by the ENGINEER.
   3. Finish U3 - After the finish U2 surface has hardened sufficiently to prevent excess of fine material from being drawn to the surface, steel troweling shall be performed with firm pressure such as will flatten the sandy texture of the floated surface and produce a dense, uniform surface free from blemishes, ripples, and trowel marks. The finish shall be smooth and free of all irregularities.
   4. Finish U4 - Trowel the Finish U3 surface to remove local depressions or high points. In addition, the surface shall be given a light hairbroom finish with brooming perpendicular to drainage unless otherwise indicated. The resulting surface shall be rough enough to provide a nonskid finish.

DRAFT

D. Unformed surfaces shall be finished according to the following schedule:

UNFORMED SURFACE FINISH SCHEDULE

Area	Finish
Grade slabs and foundations to be covered with concrete or fill material	U1
Water bearing slabs with slopes 10 percent and less	U3
Water bearing slabs with slopes greater than 10 percent	U4
Slabs not water bearing	U4
Top surface of walls	U3

3.08 CURING

A. General: All concrete shall be cured for not less than 7 days after placing, in accordance with the methods indicated below for the different parts of the WORK.

Surface to be Cured or Damp proofed	Method
Wall sections with forms removed	1
Construction joints between footings and walls, and between floor slab and columns	2
Encasement concrete and thrust blocks	1 or 2
All concrete surfaces not specifically indicated in this paragraph	1
Floor slabs on grade in hydraulic structures	1 or 2
Slabs not on grade	1 or 2

B. Method 1: The surface shall be sprayed with a liquid white pigmented curing compound.
1. It shall be applied in accordance with the manufacturer's printed instructions at a maximum coverage rate of 200 square feet per gallon and in such a manner as to cover the surface with a uniform film which will seal thoroughly.
2. Where the curing compound method is used, care shall be exercised to avoid damage to the seal during the 7-day curing period. If the seal is damaged or broken before the expiration of the curing period, the break shall be repaired immediately by the application of additional curing compound over the damaged portion.
3. Wherever curing compound has been applied by mistake to surfaces against which concrete subsequently is to be placed and to which it is to adhere, compound shall be entirely removed by wet sandblasting just prior to the placing of new concrete.
4. Curing compound shall be applied as soon as the concrete has hardened enough to prevent marring on unformed surfaces and within 2 hours after removal of forms. Repairs to formed surfaces shall be made within the 2-hour period; provided, however, that any such repairs which cannot be made within the said 2-hour period shall be delayed until after the curing compound has been applied. When repairs are to be made to an area on which curing compound has been applied, the area involved shall first be wet-sandblasted to remove the curing compound.
5. At all locations where concrete is placed adjacent to a panel which has been coated with curing compound, the panel shall have curing compound.

C. Method 2: This method applies to both walls and slabs.
1. The concrete shall be kept continuously wet by the application of water for a minimum period of at least seven (7) consecutive days beginning immediately after the concrete has reached final set or forms have been removed.
2. Until the concrete surface is covered with the curing medium, the entire surface shall be kept damp by applying water using nozzles that atomize the flow so that the surface is not marred or washed.
3. Curing blankets shall be used as a curing medium to retain the moisture during the curing period. The curing medium shall be weighted or otherwise held substantially in

contact with the concrete surface to prevent being dislodged by wind or any other causes. All edges shall be continuously held in place.

4. The curing blankets and concrete shall be kept continuously wet by the use of sprinklers or other means both during and after normal working hours.
5. Immediately after the application of water has terminated at the end of the curing period, the curing medium shall be removed, any dry spots shall be rewetted and curing compound shall be immediately applied in accordance with Method 4 above.
6. The CONTRACTOR shall dispose of excess water from the curing operation to avoid damage to the work.

3.09 PROTECTION

A. The CONTRACTOR shall protect all concrete against injury until final acceptance at the CONTRACTOR's own expense and at no additional cost to the OWNER

B. Fresh concrete shall be protected from damage due to rain, hail, sleet, or snow. The CONTRACTOR shall provide such protection while the concrete is still plastic and whenever precipitation is imminent or occurring.

3.10 CURING IN COLD WEATHER

A. The CONTRACTOR shall protect all concrete against injury from cold weather until final acceptance at the CONTRACTOR's own expense and at no additional cost to the OWNER.

B. Concrete cured by an application of curing compound will require no additional protection from freezing if the protection at 50°F for 72 hours is obtained by means of approved insulation in contact with the forms or concrete surfaces; otherwise the concrete shall be protected against freezing temperatures for 72 hours immediately following 5 days protection at 50°F. Concrete cured by water shall be protected against freezing temperatures for 3 days immediately following the 72 hours of protection at 50°F.

C. Discontinuance of protection against freezing temperatures shall be such that the drop in temperature of any portion of the concrete will be gradual and will not exceed 40°F in 24 hours. In the spring, when the mean daily temperature rises above 40°F for more than three (3) successive days, the specified 72-hour protection at a temperature not lower than 50°F may be discontinued for as long as the mean daily temperature remains above 40°F; provided, that the concrete shall be protected against freezing temperatures for not less than 48 hours after placement.

D. Where artificial heat is employed, special care shall be taken to prevent the concrete from drying. Use of un-vented heaters will be permitted only when unformed surfaces of concrete adjacent to the heaters are protected for the first 24 hours from an excessive carbon dioxide atmosphere by application of curing compound; provided, that the use of curing compound for such surfaces is otherwise permitted by these Specifications.

3.11 TREATMENT OF SURFACE DEFECTS

A. As soon as forms are removed, all exposed surfaces shall be carefully examined and any irregularities shall be immediately patched or ground in a satisfactory manner in order to secure a smooth, uniform, and continuous surface. Plastering or coating of surfaces to be smoothed will not be permitted. No repairs shall be made until after inspection by the ENGINEER. In no case will extensive patching of honeycombed concrete be permitted. Concrete containing minor voids, holes, honeycombing, or similar depression defects shall be repaired as indicated below. Concrete containing extensive voids, holes, honeycombing, or similar depression defects shall be completely removed and replaced. All repairs and replacements herein required shall be promptly executed at no increased cost to the OWNER.

B. Defective surfaces to be repaired shall be cut back from true line a minimum depth of ½-inch over the entire area. Feathered edges will not be permitted. Where chipping or cutting tools are not required in order to deepen the area properly, the surface shall be prepared for bonding by the removal of all laitance or soft material, plus not less than 1/32-inch depth of the surface film from all hard portions by means of an efficient sandblast. After cutting and sandblasting, the surface shall be wetted sufficiently in advance of shooting with shotcrete or with cement mortar so that while the repair material is being applied, the surfaces underneath will remain moist but not so wet as to overcome the suction upon which a good bond depends. The material used for repair proposed shall consist of a mixture of one sack of cement to 3 cubic feet of sand. For exposed walls, the cement shall contain such a proportion of Atlas white Portland cement as is required to make the color of the patch match the color of the surrounding concrete. In hydraulic structures the material used for repair shall be hydraulic cement as defined in this Section under Products.

C. Holes left by tie-rod cones shall be rubber stopped and grouted. Holes then shall be repaired in an approved manner with dry-packed cement grout. Holes left by form-tying devices having a rectangular cross-section and other imperfections having a depth greater than their least surface dimension shall not be reamed but shall be repaired in an approved manner with dry-packed cement grout.

D. All repairs shall be built up and shaped in such a manner that the completed work will conform to the requirements of this Section, as applicable, using approved methods which will not disturb the bond, cause sagging, or cause horizontal fractures. Surfaces of repairs shall receive the same kind and amount of curing treatment as required for the concrete in the repaired section.

E. Prior to filling any structure with water, all cracks that may have developed shall be "vee'd" as indicated in specs or in the field and filled with sealant conforming to the requirements of the applicable Sections of Division 03 – Concrete. This repair method shall be done on the water bearing face of members. Prior to backfilling, faces of members in contact with fill, which are not covered with a waterproofing membrane shall also have cracks repaired as indicated herein.

3.12 PATCHING HOLES IN CONCRETE

A. Patching Small Holes:
   1. Holes which are less than 12 inches in the least dimension and extend completely through concrete members shall be filled.
   2. Small holes in members which are water-bearing or in contact with soil or other fill material shall be filled with non-shrink grout or hydraulic cement in wet tanks. Where a face of the member is exposed to view, the non-shrink grout shall be held back 2 inches from the finished surface. The remaining 2 inches shall then be patched according to the Paragraph entitled "Treatment of Surface Defects."
   3. Small holes through all other concrete members shall be filled with non-shrink grout or hydraulic cement, with exposed faces treated as above.

B. Patching Large Holes:
   1. Holes which are larger than 12 inches in the least dimension shall have a keyway chipped into the edge of the opening all around, unless a formed keyway exists. The holes shall then be filled with concrete as indicated herein.

DRAFT

2. Holes which are larger than 24 inches in the least dimension and which do not have reinforcing steel extending from the existing concrete, shall have reinforcing steel set in grout in drilled holes. The reinforcing added shall match the reinforcing in the existing wall unless indicated otherwise.
3. Large holes in members which are water bearing or in contact with soil or other fill shall have a bentonite type hydrotite waterstop material placed around the perimeter of the hole in accordance with the applicable Sections of Division 03 – Concrete, unless there is an existing hydrotite waterstop in place.

3.13 CARE AND REPAIR OF CONCRETE

A. The CONTRACTOR shall protect all concrete against injury or damage from excessive heat, lack of moisture, over-stress, or any other cause until final acceptance. Particular care shall be taken to prevent the drying of concrete and to avoid roughening or otherwise damaging the surface. Any concrete found to be damaged, or which may have been originally defective, or which becomes defective at any time prior to the final acceptance of the completed WORK, or which departs from the established line or grade, or which, for any other reason, does not conform to the requirements of the Contract Documents, shall be satisfactorily repaired or removed and replaced with acceptable concrete at no additional cost to the OWNER.

END OF SECTION

DRAFT

SECTION 03 4100 – PRECAST CONCRETE UTILITY STRUCTURES

PART 1 – GENERAL

1.01 THE REQUIREMENT

A. The CONTRACTOR shall furnish and install structural pre-cast concrete work in accordance with the Contract Documents.

B. This Section covers the design, fabrication, delivery, and installation of all pre-cast concrete units, including connections, complete, in place, as shown and specified.

C. American Iron and Steel (AIS) requirement applies to this section. All iron and steel products used in this project must be produced in the United States.

D. Soils Report: This work shall conform to the requirements of the latest Geotechnical Evaluation and / or Soils Report.

1.02 CODES AND STANDARDS

A. Referenced Documents:

1. ASTM Standards:

A82	Steel Wire, Plain, for Concrete Reinforcement
A184	Fabricated Deformed Steel Bar Mats for Concrete Reinforcement
A185	Steel Welded Wire, Fabric, Plain, for Concrete Reinforcement
A496	Steel Wire, Deformed, for Concrete Reinforcement
A497	Welded Deformed Steel Wire Fabric for Concrete Reinforcement
A615	Deformed and Plain Billet-Steel Bars for Concrete Reinforcement
A616	Rail-Steel Deformed and Plain Bars for Concrete Reinforcement
A617	Axle-Steel Deformed and Plain Bars for Concrete Reinforcement
A706	Low-Alloy Steel Deformed Bars for Concrete Reinforcement
C31	Making and Curing Concrete Test Specimens in the Field
C33	Concrete Aggregates
C39	Compressive Strength of Cylindrical Concrete Specimens
C42	Obtaining and Testing Drilled Cores and Sawed Beams of Concrete
C94	Ready-Mixed Concrete
C150	Portland Cement
C192	Making and Curing Concrete Test Specimens in the Laboratory
C231	Air Content of Freshly Mixed Concrete by the Pressure Method
C260	Air-Entraining Admixtures for Concrete
C330	Lightweight Aggregates for Structural Concrete
C478	Precast Reinforcement Concrete Manhole Sections
C494	Shear Fatigue of Sandwich Core Materials
C595	Blended Hydraulic Cements
C618	Coal Fly Ash and Raw or Calcined Natural Pozzolan for Use as a Mineral Admixture in Concrete
C857	Minimum Structural Design Loading for Underground Precast Concrete Utility Structures

2. American Concrete Institute Standards:
   a. ACI 318 Building Code Requirements for Reinforced Concrete
3. American Welding Society Standards:
   a. AWS-D1.4 Structural Welding Code Reinforcing Steel

DRAFT

1.03 SUBMITTALS

A. Submittals shall be made in accordance with Section 01 3300 – Submittal Procedures.

B. Shop Drawings:
   1. Shop drawings shall show structure dimensions and orientation and location of all applicable inflow and outflow penetrations, access hatches, and conduit sleeves.
   2. Shop drawings shall include design structural calculations, assuming the applicable seismic zone and project groundwater conditions, that are stamped and signed by a Professional Engineer registered in Arizona and shall be approved by the ENGINEER.
   3. Shop drawings shall indicate pre-cast unit identification marks, location of units in the WORK, elevations, fabrication details, joint details, reinforcement, connections, dimensions, interface with adjacent members, and special handling instructions in sufficient detail to cover manufacture, handling and erection. Shop drawings shall include erection drawings.

C. Test Reports: Tests for compressive strength of concrete shall be performed by the factory. Copies of test reports including all test data and all test results shall be submitted.

D. Certificates of Compliance: Certificates of compliance shall be submitted attesting that materials and products meet or exceed specified requirements.

1.04 QUALITY ASSURANCE

A. General Requirements: Design members under direct supervision of a Professional Engineer experienced in design of pre-cast concrete units, registered in the State of Arizona, and conforming to requirements of this specification.
   1. Manufacture, Transportation, and Installation: The Manufacturer shall specialize in providing pre-cast products and services normally associated with pre-cast concrete construction with high quality finishes similar to that indicated on drawings.

1.05 DELIVERY, STORAGE, AND HANDLING

A. General: Pre-cast members shall be handled to position consistent with their shape and design; they shall be lifted and supported from design incorporated support points and provided with strong backs and other devices as required. Lifting or handling equipment shall be capable of maintaining units during manufacture, storage, transportation, erection, and in position for fastening.

B. Blocking and supports, lateral restraints and protective materials during transport and storage shall be clean, non-staining, without causing harm to exposed surfaces, including temporary support to prevent bowing and warping. Lateral restraints shall be provided to prevent undesirable horizontal movement. Edges and exposed faces of members shall be protected to prevent straining, chipping, or spalling of concrete.

C. Units shall be marked with date of production and final position in structure in location not visible after erection.

D. Pre-cast units shall be stored off the ground in a manner to prevent warpage and they shall be protected from weather, marring, and overload.

E. Stainless Steel Hardware: Stainless steel hardware shall be transported, handled, stored, and protected in wood crates.

DRAFT

PART 2 – PRODUCTS

2.01 MATERIALS

A. Cement: ASTM C150 or ASTM C595.

B. Aggregates: ASTM C33 and ASTM C330, except that the requirements for grading shall not apply.

C. Admixtures: May be used provided such admixtures are not injurious to other products used in the concrete.

D. Chemical Admixtures: ASTM C494

E. Fly Ash and Pozzolanic Admixture: ASTM C618
   1. Water: Used for curing, washing, aggregate, or mixing concrete shall be clean and free of injurious amounts of oil, acids, alkalis, salts, organic materials, or other substances that may be incompatible with concrete or steel.

F. Steel Reinforcement:
   1. Wire ASTM A82 or ASTM A496
   2. Wire Fabric ASTM A185 or ASTM A497
   3. Bars ASTM A184, ASTM A615, ASTM A616, ASTM A617 or ASTM A706

2.02 DESIGN REQUIREMENTS

A. Design Method: The elastic method of structural design or the ultimate strength method of reinforced concrete design as outlined in ACI 318 shall be used to design the concrete sections, including the reinforcement required, when the structure is subjected to the loading conditions covered in Practice C857.

B. Access Openings: The structural design shall take into consideration the number, placement, and size of access openings.

C. Floors: The minimum floor thickness resulting from slope shall be considered as nominal floor thickness in the structure.

D. Terminators, Knockouts and Sumps: Duct terminators, knockouts and sumps shall be designed to carry the loads imposed upon them. The basic structure shall be designed to carry all imposed loads with knockouts removed.

E. Placement of Reinforcement: The design concrete cover for reinforcing bars, mats or fabric shall not be less than ¾-inch (19 mm) subject to the requirements of Section 2.02.

F. Concrete Strength: The minimum specified compressive strength for design shall be 4,000 psi (21 MPa) at 28 days of age. Compressive-strength tests should be made in accordance with Practices C31 and C192 and Test Methods C39 and C42.

G. Joints: Joints in sectional precast concrete structure shall be designed so as to be self-aligning when assembling sections of the structure.
   1. The manufacture shall provide a single joint design on all units of the same size and type to ensure interchangeability.

H. Lifting Devices: Design of embedded lifting devices shall conform to requirements as specified in 8.4 under Special Loading Considerations of Practice ASTM C890.

I. Pickup Points and Boxouts: Pickup points, boxouts and inserts on panel faces and surfaces to be exposed are prohibited except as approved.

J. Traffic Loads: Structure and access hatches shall be designed for HS-20-44 traffic wheel loads per AASHTO as last revised, including a 30% impact factor.

DRAFT

2.03 MANUFACTURE

A. Forms: Forms shall be accurately constructed and strong enough to maintain the structure's dimensions within the tolerances given in Section 2.4. Forms should be constructed in such a manner as to minimize the seepage of water. All casting surfaces shall be smooth nonporous material.

B. Cleaning and Oiling: Forms shall be cleaned before each use. New forms shall be free of paint or other protective coatings that might cling to the surface of the structure. Releasing agents applied to the form to aid in breaking the bond between the form and the concrete shall not be injurious to the concrete.

C. Reinforcement: Steel reinforcement shall conform to the requirements of this specification and shall be securely positioned in the form to maintain design concrete cover given in Section 2.2 during concrete placement. All chairs, bolsters, braces and spacers in contact with form and reinforcing rod shall be of material that will not deteriorate.

D. Mixture: The aggregates shall be sized, graded, proportioned, and thoroughly mixed in a batch mixer with proportions of cement and water as will produce a homogeneous concrete having the required specified compressive strength. If Ready-Mix concrete is used, it shall be in accordance with Specification C 94.

E. Concrete Placement: Concrete shall be deposited as nearly as practicable in its final position. Concrete shall be placed in the form at a rate such that the concrete is plastic at all times and flows readily into all parts of the form and around all reinforcement steel and embedded fixtures without segregation of materials. Concrete that has partially hardened or has been contaminated by foreign material shall not be deposited in the form.

F. Curing: Structures shall be cured by an accepted industry method that will develop the required 28-day compressive strength without affecting the long-term durability of the concrete.

2.04 PERMISSIBLE VARIATIONS

A. Dimensional Tolerances: The length, width, height, or diameter measurements of the structure when measured on the inside surface shall not deviate from the design dimensions more than the following:

Dimension	**Tolerance**
0 to 5-feet (0 to 1.5 m)	+/- 1/4 inch (+/- 6 mm)
5 to 10-feet (1.5 to 3.0 m)	+/- 3/8 inch (+/- 10 mm)
10 to 20 feet (3.0 to 6.1 m)	+/- 1/2 inch (+/- 13 mm)
20 feet (6.1 m) and over	as agreed upon between manufacturer and purchaser

B. Squareness Tolerance: The inside of the precast concrete component shall be square as determined by diagonal measurements. The difference between such measurements shall not exceed the following:

Measured Length	**Allowable Difference**
0 to 10 feet (0 to 0.3 m)	+/- 1/2 inch (+/- 13 mm)
10 to 20 feet (3.0 to 6.1 m)	+/- 3/4 inch (+/- 19 mm)
20 feet (6.1 m) and over	as agreed upon between manufacturer and purchaser

C. Joint Surfaces: The inside joint seam gap between two sections placed together without a joint sealant shall not exceed 3/8-inch (9.5 mm).

D. Insert Location: Insert locations for attachments in each component shall not deviate individually or cumulatively more than ± 1/8-inch (3.18 mm) from dimensions on specification drawings.

DRAFT

E. Reinforcement Location: With reference to thickness of wall or slab, reinforcement shall be within ± ¼-inch (6.3 mm) of the design location, but in no case shall the cover be less than ¾-inch (19 mm). The reinforcement spacing shall not vary more than one tenth of the designed bar spacing nor exceed 1½-inch (38 mm) in variation, except for welded wire mesh which shall conform to Specifications A185 or A497.

F. Slab and Wall Thickness: The slab and wall thickness shall not be less than that shown in the design by more than 5% or 3/16-inch (4.8 mm), whichever is greater. A thickness greater than that required in the design shall not be a cause for rejection.

2.05 REPAIRS

A. Precast concrete structures may be repaired. Repairs shall be performed by the manufacturer, in such a manner as to ensure that the repaired structure conforms to the requirements of this specification.

2.06 INSPECTION

A. The quality of material, process of manufacture, and the finished structure shall be subject to inspection at any time by the purchaser or his representative.

2.07 REJECTION

A. Precast concrete structures or sections of structures shall be subject to rejection upon failure to conform to any specified requirements contained herein, or if any of the following imperfections occur:
   1. Defects that indicate any imperfect concrete mixing and molding, or
   2. Surface defects indicated by honeycombed or open-texture and damaged areas where such defects would affect the structural adequacy.

2.08 CERTIFICATION

A. At the request of the purchaser, the manufacturer shall, prior to the actual delivery of a structure, furnish a statement giving the source and type of cement, the source and specific gravities of the aggregates, the concrete mix proportions, strength, type, amount, and name of admixtures and mill certificates for the reinforcement steel used in manufacture.

2.09 MARKING

A. The weight shall be marked on the outside of each component section.

B. The purchaser may request additional information to be marked on the component section when ordering.

C. The method of marking shall be agreed upon between the purchaser and the supplier prior to ordering.

PART 3 – EXECUTION

3.01 INSTALLATION

A. Erection:
   1. The units shall be erected in accordance with approved shop/erection drawings without damage to shape or finish or adjacent work. Unless otherwise shown, members shall be erected level and plumb within allowable tolerances.
   2. The CONTRACTOR shall align and maintain uniform horizontal joints as erection progresses, provide approved shims and wedges as required, and when members required adjustment beyond design or tolerance criteria, discontinue affected work. Units shall be secured in place and field welds; scratches and otherwise damaged steel surfaces shall be touched up.

DRAFT

3. Pickup points, boxouts, inserts and bearing surfaces shown shall be grouted with non-shrink grout in accordance with these Specifications. The color and texture of concrete surfaces of adjacent areas shall be finished to match in the same plane.

3.02 PROTECTION

A. Adjacent surfaces shall be protected from damage during sealing and cleaning operations and against damage, disfiguration, or discoloration from subsequent operations. Noncombustible shielding shall be used during welding operations.

END OF SECTION

DRAFT

SECTION 03 6000 – GROUTING

PART 1 – GENERAL

1.01 THE REQUIREMENT

A. Provide and place grout in accordance with the Contract Documents.

B. Section Includes:
   1. Concrete Mortar
   2. Grout
   3. Dry-pack Mortar
   4. Non-shrink Grout
   5. Epoxy grout
   6. Non-shrink epoxy grout

C. Refer to the applicable Sections of Division 03 – Concrete.

1.02 REFERENCES

A. American Society for Testing and Materials (ASTM):

C109	Compressive Strength of Hydraulic Cement Mortars (using 2 inch or 50 millimeter cube specimens)
C230	Flow Table for Use in Tests of Hydraulic Cement
C531	Liner Shrinkage and Coefficient of Thermal Expansion of Chemical-Resistant Mortars, Grouts, Monolithic Surfacing and Polymer Concretes
C579	Compressive Strength of Chemical-Resistant Mortars and Monolithic Surfacing
C827	Change in Height at Early Ages of Cylindrical Specimens from Cementitious Mixtures
C939	Flow of Grout for Preplaced-Aggregate Concrete (Flow Cone Method)
C1090	Measuring Change in Height of Cylindrical Specimens from Hydraulic-Cement Grout
C1107	Packaged Dry, Hydraulic-Cement Grout (non-shrink)
C1181	Compressive Creep of Chemical-Resistant Polymer Machinery Grouts

1.03 SUBMITTALS

A. Furnish submittals in accordance with Section 01 3300 – Submittal Procedures.

B. Grout: Submit manufacturer's Literature and certified test data prior to installation of any grout mixes.

1.04 DELIVERY, STORAGE, AND HANDLING

A. All materials shall be delivered to the jobsite in their original, unopened packages or containers, clearly labeled with the manufacturer's product identification and printed instructions.

B. All materials shall be stored in a cool dry place and in accordance with the manufacturer's recommendations.

C. All materials shall be handled in accordance with the manufacturer's instructions.

1.05 PROJECT/SITE CONDITIONS

A. Refer to manufacturer's literature or contact the manufacturer for any special physical or environmental limitations that may be required for use of products.

1.06 WARRANTIES

A. Non-shrink Grout: The manufacturer shall warranty that the non-shrink grout will never go below its initial placement volume when tested in accordance with ASTM C1107.

DRAFT

B. Non-shrink Epoxy Grout: The manufacturer shall warranty that the non-shrink epoxy grout will show negligible shrinkage or expansion when tested in accordance with ASTM C531.

PART 2 – PRODUCTS

2.01 MATERIALS

A. Concrete Mortar:
   1. General: Consist of concrete mixture with coarse aggregate removed and water quantity adjusted as required.
   2. At Exposed Concrete Surfaces Not to Be Painted or Submerged in Water: White Cement.

B. Grout: Consist of mixture of Portland cement and sand.

C. Dry-pack:
   1. Mortar consists of mixture of Portland cement and sand.
   2. Hydraulic Cement Manufacturers
      a. Aqua Plug
      b. Unitex Hydraulic Cement
      c. Thoro Water Plug

D. Non-shrink Grout:
   1. Manufacturers: One of the following or ENGINEER-approved equal:
      a. Five Star Products, Inc., Fairfield, CT, Five Star Grout.
      b. Master Builders, Inc., Cleveland, OH, Masterflow 928.
      c. L&M Construction Chemicals, Inc., Omaha, NE, CRYSTEX
   2. Non-shrink grout shall be a proportioned and prepackaged cement-based mixture. It shall contain no metallic particles such as aluminum powder and no metallic aggregate such as iron filings. It shall require only the addition of potable water.
   3. Potable water for pre-soaking, mixing, and curing shall be clean and free of oils, acids, alkalis, organics, and any other deleterious matter.
   4. Bleeding: Non-shrink grout shall be free from the emergence of mixing water from within or the presence of water on its surface.
   5. Non-shrink grout shall be in accordance with ASTM C1107.
   6. Consistency: Non-shrink grout shall remain at a minimum flowable consistency for at least 45 minutes after mixing at 45°F to 90°F when tested in accordance with ASTM C230. If at a fluid consistency, it shall be verified in accordance with ASTM C939.
   7. Dimensional Stability (height change): Non-shrink grout shall be in accordance with ASTM C1107, volume-adjusting Grade B or C at 45°F to 90°F. It shall show 90 percent or greater bearing area under bases or baseplates.
   8. Compressive Strength: Non-shrink grout shall show minimum compressive strengths at 45°F to 90°F in accordance with ASTM C1107 for various periods from the time of placement, including 5,000 pounds per square inch at 28 days when tested in accordance with ASTM C109 as modified by C1107.

E. Epoxy Grout:
   1. Consist of mixture of epoxy and sand.
   2. Sand: Clean, bagged, graded, and kiln dried silica sand.

F. Non-shrink Epoxy Grout:
   1. Manufacturers: One of the following or equal:
      a. Five Star Products, Inc., Fairfield, CT, Five Star Epoxy Grout.
      b. Master Builders, Inc., Cleveland, OH, Masterflow 648 CP Plus.
      c. L&M Construction Chemicals, Inc., Omaha, NE, EPOGROUT.

DRAFT

2. Non-shrink epoxy grout shall be a 100-percent-solids, pre-measured, prepackaged system containing a two-component thermosetting epoxy resin and inert aggregate
3. Consistency: Non-shrink epoxy grout shall maintain a flowable consistency for at least 45 minutes at 70°F.
4. Dimensional Stability (height change):
   a. Non-shrink epoxy grout shall have negligible shrinkage or expansion (less than 0.0006 in/in) when tested in accordance with ASTM C531.
5. Compressive Strength: Non-shrink epoxy grout shall show a minimum compressive strength of 10,000 pounds per square inch at 24 hours and 14,000 pounds per square inch at 7 days when tested in accordance with ASTM C579, Method B.
6. Compressive Creep: The compressive creep for non-shrink epoxy grout shall not exceed 0.0027 in/in when tested under a 400 pounds per square inch constant load at 140°F in accordance with ASTM C1181.
7. Thermal Capability: The coefficient of thermal expansion for non-shrink epoxy grout shall not exceed 0.000018 inches per inch per degree Fahrenheit when tested under ASTM C531, Method B.

2.02 MIXES

A. Concrete Mortar Mix:
   1. Use water-cement ratio that is no more than that specified for concrete being repaired.
   2. At Exposed Concrete Surfaces Not to Be Painted or Submerged in Water: Use sufficient white cement to make color of finished patch match that of surrounding concrete.

B. Grout Mix:
   1. For Concrete Repair: Mix in same proportions used for concrete being repaired, with only sufficient water to give required consistency for spreading.
   2. For Spreading over the Surfaces of Construction or Cold Joints: Mix with no more water used than allowed by water-cement ratio specified for concrete.
   3. For Other Applications: Mix in proportions by weight of one part cement to four parts of concrete sand.

C. Dry-pack Mortar and Hydraulic Cement Mix: Use only enough water so that resulting mortar will crumble to touch after being formed into a ball by hand.

D. Non-shrink Grout: Mix in accordance with manufacturer's installation instructions such that resulting mix has fluid or flowable consistency and is suitable for placing by pouring.

E. Epoxy grout: Mix in accordance with manufacturer's installation instructions for mixing.

F. Non-shrink Epoxy Grout: Mix in accordance with manufacturer's installation instructions.

PART 3 – EXECUTION

3.01 EXAMINATION

A. Inspect concrete surfaces to receive grout or mortar and verify that they are free of ice, frost, dirt, grease, oil, curing compounds, paints, impregnations and all loose material or foreign matter likely to affect the bond or performance of grout or mortar.

B. Inspect baseplate and anchor systems for rust, oil, and other deleterious substances that may affect the bond or performance of grout.

C. Confirm that newly placed concrete has been cured sufficiently to attain its design strength and limit further shrinkage.

DRAFT

D. Verify that temperature of cementitious or epoxy grout does not exceed manufacturer's recommendations.

3.02 PREPARATION

A. Surface Preparation:
   1. Roughen all concrete surfaces by heavy sandblasting, chipping, or other mechanical means to assure bond. Loose or broken concrete shall be removed.
   2. All grease, oil, dirt, curing compounds, laitance, and other deleterious materials that may affect bond that were identified in the inspection process shall be completely removed from concrete and bottoms of baseplates. All metal surfaces should have a 2- to 3-mil peak-to-valley profile for epoxy grouts.
   3. For cementitious mortars and grouts, concrete surfaces shall be saturated surface dry. Any standing water shall be removed prior to placing grouts.
   4. For epoxy grouts, do not wet concrete surfaces with water. Instead, where required, wet surfaces with epoxy for horizontal work or epoxy gel for vertical or overhead work prior to placing epoxy grouts.

B. Forms and Headboxes for Grouts (Cementitious or Epoxy):
   1. Forms for grouts shall be built of material with adequate strength to withstand the placement of grouts.
   2. Forms must be rigid and liquid tight. All cracks and joints shall be caulked with an elastomeric sealant. All forms shall be lined with polyethylene for easy grout release. Forms carefully waxed with two coats of heavy-duty paste wax shall also be acceptable.
   3. Forms shall be 4 to 6 inches higher than the baseplate on one side of the baseplate configuration when using head pressure for placement.
   4. A sufficient number of headboxes shall be built to facilitate placement of grouts.
   5. Air relief holes a minimum 1/8 inch in diameter shall be provided when required by a baseplate configuration to avoid entrapping air underneath.

3.03 APPLICATION

A. Cement Mortar and Grout:
   1. For Defective Concrete Repair:
      a. Filling: Filling of voids around items through the concrete.
      b. Grout Spreading: Spread over construction joints, cold joints, and similar type items.
   2. Concrete Surfaces: Apply epoxy bonding agent to clean, roughened, and dry surfaces before placing mortar or grout.
   3. Placing:
      a. Exercise particular care in placing Portland cement mortar or grout since they are both required to furnish structural strength or impermeable water seal or both.
      b. Do not use cement mortar or grout that has not been placed within 30 minutes after mixing.

B. Epoxy Grout:
   1. Apply in accordance with manufacturer's installation instructions.
   2. Use where specified herein or where indicated on the Drawings.

3.04 PLACEMENT

A. The CONTRACTOR shall arrange to have a grout manufacturer's representative present for a preconstruction meeting and during the initial grout placement. Grout shall only be installed after the final equipment alignment is correct and accepted by the ENGINEER.
   1. Grouts shall be mixed in accordance with the manufacturer's recommendations.

DRAFT

2. A mortar mixer with moving paddles shall be used for mixing grouts. For cementitious grouts, pre-wet the mixer and empty out excess water before beginning mixing.
3. Cementitious Grouts:
    a. Non-shrink cementitious grout shall be added to a pre-measured amount of water that does not exceed the manufacturer's maximum recommended water content.
    b. Mix cementitious grouts per manufacturer's instructions for uniform consistency.
    c. Grouts may be dry packed, flowed, or pumped into place. All baseplate grouting shall take place from one side of a baseplate to the other to avoid trapping air. Do not overwork grouts.
    d. Do not retemper grout by adding more water after stiffening.
    e. Hydrostatic head pressure shall be maintained by keeping the level of the grout in the headbox above the bottom of the baseplate. The headbox should be filled to maximum level and the grout worked down to top of baseplate.
4. Epoxy Grouts:
    a. Epoxy grouts shall be mixed in complete units. Do not vary the ratio if components or add solvent to change the consistency of the mix.
    b. Pour the hardener into the resin and mix for at least one minute and until each mixture is uniform in color. Pour the chemical components into the mortar mixer wheelbarrow and add the aggregate. Mix until aggregate is uniformly wetted. Overmixing will cause air entrapment in the mix.
    c. All epoxy grout shall be flowed into place using a headbox. All grouting shall take place from one side of a baseplate to the other in a continuous flow to avoid trapping air.
    d. Hydrostatic head pressure shall be maintained by keeping the level of grout in headboxes above the bottom of baseplates. Headboxes shall be filled to the maximum level and grout worked down to the bottom of the baseplates.
    e. Epoxy grouts shall not be cut back after setting. The final level of grout will be as installed with all chamfer edges built into the formwork.

3.05 CURING

A. Cementitious Grouts:
1. Grouts must be cut back to the lower edge of baseplates after reaching initial set. Provide a 45-degree angle cut back.
2. Clean equipment and tools as recommended by the grout manufacturer.
3. Cure Grouts in accordance with the manufacturer's specifications and recommendations. Keep grout moist for a minimum of 3 days. The method needed to protect grouts will depend on temperature, humidity, and wind. Wet burlap, a soaker hose, sun shading, ponding and in extreme conditions, a combination of methods shall be employed.
4. Grouts shall be maintained above 40°F until they have attained a compressive strength of 3,000 pounds per square inch or above 70°F for a minimum of 24 hours to avoid damage from subsequent freezing.

B. Epoxy Grouts:
1. Cure grouts in accordance with manufacturer's specifications and recommendations. Do not wet cure epoxy grouts.
2. Consult the manufacturer for appropriate cure schedule. In no case should any surface in contact with grout be allowed to fall below 50°F for a minimum of 48 hours after placement.
3. Equipment and tools shall be cleaned immediately with a strong liquid detergent and water solution before grout hardens.

DRAFT

3.06 FIELD QUALITY CONTROL

A. Non-shrink grouts shall be tested for 84 hour compressive strength in accordance with ASTM C109.

B. Non-shrink grouts shall be tested for 24 hour compressive strength in accordance with ASTM C579 (Method B).

END OF SECTION

DRAFT

SECTION 03 6423 – EPOXY INJECTION GROUTING

PART 1 – GENERAL

1.01 SUMMARY

A. Section Includes: Epoxy injection system.

1.02 REFERENCES

A. American Society for Testing and Materials (ASTM):

D638 Tensile Properties of Plastics.
D695 Compressive Properties of Rigid Plastics.
D790 Flexural Properties of Unreinforced and Reinforced Plastics and Electrical Insulating Materials

1.03 SUBMITTALS

A. Furnish submittals in accordance with Section 01 3300 – Submittal Procedures.

B. Product Data: Submit manufacturer's data completely describing epoxy injection system materials.

C. Quality Control Submittals:
1. Certificates of Compliance
2. Manufacturer's Instructions

PART 2 – PRODUCTS

2.01 MATERIALS

A. Manufacturers: One of the following or ENGINEER-approved equal:
1. Master Builders, Inc., Concressive Standard LVI
2. Sika Chemical Corp.'s, Sikadur 35, Hi-Mod LV

B. Epoxy: Provide epoxy materials that are new and use them within shelf life limitations set forth by manufacturer. Water-insensitive, 2-part type, low viscosity epoxy adhesive material containing 100 percent solids and meeting or exceeding following characteristics when tested in accordance with standards specified:

Physical Characteristic	Test Method	Required Results
Tensile Strength	ASTM D638	8,000 pounds per square inch at 14 days and 77°F cure
Flexure Strength	ASTM D790	11,000 pounds per square inch at 14 days and 77°F cure
Compressive Strength	ASTM D695	16,000 pounds per square inch at 24 hours and 77°F cure
Bond Strength	--	Concrete shall fail before failure of epoxy
Gel Time in 5-Mil Film	--	Four hours maximum at 77°F
Elongation	ASTM D638	1 percent at 14 days and 77°F

DRAFT

2.02 EQUIPMENT

A. Pump Unit:
   1. Furnish unit to be used for injection that is positive displacement type with interlock to provide in-line mixing and metering system for 2-component epoxy.
   2. Furnish pressure hoses and injection nozzle of such design as to allow proper mixing of 2 components of epoxy.
   3. Presence of standby injection unit may be required.

2.03 MIXES

A. Epoxy Injection System Materials:
   1. Mix epoxy in accordance with manufacturer's installation instructions.
   2. Do not use solvents to thin epoxy system materials introduced into cracks or joints.

PART 3 – EXECUTION

3.01 PREPARATION

A. Surface Preparation:
   1. Epoxy Injection System:
      a. General: Before processing, sweep or clean area in vicinity of crack location to receive epoxy and leave in generally clean condition.
      b. Joints to Receive Epoxy: Clean in manner such that joints are free from dirt, laitance, and other loose matter.

3.02 INSTALLATION

A. Install and cure epoxy materials in accordance with manufacturer's installation instructions.

B. Perform and conduct work of this Section in neat orderly manner.

C. Epoxy Injection System:
   1. Apply adequate surface seal to crack or joint to prevent escape of epoxy.
   2. Establish entry points at distance along seal not less than thickness of cracked member.
   3. Force epoxy into crack at first port with sufficient pressure to advance epoxy to adjacent port.
   4. Seal original port and shift entry to port at which epoxy appears.
   5. Continue this manner of port-to-port injection until each joint has been injected for its entire length.
   6. For small amounts, or where excessive grout pressure developed by pump unit might further damage structure, premixed material and hand caulking gun may be used if acceptable to the ENGINEER.
   7. Seal ports, including adjacent locations where epoxy seepage occurs, as necessary to prevent drips or run out.

END OF SECTION

DRAFT

SECTION 05 1200 – STRUCTURAL STEEL FRAMING

PART 1 – GENERAL

1.01 THE REQUIREMENT

A. Provide structural steel for building construction including sub-framing units, which are part of the general framing system. Include anchors, bases, bearing plates, bracing, lintels when part of structural framing and detail fittings.

B. Modify existing structural steel systems and components to accommodate remodeling and new work.

1.02 SUBMITTALS

A. Submittals shall be furnished in accordance with Section 01 3300 – Submittal Procedures.

1.03 QUALITY ASSURANCE

A. Comply with Governing Codes and Regulations. Provide products of acceptable manufacturers. Use experienced installers. Deliver, handle and store materials in accordance with manufacturer's instructions.

PART 2 – PRODUCTS

2.01 MATERIALS

A. Steel shapes plates and bars: ASTM A36 or ASTM A572, Grade 50

B. Steel pipe: ASTM A53

C. Anchor bolts: ASTM A307

D. High strength threaded fasteners: ASTM A325

E. Non-metallic shrinkage resistant grout; Euclid Euco NS, L&M Crystex, Sonneborn Sonnegrout or ENGINEER-approved equal. Compressive strength suited for Project Requirements.

F. Shop finish for structural steel in accordance to these Specifications.

G. Galvanized lintels: Hot dip galvanized ASTM A123

H. Welding: AWS D1.1

PART 3 – EXECUTION

3.01 INSTALLATION

A. Comply with AISC Codes and Specifications and with AWS "Structural Welding Code."

B. Employ a registered engineer to check elevations and plumb and level tolerances; certify that installed work is within AISC Standards. Testing/inspection agency may be employed to inspect welded and bolted connections.

C. Architecturally Exposed Steel: Fabricate with special care using materials carefully selected for best appearance. Store materials off ground and keep clean. Cut, fit, and assemble work with surfaces smooth, square, and with complete contact at joints. Set all cambers up. Weld all work continuously; grind smooth and flush to make seams invisible after priming. Prepare surfaces to comply with SSPC-SP6; apply prime coat within 24 hours after cleaning.

D. Touch-up field welds and abraded areas in accordance with these Specifications.

E. Provide all necessary bolt, fasteners, anchors, etc. to install or construct this scope of the WORK.

END OF SECTION

DRAFT

SECTION 05 3123 – METAL ROOF DECKING

PART 1 – GENERAL

1.01 DESCRIPTION

A. This section describes materials and installation of metal roof decking.

1.02 SUBMITTALS

A. Submit shop drawings in accordance with Section 01 3300 – Submittal Procedures.

B. Submit complete manufacturer's specifications and installation instructions in advance of fabrication. Include manufacturer's certification showing compliance with these specifications. Indicate on transmittal form to OWNER's Representative that a copy of each instruction has been distributed to the installer.

C. Submit detailed shop drawings showing layout of roof deck panels, anchorage details, and every condition requiring closure panels, supplementary framing, special jointing, or other accessories.

D. Submit current International Conference of Building Officials (ICBO) approval for deck diaphragm shear values for deck welds.

E. Fabrication: Prior to erection of metal decking, deliver to the OWNER's Representative a letter signed by an official of the manufacturer's firm certifying that the metal decking delivered for this WORK was fabricated in accordance with these specifications.

F. Erection: Upon completion of erection, deliver of the OWNER's Representative a letter signed by an official of the erector's firm certifying that metal decking installed in this WORK was installed in accordance with these specifications.

1.03 SUBMITTALS

A. Comply with the current editions of codes and regulations including current editions or revisions and supplements of the following reference standards: ICBO – Latest Edition.

AISI "Specification for the Design of Cold – Formed Steel Structural Members."

AWS "Code for the Welding in Building Construction." SDI "Steel Roof Deck Design Manual."

B. Performance Requirements:

1. Compute the properties of metal floor deck sections on the basis of the effective design width as limited by the provisions of the AISI specifications. Provide not less than the specified deck section properties shown including section modules and moment of inertia per foot of width.
2. Allowable Deflection: Design and fabricate deck for a maximum deflection of 1/360 of the clear span under the total uniform dead and live load.
3. Uplift Loading: Install and anchor roof deck units to resist a gross uplift loading of 30 psf (less dead load for roof areas).

C. Qualifications of Suppliers and Personnel: The erector shall have at least five years' continuous experience in the erection of metal decking.

D. Qualifications of Welding:

1. Quality welding processes and welding operators in accordance with AWS B3.0 "Welding Procedure and Performance Qualification."

DRAFT

2. Decking welded in place is subject to inspection and testing. Expense of removing and replacing any portion of decking for testing purposes will be borne by the OWNER if welds are found to be satisfactory. If any welds are found defective, the CONTRACTOR shall be responsible for the expense of testing and removal and replacing that portion of decking to the satisfaction of the OWNER's Representative.

PART 2 – PRODUCTS

2.01 MATERIALS

A. Form metal roof decking from steel conforming to ASTM A653 SS, Grade 50 min with G90.

B. Decking shall be galvanized.

C. Metal roof decking shall conform to the following properties:

Gauge:	As Shown (20 Min.)
Moment of Inertia:	0.219 in^4
Section Modulus:	+ 0.23 in^3 - 0.237 in^3
Weight per Square Foot:	2.3 (lbs.)
Depth of Corrugations:	1-1/2 inches

2.02 FABRICATION

A. Form deck units in lengths to span three or more support spacing with flush, telescoped, or nested 2-inch end laps and nesting side laps, unless otherwise shown or specified. Provide deck configurations complying with SDI "Basic Design Specifications."

B. Fabricate metal closure strips of painted sheet steel of the same quality as the deck units: not less than nominal 0.0359 inch (20-gauge) thick before coating. Form to the configuration required to provide tight-fitting closures at open ends and sides of decking.

C. Provide decking accessories, including welding washers, anchor washes with ear clips, closures, and filler strips. Provide closure plates and other attachments at openings through decking for ducts, shafts, and other penetrations. Where decking changes directions, and at perimeter, closures shall be of 18-gauge steel unless otherwise indicated.

D. Reinforce decking at openings per manufacturer's requirements.

PART 3 – EXECUTION

3.01 PRODUCT DELIVERY STORAGE AND HANDLING

A. When delivered to the jobsite, store the metal decking off the ground and cover to protect material from the elements. Slope to permit drainage.

B. In the event of damage, immediately make repairs and replacements. Replacements and repairs shall be at CONTRACTOR's expense.

3.02 INSTALLATION OF METAL ROOF DECKING

A. Place metal roof decking with edges up and flutes at right angles to supports. End laps shall always occur over supports, with a minimum end lap of 2 inches for welded attachment. Begin at corner of buildings to maintain alignment. Lap sheets one-half flute at side laps. Attach sheets to top chord of supports by plug welding through special welding washers. Fasten each end lap in the trough of the flutes at each corner (through four thickness of metal) and at center of end lap. Limit the spacing between adjacent points of attachment to 18 inches maximum over all supports. Attach placed sheets at the end of the workday. Metal connections shall be as indicated on plans.

DRAFT

3.03 PAINTING

A. For touch-up on decking, wire brush, clean, and paint scarred areas, welds, and rust spots on top and bottom surfaces of decking units and supporting steel members.

3.04 PROTECTION

A. Do not use deck units for storage or working platforms until permanently secured in position.

B. Assure that construction loads do not exceed carrying capacity of deck.

C. Do not use calcium chlorides or admixtures containing chloride salts in the concrete fill over the deck.

END OF SECTION

DRAFT

SECTION 05 5000 – METAL FABRICATIONS

PART 1 – GENERAL

1.01 THE REQUIREMENT

A. Provide all labor, materials, bolts, fasteners, equipment, and service necessary for fabrication and erection of structural steel and aluminum and for fabrication and installation of miscellaneous non-ferrous metals in accordance with the Contract Documents and not specifically included under other Sections of these Specifications.
   1. Erection
   2. Shop and Erection Drawings
   3. Shop Painting
   4. Galvanizing
   5. Aluminum Work Protection
   6. Cleaning Aluminum Work
   7. Miscellaneous Items
   8. Loose Lintels
   9. Sleeves and Inserts
   10. Aluminum Pipe Railing
   11. Plate Covers and Frames
   12. Guard Chains
   13. Lifting Hooks
   14. Cast Iron Wheel Guard
   15. Cast Aluminum Nosings
   16. Floor Hatches and Frames
   17. Access Doors

B. American Iron and Steel (AIS) requirement applies to this section. All iron and steel products used in this project must be produced in the United States.

1.02 REFERENCES

A. All work under this Section shall be governed by:
   1. Specifications for the design, fabrication, and erection of structural steel for buildings – American Institute of Steel Construction, current edition.
   2. Aluminum Construction Manual, Section 1, Specifications for Aluminum Structures – The Aluminum Association.
   3. All welding shall conform to the latest code of the American Welding Society.
   4. ANSI B94.12
   5. ASTM A12, A153, A384, A593 and A780
   6. ASTM A48
   7. ASTM A276
   8. ASTM A325
   9. ASTM F593, 294
   10. Federal Specification FF-S-325
   11. Federal Specification TT-V-51F
   12. SSPC SP-1, SP-2, SP3, SP-7

1.03 SUBMITTALS

A. Submittals shall be furnished in accordance with Section 01 3300 – Submittal Procedures.

DRAFT

B. As required by the Specifications, submit for review completely detailed and certified shop and erection drawings of the miscellaneous metal work. All Coatings or other protection against corrosion to be applied at the shop or in the field shall be indicated on these drawings. The shop drawings for aluminum work shall show the alloys and tempers to be used, and the finish, if any to be applied.

C. Shop drawings, giving complete information necessary for fabrication, layout and installation of metal work shall be submitted to the ENGINEER for review prior to fabrication.

D. Preparation of shop drawings for fabricated metal items shall be coordinated with the manufacturers, of various equipment in order to comply with details, locations, openings, and arrangements required by the manufacturers, of various equipment in order to comply with details, locations, openings, and arrangements, required by the manufacturers.

E. Field measurements shall be made to verify all dimensions in the field, which may affect installation of work before shop drawings are made and/or fabrication is performed.

1.04 QUALITY ASSURANCE

A. The design, detail and workmanship of steel plates and structural steel shall conform to the AISC Specification for the Design, Fabrication and Erection of Structural Steel for Buildings.

B. Where welding is permitted or required, it shall conform to the current requirements of the American Welding Society for the type of work in question.

C. Aluminum work shall be fabricated in a shop where the quality of work is in accordance with the highest standards for work of this type. All work shall be executed by mechanics skilled in the fabrication of aluminum, and shall be true to detail with sharp, clean profiles, fitted with proper joints and intersections and with finishes as specified.

D. All miscellaneous metal work shall be formed to shape and size with sharp lines and angles. Shearing and punching shall leave clean true lines and surfaces.

1.05 RESPONSIBILITY FOR DIMENSIONS

A. The general design and dimensions of the miscellaneous metal work are indicated on the Drawings, correctness of the details and dimensions of the finished articles is required. Verification of conditions at the job before fabrication and coordination of the work with that of all other trades to prevent interference.

PART 2 – PRODUCTS

2.01 STEEL

A. Structural steel, plates, and shapes shall conform to the requirements of ASTM A36. Structural tubing, where used, shall conform to the requirements of ASTM A500, Grade B, and the ends of the tubing shall be properly sealed to protect the internal surfaces. Steel anchor bolts shall be ASTM A36 hot rolled threaded rod or bar stock, except where stainless steel is indicated on the Drawings.

B. Structural steel members as required shall conform to ASTM Standard shapes.

C. Base and bearing plates shall be provided where necessary to provide maximum bearing value of not more than 200 psi on solid concrete masonry units not more than 750 psi on concrete and shall be grouted in place.

DRAFT

D. Steel lintels shall be provided for all square head openings in masonry where shown and where other lintels are not indicated on the Drawings. Lengths of bearing at each end of lintels shall be not less than 1 inch per foot of span, but in no case less than 8 inches shall be increased or the lintels shall be fitted with bearing plates as required to provide unit pressures in pounds per square inch of not more than 200 on solid concrete masonry units and 625 on concrete. All new steel lintels shall be shop primed and ready to receive coatings and finish coats as specified in the applicable Sections of Division 09 – Finishes.

E. Sheet steel shall be cold rolled or hot rolled carbon sheet steel conforming to ASTM Standard Specification for Steel, Carbon, Cold Rolled Sheet, Commercial Quality, Designation A36 or ASTM Standard Specification for Steel, Carbon (0.15 maximum, percent), Hot Rolled Sheet and Strip, Commercial Quality, Designation A569, as appropriate.

F. Steel pipe shall conform to ASTM Standard Specifications for Pipe, Steel, Black and Hot Dipped, Zinc Coated, Welded and Seamless, Designation A53.

2.02 GALVANIZING

A. Items of miscellaneous iron work and steel work indicated on the Drawings or specified to be galvanized shall be zinc coated by the hot dip process in conformity with ASTM Standard Specification for Zinc (hot galvanized) Coatings on Products Fabricated from Rolled, Pressed, and Forged Steel Shapes, Plates, Bars, and Strip, Designation A123-78; or ASTM Standard Specifications for Zinc Coating (hot-dip) on Iron and Steel Hardware, Designation A153-78, as appropriate. Galvanizing is specified under Article 3.04, "Hot-Dip Galvanizing."

2.03 ALUMINUM

A. All structural and miscellaneous aluminum shall be Alloy 6061 (Alloy 6063 for extrusions), Temper T6, unless otherwise noted, indicated, or accepted by the OWNER. Where welding is necessary in fabrication, is shall be done in conformance with Section 7 "Welded Construction" of Specification for Aluminum Structures, referenced hereinbefore.

B. Aluminum work shall be fabricated of plates, rolled, or extruded shapes, sheets or casting conforming (unless otherwise permitted or indicated) to the following alloy and temper designations of the Aluminum Association:
   1. Structural rolled or extruded shapes 6061-T6
   2. Extruded shapes 6063-T5
   3. Plates 6061-T6
   4. Gratings (bearing bars) 6061-T6 (crimp bars) 6063-T6
   5. Castings 214
   6. Sheets 3003-F
   7. Bolts and nuts 2024-T4
   8. Pipe Railing 6063-T6

C. Aluminum surfaces which after erection would otherwise be in contact with concrete or brick masonry or with mortar, shall be protected from contact therewith by a coat of bitumastic super service black manufactured by the Koppers Company, Inc. Pittsburgh, PA; Tarmastic 100 manufactured by Porter Coating Division, Porter Paint Company, North Kansas City, MO; or an ENGINEER-approved equal. Areas where the paint has been damaged by abrasion or other cause shall be cleaned and repainted as directed so that the aluminum will have a complete protective paint film when brought into contact with the material against which it is being protected. Before application of coating, the surface shall be cleaned of all dirt, heavy deposits of grease or oil and other foreign

DRAFT

substances and shall be immersed in or swabbed with an acceptable solvent. Next the surfaces shall be rinsed with clear water and thoroughly dried.

D. Attention of the Specifications in regard to protection against electrolysis where aluminum is to be used in conjunction with dissimilar metals is required.

E. Where a shop coating of methacrylate lacquer has been specified on aluminum work to protect the surface from stain, the protective coating of lacquer worn off during handling or erection shall be replaced in the field by a new coating of lacquer of the same type.

F. During construction, care shall be taken to prevent damage to the aluminum work from splashing or the accumulation of paint, concrete, mortar, or other similar materials.

2.04 STAINLESS STEEL

A. Stainless steel shapes shall be ANSI Type 304 or 316 in accordance with ASTM A276. Miscellaneous bar stock products such as pipe straps shall be 300 Series stainless steel. Anchor bolts, nuts and washers shall be ANSI Series 300 stainless steel.

2.05 FASTENERS

A. Bolts, Nuts and Washers:
   1. Structural bolts shall be ANSI Type 300 Series stainless steel in accordance with ASTM F593, with ASTM F594 nuts. All bolts shall have hexagonal heads.
   2. Anchors and bolts including nuts and washers shall be provided where necessary for securing the work in place. Sizes, types and spacings of anchors and bolts not indicated or specified otherwise shall be as necessary for their purposes. Anchor bolts and anchors for the erection of structural steel shall be shall be stainless steel Type 316.
   3. Bolts and nuts shall be installed with anti-seize per Loctite, or ENGINEER-approved equal (or thread locker to be confirmed with WWTP Operations).

B. Expansion Anchors (In Concrete):
   1. Expansion anchors shall be of three (3) types:
      a. Stainless steel wedge type.
      b. Self-drilling plated type with stainless steel bolt and stainless-steel washer.
      c. Type of expansion anchor desired shall be noted on Drawings.
   2. Stainless steel wedge type anchors shall be ITW Ramset/Red Head or ENGINEER-approved equal of Type 316 stainless steel. Anchors shall meet or exceed latest Government GSA Federal Specifications FF-S-325, Group II, Type 4, Class 1. Anchor shall be used with 300 series stainless steel bolt and washer.
   3. Self-drilling plated anchors shall be ITW Ramset/Red Head of ENGINEER-approved equal. Anchors shall meet or exceed latest Government GSA Federal Specification FF-S-325, Group III, Type 1. Self-drilling anchors shall be electro-deposited zinc plated and chromate dipped, to meet or exceed the requirements of the latest Federal Specification QQ-Z-325, Type II, Class 3. Cutting teeth shall have minimum hardness of 82 Rockwell A scale.
   4. Steel expansion anchors shall be installed in accordance with manufacturer's recommendations.
   5. Self-drilling expansion anchors shall be installed in accordance with manufacturer's recommendations. To insure full development strength, all self-drilling expansion anchors shall be expanded over the plug in the final set, by using a bolt screwed into the female threads and impacted by hand with a suitable hammer. The final set shall not be accomplished by using the drilling tool.
   6. After installation, pull-out tests by the anchor manufacturer's representative may be requested by the ENGINEER. If so, the ENGINEER will specify the number and location of the tests.

DRAFT

2.06 MISCELLANEOUS ITEMS

A. Items of miscellaneous metal work not particularly specified hereinafter shall be of the shape, size, materials, and details indicated on the Drawings or suitable for the purpose intended.

2.07 LOOSE LINTELS

A. Furnish all loose lintels as indicated on the Drawings or required by the Work. The loose lintels shall be fabricated from structural steel shapes and plates. All loose lintels shall be shop primed and ready to receive coatings as specified in the applicable Sections of Division 09 – Finishes.

2.08 SLEEVES AND INSERTS

A. Attention is directed to the requirements of the Specifications regarding sleeves and inserts.

2.09 ALUMINUM PIPE RAILING

A. The aluminum pipe railing shall be the product of company normally engaged in the manufacture of pipe railing. Railing shall be shop assembled in lengths not to exceed 24 feet for field erection.

B. Handrails and stair rails shall be designed to withstand a 200-pound concentrated load applied in any direction at any point on the top rail. Handrails and stair rails shall also be designed to withstand a load of 50 pounds per foot applied horizontally to the top rail. The 200-pound load will not be applied simultaneously with the 50-pounds-per-foot load. In addition, the handrails shall be designed to withstand a load of 100 pounds per foot horizontal load. The 100-pounds-per-foot vertical load does not apply to stair rails.

C. The manufacturer shall submit calculations to the ENGINEER for approval. Testing of base castings or base extrusions by an independent lab or manufacturer's lab (if manufacturer's lab meets the requirements of the Aluminum Association) will be an acceptable substitute for calculations. Calculations will be required for approval of all other design aspects.

D. Post spacing shall be a maximum of 8 feet 0 inches, unless noted otherwise. Posts and railings shall be a minimum of 1½ inches Schedule 40 aluminum pipe alloy 6063-T6, ASTM B429 or ASTM B221. The handrail manufacturer shall show that their posts are of adequate strength, the manufacturer may reduce the post spacing or add reinforcing dowels or may do both in order to meeting loading requirements.

E. The handrail shall be made of pipes joined together with component fittings. Samples of all components, bases, toe plate and pipe must be submitted for approval. Components that are glued at the joints will not be acceptable. Handrail and components shall be Kee Clamp, Inc., Golden Railings, Speed-Rail, or ENGINEER-approved equal.

F. Posts shall not interrupt the continuation of the top rail at any point along the railing, including corners and end terminators.

G. The midrail at a corner return shall be able to withstand a 200-pound load without loosening.

H. Expansion bolts shall be spaced 10 diameters apart and 5-diameter edge distance for not reduction in pullout strength. A safety factor of four shall be used on expansion bolt pullout values published by the manufacturer.

DRAFT

I. Toe plate shall conform to OSHA Standards. Toe plate shall be a minimum of 4 inches high and shall be an extrusion that attaches to the posts with clamps, which allow for expansions and contraction between posts. Toe plates shall be set ¼-inch above the walking surface. Toe plates shall be provided on handrails as required by OSHA and/or as shown on Drawings. Toe plates shall be shipped loose in stock lengths with pre-manufactured corners for field installation.

J. Openings in the railing shall be guarded by a self-closing gate. Safety chains shall not be used unless specifically shown on the Drawings.

K. Finish shall be Aluminum Association M10-C22-A41 (215-R1). The pipe shall be plastic wrapped. The plastic wrap is to be removed after erection.

L. Aluminum surfaces in contact with concrete, grout or dissimilar metals will be protected with a coat of bituminous paint, (two (2) coats of Federal Specification TT-V51F Asphalt Varnish), mylar isolators, or other approved material.

2.10 PLATE COVERS AND FRAMES

A. The plate covers and frames shall be the sizes indicated on the Drawings. The frames shall be aluminum angles of the sizes indicated with welded strap anchors for securing the frames in the concrete. The frames shall have mitered corners with welded joints ground smooth where exposed.

B. The covers shall be ¼-inch thick aluminum tread plate having an acceptable nonskid surface and reinforced with aluminum bars welded to the underside of the cover in accordance with the details. Plate covers shall be capable of supporting a uniform superimposed load of 100 psf for the span with a deflection of less than ¼-inch based on allowable fiber stress of 16,000 psi. The covers shall be made to fit neatly and accurately in the frames.

C. Hinged covers shall be furnished with heavy-duty stainless steel, plain bearing hinges with stainless steel pins. The hinges shall be fastened to the covers and frames with stainless steel machine screws. The hinged covers shall be provided with flush lift handles fabricated from ½-inch diameter aluminum rod, alloy 6061-T6511.

D. A single leaf of hinged plate covers shall be no greater than 3 feet x 5 feet in size.

E. Removable plate covers shall have 1-inch diameters finger holes to facilitate removal. All edges of holes cut in the plate covers shall be ground smooth.

F. Removable plate covers shall be no greater than 14 square feet in size with the longer dimension no greater than 7 feet.

G. Gasket plate covers shall have continuous compressible neoprene seals between the cover and the frame at the perimeter. The covers shall be secured to the frames with countersunk, flathead, stainless steel machine screws spaced approximately 6 inches on centers.

2.11 GUARD CHAINS

A. Removable guard chains at openings in aluminum pipe railings shall be fabricated from wrought, non-welded aluminum chain having 12 links per foot. The chains shall be secured to aluminum eyes bolted or welded to pipe stanchion at one end of the opening. The free ends of the chains shall be provided with hooks formed from ¼-inch diameter solid aluminum rod for attaching to similar eyes in the pipe stanchion at the opposite end of the opening.

DRAFT

2.12 CAST IRON WHEEL GUARDS

A. Wheel guards where indicated on the Drawings shall be cast iron guards of the sizes and types indicated on the Drawings as herein specified and shall be manufactured by Neenah Foundry Company, Neenah, WI; Flockhart Foundry Company, Neward, NJ; McKinley Iron Work, Fort Worth, TX or ENGINEER-approved equal. Wheel guards shall be given one shop coat of rust inhibitive paint before shipment.

B. Wheel guards shall be heavy-duty concrete fill type, cast iron wheel guards, No., R-4983-C manufactured by Neenah Foundry Company Type 706A manufactured by Flockhart Foundry Company or ENGINEER-approved equal. The guards shall be set 2 inches into the pavement and shall be bolted to the masonry walls. The guards shall be filled with Class A concrete and the top of the fill sloped at a 15-degree angle from the building.

2.13 CAST ALUMINUM NOSINGS

A. The cast aluminum nosing shall be abrasive cast aluminum nosing securely fastened with stainless steel, flat head bolts and wing anchors set into the fresh concrete. The nosings shall be the products of Wooster Products, Inc., Wooster, OH; American Abrasive Metals Company, Irvington, NJ; Andco Building Specialties or ENGINEER-approved equal.

2.14 ACCESS DOORS

A. Doors shall be flush panel access doors as manufactured Inryco, Inc., Milwaukee, WI; Karp Associates, Inc., Maspeth, NY; BOICO, Birmingham, AL or ENGINEER-approved equal. Doors and frames to be steel with concealed hinge and flush screwdriver operated locks.

2.15 CASTINGS

A. All miscellaneous iron castings shall be of best quality materials free from flaws and unsightly defects. Gray cast iron shall be ASTM A48 Class 35 (35,000 psi tensile strength). Furnish and install in the locations indicated casting of the type and size shown on the Drawings.

2.16 CARPENTERS IRON WORK

A. Furnish bent or otherwise custom fabricated bolts, plates, anchors, hangers, dowels and other miscellaneous steel and iron shapes as required for framing and supporting woodwork and for anchoring or securing woodwork to concrete or other structures. Manufacture or fabricate items of sizes, shapes and dimensions required. Furnish malleable iron washers for head and nuts which bear on wood structural connections, elsewhere, furnish steel washers.

2.17 MISCELLANEOUS FRAMING AND SUPPORTS

A. Provide miscellaneous steel framing and supports as required to complete the work. Fabricate miscellaneous units to the sizes, shapes and profiles shown or if not shown, of the required dimensions to receive adjacent grating plates, louvers, vents, grilles, screens, or other work to be retained by the framing. Except as otherwise shown, fabricate from structural steel shapes and plates and steel bars of all welded construction using mitered corners, welded brackets and splice plates and a minimum number of joints for filed connection. Cut, drill, and tap units to receive hardware and similar items to be anchored to the work.

2.18 SHOP PAINTING

A. Painting of miscellaneous ferrous metal work is specified in the applicable Sections of Division 09 – Finishes.

DRAFT

PART 3 – EXECUTION

3.01 ANCHORAGE ITEMS

A. Furnish all bolts, nuts, shims, pins, screws, nails, and other anchors, which, may be required by the Drawings or job conditions to secure all items permanently in place whether or not specifically called for or shown on the Drawings.

3.02 FABRICATION AND INSTALLATION OF METAL WORK

A. General: All metal items shall be accurately fabricated and erected with exposed joints close fitting. All joints shall be such of character and so assemble that they will be as strong and rigid as adjoining sections. Joints shall be located where least conspicuous. Items shall have smooth finished surfaces except where otherwise shown or specified.

B. Built-In Items: Members or parts to be built-in with masonry or concrete shall be in a form affording a suitable anchorage or shall be provided with approved anchors, expansion shields or other approved means of securing members.

C. Dissimilar Metals: Ferrous and non-ferrous metals shall be insulated at all contacts with felt washer, mylar strips or sheets, bitumastic paints, or other acceptable means. All aluminum surfaces in contact with concrete shall be coated with two (2) coats of Federal Specification TT-V51F Asphalt Varnish or ENGINEER-approved equal.

D. Connections:
1. All required anchors, couplings, bolts, and nuts required to support miscellaneous metalwork should be furnished and installed as required.
2. Weights of connections and accessories shall be adequate to safely sustain and withstand stresses and strains to which they will be normally subjected.
3. Connections shall be bolted except where welding is called for in the Drawings. Bolts shall be ¾-inch diameter unless noted or required otherwise.

E. Expansions Anchors:
1. Expansions anchors shall be installed in holes drilled into concrete with carbide tipped drill bits conforming to ANSI B94.12-1977, using a rotary impact hammer for ½-inch and 3/8-inch anchors. Hole depth shall equal or exceed the anchor manufacturer's minimum recommended embedment. Should hole depth equal anchor manufacturer's minimum recommended embedment, hole shall be cleaned out by air pressure. The minimum hole depth shall be per anchor manufacturer's recommendations. Assure hole is perpendicular and conforms in size to anchor manufacturer's recommendation.
2. Washer and nut shall be assembled on anchor so that the top of the nut is flush with the top of the anchor. Then the anchor shall be driven into the hole through the work until the washer bears against the work. The anchor shall be expanded in accordance with the manufacturer's recommendations.
3. General: Provide stainless steel fasteners for exterior use or where built into exterior walls. Select fasteners for the type, grade and class required.
4. Bolts and Buts: Regular hexagon head type, stainless steel, Grade A (within tankage)
5. Lag Bolts: Stainless steel (within tankage)
6. Machine Screws: Stainless steel
7. Wood Screws: Stainless steel
8. Plain Washers: Stainless steel
9. Masonry Anchorage Devices: Stainless steel
10. Toggle Bolts: Stainless steel (within tankage)
11. Lock Washers: Stainless steel

DRAFT

12. Bolts, buts, lags, toggle bolts, and lock washers above and exterior to tankage shall be stainless steel

3.03 WELDING

A. Welding procedures, welders, and welding operators, both for shop and field welding, shall be qualified and certified in accordance with the requirements of AWS D1.1 “Welding in Building Construction” of the American Welding Society. Manufacturer’s and fabricator’s shop drawings shall clearly show complete information and all field welding shall be performed in conformance with this information regarding location, type, size, and length of all welds, all in accordance with AWS A2.0 “Standard Welding Symbols” of the American Welding Society. Special conditions shall be fully explained by notes and details.

3.04 HOT-DIP GALVANIZING

A. All fabrication, galvanizing and repair shall comply with ASTM Standards as they apply in accordance with the publication “ASTM Standard for Materials Hot-Dip Galvanized after Fabrication” issued by American Hot-Dip Galvanizers Association, Inc. In particular, the following specific standards shall apply to work under this contract: ASTM A123, A153, A384, A385, A563 and A780.

B. Items to be galvanized shall be fabricated in accordance with ASTM A385.

C. Galvanizing for fabricated steel items, shall conform to ASTM A123 and shall be done after fabrication. Steel assemblies shall be subject to safeguarding from warpage and distortion during galvanizing per ASTM A384.

D. Upon field erection, any damage measuring more than 1/10-inch wide shall be repaired with a zinc-based solder or zinc-rich paint in accordance with ASTM A780. Marred, damaged, or uncoated areas 4 square inches and less shall be patched with a zinc-based solder to a thickness of 5 milligrams; areas greater than 4 square inches shall be patched with an organic zinc-rich paint to a dry film, Devcon Z, LPS Instant Cold Galvanized or ENGINEER-approved equal. The resident project representative shall determine the extent of damage, which would require recoating.

E. Items subject to distortion during transit, such as thin, curved members, etc., shall be stacked on edge and/or blocked to prevent radius change or other distortion while in transit to and from the galvanizing plant.

3.05 PAINTING

A. Painting of miscellaneous ferrous metal work shall be in accordance to the Contract documents.

3.06 MISCELLANEOUS METAL FABRICATIONS

A. Rough Hardware:
1. Furnish bent or otherwise custom fabricated bolts, plates, anchors, hangers, dowels, and other miscellaneous steel and iron shapes as required for framing and supporting woodwork, and for anchoring or securing woodwork to concrete or other structure. Straight bolts and other stock rough hardware items shall be in accordance with these Specifications.

B. Fabricate items to sizes, shapes and dimensions required. Furnish malleable iron washers for heads and nuts, which bear on wood structural connections; elsewhere, furnish steel washers.

DRAFT

C. Miscellaneous Steel Trim:
   1. Provide shapes and sizes for profiles shown. Except as otherwise indicated, fabricate units from structural steel shapes and plates and steel bars, with continuously welded joints and smooth exposed edges. Use concealed field splices wherever possible. Provide cutouts, fittings and anchorages as required for coordination of assembly and installation with other work.
   2. Galvanize miscellaneous steel trim where indicated.

END OF SECTION

DRAFT

SECTION 05 5213 – PIPE AND TUBE RAILINGS

PART 1 – GENERAL

1.01 THE REQUIREMENT

A. Furnish and install handrails in accordance with these Specifications and Contract Documents.

1.02 SUBMITTALS

A. Submittals shall be furnished in accordance with Section 01 3300 – Submittal Procedures.

PART 2 – PRODUCTS

2.01 MANUFACTURERS

A. Handrails manufacturer shall be Engineer approved.

2.02 MATERIALS

A. Rolled Plates and Shapes: ASTM A36

B. Steel Pipe: ASTM A53, Grade B, Type E or S, Schedule 40 unless otherwise noted.

C. Tubing: Cold formed shapes per ASTM A500 or hot-formed shapes per ASTM A501. Wall thickness for either category shall be in accordance with the thickness and tolerances specified in ASTM A501.

D. Bolts: ASTM A307, Grade A, with hexagon heads or nuts where exposed in the finish work, with flat heads for countersinking where flush bolting is specified or required.

E. Plastic Cover: Polyethylene Thermoplastic (HDPE) tubes having ultra-violet resistance and anti-static properties, nominal thickness 0.250 inches. Color shall be OSHA yellow unless otherwise noted. Size covers for pipe diameters.

F. Grout: Non-shrink, nonmetallic type per CE CRD-621 and ASTM C1107. Grout shall be premixed and factory-packaged. Formulation shall be non-staining, noncorrosive, nongaseous properties. Provide grout as recommended by grout manufacturer for interior or exterior application.

G. Anchor Bolts:
   1. Expansion Anchors: Threaded stud type with two independent expansion anchor wedges per Fed. Spec. FF-S-325, Group II, Type 4, Class 1 for concrete expansion anchors. Stud, wedges, washer, and nut shall be zinc-plated steel.
   2. Adhesive Anchor System: Self-contained glass vial containing pre-measured amounts of quartz sand, hardening agent, and polyester resin. Studs shall be threaded rod conforming to ASTM A307 with compatible washers and hexagon nuts furnished by the anchor manufacturer.

H. Concrete: Provide 3,000 psi, 28-day strength concrete unless noted otherwise. ASTM C94, slump of 4 inches ± 1 percent.
   1. Exterior Concrete: Include air-entrainment or 6 percent ± 1 percent.
   2. Cement: ASTM C150, Type 1.
   3. Aggregates: ASTM C33 normal weight, natural coarse aggregate, maximum ¾" diameter.
   4. Water: Potable

DRAFT

2.03 HAND RAIL SYSTEM

A. Structural Performance of Handrails and Railings: Provide handrails and railings capable of withstanding the following structural loads based on 2000 international building code, without exceeding allowable design working stresses of materials for handrails, railings anchors, and connections:
   1. Top Rail of Guards and hand rails: Capable of withstanding the following loads as indicated
      a. Concentrated load of 200 lbf (890 N) applied at any point and in any direction.
      b. Uniform load of 50 lbf/ft: (730 N/m) applied in any direction at the top and to transfer this load through the supports to the structure.
      c. Concentrated and uniform loads above need not be assumed to act concurrently.
   2. Intermediate rails, balusters, and filler panels: Capable of withstanding the following loads applied as indicated:
      a. Applied normal load of 50 pounds (0.22kN) on an area not to exceed 1 square foot including openings and space between rails.
      b. Reactions due to this loading are not required to be superimposed with the proceeding section.

B. Provide Handrail system complying with the following requirements
   1. Sleek system with internal connectors.
      a. Rails and Posts
         1) Extruded Aluminum Pipe ASTM B429, Aluminum alloy 6061-T6. Finish AA M10C22A41. Posts – 1½ inch IPS Schedule 80. Rails – 1½ inch IPS Schedule 40.
         2) Steel pipe scheduled 40. Posts and rails 1¼ inch, with high-density polyethylene thermoplastic coating, nominally 0.125 inch thick.
      b. Mechanical Connectors
         1) Post and handrail connector fittings
         2) Machined from solid aluminum bar stock of alloy 6063-T6 (ASTM B221) or austenitic stainless steel bar stock of alloy 303 (ASTM A582) or machined castings of high tensile aluminum-magnesium alloy 535.0 (ASTM B26) or castings from high purity ingot 535.2 (ASTM B179)
         3) Anodize finish 0.7 mil minimum thickness.
         4) Design – Fittings shall be the type which fastens externally with anodized aluminum, tubular rivet nut with socket head cap screw and stainless steel lock washer. Internal connections by means of an internal double tang, expanded by an internal/external, reverse knurl, cup point, hexagon socket set screw.
      c. Flanges
         1) Sand cast from high tensile aluminum-magnesium alloy 535.0
         2) Supplied with anodize finish – 7-mil minimum thickness.
         3) Design – Fittings shall be the type, which fastens directly to the pipe by means of an internal/external, reverse knurl, cup point, hexagon socket set screw.
         4) All anchoring hardware shall be 300 series stainless steel.
      d. Fasteners
         1) All fasteners to be 302 or 304 stainless steel.

DRAFT

PART 3 – EXECUTION

3.01 INSTALLATION

A. Installation Options
   1. Core
   2. Base Mount

END OF SECTION

DRAFT

SECTION 05 5300 – METAL GRATINGS

PART 1 – GENERAL

1.01 THE REQUIREMENT

A. Furnish and install metal bar grating (solid top or open) were shown on the Drawings and in accordance with the Contract Documents.

1.02 REFERENCES

A. Design, fabrication, and installation of grating shall be in accordance with Standard Specifications and Voluntary Code of Practice in Metal Bar Grating Manual, most current published edition, published by National Association of Architectural Metal Manufacturers, Chicago, IL (ANSI A-202.1).

B. ASTM A36

C. ASTM A67

D. ASTM A569

E. ASTM B210

F. ASTM B221

G. ASTM 6061-T6 or 6063-T6

H. Federal Specification TT-V-51F

1.03 SUBMITTALS

A. Submittals shall be furnished in accordance with Section 01 3300 – Submittal Procedures.

PART 2 – PRODUCTS

2.01 DESIGN CRITERIA

A. Support minimum uniform live load of 250 psf

B. Deflection not to exceed span of bearing bars (in inches) divided by 240

C. Meet H20 loading when noted in Contract Documents.

2.02 BASIC DESIGN

A. The gratings shall be 2½-inch metal that shall fit into the area shown on the mechanical plan.

B. The gratings shall be secured in place by at least four (4) acceptable removable-type fasteners per grating panel. The ends of each grating section shall be banded with bearing bars.

C. All openings for fixtures or pipes, which require the cutting of three main bars or more, shall be finished in a similar manner as the ends.

D. Gratings in concrete shall have coated aluminum or reinforced fiberglass angle frames with mitered corners and with welded joints ground smooth where exposed. The frames shall have welded anchors and shall be set in the concrete as it is placed.

E. Bearing and cross bars shall be flush at surface.

F. All free and supported bar ends around perimeter and around cutouts shall be banded.

G. Provide removable sections of grating with suitable end bearing where noted on the Drawings or otherwise required.

DRAFT

2.03 MATERIAL

A. Aluminum
   1. Bear Bars: ASTM B221, 6061-T6 or 6063-T6
   2. Cross Bars: ASTM B221 (extruded) or ASTM B210 (drawn)
   3. Maximum Fiber Stress: 12,000 psi
   4. Steel Fasteners: Stainless steel, when used with aluminum grating
   5. Finish: Aluminum mill finish (as fabricated)
   6. Anchors: Stainless Steel Saddle clips of manufacturer's standard design

B. Carbon Steel
   1. Bear Bars: ASTM A569
   2. Cross Bars: ASTM A569
   3. Maximum Fiber Stress: 18,000 psi
   4. Steel Fasteners: Stainless steel
   5. Finish: Mill finish (as fabricated)
   6. Anchors: Stainless Steel Saddle clips of manufacturer's standard design

C. Heavy-Duty Carbon Steel
   1. Bear Bars: ASTM A36
   2. Cross Bars: ASTM A36
   3. Maximum Fiber Stress: 20,000 psi
   4. Steel Fasteners: Stainless steel
   5. Anchors: Stainless Steel Saddle clips of manufacturer's standard design

D. Stainless Steel (304SS)
   1. Bear Bars: ASTM A167
   2. Cross Bars: ASTM A167
   3. Maximum Fiber Stress: 20,000 psi
   4. Steel Fasteners: Stainless steel
   5. Finish: Mill finish (as fabricated)
   6. Anchors: Stainless Steel Saddle clips of manufacturer's standard design

PART 3 – EXECUTION

3.01 INSTALLATION

A. CONTRACTOR shall provide submittals in accordance with Section 01 3300 – Submittal Procedures showing the layout of the grating where grating is called out in the Contract Documents.

B. Grating shall be set with full and uniform end bearing to preclude rocking; do not use wedges or shims.

C. Provide 1-inch minimum bearing with maximum erection clearance of ¼-inch all around.

D. Anchor grating with saddle clips in accordance with manufacturer's recommendations or as detailed on the Drawings.

E. Provide cutouts for the passage of pipe, valve and equipment operators, conduit, stems and similar work; cutouts for circular obstructions shall be at least 2 inches larger in diameter than the obstruction.

F. Protect all surfaces of angles and frames to be in contact with concrete or dissimilar metals with two (2) coats of Federal Specification TT-V-51F Asphalt Varnish.

END OF SECTION

DRAFT

SECTION 06 7413 – FIBERGLASS REINFORCED PLASTICS GRATING

PART 1 – GENERAL

1.01 SCOPE OF WORK

A. The CONTRACTOR shall furnish, fabricate (where necessary), and install all fiberglass reinforced plastic (FRP) items, with all appurtenances, accessories and incidentals necessary to produce a complete, operable and serviceable installation as shown on the Contract Drawings and as specified herein, and in accordance with the requirements of the Contract Documents.

B. The CONTRACTOR shall furnish a complete structural design submittal, as part of the deferred submittal process. The structural design of the grating shall be provided by a registered engineer in the State of the Project.

1.02 REFERENCES

A. The publications listed below (latest revision applicable) form a part of this specification to the extent referenced herein. The publications are referred to within the text by the designation only.

1. AMERICAN SOCIETY FOR TESTING AND MATERIALS (ASTM) Test Methods:
   a. ASTM D635 Rate of Burning and/or Extent and Time of Burning of Self-Supporting Plastics in a Horizontal Position
   b. ASTM E84 Surface Burning Characteristics of Building Materials

1.03 CONTRACTOR SUBMITTALS

A. The CONTRACTOR shall furnish shop drawings of all fabricated gratings and accessories in accordance with the provisions of this Section.

B. The CONTRACTOR shall furnish manufacturer's shop drawings clearly showing material sizes, types, styles, part or catalog numbers, complete details for the fabrication and erection of components including, but not limited to, layout, location, lengths, type and sizes of fasteners, clip angles, member sizes, and connection details.

C. The CONTRACTOR shall submit the manufacturer's published literature including structural design data, structural properties data, grating load/deflection tables, corrosion resistance tables, certificates of compliance, test reports as applicable, concrete anchor systems and their allowable load tables, and design calculations for systems not sized or designed in the contract documents.

D. The CONTRACTOR may be requested to submit sample pieces of each item specified herein for acceptance by the DESIGN/BUILDER as to quality and color. Sample pieces shall be manufactured by the method to be used in the WORK.

E. CONTRACTOR's Grating Manufacturer shall provide structural calculations for the proposed FRP grating system signed and stamped by a registered civil engineer in the State of the Project. The provided structural calculations shall cover all supplied structural members specifically the grating material, and its supports and anchors bolts.

1.04 QUALITY ASSURANCE

A. All items to be provided under this Section shall be furnished only by manufacturers having a minimum of ten (10) years' experience in the design and manufacture of similar products and systems. Additionally, if requested, a record of at least five (5) previous, separate, similar successful installations in the last five (5) years shall be provided.

B. Manufacturer shall offer a 3-year limited warranty on all FRP products against defects in materials and workmanship.

C. Manufacturer shall be certified to the ISO 9001-2008 standard.

DRAFT

D. Manufacturer shall provide proof of certification from at least two other quality assurance programs for its facilities or products (DNV, ABS, USCG, AARR).

1.05 PRODUCT DELIVERY AND STORAGE

A. Delivery of Materials: Manufactured materials shall be delivered in original, unbroken pallets, packages, containers, or bundles bearing the label of the manufacturer. Adhesives, resins and their catalysts and hardeners shall be crated or boxed separately and noted as such to facilitate their movement to a dry indoor storage facility.

B. Storage of Products: All materials shall be carefully handled to prevent them from abrasion, cracking, chipping, twisting, other deformations, and other types of damage. Adhesives, resins and their catalysts are to be stored in dry indoor storage facilities between 70 and 85 degrees Fahrenheit (21°C to 29°C) until they are required.

PART 2 – PRODUCTS

2.01 MANUFACTURER

A. McNichols Co. Inc.,

B. Fibergrate

C. Or ENGINEER-approved equal.

2.02 GENERAL

A. All FRP items furnished under this Section shall be composed of fiberglass reinforcement and resin in qualities, quantities, properties, arrangements and dimensions as necessary to meet the design requirements and dimensions as specified in the Contract Documents.

B. Load/Deflection: Grating shall meet manufacturers published safe recommended loadings with deflection not to exceed the following:

a. Uniform distributed load over a 66" span: 50 lbs per square foot

b. Concentration load: 1000 lbs over 2.5 ft x 2.5 ft area

c. Deflection limit: L/200 or 3/16”

C. Fiberglass reinforcement shall be a combination of continuous roving, continuous strand mat, and surfacing veil in sufficient quantities as needed by the application and/or physical properties required.

D. Resins shall be VINYL ESTER with chemical formulations as necessary to provide the corrosion resistance, strength and other physical properties as required.

E. All finished surfaces of FRP items and fabrications shall be smooth, resin-rich, free of voids and without dry spots, cracks, crazes or unreinforced areas. All glass fibers shall be well covered with resin to protect against their exposure due to wear or weathering.

F. All pultruded structural shapes shall be further protected from ultraviolet (UV) light with 1) integral UV inhibitors in the resin and 2) a synthetic surfacing veil to help produce a resin rich surface.

G. All FRP products shall have a tested flame spread rating of 25 or less per ASTM E84 Tunnel Test. Gratings shall not burn past the 25 mm reference mark and will be classified HB per ASTM D635.

H. All grating clips shall be manufactured of Type 316SS (stainless steel).

2.03 PROTRUDED FRP GRATING

A. Grating components shall be high strength and high stiffness pultruded elements having a maximum of 70% and a minimum of 60% glass content (by weight) of continuous roving

DRAFT

and continuous strand mat fiberglass reinforcements. The finished surface of the product shall be provided with a surfacing veil to provide a resin rich surface which improves corrosion resistance and resistance to ultraviolet degradation. Bearing bars shall be interlocked and epoxied in place with a two piece cross rod system to provide a mechanical and chemical lock. Cross rods should be below the walking surface of the grating. Gratings with cross rods that are flush with the walking surface are excluded.

For covered grating, the grating cover plate shall be attached to the completed panel of grating by chemical means to ensure integral action of the panel and plate. The panel and grating shall be uniformly clamped together to ensure that all contact surface remain in contact throughout the curing process.

B. Non-slip surfacing: Grating shall be provided with a quartz grit bonded and baked to the top surface of the finished grating product. Covered grating shall have a gritted surface.

C. Fire rating: Grating shall be fire retardant with a tested flame spread rating of 25 or less when tested in accordance with ASTM E84. Manufacturer may be required to provide certification of ASTM E84 test on grating panels from an independent testing laboratory. Test data shall be from full scale testing of actual production grating, of the same type and material supplied on the project. Test data performed only on the base resin shall not be acceptable.

D. Resin system: The resin system used in the manufacture of the grating shall be VEFR. Manufacturer may be required to submit corrosion data from tests performed on actual grating products in standard chemical environments. Corrosion resistance data of the base resin from the manufacturer is not a true indicator of grating corrosion resistance and shall not be accepted.

E. Color: Gray or Yellow (to be selected by Owner)

F. Depth: 2" deep load bars with a tolerance of plus or minus 1/32".

G. Mesh Configuration of grating: 2" load bar spacing, 6" tie bar spacing on centers

2.04 GRATING FABRICATION

A. Measurements: Grating supplied shall meet the dimensional requirements and tolerances as shown or specified. The Contractor shall provide and/or verify measurements in field for work fabricated to fit field conditions as required by grating manufacturer to complete the work. When field dimensions are not required, contractor shall determine correct size and locations of required holes or cutouts from field dimensions before grating fabrication.

B. Layout: Each covered grating section shall be tied down with appropriate anchors or clips. Manufacturer to provide openings and holes where located on the contract drawings. Grating openings which fit around protrusions (pipes, cables, machinery, etc.) shall be field cut or, when shop fabricated, discontinuous at approximately the centerline of opening so each section of grating is readily removable.

C. Sealing: All shop fabricated grating cuts shall be sealed to provide maximum corrosion resistance. All field fabricated grating cuts shall be coated similarly by the contractor in accordance with the manufacturer's instructions.

D. Hardware: Type 316 stainless steel hold-down clips shall be provided and spaced at a maximum of four feet apart with a minimum of four per piece of grating, or as recommended by the manufacturer.

DRAFT

PART 3 – EXECUTION

3.01 INSPECTION

A. The fabricator shall give ample notice to Contractor prior to the beginning of any fabrication work so that inspection may be provided, if requested by Owner. The grating shall be as free, as commercially possible, from visual defects such as foreign inclusions, delamination, blisters, resin burns, air bubbles and pits. The surface shall have a smooth finish (except for grit top surfaces).

3.02 INSTALLATION

A. Contractor shall install gratings in accordance with manufacturer's assembly drawings. Fasten grating panels securely in place with hold-down fasteners as specified herein. Field cut and drill fiberglass reinforced plastic products with carbide or diamond tipped bits and blades. Seal cut or drilled surfaces in accordance with manufacturer's instructions. Follow manufacturer's instructions when cutting or drilling fiberglass products or using resin products; provide adequate ventilation.

END OF SECTION

DRAFT

06 8316 – FIBERGLASS REINFORCED PLASTIC (FRP) PANELNG AND COVERS

PART 1 – GENERAL

1.01 WORK INCLUDED

A. This specification outlines the requirements for the design, fabrication, and installation of a fiberglass reinforced plastic (FRP) paneling or covers for used in wastewater treatment applications.

1.02 STANDARDS, SPECIFICATIONS AND CODES

A. Tanks, vessels, and equipment shall be designed, fabricated, inspected and delivered in accordance with the latest issue of the following standards:
   1. ASTM D3982 – Contact Molded Glass-Fiber-Reinforced Thermoset Resin Duct
   2. ASTM D2583 – Indentation Hardness of Rigid Plastics by Means of a Barcol Impresser
   3. ASTM D2584 – Ignition Loss of Cured Reinforced Resins
   4. ASTM D2563 – Classifying Visual Defects in Glass Reinforced Plastic Laminate Parts
   5. ASME/ANSI B16.1 – Cast Iron Pipe Flanges and Flanged Fittings
   6. ASME/ANSI B16.5 – Pipe Flanges and Flanged Fittings
   7. Occupational Safety and Health Act (OSHA) – Standards for Health and Safety

1.03 SUBMITTALS

A. Submittals shall be made in accordance with Section 01 3300 – Submittal Procedures. In addition, the following specific information shall be provided:
   1. Detailed description of the laminate and the type of reinforcing to be used shall be included in the design calculations and the fabrication drawings. When equipment service is chemical laminate description shall be accompanied by a letter from the resin manufacturer stating that the laminate and type of reinforcing material used in the liner will provide suitable chemical resistance for the service conditions provided in the tank data sheet.
   2. When required by the customer, design calculations stamped by a registered Professional Engineer. Calculations shall include, but are not limited to, the following: Dead Loads, Live Loads, Environmental Loads (seismic, wind and snow loads as applicable), Anchor Design, and Configuration Details.
   3. Detailed shop drawings showing layout, quantity, weights and dimensions, general arrangement all nozzles and hatches, wall thickness, bill of material and construction materials.
   4. Upon request:
      a. Standard colors are white, grey and tan. Custom colors are available upon request.
      b. Fabricator's Engineer's resume showing 5+ years' experience.
      c. Fabricator's Quality Control Manager's resume showing 5+ years' experience.
      d. Written or electronic fabrication schedule.

PART 2 – PRODUCTS

2.01 DESIGN REQUIREMENTS

   1. Design Temperature: 180°F maximum
   2. Design Pressure: 0.0 to ±1.0 psig maximum
   3. Load Rating:
      a. Minimum live uniform load: 25 psf;
      b. Minimum concentrate man load: 1300 lbs over 12 ft (distributed over a 1 ft x 2' area).

DRAFT

c. Maximum Deflection: L/180
d. Span requirement: per plan
e. Wind load: per ASCE 7
f. Seismic load: per ASCE 7
g. Snow load: per ASCE 7

2.02 MATERIALS

A. Resin System:
1. Type: Isophthalic polyester or vinyl ester resin.
2. UV-resistant additives and fire retardant to ASTM E84 Class I (if exposed).

B. Reinforcement:
1. E or ECR-glass chopped strand mat and woven roving.
2. Core materials (if sandwich construction): PVC foam or balsa (sealed).

C. Gel Coat (Optional):
1. Thickness: 15–20 mils.
2. Color: White or light grey for UV reflectance.

2.03 FABRICATION

A. Method:
1. Hand lay-up or spray-up, per ASTM C582, D3982 and ASTM D4097.
2. Use vacuum bagging (infusion) if required to increase glass content and reduce void content.

B. Laminate Schedule (Typical):
1. Surface veil
2. 2 layers chopped strand or mat
3. Structural layers:
   a. Chopped strand or mat
   b. 24 oz. 5x4 bi-directional woven roving fabric
   c. 15 oz. uni-directional roving fabric
4. Core (optional)
   a. For ribs – foam or poly plastic
   b. For panels – balsa wood
5. Repeat symmetrical layering
6. Minimum thickness: 1/4" (6.4 mm), thicker at mounting and load points.

C. Curing:
1. At ambient temperature with post-cure as needed.

D. Fasteners:
1. Stainless steel 316 or FRP-embedded inserts.
2. Gasketed joints with EPDM or neoprene.

E. Access hatches:
1. Non-skid FRP, gasketed, hinged hatch with lockable handles
2. FRP frame
3. 316 SS fasteners

2.04 MANUFACTURER

A. NOV

B. Enduro Composites

DRAFT

C. Or Engineer-approved Equal

PART 3 – EXECUTION

3.01 Installation:

A. Follow the manufacturer’s equipment installation instruction guidelines.

END OF SECTION

DRAFT

SECTION 07 6100 – SHEET METAL ROOFING

PART 1 – GENERAL

1.01 SECTION INCLUDES

A. Sheet metal roofing, associated flashings, and underlayment

B. Counterflashings

C. Gutters and downspouts

D. Snow guards

E. Integral Fasçias

1.02 REFERENCE STANDARDS

A. American Architectural Manufacturer's Association (AAMA): www.aamanet.org:
   1. AAMA 621 - Voluntary Specifications for High Performance Organic Coatings on Coil Coated Architectural Hot Dipped Galvanized (HDG) & Zinc-Aluminum Coated Steel Substrates.
   2. AAMA 809.2 - Voluntary Specification Non-Drying Sealants.

B. American Society of Civil Engineers (ASCE): www.asce.org/codes-standards:
   1. ASCE 7 - Minimum Design Loads for Buildings and Other Structures.

C. ASTM International (ASTM): www.astm.org:

A653	Steel Sheet, Zinc-Coated (Galvanized) or Zinc-Iron Alloy-Coated (Galvannealed) by the Hot-Dip Process
A755	Steel Sheet, Metallic Coated by the Hot-Dip Process and Prepainted by the Coil-Coating Process for Exterior Exposed Building Products
A792/A792M	Steel Sheet, 55% Aluminum-Zinc Alloy-Coated by the Hot-Dip Process
A980	Steel, Sheet, Carbon, Ultra High Strength Cold Rolled
C645	Nonstructural Steel Framing Members
C754	Installation of Steel Framing Members to Receive Screw-Attached Gypsum Panel Products
C920	Elastomeric Joint Sealants
D1003	Haze and Luminous Transmittance of Transparent Plastics
D2244	Calculation of Color Differences from Instrumentally Measured Color Coordinates.
D4214	Evaluating Degree of Chalking of Exterior Paint Films
E283	Determining Rate of Air Leakage Through Exterior Windows, Curtain Walls, and Doors Under Specified Pressure Differences Across the Specimen.
E331	Water Penetration of Exterior Windows, Skylights, Doors, and Curtain Walls by Uniform Static Air Pressure Difference
E1646	Water Penetration of Exterior Metal Roof Panel Systems by Uniform Static Air Pressure Difference
E1680	Rate of Air Leakage Through Exterior Metal Roof Panel Systems
E1980	Calculating Solar Reflectance Index of Horizontal and Low-Sloped Opaque Surfaces

DRAFT

1.03 ADMINISTRATIVE REQUIREMENTS

A. Preinstallation Meeting: Convene one week before starting work of this section.

1.04 SUBMITTALS

A. See Section 01 3300 – Submittal Procedures.

B. Shop Drawings: Indicate material profile, jointing pattern, jointing details, fastening methods, flashings, terminations, and installation details.

C. Product Data: Provide data on metal types, finishes, and characteristics.

1.05 QUALITY ASSURANCE

A. Perform work in accordance with SMACNA Architectural Sheet Metal Manual requirements and standard details, except as otherwise noted.
   1. Maintain one copy on project site.

1.06 DELIVERY, STORAGE, AND HANDLING

A. Stack material to prevent twisting, bending, or abrasion, and to provide ventilation. Slope metal sheets to ensure drainage.

B. Prevent contact with materials that could cause discoloration or staining.

1.07 WARRANTY

A. Correct defective Work within a five year period after Date of Substantial Completion. Defective work includes degradation of metal finish.

PART 2 – PRODUCTS

2.01 SHEET MATERIALS

A. PBR Roof Panel
   1. PBR Panel: A through-fastened sidewall panel with 1-1/4 inch (32mm) ribs at 12 inches (305mm) on center. The area between the ribs is reinforced to minimize oil-canning. Reverse roll optional.
   2. Gauge: 26.
   3. Dimensions: 36 inches (915mm) wide by 1 1/4 inch (32mm) high.

B. Standing Seam Metal Roof
   1. Material: Steel conforming to ASTM A792.
      a. 24 Gauge: Yield strength 50,000 psi; with aluminum-zinc alloy coating conforming to ASTM A792, Class AZ50.
   2. Panel Width and Pattern:
      a. 12” or 16” panel width.
   3. Panel Seam Height: 1.25 - 2 inches.
   4. Panel Finish: Provide primer and top finish coat on exposed faces; provide primer and backer coat on concealed faces of panels.
      a. Panel Color: To be selected by Owner
   5. Seam Sealant: The factory applies high-grade butyl mastic sealant within the confines of the panel’s female leg, designed to seal against the adjacent male panel leg.
   6. Clips: Provide clip designed to allow panels to thermally expand and contract. Clip shall incorporate a self-centering feature to allow 1 inch of movement in both directions along panel length. Clip type shall be selected to meet positive and negative pressures as specified. Factory-installed sealant to provide continuity of seal at clip locations
   7. Bearing plate, if required, shall be designed with tabs to attached clip base to bearing plate on the ground, prior to installation.
   8. Fasteners: As recommended by manufacturer for performance indicated.

DRAFT

9. Trims and Flashings: Material, metal thickness, and finish to match panels. Profiles indicated in Drawings.
    a. Provide manufacturer's standard accessories and other items essential to completeness of standing seam roof installation.
    b. Panel Penetration Flashings: As recommended by panel manufacturer; designed to provide sufficient movement to prevent creation of points of fixity at penetrations.
10. Manufacturer: AEP Span-Lok, ABC Lokseam or ENGINEER-approved equal.

2.02 ACCESSORIES

A. Fasteners: Galvanized steel, with soft neoprene washers.

B. Underlayment: Synthetic non-asphaltic sheet, intended by manufacturer for mechanically fastened roofing underlayment without sealed seams.
    1. Type: Woven polypropylene with anti-slip polyolefin coating on both sides.
    2. Minimum Requirements: Comply with requirements of ICC-ES AC188 for non-self-adhesive sheet.
    3. Self Sealability: Passing nail sealability test specified in ASTM D1970.
    4. Flammability: Minimum of Class A, when tested in accordance with ASTM E108.
    5. Ultraviolet Resistance and Weatherability: Approved in writing by manufacturer for exposure to weather for minimum of 12 months.
    6. Low Temperature Flexibility: Passing test specified in ASTM D1970.
    7. Water Vapor Permeance: Vapor retarder; maximum of 0.1 perm, when tested in accordance with ASTM E96/E96M Procedure A (desiccant method).
    8. Fasteners: As specified by manufacturer and building code qualification report or approval, if any.

C. Underlayment: 6 mil polyethylene.

D. Slip Sheet: Rosin sized building paper.

E. Primer: Zinc molybdate type.

F. Protective Backing Paint: Zinc molybdate alkyd.

G. Sealant: As required by manufacturer.

H. Plastic Cement: ASTM D4586, Type I.

I. Eave Protection Sheet: Rubberized asphalt bonded to sheet polyethylene, 40 mil total thicknesses, with strippable treated release paper

J. Reglets: Surface mounted type, same material as roofing sheets; face and ends covered with plastic tape.

K. Solder: ASTM B32; Sn50 (50/50) type.

L. Splash Pads: Precast concrete type, of sizes and profiles indicated; minimum 3000 psi at 28 days, with minimum 5 percent air entrainment.

2.03 FABRICATION

A. Form sections true to shape, accurate in size, square, and free from distortion or defects.

B. Fabricate cleats of same material as sheet, same gage as roofing sheet.

C. Fabricate starter strips, interlockable with sheet.

D. Form pieces in longest practical lengths.

E. Hem exposed edges on underside ½-inch; miter and seam corners.

F. Form material with standing seams, except where otherwise indicated. At moving joints, use sealed lapped, bayonet-type or interlocking hooked seams.

DRAFT

G. Tin edges of copper sheet to be soldered. Solder shop formed metal joints. After soldering, remove flux. Wipe and wash solder joints clean. Weather seal joints.

H. Fabricate corners from one piece with minimum 18 inch long legs; seam for rigidity, seal with sealant.

I. Fabricate vertical faces with bottom edge formed outward 1/4 inch and hemmed to form drip.

J. Fabricate flashings to allow toe to extend 2 inches over roofing gravel. Return and brake edges.

K. Fabricate snow guards in accordance with SMACNA.

2.04 FACTORY FINISHING

A. Clear Anodized Finish: AAMA 611 AA-M12C22A41 Class I clear anodic coating not less than 0.7 mils thick.

B. Color Anodized Finish: AAMA 611 AA-M12C22A42/44 Class I integrally or electrolytically colored anodic coating not less than 0.7 mils thick.

C. Modified Silicone Polyester Coating: Pigmented Organic Coating System, AAMA 2603; baked enamel finish system.

D. Fluoropolymer Coating: High Performance Organic Finish, AAMA 2604; multiple coat, thermally cured fluoropolymer finish system.

E. PVDF (Polyvinylidene Fluoride) Coating: Superior Performance Organic Finish, AAMA 2605; multiple coat, thermally cured fluoropolymer finish system.

F. Color: As shown on drawings.

G. Primer Coat: On coated sheets, finish concealed side of sheet with primer compatible with finish system as recommended by finish system manufacturer.

PART 3 – EXECUTION

3.01 EXAMINATION

A. Inspect roof deck to verify deck is clean and smooth, free of depressions, waves, or projections, properly sloped to drains.

B. Verify deck is dry and free of snow or ice. Verify joints in wood deck are solidly supported and fastened.

C. Verify correct placement of wood nailers and insulation positioning between nailers.

D. Verify roof openings, curbs, pipes, sleeves, ducts, or vents through roof are solidly set, reglets are in place, and nailing strips located.

E. Verify roofing termination and base flashings are in place, sealed, and secure.

3.02 PREPARATION

A. Install starter and edge strips, and cleats before starting installation.

B. Install surface mounted reglets true to lines and levels. Seal top of reglets with sealant.

C. Back paint concealed metal surfaces and surfaces in contact with dissimilar metals with protective backing paint to a minimum dry film thickness of 15 mil.

D. Place eave edge metal flashings tight with fascia boards. Weather lap joints 2 inches and seal with plastic cement. Secure flange with nails per plan.

DRAFT

3.03 INSTALLATION - EAVE (ICE DAM) PROTECTION

A. Apply eave protection sheet in accordance with manufacturer's instructions.

B. Apply 4-inch-wide band of plastic cement over deck flange of eave edge flashings, and embed an 18-inch-wide strip of eave protection sheet. Place starter strip with eave edge flush with face of flashings. Secure in place. Lap ends minimum 6 inches.

C. Apply plastic cement at rate of approximately 1¼ gal/100 sq ft over starter strip.

D. Starting from lower edge of starter strip, lay additional 36-inch-wide strips of eave protection sheet in plastic cement, to produce a two ply membrane. Weather lap plies minimum 19 inches and nail in place. Lap ends minimum 6 inches. Stagger end joints of each consecutive ply.

E. Extend eave protection sheet minimum 4 feet upslope beyond interior face of exterior wall.

3.04 INSTALLATION - ROOFING

A. Apply underlayment over entire roof area.
   1. Apply in single layer laid perpendicular to slope; weather lap edges 2 inches and nail in place.
   2. Apply in 2 layers; the first layer laid parallel to slope with joints lapped 6 inches, second layer laid perpendicular to slope with 2-inch lapped edges.
   3. Minimize nail quantity.

B. Apply slip sheet in one layer, laid loose.

C. Cleat and seam all joints.

D. Use plastic cement for joints between metal and bitumen and for joints between metal and felts.

E. Provide formed metal pans for protrusions through roof. Fill pans watertight with plastic cement.

F. Provide gutters.

G. Solder lap joints. After soldering, wash metal clean with neutralizing solution, rinse with water.

H. Install snow guards as shown in drawings.

3.05 INSTALLATION – PBR ROOFING

A. Conform to SMACNA Architectural Sheet Metal Manual

B. Roof shall have a minimum pitch of 1/12.

C. Space seams as required.

D. Panel shall begin at gable end of roof opposite the prevailing rain-bearing wind.

E. Panel to be laid square the eave and ridge.

F. If end-lapping is required, the upper panel should lap over the lower panel. Place an overhang 2-3 inches to provide a drip edge (1 inch for gutter).

G. Butyl tape shall be applied above and beneath inside closure.

3.06 INSTALLATION - STANDING SEAM ROOFING

A. Conform to SMACNA Architectural Sheet Metal Manual

B. Space standing seams as required.

C. Lay sheets with long dimension perpendicular to eaves. Apply pans beginning at eaves.

DRAFT

D. Lock cleats into seams and flatten.

E. Stagger transverse joints of roofing sheets.

F. At eaves and gable ends, terminate roofing by hooking over edge strip.

G. Finish standing seams 1 inch high on flat surfaces

H. Finish standing seams 1/2 inch high on curved surfaces.

I. Bend up one side edge 1-1/2 inches and other edge 1-3/4 inches.

J. Make first fold 1/4 inch wide single fold and second fold ½-inch wide, providing locked portion of standing seam, 5 plies in thickness.

K. Fold lower ends of seams at eaves over at 45-degree angle.

L. Terminate standing seams at ridge and hips by turning down with tapered fold.

M. Form valleys of sheets not exceeding 10 feet in length. Lap joints 6 inches in direction of drainage.

N. Extend valley sheet minimum 6 inches under roofing sheets.

O. At valley, double fold valley and roofing sheets and secure with cleats spaced 18 inches on center.

3.07 INSTALLATION - BUILT-IN GUTTERS AND DOWNSPOUTS

A. Conform to SMACNA Architectural Sheet Metal Manual

B. Secure gutter lining to substrate with cleats spaced as shown in drawings.

C. Longitudinal joints not acceptable.

D. At roof edges, extend gutter lining under metal roofing 6 inches minimum and terminate in 3/4 inch folded edge secured by cleats. Hook lower end of roofing into lock strip to form 3/4 inch wide loose-lock seam.

E. Seal gutters watertight. Seal joint of gutter to drain.

F. Connect downspouts to downspout boots as shown in drawings.

G. Set splash pans under downspouts.

3.08 INSTALLATION - FLASHINGS

A. Conform to SMACNA Architectural Sheet Metal Manual

B. Insert flashings into reglets to form tight fit.
   1. Secure in place with lead wedges as required. Pack remaining spaces with lead wool.
   2. Seal flashings into reglets with sealant.

C. Secure flashings in place using concealed fasteners. Use exposed fasteners only where permitted.

D. Cleat and seam all joints.

E. Apply plastic cement compound between metal flashings and felt flashings.

F. Fit flashings tight in place. Make corners square, surfaces true and straight in planes, and lines accurate to profiles.

G. Seal metal joints watertight.

H. Solder metal joints for full metal surface contact. After soldering, wash metal clean with neutralizing solution and rinse with water.

DRAFT

3.09 PROTECTION

A. Do not permit traffic over unprotected roof surface.

END OF SECTION

DRAFT

SECTION 07 9200 – JOINT SEALANTS

PART 1 – GENERAL

1.01 THE REQUIREMENT

A. Furnish and install caulking and sealing as indicated these Specifications.

1.02 SUBMITTALS

A. Submittals shall be furnished in accordance with Section 01 3300 – Submittal Procedures.

B. Indicate manufacturers and brand names, colors available and locations where each will be used.

1.03 QUALITY ASSURANCE

A. Comply with requirements of the general conditions except as noted below.

B. Guarantee all work of this Section for a period of 2 years.

C. Guarantee all work against water leaks, air infiltration, sagging and pulling loose.

D. Guarantee shall include replacement and/or repair of other work damaged by water leakage in caulking and sealant work.

1.04 PRODUCT DELIVERY, STORAGE AND HANDLING

A. Deliver sealants in original sealed containers, each bearing manufacturer's name and product designation.

B. Do not retain at the job site material, which has exceeded the shelf life recommended by its manufacturer.

PART 2 – MATERIALS

2.01 SEALANTS

A. Types 1 to 4 Sealants: Polyurethane sealants conforming to Federal Specification TT-S-00227E Type II & ANSI A116.1.
   1. Type 1 Sealant: Two part 30-40 Shore A, non-sag
      a. Manufacture Sikaflex – 2C or ENGINEER-approved equal
   2. Type 2 Sealant: Two part, 35-45 Shore A, self-leveling.
   3. Type 3 Sealant: Two part, 20-35 Shore A, self-leveling.
   4. Type 4 Sealant: Two part, 20-35 Shore A, non-sag.

B. Type 5 Sealant: One component, elastomeric gun grade polyurethane sealant conforming to ASTM C920, Type S, Grade NS, Class 25. Use NT, M, A, G, and I Federal Specifications TT-S-00230C Type 2, Class A.
   1. Manufacturer: Sonneborn Sonolastic NP 1 or ENGINEER-approved equal.

2.02 ACCESSORIES

A. Primers: As specified by sealant manufacturer

B. Backup Materials: Closed cell polyethylene foam

C. Bond Breaker: Polyethylene film.

DRAFT

2.03 COLOR

A. Color for each location of use shall be as selected by OWNER and in accordance with the contract documents. Non-availability of a required color within a particular brand of otherwise approved material shall not act to relieve obligation to furnish material of required color and conforming to specifications.

B. Colors shall be selected to best blend with adjoining materials.

PART 3 – EXECUTION

3.01 LOCATIONS FOR SEALANT TYPES

A. Type 1 Sealant: Use for all interior and exterior construction, expansion joints, etc. associated with sealing the joints in the concrete tanks

B. Type 2 Sealant: Except as hereinafter specified, use for all interior and exterior horizontal joints subject to foot traffic.

C. Type 3 Sealant: Except as hereinafter specified, or where Type 1 sealant is required, use for all exterior horizontal joint.

D. Type 4 Sealant: Use for all exterior vertical surfaces.

E. Type 5 Sealant: Use for all interior work except where Type 1 sealant is required.

F. Caulk and seal all open joints, both interior and exterior; at junction of metal frames and walls; at other locations as noted on drawings.

G. Generally, expansion joints in exterior concreted flatwork on grade, curbs, and gutter for sitework, etc.; joint fillers will not require a joint sealant. Where sealant is noted on drawings for such joints, sealant shall be Type 1 and a bond breaker shall be installed along top of joint filler, full width of joint, to present contact between sealant and joint filler.

3.02 SEALANT AND JOINT DETAILS

A. Joint Sizes:
   1. Types 1, 2, 3 and 4 Sealants:
      a. Minimum joint size: ¼-inch x ¼-inch
      b. Depth to width ration of joint shall be a recommended by sealant manufacturer.
      c. Maximum width: Sealant manufacturer's recommended maximum.
   2. Type 4 Sealant: Maximum joint size shall be 3/8-inch x ½-inch.

B. Joints deeper than above shall have backup material installed to maintain specified depth.

C. With Types 1, 2, 3 and 4 sealants, a bond breaker shall be installed, unless backup material is used, so that sealant bonds only sides of joints.

3.03 SEALANT INSTALLATION

A. Carefully and thoroughly clean surfaces with cleaner, and in matter recommended by sealant manufacturer.

B. Prime surfaces where recommended by sealant manufacturer.

C. Apply sealants smoothly and uniformly. Mask surfaces each side of joints to protect adjacent surface and to form straight, even edges.

END OF SECTION

DRAFT

SECTION 08 1100 – METAL DOORS AND FRAMES

PART 1 – GENERAL

1.01 THE REQUIREMENT

A. Furnish and install steel doors, frames, and related items, complete, operable, including all finish hardware, and all appurtenant work, complete and operable, in accordance with the requirements of the Contract Documents.

1.02 REFERENCE SPECIFICATIONS, CODES AND STANDARDS

A. Commercial Standards:
   1. ASTM A366 – Specification for Steel, Carbon, Cold-Rolled Sheet, Commercial Quality
   2. ANSI A115 Series – Door and Frame Preparation
   3. UL – Underwriters Laboratories, Inc.

B. Trade Standards: National Association of Architectural Metal Manufacturers (NAAMM) or Steel Door Institute (SDI).

C. Manufacturers' Standards: In addition to the standards listed above, the steel doors and frames and their installation shall be in accordance with the manufacturer's published recommendations and specifications.

1.03 SUBMITTALS

A. Submittals shall be in accordance with Section 01 3300 – Submittal Procedures.

B. Shop Drawings: Shop drawings shall show details of the products and systems and connections to adjoining materials. Schedules showing sizes, types, and locations of door louvers and glass shall be submitted along with manufacturer's installation instructions.

1.04 PRODUCT DELIVERY, STORAGE AND HANDLING

A. Doors and frames shall be shipped and stored with temporary stiffeners and spacers in place to prevent distortion.

B. Doors and frames shall be delivered in original, unbroken packages, containers or bundles bearing the name of the manufacturer.

C. Doors and frames shall be carefully stored on wood blocking in an area that is protected from the elements. Storage shall be in a manner that will prevent damage or marring of finish.

PART 2 – PRODUCTS

2.01 MATERIALS AND FABRICATION - GENERAL

A. Shop Fabrication and Assembly: All steel doors and frames shall be shop fabricated and shop assembled, where possible. Temporary stiffeners, spacers, and other accessories necessary to facilitate handling and accurate erection shall be provided. After fabrication, all tool marks and other surface imperfections shall be filled and ground smooth.

B. Fire Rating and Labeling: Doors and frames specified or shown as fire-rated shall bear a UL label indicating the type of rating for which certified. Designs and construction of such products shall have specific UL approval according to current procedures for the specified fire rating, either 3-hour, 1½-hour, ¾-hour or 20-minute as shown. Hollow steel doors and frames for fire-rated openings shall conform to UL listing and shall be UL labeled.

C. Materials for Doors and Frames: All hollow metal doors and frames shall be fabricated entirely from prime quality, commercial grade, cold-rolled steel conforming to ASTM A366, Type II or III.

DRAFT

D. Priming and Painting: Doors and frames shall be chemically treated to ensure maximum paint adhesion and shall have all exposed surfaces painted with a rust-inhibitive primer after fabrication.

E. Hardware: Doors and frames shall be reinforced and drilled or tapped for fully templated hardware; and shall be reinforced with plates for surface-mounted hardware, meeting ANSI A115 Series requirements. Hardware shall be as specified in these Specifications and/or as shown.

2.02 METAL FRAMES

A. Pressed Metal Frames: Pressed steel frames for doors and other openings shall be combination buckled frame and trim of type and sizes as shown. Metal shall not be lighter than 16-gauge steel. Frames shall be of the welded unit type. Special frames, oversized frames and frames with transom shall be provided where shown.

2.03 FRAME ANCHORS

A. Floor Anchors: Floor anchors shall be welded inside each frame jamb head, and holes shall be provided for floor anchorage. Minimum thickness of floor anchors shall be 14-gauge.

B. Anchors for Masonry/Concrete Installations: Frames for installation in masonry and/or concrete walls shall be provided with variable jamb anchors of the T-strap, stirrups and strap or wire type. The number of anchors provided per frame jamb and head shall be as follows:
   1. Frames up to 7 feet 6 inches in height: Three (3) anchors.
   2. Frames over 7 feet 6 inches to 8 feet 0 inches in height: Four (4) anchors.
   3. Frames over 8 feet 0 inches in height: One (1) anchor for each 2 feet 0 inches or fraction in height.
   4. Frame head anchors shall be not less than those required in these Specifications.

2.04 SILENCER HOLES

A. Appropriate holes for silencers shall be provided in the doorframes, which are not designated to receive weather stripping, seals, or sound seals.

2.05 STEEL DOORS

A. Design and Construction: Steel doors shall be of hollow metal construction and shall be of full flush design with no visible seams. Face sheets shall be not less than cold-rolled, stretcher-leveled, 18-gauge steel. All doors shall have flush seamless face sheets with continuously and fully welded seam edges. Doors shall be rigid and neat in appearance, and shall be free from warpage or buckle. Corner bends shall be true and straight and shall be of not less than the minimum radius for the gage of metal used. The door top and bottom shall be internally reinforced by steel members welded in place. Tops of exterior doors shall be provided with flush, water and weather tight, top enclosures.

B. Transom Panels: Transom panels shall be provided where shown and shall be of construction same as doors.

C. Door and Transom Cores: Doors and transom cores shall be water-resistant honeycomb with minimum R of four (4) mineral/fiberboard. Fire rated doors shall be solid or mineral fiberboard core doors as required to meet code and Reference Standard’s requirements.

DRAFT

D. Louvers (where applicable): Door louvers for steel doors shall be of steel of the type, which integrally frames the opening and can attach securely. Louvers shall be of the inverted "Y" blade type for exterior use and "V" blade for interior use. Exterior louvered openings shall be provided with removable type insect screens. Door louvers shall be uniformly located in doors and shall be of sizes shown. Louvers at labeled doors shall be equipped with concealed fusible links.

E. Double Doors: Double doors shall be provided with a "T" type steel astragal unless otherwise specified.

F. Manufacturers or ENGINEER-approved equal:
   1. Forderer Cornice Works
   2. Krieger Steel Products Co.
   3. Overly Manufacturing Co.
   4. Dean Steel Mfg.
   5. Curries

PART 3 – EXECUTION

3.01 CONSTRUCTION

A. General: All work shall be in accordance with manufacturer's published recommendations and specifications.

B. All work shall be coordinated with appropriate related subcontractor’s work to assure a proper installation. Field conditions and dimensions shall be verified prior to fabrication.

3.02 FRAME INSTALLATION

A. Frames shall be set plumb and square in a true plane, and be securely anchored to the adjoining construction. Steel shims shall be provided and shall be set tight and rigidly attached between frame anchors and structure. All finished metal frames shall be strong and rigid; neat in appearance and square, true, and free of defects, warp, or buckle.

B. Molded members, trims and stops, shall be clean cut, straight and shall be of a uniform profile throughout their lengths.

C. Corner joints shall have all contact edges tightly closed with all trim faces mitered, welded, and finished smooth. The use of gussets will not be permitted.

3.03 DOOR INSTALLATION

A. Doors shall be installed plumb, square, and level. Doors shall operate freely, but not loosely. They shall be free from rattling while in a closed position.

B. The door clearances shall be plus 3/32-inch or minus 1/32-inch and shall not exceed the limits specified in the manufacturers printed recommendations.

C. Any door that becomes warped more than 3/16-inch out-of-plane shall be replaced.

D. Doors and door's finish hardware shall have hardware protected prior to painting as specified.

3.04 FINISH HARDWARE

A. Finish hardware shall be installed in accordance with hardware manufacturer's standard templates and printed instructions. Operable parts shall be adjusted for correct function and operation.

DRAFT

3.05 EXISTING CONSTRUCTION

A. Frames that are dimpled for fasteners required for installation into previously placed (existing) concrete, masonry or steel structures shall have the fasteners and fastener frame dimples filled with auto putty or an ENGINEER-approved equal filler material. The fasteners and fillers at dimple holes shall be ground smooth (non-visible) before painting. Fastener locations shall not be visible after the painting work is finished.

END OF SECTION

DRAFT

SECTION 08 3113 – SAFETY ACCESS HATCHES

PART 1 – GENERAL

1.01 THE REQUIREMENT

A. Furnish and install safety hatches in accordance with the Contract Documents.

B. The safety hatches shall be designed to combine covering of the opening, fall through protection per OSHA standard 1910.23 and controlled confine space entry per OSHA standard 1910.146.

1.02 SUBMITTALS

A. Submittals shall be furnished in accordance with Section 01 3300 – Submittal Procedures.

1.03 QUALITY ASSURANCE

A. Warranty: A ten-year warranty protects against defects in materials and workmanship from the date of purchase. Any part that fails in normal use will be furnished at no charge. The warranty is invalid if product is modified, changed, damaged, improperly installed or used in an application for which it is not designed.

PART 2 – PRODUCTS

2.01 MANUFACTURERS

A. Safety hatch manufacturer shall be EJ (Infrastructure Access Solutions for Asia-Pacific | EJ (ejco.com) or ENGINEER-approved equal.

2.02 EQUIPMENT

A. Hatches shall be rated for 300 PSF (Pedestrian Rated) at a minimum, unless noted otherwise.

B. Where noted in the Contract Documents, heavy duty H20 traffic rated hatches shall be rated for AASHTO H-20 wheel loads where not subject to high-density traffic. Deflection shall not exceed 1/150th of the span. AASHTO H-20 requirements dictate a 16,000-lb. load, on a single contact area of 10” x 20”.

C. Where noted in the Contract Documents, extra heavy duty “H30” traffic rated hatches shall have load capacity meeting a proof load of 24,000 lbs. applied to a 9” x 9” contact area. Units not conforming to Proof Load requirement will not be accepted as equal.

D. Each door shall be equipped with a stainless steel hold open arm. Door shall lock open in the 90-degree position. Hold open arm shall be fastened to the frame with a ½-inch grade 316 stainless steel bolt.

E. Covers to be lift assisted must comprise a two piece stainless steel inner and outer tube housing a stainless steel mechanical spring. Covers to rest open at 105˚. H-20 and H-30 rated hatches shall be provided with lift assist mechanism.

F. Angle frame shall be of extruded aluminum with a continuous 1½-inch anchor flange. H-30 frame shall be ductile iron. Exterior of frame (in contact with concrete) shall be supplied with a 3-mil thickness of “Tufcoat 3.5PR” Industrial Coating by Dupont. Application procedure shall be as recommended by Dupont. Isolation coatings shall not be substituted.

G. Hinges shall be of heavy-duty design. Material shall be grade 316 stainless steel. Each hinge shall have a 3/8-inch grade 316 stainless steel pin. Hinges shall be bolted to the angle frame and diamond plate, with grade 316 stainless steel bolts and ny-lock nuts. Aluminum hinges, or stainless steel hinges not utilizing a 3/8” stainless steel pin shall not

DRAFT

be considered equal. Dimensions and quantities for each hatch are provided in the construction plans.

H. Each hatch shall be supplied with a grade 316 stainless steel slam lock, with keyway protected by a threaded aluminum plug. Plug shall be flush with the top of the ¼-inch diamond plate. Slam lock shall be fastened with four grade 316 stainless steel bolts and washers. Slam locks that fasten with only two grade 316 stainless steel bolts and washers shall not be accepted. Any hinges or cut outs in hatch will be shown in the construction plans.

I. Each hatch shall be equipped with a stainless steel lift handle. The lift handle shall be flush with the top of the ¼-inch diamond plate.

J. The safety grate shall be made of 6061-T6 aluminum and designed per the "Specifications for Aluminum Structures," by the Aluminum Association, Inc., 5th Edition, Dec. 1986 for "Bridge Type Structures.

K. Where noted in the Contract Documents, for heavy duty hatches, grating shall be designed to withstand an H-20 or H-30 wheel load per AASHTO specifications. Safety Hatch type systems that utilize the H-20/H-30 reinforcement on the cover, and supplied with a 300 PSF (pedestrian rated) grate, as well as a safety net system shall not be acceptable.

L. Grate openings shall allow for visual inspection, limited maintenance and float adjustments while the safety grate fall through protection is left in place.

M. Design must assure that the fall through protection is in place before the doors can be closed, thereby protecting the next operator.

N. Each grate shall be provided with a separate hold open arm, which will lock the grate in the 90-degree position once opened.

O. Each grate supplied with a locking device (for owner's padlock) that will prevent unauthorized entry to the confined space. The grating system will allow anyone to make visual inspection and float adjustments without entering the confined space.

P. Grate shall be coated with an OSHA type safety orange color, promoting visual awareness of the hazard. The aluminum safety grates shall receive a two-coat powder coat system, applied by the electrostatic spray process. The base coat is a thermosetting epoxy powder coat finish with a minimum thickness of 2 - 4 mils. The top coat is a mar-resistant, TGIC polyester powder coating with a minimum thickness of 2 - 4 mils. Each coat shall be baked at 350°F - 375°F until cured.

Q. Welding shall be in accordance with ANSI/AWS D1.2-90 Structural Welding Code for Aluminum.

2.03 MATERIAL SPECIFICATIONS

A. Aluminum material shall be 6061-T6 aluminum for bars, angles and extrusions ¼-inch diamond plate shall be 5086 aluminum.

B. H-30 frame and cover shall be manufactured from ductile iron conforming to the requirements of ASTM A536, and AASHTO M105 and M306. Gray Iron/Gray Cast Iron shall not be accepted as equal.

PART 3 – EXECUTION (NOT USED)

END OF SECTION

DRAFT

SECTION 08 3300 – COIL DOORS

PART 1 – GENERAL

1.01 THE REQUIREMENT

A. Furnish and install coil doors in locations in accordance with the Contract Documents.

1.02 SUBMITTALS

A. Submittals shall be furnished in accordance with Section 01 3300 – Submittal Procedures.

B. Product Data: Submit manufacturer's product data and installation instructions for each type of rolling door. Include both published data and any specific data prepared for this project.

C. Shop Drawings: Submit shop drawing for approval prior to fabrication. Include detailed plans, elevations, details of framing members, required clearances, anchors, and accessories. Include relationship with adjacent materials.

1.03 QUALITY ASSURANCE

A. Manufacturer: Rolling doors shall be manufactured by a firm with a minimum of five years experience in the fabrication and installation of rolling doors. Manufacturers proposed for use, which are not named in these specifications, shall submit evidence of ability to meet performance and fabrication requirements specified, and include a list of five projects of similar design and complexity completed within the past five years.

B. Installation of rolling doors shall be performed by the authorized representative of the manufacturer.

C. Single-Source Responsibility: Provide doors, guides, motors, and related primary components from one manufacturer for each type of door. Provide secondary components from source acceptable to manufacturer of primary components.

D. Pre-Installation Conference: Schedule and convene a pre-installation conference just prior to commencement of field operations, to establish procedures to maintain optimum working conditions and to coordinate this work with related and adjacent work.

1.04 PRODUCT HANDLING

A. Deliver materials and products in labeled protective packages. Store and handle in strict compliance with manufacturers instructions and recommendations. Protect from damage from weather, excessive temperatures, and construction operations.

PART 2 – PRODUCTS

2.01 CURTAIN

Interlocking roll-formed galvanized steel slats, flat crown profile type CAW, 26-gauge for widths up to 12´4", 24-gauge for widths up to 14´4". End of each slat shall be locked from lateral movement by a staking lock system (Galvanized steel end locks).

2.02 FINISH

Curtain slats (and hood) shall be galvanized in accordance with ASTM A525 and receive rust-inhibitive, roll coating process, including bonderizing, 0.2 mils thick baked-on prime paint, and 0.6-mil thick baked-on polyester top coat. Non-galvanized exposed ferrous surfaces shall receive one coat of rust-inhibitive primer.

DRAFT

2.03 COLOR

White polyester top coat (Brown polyester top coat).

2.04 WEATHERSEALS

Vinyl bottom seal.

2.05 BOTTOM BAR

Extruded aluminum.

2.06 GUIDES

Roll-formed galvanized steel shapes attached to continuous galvanized steel wall angle.

2.07 BRACKETS

Galvanized steel to support counterbalance and curtain.

2.08 COUNTERBALANCE (Helical torsion spring type).

Counterbalance shall be housed in a steel tube or pipe barrel, supporting the curtain with deflection limited to 0.03 per foot of span. Spring tension shall be adjustable.

2.09 HOOD (Not Required)

24-gauge galvanized steel with intermediate supports as required

2.10 MANUAL OPERATION

Manual push up (chain hoist) for doors up to 100 sq. ft. Chain hoist for doors over 100 sq. ft.

2.11 ELECTRIC MOTOR OPERATION

Provide UL listed electric operator, size as recommended by manufacturer to move door in either direction at not less than 2/3 foot nor more than 1 foot per second.

A. Sensing Edge Protection: (Pneumatic sensing edge) (Electric sensing edge)

B. Operator Controls: Push-button (Key) (Push-button and key) operated control stations with open, close, and stop buttons for surface (flush) mounting, for interior (exterior) (both interior and exterior) location.

C. Special Operation: (Vehicle detector operation, radio control operation, card reader control, photocell operation, door timer operation, commercial light package, explosion- and dust-ignition-proof control wiring)

2.12 LOCKING

Interior bottom bar slide bolt. Exterior slide lock for manually operated mini-warehouse doors. Chain keeper locks for chain hoist operation. (Interior slide bolt lock for electric operation with interlock switch.) (Cylinder lock for electric operation with interlock switch.)

2.13 WALL MOUNTING CONDITION

Face-of-wall.

PART 3 – EXECUTION

3.01 PREPARATION

Take field dimension and examine conditions of substrates, supports, and other conditions under which this work is to be performed. Do not proceed with work until unsatisfactory conditions are corrected.

DRAFT

3.02 INSTALLATION

Strictly comply with manufacturer's installation instructions and recommendations. Coordinate installation with adjacent work to ensure proper clearances and allow for maintenance.

Instruct Owners personnel in proper operating procedures and maintenance schedule.

3.03 ADJUSTING AND CLEANING

Test rolling doors for proper operation and adjust as necessary to provide proper operation without binding or distortion.

Touch-up damaged coatings and finishes and repair minor damage. Clean exposed surfaces using non-abrasive materials and methods recommended by manufacturer of material or product being cleaned.

END OF SECTION

DRAFT

SECTION 08 9100 – LOUVERS

PART 1 – GENERAL

1.01 SECTION INCLUDES

A. Louvers, frames, and accessories.

1.02 REFERENCE STANDARDS

AAMA 611	Voluntary Specification for Anodized Architectural Aluminum; American Architectural Manufacturers Association
AAMA 2604	Voluntary Specification, Performance Requirements and Test Procedures for High Performance Organic Coatings on Aluminum Extrusions and Panels
AAMA 2605	Voluntary Specification, Performance Requirements and Test Procedures for Superior Performing Organic Coatings on Aluminum Extrusions and Panels
AMCA 500-L	Laboratory Methods of Testing Louvers for Rating; Air Movement and Control Association International, Inc.
AMCA 511	Certified Ratings Program Product Rating Manual for Air Control Devices
ASTM A653/A653M	Steel Sheet, Zinc-Coated (Galvanized) or Zinc-Iron Alloy-Coated (Galvannealed) by the Hot-Dip Process
ASTM A666	Annealed or Cold-Worked Austenitic Stainless Steel Sheet, Strip, Plate, and Flat Bar
ASTM B209	Aluminum and Aluminum-Alloy Sheet and Plate
ASTM B209M	Aluminum and Aluminum-Alloy Sheet and Plate [Metric]
ASTM B221	Aluminum and Aluminum-Alloy Extruded Bars, Rods, Wire, Profiles, and Tubes
ASTM B221M	Aluminum and Aluminum-Alloy Extruded Bars, Rods, Wire, Profiles, and Tubes [Metric]

1.03 SUBMITTALS

A. See Section 01 3300 – Submittal Procedures.

B. Product Data: Provide data describing design characteristics, maximum recommended air velocity, design free area, materials, and finishes.

C. Shop Drawings: Indicate louver layout plan and elevations, opening and clearance dimensions, tolerances; head, jamb, and sill details; blade configuration, screens, blank-out areas required, and frames.

D. Samples: Submit two samples 2 by 2 inches in size illustrating finish and color of exterior and interior surfaces.

E. Test Reports: Independent agency reports showing compliance with specified performance criteria.

F. Manufacturer's Certificate: Certify that products meet or exceed specified requirements.

G. Maintenance Data: Include lubrication schedules, and adjustment requirements.

1.04 QUALITY ASSURANCE

A. Manufacturer Qualifications: Company specializing in manufacturing products of the type specified in this section, with minimum three years of documented experience.

DRAFT

1.05 WARRANTY

A. Provide twenty-year manufacturer warranty against distortion, metal degradation, and failure of connections.

PART 2 – PRODUCTS

2.01 MANUFACTURERS

A. Wall Louvers:
   1. Airolite Company, LLC
   2. American Warming and Ventilating
   3. Construction Specialties, Inc
   4. Pottorff
   5. Or ENGINEER-approved equal.

2.02 LOUVERS

A. Louvers: Factory fabricated and assembled, complete with frame, mullions, and accessories; AMCA Certified in accordance with AMCA 511.
   1. Wind Load Resistance: Design to resist positive and negative wind load of 25 psf without damage or permanent deformation.
   2. Intake Louvers: Design to allow maximum of 0.01 oz/sq. ft water penetration at calculated intake design velocity based on design air flow and actual free area, when tested in accordance with AMCA 500-L.
   3. Drainable Blades: Continuous rain stop at front or rear of blade aligned with vertical gutter recessed into both jambs of frame.
   4. Screens: Provide insect screens at intake louvers and bird screens at exhaust louvers.
   5. Hinged Units: Provide secondary frame to which louver frame is attached; non-ferrous hinges.

B. Stationary Louvers: Horizontal blade, extruded aluminum construction, with intermediate mullions matching frame.
   1. Free Area: 50 percent, minimum.
   2. Static Pressure Loss: 0.15 inch wg maximum per square foot of free area at velocity of 1000 fpm, when tested in accordance with AMCA 500-L.
   3. Blades: Straight.
   4. Frame: 4 inches deep, channel profile; corner joints mitered and, with continuous recessed caulking channel each side.
   5. Metal Thickness: Frame 0.081 inch; blades 0.081 inch.
   6. Finish: Color anodized; finish welded units after fabrication.
   7. Color: As scheduled.

C. Operable Louvers: Operable horizontal blades, extruded aluminum construction.
   1. Free Area: 50 percent, minimum.
   2. Static Pressure Loss: 0.15 inch wg maximum per square foot of free area at velocity of 1000 fpm, when tested in accordance with AMCA 500-L.
   3. Operation: Gravity balanced, 90-degree opening. with adjustment device to permit setting for varying differential static pressure.
   4. Operation: Actuator provided in HVAC control system.
   5. Movable Blades: Straight, pivoted at, with vinyl, rubber, or polyethylene blade edge and jamb seals; rattle-free linkage.
   6. Fixed Blades: Straight.
   7. Frame: 4 inches deep, channel profile; corner joints mitered and, with continuous recessed caulking channel each side.
   8. Metal Thickness: Frame 0.081 inch; blades 0.081 inch.

DRAFT

9. Finish: Color anodized; finish welded units after fabrication.
10. Color: As scheduled.

D. Acoustical Louvers: Horizontal blade, formed aluminum sheet construction.
1. Sound Attenuation: Minimum sound transmission loss of 10 db at 63 Hz, when tested in accordance with ASTM E90.
2. Free Area: 50 percent, minimum.
3. Static Pressure Loss: 0.15 inch wg maximum per square foot of free area at velocity of 1000 fpm, when tested in accordance with AMCA 500-L.
4. Blades: Straight, sloped at 45 degrees, with insulating material in cavity, lower surface covered with perforated sheet metal of same type as blades.
5. Metal Thickness: Frame 0.081 inch; blades 0.081 inch.
6. Finish: Color anodized; finish welded units after fabrication.

2.03 MATERIALS

A. Extruded Aluminum: ASTM B221 (ASTM B221M)
1. Color Anodizing: AAMA 611 Class I, AA-M12C22A42/44.
2. Clear Anodizing: AAMA 611 Class I, AA-M12C22A41.

B. Formed Aluminum: Formed sheet, ASTM B209 (ASTM B209M).
1. Color Anodizing: AAMA 611 Class I, AA-M12C22A42/44.
2. Clear Anodizing: AAMA 611 Class I, AA-M12C22A41.

C. Steel Sheet: Hot-dipped galvanized steel sheet, ASTM A653/A653M, with G90/Z275 coating.

D. Stainless Steel: ASTM A666 Type 304, soft temper, smooth surface, No. 4 finish.

E. Bird Screen: Interwoven wire mesh of steel, 0.063-inch diameter wire, ½-inch open weave, diagonal design.

F. Insect Screen: 18 x 16 size aluminum mesh.

G. Polyvinylidene Fluoride Coating: Minimum 70 percent Kynar 500/Hylar 500 resin, two-coat finish, complying with AAMA 2604.

H. Primer: Zinc chromate, alkyd type.

2.04 ACCESSORIES

A. Blank-Off Panels: Same material as louver, painted black on exterior side; provide where duct connected to louver is smaller than louver frame, sealing off louver area outside duct.

B. Screens: Frame of same material as louver, with reinforced corners; removable, screw attached; installed on inside face of louver frame.

C. Fasteners and Anchors: Galvanized steel.

D. Flashings: Of same material as louver frame, formed to required shape, single length in one piece per location.

PART 3 – EXECUTION

3.01 EXAMINATION

A. Verify that prepared openings and flashings are ready to receive work and opening dimensions are as indicated on shop drawings.

B. Verify that field measurements are as indicated.

3.02 INSTALLATION

A. Install louver assembly in accordance with manufacturer's instructions.

DRAFT

B. Coordinate with installation of flashings by others.

C. Install louvers level and plumb.

D. Align louver assembly to ensure moisture shed from flashings and diversion of moisture to exterior.

E. Secure louver frames in openings with concealed fasteners.

F. Install perimeter sealant and backing rod in accordance with manufacturer's instructions, unless instructed otherwise.

G. Coordinate with installation of mechanical ductwork.

H. Coordinate with installation of louver actuators.

3.03 ADJUSTING

A. Adjust operable louvers for freedom of movement of control mechanism. Lubricate operating joints.

3.04 CLEANING

A. Strip protective finish coverings.

B. Clean surfaces and components.

3.05 SCHEDULES

A. Aeration Building - South Wall: Intake acoustical louver, hinged bird screen, prefinished to match adjacent window frames.

END OF SECTION

DRAFT

SECTION 09 9100 – PAINTING

PART 1 – GENERAL

1.01 THE REQUIREMENT

A. Provide all labor, materials, equipment, and services required to do all painting (excluding items otherwise listed in the applicable Sections of Division 09 – Finishes), including preparation, priming and protection of finished surfaces. An extensive and comprehensive painting job will be required and shall include all surfaces which normally are painted.

B. The intent of these Specifications is to obtain the material and workmanship necessary to produce an adequate and acceptable job, and is intended to describe the requirements for both shop and field painting.

C. The intent of this Specification Section is to include all items which are to receive painting and have not been included otherwise in these Specifications.

D. The intent of this Specification shall be to paint all exposed structural steel, miscellaneous ferrous metal, lintels, equipment, piping, all exterior masonry walls, and all other work obviously required or noted to be painted unless otherwise specified (see Section 2.01). The omission of minor items in the schedule of work shall not relieve the obligation to include such items where they come within the general intent of the Specifications as stated herein. All interior surfaces and equipment which have been previously painted shall be repainted or recoated following the proper surface preparation as shown on the Drawings.

E. Review and examine all Divisions and Sections of these Specifications for any additional painting requirements and/or additional surfaces or items to be painted.

F. Apply specified finish coats of paint to all pre-primed work and complete finishing system for unprimed work required to be painted.

G. Backprime, with specified interior first coat material all surfaces of finish trim which will be concealed after installation.

H. Apply specified finish coats of paint to all prepainted surfaces which require only a finish coat. Otherwise, the complete system (as given in Section 2.1) shall be administered.

1.02 RELATED WORK

A. Wherever detailed painting requirements are covered under an equipment or product Specification, the Specifications herein other Sections, govern with respect to surface preparation, paint materials, coats, thicknesses, and coverage.

1.03 ITEMS NOT REQUIRING FIELD PAINTING

A. All new galvanized and stainless steel surfaces (except where noted on Drawings).

B. Valves, fittings, and appurtenances in small diameter plastic piping (less than 3 inches).

C. Prefinished items.

D. Plain copper (except as required for color coding) and stainless steel.

E. Aluminum except where otherwise designated and required to prevent corrosion at contact with dissimilar materials.

F. Concrete floors except where noted.

G. Exterior concrete surfaces except where noted.

H. Finish hardware.

DRAFT

I. Concealed from view items (except where required for color coding) and surfaces, except as specified herein or where previously painted.

J. Packing glands and other adjustable parts and nameplates of mechanical equipment.

K. Mechanical equipment (i.e. pumps, blowers, actuators, etc.)

1.04 DEFINITIONS

A. The term “paint” as used herein includes enamels, epoxy, paints, sealers, fillers, emulsions, and other coatings.

B. MDMTPC = Minimum dry mil thickness per coat.

C. MDFT = Minimum dry film thickness.

D. SSPC = Steel Structures Painting Council.

1.05 QUALITY ASSURANCE

A. Qualification of Painters: All painting shall be done by qualified, skilled, experienced craftsmen. In the acceptance or rejection of completed painting, no allowance will be made for lack of skills on the part of the craftsmen.

B. Paint Labels: Labels on paint containers shall include the following:
   1. Manufacturer's name
   2. Generic type of paint
   3. Manufacturer's stock number
   4. Color
   5. Instructions for thinning where applicable

C. Field Quality Control: Paint film thickness shall be subject to measurement by electrometer, wet film gauge, low or high voltage meter, and/or ENGINEER approved measuring instruments. If dry film thickness is found to be less than specified, or coverage is not uniform, apply additional paint to correct the thickness or appearance at no additional cost to the Owner.

D. Compatibility:
   1. Compatibility of all paints used is required. A compatible paint will be considered a paint which precludes adverse effects related to bonding, drying delamination, scaling, lifting, and bleeding.
   2. In cases where shop-applied primers and coatings on materials and equipment furnished by suppliers are products different from those described in the Specifications, compatibility shall be verified with the specified field-applied coating system.
   3. Where thinning is necessary, only the products of the manufacturer furnishing the paint, and products for thinning purposes only, will be allowed.

E. Thickness and Spreading Rates:
   1. Minimum dry mil thicknesses per coat (MDMTPC) and/or spreading rates in square feet per gallon shall be governed by the manufacturer's current data sheets or literature containing recommendations or instructions regarding these values. These recommended dry mil thickness and/or spreading rate values will be considered requirements to be met same as if set out herein these Specifications and Contract Documents. Do not exceed manufacturer's recommended coverage rates.
   2. The number of coats to be applied are specified herein and shall govern. Where the total dry film thickness is specified, this thickness shall govern over the MDMTPC.

DRAFT

1.06 PRODUCT DELIVERY, HANDLING AND STORAGE

A. Delivery: All materials shall be brought to the project site in the original sealed and labeled containers of the paint manufacturer. All labels shall be legible and intact at time of use.

B. Manufacturer's Instructions: Paint manufacturer's written instructions for proper surface preparation, mixing, thinning, application and drying shall be furnished with the paint, and strictly followed.

C. Storage of Materials:
   1. Store only acceptable materials on project site.
   2. Store only in a suitable and designated area restricted to the storage of paint materials and related equipment.
   3. Comply with all applicable health and fire regulations regarding the storage of paint materials.
   4. Storage of material shall comply with the manufacturer's specifications; however, storage shall be at a minimum temperature of 50°F.

D. Protection of Materials:
   1. Take all necessary precautions to ensure the safe storage and use of paint materials and the prompt and safe disposal of waste.
   2. Painting wastes shall be properly deposited in containers made for this purpose. Do not use plumbing fixtures for disposing of paints wastes.
   3. Take all necessary precautions to protect paint materials before, during and after application and to protect the finished work.

E. Replacement: In the event of damage to paint materials, immediately make all replacements necessary at no additional cost.

F. Product delivery, handling and storage shall be in accordance with Part 1 of this Specification.

1.07 JOB CONDITIONS

A. Environmental Requirements:
   1. Comply with manufacturer's recommendations as to the environmental conditions under which painting systems can be applied.
   2. Do not apply finish in areas where dust and/or mist is being generated.

B. Climatic Conditions: Paint shall not be applied if:
   1. The ambient temperature or temperature of the surface to be painted is below 50°F or below the temperature recommended by the paint manufacturer.
   2. The relative humidity is above 85 percent.
   3. The relative humidity is such that the paint will not dry properly in accordance with the manufacturer's instructions.

C. Projection:
   1. Protect with drop cloths, masking or other acceptable means all surfaces which could be damaged in function or appearance by paint, including surfaces not being painted concurrently and surfaces not to be painted.
   2. Hardware, accessories, fixtures, and similar items shall be removed and replaced after completion of painting.
   3. Spray painting will not be permitted when it will cause damage to adjacent of otherwise located surfaces.
   4. All paint splatters on glass shall be wiped off immediately.

DRAFT

PART 2 – PRODUCTS

2.01 PAINT SYSTEMS

A. General:
   1. All paints of a system shall be by one (1) manufacturer.
   2. "Lift" tests may be requested on various surfaces to be painted to assure bonding compatibility.
   3. Paints containing lead, or other "dangerous" materials, that surpass federal maximum levels shall not be allowed. Oil shall be pure boiled linseed oil.

2.02 COLORS

A. The manufacturer shall be able to furnish all paints for exposed surfaces in a wide range of colors including lighter and darker shades of these colors which may be selected on various surfaces, if not included in the following codes (also note, the below listed may be included in the requirements of the applicable Sections of Division 09 – Finishes):
   1. Safety Color Codes: Comply with Occupational Safety and Health Administration Standards, as applicable, regarding safety color codes.
   2. Piping Color Codes: Colors for process pipe coding shall be in accordance with these Specifications.

PART 3 – EXECUTION

3.01 INSPECTION

A. Examine surfaces scheduled to receive paint and/or coating finishes for conditions that will adversely affect application, permanence, or quality of work and which cannot be put into an acceptable condition through surface preparation.

B. Do not proceed with surface preparation or painting application until conditions are suitable.

C. If surfaces are not thoroughly dry or if they cannot be put in proper conditions to receive paint by customary cleaning methods, the painting applicators shall notify the ENGINEER in writing, requesting necessary corrections.

D. Review the specified or approved painting systems and bring any questions or doubts as to the proper performance to the ENGINEER. Otherwise, assume the responsibility for providing the desired results.

3.02 ACCEPTANCE OF SURFACES

A. The commencement of painting work in any area or space will be construed as acceptance of the surface as being satisfactory.

3.03 SURFACE PREPARATION

A. General:
   1. All surfaces shall be thoroughly cleaned and free of dust, rust, mill scale, loose paint, or oily materials.
   2. References to SSPC refer to Steel Structures Painting Council specifications.
   3. Surfaces shall be primed and/or treated, as specified, as soon after completion of surface preparation as practical, but in any event before any visible or detrimental corrosion or contamination can occur. A prepared surface, which becomes corroded or contaminated, shall be re-prepared before treating and/or priming.

B. Non-submerged Non-Galvanized Structural Steel: All new non-galvanized structural steel for non-submerged service shall have their surfaces prepared according to SSPC-SP6-63, Commercial Blast Cleaning.

DRAFT

C. Submerged Non-Galvanized Structural Steel: All new non-galvanized structural steel and fabricated metals for submerged service of high temperature service shall have their surfaces prepared according to SSPC-SP10-63T Near White Metal Blast Cleaning.

D. Unprimed Metal Surfaces: All unprimed metal surfaces and miscellaneous fabricated metals (exclusive of structural steel and galvanized metal) to be painted shall be thoroughly cleaned according to SSPC-SP2-63 Hand Tool Cleaning or SSPC-SP3-63 Power Tool Cleaning, unless specifically required elsewhere in these Specifications.

E. Non-Ferrous Metals: Non-ferrous metals surface preparation shall be not less than that required by the paint manufacturer.

F. Concrete and Masonry:
   1. All concrete and masonry surfaces shall be cleaned and free from loose particles.
   2. Concrete floors to be painted shall be etched with a 10 percent solution of muriatic acid. If the concrete surface is exceedingly dense, a greater strength acid or a second etching will be required. After etching for a minimum of 30 minutes, wash thoroughly with water to remove all traces of acid. Allow to thoroughly dry at least 72 hours.
   3. Submerged concrete to be coated shall have their surfaces prepared by a light sandblast (Brush Blast), to remove loose coating and provide a textured surface to enhance adherence of the new coating. No sandblasting shall be done on the job in areas containing pumps, motors or other equipment that could be damaged by infiltration of sand particles.

G. Wood Surfaces: Wood surfaces shall be thoroughly cleaned of all extraneous matter and all cracks, nail holes, and other defects properly filled and smoothed. Wood trim shall be sanded to fine finish and wiped clean of dust.

3.04 SHOP PRIMING

A. Shop priming shall be done with primers that are guaranteed by the equipment manufacturer to be compatible with the finish paints to be used.

B. The CONTRACTOR shall coordinate all paint materials supplied in the shop and field.

3.05 APPLICATION

A. On metal surfaces apply each coat of paint at the rate specified by the manufacturer to achieve the minimum dry mill thickness required. One gallon of paint as originally furnished by the manufacturer shall not cover a greater area when applied by spray gun than when applied un-thinned by brush. Deficiencies of film thickness shall be corrected.

B. On masonry, the application rates will vary according to surface texture; however, in no case shall the manufacturer's stated coverage rate be exceeded.

C. On porous surfaces, it shall be the painter's responsibility to achieve a protective and decorative finish either by decreasing the coverage rate of by applying additional coats of paint.

D. Evenly brush out each finish coat and permit to dry per manufacturer's recommendation before applying any subsequent coats.

E. All paints and catalogs shall be maintained at a minimum manufacturer's application temperature before applying.

F. Successive coats of paint shall be tinted so as to make each coat easily distinguishable from each other with the final undercoat tinted to a darker shade than the finish coat.

G. Finish surfaces shall not show brush marks or other irregularities. Undercoats shall be thoroughly and uniformly sanded with No. 00 sandpaper or equal to remove defects and provide a smooth even surface.

DRAFT

H. Painting shall be continuous and shall be accomplished in an orderly manner so as to facilitate inspection. Materials subject to weathering shall be prime coated as quickly as possible. Surfaces of exposed members that will be inaccessible after erection shall be cleaned and painted before erection.

I. All surfaces to be painted as well as the atmosphere in which painting is to be done shall be maintained at the conditions recommended by manufacturer by heating and ventilating, if necessary, until each coat of paint has hardened. Any defective paint shall be removed and the surface repainted.

J. Perform all required back priming work before items are installed.

3.06 REINSTALLATION OF REMOVED ITEMS

A. Following completion of painting in each space, promptly reinstall all items removed for painting, using only workmen skilled in the particular trade.

3.07 CLEANING

A. During the progress of Work, do not allow the accumulation of empty containers or other excess items except in areas specifically reserved for that purpose.

B. Take all precautions to prevent accidental spillage of paint materials. In the event of spilling, immediately remove all spilled materials and the waste and other equipment used to clean up the spill, and wash surfaces to their original undamaged condition.

C. Touch-up and restore finish where damaged.

D. Remove all trash and accumulated materials of a painting nature from premises at the completion of the Work.

E. Paint spots, oil or stains upon adjacent surfaces shall be removed. Any damage to Work of other trades or equipment caused from painting shall be made good at no additional expense.

F. Do not mark surface finish of items being cleaned.

G. Leave entire job clean (including paint storage space).

3.08 FINAL INSPECTION

A. Protect all painted surfaces against damage until the date of final acceptance of the Work.

B. Conduct a final inspection of all painting work and repaint or retouch any areas or surfaces found deficient in complying with these Specifications.

END OF SECTION

DRAFT

SECTION 09 9700 – SPECIAL COATINGS

PART 1 – GENERAL

1.01 THE REQUIREMENT

A. Provide all labor, materials, equipment, and services required for accomplishing special coatings on equipment, tanks, or piping in accordance with these Specifications and Contract Documents.

1.02 SPECIAL NOTICE

A. Because there exists in this project corrosive agents in the liquids and, in certain areas, in the atmosphere, special coatings for protecting the select equipment, structures, and appurtenances are required. The service requirements of the coatings are harsh and only products with an extended history of successful application will be acceptable.

B. Related Sections: Work shall conform to the requirements in applicable Sections of the following Divisions:

Division 01 – General Requirements
Division 05 – Metals
Division 09 – Finishes

C. Wherever detailed coating/painting requirements are covered under an equipment or product specification, the Specifications herein, shall govern over those coating requirements, with respect to surface preparation, coat materials, coats, thickness, and coverage with the exception of manufacturer's supplied coatings and protection. Determine if the manufacturer's supplied coatings are adequate.

1.03 ACCEPTABLE PRODUCTS

A. Specified products are specified as the standard of quality. Products are listed to establish a minimum standard of quality. Equivalent materials of other manufacturers may be submitted on written approval of the ENGINEER. As part of the proof of quality and performance equivalency, the ENGINEER will require at the cost of the CONTRACTOR, certified test reports from a nationally known, reputable, and independent testing laboratory conducting comparative tests as directed by the ENGINEER between the product specified and the requested substitution.

B. Requests for substitution shall include manufacturer's literature for each product giving name, product number, and generic type, descriptive information, solids by volume, recommended dry film thickness and certified lab test reports showing results to equal the performance criteria of the products specified herein. All materials must meet all local, state, and Federal regulations including and not limited to the Air Quality Management District. In addition, a list of five projects shall be submitted in which each product has been used and rendered satisfactory service.

1.04 ITEMS REQUIRING SPECIAL COATING

A. See Coating Schedules as listed in PART 2 – PRODUCTS.

1.05 ITEMS NOT REQUIRING SPECIAL COATING

A. The metal surfaces of stainless steel, chromium plate, galvanized and aluminum that are not now coated will not require field coating. Do not apply coating over any code-required labels, glass items, gauges, and name plates. It is also important not to coat any moving parts or operating units, valves or stems, or any mechanical and electrical parts such as valve and damper operators, linkages. It is the contactor's responsibility to protect any surface that is not to receive a coating.

DRAFT

1.06 QUALITY ASSURANCE

A. Qualification of Coaters: Qualification of Coaters: All coating shall be done by qualified, skilled, and experienced craftsmen. In the acceptance or rejection of completed coating, no allowance will be made for lack of skills on the part of the craftsmen.
   1. SSPC-QP-1 Certified - Field Application to Complex Industrial and Marine Structures
   2. SSPC-QP-3 Certified - Shop Painting Certification

B. Coating Labels: Labels on coating containers shall include the following:
   1. Manufacturer's name
   2. Generic type of coat
   3. Manufacturer's stock number
   4. Color
   5. Instructions for thinning where applicable

C. Field Quality Control: Coating film thickness shall be subject to measurement with electrometer, wet film gauge, low or high voltage meter and/or applicable measuring instruments acceptable to the ENGINEER. If dry film thickness is found to be less than specified, or coverage is not uniform, an additional coating to correct thickness or appearance at no additional cost shall be applied.

D. Compatibility:
   1. Compatibility of all coatings used shall be required. A compatible coating will be considered a coat, which precludes adverse effects related to bonding, drying delamination, scaling, lifting, and bleeding.
   2. In cases where shop-applied primers and coatings on materials and equipment furnished by suppliers are products different from those described in the Specifications, compatibility with the specified field-applied coating system shall be verified by the CONTRACTOR.
   3. Where thinning is necessary, only the products of the manufacturer furnishing the coating, and products for thinning purposes only, will be allowed.

E. Thickness and Spreading Rates:
   1. Minimum dry mil thickness per coat (MDMTPC) and/or spreading rates in square feet per gallon shall be governed by the manufacturer's current data sheets or literature containing recommendations or instructions regarding these values. These recommended dry mil thickness and/or spreading rate values will be considered requirements to be met same as if set out herein; these Do Not exceed manufacturer's recommended coverage rates.
   2. The number of coats to be applied are specified herein and shall govern. Where the total dry film thickness is specified, this thickness shall govern over the MDMTPC.

1.07 PRODUCT DELIVERY, HANDLING AND STORAGE

A. Delivery: All materials shall be brought to the job site in the original sealed and labeled containers of the coating manufacturer. All labels shall be legible and intact at time of use.

B. Manufacturer's Instruction: Coating manufacturer's written instructions for proper surface preparation, mixing, thinning, application and drying shall be furnished with the coating and strictly followed.

C. Storage of Materials:
   1. Store only acceptable materials on project site.
   2. Store only in a suitable and designated area restricted to the storage of coating materials and related equipment.

DRAFT

3. Comply with all applicable health and fire regulations regarding the storage of coating materials.
4. Storage of material shall comply with the manufacturer's specifications; however, storage shall be at a minimum temperature of 50°F.

D. Protection of Materials:
1. Take all necessary precautions to ensure the safe storage and use of coating materials and the prompt and safe disposal of waste.
2. Coating wastes shall be properly deposited in containers made for this purpose.
3. Take all necessary precautions to protect coating materials before, during and after application and to protect the finished work.

E. Replacement: In the event of damage to coating materials, immediately make all replacements necessary to the approval of the ENGINEER and at no additional cost.

F. Product delivery, handling and storage shall be in accordance with Part 1 of this Section and the manufacturer's recommendations.

1.08 JOB CONDITIONS

A. Environmental Requirements:
1. Comply with manufacturer's recommendations as to environmental conditions under which coatings and coating systems can be applied.
2. Do not apply finish in areas where dust and/or mist is being generated.

B. Climatic Conditions: Coating shall not be applied if:
1. The ambient temperature or temperature of the surface to be coated is below 50°F or below the temperature recommended by the coating manufacturer.
2. The relative humidity is above 85 percent.
3. The relative humidity is such that the coating will not dry properly in accordance with the manufacturer's instructions.

C. Protection:
1. Protect with drop cloths, masking or other acceptable means all surfaces which could be damaged in function or appearance by coating, including surfaces not being coated concurrently and surfaces not to be coated.
2. Hardware, accessories, fixtures, and similar items shall be removed and replaced after completion of coating.
3. Spray coating will not be permitted when it will cause damage to adjacent or otherwise located surfaces.
4. All coating splatters on glass shall be wiped off immediately.

PART 2 – PRODUCTS

2.01 COATING SYSTEMS FOR STEEL - STRUCTURAL, TANKS, ROOF DECKING, PIPE, AND EQUIPMENT

A. Exterior Exposed:
1. System Type: Aromatic Urethane Zinc-rich Primer/Epoxy/Polyurethane.
2. Surface Preparation: SSPC-SP 6.
3. Primer:
   a. Sherwin Williams Corothane Galvapac 2K @ 3.0 – 5.0 mils DFT 2K 100 for Low VOC
   b. Tnemec Series 90-97 Tneme Zinc @ 2.5-3.5 0 mils DFT. 94 H2O for Low VOC
4. Intermediate Coat:
   a. Sherwin Williams Macropoxy 646; 4.0 – 8.0 mils DFT. 100 for Low VOC
   b. Tnemec Series N69 Hi-Build Epoxoline II; 4.0 to 6.0 mils DFT. L69 for Low VOC

DRAFT

5. Finish Coat:
    a. Sherwin Williams Hi Solids Polyurethane @ 3.0 – 5.0 mils DFT. 250 or 100 for Low VOC
    b. Series 1075 Endura-Shield II; 2.5 to 3.5 mils DFT. 1095 for Low VOC
6. Total DFT: 9.5 to 14.5 mils.

B. Interior Exposed:
1. System Type: Epoxy.
2. Surface Preparation: SSPC-SP 6.
3. Primer:
    a. Sherwin Williams Macropoxy 646; 4 – 8 mils DFT. M646 100 for Low VOC
    b. Tnemec Series N69 Hi-Build Epoxoline II; 3.0 to 5.0 mils DFT. L69 for Low VOC
4. Finish Coat:
    a. Sherwin Williams Macropoxy 646; 4 – 8 mils DFT. M646 100 for Low VOC
    b. Tnemec Series N69 Hi-Build Epoxoline II; 4.0 to 6.0 mils DFT. L69 for Low VOC
5. Total DFT: 7.0 to 11.0 mils.

C. Immersion, Potable Water:
1. System Type: Epoxy.
2. Surface Preparation: SSPC-SP 10.
3. Primer:
    a. Sherwin Williams Macropoxy 5500; 4.0 – 8.0 mils DFT.
    b. Tnemec Series N140 Pota Pox Plus; 4.0 to 6.0 mils DFT. L140 for Low VOC
4. Intermediate Coat:
    a. Sherwin Williams Macropoxy 5500; 4.0 – 8.0 mils DFT
    b. Tnemec Series N140 Pota Pox Plus; 4.0 to 6.0 mils DFT. L140 for Low VOC
5. Finish Coat:
    a. Sherwin Williams Macropoxy 5500; 4.0 – 8.0 mils DFT
    b. Tnemec Series N140 Pota Pox Plus; 4.0 to 6.0 mils DFT. L140 for Low VOC
6. Total DFT: 12.0 to 18.0 mils.

Or

1. System Type: Ultra High Solids Epoxy.
2. Surface Preparation: Abrasive blast clean per SSPC-SP10, 2.5 – 4 mil profile
3. Primer:
    a. For stripe coat application to all welds and irregular surfaces.
    b. Sherwin Williams Macropoxy 5500; 4.0 – 6.0 mils DFT
    c. Tnemec Series N140 Pota Pox Plus; 4.0 to 6.0 mils DFT. L140 for Low VOC
4. Finish Coat:
    a. For finish coat application over all surfaces.
    b. Sherwin Williams Sherplate PW or Duraplate UHS; 20.0 – 30.0 mils DFT
    c. Tnemec Series 20 or 22; 20.0 - 30.0 mils DFT.
5. Total DFT: 20.0 to 30.0 mils

D. Interior/Immersion, Severe Exposure to H2S:
1. System Type: Modified Epoxy.
2. Surface Preparation: White Metal Blast SSPC-SP 5 with minimum 3.0-mil profile.
3. Primer/Finish (One or More Coats):
    a. Sherwin Williams Duraplate 6100 or Novaplate 325; 30.0 – 40.0 mils DFT
    b. Tnemec Series 435 Perma-Glaze; 30.0 to 36.0 mils DFT.
4. Total DFT: 30.0 to 36.0 mils.

DRAFT

E. Marginally Prepared Surfaces (Maintenance, Non-Immersion, Interior):
1. System Type: Mastic epoxy, solvent or water based.
2. Surface Preparation: In accordance with manufacturer's instructions.
3. Primer:
   a. Sherwin Williams Macropoxy 646; 4 – 8 mils DFT. M646 100 for Low VOC
   b. Tnemec Series 27 WB Typoxy 4.0 to 6.0 mils DFT.
4. Finish Coat:
   a. Sherwin Williams Macropoxy 646; 4 – 8 mils DFT. M646 100 for Low VOC
   b. Tnemec Series 27 WB Typoxy 4.0 to 6.0 mils DFT.
5. Total DFT: 8.0 to 12.0 mils.

F. Marginally Prepared Surfaces (Maintenance, Non-Immersion, Exterior):
1. System Type: Mastic Epoxy/Polyurethane.
2. Surface Preparation: In accordance with manufacturer's instructions.
3. Primer:
   a. Sherwin Williams Macropoxy 646; 4 – 8 mils DFT. M646 100 for Low VOC
   b. Tnemec Series 27 WB Typoxy 4.0 to 6.0 mils DFT.
4. Finish Coat (Exterior):
   a. Sherwin Williams Hi Solids Polyurethane; 3.0 – 5.0 mils DFT; 250 or 100 for Low VOC
   b. Series 1075 Endura-Shield II; 2.5 to 3.5 mils. DFT 1095 for Low VOC
5. Total DFT: 6.5 to 9.5 mils.

G. Below Ground Pipe (Heat Resistant to 375°F and Corrosion Resistant):
1. System Type: Moisture Cure Urethane Zinc Rich Primer/Inorganic Hybrid water borne Epoxy
2. Surface Preparation: Near White Metal Blast SSPC-SP-10 with an angular anchor profile of 1-2 mils.
3. Primer:
   a. Sherwin Williams Corothane Galvapac 2K; 3.0 – 5.0 mils DFT. 100 for low VOC.
   b. Tnemec Series 90E-92 Tneme Zinc; 2.5 to 3.5 mils DFT.
4. Intermediate Coat:
   a. Sherwin Williams N/A
   b. Tnemec Series 1224 Epoxoline WB @ 4.0 – 8.0 mils DFT
5. Finish Coat:
   a. Sherwin Williams Sherglass FF; 8.0 - 16.0 mils DFT.
   b. Series 1224 Epoxoline WB; 4.0 – 8.0 mils DFT
6. Total DFT: 10.5 to 19.5 mils.

Or

1. System Type: Reinforced Novolac Epoxy
2. Surface Preparation: Near White Metal Blast SSPC-SP-10 with an angular anchor profile of 1-2 mils.
3. Primer:
   a. Sherwin Williams Epo Phen HT Coating; 7.0 - 9.0 mils DFT.
4. Finish Coat:
   a. Sherwin Williams Epo Phen HT Coating; 7.0 - 9.0 mils. DFT
5. Total DFT: 14.0 to 18.0 mils.

DRAFT

2.02 COATING SYSTEMS FOR FACTORY PRIMED STEEL - DOORS, FRAMES, AND MISCELLANEOUS EQUIPMENT

A. Interior Exposed:
1. System Type: Acrylic
2. Surface Preparation: Clean and dry
3. Primer: Factory primed
4. Field Primer:
   a. Sherwin Williams ProCryl Universal Primer; 2.0 - 4.0 mils DFT
   b. Tnemec Series 115 Uni Bond DF; 2.0 to 3.0 mils DFT.
5. Finish Coat:
   a. Sherwin Williams Shercryl HPA; 2.0 – 4.0 mils DFT. Pro Industrial Acrylic for low VOC.
   b. Tnemec Series 1029 Enduratone; 2.0 - 3.0 mils. DFT
6. Total DFT: 4.0 to 6.0 mils (on top of shop primer).

B. Exterior Exposed:
1. System Type: Inorganic Hybrid Water Based Epoxy/Polyurethane
2. Surface Preparation: Clean and dry.
3. Primer: Factory primed.
4. Field Primer:
   a. Sherwin Williams Pro Industrial WB Cat Epoxy B73; 3.0 – 5.0 mils DFT
   b. Tnemec Series 27 Typoxy WB; 3.0 - 5.0 mils DFT.
5. Finish Coat:
   a. Sherwin Williams Pro Industrial WB Acrolon 100 B65; 2.0 – 4.0 mils DFT.
   b. Tnemec Series 1075 Endura-Shield II; 2.5 - 3.5 mils. DFT 1095 for Low VOC
6. Total DFT: 5.5 to 8.5 mils (on top of shop primer).

2.03 COATING SYSTEMS FOR GALVANIZED STEEL AND NONFERROUS METAL - PIPE AND MISCELLANEOUS FABRICATIONS

A. Interior Exposure:
1. System Type: Acrylic
2. Surface Preparation: In accordance with manufacturer's instructions and ASTM D6386
3. Primer:
   a. Sherwin Williams ProCryl Primer; 2.0 – 3.0 mils DFT
   b. Tnemec Series 115 Uni Bond DF; 2.0 - 3.0 mils DFT
4. Finish Coat:
   a. Sherwin Williams Shercryl HPA; 2.0 – 4.0 mils DFT. Pro Industrial Acrylic for low VOC.
   b. Tnemec Series 1029 Enduratone; 2 .0 - 3 .0 mils DFT.
5. Total DFT: 4 .0 to 6 .0 mils.

B. Exterior Exposure:
1. System Type: Acrylic
2. Surface Preparation: In accordance with manufacturer's instructions and ASTM D6386
3. Primer:
   a. Sherwin Williams ProCryl Primer; 2.0 – 3.0 mils DFT
   b. Tnemec Series 115 Uni Bond DF; 2 .0 to 3 .0 mils DFT.

DRAFT

4. Finish Coat:
    a. Sherwin Williams Shercryl HPA; 2.0 – 4.0 mils DFT. Pro Industrial Acrylic for low VOC.
    b. Tnemec Series 1029 Enduratone; 2.0 to 3.0 mils. DFT
5. Total DFT: 4.0 to 6.0 mils

2.04 COATING SYSTEMS FOR DUCTILE OR CAST IRON - PIPE, PUMPS, AND VALVES

A. Interior Exposure:
1. System Type: Epoxy
2. Surface Preparation: In accordance with manufacturer's instructions
3. Primer:
    a. Sherwin Williams Macropoxy 646; 4 – 8 mils DFT. M646 100 for Low VOC
    b. Series N69 Hi-Build Epoxoline II; 4.0 to 6.0 mils DFT. L69 for Low VOC
4. Finish Coat:
    a. Sherwin Williams Macropoxy 646; 4 – 8 mils DFT. M646 100 for Low VOC
    b. Series N69 Hi-Build Epoxoline II; 4.0 - 6.0 mils DFT. L69 for Low VOC
5. Total DFT: 8.0 to 12.0 mils.

B. Exterior Exposure:
1. System Type: Epoxy/Polyurethane.
2. Surface Preparation: In accordance with manufacturer's instructions.
3. Primer:
    a. Sherwin Williams Macropoxy 646; 4 – 8 mils DFT. M646 100 for Low VOC
    b. Tnemec Series N69 Hi-Build Epoxoline II; 4.0 - 6.0 mils DFT. L69 for Low VOC
4. Finish Coat:
    a. Sherwin Williams Hi Solids Polyurethane; 3.0 – 5.0 mils DFT. 250 or 100 for low VOC.
    b. Series 1075 Endura-Shield II; 2.5 - 3.5 mils DFT. 1095 for Low VOC
5. Total DFT: 6.5 to 9.5 mils

C. Below Ground:
1. System Type: Coal tar epoxy.
2. Surface Preparation: In accordance with manufacturer's instructions.
3. Prime/Finish Coat:
    a. Sherwin Williams Targuard Coal Tar Epoxy; 16 – 32 mils DFT. 100 for low VOC.
    b. Series 46H-413 Hi-Build Tneme-Tar; 14.0 - 20.0 mils DFT. Series 27 WB Typoxy for Low VOC.
4. Total DFT: 14.0 to 20.0 mils

D. Immersion, Potable Water:
1. System Type: Epoxy.
2. Surface Preparation: In accordance with manufacturer's instructions.
3. Primer:
    a. Sherwin Williams Macropoxy 5500; 4.0 – 6.0 mils DFT
    b. Series N140 Pota Pox Plus; 4.0 to 6.0 mils DFT. L140 for Low VOC
4. Intermediate Coat:
    a. Sherwin Williams Macropoxy 5500; 4.0 – 6.0 mils DFT
    b. Series N140 Pota Pox Plus; 4.0 - 6.0 mils DFT. L140 for Low VOC.
5. Finish Coat:
    a. Sherwin Williams Macropoxy 5500; 4.0 – 6.0 mils DFT
    b. N69 Hi-Build Epoxoline II; 4.0 - 6.0 mils DFT. L140 for Low VOC
6. Total DFT: 12.0 to 18.0 mils

DRAFT

Or

1. System Type: Ultra High Solids Epoxy.
2. Surface Preparation: Abrasive blast clean per SSPC-SP10, 2.5 – 4 mil profile
3. Primer:
   a. For stripe coat application to all welds and irregular surfaces.
   b. Sherwin Williams Macropoxy 5500; 4.0 – 6.0 mils DFT
   c. Tnemec Series N140 Pota Pox Plus; 4.0 to 6.0 mils DFT. L140 for Low VOC
4. Finish Coat:
   a. For finish coat application over all surfaces.
   b. Sherwin Williams Sherplate PW or Duraplate UHS; 20.0 – 30.0 mils DFT
   c. Tnemec Series 20 or 22; 20.0 - 30.0 mils DFT.
5. Total DFT: 20.0 to 30.0 mils

E. Immersion, Severe Exposure to H2S:

1. System type: Modified Polyamine Ceramic Epoxy
2. Surface preparation: In accordance with manufacturer's recommendation.
3. Primer/Finish (One or more coats):
   a. Sherwin Williams Duraplate 6100 or Novaplate 325; 30 – 40 mils DFT
   b. Tnemec Series 431 Perma Glaze; 30-40 mils DFT
4. Total DFT: 30-40 mils.

2.05 COATING SYSTEMS FOR PVC

A. Interior Exposure:

1. System Type: Epoxy.
2. Surface Preparation: Scarify
3. Primer:
   a. Sherwin Williams Macropoxy 646; 4.0 – 8.0 mils DFT. M646 100 for Low VOC
   b. Series N69 Hi-Build Epoxoline II; 4.0 to 6.0 mils DFT. L69 for Low VOC
4. Finish Coat:
   a. Sherwin Williams Macropoxy 646; 4.0 – 8.0 mils DFT. M646 100 for Low VOC
   b. Tnemec Series N69 Hi-Build Epoxoline II; 4.0 to 6.0 mils DFT. L69 for Low VOC
5. Total DFT: 8.0 to 12.0 mils.

B. Exterior Exposure:

1. System Type: Epoxy/Polyurethane.
2. Surface Preparation: Scarify.
3. Primer:
   a. Sherwin Williams Macropoxy 646; 4.0 – 8.0 mils DFT. M646 100 for Low VOC
   b. Series N69 Hi-Build Epoxoline II; 4.0 - 6.0 mils DFT. L69 for Low VOC
4. Finish Coat:
   a. Sherwin Williams Hi Solids Polyurethane; 3.0 – 5.0 mils DFT. 250 or 100 for low VOC.
   b. Series 1075 Endura-Shield II; 2.5 to 3.5 mils. DFT. 1095 for Low VOC
5. Coating provided shall contain UV inhibitor.

DRAFT

2.06 COATING SYSTEMS FOR PRECAST CONCRETE AND CAST-IN-PLACE CONCRETE (REQUIRE WHERE INDICATED IN PLANS)

A. Exterior Exposed:
   1. System Type: Acrylic
   2. Surface Preparation: SSPC-SP 13/NACE 6. Clean and dry
   3. Primer:
      a. Sherwin Williams Loxon XP; 4.0 – 8.0 mils DFT
      b. Tnemec Series 180 W.B. Tneme-Crete; 4.0 to 8.0 mils DFT.
   4. Finish Coat:
      a. Sherwin Williams Loxon XP; 4.0 – 8.0 mils DFT
      b. Tnemec Series 180 W.B. Tneme-Crete; 4.0 to 8.0 mils DFT.
   5. Total DFT: 8.0 to 16.0 mils.

B. Below Grade:
   1. System Type: Coal tar
   2. Surface Preparation: SSPC-SP 13/NACE 6. Clean and dry
   3. Primer:
      a. Sherwin Williams Targuard Coal Tar Epoxy; 8.0 – 16.0 mils DFT. 100 for low VOC
      b. Series 46-465 H.B. Tnemecol. DFT 8.0 to 12.0 mils.
   4. Finish Coat:
      a. Sherwin Williams Targuard Coal Tar Epoxy; 8.0 – 16.0 mils DFT. 100 for low VOC
      b. Tnemec Series 46-465 H.B. Tnemecol. DFT 8.0 to 12.0 mils.
   5. Total DFT: 16.0 to 24.0 mils.

C. Interior Exposed:
   1. System Type: Epoxy
   2. Surface Preparation: SSPC-SP 13/NACE 6. Abrasive Blast Cleaning
   3. Patching:
      a. Sherwin Williams Duraplate 2300 (as needed)
      b. Series 218 MortarClad (as needed)
   4. Primer:
      a. Sherwin Williams Macropoxy 646; 4.0 – 8.0 mils DFT. M646 100 for Low VOC
      b. Tnemec Series N69 Hi-Build Epoxoline II; 4.0 to 6.0 mils DFT. L69 for Low VOC
   5. Finish Coat:
      a. Sherwin Williams Macropoxy 646; 4.0 – 8.0 mils DFT. M646 100 for Low VOC
      b. Tnemec Series N69 Hi-Build Epoxoline II; 4.0 to 6.0 mils DFT. L69 for Low VOC
   6. Total DFT: 8.0 to 12.0 mils.

D. Severe Service – Immersion, H2S Exposure or Chemical Corrosion Protection (Light to Heavy Abrasion):
   1. System I (H2S less than 50 ppm, Light Abrasion)
      a. System Type: Modified Epoxy.
      b. Surface Preparation: SSPC-SP 13/NACE 6. Abrasive blast clean to ICRI 310.2, CSP 4 – 6. Surfacing and Patching:
         1) Sherwin Williams Duraplate 2300; 1/16 inch DFT
         2) Tnemec Series 218 MortarClad; 1/16 inch DFT (nominal 62.5 mils)
      c. Primer/Finish (One or More Coats):
         1) Sherwin Williams Duraplate 6100; 1/16 inch DFT
         2) Tnemec Series 435 Perma-Glaze; 20.0 to 30.0 mils DFT

DRAFT

2. System II (H2S less than 100 ppm, Moderate to Heavy Abrasion)
    a. System Type: Modified Epoxy Mortar
    b. Surface Preparation: SSPC-SP 13/NACE 6. Abrasive blast clean to ICRI 310.2, CSP 4 – 6. Patching:
        1) Sherwin Williams Duraplate 2300; As needed
        2) Tnemec Series 218 MortarClad; As Needed
    c. Series 434 Perma-Shield H2S; 1/8 inch DFT (nominal 125 mils)
3. System III (H2S more than 100 ppm, Moderate to Heavy Abrasion)
    a. System Type: Modified Epoxy Mortar.
    b. Surface Preparation: SSPC-SP 13/NACE 6. Abrasive blast clean to ICRI 310.2, CSP 4 – 6. Patching:
        1) Sherwin Williams Duraplate 2300
        2) Tnemec Series 218 MortarClad; As Needed
    c. Mortar:
        1) Sherwin Williams Duraplate 6100; 1/8 inch DFT (nominal 125 mils)
        2) Series 434 Perma-Shield H2S; 1/8 inch DFT (nominal 125 mils)
    d. Finish (One or More Coats):
        1) Sherwin Williams Duraplate 6100; 20.0 – 30.0 mils DFT
        2) Series 435 Perma-Glaze; 20.0 - 30.0 mils DFT
4. System IV (H2S more than 100 ppm, Moderate to Heavy Abrasion)
    a. System Type: Semi Structural Epoxy
    b. Surface Preparation: SSPC-SP 13/NACE 6. Abrasive blast clean to ICRI 310.2, CSP 4 – 6
    c. Surfacing:
        1) Sherwin Williams Duraplate 2300, ¼ inch DFT nominal 250 mils
    d. Finish (One or More Coats):
        1) Sherwin Williams Duraplate 6100; 125.0 – 150.0 mils DFT
5. Chemical Corrosion Protective Coating
    a. Surface Preparation: SSPC-SP 13/NACE 6. Abrasive blast clean to ICRI 310.2, CSP 4 – 6.
    b. Primer:
        1) Sherwin Williams Duraplate 235 PW, Phenalkamine Epoxy; 1-coat @ 4-8 mils DFT
    c. Finish (One or More Coats):
        1) Sherflex Elastomeric Urethane; Aromatic Hybrid Polyurethane; 1-coat @ 60-80 mils DFT

2.07 COATING SYSTEMS FOR CONCRETE BLOCK MASONRY

A. Exposed, indoors and outdoors, as shown.
    1. System: Acrylic, Concrete: High molecular weight acrylic coating material shall have a minimum solids content of 35 percent by volume. Prime coat shall be an acrylic filler and sealer for concrete surfaces.
        a. Prime coat (Filler/sealer), Tnemec 180 Tneme-Crete, Sanitile 100, or ENGINEER-approved equal.
        b. Finish coats (2 or more, DFT = 3 mils), Tnemec 180 Tneme- Crete, Carbocrylic 3359 MC (DFT = 6 mils) or ENGINEER-approved equal.

DRAFT

B. Submerged in wastewater, including all vertical masonry surfaces above waterline as shown.
   1. System: Epoxy Mortar: High-build, 3-componet amine cured epoxy mortar, shall have a solids content of 100 percent by volume, suitable for long-term immersion and atmospheric exposure to wastewater. Filler-resurfacer compound shall be a 3-component epoxy cementitious thin overlay material used to fill voids and rough areas and must feather-edge capable. Epoxy Glaze (finish) coat shall be a 100-percent-solids epoxy suitable for long-term immersion and atmospheric exposure to wastewater.
      a. Filler/Resurfacre thin Overlay (Thickness = minimum 1/16”), Tnemec 218 MortarClad, or ENGINEER-approved equal.
      b. Epoxy Mortar (DFT = 125 mils) Tnemec 434 Perma-Shield, or ENGINEER-approved equal.
      c. Finish coat (DFT = 15-20 mils), Tnemec 435 Perma-Glaze, or ENGINEER-approved equal.

C. Exterior surfaces, above grade.
   1. System: Waterproofing: Two coats of a clear, non-staining, silane-modified-siloxane masonry waterproofing material. The waterproofing system after application shall be provided with not less than a five-year warranty on the performance of the product.
      a. Where EPA Allows Solvents: Chemstop, "WB Heavy Duty”; Rainguard, "XS", Chemprobe / Prime a Pell H2O; or ENGINEER-approved equal.
      b. Where EPA Prohibits Solvents: Chemstop, "WB Regular / Heavy Duty"; Rainguard's "Blok-Lok"; Rainproof's "Chem-Trete #45", Chemprobe / Prime A Pell H2O; or ENGINEER-approved equal.
   2. Surfaces shall be cleaned with a chemical (approved by waterproofing manufacturer) cleaner and power wash. Surfaces shall be clean and dry before application of waterproofing. Method and rate of application shall be in accordance with manufacturer's published instructions. A manufacturer's representative shall be present during applications if necessary for warranty.

PART 3 – EXECUTION

3.01 INSPECTION

A. Examine surfaces scheduled to receive coating for conditions that will adversely affect application, permanence, or quality of work and which cannot be put into an acceptable condition through surface preparation.

B. Do not proceed with surface preparation or coating application until conditions are suitable.

3.02 ACCEPTANCE OF SURFACES

A. The commencement of coating work in any area or space will be construed as acceptance of the surface as being satisfactory.

3.03 PREPARATION AND APPLICATION

A. Preparation and application shall be in accordance with coating systems (PART 2).

3.04 FINAL INSPECTION

A. Protect all coated surfaces against damage until the date of final acceptance.

B. Conduct a final inspection of all coating work and recoat or retouch any areas or surfaces found deficient in complying with these Specifications.

DRAFT

3.05 PIPING IDENTIFICATION AND COLOR CODE

A. All piping identification and color coding shall follow the ANSI/ASME A13.1 Labeling guidelines, unless noted otherwise in the Contract Documents.

END OF SECTION

DRAFT

SECTION 10 7316.23 – FABRIC CANOPIES

PART 1 – GENERAL

1.01 SCOPE – Supply all labor, materials, equipment, and incidentals required to install and place into operation the fine and coarse screening system as shown on the Drawings and as specified herein.

1.02 REFERENCE STANDARDS – The properties of all materials, design, fabrication, and performance of the equipment to be furnished under this section shall be in accordance with the latest issue of applicable standard specifications. The governing authorities of these standards are listed below.

A. ACI, American Concrete Institute

B. AISC, American Institute of Steel Construction

C. ASCE, American Society of Civil Engineers

D. ASTM, American Society of Testing and Materials

E. AWS, American Welding Society

F. CRSI, Concrete Reinforcing Steel Institute

G. IBC, International Building Code

H. NFPA, National Fire Protection Association

1.03 SUBMITTALS – Submittals shall be provided to the ENGINEER that includes all the following information:

A. Certified shop drawings showing all important details of construction, dimensions, and anchor bolt locations.

B. Descriptive product literature.

C. Schematic support and foundation setup.

D. A complete bill of materials of all components.

1.04 DESIGN REQUIREMENTS

A. Design Load

1. The fabric canopy shall withstand 115 MPH under the 3-Sec. Gust, RISK CATEGORY II & EXPOSURE according to the basic wind speed maps of American Society of Civil Engineers (ASCE) 7-16. The wind load is equal to the allowable stress design wind speed of 90 MPH set by ASCE 7-05 and International Building Code (IBC) 2018 Equation 16-33.
2. The live load of the fabric canopy is 5 psf, and the snow load is 5 psf.

PART 2 – PRODUCTS

2.01 MANUFACTURER

A. The structure's materials are provided by USA Shade & Fabric Structures, Texas or ENGINEER-approved equal.

B. If submitted structure requires arrangement differing from that specified, prepare and submit for review complete structural, mechanical, and materials lists showing all necessary changes. Any changes are at no additional compensation and the Manufacturer will be responsible for all engineering costs of redesign by the ENGINEER, if necessary.

DRAFT

2.02 COMPONENTS

A. Structural Steel

1. All structural steel members in the project shall be cold-formed as hollow structural sections (HSS) per American Society of Testing Materials (ASTM) A500 GRADE C. The mechanical properties for square and rectangular HSS shall be 50,000 psi yield and 62,000 PSI tensile unless specified. The mechanical properties for round pipes shall be 46,000 psi yield and 62,000 psi tensile unless specified.
2. All galvanized steel tube products shall be manufactured per ASTM A500. The mechanical properties for galvanized round tubes shall be 45,000 psi yield and 48,000 psi tensile unless specified.
3. All plates shall comply with ASTM A572 Grade 50.
4. Structural steel needs to be detailed, fabricated, and erected per American Institute of Steel Construction (AISC) specifications.
5. All shop welds shall meet American Welding Society (AWS) D1.1 specifications during execution. All welds shall be continuous if length is not specified, noted, or shown on the drawing. All welds shall develop the full strength of the weaker member and be made using E70XX .045 wire.
6. All shop connections shall be welded unless specified. Field connections will be indicated on the drawings when required. All fillet welds shall be a minimum of 3/16" unless specified. Field welds are NOT ALLOWED.
7. All high strength bots shall comply with ASTM A325 Type 1 or A490 Type 1. All nuts need to comply with ASTM A563DH. All washers need to comply with ASTM F436.
8. All high strength bolds need to be tightened to a snug tight condition.
9. All stainless-steel bolts/studs shall comply with ASTM F593, Alloy Group 1 or 2. All stainless-steel nuts shall comply with ASTM F594 Alloy Group 1 or 2.

B. Fabric Specification

1. Fabric shall be made of a high-density polyethylene with ultraviolet additives, with monofilament and tape construction (giving a stable material and Rachel knitted to prevent unraveling if cut).
2. Fabric specifications shall be as follows:

	SOLID COLORS	STRIPE COLORS
Tear Strength	Warp 220.4622 lb Weft 462.9707 lb	Warp 182.9836 lb Weft 401.2413 lb
Burst Strength	37.7098 psia	33.0686 psia
Fading	Minimum fading after 5 years	
Life Expectancy	A minimum of 8 years of continuous exposure to the sun	

3. Fabric needs to pass the fire tests National Fire Protection Association (NFPA) 701 Test 2 and ASTM E84.
4. Thread-PTFE (Teflon) shall meet the following specifications: high strength, low shrinkage, wide temperature range, flex and abrasion resistance, and ultraviolet radiation immunity. Lockstitch is 1200 denier, and chainstitch is 2400 denier.

C. Aircraft Cable

1. Wire rope item 15A (60 ft of ½" galvanized steel cable) and 15B (45 ft of ½" steel galvanized cable) shall be 6x19 strand core wire rope with a breaking strength value of 20,500 lbs.
2. Wire rope item 15C (50 ft of 3/8" galvanized Keder cable) and 15D (6 ft of 3/8" Keder galvanized cable) shall be 7 x 19 strand core wire rope with a breaking strength value

DRAFT

of 14,400 lbs.

3. Cables shall be fed through the fabric sleeves around the perimeter of the canopy and tension until the fabric panels, which are purposely designed undersized, reach a taunt appearance. Retighten during maintenance to minimize the long-term cable sag.

D. Reinforced Concrete Notes

1. Concrete work shall be executed in accordance with the structural concrete ACI 301 and building code ACI 318. Concrete specifications are as follows: 28-day strength of 2500 psi, slump 3-5, Portland cement conform to ASTM C150, and aggregate conform to ASTM C33.
2. All reinforcement steel shall meet ASTM A615 Grade 60 and be detailed, fabricated, and placed to meet structural concrete ACI 301, ACI detailing manual, and CRSI manual of standard practice.
3. All anchor bolts set in new concrete shall comply with ASTM F1554 Grade 55 (galvanized).
4. All non-shrink grout shall have a minimum 28-day compressive strength of 5,000 psi and comply with ASTM C109, ASTM C939, ASTM C1090, and ASTM C1107 when applicable.
5. Soil parameters for footing analysis shall meet the IBC Table 1806.2, Class 5 for medium dense sand/sandy gravel.

2.03 SURFACE PREPARATION AND PAINTING

A. All steel tubing shall be coated with in-line electroplating coat process three times for rust protection. The internal coating shall be zinc and organic coatings to prevent corrosion as manufactured by Allied Tube & Conduit or approved equal.

B. All structural steels need to be painted with one-shot coat, 2.5 to 3.5 mils thick minimum. The coating is based on polyester TGIC as a weather-resistant power coating. Proper treatment and drying is required before coating to achieve optimum adhesion. Polyester TGIC specifications shall be pencil hardness per ASTM D3363, humidity ASTM D2247, and solvent resistance (PCI Method) – 50 DBL Rubs SL. Softness

PART 3 – EXECUTION

3.01 WARRANTY

A. The structural integrity of all supplied steel shall be warranted for ten years. If assembly is provided by the Manufacturer workmanship covering the labor for the removal, assembly, and cost of shipping will be covered for one year. All steel surface finishes are warranted for one year.

B. Shadesure™, Colourshade® FR, Extreme 32™, Commercial 95™, SaFRshade™ and Monotec 370™ fabrics all carry a ten-year limited manufacturer's warranty against failure from significant fading, deterioration, breakdown, outdoor heat, cold, or discoloration. Should the fabric need to be replaced under the warranty, the Manufacturer shall manufacture and ship a new replacement fabric at no charge for the first six years, thereafter pro-rated at 20% per year over the remaining four years.

C. The following are exceptions to the preceding warranty terms:

1. Shadesure™ fabrics in Red, Yellow, Atomic Orange, Electric Purple, Zesty Lime, Cinnamon, Olive, and Mulberry shall carry a five-year pro-rated warranty.
2. Fabrics attached to Coolbrella structures shall carry a three-year warranty.
3. Individual fabric tops measuring greater than 40' in length shall be covered by a non-prorated five-year warranty.
4. Precontraint 502™ waterproof material shall carry to an eight-year pro-rated warranty.

D. Sewing thread shall be warranted for ten years.

DRAFT

3.02 DELIVERY AND STORAGE

A. The fabric canopy shall be appropriately crafted and delivered to protect against damage during shipment.

B. An authorized representative of the Contractor shall inspect the fabric canopy on delivery to the jobsite and shall report any damage or missing components to the Manufacturer and the ENGINEER within 72 hours of receipt of the shipment.

3.03 INSTALLATION**:** The installation of the structure shall be as indicated on the drawings and in strict accordance with the Manufacturer's instructions and recommendations.

3.04 NOTICE

A. Fabric top shall be removed if snow exceeding 5 psf is anticipated.

B. Fabric top shall be removed if winds exceeding 115 mph are anticipated.

END OF SECTION

DRAFT

SECTION 13 4613 – LIGHTNING PROTECTION FOR STRUCTURES

PART 1 – GENERAL

1.01 SUMMARY

A. Section Includes: Air terminals, interconnecting conductors, grounding, and bonding for lightning protection.

1.02 SYSTEM DESCRIPTION

A. Description: Conductor system protecting for canopy and tank structures.

1.03 SUBMITTALS

A. Shop Drawings: Indicate layout of air terminals, grounding electrodes, and bonding connections to structure and other metal objects. Include terminal, electrode, and conductor sizes, and connection and termination details.

B. Product Data: Show dimensions and materials of each component, and include indication of listing according to UL 96.

C. Test Reports: Indicate procedures and results for specified factory and field testing and inspection.

D. Manufacturer's Certificate: Products meet or exceed specified requirements.

E. Certificate of Compliance: From inspector indicating approval of lightning protection systems.

1.04 CLOSEOUT SUBMITTALS

A. Project Record Documents: Record actual locations of air terminals, grounding electrodes, bonding connections, and routing of system conductors.

1.05 QUALITY ASSURANCE

A. Perform Work according to NFPA 780.

B. Perform Work according to UL 96A.

C. Perform Work according to LPI-175.

D. Manufacturer: Company specializing in lightning protection equipment with three years' experience and member of Lightning Protection Institute.

E. Installer: Authorized installer of manufacturer with three years' experience.

F. Inspection Agency: UL Lightning Protection Institute, Inc. (LPI) Electrical Testing Laboratories, Inc., or ENGINEER-approved equal.

1.06 FIELD MEASUREMENTS

A. Verify field measurements prior to fabrication, and indicate on Shop Drawings.

1.07 COORDINATION

A. Coordinate Work with roofing and exterior and interior finish installations.

DRAFT

PART 2 – PRODUCTS

2.01 COMPONENTS

A. Manufacturers:
   1. ABB, Eaton, Erico, or ENGINEER-approved equal.

B. Product Listing: UL 96.

C. Air Terminals:
   1. Material: Copper
   2. Configuration: Solid
   3. Use adhesive base for single-ply roof installations
   4. Air Terminal for Chimney: Lead-coated copper
   5. Decorations: Ball
   6. Grounding Rods: Solid copper
   7. Ground Plate: Copper
   8. Conductors:
      a. Material: Copper
      b. Configuration: Cable

D. Connectors and Splicers: Bronze

PART 3 – EXECUTION

3.01 EXISTING WORK

A. Remove exposed abandoned air terminals, interconnecting cable, and grounding electrodes, and other lightning protection components. Cut cable flush with walls, floors, and roof; patch surfaces.

B. Maintain access to existing grounding and bonding connections, and other installations remaining active and requiring access. Modify installation or install access panel.

C. Extend existing lightning protection installations using materials and methods compatible with existing installations and as specified.

D. Clean and repair existing remaining or reinstalled lightning protection components.

3.02 INSTALLATION

A. Install according to NFPA 780, UL 96A, and LPI-175.

B. Connect conductors using exothermic welding process. Protect adjacent construction elements and finishes from damage.

C. Conceal interior conductors within building finishes. Conceal exterior conductors where practical.

D. Bond exterior metal bodies on structure to lightning protection system.

3.03 FIELD QUALITY CONTROL

A. Perform inspection and testing according to UL 96A.

END OF SECTION

DRAFT

SECTION 22 0529 – HANGERS AND SUPPORTS FOR PLUMBING PIPING AND EQUIPMENT

PART 1 – GENERAL

1.01 THE REQUIREMENT

A. Provide pipe supports, hangers, guides, and anchors, complete, in accordance with these Specifications and the Contract Documents.

B. American Iron and Steel (AIS) requirement applies to this Section. All iron and steel products used in this project must be produced in the United States.

1.02 SUBMITTALS

A. Submittals shall be in accordance with Section 01 3300 – Submittal Procedures.

B. Shop Drawings shall include the following information:
   1. Drawings of pipe supports, hangers, anchors, and guides
   2. Calculations for special supports and anchors.

PART 2 – PRODUCTS

2.01 GENERAL REQUIREMENTS

A. Code Compliance: All piping systems and pipe connections to equipment shall be properly anchored and supported to prevent undue deflection, vibration, dislocation due to line pressures, and stresses on piping, equipment, and structures. All supports and parts thereof shall conform to the requirements of ANSI/ASME B31.1 - Power Piping, except as supplemented or modified in the tables within this Specification. Supports for plumbing piping shall be in accordance with the latest edition of the applicable plumbing code or local administration requirements.

B. Structural Members: Wherever possible, pipes shall be supported from structural members. Where it is necessary to frame structural members between existing members, such supplementary members shall be provided. All supplementary members shall be in accordance with the requirements of the building code and the American Institute of Steel Construction.

C. Pipe Hangers: Pipe hangers shall be capable of supporting the pipe in all conditions of operation, allowing free expansion and contraction of the piping, and preventing excessive stress on equipment. All hangers shall have a means of vertical adjustment after erection. Hangers shall be designed to prevent becoming disengaged by any movement of the supported pipe. Hangers subject to shock or thrust imposed by the actuation of safety valves, shall include hydraulic shock suppressors. All hanger rods shall be subject to tensile loading only.

D. Hangers Subject to Horizontal Movements: At hanger locations where lateral or axial movement is anticipated, suitable linkage shall be provided to permit such movement. Where horizontal pipe movement is greater than 1/2-inch, or where the hanger rod deflection from the vertical is greater than 4 degrees from the cold to the hot position of the pipe, the hanger rod and structural attachment shall be offset in such a manner that the rod is vertical in the hot position.

E. Spring-Type Hangers: Spring-type pipe hangers shall be provided for piping subject to vibration or vertical expansion and contraction, such as engine exhausts and similar piping. All spring-type hangers shall be sized to the manufacturer's printed recommendations and the loading conditions encountered. Variable spring supports shall be provided with means to limit misalignment, buckling, eccentric loading, or to prevent overstressing of the spring, and with means to indicate at all times the

compression of the spring. Supports shall be capable of accommodating at least 4 times the maximum travel due to thermal expansion.

F. Thermal Expansion: Wherever expansion and contraction of piping is expected, a sufficient number of expansion loops or joints shall be provided, together with the necessary rolling or sliding supports, anchors, guides, pivots, and restraints permitting the piping to expand and contract freely in directions away from the anchored points. All components shall be structurally suitable to withstand all loads imposed.

G. Heat Transmission: Supports, hangers, anchors, and guides shall be so designed and insulated, that excessive heat will not be transmitted to the structure or to other equipment.

H. Riser Supports: Where practical, risers shall be supported on each floor with riser clamps and lugs, independent of the connected horizontal piping.

I. Freestanding Piping: Free-standing pipe connections to equipment such as chemical feeders and pumps shall be firmly attached to steel frames fabricated from angles, channels, or I-beams anchored to the structure. Exterior, free-standing overhead piping shall be supported on fabricated pipe stands consisting of pipe columns anchored to concrete footings, with horizontal, welded steel angles and U-bolts or clamps securing the pipes.

J. Materials of Construction:
   1. General: All pipe support assemblies, including framing, hardware, and anchors, shall be steel construction, galvanized after fabrication, unless otherwise indicated.
   2. Submerged Supports: All submerged piping, as well as piping, conduits, and equipment in hydraulic structures within 24 inches of the water level, shall be supported with support, assemblies, including framing, hardware, constructed of Type 304 stainless steel, unless otherwise indicated. All bolts and nuts shall be 316 stainless steel conforming to ASTM A193, Grade B8M, for bolts and ASTM A194, Grade 8M, for nuts.

K. Point Loads: Any meters, valves, heavy equipment, and other point loads on PVC, FRP, and other plastic pipes, shall be supported on both sides, according to manufacturer's recommendations to avoid undue pipe stresses and failures. To avoid point loads, all supports on PVC, FRP, and other plastic piping shall be equipped with extra wide pipe saddles or galvanized steel shields.

L. Noise Reduction: To reduce transmission of noise in piping systems, all copper tubes in buildings and structures shall be wrapped with a 2-inch-wide strip of rubber fabric or similar, suitable material at each pipe support, bracket, clip, or hanger.

2.02 SUPPORT SPACING

A. Supports for piping with the longitudinal axis in approximately a horizontal position shall be spaced to prevent excessive sag, bending, and shear stresses in the piping, with special consideration given where components such as flanges and valves impose concentrated loads. Pipe support spacing shall not exceed the maximum spans in the tables on the following pages. For temperatures other than ambient temperatures, or those listed, and for other piping materials or wall thicknesses, the pipe support spacings shall be modified in accordance with the pipe manufacturer's recommendations. Vertical supports shall be provided to prevent the pipe from being overstressed from the combination of all loading effects.

DRAFT

1. Support Spacing for Schedule 40 and Schedule 80 Steel Pipe:

Normal Pipe Diameter (inches)	Maximum Span (feet)
1/2	6
3/4 and 1	8
1 1/4 to 2	10
3	12
4	14
6	17
8 and 10	19
12 and 14	23
16 and 18	25
20 and greater	30

2. Support Spacing for Welded Fabricated Steel Pipe:

   The support spacing shall be designed so that the stress on the pipe does not exceed 5,000 psi. Maximum deflection of pipe shall be limited to 1/360th of the span and shall be calculated by using the formula:

   $$L = (7500tD/(32t+D))1/2$$

   where:

   t=Thickness (inches)
   D=Diameter (inches)
   L=Maximum span (feet)

3. Support Spacing for Ductile-Iron Pipe:

Normal Pipe Diameter (inches)	Maximum Span (feet)
All diameters	Two supports per pipe length or 10 feet (one of the 2 supports located at joint)

4. Support Spacing for Copper Tubing:

Normal Pipe Diameter (inches)	Maximum Span (feet)
1/2 to 1 1/2	6
2 to 4	10
6 and greater	12

5. Support Spacing for Schedule 40 or 80 PVC Pipe:

Normal Pipe Diameter (inches)	Maximum Span (at 100°F) (feet)
1/2	4
3/4	4
1	5
1 1/4	5
1 1/2	5
2	6
3	7
4	8
6	10
8	11
10	12
12	13

DRAFT

2.03 MANUFACTURED SUPPORTS

A. Stock Parts: Where not specifically indicated, designs which are generally accepted as exemplifying good engineering practice and use stock or production parts, shall be utilized wherever possible. Such parts shall be locally available, new, of best commercial quality, designed and rated for the intended purpose.

B. Manufacturers, or ENGINEER-approved equal:
   1. TOLCO Inc.
   2. Bergen-Paterson Pipesupport Corp., Woburn, MA
   3. Grinnell Corp. (Supply Sales Company), Cranston, RI
   4. NPS Products, Inc., Westborough, MA
   5. Power Piping Company, Pittsburgh, PA
   6. ZSI

2.04 COATING

A. Galvanizing: Unless otherwise indicated, all fabricated pipe supports other than stainless steel or non-ferrous supports shall be blast-cleaned after fabrication and hot-dip galvanized in accordance with ASTM A123 - Specifications for Zinc (Hot-Dip Galvanized) Coatings on Iron and Steel Products.

B. Other Coatings: Other than stainless steel or non-ferrous supports, all supports shall receive protective coatings in accordance with the requirements of applicable Sections in Division 09 – Finishes.

PART 3 – EXECUTION

3.01 INSTALLATION

A. General: All pipe supports, hangers, brackets, anchors, guides, and inserts shall be fabricated and installed in accordance with the manufacturer's printed instructions and ANSI/ASME B31.1 - Power Piping. All concrete inserts for pipe hangers and supports shall be coordinated with the formwork.

B. Appearance: Pipe supports and hangers shall be positioned to produce an orderly, neat piping system. All hanger rods shall be vertical, without offsets, unless noted otherwise. Hangers shall be adjusted to line up groups of pipes at the proper grade for drainage and venting, as close to ceilings or roofs as possible, without interference with other work.

3.02 FABRICATION

A. Quality Control: Pipe hangers and supports shall be fabricated and installed by experienced welders and fitters, using the best welding procedures available. Fabricated supports shall be neat in appearance without sharp corners, burrs, and edges.

END OF SECTION

DRAFT

SECTION 22 1000 – PLUMBING PIPING

PART 1 – GENERAL

1.01 THE REQUIREMENT

A. Furnish all drainage and vent piping, cleanouts and access panels, floor drains, hot and cold water piping, valves, piping specialties and appurtenances, supports and anchors, and plumbing and piping insulation in accordance with the Contract Documents.

B. American Iron and Steel (AIS) requirement applies to this section. All iron and steel products used in this project must be produced in the United States.

1.02 SUBMITTALS

A. Furnish submittals in accordance with Section 01 3300 – Submittal Procedures.

B. Product data to be submitted:
   1. Materials list of items proposed to be provided under this Section.
   2. Manufacturer's specifications, catalog cuts, and other data needed to prove compliance with the specified requirements.
   3. Shop Drawings and other data as required indicating method of installing and attaching equipment, except where such details are fully shown on the Drawings.

C. Sterilization Certificate: Upon completion of water line sterilization, deliver to the ENGINEER two copies of an acceptable "Certificate of Performance" for that activity.

D. Cathodic Protection:
   1. Upon completion of the work of this Section, deliver to the ENGINEER sufficient data to prove that wrapping of steel piping has been tested and meets the specified requirements.
   2. Show date of inspection, voltages used, and name and address of the inspector.

1.03 QUALITY ASSURANCE

A. Use adequate numbers of skilled workmen who are thoroughly trained and experience in the necessary crafts and who are completely familiar with the specified requirements and the methods needed for proper performance of the work of this Section.

B. Codes and Regulations:
   1. In additions to complying with the specified requirements, comply with pertinent regulations of governmental agencies having jurisdiction.
   2. In the event of conflict between or among specified requirements and pertinent regulations, the more stringent requirement will govern when so directed by the Engineer.
   3. Plumbing Code Compliance: Comply with applicable portions of the Uniform Plumbing Code pertaining to selection and installation of plumbing materials and products.

PART 2 – MATERIALS

2.01 PIPE MATERIALS

A. Provide pipes and pipe fittings complying with the applicable Sections within Division 40 – Process Integration and in accordance with the following listings:

B. Cast Iron Soil Pipe and Fittings:
   1. Service weight cast iron conforming to ASTM A74, hubless type, asphaltic coated.
   2. Joints shall be made with cast iron mechanical couplings or stainless-steel sleeves with neoprene gaskets.

DRAFT

C. Galvanized or Black Steel Pipe:
   1. 3 inches and Smaller – ASTM A120. Schedule 40, black or hot-dipped galvanized, welded, or seamless steel pipe, threaded or coupled.
   2. 4 inches and Larger – ASTM A53. Grade A or B, Schedule 40, black or hot dipped galvanized, welded, or seamless steel pipe, threaded.
   3. Fittings: FS WW-P521, 150 psi, malleable iron. Black or hot dipped galvanized ASTM A153.
   4. Unions: FS WW-U-531, Type B, black or hot dipped galvanized, Class 2, 250 psi, malleable iron, ground joint and brass seat.
   5. Sealing Paste or Tape: Teflon.
   6. Corrosion Protective Wrap: Polyvinyl chloride or Polyethylene pressure sensitive tape, 20-mil nominal thickness (one layer 20 mil or two layers 10 mil).
   7. Primer: 3M “Scotchwrap Pipe Primer.”

D. Copper Pipe and Fittings:
   1. Pipe: Underground, ANSI/ASTM B88, Type K, hard temper, seamless water tube.
   2. Fittings: ANSI/ASME B16.22. wrought copper or brass solder-joint fittings.
   3. Solder: Lead-free, silver tin-antimony solder 95-5, or tin-silver solder 96.5-3.5, 95.5, or 94-6, with mildly corrosive liquid or petroleum-based past flux containing chlorides of zinc and ammonium.

E. ABS: (Acrylonitrile Butadiene Styrene) plastic, drain, waste and vent pipe.
   1. Pipe and Fittings: ASTM D2661; ASTM F628; CSA B181.1.
   2. Solvent Cement: As recommended by the pipe manufacturer.

F. Polypropylene Drain, Waste and Vent Pipe:
   1. Flame retardant polypropylene material conforming to ASTM D2146 and flammability based on ASTM D635.
   2. Pipe shall be produced to Schedule 40 Iron Pipe size dimensional standards, including wall
   3. Fitting design shall be based upon the laying length dimensions in ANSI B16-12 for case iron screwed drainage fittings. Fitting wall thicknesses shall be measured in accordance with ASTM D2122, Section 4, and interval diameters shall be measured in accordance with ASTM D2122, Section 7.
   4. In concealed locations, joints shall be made by the electrical fusion method. In exposed or easily accessible locations, mechanical joint polypropylene fittings and joints may be used.
   5. Pipe and fittings shall be GSR Fuseal, manufactured by R & G Sloane Co., or ENGINEER-approved equal.

G. Polyvinyl Chloride (PVC):
   1. General: PVC materials for pipe and fittings shall conform to ASTM D1784, Cell Classification 12454-B. Pipe and fitting materials shall be specially formulated with sufficient UV protection additives to provide for long term outdoor exposure with no deleterious effects. Flanges shall be one-piece solid design or two-part van stone type which utilize the tapered, serrated face and full face gasket technique for joining and are compatible with ANSIN16.5 Class 150 metal flanges. Unions shall be the O-ring type having interchangeable components with true union valves for maximum system versatility.
   2. Schedule 40, 80, and 120: Pipe in accordance with ASTM D1785. Schedule 80 PVC socket type fittings shall conform to ASTM D2467. Schedule 40 PVC fittings shall conform to ASTM D2466. PVC solvent weld cement for socket connections shall meet the requirement of ASTM D2564/ Schedule 80 PVC threaded fittings shall conform to ASTM D2464.

DRAFT

2.02 TRENCH DRAINS

A. Trench Drain Channels:
   1. Trench drain channels shall be made of pre-cast polymer concrete with a top width of 6.1 inches, radiused bottoms and nominal lengths of ½ of 1 meter. All channels shall interlock with tongue and groove connections with adjoining channels. Each channel shall have horizontal anchoring ribs to mechanically lock the channel into the floor slab or pavement.
   2. Channels shall have available vertical cut outs for 4-inch or 6-inch discharge and available 4-inch or 6-inch horizontal outlet end caps. Channels shall have a built-in bottom slope of 0.6 percent.

B. Channel Grates: Channel grates shall be for heavy duty service made of Vinylester FRP or ENGINEER-approved equal. Grates should be securely locked down with built-in channel lock blocks. Locking mechanism shall be designed so as to provide an obstruction-free trench for maintenance and cleaning as well as to prevent concrete from entering channels during installation. FRP gates should comply with the Contract Documents.

C. Catch Basins: Catch basins shall be pre-cast polymer concrete with FRP grates. Any trench drains entering catch basins shall interlock fully with tongue and groove connections.

D. Joint Sealers: To prevent leakage, joints between channels, catch basin connections, etc., shall be sealed with an adhesive recommended by the manufacturer.

E. Manufacturers: Trench drains shall be as manufactured by ACO Polymer Products, Inc., Chagrin Falls, OH; Polydrain ABT, Inc., Troutman, NC; or ENGINEER-approved equal.

2.03 PIPE HANGERS

A. Water Piping:
   1. Split ring hangers with supporting rods, Grinnel Fig. 108; Elcen Fig. 10, or ENGINEER-approved equal.
   2. Semco “trisolators” or ENGINEER-approved equal.
   3. Channel mounted clamping system, Cush-A-Clamp per ZSI, or ENGINEER-approved equal.

B. Soil and Waste Piping:
   1. Variable ring hangers with supporting rods, Grinnel Fig. 108; Elcen 10, or ENGINEER-approved equal.
   2. Riser clamps at each floor and as required, Grinnell Fig. 261; Elcen Fig. 39 or ENGINEER-approved equal.
   3. Channel mounted clamping system, Cush-A-Clamp per ZSI, or ENGINEER-approved equal.

C. Gas Piping: Split ring hangers with supporting rods, Grinnel Fig. 108; Elcen Fig. 10, or ENGINEER-approved equal.

2.04 PIPE INSULATION

A. Hot and Cold Water (Exposed to Freezing Conditions): Molded fiberglass insulation jacketed with PVC jacketing. Provide.016 mil embossed aluminum weather protective jacket for outdoor application. Insulation 2-inch thick for pipe sizes less than 6-inch. Flame spread rating of 25 or less and smoke developed ratings of 50 or less per ASTM E84-89a. Manville “Micro-Lok AP”; Owens/Corning Fiberglass “SSL-11,” or ENGINEER-approved equal.

DRAFT

2.05 VALVES: Valves: Isolation valves shall be bronze valves with ends to suit pipe. Valves shall be rated for a working pressure of 150 psi.

A. Bronze Ball Valve: Two-Piece, Full-Port, Bronze Ball Valves with Bronze Trim
   1. Manufacturers: Subject to compliance with requirements, provide products by one of the following or ENGINEER-approved equal:
      a. American Valve, Inc.
      b. Conbraco Industries, Inc.; Apollo Valves
      c. Hammond Valve
      d. Milwaukee Valve Company
      e. Watts Regulator Co.; a division of Watts Water Technologies, Inc.
   2. Description:
      a. Standard: MSS SP-110.
      b. SWP Rating: 150 psig (1035 kPa).
      c. CWP Rating: 600 psig (4140 kPa).
      d. Body Design: Two piece
      e. Body Material: Bronze
      f. Ends: Suit to pipe
      g. Seats: PTFE or TFE
      h. Stem: Bronze
      i. Ball: Chrome-plated brass
      j. Port: Full

B. Bronze Gate Valves: Class 150, Non-Rising Stem Bronze Gate Valves:
   1. Manufacturers: Subject to compliance with requirements, provide products by one of the following ENGINEER-approved equal:
      a. Hammond Valve
      b. Milwaukee Valve Company
      c. Red-White Valve Corporation
      d. Watts Regulator Co.; a division of Watts Water Technologies, Inc.
      e. Conbraco Industries, Inc.; Apollo Valves
   2. Description:
      a. Standard: MSS SP-80, Type 1.
      b. CWP Rating: 300 psig (2070 kPa).
      c. Body Material: ASTM B62, bronze with integral seat and union-ring bonnet.
      d. Ends: Suit to pipe
      e. Stem: Bronze
      f. Disc: Solid wedge; bronze
      g. Packing: Asbestos-free
      h. Handwheel: Malleable iron (bronze, or aluminum).

2.06 OTHER MATERIALS

A. Provide other materials, not specifically described but required for a complete and proper installation, subject to the approval of the ENGINEER.

PART 3 – EXECUTION

3.01 SURFACE CONDITIONS

A. Examine the areas and conditions under which work of this Section will be performed. Correct conditions detrimental to timely and proper completion of the Work. Do not proceed until unsatisfactory conditions are connected.

DRAFT

3.02 PLUMBING SYSTEM LAYOUT

A. Lay out the plumbing system in careful coordination with the Drawings, determining proper elevations for all components of the system and using only the minimum number of bends to produce a satisfactorily functioning system.

B. Follow the general layout shown on the Drawings (where other work may interfere, consult with ENGINEER).

C. Lay out pipes to fall within partition, wall, or roof cavities, and to not require furring other than as shown on the Drawings.

3.03 TRENCHING AND BACKFILLING

A. Perform trenching and backfilling associated with the work of this Section in strict accordance with the provisions of applicable Sections of Division 31 – Earthwork.

B. Cut bottom of trenches to grade. Make trenches 12 inches wider than the greatest dimension of the pipe.

C. Bedding and Backfilling:
   1. Install piping promptly after trenching. Keep trenches open as short a time as practicable.
   2. Under the structures, install pipes on a 6-inch bed of damp sand. Backfill the bottom of slab with damp sand.
   3. Outside of the structures, install underground piping on a 6-inch bed of damp sand. Backfill to within 12-inch of finish grade with damp sand. Backfill remainder with native soil.
   4. Don not backfill until installation has been approved and until Project Record Documents have been properly annotated.

3.04 PIPE SCHEDULE: PIPE SIZES, SCHEDULE, AND MATERIAL TO BE INSTALLED PER DRAWINGS.

A. Interior and Exterior Water Piping and Compressed Air Piping:
   1. Pipe: Underground, ANSI/ASTM B88, Type K, hard temper, seamless copper water tube. Aboveground, ANSI/ASTM B88, Type L, hard drawn, seamless copper water tube.
   2. Fittings: ANSI/ASME B16.22, wrought copper or brass solder joint fittings.
   3. Solder: Lead-free, tin-antimony solder 95-5, or tin-silver solder 96.5-3.5, 95.5-5 or 94-6.

B. Above Ground Facility Drain Piping:
   1. Sizes 3-Inch and Smaller: PVC Schedule 40/80 or standard weight galvanized steel pipe, with black or galvanized cast iron fittings, drainage pattern and screwed joints, or provide service weight cast iron soil pipe and fittings.
   2. Sizes 4-Inch and Smaller: PVC Schedule 40/80 or service weight cast iron soil pipe, conforming to ASTM A74, hubless cast iron soil pipe fittings with cast iron mechanical couplings or stainless-steel sleeves with stainless steel bands and neoprene gaskets.

C. Above Ground Chemical Waste Piping: Schedule 40 flame retardant polypropylene, GSR Fuseal, or ENGINEER-approved equal, with electrical-resistance fusion joints and fittings, except that mechanical joints may be used in exposed or easily accessible location.

DRAFT

D. Vent Piping:
   1. Above Ground: Sizes 2-½ inches and smaller; Schedule 40 PVC or galvanized steel pipe ASTM A53, welded or seamless, with black or galvanized cast iron drainage fittings. Pipe sizes 3 inches or larger: PVC or Cast-iron soil pipe and fittings as specified above.
   2. Underground: PVC or Cast-iron soil pipes and fittings.

E. Underground Facility Drain Piping: Schedule 40/80 PVC or service weight cast iron soil pipe: Conforming to ASTM A74, bell and spigot cast iron soil pipe and cast iron bell and spigot fittings or hubless cast iron pipe with cast iron mechanical couplings or stainless steel sleeves with stainless steel bands and neoprene gaskets.

F. Underground Chemical Waste Piping: Schedule 40 flame retardant polypropylene pipe with electrical-resistance fusion joints, as specified above.

G. Facility Distribution Gas Piping: Schedule 40 black steel pipe with malleable iron threaded fittings.

3.05 INSTALLATION OF PIPING

A. General:
   1. Proceed as rapidly as the facility construction will permit.
   2. Thoroughly clean items before installation. Cap pipe openings to exclude dirt until fixtures are installed and final connections have been made.
   3. Cut pipe accurately and work into place without springing of forcing, properly clearing windows, doors, and other openings. Excessive cutting or other weakening of the structures will not be permitted.
   4. Remove cutting and threading burrs before assembling piping.
   5. Do not install defective piping of fittings. Do not use pipe with threads which are chipped, stripped, or damaged.
   6. Shoe no tool marks or threads on exposed plated, polished, or enameled connections from fixtures. Tape all finished surfaces to prevent damage during construction.
   7. Make changes in directions with fittings; make changes in main sizes with eccentric reducing fittings. Unless otherwise noted, install water supply and return piping with straight side of eccentric fittings at top of the pipe.
   8. Run horizontal sanitary and storm drainage piping at uniform grade of ¼-inch per foot, unless otherwise noted. Run horizontal water piping with an adequate pitch upwards in direction of flow to allow complete drainage.
   9. Provide sufficient swing joint, ball joints, expansion loops, and devices necessary for a flexible pipeline system, whether or not shown on the Drawings.
   10. Support piping independently at pumps, coils, tanks, and similar locations, so that weight of pipe will not be supported by the equipment.
   11. Pipe the drains from pump glands, drip pans, relief valves, air vents, and similar locations, to spill over an open sight drain, floor drain, or other acceptable discharge point, and terminate with a plain and unthreaded pipe 6 inches above the drain.
   12. Securely bolt all equipment, isolators, hangers, and similar items in place.
   13. Support each item independently from other pipes. Do not use wire for hanging or strapping pipes.
   14. Provide complete dielectric isolation between ferrous and non-ferrous metals.
   15. Provide union and shut off valves suitable located to facilitate maintenance and removal of equipment and apparatus.

DRAFT

B. Trapping and Venting of Fixtures:
   1. Trap and vent all plumbing fixtures in accordance with Uniform Plumbing Code adopted by the Western Plumbing Officials Association and local plumbing codes, whether or not shown on the Drawings. Strictly adhere to any local codes. Only exceptions to the above will be those fixtures which are especially noted herein or on the Drawings to be provided with special wastes.
   2. No vent shall intersect another vent at a point less than 6 inches above extreme overflow level of highest fixture served.
   3. Take vents off top half of horizontal runs and grade so as to free vents quickly of any water or condensation.

C. Installation of Compressed Air Piping: Run compressed air piping with pitch as shown, without pockets. Provide glove valve drips at low points. All branches shall be taken off tip of mains.

D. Equipment Access:
   1. Install piping, equipment, and accessories to permit access for maintenance. Relocate items as necessary to provide such access, and without additional cost to the Owner.
   2. Provide access doors where valves, motors, or equipment requiring access to maintenance are located in walls or chases or above ceilings. Coordinate location of access doors with other trades as required.

3.06 PIPE JOINTS

A. Copper Tubing
   1. Cut square, ream cut end and remove burrs, and clean inside of female fitting to a bright finish.
      a. Apply solder flux with brush to tubing.
      b. Apply flux to fitting socket.
      c. Remove internal parts of solder-end valves prior to soldering.
      d. Assemble.
      e. Remove excess flux.
      f. Apply heat and solder. Allow joint to cool.
   2. Provide dielectric unions at points of connection of copper tubing to ferrous piping and equipment.

B. Screwed Piping:
   1. Deburr cuts
      a. Do not ream exceeding internal diameter of the pipe.
      b. Thread to requirements of ANSI B2.1.
   2. Use Teflon tape on male thread prior to cleaning for air and oil piping.

C. Leaky Joints:
   1. Remake with new material.
   2. Remove leaky section and/or fitting as directed.
   3. Do not use thread cement or sealant to tighten joint.

3.07 INSTALLATION OF POLYPROPYLENE AND PVC PIPING

A. Install in strict accordance with the pipe manufacturer’s directions.

3.08 PIPE SUPPORTS

A. Support suspended piping with clevis or trapeze hangers and rods.

DRAFT

B. Space hangers and support for horizontal steel pipes according to the following schedule:

Pipe Size	Maximum Spacing on Centers
1 ¼" and smaller	8'–0"
1 ½" to 3"	10'-0"
4" to 5"	14'-0"

C. Space hangers and supports for horizontal copper tubing according to the following schedule:

Tube Size	Maximum Spacing on Centers
1" and smaller	6'-0"
1 1/2"	7'-0"
2"	8'-0"
2 1/2"	9'-0"
3" and larger	10'-0"

D. Provide sway bracing on hangers longer than 18 inches.

E. Support vertical piping with riser clamps secured to the piping and resting on the structures. Provide at each floor unless otherwise noted.

F. Provide insulation continuous through hangers and rollers. Protect insulation by galvanized steel shields.

G. Arrange pipe supports to prevent excessive deflection, and to avoid excessive bending stress.

H. Support piping from inserts or anchors in concrete slabs. Where practical, provide the inserts under this Section and arrange for the placing per the applicable Sections of Division 03 – Concrete.

I. Hubless Piping:
1. Provide hangers on the piping at each side of, and within 6 inches of, hubless pipe coupling so the coupling will bear no weight.
2. Do not provide hangers on couplings.
3. Provide hangers adequate to maintain alignment and to prevent sagging of the pipe.
4. Make adequate provision to prevent shearing and twisting of the pipe and the joint.

3.09 SLEEVES AND OPENINGS

A. Provide sleeves in place before concrete is placed.
1. Set pipe sleeves in place before concrete is placed.
2. For un-insulated pipe, provide sleeves two pipe sizes larger than the pipe passing through, or provide a minimum of ½-inch clearance between inside and outside of the pipe.
3. For insulated pipe, provide sleeves of adequate size to accommodate the full thickness of pipe covering, with clearance for packing and caulking.

B. Caulk the space between the sleeve and pipe or pipe covering, using a noncombustible, permanently plastic, waterproof, non-staining compound which leaves a smooth finished appearance, or pack with noncombustible fiberglass packing or fiberglass rope to within ½-incn of both wall faces, and provide the waterproof compound described above.

C. Finish and Escutcheons:
1. Smooth rough edges around sleeves with plaster or spackling compound.

DRAFT

2. Provide 1-inch-wide chrome or nickel-plated escutcheons on all pipes exposed to view where passing through walls, floors, partitions, ceiling, and similar locations.
   a. Size the escutcheons to fit pipe and covering.
   b. Hold escutcheons in place with set screw.

3.10 VALVES

A. Provide valves in water, air, and gas systems. Locate and arrange so as to give complete regulation of apparatus, equipment, and fixture.

B. Provide valves in at least the following locations:
   1. In branches and/or headers of water piping serving a group of fixtures.
   2. On both sides of apparatus and equipment.
   3. For shutoff of risers and branch mains.
   4. For flushing and sterilizing the system.
   5. Where shown on Drawings.

C. Locate valves for easy accessibility and maintenance.

3.11 CONCRETE

A. Provide concreted required for the work of this Section in strict accordance with pertinent provisions of Division 03 – Concrete.

3.12 DISINFECTION OF WATER SYSTEMS

A. Disinfect water systems in accordance with the applicable Sections of Division 33 – Utilities.
   1. Perform disinfection under the Engineer's observation. Notify the ENGINEER at least 48 hours prior to start of the disinfection process.
   2. Upon completion of disinfecting, secure and submit the Certificate of Performance required under Article 1.04 of this Section, stating system capacity, disinfectant used, time and rate of disinfectant applied and resultant residuals in ppm at completion.
   3. Use disinfectant method approved by the ENGINEER.

3.13 OTHER TESTING AND ADJUSTING

A. Provide personnel and equipment, and arrange for and pay the costs of all required tests and inspections required by governmental agencies having jurisdictions.

B. Where tests show materials or workmanship to be deficient, replace or repair as necessary, and repeat the tests until the specified standards are achieved.

C. Adjust the system to optimum standards of operations.

END OF SECTION

DRAFT

SECTION 23 0000 – VENTILATING, HEATING AND AIR CONDITIONING

PART 1 – GENERAL

1.01 THE REQUIREMENT

A. Provide ventilating, heating, and air conditioning systems, complete and operable, in accordance with the Contract Documents.

1.02 REFERENCE SPECIFICATIONS, CODES, AND STANDARDS

A. All work and materials shall be in full accordance with the latest rules and regulations or publications of the Health and Safety Rules (Air Conditioning Systems), the local Plumbing Code, the local Building Code, and all other local codes. Nothing in the Contract Documents shall be construed to permit work in violation of the above codes, rules, and regulations. In the absence of applicable codes, the installation and workmanship shall follow the standards set by the American Society of Heating, Refrigeration and Air Conditioning.

1.03 SUBMITTALS

A. Shop Drawings: Shop drawings shall be submitted in accordance with Section 01 3300 – Submittal Procedures.

B. Equipment Numbers: Equipment is identified by assigned numbers for reference and location purposes in the Contract Documents. The appropriate equipment numbers shall be included on the Shop Drawings and on other submittals.

1.04 WARRANTY

A. Air conditioners, and all fans and blowers, shall carry the manufacturer's standard warranty, and all such warranties shall be furnished upon final acceptance of the completed systems. All reciprocating refrigerant compressors shall carry a 5-year warranty by the manufacturers.

PART 2 – PRODUCTS

2.01 GENERAL

A. Quality: All mechanisms or parts shall be amply proportioned for the stresses which may occur during operation or for any other stresses which may occur during fabrication and erection. Individual parts that are alike in all units shall be alike in workmanship, design, and materials and shall be of the manufacturer's top line, industrial-commercial grade.

B. Supports: All equipment and appurtenances shall be firmly anchored or connected to supporting members. All supports required for the proper installation of the equipment, but not forming an integral part of the building structure, shall be provided by the heating and ventilating subcontractor, unless otherwise indicated. Equipment shall be supported on restrained spring-type vibration isolators.

C. Noise/Vibration Control: The system shall be free of any objectionable vibrations and noise. Flexible connections shall be provided in all ducts and piping connections to fans, compressors, and any other vibrating equipment.

D. Electric Motors: Electric motors shall be provided in accordance with Division 26 – Electrical.

2.02 DUCTWORK AND MISCELLANEOUS ACCESSORIES

A. Construction: Sheet metal ducts and plenums shall be constructed with airtight joints and seams in accordance with ASHRAE standards and SMACNA Duct Construction Manual. All joints on concealed ducts shall be taped with pressureless tape and adhesive, except

DRAFT

welded or soldered joints. Ductwork materials shall be galvanized steel or aluminum, unless otherwise indicated. Minimum duct gauges required are as follows:

Maximum Dimension of Duct (inches)	Galvanized Steel U.S Standard Gauge	Aluminum B and S Gauge
12 and less	26	24
13 through 30	24	22
31 through 54	22	20
55 through 84	20	18

B. Supports: Supports for horizontal ducts and plenums shall be galvanized steel angles with hanger rods. Supports for vertical ducts shall be band iron strap or angle bracket type. Inlet ducts shall be amply braced to withstand maximum negative pressure.

C. Insulation: The exterior of all ductwork inside of buildings downstream of air conditioning or heating units, other than ducts located in air conditioned spaces, shall be insulated with 2-inch thick flexible glass fiber insulation with a UL-labeled vapor barrier. All joints shall be taped to provide a continuous vapor seal. The insulation shall be attached to the ducts with adhesive applied in a 50 percent coverage. Insulation also shall be secured to the bottom of rectangular ducts over 24 inches wide with mechanical fasteners spaced 12 inches on centers. Ductwork to be internally lined will not require exterior insulation.

D. Lining: The interior of supply and return ducts and plenums within 10-feet distance from fans and all ductwork exposed to the weather shall be lined. Duct lining shall be 1-inch-thick fiberglass fastened to the inside of the ducts. Fastening shall be 100 percent coverage adhesive and mechanical fasteners 12 inches on center in both directions starting approximately 6 inches from ends of insulation. All exposed edges, ends, and rough surfaces shall be painted with adhesive or taped with 3-inch canvas tape dipped in adhesive.

E. Bird Screens: Removable bird screens shall be provided on all outside air intakes and exhaust air discharges to outside air. Screens shall be secured in frames of same metal as screens. Bird screens shall be ½-inch mesh stainless steel by 14-gauge.

F. Flexible Connectors: Flexible duct connections shall be made with banded or flanged 8-oz canvas, or reinforced plastic, or equal at each point where a blower unit is connected to a duct. A minimum clearance of 3 inches between the duct and source of vibration shall be maintained.

G. Diffusers, Grilles, and Registers: All supply air registers and diffusers, return air, and exhaust grilles shall be constructed with smooth corners, flanges, and sponge rubber gaskets and material as noted on the Diffuser Schedule in the Contract Documents. All supply and return air registers and diffusers shall have individually variable blades and volume control dampers as indicated. All ceiling or duct-mounted outlets shall be off-white. Wall-mounted outlets shall be factory prime-coated. Terminals shall be Titus; Metalaire; Krueger; or ENGINEER-approved equal.

H. Acoustic Louvers: Acoustic louvers shall be provided as indicated. Acoustic louvers shall have a minimum noise reduction of 14 dB at octave band No. 3. The CONTRACTOR shall submit certified data from a laboratory substantiating the acoustical performance. Static pressure drop shall not exceed 0.100 inches W.C. at 750 fpm.

I. Acoustic louvers shall be of galvanized formed steel construction with air foil blades. Frame and blade face shall be of 16 and 18-gauge, respectively. Air-side blades shall have perforations, and blades shall be packed with 3.5 lb. density fiber glass or with inert, vermin-and moisture-proof mineral fiber for better acoustical performance. Louvers shall be flush with exterior wall, with mounting frames caulked to provide weather-tight connections. All protruding inside edges shall be provided with smooth moldings. Acoustic

DRAFT

louvers shall be Ruskin, Industrial Acoustics Company; or ENGINEER-approved equal. Coat louvers in accordance with these Specifications.

J. Turning Vanes: Square-turn elbows shall be fitted with shop-fabricated double-blade turning vanes mounted inside rails. Construction shall be of the same material as the duct work and be rigid enough to prevent vibration at high air flow.

K. Air Extractors: An air extractor shall be provided on each take-off from main supply duct adjacent to any diffuser, register, or grille where a splitter is not used. Air extractors shall be Carnes; Tuttle and Bailey or ENGINEER-approved equal. Extractors shall have synchronized steel curved blades, heavy side rails, and screw operator.

2.03 CONTROLS

A. General: All cooling, ventilating, and air conditioning equipment shall be provided with manual and automatic control systems as indicated. The exhaust fan shall be interlocked with the air conditioner to prevent fan operation while the A/C unit is operating. The exhaust fan shall be controlled from a HAND-OFF-AUTOMATIC switch and line-voltage cooling thermostat, wall-mounted. Individual exhaust fans shall have manual switches for single or 2-speed motors as indicated.

B. Thermostats: Room thermostats shall be of the modulating electric type, except where 2-position action is required. Thermostats shall be located in air-conditioned spaces and shall have a range of 40°F to 100°F. All thermostats shall have exposed adjustment dials and a thermometer on the front face. Mounting height shall be 5 feet. An insulating back shall be provided where exterior wall mounting is shown. Guards shall be provided for room thermostats installed in areas other than administrative offices or control rooms.

C. Manufacturers: Control system components and thermostats shall be as manufactured by Honeywell; Johnson Controls Company; General Controls; or ENGINEER-approved equal.

2.04 PIPING

A. Piping in air conditioning systems shall be galvanized steel in accordance with these Specifications. Equipment drains shall be of Type "K" copper tube.

2.05 FANS

A. General: Location, type, capacity, and motor horsepower shall be as indicated. Fans shall be complete with motors, variable motor bases, variable drives, safety cages, belt guards, flexible connections to supply and/or suction ducts, vibration isolators, and necessary accessories. All fans shall be suitable for continuous operation.

B. Performance: Fans shall be guaranteed to deliver the quantities of standard air against the respective static pressure without deviating by more than 5 percent. Every fan wheel, regardless of size, shall be statically and dynamically balanced, and shall be free from objectionable vibration or noises.

2.06 VENTILATION FAN

A. Ventilation fan shall be remote mount, energy conserving type, with no less than 340 cfm as certified by the Home Ventilating Institute (HVI) at 0.2” static pressure in inches water gauge and no more than 1.7 sone as rated by manufacturer at 0.2” static pressure. Power consumption shall be no greater than 100 watts and energy efficiency rating shall be no less than 3.5 cfm/watt. Housing shall be insulated to reduce condensation. Duct diameter shall be no less than 6”. Fan shall be UL listed when used with GFCI branch circuit wiring. Brackets shall be provided for joist, truss, or suspension installations.

2.07 CENTRIFUGAL EXHAUST FAN

A. Exhaust fan shall be direct mounted, direct driven, propeller type. Fan blades shall be fabricated of aluminum. Propellers shall be statically and dynamically balanced in

DRAFT

accordance with ACMA standard 204. Motors shall be continuous duty ball bearing design, permanently lubricated, heavy duty type, matched to the fan load and furnished at the specified RPM, voltage, phase, and enclosure. Motor drive frame assemblies and fan panels shall be epoxy painted steel. Drive frame assemblies shall be welded wire or formed channels and fan panels shall have pre-punched mounting holes, formed flanges, and a deep formed inlet venturi. Motor shall meet the requirements of Division 26. Fan shall be certified for air and sound performance in accordance with ACMA.

B. Performance: Fans shall be guaranteed to deliver the quantities of standard air against the respective static pressure without deviating by more than 5 percent. Every fan wheel, regardless of size, shall be statically and dynamically balanced, and shall be free from objectionable vibration or noises. Fan performances indicated in the schedule shall be minimum.

C. Isolation Damper: The dampers shall be positive seal, butterfly isolation type. The blade shall be constructed of aluminum or stainless steel depending on requirements. Blade seal shall occur when the gasket seats against the inside of the housing wall. The damper shall be all weld design. Manual actuator shall be 1/4" turn worm gear with handwheel.

D. Fan manufacturers shall be Dayton, Greenheck, Penn Ventilation or ENGINEER-approved equal. Damper manufacturers shall be Arrow, Ruskin or ENGINEER-approved equal.

2.08 AIR CONDITIONER

A. Central Air conditioning unit shall be of the packaged, rooftop design as indicated. Heating and cooling capacity (BTU requirements) shall be as indicated on the plans. All air conditioning units shall have direct expansion coils and, where indicated, gas or electric heaters; filter compartments with access door and industrial type disposable filters mounted on steel frames; mixing boxes with return air, fresh air and relief dampers; mounting frame or curb and restrained spring-type vibration isolators. All units shall be controlled from cooling room-thermostats. Unless otherwise indicated, motorized dampers shall be controlled from outside air thermostats. All outdoor air conditioners shall have heavy galvanized or prime-coated steel cabinets of weather resistant design. All drain pans shall have galvanized steel or copper drain lines connected to the nearest floor sink or drain in accordance with the applicable Plumbing Code.

1. Air conditioners shall be as manufactured by Trane, Carrier, York, Lennox, or ENGINEER-approved equal.

B. Mini-Split Air conditioners shall be a ductless split unit and shall include an indoor wall-mounted air handler and outdoor floor or wall-mounted condenser. All air conditioning units shall have electric heaters (if indicated on plans); advanced filtration, multi-speed fan, and built-in thermostat. Heating and cooling capacity (BTU requirements) shall be as indicated on the plans. All drain lines connected to the nearest floor sink or drain in accordance with the applicable Plumbing Code.

1. Mini-Split Air conditioners shall be as manufactured by Mitsubishi, Pioneer, Panasonic, or ENGINEER-approved equal.

2.09 FILTERS

A. All air handling units and air conditioners shall be provided with filter compartments. The filters shall be of the disposable, high efficiency, industrial type, set into galvanized mounting frames with fastening clips for easy removal.

DRAFT

2.10 EVAPORATIVE COOLER

A. Evaporative cooler shall provide the required CFM and operating conditions as indicated in the plans and drawings. Material of construction shall be made of noncorrosive material capable of resisting corrosion and wear caused by moisture. Units shall operate on 120 VAC with outlet plug, unless noted. Furnished with fan, motor, enclosure with evaporative pads, controls, mounting hardware, roof curb and all appurtenances as required for proper operation. Excess water is to be removed from the bottom of the unit via a drain hose. The evaporative cooling system shall be controlled by a thermostat installed in the building. Manufacturer shall be Phoenix Manufacturing, or ENGINEER-approved equal.

2.11 HEAT PUMP

A. Heat pump shall be performance certified to ISO standard 13256-1 for water loop heat pump, ground water heat pump and ground loop heat pump applications. Units shall be UL listed for safety on all models. The units shall be designed to operate with entering fluid temperature between 50°F and 110°F in cooling and temperatures between 25°F and 80°F in heating.

B. The cabinet shall be fabricated from heavy-gauge steel finished with aluminum zinc alloy for additional corrosion protection. All units shall allow sufficient service access to replace the compressor without unit removal. A duct collar shall be provided on the supply air opening. A filter rack with 1” thick disposable filters and a 1”-return air duct collar shall be provided with each unit. Units shall have a stainless steel condensate drain pan.

C. All units shall contain a sealed refrigerant circuit including a hermetic compressor, bi-directional thermal expansion valve metering device, finned tube air-to refrigerant heat exchanger, refrigerant reversing valve and service ports. Compressor shall be high efficiency rotary or scroll type, designed for heat pump duty, quiet operation, and mounted on rubber vibration isolators. Compressor motors shall be equipped with overload protection.

D. The fan shall be direct drive centrifugal forward curved type with a dynamically balanced wheel. The fan motor shall be an ECM-2 microprocessor controlled DC type motor with internal programming factory set for the specific unit and featuring soft start/stop and a delay off feature for max efficiency and quiet operation.

1. Controls and safety devices will be factory wired and mounted within the unit. Controls shall include compressor contactor, 24V transformer, reversing valve coil and solid state lock-out controller (UPM). Tre EMC motor interface board shall provide a screw type terminal block for thermostat connection, LED to indicate thermostat status and air delivery

E. Supply, return water and condensate drain connections shall be brass female pipe thread fittings and mounted flush to cabinet exterior.

F. Heat pump shall be a Geotherm Model GS as manufactured by FHP Manufacturing, Model CCW as manufactured by McQuay Infinity, or Engineer approved equal.

PART 3 – EXECUTION

3.01 GENERAL

A. Roughing-In: It shall be ascertained that all inserts, chassis, shafts, and openings are correctly located; otherwise all new openings shall be cut at no additional expense.

B. Checking: Test and make tight all work, furnish all equipment necessary to carry out the tests and thoroughly clean the system before startup.

C. System Balancing: After completion of all required work, the system, as a whole, shall be checked and balanced. System balancing shall include the following:

1. Adjusting fans, dampers, diffusers, registers, valves, and other devices so that the quantities of air, water, and steam called for on the Drawings are supplied, returned, or exhausted.
2. Measuring and recording at least once the water and air temperatures delivered through each coil on full heating and full cooling: making all necessary adjustments to obtain the required conditions.
3. Measuring and recording current on each fan and motor, and checking for proper operation of all equipment.
4. Adjusting any variable blade registers to the correct setting to obtain the design conditions.

END OF SECTION

DRAFT

SECTION 26 0126 – MAINTENANCE TESTING OF ELECTRICAL SYSTEMS

PART 1 – GENERAL

1.01 SCOPE OF WORK

A. The CONTRACTOR shall provide testing as specified herein.

1.02 REFERENCES

A. The following is a list of standards which may be referenced in this Section:

1. American National Standards Institute (ANSI):

450	Maintenance, Testing, and Replacement of Large lead Storage Batteries for Generator Stations and Substations.
C2	National Electric Safety Code.
C37.20.1	Metal-Enclosed Low Voltage Power Circuit Breaker Switchgear.
C37.20.2	Metal-Clad and Station-Type Cubicle Switchgear.
C37.20.3	Metal-Enclosed Interrupter Switchgear.
C62.33	Test Specifications for Varistor Surge Protective Devices.

2. American Society for Testing and Materials (ASTM):

D665	Rust Preventing Characteristics of Inhibited Mineral Oil in the Presence of Water
D877	Dielectric Breakdown Voltage of Insulating Liquids Using Disk Electrodes
D923	Sampling Electrical Insulating Liquids
D924	A-Class Characteristics and Relative Permittivity (Dielectric Constant) of Electrical Insulating Liquids
D971	Interfacial Tension of 0.1 Against Water by the Ring Method
D974	Acid and Base Number by Color-indicator Titration
D1298	Density, Relative Density (Specific Gravity), or API Gravity of Crude Petroleum and Liquid Petroleum Products by Hydrometer Method
D1500	ASTM Color of Petroleum Products
D1524	Visual Examination of Used Electrical Insulating Oils of Petroleum Origin in the Field
D1533	Water in Insulating Liquids
D1816	Dielectric Breakdown Voltage on Insulating Oils of Petroleum Origin Using VDE Electrodes
D2285	Interfacial Tension of Electrical Insulating Oils of Petroleum Origin Against Water by the Drop-Weight Method

3. Institute of Electrical and Electronics Engineers (IEEE):

43	Testing Insulating Resistance of Rotating Machinery
48	Test Procedures and Requirements for High-Voltage Alternating-Current Cable Terminators
81	Measuring Earth Resistivity, Ground Impedance, and Earth Surface Potentials of a Ground System
95	Insulation Testing of Large AC Rotating Machinery with High Direct Voltage
118	Test Code for Resistance Measurement
400	Making High-Direct-Voltage Tests on Power Cable Systems in the Field

DRAFT

4. National Electrical Manufacturers Association (NEMA):

   AB 4 Inspection and Preventive Maintenance of Molded Case Circuit Breakers Used in Commercial and Industrial Applications
   PB 2 Deadfront Distribution Switchboards
   WC 7 Cross-Linked-Thermosetting-Polyethylene-Insulated Wire and Cable for the Transmission and Distribution of Electrical Energy.
   WC 8 Ethylene-Propylene-Rubber-insulated Wire and Cable for the Transmission and Distribution of Electrical Energy.

5. International Electrical Testing Association (NETA) 1999: Acceptance Testing Specifications (ATS) for Electrical Power Distribution Equipment and Systems.
6. National Fire Protection Association (NFPA):

   70 National Electrical Code (NEC).
   70E Standard for Electrical Safety Requirements for Employee Workplaces.

1.03 SUBMITTALS

A. Products shall be submitted for review in accordance with these Specifications and the Contract Documents.

B. Administrative Submittals: Submit 30 days prior to performing inspections or tests:
   1. Schedule for performing inspection and tests
      a. Include notification dates for special inspections.
   2. List of references to be used for each test
   3. Sample copy of equipment and materials inspection form(s)
   4. Sample copy of individual device test form
   5. Sample copy of individual system test form

C. Quality Control Submittals: Submit within 14 days after completion of test:
   1. Test or inspection reports and certificates for each electrical item tested

D. Contract Closeout Submittals:
   1. In accordance with Operation & Maintenance requirements specified elsewhere
   2. After test of inspection reports and certificates have been reviewed by ENGINEER and returned, insert a copy of each in operation and maintenance manual.

1.04 QUALITY ASSURANCE

A. Testing Firm Qualifications:
   1. Independent 3rd party organization functioning as an unbiased testing authority.
   2. Professionally independent of manufacturers, suppliers, and installers, of electrical equipment and systems being tested.
   3. Employer of engineers and technicians regularly engaged in testing and inspecting of electrical equipment, installations, and systems.
   4. Supervising engineer accredited as Certified Electrical Test Technologist by National Institute for Certification of Engineering Technologists (NICET), or International Electrical Testing Association and having a minimum of 5 years testing experience on similar projects.
   5. Technicians certified by NICET or NETA.
   6. Assistants and apprentices assigned to project at ratio not to exceed two certified to one non-certified assistant or apprentice.
   7. Registered Professional Engineer to provide comprehensive project report outlining services performed, results of such services, recommendations, actions taken, and opinions.

DRAFT

8. In compliance with OSHA Title 29, Part 1910.7 criteria for accreditation of testing laboratories.

B. Test equipment shall have an operating accuracy equal to, or greater than, requirements established by NETA ATS. Test instrument calibration shall be in accordance with NETA ATS.

1.05 SEQUENCING AND SCHEDULING

A. Perform inspection and electrical tests after equipment has been installed and certified by equipment manufacturer's representative.

B. Perform tests with apparatus de-energized whenever feasible.

C. Inspection and electrical tests on energized equipment are to be:
1. Scheduled with OWNER and ENGINEER prior to de-energization.
2. Minimized to avoid extended period of interruption to the operating equipment.

D. Notify OWNER and ENGINEER at least 72 hours prior to performing tests on energized electrical equipment.

PART 2 – PRODUCTS (NOT USED)

PART 3 – EXECUTION

3.01 GENERAL

A. Tests specified in this Section are to be performed in accordance with the requirements of manufacturer's minimum recommendations, as identified herein, and as detailed in specific equipment specifications.

B. Tests and inspection shall establish that:
1. Electrical equipment is operational within industry and manufacturer's tolerances.
2. Installation operates as designed and intended by the equipment manufacturer.
3. Equipment is suitable for energization.
4. Installation conforms to requirements of Contract Documents and NFPA 70, NFPA 70E, and ANSI C2.

C. Perform inspection and testing in accordance with NETA ATS, industry standards, and manufacturer's recommendations.

D. Adjust mechanisms and moving parts for free mechanical movement.

E. Adjust adjustable relays and sensors to correspond to operating conditions, or as recommended by manufacturer.

F. Verify nameplate data for conformance to Contract Documents.

G. Realign and shim equipment not properly aligned and correct out of alignment, plumb, or level condition.

H. Properly anchor electrical equipment found to be inadequately anchored.

I. Tighten accessible bolted connections, including wiring connections, with calibrated torque wrench to manufacturer's recommendations, or as otherwise specified.

J. Clean contaminated surfaces with cleaning solvents as recommended by manufacturer.

K. Provide proper lubrication of applicable moving parts.

L. Inform OWNER of working clearances not in accordance with NFPA 70.

M. Investigate and repair or replace:
1. Electrical items that fail tests.

DRAFT

2. Active components not operating in accordance with manufacturer's instructions.
3. Damaged electrical equipment.

3.02 ELECTRICAL ENCLOSURES

A. Remove foreign material and moisture from enclosure interior.

B. Vacuum and wipe clean enclosure interior.

C. Remove corrosion found on metal surfaces.

D. Repair or replace, as determined by OWNER, door and panel sections having dented surfaces.

E. Repair or replace, as determined by OWNER, poor fitting doors and panel sections.

F. Repair or replace improperly operating latching, locking, or interlocking devices.

G. Replace missing or damaged hardware.

H. Finish:
1. Provide matching paint and touch up scratches and mars.
2. If required due to extensive damage, as determined by OWNER, refinish the entire assembly.

I. Replace fuses and circuit breakers that do not conform to size and type required by the Contract Documents.

J. Grout, caulk, or seal around the base of enclosures to prevent the entrance of moisture, dust, and rodents.

3.03 DRY TYPE TRANSFORMERS

A. Visual and Mechanical inspection:
1. Physical and insulator damage
2. Proper winding connections
3. Bolt torque level in accordance with most recent publication of NETA ATS, unless otherwise specified by manufacturer.
4. Defective wiring
5. Removal of shipping brackets, fixtures, or bracing
6. Free and properly installed resilient mounts
7. Cleanliness and improper blockage of ventilation passages
8. Verify that tap-changer is set at correct ratio for rated output voltage under normal operating conditions.
9. Verify proper secondary voltage phase-to-phase and phase-to-ground after energization and prior to loading.

B. Electrical Tests:
1. Insulation Resistance Tests:
   a. Applied megohmmeter in accordance with most recent publication of NETA ATS, for each:
      1) Winding-to-winding
      2) Winding-to-ground
   b. 10-minute test duration with resistances tabulated at 30 seconds, 1 minute, and 10 minutes.
   c. Results temperature corrected in accordance with most recent publication of NETA ATS.
   d. Temperature corrected insulation resistance values equal to, or greater than, ohmic values established by manufacturer.

DRAFT

e. Insulation resistance test results to compare within 1 percent of adjacent windings.

2. Perform tests and adjustments for fans, controls, and alarm functions as suggested by manufacturer.

3.04 LOW VOLTAGE CABLES, 600 VOLTS MAXIMUM

A. Visual and Mechanical Inspection:

1. Inspect each individual exposed power cable No. 4 and larger for:
   a. Physical damage.
   b. Proper connections in accordance with Contract Drawings and approved submittals.
   c. Cable bends not in conformance with manufacturer's minimum allowable bending radius where applicable.
   d. Color coding conformance with NFPA 70 or specifications.
   e. Proper circuit identification.
2. Mechanical Connections For:
   a. Proper lug type for conductor material.
   b. Proper lug installation.
   c. Bolt torque level in accordance with most recent publication of NETA ATS, unless otherwise specified by manufacturer.
3. Shielded Instrumentation Cables (IC) for:
   a. Proper shield grounding.
   b. Proper terminations.
   c. Proper circuit identification.
4. Control Cables For:
   a. Proper termination.
   b. Proper circuit identification.
5. Cables Terminated Through Window Type CTs: Verify that neutrals and grounds are terminated for correct operation of protective devices.

B. Electrical Tests:

1. Insulation Resistance Tests:
   a. Applied megohmmeter in accordance with most recent publication of NETA ATS.
   b. Phase-to-phase and phase-to-ground for 1 minute on each pole.
   c. Insulation resistance values equal to, or greater than ohmic values established by manufacturer or listed in the most recent publication of NETA ATS.
2. Contact Resistance Tests:
   a. Contact resistance in microhms across each switch blade and fuse holder, 30 amps and larger.
   b. Investigate deviation of 50 percent or more from adjacent poles or similar switches.

3.05 MOLDED CASE CIRCUIT BREAKERS

A. General: Inspection and testing limited to circuit breakers rated 200 amperes and larger.

B. Visual and Mechanical Inspection:

1. Proper mounting
2. Proper conductor size
3. Feeder designation according to nameplate and one-line diagram
4. Cracked casings
5. Connection bolt torque level in accordance with the most recent publication of NETA ATS.
6. Operate frame size and trip setting with circuit breaker schedules or one-line diagram.
7. Compare frame size and trip setting with circuit breaker schedules or one-line diagram.
8. Verify that terminals are suitable for 75°C rated insulated conductors.

DRAFT

C. Electrical Tests:
   1. Insulation Resistance Tests:
      a. Utilize 1,000-volt megohmmeter for 480 and 600-volt circuit breakers.
      b. Pole-to-pole and pole-to-ground with breaker contacts opened for 1 minute
      c. Pole-to-pole and pole-to-ground with breaker contacts closed for 1 minute
      d. Test valves to comply with the most recent publication of NETA ATS.
   2. Contact Resistance Tests:
      a. Contact resistance in microhms across each pole
      b. Investigate deviation of 50 percent or more from adjacent poles and similar breakers.
   3. Primary Current Injection Test to Verify:
      a. Long-time minimum pickup and delay
      b. Short-time pickup and delay
      c. Ground fault pickup and delay
      d. Instantaneous pickup by run-up or pulse method
      e. Trip characteristics of adjustable trip breakers shall be within manufacturer's published time-current characteristic tolerance band, including adjustment factors
      f. Trip times shall be within limits established by the most recent publication of NEMA AB 4.
      g. Instantaneous pickup value shall be within values established by the most recent publication of NEMA AB 4.

3.06 INSTRUMENT TRANSFORMERS

A. Visual and Mechanical Inspection:
   1. Visually Check Current, Potential, and Control Transformers For:
      a. Cracked insulation
      b. Broken leads or defective wiring
      c. Proper connections
      d. Adequate clearances between primary and secondary circuit wiring
   2. Verify Mechanically that:
      a. Grounding and shorting connections have good contact.
      b. Withdrawal mechanism and grounding operation, when applicable, operate properly.
   3. Insulation resistance measurement on instrument transformer shall not be less than that shown in the most recent publication of NETA ATS.

3.07 METERING

A. Visual and Mechanical Inspection:
   1. Verify meter connections in accordance with appropriate diagrams.
   2. Verify meter multipliers.
   3. Verify that meter types and scales conform to Contract Documents.
   4. Check calibration of meters at cardinal points.
   5. Check calibration of electrical transducers.

DRAFT

3.08 GROUNDING SYSTEMS

A. Visual and Mechanical Inspection:
   1. Equipment and circuit grounds in motor control center and panelboard assemblies for proper connection and tightness.
   2. Ground bus connections in motor control center and panelboard assemblies for proper termination and tightness.
   3. Effective transformer core and equipment grounding.
   4. Accessible connections to grounding electrodes for proper fit and tightness.
   5. Accessible exothermic-weld grounding connections to verify that molds were fully filled and proper bonding was obtained.

3.09 AC INDUCTION MOTORS

A. General: Inspection and testing limited to motors rated 10 hp and larger.
B. Visual and Mechanical Inspection:
   1. Proper electrical and grounding connections.
   2. Shaft alignment.
   3. Blockage of ventilating air passageways.
   4. Operate Motor and Check for:
      a. Excessive mechanical and electrical noise.
      b. Overheating.
      c. Correct rotation.
      d. Check vibration detectors, resistance temperature detectors, or motor inherent protectors for function ability and proper operation.
      e. Excessive vibration.
   5. Check operation of space heaters.

C. Electrical Tests:
   1. Insulation Resistance Tests:
      a. In accordance with IEEE 43:
         1) Motors above 200 hp for 10-minute duration with resistances tabulated at 30 seconds, 1 minute, and 10 minutes.
         2) Motors 200 hp and less for 1-minute duration with resistances tabulated at 30 and 60 seconds.
   2. Insulation resistance values equal to, or greater than, ohmic values established by manufacturers.
   3. Calculate polarization index ratios for motors above 200 hp. Investigate index ratios less than 1.5 for Class A insulation and 2.0 for Class B insulation.
   4. Insulation resistance test on insulated bearings in accordance with manufacturer's instructions.
   5. Measure running current and voltage, and evaluate relative to load conditions and nameplate full-load amperes.
   6. Verify proper operation of motor moisture and winding temperature protection, and other ancillary devices.

3.10 MOTOR CONTROL CENTERS AND MOTOR CONTROLLERS

A. Visual and Mechanical Inspection:
   1. Proper barrier and shutter installation and operation.
   2. Proper operation of indicating and monitoring devices.
   3. Proper overload protection for each motor.
   4. Improper blockage of air-cooling passages.
   5. Proper operation of draw out elements.
   6. Integrity and contamination of insulation system.

DRAFT

7. Check door and device interlocking system by:
   a. Closure attempt of device when door is in OFF or OPEN position.
   b. Opening attempt of door when device is in ON or CLOSED position.
8. Check nameplates for proper identification of:
   a. Equipment title and tag number with latest Contract Drawings and approved submittals.
   b. Pushbuttons
   c. Control switches
   d. Pilot lights
   e. Control relays
   f. Circuit breakers
   g. Indicating meters
9. Verify that fuse and circuit breaker sizes and types conform to Contract Documents.
10. Verify that current and potential transformer ratios conform to Contract Documents.
11. Check bus connections for high resistance by low resistance ohmmeter and calibrated torque wrench applied to bolted joints:
    a. Ohmic value to be zero
    b. Bolt torque level in accordance with the most recent publication of NETA ATS, unless otherwise specified by manufacturer.
12. Check operation and sequencing of electrical and mechanical interlock systems by:
    a. Closure attempt for locked open devices.
    b. Opening attempt for locked closed devices.
13. Verify performance of each control device and feature famished as part of the motor control center or motor controller.
14. Control Wiring:
    a. Compare wiring to local and remote control, and protective devices with elementary diagrams.
    b. Check for proper conductor lacing and bundling.
    c. Check for proper conductor identification.
    d. Check for proper conductor lugs and connections.
15. Exercise active components.
16. Inspect contactors for:
    a. Correct mechanical operations.
    b. Correct contact gap, wipe, alignment, and pressure.
    c. Correct torque of all connections.
17. Compare overload rating with full-load current for proper size.
18. Compare fuse, motor protector, and circuit breaker with motor characteristics for proper size.
19. Perform phasing check on double-ended motor control centers to ensure proper bus phasing from each source.

B. Electrical Tests:
   1. Insulation Resistance Tests:
      a. Applied megohmmeter in accordance with the most recent publication of NETA ATS.
      b. Bus section phase-to-phase and phase-to-ground for 1 minute on each phase.
      c. Contactor phase-to-ground and across open contacts for 1 minute on each phase.
      d. Starter section phase-to-phase and phase-to-ground on each phase with starter contacts closed and protective devices open.
      e. Test values to comply with the most recent publication of NETA ATS.

DRAFT

2. Overpotential Tests:
    a. Maximum applied voltage in accordance with manufacturer's published values. If not available, in accordance with the most recent publication of NETA ATS.
    b. Phase-to-phase and phase-to-ground for 1 minute for each phase of each bus section.
    c. Test results evaluated on pass/fail basis.
3. Current Injection Through Overload Unit at 300 Percent of Motor Full-Load Current and Monitor Trip Time:
    a. Trip time in accordance with manufacturer's published data.
    b. Investigate values in excess of 120 seconds.
4. Control Wiring Tests:
    a. Apply secondary voltage to control power and potential circuits.
    b. Check voltage levels at each point on terminal boards and each device terminal.
    c. Insulation resistance test at 1,000 volts on control wiring except that connected to solid state components.
        1) Insulation resistance to be 1 megohm minimum.
5. Operational test by initiating control devices to affect proper operation.

3.11 LOW VOLTAGE SURGE ARRESTORS

A. Visual and Mechanical Inspection:
1. Adequate clearances between arrestors and enclosures.
2. Ground connections to ground bus.

B. Electrical Tests:
1. Varistor Type Arresters:
    a. Clamping voltage test.
    b. Rated RMS voltage test.
    c. Rated voltage test.
    d. Varistor arrester test values in accordance with ANSI C62.33, Sections 4.4 and 4.7.

END OF SECTION

DRAFT

SECTION 26 0500 – COMMON WORK RESULTS FOR ELECTRICAL

PART 1 – GENERAL

1.01 SCOPE OF WORK

A. It is the intent of this part of the Contract Documents to cover the work and materials necessary for erecting a complete electrical system, tested and ready for continuous use. The system shall be constructed in accordance with the Contract Documents, and Federal, State, and Local codes and regulations.

1.02 RELATED WORK

A. The CONTRACTOR shall coordinate the work with other trades, and furnish and install the equipment in accordance with the manufacturers' requirements.

1.03 GENERAL PROVISIONS

A. Minimum sizes of equipment, and electrical devices, are indicated but it is not intended to show every offset and fitting, nor every structural or mechanical difficulty that will be encountered during the installation of the work.

B. Work indicated on the Plans is approximately to scale, but actual dimensions and detailed Plans should be followed as closely as field conditions permit. Field verification of scale dimensions on Plans is governed by field conditions. Installation of systems and equipment is subject to clarification as indicated in reviewed shop drawings and field coordination.

C. Discrepancies indicated on different Plans, between Plans and actual field conditions, or between Plans and Contract Documents shall be promptly brought to the attention of the ENGINEER for clarification, prior to purchasing and installing equipment.

D. The alignment of equipment and conduit shall be adjusted to accommodate architectural changes, or to avoid work of other trades, without extra expense to the OWNER.

E. The CONTRACTOR shall furnish and install the parts and pieces necessary to the installation of equipment, in accordance with the best practice of the trade, and in conformance with the requirements of these Contract Documents.

F. Items not specifically mentioned in these Contract Documents, or noted on the Plans, or indicated on reviewed shop drawings, but which are obviously necessary to make a complete working installation, shall be deemed to be included herein.

G. The CONTRACTOR shall lay out and install electrical work prior to placing floors and walls. Furnish and install sleeves and openings through floors and walls, required for installation of conduits. Sleeves shall be rigidly supported and suitably packed, or sealed, to prevent ingress of wet concrete. Spacers shall be installed in order to prevent conduit movement. Dimensions indicated for electrical equipment and their installation are restrictive dimensions.

H. The CONTRACTOR shall furnish and install inserts and hangers required to support conduits and other electrical equipment. If the inserts, hangers, sleeves, or other mounting hardware are improperly placed, or installed, the CONTRACTOR shall do necessary work, at their own expense, to rectify the errors.

I. Electrical equipment shall be capable of operating successfully at full-rated load, without failure, at an ambient air temperature of 60°C, and specifically rated for the altitude indicated on the Plans. Electrical equipment not rated for operation at that temperature shall be provided with air conditioning to meet the manufacturers' operating temperature.

J. If any contradictions, contrasts, non-homogeneity, or inconsistency appears, the stricter criteria noted and the collective requirements in any and all of the project documents shall apply.

DRAFT

K. The CONTRACTOR shall perform necessary saw cutting, core drilling, excavating, removal, shoring, backfilling, and other work required for the proper installation of conduits, whether inside, or outside of the buildings and structures. The CONTRACTOR shall repair and patch where demolition has taken place in a manner to match existing original structure.

1.04 REGULATIONS, CODES, AND STANDARDS

A. Electrical work, including connection to electrical equipment integral with mechanical equipment, shall be performed in accordance with the latest published regulations, codes, and standards, of the following:
   1. National Electrical Code (NEC)
   2. State and local codes
   3. Institute of Electrical and Electronic Engineers (IEEE)
   4. American National Standards Institute (ANSI)
   5. American Society for Testing and Materials (ASTM)
   6. Insulated Cable Engineers Association (ICEA)
   7. National Electrical Manufacturers Association (NEMA) Standards
   8. Federal Occupational Safety and Health Act (OSHA)
   9. National Fire Protection Association (NFPA)
   10. National Electrical Testing Association (NETA)

B. When applicable, the material used in the performance of the electrical work shall be listed by the Underwriters' Laboratories, Inc. (UL) for the class of service for which they are intended.

1.05 SUBMITTALS

A. It is the obligation of the CONTRACTOR to organize their work, so that a complete electrical, instrumentation, and control system for the facility will be provided, and will be supported by accurate shop and record drawings, and O&M manuals.

B. The CONTRACTOR shall submit detailed shop drawings and data prepared and organized by the suppliers. The quantity of submittal sets required shall be as specified in the Contract Documents.

C. The submittals shall be neatly grouped and organized by Specification Section number, and sub-section. Related information shall be highlighted, and the specific product shall be marked. All submittals shall be complete, and presented in one package. Incomplete submittals will be returned without review. If a portion of the project requires a fast track schedule, that portion may only be submitted earlier under a separate cover letter. The following shall be submitted to the ENGINEER and returned reviewed to the CONTRACTOR before fabrication is started.
   1. A complete list of the equipment and materials, including the manufacturer's name, product specification, descriptive data, technical literature, performance charts, catalog cuts, installation instructions, and spare part recommendations for each different item of the equipment specified. The above shall clearly show all the specified requirements as described in the Specifications including but not limited to specific UL and NEMA rating, technical capabilities, test result verifications, and acceptance letters.
   2. Drawings containing complete point to point wiring and schematic diagrams, control diagrams, and any other details required to demonstrate that the system has been coordinated and will operate as intended. Drawings for each panel, cabinet, or enclosure shall show a complete Bill of Materials, wire numbers for internal panel and field wiring, terminal block numbers, proposed internal layout with assembly details, anchoring, support, and appurtenances of equipment, and equipment relationship to other parts of the work including clearances for maintenance and operations.

DRAFT

3. Any exceptions to these Specifications, with the reasons for requesting such exceptions, with calculations and drawings for redesign of related components, including detail drawings showing internal and assembly details, with installation instructions. Proposed layout showing any modifications or exceptions to related work made necessary by this work, with calculations and drawings showing such modifications or exceptions.

D. Upon Project acceptance, the CONTRACTOR shall submit "Record Drawings" of the electrical, control, and instrumentation, along with step-by-step procedure manuals for the installation, operation start-up, and maintenance of the equipment. Each set shall include installation, operating, troubleshooting, and maintenance and overhaul instructions in complete detail. It shall also include possible breakdowns and repairs, and troubleshooting guides, as well as simplified wiring and control diagrams of the system installed. This shall provide the OWNER with comprehensive information on all systems and components to enable operation, service, maintenance and repair. Exploded or other detailed views of all equipment, devices, assemblies, and accessory components shall be included, together with complete parts lists and ordering instructions.

1. Record Drawings:
   a. The CONTRACTOR shall maintain a marked up set of Contract Document Plans showing actual installed circuit numbers, conduit sizes, cable tray routing, number of conductors, conductor sizes (larger than #12 AWG), and all other deviations from the design Plans.
   b. Underground conduit and concealed items shall be dimensioned on the Plans from permanent, visible, building features.
   c. The CONTRACTOR shall provide actual transformer kVA, disconnect switch rating, starter, and overload heater size (if applicable) along with all other protective equipment for all 480, 240, 208 and 120V devices as part of the one-line record drawings.
   d. The CONTRACTOR shall revise all conductor identification and panel schedules to indicate as-built conditions.

PART 2 – PRODUCTS

2.01 GENERAL MATERIALS AND METHODS

A. Materials, equipment, and parts comprising any unit, or part thereof, specified or indicated on the Plans, shall be new and unused, of current manufacture, and of highest grade consistent with the state of the art. Damaged materials, equipment, and parts, are not considered to be new and unused, and will not be accepted.

B. Field verification of scale dimensions on Plans is directed, since actual locations, distances, and levels will be governed by actual field conditions. The CONTRACTOR shall also review architectural, structural, yard, mechanical, and other Plans, and the accepted electrical and mechanical shop drawings, and shall adjust their work to conform to the conditions indicated therein.

C. The fabricator of major components, such as distribution panelboards, switchgear/switchboards, and motor control centers, shall also be the manufacturer of the major devices therein.

D. Refer to various Division Sections for individual equipment manufacturers. Indicated manufacturers are subject to strict compliance with the Specifications and complete project documents. The reference to a particular manufacturer does not relieve the CONTRACTOR from conforming to the specified requirements.

2.02 NAMEPLATES

A. Where indicated elsewhere in these Specifications, or on the Plans, the CONTRACTOR shall furnish and install nameplates, which shall be white laminate with black letters. The nameplates shall be fastened to the various devices with round head stainless steel screws. Each disconnecting means for service, feeder, branch, or equipment conductors, shall have nameplates indicating its purpose.

DRAFT

2.03 EQUIPMENT ASSEMBLIES

A. Equipment assemblies, such as Service Entrance Sections, Switchgear, Switchboards, Control and Distribution Panels, and other custom fabricated electrical enclosures shall bear a UL label as a complete assembly. The UL label on the individual components making up the assembly will not be considered sufficient to meet the present requirement. Whenever a generic UL label does not apply for the assembly, a serialized UL label shall be affixed to the assembly, and the serial number shall be submitted with the assembly record shop drawings.

B. Custom fabricated electrical control panels, and enclosures, shall bear a UL label affixed by a local UL inspector.

PART 3 – EXECUTION

3.01 UTILITY SERVICE AND EQUIPMENT

A. Electrical Utility: The CONTRACTOR shall be responsible for contacting and coordinating the electrical utility work with the electrical utility company:

PACIFIC GAS & ELECTRIC
877.743.7782 (Building and Renovation Customer Service)

B. The CONTRACTOR shall be responsible for furnishing and installing equipment and material required to bring electrical power service to the service location in conformance with the electrical utility requirements. The CONTRACTOR may have to provide the following for the electrical utility company's primary (from utility power line to the utility transformer) and secondary (from utility transformer to the service) electrical lines in accordance with the electrical utility company's specifications and requirements:

1. Conduits (verify quantity and sizes).
2. Trenching, backfill, and compacting (verify trench size(s), backfill material, and compaction percentage requirements).
3. Concrete pad(s) (for pad mounted transformer(s)).
4. Cable protection along the vertical drop at the utility company's pole (if pole mounted transformer(s).
5. Other items required by the power utility company's specifications.

B. The CONTRACTOR shall also submit copies of service entrance shop Drawings to the utility, per utility submittal requirements, prior to submittal to the ENGINEER. The CONTRACTOR shall obtain written approval from the power utility company that the service entrance equipment is acceptable prior to releasing the order to the supplier for fabrication. A copy of the approval letter from the utility shall be transmitted to the ENGINEER along with the submittal.

C. Internet Service: The CONTRACTOR shall be responsible for contacting the Internet Service Company to coordinate requirements to provide internet service, as called for on the Plans.

D. The CONTRACTOR shall provide trenching, conduit, and backfill for the Telephone Company's communication lines from their main distribution panel to the connection box at this project site, as required by the Telephone Company.

E. Electrical equipment such as switchboard, switchgear, panelboards, industrial control panels, and meter socket shall have an arc flash label in accordance with NEC 110.16(a).

3.02 INSTALLATION OF ELECTRICAL EQUIPMENT

A. Coordinate the installation of electrical equipment with other trades.

1. Arrange for the building-in of equipment during structure construction.
2. Where equipment cannot be built-in during construction, arrange for sleeves, box-outs, and other openings, as required to allow installation of equipment after structure construction is complete.

DRAFT

B. Verify that equipment will fit support layouts indicated.

C. Equipment Dimensions and Clearances:
   1. Do not use equipment that exceeds the indicated dimensions except as approved in writing by the ENGINEER.
   2. Do not use equipment or arrangements of equipment that reduce required clearances or exceed the space allocation.

D. Install equipment in accordance with the manufacturer's instructions.

E. Equipment Access:
   1. Install equipment so it is readily accessible for operation and maintenance.
   2. Equipment shall not be blocked or concealed.
   3. Do not install electrical equipment such that it interferes with normal maintenance requirements of other equipment.

F. Equipment shall be installed plumb, square and true with the building construction, and shall be securely fastened.

G. Outdoor wall-mounted equipment, and indoor equipment mounted on earth, or water bearing walls, shall be provided with corrosion-resistant spacers to maintain 1/4-inch separation between the equipment and the wall.

H. Screen or seal all openings into outdoor equipment to prevent the entrance of rodents and insects.

I. Equipment fabricated from aluminum shall not be imbedded in earth or concrete.

J. Provide all necessary anchoring devices and supports:
   1. Use supports as detailed on the Plans and as specified.
   2. Supports and anchoring devices shall be rated and sized based on dimensions and weights verified from approved equipment submittals.
   3. Hardware shall be stainless steel.
   4. Do not cut, or weld to, building structural members.
   5. Do not mount safety switches and external equipment to other equipment enclosures, unless enclosure mounting surface is properly braced to accept mounting of external equipment.

K. CONTRACTOR shall verify exact rough-in location and dimensions for connection to electrical items furnished by others.
   1. Shop drawings shall be obtained from those furnishing the equipment.
   2. Proceeding without proper information may require the CONTRACTOR to remove and replace work that does not meet the conditions imposed by the equipment supplied.
   3. Provide sleeves wherever openings are required through new concrete or masonry members. Place sleeves accurately and coordinate locations with the ENGINEER.
   4. Should any cutting and patching be required on account of failure of the CONTRACTOR to coordinate penetrations, such cutting and patching shall be done at the expense of the CONTRACTOR.
      a. The CONTRACTOR shall not endanger the stability of any structural member by cutting, digging, chasing, or drilling and shall not, at any time, cut or alter the work without the ENGINEER's written consent.
         1) Provide additional reinforcing if required.
         2) Cutting shall be done neatly using proper tools and methods.
      b. Subsequent patching to restore walls, ceilings, or floors to their original condition shall be done by the CONTRACTOR.

L. Provide concrete foundations or pads required for electrical equipment as indicated or specified.
   1. Floor-mounted equipment shall be mounted on a 4-inch concrete housekeeping pad. Pad shall be poured on top of the finished floor or slab.

DRAFT

3.03 TEMPORARY POWER

A. The CONTRACTOR shall furnish, install, and maintain, temporary power and lighting systems needed for construction. This temporary system shall include weatherproof panel(s) for the CONTRACTOR's main breakers and distribution system. Ground fault interrupting equipment shall be installed. Connections shall be watertight, with wiring done with Type SO portable cable. After construction is completed, the CONTRACTOR shall remove temporary power equipment and devices.

3.04 CUTTING AND REPAIRING

A. Where it becomes necessary to cut into existing work for the purpose of making electrical installations, core drills shall be used for making circular holes. Other demolition methods for cutting or removing shall be reviewed by the ENGINEER prior to starting the work.

B. The CONTRACTOR shall repair damage caused by construction, or demolition work, and restore damaged areas to original condition.

3.05 CORROSION PROTECTION

A. Wherever dissimilar metals (except conduit and conduit fittings) come in contact, the CONTRACTOR shall isolate these metals, as required, with neoprene washers, 9 mil polyethylene tape, or gaskets. Where fastening conduit, electro-plated or equivalent fasteners and stainless steel bolts shall be used.

B. Factory finishes damaged during shipping, or construction, shall be restored to original new condition. Rust shall be removed, and bare metal surfaces shall be primed and painted to match the original surrounding finish.

C. Electrical panels, switchgear, motor control centers, and other electrical equipment, shall be shipped in sealed dust and moisture proof plastic sheet enclosures, and the seal maintained until units are installed. Said units shall be new and free of any dirt, dust, water, grease, rust, damaged parts or components. Relays, starters, circuit breakers, switches, contacts, insulators, mechanisms, and buses shall be free of dust, dirt, oil, moisture, metal shavings, and other debris before testing and energizing.

D. Once equipment is installed, it shall be protected at all times with plastic sheet covers until the area is free of dirt, dust, paint spray, water, and other trades. Heat shall be provided to eliminate condensation.

3.06 COORDINATION OF THE ELECTRICAL SYSTEM

A. The CONTRACTOR shall verify actual equipment, and motor full-load, and locked-rotor current ratings. The necessary minimum equipment, wire, and conduit sizes are indicated on the Plans. If the CONTRACTOR furnishes equipment of different ratings, the CONTRACTOR shall coordinate the actual current rating of equipment furnished with the branch circuit conductor size, the overcurrent protection, the controller size, the motor starter, and the branch circuit overcurrent protection. The branch circuit conductors shall have a current carrying capacity of not less than 125 percent of the actual full-load current rating. The size of the branch circuit conductors shall be such that the voltage drop from the overcurrent protection devices, up to the equipment, shall not exceed 3 percent, when the equipment is running at full-load and rated voltage.

DRAFT

3.07 TESTING

A. The electrical work shall be free from improper grounds and short circuits. The correctness of the wiring shall be verified first by visual comparison of the conductor connections with connection diagrams. Next, individual circuit continuity checks shall be made by using electrical circuit testers. Last, the correctness of the wiring shall be verified by the actual electrical operation of the electrical and mechanical devices. Any deviation from the wiring indicated on the Plans, or accepted Drawings, shall be corrected and indicated on the record drawings.

B. Each conductor shall be identified as required by the Contract Documents. This identification shall be indicated on the record drawings to enable rapid and accurate circuit tracing by maintenance personnel.

3.08 SINGLE LINE DIAGRAMS

A. Single line diagrams, as indicated on the Drawings, show circuit voltages, circuit protection rating, and other pertinent data. Where conflicts exist on the Drawings, the single line diagrams shall take precedence. Grounding conductors are not necessarily indicated. See grounding requirements specified elsewhere herein.

END OF SECTION

DRAFT

SECTION 26 0519 – LOW-VOLTAGE ELECTRICAL POWER CABLES

PART 1 – GENERAL

1.01 DESCRIPTION

A. Scope:
1. Provide all labor, materials, equipment, and incidentals shown, specified, and required to furnish, install, test and terminate low-voltage cables.
2. If larger loads than indicated in the plans (such as larger motor horsepower) are required, revise the raceways, conductors, starters, variable speed drives, overload elements, and branch circuit protectors to comply with the national electrical code.
3. Types of cabling required include:
   a. Insulated cable for installation in raceways.

1.02 REFERENCES

A. Standards referenced in this Section are listed below:

ANSI/ NETA ATS	Acceptance Testing Specifications for Electrical Power Equipment and Systems
ASTM B3	Soft or Annealed Copper Wire
ASTM B8	Concentric-Lay-Stranded Copper Conductors, Hard, Medium-Hard or Soft
ASTM F2160	Solid Wall High Density Polyethylene (HDPE) Conduit Based on Controlled Outside Diameter (OD).
NEMA TC 7	Smooth Wall Coilable Electrical Polyethylene Conduit.
UL 44	Thermoset-Insulated Wires and Cables.
UL 1277	Standard for Electrical Power and Control Tray Cables with Optional Optical-Fiber Members.

1.03 QUALITY ASSURANCE

A. Regulatory Requirements: Comply with the following:
1. NEC Article 300, Wiring Methods.
2. NEC Article 310, Conductors for General Wiring.
3. NEC Article 392, Cable Trays.

1.04 SUBMITTALS

A. Action Submittals: Submit the following:
1. Product Data:
   a. Manufacturer's literature, specifications, and engineering data for low volt insulated cable proposed for use.
   b. Manufacturer's cable pulling calculations for all cables (power and control) that are to be pulled through the jack and bore casing. Calculations shall indicate acceptability of the proposed cables with a proposed pulling setup. Calculations shall be made and submitted for review before ductbanks are installed.

B. Informational Submittals: Submit the following:
1. Field Quality Control Submittals:
   a. Written results of field insulation resistance tests.

PART 2 – PRODUCTS

2.01 MATERIALS

A. Insulated Cable in Raceways:

DRAFT

1. Application: Use for circuits located indoors and outdoors.
2. Manufacturers: Provide products of one of the following:
   a. Southwire
   b. The Okonite Company
   c. American Insulated Wire
   d. General Cable
   e. Or ENGINEER-approved equal
3. Material: Single or multiconductor type copper cable complying with ASTM B3 and ASTM B8 with flame-retardant, moisture- and heat-resistant insulation rated for 90°C in dry or wet locations, listed by UL.
4. Application: Use UL listed type XHHW-2 for AWG No. 12 and larger. Use UL listed type THHN/THWN-2 for AWG No. 12 and smaller.
5. Wire Sizes: Not smaller than AWG No. 12 for power and lighting and AWG No. 14 for 120-volt control circuits.
6. Stranding: 600-volt cable shall be stranded, except that solid cable, AWG No. 10 and AWG No. 12 may be used for lighting circuits and receptacle circuits.
7. Cables in Cable Trays shall be listed for cable tray use and be installed per NEC 392.

B. Cable Connectors, Solderless Type:
1. Products and Manufacturers: Provide products of one of the following:
   a. T&B Sta-Kon
   b. Burndy Hylug
   c. Or ENGINEER-approved equal
2. For wire sizes No. 4 AWG and above, use either compression type or bolted type with silver-plated contact faces.
3. For wire sizes up to and including No. 6 AWG, use compression type. Alarm and control wire shall be terminated using forked type connectors at terminal boards.
4. For wire sizes No. 250 KCMIL and larger, use connectors with at least two cable clamping elements or compression indents and provision for at least two bolts for joining to apparatus terminal.
5. Properly size connectors to fit fastening device and wire size. Connectors shall be rated for 90°C, 600 volts.

C. Cable Splices:
1. Products and Manufacturers:
   a. Compression-Type Splices: Provide one of the following:
      1) Burndy Hylink
      2) T&B Color-Keyed Compression Connectors
      3) Or ENGINEER-approved equal
   b. Spring Connectors: Provide one of the following:
      1) Buchanan B-Cap
      2) T&B Wire Connector
      3) Or ENGINEER-approved equal
2. For wire sizes No. 8 AWG and larger, splices shall be made up with compression type copper splice fittings. Splices shall be taped and covered with materials recommended by cable manufacturer to provide insulation equal to that on conductors.
3. For wire sizes No. 10 AWG and smaller, splices may be made up with pre-insulated spring connectors.

DRAFT

4. For wet locations, splices shall be waterproof. Compression type splices shall be waterproofed by sealant-filled, thick wall, heat shrinkable, thermosetting tubing or by pouring thermosetting resin into mold that surrounds the joined conductor. Spring connector splices shall be waterproofed with sealant filler.
5. Splices shall be suitably sized for cable, rated 90°C, and 600 volts.

D. Wire and Cable Markers:
1. Provide wire and cable markers in accordance with these Specifications.

E. Variable Frequency Drive Symmetrical Type Cable:
1. Power Conductors: Three (3) annealed, tinned, stranded copper per ASTM B8, coated per ASTM B33.
2. Insulation: Black cross-linked polyethylene (XLPE) per UL44.
3. Ground: Three (3) symmetrically placed bare annealed Class B stranded copper conductors per ASTM B3 and B8 whose cross-section areas shall add to equal the cross-section area of the power conductor size. The conductors shall be in direct contact with the shield and may be tinned or untinned.
4. Shield: Overall annealed 5 mil bare copper tape shield, 50% overlap for 100% coverage OR overall tinned copper braided shield and aluminum polymer tape for 100% coverage.
5. Jacket: Polyvinyl Chloride (PVC), oil resistant, per UL1277.
6. Voltage insulation: 2000V.
7. Cable size shall be as indicated on the Drawings.
8. Splices: Splices in VFD cables shall not be permitted.
9. Connections and Termination: cable and shield terminations and connections shall be in complete accordance with VFD, motor and cable manufacturers published requirements.
10. Manufacturers: General Cable CVTC-VFD; Southwire type TC VFD cable; or ENGINEER-approved equal.

2.02 SOURCE QUALITY CONTROL

A. Factory Tests:
1. Factory-test wire and cable in accordance with UL standards

PART 3 – EXECUTION

3.01 INSTALLATION

A. Install cables complete with proper terminations at both ends. Check and correct for proper phase sequence and proper motor rotation.

B. Pulling:
1. Use insulating types of pulling compounds containing no mineral oil.
2. Pulling tension shall be within limits recommended by wire and cable manufacturer.
3. Use dynamometer where mechanical means are used.
4. Cut off section subject to mechanical means.

C. Bending Radius: Limit to minimum of six times cable overall diameter and in accordance with manufacturer requirements.

D. Slack: Provide maximum slack at all terminal points.

E. Splices:
1. Where possible, install cable continuous, without splice, from termination to termination.
2. Where required, splice as shown and also where required for cable installation. Splices below grade, in manholes, handholes, and wet locations shall be waterproof.

DRAFT

3. Splices are not allowed in conduits.
4. Splices are not allowed in VFD cables.

F. Identification:
1. Identify conductors in accordance with applicable Sections of Division 26 – Electrical.
2. Identify power conductors by circuit number and phase at each terminal or splice location.
3. Identify control and status wiring using numeral tagging system.

G. Color-code power cables as follows:
1. No. 8 AWG and Smaller: Provide colored conductors.
2. No. 6 AWG and Larger: Apply general purpose, flame retardant tape at each end, wrapped in overlapping turns to cover an area of at least two inches.
3. Colors: Match color scheme in use at the Site. If the Site does not have an existing color scheme, use the following colors:

System	Conductor	Color
All Systems	Equipment Grounding	Green
240/120 Volts Single-Phase, Three-Wire	Grounded Neutral One Hot Leg Other Hot Leg	White Black Red
208Y/120 Volts Three-Phase, Four-Wire	Grounded Neutral Phase A Phase B Phase C	White Black Red Blue
480Y/277 Volts Three-Phase, Four-Wire	Grounded Neutral Phase A Phase B Phase C	Gray Brown Orange Yellow

3.02 FIELD QUALITY CONTROL

A. Site Tests:
1. Test each electrical circuit after permanent cables are in place, to demonstrate that circuit and equipment are connected properly and will perform satisfactorily, free from improper grounds and short circuits. Document each test performed.
2. Individually test 600-volt cable mechanical connections after installation and before they are put in service, with calibrated torque wrench. Values shall be in accordance with manufacturer's recommendations.
3. Individually test 600-volt cables for insulation resistance between phases and from each phase to ground. Test after cables are installed and before they are put in service, with Megger for one minute at voltage rating recommended by cable manufacturer or in accordance with ANSI/NETA ATS recommendations.
4. Insulation resistance for each conductor shall not be less than value recommended by cable manufacturer. Cables not meeting recommended value or that fail when tested under full load conditions shall be replaced with a new cable for full length.

END OF SECTION

DRAFT

SECTION 26 0523 – INSTRUMENTATION AND COMMUNICATION CABLES

PART 1 – GENERAL

1.01 DESCRIPTION

A. Scope:
1. Provide all labor, materials, equipment, and incidentals shown, specified, and required to furnish and install instrumentation and communication cables.

1.02 REFERENCES

A. Standards referenced in this Section are listed below:

ASTM A510/ A510M	Wire Rods and Coarse Round Wire, Carbon Steel and Alloy Steel
ASTM B633	Electrodeposited Coatings of Zinc on Iron and Steel
ANSI/TIA/ EIA-568	Commercial Building Telecommunications Cabling (requirements and restrictions of Technical Service Bulletins (TSBs) apply.)
RS-485	Electrical Characteristics of Generators and Receivers for Use in Balanced Digital Multipoint Systems (also known as TIA/EIA-485).
UL 13	Power-Limited Circuit Cables
UL 1581	Standard for Electrical Wires, Cables and Flexible Cords
UL VW-1	Vertical Wire Flame Test
UL 1666	Test for Flame Propagation Height of Electrical and Optical-Fiber Cables Installed Vertically in Shafts

1.03 QUALITY ASSURANCE

A. Regulatory Requirements:
1. NEC 725 – Class 1, Class 2, and Class 3 Remote-Control, Signaling and Power-Limited Circuits
2. NEC 727 – Instrumentation Tray Cable
3. NEC 800 – Communications Circuits

1.04 SUBMITTALS

A. Action Submittals: Submit the following:
1. Product Data: Manufacturer's technical information for instrumentation cables and communications cables proposed.
2. Provide pulling calculations for cables to be installed in the jack and bore ductbank.

B. Informational Submittals: Submit the following:
1. Field Quality Control Submittals: Written report of results of field quality control testing specified in this Section.

PART 2 – PRODUCTS

2.01. MATERIALS

A. Single and Multiple Shielded Pair Instrument Cable:
1. Bare, soft annealed copper, 7 strand, PVC insulated conductors, No. 16 AWG minimum (unless indicated otherwise on the drawings / conduit schedule), twisted with aluminum/mylar shield with 25 percent minimum overlap, stranded tinned 20 AWG copper drain wire and PVC outer jacket. Rated for 600 volts. Temperature rated 90°C in dry installations, rated 75°C in wet locations. UL Type TC, UL listed for cable tray use, sunlight resistant. The abbreviation "STP" or "TSP" is used for shielded twisted pair on the Drawings.

DRAFT

2. Product and Manufacturer: Provide shielded cable of the following:
    a. Alpha Wire Company.
    b. Or ENGINEER-approved equal.
3. Cable shall be plenum rated when all or part of the cable is not encased in conduit.
4. Multi pair instrument cable shall have individual pair shielding and overall shielding.

B. Cable Terminals:
1. Manufacturers: Provide products of one of the following:
    a. T&B Sta-Kon
    b. Burndy Insulug
    c. Or ENGINEER-approved equal
2. Fork type copper compression terminals with nylon insulation for termination of cable at terminal blocks.

C. Single Shielded Triad Instrument Cable:
1. Bare, soft annealed copper, 7-strand, PVC insulated conductors, No. 16 AWG minimum, twisted with aluminum/mylar shield with 25 percent minimum overlap, stranded tinned 20 AWG copper drain wire and PVC outer jacket. Rated for 600 volts. Temperature rated 90°C in dry installations, rated 75°C in wet locations. UL Type TC, UL listed for cable tray use, sunlight resistant. The abbreviation “STT” or “TST” is used for shielded twisted triad on the Drawings.
2. Product and Manufacturer: Provide shielded cable of the following:
    a. Alpha Wire Company
    b. Or ENGINEER-approved equal
3. Cable shall be plenum rated when all or part of the cable is not encased in conduit.

D. Shielded Ethernet Category 5e Premises Cable:
1. This cabling is for outdoor applications, process control interface (VFDs, PLCs, etc.), lighting control component interconnections, and anywhere network cables will be routed in the same ductbank, manhole, handhole, or other raceway as AC power cabling.
2. Furnish, install, and terminate from each field device to the network switch.
    a. Suitable Applications: Gigabit Ethernet, 100BaseTX, 100MHz Category 5e.
    b. Number of Pairs: 4
    c. Total Number of Conductors: 8
    d. AWG: 24
    e. Stranding: Solid
    f. Conductor Material: Bare Copper
    g. Color Code: EIA 568
    h. Shield: Double-shielded version with 100% coverage aluminum foil tape plus tinned copper braid
    i. Insulation Material: Polyolefin
    j. Outer Jacket Material: PVC, outdoor rated, sunlight resistant, oil resistant
    k. Outer Jacket Color: Blue.
    l. TIA/EIA Specification: 1005, 568B compliant
    m. UL Flame Test: UL 1666 Riser compliant
    n. Manufacturer: Belden, Model 7957A
    o. Use shielded RJ45 strain relief plug systems by L-com (TDS8PC5) with plug-boots (TDS8CVR-BK).

DRAFT

PART 3 – EXECUTION

3.01 INSPECTION

A. Examine conditions under which materials and equipment will be installed and notify OWNER in writing of conditions detrimental to proper and timely completion of the work. Do not proceed with the work until unsatisfactory conditions are corrected.

3.02 INSTALLATION

A. General:
   1. Install cables complete with proper terminations at both ends.
   2. Install in conduit separate from power cables, unless shown or indicated otherwise.
   3. Ground shield on shielded cables at the source end (PLC panel, etc.).
   4. Identify conductors in accordance with these Specifications.
   5. Install and terminate Supplier-furnished cable in accordance with equipment manufacturer requirements and cable manufacturer's recommendations.
   6. Install in accordance with Laws and Regulations, including NEC.
   7. Splicing of instrumentation and communication cables is not permitted unless approved by the ENGINEER of record.

3.03 FIELD QUALITY CONTROL

A. Site Tests:
   1. Test shielded instrumentation cable shields with ohmmeter for continuity along full length of cables, and for shield continuity to ground.
   2. Connect shielded instrumentation cables to calibrated 4 to 20 mA DC signal transmitter and receiver. Test at 4 and 20 mA DC transmitter settings.
   3. Replace with new cables the full length of cables that fail test.
   4. Test equipment shall be provided by CONTRACTOR.
   5. Test all Ethernet cables with a Fluke DSP100 Cable Meter (or equal) testing system. Each cable shall be tested from the connected data jack, control panel, VFD, UPS, etc., to the patch panels. A qualified factory-trained manufacturer's representative shall certify in writing that the network cabling system has been installed, adjusted, and tested in accordance with the cable manufacturer's recommendations and industry standards for performance testing. Certification shall bear the typewritten name and signature of the person responsible for the work. Certification shall state the unit has passed all tests and is ready to be placed into operation. Provide four (4) copies of the manufacturer's representative's certification.

END OF SECTION

DRAFT

SECTION 26 0526 – GROUNDING AND BONDING FOR ELECTRICAL SYSTEMS

PART 1 – GENERAL

1.01 SCOPE OF WORK

A. A ground grid system consisting of the indicated configuration of copper wires, and ground rods, or concrete encased grounding electrodes ("UFERs") shall be provided to minimize station potential gradient irregularities and drain leakage and fault currents to earth.

B. Whether indicated on the Plans or not, neutral conductors, cable shields, metallic conduits, cable terminations, junction boxes, poles, surge arresters, and other non-current-carrying metallic parts of equipment shall be grounded.

1.02 SUBMITTALS

A. Products shall be submitted in accordance with Section 01 3300 – Submittal Procedures, and elsewhere in the Contract Documents prior to installation.

1.03 REFERENCES

A. National Electrical Code (NEC) Article 250

PART 2 – PRODUCTS

2.01 GENERAL REQUIREMENTS

A. A resistance of not greater than 25 ohms shall be provided, unless otherwise specified. Ground resistances shall be measured as herein described. Resistances of systems requiring separate ground rods, rather than a counterpoise, shall be measured separately before bonding below grade. The combined ground resistance of separate systems bonded together below grade may be used to meet the specified ground resistance, but the minimum number of rods indicated must still be provided.

2.02 GROUND RODS

A. Ground rods shall be copper-clad steel conforming to UL 467, 314 inch in diameter by 10 feet in length. Unless otherwise indicated, ground rods shall be driven into the ground until tops of rods are approximately 6 inches below finished grade. In counterpoise systems. Tops of ground rods shall be approximately at elevations of counterpoises. Where the specified ground resistance cannot be met with the indicated number of ground rods, additional ground rods, longer ground rods, or deep-driven sectional rods shall be installed and connected until the specified resistance is obtained, except that not more than three additional ground rods shall be required at any one installation. Ground rods shall be spaced as evenly as possible at least 6 feet apart and connected below grade.

2.03 CONNECTIONS

A. Connections above grade shall be made with bolted solderless connectors, and those below grade shall be made by a fusion-welding process. An embossing die code or other standard method shall provide visible indication that a connector has been adequately compressed on the ground wire.

DRAFT

2.04 GROUNDING ELECTRODE CONDUCTOR

A. Service entrance ground wires shall be sized in accordance with the most recent publication of NEC Table 250-66, unless otherwise indicated on the Plans. After being located to provide maximum physical protection, exposed ground wires shall be securely attached to structural supports at not more than 2-foot intervals with suitable fasteners. Bends greater than 45 degrees in ground wires are not permitted. Routing of ground conductors through concrete should be avoided, except where specifically called for in these Documents. When concrete penetration is necessary, nonmetallic conduit shall be cast flush with the points of concrete entrance and exit, so as to provide an opening for the ground wire. The opening shall be sealed with a suitable compound after installation of the ground wire.

2.05 EQUIPMENT GROUNDING CONDUCTOR

A. Neutral conductors shall be grounded where indicated. Equipment grounding conductors shall be sized in accordance with the most recent publication of NEC Table 250-122, unless otherwise indicated. Ground wires shall be protected by conduit, where such wires run exposed above grade in non-fence-enclosed areas, or are run through concrete construction. Where concrete penetration is necessary, nonmetallic conduit shall be cast flush with the points of concrete entrance and exit, so as to provide an opening for the ground wire. The opening shall be sealed with a suitable compound after installation of the ground wire. Bends greater than 45 degrees in ground wire connections to the ground rods, or counterpoises are not permitted.

2.06 EQUIPMENT GROUNDING

A. Equipment frames of motor housings, metallic tanks, metallic equipment enclosures, metal splicing boxes, chain-link fencing, and other metallic noncurrent-carrying metal items, shall be grounded. Connections to earth shall be made in the same manner as required for system grounding. Equipment or devices operating at less than 750 volts may be connected to secondary neutral grounding electrodes.

2.07 SURGE ARRESTER GROUNDING

A. Surge arresters shall be grounded. Resistance to ground for intermediate-class arresters shall be not more than 10 ohms and for distribution-class arresters shall be not more than 25 ohms. Ground wire connections shall be not less than No. 4 AWG for distribution arresters and No. 1/0 AWG for intermediate arresters. Connections to earth shall be made in the same manner as required for neutral conductors. Surge arrester grounds may use the same ground wires provided for equipment operating at more than 750 volts. Surge arrester and secondary neutral grounds shall be separate from and independent of each other but both grounds shall be bonded together below grade at the ground rods or may utilize a common counterpoise.

2.08 LIGHTING POLE GROUNDING

A. Base of lighting poles shall be connected to an adjacent ground rod as indicated on Plans. A ground connection from poles back to neutral ground points shall also be provided utilizing equipment grounding conductor.

2.09 METALLIC STRUCTURES

A. Metallic structures and buildings shall be grounded per NEC.

2.10 GROUNDING RINGS

A. When required, grounding rings shall be installed using bare copper cable with ground rods at least 25 feet intervals using thermoweld connecting means as indicated on Plans in accordance with NEC requirements.

DRAFT

PART 3 – EXECUTION

3.01 INSTALLATION

A. It is the intent of these Contract Documents that all device and equipment grounds shall be run as a separate conductor in the conduit from the equipment to the ground. Wireways and enclosures shall be properly bonded and grounded, and ground conductors shall be run for all circuits.

B. Equipment cases and devices shall be grounded. Ground rods shall be driven and concrete encased conduits installed before a building or structure is built and ground conductors brought through the concrete to accessible points for grounding equipment. These systems shall be installed at each structure, where transformers, switchboards, panelboards, and MCCs are installed.

C. Duct banks shall contain a concrete encased system bare copper ground conductor. The system ground conductors shall run continuously in duct banks, through handholes and other raceway boxes. The system ground shall be connected to the structure grounding systems to provide a continuous grounding system. Each metallic raceway, panel, switchboard, and other metallic devices associated with the electrical and control systems shall be bonded to this grounding system.

D. Ground rod shall be installed not less than 6 inches below grade. Equipment, neutral, and surge arrester ground wires shall be connected to the ground grid as indicated.

E. Make buried and concrete-encased cable-to-cable and cable-to-ground rod connections using exothermic welds by Cadweld, Thermoweld**,** or ENGINEER-approved equal.

F. Each raceway must have a separate grounding conductor independent from the raceway material.

G. Route the conductors inside the raceway.

H. Interconnect the secondary MCC, switchgear, or panelboard neutral bus to the ground bus in the secondary switchgear compartment only at the service entrance point or after a transformer.

3.02 TESTS

A. Pre-Energization Tests - Pre-energization tests shall include, but shall not be limited to tests that the equipment engineer is required to perform under paragraph "GENERAL REQUIREMENTS." No part of the electrical system shall be energized until all station grounding system components have been tested and demonstrated to comply with the requirements specified, and until associated test reports have been submitted and approved.

B. Operating Test - After the installation is completed, the CONTRACTOR shall conduct an operating test for approval. Equipment shall be demonstrated to operate in accordance with the requirements herein. Tests shall be performed in the presence of the ENGINEER. The CONTRACTOR shall furnish instruments and personnel required for the test.

C. Ground-Resistance Measurements - Ground-resistance measurements of each ground rod shall be taken and certified by the CONTRACTOR to the ENGINEER. No part of the electrical distribution system shall be energized prior to the resistance testing of that system's ground rods and grounding system and submission of test results to the ENGINEER. Test reports shall indicate the location of the ground rod and grounding system and the resistance and the soil conditions at the time the test was performed. When the building water service is used as a ground or part of the grounding system, ground-resistance measurements shall also be made of this connection. Ground-resistance measurements shall be made in normally dry weather, not less than 48 hours after rainfall, and with the ground under test isolated from other grounds. The resistance to ground shall

DRAFT

be measured using the fall-of-potential method described in IEEE Std 142 and Std 81.

3.03 TEST RESULTS

A. The CONTRACTOR shall perform the above tests and submit a certified test report prior to energizing the equipment.

END OF SECTION

DRAFT

SECTION 26 0529 – HANGERS AND SUPPORTS FOR ELECTRICAL SYSTEMS

PART 1 – GENERAL

1.01 DESCRIPTION

A. This Section outlines the wiring requirements for the electrical work and forms a part of all other Sections of Division 26 unless otherwise specified.

1.02 SUBMITTALS

A. Submit for the OWNER's approval material lists, shop drawings, factory test reports, and technical data to the extent required in these Specifications.

PART 2 – PRODUCTS

2.01 GENERAL

A. Provide basic materials and all wiring installations as indicated, specified, and required.

2.02 SUPPORTS

A. Provide the galvanized and PVC coated metal channels, fittings, stanchions, clamps, hangers, and required hardware to support all conduit and equipment as required.

B. Channels shall be steel and cold rolled. One side of the channel shall have a continuous slot. On both sides of the slot, the edges turn inward and forms a guide for the spring nuts. The fittings shall be fabricated from steel and attached to the channel with bolts and spring nuts. The channel, fittings and hardware shall be hot-dipped galvanized and manufactured by Unistrut, GTE Products Co., Ideal Industries, Josyln Mfg. & Supply Co., or ENGINEER-approved equal.

C. One-Hole Clamps shall be malleable iron, galvanized for steel conduits and equipped with clamp-backs. The clamps shall be Efcor, Thomas and Betts, Appleton, or ENGINEER-approved equal.

D. Beam Clamps shall be malleable iron, galvanized, right angle and parallel types. The clamps shall be manufactured by Efcor, Thomas and Betts, Appleton, or ENGINEER-approved equal.

E. Spacers shall be plastic and provided to support underground conduits for concrete encasements. The spacers shall be Carlon, Johns-Manville, Underground Products, or ENGINEER-approved equal.

F. Steel Anchors shall be sleeve and stud types for securing equipment to concrete foundations, floors, and walls. The anchors shall be Phillips "Red Head", Diamond, or ENGINEER-approved equal. Concrete foundation to include 4" housekeeping pad.

G. Toggle Bolts shall be steel, spring wing type for securing equipment to hollow walls and ceilings. Toggle bolts shall be Phillips "Red-Head", Diamond, or ENGINEER-approved equal.

H. Conduit Hangers shall be heavy gauge formed steel, galvanized, and equipped with carriage bolts, 1/4-inch rods and nuts. The hangers shall be Efcor, Appleton, Ideal Industries, Josyln Mfg. & Supply Co., or ENGINEER-approved equal.

I. U-Bolts shall be heavy gauge steel, galvanized and equipped with two hexagon steel nuts. The U-bolts shall be Efcor, Kindorf, or ENGINEER-approved equal.

J. Hardware shall be provided to securely attach all equipment and materials.

DRAFT

PART 3 – EXECUTION

3.01 GENERAL

A. A. Provide the required labor and equipment, and all checking, adjusting, and testing operations on the electrical installations.

3.02 SUPPORTS

A. Install the required structural channels, brackets, stanchions, U-bolts, clamps, anchors, hangers, fittings, and other hardware to securely attach and support all the equipment and conduits.

B. Painting. Brackets, stanchions, and other unfinished steel supports shall be painted per requirements of these Specifications.

C. Operation Tests. Perform operation tests and observe that all loads operate satisfactorily.

3.03 CHECKING, ADJUSTING AND TESTING

A. Provide the required labor and equipment, and all checking, adjusting, and testing operations on the electrical installations.

END OF SECTION

DRAFT

SECTION 26 0533.13 – CONDUIT FOR ELECTRICAL SYSTEMS

PART 1 – GENERAL

1.01 SCOPE OF WORK

A. Furnish and install conduits as required, and as shown on the Plans. Materials employed shall be as shown on the Plans.

1.02 SUBMITTALS

A. Submit product literature including manufacturer part number, model number, material, size, and specifications. Material shall not be installed until the ENGINEER has reviewed the submittal data.

B. Shop Drawings shall be submitted for review and acceptance showing routing, conduit size, and number and size of wires in each conduit before installation of conduit and any related work.

C. Proposed routing of conduits buried under floor slabs-on-grade.

D. Identify conduit by tag number of equipment served or by circuit schedule number.

E. Proposed routing and details of construction including conduit and rebar embedded in floor slabs, columns, etc. Identify conduit by tag number of equipment served or by circuit schedule number.

F. Proposed location and details of construction for openings in slabs and walls for raceway runs.

1.03 REFERENCES

A. American National Standards Institute (ANSI): C80.1, Electrical Rigid Steel Conduit.

B. National Electric Manufacturers Association (NEMA):
1. RN-1, Polyvinyl-Chloride (PVC) Externally Coated Galvanized Rigid Steel Metal Conduit and Intermediate Metal Conduit
2. TC-2, Electrical Polyvinyl Chloride (PVC) Conduit

C. Underwriters Laboratories Inc. (UL):

1	Flexible Metal Conduit
6	Electrical Rigid Metal Conduit - Steel
360	Liquid-Tight Flexible Steel Conduit
467	Grounding and Bonding Equipment
514C	Nonmetallic Outlet Boxes, Flush-Device Boxes and Covers
651	Schedule 40, 80, Type EB and A Rigid PVC Conduit and Fittings
870	Wireways, Auxiliary Gutters, and Associated Fittings
884	Underfloor Raceways and Fittings
886	Outlet Boxes and Fittings for Use in Hazardous (Classified) Locations

PART 2 – PRODUCTS

2.01 RACEWAYS

A. Indoor exposed conduit shall be galvanized rigid steel (GRS) unless specifically indicated otherwise on the Plans. Exposed conduits outdoors or in a wet or corrosive area shall be PVC coated GRS unless otherwise indicated Underground and/or concrete encased conduits shall be PVC, unless otherwise indicated. All wiring, except as otherwise noted, shall be in conduit. Conduit size shall not be less than the National Electrical Code (NEC)

DRAFT

size required for the conductors therein and shall not be smaller than 3/4-inch. No underground conduit shall be less than one inch.

B. Condulet type fittings shall be Form 8, Crouse-Hinds, Appleton, or ENGINEER-approved equal with gasketed covers. All condulets located outdoors or in wet locations shall be weathertight.

C. In unclassified areas, flexible conduit shall be grounding type, weatherproof, corrosion resistant, and watertight. If indicated on the plans, liquidtight flexible conduit shall have an external bonding jumper. Connectors shall be as manufactured by OZ-Gedney, Type 4Q-L, or ENGINEER-approved equal.

D. Couplings, connectors, and fittings shall be standard types specifically designed and manufactured for the purpose. They shall be installed to provide a firm mechanical assembly and electrical conductivity throughout.

E. Expansion fittings shall be OZ type AX with jumper for exposed locations and type DX at structural expansion joints, Spring City, or ENGINEER-approved equal. Conduits shall have expansion fittings in accordance with NEC.

F. The conduits and fittings shall be supported per NEC requirements as a minimum.

2.02 GALVANIZED RIGID STEEL (GRS)

A. Conduit and couplings shall be hot-dipped galvanized with zinc coated threads and outer coating of zinc bichromate, in accordance with ANSI C80.1 standards, as manufactured by Jones & Laughlin Steel Corporation, Allied Tube & Conduit Corporation, Triangle PWC, Republic, Youngstown, or ENGINEER-approved equal.

B. Steel conduit shall not be buried in earth without concrete encasement and additional corrosion protection. A half-lapped rapping of 20 mil PVC based corrosion protection tape shall be used.

2.03 PVC COATED GALVANIZED RIGID STEEL (PVC-GRS)

A. PVC coated GRS conduit shall conform to NEMA RN-1 and ANSI C80.1 standards.

B. The zinc surface of the conduit shall remain intact and undisturbed on both the inside and the outside of the conduit throughout the preparation and application processing. A Polyvinyl Chloride (PVC) coating shall be bonded to the galvanized outer surface of the conduit. The bond between the PVC coating and the conduit surface shall be greater than the tensile strength of the plastic. The thickness of the PVC coating shall be a minimum of 0.040-inch (40 mil).

C. A loose coupling shall be furnished with each length of conduit. A PVC coating shall be bonded to the outer surface of the coupling and a PVC sleeve equal to the outside diameter of the uncoated conduit shall extend beyond both ends of the coupling approximately one pipe diameter or 1-1/2 inches, whichever is smaller. The wall thickness of the coating on the coupling and the sleeve shall be a minimum of 0.055-inch (55 mil).

D. A PVC coating shall be bonded to the inner and outer surface of all conduit bodies and fittings and a PVC sleeve shall extend from all hubs. The wall thickness of the coating on conduit bodies and fittings and the sleeve walls shall be identical to those on couplings in length and thickness. The covers on all conduit bodies shall be coated on both sides and shall be designed to be completely interchangeable. The inside of conduit bodies shall remain undisturbed in the processing.

DRAFT

E. Type 316 stainless steel screws shall be furnished and used to attach the cover to the conduit body. All coated material shall be installed and patched according to the manufacturer's recommended installation and patching instructions.

F. Conduit straps shall be PVC coated or 316 stainless steel.

G. PVC coated conduit and fittings shall be as manufactured by Plasti-Bond, Perma-Cote, Occidental Coating Company, Kor Kap, or ENGINEER-approved equal.

H. PVC coated flexible conduits shall be liquid and vaportight and manufactured in accordance with UL 360 standards.

2.04 RIGID NONMETALLIC - PVC

A. Where specifically indicated on the Plans, or elsewhere specified, conduit may be high density Schedule 40, 90°C, heavy-duty PVC. The conduit shall be manufactured from virgin polyvinyl chloride compound which meets ASTM D1784, NEMA TC-2, and UL 651 standards. Smoke emissions shall be limited to less than 6 grams per 100 grams of material tested.

B. Where conduit concrete encasement is indicated on the Plans, conduit supports shall be installed at five foot intervals. PVC conduit shall be manufactured by Carlon, Triangle Conduit & Cable, or ENGINEER-approved equal.

2.05 LIQUIDTIGHT FLEXIBLE METAL CONDUIT

A. Liquidtight flexible metal conduit shall be liquid and vaportight, oil and ultraviolet ray resistant and manufactured in accordance with UL 360 standards. Liquidtight flexible metal conduit shall be formed of a continuous, spiral wound, galvanized steel core with an extruded PVC jacket. The PVC jacket shall be rated for high ambient heat applications, 90°C.

B. For corrosive locations, liquidtight flexible metal conduit shall be formed of a continuous, spiral wound, aluminum core with an extruded PVC jacket. The PVC jacket shall be impervious to corrosive liquids and vapors.

C. An external bonding conductor shall be required for all flexible conduit connections. Flexible conduit and connectors shall be listed for grounding.

D. Connectors for liquidtight flexible conduit shall be galvanized, furnished with a sealing ring and locknut, and suitable for wet locations.

PART 3 – EXECUTION

3.01 INSTALLATION

A. Conduit runs are schematic only, and shall be modified as required to suit field conditions, subject to review and acceptance by the ENGINEER.

B. Conduit shall run continuously between outlets and shall be provided with junction boxes where connections are made. Couplings, connectors, and fittings shall be acceptable types designed and manufactured for the purpose, and shall provide a firm mechanical assembly, and electrical conductivity throughout.

C. Conduit runs shall be straight and true. Elbows, offsets, and bends shall be uniform and symmetrical. Changes in direction shall be made with long radius bends, or with fittings of the condulet type.

D. Conduit runs in buildings and structures shall be exposed except as specifically noted, or accepted by the ENGINEER.

DRAFT

E. Conduit runs shall not interfere with the proper and safe operation of equipment, and shall not block or interfere with ingress or egress, including equipment removal hatches.

F. Exposed conduits shall be securely fastened with clamps, or straps, intended for conduit use. All exposed conduit shall be run on the walls and ceiling only and shall be parallel to the planes of the walls or ceiling. No diagonal runs will be permitted. Flexible conduit shall be used only for short lengths required to facilitate connections between rigid conduit to motors from junction boxes, or control equipment. The maximum length of flexible conduit shall be 3 feet.

G. Conduit runs on water-bearing walls shall be supported one inch away from the wall on an accepted channel. When channel galvanizing, or other coating, is cut or otherwise damaged, it shall be field coated to original condition. No conduit shall be run in water-bearing walls, unless specifically designated otherwise.

H. Conduit shall be thoroughly reamed to remove burrs. GRS shall be reamed during the threading process, and Rigid Nonmetallic PVC shall be reamed before applying fittings. A zinc rich cold galvanizing shall be used to restore corrosion protection on field cut threads. Bushings and lock nuts or hubs shall be used at conduit terminations. The total number of bends in any run between pull points shall not exceed 360 degrees. Junction boxes and pull boxes shall be installed at points acceptable to the ENGINEER. Conduit ends shall be plugged to prevent the entrance of moisture or debris during construction. All spare conduits shall be adequately capped and shall contain a suitable pull string.

I. Joints shall be set up tight. Hangers and fastenings shall be secure, and of a type appropriate in design, and dimensions, for the particular application.

J. Conduit runs shall be cleaned and internally sized (obstruction tested) so that no foreign objects, or obstructions remain in the conduit prior to pulling in conductors.

K. After installation of complete conduit runs 2 inches and larger, conduits shall be snaked with a conduit cleaner equipped with a cylindrical mandrel of a diameter not less than 85 percent of the nominal diameter of the conduit. Conduits through which the mandrel will not pass shall not be used.

L. Expansion fittings shall be installed across all expansion joints and at other locations where necessary to compensate for thermal expansion and contraction.

M. Provide trenching, backfill, and compaction for conduits installed underground.

N. Each conduit shall be provided with tags as specified on the plan details or with stainless steel identification tags affixed by means of stainless steel wire to the conduit's termination bushing. The minimum size of the identification tags shall be ¾-inch X 2-inches. The identification tag shall be embossed with the conduit number shown in the Plans. The letters and numbers on the tags shall, as a minimum, be ¼-inch high.

END OF SECTION

DRAFT

SECTION 26 0533.16 – BOXES FOR ELECTRICAL SYSTEMS

PART 1 – GENERAL

1.01 SUMMARY

A. Section Includes:
   1. Outlet, pull and junction boxes.

1.02 QUALITY ASSURANCE

A. Referenced Standards: As required in these Specifications.

1.03 SUBMITTALS

A. Shop Drawings: In accordance with Section 01 3300 – Submittal Procedures.

1.04 DELIVERY, STORAGE, AND HANDLING

A. In accordance with these Specifications and Contract Documents.

PART 2 – PRODUCTS

2.01 ACCEPTABLE MANUFACTURERS

A. Subject to compliance with the Contract Documents, the following manufacturers are acceptable:
   1. Galvanized steel boxes:
      a. Appleton Electric Co.
      b. Steel City
      c. Raco
      d. Or ENGINEER-approved equal
   2. Sheet metal boxes for non-classified areas:
      a. Hoffman Engineering Co.
      b. Or ENGINEER-approved equal
   3. Corrosion-resistant boxes:
      a. Hoffman Engineering Co.
      b. Crouse-Hinds
      c. Or ENGINEER-approved equal
   4. Hazardous location boxes (Class I, II & III):
      a. Appleton Electric Co.
      b. Crouse-Hinds
      c. Killark
      d. O-Z/Gedney
      e. Or ENGINEER-approved equal
   5. Raintight and watertight boxes:
      a. Appleton Electric Co.
      b. Crouse-Hinds
      c. Or ENGINEER-approved equal
   6. Terminal boxes:
      a. Hoffman Engineering Co.
      b. Or ENGINEER-approved equal
   7. Boxes in sidewalk:
      a. Appleton Electric Co.
      b. Crouse-Hinds
      c. O-Z/Gedney

DRAFT

a. Or ENGINEER-approved equal.

8. Boxes in earth:
   a. Carlon Electric Products.
   b. Or ENGINEER-approved equal
9. Exposed switch and receptacle boxes:
   a. Appleton Electric Co.
   b. Crouse-Hinds
   c. Or ENGINEER-approved equal.

2.02 MATERIALS

A. Pull and Junction Boxes for Offices and other Dry Architecturally Finished Areas:
   1. Material: 14 GA, galvanized steel
   2. Concentric knockouts on all four sides
   3. Flat cover fastened with screws
   4. NEMA 1 classification
   5. UL listed

B. Pull and Junction Boxes for General Use Unclassified Areas Suitable for NEMA 12 Enclosures:
   1. Material: 14 GA galvanized steel with seams continuously welded, ground smooth and no knockouts
   2. Zinc-rich coating on all seams
   3. Stainless steel captivated cover screws threaded into sealed wells
   4. Flat door with oil resistant gasket
   5. NEMA 12 classification
   6. UL listed

B. Pull and Junction Boxes for Wet Areas:
   1. Material: 14 GA steel with polyester powder coating inside and out over phosphatized surfaces.
   2. Seams continuously welded, ground smooth, no knockouts
   3. Stainless steel clamps on four sides
   4. Flat cover with oil resistant gasket
   5. NEMA 4X classification
   6. UL listed

D. Pull and Junction Boxes for Corrosive Areas:
   1. Material: 14 GA steel with powdered epoxy resin coating inside and out or fiberglass-reinforced polyester material
   2. Steel boxes:
      a. Seams continuously welded, ground smooth, no knockouts
      b. Rolled lip around all sides
      c. Hinged door
      d. Captivated stainless steel door screws
      e. Flat door with oil-resistant gasket
   3. Fiberglass-reinforced polyester boxes:
      a. Hinged door with latch and lockout
      b. Neoprene door gasket
      c. Grounding bushing(s)
   4. NEMA 4X classification
   5. UL listed

DRAFT

E. Pull and Junction Boxes for Hazardous Areas:
   1. Material: Cast gray iron alloy or copper-free cast aluminum
   2. Drilled and tapped openings or tapered threaded hub equipped
   3. Flat bolted-down or threaded cover with neoprene gasket
   4. Stainless steel hex head screws
   5. Explosion proof, UL listed for Class 1 Groups C and D

F. Pull and Junction Boxes for Sidewalks:
   1. Cast-iron box and cover, hot-dip galvanized
   2. Flange for flush mounting
   3. Checkered cover with neoprene gasket, pry bar slots and stainless steel screws
   4. UL listed
   5. Drilled and tapped holes
   6. Watertight NEMA 4X classification

G. Large Pull and Junction Boxes (100 CU IN and larger):
   1. Located in offices and other dry architecturally finished areas where EMT is utilized:
      a. NEMA 1 gasketed without knockouts
   2. Located in general use areas:
      a. NEMA 12 construction:
         1) Welded steel
         2) Furnished with gray enamel inside and out over phosphatized surfaces
   3. Located in wet and corrosive areas:
      a. NEMA 4X with stainless steel screws.
   4. Constructed of 14 GA steel with seams continuously welded, ground smooth, no knockouts
   5. Rolled lip around all sides
   6. Rigid handles for covers larger than 9 sf or heavier than 25 lbs.
   7. Split covers when heavier than 25 lbs.

H. Terminal Boxes:
   1. Galvanized 16 GA steel box provided with plain blank screw cover, subpanel, and terminal points
   2. Refer to Drawing for dimensions and number of terminals
   3. Terminal blocks shall be screw-post barrier-type, white center marker strip
   4. Rated 20 ampere, minimum 600 V

I. Fiberglass Cable-Pulling Enclosure:
   1. Use: Access points to facilitate pulling of electrical cables in buried conduit runs.
   2. Size and quantity: As shown on Drawings
   3. Type: Rectangular fiberglass composite, suitable for direct burial pedestrian traffic on top, -50°F, chemical, sunlight, and weather resistant.
   4. Provide matching top with "ELECTRIC" logo.

J. Outlet Boxes:
   1. Use: Installation of wiring devices
   2. Boxes for exposed wiring:
      a. Cadmium plated, cast, ferrous metal, with threaded hubs
   3. Boxes for concealed wiring:
      a. Code gauge, hot-dip galvanized steel
      b. Include bar hangers for metal stud partitions
      c. Provide barriers between switches in boxes with 277 V switches on opposite phases

DRAFT

d. Use extension and plaster rings where required
e. Provide grounding screw.

PART 3 – EXECUTION

3.1 INSTALLATION

A. Use locknut and bushing for boxes in non-classified areas.

B. Use cast metal boxes with threaded conduit hubs in hazardous areas.

C. Use Type FS and FD boxes in wet areas and where exposed rigid steel conduit is required.

D. Use epoxy resin coated, stainless steel, cast aluminum or fiberglass boxes for corrosive areas.

E. Fill unused punched-out, tapped, or threaded hub openings with insert plugs.

F. Use outlet boxes sized to accommodate quantity of conductors enclosed.

G. Use boxes sized to accommodate conduit tying into box.

H. Install pull boxes or junction boxes in conduit runs where indicated or required to facilitate pulling of wires or making connections.
1. Make covers of boxes accessible.

I. Install pull boxes or junction boxes rated for the area classification.

J. Install rigid conduit squarely into boxes which do not have hubs or are drilled and tapped.
1. Install with locknut on the outside and bushing on inside.

K. Install conduit into boxes with hubs, or that are tapped, using thread lubricant.

L. Do not use back-to-back boxes on this Project.

M. Seal all points of conduit entry into fiberglass cable-pulling enclosures for a waterproof installation.

N. Support outlet boxes for incandescent fixtures and other ceiling-mounted devices in lay-in acoustical tile ceilings by bar hangers anchored to ceiling construction members which do not interfere with tile removal.

END OF SECTION

DRAFT

SECTION 26 0553 – IDENTIFICATION FOR ELECTRICAL SYSTEMS

PART 1 – GENERAL

1.01 SCOPE OF WORK

A. Electrical identification work specified in this section covers the following:
   1. Buried cable warnings
   2. Electrical power, control and communication conductors
   3. Operational instructions and warnings
   4. Danger signs
   5. Equipment/system identification signs

1.02 SUBMITTALS

A. Submittals to the ENGINEER shall include the following:
   1. Manufacturers data on electrical identification materials and products.
   2. Samples of each color, lettering style and other graphic representation required for each identification material or system.

1.03 MANUFACTURERS

A. Subject to compliance with requirements, manufacturers offering electrical identification products may be incorporated in the work include, but not limited to, the following:
   1. Brady, W.H. Co.
   2. Ideal Industries, Inc.
   3. Panduit Corp.
   4. or ENGINEER-approved equal

1.04 QUALITY COMPLIANCE

A. Comply with applicable requirements of UL Std. 969, "Marking and Labeling Systems", pertaining to electrical identification systems.

B. Comply with applicable requirements of NEMA Std. No's WC-1 and WC-2 pertaining to identification of power and control conductors.

C. Comply with the latest National Electrical Code

PART 2 – PRODUCTS

2.01 GENERAL

A. Except as otherwise indicated, provide manufacturer's standard products of categories and types required for each application. Where more than single type is specified for an application, selection is Installer's option, but provide single selection for each application.

2.02 COLOR CODED CONDUIT MARKERS

A. Provide manufacturer's standard pre-printed, flexible or semi-rigid, permanent, plastic-sheet conduit markers, extending 360 degrees around conduits; designed for attachment to conduit by adhesive, adhesive lap joint of marker, matching adhesive plastic tape at each end of marker, or pretensioned snap-on. Except as otherwise indicated, provide lettering that indicates voltage of conductor(s) in conduit. Provide 8" minimum length for 2" and smaller conduit, 12" length for larger conduit.

B. Unless otherwise indicated or required by governing regulations, provide white markers with black letters.

C. Conduit identification shall be via stainless-steel tags, and as required in these Specifications.

DRAFT

2.03 CABLE AND CONDUCTOR WIRE MARKERS

A. Cable and conductor wire markers shall be self-laminating vinyl on white background, printed using a Brady TLS2200 printer, Seton printer, or ENGINEER-approved equal. Handwritten wire markers are not acceptable.

2.04 SELF-ADHESIVE PLASTIC SIGNS

A. Provide manufacturer's standard, self-adhesive or pressure-sensitive, pre-printed, flexible vinyl signs for operational instructions or warnings; of sizes suitable for application areas and adequate for visibility, with proper wording for each application, e.g., 208V, EXHAUST FAN, RECTIFIER.

B. Unless otherwise indicated or required by governing regulations, provide white signs with black lettering.

C. Signs shall be attached with stainless-steel screws.

2.05 LETTERING AND GRAPHICS

A. Coordinate names, abbreviations and other designations used in electrical identification work, with corresponding designations shown, specified or scheduled. Provide numbers, lettering and wording as indicated or, if not otherwise indicated, as recommended by manufacturers or as required for proper identification and operation/maintenance of electrical systems and equipment. Comply with ANSI A13.1 pertaining to minimum sizes for letters and numbers.

PART 3 – EXECUTION

3.01 INSTALLATION

A. Install electrical identification products as indicated, in accordance with manufacturer's written instructions, and requirements of NEC.

B. Where identification is to be applied to surfaces that require finish, install identification after completion of painting.

C. Comply with governing regulations and requests of governing authorities for identification of electrical work.

3.02 CONDUIT IDENTIFICATION

A. Where electrical conduit is exposed in spaces with exposed mechanical piping that is identified by a color-coded method, apply color-coded identification on electrical conduit in a manner similar to piping identification. Except as otherwise indicated, use white as coded color for conduit.

3.03 CABLE/CONDUCTOR IDENTIFICATION

A. Apply cable/conductor identification, including voltage, phase and feeder number, on each cable/conductor in each box/enclosure/cabinet where wires of more than one circuit or communication/signal system are present, except where another form of identification (such as color-coded conductors) is provided. Match identification with marking system used in panelboards, shop drawings, contract documents, and similar previously established identification for project's electrical work.

3.04 EQUIPMENT/SYSTEM IDENTIFICATION

A. Install engraved plastic-laminate sign on each major unit of electrical equipment in building; including central or master unit of each electrical system including communication-control-signal systems, unless unit is specified with its own self-explanatory identification or signal system. Except as otherwise indicated, provide single line of text, 1/2" high lettering on 1-1/2" high sign (2" high where 2 lines are required),

DRAFT

white lettering in black field. Provide text matching terminology and numbering of the contract documents and shop drawings. Provide signs for each unit of the following categories of electrical work:

1. Panelboards, electrical cabinets and enclosures.
2. Access panel/doors to electrical facilities.
3. Major electrical switchgear.

B. Install signs at locations indicated or, where not otherwise indicated, at location for best convenience of viewing without interference with operation and maintenance of equipment. Secure to substrate with brass or stainless-steel screws, except use adhesive where screws should not or cannot penetrate the substrate.

C. Identification signs shall be black lettering on a white field to match the Districts' standard.

3.05 CIRCUIT IDENTIFICATION

A. The neutral shall match the requirements of Section 26 0519. The 3-phase wires shall be identified at the switchgear, panelboards and motor control centers as Phases A, B, and C. At 277/480V, Phase A shall be brown, Phase B shall be orange, and Phase C shall be yellow.

B. In addition to color coding all conductors, each conductor shall be identified in each pull box, manhole, panelboard, cable tray, or termination with circuit identification markers. This identification is applicable to all power, control, alarm, and instrumentation conductors and these markings shall be recorded on the Record Documents. Markers shall be slip-on PVC sleeve type as manufactured by Brady, Seton, or equal.

C. Markers for other cabling shall be B-292 vinyl as manufactured by Brady, Seton, or ENGINEER-approved equal.

D. Exposed medium voltage conduits shall be labeled at 50-foot intervals with f-inch letters stating the voltage - example - "12,470 volts". Labels shall be vinyl plastic as manufactured by Brady, Seton, or ENGINEER-approved equal.

3.06 AUTOMATIC EQUIPMENT WARNING SIGNS

A. Permanent warning signs shall be mounted at all mechanical equipment that may be started automatically or from remote locations. Signs shall be in accordance with OSHA regulations and shall be suitable for exterior use. The warning signs shall be fastened with round head brass screws or bolts, located and mounted in a manner acceptable to the ENGINEER.

B. Warning signs shall be 7 inches high by 10 inches wide, colored yellow and black, on not less than 18 gauge vitreous enameling stock. Sign shall read:

CAUTION
THIS EQUIPMENT STARTS
AUTOMATICALLY
BY REMOTE CONTROL

3.07 HIGH VOLTAGE WARNING SIGNS

A. Permanent and conspicuous warning signs shall be mounted on all equipment, doorways to equipment rooms, pull boxes, manholes, where the voltage exceeds 600 volts.

B. Signs shall be in accordance with OSHA regulation, and shall be suitable for exterior use. The warning signs shall be fastened with round head brass screws or bolts, located and mounted in a manner acceptable to the ENGINEER.

DRAFT

C. Signs shall be 7 inches high by 10 inches wide, colored red and white, on not less than 18 gauge vitreous enameling stock. Sign shall read:

WARNING
HIGH VOLTAGE
KEEP OUT

3.08 CONDUCTOR FASTENERS

A. Glue-on type conductor fasteners shall not be used in any panels, panelboards, switchboards, switchgear, motor control centers, or other enclosures containing electrical devices and/or conductors.

END OF SECTION

DRAFT

SECTION 26 0583 – WIRING CONNECTIONS

PART 1 – GENERAL

1.01 SCOPE OF WORK

A. This section covers terminal blocks for control and other wiring.

1.02 SUBMITTALS

A. Products shall be submitted in accordance with these Specifications and elsewhere in the Contract Documents prior to installation.

1.03 MANUFACTURERS

A. Terminal blocks shall be Entrelec, Phoenix Contact, Weidmuller, or ENGINEER-approved equal.

B. Surge protection blocks shall be TELEMATIC, Series SD, or ENGINEER-approved equal.

C. Power distribution blocks shall be Ilsco Corporation, or ENGINEER-approved equal.

PART 2 – PRODUCTS

2.01 TERMINAL BLOCKS

A. Terminal blocks shall mount on standard DIN rail, and be of the size required for conductors therein. A minimum of 25 percent spares shall be provided in each terminal box. No more than 2 conductors shall be allowed per termination. Jumper bar assemblies shall be installed for interconnecting terminal blocks, distributing power and signal commons. Terminal blocks shall be UL-rated for 600 Volts, and 30 Amps, minimum.

B. Grounding terminal blocks shall be provided for instrumentation cable shields. The terminal blocks shall have distinctive 2-color bodies, and shall be mounted to the DIN rail with metal screw down type clamps, providing a positive ground connection. One grounding terminal block shall be installed for every 2 instrument cables terminated. Grounding terminal blocks shall be UL-rated for 600 Volts, and 20 Amps, minimum.

C. Terminal blocks shall be available in a variety of colors, including red, green, blue, gray, black, yellow, and orange.

D. DIN mount fuse holders shall have blown fuse indicators for DC and AC circuits. Fuse holders shall be of the compression clamp type. Fuse holders shall be UL listed, and rated for 600 Volts. Fuse sizes shall not exceed the UL current rating for the fuse holders.

E. DIN rail shall be prepunched, zinc bichromate plated steel. Symmetrical DIN rail shall be 35mm X 7.5mm, minimum.

F. Terminal blocks for 4 to 20 milliamp signals shall have knife disconnect switches, and accessible test points for testing and measurement of current loop signals, without the need for removing wire terminations.

2.02 SURGE PROTECTION BLOCKS (SPB)

A. Analog inputs and outputs shall be terminated at surge protection blocks (SPB). The SPBs shall be designed for a working voltage of 32 volts, and shall be fused.

B. SPBs shall provide full hybrid line to line protection, and shall have a GDT rating of 10,000 A.

C. SPBs shall be UL94 V-2 listed.

DRAFT

2.03 POWER DISTRIBUTION BLOCKS (PDB)

A. PDBs shall be Electro tin-plated and manufactured from high strength 6061-T6 aluminum alloy.

B. PDBs shall be UL Recognized, rated 90°C, and CSA Certified.

C. PDBs shall provide flexibility in using the connector as an in-line splice or to reduce conductor size for taps.

D. PDBs shall be rated for 600 Volts and dual rated for Copper and Aluminum Conductors.

E. PDBs shall have the sizes and ratings as shown on the Plans.

PART 3 – EXECUTION

3.01 INSTALLATION

A. Each terminal block and fuse holder shall be identified with the circuit number, or conductor number, corresponding to the identification appearing on the shop Drawings for the equipment, or system.

B. Terminal block and fuse holder markers shall be computer printed plastic-type, with permanent markings.

C. End clamps and end sections shall be installed on each terminal block and fuse holder assembly.

D. Terminal blocks for DC voltages shall be blue, and AC voltages shall be gray**.**

END OF SECTION

DRAFT

SECTION 26 0916 – ELECTRICAL CONTROLS AND RELAYS

PART 1 – GENERAL

1.01 SCOPE OF WORK

A. This Section includes the following:
   1. Pushbutton and Selector Switches
   2. Relays
   3. Alarms
   4. Intrinsic Safety Barriers
   5. Wireways
   6. Watthour Transducers
   7. Elapsed Time Meters and Time Clocks

1.02 REFERENCES

A. NEMA ICS 1: General Standards for Industrial Control Systems.

B. NEMA ICS 2: Standards for Industrial Control Devices, Controllers and Assemblies.

C. NEMA ICS 6: Enclosures for Industrial Controls and Systems.

D. NEMA ST 1: Standard for Specialty Transformers (Except General purpose Type).

1.03 SUBMITTALS

A. Data: A complete list of equipment and material including manufacturer's descriptive data and technical literature, performance charts, catalog cuts and installation instructions, spare parts data for each different item of equipment specified. The data shall include a complete Bill of Materials.

B. Drawings: Containing complete wiring and schematic diagrams, control diagrams, and any other details required to demonstrate that the system has been coordinated and will properly function as a unit. Drawings shall show proposed layout, anchorage, support and appurtenances of equipment and equipment relationship to other parts of the work including clearances for maintenance and operations.

C. Submit shop drawings in accordance with the Contract Documents, and NEMA ICS 1 specifications indicating control panel layouts, wiring connections and diagrams, dimensions, support points.

1.04 PROJECT RECORD DOCUMENTS

A. Submit record documents in accordance with the Contract Documents.

B. Accurately record actual locations of control equipment. Revise diagrams included in Drawings to reflect actual control device connections.

1.05 OPERATION AND MAINTENANCE DATA

A. Submit operation data in accordance with the Contract Documents.

B. Include instructions for adjusting and resetting time delay relays, timers, and counters.

C. Submit maintenance data in accordance with the Contract Documents.

D. Include recommended preventative maintenance procedures and materials.

DRAFT

PART 2 – PRODUCTS

2.01 PUSHBUTTONS AND SELECTOR SWITCHES

A. Pushbuttons, pilot lights and selector switches shall be of the full size, heavy-duty industrial, oil tight, 120 volts, with interchangeable pilot lights, plug-in construction, double break silver contacts, chrome plated lock rings, with modular contacts, and NEMA rating equal to that of the enclosure on which devices are installed. All components shall be flush mounted on front of panel, unless otherwise noted.

B. Provide individual legend plates for indication of switch, pushbutton, and light function (e.g., Open, Closed, Hand-Off-Auto). A list shall be submitted for review and approval

C. Pilot lights shall be high intensity LED type. Pilot lights shall have clear lenses and LED lamps colored as shown on the Plans. Common, remote push-to-test circuitry shall be provided for each control panel to simultaneously test all indicating lights on the panel using a single pushbutton when there are 10 or more lights on the panel. Control panels with less than 10 lights shall utilize individual push-to-test lights and control circuitry.

D. Pushbuttons shall be maintained or momentary as required and as shown on the Drawings. Provide extended head pushbutton for all stop functions, mushroom head for emergency stop functions, and flush head pushbuttons for all other functions. Where indicated on the Drawings pushbuttons shall be illuminated type. Provide locking mechanism for all lock out functions. Selector switches shall have black knob operator, be maintained contact type unless noted otherwise, number and arrangement as required to perform intended functions specified but not less than one double pole, double throw, double break contact per switch. Contact rating shall be compatible with AC or DC throughput current of devices simultaneously operated by the switch contact but not less than 10 amperes resistive at 120 volts AC or DC continuous.

E. Potentiometers shall be provided with operators and resistive elements of the type and quantity indicated on the Drawings and as required with legend plates indicating percent of span.

F. The above devices shall be manufactured by Allen Bradley, General Electric, or ENGINEER-approved equal.

2.02 RELAYS

A. Timing relays shall be heavy duty, 120V AC, 10 amps, solid state design, poles as required per application, -10°C to +60°C, have timing repeatability of ±2.0% of setting, and be UL listed. The range shall be determined from the control descriptions and or schematic drawings. Provide mounting accessories, as required. The timing relays shall be manufactured by Allen Bradley, Cutler Hammer, or ENGINEER-approved equal.

B. Control relays shall be of the plug-in socket base type with dust-proof plastic enclosures, with silver-cadmium oxide contacts rated 120V AC, 10 amperes, with contact arrangement and operating coils of the proper voltage as required by the control circuit sequence. Relays shall have indicating lamp to show energized state. Each relay shall have a minimum of two double pole, double throw contacts, or as required. Control relays shall be Allen Bradley, Cutler Hammer, or ENGINEER-approved equal.

C. Alternating relays shall be UL listed, 120V AC, with contacts rated for 10 amperes at 120V AC, life expectancy of 100,000 operations, load indicating LEDs, and switch for load locking and load selecting options. Alternating relays shall be manufactured by TimeMark models 261, 271, and 471, and Diversified Electronics model ARA for duplex, triplex, and quadplex alternators.

DRAFT

2.03 ALARMS

A. Audible alarms shall be UL listed, 120V AC, with solid state circuitry, vibrating horn, non-metallic corrosion resistant housing, with required mounting hardware, suitable for outdoor use capable of producing 100 dB at 10 feet. The audible alarm shall be manufactured by Federal Signal model 350, Edwards model 870-EX, or ENGINEER-approved equal.

B. Beacons for interior and/or exterior locations shall be rated NEMA 4X, flashing type (90 times per minute, minimum) with a red lens. Beacons shall be as manufactured by Federal Signal, Model 225XL, or ENGINEER-approved equal.

2.04 INTRINSIC SAFETY BARRIERS

A. Intrinsic safety barriers shall permit connection of devices located in a hazardous area to other devices located in a safe area. Intrinsic safety barriers shall be EMC compliant, 10 to 35V DC, 35 mA output current, hazardous area terminals identified by blue labels, terminals accommodating conductors up to 12 AWG, ambient temperature rating of -20°C to +60°C. The intrinsic safety barriers shall be manufactured by Allen-Bradley Bulletin 937, or ENGINEER-approved equal.

2.05 WIREWAYS

A. Wireways shall be PVC, snap-in slot design, with non-slip cover. Safe area wireways shall be light gray and marked "Safe Area Wiring." Hazardous area wireways shall be intrinsic blue and marked "Hazardous Area Wiring." The wireways shall be manufactured by Panduit Corporation, or ENGINEER-approved equal.

2.06 WATTHOUR TRANSDUCERS

A. Watthour transducers for active or reactive power shall be DIN rail and surface mount, single-phase or three-phase with balanced or unbalanced load, electrically isolated input and output signals, 4 to 20 mA output signal, 0-10 mA to 0-10 A input current, 0-10 V to 0-600 VAC input voltage, 16-500 Hz selectable frequency. The watthour transducers shall be manufactured by Sineax model PQ502, or ENGINEER-approved equal.

2.07 ELAPSED TIME METERS AND TIME CLOCKS

A. Elapsed time meters shall be self-powered, non-reset, solid state counter which provides silent, accurate and noise immune operation. Elapsed time meters shall require no external power, five-year minimum battery life, rated for 120V AC power, accessories for panel mounting, nameplate below LCD display reading "HOURS", liquid crystal display with 6 digits approximately 2 inches high with 50,000-hour minimum display life and indication of sufficient battery power. The elapsed time meters shall be manufactured by Durant, Automatic Timing and Controls, or ENGINEER-approved equal.

B. Time clocks shall be microprocessor based, have 24-hour time control, up to 24 operations per day, programmable from panel face keys, skip-a-day feature allowing schedule to be skipped for one to seven days, SPDT switch contact rated at 15 amps at 120V AC, with battery carryover to maintain time and program during power outage for 275 hours. The time clocks shall be manufactured by Tork, Paragon Electric Company, or ENGINEER-approved equal.

PART 3 – EXECUTION

3.01 INSTALLATION

A. Fasteners shall be type 316 stainless steel.

B. Install devices in strict accordance with NEC requirements and per manufacturers recommendation.

C. Coordinate with other trades as necessary during installation of these devices.

3.02 ACCEPTANCE

A. All installations are subject to evaluation in accordance with NEC requirements and manufacturers recommendations. CONTRACTOR shall remove the unacceptable work and correct work at no charge to OWNER.

END OF SECTION

DRAFT

SECTION 26 2100 – ELECTRICAL SERVICE ENTRANCE

PART 1 – GENERAL

1.01 DESCRIPTION

A. This Section outlines the electrical work for underground or overhead power service and power distribution.

B. Power Service: The underground or overhead service shall be complete and as shown on the Drawings. The service installation shall conform with the power company service requirements.

C. Distribution: The power distribution system shall include equipment installations and underground or overhead wiring installations as shown on the Drawings.

1.02 SUBMITTALS

A. Submit for the ENGINEER's approval material lists, shop drawings, factory test reports, and technical data to the extent required in these Specifications and contract documents.

PART 2 – PRODUCTS

2.01 GENERAL

A. Provide all the equipment and materials, and complete all of the power service, power distribution and grounding installations as indicated, specified and required. Sizes of equipment shown on the Drawings and space allowed for the equipment are based on equipment manufactured by only one of the listed acceptable manufacturers. The manufacturers and models listed in this Section of the Specifications are acceptable providing they conform to the Specifications and that the equipment and materials provided fit properly in the available space.

2.02 SERVICE EQUIPMENT

A. Provide the metal enclosed, service equipment as shown on the Drawings, and in accordance with the power company service requirements. The low voltage equipment shall be manufactured by Square D, Cutler Hammer, General Electric, Siemens, Allen Bradley, or ENGINEER-approved equal. Service equipment shall be part of the distribution panelboard as shown on the Drawings. All sections must meet Local Power Utility requirements.

B. Metering Section shall be equipped with meter sockets, copper busses, main circuit breaker and ground fault protection as indicated. The meter sockets shall be provided for the power company self contained meter or meters that shall be connected to instrument transformers as required. Must meet Local Power Utility requirements.

C. Pull Section shall be totally metal enclosed, and equipped with copper buses and connectors for the underground service conductors. Must meet Local Power Utility requirements.

D. A main circuit breaker shall be used as a service disconnect in the service equipment as shown on the Drawings.

E. Nameplates shall be provided for the service equipment as required in these Specifications.

F. Double hasp shall be attached on a gasketed hinged door of outdoor equipment for two padlocks.

G. Grounding shall meet the requirements of these Specifications.

DRAFT

H. Service equipment shall be labeled with available fault current in accordance with NEC 110.24(a).

PART 3 – EXECUTION

3.01 GENERAL

A. Provide all the equipment installations and wiring installations including connections and interconnections for the power service and distribution as indicated, specified and required. Assure proper fits for all equipment and materials in the spaces shown on the Drawings.

B. Earthwork, Concrete and Painting: The required work for excavations, backfills, concrete and painting shall be provided for the electrical installations.
   1. Earthwork shall be performed for handholes, pull boxes, underground conduits, poles, guys, grounding, equipment foundations and supports as indicated and specified.
   2. Concrete shall be provided for electrical equipment foundations and supports, and conduit encasements as indicated and specified in these Specifications.
   3. Painting shall be provided for all installations having unfinished surfaces as specified in. Field damaged factory finishes on equipment shall be touched-up with paint that is equal in quality and color to the original factory finish.

C. Handholes and Pull Boxes: Precast concrete handholes and pull boxes shall be installed in excavations as shown on the Drawings and as required.
   1. Accessories shall be installed, which include pull eyes and required hardware.
   2. Covers shall be installed on all handholes and pull boxes.

D. Service Equipment: Install the metal enclosed service equipment and wiring as indicated, specified and required.
   1. Equipment shall be installed level and securely attached to the concrete foundation with anchor bolts. The sections shall be joined together with bolts, washers and nuts to form a unit assembly.
   2. Wiring installations shall be complete and in accordance with the power company service requirements.
   3. Nameplates shall be laminated plastic and attached to clean surfaces of the metal enclosures with an adhesive or equal.

E. Grounding: Install all the equipment, materials and wiring to complete the equipment, structural, lightning and system grounding installations as shown on the Drawings, specified and required.

F. Panelboards and Switchboards: Install the metal enclosed panelboards and distribution switchboards as indicated, specified and required.
   1. Equipment shall be installed level and securely attached to the concrete foundations, floors and walls with anchor bolts.
   2. Wiring installations shall be complete, including all connections.
   3. Nameplates shall be laminated plastic, and attached to clean surfaces of the metal enclosures with an adhesive.

G. Automatic Transfer Switch: The Automatic Transfer Switch described in Specification Section 26 3600 shall be supplied with the Service Entrance equipment.

H. Checking, Adjusting and Testing: Provide all checking, adjusting and testing operations on equipment and complete installations as specified in these Specifications.

END OF SECTION

DRAFT

SECTION 26 2200 – LOW VOLTAGE TRANSFORMERS

PART 1 – GENERAL

1.01 SCOPE OF WORK

A. This section covers dry type transformers used for low voltage, single and three phase, power distribution and lighting.

1.02 SUBMITTALS

A. Products shall be submitted in accordance with Section 01 3300 – Submittal Procedures and the Contract Documents prior to installation.

1.03 QUALITY ASSURANCE

A. IEEE C57.12.01, General Requirements for Dry-Type Distribution and Power Transformers

B. NEMA ST 20, Dry-Type Transformers for General Applications

C. UL 506, Standard for Specialty Transformers

PART 2 – PRODUCTS

2.01 DISTRIBUTION - LOW VOLTAGE LIGHTING AND POWER

A. Transformers shall be premium high efficiency quiet type, and shall be installed where indicated on the Plans. The primary winding of the transformers shall have two 2.5% taps above, and below normal.

B. The transformers shall have a BIL of 10 KV with a temperature class of 185°C for transformers up to 25 KVA, and a temperature class of 220°C for larger transformers.

C. The sound level shall not exceed 44 dBa measured at 5 feet from the transformer after installation. Core and coil assemblies 30 KVA and larger, shall be mounted on rubber vibration isolators, designed to reduce harmonics generated noise.

D. Transformers shall include primary and secondary circuit protection.

E. Transformers shall be types manufactured by Square-D, Eaton, ACME, or ENGINEER-approved equal.

2.02 FERRO RESONANT ISOLATION TRANSFORMERS

A. Ferro resonant isolation transformers shall be provided where indicated on the Plans. Regulation shall be +3 percent for an input range of +10 percent. Common mode noise rejection shall be better than 120 dB with transverse mode noise rejection better than 60 dB. Voltage spike attenuation shall be better than 250:1.

B. Isolation transformers shall be as manufactured by Shape Magnetronics, Control Concepts, Inc., or ENGINEER-approved equal.

C. Transformers 15 kVA and larger must meet the energy requirements of NEMA TP-1.

PART 3 – EXECUTION

3.01 INSTALLATION

A. Transformers shall be installed as indicated on the Plans, and in accordance with the manufacturer's instructions and recommendations. CONTRACTOR shall provide painted metal wall brackets, when required.

B. Grounding shall be provided per NEC, and these Specifications.

DRAFT

C. A sign with 2”-high black letters on a white background shall indicate the exact (not the general) location of the transformer’s primary circuit disconnect switch.

END OF SECTION

DRAFT

SECTION 26 2413 – SWITCHBOARDS

PART 1 – GENERAL

1.01 SCOPE

A. The CONTRACTOR shall furnish and install, where indicated, a free-standing, dead-front type low-voltage distribution switchboard, utilizing group mounted circuit protective devices as specified herein, and as shown on the contract drawings.

1.02 REFERENCES

A. The low voltage distribution switchboards and all components shall be designed, manufactured and tested in accordance with the latest applicable following standards:
   1. NEMA PB-2
   2. UL Standard 891

1.03 SUBMITTALS

A. The following information shall be submitted to the ENGINEER for review:
   1. Master drawing index
   2. Front view elevation
   3. Floor plan
   4. Top view
   5. Single line
   6. Schematic diagram
   7. Nameplate schedule
   8. Component list
   9. Conduit entry/exit locations
   10. Assembly ratings including:
      a. Short-circuit rating
      b. Continuous current
      c. Voltage
   11. Major component ratings including:
      a. Voltage
      b. Continuous current
      c. Interrupting ratings
   12. Cable terminal sizes.
   13. Busway connection
   14. Connection details between close-coupled assemblies
   15. Composite floor plan of close-coupled assemblies
   16. Key interlock scheme drawing and sequence of operations.
   17. Calculation of flash protection boundary and require personal protective equipment

B. Submit copies of the following information for record purposes:
   1. Final as-built drawings and information for items listed in Section 01 3300 Submittal Procedures.
   2. Wiring diagrams
   3. Certified production test reports
   4. Installation information
   5. Seismic certification and equipment anchorage details

DRAFT

1.04 QUALIFICATIONS

A. The manufacturer of the assembly shall be the manufacturer of the circuit protective devices within the assembly.

B. For the equipment specified herein, the manufacturer shall be ISO 9000, 9001, or 9002 certified.

C. The manufacturer of this equipment shall have produced similar electrical equipment for a minimum period of five (5) years. When requested by the ENGINEER, an acceptable list of installations with similar equipment shall be provided demonstrating compliance with this requirement.

1.05 REGULATORY REQUIREMENTS

A. The low-voltage switchboard shall be UL labeled.

1.06 DELIVERY, STORAGE AND HANDLING

A. Equipment shall be handled and stored in accordance with manufacturer's instructions. One (1) copy of these instructions shall be included with the equipment at time of shipment.

1.07 OPERATION AND MAINTENANCE MANUALS

A. Copies of the equipment operation and maintenance manuals shall be provided. Operation and maintenance manuals shall include the following information:
   1. Instruction books and/or leaflets
   2. Recommended renewal parts list
   3. Drawings and information required by section 1.04.

PART 2 – PRODUCTS

2.01 MANUFACTURERS

A. Cutler-Hammer

B. General Electric

C. ENGINEER-approved equal

2.02 RATINGS

A. The assembly shall be rated to withstand mechanical forces exerted during short-circuit rating as indicated on the Plans.

B. Voltage rating to be as indicated on the Plans.

2.03 CONSTRUCTION

A. Switchboard shall consist of the required number of vertical sections bolted together to form a rigid assembly. The sides and rear shall be covered with removable bolt-on covers. All edges of front covers or hinged front panels shall be formed. Provide adequate ventilation within the enclosure.

B. All sections of the switchboard shall be rear aligned with depth as shown on the drawings. All protective devices shall be group mounted. Devices shall be front removable and load connections front accessible enabling switchboard to be mounted against a wall.

C. The assembly shall be provided with adequate lifting means.

D. The switchboard shall be equal to Cutler-Hammer type Pow-R-Line C utilizing the components herein specified and as shown on the drawings.

DRAFT

2.04 BUS

A. All bus bars shall be silver-plated copper. Main horizontal bus bars shall be mounted with all three phases arranged in the same vertical plane. Bus sizing shall be based on NEMA standard current density of 1000 amps per square inch.

B. Provide a full capacity neutral bus where a neutral bus is indicated on the drawings.

C. A copper ground bus (minimum ¼-inch x 2 inches), shall be furnished firmly secured to each vertical section structure and shall extend the entire length of the switchboard.

D. All hardware used on conductors shall be high-tensile strength and zinc-plated. All bus joints shall be provided with conical spring type washers.

2.05 WIRING/TERMINATIONS

A. Small wiring, necessary fuse blocks and terminal blocks within the switchboard shall be furnished as required. Control components mounted within the assembly, such as fuse blocks, relays, pushbuttons, switches, etc., shall be suitably marked for identification corresponding to appropriate designations on manufacturers wiring diagrams. Wiring diagrams shall contain terminal and wire numbers.

B. Mechanical-type terminals shall be provided for all line and load terminations suitable for copper or aluminum cable rated for 75°C of the size as indicated on the Plans.

C. Lugs shall be provided in the incoming line section for connection of the main grounding conductor. Additional lugs for connection of other grounding conductors shall be provided as indicated on the Plans.

D. All control wire shall be type SIS, bundled and secured with nylon ties. Insulated locking spade terminals shall be provided for all control connections, except where saddle type terminals are provided integral to a device. All current transformer secondary leads shall first be connected to conveniently accessible short-circuit terminal blocks before connecting to any other device. All groups of control wires leaving the switchboard shall be provided with terminals blocks with suitable numbering strips. Provide wire markers at each end of all control wiring.

2.06 MOLDED CASE PROTECTIVE DEVICES

A. Main and feeder protective devices shall be molded case circuit breakers with inverse time and instantaneous tripping characteristics and shall have ground fault protection where indicated, or as required by NEC.

B. Circuit breakers shall be operated by a toggle-type handle and shall have a quick-make/quick-break over-center switching mechanism that is mechanically trip-free. Automatic tripping of the breaker shall be clearly indicated by the handle position. Contacts shall be non-welding silver alloy, and arc extinction shall be accomplished by means of DE-ION arc chutes. A push-to-trip button on the front of the circuit breaker shall provide a local manual means to exercise the trip mechanism.

C. Circuit breakers shall have a minimum symmetrical interrupting capacity as indicated on the Drawings.

D. Where indicated on the Drawings, circuit breakers shall be UL listed for series application.

E. Where indicated on the Drawings, circuit breakers shall be current limiting.

F. Circuit breakers 400 ampere frame and below shall be thermal-magnetic trip units and inverse time-current characteristics. Circuit breakers 600-ampere through 1200-ampere frame shall be microprocessor-based RMS sensing trip units. Circuit breakers 1600-ampere through 2500-ampere frame shall be microprocessor-based RMS sensing trip units.

DRAFT

G. On circuit breakers 800 amps and larger, a trip button and integral current reading display shall be provided

H. Where indicated, provide circuit breakers UL listed for application at 100% of their continuous ampere rating in their intended enclosure.

I. Provide Lamicoid labels for feeder circuit breakers that provide a descriptive name, as identified on the Drawings, of the load being served. Include circuit number and circuit breaker trip rating.

2.07 ACCESSORIES

A. Provide shunt trips, bell alarms and auxiliary switches as shown on the contract drawings.

B. Circuit Breaker Energy Monitoring.

C. Centralized Local Monitoring.

D. Provide transient voltage surge suppression as required in these Specifications and indicated on the Plans.

2.08 MISCELLANEOUS DEVICES

A. Key interlocks shall be provided as indicated on the Plans or required for safe equipment operation.

B. Control power transformers with primary and secondary protection shall be provided, as indicated on the Plans, or as required for proper operation of the equipment.

C. Each section of the switchboard shall be provided with a space heater, thermostatically controlled. Power for the space heaters shall be obtained from a control power transformer within the switchboard. Supply voltage shall be 120 volts AC.

2.09 ENCLOSURES

A. Indoor NEMA 1 Enclosure

B. Outdoor NEMA 3R Enclosure

1. Outdoor enclosure shall be non-walk-in and meet applicable NEMA 3R UL requirements.
2. Enclosure shall have flat roof sloping roof downward toward rear.
3. Outer sections shall be the same widths as indoor structures, except each end of the outdoor assembly shall have an end trim.
4. The enclosure shall be provided with bolt-on rear covers for each section.
5. Doors shall have provisions for padlocking.
6. Ventilating openings shall be provided complete with replaceable fiber glass air filters.
7. Provide space heaters thermostatically controlled for each structure with adequate wattage to prevent the accumulation of moisture.
8. Power for space heaters, lights and receptacles shall be obtained from a control power transformer within the switchboard. Supply voltage shall be 120 volts AC.

2.10 NAMEPLATES

A. Engraved nameplates, mounted on the face of the assembly, shall be furnished for all main and feeder circuits as indicated on the Plans. Nameplates shall be laminated plastic, black characters on white background. Nameplates shall give item designation and circuit number as well as frame ampere size and appropriate trip rating. Furnish master nameplate giving switchboard designation, voltage ampere rating, short-circuit rating, manufacturer's name, general order number, and item number.

DRAFT

B. Control components mounted within the assembly, such as fuse blocks, relays, pushbuttons, switches, etc., shall be suitably marked for identification corresponding to appropriate designations on manufacturer's wiring diagrams.

2.11 FINISH

A. All exterior and interior steel surfaces of the switchboard shall be properly cleaned and provided with a rust-inhibiting phosphatized coating. Color and finish of the switchboard shall be ANSI 61 light gray.

PART 3 – EXECUTION

3.01 FACTORY TESTING

A. The following standard factory tests shall be performed on the equipment provided under this section. All tests shall be in accordance with the latest version of ANSI and NEMA standards.
   1. The switchboard shall be completely assembled, wired, adjusted, and tested at the factory. After assembly, the complete switchboard will be tested for operation under simulated service conditions to assure the accuracy of the wiring and the functioning of all equipment. The main circuits shall be given a dielectric test of 2200 volts for one (1) minute between live parts and ground, and between opposite polarities. The wiring and control circuits shall be given a dielectric test of 1500 volts for one (1) minute between live parts and ground.

B. The manufacturer shall provide certified copies of factory test reports.

3.02 INSTALLATION

A. The CONTRACTOR shall install all equipment per the MANUFACTURER'S instructions, Contract Documents, and National Electrical Code.

B. The assembly shall be provided with adequate lifting means and shall be capable of being moved into installation position and bolted directly to the floor without the use of floor sills provided the floor is level to 1/8-inch per 3-foot distance in any direction. All necessary hardware to secure the assembly in place shall be provided by the CONTRACTOR.

3.03 FIELD INSPECTION AND TESTS

A. Provide the services of an authorized representative of the equipment manufacturer to make site visits to supervise the field testing and installation to be performed by the CONTRACTOR. The manufacturer’s representative shall state in writing that the equipment has been correctly installed and tested.

B. Perform the following minimum tests and checks before energizing equipment:
   1. Megger terminals and busses for grounds after disconnecting devices sensitive to megger voltage.
   2. Inspect all mechanical and electrical interlocks for proper operation.

C. Perform any other tests recommended by the equipment manufacturer and other tests as described in this specification.

D. The manufacturer’s representative shall supply results of all factory and field tests in writing for submittal to the ENGINEER.

E. The manufacturer shall supply test results to confirm that the assembly design has been tested to substantiate conformance with the applicable ANSI and NEMA Standards.

F. Touch-up paint all chips and scratches with manufacturer supplied paint and leave remaining paint with OWNER.

DRAFT

G. The CONTRACTOR shall perform field adjustments of the protective devices as required to place the equipment in final operating condition. Necessary field settings of devices, adjustments, and minor modifications to equipment to accomplish operational condition shall be carried out by the CONTRACTOR at no additional cost to the OWNER.

END OF SECTION

DRAFT

SECTION 26 2416 – PANELBOARDS

PART 1 – GENERAL

1.01 SCOPE OF WORK

A. This section covers electrical panelboards.

1.02 SUBMITTALS

A. Products shall be submitted in accordance with these Specifications and the Contract Documents prior to installation.

B. Panelboard submittal shall include:
   1. Layout and dimensions with alphanumeric designation
   2. Branch circuit breaker sizes and types
   3. AIC rating
   4. Bus sizes and ratings
   5. Cable terminal sizes
   6. Product sheets
   7. Installation information
   8. Seismic certification and equipment anchorage details

1.03 QUALITY ASSURANCE

A. NEMA PB-1, Panelboards

B. NEC

C. UL67, Panelboards

PART 2 – PRODUCTS

2.01 PANELBOARDS

A. Dead-front panelboards, including lighting distribution and control panels, shall be furnished and installed as indicated on the Plans. Buses shall be copper. Mounting and type of enclosures shall be as indicated on the Plans. Where not indicated, indoor enclosures shall be NEMA 12 and outdoor enclosures shall be NEMA 3R. The minimum interrupting capacity of any device shall be as indicated on the Plans.

B. Protective devices shall be replaceable without disturbing adjacent units. Wire connectors shall be suitable for wire sizes indicated. Branch circuits shall be numbered as indicated on the Plans, and a complete typed circuit schedule shall be furnished under a transparent cover, and affixed to the panel. Phase busing shall be full height without reduction. Full size neutral bars shall be included, and shall have suitable lug for each outgoing circuit requiring neutral connection. Spaces for future protective devices provided in lighting panels shall be bused for the maximum device that can be fitted into them.

C. Panelboards shall be finished with a primer, rust resistant phosphate undercoat and two coats of oven baked enamel with finish ANSI grey. Doors shall not uncover any live parts, and shall be hinged and have latches that require no tool to operate. Panelboard doors shall be lockable. Lock and two keys shall be furnished.

D. Each panelboard shall have, on the outside of the door, a lamicoid nameplate with ¾-inch letters as specified elsewhere in these Contract Documents.

E. Panelboards shall be manufactured by Cutler Hammer, General Electric, or ENGINEER-approved equal.

F. Panelboards shall be service entrance rated where required, and as shown on the Plans.

DRAFT

G. Panelboards shall be bolt-on type and provided with spare breakers as indicated on the Plans.

H. Panelboards shall include a typed circuit directory located inside the panel.

I. Surge Protective Devices (SPD)
   1. The SPD shall be per these Specifications.
   2. Surge Protective Devices (SPD) shall be designed to provide transient voltage protection for a service entrance panelboard.
   3. SPD shall be rated for the voltage and phase service of the panel at 120 kA per phase.

PART 3 – EXECUTION

3.01 INSTALLATION

A. Panelboards shall be installed as indicated on the plans and according to manufacturer's instructions.

B. Provide grounding per NEC and these Specifications.

C. CONTRACTOR shall verify all NEC clearance requirements prior to installation.

END OF SECTION

DRAFT

SECTION 26 2716 – ELECTRICAL CABINETS AND ENCLOSURES

PART 1 – GENERAL

1.01 SCOPE OF WORK

A. This specification includes enclosures to house electrical controls, instruments, terminal blocks, and/or serve as junction boxes where shown on the Plans.

1.02 SUBMITTALS

A. Products shall be submitted in accordance with these Specifications and elsewhere in the Contract Documents prior to installation.

1.03 MANUFACTURERS

A. Enclosures shall be manufactured by Hammond, Hoffman, Rittal, or ENGINEER-approved equal.

PART 2 – PRODUCTS

2.01 STEEL

A. Enclosures shall be fabricated from 14 gauge steel with seams that are continuously welded. Doors shall have full length piano hinges with the door removable by pulling the hinge pin.

B. A rolled lip shall be provided around three sides of the door and around all sides of the enclosure opening. The gasket shall be attached with oil-resistant adhesive and held in place with steel retaining strips. Exterior hardware, such as clamps, screws, and hinge pins, shall be of stainless steel for outdoor installations. A hasp and staple shall be provided for padlocking. Each enclosure shall have a print pocket. All wires entering or leaving the enclosure shall terminate on terminal strips. All wires and terminals shall be clearly identified as specified elsewhere in these specifications.

C. Finish shall be white enamel interior, light gray enamel, ANSI 61 exterior, over phosphatized surfaces. Special finishes and colors shall be furnished for wet locations. Plans should be checked for special conditions.

2.02 NEMA RATING

A. Unless otherwise indicated on the Plans, enclosures shall be NEMA 12 for indoors, NEMA 4X for corrosive areas, and NEMA 3R for outdoor installations. NEMA 4X enclosures shall be 316 stainless steel, unless noted otherwise. NEMA 4X enclosures shall also be used in wet or wash down areas.

2.03 FIBERGLASS ENCLOSURES (where indicated in plans)

A. Where called out in the Plans, fiberglass NEMA 3R or 4X enclosures shall be compression molded, fiberglass reinforced polyester, high impact, and heat resistant.

PART 3 – EXECUTION

3.01 INSTALLATION

A. Enclosures shall be installed as indicated on the Plans, and according to manufacturer's instructions.

B. Enclosures shall be properly grounded, and shall include ground straps connected to hinged doors and accessories.

END OF SECTION

DRAFT

SECTION 26 2726 – WIRING DEVICES

PART 1 – GENERAL

1.01 SUMMARY

A. Section Includes:
   1. Light switches, receptacles, device plates, dimmers, plug-in strips, and tele-power poles.

1.02 QUALITY ASSURANCE

A. Device shall be UL-rated when applicable

1.03 SUBMITTALS

A. Shop Drawings: Refer to the Contract Documents and these Specifications.

PART 2 – PRODUCTS

2.01 ACCEPTABLE MANUFACTURERS

A. Subject to compliance with the Contract Documents, the following manufacturers are acceptable:
   1. Light switches (except explosion proof):
      a. Hubbell
      b. Slater
      c. P&S
      d. Arrow Hart
      e. General Electric
      f. Leviton
      g. Or ENGINEER-approved equal
   2. Explosion proof light switches:
      a. Crouse-Hinds
      b. Appleton Electric Co.
      c. Killark
      d. Or ENGINEER-approved equal
   3. Door switches:
      a. General Electric
      b. Slater
      c. P&S
      d. Arrow Hart
      e. Micro-switch
      f. Or ENGINEER-approved equal
   4. Receptacles (except explosion proof):
      a. Hubbell
      b. Slater
      c. P&S
      d. Arrow Hart
      e. General Electric
      f. Leviton
      g. Or ENGINEER-approved equal
   5. Explosion proof receptacles:
      a. Crouse-Hinds
      b. Appleton Electric Co.

DRAFT

c. Killark
d. Or ENGINEER-approved equal

6. Welding receptacles:
   a. Crouse-Hinds
   b. Appleton Electric Co.
   c. Or ENGINEER-approved equal
7. Tele-power poles:
   a. Wiremold
   b. Walker
   c. Or ENGINEER-approved equal
8. Dimmers:
   a. Lutron
   b. General Electric
   c. P&S
   d. Or ENGINEER-approved equal
9. Plug-in strip:
   a. Wiremold
   b. Walker
   c. Or ENGINEER-approved equal

2.02 MATERIALS

A. Light Switches for Unclassified Areas:
   1. Toggle type, quiet action, specification grade with grounding terminal
   2. Back and side wired
   3. Solid silver cadmium oxide contacts
   4. One-piece switch arm rated 20 A, 120/277 V AC
   5. UL listed
   6. Color: Ivory
   7. Wall plate: Type 304 stainless steel
   8. Type: As indicated on Drawings

B. Receptacles for Unclassified Areas:
   1. Straight blade, grounding type, specification grade
   2. Back and side wired with wrap-around bridge
   3. Rated 20 A, 125 V AC
   4. UL listed
   5. Color:
      a. For use on normal power: Ivory
      b. For use on UPS systems: Red
      c. For use on isolated ground systems: Orange
   6. Wall plate: Type 304 stainless steel
   7. Type: As indicated on Drawings

C. Light Switches for Wet Areas:
   1. Presswitch type, quiet action, specification grade, with grounding terminal
   2. Back and side wired
   3. Solid silver cadmium oxide contacts
   4. One-piece switch arm rated 20 A, 120/277 V AC
   5. UL listed
   6. Color: Ivory
   7. Wall plate: Gray weatherproof presswitch type
   8. Type: As indicated on Drawings

DRAFT

D. Receptacles for Wet Areas:
   1. Straight blade, grounding type, specification grade
   2. Back and side wired with wrap around bridge
   3. Rated 20 A, 125 V AC
   4. UL listed
   5. Color: Ivory
   6. Wall plate: Weatherproof, cast aluminum, UL listed, WDL open and closed
   7. Type: As indicated on Drawings

E. Ground Fault Circuit Interrupter Receptacles:
   1. Straight blade, grounding type, specification grade
   2. Rated 20 A, 125 V AC
   3. UL listed
   4. Test and reset buttons
   5. Wall plate: Indoor or weatherproof as required
   6. Feed-through type

F. Light Switches for Corrosive Areas:
   1. Corrosion-resistant NEMA 4X enclosure with switch consisting of:
      a. Fiberglass reinforced polyester enclosure
      b. Fiberglass reinforced polyester gasketed wall plate with built-in toggle lever switch with stainless steel shaft
      c. Grounding bushing
      d. Rated 20 A, 125 V AC
      e. UL listed
      f. Type: As indicated on Drawings
      g. Color: Yellow
   2. Optional: Corrosion-resistant enclosure and switch consisting of:
      a. Cast copper-free aluminum "FS" or "FD" ridge type hub box
      b. Toggle type, quiet action, specification grade with grounding terminal
      c. Rated 20 A, 125 V AC with solid silver cadmium oxide contacts
      d. UL listed
      e. Neoprene gasket
      f. Cast aluminum cover with stainless steel screws and lever to activate switch
      g. Type: As indicated on Drawings
      h. Color: Yellow

G. Receptacles for Corrosive Areas:
   1. Corrosion-resistant straight blade, grounding type, specification grade
   2. Back and side wired with wrap-around bridge
   3. Rated 20 A, 125 V AC
   4. UL listed
   5. Color: Yellow
   6. Box: "FS" or "FD" ridge type cast hub box of copper-free aluminum
   7. Gasket: Neoprene
   8. Wall plate: Weatherproof, cast aluminum, UL listed, WDL open or closed
   9. Type: As indicated on Drawings

H. Explosion proof Light Switches for Use in Hazardous Areas:
   1. Explosion proof, UL listed for Class I, Division 1 and 2, Groups B, C, and D; and Class II, Division 1 and 2 areas, Groups E, F, and G.
   2. EDS factory sealed
   3. Malleable iron body and cover

DRAFT

4. Aluminum sealing chamber
5. Front operated handle with stainless steel shaft
6. Rated 20 A, 125 V AC
7. With grounding screw
8. Type: As indicated on Drawings

I. Explosion proof Receptacles for Use in Hazardous Areas:
1. Explosion-proof, UL listed for Class I, Division 1 and 2, Groups B, C, and D; and Class II, Division 1 and 2, Groups F and G.
2. Factory-sealed malleable iron receptacle with spring-loaded cover
3. Malleable iron mounting box
4. Rated 20 A, 125 V AC
5. "Dead-front" construction requiring plug to be inserted and rotated to activate receptacle
6. Type: As indicated on Drawings.

J. Welding Receptacles: 1. 60 A, 480 V, 3 pole, 4 wire, grounding type

K. Plug-In Strip: Surface steel raceway plug-in strip with single 15 A, 125 V, 3 wire grounding-type receptacles spaced 18 IN on center.
1. Prewired with two #12 TW and one #12 TW green insulated ground
2. Minimum 1-1/4 IN wide x 3/4 IN deep
3. Suitable fittings and snap-in cover
4. Finish:
   a. Stainless steel
5. Receptacle color:
   a. For use on normal power: Ivory
   b. For use on UPS systems: Red
   c. For use on isolated ground systems: Orange

PART 3 – EXECUTION

3.01 INSTALLATION

A. Mount devices where indicated on the Drawings and as scheduled in these Specifications.

B. Surface mount receptacles and light switches in concrete construction.

C. In masonry and metal stud construction, recess mount receptacles and light switches unless device precludes recessed mounting or unless otherwise noted on the Drawings.

D. Where more than one receptacle is installed in a room, they shall be symmetrically arranged.

E. Set switches and receptacles plumb and vertical to the floor.

F. Set recess-mounted switches and receptacles flush with face of walls.

G. Do not connect dimmers to loads in excess of 80 percent of the rating of the dimmer.

H. Provide blank plates for empty outlets.

END OF SECTION

DRAFT

SECTION 26 2813 – FUSES

PART 1 – GENERAL

1.01 SCOPE OF WORK

A. This section covers the requirements for protective fusing on this project. The CONTRACTOR shall furnish and install fuses and fuse holders per the Drawings and equipment manufacturers recommendations.

B. This specification includes the general requirements for various types of fuses whether they are shown on the Drawings or not. If fusing is required by codes or manufacturers recommendations, but not shown on the Drawings, this specification shall apply to the type of fusing provided by the CONTRACTOR.

C. Types of fuses specified in this section include the following:
   1. Class L time-delay
   2. Class L fast-acting
   3. Class RK1 time-delay
   4. Class RK1 and Class J current-limiting
   5. Class RK5 time-delay
   6. Class K5 time-delay, noncurrent-limiting
   7. Class T current-limiting

1.02 QUALITY ASSURANCE

A. The fuse manufacturer's facilities shall be ISO 9001 certified.

1.03 CODES AND STANDARDS

A. UL Compliance and Labeling: Comply with applicable provisions of UL 198D, "High-Interrupting-Capacity Class K Fuses". Provide over-current protective devices which are UL-listed and labeled.

B. NEC Compliance: Comply with NEC as applicable to construction and installation of fusible devices.

C. ANSI Compliance: Comply with applicable requirements of ANSI C97.1 "Low-Voltage Cartridge Fuses 600 Volts or Less".

1.04 SUBMITTALS

A. Product Data: Submit manufacturer's technical product data on fuses, including specifications, electrical characteristics, installation instructions, furnished specialties and accessories in accordance with these Specifications and the Contract Documents. In addition, include voltages and current ratings, interrupting ratings, current limitation ratings, time-current trip characteristic curves, and mounting requirements.

1.05 MANUFACTURERS

A. Subject to compliance with requirements, manufacturers offering fusible devices which may be incorporated in the work include, but are not limited to, the following: Bussmann, Gould-Shawmut, Reliance, or ENGINEER-approved equal.

DRAFT

PART 2 – PRODUCTS

2.01 GENERAL

A. Except as otherwise indicated, provide fuses of types, sizes, ratings, and average time-current and peak let-through current characteristics indicated, which comply with manufacturer's standard design, materials, and constructed in accordance with published product information, and with industry standards and configurations.

2.02 CLASS L TIME-DELAY FUSES

A. Provide UL Class L time-delay fuses rated 600 volts, 60 Hz, with 200,000 RMS symmetrical interrupting current rating for protecting transformers, motors, and circuit-breakers.

2.03 CLASS L FAST-ACTING FUSES

A. Provide UL Class L fast-acting fuses rated 600 volts, 60 Hz, with 200,000 RMS symmetrical interrupting current rating for protecting service entrances and main feeder circuit-breakers.

2.04 CLASS RK1 TIME-DELAY FUSES

A. Provide UL Class RK1 time-delay fuses rated 600 volts, 60 Hz, with 200,000 RMS symmetrical interrupting current rating for protecting motors and circuit-breakers.

2.05 CLASS RK1 CURRENT-LIMITING FUSES

A. Provide UL Class RK1 current-limiting fuses rated 250 volts, 60 Hz, with 200,000 RMS symmetrical interrupting current rating for protecting circuit-breakers.

2.06 CLASS J CURRENT LIMITING FUSES

A. Provide UL Class J current-limiting fuses rated 600 volts, 60 Hz, with 200,000 RMS symmetrical interrupting current rating.

2.07 CLASS RK5 TIME-DELAY FUSES

A. Provide UL Class RK5 time-delay fuses rated 600 volts, 60 Hz, with 200,000 RMS symmetrical interrupting current rating for protecting motors.

2.08 CLASS K5 ONE-TIME FUSES

A. Provide UL Class K5 one-time fuses rated 250 volts, 60 Hz, with 100,000 RMS symmetrical interrupting current rating for protecting non-inductive loads.

2.09 CLASS T FUSES

A. Provide UL Class T fuses rated 600 volts, 60 Hz, with 200,000 RMS symmetrical interrupting current rating for protection of physically small devices.

PART 3 – EXECUTION

3.01 INSTALLATION

A. Fuse types and sizes shall be as indicated on the Plans. Fuses shall be installed in accordance with the National Electric Code (NEC) requirements and the manufacturer's written instructions.

B. Install fuses in proper fuse holders.

C. Where fuses are installed in the motor starters, fuses shall be sized to match the actual motor full load current.

D. Where fuses are installed in disconnect switches at HVAC units, the fuse sizes shall be sized to meet the HVAC manufacturer's requirements.

DRAFT

E. Fuses for control transformers shall be sized in accordance with the National Electrical Code.

F. Fuses shall be installed with the labels clearly visible.

3.02 FIELD QUALITY CONTROL

A. Prior to energizing fusible devices, test devices for circuit continuity and for short-circuits.

3.03 SPARE PARTS

B. Furnish 3 spare fuses of each size and type.

END OF SECTION

DRAFT

SECTION 26 2816 – ENCLOSED SWITCHES AND CIRCUIT BREAKERS

PART 1 – GENERAL

1.01 SCOPE OF WORK

A. The CONTRACTOR shall furnish and install, low voltage circuit breakers and enclosed disconnect switches, as indicated on the Drawings and specified herein.

1.02 SUBMITTALS

A. Products shall be submitted in accordance with these Specifications and elsewhere in the Contract Documents prior to installation.

1.03 QUALITY ASSURANCE

A. The breaker manufacturer's facilities shall be ISO 9001 certified.

PART 2 – PRODUCTS

2.01 GENERAL

A. Circuit breakers shall be manufactured by Cutler-Hammer, Allen-Bradley, General Electric, or ENGINEER-approved equal.

B. Circuit breaker frame, trip, short circuit, and interruption ratings shall be as indicated on the Drawings, except that they shall be coordinated with the ratings of the equipment actually furnished, and shall be modified where necessary to suit the equipment. Circuit breakers to be used in motor control centers shall be as indicated on the Drawings. Where no indication of type is given on the Drawings circuit breakers protecting motors shall be motor circuit protectors, and other circuit breakers shall be molded case type.

C. Circuit breaker for mounting in motor control centers, or for separate mounting shall be of the air-break type, quick-make and quick-break, 600 volt, with number of poles as indicated on the Drawings.

D. Each pole of the circuit breaker shall provide inverse time delay, and instantaneous circuit protection.

E. The breakers shall be operated by a handle, and shall have a switching mechanism that is mechanically trip free from the handle, so that the contacts cannot be held closed against short circuits, and abnormal currents. Tripping due to overload, or short circuit shall be clearly indicated by the handle automatically assuming a position between the manual ON and OFF positions. Latch surfaces shall be ground and polished. Poles shall be constructed so that they open, close, and trip simultaneously.

F. Breakers must be completely enclosed in a molded case. Non-interchangeable trip breakers shall have their covers sealed; interchangeable trip breakers shall have the trip unit sealed to prevent tampering. Ampere ratings shall be clearly visible. Contacts shall be non-welding silver alloy. Arc extinction must be accomplished by means of arc chutes. The minimum interrupting ratings of the circuit breakers shall be at least equal to the available short circuit current at the line terminals.

G. Circuit breakers shall conform to the applicable requirements of NEMA Standards Publication No. AB1.

DRAFT

H. Molded case circuit breakers shall be ambient temperature compensating that provides inverse time delay overload and instantaneous short circuit protection by means of a thermal-magnetic element. Compensation shall be accomplished by a secondary bi-metal that will allow the breaker to carry rated current between 25°C and 50°C with tripping characteristics that are approximately the same throughout this temperature range.

I. On breakers with interchangeable, thermal, adjustable magnetic trip, the accessibility and position of the adjustment knob shall not be changed from those on the standard breaker.

J. Unless mounted in a switchboard, or panelboard, circuit breakers shall be housed in a NEMA rated enclosure as described elsewhere in these specifications.

K. Provide circuit breakers with shunt trip mechanisms where shown on the Drawings.

2.02 DISCONNECT SWITCHES

A. Disconnect switches shall be heavy-duty safety switches with a quick-make, quick-break operating mechanism, full cover interlock, and indicator handle. Disconnect switches shall be furnished with fuses of the size indicated on the Plans. One set of spare fuses shall be furnished for each fused disconnect switch. Disconnect switches shall be NEMA type HD heavy duty construction, UL 98 listed.

B. Enclosures shall be rated NEMA 12 for indoor use, NEMA 4X for corrosive areas and for outdoor use, unless otherwise indicated on the Plans.

C. Disconnect switch handle shall be padlockable.

D. Disconnect switches in corrosive areas as indicated on the Plans, shall be NEMA 4X, 316 stainless steel.

E. Disconnect switches shall be manufactured by Square D, Cutler Hammer, Allen-Bradley, General Electric, Eaton, or equal.

F. Disconnect switches for motors shall be rated for 125% of the motor HP or as indicated on the plans.

PART 3 – EXECUTION

3.01 INSTALLATION

A. Circuit breakers and disconnect switches shall be installed as indicated on the Drawings and per manufacturer's instructions.

END OF SECTION

DRAFT

SECTION 26 2913 – ENCLOSED MOTOR CONTROLLERS

PART 1 – GENERAL

1.01 SCOPE OF WORK

A. A motor controller is any device or group of devices normally used to start and stop a motor by making and breaking the motor circuit current. The motor controller and devices that make up the motor controller shall be governed by items indicated on the Plans, or elsewhere within these specifications.

B. Types of motor controllers specified in this section include the following:
   1. Combination
   2. Fractional HP manual
   3. Solid-state reduced voltage starter (SSS)

C. This section applies to motor controllers rated 480 V and below.

1.02 CODE AND STANDARDS

A. Electrical Code Compliance: Comply with applicable local electrical code requirements of the authority having jurisdiction and NEC Articles 220, 250, and 430, as applicable to installation, and construction of motor controllers.

B. NFPA Compliance: Comply with applicable requirements of NFPA 70E, "Standard for Electrical Safety in the Workplace."

C. UL Compliance: Comply with applicable requirements of UL 486A and B, and UL 508, pertaining to installation of motor controllers. Provide controllers and components which are UL-listed and labeled.

D. NEMA Compliance: Comply with applicable requirements of NEMA Standard ICS 2, "Controllers, Contactors and Overload Relays" and Pub No. 250, "Enclosures for Electrical Equipment (1000 Volts Maximum)," pertaining to motor controllers and enclosures.

1.03 MAINTENANCE DATA

A. Submit maintenance data and parts list for each motor controller and component; including troubleshooting maintenance guide. Also, provide product data and shop drawings in a maintenance manual, in accordance with requirements of these Specifications and the Contract Documents.

1.04 SUBMITTALS

A. Product Data: Submit manufacturer’s data and installation instructions on motor controllers.

B. Shop Drawings: Submit shop drawings of motor controllers showing accurately scaled equipment locations and spatial relationships to associated motors and equipment.

C. Wiring Diagrams: Submit power and control wiring diagrams for motor controllers showing connections to electrical power panels, feeders, and equipment.

D. Submittal documents shall be provided in accordance with these Specifications and other requirements of the Contract Documents.

PART 2 – PRODUCTS

2.01 GENERAL

A. Except as otherwise indicated, provide motor controllers and ancillary components that comply with manufacturer's standard materials, design, and construction in accordance with published product information, and as required for a complete installation.

DRAFT

2.02 ELECTRONIC OVERLOAD RELAYS

A. Electronic overload relays shall be provided with the motor starters. The overload relay shall be a 3-pole solid state device that monitors all 3 phases of the motor current. The unit shall detect overcurrent, phase current imbalance, phase loss, and trip after an adjustable time from 3 seconds to 30 seconds.

B. The overload relays shall be field selectable to Class 10, 20, or 30, ambient temperature compensated, and shall have an LED trip indicator. The unit shall have a manual and automatic reset feature, and a normally closed contact for control.

C. Each module shall provide individual trip indication and reset for each trip condition, visible without opening the distribution panelboard compartment door. Provide a normally open auxiliary contact for remote trip indication.

D. Solid state circuits shall be completely protected from damage arising from line transients and voltage spikes.

E. Electronic Overload Relays shall be as manufactured by Allen-Bradley, Cutler Hammer, General Electric, or ENGINEER-approved equal.

2.03 MAGNETIC MOTOR STARTERS

A. Starters, Size 2 and larger, shall have arc quenchers on all load breaking contacts. Starters shall be suitable for the horsepower ratings specified. The CONTRACTOR shall verify the motor ratings, and coordinate the starter and overload trip ratings with the actual horsepower ratings of the motors installed. Extended overload reset buttons shall be mounted so as to be accessible for operation without opening the door of the enclosure.

B. Magnetic contactors shall be factory adjusted and shall be chatter free. Overload relays shall be electronic, as specified herein.

C. Starters shall be furnished complete with a 120-volt secondary control power transformer. Control circuit fuses shall be furnished both on the primary and secondary of the control circuit transformer. If there is no transformer, all live control power supply wires shall be fused.

D. Starters shall be designed to operate in ambient temperatures up to 600°C.

E. The minimum size starter shall be NEMA Size 1.

F. Magnetic Motor Starters shall be manufactured by Allen-Bradley, Square D, Cutler Hammer, General Electric, or ENGINEER-approved equal.

2.04 MANUAL STARTERS

A. Manual starters shall be rated for the motor load, and shall be equipped with built-in overloads.

B. Manual starters shall be provided with enclosures as indicated on the Plans, lockable handles that clearly indicate ON, OFF, and TRIPPED positions, pilot light, and positive, quick-make, quick break mechanisms.

C. Manual Starters shall be manufactured by Allen-Bradley, Cutler Hammer, General Electric, or ENGINEER-approved equal.

2.05 MOTOR PHASE FAILURE RELAY

A. The relay shall detect voltage values below an adjustable value, loss of phase, and phase reversal. The unit shall automatically de-energize the control circuits of the motors to be protected, when one or all three phase voltages drop below the set point. The unit shall have a nominal trip delay time of two seconds and a reset time of two seconds. The relay shall automatically reset upon restoration of the line voltage. Relays shall be MotorSaver,

DRAFT

Time Mark Corporation, or ENGINEER-approved equal.

2.06 MOTOR PROTECTION RELAY

A. The motor protection relay shall be capable of the following as a minimum:
   1. Phase loss
   2. Low voltage (adjustable)
   3. Phase reversal
   4. Phase unbalance

B. The motor protection relay shall be equipped with the following as a minimum:
   1. Adjustable trip delay (2 to 20 seconds)
   2. Automatic reset
   3. Transient protection (2,500 volts for 10 ms)

C. Motor protection relays shall be set during the project startup according to the individual motor characteristics and application parameters. The motor protection relays for the motors with variable frequency drives shall be set as to prevent low voltage tripping.

D. The motor protection relays shall be MotorSaver Model 350, Time Mark Model 264, or ENGINEER-approved equal.

2.07 SOLID STATE REDUCED VOLTAGE STARTER

A. Furnish and install a solid-state reduced voltage starter (SSS) to provide motor soft start and soft stop, where indicated on the Plans. The starter shall be capable of operating with any standard NEMA design motor of the specified horsepower. The unit shall be self-contained, house the logic board, power switches, heat sinks, motor overload protection, control power transformer, and applicable disconnect means in one enclosure.

B. Voltage rating to be 460V, 60Hz, 3 phase, +1- 20%.

C. SSS shall be supplied with a fused disconnect switch with the ability to be lockable in the open position.

D. Operating temperature shall be 0°C to 50°C, 5% to 95% relative humidity, non-condensing. De-rate 33% for each 10°C over 50°C to a maximum of 70°C.

E. Built in overload protection shall shut down and disable the starter until reset.

F. There shall be three pairs of inverse parallel SCRs. Each SCR shall be rated to block 2.5 times the nominal line to line voltage. The SCRs shall be sized to handle locked rotor current: 6 times full load current for 10 seconds on a cold start at 50°C.

G. The starter shall be installed as indicted on the Plans, and shall be supplied with properly sized input and bypass contactors, and controls as shown on the Plans.

H. Adjustments and indicators shall be accessible from a digital keypad with LCD panel. Indications shall include control power on, motor on, motor starting, overload, motor on bypass, and current.

I. Power poles and logic assemblies to be removable as one piece assemblies. One logic assembly shall work in any size unit of a given line voltage. The logic assembly shall be conformal coated. The gate drive circuit shall be optically coupled for noise immunity and long life. The logic assembly and SCRs shall be noise immune per NEMA showering arc test for solid-state contactors.

J. The soft start unit shall be capable of voltage or current control. The voltage limit shall be adjustable from 30% to 80% of line voltage and the current control shall be adjustable from 200% to 600% of FLA. In the voltage control mode, the ramp time shall be adjustable from 1 to 30 seconds, and the unit shall also have a soft stop feature.

DRAFT

K. The soft start shall have dry contact, form C, outputs available for internal faults, bypass contactor control, and run status.

L. Solid State reduced voltage starters shall be UL listed under UL508, and manufactured by Allen Bradley, Square D, Eaton, or ENGINEER-approved equal.

PART 3 – EXECUTION

3.01 INSTALLATION

A. Install motor controllers in accordance with equipment manufacturer's written instructions, and with recognized industry practices. Comply with applicable requirements of NEC, UL, and NEMA standards, to ensure that products fulfill requirements.

B. Tighten connectors and terminals, including screws and bolts, in accordance with equipment manufacturer's published torque values for equipment connectors. Where manufacturer's torque requirements are not indicated, tighten connectors and terminals to comply with tightening torques specified in UL Standards 486A and B, and the National Electrical Code.

C. Install fuses, of sizes indicated, in each fusible disconnect switch, if any. The type and sizes of the fuses for SSS must be per the manufacturer’s recommendation.

D. Prior to energizing motor controller equipment, check with ground resistance tester, phase-to phase and phase-to-ground insulation resistance levels to ensure requirements are fulfilled.

E. Prior to energizing, check circuitry for electrical continuity.

F. Check rotation of each motor for proper direction.

G. Upon completion of installation of motor controller equipment and electrical circuitry, energize controller circuitry and demonstrate functioning of equipment in accordance with requirements. Where possible, correct malfunctioning units at site, then retest to demonstrate compliance; otherwise, remove and replace with new units, and retest to demonstrate compliance.

END OF SECTION

DRAFT

SECTION 26 2923 – VARIABLE FREQUENCY DRIVES

PART 1 – GENERAL

1.01 SCOPE OF WORK

A. This section provides specification requirements for Variable Frequency Drives (VFD), and Variable Speed Drives (VSD) or herein identified as AC Drives for use with NEMA® Design B motors.

B. The CONTRACTOR shall furnish all labor, materials, equipment, appurtenances, and incidentals required to install, test, and operate the AC Drive systems specified herein, complete with all auxiliary items and accessories necessary to meet the highest standards for the type of service. Additionally, the CONTRACTOR shall provide for instruction of the regular operating personnel in the operation and maintenance of all systems and equipment supplied.

C. Where shown on the plans or specified herein, VFDs will be used to vary the operating speed of electric motors used to drive pumps, blowers, or other process equipment. The drives indicated on the plans are to be supplied by a single Manufacturer/Vendor, with the exception of the blower motor control units which will be supplied as part of a process equipment package.

D. The AC Drive supplier shall furnish, field test, adjust and certify all installed AC Drives for satisfactory operation. The supplier shall provide and have complete system responsibility for the adjustable frequency drives on the project. The supplier must confirm that his equipment is completely compatible with the facility's motors, controls, and electrical power system at each location. The supplier shall verify that the motor and adjustable speed equipment output speed, horsepower, and torque range agree with the driven motor requirements as determined and required by the process equipment supplier.

E. Any exceptions or deviations to this specification shall be indicated in writing and submitted to the ENGINEER for approval prior to commencement of work.

F. Start-up Services: The VFD supplier shall provide a start-up engineer for a minimum of two visits of one day each to perform commissioning services for the VFD equipment supplied. The VFD supplier shall confirm with the VFD manufacturer what amount of commissioning time is required for the VFD equipment for this project. The VFD supplier shall provide all required commissioning time of the start-up engineer at no extra cost to the OWNER. The start-up engineer shall supervise the final wiring of the VFD equipment.

1.02 REFERENCES

ANSI®/NFPA® 70	National Electrical Code® (NEC®)
CSA® C22.2 No. 14-M91	Industrial Control Equipment
IEC 60529	Mechanical & Electrical Enclosure Protection
IEC 61000	Electromagnetic Compatibility
IEEE 519	Recommended Practice and Requirements for Harmonic Control in Electric Power Systems.
NEMA 250	Enclosures for Electrical Equipment
NEMA ICS 2	Industrial Control and Systems Controllers, Contactors and Overload Relays Rated 600 Volts.
NEMA ICS7	Industrial Control and Systems Adjustable Speed Drives
NEMA ICS 7.1	Safety Standards for Construction and Guide for Selection Installation and Operation of Adjustable Speed Drives
OSHA® 1910.95	AC Drive Controller Acoustical Noise
UL®50	Enclosures for Electrical Equipment
UL 98	Disconnect Switches

DRAFT

UL 507	Electric Fans
UL 508	Industrial Control Equipment
UL 508C	Power Conversion Equipment
UL 991	Safety Tests for Safety Related Controls employing Solid State Devices

1.03 QUALIFICATIONS

A. All of the AC Drives furnished under this Section shall be the product of a single manufacturer.

B. The Manufacturer of the AC Drive equipment shall provide equipment which is reliable, and designed and manufactured to assure compatibility of all components in both function and appearance.

C. Approved manufacturers shall be:
   1. Danfoss North America
   2. Or ENGINEER-approved equal

D. The Manufacturer of the AC Drives shall maintain a permanent fully factory trained and employed technical staff and an equipped service facility within a 400-mile radius of the project site having all personnel and all equipment required to maintain, repair, or overhaul the adjustable frequency drives and associated systems supplied herein.

1.04 SUBMITTALS

A. Submit complete material lists, shop drawings, and technical data for the ENGINEER's approval to the extent required in Section 01 3300 – Submittal Procedures and elsewhere in these Specifications.

B. The equipment supplied under this specification shall be pre-packaged and factory assembled and tested for conformance with these specifications and the project plans and documents.

C. Shop Drawings: The shop drawings shall be complete for the adjustable speed equipment as well as all other equipment furnished per this specification and shall include as a minimum the following items:
   1. Standard catalog sheets showing voltage, horsepower, maximum current ratings, and recommended replacement parts with part numbers shall be furnished for each different horsepower rated AC Drive shall be provided.
   2. Elevation drawings shall show the arrangement of all components. Positions on the front panel shall be identified with nameplates. Nameplates shall be in accordance with these Specifications.
   3. Dimensions for the equipment shall be shown on the Drawings.
   4. Weights for the equipment shall be shown on the Drawings.
   5. Diagrams shall show the equipment, equipment locations, wiring circuit schematics, voltage, wire numbers, and identified terminals.
   6. Settings of all protective devices and relays plus settings of all adjustable equipment parameters shall be provides as a typed list. This list shall include control network configuration parameters.
   7. Parts List: A complete list of parts that would be necessary to maintain and service the equipment shall be submitted to the ENGINEER with the shop drawings. The Manufacturer shall identify and furnish those spare parts required for one year of operation as part of this contract.

D. Installation and Operation Reports: Copies of the AC Drive supplier's Certified Reports for the equipment installation, testing and operation shall be submitted to the ENGINEER with the Operations and Maintenance Manuals.

DRAFT

E. Installation, Operations and Maintenance Manuals: Submit four (4) hardbound copies and one (1) electronic copy (pdf format) of the complete installation, operation, and maintenance manuals.
   1. Required operation and maintenance data includes, but is not limited to the following:
      a. Complete, detailed written operating instructions for each project or piece or equipment including: equipment function; operating characteristic; regulation and control; and shutdown. Manuals must be specific. General Manuals will not be accepted.
      b. Complete, detailed written preventative maintenance instruction.
      c. A complete inventory of all parts and components.
      d. Recommended spare parts lists and local sources of supply for parts.
      e. Written explanations of all safety considerations relating to operation and maintenance procedures.
      f. Name, address, and phone number of manufacturers, manufacturer's local service representative, or installer.
      g. A written explanation with illustrations for each preventative maintenance task.
      h. Trouble shooting instructions.

1.05 QUALITY ASSURANCE

A. The manufacturer of the AC Drive shall be a certified ISO 9001 facility.

B. The AC Drive and all associated optional equipment shall be UL Listed according to UL508C Power Conversion Equipment. A UL label shall be attached inside each enclosure as verification.

C. The AC Drive shall be designed constructed and tested in accordance with UL, CSA, NEMA and NEC standards.

D. Every power converter shall be quality assurance tested with an AC induction motor under load conditions and subjected to a hi-pot test with all enclosed devices mounted and wired, prior to shipment.

E. Quality Assurance documentation shall be furnished to verify successful completion upon written request of the ENGINEER.

1.06 WARRANTY

A. The CONTRACTOR, through the AC Drive Supplier, shall warranty the supplied equipment and installation for a period of 18 months from Acceptance of equipment or 12 months after Final Project Completion, whichever occurs first.

PART 2 – PRODUCTS

2.01 CONSTRUCTION

A. The AC Drive shall be installed within the allocated space within the MCC or control panel.

B. If the drive is mounted in a cabinet or compartment within the MCC or within a control panel, a means of cooling the interior of the space shall be provided to maintain the ambient temperature within the acceptable specified limits listed by the AC Drive manufacture.

C. Provisions shall be provided for locking all disconnects in the off position.

D. All AC drives (unless noted otherwise) shall be provided with an enclosure rated to IP65 protection (IP65 case).

E. All AC drives (unless noted otherwise) shall be provided with Ethernet I/P communication modules. All drives shall be capable of communicating to the Main PLC.

DRAFT

F. AC Drive Features: The AC Drive shall be provided with the following features per the Process & Information Diagrams (P&IDs):
   1. Provisions for 4 to 20 mA input speed reference signal
   2. Provisions for 4 to 20 mA output signal proportional to AC Drive output frequency
   3. Electrically isolated auxiliary contacts for ready, running, fault (alarm) status, HOA position (Auto), and Motor High Temperature.
   4. Adjustable minimum/maximum frequency limits
   5. Independent timed linear acceleration and deceleration
   6. Adjustable motor slip compensation based on motor current
   7. Terminal blocks for control and signal wires entering and leaving the controller
   8. Output transistors shall be insulated gate bipolar transistors (IGBT) type, or Darlington pair
   9. Current limit
   10. Programmable automatic restart
   11. Digital keypad, with configurable security password protection for configuration, programming, local control, and monitoring
   12. Microprocessor-based control for system logical sequencing functions
   13. Drives interface module to be installed on the door of the bucket/compartment.

G. Functional Requirements:
   1. Supply Power: The VFD shall operate continuously with supply power of 460 volts plus or minus 10 percent / 60 Hz plus or minus 3 percent.
   2. Ambient Conditions: The VFD's shall operate continuously as specified in an ambient temperature of minus 5°C to plus 50°C and an ambient humidity of 0 to 90 percent, non-condensing.
   3. Loads: The VFD system shall be capable of 110% continuous current overload. Variable torque inverters shall be capable of delivering 120 percent of the specified load for up to 60 seconds, and constant torque inverters shall deliver 150 percent overload current for 120 seconds.
   4. Power Factor: Displacement power factor shall not be less than 0.95 at rated full speed and load. Overall power factor, including harmonic distortion, shall be 0.85, or greater. Contractor shall provide power factor correction components as necessary to meet this requirement.
   5. Efficiency: Efficiency of VFD systems shall be at least 95percent at 60 Hz output driving the specified maximum load.
   6. Frequency and Voltage Regulation: VFD output frequency shall be regulated to within 0.6 Hz of the frequency set point. VFD output voltage shall be regulated to within =1.0 percent of that value which will provide minimum motor heating at any operating frequency within the specified range.
   7. Frequency Range: VFD shall be capable of continuous operation with the specified load at any frequency between 0.1 Hz and 60 Hz.
   8. Space: VFD system size shall not exceed the size allotments specified on the Plans, nor shall any portion of the VFD system exceed a height of 90 inches. VFD system shall be front accessible and shall not require rear access. The VFD equipment shall be suitable for mounting directly against the wall without any clearance for ventilation or other purposes. VFD units shall be arranged as required for entry of incoming line cables and as required for entry of load cables.
   9. Ambient Noise: Free field noise generated by the VFD shall not exceed 85dBA at 3 feet out from any point on the VFD cabinet under any normal operation condition.

DRAFT

H. Protection and Annunciation:
   1. Overcurrent Protection: The VFD system shall provide electronic current limit at 150 percent of motor nameplate current. Current limit shall be accurate to within 1.0 percent and shall smoothly limit motor speed at whatever value is necessary to limit motor current that value. The VFD shall also provide motor running overcurrent protection in compliance with NFPA 70.
   2. Short Circuit Protection: The VFD shall be fully protected against load faults. Bolted faults, phase to phase, or phase to ground shall not damage the unit. Any impedance or other current limiting necessary to meet this requirement shall be provided as part of the VFD system, and any losses caused by current limiting devices shall be included in efficiency calculation for the VFD system.
   3. Line Voltage: The VFD shall be protected against high and low line voltage on one or more phases.
   4. Internal Faults: The VFD shall incorporate an internal fault monitoring system to detect malfunctions. This system shall be designed to protect the VFD from transient and sustained faults, and to limit damage that may be caused by these faults.
   5. Over Temperature: Over temperature circuitry shall shut down the VFD upon overheating, and display an over temperature alarm, or message.
   6. Diagnostics: The VFD shall be provided with a fault diagnostics system that indicates the cause of any shutdown. The system shall store faults in memory and discard the oldest faults as new ones fill the memory. Faults shall be accessible via a digital keypad, also used for local control and programming.

I. External Control and Monitoring:
   1. All AC drives (unless noted otherwise) shall be provided with Ethernet I/P communication modules. All drives shall be capable of communicating to the MAIN PLC.
   2. In addition to network communication, the AC Drive shall also provide the following minimum external control and monitoring signalization capabilities:
      a. Speed Reference: The VFD shall accept a 4 to 20 milliampere direct current speed reference signal. Speed reference input shall be galvanically isolated and input resistance shall not exceed 250 ohms.
      b. Ready Signal: The VFD shall provide a contact closure that the controller line power supply is within acceptable tolerances, the control circuits are normal, and there are no internal or external fault conditions that have not been reset. Presence of this signal indicates that the controller should start normally.
      c. Running Signal: The VFD shall provide a contact closure which indicates that the controller is running.
      d. Fault Signal: Isolated normally open contacts for remote fault, annunciation shall be provided and wired to terminal blocks, which shall be labeled and identified. Contact shall close under fault conditions. Fault conditions that drive outputs shall be selectable from the digital keypad.
   3. The AC Drive control circuitry shall shut down the drive unit if the motor overheats. Motor winding temperature switches, or RTD's, shall be connected if provided by the motor manufacturer.

PART 3 – EXECUTION

3.01 INSPECTION

A. The AC Drive equipment shall be installed as shown on the Drawings in the existing limited spaces available. The AC Drive Supplier and CONTRACTOR shall verify that all equipment will fit into the space allocated for each as shown on the Drawings. AC Drives and all specified equipment shall be built in strict accordance with the overall sizing and component layouts as detailed on the drawings and no deviations in location or elevation

will be allowed without prior approval of the ENGINEER.

B. Verify that the location is ready to receive work and the dimensions are as indicated. AC Drive equipment shall not be installed until the building environment can be maintained within the service conditions required by the drive manufacturer.

C. All AC Drive equipment shall be fully tested as a system with actual job motors at the point of installation.

3.02 PROTECTION

A. Before, during and after installation of the drive, the CONTRACTOR shall ensure that the AC Drive equipment is protected from site contaminants.

3.03 INSTALLATION

A. Installation shall comply with manufacturer's instructions, drawings, and recommendations.

B. The AC Drive manufacturer shall provide a certified technical service representative to supervise the contractor's installation, testing and start-up of the AC Drive(s) furnished under this specification for a minimum total of 3 days.

3.04 TESTING & TRAINING

A. Testing and training for this equipment shall be provided by the AC Drive Supplier and/or CONTRACTOR. Installation and performance testing shall be conducted as part of the associated motor tests.

B. Perform voltage and current harmonic tests with each AC Drive running at minimum and at maximum speed. Submit test results for each drive unit. Test shall be witnessed by the ENGINEER.

C. Four (4) hours of AC Drive training shall be provided for the Owner’s Operation and Maintenance Staff. Training shall cover AC Drive theory of operation, features and functions available, normal operation, troubleshooting, and routine maintenance. The CONTRACTOR shall submit a syllabus for the training session for approval, within 3 weeks of conducting the class. Provide each attendee with a class syllabus detailing each topic to be discussed.

END OF SECTION

DRAFT

SECTION 26 3213 – GENERATOR SET - DIESEL

PART 1 – GENERAL

1.01 SCOPE

A. Provide complete factory assembled generator set equipment with digital (microprocessor-based) electronic generator set controls, digital governor, and digital voltage regulator, as well as additional equipment as included in the project drawings.

B. Provide factory test, startup by a supplier authorized by the equipment manufacturer(s), and on-site testing of the system.

C. The generator set manufacturer shall warrant all equipment provided under this section, whether or not it is manufactured by the generator set manufacturer, so that there is one source for warranty and product service. Technicians specifically trained and certified by the manufacturer to support the product and employed by the generator set supplier shall service the generator sets.

D. The generator set supplier shall be responsible for complete compliance to all specification requirements for the entire on-site power supply system, including generator set.

E. Prototype testing, factory testing, site testing.

1.02 CODES AND STANDARDS

A. The generator set installation and on-site testing shall conform to the requirements of the following codes and standards, as applicable. The generator set shall include necessary features to meet the requirements of these standards.

1. ANSI S1.13-1971—Measurement of Sound Pressure Levels in Air
2. CSA 282, 1989 Emergency Electrical Power Supply for Buildings
3. IEEE446 – Recommended Practice for Emergency and Standby Power Systems for Commercial and Industrial Applications
4. NFPA 30 – Flammable and Combustible Liquids
5. NFPA 37 – Standard for the Installation and Use of Stationary Combustion Engines and Gas Turbines
6. NFPA 70 – National Electrical Code. Equipment shall be suitable for use in systems in compliance to Articles 700, 701, and 702.
7. NFPA 99 – Essential Electrical Systems for Health Care Facilities
8. NFPA 110 – Emergency and Standby Power Systems. The generator set shall meet all requirements for Level 1 systems. Level 1prototype tests required by this standard shall have been performed on a complete and functional unit, component level type tests will not substitute for this requirement.
9. IBC Certified for the jobsite installation requirements, and IBC 2000, 2003, 2006, 2009, and 2012.

B. The generator set and supplied accessories shall meet the requirements of the following standards:

1. NEMA MG1-1998 part 32: Alternator shall comply with the requirements of this standard.
2. UL1236: Battery Chargers
3. UL2200: The generator set shall be listed to UL2200 or submit to an independent third-party certification process to verify compliance as installed.

DRAFT

C. The control system for the generator set shall comply with the following requirements.
   1. EN50082-2, Electromagnetic Compatibility – Generic Immunity Requirements, Part 2: Industrial.
   2. EN55011, Limits and Methods of Measurement of Radio Interference Characteristics of Industrial, Scientific and Medical Equipment.
   3. FCC Part 15, Subpart B.
   4. IEC8528 part 4. Control Systems for Generator Sets

D. The generator set manufacturer shall be certified to ISO 9001 International Quality Standard and shall have third party certification verifying quality assurance in design/development, production, installation, and service, in accordance with ISO 9001.

1.03 ACCEPTABLE MANUFACTURERS

A. Equipment specifications for this project are based on microprocessor-based generator sets manufactured by Cummins Power Generation or approved equal. Equipment by other suppliers that meets the requirement of this specification are acceptable, if approved. Proposals must include a line by line compliance statement based on this specification. Modifications to the design resulting from equal equipment not specified shall be the responsibility of the Contractor.

1.04 SUBMITTALS

A. Shop drawings shall be submitted as specified in Section 01 3300 – Submittal Procedures and include the following:
   1. Installation Instructions
   2. Outline drawings of assembly
   3. One-line diagrams and wiring diagrams for assembly and components
   4. Interconnection wiring diagrams
   5. Submit names, experience level, training certifications, and locations for technicians that will be responsible for servicing equipment at this site.

B. Product data:
   1. Technical data on all major components. Technical data must include an alternator thermal damage curve, description and operating characteristics of the alternator protection device demonstrating alternator protection, and an alternator reactive capability curve.
   2. Certification of the emissions performance of the generator set engine by the engine manufacturer
   3. Seismic certification, demonstrating compliance to local requirement
   4. Sound test data, based on a free field requirement.
   5. Submit statement of compliance which states the proposed product is certified to the emission standards required by the location for EPA, stationary emergency application.

C. Project information:
   1. Test reports and certifications
   2. Factory test procedures

D. Contract closeout information:
   1. Operating and maintenance data

1.05 QUALIFICATIONS

A. The generation set manufacturer shall be certified to ISO 9001 International Quality Standard and shall have third party certification verifying quality assurance in design/development, production, installation, and service, in accordance with ISO 9001.

DRAFT

B. The manufacturer of this equipment shall have produced similar equipment for a minimum period of ten years. When requested by the Engineer, an acceptable list of installations with similar equipment shall be provided demonstrating compliance with this requirement.

1.06 REGULATORY REQUIREMENTS

A. The generator set shall be UL2200 listed and labeled.

B. The generator set overcurrent protection shall be UL listed as a utility grade protective device under UL category NRGU or CSA equivalent.

C. The generator set engine shall be EPA and SCAQMD Certified and shall comply will all applicable emissions standards at the date of installation, or per the requirements of the Air District Permit, which ever governs.

1.07 WARRANTY

A. The manufacturer shall warrant the material and workmanship of the generator set for a minimum of two (2) years from registered commissioning and start-up.

B. The warranty shall be comprehensive. No deductibles shall be allowed for travel time, service hours, repair parts cost, etc. shall be allowed during the minimum noted warranty period described in paragraph A above.

PART 2 – PRODUCTS

2.01 GENERATOR SET

A. Ratings

1. The generator set shall operate at 1800 rpm and at a voltage of: 208/120, 3-Phase, 4-wire, 60 Hz.
2. The complete generator set shall be rated per ISO8528 at KW-rating as indicated on the plans at 0.8 PF standby rating, based on site conditions of: Altitude (as indicated on the plans) in feet, ambient temperatures of 104°F, and relative humidity of 0 to 95 percent.
3. The generator set rating shall be based on emergency/standby service and marked as such per NFPA110.

B. Performance

1. Voltage regulation shall not exceed one percent for any constant load between no load and rated load for both parallel and non-parallel applications. Random voltage variation with any steady load from no load to full load shall not exceed plus or minus 0.5 percent.
2. Frequency regulation shall be isochronous from steady state no load to steady state rated load. Random frequency variation with any steady load from no load to full load shall not exceed plus or minus 0.25%.
3. Generator sets shall be designed to allow operation at full rated load in an ambient temperature under site conditions, based on highest ambient condition. Ambient temperature shall be as measured at the air inlet to the generator set for enclosed generator sets, and at the control of the generator set for machines installed in equipment rooms.
4. The engine-generator set shall be capable of single step load pick up of 100% nameplate kW and power factor, less applicable derating factors, with the engine-generator set at operating temperature.
5. Motor starting capability shall be a minimum of 3866 kVA in a single step. The generator set shall be capable of sustaining a minimum of 90% of rated no load voltage with the specified kVA load at near zero power factor applied to the generator set.

DRAFT

6. The alternator shall produce a clean AC voltage waveform, with not more than 5% total harmonic distortion at full linear load, when measured from line to neutral, and with not more than 3% in any single harmonic, and no 3rd order harmonics or their multiples. Telephone influence factor shall be less than 40.
7. The generator set shall be certified by the engine manufacturer to be suitable for use at the installed location and rating, and shall meet all applicable exhaust emission requirements according to the owners Air District Permit.
8. The generator set shall be tested by the manufacturer per ANSI S1.13. Data documenting performance shall be provided with submittal documentation.

C. Construction
1. The engine-generator set shall be mounted on a heavy-duty steel base to maintain alignment between components.
2. All switches, lamps, and meters in the control system shall be oil-tight and dust-tight. There shall be no exposed points in the control (with the door open) that operate in excess of 50 volts.
3. Rigging Information: Indicate location of each lifting attachment, generator-set center of gravity, and total package weight in submittal drawings

D. Connections
1. The generator set load connections shall be composed of silver or tin plated copper bus bars, drilled to accept mechanical or compression terminations of the number and type as shown on the drawings. Sufficient lug space shall be provided for use with cables of the number and size as shown on the drawings.
2. Power connections to auxiliary devices shall be made at the devices, with required protection located at a wall-mounted common distribution panel.
3. Generator set control interfaces to other system components shall be made on a common, permanently labeled terminal block assembly.

2.02 ENGINE AND ENGINE EQUIPMENT

A. The engine shall be diesel, radiator and fan cooled. Minimum displacement and number of cylinders shall be the same or greater than the equivalent rated unit by the manufacturer specified in Section 1.3. The horsepower rating of the engine at its minimum tolerance level shall be sufficient to drive the alternator and all connected accessories. Two cycle engines are not acceptable. Engine accessories and features shall include:
1. An electronic governor system shall provide automatic isochronous frequency regulation. The governing system dynamic capabilities shall be controlled as a function of engine coolant temperature to provide fast, stable operation at varying engine operating temperature conditions. The control system shall actively control the fuel rate and excitation as appropriate to the state of the generator set. Fuel rate shall be regulated as a function of starting, accelerating to start disconnect speed, accelerating to rated speed, and operating in various isochronous states.
2. Skid-mounted radiator and cooling system rated for full load operation in 40°C ambient as measured at the generator air inlet, based on 0.5 in H2O external static head. Radiator shall be sized based on a core temperature which is 10C higher than the rated operation temperature, or prototype tested to verify cooling performance of the engine/radiator/fan operation in a controlled environment. Radiator shall be provided with a duct adapter flange. The cooling system shall be filled with a 50/50 ethylene glycol/water mixture by the equipment manufacturer. Rotating parts shall be guarded against accidental contact.
3. Electric starter capable of three complete cranking cycles without overheating.
4. Positive displacement, mechanical, full pressure, lubrication oil pump.

DRAFT

5. Full flow lubrication oil filters with replaceable spin-on canister elements and dipstick oil level indicator.
6. Diesel engines shall include an engine driven, mechanical, positive displacement fuel pump and fuel filter(s) with replaceable spin-on canister element(s). Fuel cooler, suitable for operation of the generator set at full rated load in the ambient temperature specified shall be provided if required for operation due to the design of the engine and the installation.
7. Replaceable dry element air cleaner with restriction indicator.
8. Flexible supply and return fuel lines.
9. Engine mounted battery charging alternator, 35-ampere minimum, and solid-state voltage regulator.

B. Coolant heater
1. Engine mounted, thermostatically controlled, coolant heater(s) for each engine. Heater voltage shall be as shown on the project drawings. The coolant heater shall be UL499 listed and labeled.
2. The coolant heater shall be installed on the engine with SAEJ20 compliant materials. Steel tubing shall be used for connections into the engine coolant system wherever the length of pipe run exceeds 12 inches. The coolant heater installation shall be specifically designed to provide proper venting of the system. The coolant heaters shall be installed using isolation valves to isolate the heater for replacement of the heater element.
3. The coolant heater shall be provided with a 24VDC thermostat, installed at the engine thermostat housing. An AC power connection shall be provided for a single AC power connection to the coolant heater system.
4. The coolant heater(s) shall be sized as recommended by the engine manufacturer to warm the engine to a minimum of 40°C in a 15°C ambient, as a minimum, or the temperature required for starting and load pickup requirements of this specification.

C. Provide vibration isolators, spring type, EQ Certified, rating and quantity as recommended by the generator set manufacturer to be compatible with genset manufacturers CBC Seismic Certification. Isolators shall include seismic restraints as required by site location.

D. Starting and Control Batteries shall be lead acid type, 24 volt DC, sized as recommended by the engine manufacturer for compliance to NFPA110 starting requirements, complete with battery cables, connectors, and rack.

E. Provide flex connection for engine of size and type as recommended by the generator set manufacturer and connect to existing exhaust silencer. Utilize existing exhaust system installed in the facility by others according to the engine manufacturer's recommendations and applicable codes and standards.

F. Provide fully regulated, constant voltage, current limited, battery charger for each battery bank charger. The chargers shall be designed for heavy-duty industrial service, primarily to quickly recharge and maintain batteries that start internal combustion engines. Charger shall be rated a minimum of 10 amps, and be capable of operating in parallel with another like charger for reliability and added charging capacity.
1. Charger shall provide 4 distinct charge states: "dead battery", "bulk charge", "absorption", and "float". Charge rate shall be temperature compensated to provide proper charging in ambient conditions from –20°C to +55°C.
2. Provider LED indication of general charger condition, including charging, fault, and equalize. Provide a 2-line LCD display to indicate charge rate, battery voltage, faults, and provide for charger set up. Charger shall provide relay contacts for fault conditions as required by NFPA110.

DRAFT

3. The charger shall operate properly during fault conditions, including battery disconnection while charging, reversed battery polarity connections, and shorted battery.
4. The charger shall be compliant to the same RFI/EMI and voltage surge performance as are specified for the genset control.

2.03 LOW VOLTAGE AC ALTERNATOR

A. The AC alternator shall be; synchronous, four pole, 2/3 pitch, brushless, revolving field, drip-proof construction, single pre-lubricated sealed bearing, air cooled by a direct drive centrifugal blower fan, and directly connected to the engine with flexible drive disc. The alternator design shall prevent shaft current from flowing and eliminate the need for insulated bearings. All insulation system components shall meet NEMA MG1 requirements for Class H insulation systems. Actual temperature rise measured by resistance method at full load shall not exceed 125°C in a 408°C ambient. Alternator shall be provided with protection to prevent damage due to any external fault or overload condition, including short circuit, ground fault, or overload.

B. The alternator shall be capable of delivering rated output (kVA) at rated frequency and power factor, at any voltage up to 5 percent above or below rated voltage.

C. The alternator shall be supplied with a dedicated, independent power source for the voltage regulation system, which provides sufficient excitation for the alternator to supply 300% of rated output current for 10 seconds.

D. The subtransient reactance of the alternator shall not exceed 12 percent based on the standby rating of the generator set.

E. Provide an anti-condensation heater for the alternator for generator sets installed outdoors or in unheated environments or in coastal environments.

2.04 GENERATOR SET CONTROL AND PROTECTION

A. Generator
1. The generator set shall be provided with a microprocessor-based control system that is designed to provide automatic starting, monitoring, protection and control functions for the generator set. The control system shall also be designed to allow local monitoring and control of the generator set, and remote monitoring and control as described in this specification.
2. The control shall be mounted on the generator set. The control shall be vibration isolated and prototype tested to verify the durability of all components in the system under the vibration conditions encountered.
3. The generator set mounted control shall include the following features and functions:

B. Control Switches
1. Mode Select Switch. The mode select switch shall initiate the following control modes. When in the RUN or Manual position the generator set shall start, and accelerate to rated speed and voltage as directed by the operator. In the OFF position the generator set shall immediately stop, bypassing all time delays. In the AUTO position the generator set shall be ready to accept a signal from a remote device to start and accelerate to rated speed and voltage.
2. EMERGENCY STOP switch. Switch shall be Red "mushroom-head" push-button. Depressing the emergency stop switch shall cause the generator set to immediately shut down, and be locked out from automatic restarting. The switch shall include a lockout provision for use in safely disabling the generator set for necessary service.
3. RESET switch. The RESET switch shall be used to clear a fault and allow restarting the generator set after it has shut down for any fault condition.

DRAFT

4. PANEL LAMP switch. Operating the panel lamp switch shall cause the entire panel to be lighted with DC control power. The panel lamps shall automatically be switched off 10 minutes after the switch is operated, or after the switch is operated a second time.

C. Generator Set AC Output Metering. The generator set shall be provided with a metering set including the following features and functions:
   1. Analog voltmeter, ammeter, frequency meter, and kilowatt (KW) meter. Voltmeter and ammeter shall display all three phases. Ammeter and KW meter scales shall be color coded in the following fashion: readings from 0-90% of generator set standby rating: green; readings from 90-100% of standby rating: amber; readings in excess of 100%: red.
   2. Digital metering set, 0.5% accuracy, to indicate generator RMS voltage and current, frequency, output current, output KW, KW-hours, and power factor. Generator output voltage shall be available in line-to-line and line-to-neutral voltages, and shall display all three phase voltages (line to neutral or line to line) simultaneously.
   3. Both analog and digital metering are required. The analog and digital metering equipment shall be driven by a single microprocessor, to provide consistent readings and performance.

D. Generator Set Alarm and Status Display.
   1. The generator set shall be provided with alarm and status indicating lamps to indicate non-automatic generator status, and existing warning and shutdown conditions. The lamps shall be high-intensity LED type. The lamp condition shall be clearly apparent under bright room lighting conditions. The generator set control shall indicate the existence of all alarm, shutdown, and status conditions associated with the generator set, including all paralleling control functions and the engine ECM on an alphanumerical display on the genset. The following alarm, shutdown, and status conditions are required, as a minimum:

      low oil pressure (alarm)
      low oil pressure (shutdown)
      oil pressure sender failure (alarm)
      low coolant temperature (alarm)
      high coolant temperature (alarm)
      high coolant temperature (shutdown)
      engine temperature sender failure (alarm)
      low coolant level (alarm or shutdown--selectable)
      fail to crank (shutdown)
      fail to start/overcrank (shutdown)
      overspeed (shutdown)
      low DC voltage (alarm)
      high DC voltage (alarm)
      weak battery (alarm)
      low fuel-daytank (alarm)
      high AC voltage (shutdown)
      low AC voltage (shutdown)
      under frequency (shutdown)
      over current (warning)
      over current (shutdown)

DRAFT

short circuit (shutdown)
over load (alarm)
emergency stop (shutdown)

2. The generator set control shall annunciate all alarm and shutdown conditions from the engine electronic control.
3. Provisions shall be made for indication of four customer-specified alarm or shutdown conditions. Labeling of the customer-specified alarm or shutdown conditions shall be of the same type and quality as the above specified conditions. The non-automatic indicating lamp shall be red, and shall flash to indicate that the generator set is not able to automatically respond to a command to start from a remote location.

E. Engine Status Monitoring.
1. The following information shall be available from a digital status panel on the generator set control:

engine oil pressure (psi or kPA)
engine coolant temperature (degrees F or C)
engine oil temperature (degrees F or C)
engine speed (rpm)
number of hours of operation (hours)
number of start attempts
battery voltage (DC volts)

2. The control system shall also incorporate a data logging and display provision to allow logging of a minimum of the last 20 warning or shutdown indications on the generator set, the time of the last fault of each type, and the number of faults of each type, and total time of operation at various loads as a percent of the standby rating of the generator set.

F. Engine Control Functions.
1. The control system provided shall include a cycle cranking system, which allows for user selected crank time, rest time, and # of cycles. Initial settings shall be for 3 cranking periods of 15 seconds each, with 15-second rest period between cranking periods.
2. The control system shall include an engine governor control, which functions to provide steady state frequency regulation as noted elsewhere in this specification. The governor control shall include adjustments for gain, damping, and a ramping function to control engine speed and limit exhaust smoke while the unit is starting. The governor control shall be suitable for use in paralleling applications without component changes.
3. The control system shall include time delay start (adjustable 0-300 seconds) and time delay stop (adjustable 0-600 seconds) functions.
4. The control system shall include sender failure monitoring logic for oil pressure, and engine temperature which is capable of discriminating between failed sender or wiring components, and an actual failure conditions.
5. The control system shall include all interfaces necessary for proper operation with the paralleling equipment provided under this contract.

G. Alternator Control Functions:
1. The generator set shall include a full wave rectified automatic digital voltage regulation system that is matched and prototype tested by the engine manufacturer with the governing system provided. It shall be immune from mis-operation due to load-induced voltage waveform distortion and provide a pulse width modulated output to the alternator exciter. The voltage regulation system shall be equipped with three-phase line to neutral RMS sensing and shall control buildup of AC generator

DRAFT

voltage to provide a linear rise and limit overshoot. The system shall include a torque-matching characteristic, which shall reduce output voltage in proportion to frequency below an adjustable frequency threshold. Torque matching characteristic shall be adjustable for roll-off frequency and rate, and be capable of being curve-matched to the engine torque curve with adjustments in the field. The voltage regulator shall include adjustments for gain, damping, and frequency roll-off. Adjustments shall be broad range, and made via digital raise-lower switches, with an alphanumeric LED readout to indicate setting level. Rotary potentiometers for system adjustments are not acceptable.

2. Controls shall be provided to monitor the output current of the generator set and initiate an alarm (over current warning) when load current exceeds 110% of the rated current of the generator set on any phase for more than 60 seconds.
3. Controls shall be provided to individually monitor all three phases of the output current for 1, 2, or 3-phase short circuit conditions. The control/protection system shall monitor the current level and voltage. The controls shall shut down and lock out the generator set when output current level approaches the thermal damage point of the alternator (short circuit shutdown). This function shall be provided by equipment which is listed under UL category NRGU, or equivalent equipment that is CSA listed for applications installed in Canada.
4. Controls shall be provided to monitor the KW load on the generator set, and initiate an alarm condition (over load) when total load on the generator set exceeds the generator set rating for in excess of 5 seconds. Controls shall include a load shed control, to operate a set of dry contacts (for use in shedding customer load devices) when the generator set is overloaded.
5. An AC over/under voltage monitoring system that responds only to true RMS voltage conditions shall be provided. The system shall initiate shutdown of the generator set when alternator output voltage exceeds 110% of the operator-set voltage level for more than 10 seconds, or with no intentional delay when voltage exceeds 130%. Under voltage shutdown shall occur when the output voltage of the alternator is less than 85% for more than 10 seconds.
6. A battery monitoring system shall be provided which initiates alarms when the DC control and starting voltage is less than 16VDC or more than 32 VDC (24VDC nominal) or less than 8VDC or more than 16 VDC (12VDC nominal). During engine cranking (starter engaged), the low voltage limit shall be disabled, and if DC voltage drops to less than 14.4 volts for more than two seconds a "weak battery" alarm shall be initiated.

H. The generator set shall be provided with a network communication module to allow real time communication with the generator set control by remote devices. The control shall communicate all engine and alternator data; alarm, shutdown and status conditions; and allow starting and stopping of the generator set via the network in both test and emergency modes.

I. Control Interfaces for Remote Monitoring:
1. No field connections for control devices shall be made in the AC power output enclosure. Provide the following features in the control system:
2. Form "C" dry contact set rated 2A @ 30VDC to indicate existence of any alarm or shutdown condition on the generator set.
3. One set of contacts rated 2A @ 30VDC to indicate generator set is ready to load. The contacts shall operate when voltage and frequency are greater than 90% of rated condition.
4. A fused 10 amp switched 24VDC power supply circuit shall be provided for customer use. DC power shall be available from this circuit whenever the generator set is running.

DRAFT

5. A fused 20 amp 24VDC power supply circuit shall be provided for customer use. DC power shall be available from this circuit at all times from the engine starting/control batteries.
6. The control shall be provided with a direct serial communication link for the communication network interface as described elsewhere in this specification and shown on the drawings.

2.05 SOUND/WEATHER ENCLOSURE

A. The complete diesel engine generator set, including generator control panel, engine starting batteries and fuel oil tank, shall be enclosed in a factory assembled, sound attenuated enclosure mounted on the integral sub-base fuel tank. The sound attenuated enclosure shall be weather resistant to withstand outdoor exposure.

B. A sound attenuated enclosure of steel with electrostatically applied powder coated baked polyester paint. It shall consist of a roof, side walls, and end walls. Fasteners shall be either zinc plated or stainless steel. Handles shall be key lockable, all doors keyed alike, and hinges shall be zinc die cast or stainless steel. Access doors shall be hinged and can be lifted off after opening 90 degrees. Intake openings shall be screened to prevent the entrance of rodents or pests.

C. The sound enclosure shall meet Level II requirements listed below, unless noted otherwise on the plans (as measured at a distance of 7 meters).

Level I – Generator operates at 70 to 89 d(B)A
Level II – Generator operates at 63 to 78 d(B)A
Level III – Generator operates at 68 to 70 d(B)A

2.06 SUBBASE FUEL TANK

A. The package shall include a sub base fuel tank with a minimum of 12 hours of fuel storage while operating at full load. The fuel tank shall be constructed of heavy gauge welded steel and shall be double walled with a sealed, separately vented, integral fuel containment basin.

B. The fuel tank shall include a low fuel level switch and a leak detection rupture basin switch. The fuel tank shall be UL 142 listed, ULC-S601-07 listed and NFPA 37 compliant

C. The package shall include the manufacturer's standard accessory kit.

PART 3 – EXECUTION

3.01 PROTOTYPE TESTING ***(submit evidence of prototype testing; manufacturer's certificate, etc.)***

3.02 SUBMITTALS

A. For equals, within 10 days after award of contract, provide six sets of the following information for review:
1. Manufacturer's product literature and performance data, sufficient to verify compliance to specification requirements.
2. A paragraph by paragraph specification compliance statement, describing the differences between the specified and the proposed equipment.
3. Manufacturer's certification of prototype testing.
4. Manufacturer's published warranty documents.
5. Shop drawings showing plan and elevation views with certified overall dimensions, as well as wiring interconnection details.
6. Interconnection wiring diagrams showing all external connections required; with field wiring terminals marked in a consistent point to point manner.
7. Manufacturer's installation instructions.

DRAFT

3.03 FACTORY TESTING

A. The generator set manufacturer shall perform a complete operational test on the generator set prior to shipping from the factory. A certified test report shall be provided. All testing shall be performed with calibrated metering.

B. Generator set factory tests on the equipment shall be performed at rated load and rated power factor, as well as 1.0 power factor. Generator sets that have not been factory tested at rated power factor will not be acceptable. Tests shall include: run at full load, maximum power, voltage regulation, transient and steady-state governing, single step load pickup, and function of safety shutdowns.

C. A certified test report shall be provided documenting the results of these tests.

3.04 INSTALLATION

A. Equipment shall be installed by the contractor in accordance with final submittals and contract documents. Installation shall comply with applicable state and local codes as required by the authority having jurisdiction. Install equipment in accordance with manufacturer's instructions and instructions included in the listing or labeling of UL listed products.

B. Installation of equipment shall include furnishing and installing all interconnecting wiring between all major equipment provided for the on-site power system. The contractor shall also perform interconnecting wiring between equipment sections (when required), under the supervision of the equipment supplier.

C. Equipment shall be installed on concrete housekeeping pads or as indicated in the plans. Equipment shall be permanently fastened to the pad in accordance with manufacturer’s instructions and seismic requirements of the site.

D. Equipment shall be initially started and operated by representatives of the manufacturer. All protective settings shall be adjusted as instructed by the consulting engineer.

E. All equipment shall be physically inspected for damage. Scratches and other installation damage shall be repaired prior to final system testing. Equipment shall be thoroughly cleaned to remove all dirt and construction debris prior to initial operation and final testing of the system.

F. On completion of the installation by the electrical contractor, the generator set supplier shall conduct a site evaluation to verify that the equipment is installed per manufacturer’s recommended practice.

3.05 ON-SITE ACCEPTANCE TEST

G. The complete installation shall be tested to verify compliance with the performance requirements of this specification following completion of all site work. Testing shall be conducted by representatives of the manufacturer, with required fuel supplied by Contractor. The Engineer shall be notified in advance and shall have the option to witness the tests. The generator set manufacturer shall provide a site test specification covering the entire system. Tests shall include:

H. Prior to start of active testing, all field connections for wiring, power conductors, and bus bar connections shall be checked for proper tightening torque.

I. Installation acceptance tests to be conducted on-site shall include a "cold start" test, a two hour full load (resistive) test, and a one-step rated load pickup test in accordance with NFPA 110. Provide a resistive load bank and make temporary connections for full load test, if necessary.

DRAFT

J. Perform a power failure test on the entire installed system. This test shall be conducted by opening the power supply from the utility service, and observing proper operation of the system for at least 2 hours. Coordinate timing and obtain approval for start of test with site personnel.

3.06 TRAINING

A. The equipment supplier shall provide training for the facility operating personnel covering operation and maintenance of the equipment provided. The training program shall be not less than 4 hours in duration and the class size shall be limited to 5 persons. Training date shall be coordinated with the facility owner.

3.07 SERVICE AND SUPPORT

A. The generator set supplier shall maintain service parts inventory for the entire power system at a central location which is accessible to the service location 24 hours per day, 365 days per year. The inventory shall have a commercial value of $3 million or more. The manufacturer of the generator set shall maintain a central parts inventory to support the supplier, covering all the major components of the power system, including engines, alternators, control systems, paralleling electronics, and power transfer equipment.

B. The generator set shall be serviced by a local service organization that is trained and factory certified in generator set service. The supplier shall maintain an inventory of critical power system replacement parts in the local service location. Service vehicles shall be stocked with critical replacement parts. The service organization shall be on call 24 hours per day, 365 days per year. The service organization shall be physically located within 40 miles of the site.

C. The manufacturer shall maintain model and serial number records of each generator set provided for at least 20 years.

END OF SECTION

DRAFT

SECTION 26 3353 – STATIC UNINTERRUPTIBLE POWER SUPPLY

PART 1 – GENERAL

1.01 SCOPE OF WORK

A. This section covers the requirements for uninterruptable power supplies (UPSs) to be provided as shown on the Plans.

1.02 SUBMITTALS

A. Products shall be submitted in accordance with these Specifications and the Contract Documents prior to installation.

1.03 REFERENCES

A. National Electrical Code (NEC) Article 250

PART 2 – PRODUCTS

2.01 GENERAL REQUIREMENTS

A. The UPS equipment shall be manufactured by Powerware, or equal.

B. The UPS shall be sized for a minimum of 30 minutes of backup power for its rated load. The rated load shall be equal to or greater than the connected load.

C. The UPS shall be a line-interactive type, consisting of a ferroresonant or linear transformer, battery charger, batteries, inverter, and microprocessor control. The batteries shall be maintenance free, premium type.

D. The UPS shall pass lightning and surge protection ANSI/IEEE C62.41 standards, Category A and B. The UPS shall be UL 1449 listed.

E. The output waveform shall be a pure sine-wave with less than 5% total harmonic distortion on the inverter.

F. The UPS shall have a digital display for load-dependent runtime, volts in, volts out, battery voltage, percent loading, and alarm codes.

G. The UPS shall operate between 0°C and 50°C, at a minimum of 95% efficiency on-line.

PART 3 – EXECUTION

3.01 INSTALLATION

A. Install the UPS equipment in accordance with the manufacturers' recommendations.

B. The UPS shall be provided with a 2-year parts and factory service warranty.

END OF SECTION

DRAFT

SECTION 26 3623 – AUTOMATIC TRANSFER SWITCHES

PART 1 – GENERAL

1.01 SCOPE OF WORK

A. Automatic transfer switch shall be furnished and installed, as indicated on the Drawings, with full load current and voltage ratings as indicated on the Drawings. The switch shall be capable of switching all classes of load, and shall be rated for continuous duty when installed in a non-ventilated enclosure. Withstand current rating shall be as indicated on the Drawings.

1.02 SUBMITTALS

A. CONTRACTOR shall submit shop drawings, manufacturer's data sheets, and a complete wiring diagram detailing all connections to the electrical system in accordance with these Specifications and other requirements of the Contract Documents.

PART 2 – PRODUCTS

2.01 AUTOMATIC TRANSFER SWITCH

A. The automatic transfer switch shall be of the time delay neutral, delayed transition, break-before-make type. The automatic transfer switch shall have the following capabilities:
   1. Adjustable time delay for generator start
   2. Adjustable time delay transfer to generator
   3. Adjustable time delay in "off" position
   4. Re-transfer to normal power position inhibit
   5. Adjustable time delay for generator stop
   6. The switches shall be capable of transferring successfully in either direction with 70 percent of rated voltage applied to the terminals.

B. The normal and standby contacts shall be positively interlocked mechanically and electrically to prevent simultaneous closing. Main contacts shall be mechanically locked in position in both the normal and standby positions without the use of hooks, latches, or magnets, and shall be silver alloy protected by arcing contacts, with magnetic blowouts on each pole. Parallel main contacts are not acceptable.

C. The transfer switch shall be equipped with a manual operator that is designed to prevent injury to personnel if the electrical operator should become energized during manual transfer.

D. The transfer switch, complete with all accessories, shall be listed by UL. Transfer switches installed outdoors shall be rated NEMA 3R unless noted otherwise in Plans. Transfer switches installed indoors shall be rated NEMA 1 unless noted otherwise in Plans.

E. The transfer switch shall be compatible with the standby generator, and shall be supplied with the generator.

F. The transfer switch operation shall be selectable by the Operator. In Manual mode, the Operator shall be able to transfer the load to the generator using a selector, toggle, or pushbutton switch. In Automatic mode, the internal logic shall sense loss or presence of utility power, and transfer the load to or from the generator.

G. Transfer switches shall be manufactured by CAT, ASCO, Zenith, Russelectric, or ENGINEER-approved equal.

DRAFT

2.02 ACCESSORIES

A. The transfer switch shall be equipped with the following:
   1. Nominal 0.5 to 6 second time delay to override momentary outages.
   2. Field adjustable 0 to 31 minutes time delay to retransfer to normal source with 5-minute unloaded running time of standby plant. A switch shall be provided to bypass this feature with transfer to normal source made manually. Time delay shall be nullified if standby power fails and normal power is available.
   3. Differential protection on 3 phases. Dropout and pickup.
   4. Test switch.
   5. Auxiliary contacts which close in normal position. Two sets of Form C contacts shall be provided.
   6. Auxiliary contacts which close with normal power available. Two sets of Form C contacts shall be provided.
   7. Auxiliary contacts which close in standby position. Two sets of Form C contacts shall be provided.
   8. Auxiliary contacts which close with standby power available. Two sets of Form C contacts shall be provided.
   9. Pilot lights: indicating normal and standby switch position.
   10. Manual and automatic selector switch.
   11. Manual and automatic pilot lights with push-to-test.

PART 3 – EXECUTION

3.01 INSTALLATION

A. Transfer switch shall be installed, in accordance with the manufacturer's recommendations.

3.02 MANUFACTURER TESTING

A. When conducting temperature rise tests in accordance with UL, the manufacturer shall include post-endurance temperature rise tests to verify the ability of the switches to carry full rated current after completing the overload and endurance tests.

B. On completion of the installation, start-up shall be performed by a factory-trained service representative in the presence of the OWNER and the ENGINEER.

3.03 TESTING AND TRAINING

A. Testing and training for this equipment shall be provided in accordance with the Contract Documents. Installation and performance testing shall be conducted as part of the standby generator tests.

B. Four (4) hours of training shall be provided for the OWNER's Operations and Maintenance Staff. Training shall be certified on forms provided in the Contract Documents. Training shall cover theory of operation, features and functions available, normal operation, troubleshooting, and routine maintenance. The CONTRACTOR shall submit a syllabus for the training session for approval, within 3 weeks of conducting the class. Provide each attendee with a class syllabus detailing each topic to be discussed.

END OF SECTION

DRAFT

SECTION 26 4313
SURGE PROTECTIVE DEVICES FOR LOW-VOLTAGE ELECTRICAL POWER CIRCUITS

PART 1 – GENERAL

1.01 APPLICABLE STANDARDS AND TESTING

A. UL 1449 – Surge Protective Devices

B. UL 1283 – Electromagnetic Interference Filters

C. UL 67 – Panelboards (UL 67 listing for internal panelboard SPD)

D. NEC 2020 – (NEC Article 242 SPD Installation practice/NEC Article 250.53 Grounding)

E. NFPA 78 – Guide on Electrical Inspections

F. ISO 9001:2015 – Quality standard

G. IEEE C62.41.1 and C62.41.2 - (System shall be designed to meet American National Standards Institute/Institute of Electrical and Electronic Engineering Inc. C62.41)

H. IEEE C62.45 2002 – (System shall be tested to meet the C62.45)

I. Category A & B – (0.5 μSEC x 100 kHz Ring Wave)

J. Category B3 Biwave – (8 x 20 μSEC at 3,000 Amperes and 1.2 x 50 μSEC at 6,000 Volts)

K. Category C3 Biwave – (8 x 20 μSEC at 10,000 Amperes and 1.2 x 50 μSEC at 20,000 Volts)

L. The fusing elements must be capable of allowing the SPD's rated single impulse current to pass through the SPD at least one time without failure. The system shall be tested to 1,000 sequential ANSI/IEEE C62.41.1 and C62.41.2 Category C3 combination wave transients. The Category C3 combination wave is defined as a 1.2 x 50 microsecond wave at 20,000-volt open circuit voltage waveform and 8 x 20 microsecond wave at 10,000-ampere short circuit current waveform. In addition, the system components shall be tested repetitively 1,000 times testing based on an IEEE C62.33 (MOV test) and C62.35 (SAD test) without failure or degradation exceeding ±10%.

M. CBEMA (ITIC) and IEC - (Computer Business Equipment Manufacturers Association or Information Technology Industry Council and International Electrotechnical Commission define clamping voltage tolerance guidelines for sensitive equipment)

1.02 SUBMITTALS

A. Must have approval fifteen days prior to bidding on project. Request for submittal must be in writing with the following items.

B. Drawings: Electrical and mechanical drawings shall be provided by the manufacturer which show unit dimensions, weights, mounting provisions, connection notes, wire size and wiring diagram.

C. Equipment Manual: The manufacturer shall furnish an installation manual with installation notes, start-up, and operating instructions for the specified system. Installation instructions shall clearly state whether the system requires an external overcurrent device to maintain the system's UL 1449 listing.

D. National Electrical Code (NEC) 242 - Installation requirements for SPD.
   1. Section 242.8, An SPD shall be a listed device (UL 1449).
   2. Section 242.10, SPD shall be marked with a short-circuit current rating and shall not be installed at a point on the system (ex. service, distribution, or branch panels) where the available fault current (AIC rating) is in excess of that rating.

DRAFT

E. UL 1449 stipulation for fused SPD - The manufacturer's authorized representative is required to submit the following:
   1. Certify that the SPD system is UL 1449 listed (UL Card).
   2. Indicate the type of internal or external fusing that is incorporated in the SPD system and what impact the fusing has on the performance of the device with respect to surge capacity and clamping levels.

F. CBEMA (ITIC) & IEC - SVRS must meet voltage tolerance guidelines:
   1. SVR clamp levels for wye and single phase (L-N, L-G and N-G):
      a. 400-600V for 120V systems, 800-1200V for 277V systems and 1200-1500V for 347V systems
   2. SVR clamp levels for delta circuits (L-L and L-G):
      a. 1000-1200V for 240V systems, 1500-1800V for 480V systems and 1800-2000V for 600V systems

PART 2 – PRODUCTS

2.01 SERVICE ENTRANCE/SWITCHBOARD/SWITCHGEAR

A. Acceptable Manufacturers:
   1. Current Technology
   2. LEA International Inc.
   3. Liebert
   4. Phoenix Contact
   5. General Electric
   6. OR ENGINEER-approved equal

B. Equipment shall be a multi-stage parallel protector rated for 277/480VAC, 3 PHASE, 4 WIRE, plus ground. The equipment's minimum surge current capacity shall be 400 kA per phase (L-N plus L-G) and 200 kA per mode (L-N, L-G, L-L and N-G).

C. The system protection modules shall contain a technology that utilizes a symmetrical array of balanced metal oxide varistors (MOV). Each MOV will be individually coordinated to pass UL 1449.

D. All primary transient paths shall utilize copper wire, copper bus bar and lugs of equivalent capacity to provide equal impedance interconnection between phases. No plug-in module or components shall be used in surge carrying paths.

E. Each protection module shall have a visual indicator that signifies that the protection circuitry is on line. The unit shall not be taken off line to verify integrity of system. Redundant status indicators shall be mounted on the front of the door that monitors the system protection circuitry.

F. The system shall be modular with field replaceable modules. Modular units shall contain a minimum of one module per phase.

G. Each protection module shall have a capacitive filtering system connected in each Line to Neutral (L→N)(Wye) mode or Line to Line (L→L)(Delta) mode to provide EMI/RFI noise attenuation (UL 1283).

H. Protection modes: The SPD shall provide Line to Neutral (L→N)(Wye), Line to Ground (L→G)(Wye or Delta), Line to Line (L→L)(Delta) and Neutral to Ground (N→G)(Wye) protection.

DRAFT

I. Service Conditions: Rate surge protective device for continuous operation under the following conditions, unless otherwise indicated:
   1. MCOV: Maximum Continuous Operating Voltage of 125% or greater
   2. Operating Temperature: 30°F to 120°F
   3. Humidity: 0 to 85 percent, noncondensing
   4. Altitude: Less than 20,000 feet above sea level

2.02 BRANCH PANEL PROTECTION

A. Acceptable Manufacturers:
   1. Current Technology
   2. LEA International Inc.
   3. Liebert
   4. Phoenix Contact
   5. General Electric
   6. OR ENGINEER-approved equal

B. Device shall meet all specification requirements in section 2.1 except as follows:
   1. Equipment shall be a multi-stage parallel protector rated for 277/480VAC, 3 PHASE, 4 WIRE, plus ground. The equipment's minimum surge current capacity shall be 120 kA per phase (L-N plus L-G) and 200 kA per mode (L-N, L-G, L-L and N-G).

C. The system protection modules shall contain a technology that utilizes a symmetrical array of balanced metal oxide varistors (MOV). Each MOV will be individually coordinated to pass UL 1449.

PART 3 – EXECUTION

3.01 INSTALLATION

A. The specified service entrance/switchboard/switchgear system shall be installed with the shortest lead length possible not to exceed five (5) electrical feet from the power conductor(s) it is protecting, must have a grounding of 25 Ohms (per NEC Article 250.53(A)(2) Exception) or less and shall avoid any unnecessary or sharp bends. Utilize a 3-pole 15-amp breaker for connection means.

B. The specified branch panelboard system shall be installed with the shortest lead length possible not to exceed a foot and half (1.5) electrical feet from the power conductor(s) it is protecting, must have a grounding of 25 Ohms (per NEC Article 250.53(A)(2) Exception) or less and shall avoid any unnecessary or sharp bends.

3.02 WARRANTY AND QUALITY ASSURANCE

A. Manufacturer shall provide a product warranty for a period of not less than five (5) years from date of installation. Warranty shall cover unlimited replacement of SPD modules during the warranty period. Those firms responding to this specification shall provide proof that they have been regularly engaged in the design, manufacturing and testing of SPD for not less than twenty-five (25) years. Utilize a 3-pole 15-amp breaker for connection means.

3.03 ACCEPTANCE

A. Manufacturer's representative shall visit site, verify installation, and submit to Contracting Officer a letter stating that equipment and installation meets intent of Contract Documents and manufacturer's warranties and that guarantees are in effect.

END OF SECTION

DRAFT

SECTION 26 5000 – LIGHTING

PART 1 – GENERAL

1.01 SUMMARY

A. Section Includes: Luminaires, ballasts, poles and lamps.

1.02 SUBMITTALS

B. Submit manufacturer's data for the following:
   1. Luminaires with designation as indicated on the Drawings, for each one proposed.
   2. Luminaire ballasts, for each one proposed.
   3. Lamps (type, color, wattage, etc.), for each one proposed.
   4. Light pole with accessories, including foundation details. Area light pole foundations must be designed for 80mph wind loading with 100mph wind gusts.

C. Submit manufacturer's data demonstrating compliance with Specifications and the luminaires as indicated on the Drawings.

1.03 QUALITY ASSURANCE

D. Comply with the following Codes and Standards, as well as these Specifications and Contract Documents:
   1. UL-listed and -labeled
   2. NEMA
   3. NFPA 70 (NEC)
   4. IES

PART 2 – PRODUCTS

2.01 ACCEPTABLE MANUFACTURERS

A. Magnetic Ballasts:
   1. Jefferson Electric (all types)
   2. Advance Transformer Co. (fluorescent)
   3. Universal Manufacturing Co. (fluorescent)
   4. Or ENGINEER-approved equal

B. Electronic Ballast:
   1. Motorola
   2. Advanced
   3. Magnetek
   4. Or ENGINEER-approved equal

C. Lamps:
   1. Sylvania
   2. Philips
   3. General Electric Co.
   4. Or ENGINEER-approved equal

DRAFT

2.02 MATERIALS

A. Luminaires shall be:
   1. Furnished with proper outlet boxes, hangers, hardware, supports, canopy extensions, etc. Wall mounted exterior luminaires shall be furnished with a flush {surface} mounted weatherproof box and be rated for outdoor use in wet locations.
   2. Furnished complete with lamps with wattage and voltage as indicated on the Drawings.
   3. Furnished complete with plaster frames and light tight gaskets when recessed in drywall or plaster ceilings or overhangs.
   4. Of the specified finishes and color.

B. Ballasts for luminaires with high pressure sodium lamps shall be:
   1. Autoregulator, constant wattage type (CWA) 90% pf, 18 percent maximum loss, low starting current).
   2. LPA “Peak Lead” auto transformer type, 90 percent pf, 20 percent loss, for two lamp fixtures, metallic vapor.
   3. UL listed and labeled for application.
   4. Sound rated 20 to 24db (free if magnetic hum).
   5. Isolated for vibration.
   6. Not exceed 90ºC operating temperature.
   7. Meet NEMA standards and be labeled.

C. Ballasts for luminaires with metal halide lamps shall be:
   1. Pulse start for 150-500W lamps, unless the ballast is greater than 88% efficient. All other metal halide ballasts may be of electronic, non-pulse start type, 90% pf, 20% maximum loss.
   2. UL listed and labeled for application.
   3. Isolated for vibration.
   4. Not exceed 90ºC operating temperature.
   5. Meet NEMA standards and be labeled.
   6. Meet the Federal Energy Independence and Security Act of 2007 (EISA) requirements.

D. Ballasts for fluorescent lighting luminaires shall be the electronic type and shall have the following minimum requirements:
   1. UL Listed Class P, Type 1
   2. Class A sound rating with no audible noise
   3. Operate at an input voltage of 108 to 132 (120 Volt Circuit) at an input frequency of 60 HZ. Light output shall remain constant for line voltage fluctuation of plus or minus 5 percent.
   4. Ballast shall be full rapid start and maintain full cathode heat during operation.
   5. No polychlorinated Byphenyls (PCB’S) contained in the Ballast.
   6. No potting compound, maximum ballast weight shall be 1.25 pounds.
   7. Total harmonic distortion shall be less than 10 percent.
   8. Third harmonic distortion shall be less than 8 percent.
   9. Power factor shall be greater than 0.95.
   10. Lamp flicker shall be less than 2 percent.
   11. Lamp current frequency shall be greater than 25 KHZ.
   12. Ballast shall be rated for T-8 lamps.

DRAFT

E. Lamps:
   1. Fluorescent lamps shall be pre-heat, rapid start or instant start type unless otherwise specified on the Drawings. Lamp types shall be as follows:
      a. Cool white, 3150 lumens
      b. Color Rendering Index (CRI): Lamps shall have a minimum CRI of 70 through the use of RE-70 or RE-80 rare earth phosphor coatings.
   2. Metal-halide lamps shall be “pulse-start” for 400 watts and below.

F. Lighting contactors:
   1. Lighting contactors shall be heavy-duty type with a 120 VAC operating coil.
   2. Unless otherwise indicated, the lighting contactor shall have a minimum of three 600V contacts with amperage rating no less than the maximum lighting circuit passing through the contactor.

G. Photocells:
   1. Photocells shall operate on 120VAC unless otherwise indicated and housed in a heavy-duty, weatherproof housing.
   2. Normally open contacts shall close at approximately 3 foot-candles and open at approximately 12 foot-candles.

H. Time clocks:
   1. Time clocks shall be 24-hour, electromechanical type with a synchronous motor and spring-driven reserve power. Power for the timeclock shall be 120VAC or as indicated on the Drawings. Contacts shall be rated 40A at 120VAC.

I. Area Lighting:
   1. Pole mounted area lights shall be furnished complete with pole, handhole, receptacle, gaskets, welded ground lug opposite the handhole, luminaire labeled approved for wet location. Luminaires shall have lamp bases coated with an inhibitor to prevent base from corroding to the socket and be solidly grounded.
   2. Where indicated, luminaires shall include a factory-installed photocell with the following features.
      a. Photocells shall operate on 120VAC unless otherwise indicated and housed in a heavy-duty, weatherproof housing.
      b. Normally open contacts shall close at approximately 3 foot-candles and open at approximately 12 foot-candles.

J. Light Poles:
   1. Light poles shall be constructed of square aluminum tubing with a flush-mounted receptacle and hinged pole base as indicated on the Drawings.

K. Exterior Lighting:
   1. Exterior luminaires shall be furnished complete with gaskets, cast aluminum weatherproof outlet boxes, labeled approved for outdoor locations, have lamp bases coated with an inhibitor to prevent base from corroding to the socket and be solidly grounded.

DRAFT

PART 3 – EXECUTION

3.01 INTERFERENCES

A. Contractor shall carefully examine the complete areas as well as each individual room where luminaires are to be installed, for interference with piping and other trades. Where such interferences occur, provide luminaires with proper type suspension to overcome such interferences.

3.02 INSTALLATION

A. Luminaires shall be installed parallel with walls and ground for a neat appearance. Where luminaires are indicated to be mounted on a perimeter wall, luminaires shall be installed on a flush mounted box at an elevation such that the top of fixture is flush with the top of wall.

B. Operate luminaires after installation and connection. Check for proper operation. Re-lamp luminaires that have failed lamps.

3.03 OPERATION

A. Area lights shall be controlled by a 3-position selector switch (On-Off-PC) located on the outdoor lighting control panel door.

B. Shade canopy lights shall be controlled by a light switch, location as indicated on the Drawings.

C. Lighting shall be controlled as indicated on the Drawings.

END OF SECTION

DRAFT

SECTION 31 0000 – EARTHWORK

PART 1 – GENERAL

1.01 THE REQUIREMENT

A. Perform all earthwork indicated and required for construction of the WORK, complete and operable in accordance with the Contract Documents and the latest Geotechnical Evaluation and or Soils Report.

1.02 SUBMITTALS

A. Submittals shall be made in accordance with Section 01 3300 – Submittal Procedures.
   1. Excavation Plan and stock pile storage sites.
   2. Backfill Plan

PART 2 – PRODUCTS

2.01 SUITABLE FILL AND BACKFILL MATERIAL REQUIREMENTS

A. General: All excavation or backfill shall conform to the requirements of the Geotechnical Engineer. Fill, backfill, and embankment materials shall be suitable selected or processed clean, fine earth, rock, or sand, free from grass, roots, brush, or other vegetation and approved by the Geotechnical Engineer.

B. Fill and backfill materials to be placed within 6 inches of any structure or pipe shall be free of rocks or unbroken masses of earth materials having a maximum dimension larger than 3 inches.

C. Suitable Materials: Materials not defined as unsuitable in the following Sections are defined as suitable materials and may be used in fills, backfilling and embankment construction subject to the indicated limitations. In addition, when acceptable to the ENGINEER, some of the material listed as unsuitable may be used when thoroughly mixed with suitable material to form a stable composite.

D. Suitable materials may be obtained from on-site excavations, or may be processed on-site materials. If the Geotechnical Engineer determines that excavated material is not suitable then additional compensation may be allowed on site processing or for import materials.

E. The following types of suitable materials are defined, unless otherwise specified in the project Geotechnical Evaluation and or Soils Report.
   1. Type A: Native soil excavated from the site after the site is stripped in accordance with these Specifications. This soil must be approved by the Geotechnical Engineer.
   2. Type B (sand backfill): Sand with 100% passing a 3/8-inch sieve, at least 90% passing a Number 4-sieve, and a sand equivalent value not less than 30.
   3. Type C (crushed rock): Crushed rock shall be imported material that consists of durable rock and gravel that is free of deleterious material and free from slaking or decomposition under the action of alternate wetting and drying. Crushed rock shall meet the following gradation requirements.

Sieve Size	Percentage Passing
1-inch	100
3/4 inch	90 - 100
No. 4	0 - 10
No. 200	0 - 2

      These materials should have a durability index of not less than 40.
   4. Type D (pea gravel or chat backfill): Crushed rock or gravel with 100% passing a ½-inch sieve and not more than 10% passing a Number 4-sieve.

DRAFT

5. Type E (coarse drain rock): Crushed rock or gravel with a Durability Index of not less than 40 meeting the following gradation requirements:

Sieve Size	Percentage Passing
2-inch	100
1½–inch	90 - 100
1-Inch	20 - 55
¾-inch	0 - 15
No. 200	0 - 3

6. Type F (aggregate base): Crushed rock/gravel aggregate base material shall be in accordance with MAG Standard Specification Section 702. Crushed rock and gravel shall conform to the following gradation as listed in MAG Standard Specification 702, Table 702-1:

Percentage by Weight Passing Sieve			
Select Material			
Sieve Size (Square Opening)	Type A	Type B	Aggregate Base
3-inch	100	-	-
1½–inch	-	100	-
1 1/4–inch	-	-	100
30-75	30-70	38-65	
20-60	20-60	25-60	
No. 30	10-40	10-40	10-40
No. 200	0-12	0-12	3-12

7. Type G (topsoil): Shall not be used.
8. Type H (cement-treated backfill): Material which consists of Type E material, which has been cement-treated so that the cement content of the material is not less than 5% by weight when tested in accordance with ASTM D2901 - Cement Content of Freshly Mixed Soil Cement. The ultimate compressive strength at 28 days shall be not less than 400 psi when tested in accordance with ASTM D1633 - Compressive Strength of Molded Soil - Cement Cylinders.
9. Type I (trench plug): Low permeable fill material, a non-dispersible clay material having a minimum plasticity index of 10.

2.02 UNSUITABLE MATERIAL

A. Unsuitable materials include the materials listed below:
   1. Soils defined as unsuitable in the Geotechnical Evaluation and or Soils Report or by the Geotechnical Engineer.
   2. Soils which, when classified under ASTM D2487 - Soils for Engineering Purposes (Unified Soil Classification System), fall in the Classifications of PT, OH, CH, MH, or OL.
   3. Soils, which cannot be compacted sufficiently to achieve the density specified for the intended use.
   4. Materials that contain hazardous or designated waste materials including petroleum hydrocarbons, pesticides, heavy metals, and any material which may be classified as hazardous or toxic according to applicable regulations.
   5. Soils that contain greater concentrations of chloride or sulfate ions, or have a soil resistivity or pH less than the existing on-site soils.
   6. Topsoil, except as allowed below.

DRAFT

2.03 USE OF FILL, BACKFILL AND EMBANKMENT MATERIAL TYPES

A. The types of materials as designated herein for all required fill, backfill and embankment construction hereunder shall be used.

B. Where these Specifications conflict with the requirements of any local agency having jurisdiction or with the requirements of a pipe material manufacturer, the ENGINEER shall be immediately notified. In case of conflict between types of pipe embedment backfills, the agency-specified backfill material if that material provides a greater degree of structural support to the pipe shall be used. In case of conflict between types of trench or final backfill types, the agency-specified backfill material, if that material provides the greater in-place density after compaction shall be used.

C. Fill and backfill types shall be used in accordance with the following provisions as approved by the Geotechnical Engineer:
   1. Embankment fills shall be constructed of Type A materials, as defined herein, or of primarily Type I mixed with lesser amounts of Type A through Type H materials.
   2. Pipe zone backfill, as defined in these Specifications.
   3. Aggregate base materials under pavements shall be Type F material constructed to the thicknesses indicated. For aggregate sub-base shall be Type H material.
   4. Backfill around structures shall be Type I material or Types F or H where indicated on the plans.
   5. Backfill materials beneath structures shall be defined by the Geotechnical Engineer or as follows:
      a. Drain rock materials under hydraulic structures or other water retaining structures with underdrain systems shall be Type C material or where shown.
      b. Under concrete hydraulic structures or other water retaining structures without underdrain systems, Types C or E shall be used. Undisturbed subgrade.
      c. Under structures where groundwater must be removed to allow placement of concrete, Type E material shall be used. Before the Type E material is placed, filter fabric shall be placed over the exposed foundation.
      d. Under all other structures, Type A or F materials shall be used.
   6. Filter fabric, if not specified on the plans, shall be Mirafi 140 N, Mirafi 700X or ENGINEER-approved equal.

2.04 MATERIALS TESTING

A. All soils testing of samples submitted will be done by a testing laboratory with the ENGINEER’s approval and at no additional expense. At its discretion, the ENGINEER may request that samples for testing of any material used in the work be supplied.

B. Particle size analysis of soils and aggregates will be performed using ASTM D422 - Particle-Size Analysis of Soils.

C. Determination of sand equivalent value will be performed using ASTM D2419 - Sand Equivalent Value of Soils and Fine Aggregate.

D. Unified Soil Classification System: References in this Section to soil classification types and standards shall have the meanings and definitions indicated in ASTM D2487. ASTM D2487 in the interpretation of soil classifications shall bind all applicable provisions.

PART 3 – EXECUTION

3.01 EXCAVATION

A. General: Except when specifically provided to the contrary, excavation shall include the removal of all materials of whatever nature encountered, including all obstructions of any nature that would interfere with the proper execution and completion of the WORK. The

DRAFT

removal of said materials shall conform to the lines and grades indicated or ordered. Unless otherwise indicated, the entire construction site shall be stripped of all vegetation and debris, and such material shall be removed from the site prior to performing any excavation or placing any fill. All supports and shoring that may be required for the sides of the excavations shall be furnished, placed and maintained. Excavations shall be sloped or otherwise supported in a safe manner in accordance with applicable State and OSHA safety requirements and the requirements of OSHA Safety and Health Standards for Construction (29CFR1926).

B. Removal and Exclusion of Water: Remove and exclude water, including stormwater, groundwater, irrigation water and wastewater, from all excavations as defined in the contract.

3.02 STRUCTURE, ROADWAY, AND EMBANKMENT EXCAVATION

A. Excavation Beneath Structures and Embankments: Except where otherwise indicated for a particular structure, excavation shall be carried to the grade of the bottom of the footing or slab and prepared in accordance with the Geotechnical Evaluation and or Soils Report.

B. Excavation Beneath Paved Areas: Excavation under areas to be paved shall extend to the bottom of the aggregate base and prepared in accordance with the Geotechnical Evaluation and or Soils Report.

3.03 PIPELINE AND UTILITY TRENCH EXCAVATION

A. As referenced in these Specifications.

3.04 OVER-EXCAVATION NOT ORDERED OR INDICATED

A. Any over-excavation carried below the grade ordered or indicated, shall be backfilled and compacted to the required grade with the indicated material, in accordance with the Geotechnical Engineer’s requirements.

3.05 DISPOSAL OF EXCESS EXCAVATED MATERIAL

A. Obtain OWNER approvals for disposal of excess excavated material in a designated wasting area, as defined in the contract.

3.06 BACKFILL - GENERAL

A. Backfill shall not be dropped directly upon any structure or pipe. Backfill shall not be placed around or upon any structure until the concrete has attained sufficient strength to withstand the loads imposed.

B. Except for drainrock materials being placed in over-excavated areas or trenches, backfill shall be placed after all water is removed from the excavation and the trench sidewalls and bottom have been dried to moisture content suitable for compaction.

C. Immediately prior to placement of backfill materials, the bottoms and sidewalls of trenches and structure excavations shall have all loose sloughing, or caving soil and rock materials removed. Trench sidewalls shall consist of excavated surfaces that are in a relatively undisturbed condition before placement of backfill materials.

3.07 PLACING AND SPREADING OF BACKFILL MATERIALS

A. Backfill materials shall be placed and spread evenly in layers. When compaction is achieved using mechanical equipment, the layers shall be evenly spread so that when each layer compacted shall not exceed 6 inches in thickness. The compaction lift depth may be adjusted at the direction of the Geotechnical Engineer.

B. During spreading, each layer shall be thoroughly mixed as necessary to promote uniformity of material in each layer. Pipe zone backfill materials shall be manually spread

DRAFT

around the pipe so when compacted the pipe zone backfill will provide uniform bearing and side support.

C. Backfill should be compacted within a water content range of 3 percent below to 3 percent above optimum.

3.08 COMPACTION OF FILL, BACKFILL AND EMBANKMENT MATERIALS

A. Each layer of Types A, B, F and G, backfill materials as defined herein, where the material is graded such that at least 10% passes a No. 4 sieve, shall be mechanically compacted to the indicated percentage of density. Equipment that is consistently capable of achieving the required degree of compaction shall be used and each layer shall be compacted over its entire area while the material is at the required moisture content.

B. Each layer of Type C, D and E backfill materials shall be compacted by means of at least 2 passes from a flat plate vibratory compactor. When such materials are used for pipe zone backfill, vibratory compaction shall be used at the top of the pipe zone or at vertical intervals of 24 inches, whichever is the least distance from the sub-grade.

C. Flooding, pending or jetting shall not be permitted.

D. Equipment weighing more than 10,000 pounds shall not be used closer to walls than a horizontal distance equal to the depth of the fill at that time. Hand operated power compaction equipment shall be used where use of heavier equipment is impractical or restricted due to weight limitations. Exception: With the written approval of the Structural Engineer.

E. Backfill around and over pipelines that is mechanically compacted shall be compacted using light, hand operated, vibratory compactors and rollers. After completion of at least 2 feet of compacted backfill over the top of pipeline, compaction equipment weighing no more than 8,000 pounds may be used to complete the trench backfill.

F. Compaction Requirements: The following compaction test requirements shall be in accordance with ASTM D1557 - Laboratory Compaction Characteristics of Soils Using Modified Effort (56,000 ft - lbf/ft3) (2,700 kN-m/m3) for Type A, B, C, E, F, and G materials and in accordance with ASTM D4253 - Maximum Index Density and Unit Weight of Soils Using a Vibratory Table, and D4254 - Minimum Index Density and Unit Weight of Soils and Calculation of Relative Density, for Type C, D, E and H materials. Where agency, utility company, or Geotechnical Evaluation and or Soils Report requirements govern, the highest compaction standards shall apply.

DRAFT

Location or Use of Fill	Percentage of Maximum Density
Final backfill, beneath paved areas or structures	95
Final backfill, not beneath paved areas or structures	90
Embankments and fills	90
Embankments and fills beneath paved areas or structures	90
Backfill beneath structures and hydraulic structures	95
Backfill and fill around structures on reservoir or structure roof	90
Topsoil (Type G material)	80
Aggregate base or sub-base (Type F or H material)	95

3.09 FILL AND EMBANKMENT CONSTRUCTION

A. The area where a fill or embankment is to be constructed shall be cleared, grubbed, and stripped in accordance with these Specifications. Embankment and fill material shall be placed and spread evenly in approximately horizontal layers. Each layer shall be thoroughly mixed and moisture conditioned, as necessary. Unless otherwise approved by the ENGINEER, each layer shall not exceed 6 inches of compacted thickness.

B. Base keys shall be provided at the toes of all fill slopes more than 5 feet high. The keys shall be cut into underlying undisturbed soil. Keys shall be a minimum of 12 feet wide and 4 feet deep measured at the downslope side of the key. Keys shall be sloped back toward the fill slope at a gradient of no less than 2%.

C. When an embankment or fill is to be made and compacted against hillsides or slopes steeper than 4:1, the slopes shall be horizontally benched to key the embankment or fill to the underlying ground. A minimum of 12 inches normal to the slope shall be removed and re-compacted as the embankment or fill is brought up in layers. Material thus cut shall be re-compacted along with the new material. Hillside or fill slopes 4:1 or flatter shall be prepared in accordance with Paragraph A, above.

D. Where embankment or structure fills are constructed over pipelines, the first 4 feet of fill over the pipe shall be constructed using light placement and compaction equipment that does not damage the pipe. Heavy construction equipment shall maintain a minimum distance from the edge of the trench equal to the depth of the trench until at least 4 feet of fill over the pipe has been completed.

E. All permanent fill slopes shall be overbuilt by at least 1 foot and then cut to final grade to provide adequate compaction.

3.10 GRADING

A. General: Uniformly grade areas to a smooth surface, free of irregular surface changes. Comply with compaction requirements and grade to cross-sections, lines, and elevations indicated.
   1. Provide a smooth transition between adjacent existing grades and new grades.
   2. Cut out soft spots, fill low spots, and trim high spots to comply with required surface tolerances.

B. Site Grading: Slope grades to direct water away from buildings/structures and to prevent ponding. Finish subgrades to required elevations within the following tolerances:
   1. Lawn or Unpaved Areas: Plus or minus 1 inch
   2. Walks: Plus or minus 1 inch
   3. Pavements: Plus or minus ½-inch

DRAFT

3.11 FIELD TESTING

A. General: All field soils testing shall be done by a testing laboratory as specified in the Contract Documents.

B. Where soil material is required to be compacted to a percentage of maximum density, the maximum density at optimum moisture content will be determined in accordance with Method C of ASTM D1557. Where cohesionless, free draining soil material is required to be compacted to a percentage of relative density, the calculation of relative density will be determined in accordance with ASTM D4253 and D4254. Field density in-place tests will be performed in accordance with ASTM D1556 - Density and Unit Weight of Soil in Place by the Sand-Cone Method, ASTM D2922 - Density of Soil and Soil-Aggregate in Place by Nuclear Methods (Shallow Depth), or by such other means acceptable to the ENGINEER.

C. In case the test of the fill or backfill show non-compliance with the required density, a remedy as may be required to insure compliance shall be accomplished. Subsequent testing to show compliance shall be performed by a testing laboratory.

D. Provide test trenches and excavations including excavation, trench support and groundwater removal for the ENGINEER's field soils testing operations. The trenches and excavations shall be provided at the locations and to the depths required by the ENGINEER.

END OF SECTION

DRAFT

SECTION 31 1000 – SITE CLEARING

PART 1 – GENERAL

1.01 THE REQUIREMENT

A. CONTRACTOR shall furnish all tools, equipment materials and supplies and shall perform all labor to complete the WORK associated with removal of all natural and artificial objectionable material from the designated areas of WORK as indicated in the Contract Documents.

B. This WORK shall also include the protection from injury and preservation of existing improvements, adjacent property, utility vegetation and existing objects designated to remain.

C. Prior to commencing the WORK, obtain acceptance from the ENGINEER regarding methods to be used and disposal of removed materials.

1.02 REFERENCE SPECIFICATIONS, CODES AND STANDARDS

A. Comply with Standard Specifications for Public Works Construction (SSPWC) 7-8: Project Site Maintenance

1.03 QUALITY ASSURANCE

A. Comply with these Specifications and Contract Documents.

PART 2 – PRODUCTS

2.01 CLEARING

A. Clearing shall consist of removing all vegetable growth such as trees, roots, stumps, shrubs, brush, limbs, and other vegetative growth. Remove all evidence of their presence from the growth surface. Clearing shall also include the removal and disposal of trash piles, rubbish, and fencing.

2.02 PRESERVATION OF TREES, SHRUBS, AND OTHER VEGETATION

A. Protect trees, shrubbery, and other vegetation not designated for removal from damage resulting from the WORK. Cut and remove tree branches only where, in the opinion of the ENGINEER, such cutting is necessary to affect construction. Scars resulting from the removal of branches shall be treated with an approved tree sealant. The ENGINEER shall identify all trees for removal, relocation, or preservation

2.03 GRUBBING

A. Grubbing shall consist of the removal and disposal of wood, stumps or root matter a minimum of 36 inches below existing ground surface or bottom of subgrade, whichever is deeper, unless otherwise shown on the Drawings. Clearing shall include stumps, logs, roots, or root systems greater than 1.5 inches in diameter or thickness.

2.04 CLEARING AND GRUBBING FOR TRENCHING

A. The CONTRACTOR shall obtain ENGINEER'S approval before beginning excavation. The CONTRACTOR shall complete clearing and grubbing prior to the start of trenching. The CONTRACTOR shall not permit excavated materials to cover vegetation prior to disposal.

DRAFT

2.05 REMOVAL AND DISPOSAL OF CLEARING AND GRUBBING DEBRIS

A. General: All materials removed shall be disposed of outside of the Project Site. No accumulation of flammable material shall remain on or adjacent to the right-of-way. The roadway and adjacent areas shall be left with a neat and finished appearance.

B. Bituminous Pavement: Bituminous pavement removal shall be in conformance with SSPWC Section 300-1.3.2 (a). Estimated thickness of paving sections to be removed are shown on Contract drawings.

C. Concrete Pavement: Concrete pavement removal shall be in conformance with SSPWC Section 300-1.3.2 (b). Estimated thickness of paving sections to be removed are shown on Contract drawings.

D. Concrete Curb, Walk, Gutters, Cross Gutters, Driveways, and Alley Intersections: Concrete removal shall be in conformance with SSPWC Section 300-1.3.2 (c).

2.06 STRIPPING

A. Stripping shall include the removal and disposal of all organic sod, topsoil, grass and grass roots, and other objectionable material remaining after clearing and grubbing from the areas designated to be stripped. The depth of stripping shall be as shown on the Drawings and specified herein.

B. Topsoil from the strippings shall be stockpiled and used for the finished site grading. Excess topsoil will be placed in the waste disposal areas designated by the ENGINEER.

PART 3 – EXECUTION

3.01 CLEARING AND GRUBBING

A. Clearing and grubbing shall be in conformance with the SSPWC Section 300-1.

3.02 STRIPPING

A. Prior to beginning any excavation or fill, strip the topsoil to a depth sufficient to remove all organic material and stockpile for future use. In general, topsoil shall be removed where structures are to be built, trenches dug, and roads, parking lots, walks, and similar improvements constructed within the areas presently covered with topsoil. Topsoil shall be stored clear of the construction area. Take reasonable care to prevent the topsoil from becoming mixed with subsoil. In lieu of reusing stockpiled topsoil, use imported topsoil as required for final grading.

END OF SECTION

DRAFT

SECTION 31 2333 – TRENCHING AND BACKFILLING

PART 1 – GENERAL

1.01 THE REQUIREMENT

A. Section Includes: Trench excavation, fine grading, pipe bedding, backfilling, and compaction for the following, including requirements for ditch crossings:
   1. Pipe and electrical conduits.
   2. Manholes, valves, or other accessories.
   3. Potable and non-potable water pipe appurtenances.

B. Soils Report: This work shall conform to the requirements of the latest Geotechnical Evaluation.

1.02 REFERENCES

A. American Society for Testing and Materials (ASTM):

C117	Material Finer than 75-µm (No. 200) Sieve in Mineral Aggregates by Washing
C131	Resistance to Degradation of Small-Size Course Aggregate by Abrasion and Impact in the Los Angeles Machine
C136	Sieve Analysis of Fine and Course Aggregates
D1556	Density and Unit Weight of Soil in Place by the Sand Cone Method
D1557	Laboratory Compaction Characteristics of Soil Using Modified Effort
D2922	Density of Soil and Soil-Aggregate in Place by Nuclear Methods (Shallow Depth)
D2937	Density of Soil in Place by the Drive-Cylinder Method
D4318	Liquid Limit, Plastic Limit, and Plasticity Index of Soils
OSHA	Document 2226 Excavation

1.03 SUBMITTALS

A. Submittals shall be furnished in accordance with Section 01 3300 – Submittal Procedures.

B. Products Data: For all proposed bedding and backfill materials as defined in these Specifications.
   1. Material source
   2. Gradation
   3. Testing data

C. Submit shoring and/or bracing details for trench depths greater than 5 ft.

PART 2 – PRODUCTS

2.01 MATERIALS

A. General:
   1. The following types of suitable materials are defined, unless otherwise specified by the Geotechnical Evaluation.
   2. Provide material having maximum particle size not exceeding 2 inches and that is free of leaves, grass, roots, stumps, and other organic matter.
   3. Materials derived from processing demolished or removed asphalt concrete are not acceptable.

DRAFT

B. All products shall comply with applicable Sections of these Specifications, Section 31 0000 – Earthwork, including, but not limited to the following:
   Aggregate Base Course
   Gravel
   Native Material
   Sand
   Select Material

2.02 UNSUITABLE MATERIAL

A. Unsuitable materials include the materials listed below:
   1. Soils as defined unsuitable in the Geotechnical Evaluation or by the Geotechnical Engineer.
   2. Soils which, when classified under ASTM D2487 - Standard Classification of Soils for Engineering Purposes (Unified Soil Classification System), fall in the Classifications of PT, OH, CH, MH or OL.
   3. Soils, which cannot be compacted sufficiently to achieve the density specified for the intended use.
   4. Materials that contain hazardous or designated waste materials including petroleum hydrocarbons, pesticides, heavy metals, and any material which may be classified as hazardous or toxic according to applicable regulations.
   5. Soils that contain greater concentrations of chloride or sulfate ions, or have a soil resistivity or pH less than the existing on-site soils.
   6. Topsoil, except as allowed below.

2.03 USE OF FILL, BACKFILL

A. Where these Specifications conflict with the requirements of any local agency having jurisdiction or with the requirements of a pipe material manufacturer, the ENGINEER shall be immediately notified. In case of conflict between types of pipe embedment backfills, the agency-specified backfill material if that material provides a greater degree of structural support to the pipe shall be used. In case of conflict between types of trench or final backfill types, the agency-specified backfill material, if that material provides the greater in-place density after compaction shall be used.

B. Fill and backfill types shall be used in accordance with the following provisions:
   1. Pipe zone backfill shall consist of the following materials for each pipe material listed below.
      a. Mortar coated pipe, concrete pipe and un-coated ductile iron pipe shall be provided Type C or D pipe bedding and embedment backfill material.
      b. Coal tar enamel coated pipe, polyethylene encased pipe, tape wrapped pipe and other non-mortar coated pipe shall be backfilled with Type B bedding and embedment zone backfill material.
      c. Plastic pipe shall be backfilled with Type B, C, or D bedding and embedment zone backfill material.
      d. Where pipelines are installed on grades exceeding 4%, and where backfill materials are graded such that there is less than 10% passing a Number 4 sieve, trench plugs of Type H or I material shall be provided at maximum intervals of 200 feet unless indicated otherwise.
   2. Allowable trench backfill materials for pipelines as defined under the MAG Standards and Specifications.

2.04 MATERIALS TESTING

A. As defined in these Specifications.

DRAFT

PART 3 – EXECUTION

3.01 PREPARATION

A. General:
   1. All utility piping shall be field surveyed for location of pipe runs and joints prior to backfilling.
   2. Before laying pipes or electrical conduits in fill, place fill and compact it to not less than 1 ft above top of pipe or conduit.
   3. After placing and compacting fill, excavate through fill and fine grade as required in this Section.

3.02 EXCAVATION AND TRENCH PROTECTION:

A. Provide safe working conditions, to prevent shifting of material, to prevent damage to structures or other work, to avoid delay to the work, all in accordance with applicable safety and health regulations. Properly shore, sheet, and brace all excavations which are not cut back to the proper slope and where shown.
   1. Locate all underground utilities and take the required measures necessary to protect them from damage.
   2. Construction and shop drawings containing deviations from OSHA standards or special designs shall be sealed by a licensed Engineer retained by the CONTRACTOR.

B. Stabilize excavation through shoring, sheeting, and bracing as required by OSHA or local standards, whichever is more stringent.
   1. Code of Federal Regulations Title 29 CFR Part 1926, Subpart P, Excavations.
   2. Occupational Safety and Health Administration Document 2226.

3.03 EXCAVATION AND GRADING

A. Exploratory Excavation:
   1. Excavate and expose buried points of connection to existing utilities where indicated on the Drawings. Excavation shall be performed prior to preparation of Shop Drawings for connections and before fabrication of pipe, and the data obtained shall be used in preparing Shop Drawings.
   2. Data, including dates, locations excavated, and sketches, shall be submitted to the ENGINEER within one week of excavation.
   3. Damage to utilities from excavation activities shall be repaired at the CONTRACTOR's expense.

B. Trench Excavation:
   1. General Requirements:
      a. If, because of soil conditions, safety requirements or other reasons, trench width at top of pipe is increased beyond width specified in the MAG Standards and Specifications, upgrade laying conditions or install stronger pipe designed in conformance with the appropriate pipe Specification Section for the increased trench width, without additional cost.

DRAFT

b. Pipe and Electrical Conduits:
    1) Lay pipe or electrical conduits in open trench.
    2) If bottom of excavation is found to consist of rock or any material that by reason of its hardness cannot be excavated to provide uniform bearing surface, remove such rock or other material to a depth of not less than 4 inches below bottom of pipe and refill to grade with aggregate base course material or sand placed at uniform density, with minimum possible compaction, at no additional cost.
    3) If bottom of excavation is found to consist of soft or unstable material which is incapable of properly supporting pipe, remove such material to a depth and for the length required, as determined by the ENGINEER, and then refill trench to grade with aggregate base course or sand, compacted to 90 percent of maximum density.
    4) Where indicated on the Drawings, cradle pipe in concrete.
c. For Manholes, Valves, or Other Accessories:
    1) Provide excavations sufficient to leave at least 12 inches clear between their outer surfaces and embankment or shoring which may be used to hold banks and protect them.
    2) Do not backfill with earth under manholes, vaults, tanks, or valves.
    3) Fill any unauthorized excess excavation below elevation indicated on the Drawings for foundation of any structure with sand, aggregate base material, bedding material, or concrete at no additional cost.
    4) Backfilling of Manhole Excavation: Conform to backfilling requirements as specified for pipe and utility trench backfill in this Section.
d. Potable and Non-Potable Water Pipe Appurtenances:
    1) Lay in trenches separate from those used for sewers.
    2) Unless otherwise specified or indicated on the Drawings, lay in trenches having cover of not less than 3 feet below surface of ground and located at distance of not less than 6 feet from any parallel sewer trench, or as required by local requirements.
e. At Road Crossings or Existing Driveways:
    1) Make provision for trench crossings at these points, either by means of backfills, tunnels, or temporary bridges.

C. Trench Fine Grading:
1. For Pipes 16 Inches in Nominal Diameter and Under:
    a. Unless otherwise specified, accurately grade bottom of trench to provide uniform bearing and support for each section of pipe, on undisturbed soil at every point along pipe's entire length, except for portions of pipe where it is necessary to excavate for bells and for proper sealing of pipe joints.
2. For Pipe over 16 Inches in Diameter:
    a. Over-excavate bottom of trench by at least 4 inches, or 1/12 outside diameter of pipe, whichever is greater.
    b. Fill overcut with bedding material specified herein, and fine graded as specified above.
    c. Place bedding material at uniform density, with minimum possible compaction.
    d. Where trench excavation is below grade of bedding material, restore trench bottom to proper grade by backfilling and compacting backfill to 95 percent of maximum density, at no additional cost. Use bedding material as specified in this Section.

DRAFT

3. Bell or Coupling Holes:
   a. Dig holes after trench bottom has been graded.
   b. Provide holes of sufficient width to provide ample room for grouting, banding, or welding.
   c. Excavate holes only as necessary in making joints and to ensure that pipe rests upon prepared trench bottom and not supported by any portion of the joint.
4. Depressions for Joints, Other than Bell and spigot:
   a. Make in accordance with recommendations of joint manufacturer for particular joint used.

3.04 DISPOSAL OF EXCESS EXCAVATED MATERIAL

A. Obtain OWNER approvals for disposal of excess excavated material in designated wasting area, as defined in the contract.

3.05 BACKFILL - GENERAL

A. Backfill shall not be dropped directly upon any pipe. Backfill shall not be placed around or upon any structure until the concrete has attained sufficient strength to withstand the loads imposed.

B. Except for drainrock materials being placed in over-excavated areas or trenches, backfill shall be placed after all water is removed from the excavation and the trench sidewalls and bottom have been dried to moisture content suitable for compaction.

C. If a moveable trench shield is used during excavation, pipe installation and backfill operations, the shield shall be moved by lifting the shield free of the trench bottom or backfill and then moving the shield horizontally. No trench shields shall be dragged along the trench causing damage or displacement to the trench sidewalls, the pipe, or the bedding and backfill.

D. Immediately prior to placement of backfill materials, the bottoms and sidewalls of trenches and structure excavations shall have all loose sloughing, or caving soil and rock materials removed. Trench sidewalls shall consist of excavated surfaces that are in a relatively undisturbed condition before placement of backfill materials.

3.06 PLACING AND SPREADING OF BACKFILL MATERIALS

A. During spreading, each layer shall be thoroughly mixed as necessary to promote uniformity of material in each layer. Pipe zone backfill materials shall be manually spread around the pipe so when compacted the pipe zone backfill will provide uniform bearing and side support.

B. Where the backfill material moisture content is below the optimum moisture content, water shall be added before or during spreading until the moisture content is between optimum and 3% over the optimum.

C. Where the backfill material moisture content is too high to permit the specified degree of compaction the material shall be dried until the moisture content is between optimum and 3% over the optimum.

3.07 COMPACTION OF FILL, BACKFILL AND EMBANKMENT MATERIALS

A. Compaction Requirements: Backfill compaction requirements shall be per the Geotechnical Evaluation and or Soils Report and per MAG Standards and Specifications.

DRAFT

3.08 PIPE AND UTILITY TRENCH BACKFILL

A. Pipe Zone Backfill:
   1. The pipe zone is defined as that portion of the vertical trench cross-section lying between a plane below the bottom surface of the pipe and a plane at a point above the top surface of the pipe. The bedding is defined as that portion of pipe zone backfill material between the trench sub-grade and the bottom of the pipe. The embedment is defined as that portion of the pipe zone backfill material between the bedding and a level line.
   2. After compacting the bedding, perform a final trim using a laser or approved method for establishing grade, such that each pipe section when first laid will be continually in contact with the bedding along the extreme bottom of the pipe. Excavation for pipe bells and welding shall be made as required.
   3. The pipe zone shall be backfilled with the indicated backfill material. Care to prevent damage to the pipeline coating, cathodic bonds and the pipe itself during the installation and backfill operations shall be exercised.
   4. If a moveable trench shield is used during backfill operations, the shield shall be lifted to a location above each layer of backfill material prior to compaction of the layer. The pipe or backfill shall not be displaced while the shield is being moved.

B. Trench Zone Backfill: After the pipe zone backfills have been placed, backfilling of the trench zone may proceed. The trench zone is defined as that portion of the vertical trench cross-section lying as indicated between a plane above the top surface of the pipe and a plane at a point, 18 inches below the finished surface grade, or if the trench is under pavement, 18 inches below the roadway sub-grade.

C. Final Backfill: Final backfill is all backfill in the trench cross-sectional area within 18 inches of finished grade, or if the trench is under pavement, all backfill within 18 inches of the roadway sub-grade.

3.09 FIELD QUALITY CONTROL

A. Tests:
   1. Confirmation Tests:
      a. CONTRACTOR’s Responsibilities:
         1) Accomplish specified compaction of trench backfill.
         2) Control operations by confirmation tests to verify and confirm that compaction work complies, and is complying at all times, with requirements specified in this Section concerning compaction, control, and testing.
         3) All field soils testing will be done by a testing laboratory as specified in the Contract Documents.
         4) Copies of Confirmation Test Reports: Submit promptly to the ENGINEER.
      b. Frequency of Confirmation Testing:
         1) Perform testing not less than as follows:
            a) For Trenches: At each test location include tests for each type or class of backfill from bedding to finish grade.
            b) In Open Fields: Two every 1,000 linear feet.
            c) Along Dirt or Gravel Road or off Traveled Right-of-way: Two every 500 linear feet.
            d) Crossing Paved Roads: Two locations along each crossing.
            e) Under Pavement Cuts or Within 2 Feet of Pavement Edges: one location every 400 linear feet.

DRAFT

2. Compliance Tests:
    a. Frequency of Testing: Periodic compliance tests will be made by the
        1) ENGINEER to verify that compaction is meeting requirements previously specified.
    b. If Compaction Fails to Meet Specified Requirements: Perform remedial work by one of the following methods:
        1) Remove and replace backfill at proper density.
        2) Bring density up to specified level by other means acceptable to the ENGINEER.
    c. Retesting:
        1) Costs of Retesting: Costs of retesting required to confirm and verify that remedial work has brought compaction within specified requirements shall be borne by the CONTRACTOR.
        2) CONTRACTOR's Confirmation Tests During Performance of Remedial Work:
            a) Performance: Perform tests in manner acceptable to the ENGINEER.
            b) Frequency: Double amount specified for initial confirmation tests.
3. Leak Testing Pipe:
    a. After Bedding the Pipe, CONTRACTOR Has the Following Option To:
        1) Leak-test pipe.
        2) Backfill to surface, at his own risk, before leak water-testing pipe.
    b. If pipe does not pass test, uncover pipe, locate leaks, repair and retest, repeating until pipe section under test passes.

END OF SECTION

DRAFT

SECTION 32 1216 – ASPHALT PAVING

PART 1 – GENERAL

1.01 THE REQUIREMENT

A. Perform all WORK associated with Asphalt Concrete (AC) Pavement and base as shown and specified herein including all labor, materials, equipment supplies, and facilities associated with providing a finished product satisfying all the requirements of the Contract Documents.

B. Verify all requirements with latest Geotechnical Evaluation and Report and notify the Engineer immediately if discrepancies exist.

1.02 REFERENCE SPECIFICATIONS, CODES AND STANDARDS

A. Codes**:** All codes, as referenced herein.

B. References**:** These specifications refer to the State of Arizona Department of Transportation (ADOT) Standard Specifications, referred to herein as the Standard Specifications.

1.03 SUBMITTALS

A. Submittals shall be furnished in accordance with Section 01 3300 – Submittal Procedures.

B. Submit, in writing, materials testing reports, mix designs and other pertinent information satisfactory to the ENGINEER demonstrating that materials and methods it proposes to utilize will comply with the referenced provisions of the Standard Specifications, in accordance Submittal Requirements.

PART 2 – PRODUCTS

2.01 DESCRIPTION

A. Asphaltic concrete shall consist of furnishing all materials, mixing, hauling, and placing a mixture of aggregates, mineral admixture, and bituminous material to form a pavement course or to be used for other specified purposes, in accordance with the details shown on the project plans and as directed by the Engineer.

B. The contractor may propose the use of a mix design that has been developed for a previous project. The CONTRACTOR shall provide evidence that the asphalt cement and mineral admixture type and source of supply, and the source and methods of producing mineral aggregate, have not changed since the formulation of the previous mix design. The CONTRACTOR shall also provide current test results for all specified characteristics of the mineral aggregate proposed for use. The ENGINEER will determine if the previously used mix design is suitable for the intended use. The Engineer will determine if the previously used mix design is suitable for the intended use. The ENGINEER will either approve or disapprove the proposed mix design. Should the ENGINEER disapprove the use of the previously used mix design, the contractor shall prepare and submit a new mix design proposal in accordance with the requirements of these specifications.

C. A previously used mix design older than two years from the date it was formulated, sealed, signed, and dated shall not be allowed for use. Any previously used mix design that is older than one year, but less than two years, shall not be allowed for use unless the contractor provides verification testing results. Such testing shall be a one-point verification at the design asphalt content utilizing the proposed mineral aggregate, asphalt cement, and mineral admixture. Once approved for use on a project, a mix design may be used for the duration of the project.

2.02 MATERIALS REQUIREMENTS

DRAFT

A. Mineral aggregate shall conform to the following requirements when tested in accordance with the applicable test methods

MINERAL AGGREGATE CHARACTERISTICS		
Characteristic	**Test Method**	**Requirement**
Combined Bulk Oven Dry Specific Gravity	Arizona Test Method 251	2.350 – 2.850
Combined Water Absorption	Arizona Test Method 251	0 – 2.5%
Sand Equivalent	AASHTO T 176 (After thoroughly sieving the sample, no additional cleaning of the fines from the plus No. 4 material is required)	Minimum 55
Fractured Coarse Aggregate Particles	Arizona Test Method 212	Minimum 70% (plus No. 4 material)

The gradation will be determined in accordance with Arizona Test Method 201 and shall conform to the requirements given below.

Mix Design Grading Limits				
Sieve Size	**Percent Passing**			
	Lift Thickness Less Than or Equal to Two Inches		**Lift Thickness Greater Than Two Inches**	
	Without Admixture	**With Admixture**	**Without Admixture**	**With Admixture**
1 inch	---	---	100	100
¾-inch	100	100	90-100	90-100
½-inch	90 – 100	90 - 100	---	---
3/8-inch	70 – 85	70 – 85	70 – 85	70 – 85
No. 8	41 – 51	42 – 52	41 – 51	42 – 52
No. 200	2.0 – 5.0	3.0 – 6.5	2.0 – 5.0	3.0 – 6.5

B. Bituminous Material

1. Asphalt cement shall be a performance grade (PG) asphalt binder conforming to the requirements of Section 1005 of the Standard Specifications. The type of asphalt binder shall be PG64-22.
2. The percent of asphalt cement used shall be based on the weight of total mix (asphalt cement, mineral aggregate, and mineral admixture).
3. The CONTRACTOR shall provide the laboratory mixing and compaction temperature ranges to the mix design laboratory for each PG asphalt binder used for mix design purposes. The laboratory mixing temperature range is defined as the range of temperatures where the un-aged asphalt binder has a rotational viscosity of 0.17 ± 0.02 Pascal seconds, measured in accordance with AASHTO T 316. The laboratory compaction temperature range is defined as the range of temperatures where the un-aged asphalt binder has a rotational viscosity of 0.28 ± 0.03 Pascal seconds, measured in accordance with AASHTO T 316. The testing required in AASHTO T 316 shall be performed at 275°F and 350°F, and a viscosity· temperature curve developed in accordance with ASTM D2493. The viscosity-temperature curve shall be included in the mix design report. For PG asphalt binders that have a maximum laboratory mixing temperature exceeding 325°F or a maximum laboratory compaction temperature exceeding 300°F the laboratory mixing and compaction temperature ranges shall be specified in writing by the asphalt binder supplier. The laboratory

DRAFT

mixing and compaction temperature ranges, as well as the actual laboratory mixing and compaction temperatures used, shall be reported in the mix design. The Contractor shall ensure that the asphalt binder supplier information required in this paragraph is provided to all appropriate parties in a timely manner, and that copies are included in the mix design report. The laboratory mixing and compaction temperatures are for mix design purposes only. Field mixing and compaction temperatures are specified in Subsection 2.03.

C. Mineral Admixture

1. Mineral admixture shall be either Portland cement, blended hydraulic cement, or hydrated lime conforming to the following requirements:

Material	Requirement
Portland Cement, Type I or II	ASTM C150
Blended Hydraulic Cement, Type IP	ASTM C595
Hydrated Lime	ASTM C1097

2. The mineral admixture content shall be 2.0 percent, by weight, of the mineral aggregate. However, a minimum of 1.0 percent mineral admixture may be used if the Contractor submits test information a lowered percentage of mineral admixture produces mix design results for Index of Retained Strength of at least 60 percent and a Minimum Wet Strength of 150 psi when tested in accordance with Arizona Test Method 802.

D. Mix Design

1. Utilizing mineral aggregate which has been crushed, processed, separated, and stockpiled, a mix design shall be formulated and submitted by the Contractor to the ENGINEER. The mineral aggregate samples used for mix design purposes shall be representative of aggregate materials to be used during production.
2. The mix design shall be based on the mix design criteria and other requirements specified herein, utilizing asphalt cement and mineral admixture of the type and from the sources proposed for use in the production of asphaltic concrete.
3. The mix design shall be prepared under the direct supervision of a professional engineer experienced in the development of mix designs and mix design testing. The mix design shall be provided in a format that clearly indicates all the mix design requirements and shall be sealed, signed, and dated by the mix design engineer.
4. The mix design shall be prepared by a mix design laboratory that has met the requirements of the Department's “System for the Evaluation of Testing Laboratories”. The requirements may be obtained from ADOT Materials Group, 1221 North 21st Avenue, Phoenix, Arizona 85009.
5. Test results used in the formulation of the mix design must be from testing performed no earlier than 45 days prior to the date the mix design is signed by the mix design engineer. Historical abrasion values may be supplied on sources provided the testing was conducted within the past two years.
6. The mix design shall be submitted to the ENGINEER under a cover letter signed by an authorized representative of the contractor.
7. The mix design shall be submitted to the ENGINEER for review a minimum of five working days prior to the start of production.
8. The mix design shall meet the following criteria when tested in accordance with the requirements of the following test methods:

DRAFT

Criteria	Requirement	Arizona Test Method
Voids in Mineral Aggregate: %, Range	14.5 – 18.5	815
Effective Voids: %, Range	5.5 – 6.5	815
Absorbed Asphalt: %, Range	0 – 1.0	815

9. The ENGINEER reserves the right to adjust the asphalt content during production from the mix design value without additional compensation to the contractor in order to obtain desirable effective voids. The ENGINEER may waive the requirements for a mix design if the intended use of the material is temporary in nature.

E. Sampling and testing the materials or mixture for quality control purposes shall be the Contractor's responsibility. The ENGINEER reserves the right to sample and test the materials and mixture when necessary to determine that they reasonably conform to the requirements specified herein.

2.03 CONSTRUCTION REQUIREMENTS

A. General

1. All courses of asphaltic concrete shall be compacted as required, smooth, and true to the required lines, grades, and dimensions.
2. The following smoothness requirements shall be met:
   a. The surface of the final lift of asphaltic concrete placed under this section of the specifications shall be tested and shall not vary by more than 1/8 inch from the lower edge of a ten-foot straightedge when it is placed in the longitudinal direction (including across transverse joints), and when it is placed in the transverse direction across longitudinal joints.
   b. The surface of any lift of asphaltic concrete placed under this section of the specifications, other than the final lift, shall be tested and shall not vary by more than 1/4 inch from the lower edge of a ten-foot straightedge when it is placed in the longitudinal direction (including across transverse joints), and when it is placed in the transverse direction across, longitudinal joints.
   c. All deviations exceeding the specified tolerances above shall be corrected by the contractor, to the satisfaction of the ENGINEER.
3. No fine material which has been collected in the dust collection system shall be returned to the mixture unless the collected fines are accurately and uniformly metered into the mixture.
4. The temperature of asphaltic concrete or mineral aggregate upon discharge from the drier shall not exceed 325°F, unless a higher temperature is recommended in writing by the asphalt binder supplier and approved by the ENGINEER.
5. The moisture content of the asphaltic concrete immediately behind the paver shall not exceed 0.5 percent. The moisture content will be determined in accordance with the requirements of Arizona Test Method 406.
6. Asphaltic concrete shall be placed only when the temperature of the surface on which the asphaltic concrete is to be placed is at least 65°F.
7. At any time, the ENGINEER may require that the work cease or that the work day be reduced in the event that weather conditions, either existing or expected, are anticipated to have an adverse effect upon the asphaltic concrete.
8. All wheels and tires of compactors and other equipment surfaces shall be treated when necessary with a product approved by the ENGINEER in order to prevent the slicking of asphaltic concrete.
9. Asphaltic concrete immediately behind the laydown machine shall be a minimum of 250°F.

DRAFT

10. Just prior to being placed, the asphaltic concrete shall be in a thoroughly mixed condition, free of lumps and crusts and at such a temperature as to be in a free flowing, workable condition.
11. All courses of asphaltic concrete shall be placed and finished by means of self-propelled paving machines except under certain conditions or at certain locations where the ENGINEER deems the use of self-propelled paving machines impractical.
12. Pavers shall be equipped with a screed for the full width being paved, heated if necessary, and capable of spreading and finishing all courses of asphaltic concrete.
13. Pavers shall be equipped with automatic screed controls with sensors for either or both sides of the paver, capable of sensing grade from an outside reference line, sensing the transverse slope of the screed, and providing the automatic signals which operate the screed to maintain the desired grade and transverse slope.
14. Failure of the control system to function properly shall be cause for the suspension of the placing of asphaltic concrete.
15. The base or subgrade upon which asphaltic concrete is to be placed shall be prepared and maintained in a firm condition until asphaltic concrete is placed. It shall not be frozen or excessively wet.
16. Before asphaltic concrete is placed, the surface to be paved shall be cleaned of objectionable material and tacked.
17. Longitudinal joints of each course shall be staggered a minimum of one foot with relation to the longitudinal joint of any immediate underlying course. Longitudinal joints shall be located within one foot of the center of a lane or within one foot of the centerline between two adjacent lanes.
18. The contractor shall schedule paving operations to minimize exposed longitudinal edges. Unless otherwise approved by the ENGINEER, the contractor shall limit the placement of asphaltic concrete courses, in advance of adjacent courses, to one shift of asphaltic concrete production. The contractor shall schedule paving operations in such a manner to eliminate exposed longitudinal edges over weekends or holidays.

B. Compaction

1. Compaction shall consist of an established sequence of coverage using specified types of compactors. A pass shall be defined as one movement of a compactor in either direction. Coverage shall be the number of passes as are necessary to cover the entire width being paved.
2. The rolling sequence, the type of compactor to be used, and the number of coverages required shall be as follows:

Rolling Sequence	**Type of Compactor**		**Number of Coverages**	
	Option No.1	**Option No.2**	**Option No.1**	**Option No.2**
Initial	Static Steel	Vibrating Steel	1	1
Intermediate	Pneumatic Tired	Vibrating Steel	2 – 6*	2 – 4*
Finish	Static	Static Steel	1 - 3	1 - 3
*Based on the roller pattern which exhibits the best performance.				

3. The ENGINEER shall select the option for compaction and, when pneumatic-tired compactors are used, will designate the tire pressure.
4. Steel wheel compactors shall not be used in the vibratory mode for courses of one inch or less in nominal thickness nor when the temperature of the asphaltic concrete falls below 180°F. Steel wheel compactors shall weigh not less than eight tons.

DRAFT

5. Initial and intermediate compaction shall be completed before the temperature of the asphaltic concrete falls below 200°F. All edges shall be rolled with a pneumatic tired compactor, or other methods approved by the ENGINEER, while the mixture is still hot.
6. Compaction will be deemed to be acceptable on the condition that the asphaltic concrete is compacted using the type of compactors specified, ballasted, and operated as specified and with the number of coverages of the compactors as specified.

C. Acceptance: Asphaltic concrete will be accepted complete in place if, in the judgment of the ENGINEER, the asphaltic concrete reasonably conforms to the requirements specified herein. Asphaltic concrete that is not acceptable and is rejected shall be replaced to the satisfaction of the ENGINEER and at no expense to the Owner.

2.04 METHOD OF MEASUREMENT

A. Asphaltic concrete will be measured by the ton for the mixture actually used, which will include the weight of mineral aggregate, bituminous material, and mineral admixture. Measurement will include any weight used in construction of intersections, turnout, curbs, spillways and spillway inlets, ditches, catch basin entrances, median strips, sidewalks or other miscellaneous items or surfaces.

PART 3 – EXECUTION

3.01 CONSTRUCTION REQUIREMENTS FOR NEW ROADWAY PAVEMENT

A. Subgrade Preparation shall comply with the Geotechnical Evaluation.

B. Aggregate Base: Aggregate base shall be provided where shown and to the thickness shown. Construction of the aggregate base course shall be as shown on the plans.

C. Asphalt Concrete:
1. AC paving shall be constructed as shown on the plans.
2. Alternate compacting equipment or substitution of a vibratory roller for a pneumatic-tired roller must be approved by the ENGINEER.
3. All mixtures shall be spread at a temperature of not less than 250°F. Base material compaction shall be completed before the mix reaches 200°F.

D. Pavement Marking: Application of the paint shall be in accordance with the paint manufacturer's instructions. Traffic markings obliterated by the WORK shall be repainted, unless otherwise directed by the ENGINEER.

3.02 CONSTRUCTION REQUIREMENTS FOR PAVEMENT REPAIR

A. Preparation of the site for pavement repair shall be in accordance with the Contract Drawings.

B. New pavement shall be placed according to the provisions of this Section and shall be of similar materials and pavement thickness as existing adjacent pavement except that the new pavement section surface shall be 1/8-inch higher than adjacent pavement.

C. Diamond saw cut joining pavement edges and tack coat edges.

END OF SECTION

DRAFT

SECTION 32 1600 – CURBS, GUTTERS, SIDEWALKS, AND DRIVEWAYS

PART 1 – GENERAL

1.01 SUMMARY

A. Section Includes: Concrete curbs, gutters, sidewalks, valley gutters, driveways, access ramps, and alley intersections.

1.02 SYSTEM DESCRIPTION

A. Performance Requirements: Construct various types of concrete curb, gutter, sidewalk, driveways, and alley intersections to dimensions and details indicated on the Drawings.

1.03 SUBMITTALS

A. Submittals shall be made in accordance with Section 01 3300 – Submittal Procedures.

B. Product Data: Submit data completely describing products.

C. Samples: Submit samples when requested.

PART 2 – PRODUCTS

2.01 MATERIALS

A. Concrete: 4000 psi, conforming to the applicable requirements of these Specifications.

B. Curb Finishing Mortar: 1 part Portland cement to two parts sand.

C. Form Release Material: Light oil or other releasing agent of type which does not discolor concrete or interfere with the application of finishing mortar to curb tops and faces.

D. Joint Materials:
   1. Expansion: Comply with requirements as specified in these Specifications.
   2. Construction: Steel dividers or plastic inserts.

PART 3 – EXECUTION

3.01 EXAMINATION

A. Verification of Conditions: Verify field conditions, including subgrade condition and interferences, before beginning construction.

3.02 PREPARATION

A. Surface Preparation:
   1. Subgrade:
      a. Construct and compact true to grades and lines indicated on the Drawings and requirements as specified in these Specifications.
      b. Remove soft or unsuitable material to depth of not less than 6 inches below subgrade elevation and replace with satisfactory material.
   2. Forms and Subgrade: Water immediately in advance of placing concrete.

3.03 INSTALLATION

A. Special Techniques:
   1. CONTRACTOR's Option:
      a. Construct concrete curbs and gutters by conventional use of forms, or by means of curb and gutter machine when acceptable to the ENGINEER.
      b. When use of machines designed specifically for work of this Section are accepted by the ENGINEER, results must be equal to or better than those produced by use of forms.

DRAFT

c. Applicable requirements of construction that apply to use of forms also apply to use of machines.
d. Discontinue use of machines when results are not satisfactory to the ENGINEER.

B. Forms:
1. Carefully set to line and grade and securely stake in position forms conforming to dimensions of items to be constructed.
2. Thoroughly clean prior to each use and coat with form releasing material.

C. Expansion and Contraction Joints:
1. Expansion Joints:
a. Construct vertically, and at right angles to centerline of street and match joints in adjacent pavement or sidewalks.
b. Constructed at radius points, driveways, alley entrances, and at adjoining structures.
c. Fill joints with expansion joint filler material.
2. Contraction Joints:
a. Constructed not more than 15 feet apart.
b. Make joints of construction joint material, scoring or saw cutting to depth of not less than 1-1/2 inches, and matching joints in adjacent pavement or sidewalk.

D. Concrete:
1. Placing:
a. Thoroughly spade concrete away from forms so that no rock pockets exist next to forms and so that no coarse aggregate will show when forms are removed.
2. Compacting:
a. Compact by mechanical vibrators accepted by the ENGINEER.
b. Continue tamping or vibrating until mortar flushes to surface and coarse aggregate is below concrete surface.
3. Form Removal:
a. Front Form Faces: Do not remove before concrete has taken initial set and has sufficient strength to carry its own weight.
b. Gutter and Rear Forms: Do not remove until concrete has hardened sufficiently to prevent damage to edges. Take special care to prevent damage.
4. Finishing and Curing: Comply with requirements of these Specifications, except as modified here:
a. As soon as curb face forms are stripped, apply finishing mortar to the top and face of curb and trowel to a smooth, even finish. Finish with fine haired broom in direction of work.
b. Where curb is installed without integral gutter, extend finish 2 inches below grade.
c. Edge concrete at expansion joints to 1/4-inch radius.
d. Flow lines of gutters shall be troweled smooth 4 inches out from curb face for integral curb and gutter and 4 inches on both sides of flowline for gutters without curbs.

E. Backfilling: Unless otherwise specified, backfill behind curbs, gutters, or sidewalks with soil native to area and to lines and grades indicated on the Drawings.

DRAFT

3.04 FIELD QUALITY CONTROL

A. Tests:
   1. Curbs, Gutters, and Valley Gutters:
      a. Test face, top, back, and flow line with 10-foot straight edge or curve template longitudinally along surface.
      b. Correct deviations in excess of ¼-inch.
   2. Gutters:
      a. Frequency of Testing: When required by the ENGINEER, where gutters have slope of 0.8 foot per hundred feet or less, or where unusual or special conditions cast doubt on capability of gutters to drain.
      b. Test Method: Establish flow in length of gutter to be tested by supplying water from hydrant, tank truck, or other source.
      c. Required Results:
         1) 1 hour after supply of water is shut off, inspect gutter for evidence of ponding or improper shape.
         2) In event water is found ponded in gutter to depth greater than 1/2 inch, or on adjacent asphalt pavement, correct defect, or defects in manner acceptable to the ENGINEER without additional cost to the Contract.

3.05 ADJUSTING

A. Repair portions of concrete damaged while stripping forms or, when damage is severe, replace such work at no additional cost to the Contract. Evidence of repairs shall not be noticeable in the finished product.

B. Remove and replace sections of work deficient in depth or not conforming to requirements indicated on the Drawings and specified in the Specifications at no additional cost to the Contract. Removal and replacement shall be the complete section between two joints.

END OF SECTION

DRAFT

SECTION 32 3113 – CHAIN LINK FENCES AND GATES

PART 1 – GENERAL

1.01 THE REQUIREMENT

A. The CONTRACTOR shall furnish all tools, equipment, materials, and supplies and shall perform all labor required to complete the WORK as indicated on the Drawings and specified herein.

B. This Section covers the work necessary for the chain link fence and gate(s), including removal of a portion of existing fence and reinstalling the chain link fence and gate(s) as shown on the Drawings and specified in the Contract Documents.

C. American Iron and Steel (AIS) requirement applies to this Section. All iron and steel products used in this project must be produced in the United States.

1.02 REFERENCE SPECIFICATIONS, CODES, AND STANDARDS

A. Reference MAG Standard Details and Specifications.

B. All Work specified herein shall conform to or exceed the applicable requirements of the referenced portions of the following publications to the extent that the provisions thereof are not in conflict with other provisions of these Specifications.

C. Comply with the applicable editions of the following codes, regulations and standards.
   1. Industry Standards:
      a. ASTM F567: Installation of Chain-Link Fence
      b. SSPWC Section 206-6 “Green Book”: Standard Specifications for Public Works Construction, Chain Link Fence
      c. SSPWC Section 304-3 “Green Book”: Standard Specifications for Public Works Construction, Chain Link Fence

D. Comply with the MAG Standard Details and Specifications, SPPWC, Standard Plans for Public Works Construction, as referenced in this Specification.

1.03 CONTRACTOR SUBMITTALS

A. Submittals shall be made in accordance with the Section 01 3300 – Submittal Procedures.

1.04 QUALITY ASSURANCE

A. General
   1. Comply with the requirements specified herein and the applicable reference Specifications of the General Requirements.
   2. Contractor shall adhere to OSHA, state, and local safety guidelines, laws, rules, and regulations.

1.05 WARRANTY

A. Provide a minimum of a five-year warranty.

PART 2 – PRODUCTS

2.01 GENERAL

A. All materials and fittings shall be in conformance with MAG Standard Detail 160 and Specification Section 420, SSPWC Section 206-6 Chain Link Fence, or as otherwise shown on the Drawings.

DRAFT

B. Salvaged material from the existing fence shall be undamaged and acceptable to the ENGINEER prior to reuse or reinstallation. Any material not reused shall be removed as directed by the ENGINEER.

C. Like items of materials provided hereunder shall be the end products of one manufacturer in order to achieve standardization for appearance, maintenance, and replacement.

2.02 FABRIC

A. Galvanized Fabric:
   1. Chain link fabric shall conform to the requirements of SSPWC Section 206-6.3.1.

B. Polyvinyl Chloride (PVC)-Coated Fabric:
   1. PVC-coated chain link fabric shall be in conformance with SSPWC Section 206-6.3.2.

2.03 POSTS, RAILS AND BRACES

A. The materials for posts, rails, and braces shall be in conformance with SSPWC Section 206-6.2.

2.04 TENSION WIRES AND FABRIC TIES

A. Tension wires and ties used to fasten the fabric to posts, rails, and gate framed shall be in conformance with SSPWC Section 206-6.4.

2.05 TRUSS OR TENSION RODS

A. Truss or tension rod used in construction shall be in conformance with SSPWC Section 206-6.5.

2.06 FITTINGS

A. All required fittings and hardware shall be galvanized and in conformance with SSPWC Section 206-6.6.

2.07 BARBED WIRE

A. Barbed wire shall be in conformance with SSPWC Section 206-6.7.

2.08 REPAIR OF DAMAGED COATINGS

A. Repairs to abraded or otherwise damaged zinc coating shall be made in conformance with SSPWC Section 206-6.8.

2.09 GATES

A. Gates shall be swing or sliding as indicated, complete with latches, stops, keepers, hinges, or rollers and roller tracks.

B. Gate frames shall be constructed of tubular members welded at all corners or assembled with fittings. On steel, welds shall be painted with zinc-based paint. Where corner fittings are used, gates shall have truss rods of 5/16-inch minimum nominal diameter to prevent sag or twist. Gate leaves shall have vertical intermediate bracing as required, spaced so that no members are more than 8 feet apart. Gate leaves 10 feet or over shall have a horizontal brace or one 5/16-inch minimum diagonal truss rod. When fence has barbed wire top, the end members of the gate frames shall be extended 1 foot above the top horizontal member to which three strands of barbed wire, uniformly spaced, shall be attached by use of bands, clips, or hook bolts.

C. Fabricate frames of standard weight pipe 1.90 inches outside diameter, weight 2.72 pounds per linear foot.

DRAFT

D. Gate fabric shall be the same type as used in the fence construction. The fabric shall be attached securely to the gate frame at intervals not exceeding 15 inches.

E. Gate hinges shall be of adequate strength for gate and with large bearing surfaces for clamping in position. The hinges shall not twist or turn under the action of the gate. The gates shall be capable of being opened and closed easily by one person.

F. Gate latches, stops, and keepers shall be provided for all gates. Latches shall have a plunger-bar arranged to engage the center stop, except that for single gates of openings less than 10 feet wide a forked latch may be provided. Latches shall be arranged for locking with padlocks. Center stops shall consist of a device arranged to be set in concrete and to engage a plunger-bar of the latch of double gates. No stop is required for single gates. Keepers shall consist of a mechanical device for securing the free end of the gate when in the full open position.
   1. Double Gates: Size and configuration shall be as indicated. Provide gate stops for all double gates, consisting of mushroom type or flush plate with anchors. Set in concrete to engage the center drop rod or plunger bar. Provide locking device and padlock eyes as an integral part of the latch, requiring one padlock for locking both gate leaves.
   2. Sliding Gates: Provide manufacturer's standard heavy-duty track, ball-bearing hanger sheaves, overhead framing and supports, guides, stays, bracing, and accessories as required. All sliding gates shall be rolling, cantilever slide, or overhead (top) suspended, as indicated on Drawings.

G. Rolling gate track rollers shall be malleable iron or heavy pressed steel construction, with provision for regular grease lubrication. Ground rollers shall have malleable iron or heavy pressed-steel hubs with similar provision for lubrication. Gate track shall be Schedule 40 pipe, firmly attached to support posts on 7-foot-maximum centers. Gates more than 8 feet in height shall have three tracks. Rolling gate frames shall be constructed similar to swing gates except diagonal bracing shall reflect different support type.

H. Cantilever gate rollers shall have heavy malleable rollers, needle or ball bearings with fittings for regular lubrication. Maximum spacing of support posts is 10 feet. Additional weight-supporting posts with lower roller shall be provided on 10-foot-maximum centers. Support posts shall be 4 inches in diameter, Schedule 40, set at 36 inches minimum depth. Top and lower rails of gate shall be 2-3/8 inches in OD, Schedule 40 pipe. Vertical support posts shall be on 6-foot maximum spacing, 1-7/8-inch OD, Schedule 40 pipe, all diagonal bracing 1-5/8-inch OD, Schedule 40 pipe, all connections welded and painted.

I. Keeper: Provide keeper for all vehicle gates that automatically engages the gate leaf and holds it in the OPEN position until manually released.

2.10 REMOVABLE FENCE PANELS

A. Removable fence panels shall be provided as indicated on the Drawings. The total length of any removable fence section shall be divided into equal removable fence panels with panel length not to exceed 10 feet. The posts on either side of removable fence panels shall be hot-dip galvanized pipe, 3 inches OD, 5.71 pounds per linear foot.

2.11 CONCRETE

A. Materials as specified in these Specifications. Proportions shall be 1:2:4. Compressive strength shall not be less than 2,000 psi at 28 days.

DRAFT

PART 3 – EXECUTION

3.01 INSTALLATION

A. Installation of fencing shall meet the requirements of ASTM F567.

B. Fence construction shall be in conformance with MAG Standard Detail 160 and Specification Section 420, SSPWC Section 304-3.2

C. Installation of gates shall be in conformance with the manufacturer's installation instructions, MAG Standard Detail 160 and Specification Section 420, and SSPWC Section 304-3.3.

3.02 REMOVAL AND RESETTING OF EXISTING FENCE

A. All accessories shall be removed carefully and all materials stored in a safe place until required for resetting. The CONTRACTOR shall provide all new material necessary to replace lost or damaged material and as required for a complete and satisfactory installation. In general, the salvaged fencing shall be reinstalled as specified for new material. All concrete shall be removed from posts before they are reset. The CONTRACTOR may furnish all new materials, rather than salvage and reuse the existing fence.

3.03 CLEANUP

A. Upon completion of the fence installation, clean up all waste material resulting from the operation. The clean-up shall be subject to acceptance by the ENGINEER.

END OF SECTION

DRAFT

SECTION 32 3219 – REINFORCED CONCRETE BLOCK MASONRY

PART 1 – GENERAL

1.01 THE REQUIREMENT

Provide concrete masonry and other appurtenant work, complete and in place, in accordance with the Contract Documents.

1.02 REFERENCE SPECIFICATIONS, CODES AND STANDARDS

A Commercial Standards:

ANSI/ASTM C5	Quicklime for Structural Purposes
ASTM A615	Deformed and Plain Billet-Steel Bars for Concrete Reinforcement
ASTM C90	Load-Bearing Concrete Masonry Units
ASTM C129	Non load bearing Concrete Masonry Units
ASTM C140	Sampling and Testing Concrete Masonry Units
ASTM C144	Aggregate for Masonry Mortar
ASTM C150	Portland Cement
ASTM C207	Hydrated Lime for Masonry Purposes
ASTM C404	Aggregates for Masonry Grout
ASTM E447	Compressive Strength of Masonry Prisms
UBC 21-16	Field Test Specimens for Mortar

1.03 SUBMITTALS

A. Submittals shall be furnished in accordance with Section 01 3300 – Submittal Procedures.

Samples:

1. Samples of concrete masonry unit colors with texture ranges indicated for selection of color. Full size samples of the blocks selected shall be submitted for final approval by the ENGINEER after color selection, if requested. If the specified product is a colored and textured unit, the samples shall be colored and textured units.
2. Samples of mortar colors for color selection
3. A 4-foot minimum square free standing sample panel shall be prepared for approval before starting masonry work if required. The panel shall remain at the Site for reference until all masonry work is completed.

Documentation:

1. Reports from testing Masonry units. Letter of certification that units meet ASTM standards. Recent test reports on units from independent testing company.
2. Reports from Mortar and Grout testing will be obtained from on site testing company.

Grout and Mortar Mix Design:

1. Proportions for all components
2. Mill Tests for Cement
3. Admixture Certification, include chloride ion content
4. Aggregate Graduation and Certification
5. Lime Certification

1.04 QUALITY ASSURANCE

A. Applicable Standards: Concrete masonry shall conform to the local Building Code, and other applicable codes and standards of governing authorities.

DRAFT

B. All work shall conform to the standard of quality established by the approved free-standing sample panel.

C. Concrete block masonry units and ready mix grout from the job site shall be sampled and tested in accordance with applicable ASTM standards by onsite testing company.

D. Inspection: Whenever required under the provisions of the Building Code, work hereunder will be subject to continuous inspection by a Special Inspector selected by the ENGINEER and approved by the local Building Official having jurisdiction. The Special Inspector will work under the supervision of the ENGINEER.

E. Weather Conditions: Concrete masonry units shall not be placed when air temperature is below 40°F (4°C) and shall be protected against direct exposure to the wind and sun when erected when the ambient air temperature exceeds 100°F (37°C) in the shade with relative humidity less than 50%. Cold weather installation shall be per code and Reference Standards and as approved by the ENGINEER.

F. Product Storage: Cement, lime and other cementitious materials shall be delivered and stored in dry, weather-tight sheds or enclosures, in unbroken bags, barrels, or other approved containers, plainly marked and labeled with the manufacturers' names and brands. Mortar and grout shall be stored and handled in a manner, which will prevent the inclusion of foreign materials and damage, by water or dampness. Masonry units shall be handled with care to avoid chipping and breakage, and shall be stored on wooden pallets. Materials stored on newly constructed floors shall be stacked in such manner that the uniformly-distributed loading does not exceed 50 psf. Masonry materials shall be protected from contact with the earth and exposure to the weather and shall be kept dry and clean until used.

PART 2 – PRODUCTS

2.01 CONCRETE MASONRY UNITS

A. Concrete masonry units shall conform to ASTM C90 and ASTM C140, 1,900 psi, Grade N, with normal weight unit with maximum linear shrinkage of 0.06%.

B. Concrete masonry units shall be modular size as shown or indicated on the drawings, with split-faces or smooth finish as indicated on the plans. Units shall be integrally-colored or standard unit color with painted exterior as indicated on the drawings with color selections from light and medium color range (white, black, and dark green not included in color range).

C. All bond beam, corner, lintel, sill, and other specially shaped blocks shall be provided where required or necessary. Specially shaped non-structural blocks may be constructed by saw cutting. Color and texture shall match that of adjacent units. No exposed grouted block cells will be allowed. All exposed masonry surfaces of openings and window and door openings such as sills, heads, and jambs shall be finish block surfaces, not formed surfaces, unless indicated otherwise. Closed bottom bond beam blocks shall be used at heads and sills.

D. Concrete masonry units hidden from view entirely may be natural color units the same size as other adjacent masonry units.

2.02 MATERIALS

A. Portland Cement shall be Type I or II, low alkali, conforming to ASTM C150. No masonry cement will be allowed.

B. Hydrated lime shall be Type S, conforming to ASTM C207. Pulverized quicklime shall conform to ANSI/ASTM C5, shall pass a No. 20 sieve, and 90% shall pass a No. 50 sieve.

C. Sand shall conform to ASTM C144. Coarse aggregate shall conform to ASTM C404.

D. Water for mixing shall be clear potable water.

E. Reinforcing steel shall be deformed bars conforming to ASTM A615, Grade 40 for #4 bars and smaller and ASTM A615, Grade 60 for #5 bars and larger.

F. Any admixtures must be pre-approved prior to usage. See Section 2.04 B.

G. Veneer ties shall be per local governing code and shall be Hot Dip Galvanized per ASTM A153-B2.

H. Horizontal Joint Reinforcement shall be Hot Dip Galvanized ladder-type per ASTM A153-B2

2.03 MORTAR

A. Mortar for concrete block masonry shall meet ASTM C270 and shall be Type S, with a minimum 28-day compressive strength of 2000 psi.

B. Mortar for use with colored masonry units shall have integral color as approved by the ENGINEER.

2.04 GROUT

A. Grout shall meet ASTM C476 and have a minimum 28-day compressive strength of 2000 psi. Where the grout space is less than 4 inches, pea gravel shall be omitted.

B. Admixtures may only be used when approved by the ENGINEER. When it has been approved for use, it shall be used in accordance with the manufacturer's published recommendations for the grout.

PART 3 – EXECUTION

3.01 GENERAL

A. Measurements for mortar and grout shall be accurately made. Mortar proportions shall be accurately controlled and maintained.

B. Work shall be performed in accordance with the provisions of the applicable code for reinforced concrete hollow-unit masonry.

C. Set or embed all anchors, bolts, reglets, sleeves, conduits, and other items as required.

D. All block cutting shall be by machine.

E. Reinforcing steel shall be cleaned of all loose rust and scale, and all oil, dirt, paint, laitance, or other substances, which may be detrimental to or reduce bonding of the steel and concrete.

F. Immediately before starting work, the concrete upon which the masonry will be laid shall be cleaned with water under pressure.

G. Full mortar bed for first course shall be provided.

H. Units shall be shoved tightly against adjacent units to assure good mortar bond.

I. All equipment for mixing and transporting the mortar and grout shall be clean and free from set mortar, dirt, or other foreign matter.

DRAFT

3.02 MIXING

A. Mortar shall be mixed according to ASTM C270. After all ingredients are in the mixer, they shall be mechanically mixed for not less than 5 minutes. Retempering shall be done on the mortar board by adding water within a basin formed within the mortar, and the mortar reworked into the water. Mortar, which is not used within 2½ hours, shall be discarded per ASTM requirements.

3.03 ERECTION OF CONCRETE BLOCK MASONRY

A. Masonry work shall be erected in-plane, plumb, level, straight, and true to dimensions and executed in accordance with acceptable practices of the trade.

B. Unless indicated otherwise, masonry shall be laid up in straight uniform courses with running bond.

C. All masonry shall be erected to preserve the unobstructed vertical continuity of the cells measuring not less than 3-inch x 3-inch in cross-section. Cross webs shall be full bedded in mortar, to prevent grout leakage. All head (or end) joints shall be solidly filled with mortar for a distance in from the face of the wall or unit not less than the thickness of the longitudinal face shells.

3.04 JOINTS

A. Vertical and horizontal joints shall be uniform and approximately 3/8-inch wide. Exterior joints and interior exposed block joints shall be concave-tooled to form dense surface. Special care shall be used in tooling joints so as to match existing construction. Interior or exterior non-exposed masonry and masonry behind plaster shall have flush joints.

3.05 CLEANOUTS

A. Cleanout openings shall be provided at the bottoms of all cells to be filled at each lift or pour of grout, where such lift or pour is over 4 feet in height. Any overhanging mortar larger than ½-inch or other obstructions or debris shall be removed from the insides of such cells. The cleanouts shall be sealed before grouting and after inspection. Cleanout openings shall match the finished wall in exposed masonry.

3.06 REINFORCEMENT

A. Bond beam blocks shall be used where horizontal reinforcing steel is embedded.

B. Knock-out openings shall have no steel or joint reinforcing running through the opening. Head, jambs, and sill blocks shall be used to provide an even finish surface to install window when blocks are removed. Joints at head, jambs and sills shall be stacked and continuous.

C. Vertical reinforcement shall be held in position at top and bottom and at intervals as defined on the drawings.

D. Horizontal joint reinforcing to 16” OC. in all masonry walls, unless noted otherwise.

E. Veneer ties shall be provided per Building Code and trade standards where veneered surfaces are indicated and shall be spaced no less than 16” OC each way.

3.07 GROUTING

A. All cells and bond beam containing reinforcement shall be filled solidly with grout. Grouting shall not be started until the wall has cured for 24 hours.

B. All grout shall be consolidated at time of pouring by vibrating. Where the grouting operation has been stopped for one hour or longer, horizontal construction joints shall be formed by stopping the grout pour 1½ inches below the top of the uppermost unit.

DRAFT

3.08 PROTECTION

A. Wall surfaces shall be protected from droppings of mortar or grout during construction.

3.09 FINISHING AND CLEANING

A. Masonry shall not be wet-finished unless exposed to extreme hot weather or hot wind and then only by using a nozzle-regulated fog spray sufficient only to dampen the face but not of such quantity to cause water to flow down over the masonry.

B. Finish masonry shall be cleaned and pointed in a manner satisfactory to the ENGINEER, based upon the approved sample panel.

C. All interior and exterior colored masonry work exposed to view shall be cleaned to remove all stains and other imperfections.

END OF SECTION

DRAFT

SECTION 33 0505.31 – PIPELINE HYDROSTATIC TESTING

PART 1 – GENERAL

1.01 THE REQUIREMENT

A. Perform all pipeline flushing and testing, complete, for piping system piping as specified herein and in accordance with the requirements of the Contract Documents.

B. Be responsible for providing conveyance of test water to the point of usage and also for disposal, as required, of water used in the testing operations.

1.02 REFERENCE SPECIFICATIONS, CODES, AND STANDARDS

A. Commercial Standards:

ANSI/AWWA B300	Hypochlorites
ANSI/AWWA B301	Liquid Chlorine
ANSI/AWWA C651	Disinfecting Water Mains
ASTM A746	Ductile Iron Gravity Sewer Pipe
ASTM F1417	Installation Acceptance of Plastic Gravity Sewer Lines Using Low-Pressure Air
NSF/ANSI 60	Drinking Water Treatment Chemicals – Health Effects
NSF/ANSI 61	Drinking Water System Components – Health Effects

1.03 SUBMITTALS

A. Submittals shall be made in accordance with Section 01 3300 – Submittal Procedures.

B. Proposed plans for testing of the sanitary sewer system. The methods used may be air or water as described herein. If water method is used then provide the water conveyance, control, and disposal. Advance written notice of its proposed testing schedule for review and concurrence of the ENGINEER shall be submitted.

PART 2 – PRODUCTS

2.01 MATERIALS REQUIREMENTS

A. Temporary valves, plugs, bulkheads, and other air pressure testing and water control equipment and materials shall be provided, subject to the ENGINEER's review. No materials shall be used which would be injurious to pipeline structure and future function. Air test gauges shall be laboratory-calibrated test gauges and shall be recalibrated by a certified laboratory at the CONTRACTOR’s expense prior to the leakage test, if required by the ENGINEER.

B. All test equipment, chemicals for chlorination, temporary valves, bulkheads, or other water control equipment and materials shall be selected and furnished, subject to the ENGINEER's review. No materials shall be used that would be injurious to the construction or its future function.

C. Chlorine for disinfection may be in the form of liquid chlorine, sodium hypochlorite solution, or calcium hypochlorite granules or tablets.

D. Liquid chlorine shall be in accordance with the requirements of ANSI/AWWA B301. Liquid chlorine shall be used only:
   1. In combination with appropriate gas flow chlorinators and ejectors;
   2. Under the direct supervision of an experienced technician;
   3. When appropriate safety practices are observed.

DRAFT

A. Sodium hypochlorite and calcium hypochlorite shall be in accordance with the requirements of ANSI/AWWA B300.

PART 3 – EXECUTION

3.01 GENERAL – PIPELINE HYDROSTATIC TESTING

A. Unless otherwise specified, water for testing will be furnished by OWNER; however, all necessary provisions for conveying the water from the designated source to the points of use shall be made by the CONTRACTOR.

B. Release of water from pipelines, after testing has been completed, shall be performed as reviewed by the ENGINEER.

C. All testing operations shall be performed in the presence of the ENGINEER.

3.02 TESTING OF SEWER PIPING

A. General: All gravity sewer pipes and service laterals shall be tested for exfiltration and/or infiltration and deflection, as specified. All manholes shall be tested for leakage, as specified. Manholes shall be tested prior to backfill placement. Reference applicable Sections of Division 31 – Earthwork, for pipe leak testing prior to backfill placement. All leakage tests shall be completed and approved prior to placing of permanent resurfacing. When leakage or infiltration exceeds the amount allowed by the Specifications, locate the leaks, and make the necessary repairs or replacements in accordance with the Specifications to reduce the leakage or infiltration to the specified limits. Any individually detectable leaks shall be repaired, regardless of the results of the tests.

B. Leakage Tests: Sanitary sewer systems shall be tested for leakage as follows:
   1. Gravity sewers 24 inches or less in diameter, where difference in elevation between inverts of adjacent manholes is 10 feet or less; water exfiltration test or water infiltration test as approved. The ENGINEER may allow substitution of an air pressure test for the water exfiltration test.
   2. Gravity sewers 24 inches or less in diameter, where difference in elevation between inverts of adjacent manholes is greater than 10 feet: air pressure test or water infiltration test, or as approved.
   3. Gravity sewers greater than 24 inches in diameter: air pressure test or water infiltration test, or as approved.
   4. Pressure sewers (force mains): water pressure test at 120% of maximum operating pressure or 150 psi (whichever is larger), measured at the lowest point of the pipeline section being tested.

C. Water Exfiltration Test: Each section of sewer shall be tested between successive manholes by closing the lower end of the sewer to be tested and the inlet sewer of the upper manhole with stoppers. The pipe and manhole shall be filled with water to a point 4 feet above the centerline of the sewer at the center of the upper manhole; or if ground water is present, 4 feet above the average adjacent ground water level, whichever is higher.
   1. The allowable leakage will be computed by the formula:

		$E = 0.000012\ LD\ (H)^{1/2}$
in which	E =	Allowable leakage in gallon per hour of sewer tested
	L =	Length of sewer and lateral connections tested, in feet
	D =	Internal diameter of the pipe in inches
	H =	Difference in elevation between the water surface in the upper manhole and the centerline of the pipe at the lower manhole; or if ground water is present above the centerline of the pipe in the lower manhole, the difference in elevation between the water surface in the upper manhole

DRAFT

		and ground water at the lower manhole.

D. Water Infiltration Test: If, in the opinion of the ENGINEER, excessive ground water is encountered in the construction of a section of the sewer, the exfiltration test for leakage shall not be used.
   1. The end of the sewer at the upper structure shall be closed sufficiently to prevent the entrance of water, and pumping of ground water shall be discontinued for at least 3 days, after which the section shall be tested for infiltration.
   2. The infiltration into each individual reach of sewer between adjoining manholes shall not exceed that allowed by the formula above, where H is the difference in the elevation between the ground water surface and the invert of the sewer at the downstream manhole.
   3. Unless otherwise specified, infiltration will be measured using measuring devices approved by the ENGINEER.

E. Air Pressure Test: Furnish all materials, equipment, and labor for making an air test. Air test equipment shall be approved by the ENGINEER.
   1. Conduct an initial air test of the sewer main line after densification of the backfill but prior to installation of the lateral connection sewers. Such tests will be considered to be for convenience and need not be performed in the presence of the ENGINEER.
   2. Each section of sewer shall be tested between successive manholes by plugging and bracing all openings in the main sewer line and the upper ends of all house connection sewers. Prior to any air pressure testing, all pipe plugs shall be checked with a soap solution to detect any air leakage. If any leaks are found, the air pressure shall be released, the leaks eliminated, and the test procedure started over again.
   3. The final leakage test of the sewer main line and branching lateral connection sewers, shall be conducted in the presence of the ENGINEER, and shall be performed in accordance with the procedures defined in ANSI/ASTM C828 and ASTM F1417, whichever is applicable.
   4. Joints may be air tested individually, joint by joint, with the use of specialized equipment. The joint testing procedure shall be submitted for the ENGINEER's review prior to testing.

F. Water Pressure Test: Preparatory to testing, the section of the pipeline to be tested shall be filled with water and placed under a slight pressure for at least 48 hours. The pipeline shall then be brought up to the test pressure specified and maintained on the section under test for a period of not less than 4 hours.
   1. Accurate means shall be provided for measuring the quantity of water required to maintain full pressure on the line for the test period, which volume shall not exceed:

		$L = \frac{CN\,D\,(P)^{1/2}}{1850}$
in which	L =	Maximum allowable leakage in gallons per hour for the section of pipeline tested
	N =	Number of joints in length tested
	D =	Diameter of pipe in inches
	P =	Test pressure in psi
	C =	1.0 for reinforced concrete pressure pipe with rubber ring joints, cylinder type
	C =	3.0 for reinforced concrete pressure pipe with rubber joints, non-cylinder type
	C =	0.50 for cast iron pipe with mechanical or rubber gasket joints and asbestos-cement pipe
	C =	1.0 for other type of cast iron joints (calked) and other types of pipe

DRAFT

G. Deflection Test: All flexible and semi-rigid main line pipe shall be tested for deflection, joint displacement, or other obstruction by passing a rigid mandrel through the pipe by hand, not less than 30 days after completion of the trench backfill, but prior to permanent resurfacing. The mandrel shall be a full circle, solid cylinder, or a rigid, non-adjustable, odd-numbered leg (9-leg minimum) steel cylinder, approved by the ENGINEER as to design and manufacture. The circular cross section of the mandrel shall have a diameter of at least 95% of the specified average inside pipe diameter of the pipe and the minimum length of the circular portion of the mandrel shall be equal to the nominal diameter of the pipe. Obstructions encountered by the mandrel shall be corrected.

3.03 GENERAL – PIPELINE HYDROSTATIC TESTING FOR POTABLE WATER

A. Unless otherwise indicated, water for testing and disinfecting water pipelines will be furnished by the OWNER; however, all necessary provisions for conveying the water from the designated source to the points of use shall be made by the CONTRACTOR.

B. All pressure pipelines shall be tested.

C. Disinfection shall be accomplished by chlorination. All chlorinating and testing operations shall be performed in the presence of the ENGINEER.

D. Disinfection operations shall be scheduled by as late as possible during the contract time period so as to assure the maximum degree of sterility of the facilities at the time the WORK is accepted.

E. HYDROSTATIC TESTING OF PIPELINES

Pressure testing may be performed before or after final backfilling. If the pipeline is properly and safely center-loaded, a visual inspection for leaks may be made along the pipeline, while the test section is under test pressure. Any visible leaks shall be repaired and a retest conducted. However, if mechanical compaction is to be used in the backfilling operations per AWWA C600 and C605, the pressure tests shall not be performed until final backfilling is 100% completed including compaction. Backfill and compaction shall be 100% complete for any restrained pipeline sections for the entire designated restrained distance prior to pressure testing. All pipe sections, stub laterals, fire hydrant laterals, blow-offs, and valves encompassed in the test section shall be verified to be open, water filled and pressurized. Actual hydrostatic monitor testing shall not begin until the pipeline has been filled entirely with water for at least 24 hours to allow for air venting and absorption.

1. **Pressure Testing**: Unless otherwise noted in the contract documents, the minimum prescribed test pressure shall be at least 200 psi for lines smaller than 16 inches and 150 psi for lines 16 inches or larger, not to exceed 5 psi over the minimum prescribed test pressure, as measured at the lowest end of the section under test. The duration of each pressure test shall be at least 2 hours, during which time the test section shall not drop below the minimum prescribed test pressure. If the pressure in the pipe test section has not stabilized by the end of the testing period, a hydrostatic retest will be required. Each section of a new line between sectionalizing valves or between the last sectionalizing valve and the end of the project shall be tested separately as required in AWWA C600 and C605, and/or as modified in these specifications, except that any such section less than 500 feet in length may be tested with the adjacent section, if both sections of line have the same pipe class rating. No section greater than 2,640 feet in total pipe length shall be tested without written permission of the ENGINEER. CONTRACTOR shall bleed all air out of new lines being tested. After all air has been determined to have been removed and the pressure has stabilized and maintained constant, the line shall be determined to be ready for testing. The CONTRACTOR shall furnish all necessary apparatus and assistance to conduct the testing.

DRAFT

2. **Testing Allowance / Makeup Water:** If a testing allowance is permitted by the Contracting Agency, the makeup water volume shall be determined after the pressure test has been satisfactorily completed and all backfilling and compaction has been completed to top of trench. The allowance shall be defined as the maximum quantity of additional water necessary to be supplied into the pipe section under test to restore the ending test pressure to the beginning test pressure, after the pipeline has been filled with water and all air expelled. The duration of each makeup water test shall be at least 2 hours. To pass the allowance testing, the quantity of makeup water from the pipeline shall not exceed the makeup water quantity allowed by the following formula:

$$\frac{A = LD\sqrt{P}}{148{,}000}$$

Where

A = testing allowance (makeup water), gallons per hour.

L = length of pipe tested, feet.

D = nominal diameter of pipe, inches.

P = test pressure, pounds/square inch.

If the pipeline under test contains sections of various diameters, the testing allowance will be the sum of the computed allowance for each size. Should the test on any section of the pipeline require more makeup water than allowed by the above formula, the CONTRACTOR shall locate and repair the defective pipe, fittings, or joint until the makeup water volume is within the specified allowance. All repairs and re-tests, if required, shall be made at the CONTRACTOR's expense

F. DISINFECTING PIPELINES

1. General**:** All potable water pipelines except those appurtenant to hydraulic structures shall be disinfected in accordance with the requirements of NSF/ ANSI 60 & 61 AND AWWA C651 (Latest Version) Standards.
2. Sampling Ports**:** Provide sampling ports along the pipeline as defined on AWWA C651. Taps may be made at man-ways and air valves to help facilitate the spacing requirement.
3. New water mains shall be physically isolated from active distribution systems until initial disinfection and satisfactory bacteriological results have been completed.
4. Disinfection**:** The method of chlorination used shall be approved by the Contracting Agency and must conform to NSF/ANSI 60 & 61 and the AWWA C651 (Latest Version) Standards. The OWNER/ENGINEER shall determine the number and locations for sample risers. The CONTRACTOR is responsible for supplying equipment to properly dose the new main with a chlorine concentration not less than 10 parts per million (ppm). The OWNER/ENGINEER will verify the chlorine level is at 10 ppm at time of dosing and verify that after 24 hours of high chlorine solution sitting in the pipes that the chlorine concentration is at 10 ppm or greater. All new valves, hydrants and other appurtenances shall be operated fully to ensure full disinfection from the chlorine solution. After 24-hour verification is complete, the water main shall be completely flushed of the high chlorine concentration. A chlorine neutralizing agent may be required during flushing discharge. Check with the OWNER/ENGINEER to confirm.
   a. Methods of Applying Chlorine: One of the following methods of application of chlorine shall be used, subject to the approval of the Contracting Agency.
      1) Liquid chlorine gas-water mixture.
      2) Calcium or sodium hypochlorite and water mixture.

DRAFT

b. Point of Application: The preferred point of application of the chlorinating agent is at the beginning of the pipeline extension or any valved section of it and through a corporation stop inserted in the top of the newly laid pipe. The water injector for delivering the chlorine-bearing water into the pipe should be supplied from a tap or other potable water source on the pressure side of the gate valve controlling the flow into the pipeline extension.

c. Rate of Application: Water from the existing distribution system or other approved potable water source of supply shall be controlled so the rate of flow shall not exceed 500 gpm, unless approved by the OWNER/ENGINEER, through a suitable measuring device into the newly laid pipeline during the application of chlorine. The rate of chlorine solution flow shall be in such proportion to the rate of water entering the pipe that the chlorine dose applied to the water entering the newly laid pipe shall produce at least 10 ppm of residual chlorine after 24 hours standing in the pipe. This may be expected with an application of 50 ppm, although some conditions may require more. On lines 12 inches in diameter or less, determination of the rate of flow of water into the line to be treated may be made by starting with the line full of water and measuring the rate of discharge at a hydrant located at the end of the pipe farthest away from the point of chlorine application. For lines larger than 12 inches in diameter, the disinfection operation is generally started with the line empty.

d. Retention Period: The highly chlorinated water shall be retained in the pipe long enough to destroy all non-spore-forming bacteria. This period should be at least 24 hours and no more than 48 hours. If the circumstances are such that less than a 24-hour retention period must be used and upon approval by the OWNER/ENGINEER, the chlorine concentration shall be increased to 100 ppm not to exceed 300 ppm and retained for at least 2 hours. Under these conditions, special care should be taken to avoid chemical attack on pipes, valves, hydrants, and other appurtenances.

e. Short Pipe Sections / Laterals / Stubs: For short sections of new pipelines of up to twenty feet or less in length and where the new line cannot be isolated for testing or installation of a temporary backflow and metering set-up is not possible or feasible, the following procedure may be used with OWNER/ENGINEER approval on a case-by-case basis. Various modifications may be necessary or required depending on specific circumstances. This does not apply to small diameter domestic copper water services of up to two inches.

   1) 100% of all new pipe materials/fittings used in the installation and tie-in from the existing main line to the backflow assembly on fire lines and up to the first meter, connection on domestic water lines shall be disinfected. Any new tie-in valves at the main line shall remain completely closed.
   2) All new pipe materials/fittings used in the installation and tie-in are to be disinfected by swabbing with a chlorine solution of at least 200 ppm using NSF/ANSI 60 and 61 approved equipment, materials, and chemicals. The chlorine solution shall be tested by the OWNER/ENGINEER or designated representative to ensure that it meets the strength requirements. Inspector shall witness the swabbing procedure and document results. A new swabbing device should be used for each new line.
   3) The new lines and fittings shall remain empty and closed to the atmosphere for 24 hours to allow the high chlorine treatment sufficient time to disinfect.

DRAFT

4) After the 24-hour period, the new valves shall be operated, and the ends of the lines shall be opened at the largest port available to allow initial flushing of the high chlorine solution. The Contracting Agency shall test this first flow of water to verify that at least 10 ppm of chlorine is still present. The line can then continue to be sufficiently flushed until the chlorine levels are below 2.0 ppm as verified by the Contracting Agency.
5) The new lateral valves at the main tie-in shall then be closed and remain closed after flushing; the new lateral line shall remain charged with water and allowed to sit for an additional 24 hours.
6) After 24 hours, the OWNER/ENGINEER shall check the chlorine residual levels and collect microbiological samples for lab testing as detailed herein.
7) The new lateral valves at the main tie-in shall remain closed until the OWNER/ ENGINEER receives the laboratory results that show a negative or "Absent" reading for both Total Coliform and E. Coli.

f. Final Flushing, Sampling and Testing**:** Following chlorination, all treated water in the newly laid pipeline shall be thoroughly flushed until the replacement water throughout the new pipeline can be proved, by laboratory testing, comparable in quality to the water served to the public from the existing water system. Prior to sampling for laboratory testing, the residual chlorine throughout the length of the pipeline shall be reduced to 2.0 ppm or less per Regulatory Agency allowances. Once the required residual chlorine level in the pipeline is achieved, bacteriological samples shall be taken as required by Regulatory Agency.

G. CONNECTIONS TO EXISTING SYSTEM

Any temporary air release blow-offs and test sampling risers shall be left exposed, accessible, and protected during backfill operations until all testing is complete. After all testing has been completed and passed acceptance, all temporary blow-offs and sampling risers shall be properly lowered and terminated. Connections to existing pipelines or existing valves shall not be made until after all new pipe main line or specific sections thereof, has satisfactorily passed all required hydrostatic and disinfection tests and the Regulatory Agency gives approval to make the final connections and put new water mainline into service.

END OF SECTION

DRAFT

SECTION 33 0519 – DUCTILE IRON PIPE

PART 1 – GENERAL

1.01 THE REQUIREMENT

A. Provide ductile iron pipe and perform all appurtenant work, complete in place, in accordance with the Contract Documents.

1.02 REFERENCE SPECIFICATIONS, CODES AND STANDARDS

A. Commercial Standards:

ANSI/AWWA	
C104/A21.4	Cement-Mortar Lining for Ductile-Iron Pipe and Fittings for Water
C105/A21.5	Polyethylene Encasement for Ductile-Iron Piping for Water and Other Liquids
C110/A21.10	Ductile-Iron and Gray-Iron Fittings, 3 inches through 48 inches for Water and Other Liquids
C111/A21.11	Rubber-Gasket Joints for Ductile-Iron and Gray-Iron Pressure Pipe and Fittings
C115/A21.15	Flanged Ductile-Iron and Gray-Iron Pipe with Threaded Flanges
C150/A21.50	Thickness Design of Ductile-Iron Pipe
C151/A21.51	Ductile-Iron Pipe, Centrifugally Cast in Metal Molds or Sand-Lined Molds, for Water or Other Liquids
C153/A21.53	Ductile-Iron Compact Fittings, 3 inches through 12 inches for Water and Other Liquids
AWWA	
C209	Cold-Applied Tape Coatings for the Exterior of Special Sections, Connections, and Fittings for Steel Water Pipelines
C214	Tape Coating Systems for the Exterior of Steel Water Pipelines
C600	Installation of Ductile Iron Water Mains and Their Appurtenances
ASTM	
A746	Ductile Iron Gravity Sewer Pipe
C150	Specification for Portland Cement

1.03 SUBMITTALS

A. Submittals shall be made in accordance with Section 01 3300 – Submittal Procedures.

B. Shop Drawings: Submit shop drawings of pipe and fittings in accordance with the requirements in Section 01 3300 – Submittal Procedures, the requirements of the referenced standards, and the following supplemental requirements as applicable:
   1. Dimensional drawings of all valves, fittings, and appurtenances.
   2. For pipe 24 inches in diameter and larger, line layout and marking diagrams which indicate the specific number of each fitting and the location and the direction of each fitting in the completed line. In addition, the line layouts shall include: the pipe station and invert elevation at all changes in grade or horizontal alignment; all elements of curves and bends, both in horizontal and vertical alignment; and the limits of each reach of restrained joints, or of concrete encasement.

1.04 QUALITY ASSURANCE

A. All pipe shall be subject to inspection at the place of manufacture in accordance with the provisions of the referenced standards, as supplemented by the requirements herein.

B. During the manufacture of the pipe, the ENGINEER shall be given access to all areas where manufacturing is in process and shall be permitted to make all inspections necessary to confirm compliance with the Specifications.

DRAFT

PART 2 – PRODUCTS

2.01 GENERAL

A. Mortar-lined ductile iron pipe shall conform to ANSI/AWWA C151, C104 and C105, subject to the following supplemental requirements. The pipe shall be of the diameter and class noted in the Contract Documents. The pipe shall be furnished complete with rubber gaskets, with all specials and fittings provided as required under the Contract Documents.

B. Markings: Legibly mark specials 24 inches in diameter and larger in accordance with the laying schedule and marking diagram. All fittings shall be marked at each end with top field centerline.

C. Handling and Storage: The pipe shall be handled by devices acceptable to the ENGINEER, designed and constructed to prevent damage to the pipe coating/exterior. The use of equipment that might injure the pipe coating/exterior will not be permitted. Stockpiled pipe shall be suitably supported and shall be secured to prevent accidental rolling. All other pipe handling equipment and methods shall be acceptable to the ENGINEER.

D. Laying Lengths: Maximum pipe laying lengths shall be 20 feet with shorter lengths provided as required by the Drawings.

E. Finish: The pipe shall have smooth, dense interior surfaces, and shall be free from fractures, excessive interior surface crazing, and roughness.

F. Closures and Correction Pieces: Closures and correction pieces shall be provided as required so that closures may be made due to different headings in the pipe laying operation and so corrections may be made to adjust the pipe laying to conform to pipe stationing shown on the Drawings. The locations of correction pieces and closure assemblies are shown on the Drawings. Any change in location or number of said items shall be acceptable to the ENGINEER.

2.02 PIPE DESIGN CRITERIA

A. General: Ductile iron pipe shall be designed in accordance with the requirements of ANSI/AWWA C150 as applicable and as modified in this Section.

B. Pipe Wall Thickness for Internal Pressure: The pipe shall be designed with a net thickness to withstand the design pressure in accordance with the hoop stress formula.

C. Pipe Wall Thickness for External Load: The pipe shall also be designed with a net thickness to withstand external loads using ANSI/AWWA C150 Design Equation (2) with the appropriate bending moment and deflection coefficients for Laying Condition Types 4 and 5 as applicable.

D. The pipe deflection shall be checked using ANSI/AWWA C150 Design Equation (3) and the coefficients stated above. The allowable deflection shall not exceed the manufacturer’s recommended amount.

DRAFT

E. In lieu of ANSI/AWWA C150 Design Equation (4), the earth loads will be computed using the following 2 equations for trench or embankment loading as applicable:

1. Trench Condition:

$$W_d = C_d w B_d^2$$

Where:
- W_d = Earth Load in pounds per linear foot
- C_d = Calculation Coefficient
- Ku' = [0.13]
- w = [120] lb/ft^3
- B_d = Trench width at top of pipe, feet

2. Positive Projecting Embankment Condition:

$$W_c = C_c w B_c^2$$

Where:
- W_c = Earth Load in pounds per linear foot
- C_c = Calculation Coefficient (based on $r_{sd}P$ of 0.25)
- Ku = [0.19]
- w = [120] lb/ft^3
- B_c = Outside diameter of pipe, feet

F. The above 2 formulas are based on a depth of cover of 10 feet or greater. For depths of cover of less than 10 feet, HS-20 live load shall be included. For depths of cover of 3 feet or less, HS-20 live load plus impact shall be included. The determination of live load and impact factors shall be as recommended by AASHTO in "Standard Specifications for Highway Bridges."

G. If the calculated deflection exceeds 0.0225 times the nominal diameter, the pipe class shall be increased.

H. Minimum Pipe Wall Thickness: In addition to the requirements of this Section, the minimum wall thickness shall be in accordance with Table 50.5 of ANSI/AWWA C150.

2.03 MATERIALS

A. Ductile Iron Pipe: Pipe materials shall conform to the requirements of ANSI/AWWA C151.

B. Cement: Cement for mortar lining shall conform to the requirements of ANSI/AWWA C104, provided, that cement for mortar lining shall be Type II or V. Cement shall not originate from kilns that burn metal-rich hazardous waste fuel, nor shall a fly ash or pozzolan be used as a cement replacement.

2.04 SPECIALS AND FITTINGS

A. Fittings for ductile iron pipe shall conform to the requirements of ANSI/AWWA C153/A21.53 for diameters 3 inches through 24 inches and shall have a minimum pressure rating of 350 psi. Ductile iron fittings larger than 24 inches shall conform to the above referenced standard with the necessary modifications for the larger size.

2.05 DESIGN OF PIPE

A. General: The pipe furnished shall be ductile iron pipe, with rubber-gasketed joints or as specified on the plans.

B. The pipe shall be designed, manufactured, tested, inspected, and marked according to applicable requirements previously stated and except as hereinafter modified, shall conform to ANSI/AWWA C151.

C. Pipe Dimensions: The pipe shall be of the diameter and class shown. The minimum wall thickness for each pipe size shall be as specified or shown.

DRAFT

D. Fitting Dimensions: The fittings shall be of the diameter and class shown.

E. Joint Design: Ductile iron pipe and fittings shall be furnished with mechanical joints, push-on joints, flanged joints, and restrained joints as required.
   1. Mechanical and push-on joints shall conform to ANSI/AWWA C111/A21.11.
   2. Mechanical and push on joints gaskets shall be “fast Grip” Gaskets by American Ductile Iron Pipe, or “Field Locks” Gaskets by U.S. Pipe, or equal.
   3. Restrained joints shall be "Lok-Ring" Restrained Joint by American Ductile Iron Pipe, "TR FLEX" Restrained Joint by U.S. Pipe, or ENGINEER-approved equal. Provide as indicated on the plans.
   4. Flanged joints shall conform to ANSI/AWWA C115/A21.15. Special ductile iron flanges to match up to 250 psi valve and equipment flanges shall meet ANSI/AWWA C110 and be specially drilled to ANSI/ASME B16.1 Class 250 standard dimensions with raised face.

F. For bell-and-spigot ends with rubber gaskets, the clearance between the bells and spigots shall be such that when combined with the gasket groove configuration and the gasket itself, will provide watertight joints under all operating conditions when properly installed. Require the pipe manufacturer to submit details complete with significant dimensions and tolerances and to submit performance data indicating that the proposed joint has performed satisfactorily under similar conditions. In the absence of a history of field performance, the results of a test program shall be submitted.

G. Shop-applied interior linings and exterior coatings shall be held back from the ends of the pipe as shown or as otherwise acceptable to the ENGINEER.

2.06 CEMENT-MORTAR LINING

A. Cement-Mortar Lining for Shop Application: Except as otherwise provided herein, interior surfaces of all ductile iron pipe, fittings and specials shown on the plans shall be cleaned and lined in the shop with cement-mortar lining applied centrifugally in conformity with ANSI/AWWA C104. During the lining operation and thereafter, the pipe shall be maintained in a round condition by suitable bracing or strutting. The lining machines shall be of a type that has been used successfully for similar work. Every precaution shall be taken to prevent damage to the lining. If lining is damaged or found faulty at delivery site, the damaged or unsatisfactory portions shall be replaced with lining conforming to these Specifications.

B. The minimum lining thickness shall be as follows:

Nominal Pipe Diameter (inches)	**Minimum Lining Thickness (inches)**
3 - 12	$^{1}/_{8}$
14 - 24	$^{3}/_{16}$
30 - 54	$^{1}/_{4}$

C. Protection of Pipe Lining/Interior: All shop-applied cement mortar lining shall be given a seal coat of asphaltic material in conformance with ANSI/AWWA C104.

2.07 EXTERIOR COATING OF PIPE

A. Exterior Coating of Exposed Piping: The exterior surfaces of pipe which will be exposed to the atmosphere inside structures or above ground shall be thoroughly cleaned and then given a shop coat of rust-inhibitive primer conforming to the requirements of these Specifications.

DRAFT

B. Exterior Coating of Buried Piping: The exterior coating shall be an asphaltic coating approximately 1mil thick. Where noted as required by the ENGINEER, pipe will be encased in polyethylene sleeves.

PART 3 – EXECUTION

3.01 INSTALLATION OF PIPE

A. Handling and Storage: All pipe, fittings, etc., shall be carefully handled and protected against damage, impact shocks, and free fall. All pipe handling equipment shall be acceptable to the ENGINEER. Pipe shall not be placed directly on rough ground but shall be supported in a manner that will protect the pipe against injury whenever stored at the trench site or elsewhere. No pipe shall be installed where the lining or coating show defects that may be harmful as determined by the ENGINEER. Such damaged lining or coating shall be repaired, or a new undamaged pipe shall be furnished and installed.

B. All pipe that is damaged prior to Substantial Completion shall be repaired or replaced.

C. Inspect each pipe and fitting prior to installation to ensure that there are no damaged portions of the pipe.

D. Before placement of pipe in the trench, each pipe or fitting shall be thoroughly cleaned of any foreign substance, which may have collected thereon, and shall be kept clean at all times thereafter. For this purpose, the openings of all pipes and fittings in the trench shall be closed during any interruption to the WORK.

E. Pipe Laying: The pipe shall be installed in accordance with ANSI/AWWA C600.

F. Pipe shall be laid directly on the bedding material. No blocking will be permitted, and the bedding shall be such that it forms a continuous, solid bearing for the full length of the pipe. Excavations shall be made as needed to facilitate removal of handling devices after the pipe is laid. Bell holes shall be formed at the ends of the pipe to prevent point loading at the bells or couplings. Excavation shall be made as needed outside the normal trench section at field joints to permit adequate access to the joints for field connection operations and for application of coating on field joints.

G. Each section of pipes 24 inches in diameter and larger shall be laid in the order and position shown on the laying schedule. In laying pipe, it shall be laid to the setline and grade, within approximately one inch plus or minus. On grades of zero slopes, the intent is to lay to grade.

H. Where necessary to raise or lower the pipe due to unforeseen obstructions or other causes, the ENGINEER may change the alignment and/or the grades. Such change shall be made by the deflection of joints, by the use of bevel adapters, or by the use of additional fittings. However, in no case shall the deflection in the joint exceed the maximum deflection recommended by the pipe manufacturer. No joint shall be misfit any amount that will be detrimental to the strength and water tightness of the finished joint.

I. Except for short runs that may be permitted by the ENGINEER, pipes shall be laid uphill on grades exceeding 10%. Pipe that is laid on a downhill grade shall be blocked and held in place until sufficient support is furnished by the following pipe to prevent movement. All bends shall be properly installed as shown.

J. Shallow buried pipes and pipes underneath structures shall be concrete encased where noted in the Contract Documents.

DRAFT

K. Cold Weather Protection: No pipe shall be installed upon a foundation into which frost has penetrated or at any time that there is a danger of the formation of ice or penetration of frost at the bottom of the excavation. No pipe shall be laid unless it can be established that the trench will be backfilled before the formation of ice and frost occurs.

L. Pipe and Specials Protection: The openings of all pipe and specials shall be protected with suitable bulkheads to prevent unauthorized access by persons, animals, water, or any undesirable substance. At all times, means shall be provided to prevent the pipe from floating.

M. Pipe Cleanup: As pipe laying progresses, the pipe interior shall be kept free of all debris. Completely clean the interior of the pipe of all sand, dirt, mortar splatter and any other debris following completion of pipe laying, pointing of joints and any necessary interior repairs prior to testing and disinfecting the completed pipeline.

3.02 RUBBER GASKETED JOINTS

A. Rubber Gasketed Joints: Immediately before jointing pipe, the bell end of the pipe shall be thoroughly cleaned, and a clean rubber gasket lubricated with an approved vegetable-based lubricant shall be placed in the bell groove. The spigot end of the pipe shall be carefully cleaned and lubricated with a vegetable-based lubricant. The spigot end of the pipe section shall then be inserted into the bell of the previously laid joint and telescoped into its proper position. Tilting of the pipe to insert the spigot into the bell will not be permitted.

3.03 INSTALLATION OF PIPE APPURTENANCES

A. Protection of Appurtenances: Where the joining pipe is tape-coated, buried appurtenances shall be coated with cold-applied tape in accordance with ANSI/AWWA C209, Type II. Where pipe is encased in polyethylene sleeves, buried appurtenances shall also be encased in polyethylene.

B. Installation of Valves: All valves shall be handled in a manner to prevent any injury or damage to any part of the valve. All joints shall be thoroughly cleaned and prepared prior to installation. Adjust all stem packing and operate each valve prior to installation to insure proper operation.

C. All valves shall be installed so that the valve stems are plumb and, in the location, shown.

END OF SECTION

DRAFT

SECTION 33 0531 – POLYVINYL CHLORIDE (PVC) PIPE

PART 1 – GENERAL

1.01 REQUIREMENT

A. Polyvinyl chloride pressure pipe for water distribution, in nominal diameters 4 inches through 60 inches.

B. Polyvinyl chloride sewer pipe for gravity sewers in nominal diameters 4 inches through 48 inches.

C. Polyvinyl chloride pressure pipe for sewers force mains in nominal diameters 4 inches through 60 inches.

D. Pipe 3 inch or smaller: Shall comply with these Specifications.

1.02 REFERENCES

A. Commercial Standards:

ANSI A 21.16 (AWWA C116)	Protective Fusion Bonded Epoxy Coating for the Interior and Exterior Surfaces of Ductile Iron and Grey Iron Fittings for Water Supply Service.
ASTM	
D1248	Polyethylene Plastics Molding and Extrusion Materials.
D1784	Rigid Poly (Vinyl Chloride) (PVC) Compounds and Chlorinated Poly (Vinyl Chloride) (CPVC) Compounds.
D2241	Poly (Vinyl Chloride) (PVC) Pressure-Rated Pipe (SDR Series).
D2321	Underground Installation of Thermoplastic Pipe for Sewers and Other Gravity-Flow Applications.
D2444	Determination of the Impact Resistance of Thermoplastic Pipe and Fittings by Means of a Tup (Falling Weight).
D2680	Acrylonitrile-Butadiene-Styrene (ABS) and Poly (Vinyl Chloride) (PVC) Composite Sewer Piping.
D2774	Underground Installation of Thermoplastic Pressure Piping.
D3034	Type PSM Poly (Vinyl Chloride) (PVC) Sewer Pipe and Fittings.
D3139	Joints for Plastic Pressure Pipes Using Flexible Elastomeric Seals.
D3212	Joints for Drain and Sewer Plastic Pipes Using Flexible Elastomeric Seals.
F477	Elastomeric Seals (Gaskets) for Joining Plastic Pipe.
F679	Poly (Vinyl Chloride) (PVC) Large-Diameter Plastic Gravity Sewer Pipe and Fittings.
F794	Poly (Vinyl Chloride) (PVC) Profile Gravity Sewer Pipe and Fittings Based on Controlled Inside Diameter.
F949	Poly (Vinyl Chloride) (PVC) Corrugated Sewer Pipe with Smooth Interior and Fittings.
AWWA C110	American National Standard for Ductile-Iron and Gray-Iron Fittings, 3 Inches Through 48 Inches for Water.
AWWA C605	Underground Installation of PVC Pressure Pipe and Fittings for Water.
AWWA C651	Disinfecting Water Mains.
AWWA C111	Rubber-Gasket Joints for Ductile-Iron Pressure Pipe and Fittings.
AWWA C900-16	Polyvinyl Chloride (PVC) Pressure Pipe and Fabricated Fittings, 4 Inches Through 60 Inches.

DRAFT

AWWA C909	Molecularly-Oriented Polyvinyl Chloride (PVCO) Pressure Pipe, 4 Inches through 12 Inches (100mm through 300 mm), for Water Distribution.
PPI TR3	Developing Recommended Hydrostatic Design Stresses for Thermoplastic Pipe Materials.
UNI-B-13	Joint Restraint Devices for Use with Polyvinyl Chloride Pipe.

1.03 SUBMITTALS

A. Submittals shall be made in accordance with Section 01 3300 – Submittal Procedures.

B. Submit shop drawings showing design of new pipe and fittings indicating alignment and grade, laying dimensions, fabrication, fittings, flanges, and special details.

1.04 QUALITY CONTROL

A. Submit manufacturer's certifications that PVC pipe and fittings meet requirements of this Section and AWWA C900 and AWWA C909 for pressure pipe applications, or appropriate ASTM standard specified for gravity sewer pipe.

B. Submit manufacturer's certification that PVC pressure pipe for water lines and force mains has been hydrostatically tested at factory in accordance with AWWA C900, AWWA C909, and this Section.

C. When foreign manufactured material is proposed for use, have material tested for conformance to applicable ASTM requirements by certified independent testing laboratory located in United States. Certification from another source is not acceptable. Furnish copies of test reports to ENGINEER for review. Cost of testing paid by CONTRACTOR.

PART 2 – PRODUCTS

2.01 MATERIAL

A. Use PVC compounds in manufacture of pipe that contain no ingredient in amount that has been demonstrated to migrate into water in quantities considered to be toxic.

B. Furnish PVC pressure pipe manufactured from Class 12454-A or Class 12454-B virgin PVC compounds as defined in ASTM D1784. Use compounds pre-qualified for a 4,000 psi hydrostatic design basis, and a maximum hydrostatic design stress of 2,000 psi for water at 73°F per requirements of PPI TR3. Provide pipe which is homogeneous throughout, free of voids, cracks, inclusions, and other defects, uniform as commercially practical in color, density, and other physical properties. Deliver pipe with surfaces free from nicks and scratches with joining surfaces of spigots and joints free from gouges and imperfections which could cause leakage.

C. Fusible PVC pipes shall meet ASTM D2241/ D1785, CSA B137.3, AWWA C900, NFS 61 (potable water), and ASTM Cell Classification 12454.

D. PVC Solvent Weld Schedule Pipe shall meet:
1. PVC Schedule 40 and 80: ASTM D1785/ D2665 / D2241
2. Cellular Core PVC Sch 40: ASTM F891
3. PVC Schedule 30: ASTM D2949
4. PVC Perforated Drain Pipe: ASTM D2729
5. ABS Sch 40: ASTM D2661
6. Cellular Core ABS Sch 40: ASTM F628

E. Standard PVC laying length shall be 14 or 20 ft +/- 1”. Fusible PVC pipe shall be manufactured in a standard 40’ nominal length, or custom lengths as specified in the plans. Solvent Weld Pipe shall be manufactured in standard laying length of 10 ft and 20 ft.

F. Do not use PVC for offset sections with depth of cover greater than 20 feet or less than 4

DRAFT

feet, unless acceptable by manufacturer. Do not use PVC in potentially petroleum-contaminated areas.

G. PVC in areas exposed to direct sunlight shall be protected with UV-inhibitor coating.

2.02 Pipe Class and Working Pressures:

A. Pipe Pressure Class shall be as noted per plan and shall meet the requirements in the following Table 1.

Table 1 – Pipe Pressure Class

APPLICATION	ASTM or AWWA DESIGNATION	SDR (Max.)/ STIFFNESS (MIN.)	DIAMETER SIZE RANGE
PRESSURE/ GRAVITY	C900 C900 C900	DR 25/ Class 165 psi DR 18/ Class 235 psi DR 14/ Class 305 psi	4" to 60” 4" to 42 4” to 30”
GRAVITY	D3034 D3034	SDR 35/ 46 psi SDR 26/ 115 psi	4" to 15" 4" to 15"
GRAVITY	F679 F679	PS46/ 46 psi PS 115/ 115 psi	18” to 48” 18" to 48"
CORRUGATED GRAVITY	F949 F949	N/A / 46 psi N/A / 115 psi	4" to 48" 4" to 48"
CORRUGATED GRAVITY	F794 F794	N/A / 46 psi N/A / 115 psi	4" to 48" 8" to 15"

2.03 PRESSURE SERVICE PIPE

A. All potable water pipe shall bear National Sanitation Foundation Seal of Approval (NSF-PW) and meet the requirements of AWWA C900, ANSI/ NSF 61.

B. For PVC C900, pipeline curves and bend can be made by deflecting joints by no more than 1.5 deg. Do not exceed maximum deflection recommended by pipe and fitting manufacturer. Submit details of other methods of providing curves and bends for review by ENGINEER.

C. For PVC Solvent Weld Pipe (12” and smaller), pipeline curves can be made by bending the pipe within the limits of pipe curvature found in Table 2 below.

2.04 GRAVITY SEWER PIPE

A. When solid wall PVC pipe 18 inches to 27 inches in diameter is required in SDR 26, provide pipe conforming to ASTM F679, except provide wall thickness as required for SDR 26 and pipe strength of 115 psi.

B. No deflection at joint shall be allowed for pipe sizes 12” or smaller. Pipeline curves shall be accomplished through bending of the pipe within the limits of pipe curvature as shown in the following Table:

Table 2 – Pipe Bend Curvature

PIPE SIZE (IN)	MIN RADIUS (FT)	OFFSET/ 20 FT (IN)	OFFSET/ 14 FT (IN)
4	100	23.9	11.7
6	150	16	7.8
8	200	12	5.9
10	250	9.6	4.7
12	300	8	3.9

C. For pipes 15” – 36” maximum angular deflection at joint shall be 1.5 degrees or as

DRAFT

approved by pipe manufacturer.

D. For sewers up to 12 inches in diameter crossing over water lines, or crossing under water lines with less than 2 feet separation, provide minimum 150 psi pressure-rated pipe conforming to ASTM D2241 with suitable PVC adapter couplings. Pipes shall be encased in concrete, unless noted otherwise.

2.05 GASKETS

A. For pressure pipe, integral gasket bell and spigot “push-on” joint shall conform to ASTM D3139.

B. For gravity pipe, locked-in gaskets joints shall meet ASTM D3212 for joint tightness (22” Hg vacuum and a 25-ft head pressure test)

C. Gaskets shall meet the requirements of ASTM F477.

D. Flat Face Mating Flange: Full faces 1/8-inch-thick ethylene propylene (EPR) rubber.

E. Raised Face Mating Flange: Flat ring 1/8-inch ethylene propylene (EDR) rubber, with filler gasket between OD of raised face and flange OD to protect flange from bolting moment.

F. Lubricant for rubber-gasketed joints: Water soluble, non-toxic, non-objectionable in taste and odor imparted to fluid, non-supporting of bacteria growth, having no deteriorating effect on PVC or rubber gaskets.

G. Manufacturer shall test sample from each batch conforming to requirements ASTM D2444.

2.06 JOINTS AND FITTINGS:

A. Flanged or bolted mechanical joint or push-on joint ductile or gray iron fittings shall conform to ANSI/AWWA C110/A21.10 or C153/A21.53 and ANSI/ AWWA C111/A21.11. All iron fittings shall be cement mortar lined and tar (seal) coated in accordance with ANSI/AWWA C104/A21.4

B. PVC pipe fittings shall be full-bodied, either injection molded or factory fabricated, and shall meet AWWA C907. Saddle-type tee or wye fittings are not acceptable, unless noted otherwise.

C. Fusible PVC pipe lengths shall be assembled in the field with butt-fused joints. The Contractor shall follow the pipe supplier’s written guidelines for this procedure.

D. Solvent Weld PVC pipes shall utilize solvent weld on bell end, plain end, and socket type fittings and shall meet ASTM D2564.

E. Provide approved restrained joint fittings as required and as shown on plans. Restraining devices shall meet or exceed the requirements of ASTM F1674 or UNI-Bell B-13 "Recommended Standard Performance Specification for Joint Restrainers for Use with PVC Pipe."

F. Exterior Protection: Provide polyethylene wrapping of ductile-iron fittings.

2.07 Hydrostatic Test: AWWA C900, AWWA C909, ANSI A21.10 (AWWA C110); at point of manufacture; submit manufacturer's written certification.

PART 3 – EXECUTION

3.01 PROTECTION

A. Store pipe under cover out of direct sunlight and protect from excessive heat or harmful chemicals in accordance with manufacturer's recommendations.

DRAFT

3.02 INSTALLATION

A. Install PVC pipe in accordance with these Specifications, ASTM D2321 for Sewer Pipe, and manufacturer's recommendations.

B. Install PVC water service pipe to clear utility lines and have minimum depth of cover 48” below major streets, unless otherwise required by Drawings.

C. Avoid imposing strains that will overstress or buckle pipe when lowering pipe into trench.

D. Hand shovel pipe bedding under pipe haunches and along sides of pipe barrel and compact to eliminate voids and ensure side support.

F. Allow PVC pipe to cool to ground temperature before backfilling when assembled out of trench to prevent pullout due to thermal contraction.

3.03 PVC RESTRAINED MECHANISM

A. Do not apply lubricant to spline or pipe or coupling spline grooves.

B. Do not use excessive force while inserting the spline through coupling.

C. Insert spline until it is fully seated around circumference of pipe.

D. Field Cutting of Pipe Ends:
   1. Perform by workers certified by manufacturer.
   2. Use a PVC pipe cutter and provide square ends.
   3. Use manufacturer approved power routing and grooving tool to field fabricate required pipe groove.

END OF SECTION

DRAFT

SECTION 33 0536.13 – FIBERGLASS REINFORCED PLASTIC (FRP) DUCT

PART 1 – GENERAL

1.01 DESCRIPTION

A. The work of this section consists of furnishing and installing fiberglass reinforced plastic (FRP) duct for odor control, includes all labor, material, equipment, and accessories necessary to complete the ducting system.

1.02 QUALITY ASSURANCE REFERENCES

A. This section contains references to some or all of the following documents, most recent edition. They are a part of this section as specified and modified. In case of conflict between the requirements of this section and those of the listed documents, the requirements of this section shall prevail.

Reference	Title
ASTM D2996	Filament-Wound Glass-Fiber-Reinforced Thermosetting-Resin Pipe
ASTM D2997	Centrifugally Cast Glass-Fiber-Reinforced Thermosetting-Resin Pipe
ASTM D2412	Determination of External Loading Characteristics of Plastic Pipe by Parallel-Plate Loading
AWWA C950	Fiberglass Pressure Pipe
AWWA Manual M45	Fiberglass Pipe Design
PS 15-69, (NBS)	Voluntary Product Standard-Custom Molded Reinforced Polyester Chemical Resistant Process Equipment (Fittings and Rectangular Duct only)

1.03 DESIGN REQUIREMENTS

A. Temperature and Pressure
   1. All ductwork, fittings and appurtenances shall be suitable for the following conditions:
      a. Design temperature, °F
         (1) Minimum 20
         (2) Maximum 120
      b. Internal pressure, psig 25
      c. Internal vacuum, inches water column 20

1.04 SUBMITTALS

A. In accordance with Section 01 3300 – Submittal Procedures.

B. Manufacturer's data and descriptive literature for duct accessories.

C. Shop Drawings
   1. Duct layout
   2. Locations of duct anchors, guides and expansion joints
   3. Joint details

PART 2 – MATERIALS

2.01 MATERIALS

A. Resin
   1. Premium grade and corrosion resistant vinyl ester such as Derakane 411, Hetron 922, Corezyn 8300 or ENGINEER-approved equal.
   2. The exterior surface of all ductwork shall include UV inhibitor UV-9.
   3. Color: Use no dyes, pigments or colorants, except in the exterior gel coat.

DRAFT

4. The manufacturer shall warranty its products against the reduction of physical and corrosion ratings, due to ultra violet exposure, for a period of 15 years.

B. Duct

1. Round: FRP ductwork shall be manufactured by centrifugal casting process or filament wound process. Centrifugally cast reinforced shall conform to ASTM D2310 and D2997. The filament wound ductwork shall conform to ASTM D2310 and D2966. Internal pressure rating shall be based on long-term hydrostatic design stress per ASTM D2992.
2. Minimum Duct Wall Stiffness: The minimum duct wall stiffness, at 5 percent deflection, determined in accordance with ASTM D2412 and Section 3 or AWWA C950, shall not be less than the following:

Pipe Size (In.)	Nominal Duct Diameter Duct Stiffness (psi)
1-8	36
10	18
12-16	9
18 and larger, buried	10
18 and larger, other locations	5

3. The non-reinforced liner thickness shall be 50 mil for centrifugally cast FRP ductwork. The filament wound FRP ductwork shall have a 65 mil-reinforced liner.
4. Rectangular: FRP ductwork shall be of contact molded, per PS 15-69 or filament wound construction or a combination of these methods. Calculations for wall thickness determination shall be based on the structural fiberglass wall only. Rectangular FRP vacuum service: Fittings shall be factory manufactured to meet the specified design criteria and in accordance with approved submittals. Factory install reinforcing ribs as required to meet the specified deflection requirements and to provide a system free from pulsing, warpage, sagging and undue vibration. Provide forming vanes in all mitered rectangular elbows. Rectangular elbow turning vanes shall be of FRP construction, solid or double wall construction with an airfoil shaped profile. Corrosion liner shall be same as specified for round FRP duct.

C. Fittings and Flanges

1. The fittings and flanges shall be made using the same type of vinyl ester resin and suitable for the design temperature and pressure of 25 psi, and shall comply with PS 15-69, Table 5, at a design pressure of 25 psi and shall have ANSI/ASME B31.6 Class 25 diameter and drilling. Standard laterals shall be constructed at 45-degree angles. Standard elbows shall have a centerline radius of one and one-half times the pipe diameter. The length of the standard reducers and round to rectangular transition pieces shall be minimum of two and one-half times the difference in diameters (DI-D2). Wall thickness of reducers shall be the same as the required thickness of the larger pipe. Internal lining shall be of the same type of material and thickness as specified for the pipe. Transitions shall have connections compatible with the connecting pipe and equipment.
2. Compression molded or hand laid up socket fittings of manufacturers standard configuration are acceptable.

D. Fasteners

1. Bolts: ASTM A193-92, Type 3l6 Stainless Steel, ASA coarse thread series, Grade B 8M hex head or ENGINEER-approved equal.
2. Nuts: ASTM A194-92a, Type 316 Stainless Steel, Grade 8M or ENGINEER-approved equal.

E. Gaskets:

1. EPDM, 3/16-inch thick, full face 50-70 Durometer, Shore A Scale or ENGINEER-approved equal.

F. Butt Joints
1. Butt and wrap, resin bonded, PS 15-69, with pressure rating equal to the pipe.

G. Adhesive
1. Pipe manufacturer's standard.

2.02 DUCTWORK

A. Design Requirements
1. Conform to all listed standards.
2. Duct manufacturer's design for round and rectangular sections, including duct wall thickness and stiffeners (if required).
3 Consider expansion from ambient temperature variations.

B. Service Conditions
1. Odorous air collection, 100 ppm H2S maximum, 750 ppm NH3 maximum, 100 ppb maximum mercaptans, and 100 ppb organic sulfides maximum, in an air stream saturated with water vapor.
2. System Maximum Pressure: 14 inches of water column.
3. System Maximum Vacuum: 14 inches of water column.
4. Ambient Temperature: 0 to 110°F.
5. Location: Inside, Outside, Buried.

2.03 FABRICATION

A. Manufacturers
1. Fibercast, Ershigs, A. 0. Smith, Bondstrand, or ENGINEER-approved equal.

B. Mechanical Properties
1. Meet or exceed requirements of PS 15-69.
2. Squareness of ends, fittings, elbows, and butt joints shall meet or exceed requirements of PS 15-69.

C. Jointing Method
1. Shop fabricated assemblies should be provided to the maximum extent possible, to minimize the number of field joints.
2. Flanged joints shall be provided at each damper and item of equipment to facilitate disassembly, at each change in material, and where indicated on the drawings.
3. Field butt joints shall be made at locations at least 12 inches from any increasing or decreasing cross-section of duct where the duct to be jointed has the same diameter. Internal overlay shall be provided for butt joints in duct 20 inches or greater in diameter.
4. All bolts, nuts, washers and gaskets required for all connections of the ductwork system, including connections to equipment, shall be provided as specified herein.

D. Supports
1. Type: As shown on the Drawings.
2. Maximum Duct deflection: 1/2-inch at 110°F, including special sections at road crossings.
3. Support Spacing:
   a. 24-Inch Diameter and Larger: 20 feet, maximum.
   b. 20-Inch Diameter and Smaller: 15 feet, maximum.
4. At all supports, provide bearing plates or collars. Collar attachment shall be sufficient to resist all forces imposed by thermal expansion/contraction and/or duct weight, where applicable.

DRAFT

E. Isolation Dampers
   1. Butterfly type.
   2. Dampers shall be fiberglass reinforced plastic (FRP) body and disc with resin and valve construction suitable of operating in the service conditions above. When used in airflow control for system balancing, the valve shall be equipped with a shaft seal and full circumferential blade stop. When used for isolating a system with low leakage, the valve shall be equipped with a shaft seal, blade seal, and full circumferential blade stop.
   3. Damper End Connections:
      a. 12 inches and larger: Flanged, faced and drilled PS 15-69, Table 5, 25 psig design pressure, to match connecting ductwork.
      b. 10 inches and smaller: Fabricated into the duct section without the use of companion flanges.
   4. Construction: Dampers shall be of the single blade type complete with channel type frame. Dampers denoted for balancing service shall be equipped with a blade stop. Dampers denoted for isolation service shall be equipped with full circumference blade seal, angle type blade stop, and shaft seal.
   5. Dampers shall have a maximum leakage rate of 3 cubic feet per minute per square foot of damper area at minimum pressure rating.
   6. Damper operators shall be manually operated type in accordance with these Specifications. Provide chainwheel operators where required in these Specifications.
   7. Manufacturer shall be Belco or ENGINEER-approved equal.

F. FRP Ductwork Expansion Joints:
   1. Expansion joints shall be furnished and installed at the locations indicated on the drawings and at the other locations required for proper installation and operation of the system as recommended by the FRP duct manufacturer. Expansion joints shall be resistant to ultraviolet light and be suitable for the service conditions shown.
   2. Expansion joints shall be flange or slip on type. Flange type expansion joints shall have split Stainless Steel retaining rings with drilling pattern to match those shown in the FRP fittings requirements. Slip on type shall have Stainless Steel bands
   3. Expansion joints shall be designed to compress one inch and to elongate one inch with a maximum force to cause movement of 100 pounds or less. The joints shall also allow lateral deflections of up to one inch.

PART 3 – EXECUTION

3.01 INSTALLATION OF PIPE AND FITTINGS

A. General: In accordance with manufacturer's recommendations and these Specifications, whichever is more stringent.

B. Pipe and fittings shall be of the sizes indicated. Clean pipe interior of all foreign matter before installing. Pipe shall be square cut with fine tooth saw or other cutter or knife designed for use with plastic pipe. Remove burrs by smoothing edges with a knife, file, or sandpaper. Replace any section of pipe found to be defective or damaged with new acceptable pipe. Handle pipe carefully to prevent gouging or scratching. Any length of pipe have a gouge, scratch, or other permanent indentation more than 10 percent of the wall thickness in depth shall be rejected.

3.02 PREPARATION

A. Verify dimensions and conditions in the field.

B. Lay out routing in straight lines parallel to building lines.

C. Coordinate support locations with layout and joints.

DRAFT

D. All duct diameters shown on the drawings are inside diameters.

3.03 INSTALLATION

A. Duct shall be installed as specified and as indicated on the Drawings. All necessary provisions shall be taken in the fabrication and installation of ductwork to provide for expansion and contraction.

B. The ductwork shall be supported as indicated on the Drawings and in accordance with the requirements of the duct supports section.

C. The inside of duct, fittings, and transitions shall be smooth, clean, and free from blisters, when installed.

D. Adhesive Bonded Joints

1. All joints preparation, cutting, and jointing operations shall comply with the duct manufacturer's recommendations. Newly assembled joints shall be suitably blocked or restrained to prevent movement during the recommended curing period.

E. Flanged Joints

1. Flange bolts shall be tightened sufficiently to slightly compress the gasket and make a good seal, but not so tight as to distort the flanges. A flat washer, Type 316 stainless steel, shall be installed under each nut and bolt head.

F. Butt Joints

1. Butt joints shall be made in accordance with the manufacturer's recommendations and as specified herein. Twenty inch and larger duct shall be overlaid both inside (when accessible) and outside. Eighteen inch and smaller duct shall be overlaid on the outside only. The minimum width of the overlay shall be as specified in the following table. Inside overlaps shall be made to seal the joint but shall not be considered in meeting the strength requirements.

Pipe Size (in.)	Minimum Total-Width of Overlay (in.)
18-20	14
24-42	18

2. Finished joints shall be built up in successive layers, shall be as strong as the pieces being joined, and shall be as crevice-free as is commercially practicable, in accordance with ASTM D2563. The width of the first layer shall be at least 4 inches. Successive layers shall increase uniformly to provide the specified minimum total width of overlay which shall be centered on the joint. Crevices between jointed pieces shall be filled with resin, leaving a smooth inner surface. The interior of joints shall also be sealed by covering with not less than 0.100 inch of liner of the same material as the duct.
3. The inner surface shall be free of cracks and crazing, with a smooth finish, and with an average of not more than two pits per square foot, providing the pits are less than 1/8 inch in diameter, not more than 1/32 inch deep, and covered with sufficient resin to avoid exposure of inner surface fabric. Some waviness is permissible as long as the surface is smooth and free of pits. This surface may be reinforced with glass surfacing mat, synthetic fibers, or other material as usage requires.

3.04 FIELD TESTING

A. The DESIGN/BUILDER shall perform air balancing and testing of the complete odor control system in accordance with the requirements of these Specifications. Testing and balancing shall be performed with the odor control system in operation.

END OF SECTION

DRAFT

SECTION 33 0561 – CONCRETE MANHOLES

PART 1 – GENERAL

1.01 SUMMARY

A. Section Includes: Manholes for sanitary sewer system assemblies.

1.02 REFERENCES

A. Soils Report: This work shall conform to the requirements of the latest Geotechnical Evaluation.

B. American National Standards Institute (ANSI)

C. AASHTO: American Association of State Highway and Transportation Officials Standard Specification for Highway Bridges

D. American Society for Testing and Materials (ASTM):

A48	Gray Iron Castings
A193	Alloy Steel and Stainless Steel Bolting Materials for High-Temperature Service.
A615	Standard Specification for Deformed and Plain Billet-Steel Bars for Concrete Reinforcement
C14	Concrete Sewer, Storm Drain, and Culvert Pipe.
C387	Packaged, Dry, Combined Materials for Mortar and Concrete.
C478	Precast Reinforced Concrete Manhole Sections.

1.03 SUBMITTALS

A. Submittals shall be furnished in accordance with Section 01 3300 – Submittal Procedures.

B. Shop Drawings:
1. Submit drawing of each manhole with plan and sections showing manhole dimensions and actual installation.
2. Submit testing plan, documentation methods, and proposed schedule.

PART 2 – PRODUCTS

2.01 MANHOLES

A. Manhole Bases: The base of all manholes shall be either cast-in-place concrete or precast concrete, except for manholes housing air and vacuum release valve assemblies.
1. Precast concrete bases shall have the base slab integral with the sidewalls. The base slab shall be 6 inches minimum thickness with No. 4 reinforcement steel bars at 8 inches on centers each way in the center of the slab. The base reinforcement steel shall be tied to the wall steel.
2. Bases for manholes housing air and vacuum release valve assemblies shall consist of a drain gravel base and precast or cast-in-place concrete ring foundation.

B. Precast Manhole Sections: Precast manhole sections conforming to ASTM C478 shall be either 48-inch, 60-inch, 72-inch, or 84-inch internal diameter with 5-inch minimum walls or as otherwise shown for special purposes. The top and bottom of all sections shall be parallel.

C. Eccentric Sections: Eccentric cones shall be provided for all manholes except as otherwise shown on the Drawings. Cones shall have the same wall thickness and reinforcement as the precast manhole section.

D. Manhole Grade Rings:
1. Manhole grade rings for extensions shall be a maximum 6 inches high. Extensions will be limited to 15 inches.

DRAFT

2. Finish grade for solid covers shall be ½-inch below flush in concrete or asphalt concrete paved areas, and 6 inches above finish grade in unpaved areas, except flush where gated covers are specified.
3. Grade rings shall have anchor bolt holes for bolt-down frames and covers.
4. Finish installation in accordance with MAG standard Detail 420-2

E. Factory Testing: Prior to delivery of precast manhole sections, yard tests shall be conducted at the point of manufacture. Precast sections to be tested shall be selected at random from stockpiled material to be supplied for the job. All test specimens shall be mat tested, and shall meet the permeability test requirements of ASTM C14.

F. Joints of Manhole Sections: Tongue-and-groove type sealed with either mortar or preformed plastic joint material.
1. Mortar: Standard premixed mortar conforming to ASTM C387 or proportion 1 part portland cement to 2 parts clean, well-graded sand which will pass a 1/8-inch screen. Admixtures may be used not exceeding the following percentages of weight of cement: Hydrated lime, 10 percent; diatomaceous earth or other inert materials, 5 percent. Consistency of mortar shall be such that it will readily adhere to the manhole section if using the standard tongue-and-groove type joint. Mortar mixed for longer than 30 minutes shall not be used.
2. Preformed Plastic Gaskets: Preformed plastic gaskets may be used in lieu of mortar type joints.
   a. Manufacturers:
      1) Kent-Seal No. 2, Hamilton Kent Manufacturing Company, Box 178, Kent, OH 44240;
      2) Ram-Nek, K. T. Snyder Company, Inc., Central National Bank Building, Houston, TX 77002;
      3) or ENGINEER-approved equal, meeting all requirements of Federal Specification SS-S-00210.

G. Pipe connections to manholes shall be as specified by the pipe manufacturer. Inlet and outlet pipes shall extend through the walls of the structures for a sufficient distance beyond the outside surface to allow for connections, but shall be cut off flush with the wall on the inside surface. For concrete structures, the mortar shall be placed around these pipes so as to form a tight, neat connection.

H. Manhole frames and covers shall be cast iron as detailed on the Drawings and elsewhere in these Specifications and Contract Documents.

1. Use castings for frames, grates, rings, and covers conforming to ASTM A48, Class 35B. Provide locking covers if indicated on Drawings.

2. Use clean castings capable of withstanding application of AASHTO M306 - 40,000-pound proof loading without detrimental permanent deformation.

3. Fabricate castings to conform to shapes, dimensions, and with wording or logos shown on Drawings. Standard dimensions for manhole covers are 32 inches in diameter.

4. Cast iron castings shall be tough, close-grained gray iron, sound, smooth, clean, free from blisters, blowholes, shrinkage, cold shuts, and all defects, and shall conform to ASTM A48, Class 30B. Plane or grind bearing surfaces to ensure flat, true surfaces.

5. Bolt-down covers shall be used on all electrical vaults and where indicated on Drawings.

DRAFT

6. Capscrews and washers shall be Type 316 stainless steel conforming to ASTM A193. Countersink bolt holes in cover so that the top of the capscrews are below the top plane of the cover. Frames for bolt-down covers shall be supplied with four ¾-inch-diameter Type 316 stainless steel anchor bolts, nuts, and washer as detailed on the Drawings.

7. Nominal inside opening of the frame shall be 24 inches, unless noted otherwise. Provide a blind pick hole or lifting lug in the cover. Do not provide lifting rings or vent holes in covers unless specifically required.

2.02 CLEANOUTS

A. Covers shall be true and seat within frame at all points.

B. Cleanout frames and covers shall be Pinkerton Foundry No. A-469 or D&L Supply No. H-8024, or ENGINEER-approved equal.

PART 3 – EXECUTION

3.01 INSTALLATION

A. Manholes:
1. Concrete Base: Vibrate to densify poured in-place concrete and screed so that the first precast manhole section to be placed has a level, uniform bearing for the full circumference.
2. Deposit sufficient mortar on base to assure watertight seal between base and manhole wall or place the first precast section of manhole in concrete base before concrete has set. First section shall be properly located and plumb.
3. Carefully inspect precast manhole sections to be joined. Sections with chips or cracks in the tongue shall not be used. Clean ends of sections before assembly. Align manhole steps vertically.
4. Joints with preformed plastic gaskets shall be installed in strict conformance with the manufacturer's recommendations. Only pipe primer furnished by the gasket manufacturer will be approved.
5. For mortar joints, thoroughly wet joint with water prior to placing mortar. Place mortar on groove of lower section. Set next section in place. Fill joint completely with mortar of the proper consistency. Trowel interior and exterior surfaces smooth on standard tongue-and-groove joints. Prevent mortar from drying out, and cure by applying an approved curing compound or comparable approved method. Chip out and replace all cracked or defective mortar.

B. Construct manhole inverts with smooth transitions to ensure an unobstructed flow through manhole. Remove all sharp edges or rough sections which tend to obstruct flow. Do not lay pipe through manholes. Trowel all mortar surfaces smooth.

C. Install frames and covers. Frames shall be set in a bed of mortar with the mortar carried over the flange of the ring. Install bolt-down manholes as shown or as recommended by manufacturer. Provide a minimum of one 6-inch-high grade ring under the frame and cover. Extend anchor bolts through the grade ring to the frame. Hook the anchor bolt under the grade ring.

D. Manholes shall be tested as required by these Specifications and Contract Documents.

3.02 CLEANOUTS AND VAULTS

A. Construct in accordance with details as indicated on the Drawings.

DRAFT

3.03 CLEANING

A. Construction debris and other foreign matter shall be removed to the satisfaction of the ENGINEER.

B. Install cover drain pipe to minimum 12” x 12” x 12” drain rock approximately 10 feet from manhole on down slope.

C. Install top of manholes at 6 inches above finish grade or surface. Install surveyor markings to establish finish grade.

3.04 TESTING OF MANHOLES

A. All sewer manholes shall be hydrostatically tested for leakage after installation, but prior to being backfilled. Prior to hydrostatic testing, all manholes shall be visually inspected for leaks. All leaks or cracks shall be repaired, prior to hydrostatic testing, to the satisfaction of the ENGINEER. All pipes entering the manhole shall be sealed at a point outside the manhole walls so as to include testing of the pipe/manhole joints. The manhole shall be filled with water to a level 2 inches below the top of the frame. Safety lines shall be secured to all plugs utilized. After a period of at least one hour to allow the water level to stabilize, the manhole shall be refilled and the water level shall be checked. The water level shall again be checked after a period of 4 hours. If the water level is reduced by more than ¼-inch, the leakage shall be considered excessive, the required repairs shall be made and the manhole retested. The exterior of the manhole shall be inspected during this period for visible evidence of leakage. Visible moisture, sweating, or beads of water on the exterior of the manhole shall not be considered leakage, but any water running across the surface will be considered leakage and shall be repaired to the satisfaction of the ENGINEER regardless of the volume of water lost.

END OF SECTION

DRAFT

SECTION 40 0500.13 – COMMON WORK RESULTS FOR PROCESS PIPING

PART 1 – GENERAL

1.01 THE REQUIREMENT

A. Provide all piping systems indicated, complete and operable, in accordance with these Specifications and Contract Documents.

B. The mechanical drawings define the general layout, configuration, routing, method of support, pipe size and pipe type. The mechanical drawings are not pipe construction or fabrication drawings. Details for construction shall be developed as necessary to construct all mechanical piping systems, to accommodate the specific equipment provided, and to provide all spools, spacers, adapters, and connectors for a complete and functional system.

C. American Iron and Steel (AIS) requirement applies to this Section. All iron and steel products used in this project must be produced in the United States.

1.02 SUBMITTALS

A. Submittals shall be furnished in accordance with Section 01 3300 – Submittal Procedures.

B. Shop Drawings shall contain the following information:

1. Drawings: Layout drawings including all necessary dimensions, details, pipe joints, fittings, specials, bolts and nuts, gaskets, valves, appurtenances, anchors, guides, and material lists. Fabrication drawings shall indicate all spool pieces, spacers, adapters, connectors, fittings and supports to accommodate the equipment and valves in a complete and functional system.

C. Certifications: All necessary certificates, test reports, and affidavits of compliance shall be obtained.

PART 2 – PRODUCTS

2.01 GENERAL

A. Extent of Work: Pipes, fittings and appurtenances shall be provided in accordance with the requirements of these Specifications and as indicated.

B. Pipe Supports: Pipes shall be adequately supported, restrained, and anchored in accordance with these Specifications, and as indicated.

C. Lining: Application, thickness and curing of pipe lining shall be in accordance with these Specifications, unless otherwise indicated.

D. Coating: Application, thickness and curing of pipe coating shall be in accordance with these Specifications, unless otherwise indicated. Pipes above ground or in structures shall be field-coated in accordance these Specifications.

E. Pressure Rating: Piping systems shall be designed for the maximum expected pressure as defined in accordance with these Specifications, or as indicated on the Piping Schedule.

F. Inspection: Pipe shall be subject to inspection at the place of manufacture. During the manufacture of the pipe, the ENGINEER shall be given access to all areas where manufacturing is in progress and shall be permitted to make all inspections necessary to confirm compliance with requirements.

DRAFT

G. Tests: Except where otherwise indicated, materials used in the manufacture of the pipe shall be tested in accordance with the applicable specifications and standards. Welds shall be tested as indicated.

H. Welding Requirements: Welding procedures used to fabricate pipe shall be prequalified under the provisions of ANSI/AWS D1.1 - Structural Welding Code. Welding procedures shall be reviewed for longitudinal and girth or spiral welds for pipe cylinders, spigot, and bell ring attachments, reinforcing plates and ring flange welds, and plates for lug connections.

I. Welder Qualifications: Welding shall be done by skilled welders and welding operators who have had adequate experience in the methods and materials to be used. Welders shall be qualified under the provisions of ANSI/AWS D1.1 by an independent local, approved testing agency not more than 6 months prior to commencing work on the pipeline. Machines and electrodes similar to those used in the WORK shall be used in qualification tests. Qualification testing of welders and materials used during testing are part of the WORK.

2.02 PIPE FLANGES

A. General: Flanges shall have flat faces and shall be attached with bolt holes straddling the vertical axis of the pipe unless otherwise indicated. Attachment of the flanges to the pipe shall conform to the applicable requirements of ANSI/AWWA C207. Flange faces shall be perpendicular to the axis of the adjoining pipe. Flanges for miscellaneous small pipes shall be in accordance with the standards indicated for these pipes.

B. Pressure Ratings:
   1. 150 psi or less: Flanges shall conform to either ANSI/AWWA C207 - Steel Pipe Flanges for Waterworks Service--Sizes 4-inch. Through 144-inch, Class D, or ANSI/ASME B16.5 - Pipe Flanges and Flanged Fittings, 150-lb class.
   2. 150 psi to 275 psi: Flanges shall conform to either ANSI/AWWA C207 Class E or Class F, or ANSI/ASME B16.5 150-lb class.
   3. 275 psi to 700 psi: Flanges shall conform to ANSI/ASME B16.5, 300-lb class.
   4. Selection based on test pressure: AWWA flanges shall not be exposed to test pressures greater than 125 percent of rated capacity. For higher test pressures, the next higher rated AWWA flange or an ANSI-rated flange shall be selected.

C. Blind Flanges: Blind flanges shall be in accordance with ANSI/AWWA C207, or as indicated for miscellaneous small pipes.

D. Flange Coating: Machined faces of metal blind flanges and pipe flanges shall be coated with a temporary rust-inhibitive coating to protect the metal until the installation is completed.

E. Flange Bolts: Bolts and nuts shall conform to these Specifications. Bolts and nuts shall be installed with anti-seize per Loctite, or ENGINEER-approved equal (or thread locker to be confirmed with WWTP Operations). Studs and bolts shall extend through the nuts a minimum of ¼-inch. All-thread studs shall be used on all valve flange connections, where space restrictions preclude the use of regular bolts.

F. Insulating Flanges: Insulated flanges shall have bolt holes ¼-inch diameter greater than the bolt diameter.

G. Insulating Flange Sets: Insulating flange sets shall be provided where indicated or as needed. Each insulating flange set shall consist of an insulating gasket, insulating sleeves and washers and a steel washer. Insulating sleeves and washers shall be one piece when flange bolt diameter is 1½-inch or smaller and shall be made of acetal resin. For bolt diameters larger than 1½-inch, insulating sleeves and washers shall be 2-piece

DRAFT

and shall be made of polyethylene or phenolic material. Steel washers shall be in accordance with ASTM A325 - Structural Bolts, Steel, Heat Treated, 120/105 ksi Minimum Tensile Strength. Insulating gaskets shall be full-face.

H. Flange Gaskets:
   1. Gaskets for flanged joints used in general water and wastewater service shall be full-faced type, with material and thickness in accordance with ANSI/AWWA C207. Blind flanges shall have gaskets covering the entire inside face of the blind flange and shall be cemented to the blind flange. Ring gaskets shall not be permitted, unless otherwise indicated.
   2. Gaskets for flanged joints used in chemicals, air, solvents, hydrocarbons, steam, chlorine, and other fluids shall be made of materials compatible with the service, pressure, and temperature.

2.03 THREADED INSULATING CONNECTIONS

A. General: Threaded insulating bushings, unions, or couplings, as appropriate, shall be used for joining threaded pipes of dissimilar metals and for piping systems where corrosion control and cathodic protection are involved.

B. Materials: Threaded insulating connections shall be of nylon, Teflon, polycarbonate, polyethylene, or other non-conductive materials, and shall have ratings and properties to suit the service and loading conditions.

2.04 MECHANICAL-TYPE COUPLINGS (GROOVED OR BANDED PIPE)

A. General: Cast mechanical-type couplings shall be provided where indicated. The couplings shall conform to the requirements of ANSI/AWWA C606 - Grooved and Shouldered Joints. Bolts and nuts shall conform to the requirements of these Specifications. Gaskets for mechanical-type couplings shall be compatible with the piping service and fluid utilized, in accordance with the coupling manufacturer's recommendations. The wall thickness of grooved piping shall conform with the coupling manufacturer's recommendations to suit the highest expected pressure. To avoid stress on equipment, equipment connections with mechanical-type couplings shall have rigid-grooved couplings or flexible type coupling with harness in sizes where rigid couplings are not available, unless thrust restraint is provided by other means. Mechanical-type couplings shall be bonded. The Subcontractor shall have the coupling manufacturer's service representative verify the correct choice and application of couplings and gaskets, and the workmanship, to assure a correct installation. To assure uniform and compatible piping components, all grooved fittings, couplings, and valves shall be from the same manufacturer.

2.05 SLEEVE-TYPE COUPLINGS

A. Construction: Sleeve-type couplings shall be provided where indicated, in accordance with ANSI/AWWA C219 - Standard for Bolted Sleeve-Type Couplings for Plain-End Pipe. Couplings shall be steel with steel bolts, without pipe stop. Couplings shall be of sizes to fit the pipe and fittings indicated. The middle ring shall be not less than ¼-inch thick or at least the same wall thickness as the pipe to which the coupling is connected. If the strength of the middle ring material is less than the strength of the pipe material, the thickness of the middle ring shall be increased to have the same strength as the pipe. The coupling shall be either 5 or 7 inches long for sizes up to and including 30 inches and 10 inches long for sizes greater than 30 inches, for standard steel couplings, and 16 inches long for long-sleeve couplings. The followers shall be single-piece contoured mill sections welded and cold-expanded as required for the middle rings, and of sufficient strength to accommodate the number of bolts necessary to obtain adequate gasket pressures without excessive rolling. The shape of the follower shall be of such

design as to provide positive confinement of the gasket. Bolts and nuts shall conform to the requirements of these Specifications. Buried sleeve-type couplings shall be epoxy-coated at the factory as indicated.

B. Pipe Preparation: Where indicated, the ends of the pipe shall be prepared for flexible steel couplings. Plain ends for use with couplings shall be smooth and round for a distance of 12 inches from the ends of the pipe, with outside diameter not more than 1/64-inch smaller than the nominal outside diameter of the pipe. The middle ring shall be tested by cold-expanding a minimum of one percent beyond the yield point, to proof-test the weld to the strength of the parent metal. The weld of the middle ring shall be subjected to air test for porosity.

C. Gaskets:
   1. Gaskets for sleeve-type couplings shall be rubber-compound material that will not deteriorate from age or exposure to air under normal storage or use conditions. Gaskets for wastewater and sewerage applications shall be Buna "N," Grade 60, or ENGINEER-approved equivalent suitable elastomer. The rubber in the gasket shall meet the following specifications:
      a. Color: Jet Black
      b. Surface: Non-blooming
      c. Durometer Hardness: 74 plus and minus 5
      d. Tensile Strength: 1000 psi Minimum
      e. Elongation: 175 percent Minimum
   2. The gaskets shall be immune to attack by impurities normally found in water or wastewater. All gaskets shall meet the requirements of ASTM D2000 - Classification System for Rubber Products in Automotive Applications, AA709Z, meeting Suffix B13 Grade 3, except as noted above. Where sleeve couplings are used in water containing chloramine or other fluids, which attack rubber materials, gasket material shall be compatible with the piping service and fluid utilized.

D. Insulating Couplings: Where insulating couplings are required, both ends of the coupling shall have a wedge-shaped gasket which assembles over a rubber sleeve of an insulating compound in order to obtain insulation of all coupling metal parts from the pipe.

E. Restrained Joints: Sleeve-type couplings on pressure lines shall be harnessed unless thrust restraint is provided by other means. Harnesses shall be designed by the pipe manufacturer in accordance with AWWA Manual M11, or as indicated. Harness sets shall be designed for the maximum test pressure of the pipe in which they are installed. Where harness sets are installed near the suction and discharge of the pump, harness bolts shall have zero elongation to prevent misalignment of the pump imparted by the thrust within the piping system.

2.06 DISMANTLING JOINTS

A. General: Dismantling joints shall be provided where indicated, and provide up to 5” of longitudinal adjustment and up to 2 degrees of misalignment in flanged piping systems. The flange spool shall meet the requirements of AWWA Class D Ring Flange, compatible with ANSI Class 125 and 150 bolt circles. The end and body ring shall meet the requirements of ASTM A536 ductile iron meeting or exceeding Grade 65-45-12 for 3” to 12” sizes and ASTM A36 Carbon Steel with AWWA C207 Class D flanges for 14” to 72” sizes. Dismantling joints shall be provided with gaskets compounded for water and sewer service in accordance with ASTM D2000. Dismantling joints shall have a fusion bonded epoxy coating. Bolts and nuts (including tie-rods) shall conform to these Specifications. Dismantling joints shall be per Romac Industries, or ENGINEER-approved equal.

2.07 EXPANSION JOINTS

A. Piping subject to expansion and contraction shall be provided with sufficient means to compensate for such movement without exertion of undue forces to equipment or structures. This may be accomplished with expansion loops, bellow-type expansion joints or sliding-type expansion joints. Expansion joints shall be of stainless steel, monel, rubber, or other materials best suited for each individual service.

2.08 PIPE THREADS

A. Pipe threads shall be in accordance with ANSI/ASME B1.20.1 - Pipe Threads, General Purpose (inch), and be made up with Teflon tape or chemical sealant unless otherwise indicated.

2.09 PIPE INSULATION

A. Pipe thermal insulation for exterior freeze protection shall be self-sealing, flexible, tubular polyolefin/ polyethylene foam insulation. The insulation shall have a low thermal conductivity (not to exceed 0.04 W/mK) and shall have a service temperature range between -330°F and 120°F. Minimum thickness shall be 1 inch. Insulation shall be acceptable for use with heat tracing/ heat tape.

B. Where called out in the Contract Documents, heat tape shall be provided for freeze protection. Heat tape shall be wrap-type cable with built-in thermostat for automatic heat control and energy efficiency. It shall be used in conjunction with foam insulation. The low wattage design shall utilize a 120-volt power with outlet plug. Heat tape shall be manufactured by Wrap-On Co., Inc., or ENGINEER-approved equal.

C. Where called out in the Contract Documents, Pipe insulation for personnel protection against high temperature shall be provided. Protective insulation shall be fiber glass bonded with a thermosetting resin with a jacket designed to protect personnel again accidental contact with hot pipes. The insulation shall be designed to be used on systems operating up to 1000°F. Minimum thickness shall be 1 inch.

2.10 GENERAL

A. Pipes, fittings, and appurtenances shall be installed in accordance with these Specifications.

B. Lined Piping Systems: The lining manufacturer shall take full responsibility for the complete, final product and its application. Pipe ends and joints of lined pipes at screwed flanges shall be epoxy-coated to assure continuous protection.

C. Core Drilling: Where core drilling is required for pipes passing through existing concrete, core drilling locations shall be determined by radiograph of concrete construction to avoid damage to embedded raceways and reinforcing bars.

D. Cleanup: After completion of the WORK, cuttings, joining and wrapping materials, and other scattered debris shall be removed from the Site. The entire piping system shall be handed over in a clean and functional condition.

PART 3 – EXECUTION

3.01 INSTALLATION OF PIPE

A. Piping shall be installed in accordance with manufacturers' recommendation and these Specifications.

END OF SECTION

DRAFT

SECTION 40 0519 – DUCTILE IRON PIPE

PART 1 – GENERAL

1.01 DESCRIPTION

A. Furnish and install all ductile iron pipe and fittings in accordance with this section.

1.02 REFERENCES

A. Standards of the following agencies are referenced herein: American National Standards Institute (ANSI), American Society for Testing and Materials (ASTM), American Water Works Association (AWWA), Ductile Iron Pipe Research Association (DIPRA).

B. Referenced standards shall be the latest revision.

In case of conflict with referenced standards, the provisions of this section shall prevail.

1.03 SUBMITTALS

A. In accordance with Section 01 3300 – Submittal Procedures.

B. Catalog data sheets naming each product to be used identified by manufacturer and type number and additional documentation as required to demonstrate full compliance with this specification.

PART 2 – MATERIALS

2.01 DUCTILE IRON PIPE

A. Pipe shall conform to the following standards as applicable:
1. AWWA C104: Cement-Mortar Lining for Ductile-Iron Pipe and Fittings for Water.
2. AWWA C111: Rubber-Gasket Joints for Ductile-Iron Pressure Pipe and Fittings
3. AWWA C115: Flanges Ductile-Iron Pipe with Threaded Flanges
4. AWWA C150: Thickness Design of Ductile-Iron Pipe
5. AWWA C151: Ductile-Iron Pipe, Centrifugally Cast, for Water of Other Liquids
6. AWWA C606: Grooved and Shouldered Joints

B. Pipe wall thickness for push-on joint and mechanical joint pipe shall be Pressure Class 350 psi minimum, or as indicated in the Contract Documents.

C. Unless otherwise noted or required, all pipe shall have a cement mortar lining with asphaltic seal coat.

Nominal Pipe Diameter (inches)	Minimum Lining Thickness (inches)
3 - 12	$^1/_8$
14 - 24	$^3/_{16}$
30 - 54	$^1/_4$

2.02 FITTINGS AND SPECIALS

A. Fittings and specials shall be ductile iron and shall conform to the following standards as applicable:
1. AWWA C104: Cement-Mortar Lining for Ductile-Iron Pipe and Fittings for Water.
2. AWWA C110: Ductile-Iron and Gray Iron Fittings, 3 inches through 48 inches, for Water and Other Liquids.
3. AWWA C111: Rubber-Gasket Joints for Ductile-Iron Pressure Pipe and Fittings.
4. AWWA C153: Ductile-Iron Compact Fittings, 3 inches through 24 inches and 54 inches through 64 inches for Water Service.

DRAFT

5. AWWA C606: Grooved and Shouldered Joints.

B. Unless otherwise noted or required, either standard or compact fittings may be used.

C. Unless otherwise noted, all fittings shall have a cement mortar lining with asphaltic seal coat.

D. Grooved and flanged fittings shall have center to end dimensions in accordance with AWWA C111, wall thickness in accordance with AWWA C153, and shall be Class 350 minimum, or as indicated in the Contract Documents.

2.03 GROOVED JOINT COUPLINGS

A. In accordance with ASSA C606, except as modified herein.

B. Coupling body shall be ductile iron, ASTM A536

C. All bolts and nuts shall be 316 stainless steel conforming to ASTM A193, Grade B8M, for bolts and ASTM A194, Grade 8M, for nuts.

2.04 TYPE OF JOINTS

A. Buried joints shall be push-on, mechanical joint, or flexible grooved joint unless otherwise shown or required for installation.

B. Exposed joints shall be flanged or rigid grooved unless otherwise shown or required for the installation.

2.05 RESTRAINED PUSH-ON JOINTS

A. Where specified, called for on the drawings, or otherwise required for thrust restraint, push-on joints shall be Flex-Ring as manufactured by American Ductile Iron Pipe, TR Flex as manufactured by US Pipe, or ENGINEER-approved equal. Restrained joint shall provide for joint deflection after assembly.

2.06 RESTRAINED MECHANICAL JOINTS

A. Where specified, called for on the drawings or otherwise required fro thrust restraint, mechanical joints shall be made using retainer glands with set screws or clamping lugs. Retainer glands shall be as manufactured by EBAA Iron; Tyler Pipe, or ENGINEER-approved equal.

2.07 FLANGE GASKETS

A. Full face or ring, except that ring gaskets shall be used for sizes 14-inch and greater. Gaskets shall be 1/8-inch thick synthetic rubber for test pressures up to 250 psi. For test pressures greater than 250 psi, provide suitable gasket as recommended by manufacturer.

2.08 FASTENERS EXCEPT GROOVED COUPLINGS

A. 316 stainless steel conforming to ASTM A193, Grade B8M, for bolts and ASTM A194, Grade 8M, for nuts. Bolts and nuts shall be installed with anti-seize per Loctite, or ENGINEER-approved equal (or thread locker to be confirmed with WWTP Operations).

B. Washers, where required, shall be of the same material as the nuts.

2.09 POLYETHYLENE ENCASEMENT

A. Buried pipe and fittings shall be protected by polyethylene encasement in accordance with AWWA C105.

2.10 GLASS LINING

A. Where specified or called for on the drawings, ductile iron pipe shall be glass-lined.

DRAFT

B. Glass lining shall consist of vitreous and inorganic material applied to the internal surfaces of pipe and fittings that have been prepared by blasting. The items shall be exposed to an appropriate maturing temperature (above 1400°F), at which point the vitreous and inorganic material fuses to the base metal, forming an integral molecular bond with the base metal. Subsequent coatings will be processed in a similar manner, forcing an integral molecular bond with the base coast. The entire coating shall be a minimum of 10 mils thick.

C. Lining shall have a hardness of 5 to 6 on the Mohs scale and a density of 2.5-3.0 g/cm³ measured by ASTM D792. The glass lining shall be capable of withstanding a thermal shock of 350°F without crazing, blistering, or spalling. It shall be resistant to corrosion between pH 3 and pH 10 at 125°F.

D. There shall be no visible loss of surface gloss on the lining after immersing a production run sample in an 8% sulfuric acid solution at 125°F for 15 minutes. When tested according to ASTM C283, it shall show a weight loss of not more than 3 mg/in².

E. Provide continuous coverage as tested by a low voltage wet sponge holiday detector. Only isolated voids due to casting anomalies and representing less than 0.1% of the total glassed surface shall be permitted.

F. Glass lining shall be Ferrock MEH-32 as provided by Fast Fabricators/Water Works Manufacturing, Vitco, or ENGINEER-approved equal.

2.11 Direct Tap

A. Ductile iron pipe shall have a minimum wall thickness allowed by ANSI/AWWA C151/A21.51.

B. The maximum direct tap sizes for 3 though 24-inch ductile iron pipe shall be per the following table.

Sizes (in)	Pressure Class				
	150	200	250	300	350
	Maximum Direct Tap Size (in)				
3	-	-	-	-	3/4
4	-	-	-	-	3/4
6	-	-	-	-	1
8	-	-	-	-	1
10	-	-	-	-	1
12	-	-	-	-	1 ¼
14	-	-	1 ¼	1 ½	1 ½
16	-	-	1 ½	2	2
18	-	-	2	2	2
20	-	-	2	2	2
24	-	2	2	2	2

DRAFT

C. All classes of ductile iron pipe 24 inches or larger in diameter can be direct tapped for 2-inch corporation stop.

PART 3 – EXECUTION

3.01 INSTALLATION OF PIPE

A. Handling and Storage: All pipe, fittings, etc., shall be carefully handled and protected against damage, impact shocks, and free fall. All pipe handling equipment shall be acceptable to the ENGINEER. Pipe shall not be placed directly on rough ground but shall be supported in a manner that will protect the pipe against injury whenever stored at the trench site or elsewhere. No pipe shall be installed where the lining or coating show defects that may be harmful as determined by the ENGINEER. Such damaged lining or coating shall be repaired, or a new undamaged pipe shall be furnished and installed.

B. All pipe that is damaged prior to Substantial Completion shall be repaired or replaced.

C. Inspect each pipe and fitting prior to installation to ensure that there are no damaged portions of the pipe.

D. Before placement of pipe in the trench, each pipe or fitting shall be thoroughly cleaned of any foreign substance, which may have collected thereon, and shall be kept clean at all times thereafter. For this purpose, the openings of all pipes and fittings in the trench shall be closed during any interruption to the WORK.

E. Pipe Laying: The pipe shall be installed in accordance with ANSI/AWWA C600.

F. Pipe shall be laid directly on the bedding material. No blocking will be permitted, and the bedding shall be such that it forms a continuous, solid bearing for the full length of the pipe. Excavations shall be made as needed to facilitate removal of handling devices after the pipe is laid. Bell holes shall be formed at the ends of the pipe to prevent point loading at the bells or couplings. Excavation shall be made as needed outside the normal trench section at field joints to permit adequate access to the joints for field connection operations and for application of coating on field joints.

G. Each section of pipes 24 inches in diameter and larger shall be laid in the order and position shown on the laying schedule. In laying pipe, it shall be laid to the setline and grade, within approximately one inch plus or minus. On grades of zero slopes, the intent is to lay to grade.

H. Where necessary to raise or lower the pipe due to unforeseen obstructions or other causes, the ENGINEER may change the alignment and/or the grades. Such change shall be made by the deflection of joints, by the use of bevel adapters, or by the use of additional fittings. However, in no case shall the deflection in the joint exceed the maximum deflection recommended by the pipe manufacturer. No joint shall be misfit any amount that will be detrimental to the strength and water tightness of the finished joint.

I. Except for short runs that may be permitted by the ENGINEER, pipes shall be laid uphill on grades exceeding 10%. Pipe that is laid on a downhill grade shall be blocked and held in place until sufficient support is furnished by the following pipe to prevent movement. All bends shall be properly installed as shown.

J. Shallow buried pipes and pipes underneath structures shall be concrete encased where noted in the Contract Documents.

K. Cold Weather Protection: No pipe shall be installed upon a foundation into which frost has penetrated or at any time that there is a danger of the formation of ice or penetration of frost at the bottom of the excavation. No pipe shall be laid unless it can be established that the trench will be backfilled before the formation of ice and frost occurs.

DRAFT

L. Pipe and Specials Protection: The openings of all pipe and specials shall be protected with suitable bulkheads to prevent unauthorized access by persons, animals, water, or any undesirable substance. At all times, means shall be provided to prevent the pipe from floating.

M. Pipe Cleanup: As pipe laying progresses, the pipe interior shall be kept free of all debris. Completely clean the interior of the pipe of all sand, dirt, mortar splatter and any other debris following completion of pipe laying, pointing of joints and any necessary interior repairs prior to testing and disinfecting the completed pipeline.

3.02 RUBBER GASKETED JOINTS

A. Rubber Gasketed Joints: Immediately before jointing pipe, the bell end of the pipe shall be thoroughly cleaned, and a clean rubber gasket lubricated with an approved vegetable-based lubricant shall be placed in the bell groove. The spigot end of the pipe shall be carefully cleaned and lubricated with a vegetable-based lubricant. The spigot end of the pipe section shall then be inserted into the bell of the previously laid joint and telescoped into its proper position. Tilting of the pipe to insert the spigot into the bell will not be permitted.

3.03 INSTALLATION OF PIPE APPURTENANCES

A. Protection of Appurtenances: Where the joining pipe is tape-coated, buried appurtenances shall be coated with cold-applied tape in accordance with ANSI/AWWA C209, Type II. Where pipe is encased in polyethylene sleeves, buried appurtenances shall also be encased in polyethylene.

B. Installation of Valves: All valves shall be handled in a manner to prevent any injury or damage to any part of the valve. All joints shall be thoroughly cleaned and prepared prior to installation. Adjust all stem packing and operate each valve prior to installation to insure proper operation.

C. All valves shall be installed so that the valve stems are plumb and, in the location, shown.

END OF SECTION

DRAFT

SECTION 40 0523 – STAINLESS STEEL PROCESS PIPE AND TUBING

PART 1 – GENERAL

1.01 THE REQUIREMENT

A. Furnish all materials, tools, equipment, transportation, labor, supervision, and incidentals required to supply, store, install, clean, and test the shop fabricated stainless steel pipe and fittings as shown on the drawings and as specified herein.

1.02 QUALIFICATIONS

A. All shop fabricated stainless steel pipe and fitting shall be furnished by a single manufacturer who is experienced, reputable, and qualified in the manufacture and fabrication of the items to be furnished. The pipe and fittings shall be shop fabricated and field installed in accordance with common industry wide practices and methods and shall comply with these specifications. Pipe and fittings shall be as manufactured and fabricated by Douglas Brothers, Portland, Maine or approved equal.

1.03 SUBMITTALS

A. Submit for review and approval piping layouts, schedules, shop fabrication drawings, specifications, catalog cuts and other data necessary to show conformance of the complete piping systems to the specifications. The submittal shall include dimensions, fittings, locations of equipment, valves, and appurtenances, joint locations and details, types and locations of supports, coordination with all other work and existing conditions, and all other pertinent technical specifications for the piping systems to be furnished.

B. Shop fabrication drawings shall show alloys, diameters, pipe wall thicknesses, flanges and other joint preparation details, dimensions, fittings and other appurtenances to be supplied.

PART 2 – PRODUCTS

2.01 PIPE AND FITTINGS

A. Pipe shall be manufactured from ASTM A240 annealed and pickled sheets and plates in accordance with ASTM A778 in type (304L and 316L) stainless steel. Pipe shall be manufactured to nominal pipe sizes as listed in ANSI B36.19, and shall have the following nominal wall thicknesses.

Pipe Size *(inches)*	Outside Diameter *(inches)*	Identification			Wall Thickness *- t - (inches)*	Inside Diameter *- d - (inches)*
		Steel		Stainless Steel Schedule No.		
		Iron Pipe Size	Schedule No.			
1/8	0.405	. STD XS	. 40 80	10S 40S 80S	.049 .068 .095	.307 .269 .215
1/4	0.540	. STD XS	. 40 80	10S 40S 80S	.065 .088 .119	.410 .364 .302
3/8	0.675	. STD XS	. 40 80	10S 40S 80S	.065 .091 .126	.545 .493 .423

DRAFT

Pipe Size *(inches)*	Outside Diameter *(inches)*	Identification			Wall Thickness *- t - (inches)*	Inside Diameter *- d - (inches)*
		Steel		Stainless Steel Schedule No.		
		Iron Pipe Size	Schedule No.			
1/2	0.840	. . STD XS . XXS	. . 40 80 160 .	5S 10S 40S 80S . .	.065 .083 .109 .147 .187 .294	.710 .674 .622 .546 .466 .252
3/4	1.050	. . STD XS . XXS	. . 40 80 160 .	5S 10S 40S 80S . .	.065 .083 .113 .154 .219 .308	.920 .884 .824 .742 .612 .434
1	1.315	. . STD XS . XXS	. . 40 80 160 .	5S 10S 40S 80S . .	.065 .109 .133 .179 .250 .358	1.185 1.097 1.049 .957 .815 .599
1 1/4	1.660	. . STD XS . XXS	. . 40 80 160 .	5S 10S 40S 80S . .	.065 .109 .140 .191 .250 .382	1.530 1.442 1.380 1.278 1.160 .896
1 1/2	1.900	. . STD XS . XXS	. . 40 80 160 .	5S 10S 40S 80S . .	.065 .109 .145 .200 .281 .400	1.770 1.682 1.610 1.500 1.338 1.100
2	2.375	. . STD XS . XXS	. . 40 80 160 .	5S 10S 40S 80S . .	.065 .109 .154 .218 .344 .436	2.245 2.157 2.067 1.939 1.687 1.503
2 1/2	2.875	. . STD XS . XXS	. . 40 80 160 .	5S 10S 40S 80S . .	.083 .120 .203 .276 .375 .552	2.709 2.635 2.469 2.323 2.125 1.771

DRAFT

Pipe Size *(inches)*	Outside Diameter *(inches)*	Identification			Wall Thickness *- t - (inches)*	Inside Diameter *- d - (inches)*
		Steel		Stainless Steel Schedule No.		
		Iron Pipe Size	Schedule No.			
3	3.500	. . STD XS . XXS	. . 40 80 160 .	5S 10S 40S 80S . .	.083 .120 .216 .300 .438 .600	3.334 3.260 3.068 2.900 2.624 2.300
3 1/2	4.000	. . STD XS	. . 40 80	5S 10S 40S 80S	.083 .120 .226 .318	3.834 3.760 3.548 3.364
4	4.500	. . STD XS . . XXS	. . 40 80 120 160 .	5S 10S 40S 80S . . .	.083 .120 .237 .337 .438 .531 .674	4.334 4.260 4.026 3.826 3.624 3.438 3.152
5	5.563	. . STD XS . . XXS	. . 40 80 120 160 .	5S 10S 40S 80S . . .	.109 .134 .258 .375 .500 .625 .750	5.345 5.295 5.047 4.813 4.563 4.313 4.063
6	6.625	. . STD XS . . XXS	. . 40 80 120 160 .	5S 10S 40S 80S . . .	.109 .134 .280 .432 .562 .718 .864	6.407 6.357 6.065 5.761 5.501 5.187 4.897
8	8.625	. . . . STD . XS . . . XXS .	. . 20 30 40 60 80 100 120 140 . 160	5S 10S . . 40S . 80S	.109 .148 .250 .277 .322 .406 .500 .594 .719 .812 .875 .906	8.407 8.329 8.125 8.071 7.981 7.813 7.625 7.437 7.187 7.001 6.875 6.813
10	10.750	.	.	5S	.134	10.482

DRAFT

Pipe Size *(inches)*	Outside Diameter *(inches)*	Identification			Wall Thickness *- t - (inches)*	Inside Diameter *- d - (inches)*
		Steel		Stainless Steel Schedule No.		
		Iron Pipe Size	Schedule No.			
		.	.	10S	.165	10.420
		.	20	.	.250	10.250
		.	30	.	.307	10.136
		STD	40	40S	.365	10.020
		XS	60	80S	.500	9.750
		.	80	.	.594	9.562
		.	100	.	.719	9.312
		.	120	.	.844	9.062
		.	140	.	1.000	8.750
		.	160	.	1.125	8.500
		.	.	5S	.156	12.438
		.	.	10S	.180	12.390
		.	20	.	.250	12.250
		.	30	.	.330	12.090
		STD	.	40S	.375	12.000
		.	40	.	.406	11.938
12	12.75	XS	.	80S	.500	11.750
		.	60	.	.562	11.626
		.	80	.	.688	11.374
		.	100	.	.844	11.062
		.	120	.	1.000	10.750
		.	140	.	1.125	10.500
		.	160	.	1.312	10.126
		.	.	5S	156	13.688
		.	.	10S	.188	13.624
		.	10	.	.250	13.500
		.	20	.	.312	13.376
		STD	30	.	.375	13.250
		.	40	.	.438	13.124
14	14.00	XS	.	.	.500	13.000
		.	60	.	.594	12.812
		.	80	.	.750	12.500
		.	100	.	.938	12.124
		.	120	.	1.094	11.812
		.	140	.	1.250	11.500
		.	160	.	1.406	11.188
		.	.	5S	.165	15.670
		.	.	10S	.188	15.624
		.	10	.	.250	15.500
		.	20	.	.312	15.376
		STD	30	.	.375	15.250
		XS	40	.	.500	15.000
16	16.00	.	60	.	.656	14.688
		.	80	.	.844	14.312
		.	100	.	1.031	13.938
		.	120	.	1.219	13.562
		.	140	.	1.438	13.124
		.	160	.	1.594	12.812
		.	.	5S	.165	17.670
		.	.	10S	.188	17.624
18	18.00	.	10	.	.250	17.500
		.	20	.	.312	17.376

DRAFT

Pipe Size *(inches)*	Outside Diameter *(inches)*	Identification			Wall Thickness *- t - (inches)*	Inside Diameter *- d - (inches)*
		Steel		Stainless Steel Schedule No.		
		Iron Pipe Size	Schedule No.			
		STD	.	.	.375	17.250
		.	30	.	.438	17.124
		XS	.	.	.500	17.000
		.	40	.	.562	16.876
		.	60	.	.750	16.500
		.	80	.	.938	16.124
		.	100	.	1.156	15.688
		.	120	.	1.375	15.250
		.	140	.	1.562	14.876
		.	160	.	1.781	14.438
20	20.00	.	.	5S	.188	19.624
		.	.	10S	.218	19.564
		.	10	.	.250	19.500
		STD	20	.	.375	19.250
		XS	30	.	.500	19.000
		.	40	.	.594	18.812
		.	60	.	.812	18.376
		.	80	.	1.031	17.938
		.	100	.	1.281	17.438
		.	120	.	1.500	17.000
		.	140	.	1.750	16.500
		.	160	.	1.969	16.062
22	22.00	.	.	5S	.188	21.624
		.	.	10S	.218	21.564
		.	10	.	.250	21.500
		STD	20	.	.375	21.250
		XS	30	.	.500	21.000
		.	60	.	.875	20.250
		.	80	.	1.125	19.75
		.	100	.	1.375	19.25
		.	120	.	1.625	18.75
		.	140	.	1.875	18.25
		.	160	.	2.125	17.75
24	24.00	.	.	5S	.218	23.564
		.	10	10S	.250	23.500
		STD	20	.	.375	23.250
		XS	.	.	.500	23.000
		.	30	.	.562	22.876
		.	40	.	.688	22.624
		.	60	.	.969	22.062
		.	80	.	1.219	21.562
		.	100	.	1.531	20.938
		.	120	.	1.812	20.376
		.	140	.	2.062	19.876
		.	160	.	2.344	19.312
26	26.00	.	10	.	.312	25.376
		STD	.	.	.375	25.250
		XS	20	.	.500	25.000
28	28.00	.	10	.	.312	27.376
		STD	.	.	.375	27.250
		XS	20	.	.500	27.000

DRAFT

Pipe Size *(inches)*	Outside Diameter *(inches)*	Identification			Wall Thickness *- t - (inches)*	Inside Diameter *- d - (inches)*
		Steel		Stainless Steel Schedule No.		
		Iron Pipe Size	Schedule No.			
		.	30	.	.625	26.750
30	30.00	. . STD XS .	. 10 . 20 30	5S 10S . . .	.250 .312 .375 .500 .625	29.500 29.376 29.250 29.000 28.750
32	32.00	. STD XS . .	10 . 20 30 40	. . . . .	.312 .375 .500 .625 .688	31.376 31.250 31.000 30.750 30.624
34	34.00	. STD XS . .	10 . 20 30 40	. . . . .	.344 .375 .500 .625 .688	33.312 33.250 33.000 32.750 32.624
36	36.00	. STD XS . .	10 . 20 30 40	. . . . .	.312 .375 .500 .625 .750	35.376 35.250 35.000 34.750 34.500
42	42.00	STD XS . .	. 20 30 40	. . . .	.375 .500 .625 .750	41.250 41.000 40.720 40.500

1. Standard wall - STD
2. Extra strong wall - XS
3. Double extra strong wall - XXS

B. Fittings shall be butt weld type manufactured in accordance with ASTM A774 of the same raw material and in the same thicknesses as the pipe. Long radius elbows up to 24 inches diameter shall be smoothflow; i.e., centerline to end of elbow equals 1.5 times the nominal pipe size. All short radius, special radius, and reducing elbows and long radius elbows greater than 24 inches diameter shall be of mitered construction with at least five (5) miter sections for 90 degree bends, three (3) mitered sections for 45- to 60-degree bends, and two (2) mitered sections for 30-degree and smaller bends. Reducers shall be straight tapered, cone type. Tees, crosses, laterals and wyes shall be shop fabricated from pipe.

C. The finish on the raw material, manufactured to ASTM A240 will be No. 1, HRAP (hot rolled annealed and pickled) or better. The finish on the completed pipe and fittings shall be as specified in ASTM A778 and A774, respectively.

DRAFT

2.02 FLANGES

A. Flanged pipe ends shall be made up of type (304L or 316L) stainless steel slip-on type rolled angle face rings drilled to ANSI 16.1 class 125 standard. The angle face ring thickness shall be equal to or greater than the wall of the pipe or fitting to which it is welded and it shall be continuously welded on both sides to the pipe or fitting. The angle leg shall not interfere with the flange bolt holes.

2.03 COUPLINGS

A. The piping will be shop prepared for pipe couplings where shown on the drawings or specified herein.
   1. Sleeve type couplings shall be of standard steel construction. Pipe shall be plain end with external weld beads ground smooth to insure proper gasket seating. For pressure pipe lines, sleeve coupling joints will be restrained by the use of harness rods connecting across the joint to flange lugs on adjacent flange joints. Where no adjacent flange joints exist, stainless steel harness lugs shall be welded to the pipe to receive the harness rods. All sleeve couplings, flange lugs, harness rods and hardware shall be provided.
   2. Arched band type couplings shall be stainless steel of equal of superior alloy and wall thickness as the pipe and will be Depend-O-Lok type as manufactured by Brico or equal. Couplings will be Fixed – FxF, Expansion – ExE, of Fixed by Expansion – FxE as noted on the drawings or as required. The pipe shall be plain end with external weld beads ground smooth and with S.S. restraining rings shop welded to the piping for fixed type couplings.
   3. Split type couplings shall be malleable iron or ductile iron. Gaskets shall be suitable for the service conditions. The pipe ends shall be roll grooved to the coupling manufacturers specifications. Where roll grooving is impractical, the pipe shall have heavy wall machine grooved pipe nipples or machined ring collars fully welded to the pipe or fitting. Nipples shall be taper or bored to the I.D. of the adjoining pipe to allow full weld penetration. Collars shall be welded on both sides to the piping.
   4. Expansion couplings shall be the flanged rubber arch type. Pipe flanges shall be provided for these couplings where shown on the drawing.

2.04 THREADED CONNECTIONS

A. Threaded pipe, gauge or instrument connections shall be made using stainless steel 150-pound threaded half couplings conforming to ASTM A182 or ASTM A276, shop welded to the pipe at the locations shown on the drawings.

2.05 JOINTS

A. Flanges shall be provided as a minimum at all flanged valves, meters, couplings, and other equipment. Couplings will be provided as shown on the drawings.

B. Pipe and fitting spools shall be shop fabricated to the fullest extent possible in 40’0” maximum lengths with 7’6” maximum widths for efficient commercial transport to the project site. Spools with fitting may exceed 40 ft so long as length allows commercial transport. Smaller pipe spools shall be provided with joints as shown on the drawings for special handling, installation and/or disassembly requirements.

C. All other joints required for shipping, handling and installation of the piping spools shall be (filed welds, flange joints, sleeve couplings, band couplings, or split couplings.)

2.06 BOLTING

A. The CONTRACTOR shall supply and install flange bolting.

DRAFT

PART 3 – EXECUTION

3.01 GENERAL

A. Welding of pipe spools shall be performed using welders and procedures qualified in accordance with ASME Section IX. Piping with wall thicknesses up to and including 11-gauge (0.125”) shall be welded with the TIG (GTAW) process. Heavier walls shall be beveled according to procedure, root pas welded with TIG (GTAW), and have subsequent weld passes performed using the TIG (GTAW), or Metallic Arc (SMAW) process. Filler metal of equal or superior ELC grades only shall be added to all welds to provide a cross section at the weld equal to or greater than the parent metal. Weld deposit shall be smooth and evenly distributed, weld reinforcement shall be as follows:

Wall Thickness	**Weld Reinforcement (Max)**	
	I.D.	O.D.
Up to 12 Ga. (0.109”)	1/16”	3/32”
11 Ga. (0.125”) to 3.16” Pl.	3/32”	1/8”
1/4” Plate & Larger	1/8”	3/16”

Concavity, undercut, cracks or crevices shall not be allowed. Butt welds shall have full penetration to the interior surface, and inert argon gas shielding shall be provided to the interior and exterior of the joint. Angle face rings shall be continuously welded on both sides to pipe or fitting. Exterior welds, such as the back side of face rings or flanges and structural attachments, may be welded by the MIG (GMAW) or Metallic Arc (SMAW) process; however, care must be taken to avoid melting through to the interior surface on very light walls. Excessive weld deposits, slag, splatter and projections shall be removed by grinding. Welds on gasket surfaces shall be ground smooth.

B. Spools shall be fabricated to the “Pipe Fabrication Institute” fabricating tolerances ES-3 (1981).

C. After shop fabrication into pip spools, exterior welds shall be manually scrubbed or brushed win non-metallic pads or stainless-steel wire brushes to remove weld discoloration, rinsed with clean water and allowed to air dry.

D. All fabricated piping shall have opening plugged and flanges secured for storage and/or transport after fabrication. All fabricated piping shall be piece marked with identifying number or codes which correspond to the layout and installation drawings. The marks will be located on the spools at opposite ends and 180 degrees apart.

E. Use extreme care to avoid the contact of any ferrous materials with the stainless-steel piping. All saws, drills, files, wire brushes, etc. shall be uses for stainless steel piping only. Pipe storage and fabrication racks shall be non-ferrous or stainless steel or rubber lined. Nylon slings or straps or ally chains or cable shall be used for handling stainless steel piping. After installation, wash and rinse all foreign matter from the piping surface. If rusting of embedded iron occurs, pickle the affected surface with Oakite Deoxidizer SS or ENGINEER-approved equal, scrub with stainless steel brushes, and rinse clean.

F. After installation, paint all steel or iron flange, couplings and appurtenances. Painting of the stainless steel is not required. Supply and install the stainless-steel piping with a consistently clean surface. Identifying spool piece marks shall be removed with paint thinner or solvents and the entire stainless-steel surface shall be washed with detergent and rinsed clean. Final marking of the pipeline will be in accordance with these Specifications

G. After installation, the piping system shall be tested according to these Specifications.

END OF SECTION

DRAFT

SECTION 40 0524 – STEEL PROCESS PIPING

PART 1 – GENERAL

1.01 THE REQUIREMENT

A. Provide steel pipe and appurtenances, complete and in place, in accordance with the Contract Documents.

PART 2 – PRODUCTS

2.01 PIPE MATERIAL

A. Water, Air, Fuel Gas, Oil, Steam, and Waste Service: Unless otherwise indicated, galvanized and black steel pipe shall conform to ASTM A53 – Specification for Pipe, Steel, Black and Hot-Dipped, Zinc-Coated Welded and Seamless or ASTM A106 – Specification for Seamless Carbon Steel Pipe for High Temperature Service, Grade B, and shall be Schedule 10, 20, 40 or 80, as indicated in the Plans. Galvanized steel pipe shall not be cement mortar lined unless so indicated.

2.02 PIPE JOINTS

A. Black steel pipe for general service shall have screwed ends with NPT threads, welded joints, or flanged joints. Screwed joints shall be made up with Teflon tape and welded joints may have butt-weld fittings, socket-weld fittings, or flanges. Where indicated, black steel pipe shall have grooved ends for shouldered couplings or plain ends for sleeve-type couplings.

B. Black steel pipe for chlorine or sulfur dioxide pressure service shall be socket-welded except where required to match mating fittings of vacuum regulator-check units, gas filters, valves, diaphragm units, gauges, and switches.

C. Galvanized steel pipe shall have screwed ends with NPT threads made up with Teflon tape. Where indicated, galvanized steel pipe shall have grooved ends for shouldered couplings or plain ends for sleeve-type couplings.

D. Where pressure conditions permit, black and galvanized steel pipe may have push-on joints for compression type fittings. For high-pressure service these joints shall be harnessed.

2.03 FITTINGS

A. Common Use: The following fittings shall be provided for galvanized or black steel pipe, as indicated in the Piping Schedule:

1. Pipe Fittings shall conform to ASTM A234/ A234M – Standard Specificaitons for Piping Fittings of Wrought Carbon Steel and Alloy Steel for Moderate and High Temperature Service.
2. Threaded malleable iron fittings conforming to ANSI/ASME B16.3 - Malleable-Iron Threaded Fittings, Classes 150 and 300.
3. Threaded cast iron fittings conforming to ANSI/ASME B16.4 - Cast Iron Threaded Fittings, Class 125 and 250.
4. Forged steel socket welded fittings conforming to ANSI/ASME B16.11 - Forged Fittings, Socket - Welding and Threaded.
5. Butt welding fittings conforming to ANSI/ASME B16.9 - Factory-Made Wrought Steel Butt Welding Fittings, Schedule 10, 20, 40, 80, as indicated.
6. Threaded cast iron drainage fittings conforming to ANSI/ASME 16.12 - Cast Iron Threaded Drainage Fittings.
7. Flanged cast iron fittings conforming to ANSI/ASME B16.1 - Cast Iron Pipe Flanges and Flanged Fittings, Class 25, 125, 250 and 800.

DRAFT

8. Flanged steel fittings conforming to ANSI/ASME B 16.5 - Pipe Flanges and Flanged Fittings, Steel Nickel Alloy and Other Special Alloys.
9. Grooved ductile iron fittings with grooving dimensions conforming to ANSI/AWWA C606 - Joints, Grooved and Shouldered Type.
10. Compression-type steel fittings with armored Buna S gaskets for plain end pipe.

PART 3 – EXECUTION

3.01 INSTALLATION

A. General: All steel pipes shall be installed in a neat and workmanlike manner, properly aligned, and cut from measurements taken at the site, to avoid interferences with structural members, architectural features, openings, and equipment. Exposed pipes shall afford maximum headroom and access to equipment, and where necessary, all piping shall be installed with sufficient slopes for venting or drainage of liquids and condensate to low points.

B. Supports and Anchors: All piping shall be firmly supported with fabricated or commercial hangers or supports in accordance with these Specifications. Where necessary to avoid stress on equipment or structural members, the pipes shall be anchored or harnessed. Expansion joints and guides shall compensate for pipe expansion due to temperature differences.

C. Valves and Unions: Water, steam, condensate, gas, vacuum, and air supply piping to fixtures, groups of fixtures, and equipment shall be provided with a shutoff valve and union, unless the valve has flanged ends. Low points in water systems and drip legs in steam, gas, and air systems shall have drainage valves. Unions shall be provided at threaded valves, equipment and other devices requiring occasional removal or disconnection.

D. Branch Connections: Branch connections in horizontal runs of air and gas piping shall be made from the top of the pipe, to avoid drainage of condensate into the equipment.

3.02 PIPE PREPARATION

A. Prior to installation, each pipe length shall be carefully inspected, be flushed clean of any debris or dust and be straightened if not true. Ends of threaded pipes shall be reamed and filed smooth. All pipe fittings shall be equally cleaned before assemblage.

3.03 PIPE JOINTS

A. Threaded Joints: Pipe threads shall conform to ANSI/ASME B1.20.1 - Pipe Threads, General Purpose (inch), and shall be full and cleanly cut with sharp dies. Not more than three threads shall remain exposed after installation.

B. Welded Joints: Welded joints shall conform to the specifications and recommendations of ANSI/ASME B31.1 - Power Piping. All welding shall be done by skilled and qualified welders in accordance with these Specifications.

C. Grooved Joints: Grooves for grooved couplings and fittings shall be made with specially designed grooving tools to the Manufacturer's recommendations and conform to ANSI/AWWA C606. All grooves shall be clean and sharp without flaws, and the pipe ends shall be accurately cut at 90 degrees to the pipe axis.

D. Push on Joints: Push on joints and gasket installation shall be in accordance with the Manufacturer's recommendations and lubricants. Pipe ends shall be beveled to facilitate assembly. Lubricants shall be suitable for potable water service and shall be kept clean in closed containers.

DRAFT

3.04 INSPECTION AND FIELD TESTING

A. Inspection: All finished installations shall be carefully inspected for proper supports, anchoring, interferences and damage to pipe, fittings and coating. Any damage shall be repaired.

B. Field Testing: Prior to enclosure or burying, all piping systems shall be pressure tested as required in these Specifications, for a period of not less than one hour, without exceeding the tolerances listed. Where no pressures are indicated, the pipes shall be subject to 1-1/2 times the maximum working pressure. All test equipment, labor, materials and devices shall be furnished at no extra cost. For additional testing requirements, refer to applicable Sections of Division 33 – Utilities.

1. Leakage may be determined by loss of pressure, soap solution, chemical indicator, or other positive and accurate method. All fixtures, devices or other accessories which are to be connected to the lines and which would be damaged if subjected to the test pressure shall be disconnected and ends of the branch lines plugged or capped as required during the testing procedures.
2. All leaks shall be repaired and the system shall be re-tested until no leaks are found.

END OF SECTION

DRAFT

SECTION 40 0531 – PLASTIC PROCESS PIPING

PART 1 – GENERAL

1.01 THE REQUIREMENT

A. Furnish and install polyvinyl chloride, chlorinated polyvinyl chloride, polyethylene, and polypropylene pipe and fittings in accordance with the Contract Documents.

1.02 PIPE DESIGNATIONS:

A. The following plastic pipe designations are defined:

Designation	Definition
PVC	Polyvinyl Chloride
CPVC	Chlorinated polyvinyl chloride
PE	Polyethylene
PP	Polyproylene

1.03 SUBMITTALS

A. Submittals shall be furnished in accordance with Section 01 3300 – Submittals.

B. Submit materials list and catalogue data sheets naming each product to be used identified by manufacturer and type number.

1.04 QUALITY ASSURANCE REFERENCES

A. This section contains references to some or all of the following ASTM documents, most recent edition. They are a part of this section as specified and modified. In case of conflict between the requirements of this section and those of the listed documents, the requirements of this section shall prevail.

ASTM	Title
D1248	Polyethylene Plastics Molding and Extrusion Materials
D1784	Rigid Polyvinyl Chloride (PVC) Compounds and Chlorinated Poly Vinyl Chloride (CPVC) Compounds
D1785	Polyvinyl Chloride (PVC) Plastic Pipe, Schedules 40, 80, and 120
D2241	Polyvinyl Chloride (PVC) Pressure-Rated Pipe (SDR series)
D2464	Threaded Polyvinyl Chloride (PVC) Plastic Pipe Fittings, Schedule 80
D2466	Polyvinyl Chloride (PVC) Plastic Pipe Fittings, Schedule 40
D2467	Socket-Type Polyvinyl Chloride (PVC) Plastic Pipe Fittings, Schedule 80
D2564	Solvent Cements for Polyvinyl Chloride (PVC) Plastic Pipe and Fittings
D3034	Type PSM Polyvinyl Chloride (PVC) Sewer Pipe and Fittings
D4101	Propylene Plastic Injection and Extrusion Materials
F402	Practice for Safe Handling of Solvent Cements and Primers used for Joining Thermoplastic Pipe and Fittings
F437	Threaded Chlorinated Polyvinyl Chloride (CPVC) Plastic Pipe Fittings, Schedule 80
F438	Socket-Type Chlorinated Polyvinyl Chloride (CPVC) Plastic Pipe Fittings, Schedule 40
F439	Socket-Type Chlorinated Polyvinyl Chloride (CPVC) Plastic Pipe Fittings, Schedule 80
F441	Chlorinated Polyvinyl Chloride (CPVC) Plastic Pipe, Schedules 40 and 80
F477	Elastomeric Seals (Gaskets) for Joining Plastic Pipe
F493	Solvent Cements for Chlorinated Polyvinyl Chloride (CPVC) Plastic Pipe and Fittings

DRAFT

PART 2 – PRODUCTS

2.01 PVC PIPE

A. General: PVC materials for pipe and fittings shall conform to ASTM D1784, Cell Classification 12454-B. Pipe and fitting materials shall be specially formulated with sufficient UV protection additives to provide for long term outdoor exposure with no deleterious effects. Flanges shall be one-piece solid design or two-part van stone type which utilize the tapered, serrated face and full-face gasket technique for joining and are compatible with ANSIN16.5 Class 150 metal flanges. Unions shall be the O-ring type having interchangeable components with true union valves for maximum system versatility.

B. Schedule 40, 80, and 120: Pipe in accordance with ASTM D1785. Schedule 80 PVC socket type fittings shall conform to ASTM D2467. Schedule 40 PVC fittings shall conform to ASTM D2466. PVC solvent weld cement for socket connections shall meet the requirement of ASTM D2564/ Schedule 80 PVC threaded fittings shall conform to ASTM D2464.

2.02 POLYETHYLENE PIPE

A. Pipe shall meet the requirements of ASTM D3350, NSF14/61, and AWWA C901/C906.

2.03 POLYETHYLENE TUBING

A. Polyethylene tubing shall be extruded from high molecular weight resins and conform with ASTM D148 Type 1, Class A, Category 4, Grade E5. Stress crack resistance shall be per ASTM D1693. Tubing shall have a minimum working pressure of 120 psi. Fittings shall be polyethylene construction, same type as for polypropylene. All connections shall be leak proof.

2.04 POLYPROPYLENE TUBING

A. Polypropylene tubing shall be formulated of polypropylene conforming to ASTM D4101. Tubing shall have a working pressure of 300 psi. Fittings shall be FAST and TITE polypropylene fittings with SST grab ring and viton O-rings. PVC insert fittings and SST hose clamps may only be used as approved by the Engineer. All connections shall be leak proof.

2.05 BRAIDED VINYL TUBING

A. Install clear braided vinyl tubing for diluted polymer solution. A synthetic fiber braid shall be sandwiched between two layers of plasticized PVC. The nominal inside diameter shall be one (1) inch, wall thickness 5/32. Tubing shall be rated for a rated working pressure of 140 psi.

PART 3 – EXECUTION

3.01 INSTALLATION OF PIPE AND FITTINGS

A. General: In accordance with manufacturer's recommendations and these Specifications, whichever is more stringent.

B. Pipe and fittings shall be of the sizes indicated. Clean pipe interior of all foreign matter before installing. Pipe shall be square cut with fine tooth saw or other cutter or knife designed for use with plastic pipe. Remove burrs by smoothing edges with a knife, file, or sandpaper. Replace any section of pipe found to be defective or damaged with new acceptable pipe. Handle pipe carefully to prevent gouging or scratching. Any length of pipe has a gouge, scratch, or other permanent indentation more than 10 percent of the wall thickness in depth shall be rejected.

DRAFT

3.02 INSTALLATION OF SOLVENT WELD JOINT TYPE PIPE

A. In accordance with the recommendations of the pipe manufacturer and the following supplementary requirements:

1. Do not solvent weld joints if it is raining, if atmospheric temperature is below 40°F or above 90°F, if the pipe is exposed to direct sunlight.
2. Test fit dry pipe and fittings before applying cement. Pipe should enter socket without forcing at least one-third but not more than two-thirds the depth of socket. Fittings that are looser or tighter shall not be used. Thoroughly clean and dry the pipe end and socket of fitting with methyl, ethyl, ketone, acetone, or similar cleaner. Apply cement evenly to outside surface and end of pipe and inside surface of socket. Avoid excess application of cement but insure complete coverage of all bonding surfaces. Mark depth of socket on pipe to guide application of cement and insure full insertion of pipe. Insert pipe in socket, twisting pipe or fitting approximately ½ turn as pipe is being seated in socket. Make sure pipe is fully seated providing a bond between end of pipe and shoulder of socket. Immediately wipe excess cement from pipe leaving no more than a 1/8-inch fillet at fitting end. Hold assembled joint in place for approximately 15 seconds and allow to set for 30 minutes before moving. Avoid rough handling for 48 hours. Longer periods may be required in cold or wet weather.

3.03 INSTALLATION OF TUBING

A. Carefully slip tubing inside of PVC conduits without kinking or damaging the tubing. Tubing shall be continuous between boxes and equipment. No joints shall be allowed in conduits. Tubing shall be tested as specified in Section 40 0513 – Common Work Results for Process Piping for 72 hours with no visible leaks.

3.04 TESTING

A. In accordance with these Specifications.

END OF SECTION

DRAFT

SECTION 40 0551 – COMMON WORK RESULTS FOR PROCESS VALVES

PART 1 – GENERAL

1.01 THE REQUIREMENT

A. Furnish and install all valves, actuators, and appurtenances, complete and operable, in accordance with the Contract Documents. These specifications shall not apply to valves, actuators, and appurtenances to be provided by process equipment vendors as part of process systems or equipment already approved by the ENGINEER.

B. The provisions of this Section shall apply to all valves and valve actuators except where otherwise indicated. Valves and actuators in particular locations may require a combination of units, sensors, limit switches, and controls indicated in other Sections of the Specifications.

C. American Iron and Steel (AIS) requirement applies to this Section. All iron and steel products used in this project must be produced in the United States.

D. Where a valve is to be supported by means other than the piping to which it is attached, the CONTRACTOR shall obtain from the valve manufacturer a design for support and foundation that satisfies the criteria in the applicable Sections of Division 46 – Water and Wastewater Equipment. The design, including drawings and calculations sealed by an engineer, shall be submitted with the Shop Drawings. When the design is approved, the support shall be provided.

E. Unit Responsibility: A single manufacturer shall be made responsible for coordination of design, assembly, testing, and furnishing of each valve; however, the CONTRACTOR shall be responsible for compliance with the requirements of each valve section. Unless indicated otherwise, the responsible manufacturer shall be the manufacturer of the valve.

F. Single Manufacturer: Where two or more valves of the same type and size are required, the valves shall be furnished by the same manufacturer.

1.02 SUBMITTALS

A. General: Submittals shall be furnished in accordance with Section 01 3300 – Submittal Procedures.

B. Shop Drawings: Shop Drawings shall contain the following information:
   1. Valve name, size, Cv factor, pressure rating and identification number (if any).
   2. Complete information on valve actuator, including size, Manufacturer, model number, limit switches, and mounting.
   3. Cavitation limits for all control valves.
   4. Assembly drawings showing part nomenclature, materials, dimensions, weights, and relationships of valve handles, handwheels, position indicators, limit switches, integral control systems, needle valves, and control systems.

C. Technical Manual: The Technical Manual shall contain the required information for each valve.

D. Spare Parts List: A Spare Parts List shall contain the required information for each valve assembly, where indicated.

1.03 QUALITY ASSURANCE

A. Valve manufacturer and model shall be as described in the Drawings or ENGINEER-approved equal.

1.04 SPARE PARTS

DRAFT

A. The CONTRACTOR shall furnish the required spare parts suitably packaged and labeled with the valve name, location, and identification number. The CONTRACTOR shall also furnish the name, address, and telephone number of the nearest distributor for the spare parts of each valve. Spare parts are intended for use by the OWNER after expiration of the correction of defects period.

PART 2 – PRODUCTS

2.01 PRODUCTS

A. General: Valves and gates shall be new and of current manufacture. Shut-off valves 6 inches and larger shall have actuators with position indicators. Buried valves shall be provided with valve boxes and covers containing position indicators and valve extensions. Manual shut-off valves mounted higher than 7 feet above working level shall be provided with chain actuators. Valves with no clear way to determine position shall be provided with position indicators. Stem extensions shall be provided on valves where operation of the valve cannot be easily accomplished from ground level.

B. Valve Actuators: Unless otherwise indicated, valve actuators shall be in accordance with these Specifications.

C. Valve Labeling: A label shall be provided on all shut-off valves and control valves except for hose bibs. The label shall be of 1/16-inch plastic or steel, minimum 2 inches by 4 inches in size and shall by permanently attached to the valve or on the wall adjacent to the valve as directed by the ENGINEER.

D. Valve Testing: As a minimum, unless otherwise indicated or recommended by the ENGINEER, valves 3 inches in diameter and smaller shall be tested in accordance with manufacturer's standard and 4 inches in diameter and larger shall be factory tested as follows:
   1. Hydrostatic Testing: Valve bodies shall be subjected to internal hydrostatic pressure equivalent to twice the water rated pressure of the valve. Metallic valves rating pressures shall be at 100°F and plastic valves shall be 73°F, or at higher temperature according to type of material. During the hydrostatic test, there shall be no leakage through the valve body, end joints, or shaft seals, nor shall any part of the valve be permanently deformed. The duration shall be sufficient time to allow visual examination for leakage. Test duration shall be at least 10 minutes.
   2. Seat Testing: Valves shall be tested for leaks in the closed position with the pressure differential across the seat equal to the water rated pressure of the valve. The duration of test shall be sufficient time to allow visual examination for leakage. Test duration shall be at least 10 minutes. Leakage past the closed valve shall not exceed 1 fluid ounce per hour per inch diameter for metal seated valves and drop-tight for resilient seated valves.
   3. Performance Testing: All valves shall be shop operated from fully closed to fully open position and reverse under no-flow conditions in order to demonstrate the valve assembly operates properly.

E. Valve Marking: Valve bodies shall be permanently marked in accordance with MSS SP25 - Standard Marking Systems for Valves, Fittings, Flanges, and Unions.

DRAFT

2.02 MATERIALS

A. General: Materials shall be suitable for the intended application. Materials not indicated shall be high-grade standard commercial quality, free from defects and imperfections that might affect the serviceability of the product for the purpose for which it is intended. Unless otherwise indicated, valve and actuator bodies shall conform to the following requirements:
   1. Cast Iron: Close-grained gray cast iron, conforming to ASTM A48 - Gray Iron Castings, Class 30, or to ASTM A126 - Gray Iron Castings for Valves, Flanges and Pipe Fittings.
   2. Ductile Iron: ASTM A536 - Ductile Iron Castings, or to ASTM A395 - Ferritic Ductile Iron Pressure-Retaining Castings for Use at Elevated Temperatures.
   3. Steel: ASTM A216 - Steel Castings, Carbon Suitable for Fusion Welding for High-Temperature Service, or to ASTM A515 - Pressure Vessel Plates, Carbon Steel, for Intermediate- and Higher-Temperature Service.
   4. Bronze: ASTM B62 - Composition Bronze or Ounce Metal Castings, and valve stems not subject to dezincification shall conform to ASTM B584 - Copper Alloy Sand Castings for General Applications.
   5. Stainless Steel: Stainless steel valve and operator bodies and trim shall conform to ASTM A351 - Steel Castings, Austenitic, for High-Temperature Service, Grade CF8M, or shall be Type 304 or 316 stainless steel.
   6. PVC: Poly Vinyl Chloride materials for valve body, flanges, and cover shall conform to Cell Classification 12454.
   7. CPVC: Chlorinated Poly Vinyl Chloride materials for valve body, flanges, and cover shall conform to Cell Classification 23447.
   8. NSF Standard 14 and 61: All materials shall be listed for use in contact with potable water, where applicable.

B. Bodies: Valve bodies shall be cast, molded (in the case of plastic valves), forged, or welded of the materials indicated, with smooth interior passages. Wall thicknesses shall be uniform in agreement with the applicable standards for each type of valve, without casting defects, pinholes, or other defects that could weaken the body. Welds on welded bodies shall be done by certified welders and shall be ground smooth. Valve ends shall be as indicated, and be rated for the maximum temperature and pressure to which the valve will be subjected.

C. Bonnets: Valve bonnets shall be clamped, screwed, or flanged to the body and shall be of the same material, temperature, and pressure rating as the body. The bonnets shall have provision for the stem seal with the necessary glands, packing nuts, or yokes. Below grade valves with above grade worm gear drives/handwheels or electric actuators shall include extended bonnets for mating up to the worm gear drives/handwheel or electric actuators.

D. Stems: Valve stems shall be of the materials indicated, or, if not indicated, of the best commercial material for the specific service, with variable stem packing, O-rings, Chevron V-type packing, or other suitable seal. Where subject to dezincification, bronze valve stems shall conform to ASTM B62, containing not more than 5 percent of zinc or more than 2 percent of aluminum, with a minimum tensile strength of 30,000 psi, a minimum yield strength of 14,000 psi, and an elongation of at least 10 percent in 2 inches. Where dezincification is not a problem, bronze conforming to ASTM B584 may be used, except that zinc content shall not exceed 16 percent.

E. Stem Guides: Stem guides shall be provided, spaced 10-feet on centers unless the manufacturer can demonstrate by calculation that a different spacing is acceptable. Submerged stem guides shall be 304 stainless steel.

DRAFT

F. Internal Parts: Internal parts and valve trim shall be as indicated for each individual valve. Where not indicated, valve trim shall be of Type 316 stainless steel or other best suited material.

G. Nuts and Bolts: Nuts and bolts on valve flanges and supports shall be in accordance with these Specifications.

H. Coatings: Valve coatings shall be in accordance with these Specifications, or as recommended by the valve manufacturer.

I. Environment: Submerged valves shall be of stainless-steel construction as recommended by the valve manufacturer or as approved by the ENGINEER.

2.03 VALVE ACCESSORIES

Valves shall be furnished complete with the accessories required to provide a functional system.

PART 3 – EXECUTION

3.01 VALVE INSTALLATION

A. General: Valves, actuating units, stem extensions, valve boxes, and accessories shall be installed in accordance with the Manufacturer's written instructions and as indicated. Gates shall be adequately braced to prevent warpage and bending under the intended use. Valves shall be firmly supported to avoid undue stresses on the pipe.

B. Access: Valves shall be installed with easy access for actuation, removal, and maintenance and to avoid interference between valve actuators and structural members, handrails, or other equipment.

C. Valve Accessories: Where combinations of valves, sensors, switches, and controls are indicated, the CONTRACTOR shall properly assemble and install such items so that systems are compatible and operating properly. The relationship between interrelated items shall be clearly noted on Shop Drawing submittals.

END OF SECTION

DRAFT

SECTION 40 0557 – ACTUATORS FOR PROCESS VALVES AND GATES

PART 1 – GENERAL

1.01 THE REQUIREMENT

A. Provide all valve and gate actuators and appurtenances, complete and operable, in accordance with the Contract Documents.

B. The provisions of this Section shall apply to all valves and gates, except where otherwise indicated in the Contract Documents.

C. Single Manufacturer: Where two or more valve or gate actuators of the same type or size are required, the actuators shall all be produced by the same Manufacturer.

1.02 SUBMITTALS

A. General: Submittals shall be furnished in accordance with Section 01 3300 – Submittal Procedures and these Specifications. The shop drawing shall substantiate compliance with the Contract Documents requirements.

B. Shop Drawings: Shop Drawings of all actuators shall be submitted together with the valve and gate submittals as a complete package.

C. Operation & Maintenance Manuals: Operation and Maintenance Manual shall be furnished in accordance with these Specifications.

PART 2 – PRODUCTS

2.01 GENERAL

A. General: Unless otherwise indicated, all shut-off and throttling valves, and externally actuated valves and gates, shall be provided with manual or power actuators. All actuators shall be complete and operable with mounting hardware, motors, gears, controls, wiring, solenoids, hand wheels, levers, chains, and extensions, as applicable. All actuators shall be capable of holding the valve in any intermediate position between fully open and fully closed without creeping or fluttering.

B. Manufacturers: Where indicated, certain valves and gates may be provided with actuators manufactured by the valve or gate Manufacturer. Where actuators are furnished by different manufacturers, coordinate selection to have the fewest number of manufacturers possible.

C. Materials: All actuators shall be current models of the best commercial quality materials and liberally sized for the maximum expected torque. All materials shall be suitable for the environment in which the valve or gate is to be installed.

D. Mounting: All actuators shall be securely mounted by means of brackets or hardware specially designed and sized for this purpose and of ample strength. The word "open" shall be cast on each valve or actuator with an arrow indicating the direction to open in the counter-clockwise direction. All gear and power actuators shall be equipped with position indicators. Where possible, manual actuators shall be located between 48 and 60 inches above the floor or permanent working platform.

E. Standard: Unless otherwise indicated and where applicable, all actuators shall be in accordance with ANSI/AWWA C540 - AWWA Standard for Power-Actuating Devices for Valves and Sluice Gates.

F. Functionality: Electric, pneumatic, and hydraulic actuators shall be coordinated with the power requirements of these Specifications.

DRAFT

2.02 MANUAL ACTUATORS

A. General: Unless otherwise indicated, all valves and gates shall be furnished with manual actuators. Valves in sizes up to and including 8 inches shall have direct acting lever of the Manufacturer's best standard design. Larger valves and gates shall have gear-assisted manual handwheel actuators, with an operating pull of maximum 60 pounds on the rim of the handwheel. All buried and submerged gear-assisted valves, all gates, all gear-assisted valves for pressures higher than 250 psi, all valves 30 inches in diameter and larger, and where so indicated, shall have worm-gear actuators, hermetically-sealed and grease-packed, where buried or submerged. All other valves 10 inches to 24 inches in diameter may have traveling-nut actuators, worm-gear actuators, spur- or bevel-gear actuators, as appropriate for each valve.

B. Buried Valves: Unless otherwise indicated, all buried valves shall have extension stems (or bonnets where shown on the plans) to grade, with square nuts or floor stands, position indicators, and cast-iron or steel pipe extensions with valve boxes, covers and operating keys. Where so indicated, buried valves shall be in cast-iron, concrete, or similar valve boxes with covers of ample size to allow operation of the valve actuators. Covers of valve boxes shall be permanently labeled as requested by the OWNER, or the ENGINEER. Wrench-nuts shall comply with AWWA C500 - Metal Seated Gate Valves for Water Supply Service, and a minimum of 2 operating keys, or one key per 10 valves, whichever is greater, shall be furnished to the OWNER.

C. Buried and Submerged Actuators: Buried and submerged valve actuators and gear assemblies shall be provided with Type 304 and/or 316 stainless steel bolting and trim, and shall be rated for continuous submerged service. If buried, the valve actuator shall be suitable for a submerged service at a water depth of 10 feet (minimum). If submerged, the actuator shall be suitable for a submerged service at a water depth of 30 feet (minimum).

2.03 ELECTRIC ACTUATORS

A. General: The CONTRACTOR shall verify with the vendor/manufacturer that each electric actuator (supplied and installed) delivers the necessary torque requirements for opening and closing the corresponding valve that it is actuating, and provide supporting documentation to the ENGINEER. Electric actuators shall be suitable as specified on the plans for use on 115VAC, 1-phase, or 480 VAC, 3-phase, 60Hz power supply. The actuator shall include an internal high-torque reversible electric motor, terminal block, heat-treated alloy steel gearing, a minimum of two (2) 1/2" NPT conduit connections, reduction gearing, valve stem drive nut/bushing, position limit switches, mechanical overload torque switches, ductile iron gear case, automatic de-clutchable handwheel, and a two- (2-) year original manufacturer’s warranty. In order to maintain the integrity of the enclosure, setting of the torque levels, position limits and configuration of the indication contacts, etc. shall be carried out without the removal of any actuator covers over an Infrared interface. Sufficient commissioning tools shall be provided with the actuators and must meet the enclosure protection and certification levels of the actuators. Commissioning tools shall not form an integral part of the actuator and must be removable for secure storage/authorized release. In addition, provision shall be made for the protection of configured actuator settings by a means independent of access to the commissioning tool. The actuator shall include a device to ensure that the motor runs with the correct rotation for the required direction of valve travel irrespective of the connection sequence of the power supply.

DRAFT

B. Actuator Sizing: The actuator shall be sized to guarantee valve closure at the specified differential pressure and temperature. The safety margin of motor power available for seating and unseating the valve shall be sufficient to ensure torque switch trip at maximum valve torque with the supply voltage 10% below nominal. For linear operating valves, the operating speed shall be such as to give valve closing and opening at approximately 10-12 inches per minute unless otherwise noted. Actuator manufacturer/vendor shall confirm appropriate opening and closing times for the valve the actuator is operating.

C. Gears: Motor speed reduction shall be by means of a gear train consisting of hardened steel spur gears and self-locking worm and worm gear set. The worm shall be heat treated alloy steel and have worm thread surface rolled or ground. The worm gear shall be bronze. Non-metallic gears in the power train are not acceptable.

D. Environmental: Actuators shall be suitable for indoor and outdoor use. The actuator shall be capable of functioning in an ambient temperature ranging from -33°C (-27°F) to 70°C (158°F), up to 100% relative humidity. Actuators for hazardous area applications shall meet the area classification, gas group and surface temperature requirements specified in data sheet.

E. Rotating Components: All gearing and shafting shall be supported on anti-friction bearings. All thrust components shall be supported by use of tapered roller bearings.

F. Handwheel Drive: The actuator shall be furnished with a handwheel located in a 90-degree plane from the actuator output drive, with a maximum rim pull requirement of 60 pounds for valve travel loads. An external manual declutch lever shall be included to place actuator in the manual mode. The lever shall not require more than a 10-pound force to engage even when the valve has been tightly seated. The lever is to be padlockable in either handwheel or motor mode. Operation by motor shall not cause the handwheel to rotate, or operation of the handwheel shall not cause the motor to rotate. Handwheel shall operate in the clockwise direction to close.

G. Lubrication: All gearing and bearings shall be grease lubricated and suitable for year-round service based on prevailing ambient temperature conditions.

H. Electric Motors: The motor shall an integral part of the actuator, designed specifically for valve actuator applications. It shall be a low inertia high torque design, class F insulated with a class B temperature rise giving a time rating of 15 minutes at 40°C (104°F) at an average load of at least 33% of maximum valve torque. Temperature shall be limited by thermostats embedded in the motor end windings and integrated into its control. Electrical and mechanical disconnection of the motor should be possible without draining the lubricant from the actuator gear case.

I. Motor Protection: Protection shall be provided for the motor as follows:
   1. Stall – the motor shall be de-energized within 8 seconds in the event of a stall when attempting to unseat a jammed valve.
   2. Over temperature – thermostat will cause tripping of the motor. Auto-reset on cooling
   3. Single phasing – lost phase protection.
   4. Direction – phase rotation correction.

J. Limit Switches: Limit switches shall be geared to the drive mechanism and in step with actual valve position at all times, whether operation is by power or manual mode. Switches shall be activated by a rotor type design. Contacts shall be silver and have a rating of 10 amps at 120/230 VAC, a minimum of (3) N.O. and (3) N.C. contacts shall be provided for each direction of travel. Should auxiliary limit switch contacts for intermediate switch positions be required, please specify here. The limit switch gear mechanism shall be enclosed to prevent entrance of foreign matter or wire entanglement. Use of cams or screws to set switches or designs requiring battery back-up methods to ensure position

DRAFT

control in the event of a power failure, are unacceptable. Torque and turns limitation to be adjustable as follows:

1. Position setting range – multi-turn: 2.5 to 100,000 turns, with resolution to 15 deg. of actuator output.
2. Position setting range – direct drive part turn actuators: 90° +/-10°, with resolution to 0.1 deg. of actuator output.
3. Torque setting: 40% to 100% rated torque.

K. Torque Switches: The actuator shall include a variable torque switch to interrupt the motor power circuit when an obstruction is encountered in either direction of travel or when torque seating of valves is required for tight shut off. The torque switch shall have a calibrated dial for adjustment and have means to ensure maximum actuator rating is not exceeded. Contacts shall have the same construction and rating as the limit switch. Mechanical torque springs for load control shall be field replaceable without need of actuator dismantling or removal of the worm assembly. Torque control designs which do not employ mechanical torque springs are unacceptable.

L. Position Indication: Local position indication for quarter turn valves shall be by an indicator dial located on the gear operator and graduated in 25-degree increments. For rising stem multi-turn actuators, a dial window indicator shall be located on the limit switch compartment cover and labeled 0 to 100% open and graduated in 1% increments. Four contacts shall be provided which can be selected to indicate any position of the valve. Provision shall be made for the selection of a normally closed or open contact form. Contacts shall maintain and update position indication during hand wheel operation when all external power to the actuator is isolated. The contacts shall be rated at 5A, 250V AC, 30V DC. As an alternative to providing valve position any of the four above contacts shall be selectable to signal one of the following:

1. Valve opening, closing, or moving
2. Thermostat tripped, lost phase
3. Motor tripped on torque in mid travel, motor stalled
4. Remote selected
5. Actuator being operated by hand wheel
6. Provision shall be made in the design for an additional 4 contacts having the same functionality. Provision shall be made in the design for the addition of a contactless transmitter to give a 4-20mA analogue signal corresponding to valve travel for remote indication when required. The transmitter will auto range to the set limits.

M. Integral Starter and Transformer: The reversing starter, control transformer and local controls shall be integral with the valve actuator suitably housed to prevent breathing and condensation. The starter shall be suitable for 1,200 starts per hour (minimum) and of rating appropriate to motor size. The controls supply transformer shall be fed from two of the incoming three phases and incorporate overload protection. It shall have the necessary tappings and be adequately rated to provide power for the following functions:

1. Energization of the contactor coils.
2. 24V DC output for remote controls.
3. Supply for all the internal electrical circuits.

2.04 ELECTRICAL CONTROLS

A. At a minimum, the actuator shall be furnished with power and control terminal strips, limit switches, torque switches, all housed in a control compartment. The rectangular enclosure shall have a bonded O-ring seal and a hinged cover. Cover bolting shall be captive stainless hex head screws.

B. Controls shall be an integrated modular package, completely wired and be easily removable or replaceable, as a complete package, by removal of four (4) captive screws.

DRAFT

Motor leads and power supply leads will be terminated to the terminal strips located on the modular control package. Power supply terminals (5 points minimum) and control supply terminal (48 points minimum) shall be physically isolated from each other to protect against transient voltages. The terminal strips shall be completely shrouded with a high impact resistant plastic to avoid accidental terminal contact by personnel. The module is to include a snubber circuit to provide control voltage protection for switches and electronic modules for voltage surges. All electrical components of the modular package, such as reversing contactor, transformer, etc., shall be unidirectional plug connected to provide easy removal and replacement without concerns for proper wiring connections. All optional control requirements such as modulating control, 2-wire control, interposing relays, etc. shall be plug-in printed circuit type boards having gold plated contact connectors. Unless otherwise specified, all PC boards must be temperature rated -40°C to +70°C. Ease of replacement or upgrading shall be of paramount consideration.

2.05 OPEN-CLOSE SERVICE CONTROLS

A. Reversing Contactor: Control voltage shall be 120 volts, 50 or 60 Hz. N.O. Seal-in contacts for momentary contact pushbutton control and N.C. contacts for electrical interlock shall be supplied. The following options are available with the integral reversing starter: Motor Overload Relays, Auxiliary Starter Contacts, Phase Sentry.

B. Control Power Transformer: The transformer assembly shall provide 120, 18 and 12 Vac. It shall be epoxy impregnated and encapsulated to prevent moisture incursion and shall be completely wired as an assembly and plug connected to the modular package.

C. Pushbuttons: Each actuator shall be supplied with open-stop-close pushbuttons furnished integrally mounted. Pushbuttons shall be double O-ring sealed and include a protective silicone boot. Seal material shall be resistant to ozone and ultraviolet light. When integrally mounted pushbuttons are specified, the design shall permit operation of the buttons when the electrical enclosure cover is open.

D. Indicating Lights: The actuator shall include two (2) long life high intensity LED type pilot lights to indicate open, closed, and intermediate valve position (both lights on). Red shall indicate valve open and green shall indicate valve closed. An additional LED pilot light shall be furnished to indicate power is on. A fourth optional LED pilot light is available to indicate torque switch trip.

E. Selector Switch: The actuator shall include a 3-position selector switch, for local (hand)-off-remote (auto) control. If specified, the switch shall be padlockable in any position. A tumbler keylock option may be specified.

2.06 ACTUATORS FOR MODULATION DUTY

A. The starter shall be suitable for 1,200 starts per hour.

B. Control Module: For modulating applications, the control module shall be of the electronic solid-state type to control the position of an AC valve operator motor. Provide input/output per Contract Documents, including but not limited to: 4-20 mA analog input position control from PLC; 4-20 mA analog output position indication to PLC; and digital outputs to PLC for motor running, ready mode, remote mode, over torque condition and trouble. Position control shall be within +/- 2 percent of signal position.

Input Signal: The control unit shall be suited to receive an input set-point from an external 4-20 mA DC source or 120 VAC OPEN and CLOSE digital commands to remotely operate the motor in the forward and reverse directions, whichever is required for modulating purposes.

DRAFT

C. The controller shall compare the input signal with the feedback signal to produce an error signal. The controller shall cause the motor to move the valve or gate in a direction so as to reduce the magnitude of the error signal. The controller positioning accuracy shall be plus or minus 1.0 percent of travel or better. Operating speeds, unless otherwise stated, shall be 90 degrees per minute for rotary operators. It shall be possible to adjust Dead Band (0-9.9% of travel) and a Motion Inhibit Timer (2-99 secs), and select action upon loss of signal.

2.07 MANUFACTURERS

A. Beck, Rotork - IQT, or ENGINEER-approved equal.

PART 3 – EXECUTION

3.01 SERVICES OF MANUFACTURER

A. Field Adjustments: Field representatives of manufacturers of valves or gates with pneumatic, hydraulic, or electric actuators shall adjust actuator controls and limit-switches in the field for the required function.

B. Performance Test Certificate: Each actuator must be performance tested and individual test certificates shall be supplied free-of-charge. The test equipment should simulate a typical valve load and the following parameters should be recorded:
   1. Current at maximum torque setting
   2. Torque at maximum torque setting. Torque curves for both open and close strokes for each MOV shall be provided.
   3. Flash Test Voltage
   4. Actuator Output Speed or Operating Time; in addition, the test certificate should record details of specification, such as closing direction, and wiring diagram code number.

3.02 INSTALLATION

A. All valve and gate actuators and accessories shall be installed in accordance with these Specifications. Actuators shall be located to be readily accessible for operation and maintenance, without obstructing walkways. Actuators shall not be mounted where shock or vibrations will impair their operation, nor shall the support systems be attached to handrails, process piping, or mechanical equipment.

B. Coordinate all installation with the valve supplier. The supplier shall be responsible for fabrication, coordination, and assembly for a complete operating system.

C. Inspection, Startup, and Field Adjustment: An authorized representative of the Manufacturer shall visit the site and witness the following:
   1. Installation of the equipment for not less than 1 day.
   2. Inspection, checking, and adjusting the equipment for not less than 1 day.
   3. Startup and field-testing for proper operation for not less than 1 day.

END OF SECTION

DRAFT

SECTION 40 0560.10 – SLIDE, SLUICE, WEIR, AND CHANNEL STOP GATES

PART 1 – GENERAL

1.01 REQUIREMENTS

The CONTRACTOR shall provide sluice, slide, weir-type gates, stop logs, and appurtenances, complete and operable, in accordance with the Contract Documents. The contractor shall furnish all labor, materials, equipment and incidentals required to install and field test the gates shown on the Contract Drawings and specified herein.

1.02 REFERENCES

A. Definitions

Design Head: The maximum differential head that will be applied on the gate under worst case conditions, measured from the gate invert.

Seating Head: Head applied on a wall mounted gate, in the direction that pushes the gate against the wall it is installed on.

Unseating Head: Head applied on a wall mounted gate in the direction pulling the gate away from the wall it is installed on.

Operating Head: The highest differential head that is to be applied on the gate when it needs to be operated, measured from the gate invert.

B. Reference Standards

ANSI/AWWA C561	Fabricated Stainless Steel Slide Gates
ANSI/AWWA C542	Electric Motor Actuators for Valves and Slide Gates
ASTM	
A240/A240M	Chromium and Chromium Nickel Stainless Steel Plate, Sheet and Strip for Pressure Vessels and for General Applications
A276	Stainless Steel Bars and Shapes
A380	Cleaning, descaling, and passivation of Stainless Steel
A582/A582M	Free-Machining Stainless Steel Bars
A790/790M	Seamless and Welded Ferritic / Austenitic Stainless Steel Pipe
B179	Aluminum Alloys in Ingot and Molten Forms for Castings from All Casting Processes
B584	Copper Alloy Sand Castings for General Applications
D2000	Rubber Products in Automotive Applications
D4020	Ultra-High-Molecular-Weight Polyethylene Molding and Extrusion Materials
F593	Stainless Steel Bolts, Hex Cap Screws, and Studs

1.03 SUBMITTALS

A. Drawings

The slide gates manufacturer shall submit, for acceptance by the purchaser, general arrangement drawings of the equipment supplied under this section. Drawings must indicate all dimensions that will allow the contractor to ensure coordination with dimensions of the installation environment. Drawings will also show sufficient details to determine compliance with the requirements, including the stainless steel plate thickness used for all components. Drawings shall also include certification that the slide gates supplied meet all requirements of AWWA C561-12.

DRAFT

B. Design Calculations

The gate manufacturer shall submit, for acceptance by the purchaser, design calculations demonstrating compliance with the design requirements of these specifications and those of AWWA C561-12. In particular, calculations shall be submitted for the following gate components where applicable:

- Slide
- Seat contact pressure
- Frame
- Yoke
- Stem, stem connection
- Lifting nut
- Manual actuator operating force
- Electric actuator load
- Anchors

C. Factory Testing/ Test Reports

The gates shall be tested in the factory for leakage and for operating force. Leakage shall be measured at the unseating design pressure. Operating force shall be measured with the gate in vertical position, with and without the design pressure. Factory test reports shall be available on request for all gates supplied.

D. Cleaning

Before assembly, slide, frame, yoke, pedestal and all others welded parts shall be completely cleaned by abrasive blast using single-use glass bead or crushed glass, never recycled. All the surfaces of all parts shall be cleaned, in order to remove all contaminants and allow the stainless steel surface to passivate by spontaneously forming a chemically resistant surface when exposed to air. Cleaning only the welds by paste or other chemical means is not an acceptable method to remove all contaminants from the fabrication process and achieve the required level of passivation per ASTM A380

E. Installation, Operation and Maintenance Manual

The gate manufacturer shall provide a manual containing the instructions for installation, operation and maintenance of the slide gates. The manual shall also contain the detailed information on the terms of the 5-year warranty on the products.

1.04 QUALITY ASSURANCE

A. Qualifications

The gates supplied under this section shall be standard products of a manufacturer regularly engaged in the design and manufacturing of water control gates. The specifications are based on AQUANOX series S Slide Gates manufactured by ISE Metal Inc.

B. Standards and Certifications

The gates supplied under this section shall conform to all requirements of ANSI/AWWA C561-12. The slide gate manufacturer must maintain an ISO-9001 certification and also a company certification for its welding operations from the CWB or AWS.

1.05 DELIVERY

The manufacturer shall use due and customary care in preparing the gates and accessories for shipment. Self- contained frame gates shall be shipped assembled with stem and manual operator. When shipping several gates together, every item shipped separately must be clearly marked to the gate it belongs to.

DRAFT

1.06 WARRANTY

The slide gates and manual operating accessories shall be covered by a five (5) year warranty from the manufacturer against defects in materials, design and workmanship. The warranty period will start from the date of delivery of the equipment to the installation site.

PART 2 – PRODUCTS

2.01 SLIDE, SLUICE, CHANNEL AND WEIR GATES

A. Description

1. Slide gates shall be upwards opening of the 3 or 4 sides sealing type designed for submergence in water or wastewater applications. They shall have flow control capability by allowing only flow through the open area in partial opening situations. As specified in the Contract Documents, each gate shall be either open-frame or self-contained-frame design and either rising or non-rising stem configuration.
2. Sluice gates shall be upwards opening of the 4 sides sealing type designed for submergence in water or wastewater applications. They shall have flow control capability by allowing only flow through the open area in partial opening situations. As specified in the Contract Documents, each gate shall be either open-frame or self-contained-frame design and either rising or non-rising stem configuration.
3. Weir gates shall be downward opening with sealing on 3 sides, designed for water or wastewater applications. They shall have level control capability by allowing flow only over the top of the gate slide. As specified in the gate schedule, each gate shall be either open-frame or self-contained-frame design and either rising or non-rising stem configuration.
4. Channel gates shall be upwards opening of the 3 sides sealing type designed for water or wastewater applications. They shall have flow control capability by allowing only flow through the open area in partial opening situations. As specified in the gate schedule, each gate shall be either open-frame or self-contained-frame design and either rising or non-rising stem configuration.

B. General

1. Gates supplied under this section shall be manufactured by Fontaine-Aquanox, Golden Harvest, Rodney Hunt, Whipps, or ENGINEER-approved equal.
2. Gates shall be as specified herein and have the characteristics and dimensions shown on the Contract Drawings.
3. Leakage shall not exceed 0.05 gpm/ft of wetted seal perimeter in seating head and unseating head conditions.
4. The gate shall utilize self-adjusting seals. Due to the difficulty of accessing gates when they are in service, gates that utilize adjustable wedges, wedging devices or pressure pads are not acceptable.
5. All structural components of the frame and slide shall be fabricated of stainless steel having a minimum thickness of 1/4-inch and shall have adequate strength to prevent distortion during normal handling, during installation and while in service.
6. Gate frames shall be shipped fully assembled with the invert member welded to the side frames and the slide installed in the frame unless the overall width of the slide gate exceeds 96 inches or the overall height of the slide gate exceed 25 feet.
7. All welds shall be performed by welders with AWS D1.6 certification.
8. Finish: Mill finish on stainless steel. Welds shall be sandblasted to remove weld burn and scale. All iron and steel components shall be properly prepared and shop coated with a primer.
9. Materials:

DRAFT

Slide, Frame and Yoke	Stainless Steel	ASTM A240, grade 316L
Side Seal/Guides and Top Seal	Ultra-High Molecular Weight Polyethylene (UHMWPE)	ASTM D4020
Flush Invert Bottom Seal	Ethylene Propylene (EPDM)	ASTM D2000
Compression Cord	Ethylene Propylene (EPDM)	ASTM D2000
Wall Gasket	Ethylene Propylene (EPDM)	ASTM D2000
Bolts and Hardware	Stainless Steel	ASTM F593, grade 316
Stem	Stainless Steel	ASTM A582, grade 316
Thrust Nut and Lift Nut	Aluminum Bronze or Manganese Bronze	ASTM B505, C95800 ASTM B584, C86300
Stem Couplings	Stainless Steel	ASTM A582, grade 316L
Stem Guide Bracket	Stainless Steel	ASTM A582, grade 316
Stem Guide Bushing	Ultra-High Molecular Weight Polyethylene (UHMWPE)	ASTM D4020
Handwheel	Cast Aluminum	ASTM B179
Crank	Aluminum	ASTM B209, 6061-T6
Pedestal	Stainless Steel	ASTM F593, grade 316
Gearbox Housing	Cast Iron	ASTM A48 35B/40B
Square Nut	Cast Aluminum	ASTM B179
Stem Cover	Clear PVC	
Stem Cover Cap	PVC	

C. Performance and Design

1. Slide

   The slide consisting of a flat plate with welded reinforcing ribs shall be designed to withstand the design head specified in the gate schedule with a maximum deflection of L/360 of the gate opening width or 1/16 in (1.6mm) whichever is less and with stresses in the slide limited to 25% of the ultimate tensile, compressive, and shear strength and 50% of the yield strength, whichever is less. Minimum material thickness of all members of the slide shall be ¼ in (6mm). Maximum deflection for weir gates shall be L/720 of the gate opening width.

2. Frame

   The gate frame and thimble shall be made of formed plates or structural members creating the clear opening of the specified dimensions in a rigid one-piece unit. The mounting and bolting flange of the frame to the wall shall be separate and independent from the seating and sealing plane of the slide. The bottom of the frame will be of the flush invert type. Stresses in the frame under design head shall not exceed 25% of the ultimate tensile, compressive, and shear strength and 50% of the yield strength, whichever is less. Wall thimbles shall be supplied as indicated on the Contract Document. Minimum material thickness of all members shall be ¼ in (6mm).

   For Channel Gates:

   a. In wall mounted instances (CW), the mounting and bolting flange of the frame to the wall shall be separate and independent from the seating and sealing plane of the slide.
   b. In the cases where the frame is mounted to the side walls of a channel (surface or embedded), the frame shall de designed in such a manner so that access is provided to the side seal retainer bolts.

3. Yoke

DRAFT

Gates specified as self-contained design shall include a yoke consisting of a beam made of formed plates or structural members mounted on top of the frame to permit mounting of the actuator with proper stem alignment by the use of slotted holes in both direction. The yoke shall be sized to limit deflection under the design load to a maximum of L/360 of the gate opening width. The yoke design load must be considered as the vertical thrust generated by a 40 lbs force on the crank or handwheel (for a manual actuator) or by the actuator in locked rotor condition (for an electric actuator). Per AWWA C561-12, the stresses in the yoke generated by the design load shall not exceed (for a manual actuator) 25% of the ultimate tensile, compressive, and shear strength and 50% of the yield strength, whichever is less, or (for an electric actuator) 2/3 of the yield strength.

4. Guiding and Seating

   The slide shall seat and travel on guides made of ultra high molecular weight polyethylene (UHMWPE) designed to perform for the life of the slide gate without replacement. The slide shall be kept in positive contact with the guides on both its upstream and downstream faces, all along its travel in the gate clear opening by an elastomeric cord. Above the gate clear opening, the guides shall extend high enough to ensure that the slide is supported on a minimum of 2/3 of its height when fully opened. The low friction guides shall be secured to the frame by bolted retainers allowing factory adjustment of the contact pressure with the slide. The surface of contact on the side seats shall be large enough to limit the stress under the design head to 600 psi (4137 KPa) without considering the top and bottom seats as load bearing.

5. Sealing

   The guides combined with the elastomeric cord will provide sealing on both sides of the opening. Sealing at the top section of the gate will also be achieved with a UHMWPE seat maintained in contact by an elastomeric cord. At the gate invert, the slide shall close on a flush invert rubber seat/seal secured in the bottom member of the gate frame. Under the design seating or unseating head specified in the gate schedule, the slide gates shall restrict leakage to a maximum of 0.05 gpm/ft of clear opening perimeter. Manufacturer shall be able to demonstrate that the sealing system will retain its performance even after 25,000 operating cycles.

6. Stem Connection

   In the case of gates with rising stems, the stem or its extension will be connected to the slide by means of a pinned connection. For gates with non-rising stems, the connection to the slide shall be by means of a threaded thrust nut matching the stem threads. Stem connection design shall limit the stress under the design load to a maximum of 25% of the ultimate tensile, compressive, and shear strength and 50% of the yield strength. The stem connection design load shall be the thrust and torque developed when a 40lbs efforts is applied the crank or handwheel (for a manual actuator), or 1.5 times the thrust and torque developed with the actuator in stalled condition (for electric motors).

7. Stem

   The stem configuration shall be rising or non-rising according to the type specified in the schedule. The threads shall be machine rolled ACME left hand threads with double entry to minimize the number of turns required for operation and provide gate opening by counterclockwise rotation of the manual actuator. Surface finish of the machined threads will be 32 micro inch (0.813 µm) or better. For manually operated gates with rising stem, the stem shall be equipped with an adjustable stop collar to prevent over-closing the gate and potentially damaging components.

   The stem shall be sized so that its critical buckling load (as determined by the Euler column formula) is higher than the design compression load, defined as the vertical force developed by a 40lbs effort applied on the crank or handwheel (for a manual

DRAFT

actuator), or 1.5 times the thrust and torque developed with the actuator in stalled condition (for electric motors).

8. Couplings
   The required stem extensions shall be joined together or to the threaded stem by means of a bolted connection, passing through both pipe and stem.
9. Stem guides
   Guides will be provided as required to meet the stem buckling design criteria and positioned per the manufacturer's recommendations to ensure that the length to radius of gyration ratio (L/R) does not exceed 200. The guides shall incorporate a UHMWPE bushing supported by a stainless steel wall bracket adjustable in both horizontal directions.

D. Manual Actuators

1. Operation
   Manual actuator of the proper type and mounting location, as listed in the gate schedule or shown on the drawings, shall be provided by the gate manufacturer. The effort required on the manual device to operate the gate under the maximum specified seating and unseating heads by using a maximum effort of 40 lb on the crank or handwheel, and shall be able to withstand, without damage, an effort of 80 lb. Indication of the opening direction of rotation shall be clearly marked in a permanent manner on the handwheel or crank.
2. Handwheels
   The handwheel shall be removable and have a minimum diameter of 16" (406mm). It shall drive the lift nut directly or via the extension pipe of self-contained gates or it shall engage the input shaft of the gearbox, when specified.
3. Crank Operated Gearboxes
   The gearbox, comprising a lift nut and thrust bearing assembly (as described below), shall be fully enclosed in a casted housing with seals around the lift nut and around the input pinion shaft. The input pinion shaft shall be supported on ball or tapered roller bearings. The removable crank, equipped with a revolving grip shall engage on the input shaft of the gearbox and have a minimum radius of 12" (305mm).
4. Square Nut Actuator
   The square nut shall be 2" x 2" (50mm x 50mm) designed for mounting in the floor box supplied by the contractor and designed to accommodate a standard T-wrench. T-Wrench shall be supplied by the gate manufacturer in the quantity required by the gate schedule.
5. Actuator Lift Nut and Thrust Bearings
   All gates shall include a thrust bearing assembly comprising a threaded bronze lift nut to engage the operating stem. This assembly must be enclosed in a machined stainless steel housing or be an integral part of the gearbox when supplied. Needle roller thrust bearings shall be provided above and below the lift nut to support the operating efforts in closing and opening the gate. The length of thread engagement shall be sufficient to ensure that the maximum pressure on the projected area of thread contact does not exceed 2000 psi (13,8 MPa) at normal maximum operating load and that the PV (pressure velocity) factor does not exceed 30,000. The PV factor is calculated by multiplying the pressure on the projected area of thread contact in psi by the surface velocity in ft/min at the pitch diameter of the threads. For non-rising stem gates, the actuator lift nut shall be keyed to prevent rotation relative to the threaded stem.
6. Mounting
   The thrust bearing assembly or the gearbox shall be mounted on the yoke of the gate for all gates specified as self-contained or on a pedestal for gates specified as non-self-contained. Pedestal height shall be such that the handwheel or input shaft of

DRAFT

the gearbox is located approximately 36” (900mm) above the operating floor. Where shown on the drawings or when specified, a wall bracket shall be supplied to support the pedestal. The pedestal wall bracket shall be designed and supplied by the gate manufacturer to ensure that it can resist to all operating efforts of the gate based on the same design calculation criteria used for the yoke.

7. Stem Cover
   All rising stem gates, weather manual or motorized shall be equipped with a clear stem cover with a closed top and ventilation hole. The cover shall bear graduation in both inches and centimeters to indicate the position of the gate.

E. Motorized Actuators

1. When required by the gate schedule or the drawings, motorized actuators shall be supplied in accordance with these Specifications.

F. Anchor Bolts

1. The quantity, size and location of anchor bolts shall be determined by the gate manufacturer and shown on the submittal drawings. The minimum required load capacity of the anchors used for design must also be indicated on the drawings.

2.02 STOP LOGS

A. Description

The logs shall be designed for level control in water or wastewater applications, by stacking separate elements (logs) inside a frame, up to the desired height.

B. Materials

Frame	Stainless Steel	ASTM A240, grade 316L or 304L
Logs	Stainless Steel or Aluminum	ASTM A240, grade 316L or 304L or Aluminum ASTM B308 - Alloy 6061-T6
Guide Bars	Ultra-High Molecular Weight Polyethylene (UHMWPE)	ASTM D4020
Side P-Seals	Ethylene Propylene (EPDM)	ASTM D2000
Bottom Lip Seal	Ethylene Propylene (EPDM)	ASTM D2000
Wall Gasket (if CW mount)	Ethylene Propylene (EPDM)	ASTM D2000
Bolts and Hardware	Stainless Steel	ASTM F593, grade 316

C. Performance and Design

1. Logs
   The logs consisting of a flat plate with welded reinforcing ribs shall be designed to withstand the design head specified in the gate schedule with a maximum deflection of L/360 of the gate opening width or 1/16-in (1.6mm) whichever is less and with stresses in the slide limited to 25% of the ultimate tensile, compressive, and shear strength and 50% of the yield strength, whichever is less. Minimum material thickness of all members of the slide shall be ¼-in (6mm).
2. Frame
   The stainless steel frame having a U-shaped form is acting as a guide for the logs. The frame shall be constructed of structural members or formed plate. The frame shall be suitable for mounting on a concrete wall (CW) at the end of a channel, embedded inside a channel (FE) or mounted on a channel surface (EC). The frame configuration

DRAFT

shall be of the flush-bottom type. The bottom of the frame will be of the flush invert type. Minimum material thickness of all members of the frame shall be ¼-in (6mm).

3. Leakage
   Leakage shall not exceed 0.1 U.S. gallon per minute per foot of seal periphery under the design head.
4. Guiding, Seating, and Sealing
   Side P-seals shall limit leakage. The side seals shall be retained to the slide using bolted UHMWPE guide bars. The guide bars acts as gliding seats in order to ease the positioning of the slide in the frame and to reduce friction. Seals shall limit the leakage rate below the maximum specified. The bottom lip seal is attached along the bottom of the logs with a stainless steel retainer and provides sealing against the top of the logs directly underneath or the bottom section of the frame.
5. Lifting Device
   A stainless steel lifting device shall be supplied for each different log width in the project. The lifting device shall be designed to slide into the stop logs frame, while being suspended by the owner's lifting equipment. All components of the lifting device are designed to resist the load required to lift one log under the head equal to the tallest log in the stack, with conservative safety factors.

   The design of the lifting device must allow it to attach the upper log of the stack as it is lowered on it in the guide frame. When lowering logs into the frame, releasing the logs once lowered shall be made possible by using a rope from the upper operating floor.

D. Anchor Bolts
   1. The quantity, size and location of anchor bolts shall be determined by the gate manufacturer and shown on the submittal drawings.

PART 3 – EXECUTION

3.01 INSTALLATION

A. It is the responsibility of the Contractor to handle, store and install the gates in strict accordance with the manufacturer's instructions and recommendations. The Contractor shall review the installation drawings and instructions before proceeding to the installation of the gates.

B. The gate assemblies must be installed on a true vertical plane, square and plumb. The operating stem shall be accurately aligned with the gate guides and properly greased.

3.02 FIELD TESTING

A. After installation, the gates must be field tested by the Contractor, in the presence of the Engineer and Owner, to ensure compliance with the requirements of these specifications. Each gate shall be operated on its complete open-close cycle to confirm operation without binding, scraping or distorting. Operating effort on the crank, handwheel or T-wrench shall be observed or measured. In the case of motorized actuators, the operating torque shall be noted, and the initial set-up of each actuator shall be done in accordance with the instructions in the manual.

B. Each gate shall be water tested by the Contractor and sealing performance shall be observed.

END OF SECTION

DRAFT

SECTION 40 0561 – GATE VALVES

PART 1 – GENERAL

1.01 THE REQUIREMENT

A. The CONTRACTOR shall provide gate valves and appurtenances, complete and operable, in accordance with these Specifications and the Contract Documents.

B. American Iron and Steel (AIS) requirement applies to this section. All iron and steel products used in this project must be produced in the United States.

1.02 SUBMITTALS

A. Furnish submittals in accordance with Section 01 3300 – Submittal Procedures.

PART 2 – PRODUCTS

2.01 GATE VALVES (16-inch and smaller)

A. General. Gate valves for water service shall conform to the AWWA Standard for "Resilient-Seated Gate Valves" (AWWA C509, latest edition). Valves shall be of the resilient seated type with non-rising stem, closing in a clockwise direction. Sealing mechanism shall provide zero leakage at the water working pressure against line flow from either direction. The rubber covered gate shall not be wedged into a pocket nor slide across the seating surface to obtain a tight closure. Synthetic thrust washers shall be provided to minimize operating torque. Valves shall be flanged or have ends to match pipe and shall have solid bronze internal working parts.

B. Stems. Gate valve stems shall be of bronze containing not more than 5 percent of zinc nor more than 2 percent of aluminum, and shall have a minimum tensile strength of 60,000 psi, a yield strength of 35,000 psi, and an elongation of at least ten percent in 2-inches, as determined by a test coupon poured from the same ladle from which the valve stems to be furnished are poured. Seats. Resilient valve seats shall consist of styrene butadiene (SBR) rubber permanently bonded to a high-strength iron wedge gate. The gate shall be totally encapsulated. The bonding process shall meet the requirements of ASTM D429. Mechanically attached seats or seats attached to the valve body shall not be accepted.

C. Operators. Buried valves shall be provided with a 2-inch square operating nut, extension stems, and valve well, as required in Part 2.01. Unless otherwise shown on the drawings, valves in vaults or above grade shall be supplied with a cast iron handwheel and be rising stem. All buried gate valves shall be non-rising stem.

D. Pressure Rating and Testing. Valves shall be rated for a working water pressure of 200 psi and shall be seat tested at this pressure with no leakage. Shell test of 400 psi shall be applied to body with valve in the open position with no leakage through the metal, flanged joints, or stem seals.

E. Epoxy Coating. Valve and operator shall be epoxy coated as specified in part 2.01 of this Section, except coating shall have 12 mil thickness.

F. Spare Parts. Each valve shall be supplied with a spare set of upper and lower O-rings and weather seal.

G. Manufacturer. Resilient seat gate valves shall be manufactured by U.S. Pipe, American Darling CRS-80, ITT Kennedy, or ENGINEER-approved equivalent.

DRAFT

PART 3 – EXECUTION

3.01 GENERAL

A. Gate valves shall be installed in accordance with the provisions of these Specifications. Care shall be taken that valves in plastic lines are well-supported at each end of the valve.

END OF SECTION

DRAFT

SECTION 40 0562 – PLUG VALVES

PART 1 – GENERAL

1.01 THE REQUIREMENT

A. Provide plug valves and appurtenances, complete and operable, in accordance with the Contract Documents.

1.02 SUBMITTALS

A. Furnish submittals in accordance with Section 01 3300 – Submittal Procedures.

1.03 OPERATION AND MAINTENANCE MANUAL

A. Provide six (6) hard copies plus one (1) electronic version in PDF format.

B. Operation and Maintenance Manual shall be furnished in accordance with these Specifications.

1.04 QUALITY ASSURANCE

A. The manufacturer shall provide a 2-year equipment warranty.

1.05 SPARE PARTS

A. Spares shall be as requested by the ENGINEER. Payment for spares shall be made in accordance with the General Conditions.

B. A list of spare parts for each piece of equipment shall be obtained from the manufacturer and submitted at the same time as Shop Drawings. The name, address, and telephone number of the nearest distributor for each piece of equipment shall be furnished.

PART 2 – PRODUCTS

2.01 ECCENTRIC PLUG VALVES

A. General: Plug valves shall be of the quarter-turn, non-lubricated, eccentric type with resilient faced plug. Plug valves shall be designed for a working pressure of 175 psi for valves 12” and smaller, 150 psi for valves 14” and larger. Valves shall provide tight shut-off at rated pressure. Valves 20” and smaller shall have round port design. 24” and larger valves shall have rectangular port design. Minimum port area for all valves shall be 80% of corresponding pipe area.

B. Valve Body: The plug valve body shall be cast iron ASTM A126 Class B with welded-in overlay of greater than 90% nickel alloy content on all surfaces contacting the face of the plug. Sprayed, plated, nickel welded rings or seats screwed into the body are not acceptable. All cover bolts shall be corrosion resistant. The “SEAT END” of the valve shall be designated on the valve body.

C. Coating: Plug valves shall be coated in accordance with these Specifications.

D. Valve Plug: The valve plug shall be cast iron ASTM A126 Class B, with Buna N resilient seating surface to mate with the body seat.

E. Valve Connections: Flanged valves shall be drilled in compliance with ANSI B16.1, Class 125. Mechanical joint valves shall comply with AWWA C111. Threaded valves shall have NPT full size inlets with hexagonal wrench connection.

F. Valve Bearings: Plug valves shall be furnished with permanently lubricated sleeve type bearings conforming to AWWA C504. Bearings shall be of sintered, oil impregnated type 316 stainless steel ASTM A743 Grade CF-8M or bronze ASTM B127.

G. Valve Bonnet shall be in accordance with these Specifications.

DRAFT

H. Valve Shaft Seals: Valve shaft seals shall be of the “U” cup type, in accordance with AWWA C504. Seals shall be self-adjusting and repackable without removing the bonnet from the valve.

I. Valve Actuators: Valves 2.5” and smaller shall be provided with a hand lever. Valves 3” and larger shall be specified as equipped with either a handwheel or 2” square nut for direct quarter-turn operation.
   1. Where specified, a totally enclosed and sealed worm gear actuator with position indicator and externally adjustable open and closed stops shall also be included. The worm segment gear shall be ASTM A536 Grade 65-45-12 ductile iron with precision bore and keyway for connection to the valve shaft. All buried valves shall be provided with worm and gear actuators suited for the intended service. All gear actuators shall be designed to withstand, without damage, a rim pull of 200 lbs for handwheels and an input torque of 300 ft-lbs for nuts.
   2. Buried service actuators shall be packed with grease and sealed for temporary submergences to 20 feet of water. Exposed worm shafts shall be stainless steel.

J. Electric Actuators: When specified, electric actuators shall be in accordance with these Specifications.

K. Manufacturers:
   1. VAL-MATIC
   2 PRATT
   3. Dezurik
   4. ENGINEER-approved equal

PART 3 – EXECUTION

3.01 GENERAL

A. Valves shall be installed in accordance with provisions of these Specifications.

END OF SECTION

DRAFT

SECTION 40 0563 – BALL VALVES

PART 1 – GENERAL

1.01 THE REQUIREMENT

A. Provide ball valves and appurtenances, complete and operable, in accordance with the Contract Documents.

B. American Iron and Steel (AIS) requirement applies to this Section. All iron and steel products used in this project must be produced in the United States.

1.02 SUBMITTALS

A. Furnish submittals in accordance with Section 01 3300 – Submittal Procedures.

PART 2 – PRODUCTS

2.01 GENERAL

A. The ball valve type and its actuator shall be as indicated in the contract documents. All actuators shall be in accordance with these Specifications.

2.02 BALL VALVES (3- TO 12-INCH)

A. Construction: Ball valves shall be full bore with a design working pressure of 150 psig. Valve construction shall conform to the following:
   1. Top Flange shall be design for direct mounting of actuator and gear operators. Top flange shall provide easy access for adjustment of gland bolts. Design shall conform to EN ISO 5211.
   2. Valve Design shall conform to ASME B16.34-2004/ API 6D / BS EN ISO 17292 Class 150.
   3. Valve end-to-end dimensions shall be per ASME b16.10 / API 6D.
   4. Valve Body shall be flanged, two-piece design in cast construction and shall be coated with two-coat zinc-rich epoxy paint.
   5. Ball shall be floating design, stainless steel with superior finish and sphericity to ensure extended seat life and low operating torque.
   6. Stem shall be stainless steel, heavy duty construction with double “D” (sizes up to 4”) and round and keyed (sizes 6” and greater) configurations.
   7. Seat shall be contoured and be reinforced with PTFE seat.
   8. Body joint bolting shall conform to ASTM A193 B7/ ASTM A194 2H for carbon steel bodies and ASTM A193 GR.B8/ ASTM A194 GR.8 for stainless steel bodies.
   9. Actuators: Unless otherwise indicated, ball valves shall have manual hand lever or wheel actuators.

B. Manufacturers, or ENGINEER-approved equal:
   1. Apollo
   2. Nibco
   3. Valtorc

2.03 BALL VALVES (SMALLER THAN 3-INCH)

A. Construction: Ball valves, smaller than 3-inch, for general purpose use, shall be heavy-duty type for industrial service, with butt weld, grooved, threaded, or soldered ends to match the piping. The bodies shall be cast red bronze conforming to ASTM B584. The ball and threaded pack gland shall be brass with a reinforced PTFE seat ring. The stem shall be of silicon bronze. All valves shall have a pressure rating of minimum 125 psi steam, and 200 psi cold water, unless otherwise indicated.

DRAFT

B. Construction (Thermoplastic Ball Valves): PVC and CPVC ball valves, smaller than 3-inch, for general purpose use, shall be heavy-duty type for industrial service, with butt socket, threaded, or flanged ends to match the piping. The ball valves shall be true union type constructed from PVC Type I, ASTM D1784, or CPVC Type IV, ASTM D1784. All O-rings shall be EPDM or Viton. All ½" to 2" valves shall be pressure rated at 235 psi and all 2-1/2" to 3" valves shall be pressure rated at 150 psi, unless otherwise indicated.

C. Manufacturers, or ENGINEER-approved equal:
   1. Nibco
   2. Apollo
   3. Asahi
   4. Spears

2.04 CURB STOP BALL VALVES

A. Construction: Curb stop ball valves smaller than 3-inch shall be shall be heavy-duty type for industrial service, with butt socket, threaded, or flanged ends to match the piping. If Curb Stop ball valve is connecting to plastic piping, stainless steel insert stiffeners are required. Curb stop ball valve to be made of heavy cast bronze body, end piece to be epoxied into body. A fluorocarbon coated brass ball to eliminate corrosion and electrolysis associated with common plug type curb stops. Curb stops shall be 90-degree rotation for open/close, one-piece cap and stem, double Buna-N Stem O-rings to assure permanent water seal at top. Curb stop ball valves shall be designed and manufactured to conform to AWWA Standard C800-89 (ASTM B62-Index 115-85-5-5-5). Valves shall be individually inspected and tested by the manufacture for leaks by air pressure under water.

B. Manufacturers, or ENGINEER-approved equal:
   1. Ford
   2. Mueller Company
   3. Legend

PART 3 – EXECUTION

3.01 GENERAL

A. Ball valves shall be installed in accordance with the provisions of these Specifications. Care shall be taken that valves in plastic lines are well supported at each end of the valve.

END OF SECTION

DRAFT

SECTION 40 0564 – BUTTERFLY VALVES

PART 1 – GENERAL

1.01 THE REQUIREMENT

A. Provide butterfly valves and appurtenances, (air and water service) complete and operable, in accordance with the Contract Documents.

B. American Iron and Steel (AIS) requirement applies to this Section. All iron and steel products used in this project must be produced in the United States.

1.02 SUBMITTALS

A. Furnish submittals in accordance with Section 01 3300 – Submittal Procedures.

B. Complete Shop Drawings

C. Drawings of butterfly valves and actuators.

D. Drawings showing valve port diameter complete with dimensions, part numbers and materials of construction.

1.03 QUALITY ASSURANCE

A. Valves shall be subjected to performance, leakage, and hydrostatic tests in accordance with procedures and acceptance criteria established by AWWA C504.

PART 2 – PRODUCTS

2.01 RESILIENT SEATED BUTTERFLY VALVES

A. General: Butterfly valves steady-state water working pressures and steady-state differential pressure shall be as indicated on the plans.

B. Valves shall be of the body type, pressure class, end joint, and actuator type indicated on Contract Drawings.

C. Construction: Unless otherwise indicated, all materials of construction shall be suitable for the service, whether water or air. The seats shall be positively clamped or bonded into the disc or body of the valve.

Description	Material Standards (may differ for service application – water/air)
Valve Bodies	Cast Iron ASTM A126 Class B
Valve Stem	Stainless Steel 416
Valve discs	Aluminum or Bronze
Painting and coating	Refer to applicable Sections of Division 09 – Finishes

D. Manufacturers, or ENGINEER-approved equal:
1. Val-Matic
2. Keystone
3. Pratt

2.02 BURIED SERVICE BUTTERFLY VALVE

A. General: All butterfly valves shall be manufactured in accordance with the latest revision of AWWA C504 for Class 150B service. Valves in sizes 3-24” shall have 304 stainless steel trim as standard.

DRAFT

B. Valve body shall be constructed of cast iron ASTM A126 Class B and conform to AWWA C504 in terms of laying lengths and minimum body shell thickness. End connections shall be as specified on the plans.

C. Valve disc shall also be made from cast iron ASTM A126 Class B in sizes 20" and smaller. Sizes 24" and larger shall be built from ductile iron in conformance to ASTM A536. Disc shall be furnished with Type 316 stainless steel seating edge to mate with the rubber seat on the body.

D. Valve seat shall be Buna-N rubber located on the valve body. In sizes 20" and smaller, valves shall have bonded seats that meet test procedures outlined in ASTM D429 Method B. Sizes 24" and larger shall be retained in the valve body by mechanical means without use of metal retainers or other devices located in the flow stream.

E. The shaft shall be Type 304 stainless steel conforming to ASTM A276. Shaft seals shall be standard self-adjusting split V packing. Shaft seals shall be of a design allowing replacement without removing the valve shaft.

F. Bearings shall be sleeve type that is corrosion resistant and self-lubricating.

G. Actuators shall be fully grease packed and have stops in the open/close position. The actuator shall have a mechanical stop which will withstand an input torque of 450 ft. lbs. against the stop. The traveling nut shall engage alignment grooves in the housing. The actuators shall have a built-in packing leak bypass to eliminate possible packing leakage into the actuator housing.

H. The Valve Interior and Exterior Surfaces except for seating shall be coated with Ameron Amerlock 370 in accordance with AWWA C550 and C504. All internal and/or external surfaces shall be covered with a polyamide cured epoxy coating applied over a sand blasted “new white metal surface" per SSPC-SP10 to a minimum of 6 mils in compliance with AWWA C550.

I. Manufacturers, or ENGINEER-approved equal:
   1. Val-Matic
   2. Pratt

PART 3 – EXECUTION

3.01 INSTALLATION

A. All exposed butterfly valves shall be installed with a means of removing the complete valve assembly without dismantling the valve or operator. The installation shall be in accordance with these Specifications.

END OF SECTION

DRAFT

SECTION 40 0565 – VALVES FOR PUMP CONTROL AND CHECK SERVICE (CHECK VALVES)

PART 1 – GENERAL

1.01 THE REQUIREMENT

A. Provide check valves and appurtenances, complete and operable, in accordance with the Contract Documents.

B. The requirements of applicable Sections of Division 40 – Process Integration, apply to this Section.

C. American Iron and Steel (AIS) requirement applies to this Section. All iron and steel products used in this project must be produced in the United States.

1.02 SUBMITTALS

A. Furnish submittals in accordance with Section 01 3300 – Submittal Procedures.

PART 2 – PRODUCTS

2.01 SWING CHECK VALVES (3-INCH AND LARGER)

A. General: Swing check valves for water and wastewater service shall be a full body flange type, with a domed access cover and resilient disc. The valves shall meet ANSI/AWWA C508 - Swing-Check Valves for Waterworks Service, 3 in. through 24 in. NPS, unless otherwise indicated, and shall be with full-opening passages and designed for a water-working pressure of 250 psi. Check valves shall be fully operational in both the vertical and horizontal installation position.

B. Body: The valve body and cover shall be of cast iron conforming to ASTM A536 Grade 65-45-12 with flow area equal to the nominal pipe inside diameter throughout the valve. Seat shall be constructed on a 45-degree angle to reduce disc travel. The seat and internal body shall be fully coated with a two part thermosetting epoxy suitable for use in both potable water and wastewater applications.

C. Disc: The resilient disc shall be of one-piece construction, precision molded with an integral O-ring type seal surface and contain alloy steel and nylon reinforcement in the flexible hinge area. For pressure application 50 psig or greater, the resilient disc shall be a fully encapsulated steel pressure plate with integral molded O-ring on the face of the elastomer. Nylon reinforcements shall be provided in the flexible hinge area of the disc assembly.

D. Backflow Actuator: Check valves shall be provided with a screw-type backflow actuator to allow for the opening of the valve during no flow conditions. The backflow shall be a rising-stem type to indicate position. A stainless-steel T-handle shall be provided for ease of operations.

E. Position Indicator: Check valves shall be provided with a mechanical position indicator to indicate disc position.

F. Disc Accelerator Mechanism: Check valve shall be provided with a disc accelerator mechanism to assist in the rapid closure of the disc to minimize flow reversal. Accelerator mechanism shall be required in high head application of 50 psig or greater. Accelerator mechanism shall be a spring type, weighted type, or hinge type.

G. Valve manufacturer shall be Val-Matic, VSI, Pratt, or ENGINEER-approved equal.

DRAFT

2.02 SWING CHECK VALVES (2-1/2-INCH AND SMALLER)

A. General: Swing check valves for steam, water, oil, or gas in sizes 2-1/2-inch and smaller shall be suitable for a steam pressure of 150 psi and a cold water pressure of 300 psi. They shall have screwed ends, unless otherwise indicated, and screwed caps.

B. Body: The valve body and cap shall be of bronze conforming to ASTM B61 - Steam or Valve Bronze Castings, or ASTM B62 with threaded ends conforming to ANSI/ASME B1.20.1 - Pipe Threads, General Purpose (inch).

C. Disc: Valves for steam service shall have bronze or brass discs conforming to ASTM B16 – Free-Cutting Brass Rod, Bar, and Shapes for Use in Screw Machines, and for cold water, oil, and gas service replaceable composition discs.

D. Hinge Pin: The hinge pins shall be of bronze or stainless steel.

E. Position Indicator: Valves shall be provided with mechanical position (open/closed) indicators.

F. Valve manufacturer shall be as shown on the Drawings or ENGINEER-approved equal.

2.03 DOUBLE DISC CHECK VALVE

A. General: Check valve shall be of the double disc, wafer style with torsion spring induced closure. Valve shall be Wafer style for bolting between ANSI Class 125 flanges. Valves have a Ductile Iron body (ASTM A536 65-45-12) to fit inside 125# ANSI bolt circles, a two-piece Stainless-Steel disc (ASTM type 304), type 304 Stainless Steel dual shafts, ASTM A313, type 304 Stainless Steel torsion spring and have an integrally molded elastomer seat vulcanized to the body. Valve for horizontal flow shall be installed with the shafts in vertical position.

B. Valve manufacturer shall be Valmatic, Pratt or ENGINEER-approved equal.

2.04 GLOBE STYLE CHECK VALVE

A. General: Check valve shall be of the silent operating type and the same size as the entering pipe. Globe style thru 24 inches shall be rated 250PSI WOG, have a Ductile Iron body (ASTM A536 65-45-12), 125# ANSI Flat Face Flanges, ASTM A313 Type 304 Stainless Steel helical or conical spring, a Stainless Steel (ASTM type 304) seat and dual guided disc (top and bottom), 304 Stainless Steel guide bushing and type 304 Stainless Steel guide pins. Check valve to have a minimum open area in the body of 110% of the area of the entering or corresponding pipe. Valve is to operate silently in either vertical or horizontal positions, flow up or down.

B. Valve manufacturer shall be Valmatic, Pratt, or ENGINEER-approved equal.

2.05 WAFER SILENT CHECK VALVE

A. General: Check valve shall be of the silent wafer type and the same size as the entering pipe. Valves shall be the compact wafer style and have a pressure and temperature rating equal to or greater than the pipeline in which they are installed. Compact wafer-silent style check valves thru 12 inches shall be rated for 250PSI WOG for installation between ANSI Class 125 or Class 250 flanges, have a Ductile Iron body (ASTM A536 65-45-12), ASTM A313, Type 304 Stainless Steel helical or conical spring, a Stainless-Steel guide bushing and type 304 Stainless Steel guide pins. Valves are to operate silently in either vertical or horizontal positions, flow up or down.

B. Valve manufacturer shall be Val-Matic, Pratt, or ENGINEER-approved equal.

DRAFT

2.06 TILTING DISC CHECK VALVE

A. General: The tilting disc check valve shall consist of a circular disc with conical rim, hinged about a fixed pivot above its center-line and offset from the plane of the seat, sealing against a body seat clamped between the two sections of the valve body.

B. Body: The body shall be two-piece, consisting of an entrance and a discharge section bolted together at an angle with the pipeline. An O-ring seal in a groove between the body flanges shall be in place to prevent leakage between the flanges when bolted together. The valve shall be complete with ANSI class flanges to mate with adjacent equipment.

C. Disc and Seat: A body seat shall be clamped in place in a slot between the two body sections. The body seat shall have a conical finish to mate with the disc seat. There shall be an inspection port provided in both the entrance and discharge sections to provide visual access both upstream and downstream of the disc. An indicator shall be provided to show disc position for the full range of travel. Bosses shall be cast in both the entrance and discharge sections to allow for a top mounted oil dashpot for controlled opening and closing. All valve castings shall be ductile iron ASTM A536 Grade 65-45-12. The disc and body seat ring shall be Bronze B62. The hinge-pin shall be stainless steel ASTM A276 Type 304. The bearing sleeve shall be Bronze B62. Coating shall be NSF61 approved epoxy.

D. Backflow Actuator: If required, check valves shall be provided with a screw-type backflow actuator to allow for the opening of the valve during no flow conditions. The backflow shall be a rising-stem type to indicate position. A stainless-steel T-handle shall be provided for ease of operations.

E. Position Indicator: Check valves shall be provided with a mechanical position indicator to indicate disc position.

F. Valve manufacturer shall be Val-Matic, Pratt or ENGINEER-approved equal.

2.07 RUBBER FLEX DUCKBILL CHECK VALVE

A. General: Check valves are to be metal backed, rubber flanged for attaching directly to flanged-end connections. The check valve shall be made of Buna-N elastomer material. CONTRACTOR to verify the valve ID size and flange drilling dimensions.

B. Valve manufacture shall be Cla-Val, or ENGINEER-approved equal.

PART 3 – EXECUTION

3.01 GENERAL

A. Valves shall be installed in accordance with provisions of these Specifications.

END OF SECTION

DRAFT

SECTION 40 0567 – SPECIALIZED PRESSURE AND FLOW-CONTROL VALVES

PART 1 – GENERAL

1.01 THE REQUIREMENT

A. Provide all miscellaneous valves and appurtenances, complete and operable, in accordance with the Contract Documents.

B. American Iron and Steel (AIS) requirement applies to this Section. All iron and steel products used in this project must be produced in the United States.

1.02 SUBMITTALS

A. Furnish submittals in accordance with Section 01 3300 – Submittal Procedures.

1.03 OPERATION AND MAINTENANCE MANUAL

A. Provide two (2) hard copies plus one (1) electronic version in PDF format.

B. Operation and Maintenance Manual shall be furnished in accordance with these Specifications.

1.04 QUALITY ASSURANCE

A. Manufacturer and model shall be described on the Drawings or ENGINEER-approved equal.

B. The manufacturer shall provide a 2-year equipment warranty.

1.05 SPARE PARTS

A. Spares shall be as requested by the ENGINEER. Payment for spares shall be made in accordance with these Specifications and the Contract Documents.

B. A list of spare parts for each piece of equipment shall be obtained from the manufacturer and submitted at the same time as Shop Drawings. The name, address, and telephone number of the nearest distributor for each piece of equipment shall be furnished.

PART 2 – PRODUCTS

2.01 AIR-VACUUM AND AIR-RELEASE VALVES

A. Air and Vacuum Valves: Air and vacuum valves shall be capable of venting large quantities of air while pipelines are being filled, and allowing air to re-enter while pipelines are being drained. They shall be of the size indicated, with flanged or screwed ends to match piping. Bodies shall be of high-strength cast iron. The float, seat, and all moving parts shall be constructed of Type 316 stainless steel. Seat washers and gaskets shall be of a material insuring water tightness with a minimum of maintenance. Valves shall be designed for minimum 150 psi water-working pressure, unless otherwise indicated.

B. Air-Release Valves: Air-release valves shall vent accumulating air while system is in service and under pressure and be of the size indicated and shall meet the same general requirements as indicated for air and vacuum valves except that the vacuum feature will not be required. Valves shall be designed for a minimum water-working pressure of 150 psi, unless otherwise indicated.

DRAFT

C. Combination Air Valves: Combination air valves shall combine the characteristics of air and vacuum valves and air release valves by exhausting accumulated air in systems under pressure and releasing or re-admitting large quantities of air while a system is being filled or drained, respectively. Valves shall have the same general requirements as indicated for air and vacuum valves.

D. Valves shall be manufactured by ARI, or ENGINEER-approved equal, and designed for a minimum water-working pressure of 150 psi, unless otherwise indicated.

E. ARV valves shall be protected with a lockable cover. The cover shall be provided with air vents and a drain port. The cover shall be easily removed by the operator for maintenance purposes.

F. Where noted in plans, an underground air combination valve system shall be installed. The system shall feature the following:
   1. compact submerged vault assembly eliminating the need for human-assessible manholes.
   2. Integral gear box shut-off valve to allow above-ground operation of the valve and eliminate confine space entry.
   3. Air valve extraction with built-in safeguard for extraction under pressure.
   4. All connection fitted with quick connect/ release couplings.
   5. In traffic location, assembly shall be protected with H20-rated precast cover and manhole lid to eliminate direct traffic load on assembly.
   6. Underground valve system shall at a minimum consists of the following:
      a. Polyethylene chamber assembly and cover
      b. Sliding disc valve assembly for shutoff and operation
      c. Back-flushing assembly
      d. 316 SS Air combination valve meeting the requirements of these specifications
      e. Underground assembly shall be manufactured by ARI or approved equal.

2.02 PRESSURE RELIEF/PRESSURE SUSTAINING VALVES

A. Quality Assurance: The valve manufacturer shall warrant the valve to be free of defects in material and workmanship for a period of three years from date of shipment, provided the valve is installed and used in accordance with all applicable instructions. Electrical components shall have a one year warranty. Valves shall be subjected to performance, leakage, and hydrostatic tests in accordance with procedures and acceptance criteria established by AWWA C504

B. General: The pressure relief/sustaining valve shall maintain a constant upstream and/or downstream pressure regardless of changing flow rate and/or inlet pressure.

C. Main Valve: The valve shall be hydraulically operated, single diaphragm-actuated, globe pattern. The valve shall consist of three major components: the body, cover, and diaphragm assembly. The diaphragm shall be the only moving part and shall form a sealed chamber in the upper portion of the valve, separating operating pressure from line pressure. Packing glands and/or stuffing boxes are not permitted and there shall be no pistons operating the main valve or pilot controls.

D. Body: Valve body shall be ductile iron construction. Valve body shall be cast as one piece. No fabrication or welding shall be used in manufacturing.

E. Disc: The valve shall contain a resilient, synthetic rubber disc, with a rectangular cross-section contained on three and one-half sides by a disc retainer and forming a tight seal against a single removable seat insert. No O-ring type discs (circular, square, or quad type) shall be permitted as the seating surface. The disc guide shall be of the contoured type to permit smooth transition of flow and shall hold the disc firmly in place. The disc

retainer shall be of a sturdy one-piece design capable of withstanding opening and closing shocks. It must have straight edge sides and a radius at the top edge to prevent excessive diaphragm wear as the diaphragm flexes across this surface. No hourglass-shaped disc retainers shall be permitted and no V-type or slotted type disc guides shall be used.

F. Diaphragm: The diaphragm assembly containing a non-magnetic 303 stainless steel stem with sufficient diameter to withstand high hydraulic pressures shall be fully guided at both ends by a bearing in the valve cover and an integral bearing in the valve seat. No center guides shall be permitted. The stem shall be drilled and tapped in the cover end to receive and affix such accessories as may be deemed necessary. The diaphragm assembly shall be the only moving part and shall form a sealed chamber in the upper portion of the valve, separating operating pressure from line pressure.

G. The flexible, non-wicking, FDA approved diaphragm shall consist of nylon fabric bonded with synthetic rubber compatible with the operating fluid. The center hole for the main valve stem must be sealed by the vulcanized process or a rubber grommet sealing the center stem hole from the operating pressure. The diaphragm must withstand a Mullins Burst Test of a minimum of 600 psi per layer of nylon fabric and shall be cycle tested 100,000 times to insure longevity. The diaphragm shall not be used as the seating surface. The diaphragm shall be fully supported in the valve body and cover by machined surfaces which support no less than one-half of the total surface area of the diaphragm in either the fully opened or fully closed position.

H. Seat & Stem: The main valve seat and the stem bearing in the valve cover shall be removable. The lower bearing of the valve stem shall be contained concentrically within the seat and shall be exposed to the flow on all sides to avoid deposits. To insure proper alignment of the valve stem, the valve body and cover shall be machined with a locating lip. No “pinned” covers to the valve body shall be permitted. Cover bearing, disc retainer, and seat shall be made of the same material. All necessary repairs and/or modifications other than replacement of the main valve body shall be possible without removing the valve from the pipeline. Packing glands and/or stuffing boxes shall not be permitted and components including cast material shall be of North American manufacture.

I. Pilot System: Pilot tubing shall be 316 S.S. construction. The pressure relief pilot control shall be a direct-acting, adjustable, spring-loaded, normally open, diaphragm valve designed to permit flow when controlled pressure is less than the spring setting. The pilot control is held open by the force of the compression on the spring above the diaphragm, and it closes when the delivery pressure acting on the underside of the diaphragm exceeds the spring setting. The pilot control system shall include a fixed orifice. No variable orifices shall be permitted. The pilot system shall include an opening speed control on all valves. The pilot control shall have a second downstream sensing port which can be utilized to install a pressure gauge. A full range of spring settings shall be available in ranges of 20 to 200 psi.

J. Remote Sensing: Valves used for pressure relief or unloading functions in a bypass arrangement shall be provided with a remote pilot sensing. The pilot system shall provide a digital output via flow switch when the valve is actuated.

K. The valve manufacturer shall also provide a computerized cavitation chart which show flow rate, differential pressure, percentage of valve opening, Cv factor, system velocity, and if there will be cavitation damage.

L. Valve manufacturers shall be CLA-VAL, Singer, Wilkens, or ENGINEER-approved equal.

DRAFT

PART 3 – EXECUTION

3.01 INSTALLATION

A. Valves shall be installed in accordance with the manufacturer's printed recommendations, and with provisions of these Specifications.

END OF SECTION

DRAFT

SECTION 40 0573 – MISCELLANEOUS PROCESS VALVES

PART 1 – GENERAL

1.01 THE REQUIREMENT

A. Provide all miscellaneous valves and appurtenances, complete and operable, in accordance with the Contract Documents.

1.02 SUBMITTALS

A. Furnish submittals in accordance with Section 01 3300 – Submittal Procedures.

1.03 OPERATION AND MAINTENANCE MANUAL

A. Provide six (6) hard copies plus one (1) electronic version in PDF format.

B. Operation and Maintenance Manual shall be furnished in accordance with these Specifications.

1.04 QUALITY ASSURANCE

A. Manufacturer and model shall be described on the Drawings, as specified herein, or Engineer approved equal.

B. The manufacturer shall provide a 2-year equipment warranty.

1.05 SPARE PARTS

A. Spares shall be as requested by the ENGINEER. Payment for spares shall be made in accordance with the General Conditions.

B. A list of spare parts for each piece of equipment shall be obtained from the manufacturer and submitted at the same time as Shop Drawings. The name, address, and telephone number of the nearest distributor for each piece of equipment shall be furnished.

PART 2 – PRODUCTS

2.01 FLOAT VALVES (2-INCHES OR SMALLER)

A. General**:** This valve is heavy duty mechanical float valve for controlling high capacity water flow.

B. The valves have bronze body construction with machine flanges on the inlet side (sizes 1” to 2” (25 to 50mm) have female NPT pipe threaded inlet connections), and male straight-pipe threaded for locknut on the outlet side. The connectors have serrated arms for easy adjustment of water level, bronze long and short arms, replaceable seals, and no-jam single lever action.

C. Maximum working pressure shall be 165 psi. Maximum working temperature shall be 180°F.

D. Valve shall be equipped with brass float stem and plastic float designed to work with the valve. Stem shall be of sufficient length for proper operation of the valve and to maintain the required level in the storage reservoir. Floats shall be injection molded polyethylene construction.

E. Float Valves shall be Watts or approved equal.

2.02 FOOT VALVES

A. Foot Valves shall be of the type designed to provide silent operation, positive sealing, and full flow area.

DRAFT

B. Valves shall be flanged, 125 lb., ANSI standard and of the center-guided, poppet-type, having a linear stroke to provide silent operation. Guide shafts and bushings shall be of the same material as the seat and disc, i.e., bronze, or stainless steel. The Buna-N seal shall be so designed to provide an initial contact of bronze to Buna-N with final contact being metal to metal to prevent destruction of the Buna-N seal ring.

C. Flow area thru the valve, including valve stroke, shall be equal to pipe size.

D. Valve inlet shall be provided with stainless steel screening. The screening should in no way reduce the full flow area of the valve. The screening shall be in the shape of a basket with the bottom also screened.

E. Standard construction to be cast iron body, bronze trim with stainless steel basket screening.

F. Valves shall be manufactured by:
   1. Val-Matic
   2. ENGINEER-approved equal.

2.03 MUD VALVES

A. The Mud Valve shall be of the heavy duty flanged type designed to provide a positive seal under both seating and unseating head conditions. The valves shall be (non-rising, rising stem) stem style as detailed on the schedule or the plans. The frame, plug and yoke shall be cast iron (A126B) The valve operating stem and lift nut shall be bronze (B421) The seat ring shall be bronze (B62) with an accurately machined tapered seating face. The plug seat shall be a seamless molded, tapered resilient ring of BUNA-N designed to accurately mate with the seat ring for a positive seal.

B. Where required the manufacturer shall provide valve operating stems, Floor Stands and Stem Guides as specified in the valve schedule or plans.

C. The Mud Valves are to be coated using TNEMEC Pota Pox two part epoxy, NSF approved coating.

D. Valves shall be manufactured by:
   1. Troy Valve, Waterman
   2. ENGINEER-approved equal.

2.04 BACKFLOW PREVENTER

A. General**:** Backflow preventers shall be a pressure type or reduced pressure type backflow preventer unit and associated components shall be equal in quality and performance to a “Foundation for Cross-Connection Control and Hydraulic Research”. Backflow preventers shall be Febco, Watts, Wilkins, or ENGINEER-approved equal – Standard Orientation and include a fiberglass enclosure per Hot Box, appropriately sized for the backflow preventer. Enclosures shall protect against freezing down to -30°F. All backflow preventers shall be submitted for approval by the OWNER regardless of make or model.

2.05 TELESCOPING VALVE

A. General**:** Furnish and install manually-operated telescoping valves, complete and operable, as shown and specified, including appurtenances, operators, supports and accessories, in accordance with the requirements of the Contract Documents.

B. Valve Assembly: The telescoping valve assembly shall be of the rack and pinion type, of the size shown. The travel range shall be at least the amount shown. Assemblies shall consist of a handwheel pedestal (with offset if required) with handwheel operator, a rising stem, slip tube with flat weir crest skimming funnels, a tube guide collar with companion flange and gasket and a mounting bracket.

DRAFT

1. Slip Tube: The slip tube and skimming funnel shall be of Type 316, Schedule 40 stainless steel, with a seal to prevent leakage at the seam.
2. Stem: The stem shall be minimum 3/4-inch, Type 316 stainless steel, with a travel and height indicating device calibrated in 1-inch increments. A suitable stem lock shall be provided for holding the stem at the desired level.
3. Guide Collar: Guide collar shall include a neoprene gasket and cast iron companion flange for securing to the receiving pipe as shown.
4. Mounting Bracket: A cast iron bracket shall be provided for mounting the operator pedestal with stainless steel anchor bolts.
5. Fastening Hardware: All nuts and bolts and other fastening hardware shall be Type 316 stainless steel.
6. Coating: Coating of all ferrous surfaces shall be in accordance with these Specifications.

C. Valve shall be Troy Valve, Waterman, or ENGINEER-approved equal.

PART 3 – EXECUTION

3.01 INSTALLATION

A. Valves shall be installed in accordance with the manufacturer's printed recommendations, and these Specifications.

END OF SECTION

DRAFT

SECTION 40 0597 – IDENTIFICATION FOR PROCESS PIPING

PART 1 – GENERAL

1.01 THE REQUIREMENT

A. The CONTRACTOR shall furnish, paint, mark, and paint/install identification devices for all exposed piping and piping in accessible chases and areas above ceilings with panels, and valves using, lettering, flow direction arrows, and related permanent identification devices, and all appurtenant works, in accordance with the requirements of the Contract Documents.

1.02 REFERENCE SPECIFICATIONS, CODES AND STANDARDS

A. Comply with the reference specifications of the General Requirements.

1.03 CONTRACTOR SUBMITTALS

A. Submittals shall be made in accordance with Section 01 3300 – Submittal Procedures.

B. The CONTRACTOR shall submit samples of all types of identification devices to be used in the work.

C. QUALITY ASSURANCE (NOT USED)

PART 2 – PRODUCTS

2.01 IDENTIFICATION OF PIPING

A. All exposed piping and piping in accessible chases and areas above ceilings with panels, including stainless steel, galvanized steel, copper, CPVC, and Fiberglass RTR piping, shall be completely and totally painted for identification purposes. Piping all be identified with lettering or tags designating the service of each piping system, shall have flow directional arrows. All piping scheduled to be color-coded shall be completely painted or coated with the colors indicated in the schedule below.

B. Each pipe identification shall consist of color-coding in accordance with Subsection 3.04 IDENTIFICATION SCHEDULE, a painted label, and a directional flow arrow. Piping identification shall be located in accordance with Subsection 3.03 PIPE IDENTIFICATION LOCATION.

C. For cases where there are insulated lines wrapped with aluminum sheathing, stainless steel sheathing, or gray fabric, the background color shall be applied to a 24-inch length of pipe section and color band centered within the 24 inch field of background color.

D. Paint Colors: Paint colors shall conform to the following designations:

Color	**Mgf./No.**
Paper White	DuPont 40P-1031
	Tnemec F075-WH01A
	Dunn Edwards IP630-SY-1
Dark Brown	DuPont 40P-1039
	Tnemec F075-D2526A
	Dunn Edwards IP630-SY-25
Safety Red	DuPont 333-23664
	Tnemec F075-S1170A
	Dunn Edwards IP630-SY-19

DRAFT

Safety Orange	DuPont 40P-1030 Tnemec F075- S1169A Dunn Edwards IP630- VD9222
Light Gray	DuPont 333-23662 Tnemec F075- A2606A Dunn Edwards IP630- RL7422
Caribbean Blue	DuPont 40P-1048 Tnemec F075-B2478A Dunn Edwards IP630-UD10264
Safety Blue	DuPont 40P-1048 Tnemec F075-B2477A Dunn Edwards IP630-VD10265
Spectra Master (Dark Blue)	DuPont 40P-1496 Tnemec F075-B2476A Dunn Edwards IP630-SY-23
Custom Formula (Purple)	DuPont 40P-1628 Tnemec F075-R1217A Dunn Edwards IP630-SY-13
Cool Green	DuPont 40P-1008 Tnemec F075-S1168A Dunn Edwards IP630-UL9585
Safety Yellow	DuPont 333-23663 Tnemec F075-S1167A Dunn Edwards IP630-UD9223

E. Lettering

1. Identification labels and directional arrows shall be painted directly on piping using stencils or makers.
2. Pipe identification markers shall be vinyl or polyester construction with an adhesive strip, coiled to wrap completely around the pipe (no straps) and have subsurface printing. Pipe less than six inches shall have lettering to meet ANSI A13.1 standards.
3. The size of the letters for identification labels shall be as follows:

PIPE OUTSIDE DIAMETER*	LETTER SIZE
5/8” to 1 1/4”	1/2” high
1 1/2” to 3”	1” high
Over 3”	2” high

*Outside pipe diameter shall include insulation and jacketing.

4. Identification markers shall have letters, directional arrows and colors as follows:

Influent Sewage	*White Letters on Gray Field*
Secondary	*White Letters on Brown Field*
RAS or WAS	*White Letters on Brown Field*
Sludge	*White Letters on Brown Field*
MBR Effluent/ Effluent	*White Letters on Green Field*
Drain	*White Letters on Gray Field*
Reclaimed Water	*White Letters on Purple Field*
Non- Potable Plant Water	*Black Letters on White Field*
Potable Water	*White Letters on Blue Field*
Fire Protection Water	White Letters on Red Field
High Pressure Air	White Letters on Blue Field

DRAFT

Instrument Air	White Letters on Blue Field
Acid	Black Letters on Yellow Field
Caustic Solution	Black Letters on Yellow Field
Polymer	Black Letters on Yellow Field
Ferric Chloride	Black Letters on Yellow Field
Sodium Hypochlorite	Black Letters on Yellow Field
Hydrogen Peroxide	Black Letters on Yellow Field
Digester Gas	Black Letters on Yellow Field
Natural Gas	Black Letters on Yellow Field
Electrical	Per Specification Division 26

**Italics indicate customized field and may not meet ASME A13.1 color code*

PART 3 – EXECUTION

3.01 GENERAL

A. All labels shall be installed in accordance with the manufacturer's printed instructions, and shall be neat and uniform in appearance. All such tags or labels shall be readily visible from all normal working locations.

3.02 VALVE TAGS

A. Valve tags shall be permanently attached to the valve or structure as specified in the OCSD TAGGING PROCEDURES.

B. The wording on the valve tags shall describe the exact function of each valve, e.g., "HWR-BALANCING," "CLS THROTTLING", "RAS-PUMP SHUT-OFF," etc.

3.03 PIPE IDENTIFICATION LOCATION

A. Straight lines of pipe shall be identified at intervals of 20 feet maximum, and at least once in each room unless otherwise directed by the ENGINEER.

B. Piping shall also be identified at a point approximately within 2 feet of all turns, ells, valves, and the upstream side of all distribution fittings or branches and on both sides of each floor, wall, or barrier through which the line passes.

END OF SECTION

DRAFT

SECTION 40 4200 – PROCESS PIPING AND EQUIPMENT INSULATION

PART 1 – GENERAL

1.01 THE REQUIREMENT

A. The CONTRACTOR shall furnish and install all pipe and equipment insulation, complete and operable, in accordance with the requirements of the Contract Documents. In addition to the insulation shown and specified, the CONTRACTOR shall insulate any cold or hot piping and exhausts that could be hazardous to plant personnel upon contact.

B. All steam and hot or chilled water piping shall be insulated with fiberglass metal jacketed insulation to form a watertight and weatherproof system.

C. Exposed process piping shall be heat taped and insulation against freezing as shown per the Contract Documents.

D. All air process piping within the blower building which passes through spaces above finished ceilings, or are suspended over equipment, electrical panels, or cabinets shall be insulated. Refer to the plans for insulation locations and requirements for air process piping.

E. All unions, flanges, mechanical joints, valves, strainers, steam traps, and other devices in insulated piping systems shall be insulated in the same manner as the adjacent piping. Operators, instruments, and other features requiring routine access shall not be covered. Insulation over removable devices shall be easily removable and replaceable.

F. Insulation on buried piping need not be jacketed.

1.02 REFERENCE SPECIFICATIONS, CODES AND STANDARDS

A. Comply with the reference specifications of the General Requirements.

B. Comply with the current provisions of the following Codes and Standards.
   1. Federal Specifications:
      a. HH-1-558B Insulation Blocks, Boards, Blankets, Felts, Sleeving (Pipe and Tube Covering), and Pipe Fitting Covering, Thermal (Mineral Fiber, Industrial Type)
   2. Commercial Standards:
      a. ASTM C547 Specification for Mineral Fiber Preformed Pipe Insulation
      b. ASTM E84 Test Method for Surface Burning Characteristics of Building Materials

1.03 SUBMITTALS

A. Shop Drawings: Shop drawings shall be submitted in accordance with Section 01 3300 – Submittal Procedures.
   1. The following submittals and specific information shall be provided.
      a. The CONTRACTOR shall submit complete shop drawings showing locations of placement of all thermal insulation, with manufacturer's data on materials, covering, jackets, and finish.

DRAFT

PART 2 – PRODUCTS

2.01 INSULATION

A. All components of the insulation, including covering, mastics and adhesives shall have a flame-spread rating of not over 25, and a smoke development rating of not over 50. Ratings shall be as established by tests in accordance with ASTM E84 and Federal Specification standards. The integrated insulation assemblies shall also conform to the above specifications. Insulation shall be applied in strict accordance with the manufacturer's instructions.

B. MATERIALS

1. Standard Insulation: This type of insulation shall be employed for process, cold-and hot water, steam, and condensate piping and equipment with surface temperatures up to 850°F. Pipe insulation shall be molded-type pipe covering, made of fibrous glass with a minimum k-factor of 0.23 at 75°F mean temperature. The insulation shall be oversized for installation over electric heating cable. Unless otherwise specified, the insulation thickness shall be as follows:

Pipe Insulation:

	Minimum Thickness of Insulation (Inches)
Hot and cold water (domestic)	
6 inches and smaller	1
Hot and chilled water process	
6 inches and smaller	1-1/2
8 inches and larger	2
Low pressure steam (50 psi and less)	
8 inches and less	2
Condensate, boiler blowdown, and boiler feed	
8 inches and less	1-1/2
Heated sludge and process piping	
6 inches and smaller	1
8 inches and larger	1-1/2
Heat traced piping	
3 inches and smaller	1
4 inches and larger	1-1/2
EQUIPMENT AND TANKS	
Boilers, heaters, and manufactured equipment	As recommended by manufacturer
Heat exchangers, tanks, and vessels	3
Blower Discharge, blow-off, and motor exhaust lines	3

2. Vapor barrier: Insulation shall have a factory-applied white fire-retardant vapor-barrier jacket of kraft paper and aluminum foil laminated together and reinforced with fiberglass yarn.
3. Insulation at Supports: Insulation shall be coordinated with the pipe hangers and supports and where insulation protection shields are provided the top half section of pipe insulation at support locations shall be of the same specified density, and the bottom half insulation segments provided between the pipe and the insulation protection shields shall have a density of not less than 6 lb./cu ft.

C. Manufacturers, or ENGINEER-approved Equal:

1. Manville, Micro-Loc AP-T; Owens-Corning FiberGlas Corp., Kaylo

DRAFT

D. High Temperature Insulation: This type of insulation shall be employed for engine exhaust pipes, flues, and similar pipes and equipment with surface temperatures up to 1200°F. The high temperature insulation shall consist of 4-inch thick calcium silicate or similar pre-molded blocks with a minimum k-factor of 0.14, in two layers of 2-inch thickness, each, with staggered joints, all applied over a 3/4-inch high metal rib lath. The inner layer shall be suitable for 1200°F, and the second layer for 1000°F. All bends, voids, joints, fittings, and other parts of the piping system shall be filled with insulating cement. Aluminum lagging with preformed aluminum fittings shall be banded to the insulation in a similar fashion as specified for standard insulation. Allowance shall be made for thermal expansion.

E. Metal Jacketing
   1. General: All insulation shall be covered with smooth aluminum weatherproof jacketing with a factory-attached moisture barrier.
   2. The jacket for the fittings shall consist of precision-formed smooth-sided sections and shall be sized to cover and protect the insulated fitting. Each section shall be manufactured from aluminum, and all joints shall be sealed with silicon mastic, to provide a continuous, air and weathertight joint. Strapping shall be 1/2-inch wide, Type 3003 aluminum or Type 304 stainless steel.
   3. The jacket at insulated valves shall fit over the removable insulation and be easily removed and re-installed. It shall be held in place by adjustable stainless-steel hose clamps.
   4. Metal jacketing shall be 0.016-inch thick, smooth finish aluminum sheet conforming to ASTM B209, alloy 5005, temper H16, with integral vapor barrier. Sheet metal screws shall be aluminum or stainless steel. Jackets shall be secured with 0.020 by ¾-inch Type 304 stainless steel expansion bands.

2.02 HEAT CABLE

A. Heating cable shall be self-regulating through the use of a thermostat for freeze protection. Heating cable shall be applicable to the type of pipe material being protected.

B. Heating cable shall utilize 120VAC and provide heating power of minimum of 5 watt/ft @ 50°F.

PART 3 – EXECUTION

3.01 INSTALLATION

A. All insulation and heat cables shall be installed by a qualified insulation CONTRACTOR in strict accordance with the manufacturer's recommendations and the requirements of these specifications.

B. Insulation shall be installed over heat cable where required.

C. Piping shall be tested and shall be approved by the ENGINEER prior to insulation installation.

D. All end joints of insulation shall be tightly butted.

E. All seams and joints shall be held by manufacturer's standard adhesive.

F. Jacket laps shall be neatly pasted in place.

G. All joints shall be pointed with insulating cement.

H. Fittings and valves shall be covered with the same material as the pipe, cut in segments to fit snugly without open spaces, held in place with copper wire or cement, and then covered with the same jacketing material as the pipe.

DRAFT

I. Insulation at valves and other devices shall be formed into two halves, easily removable for valve maintenance. The halves shall be constructed from segments cemented together to fit the valve and to extend over the adjacent piping insulation.

Insulated fittings adjacent to vapor-barrier insulation shall be sealed with acceptable vapor-barrier cement before installation of the finish jacket.

J. Pipe insulation and vapor-barrier shall be continuous through hangers and supports. Hangers shall permit insulation to pass through. Suitable saddles shall be provided to prevent the weight of the piping from being supported by the insulation.

END OF SECTION

DRAFT

SECTION 40 6700 – LOCAL CONTROL PANELS

PART 1 – GENERAL

1.01 REQUIREMENT

A. The CONTRACTOR shall furnish all tools, equipment, materials, and supplies, and shall perform all labor as required for installing Local Control Panel (LCP's) as indicated on the Drawings and as specified herein or in other Sections of the Specifications.

B. The following is a list of LCPs to be furnished under this Contract which are required to meet these specifications:

C. Water Filtration Control Panel (Furnished and installed by CONTRACTOR)

D. All LCP panels shall be designed and constructed to the following minimum standards using the following PLC / HMI platforms:

1. Allan Bradley – Compact Logics L43 or approved ENGINEER-approved equal
2. I/O Modules with minimum 15% open I/O
3. 12” Color Panel View Human Machine Interface (HMI) Terminal w/ 120VAC Power Supply
4. N-tron Industrial 5-port PoE Ethernet Switch – Model 105TX-POE
5. Redundant 24 VDC Power Supplies for Field Instrumentation
6. Sealed, mechanical cabinet cooling, if required, to maintain interior panel ambient temperatures below equipment stated operating conditions.
7. All inputs such as instruments, sensors and interfaces (switches, buttons, etc.) shall use 24 VDC
8. All external inputs shall be individually fused with blown-fuse indicators
9. All analog inputs shall be provided with loop isolation
10. All outputs shall be isolated with interposing relays with integrated indication lights and manual override buttons
11. All external connections into or out of the panel shall be made using UL listed terminal blocks
12. All spare I/O shall be wired out to terminal blocks
13. 30mm manual switches, buttons and lights shall be provided for each motor, gate or operator local to each machine.
14. Panels shall be UL508 listed.

1.02 RELATED WORK AND CONSTRUCTION STANDARDS

A. Each LCP shall be a UL 508A recognized panel assembler. All control panel components shall be UL Listed under the category "Industrial Control Equipment".

1.03 SUBMITTALS

A. Submittals shall be furnished in accordance with Section 01 3300 – Submittal Procedures.

1.04 OPERATING AND MAINTENANCE MANUALS

A. Installation requirements and procedures.

B. Complete instructions regarding the operation and maintenance of equipment involved. Instructions and documentation not related to the equipment furnished must be removed or crossed out. O&M manuals must be individually tailored to the project and equipment as furnished

DRAFT

C. Bill of Materials, component data sheets, descriptive literature, product specification sheets, wiring diagrams and calibration procedures. O&M manuals must be individually tailored to the project and equipment as furnished

D. Complete nomenclature of replaceable parts, part numbers, current cost, name and address of nearest vendor of replacement parts. Information on equipment or components not related to equipment furnished must be removed or crossed out. O&M manuals must be individually tailored to the project and equipment as furnished

1.05 QUALITY ASSURANCE

A. Equipment to be furnished under this Section shall be the product of firms regularly engaged in the design and manufacture of this type of equipment. Manufacturer shall assume responsibility for, and guarantee performance of equipment furnished.

B. The manufacturer shall provide a 1-year equipment warranty.

C. Equipment shall be designed and installed to conform to Drawings, Specifications, engineering data, related equipment furnished by other suppliers and recommendations of the PLC manufacturer.

D. Comply with the following Codes and Standards:
1. NEMA (Testing Standards BU 1.3.03 or 1.304)
2. UL listing and labeling for materials.
3. NFPA-70
4. UL 508A

PART 2 – PRODUCTS

2.01 GENERAL

A. The CONTRACTOR shall furnish the LCP(s) to satisfy the functional requirements specified in the relevant mechanical equipment, and Instrumentation & Control Specification Sections and as indicated on the Drawings. All components shall be UL labeled or provided with proper ground fault protection as required by UL 508A.

B. LCP enclosures shall be 304 or 316 stainless steel NEMA 4X with hinged lockable doors. Freestanding enclosures shall have a 3-point latching handle. Outdoor enclosures with panel mounted devices shall contain a white interior swing panel.

C. Identification of panel-mounted devices, conductors, and electrical components shall meet the requirements specified herein.

2.02 TERMINAL BLOCKS

A. Each LCP shall be provided with identified terminal strips for the connection of all external conductors. There shall be sufficient terminal blocks for all external connections plus an additional 25 percent spare for future use. Terminal blocks shall be identified in accordance with approved shop drawings. Terminal blocks shall be individual, stacking, compression type, 600VAC, 30A minimum, suitable for wire sizes No. 10 - No. 18. A printed terminal block label shall be affixed to each terminal block for identification.

B. Each field-mounted device deriving power from the LCP 'shall be individually fused with a knife-blade or plug-in fused terminal block and blown fuse indicator.

C. Terminal blocks for analog signals shall include an indicator light that is illuminated when the signal is present. A grounding type terminal block shall be provided for termination of the analog signal cable shield/drain wire.

DRAFT

2.03 OPERATOR DEVICES

A. Pushbuttons, selector switches, and pilot lights shall be of the heavy-duty, oil-tight type, 30mm in size. Miniature style devices are not acceptable.

B. Pilot lights shall be push-to-test, LED style with LED and lens color as indicated on the Drawings.

C. START buttons shall have green cap and STOP buttons shall have red caps. All other button caps and selector switch operator handles shall be black.

D. Selector switches shall have the number of positions as indicated on the Drawings or as required to perform the intended function. Provide the number of 120VAC, 10A contacts as indicated on the Drawings or as required to perform the intended function.

E. Provide an engraved legend plate or provide laminated plastic nameplates as specified elsewhere for each device.

F. The operator devices shall have a NEMA rating equal to or more stringent than the control panel in which it is mounted.

G. Acceptable manufacturers:
   1. Cutler-Hammer 10250 series
   2. Square D 9001SK series
   3. Or ENGINEER-approved equal

2.04 CONTROL RELAYS

A. Relays shall be DPDT (minimum) plug-in type utilizing rectangular blades with an indicating LED, and sockets with screw-type terminals and hold-down clips. Operating coil voltage shall be as required or indicated on the Drawings.

B. Contacts shall be rated 10 Amps at 120 VAC. Contact material shall be silver-cadmium oxide except for signal switching circuits that shall be gold plated or other noble metal.

C. Acceptable manufacturers Square D Type K IDEC Type RH or ENGINEER-approved equal

2.05 TIMING RELAYS

A. Time delay relays shall be a combination on-delay and off-delay (selectable) with adjustable timing range from 1 sec to 10 hours. The timing relays shall include an LED indicator that is illuminated when the relay is timing out. Operating coil voltage rating shall be as indicated on the Drawings with DPDT, 120VAC, 10 amp rated contracts. Provide sockets with screw-type terminals and hold-down clips.

B. Reset Timers: Reset timers shall be synchronous motor. driven with a solenoid-operated clutch. The timing relays shall include an LED indicator that is illuminated when the relay is timing out. Voltage rating shall be as indicated on the Drawings with 120VAC, 10 amp rated contacts, and timing range as required or indicated on the Drawings.

C. Acceptable manufacturers:
   1. ATC
   2. DEC
   3. Or ENGINEER-approved equal

2.06 SIGNAL CONDITIONERS

A. Current-to-current converter/isolators shall be 4-20 mA input, 4-20 mA output. The INTEGRATION CONTRACTOR shall utilize signal isolators where necessary to boost or isolate signals for proper operation.

DRAFT

B. Pulse-to-current converters shall convert a square wave pulsed frequency to a proportional 4-20mA output and shall operate on 120 VAC.

C. Acceptable manufacturers:
   1. Moore Industries
   2. AGM
   3. Or ENGINEER-approved

2.07 POWER SUPPLIES

A. Power supplies shall be DIN-rail mounted and be of the solid-state circuitry type UL-1950 and CSA-1402C certified. Input power shall be 120VAC, +/- 10%, output voltage shall be as indicated on the Drawings or as required for proper operation of connected loads.

B. Power supplies shall be sized for 200% of the total connected load.

C. Line regulation shall be within +/- 0.05 percent with a 10 percent line change. Load regulation shall be within +/- 0.05 percent with a 50 percent load change. Output ripple shall not exceed 0.2 percent peak-to-peak:- Transient response shall be less than 50 microseconds for a 50 percent load change.

D. Power supplies shall be fully rated with an efficiency of at least 60 percent for a temperature range of 0 - 60°C or be oversized appropriately. Power supplies shall produce EMI/RR noise levels within the requirements of FCC Docket 20780.

E. Power supplies shall contain internal short circuit and overload protection. Output fusing shall be supplied on the positive terminal.

F. Acceptable manufacturers or ENGINEER-approved equal:
   1. Acopian
   2. Sola
   3. IDEC
   4. Phoenix Contact

2.08 UNINTERRUPTIBLE POWER SUPPLY (UPS)

A. The UPS shall be on-line, with automatic bypass switching upon failure, and with automatic bypass switching for maintenance. The UPS shall include built-in surge protection, rectifier/battery charger, batteries, inverter, static transfer switch, and solid-state controls to provide a true sine-wave output.

B. Input power 120VAC, +/-10%, 60Hz.

C. Output power shall be 120VAC +/- 5% 60Hz with a harmonic distribution at less than 5% (voltage).

D. UPS KVA ratings have been indicated on the Drawings for bidding purposes only. Actual KVA rating of each UPS shall be as required to operate all loads being served for a minimum of 20 minutes without input power. KVA in-rush rating shall not be less than 150% of connected load's in-rush current. UPS load calculations must be submitted with the UPS for approval.

E. Switching response time shall be less than 4 milliseconds.

F. Batteries shall be sealed, no maintenance type, designed for 5 years minimum service.

G. Display shall include: On-line or bypass operation, input power failure, UPS fault, UPS battery low.

H. Where indicated, the UPS shall be provided with dry contacts that close upon low battery alarm.

I. The UPS manufacture shall provide 1-year parts and labor warranty.

DRAFT

J. Acceptable manufacturers or ENGINEER-approved equal:
   1. APC
   2. Best

2.09 SPARE PARTS

A. Provide a minimum of 10 spare lamps.

B. Provide one control and one timing relay of each type utilized.

C. Provide one spare power supply of each size and type utilized.

D. Provide (3) spare fuses of each size and type utilized.

E. Refer to related Specification Sections for additional spare parts required.

PART 3 – EXECUTION

3.01 FABRICATION

A. LCP's shall contain components as indicated on the Drawings. The division of I/O between LCPs shall be provided per the Process and Instrumentation Diagrams (P&IDs).

B. All front accessible panel-mounted devices shall be mounted a minimum of 42-inches above finished floor elevation.

C. Where AC and DC signals must intercept each other, cross wires at 90-degree angles. Route AC and DC signals in separate wireways. Provide blank wireways for field wiring by the CONTRACTOR.

D. All internal wiring shall be contained in plastic raceways or troughs having removable covers. Wiring to door-mounted devices shall be extra flexible and anchored to doors using wire anchors cemented in place. Exposed terminals of door-mounted devices shall be guarded to prevent accidental contact with energized terminals.

E. Minimum control panel conductor size for power shall be No.12 AWG. Minimum conductor size for control wiring shall be No. 14 unless protected by a 10A overcurrent protective device or smaller, in which case it can be No.16 AWG (in PLC and operator interface cabinets only). Analog signal cables shall be 600V, No.16 AWG twisted shielded pair.

F. Wire markers shall be heat shrinkable, be a minimum of 3/8-inches in length and placed as near as possible to the end of the wire.

G. Identification of panel-mounted devices control equipment enclosure shall be engraved laminated plastic with black letters on white background. Use minimum 3/16-inch letters for identifying individual panel components. Use minimum 3/8-inch letters for identifying control equipment enclosure.

H. LCP enclosure doors that contain 120VAC devices shall be bonded to the enclosure grounding lug.

I. Each PLC I/O point connected to an external device shall be terminated at terminal blocks.

J. All analog signals shall be individually fused at the terminal block. See additional requirements as specified elsewhere in these specifications.

3.02 INSTALLATION

A. LCP(s) shall be installed as indicated on the drawings.

B. All front accessible panel-mounted devices shall be mounted a minimum of 42 inches above finished floor elevation.

C. LCP(s) shall be stored in an indoor, dry location at the jobsite to protect from condensation, damage, and the effects of weather.

DRAFT

D. LCP(s) interiors and exteriors shall be cleaned, and coatings shall be touched up to match original finish upon completion of the work.

END OF SECTION

DRAFT

SECTION 40 7000 – INSTRUMENTATION FOR PROCESS SYSTEMS

PART 1 – GENERAL

1.01 REQUIREMENT

A. This Section includes the general requirements for furnishing and installing the field instruments as indicated on the Drawings and specified in this Division of these specifications. Other instrumentation and control sections of this Division shall supplement this Section as necessary. These specifications shall not apply to instrumentation to be provided by process equipment vendors as part of the process systems or equipment already approved by the ENGINEER.

B. The field instrument schedule is attached to the end of this Specification Section but shall not be construed as a Bill of Materials or as a complete listing of all required devices. The I&C INTEGRATOR shall be responsible for all field instruments indicated in these Specifications and the Contract Documents.

C. The I&C INTEGRATOR shall provide all labor, materials, and incidentals as indicated, specified, and required to furnish, install, calibrate, adjust, test, document, start-up, and train for each field instrument furnished.

D. Labor, materials, apparatus, and components essential to the complete functioning of field instruments described and indicated herein, or which may be reasonably implied as essential, whether mentioned in the Contract Documents or not, shall be furnished and installed by the I&C INTEGRATOR. In case of doubt as to the work intended, or in the event of need for explanation thereof, the I&C INTEGRATOR shall refer to the ENGINEER for supplemental instructions.

E. For purposes of clarity and legibility, the Drawings are diagrammatic only. Construction Documents are not intended to show every fitting, junction, or component nor every difficulty that may be encountered during installation or coordination with different equipment manufacturers. The I&C INTEGRATOR shall refer to related data in all Contract Documents and shall verify this information on site.

1.02 SUBMITTALS

A. Submittals shall be furnished in accordance with Section 01 3300 – Submittal Procedures.
   1. Descriptive Data: Submit copies of complete descriptive literature, performance data, physical dimensions, power, and signal connections for each field instrument to be furnished. Provide name of manufacturer, style, and complete model number. Listing items "as specified" without both make and model or type designation is not acceptable.
   2. Component Data Sheets: Submit a component data sheet for each piece of instrumentation equipment similar to an ISA S20 form. Include equipment tag number, manufacturer's model number, location of service, materials of construction, size and scale range, calibrated range, set points, optional accessories, and any other useful information.
   3. Submit drawings and bill of materials for any sun shields that may be required. Drawings must clearly indicate how the sun shield will be fabricated and mounted.

1.03 OPERATING AND MAINTENANCE MANUALS

A. Installation requirements and procedures.

B. Complete instructions regarding the operation and maintenance of equipment involved. Instructions and documentation not related to the equipment furnished must be removed or crossed out. O&M manuals must be individually tailored to the project and equipment as furnished.

DRAFT

C. Bill of Materials, component data sheets, descriptive literature, product specification sheets, wiring diagrams and calibration procedures. O&M manuals must be individually tailored to the project and equipment as furnished.

D. Complete nomenclature of replaceable parts, part numbers, current cost, name and address of nearest vendor of replacement parts. Information on equipment or components not related to equipment furnished must be removed or crossed out. O&M manuals must be individually tailored to the project and equipment as furnished

E. Provide a copy of all instrument calibration reports.

F. Refer to Applicable Sections of Division 40 – Process Integration for additional requirements.

1.04 QUALITY ASSURANCE

A. Equipment to be furnished under this section shall be the product of firms regularly engaged in the design and manufacture of this type of equipment. Manufacturer shall assume responsibility for, and guarantee performance of equipment furnished. However, this shall not be construed as relieving the I&C INTEGRATOR from responsibility for the proper installation and functioning of the work.

B. The manufacturer shall provide a 2-year equipment warranty.

1.05 COORDINATION

A. The I&C INTEGRATOR shall coordinate with all other equipment manufacturer to ensure proper installation and operation of the field instruments.

B. The I&C INTEGRATOR shall coordinate with all other trades to avoid conflicts and interferences. No extra compensation will be allowed for changes made necessary due to conflicts between various equipment.

C. Any discrepancies noted in these contract documents or discrepancies between Drawings and actual field conditions shall be promptly brought to the ENGINEER for a decision. No extra compensation will be allowed for changes made by the I&C INTEGRATOR without ENGINEERs consent.

D. IDENTIFICATION TAGS (To be provided by Contractor, as per these Specifications.)

PART 2 – PRODUCTS

2.01 PROVIDE INSTRUMENTATION AS NOTED ON THE EQUIPMENT LIST.

2.02 MAGNETIC FLOWMETERS

A. General:

1. Magnetic flowmeters systems shall be of the low frequency electromagnetic induction type and produce a DC pulsed signal directly proportional to and linear with the liquid flow rate. Complete zero stability shall be an inherent characteristic of the flowmeter system. Each magnetic flowmeter system shall include a metering tube, signal cable, transmitter, and flowmeter grounding rings.
2. Flowmeter shall be for the appropriate type to measure water flow rate in water or wastewater as required by the Contract Documents.
3. Magnetic flowmeters and electronics shall be manufactured at facilities certified to the quality standards of ISO Standard 9001 - Quality Systems - Model for Quality Assurance in Design/Development, Production, Installation, and Servicing.
4. Flowmeters that are to be located on a submerged pipe shall be designed to operate in such conditions. Flowmeter display shall be located above water level and a connection cable of appropriate length shall be provided to allow connection to display location.

DRAFT

B. Metering Tube:
   1. Constructed of stainless steel with 150 lb. carbon or stainless steel ANSI B16.5 Class 150 flanged connection.
   2. Utilize a minimum of 2 bullet-nosed, self-cleaning electrodes.
   3. The liner shall be non-conductive and in conformance with the Manufacturer's recommended service.
   4. Electrodes constructed of materials that are in conformance with the Manufacturer's recommendation for the meter's intended service.
   5. Meter housing rated for accidental submergence.
   6. Two stainless steel grounding rings shall be furnished and installed in accordance with the manufacturer's bore and material recommendation for the meter's intended service. Installation shall be per flowmeter manufacturer's recommendations. Unless otherwise indicated, flowmeter grounding shall consist of a 3/4" x 10-foot copper clad ground rod bonded to the grounding rings with a No.6 bare copper conductor.

C. Transmitter: The transmitter shall be mounted on the flow-tube or remotely where indicated on the Drawings. The interconnecting cable shall be furnished by the flowmeter manufacturer of sufficient length to avoid splicing. Transmitters shall be housed in NEMA 4X enclosures suitable for mounting outdoors. The transmitter shall produce an electrically isolated 4-20mA DC output into a minimum load of 800 ohms linear to flow and a dry-contact, field adjustable, pulsed output for remote totalization.

D. Performance Requirements:
   1. Measuring Range: 0.33 to 33 ft/s
   2. Calibrated Range: 1.0 to 33 ft/s
   3. Time Constant: 0.01 to 100 seconds.
   4. Accuracy: ±0.2 percent of flow rate from 10 to 100 percent of full range over 1 ft. per second at 0 x D inlet run.
   5. Repeatability: 0.1 percent of full scale.
   6. Isolation: either galvanic or optic
   7. Empty pipe detection: The flow transmitter shall display "Empty Pipe" when the metering tube is not completely full.
   8. Power consumption: 30 watts max
   9. Power supply: 85 to 260 VAC
   10. Communication Protocol: Analog and Digital

E. Factory Testing: Each flowmeter shall be hydraulically calibrated at a facility that is traceable to the National Institute of Testing Standards using a 3-point (minimum) test. The calibrations procedures shall conform to the requirements of MIL-STD-45662A. A real-time computer-generated printout of the actual calibration data indicated apparent and actual flows for each flow test shall be submitted to the ENGINEER with final project documentation.

F. Acceptable Manufactures:
   1. Toshiba,
   2. Endress + Hauser,
   3. or ENGINEER-approved equal

2.03 LEVEL TRANSDUCER

A. Signal Output
   1. 4-20 MADC 2 wire twisted pair grounded shield cable @ 0.042 ohm/ft
   2. FM and CSA explosion-proof and intrinsically safe
   3. Unit meets EMI/RFI for Mil-Std 461/462 Rev. E
   4. Response time: <5ms

DRAFT

B. Accuracy
   1. Static Accuracy: 0.25% FSO BFSL
   2. 1-year Stability: 0.20% FSO
   3. Error Band: 0.90% BFSL FSO

C. Temperature
   1. Temp. Compensation: +35°F to +125°F
   2. Operating temp.: -20°F to +190°F
   3. Storage temp: -65°F to +250°F

D. Electrical Connection and Protection
   1. Vented, watertight, polyurethane-jacketed cable, 40 feet standard
   2. 10-30 VDC unregulated power
   3. Unit is FM explosion-proof and FM intrinsic safe.

E. Material
   1. Wetted Parts: 316 Stainless Steel Inconel Sensor
   2. Body: 300 Stainless Steel, explosion-resistant
   3. Cable: Polyurethane-jacketed cable
   4. Cable: 40 feet standard

F. Agency Approval Options
   1. Explosion-proof rated Class I, II, III, Division I, Groups A, B, C, D, E, F, G.

G. Ranges
   1. 5 psi higher than the high operating level, unless noted otherwise in plans

H. Acceptable Manufacturers:
   1. E&H
   2. Or ENGINEER-approved equal

2.04 LEVEL FLOATS

A. Float switches shall be used to sense liquid level in a tank, basin or other applications as indicated on the Drawings. Floats shall be mechanical activated switch contact, rated for 10A @240V for mechanical pump duty or 5A @ 240V for control duty. The float ball shall be constructed of 316 stainless steel or durable polypropylene material construction with solid polyurethane foam interior. It shall be leak proof, shock proof, and impact resistant. Switch shall be non-mercury type.

B. The switch contact configuration shall be normally open (N.O.) or normally closed (N.C.) as required to perform the proper operation as intended in these Contract documents. Actuation point shall be 1” above or below the horizontal. Power chord shall be chlorinated polyethylene material. Cord weight shall be zinc plated cast iron – 1.22 lb minimum with split-weight design for ease of adjustment.

C. Floats shall be installed such that the switch activation takes place at the liquid level as indicated or directed by the ENGINEER at time of construction. The float switch assembly shall include 1" schedule 80 PVC fastened to the tank/basin wall with 316 stainless steel anchors and clamps if required to secure the float(s) into place or as indicated on the Drawings. Float switch cables shall be secured to the cable or PVC pipe with weather-resistant, UV rated tie-wraps.

D. Acceptable Manufacturers:
   1. Connery
   2. Or ENGINEER-approved equal

DRAFT

2.05 GAS DETECTOR

A. General: Toxic gas transmitters for the monitoring of ambient oxygen levels shall be provided in areas as called out in the Contract Documents. Each gas transmitter shall consist of an explosion-proof electronic transmitter and close coupled sensor holder. Sensors shall be interchangeable and designed to easily fit into a sensor holder.

B. Gas transmitters shall measure gas concentrations in the installation area using smart electrochemical gas diffusion sensors, physically housed in a special socketed sensor holder. Sensor gas type, range, and calibration data shall store in the sensors' memory and be automatically read into the transmitter Sensors capable of remote calibration using a bench transmitter at a convenient location with the new calibration data stored in the sensor module memory.

C. The gas transmitter shall be housed in an explosion-proof enclosure with window and consist of an electronic board stack with LCD graphic display with magnetic function switches for non-intrusive access to all transmitter programming and display functions. The electronic board stack shall be designed to plug into a power supply board at the base of the transmitter enclosure and be easily removable for service or field wiring. The transmitter shall display gas concentrations on an LCD graphics display along with alarm indication and menus for setup and operating parameters.

D. Each gas transmitter shall be provided with three SPDT 5-Amp alarm relays that are assignable to any alarm setpoint or fault condition and fully programmable for setpoint, hysteresis and time delay.

E. Gas transmitters shall operate from power supplies of 12-30 VDC supply and shall be capable of driving external loads up of 675 ohms with a standard 24 VDC supply. Transmitter enclosure shall be rated explosion-proof for Class 1, Group B, C, & D.

F. Acceptable Manufacturer shall be ATI Series D12, 2-wire type with integral LCD or approved equal.

2.06 PRESSURE GAUGES

G. Pressure gages shall have the following features as a minimum:
   1. Housing: 4-1/2", aluminum case with plastic lens, white dial and black numbers/graduations/pointer
   2. Silicone oil filled
   3. Range: as indicated elsewhere
   4. Proof pressure: 150 percent of range psi minimum
   5. Accuracy: one percent of full scale
   6. Wetted material: 316 stainless steel
   7. Dial/pointer: stainless steel or aluminum
   8. Service: liquid, gas, or vapors as indicated on the Drawings
   9. Process connection: 1/4" NPT male
   10. Calibration: micro-adjustment screw
   11. Accessories: test cock, female outlets, and an isolation ball valve

H. An isolation ball valve shall be furnished and installed on each pressure gauge for ease of removal without disruption of service. The valve shall be sized as required for the process connection.

I. A diaphragm seal shall be furnished and installed to isolate each pressure gauge installed with a process connection other than potable water or clean air.

J. The I&C CONTRACTOR shall furnish and install all mounting hardware and support structures necessary for proper operation in accordance with the manufacturer's recommendations and the Contract Documents. Materials used for support structures

DRAFT

shall be suitable for the environment in which it is installed (corrosive - stainless steel, non-corrosive - galvanized steel; unless indicated otherwise).

K. Acceptable Manufacturers:
1. US Gauge (Ametek)
2. Ashcroft
3. Winters
4. Or ENGINEER-approved equal

2.07 PRESSURE TRANSMITTER

A. The pressure transmitter shall measure the pressure in the line and shall transmit a 4-20 mA output for process control. The unit shall have an LCD display for local readings.

B. Requirements
1. Accuracy: ±1% down to 10:1
2. Display: 4-character LCD
3. Output: 4-20 mA
4. Pressure: as noted in plans or 10% higher than the maximum operating pressure
5. Sensing Element: 316 SS diaphragm
6. Wetted Material: 316 SS
7. Process Connection: 1/4” NPT (F)
8. Power: 12 – 45 VDC
9. Enclosure: NEMA 4X

C. Acceptable Manufacturers:
1. Rosemount
2. Endress & Hauser
3. Or ENGINEER-approved equal

2.08 LEVEL TRANSMITTER – RADAR TYPE

A. General: Radar level transmitter is a continuous non-contact level measurement with 80 GHz technology radar with a measuring range of up to 10m (33ft) for basic applications in liquids and solids.

B. Requirements
1. Accuracy: Liquid ± 5mm (0.2”) / Solids ± 10mm (0.39”)
2. Supply/ Communication: 2-wire (4-20mA) – Bluetooth (Optional)
3. Supply Voltage: 12 to 30 VDC
4. Frequency : W-Band (~80 GHz)
5. Process Pressure: -14.5 to 43 psi
6. Ambient Temp: -40C to 60C
7. Wetted Material: PVDF, PBT/PC
8. Process Connection: 1” – 1.5” NPT
9. Max Measure Distance : 10 m (32 ft)

C. Acceptable Manufacturers:
1. Endress & Hauser Micropilot FMR10B

PART 3 – EXECUTION

3.01 INSTALLATION

A. The I&C INTEGRATOR shall furnish and install all mounting hardware and support structures for the instrumentation and the logic unit as required for proper operation in

DRAFT

accordance with the manufacturer's recommendations and the Contract Documents. Materials used for support structures shall be suitable for the environment in which it is installed (corrosive – PVC, Fiberglass or stainless steel, non-corrosive – stainless steel; unless indicated otherwise).

B. Inspect each instrument and piece of equipment for defects, damage, and correct operation before installation. Inspect work area and work involving other trades to verify readiness for installation.

C. Field instruments shall be installed per manufacturer's requirements. Verify that all mounting, process, and electrical connections are secure and tight before operating instrument.

D. Install field instrument identification tag as described above.

E. The I&C INTEGRATOR shall coordinate with the Mechanical I&C INTEGRATOR to verify process connection type and location.

F. Field instruments installed in hazardous (classified) locations shall be installed in approved enclosures or electrically connected through an intrinsically safe barrier and shall meet all other requirements of NFPA 70 Articles 500-503.

G. Furnish and install sun shields for all analog instruments installed outdoors in direct sunlight where recommended by the instrument manufacturer.

H. Additional installation supervision, calibration, testing, and start-up requirements are provided in these Specifications.

END OF SECTION

DRAFT

SECTION 41 2200 – CRANES AND HOISTS

PART 1 – GENERAL

1.01 THE REQUIREMENT

A. Provide permanent and/or portable lifting equipment and ancillary equipment as specified below.

1.02 SUBMITTALS

A. Submittals shall be furnished in accordance with Section 01 3300 – Submittal Procedures.

B. Submittal shall also include base dimensions, footing requirements, and footing reaction forces.

1.03 WORK INCLUDES THE FOLLOWING:

A. Detailed design of completed crane system, including bridge, end trucks, trolley, hoists, cabling, controls, and all appurtenances specified hereinafter.

B. Shop drawings.

C. Fabrication of a complete crane.

D. Inspection and shop testing.

1.04 REFERENCES

A. Equipment furnished under this section shall comply in all respects with the requirements of the following standards:

1. OSHA Occupational Safety and Health Administration
2. CMAA Crane Manufacturer's Association of America
3. HMI Hoist Manufacturer's Institute
4. ANSI American National Standards Institute
5. NEMA National Electric Manufacturer's Association
6. NEC National Electric Code
7. AWS AWS D14.1 Specification for Welding Cranes

1.05 QUALITY ASSURANCE

A. CONTRACTOR shall adhere to OSHA, state, and local safety guidelines, laws, rules, and regulations.

B. CONTRACTOR shall be licensed in the state of Arizona and have a minimum of 10 years' experience in the manufacture, fabrication, and installation of bridge cranes.

C. CONTRACTOR shall conform to all applicable ANSI, CMAA, and HMI specifications and/or standards.

D. Comply with CMAA specification 74 or 70, as applicable.

E. Long lead items [hoist, end trucks, drives and controls] will be ordered by CONTRACTOR upon receipt of purchase order and credit approval. Steel will not be ordered until shop drawings and submittals have been approved by the customer.

F. All electric equipment shall be UL, CSA, or ETL labeled.

1.06 WARRANTIES

A. Provide one-year equipment warranty.

1.07 SERVICE AGREEMENT

A. Provide optional cost for two-year service agreement from local service organization.

DRAFT

PART 2 – PRODUCTS

2.01 BRIDGE CRANE SYSTEM

A. The bridge crane system shall include the designing, manufacturing, shipping, installing and field testing of a top running, single girder, overhead traveling bridge crane with one electric wire rope trolley hoist.

B. The following design conditions are required for the crane(s):

Bridge Crane		
Capacity	5 tons	
Duty Class	CMAA Class C	
Span	Per plan	
Steel	AISC Hot Rolled Steel Beams, A992	
Bridge Girder Deflection	L/888	
End Trucks	Dual drive with fixed axles. Motors shall include AC magnetic disc brakes per CMAA requirements. Wheelbase-to-span ratio shall not exceed 7:1	
Hoist	Electric wire rope hoist	
Lift	38’-1.5” above the operating floor with two wraps remaining on drum at lowest hook position.	
Trolley	Motor drive with two drive wheels and brakes per CMAA requirements	
Speeds	Bridge	0 to 100 fpm, VFD control
	Hoist	20 & 3.3 fpm, two speed control
	Trolly	0 to 65 fpm, VFD control
Voltage	460 v 3 Ph 60 Hz, 115 volt control	
Nominal HP	18 HP	
Bumpers	Rubber bumpers on end trucks and trolley per CMAA requirements	
Enclosures	NEMA 4, Minimum	

C. Crane Girder
1. Girders shall be designed to resist all vertical, horizontal and torsional forces.
2. Bridge girders shall be new, ASTM A992 Hot Rolled structural steel shapes or welded box girders designed to meet the requirements of CMAA.

D. End trucks
1. End trucks shall be constructed of structural steel tubes, providing a rigid structure. Design shall allow easy wheel removal and exchange.
2. End trucks shall be fitted with shock absorbing bumpers.
3. Crane wheels shall be high strength ductile iron, machined with double flanges and straight treads, flame hardened to 300 Bn. Wheels shall be sized to meet the minimum allowable wheel loads per CMAA. The wheel axle assembly shall rotate on dual high quality anti-friction, lifetime lubricated bearings having a minimum life of 5,000 hours.
4. The end truck to girder connection shall be bolted for easy removal of end truck. Bridge girder shall be coped to provide the highest possible positioning of the runway beams.

DRAFT

E. Bridge and Trolley Drives
   1. Bridge drives shall employ fixed rotating axles with totally enclosed motors. Trolleys shall employ two drive wheels.
   2. Motors shall be TENV, Class F insulated with a temperature activated switch in the windings, 30-minute rated, 1800 RPM.
   3. The gear reducers shall be fully enclosed with oil bath for gears.

F. Wire Rope Hoist
   1. Hoist Motor and Braking System
      a. Hoist motor shall develop sufficient power to lift the rated load at the specified speed. Motors shall be TENV, Class F insulated with a temperature activated switch, 30-minute rated, 1800 RPM. Hoist motor shall not be placed inside of hoist drum.
      b. The hoist shall have a DC rectified disc type motor brake. Brake material shall not contain asbestos.
   2. Hoist Gearing
      a. Hoist gearing shall be helical, heat treated alloy steel and shall operate in an oil bath.
   3. Hoist Drum and Rope
      a. The rope drum shall be welded construction, deep grooved and precision-machined to give maximum rope life. Drum shall be supported at each end by sealed anti-friction bearings.
      b. The hoisting rope shall be of a proper design and construction for hoist service. The rated capacity load divided by the number of parts of rope shall not exceed 20% of the breaking strength of the rope.
      c. Double wrapping of the rope shall not be permitted. A drum rope guide shall be provided. A minimum of two wraps shall remain on the drum with the hook in the lowest position.
      d. Bottom block shall have a totally enclosed housing fabricated of steel. The rope sheaves shall be supported on an anti-friction thrust bearing. Hook shall be a single barbed type hook and shall be equipped with a heavy spring safety latch.
      e. Hoist shall be equipped with upper and lower limit switches as well as a redundant block operated upper limit switch. The switches shall be adjustable to set the extreme upper and lower limits of hook travel.
      f. Hoist shall be equipped with an overload device to prevent lifting loads in excess of 125%.

G. Bridge Electrification and Controls
   1. Electrification
      a. To supply the electrical power across the crane for bridge, trolley and hoist motions, a flat cable festoon system shall be utilized. The flat cable shall be extra flexible with color coded wires according to NEMA standards. Wire shall be stranded copper per CMAA.
      b. The trolleys that carry the flat cable shall have steel wheels with sealed ball bearings. The c-track that the trolley operates in shall be a minimum of 14 gauge galvanized metal.
      c. Flat cable connectors shall be heat shrinkable, corrosion resistant and flame retardant
   2. Controls
      a. Bridge, trolley and hoist controls shall be mounted in NEMA 4 enclosures.
      b. A magnetic mainline contactor, controlled by momentary on/off switches on the pushbutton shall be included.
      c. A control transformer shall be provided with separate and isolated primary and secondary winding, all copper wound. Control voltage shall not exceed 120 volts.
      d. Hoist functions shall be controlled by magnetic contactor.

DRAFT

e. Bridge and trolley functions shall be controlled by separate variable frequency drives.
f. All controls shall be sized to meet ambient temperatures. A cooling system will be provided for each enclosure when the ambient temperature exceeds the maximum allowable operating temperature of the individual electrical components.

3. Pendant Station
   a. A NEMA 4, pendant station will be provided with a separate pushbutton for each direction. A red mushroom head "OFF" switch and a separate "ON" switch shall be supplied. Operators shall be two-speed.
   b. The enclosures shall have durable, clearly marked legend plates, guards to protect switches from damage or accidental actuation and shall allow for right or left hand operation. Arrangement shall be as used on other existing cranes in the facility.

H. PAINTING
1. All structural steel shall be cleaned of rust and mill scale with a minimum SSPC-6 "commercial blast" cleaning.
2. Cranes shall be painted with 2.0 mil DFT Primer & 2.5-3.0 mil DFT Safety Yellow Industrial Enamel.
3. Hoists shall be painted per the Hoist manufacturer's standard coating. Hooks shall not be painted.
4. Structural components shall be painted with 2.0 mil DFT Primer & 2.5-3.0 mil DFT Gray Industrial Enamel.

2.02 I-BEAM CRANE SYSTEM

A. The I-beam crane system shall be self-supporting and shall span the area as shown on the Drawings. The I-beam crane system construction shall allow the operators to lift equipment from anywhere within its span. Hoist shall be electric chain type or engineering approved equal.

B. The following design conditions are required for the crane(s):

I-Beam Crane	
System Capacity:	As noted in plans
Span:	As noted in plans
Overall Length:	As noted in plans
Trolley Type:	Push
Hoist speeds:	18/3 FPM, two speed
Hoist type:	Electric chain
Hoist lift required:	As noted in plans
Area Dimensions:	As noted in plans
Steel	AISC Hot Rolled Steel Beams, A-992
I-Beam Deflection	L/600
CMAA Classification:	Class C

C. The I-beam crane shall be equipped with an electric chain hoist and push trolley system. The hoist shall be capable of lifting the required system capacity and shall be supplied with a motor rated for 460V, 3-Phase, and 60-Hz.

D. The I-beam crane shall be primed and coated per Specifications Section 09 9700 – Special Coatings. A finish coat color per OWNER selection. CONTRACTOR shall submit color pallet to OWNER as part of the Submittal process.

DRAFT

E. Materials:

Components	**Material**
Runway beams	Steel ASTM A992
Trolley	Steel ASTM A36
Wheels	Heavy Duty Cast iron or steel
Hooks	Forged steel

F. EQUIPMENT

1. Hoist and Trolley
   a. Hoist shall be electric chain type with motorized trolley, to fit bridge beam.
   b. Hoist and trolley motors shall be as indicated in the table above, as applicable.
   c. Hoist shall be two speed
   d. Trolley shall push type
   e. Upper and lower limit switch shall be provided. Limit switch shall provide upper and lower limit stopping.
   f. Hoist motor shall be totally enclosed with equivalent to NEMA 4 rating and shall have minimum class F insulation.
   g. Hoist brake shall be DC type with adequate torque to stop and hold over 100% of the hoist rated load.
   h. Hoist control panel shall be at least equivalent to NEMA 3R rating.
   i. Safety latch shall be provided on hook.

2.02 DAVIT CRANE

A. Manufacturer: Davit crane shall be as manufactured by Thern, Inc., or ENGINEER-approved equal.

B. The following design conditions are required for the crane:

Pump Stations Davit Crane	
Lifting Capacity:	1,000 lbs Capacity at 81" (2,000 capacity)
Hook Reach:	74” (shortest position), 122” (fully extended)
Winch Operation:	Electric, 115 Volt, single phase
Boom Angle Adjustment:	Manual adjustment
Lift required:	30 Ft. (minimum)
Base Requirement:	Pedestal

C. Design Factor: yield design factor shall be a minimum of 1.5 under static conditions for all crane components including winch and base. Breaking strength safety factor shall be a minimum of 2.5 under static conditions. Comply with CMAA 70 or 74.

D. Hook Height: hook height shall be adjustable by moving the boom up or down between 5 degrees above horizontal and 45 degrees from vertical, with a minimum of 86 inches between the lowest position and the highest position with the boom fully extended.

E. Boom Angle: boom angle shall be adjustable at all times. Hand operated screw jack or ratchet-style screw jack shall be provided as required to raise or lower the boom between 5 degrees above horizontal and 45 degrees from vertical.

F. Boom Sheave: wire rope shall pass over a sheave at the end of the boom. Sheave shall have a bearing and shall be supported by a machined clevis pin which shall be keyed to the boom to keep the pin from rotating.

DRAFT

G. Clearance: minimum height of the boom shall be 36 inches between mounting surface and the underside of the boom in all base configurations.

H. Rotation: mast and boom shall rotate 360 degrees in the base, with a rotational handle attached to the mast to facilitate rotation. Crane shall include a bearing sleeve to support the mast at the top of the base.

I. Fastening Pins: crane components shall be fastened together using stainless steel clevis style pins, secured with lynch pins with lanyards fastening the lynch pins to primary structural components.

J. Portability: davit crane shall break down into portable components with no single component weighing more than 100 pounds. Carrying handles shall be welded to mast and boom.

K. Winch Location: lifting winches shall be located such that the center point of the drive shaft is behind the centerline of the mast.

L. Winch Mounting Bracket: crane shall be equipped with a winch mounting bracket that connects to the crane with a pin allowing the winch with bracket to be attached or removed without tools. Winch shall attach to the bracket using standard fasteners.

M. Nametag: davit crane shall be labeled with a non-corrosive metal identification plate labeled or imprinted with the manufacturer's name, model number, serial number, capacity rating, and other essential information.

N. Painting:
   1. Crane shall be factory painted per manufacturer's standards, with finish per OWNER's Selection.
   2. Crane shall be shop cleaned, primed, and painted as in accordance with these Specifications. The following items shall not be painted: Cable/Wire Rope

PART 3 – EXECUTION

3.01 SERVICES OF MANUFACTURER

A. Inspection, Startup, and Field Adjustment: The hoist systems shall be assembled and tested per the manufacturer's instructions and requirements. The test shall be performed using a load equal to ¾ of the load rating of the system and shall be demonstrated to the satisfaction of the ENGINEER prior to acceptance.

END OF SECTION

DRAFT

SECTION 43 1134 – REGENERATIVE ROTARY BLOWERS

PART 1 – GENERAL

1.01 THE REQUIREMENT

A. The blower furnished shall be designed, constructed, and installed in accordance with the best practice and methods and shall operate satisfactorily when installed in accordance with the Contract Documents.

1.02 SUBMITTALS

A. Submittals shall be furnished in accordance with Section 01 3300 – Submittal Procedures, and shall include the following:
   1. Performance data stating the anticipated capacity, brake horsepower demand, and the temperature differential, for the model selected at the design point conditions, and performance curves providing similar information for the full rated range of blower speed and differential pressure at standard inlet conditions.
   2. Descriptive literature, bulletins, and/or catalog cut sheets of the equipment which include complete manufacturer's specifications and materials of construction.
   3. Electrical connection diagrams for motors.
   4. Special handling instructions and requirements for storage and protection prior to installation.
   5. Operation & Maintenance Manuals
   6. Manufacturer's parts and unit warranty information.

PART 2 – PRODUCTS

2.01 GENERAL

A. The blower shall be manufactured by GAST, Republic, or approved equal and meet the following requirements:

Motor Enclosure	TEFC
HP	17
Voltage	480
Insulation Class	F
Operating Condition	260 CFM @ 3.5 psi

B. The blower shall:
   1. have oil-less operation
   2. be UL and CSA approved TEFC motor with permanently sealed ball bearings
   3. be IP54 rated enclosure on motors
   4. have cast aluminum dual impeller, blower housing and cover
   5. have the capability of mounting in any plane
   6. have internal muffling on inlet and outlet

2.02 BLOWER ACCESSORIES

A. The blowers are to be standard engineered designs of a manufacturer regularly engaged in the production of blowers to ensure single source accountability and shall include the following accessories:
   1. Pressure gauge
   2. Check valve
   3. Inlet filter (pressure)
   4. Pressure relief valve

DRAFT

PART 3 – EXECUTION

3.01 INSTALLATION

A. Installation of the blower shall be in accordance with the manufacturer's instructions and recommendations in the location shown on the Contract Documents.

END OF SECTION

DRAFT

SECTION 43 2313.19 – HORIZONTAL SELF-PRIMING CENTRIFUGAL PUMP

PART 1 – GENERAL

1.01 PERFORMANCE CRITERIA

A. The pump manufacturer must be ISO 9001:2008 revision certified, with scope of registration including design control and service after sales activities.

B. The pump manufacturer must be registered to the ISO 14001 Environmental Management System standard and as such is committed to minimizing the impact of its activities on the environment and promoting environmental sustainability by the use of best management practices, technological advances, promoting environmental awareness and continual improvement.

C. Pumps must be designed to handle raw, unscreened, domestic sanitary sewage. Pumps shall have 4” suction connection, and 4” discharge connection. Each pump shall be selected to perform under following operating conditions:

1. Capacity (GPM)	400
2. Total Dynamic Head (FT)	35
3. Total Dynamic Suction Lift (FT)	15
4. Maximum Repriming Lift (FT)	Between 17-23
5. Minimum TDH (FT)	Dependent on the water level
6. Maximum TDH (FT)	Dependent on the water level

D. Pump Performance Certifications

1. Solids Handling Capability
   a. All internal passages, impeller vanes, and recirculation ports shall pass a 1½” spherical solid. Smaller internal passages that create a maintenance nuisance or interfere with priming and pump performance shall not be permitted. Upon request from the engineer, manufacturer’s certified drawings showing size and location of the recirculation port(s) shall be submitted for approval.

E. Re-prime Performance

1. Consideration shall be given to the sanitary sewage service anticipated, in which debris is expected to lodge between the suction check valve and its seat, resulting in the loss of the pump suction leg, and siphoning of liquid from the pump casing to the approximate center line of the impeller. Such occurrence shall be considered normal, and the pump must be capable of automatic, unattended operation with an air release line installed.
2. During unattended operation, the pump shall retain adequate liquid in the casing to insure automatic re-priming while operating at its rated speed in a completely open system. The need for a suction check valve or external priming device shall not be required.
3. Pump must re-prime 15 vertical ft. at the specified speed and impeller diameter. Reprime lift is defined as the static height of the pump suction above the liquid, while operating with only one-half of the liquid remaining in the pump casing. The pump must reprime and deliver full capacity within five minutes after the pump is energized in the reprime condition. Reprime performance must be confirmed with the following test set-up:
   a. A check valve to be installed down stream from the pump discharge flange. The check valve size shall be equal (or greater than) the pump discharge diameter.

DRAFT

b. A length of air release pipe shall be installed between pump and the discharge check valve. This line shall be open to atmosphere at all times duplicating the air displacement rate anticipated at a typical pump station fitted with an air release valve.
c. The pump suction check valve shall be removed. No restrictions in the pump or suction piping will prevent the siphon drop of the suction leg. Suction pipe configuration for reprime test shall incorporate a 2 feet minimum horizontal run, a 90° elbow and vertical run at the specified lift. Pipe size shall be equal to the pump suction diameter.
d. Impeller clearances shall be set as recommended in the pump service manual.
e. Repeatability of performance shall be demonstrated by testing five consecutive reprime cycles. Full pump capacity (flow) shall be achieved within five minutes during each cycle.
f. Liquid to be used for reprime test shall be water.
g. Upon request from the engineer, certified reprime performance test results, prepared by the manufacturer, and certified by a registered professional engineer, shall be submitted for approval prior to shipment.

F. Manufacturer's Warranty
1. The pump manufacturer shall warrant the pump equipment to be of quality construction, free of defects in material and workmanship. A written warranty shall include specific details described below.
2. All equipment, apparatus, and parts furnished shall be warranted for sixty (60) months, excepting only those items that are normally consumed in service, such as oils, grease, packing, gaskets, O-rings, etc. The pump manufacturer shall be solely responsible for warranty of the pump equipment and all components.
3. Components failing to perform as specified by the engineer, or as represented by the manufacturer, or as proven defective in service during the warranty period, shall be replaced, repaired, or satisfactorily modified by the manufacturer.
4. It is not intended that the pump manufacturer assume liability for consequential damages or contingent liabilities arising from failure of any vendor supplied product or part which fails to properly operate, however caused. Consequential damages resulting from defects in design, or delays in delivery are also beyond the manufacturer's scope of liability.
5. This limited warranty shall be valid only when installation is made and use and maintenance is performed in accordance with manufacturer recommendations. The warranty shall become effective on the date of acceptance by the purchaser or the purchaser's authorized agent, or sixty (60) days after installation, or ninety (90) days after shipment from the factory, whichever occurs first.

PART 2 – PRODUCT

2.01 MANUFACTURER

A. The specifications and project drawings depict equipment and materials manufactured by The Gorman-Rupp Company, which are deemed most suitable for the service anticipated. It is not intended, however, to eliminate other products of equal quality and performance. Pump shall be Gorman-Rupp Model T4DS-B-4 or Engineer-approved equal.

DRAFT

B. After execution of the contract, the contractor may offer substitutions to the specified equipment for consideration. The equipment proposed for substitution must be superior in construction and performance to that specified in the contract, and the higher quality must be demonstrated by a list of current users of the proposed equipment in similar installations.

C. In event the contractor obtains engineer's approval for equipment substitution, the contractor shall, at his own expense, make all resulting changes to the enclosures, buildings, piping, or electrical systems as required to accommodate the proposed equipment. Revised detail drawings illustrating the substituted equipment shall be submitted to the engineer prior to acceptance.

D. It will be assumed that if the cost to the contractor is less for the proposed substitution, then the contract price shall be reduced by an amount equal to the savings.

2.02 PUMP DESIGN

A. Pumps shall be horizontal, self-priming centrifugal type, designed specifically for handling raw, unscreened, domestic sanitary sewage. Pump solids handling capability and performance criteria shall be in accordance with requirements listed under PART 1 – GENERAL of this section.

B. The pump manufacturer must be ISO 9001:2008 revision certified, with scope of registration including design control and service after sales activities.

C. Materials and Construction Features

1. Pump casing shall be cast iron Class 30 with integral volute scroll. Casing shall incorporate following features:
   a. Mounting feet sized to prevent tipping or binding when pump is completely disassembled for maintenance.
   b. Fill port coverplate, 3-1/2" diameter, shall be opened after loosening a hand nut/clamp bar assembly. In consideration for safety, hand nut threads must provide slow release of pressure, and the clamp bar shall be retained by detente lugs. A Teflon gasket shall prevent adhesion of the fill port cover to the casing.
   c. Casing drain plug shall be at least 1-1/4" NPT to insure complete and rapid draining.
   d. Liquid volume and recirculation port design shall be consistent with performance criteria listed under PART 1 – GENERAL of this section.
2. Coverplate shall be cast iron Class 30. Design must incorporate following maintenance features:
   a. Retained by hand nuts for complete access to pump interior. Coverplate removal must provide ample clearance for removal of stoppages, and allow service to the impeller, seal, wearplate or check valve without removing suction or discharge piping.
   b. A replaceable wearplate secured to the coverplate by weld studs and nuts shall be AISI 1015 HRS.
   c. In consideration for safety, a pressure relief valve shall be supplied in the coverplate. Relief valve shall open at 75-200 PSI.
   d. Two O-rings of Buna-N material shall seal coverplate to pump casing.
   e. Pusher bolt capability to assist in removal of coverplate. Pusher bolt threaded holes shall be sized to accept same retaining capscrews as used in rotating assembly.
   f. Easy-grip handle shall be mounted to face of coverplate.
3. Rotating assembly, which includes impeller, shaft, mechanical shaft seal, lip seals, bearings, seal plate and bearing housing, must be removable as a single unit without disturbing the pump casing or piping. Design shall incorporate following features:

DRAFT

a. Seal plate and bearing housing shall be cast iron Class 30. Separate oil filled cavities, vented to atmosphere, shall be provided for shaft seal and bearings. Cavities must be cooled by the liquid pumped. Three lip seals will prevent leakage of oil.
    1) The bearing cavity shall have an oil level sight gauge and fill plug check valve. The clear sight gauge shall provide easy monitoring of the bearing cavity oil level and condition of oil without removal of the fill plug check valve. The check valve shall vent the cavity but prevent introduction of moist air to the bearings.
    2) The seal cavity shall have an oil level sight gauge and fill/vent plug. The clear sight gauge shall provide easy monitoring of the seal cavity oil level and condition of oil without removal of the fill/vent plug.
    3) Double lip seal shall provide an atmospheric path providing positive protection of bearings, with capability for external drainage monitoring.
b. Impeller shall be ductile iron, two-vane, semi-open, non-clog, with integral pump out vanes on the back shroud. Impeller shall thread onto the pump shaft and be secured with a lock screw and conical washer.
c. Shaft shall be AISI 4140 alloy steel unless otherwise specified by the engineer, in which case AISI 17-4 pH stainless steel shall be supplied.
d. Bearings shall be anti-friction ball type of proper size and design to withstand all radial and thrust loads expected during normal operation. Bearings shall be oil lubricated from a dedicated reservoir. Pump designs which use the same oil to lubricate the bearings and shaft seal shall not be acceptable.
e. Shaft seal shall be cartridge oil lubricated mechanical type. The stationary and rotating seal faces shall be tungsten titanium carbide alloy. Each mating surface shall be lapped to within three light bands flatness (35 millionths of an inch), as measured by an optical flat under monochromatic light. The stationary seal seat shall be double floating by virtue of a dual O-ring design; an external O-ring secures the stationary seat to the seal plate, and an internal O-ring holds the faces in alignment during periods of mechanical or hydraulic shock (loads which cause shaft deflection, vibration, and axial/radial movement). Elastomers shall be viton; cage and spring to be stainless steel. Seal shall be oil lubricated from a dedicated reservoir. The same oil shall not lubricate both shaft seal and shaft bearings. Seal shall be warranted in accordance with requirements listed under PART 1 - GENERAL of this section.
f. Pusher bolt capability to assist in removal of rotating assembly. Pusher bolt threaded holes shall be sized to accept same capscrews as used for retaining rotating assembly.

4. Adjustment of the impeller face clearance (distance between impeller and wearplate) shall be accomplished by external means.
    a. Clearances shall be maintained by a four point external shimless coverplate adjustment system, utilizing a four collar and four adjusting screw design allowing for incremental adjustment of clearances by hand as required. Each of the four points shall be lockable to prevent inadvertent clearance increases or decreases due to equipment vibration or accidental operator contact. The four point system also allows for equal clearance gaps at all points between the impeller and wear plate. Requirement of realignment of belts, couplings, etc., shall not be acceptable. Coverplate shall be capable of being removed without disturbing clearance settings. Clearance adjustment systems that utilize less than four points will not be considered.
    b. There shall be provisions for additional clearance adjustment in the event that adjustment tolerances have been depleted from the coverplate side of the pump. The removal of stainless steel shims from the rotating assembly side of the pump shall allow for further adjustment as described above

DRAFT

c. Clearance adjustment which requires movement of the shaft only, thereby adversely affecting seal working length or impeller back clearance, shall not be acceptable.

5. Suction check valve shall be molded Neoprene with integral steel and nylon reinforcement. A blow-out center shall protect pump casing from hydraulic shock or excessive pressure. Removal or installation of the check valve must be accomplished through the coverplate opening, without disturbing the suction piping. Sole function of check valve shall be to save energy by eliminating need to reprime after each pumping cycle. Pumps requiring a suction check valve to assist reprime will not be acceptable.
6. Spool flanges shall be one-piece cast iron, class 30 fitted to suction and/or discharge ports. Each spool shall have one 1-1/4" NPT and one 1/4" NPT tapped hole with pipe plugs for mounting gauges or other equipment.

D. Serviceability
1. The pump manufacturer shall demonstrate to the engineer's satisfaction that consideration has been given to reducing maintenance costs.
2. No special tools shall be required for replacement of any components within the pump.

PART 3 – EXECUTION

3.01 EXAMINATION

A. Contractor shall off-load equipment at installation site using equipment of sufficient size and design to prevent injury or damage. Immediately after off-loading, contractor shall inspect complete pump and appurtenances for shipping damage or missing parts. Any damage or discrepancy shall be noted in written claim with shipper prior to accepting delivery. Validate all pump serial numbers and parts lists with shipping documentation. Notify the manufacturer’s representative of any unacceptable conditions noted with shipper.

3.02 INSTALLATION

A. Install, level, align, and lubricate pump(s) as indicated on project drawings. Installation must be in accordance with written instructions supplied by the manufacturer at time of delivery.

B. Suction pipe connections are vacuum tight. Fasteners at all pipe connections must be tight. Install pipe with supports and thrust blocks to prevent strain and vibration on pump piping. Install and secure all service lines (level control, air release valve or pump drain lines) as required in wet well.

C. Check motor and control data plates for compatibility to site voltage. Install and test the station ground prior to connecting line voltage to control panel.

D. Prior to applying electrical power to any motors or control equipment, check all wiring for tight connection. Verify that protective devices (fuses and circuit breakers) conform to project design documents. Manually operate circuit breakers and switches to ensure operation without binding. Open all circuit breakers and disconnects before connecting utility power. Verify line voltage, phase sequence and ground before actual start-up.

E. After all anchor bolts, piping and control connections are installed, completely fill the grout dam in the pump station base with non-shrink grout.

3.03 FIELD QUALITY CONTROL

A. Operational Test
1. Prior to acceptance by owner, an operational test of all pumps, drives, and control systems shall be conducted to determine if the installed equipment meets the purpose and intent of the specifications. Tests shall demonstrate that all equipment is

DRAFT

electrically, mechanically, structurally, and otherwise acceptable; it is safe and in optimum working condition; and conforms to the specified operating characteristics.

2. After construction debris and foreign material has been removed form the wet well, contractor shall supply clear water volume adequate to operate station through several pumping cycles. Observe and record operation of pumps, suction and discharge gage readings, ampere draw, pump controls, and liquid level controls. Check calibration of all instrumentation equipment, test manual control devices, and automatic control systems. Be alert to any undue noise, vibration, or other operational problems.

END OF SECTION

DRAFT

SECTION 43 2331.15 – PROCESS WATER PACKAGE BOOSTER PUMP SKID

PART 1 – GENERAL

1.01 THE REQUIREMENT

A. Furnish and install a process water package booster pump station in accordance with the Contract Documents.

1.02 SUBMITTALS

A. Submittals shall be furnished in accordance with Section 01 3300 – Submittal Procedures.

B. Shop Drawings: Shop Drawings shall contain the following information:
   1. Pump name, identification number, and specification Section number.
   2. Performance data curves showing head, capacity, horsepower demand, NPSH required, and pump efficiency over the entire operating range of the pump. The equipment manufacturer shall indicate separately the head, capacity, horsepower demand, overall efficiency, and minimum submergence required at the design flow conditions and the maximum and minimum flow conditions.
   3. The manufacturer shall be required to indicate the limits on the performance curves recommended for stable operation without surge, cavitation, or excessive vibration. The stable operating range shall be as wide as possible based on actual hydraulic and mechanical tests.
   4. Assembly and installation drawings including shaft size, seal, coupling, bearings, anchor bolt plan, part nomenclature, material list, outline dimensions, and shipping weights.
   5. Data, in accordance with NEMA Standards, for the electric motor proposed for each pump.
   6. Wiring diagram of field connections with identification of terminations between Local Control Panels, junction terminal boxes, and equipment items.
   7. Complete electrical schematic diagram.
   8. Factory certification indicating the pump make and model has been tested satisfactorily to meet the specified performance criteria.

C. Spare Parts List: A list of spare parts for each piece of equipment shall be obtained from the manufacturer and submitted at the same time as Shop Drawings. The name, address, and telephone number of the nearest distributor for each piece of equipment shall be furnished. This list shall contain all data necessary to allow the OWNER to purchase spare parts as necessary.

1.03 WARRANTY

A. The booster system shall be warranted in writing against defects in materials or workmanship under normal use and service for a period of one year after date of original operation but not more than 18 months from date of shipment from the Company's factory when installed and used in accordance with good standard practice.

PART 2 – PRODUCTS

2.01 GENERAL

A. Furnish and install a packaged, multiple pump skid for process water application. The process water packaged booster system shall be manufactured by Multi W Systems, Inc. or ENGINEER-approved equal.

B. The complete Packaged Pumping System, including pumps, motors, control equipment, tank, valves, fittings, above-ground manifolds, and U.L. Listed. In addition to the system the control panel assembly must be separately listed under UL 508A (Industrial Control

DRAFT

Panels). For potable water application, the system components shall be NSF/ANSI 61 Certified.

2.02 COMPONENTS

A. Skid

1. The booster system shall be factory assembled on a steel skid including pumps, motors, valves, Type 304LSS above-ground discharge manifold with 300 LBS ANSI Flanges and Type 304L Stainless Steel cans with 150 LBS ANSI Flanges, and all interconnecting piping, wiring and controls. The underground suction manifold shall be provided by the Contractor.
2. Provide isolation valves and check valves on the discharge of each pump. The isolation valves shall be full port ball valves or lug style butterfly valves.
3. Skid shall be equipped with a pressure relief assembly connecting the discharge and suction headers.
4. Provide 2-1/2" ASME grade A gauges for indicating system discharge pressure. The skid and panel stand shall be factory finished in high quality enamel paint.
5. All SS system piping and components shall be left un-painted for serviceability and inspection by the Administration Having Jurisdiction (AHJ) over the installation of this equipment.
6. Individual pumps, motors, pressure regulating or check valves may be serviced with the booster system in operation and all components shall be suitable the maximum working pressure in the system.
7. Manufacturer: Multi-W Model or approved equal.

B. Pumps

1. System shall include vertical multi-stage stainless steel centrifugal pumps with ANSI flanged connections, along with piping provisions for future duty pumps, if required. The pump suction/discharge chamber, motor bracket and pump shaft coupling shall be constructed of cast iron. The impellers, pump shaft, diffuser chambers, outer discharge sleeve and impeller seal rings or seal ring retainers shall be constructed of 304 stainless steel. Intermediate and lower shaft bearings shall be silicon carbide and ceramic. Pumps shall be equipped with a mechanical seal assembly with silicon carbide/Carbon seal faces mounted in stainless steel seal components and Viton Elastomers. The pump motor shall be NEMA C face design mounted directly to the top of the pump.

Name	**Make/ Model**	**Design Parameters**	**Power**
Pump 1	Peerless or approved equal	275 GPM at 85PSI TDH	20 HP, VFD
Pump 2	Peerless or approved equal	275 GPM at 85PSI TDH	20 HP, VFD
Pump 3	Peerless or approved equal	275 GPM at 85PSI TDH	20 HP, VFD

C. Motors

1. Motors shall be by Teco-Westinghouse Series MAX-E1 Severe Duty, 460 Volt, 3 Phase, 60 Hz, TEFC, NEMA Premium Efficiency and manufactured in accordance with NEMA standards or approved equal. Motors shall be selected so that they do

DRAFT

not exceed name plate HP rating throughout the programmed sequence of pump operation. Motors MUST be inverter duty.

D. Variable Frequency Drives
   1. Provide and mount inside the control panel variable frequency drives of the PWM design suitable for variable torque applications using any standard NEMA Design B squirrel cage induction motor, along with space, electrical and controls provisions for future duty pumps' VFDs (if required). Variable frequency drives shall be sized for the maximum possible amp draw throughout the programmed sequence of pump operation. Each VFD shall have an individual lockable disconnect switch and protective fuses sized per the manufacturer's recommendations. Variable frequency drives shall be of the same manufacturer as the motors. Each VFD shall be equipped with a harmonic filter from the same manufacturer as the VFDs.
   2. Manufacturer: Teco-Westinghouse – Series EQ7 or ENGINEER-approved equal

E. Pressure Sensor/Transmitter
   1. Provide two pressure sensor/transmitter that provides a 4 to 20 mA DC analog output, compatible with the system controls, temperature, and pressure requirements. The pressure sensor/transmitter shall be encased in a cast aluminum NEMA 4X conduit housing. The wetted material shall be constructed of 316L stainless steel. Pressure sensor/transmitter shall have zero, span and damping devices with 1.0% accuracy. The transmitter shall be installed on the system discharge header and factory wired to the control panel via a conduit.
   2. Manufacturer: Dwyer Instruments or pre-approved equal.

F. Control Panel
   1. Provide, mount and wire on the skid a programmable logic controller (PLC) (Allen Bradley or approved equal) in a NEMA 3R enclosure to interface the signal from the pressure sensor to the VFD's and provide a stabilized response to speed up or slow down the pump or add the lag pump(s) to meet system requirements. The controller shall provide set point adjustment, timer adjustment, PID functions and both system and controller self-diagnostics via touch screen display. The touch screen display / human machine interface includes a 7" Color TFT LCD display, resistive analog touch, numerical system keyboard. All user interface set points are easily accessible via the password protected display screen. Normal system operation is tuned to eliminate hunting. Controller shall have Ethernet/IP communication for external monitoring and alarming for each pump and USB connectivity with optional SD Card slot. A Form C general alarm dry contact shall be provided for each pump.
   2. Each system shall include a UL listed enclosed industrial control panel in a NEMA 3R enclosure, factory mounted and wired on the steel skid. The panel shall be furnished with a main molded case circuit breaker disconnect with flanged mount handle and individual pump molded case circuit breaker disconnects with through the door handles, pump run lights, alarm indication lights and 115-volt fused control transformer. The control transformer shall be sized to meet the minimum requirement for the necessary low voltage equipment in the control panel. A bus bar system with insulation covers shall be provided to distribute power throughout the equipment in the enclosure. The enclosure bay containing the control equipment shall have a 115-volt GCFI outlet sufficient to provide adequate power for laptop use for programming the controller. The control panel shall feature a single point power connection for ease of field installation.
   3. Enclosures shall be NEMA type 3R. The VFD shall be mounted inside the enclosure to provide protection against the environment. If required, larger HP VFD shall be mounted in their individual enclosure bay and the smaller HP VFD will be mounted together inside one bay.
   4. Enclosure shall be climate-control with a closed-loop AC unit.

DRAFT

PART 3 – EXECUTION

A. START-UP:

1. The service of a factory trained representative shall be made available on the jobsite for start-up and instructing operating personnel.

END OF SECTION

DRAFT

SECTION 43 2358.23 – POSITIVE DISPLACEMENT ROTARY LOBE PUMPS

PART 1 – GENERAL

1.01 DESCRIPTION

A. Scope

1. The CONTRACTOR Furnish all material, equipment and incidentals required for positive displacement, rotary lobe pumps, motors and coordinated control systems as hereinafter specified. Furnish pumps, motor, motor controls and other equipment as show on the Drawings. The station shall be complete with pumps, motors, piping, valves, electrical work (including motor controls), structures, connections, and appurtenances, tested and ready for operations.

B. Type

1. The pumping units shall be of the positive displacement, HiFlo rotor type, specifically designed for pumping sludge's derived from the treatment of wastewater containing organic solids, small inorganic particles, and grit. The rotor lobes shall be of a convoluted design to provide uniform pulse-free flow throughout the entire operating range. The pump shall have not less than four rotor tips.

C. Performance Requirements

1. Equipment shall be designed and selected for continuous duty pumping of concentrated solids derived from the treatment of wastewater. Where specified, pumps shall operate at variable speed and shall be capable of running dry, for a short period of time, without damage to the pump and or drive unit. Pumps shall be suitable for exposure to mixed liquor and waste secondary sludge containing grit, small particles of wood, metal, industrial solvents, greases, detergents, petroleum products, dissolved ammonia and hydrogen sulfide, and organic particles in concentrations as great as 8 percent as is typical of municipal wastewater. The pumped fluids are expected to range in temperatures between 45°F and 100°F, and the pH may vary between 6 and 9.
2. The pumps, along with associated drive appurtenances, shall be mounted on a common fabricated steel adjustable baseplate for sheave drive adjustment. The baseplate shall be hot dip galvanized after fabrication.

1.02 QUALITY ASSURANCE

A. References

1. Design, manufacturing, and assembly of elements of the equipment herein specified shall be accordance with the standards of the below listed organizations. Where reference is made to a standard of one of the following or other organizations, the version of the standard in effect at the time of the bid opening shall apply.
   a. American Gear Manufacturing Association (AGMA)
   b. American Institute of Steel construction (AISC)
   c. American Iron and Steel Institute (AISI
   d. American Society of Mechanical Engineers (ASME)
   e. American National Standards Institute (ANSI)
   f. American Society for Testing Materials (ASTM)
   g. American Water Works Association (AWWA)
   h. American Welding Society (AWS)
   i. Anti-Friction Bearing MANUFACTURERS Association (AFBMA)
   j. Hydraulic Institute Standards
   k. Institute of Electrical and Electronics Engineers (IEEE)

DRAFT

l. National Electrical Code (NEC)
m. National Electrical MANUFACTURERS Association (NEMA)
n. Occupational Safety and Health Administration (OSHA
o. Steel Structures Painting Council (SSPC)
p. Underwriters Laboratories, Inc. (UL)

1.03 QUALIFICATION

A. To assure unity of responsibility, the pumps and motors shall be furnished and coordinated by the pump manufacturer (MANUFACTURER). The CONTRACTOR shall assume full responsibility for the satisfactory operation of the entire pumping systems including pumps, motors, and controls as specified.

B. The equipment covered by these Specifications shall be standard units of proven ability as manufactured by competent organizations having long experience in the production of such equipment. The pumps shall be the standard cataloged product of the MANUFACTURER. The pumps furnished shall be designed, constructed, and installed in accordance with the best practice and methods, and shall operate satisfactorily when installed. Pumps shall be manufactured in accordance with the Hydraulic Institute Standards, except as otherwise specified herein.

C. All Equipment furnished under this Specification shall be new and unused and shall be the standard product of MANUFACTURERS showing a successful record of manufacturing and servicing the equipment and systems specified herein for a minimum of five (5) years, and be ISO 9001 2000 compliant.

D. The MANUFACTURER shall be fully responsible for the design, arrangement, and operation of all connected rotating components of the assembled pumping unit to ensure that neither harmful nor damaging vibrations occur within the specified operating range. Design shall include fabricated steel base plate for mounting the units.

1.04 SUBMITTALS

A. Copies of all materials required establishing compliance with the specifications shall be submitted in accordance with the provisions of Section 01 3300 – Submittal Procedures. The submittal format shall be in the form of a booklet, suitably tabbed and divided to cover at least the areas noted below for each major equipment item. The submittal booklet shall include adequate detail and sufficient information for the ENGINEER to determine that all of the equipment proposed meets the detailed requirements of the Specifications. Incomplete or partial submittals will not be reviewed. Submittals shall include at least the following:

1. A copy of this specification section, with addendum updates included, and all referenced and applicable sections, with addendum updates included, with each paragraph check-marked to indicate specification compliance or marked to indicate requested deviations from specification requirements. Check marks (√) shall denote full compliance with a paragraph as a whole. If deviations from the specifications are indicated, and therefore requested by the CONTRACTOR, each deviation shall be underlined and denoted by a number in the margin to the right of the identified paragraph, referenced to a detailed written explanation of the reasons for requesting the deviation. The Engineer shall be the final authority for determining acceptability of requested deviations. The remaining portions of the paragraph not underlined will signify compliance on the part of the Contractor with the specifications. Failure to include a copy of the marked-up specification sections, along with justification(s) for any requested deviations to the specification requirements, with the submittal shall be sufficient cause for rejection of the entire submittal with no further consideration
2. Certified shop and erection drawings showing all, important details of construction, dimensions, and anchor bolt locations.

3. Descriptive literature, bulletins and/or catalogs of the equipment.
4. Data on the characteristics and performance of each pump. Data shall include guaranteed performance curves, based on actual shop tests of similar units, which show that they meet the specified requirements for head, capacity, and horsepower. Curves shall be submitted on 8 ½" by 11" sheets, at as large a scale as is practical. Catalog sheets showing a family of curves will not be acceptable.
5. A complete total bill of materials of all equipment (may be furnished with Operation and Maintenance manuals specified under paragraph 1.05).
6. A list of the MANUFACTURER'S recommended spare parts, in addition to those specified in paragraph 1.06. with the manufacturer's current price for each item, shall be supplied. Include gaskets, packing, etc. on the list. List bearings by the bearings manufacturer's numbers only.
7. Complete motor and control systems data.
8. Warranty as described in paragraph 1.08.

B. Test Reports
1. A schedule of the date of shop testing and delivery of the equipment to the job site.
2. Description of pump factory test procedures and equipment.
3. Copies of all tests results, as specified.

C. Complete operating and maintenance instructions shall be furnished for all equipment included under these specifications. The maintenance instructions shall include trouble shooting data and full preventative maintenance schedules and complete spare parts lists with ordering information.

D. Submit the MANUFACTURER'S Certificate of Installation, Testing and Instruction.

E. In the event that it is impossible to conform with certain details of the specifications due to different manufacturing techniques, describe completely all non-conforming aspects.

1.05 OPERATING INSTRUCTIONS

A. Operating and maintenance manuals shall be furnished. The manuals shall be prepared specifically for this installation and shall include all required cuts, drawings, equipment lists, descriptions, etc., that are required to instruct operation and maintenance personnel unfamiliar with such equipment.

B. A trained instructor, with complete knowledge of proper operation and maintenance for all major components, shall be provided for two days to instruct representatives of the OWNER and the ENGINEER on proper operation and maintenance. With the OWNER'S permission, this work may be conducted in conjunction with the inspection of the installation and test run as provided under PART 3. If there are difficulties in operation of the equipment due to the MANUFACTURER'S design or fabrication, additional service shall be provided at no cost to the OWNER.

1.06 TOOLS AND SPARE PARTS

A. One set of special tools shall be provided for servicing all pumps. In addition, the following spare parts shall be provided for each size and type of pump:
1. Two (2) sets cartridge mechanical seals
2. Two (2) spare rotor sets, as specified, for each size pump
3. Two (2) set of front and back wear plates.

B. Spare Parts shall be properly bound and labeled for easy identification without opening the packaging and suitably protected for long term storage.

C. In addition to spare parts required for pump maintenance and servicing, supply 2 rebuild kits per size of pump. The rebuild kits shall include:

• PBT.A021 - Cartridge Mechanical Seal

DRAFT

- DOR.021 - O-Ring
- PRS.102 - Strain Bolt
- DOR.052 - O-Ring
- NST.017 - Cover
- DOR.045 - O-Ring
- VUSA.0508 - Seal Kit Box 9x9x9
- VUSA.0509 - Seal Kit Box Foam
- PBA.A014.N1 - Installation Tool, Cartridge
- PBA.A001.T1 - Lobe Puller
- NSI.057 - Cylinder Head Bolt
- NSK.155 - Hexagon Head Bolt
- Spare Rotor Sets
- Front and Back Wear Plates
- Gaskets and O-rings

1.07 PRODUCT HANDLING

A. All parts shall be properly protected so that no damage deterioration will occur during a prolonged delay from the time of shipment until installation is completed and the units and equipment are ready for operation.

B. All equipment and parts must be properly protected against any damage during a prolonged period at the site. Pumps shall be rotated 2 revolutions every 30 days of storage time.

C. Factory assembled parts and components shall not be dismantled for shipment unless permission is received in writing from the ENGINEER.

D. Finished surfaces of all exposed pump openings shall be protected by wooden blanks, strongly built, and securely bolted thereto.

E. Finished iron or steel surfaces not painted shall be properly protected to prevent rust and corrosion.

F. After hydrostatic or other tests, all entrapped water shall be drained prior to shipment, and proper care shall be taken to protect parts from the entrance of water during shipment, storage, and handling.

G. Each box or package shall be properly marked to show its net weight in addition to its contents.

1.08 WARRANTY

A. The equipment shall be warranted to be free from defects in workmanship, design, and materials for a period of two (2) years. If any part of the equipment should fail during the warranty period, it shall be replaced in the machine(s) and the unit(s) restored to service at no expense to the OWNER.

B. The manufacturer of the positive displacement pump, shall provide a two year, 100% parts and labor warranty, including wear and tear to the pump. This warranty shall include, but not be limited too mechanical seals, wear plates, housing segments, and lobes. Non-manufacturer warranty will be unacceptable, and all warranties must be in writing, at the time of the bid.

C. The MANUFACTURER'S warranty period shall run concurrently with the CONTRACTOR'S warranty period. No exception to this provision shall be allowed.

DRAFT

PART 2 – PRODUCTS

2.01 ACCEPTABLE PRODUCTS

A. The Owner and Engineer believe the following candidate manufacturers are capable of producing equipment and/or products that will satisfy the requirements of this Section. This statement, however, shall not be construed as an endorsement of a particular manufacturer's products, nor shall it be construed that named manufacturers' standard equipment or products will comply with the requirements of this Section. Pump shall be Vogelsang Model VX186-260 or approved engineer-approved equal.

2.02 MATERIALS

Component	Material
Casting and casing cover plates	Grey Cast Iron ASTM A536, 230 to 260 Brinell hardness, 700 Brinell on end cover plate
Rotors	Cast iron core with Buna-N covering as specified
Shafts	Carbon steel, ASTM A293 60 mm Diameter
Shaft sleeve	Stellite coated stainless steel

2.03 EQUIPMENT

A. Operating Conditions

Primary Duty Point	1300 gpm
Differential Pressure	25 psi
Suction Conditions	Flooded
Medium	Screen WW
Maximum HP at Duty Condition	27 HP- VFD
Suction and Discharge Flange Size	8”
Maximum RPM shall be	475 RPM
Minimum number of lobe tips	4

B. Performance Requirements

1. There shall be no significant change in vibration and noise level over the entire listed range of operating conditions of operating conditions of the pumping system.
2. Maximum motor speed shall not exceed 1,800 rpm on in-line mounted units, and 1,200 RPM on overhead or piggy back mounts.
3. A motor sizing shall provide a minimum of 25% reserve HP as evidenced by specific requirements at maximum design condition on the certified performance curve.

C. Pumps

1. Each pump shall be of heavy duty, positive displacement rotary lobe design. The wet end shall be constructed of gray cast iron. The front cover shall be constructed of gray cast iron, with a minimum Brinell hardness of 230 – 260, and permit removal of the rotors without disturbing piping, bearings, and mechanical seals. The case shall also be machined to accept a reversible front and rear wear plate, constructed of Hardox, and coated with Hardox, to a finished hardened reversible surface of 700 Brinell. Pumps not equipped with a removable wear plate that use the front door for its wear surface or require bolts that are recessed below the lobe path, are not acceptable for any wearing surface.
2. The pump shall utilize HiFlo four-tip rotors, which are driven through positive timing gears running in oil. Solid grey cast iron cores of GG25 cast iron shall be covered with a layer of NBR 70, Durometer hardness 65-72. The geometry of the rotor core shall be the same as that of the finished rotor. Rotor vane geometry shall be convoluted to provide pressure-pulse free operation. Designs with rotor vanes parallel to the shaft

DRAFT

centerline will not be accepted. The convoluted rotor shall be specifically designed for pumping thickened waste, primary and secondary sludge and anaerobically digested sludge containing organic solids, small inorganic particles, and grit. Rotors shall be positioned to the shaft by replaceable hardened key ways, and secured to the shaft by internal/external expansion bolt and flush discs requiring no recesses in the end cover. Pumps utilizing lobe designs, with fewer than 4 tips will not be considered, due to the high potential for wear on the lobes, as a result of fewer sealing lines. Designs with replaceable lobe tips shall not be acceptable.

3. The shafts shall be of carbon steel ASTM A293 fitted with replaceable stainless steel sleeves where passing through the seal area. They shall be timed in their rotation by straight cut timing gears running in a separate oil chamber which also contains the ball and roller bearings for each shaft. Pumps requiring external re-timing in the event of blockage will not be considered. The shaft shall be a minimum of 60 mm in diameter where the rotors, bearings, and mechanical seals contact the shaft, to decrease the potential of torsional shaft fatigue. The use of step down, angular v-notch cut, or threaded, shafts will not be acceptable due to shaft fatigue and potential of breakage. The shaft sleeves where the mechanical seal rides, shall be removable through the front of the pump, when removing the cartridge mechanical seal, and without disturbing the surrounding piping. Maximum shaft deflection at operating pressure shall be .0034 inches.
4. Cartridge mechanical seals shall be provided of Blockring in TC / Duronite for each positive displacement pump. The seal shall include the mechanical seal faces, the seal holder and carrier, all applicable O-rings, the mechanical seal faces, and stainless steel shaft sleeve. The use of manual pre-load mechanical seals will not be accepted. A blocking chamber located behind the mechanical seal, and in front of the bearing housing lip seal shall be fitted into the cartridge seal of the pump to prevent contamination of the bearings on the event of a seal failure. This chamber shall be suitable for fill, from the top of the pump, and have an external pressurized oil bottle to review the status of the mechanical seals operation, mounted on the top of the pump, located in easy view of the operator. Pumps with open to air cavities located behind the mechanical seal housing, those that require water flush or quench, or those without oil bottles, will not be accepted, due to their potential for product spill failure on the surrounding areas of the pump, and the added maintenance and cost associated with mechanical seal water flushing systems.
5. Port connections shall be ANSI Class 150 raised face, 4-in. gooseneck designed flanges to reduce the chance of vapor locking, and increase the reliability, and suction lift capability, through its unique design. They shall be hot-dip galvanized steel, for long life and abrasion resistance.
6. The removable end cover shall be flush with no recesses or dead pockets where solids can accumulate. The cover shall be sealed with NBR 70 O-ring and provide complete access to the pump chamber without disconnecting pipe work glands or bearings. The removable front cover is to be mounted to the pump with 4 individual bolts, to provide unhindered access to the rotors to facilitate ease of maintenance and operator safety.
7. The pump and motor shall be mounted on a steel base plate complete with necessary, guards, and mounting hardware.
8. Pumps and motors shall operate at any point within their operating range without undue noise and vibration. Vibration at any point in the operating range shall not exceed the limits allowed by the Hydraulic Institute.
9. The top and bottom housing segments of the pump shall be constructed of gray cast iron, hardened to a minimum of 750 Brinell, and be adjustable based on wear. The adjustment shall be accomplished by simply moving steel shims from one hole to the next in the pump housing, allowing for the closing of tolerance around the rotors. This adjustment must be available a minimum of two times from factory tolerance. The use

DRAFT

of one-piece, block, cast housings or the use of radial wear plates will not be accepted; due to their ability to be hardened is limited and frequent replacement when a rebuild is required due to wear.

10. Bearings shall be B-10 Life, 100,000 hours. Bearings and timing gears for all pump sizes shall run in an oil chamber provided with a bolt to show the level with the centerline of the lower shaft.
11. The pump timing gears shall run in oil and shall be mounted in a gear case contiguous with the pump case. The gear case shall be fitted with oil fill and drain connections on the top and bottom. Designs that use side drains will not be acceptable, due to the inability to completely drain the fluids on the pump.
12. The manufacturer shall be ISO 9001:2015 compliant, as evidenced with a current ISO certificate at the time of bid. Manufacturers that are ISO compliant, but not certified to ISO 9001:2015 will not be considered.

2.04 MOTORS

A. General
   1. The motors shall be suitable for wash down and extreme outdoor duty.
   2. All motors shall be built in accordance with latest NEMA, IEEE, ANSI and AFBMA standards where applicable.
   3. Motors shall conform to all requirements stipulated in the motor section of this specification.
   4. The motors supplied shall be specifically designed for inverter duty to allow for the potential of future variable frequency drives. The motors shall be compatible with the pumps provided by the MANUFACTURER.

2.05 PUMP DISCHARGE GAUGES

A. Pump Suction and Discharge Gauges
   1. The CONTRACTOR shall furnish and install for each pump in tapped holes in the discharge and suction piping to accommodate the gauges which shall be supplied by the CONTRACTOR as shown on the Drawings.

2.06 PRESSURE RELIEF CONTROL

A. Pump Discharge Pressure Switch
   1. The CONTRACTOR shall furnish and install for each pump pressure switches on the pump discharge line. The pressure switches shall be set at the MANUFACTURE's recommendations.

PART 3 – EXECUTION

3.01 INSTALLATION

A. Installation in strict accordance with the MANUFACTURER'S instruction s and recommendations in the locations shown on the Drawings. Installation shall include furnishing the required oil and grease for initial operation. The grades of oil and grease shall be in accordance with the MANUFACTURER's recommendations. Anchor bolts shall be set in accordance with the MANUFACTURER's recommendations.

B. Upon completion of the installation, the CONTRACTOR shall submit a certificate from the MANUFACTURER stating that the installation of the equipment is satisfactory, that the equipment is ready for operation, and that the operating personnel have been suitably instructed in the operation, lubrication and are of each unit.

DRAFT

3.02 SHOP PAINTING

A. Before exposure to weather and prior to shop painting all surfaces shall be thoroughly cleaned, dry and free from all mill-scale, rust, grease, dirt, and other foreign matter.

B. All exposed portions of the pumps and motors shall be shops primed, with primer compatible with field painting as specified.

C. All nameplates shall be properly protected during painting

3.03 FIELD PAINTING

A. Field painting is specified under Painting Section of this specification. The primer and paint used in the shop shall be products of the same MANUFACTURER as the field paint to assure compatibility.

B. All nameplates shall be properly protected during painting.

3.04 INSPECTION AND TESTING

A. General

1. The ENGINEER shall have the right to inspect, test or witness tests of all materials or equipment to be furnished under these specifications, prior to their shipment from the point of the manufacture.
2. The ENGINEER shall be notified in writing prior to initial shipment, in ample time so that arrangements can be made for inspection by the ENGINEER.
3. Field tests shall not be conducted until such time that the entire installation is complete and ready for testing.

B. Factory Pump Tests

1. Factory testing in accordance with the standards of the Hydraulic Institute shall be required for all pumps. All pumps shall be witness tested by the pump MANUFACTURER in the presence of the ENGINEER. All witness travel and out-of-pocket expenses shall be included in the CONTRACTOR'S bid price.
2. Certified pump performance curves shall be submitted, including head, capacity, and brake horsepower, for each pump supplied.
3. Prior to conducting a pump test, notification of such test and a list of test equipment and test procedures shall be forwarded to the Engineer at least ten working days before the schedule test date. All electronic transducers, meter, gauges, and other test instruments shall have been calibrated in accordance with the requirements of the Hydraulic Institute Standards. Copies of calibration data shall be provided.
4. All pumps shall be tested at full speed and complete staging through the specified range of flow, and head/capacity/efficiency curves plotted at maximum output speed. During each test, the pump shall be run at each head condition for sufficient time to accurately determine discharge, head, power input, and efficiency.
5. If any pump tested fails to meet any specification requirement it will be modified until it meets all specification requirements. If any pump tested fails to meet the efficiency requirements at any of the listed flow or head conditions listed and all reasonable attempts to correct the inefficiency are unsuccessful, the pump(s) shall be replaced with units(s) which meet the specified requirements.

C. Field Inspection and Owner Instruction

1. The CONTRACTOR shall furnish the services of the MANUFACTURER'S field service technician, who has complete knowledge of proper operation and maintenance of the equipment, for a period of not less than two (2) days to inspect the installed equipment, supervise the initial test run, and to provide instruction to the plant personnel. The first visit shall be checking and inspecting the equipment after it is installed. The second visit will be to operate and supervise the initial field test.

DRAFT

2. At least one (1) of the two (2) days shall be allocated solely to instruction of plant personnel in operation and maintenance of the equipment. The instruction period shall be scheduled at least 14 days in advance with the OWNER and shall take place prior to start up and acceptance by OWNER. The final copies of operation and maintenance manuals specified must be delivered to the ENGINEER prior to scheduling the instruction period with the OWNER with the permission of the ENGINEER, these services may be combined with those specified by Paragraph 1.05.

D. Field Pump Tests
1. In the presence of the ENGINEER such tests as necessary to indicate that the pumps and motors conform to the operating conditions specified shall be performed. A 30-day operating period of the pumps will be required before acceptance. If a pump performance does not meet the specified requirements, corrective measures shall be taken. All test procedures shall be in accordance with factory test procedures specified above and certified results of tests shall be submitted. Provide, calibrate, and install all temporary gauges and meters, make necessary tapped holes in the pipes, and install all temporary piping and wiring required for the field acceptance tests. Written test procedures shall be submitted to the ENGINEER for approval 30 days prior to testing.
2. Noise and vibration tests shall be conducted in conformance with the Hydraulics Institute Test Codes and OSHA Standards of Occupational Noise Exposure. Maximum allowable noise level, corrected for background sound, shall not exceed 85 dBA when measured at a horizontal distance of 3 meters from the equipment being tested, at a height of 3 meters above floor level. The actual natural frequency of the installed pumping units will be verified using industry accepted procedures.
3. All pumps operating settings, alarms, controls, and shutdown devices shall be calibrated and tested ruing the field tests.
4. The CONTRACTOR shall furnish all power, water, facilities, labor, materials, supplies and test instruments required to conduct field test.
5. Deliver to the ENGINEER, upon completion of satisfactory testing of the equipment, reports as specified in Part 1.

E. Field Electric Control System Tests
1. The electric control system shall be test operated for proper functioning prior to the pump mechanical test. The control system shall be checked out using simulated operating signals as per pump MANUFACTURER'S recommendations.
2. The CONTRACTOR shall check all drives for correct clearances, alignment, and lubrication in accordance with MANUFACTURER'S instructions. The CONTRACTOR shall check direction of rotation of all motors and reverse connections if necessary.
3. The CONTRACTOR shall meet all the testing requirements of these Specifications.

F. Field Alarm System Tests
1. Check each alarm and detection device for proper operation.

END OF SECTION

DRAFT

SECTION 43 2550.10 – SUBMERSIBLE HORIZONTAL PROPELLER PUMPS

PART 1 – GENERAL

1.01 SUBMITTALS

A. Furnish and install submersible horizontal propeller pumps per the Contract Documents. Each pump shall be equipped with a submersible electric motor connected for operation on a 480-Volt, 3-Phase, 60 Hz, 3-wire service, with 25 feet of properly-sized, factory-installed submersible cable. All cables shall be chlorinated polyethylene rubber jacketed. Each pump shall be supplied with a 304 stainless steel 16-inch discharge flange connection, two 12' sections of 2" sch. 40 stainless steel guide bar, and an upper guide bar support bracket. Each unit shall be fitted with 20 feet (minimum) of stainless steel lifting cable of adequate strength to permit raising and lowering the pump.

1.02 SUBMITTALS

A. Submittals shall be furnished in accordance with Section 01 3300 – Submittal Procedures, and elsewhere in these Specifications.

1.03 QUALITY ASSURANCE

A. The pumping equipment specified herein shall be the design and fabrication from a single manufacturer which shall have sole source responsibility for said equipment.

B. The manufacturer shall provide a 2-year equipment warranty.

1.04 SPARE PARTS

A. Provide all spare parts anticipated to be required for the first 2 years of operation. Manufacturer shall clearly define quantity, description of part and associated part numbers as part of manufacturer's scope of supply.

B. Spare parts shall be placed in a separate container clearly marked as "Spare Parts." All parts shall be identified and clearly labeled with applicable part numbers.

PART 2 – PRODUCTS

2.01 Operating conditions: the work of this Section shall be suitable for operation under the following conditions:

Pump Name	Design Flow Capacity (gpm)	Total Dynamic Head Required (ft)	Rated HP	VFD Service	Installation Type
Internal Recycle Pumps	2700	4	4	Yes	Flanged

DRAFT

2.02 EQUIPMENT

A. Pump Design: The pumps shall be capable of handling raw, screened sewage. The pumps shall be able to be raised and lowered and shall be easily removed for inspection or service without the need for personnel to enter the operating tank or sump. The pump, with its appurtenances and cable, shall be capable of continuous submergence under water without loss of watertight integrity to a depth of 130 Ft.

B. Pump Construction:
   1. Each pump shall be of the integral design, close coupled, submersible type. All components of the pump, including motor shall be capable of continuous underwater operation. In addition, all components of the pump shall be capable of continuous operation completely submerged.
   2. Major pump components shall be of 304 stainless steel or ASTM 316 construction. The lubricant housing cover plate shall be of corrosion resistant plastic. All exposed nuts and bolts shall be of stainless steel.
   3. All metal surfaces coming into contact with the pumped media, other than stainless steel, shall be protected by a factory applied powder coating of a polyester resin paint.

C. Motor: The multi-pole motor shall be directly connected to the propeller to produce a propeller speed of 855 RPM. The pump motor shall be squirrel cage, induction, shell type design, housed in an air filled, watertight chamber. The stator windings shall be insulated with moisture resistant Class H insulation rated for 180°C (356°F). The stator shall be insulated by the trickle impregnation method using Class H monomer-free polyester resin resulting in a winding fill factor of at least 95%. The motor shall be inverter duty rated in accordance with NEMA MG1, Part 31. The stator shall be heat-shrink fitted into the cast iron stator housing. The use of multiple step dip and bake-type stator insulation process is not acceptable. The use of bolts, pins or other fastening devices requiring penetration of the stator housing is not acceptable. The motor shall be designed for continuous duty, capable of sustaining a maximum of at least ten (10) evenly spaced starts per hour. The rotor bars and short circuit rings shall be made of aluminum.

D. Elastomers: All mating surfaces where watertight sealing is required shall be machined and fitted with Nitrile rubber or Viton O-rings. Fitting shall be such that sealing is accomplished by metal-to-metal contact between machined surfaces. This will result in controlled compression of the O-rings without requiring a specific torque limit. No secondary sealing compounds, rectangular gaskets, elliptical O-rings, grease, or other devices shall be used.

E. Propeller: The propeller shall be of 316 stainless steel, Factory balanced, non-clogging backward curved design. Each blade shall be laser cut and welded to the hub and tested to ensure that the propeller is properly balanced. The propeller shall be capable of handling solids, fibrous materials, heavy sludge, and other matter found in normal sewage applications. The propeller shall be a nominal 15 inches in diameter and have three blades, each at a blade angle of 9 degrees.

F. Cable Entry: The cable entry housing shall be an integral part of the back plate. The cable entry shall have a double set of elastomer grommets in order to ensure a redundant system in the event of a cable entry seal failure. Single sealing systems will not be deemed acceptable. The cable entry shall be comprised of two cylindrical elastomer grommets, each flanked by washers and a ferrule designed with close tolerance fit against the cable outside diameter and the entry inside diameter. This will provide a leak proof, torque-free seal at the cable entrance. The assembly shall bear against a shoulder in the stator casing opening and be compressed by a gland nut threaded into it. Interaction between the gland nut and the ferrule should move the grommet along the cable axially instead of with a rotary motion. The junction chamber and motor compartment shall be separated by a

DRAFT

terminal board which shall protect the motor interior from foreign material gaining access into the pump top. Connection between the threaded compressed type binding posts permanently affixed to the terminal board and thus perfectly leak proof.

G. Bearings: All bearings shall have a minimum L10 rated life of 100,000 Hrs. The outboard propeller bearing shall be an angular contact bearing. The motor shaft end shall be supported by two bearings. A roller bearing shall take up the radial loads while an angular contact bearing shall take up the axial loads.

H. Thermal Sensors: Thermal sensors shall be used to monitor stator temperatures. The stator shall be equipped with three (3) thermal switches embedded in the end coils of the stator winding. These shall be used in conjunction with, and supplemental to, external motor overload protection, and wired to the control panel.

I. Shroud Assembly: The pump assembly shall incorporate a bell shaped inlet shroud, 360 degrees around the propeller.

J. Lubricant Housing: The lubricant housing shall contain two compartments consisting of an inner and an outer section with four ports to connect and facilitate lubricant flow. In the event that the mixed media bypasses the outer seal, this design will allow the outer compartment to collect the heavier (denser) fluids by means of the simple process of gravity.

K. Mechanical Seals: Each pump shall be provided with two sets of lapped and face type mechanical seals running in lubricant reservoirs for cooling and lubrication. The mechanical seals shall contain both stationary and positively driven rotary tungsten carbide face rings unless otherwise specified. In order to avoid seal failure from sticking, clogging, and misalignment from elements contained in the mixed media. Only the seal faces of the outer seal assembly and its retaining clips shall be exposed to the mixed media. All other components shall be contained in the lubricant housing. All seal faces must be solid material capable of being re-lapped. The seals shall require neither maintenance nor adjustment, but shall be easy to check and replace. Shaft seals without positively driven rotating members shall **not** be considered acceptable or equal.

L. Cutting Rings:
   1. Each pump shall be equipped with self-cleaning cutting rings to protect the mechanical seal area, and to prevent the accumulation of debris around the propeller hub and motor shaft.
   2. The concentric cutting rings shall be made of AISI type 316L stainless steel, and shall consist of one (1) stationary ring and one (1) rotating ring. The rings shall be positioned between the propeller hub and mechanical seal area. The rotating ring shall be mounted to, and driven by, the motor shaft. The rotating ring shall incorporate sharpened threads to shear any long fibers or stringy debris that may accumulate at the propeller hub.
   3. The cutting rings shall be self-cleaning, and shall not require the use of externally-supplied flushing water. Pumps without self-cleaning cutting rings shall **not** be considered equal or acceptable.

PART 3 – EXECUTION

3.01 PUMP TEST

A. The pump manufacturer shall perform the following inspections and tests on each pump before shipment from the factory:
   1. Propellers, motor ratings, and electrical connections were checked for compliance to the purchase order.
   2. All pumps are vacuum tested to establish sealing integrity. All pumps are momentarily energized to determine correct rotation and current draw (prior to immersion).

3. All pumps are run dry and/or immersed to determine correct shaft rotation, thrust direction, and power consumption.
4. After immersion tests, all pumps are inspected for lubricant seepage and/or water infiltration, insulation defects, and resistance (Ohms).

B. Inspections and tests performed shall confirm the pumps listed have met all established quality assurance standards set for similar materials. All pumps shall be warranted against defects in design, workmanship, and material (with validation being the warranty cards shipped with the products.

C. A written report stating the foregoing steps has been done and may be required with each pump at the time of shipment (upon prior notice to the fabrication of the pumps).

3.02 SERVICES OF MANUFACTURER

A. Inspection, Startup, and Field Adjustment: The CONTRACTOR shall be present at the Site to furnish the field services required by these Specifications.

B. Upon completion of field services, the CONTRACTOR shall prepare and submit a report in accordance with the requirements of these Specifications.

3.03 INSTALLATION

A. CONTRACTOR shall install the equipment in accordance with installation requirements of these Specifications.

END OF SECTION

DRAFT

SECTION 44 3119 – PACKAGED BIOLOGICAL ODOR CONTROL SYSTEM

PART 1 – GENERAL

1.01 WORK INCLUDED

A. This section covers the work necessary to furnish, install, and test, complete, the odor control system for the wastewater treatment odor control.

B. The system shall be a packaged single-stage, biological trickling filter system. Equipment shall include fan and damper, biotower vessel, water control and recirculation system, nutrient storage and addition system, and controls, complete. The system Manufacturers shall supply all equipment and process components required for a complete, functional system.

C. The CONTRACTOR shall provide all required miscellaneous materials, as shown on the Drawings and in accordance with these Specifications to connect the odor control system to the treatment system exhaust ducts. The CONTRACTOR shall furnish all materials, whether specified or not, as necessary to complete all system connections.

1.02 REFERENCES

A. American Society for Testing and Materials:
   1. ASTM C582 – Contact-Molded Reinforced Thermosetting Plastic (RTP) Laminates for Corrosion-Resistant Equipment
   2. ASTM D4097 – Contact Molded Glass Fiber Reinforced Thermoset Resin Chemical Resistant Tanks

B. NEC: National Electric Code

C. ANSI: American National Standards Institute.

1.03 SUBMITTALS

A. The following submittals for construction shall be made in accordance with the project submittal requirements as described in the GENERAL CONDITIONS and Section 01300, SUBMITTALS.
   1. Drawings of system showing assemblies, arrangements, piping, electrical, mounting details, equipment outline dimensions, fitting size and location, motor data, and operating weights of all equipment. Plan and elevation views shall be supplied of all components, including the recirculation and nutrient feed systems.
   2. Manufacturer's catalog information, descriptive literature, specifications, and identification of materials of construction.
   3. Manufacturer's performance data and curves for fan, pumps, and auxiliary components.
   4. Materials of construction of all equipment and Manufacturer's information on the biological media.
   5. If required, a media sample no smaller than $1ft^3$ shall be shipped to the ENGINEER and OWNER for approval, demonstrating compliance with 2.05 E.
   6. Complete instrumentation, control, logic and power wiring diagrams in sufficient detail to allow installation of the instrumentation, controls, and electrical components.
   7. Electrical drawings including circuit schematics, interconnection diagrams, and all information necessary for connection of motors and electrical components. Also show all landings or connections that must be completed in the field.
   8. Information on hazards associated with the system and appropriate safety precautions.
   9. Installation, operation, and start-up procedures including lubrication requirements.

DRAFT

10. A list of spare parts that are supplied with the project.
11. Certifications: Qualifications cited herein.
12. Test Reports:
    a. Factory Acceptance Testing on fiberglass vessels
    b. Performance test reports
13. Calculations:
    a. Submit utility and nutrient use calculations

1.04 OPERATION AND MAINTENANCE MANUALS

A. Submit operations and maintenance manuals for the equipment in compliance with the Contract documents, 15 days prior to shipment. Provide one pdf copy of the manual and two hard copies.

B. Manuals shall include:
1. Contact name, address, and telephone number of the equipment manufacturer's Service Department and Parts Department.
2. Descriptive literature, including illustrations, covering the operational features of the equipment, specific for the particular installation, with all inapplicable information omitted or marked out.
3. Operating, maintenance and trouble-shooting information.
4. Complete maintenance parts list.
5. Complete connection, interconnecting and assembly diagrams.
6. Approved shop drawings including complete electrical information.

1.05 QUALITY ASSURANCE

A. Manufacturer Requirements
1. All equipment provided under this section shall be obtained from a single manufacturer, who shall:
    a. Assume full responsibility for the completeness and proper operation of the biological odor control system.
    b. Have experience; be reputable and qualified in designing and manufacturing biological odor control system equipment. The odor control system manufacturer shall show evidence of at least five (5) identical 1-stage design installations of the type specified in wastewater plants with specified non-proprietary biofiltration media.
    c. Supply units containing all necessary appurtenances and components for a complete and operating system conforming to this specification. The entire system shall be pre-assembled, piped, wired, and factory tested prior to shipment to facilitate installation and start-up at the jobsite, except for media for the unit; The media may be shipped loose to the jobsite for field installation by the CONTRACTOR. The overall system footprint, including the vessel, fan, nutrient tank, nutrient pump, water irrigation piping, water cabinet and accessories, control panel and appurtenances shall not exceed the dimensions shown on the contract drawings. The system equipment layout shall match site requirements. Any exception to this requirement is not acceptable.
    d. Supply units with inorganic biological odor control media. Provision of organic biological media shall not be acceptable. Systems using any proprietary media shall not be acceptable.
    e. The complete biological odor control system, including vessel, fan, media, nutrient tank, nutrient pump, water irrigation cabinet, piping and accessories, and controls shall be constructed to be a single piece of unitary construction, except for the media for the odor control system. Any exception to this requirement is not acceptable.

DRAFT

2. To ensure quality and complete unit responsibility, the complete system must be assembled and tested by the manufacturer at its facility and be a standard and regularly marketed product of that manufacturer, except for the media for the odor control system which may be ship loose to the jobsite. The manufacturer must have physical plant, technical and design staff, and fabricating personnel to complete the work specified.
3. The OWNER reserves the right to be present at the manufacturer's facility for visual inspection of equipment to be supplied and to witness factory functional testing.
4. All equipment furnished under this specification shall be new and unused and shall be the standard product of a recognized manufacturer having a successful record of at least 10 years' experience in operation, manufacturing, and servicing similar equipment and systems. An FRP manufacturer will not be considered an equal.

1.06 WARRANTY

A. CONTRACTOR shall warrant the entire system, both in material and workmanship for a period of eighteen (18) months from the date of final acceptance but no longer than 24 months from equipment delivery.

B. The equipment shall be warranted to be free from defects in workmanship, design and materials. If any part of the equipment should fail during the warranty period, it shall be repaired or replaced and the complete system restored to service at no expense to the OWNER.

C. The biological media, on which the biological culture is grown, shall be guaranteed for 15 years from the date of delivery.

1.07 EQUIPMENT GUARANTEE CERTIFICATION FORM

A. CONTRACTOR shall obtain and submit to the ENGINEER and OWNER certification from the odor control system Manufacturer that the system meets the requirements of the intended application and contract specifications. This certification shall be provided by way of the Equipment Guarantee Certification Form attached to this specification.

1.08 NFPA 820 DESIGN REQUIREMENT

A. The system shall be designed and fabricated in compliance with National Fire and Protection Agency Code 820. As a minimum, all equipment installed on the system shall be rated for Class 1, Division 2, Group D.

B. All motors and equipment within 3 feet of the airstream shall be rated for Class 1, Division 2, Group D.

C. The local control panel will be remote-mounted from the odor control vessel and will be shipped loose. The installation and wiring of the remote-mounted control panel to the fan, nutrient pump and solenoid valve shall be the responsibility of the CONTRACTOR.

PART 2 – PRODUCTS

2.01 GENERAL

A. The odor control system shall remove hydrogen sulfide, organic reduced sulfur compounds (RSC) and other odorous compounds from the foul air stream. The hydrogen sulfide shall be oxidized by autotrophic bacteria, and heterotrophic bacteria shall oxidize other organic odorous compounds. The media shall be intermittently irrigated using potable or secondary (non-chlorinated) effluent water. The drain water shall drain off to a designated site drain location.

B. The biological treatment stage shall utilize a high surface area biomedia to facilitate the bio treatment of odorous compounds. This media should be designed not to compact or plug for a period of 15 years. The biological treatment shall operate with an independently

controlled irrigation system to maintain optimum wetted conditions to support unique microbial growth for biological destruction of the odorous compounds and removal of toxic metabolites. Systems using any type of proprietary media shall not be acceptable.

C. The system shall comprise the following major components:
   1. Single or multi-stage biotrickling filter vessel. The FRP vessel shall be comprised of at least one main module and one top piece. The unit may contain additional modules as the design conditions require. Each media module shall house the media in series and contain a single water/nutrient injection spray system.
   2. Structured, engineered, synthetic plastic media or an inert, porous, mineral, expanded clay material media is acceptable to optimize mass transfer and facilitate the growth of bacteria necessary for biological oxidation of odorous compounds.
   3. An electric control panel housing a single programmable logic controller (PLC) system with Human Machine Interface (HMI) and other components required for the control and monitoring of the system. The control panel shall with alarm relays and/or Ethernet/IP communication for remote alarming.
   4. A water cabinet that houses all components necessary for the control and monitoring of the media irrigation system including an automatic flow control system.
   5. Odor control fan to move the odorous air from the source and be able to compensate for all pressure losses at the design airflow.

D. The system shall be designed for continuous, automatic operation and also be capable of manual operation. Access port/s shall be provided to allow access to the internals of the system. The system shall be designed to withstand ambient temperatures up to 120°F. The system and all accessories shall be factory mounted, piped, and wired to the maximum extent possible.

2.02 MANUFACTURERS

A. Materials, equipment, components, and accessories specified in this Section shall be products of:
   1. Eco Verde
   2. Integrity Municipal Systems, LLC
   3. ENGINEER-approved equal

2.03 SERVICE CONDITIONS

A. The order control system shall be designed to remove the odorous constituents from process air stream under the following operating conditions:

Process Parameter	Value
Elevation Above Sea Level	100 Feet
Location	Outdoors
Inlet Air Temperature	50°F to 120°F
Type of Containment	H_2S and reduced sulfur organic compounds and other odors typically associated with wastewater conveyance
H_2S at Inlet	Average 80 ppm; peak 500 ppm
Plant Water Characteristics	200 mg/l Hardness 450 mg/l TDS

B. The biological vessel design shall conform with the Plans and the following parameters:

Design Parameter	**Value**
Vessel Type	Single-stage tower
Material of Construction	FRP per ASTM D4097
Airflow	1,000cfm

DRAFT

Operational Pressure Drop across Vessel	<1 in. w. c.
Minimum Vessel Diameter	8 feet
Minimum Residence Time	19 seconds EBRT
Total height to top of stack	13 feet (max)

C. System Performance: The odor control system shall demonstrate following performance when operating under design flow conditions listed above:
   1. The system shall remove on average 99% of the inlet hydrogen sulfide or have an outlet concentration of <0.5 ppm, when H2S inlet is <20ppm.

D. All components of the system shall be compatible with the conditions and chemicals to which they will be subjected to during normal operation, which include but are not necessarily limited to:
   1. Hydrogen Sulfide
   2. Sulfuric Acid
   3. Carbon Disulfide and other Sulfides/Disulfides
   4. Mercaptans
   5. VOCs

2.04 MATERIALS OF CONSTRUCTION

A. Vessel Materials of Construction:
   1. The vessels and FRP accessories shall be contact molded manufactured in accordance with NBS PS 15-69, ASTM D3299, ASTM D4097 for contact molding. Any material of construction other than FRP with premium grade resin will not be allowed.
   2. Resin used in the system liners shall be a premium vinyl ester type such as Corezyn 8301, Hetron 922 by Ashland Chemicals, Derakane 411 by Dow Chemical, Vipel F010 by AOC, or ENGINEER-approved equal. The resin shall be reinforced with an inner veil of a suitable synthetic organic fiber such as Nexus 111-00010. The Structural build up shall be of a general purpose isophathlic. Outer surface shall be UV protected.
   3. Reinforcement: Glass fiber reinforcement used shall be commercial grade corrosion resistance borosilicate glass. All glass fiber reinforcement shall be Type C, chemical grade, Type E electrical grade. Surfacing veil shall be 10 mil Nexus 111-00010 or ENGINEER-approved equal. Mat shall be Type "E" (electrical grade) glass, 1 1/2 oz. per sq. ft with a nominal fiber length of 1.25 + 0.25-inches, with a silane finish and styrene soluble binder. Continuous glass roving, used in chopper gun spray-up applications shall be type "E" grade with chrome or silane coupling agent. Alternate layers of mat and woven roving used for reinforcement.
   4. Miscellaneous: Stainless Steel: Unless otherwise specified, all fasteners, and metal attachments, such as anchors, brackets etc. shall be ANSI Type 316 SS. Gaskets, unless otherwise specified shall be EPDM.

2.05 SYSTEM COMPONENTS

A. Identification:
   1. Major system components, including the fan, recirculation pump, nutrient pump, reactor vessel, etc., shall have the following information engraved on stainless steel nameplates of appropriate size for the equipment involved.
      a. Name of Manufacturer
      b. Manufacturer Serial Number
      c. Year Built
      d. Equipment Name, Model, and Serial Number
      e. As applicable: capacity, performance limitations

DRAFT

B. Biotrickling Filter Vessels:
   1. The reactor vessels shall be free standing, packaged or skid mounted. Vessels shall be constructed from fiberglass reinforced plastic (FRP) in accordance with ASTM D4097 and C582, treated to withstand UV light. Vessels shall be completely corrosion resistant.
   2. All gaskets shall be EPDM.
   3. All metal components shall be Type 316 stainless steel or better.

C. Accessories: Air inlet, air outlet, spray headers, baffles, media support, drain and all connections shown on the Contract Drawings shall be provided by the manufacturer. Tie down lugs shall be integrally molded into the walls of the vessels. All external bolts shall be Type 316 stainless steel and designed for the specified loads. Interior fasteners shall be of corrosion resistant materials such as PVC, FRP or 316 SS.

D. Neoprene Pad: A 1/4-inch thick, 60 durometer neoprene rubber sheet must be placed underneath each vessel.

E. Biotrickling Filter Media (Synthetic)
   1. The synthetic structured media shall be high porosity, chemically resistant, engineered synthetic porous material. Organic, carbon derived media, proprietary, and/or non-synthetic inorganic media materials will not be allowed.
   2. The biological media characteristics (available surface area, density, and pressure drop) shall be structured and uniform throughout the media bed.
   3. The synthetic, biological media shall have a minimum available specific surface area of 230ft2/ft3 and a void opening of at least 96%.
   4. Media shall resist compaction or swelling due to varying moisture levels and shall not degrade when subjected to low pH (i.e. pH<2) conditions.
   5. The uniform structure of the media shall minimize the potential for short circuiting and encourage a uniform water and air flow pattern over the entire media cross sectional area.
   6. Sufficient media shall be provided to ensure the performance requirements of this specification are met.

F. Biotrickling Filter Media (Inorganic Clay)
   1. An inorganic expanded clay biological media shall be used as the support substrate for selectively growing sulfur-oxidizing autotrophic bacteria. The media shall be randomly dumped in the vessel to allow a low pressure drop. The media is porous and is resistant to hydrogen sulfide (H2S) and acidic conditions. The media shall be non-proprietary and commercially available.

G. Irrigation System
   1. Each reactor shall be configured with an irrigation system which shall evenly distribute the irrigation water over the entire upper surface of the synthetic media layer.
   2. Each irrigation system shall be tested by the Manufacturer and a certificate of conformity supplied with the shop drawings to show that the nozzle has been tested and meets the Manufacturer's standards for uniform distribution.
   3. The irrigation system shall be supplied with a nutrient addition system to provide the nutrients, if required, for the bacteria for optimal metabolism of the odorous compounds being treated.

H. Odor Control Fan
   1. The fan shall be centrifugal PP or FRP with 316SS shaft and airstream components designed for corrosive environment. As manufactured by IPF, Texel-Seikow, or ENGINEER-approved equal. Fan shall be appropriately sized by the system Manufacturer to include losses through the entire system.

DRAFT

2. HOUSINGS: All housings shall be materials appropriate for exposure to sewage gases and low pH environment. All units shall be built with an adjustable discharge housing which can be field rotated to any of eight standard positions.
3. WHEELS: The wheel shall be of the radial bladed backplate or backward curved design, and shall be made of materials appropriate for exposure to sewage gases and low pH environment. Wheels shall be statically and dynamically balanced.
4. MOTORS: The fan motor shall be a TEFC electric motor for operation on 3/60/230-460V, as shown on the Electrical Drawings or as required, as manufactured by US Motors, Baldor, Reliance, Weg or ENGINEER-approved equal.
5. Motor bearings shall have a minimum L-10 life, as defined by AFBMA, of at least 40,000 hours (200,000 hours average life).
6. BALANCING: Prior to shipment all fans shall be completely assembled and test run as a unit at the operating speed. Final balance of the completed fan assembly shall be taken by electronic equipment. Records of the vibration readings in the axial, vertical, and horizontal planes shall be maintained and a written copy of this record shall be available upon request.
7. Fan noise shall be less than 75 dBA at 3 feet from the system or less than 50 dBA at 10 feet.

I. Control System

1. Electrical Control Panel (ECP)
   a. The ECP enclosure shall be NEMA 4X and constructed of FRP.
   b. The ECP shall house the necessary electronic components and an Allen Bradley PLC or pre-approved equal for the control and monitoring of the irrigation system. The system shall be controlled on the basis of time for the irrigation cycle and irrigation time shall be adjustable to sustain conditions appropriate to the activity of the bacteria. There shall be an allowance to manually operate the irrigation spray for the purpose of routine maintenance checks.
   c. The ECP shall require a single electrical connection as shown on the Electrical Drawings or as required.
   d. All electronic components shall be rated for Class 1, Division 2 environments.
2. Water Control Panel (WCP)
   a. The Water Control Panel shall be constructed of FRP, and be integral to the bioreactor vessel and be of the same material as vessel.
   b. The WCP shall contain, valves, motorized valves, strainers, metering pumps, nutrient controls, pressure gauges, flowmeters, instruments and piping, as needed, for the control of the irrigation system and shall operate from control signals from the ECP.
   c. The WCP shall allow for a single connection to a potable or reclaimed water source and a single connection for a recirculation pump.
   d. The WCP shall house the nutrient addition system and dosing control.
   e. All electronic components shall be rated for the proper NFPA classification.

2.06 SPARE PARTS

A. At a minimum, the following spare parts shall be supplied with the equipment:
1. One (1) set of fuses, one (1) for each fuse rating.
2. One (1) set of bearings.
3. One (1) motorized valve.

DRAFT

PART 3 – EXECUTION

3.01 FACTORY ACCEPTANCE TEST

A. FRP Vessels: FRP vessels shall be inspected prior to shipping for conformance to the following:
   1. Dimensions match those shown on submittal drawings and are within Manufacturer's specified tolerances.
   2. Flanges and connections between reactor parts fit securely without improper bending or stressing of parts.
   3. Damage or imperfections, including cracking/crazing are minimal and in accordance with this specification.
   4. Manufacturer shall keep a record of the quality control document for each reactor vessel that is available to the ENGINEER upon request.

B. Electrical Control Panel: Electrical control panel shall be inspected prior to shipping for conformance to the following:
   1. NEMA rating according to this specification
   2. PLC program shall be tested for proper communication and functionality.
   3. PLC digital and analog inputs shall be electrically tested to ensure input recognition in the proper area of the PLC program.
   4. All wiring between panel components and terminal strips shall be checked for proper labeling and connection.

C. Water Panel: All water panel piping and/or other pre-installed piping shall be tested prior to shipping for conformance to the following:
   1. System shall have no leaks when subjected to a pressure test at 80 psi for a minimum of 1 hour.
   2. All installed instruments, sensors, pumps, actuated valves, and other electrical components shall be tested for proper operation.
   3. All wiring from terminal strips to all electrical components shall be tested to ensure proper wiring.

D. Spray Nozzles: Irrigation system shall be factory tested to ensure compliance with Manufacturer standards for uniform distribution.

3.02 RECEIVING OF EQUIPMENT

A. The OWNER reserves the right to refuse delivery of any or all pieces of equipment found, upon inspection, to have any defects in workmanship or materials.

3.03 STORAGE AND HANDLING OF EQUIPMENT

A. The CONTRACTOR shall store and temporarily support equipment prior to installation in strict accordance with the Manufacturer's recommendations and instructions. Protect all exposed surfaces. Keep records of the storage parameters and the dates that storage procedures were performed. The CONTRACTOR shall be responsible for work, equipment and materials until inspected, tested and finally accepted.

B. Protect the equipment from being contaminated by dust, dirt, vibration and moisture.

C. The biological odor control system shall be shipped complete. The unit shall be erected in strict accordance with the instructions of the Manufacturer's field engineer.

3.04 FIELD PAINTING & CORROSION PROTECTION

A. If painted surfaces are damaged during shipment, off-loading or installation, as long as the damage is surface only and in no way affects the integrity of the equipment or its ability to perform, these blemishes, scratches or other imperfections shall be touched up by the

DRAFT

CONTRACTOR in accordance with instructions from the Manufacturer. Materials used shall me compatible with the original coating material in quality and color.

3.05 INSTALLATION

A. The equipment shall be installed properly to provide a complete working system.

B. To the extent possible, all equipment shall be pre-assembled prior to shipment to minimize the need for on-site assembly. Synthetic biological media should be pre-installed by the Manufacturer and certified to meet the specified performance requirements.

C. Installation of all equipment shall be in accordance with Manufacturer's written installation and startup instructions and by workers experienced in the handling of FRP vessels, electrical work, plumbing and instrumentation. The final installation must be certified by the Manufacturer as complete and correct.

D. The Manufacturer shall provide the CONTRACTOR with required clearances, tolerances and limitations, such as smoothness/flatness of concrete pad and shall be available to answer questions prior to and during the installation of the equipment.

E. CONTRACTOR shall install water supply with pressure regulator, gravity drain to wet well with a barometric P-trap, electrical service for all required equipment which may include, but is not limited to, blower, recycle pump, valves and controls, and all other accessories and appurtenances as may be required by the Manufacturer for a complete and operational system.

F. CONTRACTOR shall install the polishing media onsite as directed by the Manufacturer.

3.06 FIELD QUALITY CONTROL

1. Functional Test:
2. Upon completion of the installation each piece of equipment in each system shall be tested for satisfactory operation without excessive noise, vibration, overheating, etc. Compliance shall be based on equipment manufacturer specifications and all applicable codes and standards. All equipment must be adjusted and checked for misalignment, clearances, supports and adherence to safety standards.

3.07 SYSTEM STARTUP

A. General:

1. The CONTRACTOR shall be responsible for the successful startup, operation, and testing of each odor control system. The Manufacturer shall provide supervisory assistance, instrumentation and testing services required during this phase of the work.
2. Start-up shall commence following certification of the installation by the Manufacturer's technical representative.

B. The CONTRACTOR, with supervision from the Manufacturer, shall start the System to begin the biological acclimation period. This acclimation period shall take no longer than six (6) weeks but at any point during this startup period, at the discretion and direction of the Manufacturer, the CONTRACTOR shall switch the system over to normal operation. Any minor re-piping or plumbing required will be clearly detailed in the Manufacturer's installation and startup manual and will be performed by the CONTRACTOR.

C. CONTRACTOR must inspect the system daily and communicate operating parameters as measured to manufacturer. Manufacturer shall provide guidance to CONTRACTOR in operating parameter changes to obtain specified performance.

D. Any special tools or instruments required for this startup/acclimation period shall be provided by the Manufacturer.

DRAFT

E. After satisfactory startup and the corresponding switch over to normal operation, the CONTRACTOR shall, in the presence of the OWNER, conduct the performance test as detailed below.

3.08 PERFORMANCE TESTING:

A. Performance testing shall not commence until the Manufacturer and OWNER agree that the system has been satisfactorily started-up and sufficient time has been allowed for the acclimation of the bacteria.

B. After the odor control system has been satisfactorily started-up and switched to normal operation, the CONTRACTOR shall, in the presence of the OWNER, demonstrate that the system will perform as specified.

C. The CONTRACTOR, with the assistance of the manufacturer, shall provide the ENGINEER with a written test protocol and the performance testing may not be conducted until the test protocol has been reviewed and approved by the ENGINEER.

D. The CONTRACTOR shall supply, install and operate all equipment, sensors and instrumentation required to complete the performance testing.

E. H2S Testing Procedure:
   1. Measure airflow into each unit and adjust to the design airflow +/-10% if necessary. Airflow shall be measured at the beginning of the test period. The set position on the damper shall be marked or noted. Airflow shall not change as long as damper remains in position.
   2. Measure pressure drop across each biotrickling filter at beginning of test period.
   3. Measure temperature and relative humidity of the inlet, outlet and ambient air.
   4. Performance test period shall begin at a noted time and last for four (4) hours. H2S data from the common inlet location and from the outlet of each odor control system shall be measured and logged once every 10 minutes to demonstrate performance during the test period.
      a. The inlet H2S data shall be logged with a pre-calibrated OdaLog gas data logger with appropriate range and accuracy for the inlet air stream (0-1000 ppmv or 0-200 ppmv range, 1 ppm display resolution or 0.0-50.0 ppmv range, 0.1 ppmv display resolution).
      b. The outlet H2S data shall be logged with a pre-calibrated OdaLog gas data logger with appropriate range and accuracy for the outlet air stream (0.00-2.00 ppmv range, 0.01 ppmv display resolution or 0.0-50.0 ppmv range, 0.1 ppmv display resolution).

F. H2S Acceptance Criteria
   1. The system's H2S removal efficiency shall be determined by calculating the average inlet H2S concentration and the average outlet H2S concentration and using the following formula: H2S removal efficiency (%) = (1 – average inlet H2S concentration/average outlet H2S concentration) x 100. Data points that are greater than 2x the average will not be included in the calculation. The H2S removal efficiency must meet the criteria specified above for the system to be accepted.

3.09 MANUFACTURER'S SERVICES

A. In addition to being available by phone to assist the CONTRACTOR during the off-loading, installation, and startup of the equipment, the following Manufacturer's services shall be provided with the number of trips and days on site as a minimum:
   1. Installation Verification and Startup guidance: Manufacturer's factory trained engineer for one (1) trip, Two (2), Eight (8) hour day each trip.
   2. Training: Manufacturer's factory-trained engineer for one (1) separate trip, four (4) hours and includes both classroom and hands on training.

DRAFT

3. Supervision: Manufacturer's factory trained engineer for one (1) separate trip, four (4) hours 6 months after performance testing.

B. Notwithstanding the above, the Manufacturer shall continue to assist the CONTRACTOR with questions, issues and assistance until the system is properly installed, running satisfactorily and handed over to the OWNER.

END OF SECTION

DRAFT

SECTION 46 5143 – FINE BUBBLE MEMBRANE DIFFUSERS

PART 1 – GENERAL

1.01 SECTION INCLUDES

A. Work necessary to deliver to the job site, the fine bubble tube diffuser aeration equipment, complete and ready for installation by others.

1.02 GENERAL

A. It is the intent of the OWNER that the fine bubble membrane diffuser aeration equipment Supplier/Manufacturer (hereafter called the "Manufacturer"), shall furnish completely engineered systems suitable for the operating conditions as outlined in these Specifications. Fine bubble membrane diffuser aeration equipment features such as drop leg size, air manifold sizes, and spacing, air manifold and header supports and spacing, diffuser spacing, etc., required to comply with all requirements of this section shall be defined by the Manufacturer and be furnished complete.

1.03 DEFINITIONS

A. SCFM: Standard Cubic Feet per Minute is understood to be air at 68°F, 14.7 psia, and 36 percent relative humidity flowing at a rate of 1 cubic foot per minute.

B. SOTR: Standard Oxygen Transfer Rate is understood to be the rate of oxygen transferred to tap water (pounds of oxygen per hour) at standard conditions of 20°C, 0.0 mg/l residual dissolved oxygen concentration, and a barometric pressure of 760 mm Hg (dry air).

C. SOTE: Standard Oxygen Transfer Efficiency is understood to be the fraction of oxygen transferred to tap water under standard conditions of 20°C, 0.0 mg/l residual dissolved oxygen concentration, and a barometric pressure of 760 mm Hg (dry air).

D. Side water Depth: Side water depth is understood to be the interior dimensions from the structure base to the water surface.

1.04 SUBMITTALS

A. Shop drawings shall be submitted in accordance with Section 01 3300. In addition, the following information shall be submitted in accordance with Section 01 3300:

1. Complete description and materials listing of the fine bubble membrane diffuser aeration equipment including equipment data sheets, description literature and bulletins which shall include the drop pipes, connections to the air manifolds, air manifolds, air distribution headers, diffusers, drain system, supports, anchorage details, expansion joints, air manifold and header joints, gaskets, bolts, nuts and washers, and all materials used.
2. Detailed Drawings of the proposed fine bubble membrane diffuser aeration equipment layout, elevation, and appropriate cross sections for each basin, showing all air line sizes and lengths, distances between air distribution headers, and the location of all diffuser holders, diffusers, supports, and expansion joints.
3. Aeration system performance data including standard oxygen transfer efficiency by independent testing facility.
4. Diffuser, diffuser connector, and system head loss curves covering the range of airflow rates specified under PERFORMANCE REQUIREMENTS.
5. Addresses and phone numbers of nearest manufacturer's representative.
6. Complete test data including 3rd party independent certified oxygen transfer performance curves, sufficient to determine the oxygenation capacity of the fine bubble membrane strip diffuser aeration equipment proposed. SOTE test data form non-3rd party accredited and independent testing services are not permissible.
7. Complete headless calculations for the aeration system from the Manufacturer’s point

DRAFT

of responsibility.

1.05 QUALITY ASSURANCE

A. Provide equipment furnished by a single manufacturer qualified and experienced in the production of similar equipment

1.06 OPERATION AND MAINTENANCE MANUAL

A. Installation, Operation and Maintenance Manual for the equipment specified herein shall contain as a minimum the following items:
   1. Equipment Data Sheets
   2. Installation instructions
   3. Operation and maintenance instructions
      a. Aeration system monitoring and maintenance
      b. Startup and test operations
      c. Normal operations
      d. Shutdown procedures
      e. Parts list
   4. Aeration equipment shop drawings
   5. Customer contact

PART 2 – PRODUCTS

2.01 GENERAL

A. The fine bubble membrane aeration equipment furnished under this section shall be the end products of one Manufacturer in order to achieve standardization for operation, maintenance, spare parts, and Manufacturer's service.

2.02 MANUFACTURERS

A. Fine bubble membrane strip diffuser aeration equipment for this project shall be manufactured by JAEGER AERATION LLC or ENGINEER-approved equal.

2.03 PROJECT CONDITIONS

Parameter	Value
Project Location	San Luis, AZ
Wastewater Type	Municipal/ Residential
Elevation above Sea Level	100-feet
Ambient Temperature Range	35°F - 115°F
Exposure	Submerged, tank opens to ambient condition
Water Temperature Range	55°F - 80°F

Design Parameter	Value
Treatment Process	Mixing of Channel Aeration of Digester
Basin Nominal Floor Dimensions	See Plans
Basin Nominal Top Dimensions*	See Plans
Nominal Operating Water Depth**	See Plans
Air Flow Flux	1.13 – 6 SCFM/ft^2 of Active Area
Air Flow per Tube	3-16 SCFM
Air Flow for MLSS Channel	260 SCFM
Air Flow for Feed Forward Channel	60 SCFM
Air Flow for Digester (Each)	760 SCFM
Aeration Period	24-hr continuous operation

DRAFT

2.04 EQUIPMENT DESCRIPTION - (Membrane Tube Diffuser)

A. General:

1. The diffuser equipment system shall be a fixed grid diffuser system type, where the fine bubble membrane diffuser:
   a. Shall be approx. 2.07 m [82”] long x 65mm [2.5”] Ø tubular shaped diffuser.
   b. The flexible fine bubble diffuser membrane shall be constructed of Silicone rubber.
   c. Where the diffuser membrane shall act as a check valve
   d. Where there is a 2nd check valve shall be installed in the diffuser body acting independently of the diffuser membrane
   e. The diffuser assembly shall be anchored directly to the basin floor using 3x 2 1/2” Ø clamp brackets per diffuser assembly constructed of PP GF 30 material
   f. Where the diffuser assembly shall be attached to the air distribution piping with a flexible hose connection orientated perpendicular to the air distribution piping.
   g. Where up to 3x diffuser assemblies can be connected and mounted in line to each other.
   h. Where the assembly diffuser shall not be using the air distribution pipe for anchoring the diffuser to the tank bottom.
2. The diffuser equipment system shall be suitable for installation in the structures shown on the Drawings.
3. The locations and size of the drop pipes to each diffuser grid are shown on drawing. The diffuser equipment for each zone shall include, but not be limited to, a vertical section of drop pipe, a flexible connection to the drop pipe, an air manifold, air headers, diffusers, supports, expansion joints, air manifold and header joints, gaskets, bolts, nuts, and washers.
4. The design, fabrication, and installation of the diffuser equipment shall be such that, upon completion of installation, all diffusers are leveled to within ± 1/4 inch of a common horizontal plane.
5. The fine bubble membrane assembly aeration equipment shall be designed for easy installation and shall include provisions for level adjustment, rotational adjustment, and thermal expansion.
6. The entire system shall be designed to allow for expansion and contraction over a temperature range of up to 140°F when installed.
7. All welded pipe supports and assemblies shall be shop fabricated from Type 304L stainless steel with a 2D finish conforming to AISI 304L and ASTM A240-78a. Unless specified otherwise, all non-welded pipe supports and pieces shall be shop fabricated from sheets and plates of 304 stainless steel conforming to AISI 304 and ASTM A240-78a.

B. Drop Pipe, Air Manifold, and Headers:

1. The drop pipe shall be 304L stainless steel, schedule 10. The drop pipes shall transition to PVC Sched 40 below the water line. All PVC piping shall contain 1½ - 2 percent by weight titanium dioxide ultraviolet light inhibitor.

C. Purge System:

1. Each tube diffuser shall be equipped with an automatic moisture purge system; the diffuser air distribution header shall be mounted at a higher elevation than the tube diffusers so that the i.e. condensation in the air distribution system is purges through the diffuser bottom purge system.

D. Diffuser Assemblies:

1. Air diffuser assemblies shall be a tubular shaped cross-section, non-clog, fine bubble type with a flexible perforated air release membrane. The membrane shall be fixed with a stainless steel band clamp to the diffuser body. The perforations shall be die cut I-shaped slits. Disc diffusers, diffusers with welded or glued fixations of flexible

DRAFT

membranes to the diffuser body are not acceptable.

2. The diffuser membrane shall be constructed from extruded silicone rubber and be suitable for continuous or intermittent aeration. The membrane shall include UV inhibitor and compounds designed for resistance to chemical attack, weathering and aging.
3. The diffuser assemblies shall have double backflow prevention / check valves to prevent liquid from passing into the aeration header of which the first check valve is composed of the flexible perforated diffuser membrane, and the second check valve is composed of a flexible flapper / membrane located over the air inlet opening of the diffuser body to the air distribution chamber between the diffuser body and the diffuser flexible perforated membrane.
4. The diffuser assembly shall be shipped completely assembled to the job site. Diffusers which require field assembly are not acceptable.
5. The membrane exterior surface shall be smooth as to inhibit biological film growth. The membrane shall inflate during aeration and deflate when the airflow is discontinued, further restricting biological film growth. The membrane shall be cleanable in place with water from a high pressure wash. Acid or other chemical cleaning methods shall not be required to restore the diffuser to like-new performance conditions.
6. Diffuser supports - tube diffusers:
    a. Each diffuser assembly shall by mounted directly to the tank floor with suitable cradle support mounting brackets. It shall not rely on the air distribution header for anchoring to basin floor. Each bottom cradle mount shall be anchored threaded anchor, with mounting hardware, all constructed entirely of 304 Stainless Steel.

E. Diffuser Connections:

1. The connection between the air distribution header and the diffuser connector shall be a flexible hose line. This connection shall be a shock absorbent type that is unaffected by system vibration.

F. Supports:

1. Supports shall be fabricated of Type 304 stainless steel for non-welded and 304L for welded. The supports shall be designed to provide $\pm$ 1/2-inch lateral and $\pm$ 1-inch vertical adjustment of the header. Adjustment shall be continuous and possible without removing the air piping from the support. All pipe ends and joints shall be provided with a pipe support.
2. Air manifold piping shall have a maximum spacing between supports of 10 feet. Manifold supports shall be attached to the tank floor with anchor bolts and shall be designed for ten (10) times the normal uplift force.
3. Header supports, shall allow longitudinal movement of the header section to prevent stress buildup in the header due to thermal expansion/contraction forces. Maximum horizontal thrust of 20 pounds or less shall initiate movement of the header relative to the mechanism under full buoyant up-lift load.
4. Anchor bolts for fastening the supports to the aeration basin concrete slab and walls shall by Type 304 stainless steel. Minimum anchor bolt diameter to be used is 3/8 inch. Supports shall be located such that concrete anchors are not installed within 6 inches of any concrete expansion joint.

G. Header Joints:

1. Connections between sections of the air distribution header shall be special flanged joints. These joints shall be designed so that individual header sections can be rotated independently of adjacent header sections for alignment purposes. The flanged joints shall be structurally designed to transmit the longitudinal forces caused by expansion and contraction in the air distribution header. Slip joints shall be designed to allow for expansion and contraction of the air distribution header.

2. Expansion joints shall be capable of handling the expansion and contraction of the air distribution system over a temperature range of up to 140°F.

H. Miscellaneous: Nuts, bolts, washers, and other non-welded parts directly exposed to the wastewater shall be Type 304 or 18-8 stainless steel. Threaded assemblies shall be chemically treated or lubricated prior to assembling to prevent galling.

PART 3 – EXECUTION

3.01 FABRICATION

A. All assembly of the aeration equipment shall be completed in the factory.

B. Factory certified testing of pressure drop, leak free operation, and consistent air distribution at the specified flux rate range per diffuser model [SCFN/ft^2 of effective membrane area]. Factory testing data and cert shall be supplied with the shipping documents like bill of material as part of the project documentation.

C. All stainless steel welding shall be by the shielded arc, inert gas, MIG, or TIG method. Filler wire shall be added to all welds to provide a cross section of weld metal equal to, or greater than, the parent metal. Butt welds shall have full penetration to the interior surface, and gas shielding shall be provided to the interior and exterior of the joint.

D. Interior weld beads shall be smooth, evenly distributed, with an interior projection not exceeding 1/16 inch beyond the inner diameter of the air header or fitting.

E. All outside weld areas shall be wire-brushed to remove weld splatter. Brushes shall be of stainless steel and used only stainless steel.

F. Solvent weld of all PVC joints shall be completed in the factory.

3.02 PREPARATION FOR SHIPMENT

A. The fine bubble membrane strip diffuser aeration and air distribution lateral equipment shall be packaged and shipped by the Manufacturer ready for unloading, storage, and installation by the Installation Contractor. The OWNER will provide a suitable storage space for the aeration equipment.

3.03 MANUFACTURER'S CERTIFICATE

A. A Manufacturer's certificate of satisfactory installation and systems start up (sign-off sheet) is required for work under this section.

3.04 CLEAN WATER FUNCTIONAL TESTS

A. After installation of the fine bubble membrane panel / strip diffuser aeration equipment is complete, witness functional testing conducted by the Installation Contractor to check for leaks, uniformity of air release, and verification of level installation. Functional testing shall be performed with clean water at a depth over the diffusers as recommended by the aeration system Manufacturer. Any leaks in the headers, diffusers, pipes, or any part of the system shall be repaired by the Installation Contractor. The test shall be repeated until the installation is void of air leaks.

3.05 WARRANTY

A. The Manufacturer shall warrant all parts, including diffuser assemblies, distribution piping, and supports, free from defective material and workmanship for a period of 1 year (12 months) after the diffuser system contacts wastewater, system start-up, or 15 months after receipt of equipment at the job site of whatever comes first. Warranty shall be limited replacement of parts within the warranty period provided.

3.06 MANUFACTURERS' SERVICES

DRAFT

A. A technically-qualified Manufacturer's representative for the equipment specified herein shall be present at the job site and/or classroom designated by the OWNER for 2 minimum person-days for installation, testing, training, and assistance.

END OF SECTION

DRAFT

Appendix A - Geotechnical Report

DRAFT

San Luis West
WWTP Improvements

101 Cesar Chavez Blvd.
San Luis, Arizona 85349

Geotechnical Investigation

GTS Job No: 24-034-G
April 2025

DRAFT



06-12-2025

Exp 06-30-2025

Prepared for:
Pacific Advanced Civil Engineering, Inc.
8723 E Via De Commercio, #A-204
Scottsdale, Arizona 85258

Prepared by:
Geotechnical Testing Services, Inc
1044 East 21st Street
Yuma, Arizona 85365

Geotechnical Testing Services, Inc. 1044 East 21st Street Yuma, Az. 85365
Materials Testing Laboratory Phone (928) 329-4695 Fax (928) 329-4782

June 12, 2025

Pacific Advanced Civil Engineering, Inc.
8723 E Via De Commercio, #A-204
Scottsdale, Arizona 85258

Attention: Mr. Duong Do

Reference: San Luis West WWTP Improvements
101 Cesar Chavez Blvd.
San Luis, Arizona 85349

Dear Mr. Do:

Geotechnical Testing Services is pleased to present the attached Geotechnical Investigation for the referenced project.

The purpose of our investigation was to evaluate the subsurface soil conditions at the proposed site in order to develop geotechnical recommendations to aid in the project design and construction.

Based on the results of our field and laboratory testing it is our opinion that the referenced project may be constructed provided that the recommendations presented in this report are incorporated.

We appreciate the opportunity to provide our services for the project. If you have any questions regarding this report or if we may be of any assistance, please contact me.

Sincerely,

Geotechnical **T**esting **S**ervices**, I**nc.

Courtney M. Arviso P.E.
President



Exp 06-30-2026

DRAFT

Table of Contents

1.Introduction 1

1.1 General 1

1.2 Project Description 1

2. Field Exploration 1

3. Laboratory Testing **2**

4. Site Conditions 2

4.1 Site Description 2

4.2 Site Soil Condition 2

4.3 Seismic Considerations 3

4.4 Liquefaction 3

5. Discussion and Recommendations 4

5.1 Site Preparation 4

5.2 Earthwork 4

5.3 Foundation 5

5.4 Concrete Slab on Grade 5

5.5 Resistance to Lateral Loads 6

5.6 Drainage 6

5.7 Utilities 7

6. Closure 8

6.1 Limitations 8

Appendix A – Vicinity Map, Site Plan and Bore Log

Appendix B – Laboratory Test Data

DRAFT

GTS Report No: 24-034-G



1. INTRODUCTION

1.1 General

This report presents the findings of our Geotechnical Investigation for the San Luis Wastewater Treatment Plant Improvements which is located at 101 Ceaser Chavez Blvd., in San Luis, Arizona (see Appendix A). The purpose of our investigation was to explore the subsurface conditions of the proposed site at various locations. This exploration was used to develop Geotechnical Engineering recommendation.

1.2 Project Description

It is our understanding that the proposed project will consist of various concrete structures and buildings. The building will be constructed out of masonry exterior walls, steel frame interior columns and a roof system and concrete slab on grade. The maximum uniform wall loads are expected to be approximately 4-6 kips per linear foot. The maximum column loads are expected to be approximately 10-15 kips. If any of the above design assumptions change during the final design stage, our office should be notified to review and possibly revise our recommendations.

2. FIELD EXPLORATION

Geotechnical Testing Services advanced seven (7) test bore holes within the proposed new project area to a depth of fifteen (15) feet below the existing grade (See Appendix A).

All the boreholes were advanced using a CME-55 drill rig. Samples were obtained from all the boring locations using either a split spoon or ring sampler or from the auger cuttings.

A staff engineer maintained logs of bore holes during the exploration. The final form of the subsurface logs was edited after reviewing the retrieved samples and the laboratory data. In addition, standard penetration tests were conducted at various holes and depths using 2.0-inch outside diameter split spoon sample. The split spoon was advanced using a 140-pound hammer falling a distance of 30 inches. The blow counts corresponding to the last 12 inches of penetration were recorded on the boring sheets.

All the soil that was encountered was sampled, logged, and visually classified in the field. These samples were re-evaluated in the laboratory after further testing and investigation. The soils were classified in accordance with the Unified Soils Classification System.

DRAFT

3. LABORATORY TESTING

The following laboratory tests were conducted on selected samples to assist in classifying and evaluating their engineering properties:

Schedule of Laboratory Tests

Test	ASTM Standards
Sieve Analysis	ASTM D-4318 & D1140
Atterberg Limits	ASTM D-4318
Moisture Density	ASTM D-698

*All the results of our laboratory testing can be found in Appendix B.

4. SITE CONDITIONS

4.1 Site Description

The proposed project site is located at 101 Cesar Chavez Boulevard. The site is currently the existing wastewater treatment plant. The north half of the site elevated approximately 5 - 6 feet above the south half.

4.2 Site Soil Conditions

The site soil typically consists of the following profile: The top fifteen (15) feet consists of a brown, moist, very soft, lean clay, (CL), and then changes to a brown, saturated, loose to medium dense, poorly graded sand with silt, (SP-SM). The clayey soils encountered have a plastic index that range from 5-15. These clayey soils have a moderate to high swell potential. Standard penetration tests were run at various holes and depth and ranged from 4 to 19 blows per foot.

During the exploration the ground water level was not encountered below the surface. There is a possibility that the ground water level varies seasonally in this area. According to the latest ground water map, the ground water level for this location is approximately 12 to 18 feet below the existing grade. The moisture content of the soil samples ranges from 1.0 to 20.0 percent.

DRAFT

4.3 Seismic Considerations

Based on our evaluation, several faults have the potential of generating earthquakes that will cause strong ground motions in the City of Yuma. The Yuma region is located within the area of greatest risk for earthquake ground shaking within the state, The Basin and Range Physiographic Province. Yuma is also in relatively close proximity to major active fault zones at the boundary of the North American and Pacific lithospheric plates in southern California and northern Mexico. The closest approach of the San Andreas system to Yuma is approximately 65 miles. Ground shaking hazard is also present from the San Jacinto system (65 miles), Imperial fault (28 miles) and the Cerro Prieto fault (49 miles). However, Basin and Range faults have relatively long and uncertain recurrence times, that is, the time between large earthquakes occurs on a scale of tens to hundreds of thousands of years.

Whereas large earthquakes occur on plate boundary faults on a scale of hundreds of years, or less. Strong ground measurements from the Northridge, Kobe and other large earthquakes have shown that ground motions are significantly greater near an earthquake source. The proposed site is located within a Seismic Risk Area and the design should include seismic provisions as included in the 2018 International Building Code.

Longitude	114°	35 Minutes	49 Seconds West
Latitude	32°	41 Minutes	47 Seconds North

*The site soil classification is Type 'D'.

4.4 Liquefaction

Since the ground water level is fairly shallow and there is potential for saturated sands, and therefore liquefaction is likely for this site. Liquefaction is the temporary loss of bearing strength due to the shear waves passing through the saturated granular soil layers. This causes the distortion of the granular structure which causes the particles to collapse. This collapse then increases the pore-water pressure.

It is understood that the site lies within an area of seismic risk. Therefore, it is recommended that suitable precautions be applied to the building design to help prevent major structural damage in the event of an earthquake. Earthquake resistant design parameters are recommended to be obtained from the 2018 International Building Code**.**

DRAFT

5. DISCUSSION AND RECOMMENDATIONS

5.1 Site Preparation

The following site recommendations should be followed within any building pad or foundation area. The foundation area included a five (5) foot perimeter outside of the footing outline. All soil containing any organic material or concrete materials should be stripped and removed entirely from the site. Any debris larger than three (3) inches in diameter on the proposed site at the time of construction should be removed.

5.2 Earthwork

A. Pad Preparation

The following steps should be followed within the building pad and foundation area.

A. Clean and grub the area as mentioned above in Section 5.1.
B. Remove and dispose enough of the existing clayey native soil to provide 48 inches of moisture conditioned and compacted imported fill below the bottom of any foundation.
C. Moisture condition and compact the bottom twelve (12) inches of excavation area to +/-2% of optimum and compact to 95% of ASTM D-698.
D. Replace the forty-eight (48) inches of over excavated soil with an aggregate base material meeting Yuma County Standards. Place the aggregate base in 12 inch loose maximum lifts. Moisture condition each lift to +/-2% of optimum and compact to a 95% per ASTM D-698.
E. The imported Aggregate base will meet the latest Yuma County standards for ABC.

Note: All imported fills must be approved by the Geotechnical Engineer before placing.

DRAFT

5.3 Foundation

Structural foundations that are reinforced can be used for the foundation system, while shallow spread footings and continuous wall footings are suitable to support the proposed structure if they are founded on properly prepared and compacted soil. The building foundation may be designed using a maximum bearing value of **2,800 PSF** for dead and live loads. The allowable soil pressure may be increased by one-third for short term loads induced by wind or seismic events.

All exterior wall footings should be embedded at a minimum of 24 inches below the compacted building pad or the lowest adjacent final grade. Interior footings should be embedded a minimum of 18 inches below the compacted building pad. Continuous wall footings should have minimum width of 18 inches. Spread footings should be designed by the Structural Engineer.

Flexible type connections such as a "Link Seal" should be used to connect exterior piping with any tanks.

5.4 Concrete Slab on Grade

The concrete slab in flat work should be designed by a Structural Engineer. The floor slab can either be monolithically placed with the foundation or doweled after footings have been placed. The compacted pad shall be moistened to within 2% of optimum moisture just prior to concrete placement.

Concrete slab and flatwork reinforcement recommendations should be provided by the Structural Engineer.

Contraction joints should be placed at 12 feet maximum on center each way for all concrete floor slabs. All joints should form approximately square patterns to help reduce randomly oriented crack. Saw cut the joints to a depth of ¼ the slab thickness. All joints should be thoroughly cleaned out and filled with semi-rigid caulking.

All exterior walkways and driveways should be placed on 12 inches of moistened and compacted native soil.

All Portland cement concrete will have a slump that does not exceed 5 inches. The concrete mix design should use Type II Portland cement. The aggregate for the mix should meet the requirements of ASTM C-33 for coarse and fine aggregates. The mix

DRAFT

design should be reviewed and approved by the Structural Engineer before any is placed. It is recommended that all concrete placement and curing operations be performed in accordance with the latest edition of the American Concrete Institute (ACI) Manuel. If moisture sensitive flooring is being used within the new building, a 10-mil vapor barrier should be placed below the concrete slab on grade. This barrier will need to be installed in accordance with the latest ACI standards.

5.5 Resistance to Lateral Loads

If free unrestrained walls are planned to retain level, predominantly granular, non-expansive soils, an active lateral soil pressure of 38 pounds per cubic foot equivalent fluid pressure may be used. For restrained retaining walls under the same conditions as stated above, an active lateral soil pressure of 58 pounds per cubic foot equivalent fluid pressure may be used. The passive soil resistance of properly compacted backfill against footings or stem walls is 270 pounds per cubic foot. The recommendation coefficient of friction is 0.30.

The lateral pressure stated above is ultimate value. Therefore, suitable factors of safety should be incorporated into the design. The Structural Engineer should also consider additional lateral loads induced by surcharged, adjacent footings or seismic activity.

5.6 Drainage

Positive drainage should be maintained away from the building pads and foundation. Water should not be allowed to drain or pond near or around the foundation. All roof drains should be directed away from all building foundation system.

If onsite retention basins are used, curbing should be used around these basins to help prevent erosion of the basin side slopes. All curbs should be extended to a minimum of 6 inches below the bottom of the subgrade to help prevent any water migration under the pavement. Maintenance of proper drainage is necessary to prolong the service life of the pavement.

Any landscaping used around the building should be kept to a minimum. This vegetation should be of the variety that does not require large amounts of water or that does not have

DRAFT

large root systems that could adversely affect the foundation system. All landscaping irrigation systems should be placed away from the foundation and should be maintained and serviced regularly.

5.7 Utilities

All underground utilities for this project should be installed in accordance with the required City of San Luis Standards details and specifications. The native sand can be used as backfill material and all clayey soil must be removed. All trenched will be backfilled in 12-inch lifts, moisture condition to +/-2 of optimum and compacted to 95% per ASTM D-698.

VI. CLOSURE

6.1 Limitations

The conclusions and recommendations in this report are based upon the proposed design parameters, subsurface findings, and the assumptions that the soil condition does not deviate appreciably from the test borings.

If there is any deviation of the soil condition or the design parameters, GTS should be notified and retained to review these changes and make the required recommendations. If changes are made or encountered and GTS is not contracted to review such changes, we will not be responsible for the impact of these changes on the structure or the site.

It is recommended that GTS be retained to observe and test the earthwork process to properly ensure that the recommendations are carried out. All testing for this project should be done in accordance with the latest City of San Luis Specifications.

This report has been prepared for the exclusive use of Pacific Advanced Civil Engineering, Inc. for the site specified within this report.

DRAFT

APPENDIX A

DRAFT

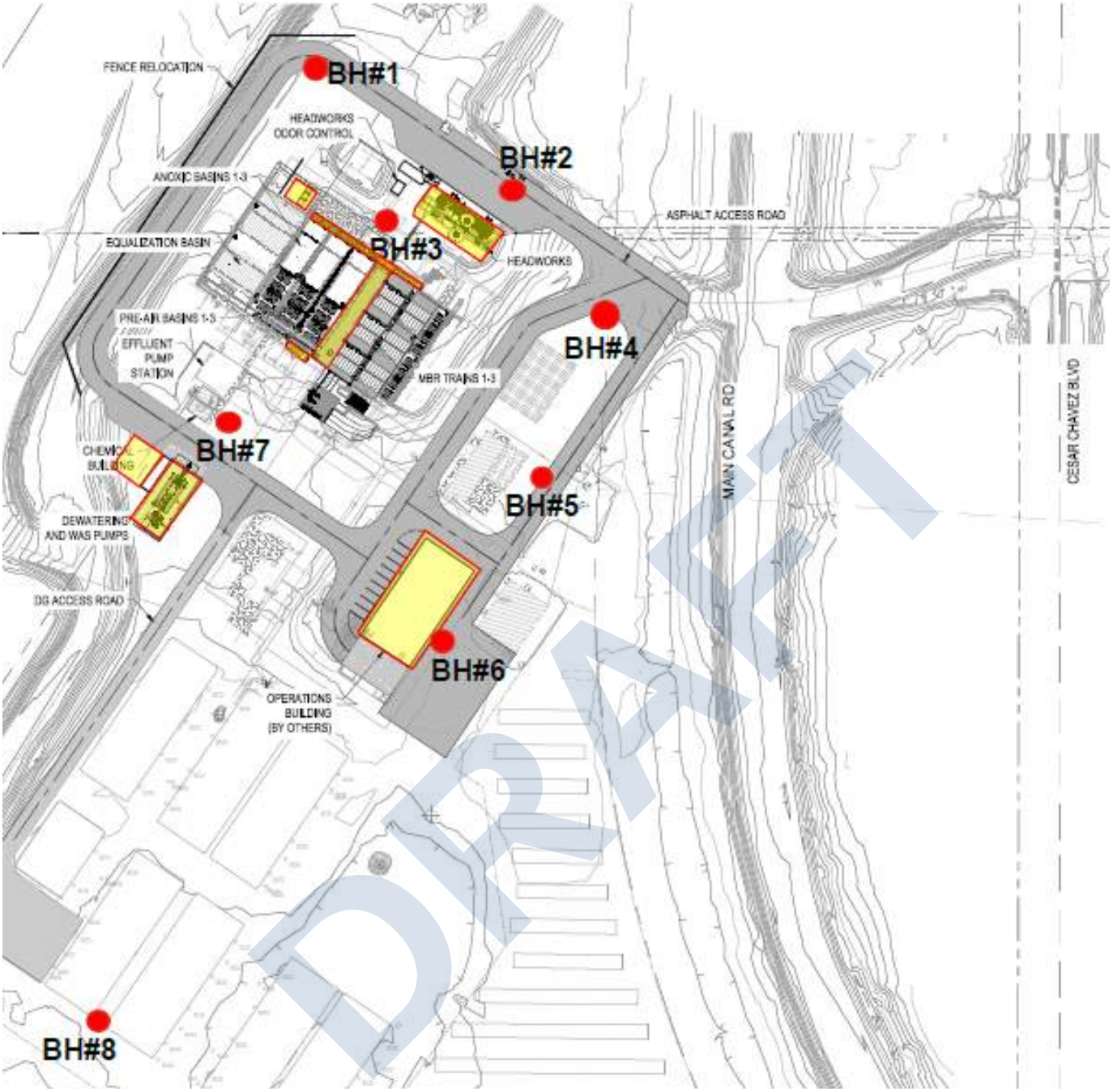

SITE PLAN

SAN LUIS WASTE WATER TREATMENT PLANT EXPANSION

SAN LUIS, ARIZONA

GEOTECHNICAL TESTING SERVICES, INC.

1044 E. 21st Street - Yuma, Arizona

Phone: (928) 329-4695

KEY TO SYMBOLS

Symbol	Description
Strata symbols	
	Silty sand
	Description not given for: "OS9"
	Description not given for: "90"
	Description not given for: "Z9S"
	Description not given for: "OS"
	Description not given for: "ZS"
	Low plasticity clay
	Description not given for: "ZO"
	Poorly graded sand with silt
Misc. Symbols	
	Drill rejection

DRAFT

Notes:

1. Exploratory borings were drilled on 03/27/25 using a CME-55 Drill Rig

2. Groundwater was encountered at approximately 16' below the existing grade at the time of drilling.

3. Boring locations were taped from existing features and elevations extrapolated from the final design schematic plan.

4. These logs are subject to the limitations, conclusions, and recommendations in this report.

5. Results of tests conducted on samples recovered are reported on the logs.

LOG OF BORING No. 1

PROJECT: SAN LUIS WASTE WATER TREATMENT PLANT **PROJECT NO.:** 24-034G
CLIENT: PACIFIC ADVANCED CIVIL
PROJECT LOCATION: WEST WASTE WATER TREATMENT PLANT SAN LUIS
LOCATION: SEE SITE PLAN **ELEVATION:** 100
DRILLER: GTS **LOGGED BY:** GTS
DRILLING METHOD: CME **DATE:** 3/27/25
DEPTH TO - WATER> INITIAL: ▽ No. GW **AFTER 24 HOURS:** ▽ No. GW **CAVING>** C

Depth (feet)	Description	Graphic	Sample No.	Blow Counts	% < #200	TEST RESULTS
0	Brown, Dry, silty sand		1-0		28.1	Plastic Limit ⊢ Liquid Limit; Water Content - ●; Penetration - ▨; 10 20 30 40 50
5	Boring terminated at 3 ft. Brown, Dry, silty sand		1-1		23.4	
10						
15						
20						
25						
30						
35						

DRAFT

This information pertains only to this boring and should not be interpreted as being indicitive of the site.

GEOTECHNICAL TESTING SERVICES
1044 E. 21st STREET
YUMA, AZ 85365
Ph. (928) 329-4695 • Fax (928) 329-4782

LOG OF BORING No. 2

PROJECT: SAN LUIS WASTE WATER TREATMENT PLANT **PROJECT NO.:** 24-034G
CLIENT: PACIFIC ADVANCED CIVIL
PROJECT LOCATION: WEST WASTE WATER TREATMENT PLANT SAN LUIS
LOCATION: SEE SITE PLAN **ELEVATION:** 100
DRILLER: GTS **LOGGED BY:** GTS
DRILLING METHOD: CME-55 **DATE:** 3/27/25
DEPTH TO - WATER> INITIAL: ▽ No. GW **AFTER 24 HOURS:** ▽ No. GW **CAVING>** C

Depth (feet)	Description	Graphic	Sample No.	Blow Counts	% < #200
0	AGGREGATE BASE MATERIAL TOP 8 TO 12 INCHES then Brown, Dry, Silty Sand		2-0		
2.5	Brown, Damp, clayey sand with gravel		2-1	2 3 3	18.8
5	Brown, Moist, silty sand with gravel and traces of clay		2-2	3 5 7	43.7
10	Brown, Very Moist, silt with sand and gravel		2-3	3 5 9	75.3
15	Boring terminated at 15 ft. Brown, Moist, lean clay with sand		2-4	4 4 7	81.0
20					
25					
30					
35					

TEST RESULTS
Plastic Limit ⊢——⊣ Liquid Limit
Water Content - ●
Penetration - ▨
10 20 30 40 50

DRAFT

This information pertains only to this boring and should not be interpreted as being indicitive of the site.

GEOTECHNICAL TESTING SERVICES
1044 E. 21st STREET
YUMA, AZ 85365
Ph. (928) 329-4695 • Fax (928) 329-4782

LOG OF BORING No. 3

PROJECT: SAN LUIS WASTE WATER TREATMENT PLANT **PROJECT NO.:** 24-034G
CLIENT: PACIFIC ADVANCED CIVIL
PROJECT LOCATION: WEST WASTE WATER TREATMENT PLANT SAN LUIS
LOCATION: SEE SITE PLAN **ELEVATION:** 100
DRILLER: GTS **LOGGED BY:** GTS
DRILLING METHOD: CME-55 **DATE:** 3/27/25
DEPTH TO - WATER> INITIAL: ▽ No. GW **AFTER 24 HOURS:** ▼ No. GW **CAVING>** C

Depth (feet)	Description	Graphic	Sample No.	Blow Counts	% < #200	TEST RESULTS
						Plastic Limit ⊢—⊣ Liquid Limit Water Content - ● Penetration - ▨ 10 20 30 40 50

DRAFT

This information pertains only to this boring and should not be interpreted as being indicitive of the site.

GEOTECHNICAL TESTING SERVICES
1044 E. 21st STREET
YUMA, AZ 85365
Ph. (928) 329-4695 • Fax (928) 329-4782

LOG OF BORING No. 4

PROJECT: SAN LUIS WASTE WATER TREATMENT PLANT **PROJECT NO.:** 24-034G
CLIENT: PACIFIC ADVANCED CIVIL
PROJECT LOCATION: WEST WASTE WATER TREATMENT PLANT SAN LUIS
LOCATION: SEE SITE PLAN **ELEVATION:** 100
DRILLER: GTS **LOGGED BY:** GTS
DRILLING METHOD: CME-55 **DATE:** 3/27/25
DEPTH TO - WATER> INITIAL: ▽ No. GW **AFTER 24 HOURS:** ▽ No. GW **CAVING>** C

Depth (feet)	Description	Graphic	Sample No.	Blow Counts	% < #200
0	AGGREGATE BASE MATERIAL TOP 8 TO 12 INCHES then Brown, Dry, Silty Sand		4-0		
2.5	Brown, Damp, clayey sand with gravel		4-1	2 3 4	18.8
5	Brown, Moist, silty sand with gravel and traces of clay		4-2	3 5 6	43.7
10	Brown, Very Moist, silt with sand and gravel		4-3	3 6 6	75.3
15	Boring terminated at 15 ft. Brown, Moist, lean clay with sand		4-4	4 7 8	81.0

TEST RESULTS
Plastic Limit ⊢—⊣ Liquid Limit
Water Content - ●
Penetration - ▨
10 20 30 40 50

DRAFT

This information pertains only to this boring and should not be interpreted as being indicitive of the site.

GEOTECHNICAL TESTING SERVICES
1044 E. 21st STREET
YUMA, AZ 85365
Ph. (928) 329-4695 • Fax (928) 329-4782

LOG OF BORING No. 5

PROJECT: SAN LUIS WASTE WATER TREATMENT PLANT **PROJECT NO.:** 24-034G
CLIENT: PACIFIC ADVANCED CIVIL
PROJECT LOCATION: WEST WASTE WATER TREATMENT PLANT SAN LUIS
LOCATION: SEE SITE PLAN **ELEVATION:** 100
DRILLER: GTS **LOGGED BY:** GTS
DRILLING METHOD: CME-55 **DATE:** 3/27/25
DEPTH TO - WATER> INITIAL: ▽ No. GW **AFTER 24 HOURS:** ▽ No. GW **CAVING>** C

Depth (feet)	Description	Graphic	Sample No.	Blow Counts	% < #200
0	Brown, Dry, silty sand with gravel and ABC type mateiral		5-0		17.7
2.5	Brown, Dry, silty sand with gravel and traces of clay		5-1	3 3 5	30.5
5	Brown, Dry, silty sand		5-2	3 5 6	28.5
10	Brown, Moist, lean clay with sand		5-3	4 5 9	31.1
15	Boring terminated at 15 ft. Brown, Moist, silty sand		5-4	4 7 10	16.1
20					
25					
30					
35					

TEST RESULTS
Plastic Limit ⊢—⊣ Liquid Limit
Water Content - ●
Penetration - ▨
10 20 30 40 50

DRAFT

This information pertains only to this boring and should not be interpreted as being indicitive of the site.

GEOTECHNICAL TESTING SERVICES
1044 E. 21st STREET
YUMA, AZ 85365
Ph. (928) 329-4695 • Fax (928) 329-4782

LOG OF BORING No. 6

PROJECT: SAN LUIS WASTE WATER TREATMENT PLANT **PROJECT NO.:** 24-034G
CLIENT: PACIFIC ADVANCED CIVIL
PROJECT LOCATION: WEST WASTE WATER TREATMENT PLANT SAN LUIS
LOCATION: SEE SITE PLAN **ELEVATION:** 100
DRILLER: GTS **LOGGED BY:** GTS
DRILLING METHOD: CME-55 **DATE:** 3/27/25
DEPTH TO - WATER> INITIAL: ▽ No. GW **AFTER 24 HOURS:** ▽ No. GW **CAVING>** C

Depth (feet)	Description	Graphic	Sample No.	Blow Counts	% < #200
0	Brown, Dry, silty sand with gravel and ABC type mateiral		6-0		17.7
2.5	Brown, Dry, silty sand with gravel and traces of clay		6-1	3 3 3	30.5
5	Brown, Dry, silty sand		6-2	3 5 6	28.5
10	Brown, Moist, lean clay with sand		6-3	4 6 8	31.1
15	Boring terminated at 15 ft. Brown, Moist, silty sand		6-4	4 6 12	16.1
20					
25					
30					
35					

TEST RESULTS
Plastic Limit ⊢—⊣ Liquid Limit
Water Content - ●
Penetration - ▨
10 20 30 40 50

DRAFT

This information pertains only to this boring and should not be interpreted as being indicitive of the site.

GEOTECHNICAL TESTING SERVICES
1044 E. 21st STREET
YUMA, AZ 85365
Ph. (928) 329-4695 • Fax (928) 329-4782

LOG OF BORING No. 7

PROJECT: SAN LUIS WASTE WATER TREATMENT PLANT **PROJECT NO.:** 24-034G
CLIENT: PACIFIC ADVANCED CIVIL
PROJECT LOCATION: WEST WASTE WATER TREATMENT PLANT SAN LUIS
LOCATION: SEE SITE PLAN **ELEVATION:** 100
DRILLER: GTS **LOGGED BY:** GTS
DRILLING METHOD: CME-55 **DATE:** 3/27/25
DEPTH TO - WATER> INITIAL: ▽ No. GW **AFTER 24 HOURS:** ▽ No. GW **CAVING>** C

Depth (feet)	Description	Graphic	Sample No.	Blow Counts	% < #200
0	Brown, Dry, silty sand with gravel (existing aggregate base material)		7-0		26.0
2.5	Brown, Moist, sandy lean clay with gravel		7-1	3 4 4	68.9
5					
5.0	Brown, Moist, lean clay with sand		7-2	3 4 7	77.1
10	Brown, Moist, lean clay with sand		7-3	3 5 7	77.8
15					
15.0	Boring terminated at 15 ft. Brown, Dry, silty sand with traces between 10 and 14 feet.		7-4	4 5 10	12.2
20					
25					
30					
35					

TEST RESULTS
Plastic Limit ⊢——⊣ Liquid Limit
Water Content - ●
Penetration - ▨
10 20 30 40 50

DRAFT

This information pertains only to this boring and should not be interpreted as being indicitive of the site.

GEOTECHNICAL TESTING SERVICES
1044 E. 21st STREET
YUMA, AZ 85365
Ph. (928) 329-4695 • Fax (928) 329-4782

LOG OF BORING No. 8

PROJECT: SAN LUIS WASTE WATER TREATMENT PLANT **PROJECT NO.:** 24-034G
CLIENT: PACIFIC ADVANCED CIVIL
PROJECT LOCATION: WEST WASTE WATER TREATMENT PLANT SAN LUIS
LOCATION: SEE SITE PLAN **ELEVATION:** 100
DRILLER: GTS **LOGGED BY:** GTS
DRILLING METHOD: CME-55 **DATE:** 3/27/25
DEPTH TO - WATER> INITIAL: ▽ No. GW **AFTER 24 HOURS:** ▽ No. GW **CAVING>** C

Depth (feet)	Description	Graphic	Sample No.	Blow Counts	% < #200
0	Brown, Dry, fine, silty clay with sand		8-0		79.8
2.5	Brown, Damp, fine, lean clay		8-1	3 4 5	97.9
5	Brown, Damp, lean clay		8-2	3 5 6	90.5
7.5'	Brown, Moist, lean clay with sand and traces of rock		8-3		83.5
10	Brown, Dry, granular, silty sand		8-4	4 6 8	22.1
15	Boring terminated at 15 ft.		8-5	4 7 12	8.7
	Brown, Dry, granular, poorly graded sand with silt				

TEST RESULTS
Plastic Limit ⊢——⊣ Liquid Limit
Water Content - ●
Penetration - ▨
10 20 30 40 50

DRAFT

This information pertains only to this boring and should not be interpreted as being indicitive of the site.

GEOTECHNICAL TESTING SERVICES
1044 E. 21st STREET
YUMA, AZ 85365
Ph. (928) 329-4695 • Fax (928) 329-4782

APPENDIX B

DRAFT

Particle Size Distribution Report

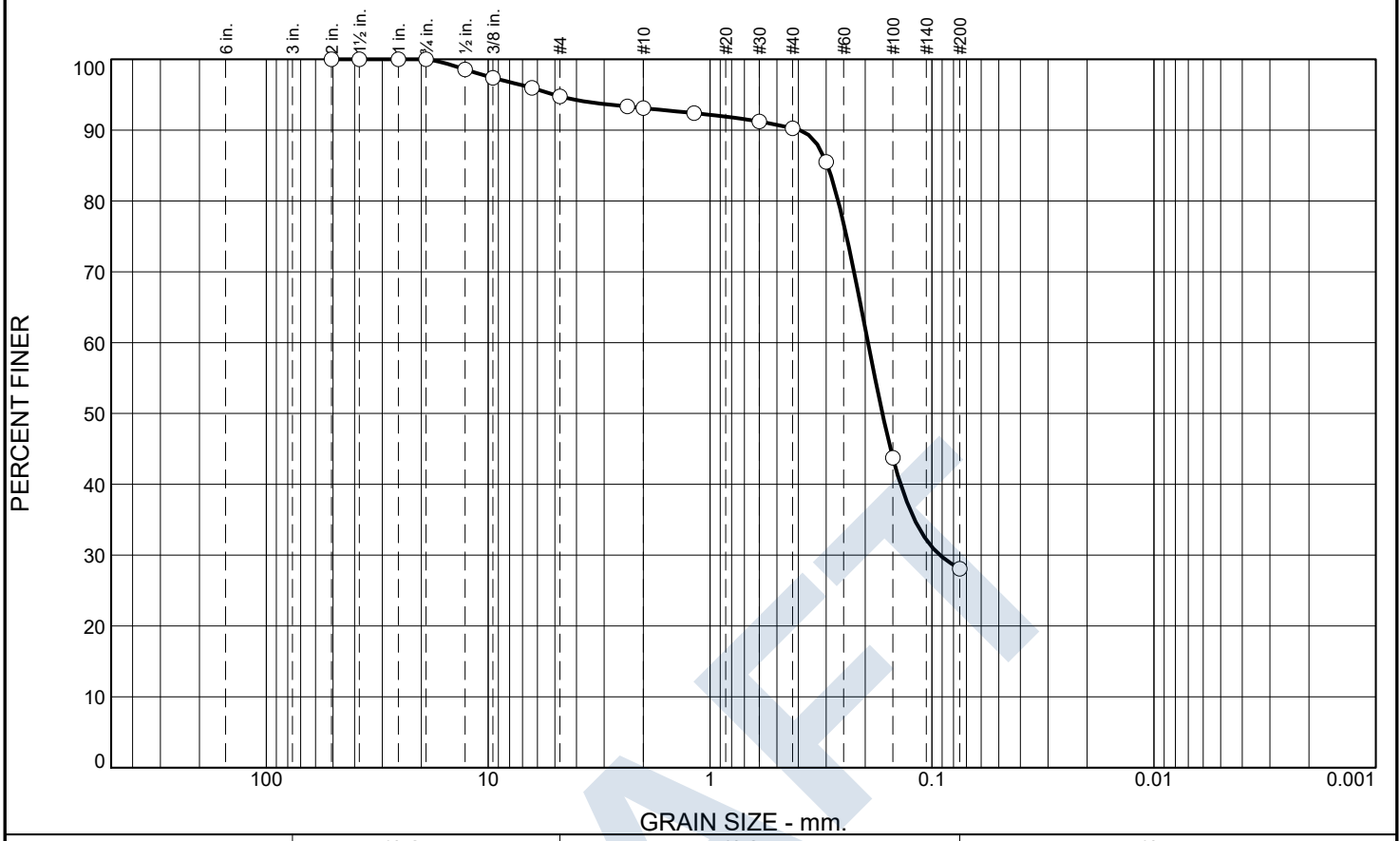

% +3"	% Gravel		% Sand			% Fines	
	Coarse	Fine	Coarse	Medium	Fine	Silt	Clay
0.0	0.0	5.2	1.7	2.8	62.2	28.1	

SIEVE SIZE	PERCENT FINER	SPEC.* PERCENT	PASS? (X=NO)
2"	100.0		
1.5"	100.0		
1"	100.0		
3/4"	100.0		
1/2"	98.6		
3/8"	97.4		
1/4"	96.0		
#4	94.8		
#8	93.4		
#10	93.1		
#16	92.4		
#30	91.2		
#40	90.3		
#50	85.5		
#100	43.7		
#200	28.1		

* (no specification provided)

Material Description

silty sand

Atterberg Limits

PL= NP LL= NV PI= NP

Coefficients

D_{90}= 0.3952 D_{85}= 0.2956 D_{60}= 0.1942
D_{50}= 0.1672 D_{30}= 0.0920 D_{15}=
D_{10}= C_u= C_c=

Classification

USCS= SM AASHTO= A-2-4(0)

Remarks

Source of Sample: 1 **Depth:** 0
Sample Number: 1-0

Date: 3/27/25

GEOTECHNICAL TESTING SERVICES
Yuma, Arizona

Client: PACIFIC ADVANCED CIVIL
Project: SAN LUIS WASTE WATER TREATMENT PLANT ADDITIONS

Project No: 24-034G **Figure** B-1

Tested By: GTS **Checked By:** GTS

DRAFT

Particle Size Distribution Report

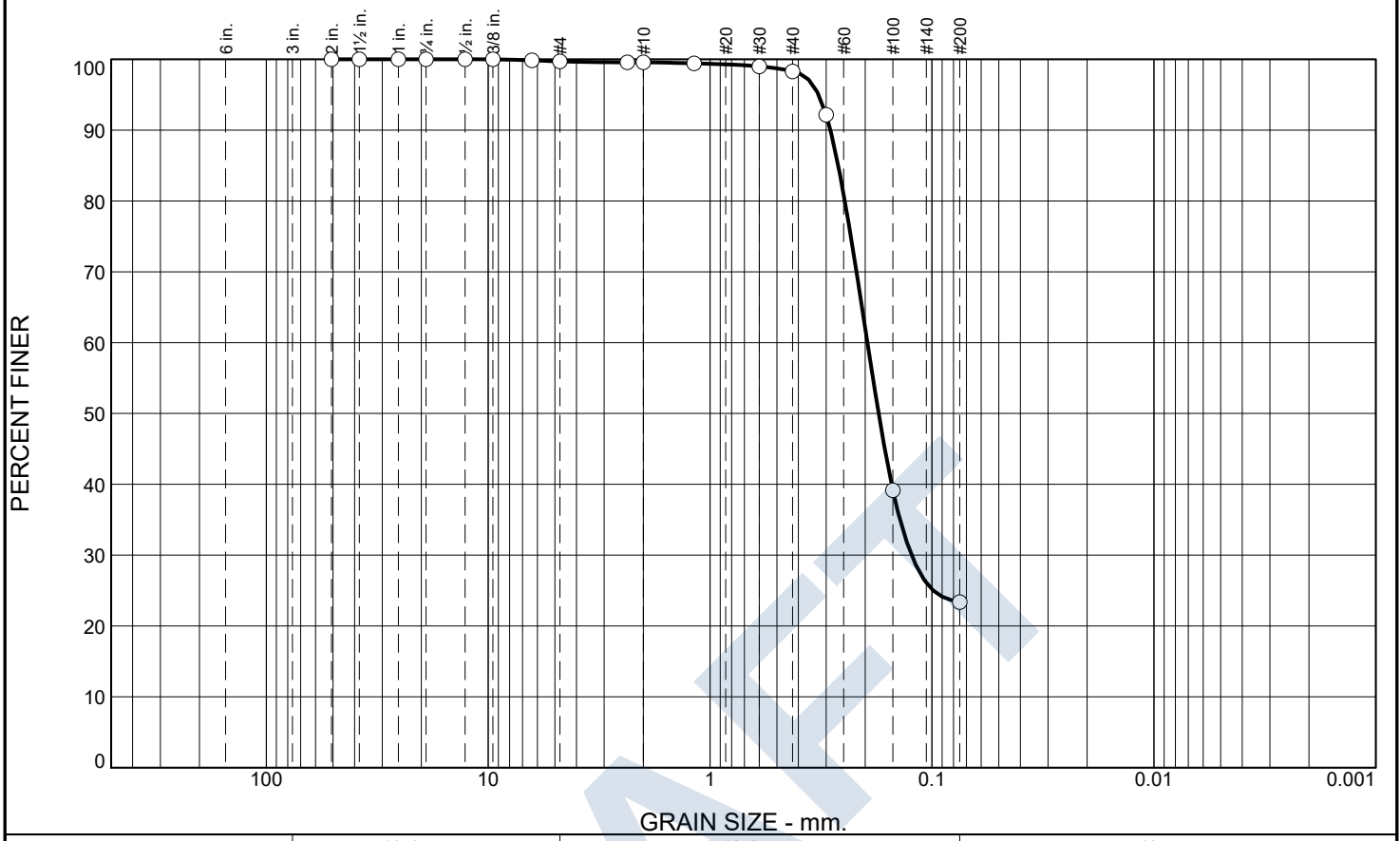

% +3"	% Gravel		% Sand			% Fines	
	Coarse	Fine	Coarse	Medium	Fine	Silt	Clay
0.0	0.0	0.3	0.1	1.3	74.9	23.4	

SIEVE SIZE	PERCENT FINER	SPEC.* PERCENT	PASS? (X=NO)
2"	100.0		
1.5"	100.0		
1"	100.0		
3/4"	100.0		
1/2"	100.0		
3/8"	100.0		
1/4"	99.9		
#4	99.7		
#8	99.6		
#10	99.6		
#16	99.4		
#30	99.0		
#40	98.3		
#50	92.2		
#100	39.2		
#200	23.4		

* (no specification provided)

Material Description

silty sand

Atterberg Limits

PL= NP LL= NV PI= NP

Coefficients

D_{90}= 0.2870 D_{85}= 0.2645 D_{60}= 0.1954
D_{50}= 0.1739 D_{30}= 0.1238 D_{15}=
D_{10}= C_u= C_c=

Classification

USCS= SM AASHTO= A-2-4(0)

Remarks

Source of Sample: 1 **Depth:** 3.0
Sample Number: 1-1

Date: 3/27/25

GEOTECHNICAL TESTING SERVICES
Yuma, Arizona

Client: PACIFIC ADVANCED CIVIL
Project: SAN LUIS WASTE WATER TREATMENT PLANT ADDITIONS

Project No: 24-034G **Figure** B-2

Tested By: GTS **Checked By:** GTS

DRAFT

Particle Size Distribution Report

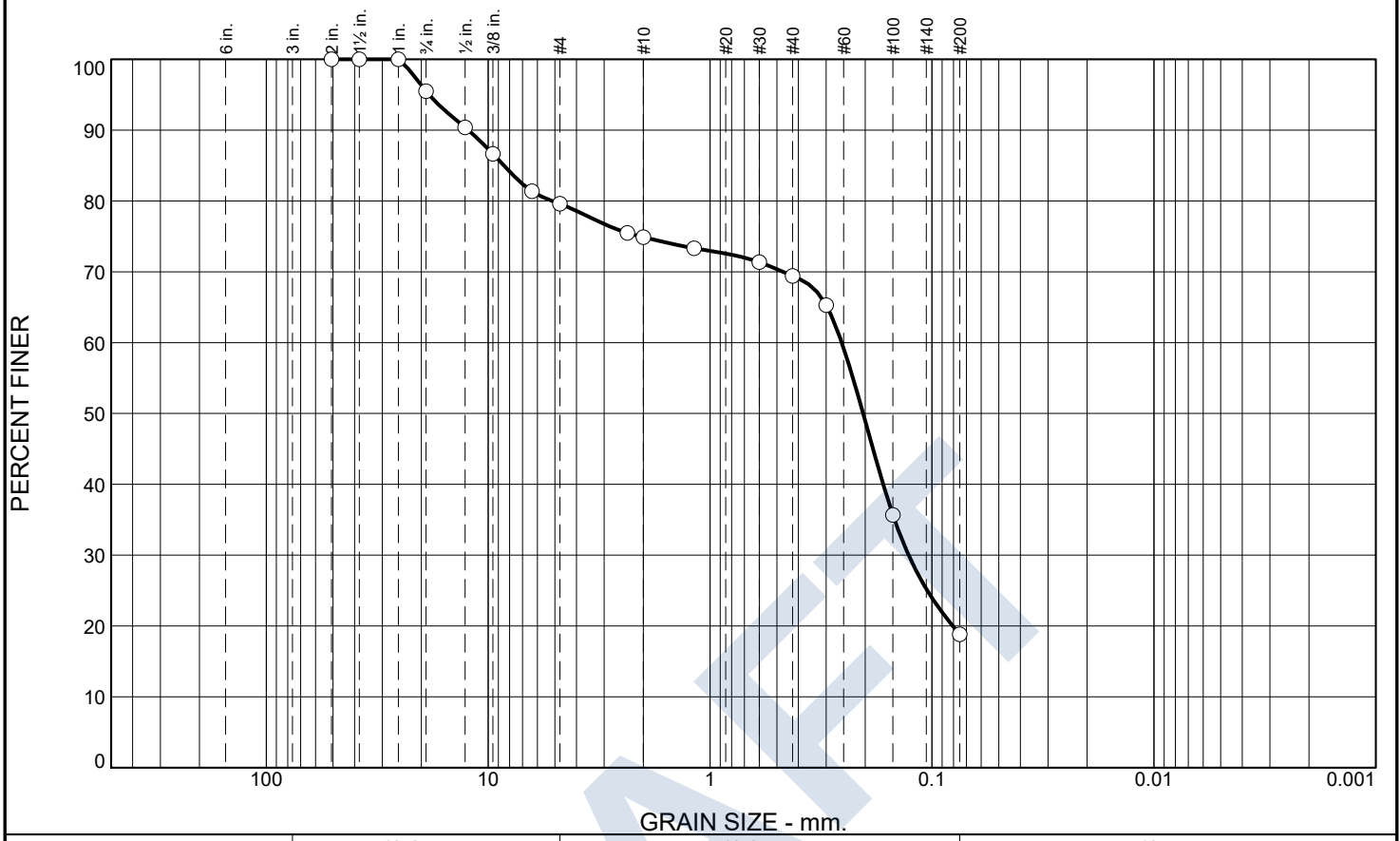

% +3"	% Gravel		% Sand			% Fines	
	Coarse	Fine	Coarse	Medium	Fine	Silt	Clay
0.0	4.5	15.9	4.7	5.5	50.6	18.8	

SIEVE SIZE	PERCENT FINER	SPEC.* PERCENT	PASS? (X=NO)
2"	100.0		
1.5"	100.0		
1"	100.0		
3/4"	95.5		
1/2"	90.4		
3/8"	86.7		
1/4"	81.4		
#4	79.6		
#8	75.5		
#10	74.9		
#16	73.3		
#30	71.4		
#40	69.4		
#50	65.3		
#100	35.7		
#200	18.8		

* (no specification provided)

Material Description

clayey sand with gravel

Atterberg Limits

PL= 16 LL= 32 PI= 16

Coefficients

D_{90}= 12.2863 D_{85}= 8.4913 D_{60}= 0.2551
D_{50}= 0.2043 D_{30}= 0.1275 D_{15}=
D_{10}= C_u= C_c=

Classification

USCS= SC AASHTO= A-2-6(0)

Remarks

Source of Sample: 2 **Depth:** 2.5
Sample Number: 2-1

Date: 3/27/25

GEOTECHNICAL TESTING SERVICES
Yuma, Arizona

Client: PACIFIC ADVANCED CIVIL
Project: SAN LUIS WASTE WATER TREATMENT PLANT ADDITIONS

Project No: 24-034G **Figure** B-3

Tested By: GTS **Checked By:** GTS

DRAFT

Particle Size Distribution Report

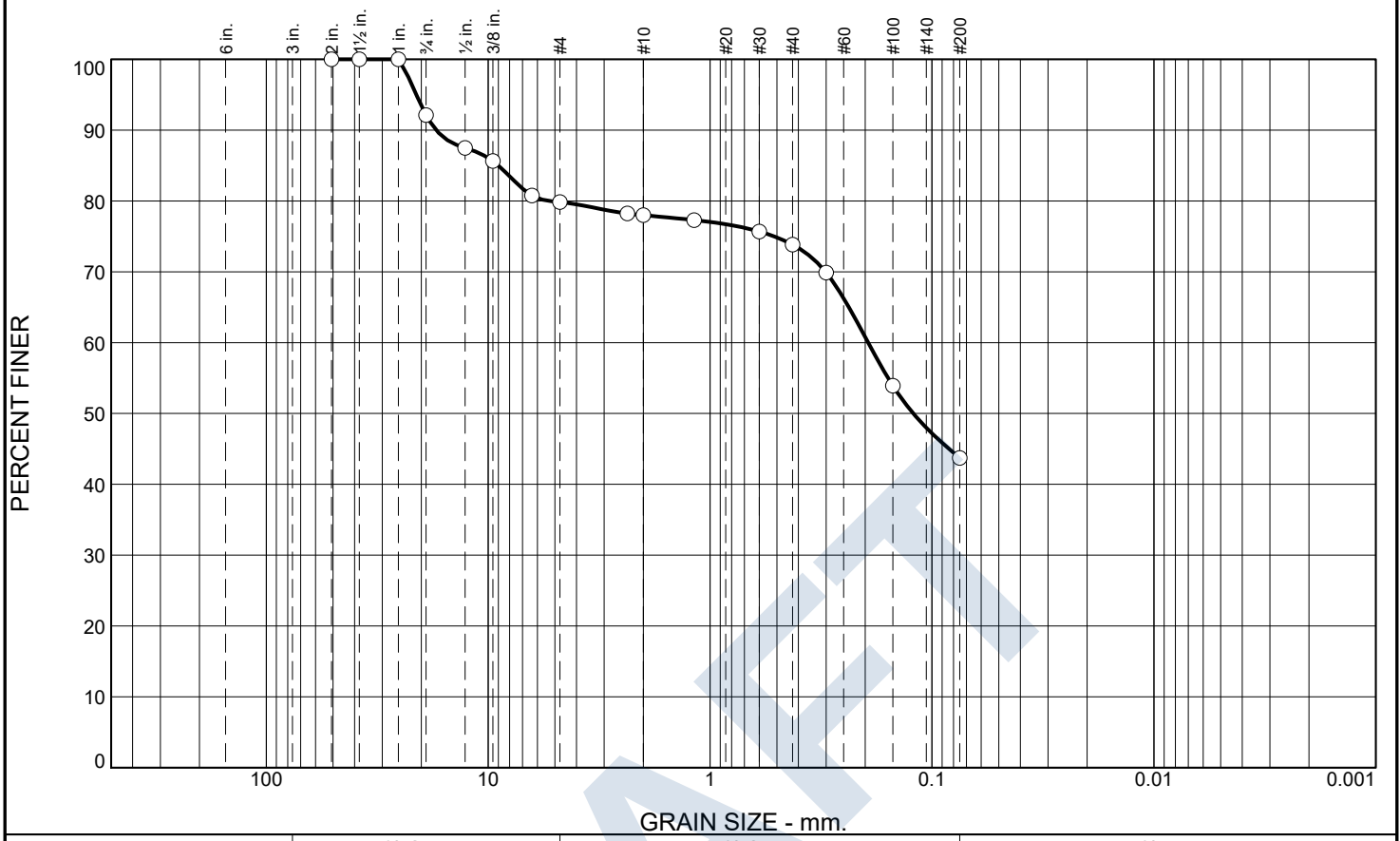

% +3"	% Gravel		% Sand			% Fines	
	Coarse	Fine	Coarse	Medium	Fine	Silt	Clay
0.0	7.9	12.2	1.9	4.2	30.1	43.7	

SIEVE SIZE	PERCENT FINER	SPEC.* PERCENT	PASS? (X=NO)
2"	100.0		
1.5"	100.0		
1"	100.0		
3/4"	92.1		
1/2"	87.5		
3/8"	85.6		
1/4"	80.8		
#4	79.9		
#8	78.2		
#10	78.0		
#16	77.3		
#30	75.7		
#40	73.8		
#50	69.9		
#100	53.9		
#200	43.7		

* (no specification provided)

Material Description

silty sand with gravel

Atterberg Limits

PL= NP LL= NV PI= NP

Coefficients

D_{90}= 17.1465 D_{85}= 8.9929 D_{60}= 0.1938
D_{50}= 0.1215 D_{30}= D_{15}=
D_{10}= C_u= C_c=

Classification

USCS= SM AASHTO= A-4(0)

Remarks

Source of Sample: 2 **Depth:** 5.0
Sample Number: 2-2

Date: 3/27/25

GEOTECHNICAL TESTING SERVICES
Yuma, Arizona

Client: PACIFIC ADVANCED CIVIL
Project: SAN LUIS WASTE WATER TREATMENT PLANT ADDITIONS

Project No: 24-034G **Figure** B-4

Tested By: GTS **Checked By:** GTS

DRAFT

Particle Size Distribution Report

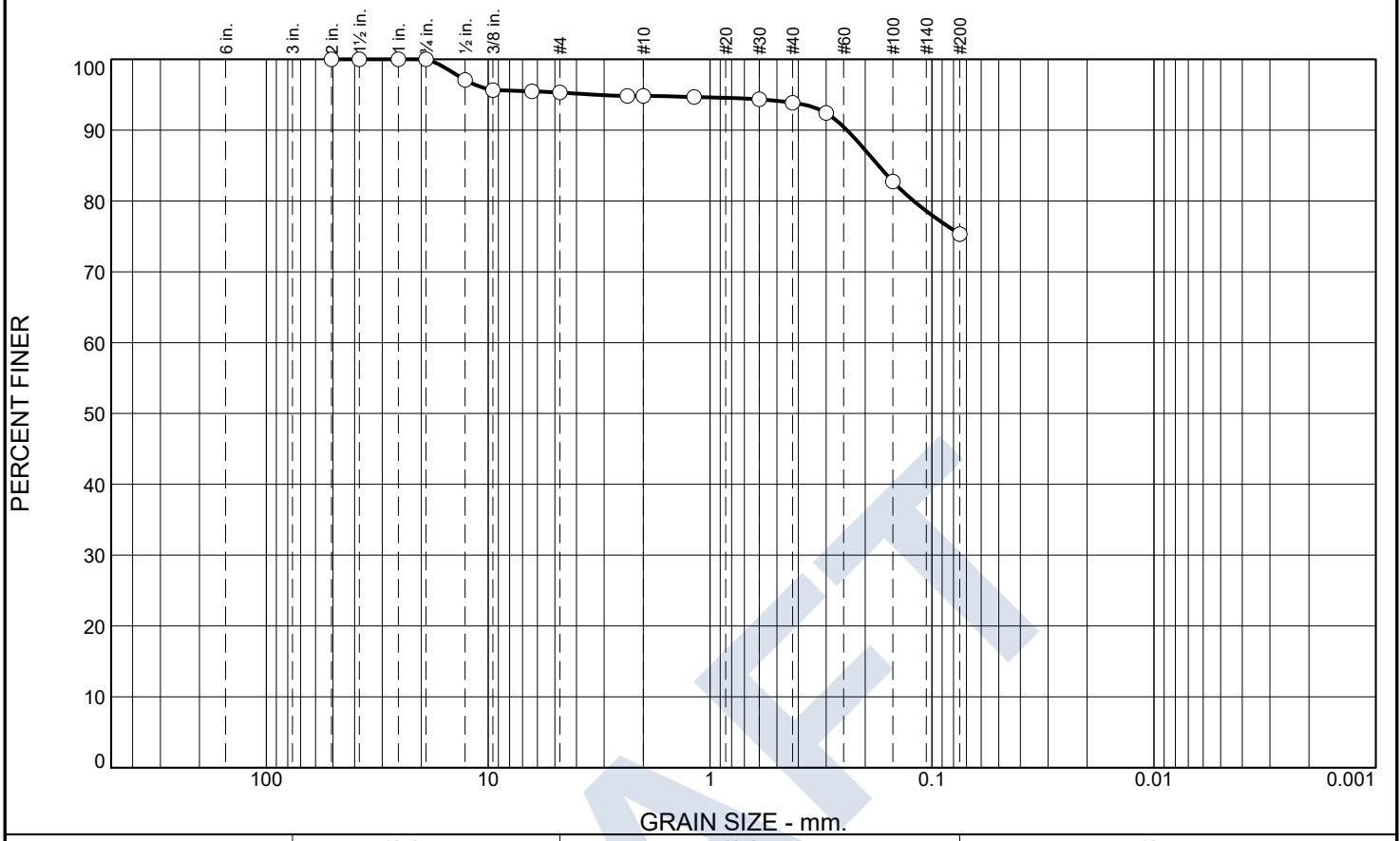

% +3"	% Gravel		% Sand			% Fines	
	Coarse	Fine	Coarse	Medium	Fine	Silt	Clay
0.0	0.0	4.7	0.5	0.9	18.6	75.3	

SIEVE SIZE	PERCENT FINER	SPEC.* PERCENT	PASS? (X=NO)
2"	100.0		
1.5"	100.0		
1"	100.0		
3/4"	100.0		
1/2"	97.1		
3/8"	95.6		
1/4"	95.5		
#4	95.3		
#8	94.8		
#10	94.8		
#16	94.7		
#30	94.4		
#40	93.9		
#50	92.4		
#100	82.7		
#200	75.3		

* (no specification provided)

Material Description

silt with sand

Atterberg Limits

PL= NP LL= NV PI= NP

Coefficients

D_{90}= 0.2415 D_{85}= 0.1742 D_{60}=
D_{50}= D_{30}= D_{15}=
D_{10}= C_u= C_c=

Classification

USCS= ML AASHTO= A-4(0)

Remarks

Source of Sample: 2 **Depth:** 10
Sample Number: 2-3

Date: 3/27/25

GEOTECHNICAL TESTING SERVICES
Yuma, Arizona

Client: PACIFIC ADVANCED CIVIL
Project: SAN LUIS WASTE WATER TREATMENT PLANT ADDITIONS

Project No: 24-034G **Figure** B-5

Tested By: GTS **Checked By:** GTS

DRAFT

Particle Size Distribution Report

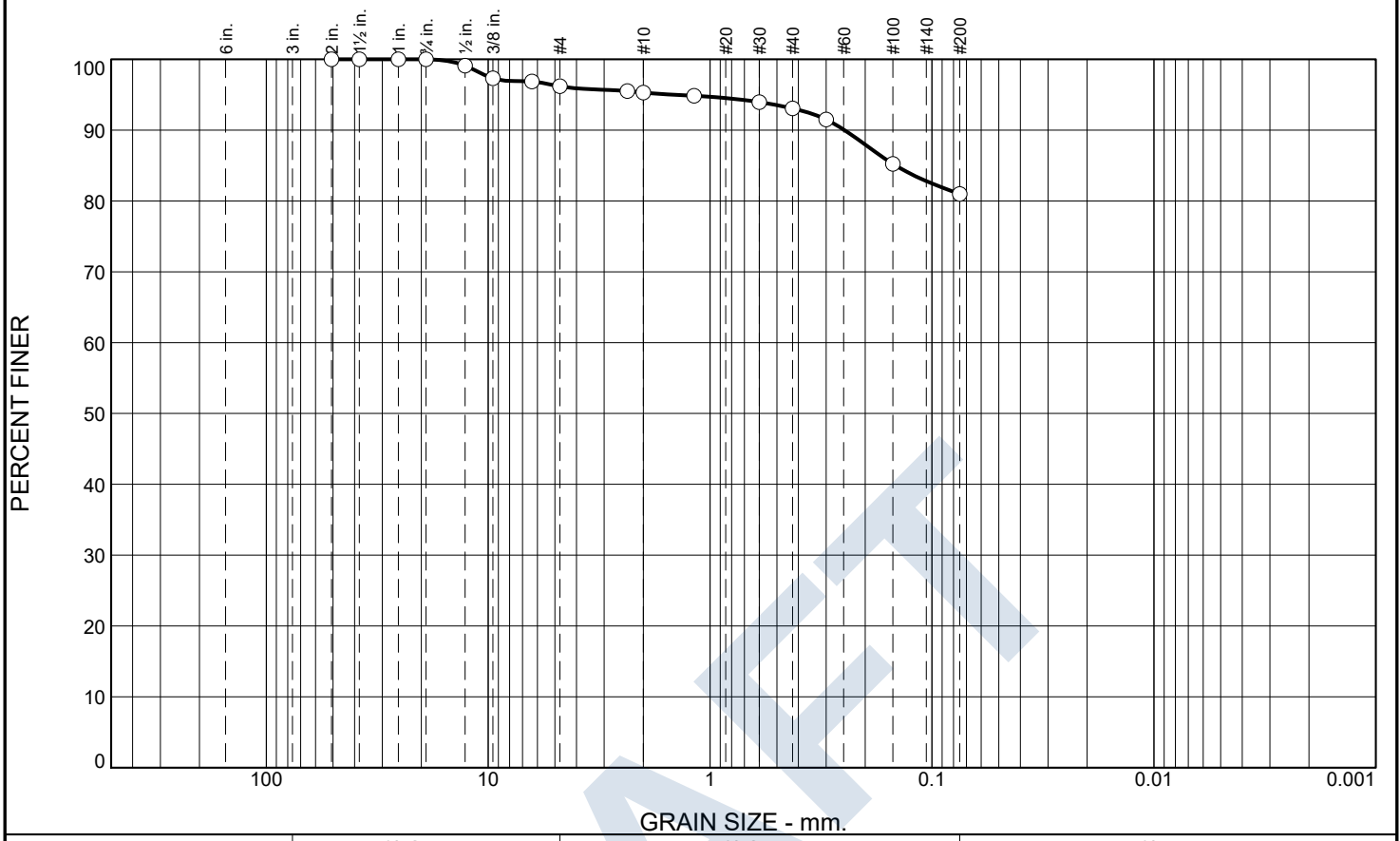

% +3"	% Gravel		% Sand			% Fines	
	Coarse	Fine	Coarse	Medium	Fine	Silt	Clay
0.0	0.0	3.8	0.9	2.2	12.1	81.0	

SIEVE SIZE	PERCENT FINER	SPEC.* PERCENT	PASS? (X=NO)
2"	100.0		
1.5"	100.0		
1"	100.0		
3/4"	100.0		
1/2"	99.1		
3/8"	97.3		
1/4"	96.9		
#4	96.2		
#8	95.5		
#10	95.3		
#16	94.9		
#30	94.0		
#40	93.1		
#50	91.5		
#100	85.2		
#200	81.0		

* (no specification provided)

Material Description

lean clay with sand

Atterberg Limits

PL= 17 LL= 38 PI= 21

Coefficients

D_{90}= 0.2478 D_{85}= 0.1458 D_{60}=
D_{50}= D_{30}= D_{15}=
D_{10}= C_u= C_c=

Classification

USCS= CL AASHTO= A-6(16)

Remarks

Source of Sample: 2 **Depth:** 15
Sample Number: 2-4

Date: 3/27/25

GEOTECHNICAL TESTING SERVICES
Yuma, Arizona

Client: PACIFIC ADVANCED CIVIL
Project: SAN LUIS WASTE WATER TREATMENT PLANT ADDITIONS

Project No: 24-034G **Figure** B-6

Tested By: GTS **Checked By:** GTS

DRAFT

Particle Size Distribution Report

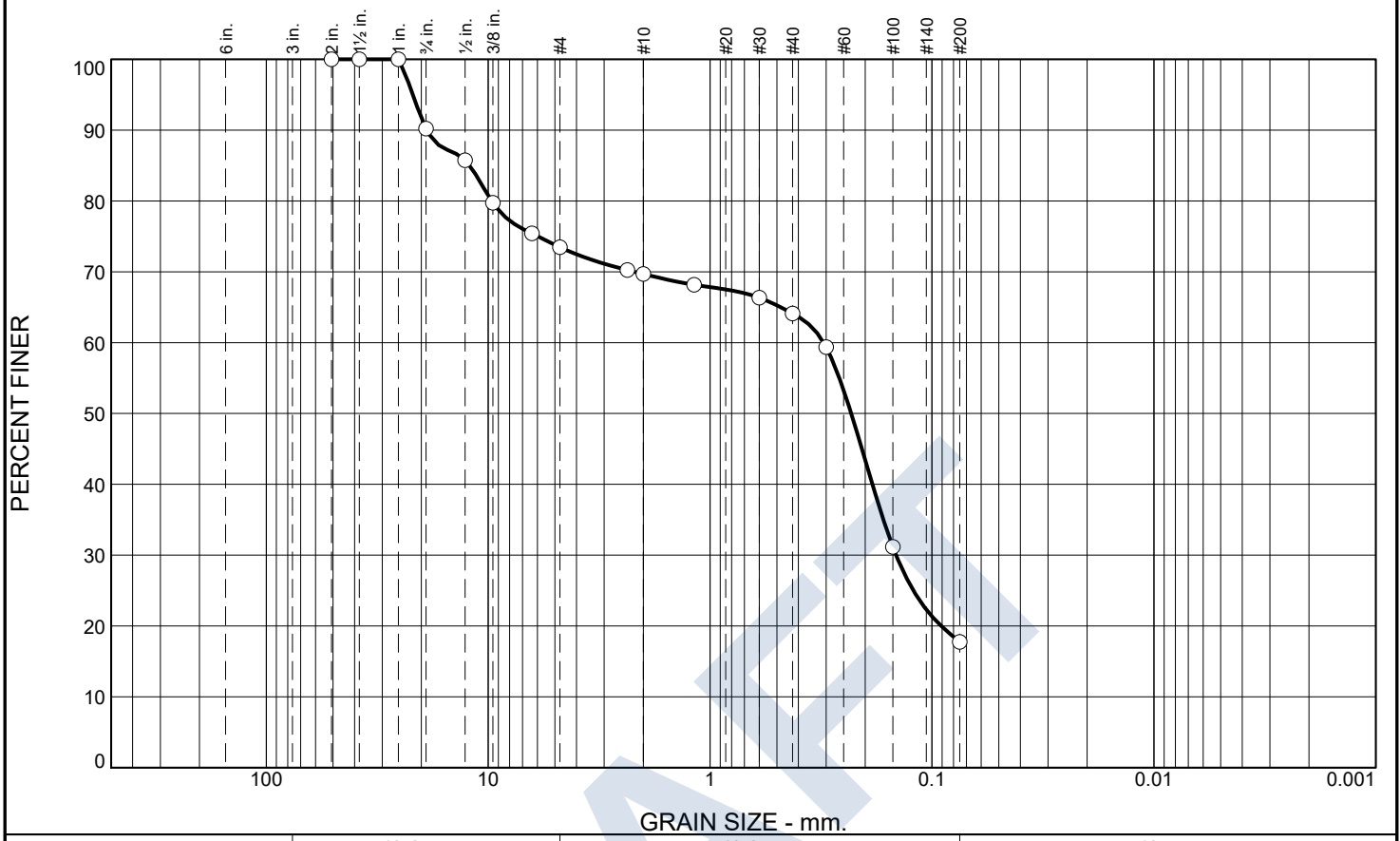

% +3"	% Gravel		% Sand			% Fines	
	Coarse	Fine	Coarse	Medium	Fine	Silt	Clay
0.0	9.8	16.7	3.8	5.6	46.4	17.7	

SIEVE SIZE	PERCENT FINER	SPEC.* PERCENT	PASS? (X=NO)
2"	100.0		
1.5"	100.0		
1"	100.0		
3/4"	90.2		
1/2"	85.8		
3/8"	79.8		
1/4"	75.4		
#4	73.5		
#8	70.3		
#10	69.7		
#16	68.2		
#30	66.3		
#40	64.1		
#50	59.4		
#100	31.2		
#200	17.7		

* (no specification provided)

Material Description

silty sand with gravel

Atterberg Limits

PL= NP LL= NV PI= NP

Coefficients

D_{90}= 18.8880 D_{85}= 12.1185 D_{60}= 0.3080
D_{50}= 0.2312 D_{30}= 0.1451 D_{15}=
D_{10}= C_u= C_c=

Classification

USCS= SM AASHTO= A-2-4(0)

Remarks

Source of Sample: 6 **Depth:** 0
Sample Number: 6-0

Date: 3/27/25

GEOTECHNICAL TESTING SERVICES
Yuma, Arizona

Client: PACIFIC ADVANCED CIVIL
Project: SAN LUIS WASTE WATER TREATMENT PLANT ADDITIONS

Project No: 24-034G **Figure** B-7

Tested By: GTS **Checked By:** GTS

DRAFT

Particle Size Distribution Report

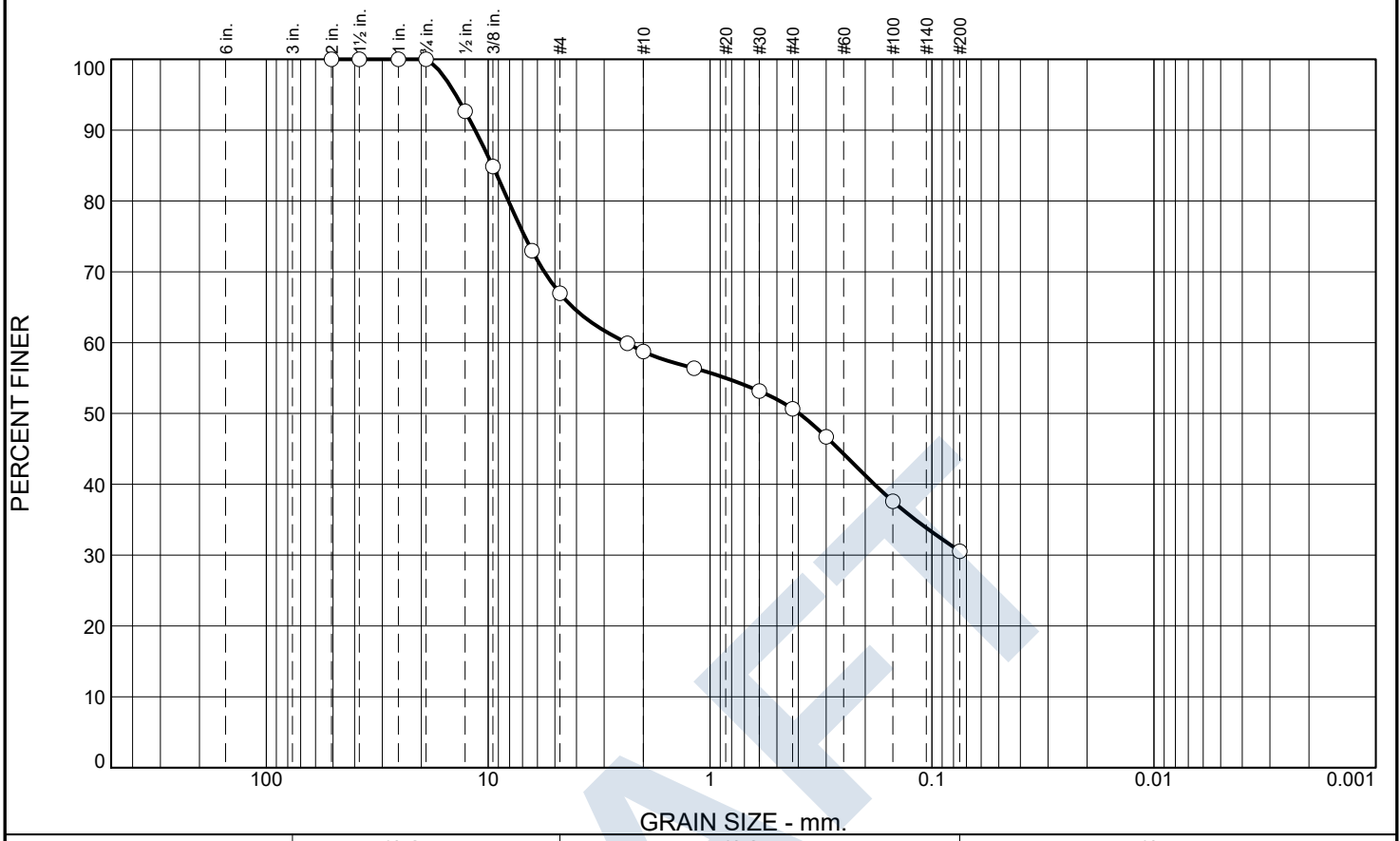

% +3"	% Gravel		% Sand			% Fines	
	Coarse	Fine	Coarse	Medium	Fine	Silt	Clay
0.0	0.0	33.0	8.3	8.0	20.2	30.5	

SIEVE SIZE	PERCENT FINER	SPEC.* PERCENT	PASS? (X=NO)
2"	100.0		
1.5"	100.0		
1"	100.0		
3/4"	100.0		
1/2"	92.7		
3/8"	84.9		
1/4"	73.0		
#4	67.0		
#8	59.9		
#10	58.7		
#16	56.4		
#30	53.2		
#40	50.7		
#50	46.7		
#100	37.6		
#200	30.5		

* (no specification provided)

Material Description

silty sand with gravel

Atterberg Limits

PL= NP LL= NV PI= NP

Coefficients

D_{90}= 11.4520 D_{85}= 9.5656 D_{60}= 2.3886
D_{50}= 0.3972 D_{30}= D_{15}=
D_{10}= C_u= C_c=

Classification

USCS= SM AASHTO= A-2-4(0)

Remarks

Source of Sample: 6 **Depth:** 2.5
Sample Number: 6-1

Date: 3/27/25

GEOTECHNICAL TESTING SERVICES
Yuma, Arizona

Client: PACIFIC ADVANCED CIVIL
Project: SAN LUIS WASTE WATER TREATMENT PLANT ADDITIONS

Project No: 24-034G **Figure** B-8

Tested By: GTS **Checked By:** GTS

DRAFT

Particle Size Distribution Report

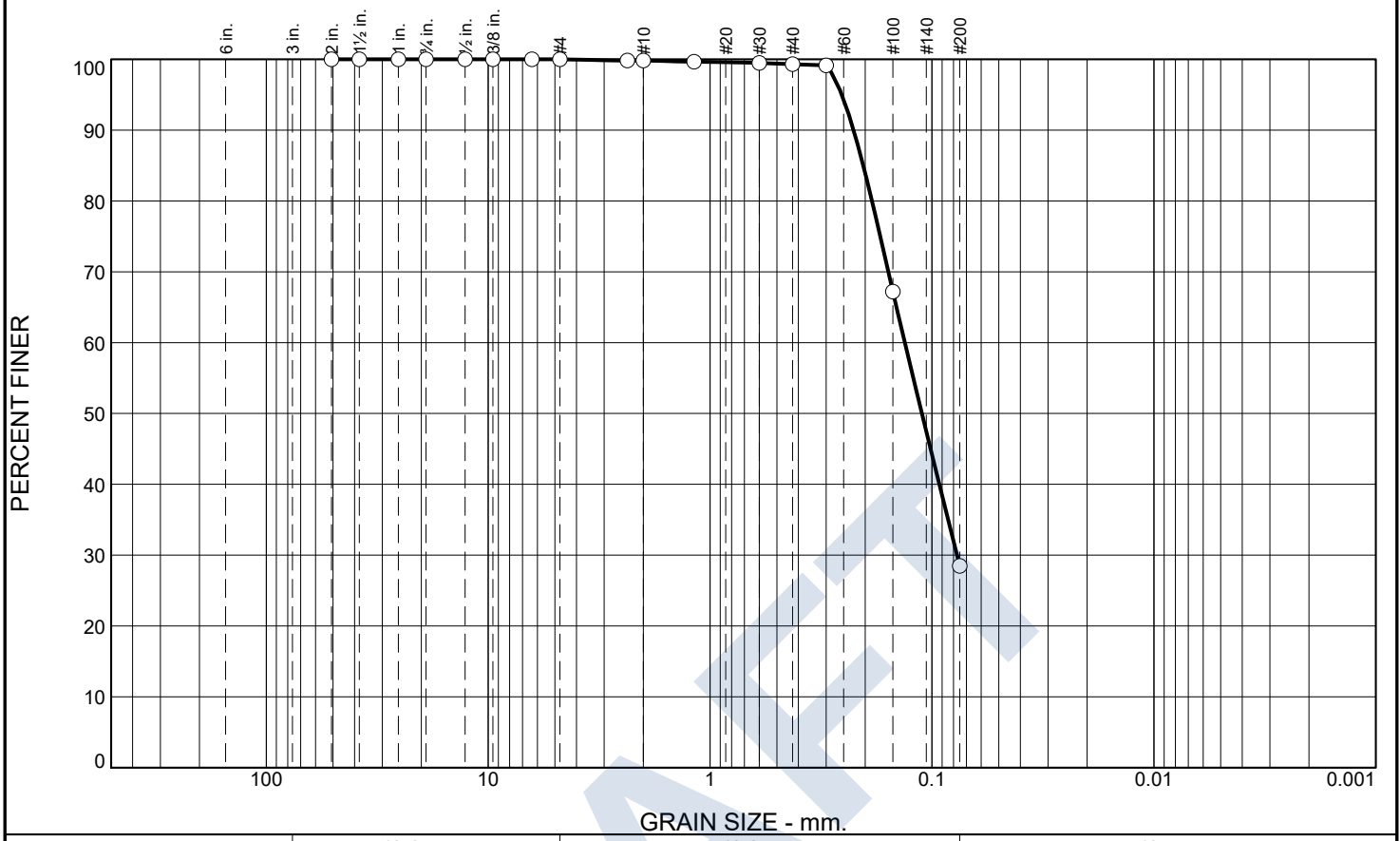

% +3"	% Gravel		% Sand			% Fines	
	Coarse	Fine	Coarse	Medium	Fine	Silt	Clay
0.0	0.0	0.0	0.2	0.5	70.8	28.5	

SIEVE SIZE	PERCENT FINER	SPEC.* PERCENT	PASS? (X=NO)
2"	100.0		
1.5"	100.0		
1"	100.0		
3/4"	100.0		
1/2"	100.0		
3/8"	100.0		
1/4"	100.0		
#4	100.0		
#8	99.8		
#10	99.8		
#16	99.7		
#30	99.5		
#40	99.3		
#50	99.2		
#100	67.2		
#200	28.5		

* (no specification provided)

Material Description

silty sand

Atterberg Limits

PL= NP LL= NV PI= NP

Coefficients

D_{90}= 0.2255 D_{85}= 0.2040 D_{60}= 0.1326
D_{50}= 0.1111 D_{30}= 0.0771 D_{15}=
D_{10}= C_u= C_c=

Classification

USCS= SM AASHTO= A-2-4(0)

Remarks

Source of Sample: 6 **Depth:** 5.0
Sample Number: 6-2

Date: 3/27/25

GEOTECHNICAL TESTING SERVICES
Yuma, Arizona

Client: PACIFIC ADVANCED CIVIL
Project: SAN LUIS WASTE WATER TREATMENT PLANT ADDITIONS

Project No: 24-034G **Figure** B-9

Tested By: GTS **Checked By:** GTS

DRAFT

Particle Size Distribution Report

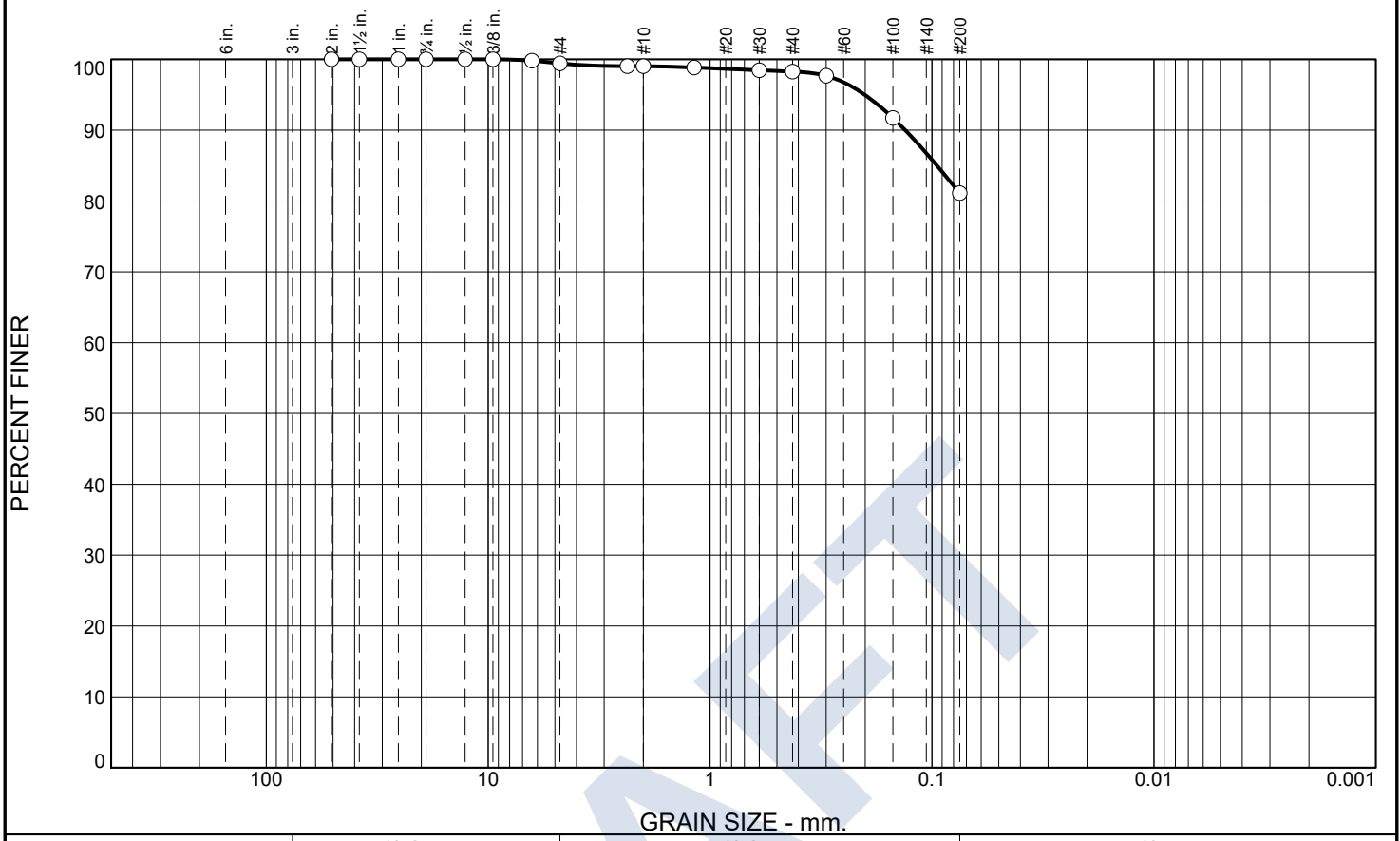

% +3"	% Gravel		% Sand			% Fines	
	Coarse	Fine	Coarse	Medium	Fine	Silt	Clay
0.0	0.0	0.6	0.4	0.7	17.2	81.1	

SIEVE SIZE	PERCENT FINER	SPEC.* PERCENT	PASS? (X=NO)
2"	100.0		
1.5"	100.0		
1"	100.0		
3/4"	100.0		
1/2"	100.0		
3/8"	100.0		
1/4"	99.8		
#4	99.4		
#8	99.0		
#10	99.0		
#16	98.8		
#30	98.5		
#40	98.3		
#50	97.7		
#100	91.7		
#200	81.1		

* (no specification provided)

Material Description

lean clay with sand

Atterberg Limits

PL= 14 LL= 23 PI= 9

Coefficients

D_{90}= 0.1321 D_{85}= 0.0951 D_{60}=
D_{50}= D_{30}= D_{15}=
D_{10}= C_u= C_c=

Classification

USCS= CL AASHTO= A-4(5)

Remarks

Source of Sample: 6 **Depth:** 10
Sample Number: 6-3

Date: 3/27/25

GEOTECHNICAL TESTING SERVICES
Yuma, Arizona

Client: PACIFIC ADVANCED CIVIL
Project: SAN LUIS WASTE WATER TREATMENT PLANT ADDITIONS

Project No: 24-034G **Figure** B-10

Tested By: GTS **Checked By:** GTS

DRAFT

Particle Size Distribution Report

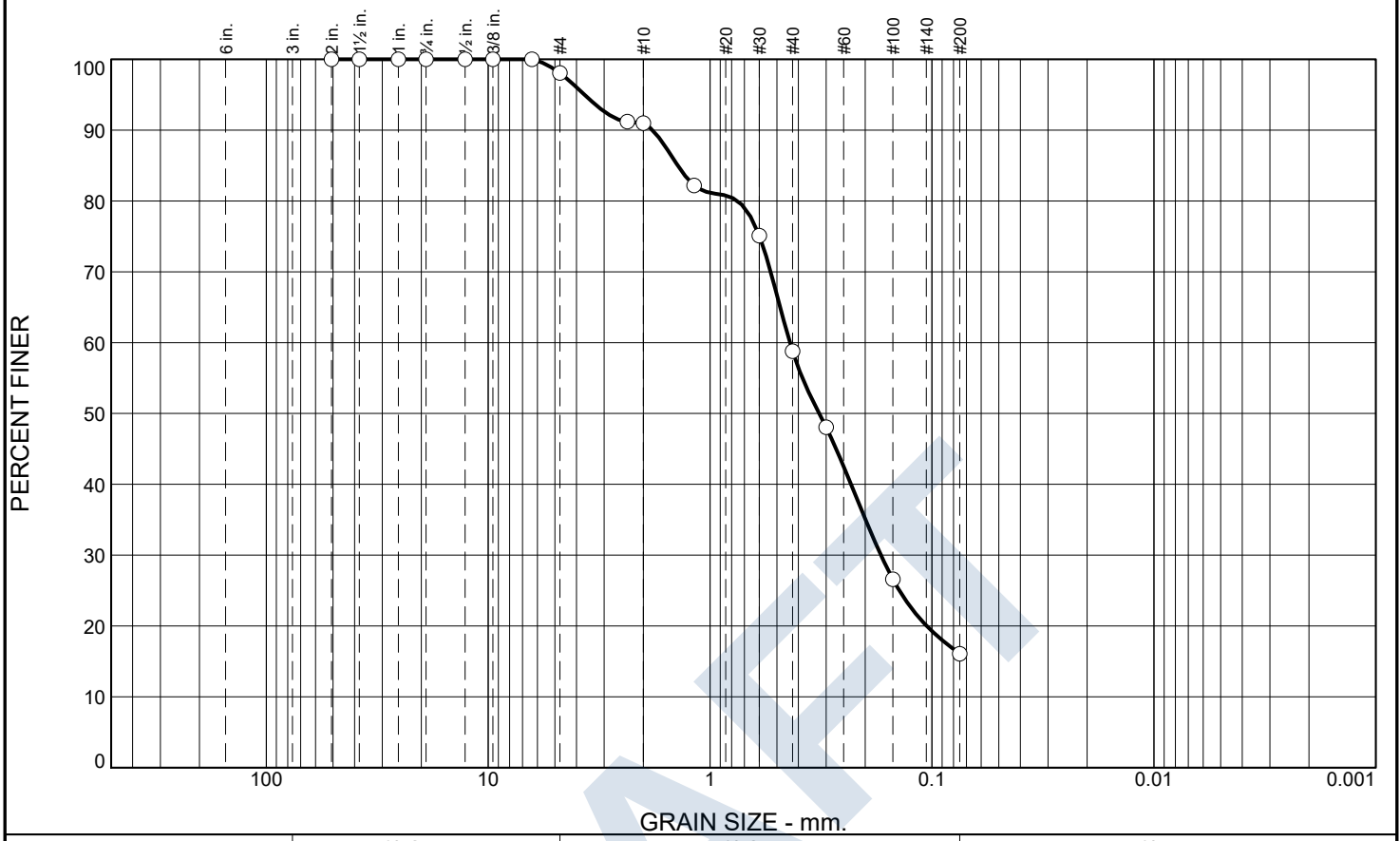

% +3"	% Gravel		% Sand			% Fines	
	Coarse	Fine	Coarse	Medium	Fine	Silt	Clay
0.0	0.0	1.9	7.1	32.2	42.7	16.1	

SIEVE SIZE	PERCENT FINER	SPEC.* PERCENT	PASS? (X=NO)
2"	100.0		
1.5"	100.0		
1"	100.0		
3/4"	100.0		
1/2"	100.0		
3/8"	100.0		
1/4"	100.0		
#4	98.1		
#8	91.2		
#10	91.0		
#16	82.2		
#30	75.1		
#40	58.8		
#50	48.1		
#100	26.6		
#200	16.1		

* (no specification provided)

Material Description

silty sand

Atterberg Limits

PL= NP LL= NV PI= NP

Coefficients

D_{90}= 1.8148 D_{85}= 1.3975 D_{60}= 0.4368
D_{50}= 0.3223 D_{30}= 0.1698 D_{15}=
D_{10}= C_u= C_c=

Classification

USCS= SM AASHTO= A-2-4(0)

Remarks

Source of Sample: 6 **Depth:** 15
Sample Number: 6-4

Date: 3/27/25

GEOTECHNICAL TESTING SERVICES
Yuma, Arizona

Client: PACIFIC ADVANCED CIVIL
Project: SAN LUIS WASTE WATER TREATMENT PLANT ADDITIONS

Project No: 24-034G **Figure** B-11

Tested By: GTS **Checked By:** GTS

DRAFT

Particle Size Distribution Report

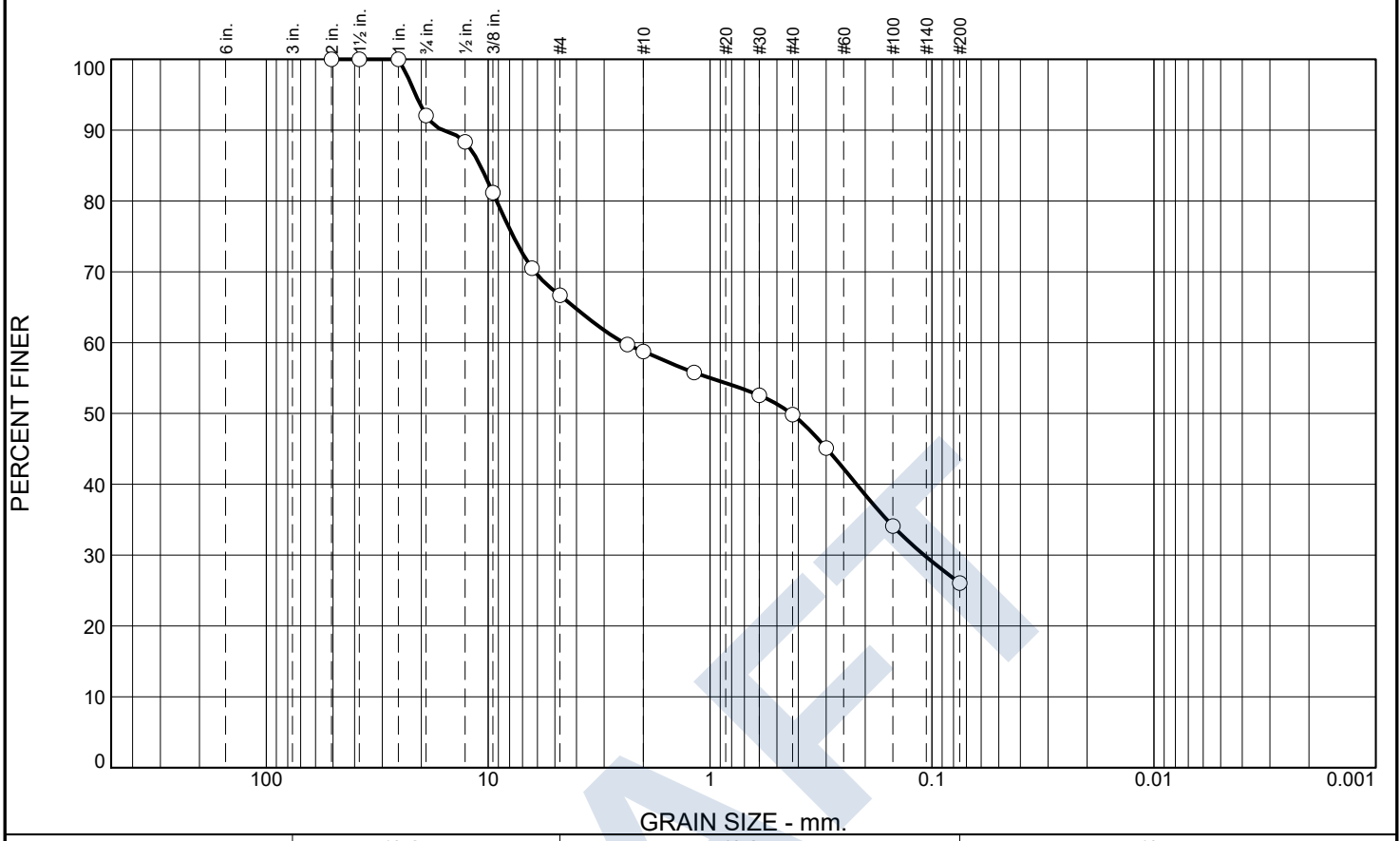

% +3"	% Gravel		% Sand			% Fines	
	Coarse	Fine	Coarse	Medium	Fine	Silt	Clay
0.0	7.9	25.4	7.9	9.0	23.8	26.0	

SIEVE SIZE	PERCENT FINER	SPEC.* PERCENT	PASS? (X=NO)
2"	100.0		
1.5"	100.0		
1"	100.0		
3/4"	92.1		
1/2"	88.4		
3/8"	81.2		
1/4"	70.5		
#4	66.7		
#8	59.7		
#10	58.8		
#16	55.8		
#30	52.6		
#40	49.8		
#50	45.1		
#100	34.1		
#200	26.0		

* (no specification provided)

Material Description

silty sand with gravel

Atterberg Limits

PL= NP LL= NV PI= NP

Coefficients

D_{90}= 15.9932 D_{85}= 10.8610 D_{60}= 2.4479
D_{50}= 0.4318 D_{30}= 0.1085 D_{15}=
D_{10}= C_u= C_c=

Classification

USCS= SM AASHTO= A-2-4(0)

Remarks

Source of Sample: 7 **Depth:** 0
Sample Number: 7-0

Date: 3/27/25

GEOTECHNICAL TESTING SERVICES
Yuma, Arizona

Client: PACIFIC ADVANCED CIVIL
Project: SAN LUIS WASTE WATER TREATMENT PLANT ADDITIONS

Project No: 24-034G **Figure** B-12

Tested By: GTS **Checked By:** GTS

DRAFT

Particle Size Distribution Report

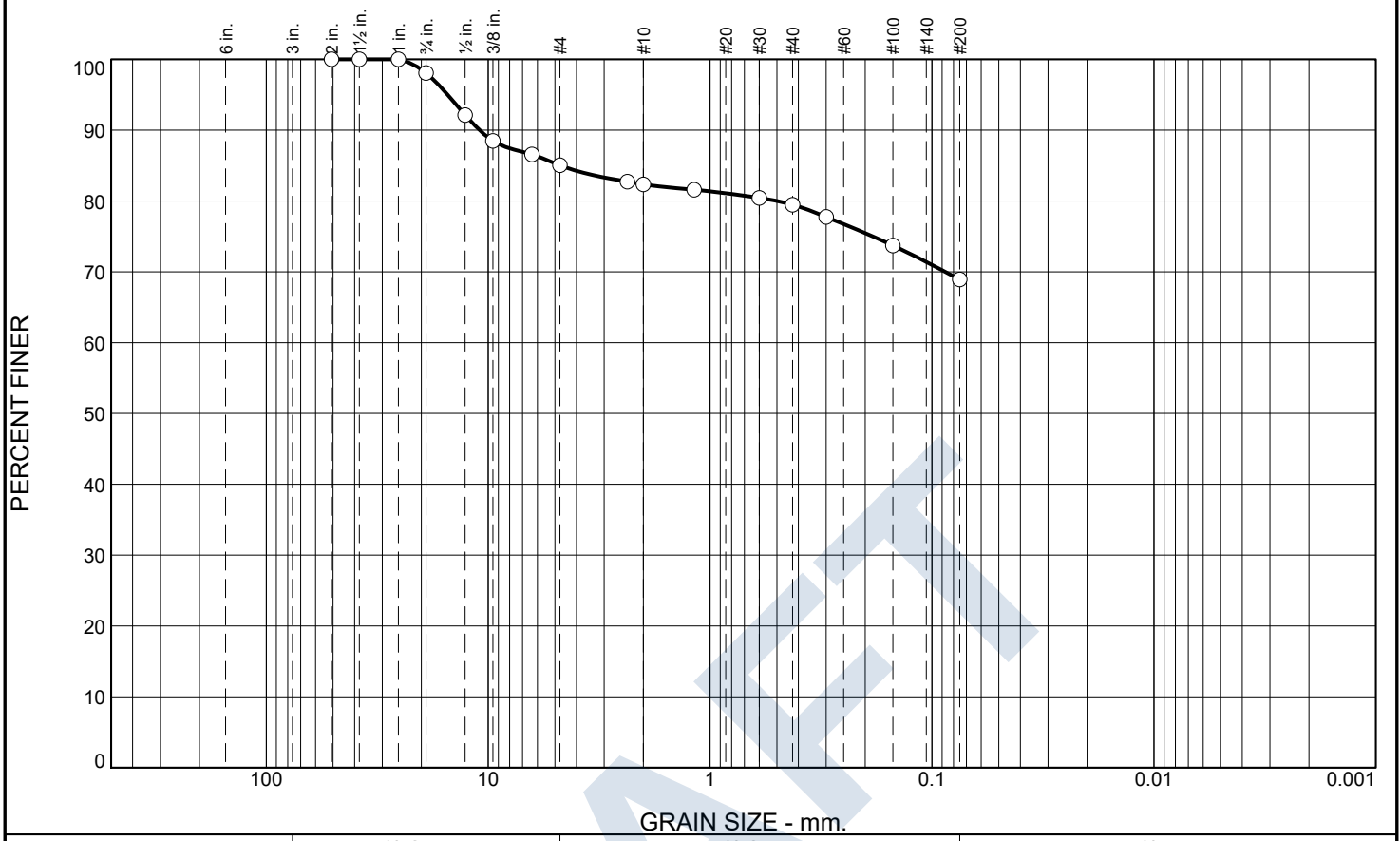

% +3"	% Gravel		% Sand			% Fines	
	Coarse	Fine	Coarse	Medium	Fine	Silt	Clay
0.0	1.9	13.1	2.7	2.8	10.6	68.9	

SIEVE SIZE	PERCENT FINER	SPEC.* PERCENT	PASS? (X=NO)
2"	100.0		
1.5"	100.0		
1"	100.0		
3/4"	98.1		
1/2"	92.1		
3/8"	88.5		
1/4"	86.6		
#4	85.0		
#8	82.7		
#10	82.3		
#16	81.6		
#30	80.4		
#40	79.5		
#50	77.7		
#100	73.7		
#200	68.9		

* (no specification provided)

Material Description

sandy lean clay with gravel

Atterberg Limits

PL= 16 LL= 30 PI= 14

Coefficients

D_{90}= 10.9416 D_{85}= 4.7183 D_{60}=
D_{50}= D_{30}= D_{15}=
D_{10}= C_u= C_c=

Classification

USCS= CL AASHTO= A-6(7)

Remarks

Source of Sample: 7 **Depth:** 2.5
Sample Number: 7-1

Date: 3/27/25

GEOTECHNICAL TESTING SERVICES
Yuma, Arizona

Client: PACIFIC ADVANCED CIVIL
Project: SAN LUIS WASTE WATER TREATMENT PLANT ADDITIONS

Project No: 24-034G **Figure** B-13

Tested By: GTS **Checked By:** GTS

DRAFT

Particle Size Distribution Report

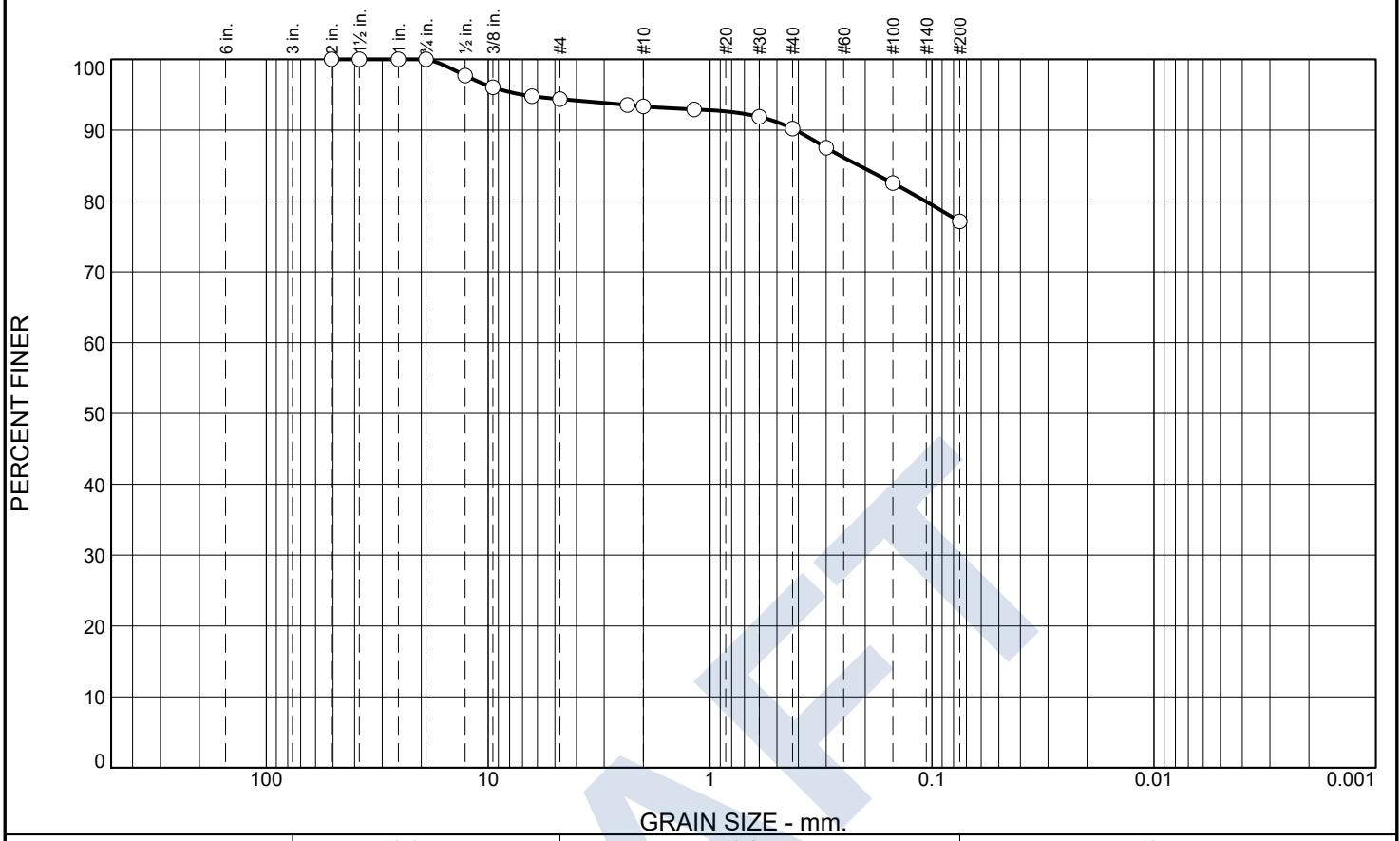

% +3"	% Gravel		% Sand			% Fines	
	Coarse	Fine	Coarse	Medium	Fine	Silt	Clay
0.0	0.0	5.6	1.1	3.1	13.1	77.1	

SIEVE SIZE	PERCENT FINER	SPEC.* PERCENT	PASS? (X=NO)
2"	100.0		
1.5"	100.0		
1"	100.0		
3/4"	100.0		
1/2"	97.7		
3/8"	96.0		
1/4"	94.8		
#4	94.4		
#8	93.6		
#10	93.3		
#16	92.9		
#30	91.9		
#40	90.2		
#50	87.5		
#100	82.5		
#200	77.1		

* (no specification provided)

Material Description

lean clay with sand

Atterberg Limits

PL= 16 LL= 30 PI= 14

Coefficients

D_{90}= 0.4114 D_{85}= 0.2133 D_{60}=
D_{50}= D_{30}= D_{15}=
D_{10}= C_u= C_c=

Classification

USCS= CL AASHTO= A-6(9)

Remarks

Source of Sample: 7 **Depth:** 5.0
Sample Number: 7-2

Date: 3/27/25

GEOTECHNICAL TESTING SERVICES
Yuma, Arizona

Client: PACIFIC ADVANCED CIVIL
Project: SAN LUIS WASTE WATER TREATMENT PLANT ADDITIONS

Project No: 24-034G **Figure** B-14

Tested By: GTS **Checked By:** GTS

DRAFT

Particle Size Distribution Report

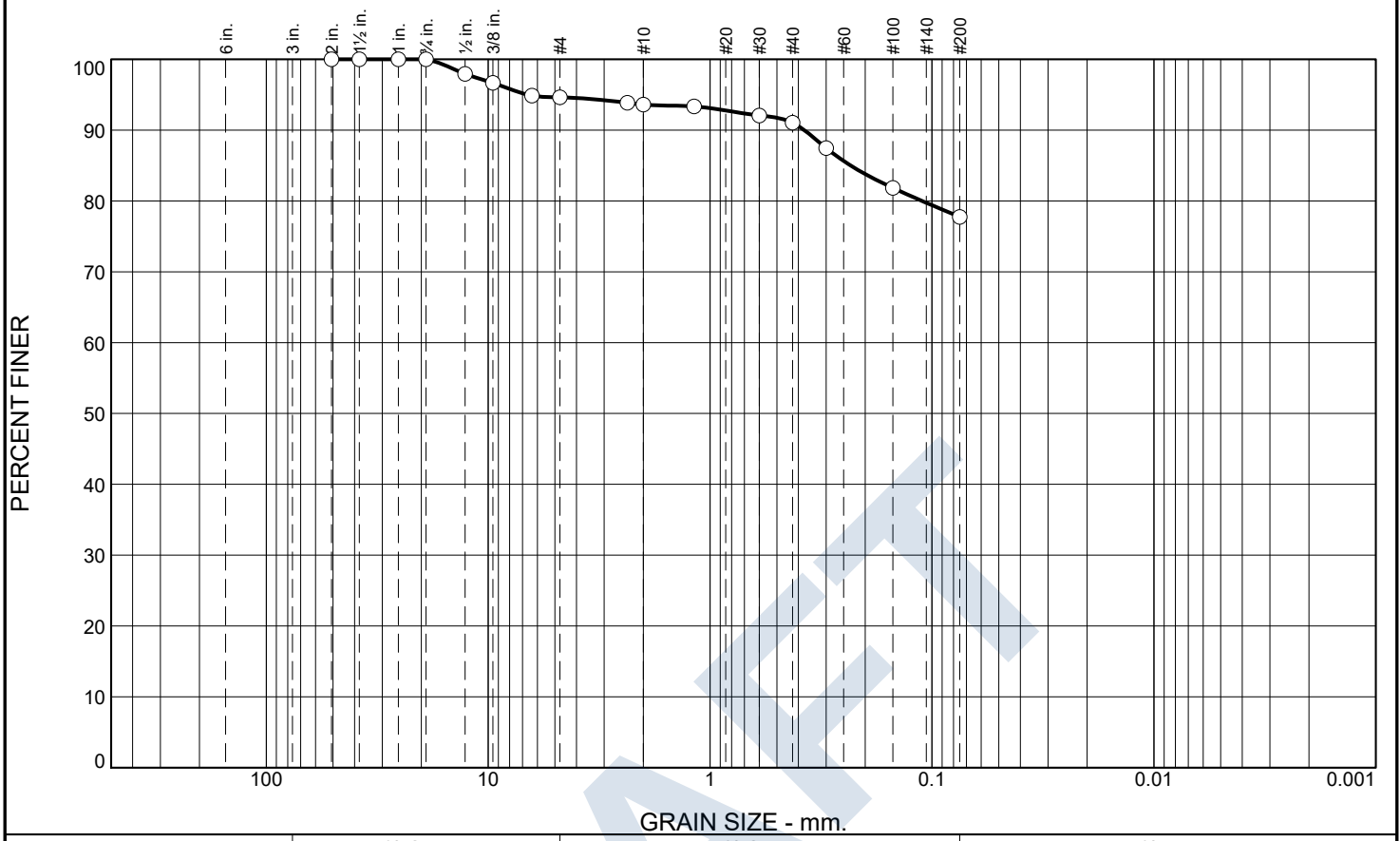

% +3"	% Gravel		% Sand			% Fines	
	Coarse	Fine	Coarse	Medium	Fine	Silt	Clay
0.0	0.0	5.4	1.0	2.5	13.3	77.8	

SIEVE SIZE	PERCENT FINER	SPEC.* PERCENT	PASS? (X=NO)
2"	100.0		
1.5"	100.0		
1"	100.0		
3/4"	100.0		
1/2"	98.0		
3/8"	96.7		
1/4"	94.9		
#4	94.6		
#8	93.9		
#10	93.6		
#16	93.4		
#30	92.1		
#40	91.1		
#50	87.5		
#100	81.8		
#200	77.8		

* (no specification provided)

Material Description

lean clay with sand

Atterberg Limits

PL= 15 LL= 29 PI= 14

Coefficients

D_{90}= 0.3763 D_{85}= 0.2324 D_{60}=
D_{50}= D_{30}= D_{15}=
D_{10}= C_u= C_c=

Classification

USCS= CL AASHTO= A-6(9)

Remarks

Source of Sample: 7 **Depth:** 10.0
Sample Number: 7-3

Date: 3/27/25

GEOTECHNICAL TESTING SERVICES
Yuma, Arizona

Client: PACIFIC ADVANCED CIVIL
Project: SAN LUIS WASTE WATER TREATMENT PLANT ADDITIONS

Project No: 24-034G **Figure** B-15

Tested By: GTS **Checked By:** GTS

DRAFT

Particle Size Distribution Report

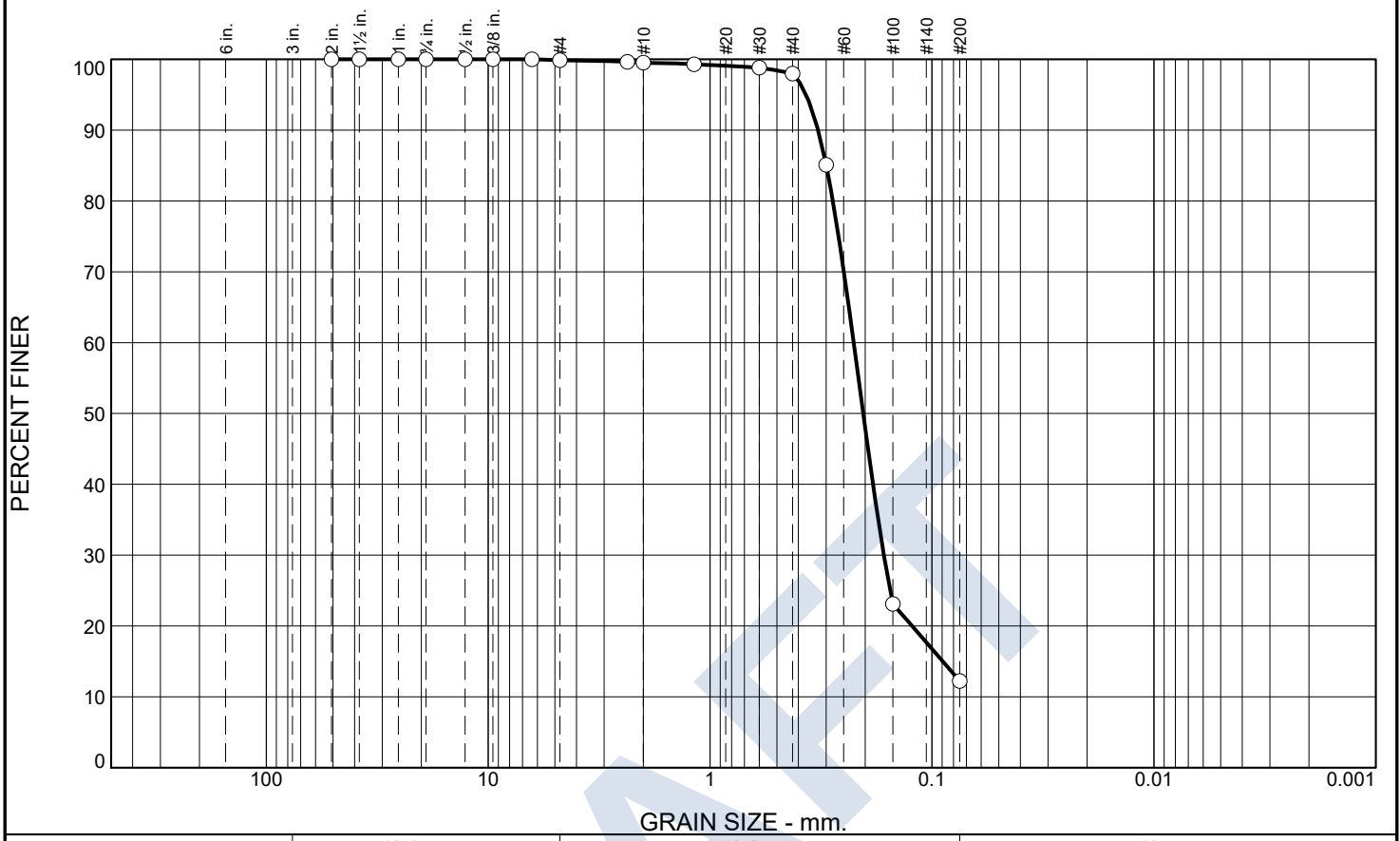

% +3"	% Gravel		% Sand			% Fines	
	Coarse	Fine	Coarse	Medium	Fine	Silt	Clay
0.0	0.0	0.1	0.4	1.5	85.8	12.2	

SIEVE SIZE	PERCENT FINER	SPEC.* PERCENT	PASS? (X=NO)
2"	100.0		
1.5"	100.0		
1"	100.0		
3/4"	100.0		
1/2"	100.0		
3/8"	100.0		
1/4"	100.0		
#4	99.9		
#8	99.6		
#10	99.5		
#16	99.3		
#30	98.8		
#40	98.0		
#50	85.1		
#100	23.1		
#200	12.2		

* (no specification provided)

Material Description

silty sand

Atterberg Limits

PL= NP LL= NV PI= NP

Coefficients

D_{90}= 0.3262 D_{85}= 0.2995 D_{60}= 0.2253
D_{50}= 0.2041 D_{30}= 0.1648 D_{15}= 0.0895
D_{10}= C_u= C_c=

Classification

USCS= SM AASHTO= A-2-4(0)

Remarks

Source of Sample: 7 **Depth:** 15.0
Sample Number: 7-4

Date: 3/27/25

GEOTECHNICAL TESTING SERVICES
Yuma, Arizona

Client: PACIFIC ADVANCED CIVIL
Project: SAN LUIS WASTE WATER TREATMENT PLANT ADDITIONS

Project No: 24-034G **Figure** B-16

Tested By: GTS **Checked By:** GTS

DRAFT

Particle Size Distribution Report

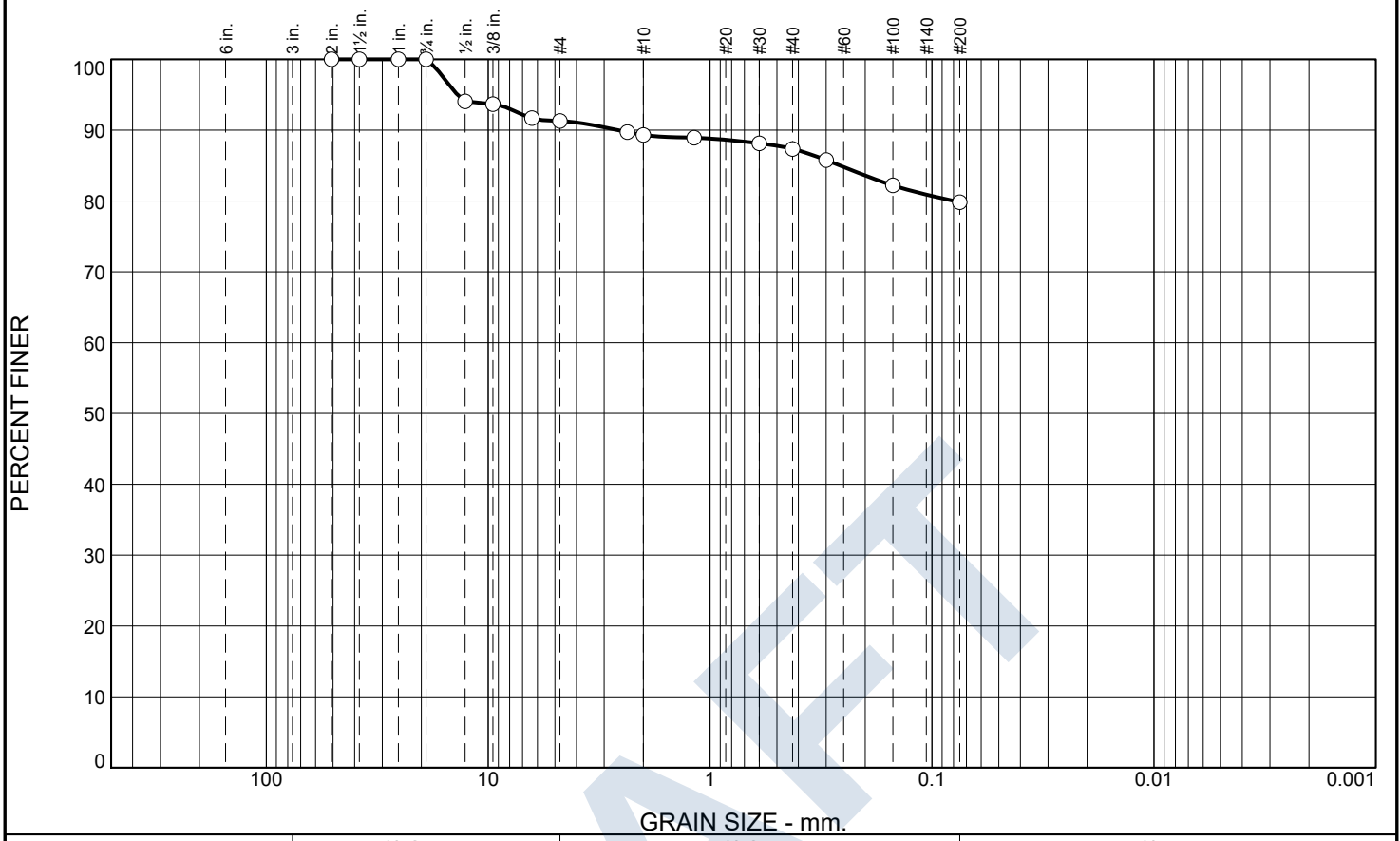

% +3"	% Gravel		% Sand			% Fines	
	Coarse	Fine	Coarse	Medium	Fine	Silt	Clay
0.0	0.0	8.7	2.0	2.0	7.5	79.8	

SIEVE SIZE	PERCENT FINER	SPEC.* PERCENT	PASS? (X=NO)
2"	100.0		
1.5"	100.0		
1"	100.0		
3/4"	100.0		
1/2"	94.1		
3/8"	93.7		
1/4"	91.7		
#4	91.3		
#8	89.7		
#10	89.3		
#16	88.9		
#30	88.1		
#40	87.3		
#50	85.8		
#100	82.2		
#200	79.8		

* (no specification provided)

Material Description

silty clay with sand

Atterberg Limits

PL= 21 LL= 27 PI= 6

Coefficients

D_{90}= 2.6103 D_{85}= 0.2599 D_{60}=
D_{50}= D_{30}= D_{15}=
D_{10}= C_u= C_c=

Classification

USCS= CL-ML AASHTO= A-4(3)

Remarks

Source of Sample: 8 **Depth:** 0
Sample Number: 8-0

Date: 3/27/25

GEOTECHNICAL TESTING SERVICES
Yuma, Arizona

Client: PACIFIC ADVANCED CIVIL
Project: SAN LUIS WASTE WATER TREATMENT PLANT ADDITIONS

Project No: 24-034G **Figure** B-17

Tested By: GTS **Checked By:** GTS

DRAFT

Particle Size Distribution Report

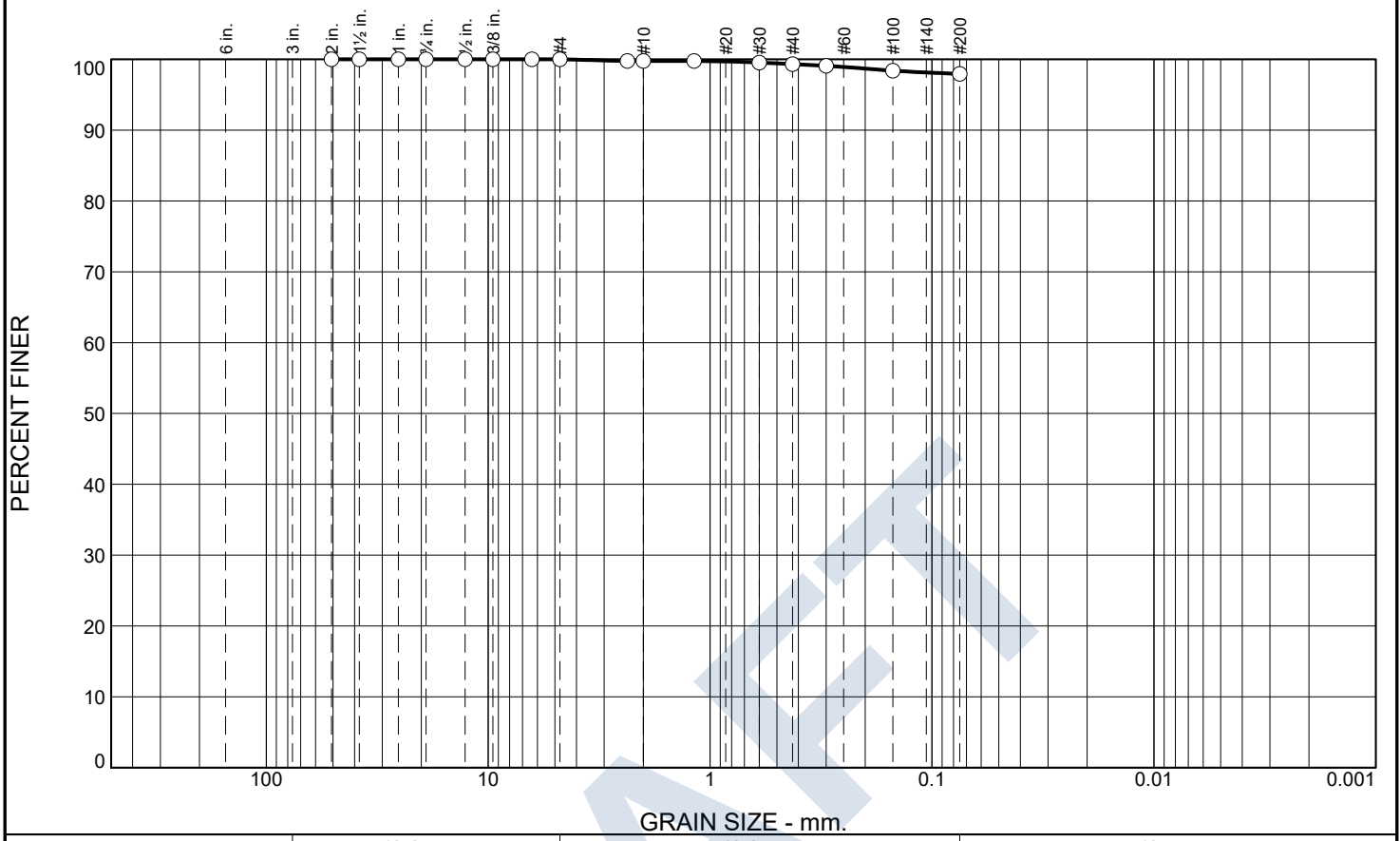

% +3"	% Gravel		% Sand			% Fines	
	Coarse	Fine	Coarse	Medium	Fine	Silt	Clay
0.0	0.0	0.0	0.2	0.5	1.4	97.9	

SIEVE SIZE	PERCENT FINER	SPEC.* PERCENT	PASS? (X=NO)
2"	100.0		
1.5"	100.0		
1"	100.0		
3/4"	100.0		
1/2"	100.0		
3/8"	100.0		
1/4"	100.0		
#4	100.0		
#8	99.8		
#10	99.8		
#16	99.8		
#30	99.5		
#40	99.3		
#50	99.1		
#100	98.4		
#200	97.9		

* (no specification provided)

Material Description

lean clay

Atterberg Limits

PL= 22 LL= 31 PI= 9

Coefficients

D_{90}= D_{85}= D_{60}=
D_{50}= D_{30}= D_{15}=
D_{10}= C_u= C_c=

Classification

USCS= CL AASHTO= A-4(9)

Remarks

Source of Sample: 8 **Depth:** 2.5
Sample Number: 8-1

Date: 3/27/25

GEOTECHNICAL TESTING SERVICES
Yuma, Arizona

Client: PACIFIC ADVANCED CIVIL
Project: SAN LUIS WASTE WATER TREATMENT PLANT ADDITIONS

Project No: 24-034G **Figure** B-18

Tested By: GTS **Checked By:** GTS

DRAFT

Particle Size Distribution Report

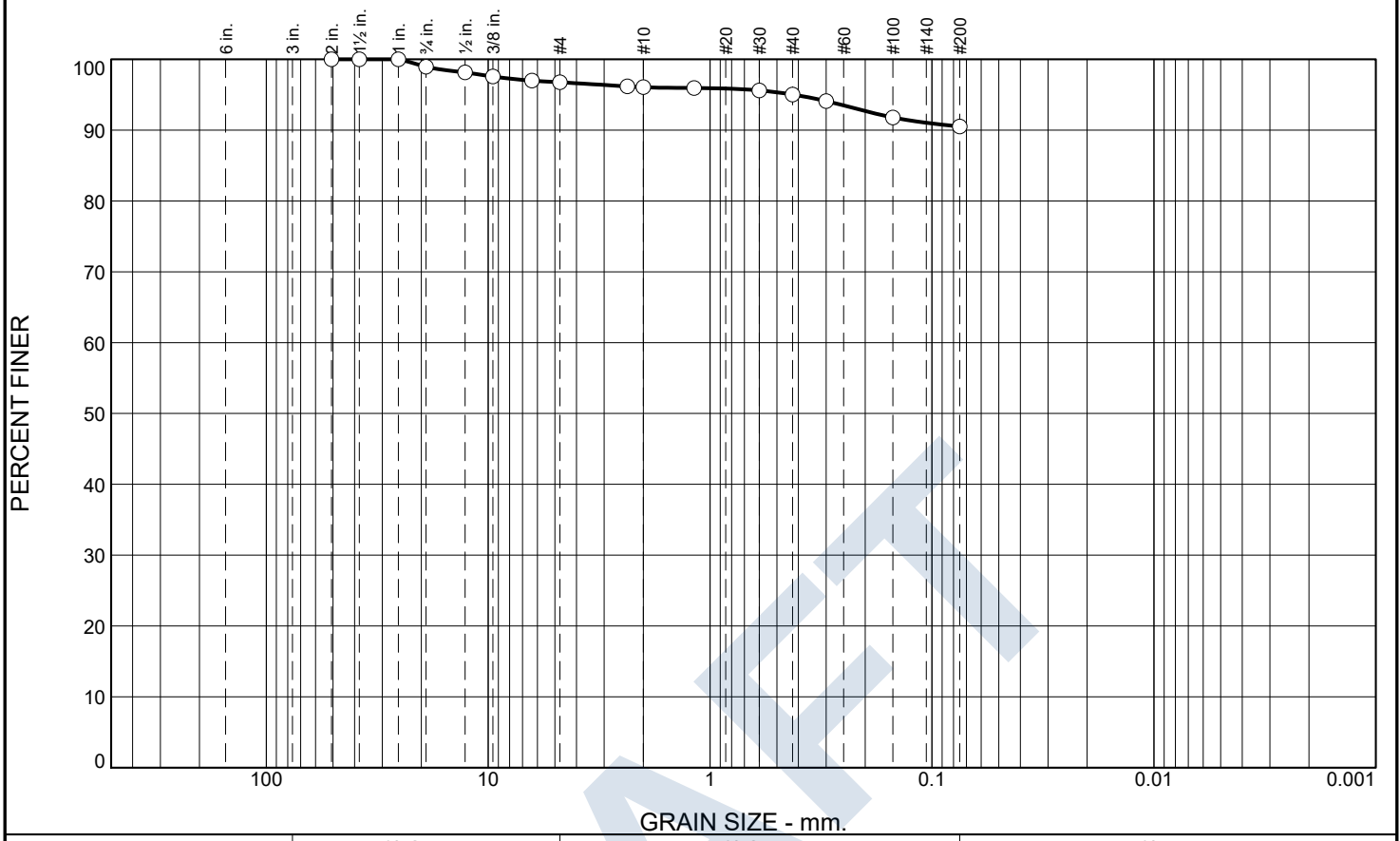

% +3"	% Gravel		% Sand			% Fines	
	Coarse	Fine	Coarse	Medium	Fine	Silt	Clay
0.0	1.0	2.2	0.7	1.1	4.5	90.5	

SIEVE SIZE	PERCENT FINER	SPEC.* PERCENT	PASS? (X=NO)
2"	100.0		
1.5"	100.0		
1"	100.0		
3/4"	99.0		
1/2"	98.1		
3/8"	97.6		
1/4"	97.0		
#4	96.8		
#8	96.2		
#10	96.1		
#16	96.0		
#30	95.6		
#40	95.0		
#50	94.1		
#100	91.8		
#200	90.5		

* (no specification provided)

Material Description

lean clay

Atterberg Limits

PL= 20 LL= 30 PI= 10

Coefficients

D_{90}= D_{85}= D_{60}=
D_{50}= D_{30}= D_{15}=
D_{10}= C_u= C_c=

Classification

USCS= CL AASHTO= A-4(8)

Remarks

Source of Sample: 8 **Depth:** 5.0
Sample Number: 8-2 **Date:**

GEOTECHNICAL TESTING SERVICES
Yuma, Arizona

Client: PACIFIC ADVANCED CIVIL
Project: SAN LUIS WASTE WATER TREATMENT PLANT ADDITIONS

Project No: 24-034G **Figure** B-19

Tested By: gts **Checked By:** gts

DRAFT

Particle Size Distribution Report

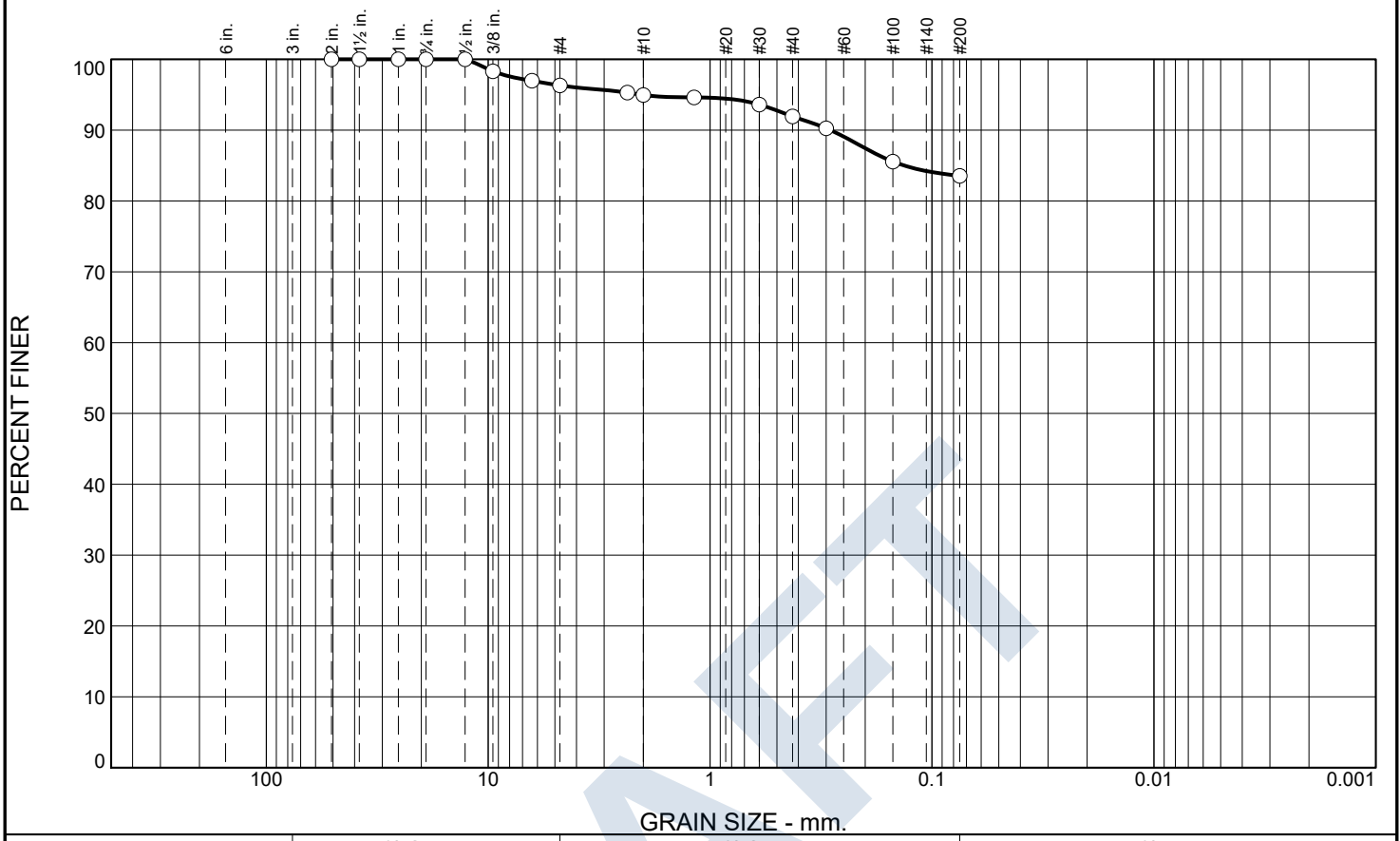

% +3"	% Gravel		% Sand			% Fines	
	Coarse	Fine	Coarse	Medium	Fine	Silt	Clay
0.0	0.0	3.7	1.3	3.1	8.4	83.5	

SIEVE SIZE	PERCENT FINER	SPEC.* PERCENT	PASS? (X=NO)
2"	100.0		
1.5"	100.0		
1"	100.0		
3/4"	100.0		
1/2"	100.0		
3/8"	98.3		
1/4"	97.0		
#4	96.3		
#8	95.3		
#10	95.0		
#16	94.6		
#30	93.6		
#40	91.9		
#50	90.3		
#100	85.6		
#200	83.5		

* (no specification provided)

Material Description

lean clay with sand

Atterberg Limits

PL= 18 LL= 31 PI= 13

Coefficients

D_{90}= 0.2870 D_{85}= 0.1336 D_{60}=
D_{50}= D_{30}= D_{15}=
D_{10}= C_u= C_c=

Classification

USCS= CL AASHTO= A-6(10)

Remarks

Source of Sample: 8 **Depth:** 7.5'
Sample Number: 8-3 **Date:**

GEOTECHNICAL TESTING SERVICES
Yuma, Arizona

Client: PACIFIC ADVANCED CIVIL
Project: SAN LUIS WASTE WATER TREATMENT PLANT ADDITIONS

Project No: 24-034G **Figure** B-20

Tested By: gts **Checked By:** gts

DRAFT

Particle Size Distribution Report

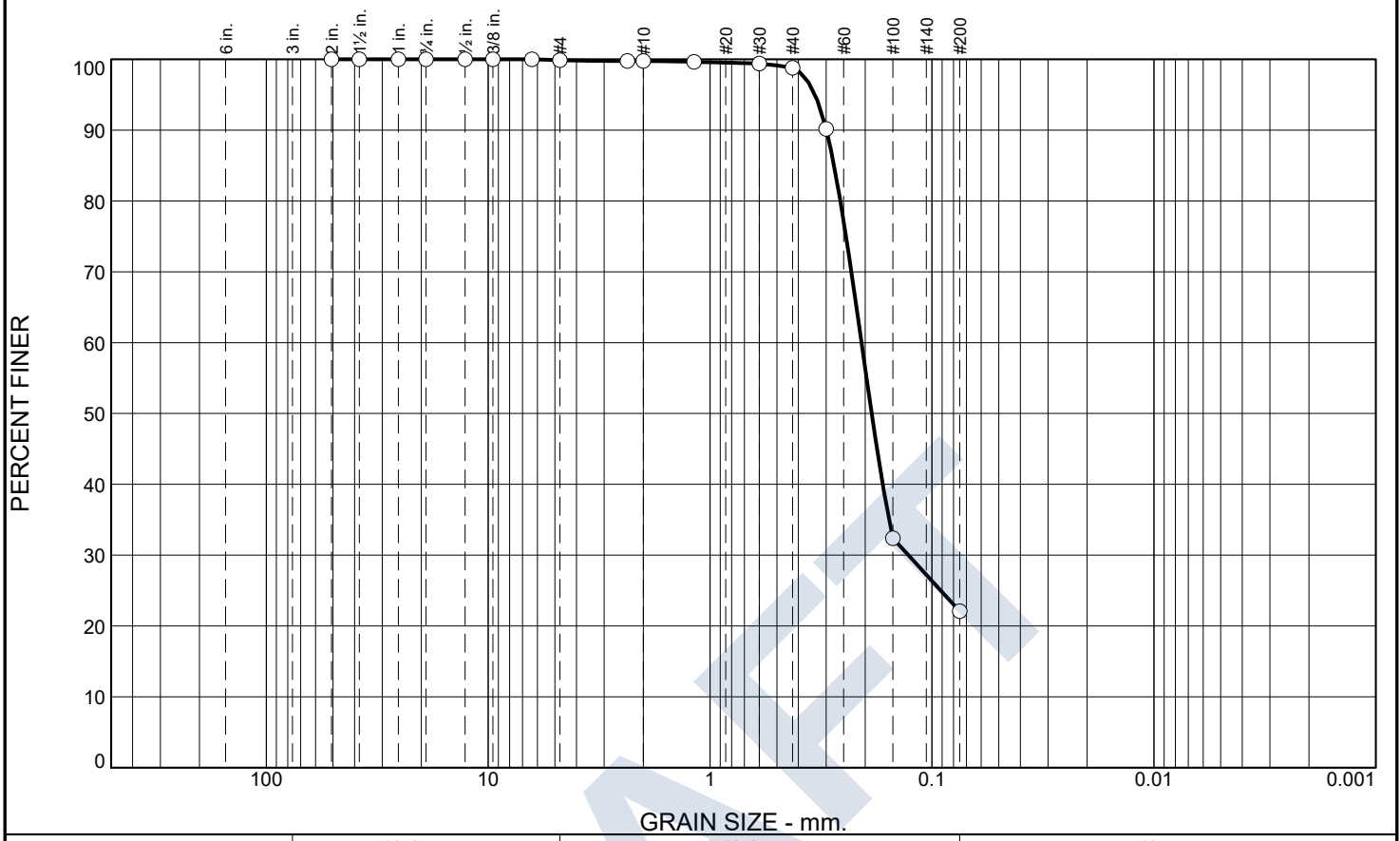

% +3"	% Gravel		% Sand			% Fines	
	Coarse	Fine	Coarse	Medium	Fine	Silt	Clay
0.0	0.0	0.1	0.1	1.0	76.7	22.1	

SIEVE SIZE	PERCENT FINER	SPEC.* PERCENT	PASS? (X=NO)
2"	100.0		
1.5"	100.0		
1"	100.0		
3/4"	100.0		
1/2"	100.0		
3/8"	100.0		
1/4"	100.0		
#4	99.9		
#8	99.8		
#10	99.8		
#16	99.6		
#30	99.4		
#40	98.8		
#50	90.2		
#100	32.4		
#200	22.1		

* (no specification provided)

Material Description

silty sand

Atterberg Limits

PL= NP LL= NV PI= NP

Coefficients

D_{90}= 0.2991 D_{85}= 0.2763 D_{60}= 0.2077
D_{50}= 0.1870 D_{30}= 0.1278 D_{15}=
D_{10}= C_u= C_c=

Classification

USCS= SM AASHTO= A-2-4(0)

Remarks

Source of Sample: 8 **Depth:** 10
Sample Number: 8-4 **Date:**

GEOTECHNICAL TESTING SERVICES
Yuma, Arizona

Client: PACIFIC ADVANCED CIVIL
Project: SAN LUIS WASTE WATER TREATMENT PLANT ADDITIONS

Project No: 24-034G **Figure** B-21

Tested By: GTS **Checked By:** GTS

DRAFT

Particle Size Distribution Report

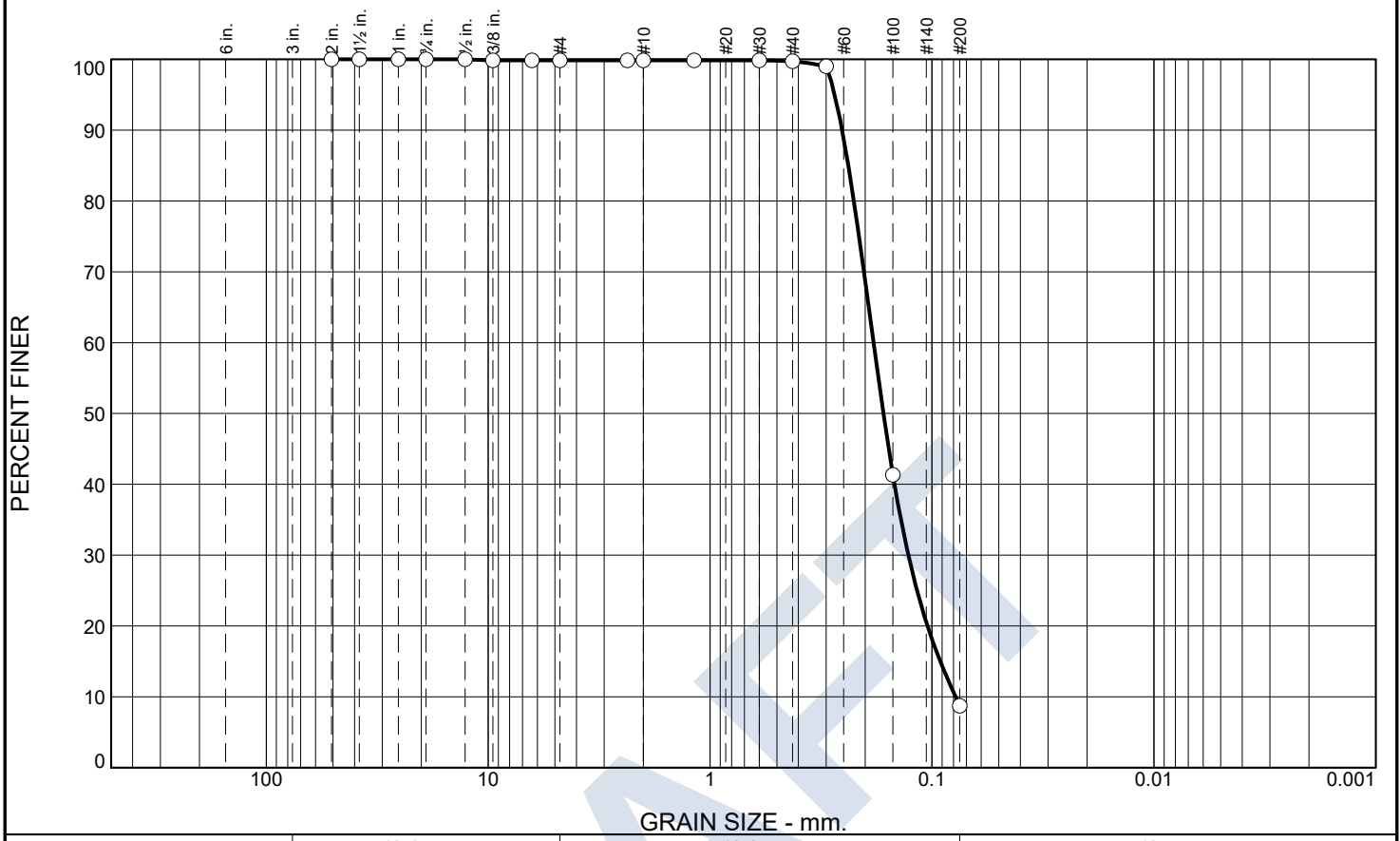

% +3"	% Gravel		% Sand			% Fines	
	Coarse	Fine	Coarse	Medium	Fine	Silt	Clay
0.0	0.0	0.1	0.0	0.2	91.0	8.7	

SIEVE SIZE	PERCENT FINER	SPEC.* PERCENT	PASS? (X=NO)
2"	100.0		
1.5"	100.0		
1"	100.0		
3/4"	100.0		
1/2"	100.0		
3/8"	99.9		
1/4"	99.9		
#4	99.9		
#8	99.9		
#10	99.9		
#16	99.9		
#30	99.9		
#40	99.7		
#50	99.0		
#100	41.3		
#200	8.7		

* (no specification provided)

Material Description

poorly graded sand with silt

Atterberg Limits

PL= NP LL= NV PI= NP

Coefficients

D_{90}= 0.2539 D_{85}= 0.2382 D_{60}= 0.1833
D_{50}= 0.1654 D_{30}= 0.1279 D_{15}= 0.0918
D_{10}= 0.0783 C_u= 2.34 C_c= 1.14

Classification

USCS= SP-SM AASHTO= A-3

Remarks

Source of Sample: 8 **Depth:** 15
Sample Number: 8-5 **Date:**

GEOTECHNICAL TESTING SERVICES
Yuma, Arizona

Client: PACIFIC ADVANCED CIVIL
Project: SAN LUIS WASTE WATER TREATMENT PLANT ADDITIONS

Project No: 24-034G **Figure** B-22

Tested By: GTS **Checked By:** GTS

DRAFT

LIQUID AND PLASTIC LIMITS TEST REPORT

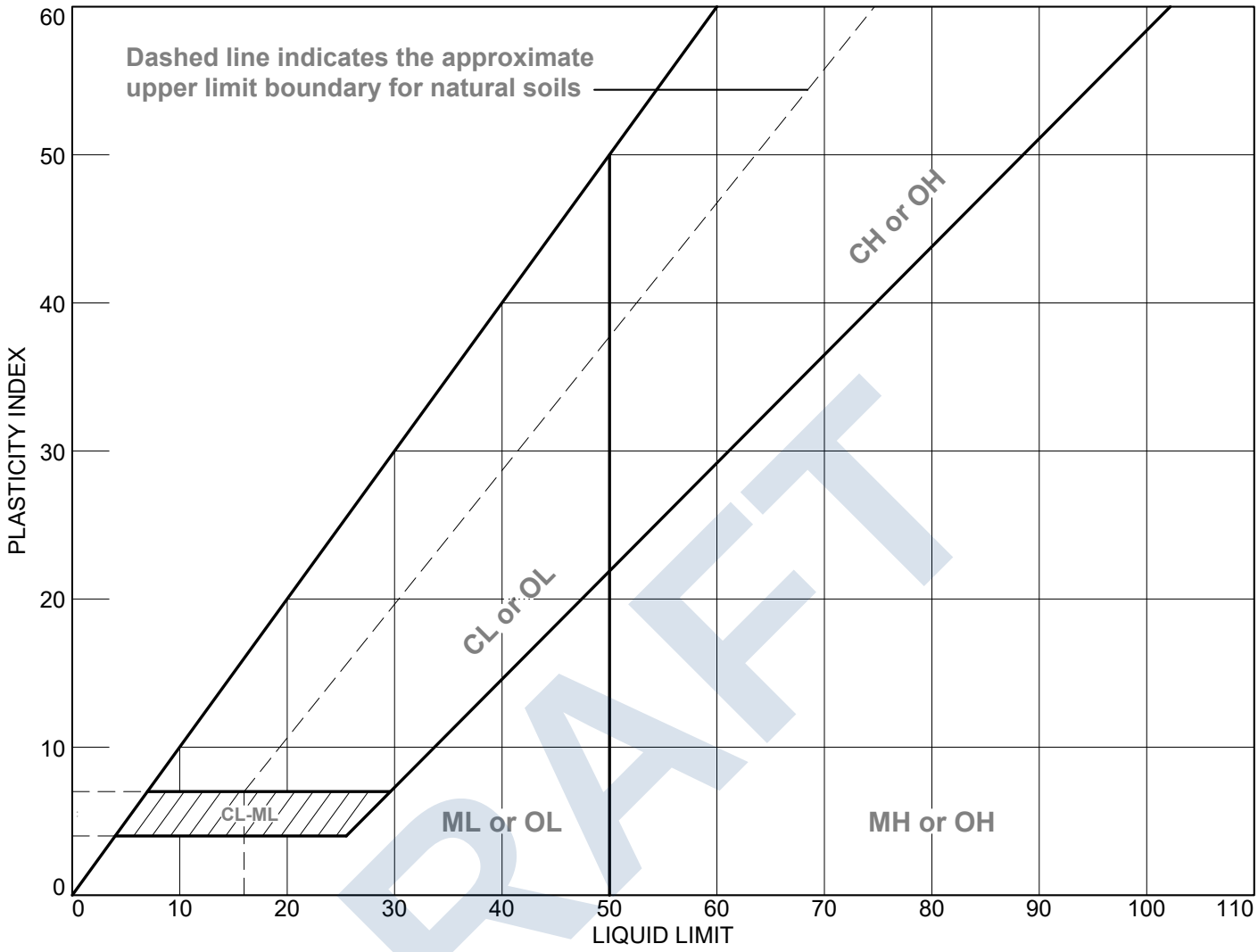

DRAFT

SOIL DATA

SYMBOL	SOURCE	SAMPLE NO.	DEPTH	NATURAL WATER CONTENT (%)	PLASTIC LIMIT (%)	LIQUID LIMIT (%)	PLASTICITY INDEX (%)	USCS
●	1	1-0	0	1.6	NP	NV	NP	SM
■	1	1-1	3.0	2.6	NP	NV	NP	SM

GEOTECHNICAL TESTING SERVICES
Yuma, Arizona

Client: PACIFIC ADVANCED CIVIL
Project: SAN LUIS WASTE WATER TREATMENT PLANT ADDITIONS

Project No.: 24-034G **Figure** B-23

Tested By: GTS **Checked By:** GTS

LIQUID AND PLASTIC LIMITS TEST REPORT

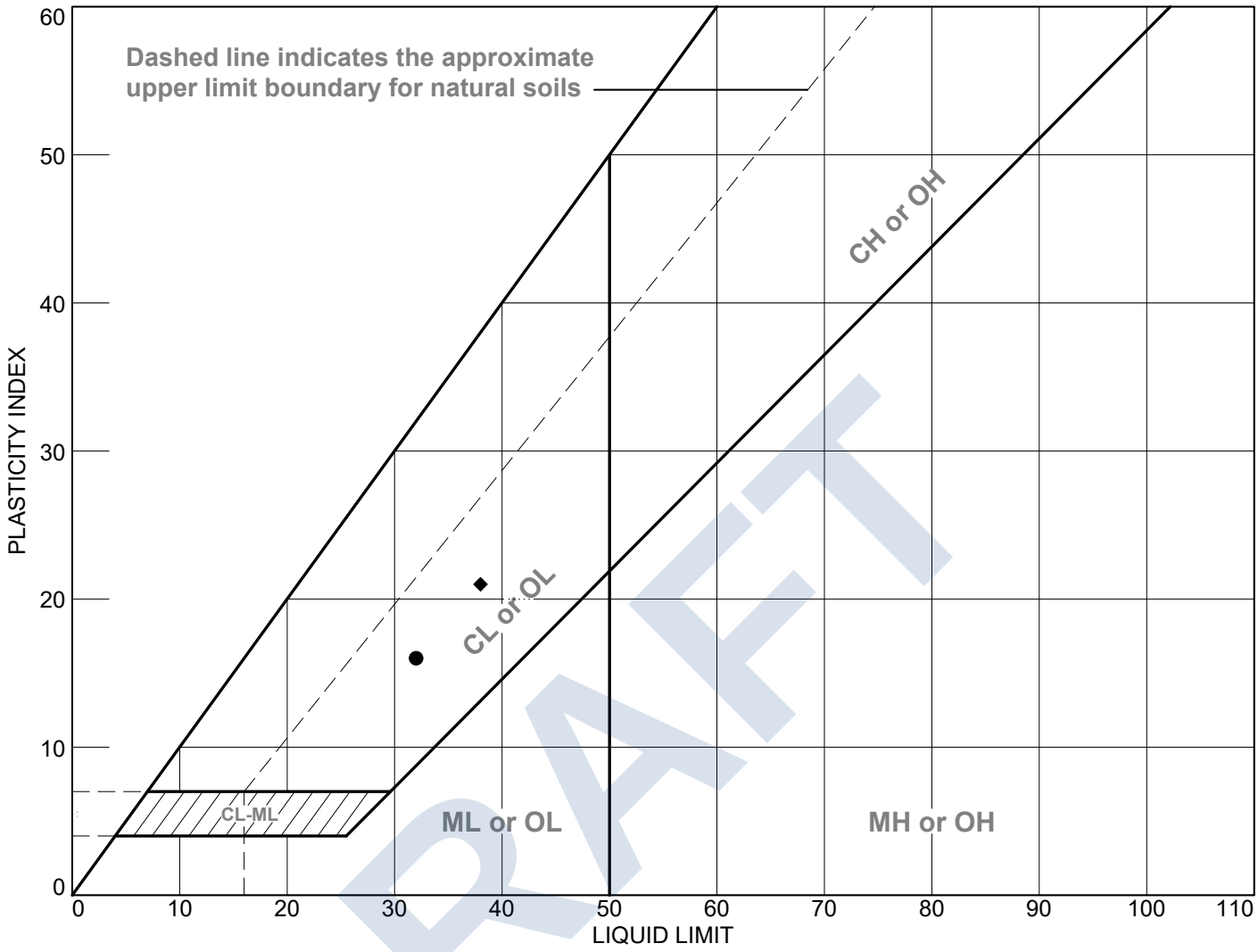

DRAFT

SOIL DATA

SYMBOL	SOURCE	SAMPLE NO.	DEPTH	NATURAL WATER CONTENT (%)	PLASTIC LIMIT (%)	LIQUID LIMIT (%)	PLASTICITY INDEX (%)	USCS
●	2	2-1	2.5	9.5	16	32	16	SC
■	2	2-2	5.0	14.3	NP	NV	NP	SM
▲	2	2-3	10	19.5	NP	NV	NP	ML
◆	2	2-4	15	21.5	17	38	21	CL

GEOTECHNICAL TESTING SERVICES
Yuma, Arizona

Client: PACIFIC ADVANCED CIVIL
Project: SAN LUIS WASTE WATER TREATMENT PLANT ADDITIONS

Project No.: 24-034G **Figure** B-24

Tested By: GTS **Checked By:** GTS

LIQUID AND PLASTIC LIMITS TEST REPORT

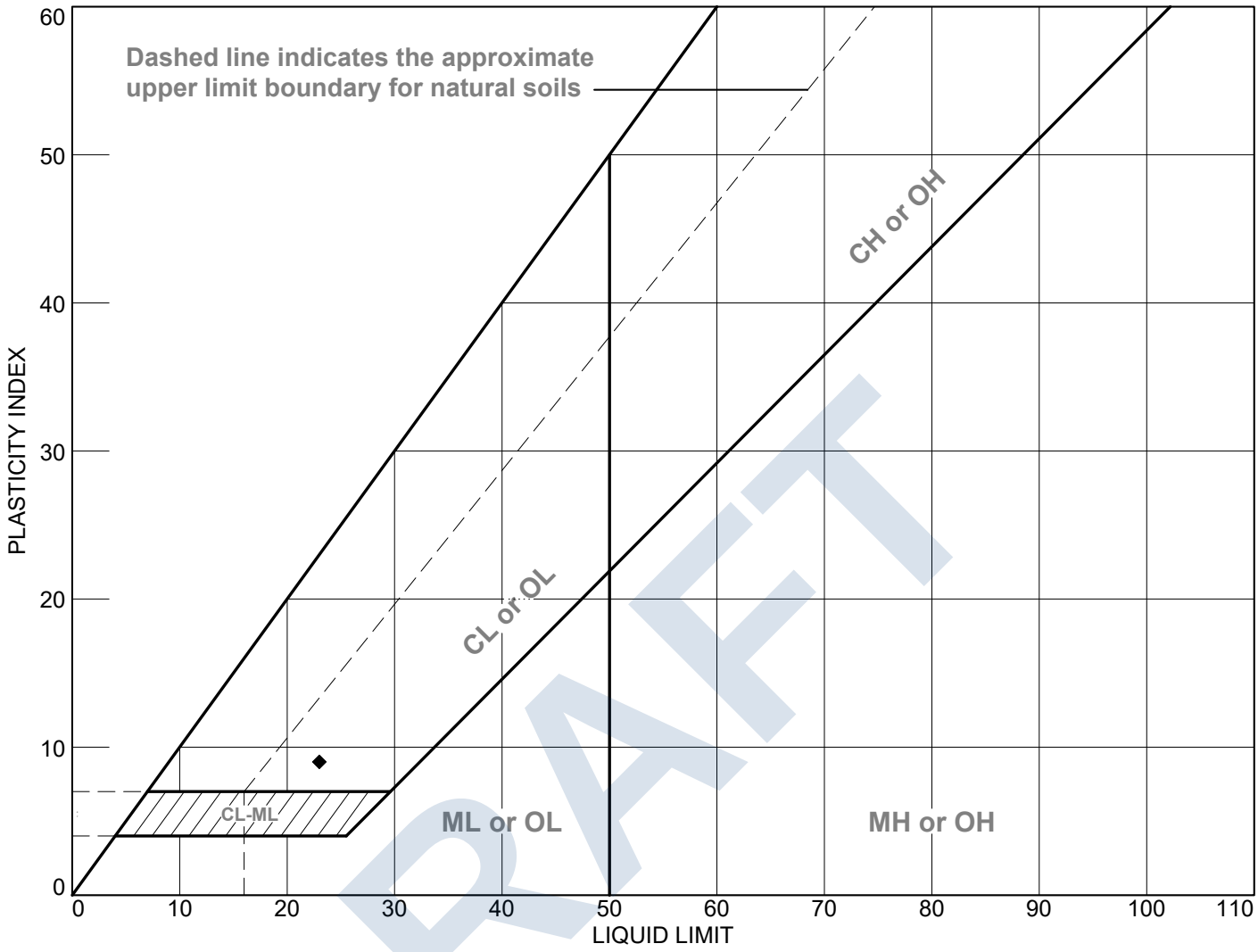

DRAFT

SOIL DATA

SYMBOL	SOURCE	SAMPLE NO.	DEPTH	NATURAL WATER CONTENT (%)	PLASTIC LIMIT (%)	LIQUID LIMIT (%)	PLASTICITY INDEX (%)	USCS
●	6	6-0	0	1.3	NP	NV	NP	SM
■	6	6-1	2.5	2.8	NP	NV	NP	SM
▲	6	6-2	5.0	2.5	NP	NV	NP	SM
◆	6	6-3	10	14.6	14	23	9	CL
▼	6	6-4	15	19.9	NP	NV	NP	SM

GEOTECHNICAL TESTING SERVICES
Yuma, Arizona

Client: PACIFIC ADVANCED CIVIL
Project: SAN LUIS WASTE WATER TREATMENT PLANT ADDITIONS

Project No.: 24-034G **Figure** B-25

Tested By: GTS **Checked By:** GTS

LIQUID AND PLASTIC LIMITS TEST REPORT

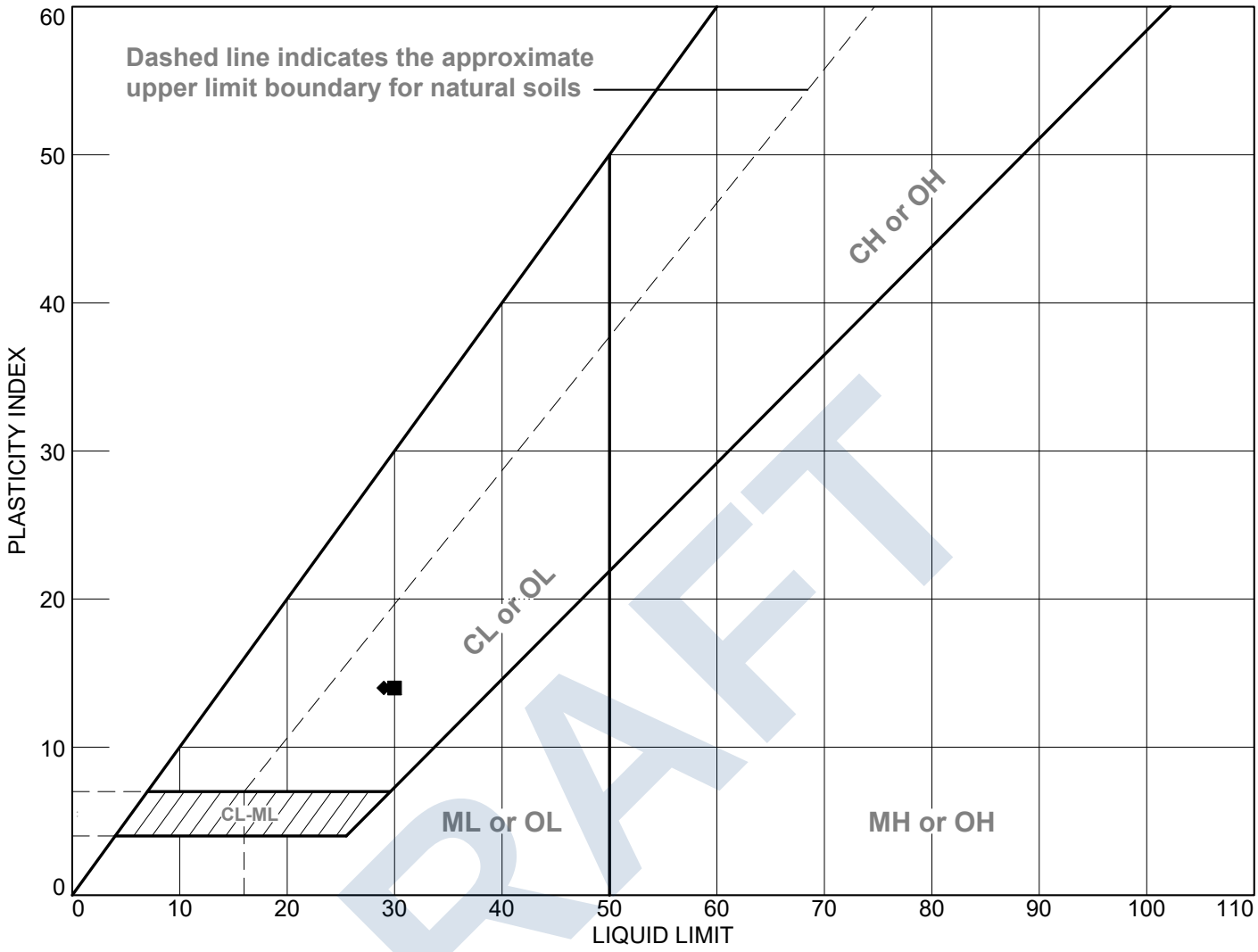

DRAFT

SOIL DATA

SYMBOL	SOURCE	SAMPLE NO.	DEPTH	NATURAL WATER CONTENT (%)	PLASTIC LIMIT (%)	LIQUID LIMIT (%)	PLASTICITY INDEX (%)	USCS
●	7	7-0	0	2.2	NP	NV	NP	SM
■	7	7-1	2.5	9.3	16	30	14	CL
▲	7	7-2	5.0	13.5	16	30	14	CL
◆	7	7-3	10.0	14.6	15	29	14	CL
▼	7	7-4	15.0	2.3	NP	NV	NP	SM

GEOTECHNICAL TESTING SERVICES
Yuma, Arizona

Client: PACIFIC ADVANCED CIVIL
Project: SAN LUIS WASTE WATER TREATMENT PLANT ADDITIONS

Project No.: 24-034G **Figure** B-26

Tested By: GTS **Checked By:** GTS

LIQUID AND PLASTIC LIMITS TEST REPORT

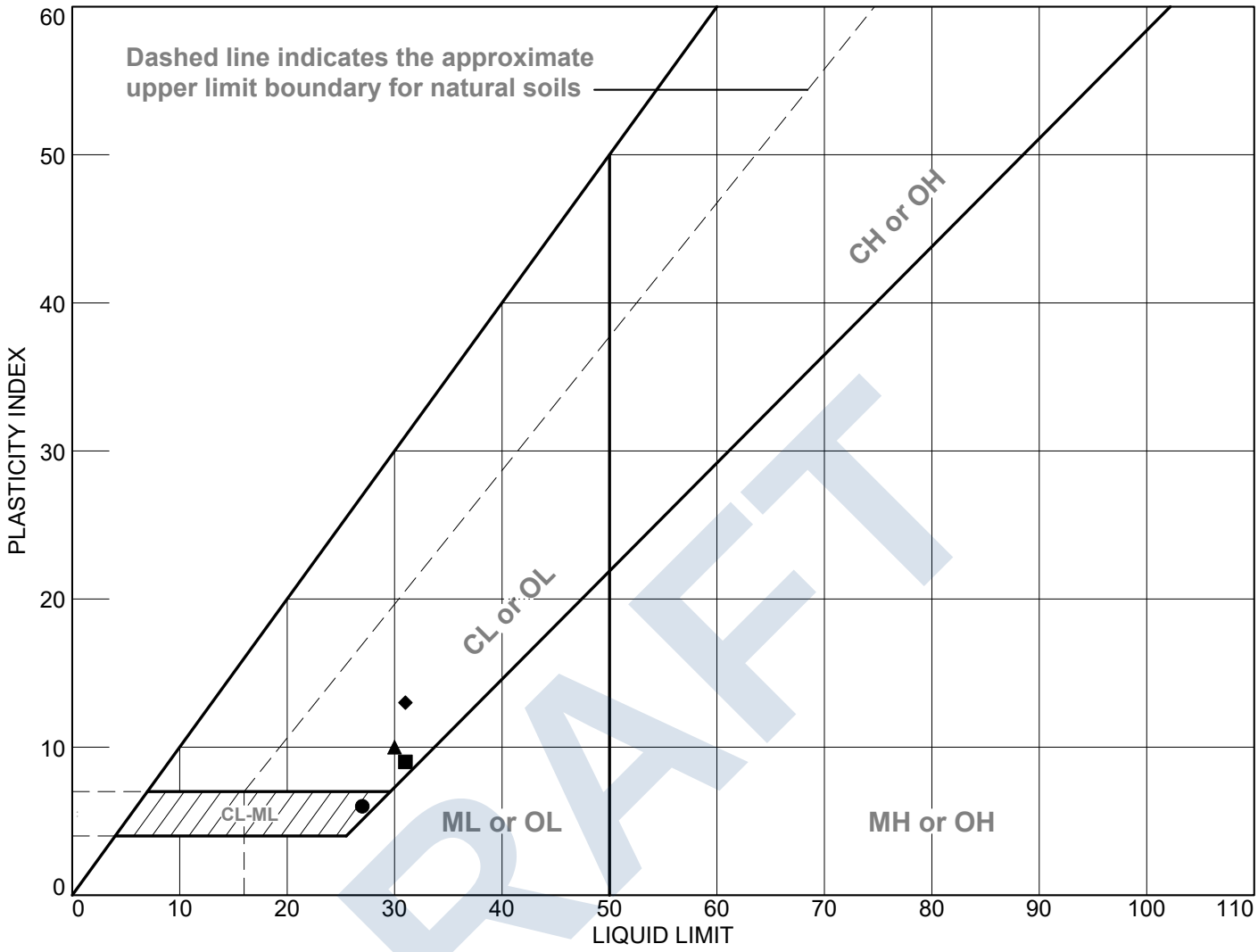

DRAFT

SOIL DATA

SYMBOL	SOURCE	SAMPLE NO.	DEPTH	NATURAL WATER CONTENT (%)	PLASTIC LIMIT (%)	LIQUID LIMIT (%)	PLASTICITY INDEX (%)	USCS
●	8	8-0	0	1.8	21	27	6	CL-ML
■	8	8-1	2.5	3.5	22	31	9	CL
▲	8	8-2	5.0	7.9	20	30	10	CL
◆	8	8-3	7.5'	11.7	18	31	13	CL
▼	8	8-4	10	3.1	NP	NV	NP	SM

GEOTECHNICAL TESTING SERVICES
Yuma, Arizona

Client: PACIFIC ADVANCED CIVIL
Project: SAN LUIS WASTE WATER TREATMENT PLANT ADDITIONS
Project No.: 24-034G **Figure** B-27

Tested By: ● GTS ■ GTS ▲ gts ◆ gts ▼ GTS **Checked By:** GTS

LIQUID AND PLASTIC LIMITS TEST REPORT

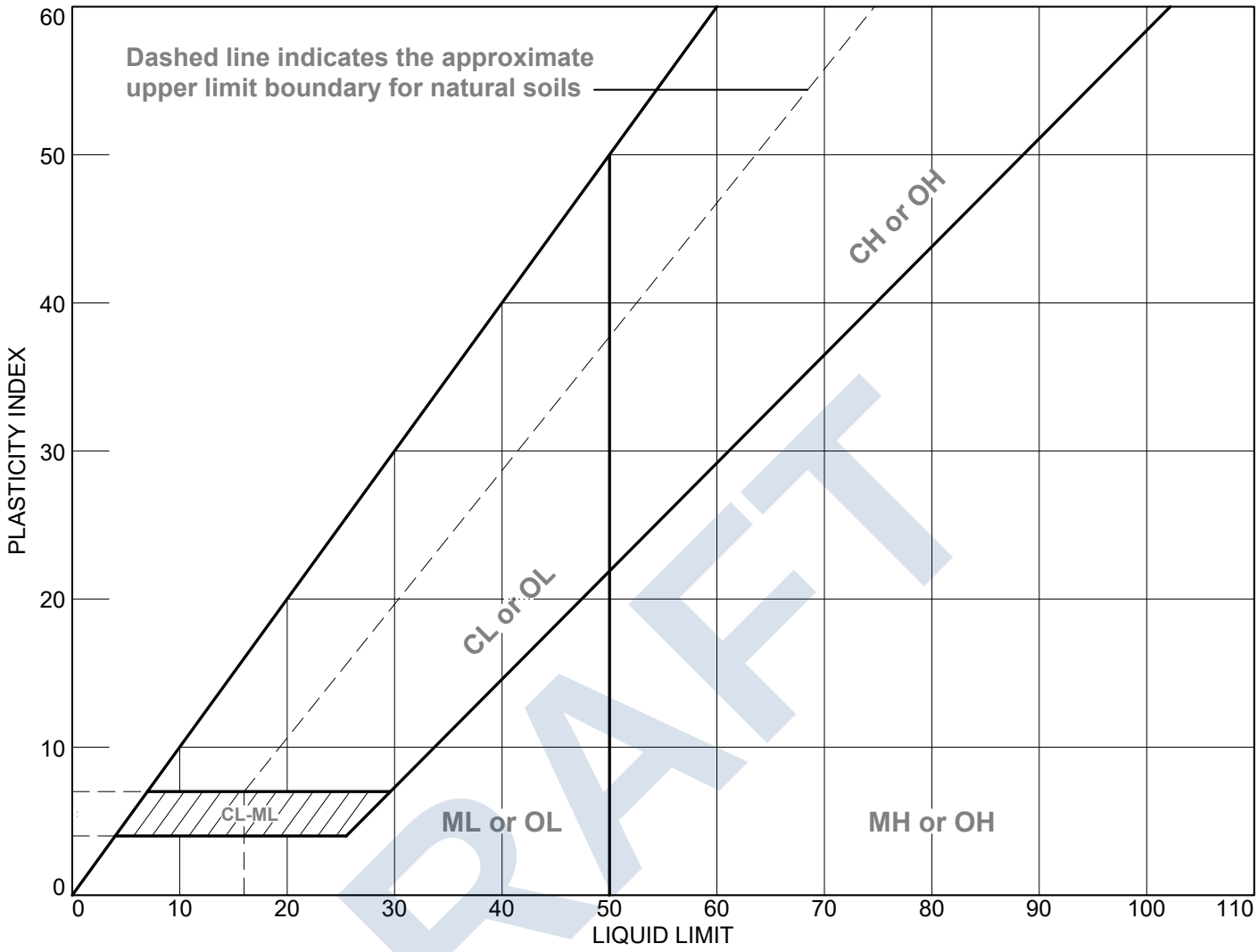

DRAFT

SOIL DATA

SYMBOL	SOURCE	SAMPLE NO.	DEPTH	NATURAL WATER CONTENT (%)	PLASTIC LIMIT (%)	LIQUID LIMIT (%)	PLASTICITY INDEX (%)	USCS
●	8	8-5	15	1.6	NP	NV	NP	SP-SM

GEOTECHNICAL TESTING SERVICES
Yuma, Arizona

Client: PACIFIC ADVANCED CIVIL
Project: SAN LUIS WASTE WATER TREATMENT PLANT ADDITIONS
Project No.: 24-034G **Figure** B-28

Tested By: GTS **Checked By:** GTS

COMPACTION TEST REPORT

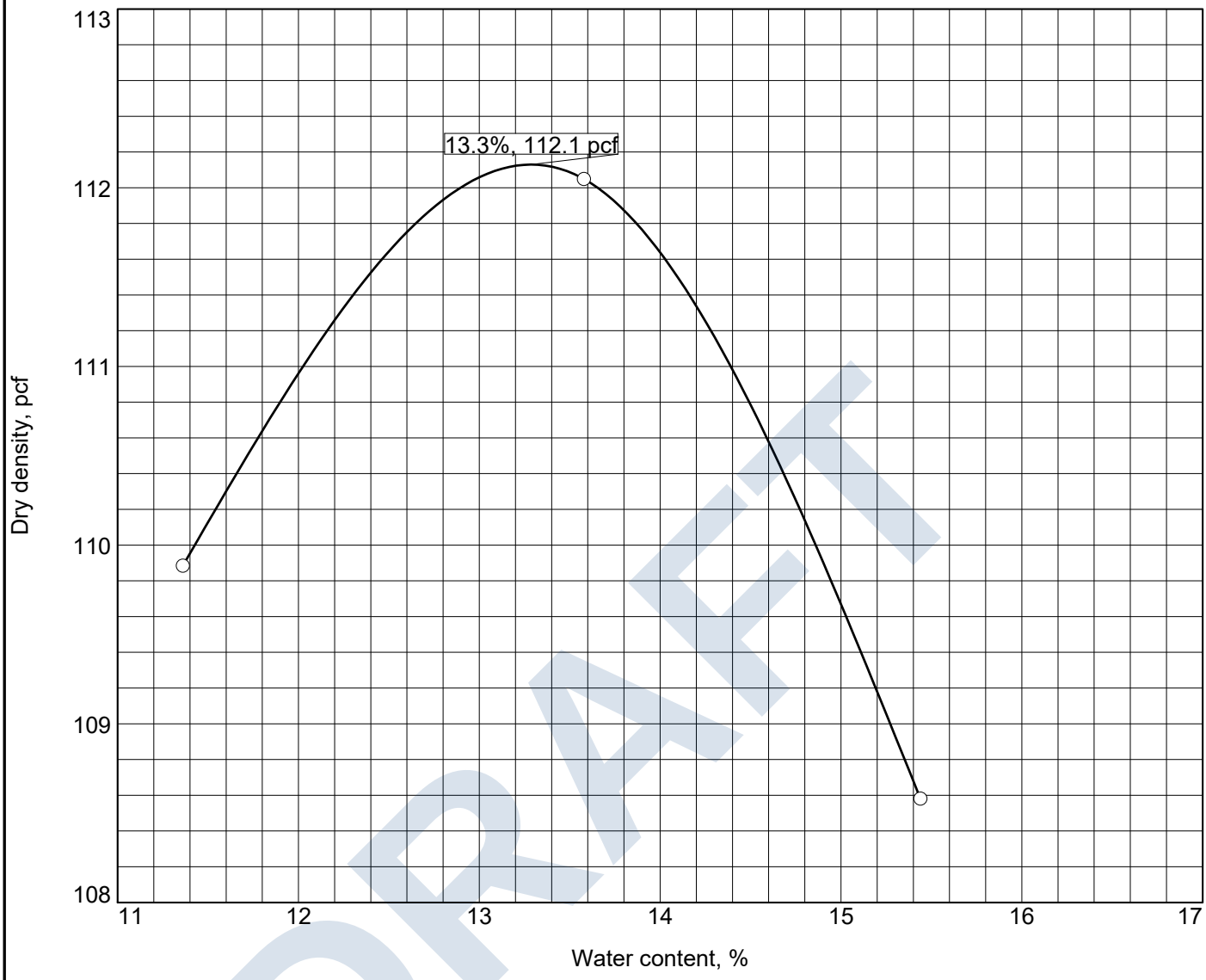

DRAFT

Test specification: ASTM D 698-12 Method A Standard

Elev/ Depth	Classification		Nat. Moist.	Sp.G.	LL	PI	% > #4	% < No.200
	USCS	AASHTO						
5.0	SM	A-2-4(0)	2.5		NV	NP	0.0	28.5

TEST RESULTS	MATERIAL DESCRIPTION
Maximum dry density = 112.1 pcf Optimum moisture = 13.3 %	silty sand

Project No. 24-034G **Client:** PACIFIC ADVANCED CIVIL

Project: SAN LUIS WASTE WATER TREATMENT PLANT ADDITIONS

○ **Source of Sample:** 6 **Sample Number:** 6-2

Remarks:

GEOTECHNICAL TESTING SERVICES

Yuma, Arizona

Figure

Geotechnical Testing Services, Inc. 1044 East 21st Street Yuma, Az. 85365
Materials Testing Laboratory Phone (928) 329-4695

July 14th, 202

Pacific Advanced Civil Engineering, Inc.
8723 E Via De Commercio, #A-204
Scottsdale, Arizona 85258

Attention: Mr. Duong Do

Reference: San Luis West WWTP Improvements – Report #24-03G Addendum #1
101 Cesar Chavez Boulevard
San Luis, Arizona 85349

Dear Mr. Do:

The following is additional information that will be part of above referenced Geotechnical Report.

Asphalt Vehicle Parking Pavement

The following steps need to be followed within any pavement area.

A. Subgrade

The areas to receive asphalt pavement should be free of all vegetation and debris per Section 5.1 of the referenced Geotechnical Report. The top 12 inches of native soil should be scarified and moisture condition to +/- 2% of optimum. The soil should then be compacted to 95% of ASTM D-698. The moisture content of the subgrade should be maintained prior to the aggregate base coarse placement.

B. Asphalt Pavement Section

Light Traffic Areas (light vehicle parking lots)
Use 3 inches of asphalt over 6-inches of aggregate base coarse.

Heavy Traffic Areas (Driveways)
Use 3 inches of asphalt over 8-inches of aggregate base coarse.

Note:

1. The asphalt will meet the current Yuma County Standards Specifications for a ¾" mix and compacted to 95% of ASTM D-1559. The aggregate base coarse will meet the current Yuma County Standard Specifications and must be compacted to 95% per ASTM D-698.
2. For areas subject to high dynamic loads, (driveways, aprons, or trash enclosure areas), use 6 inches of **4,000 psi** concrete over six inches of aggregate base, over 12-inches of compacted native soil. Compact the ABC to 95%, the subgrade to 95% and moisture condition per ASTM D-698.

DRAFT

Corrosion

Soils samples were taken and tested for water soluble sulfates, pH and resistivity in the soil. These soils exhibit moderate potential for soluble sulfate per ACI 3.8, Table 4.3.1. Therefore, any concrete placed must use a type II/V cement with a water-cement ratio of 0.45 and a minimum strength of 4,500psi per ACI 318 Table 4.3.1. The resistivity values were between 4,700-8,100 ohm-cm and the Ph between 9.0 - 10.0. These values indicate low to moderate corrosive potential per ADOT standards.

ADOT Guidelines Section 501-3.05 (A)	
Ph	
Metal Pipe	6.0 – 10.0
Aluminum Pipe	6.0 – 9.0
Concrete or Plastic Pipe	6.0 – 12.0
Resistivity	
Metal Pipe	Not less than 2,000 ohm-cm

Slopes and Cut Areas

A. Temporary Slopes/Cuts

For the excavation of utility trenches, temporary vertical cuts to a maximum depth of four (4) feet may be constructed in the natural soil however, due to possibility of non-cohesive characteristics of the on-site soil, temporary shoring measures will be required. Any temporary cuts beyond the above height mentioned, all trenches and cuts should be shored or further laid back following a 3:1 (horizontal; vertical) slope ratio and should not exceed a total height of fifteen (15) feet. Local safety measures should be enforced, and the contractor should follow the recommendation in The Construction Standards for Excavations by the Arizona Division of Occupational Safety & Health.

B. Temporary Shoring System

Due to the granular and non-cohesive characteristics of the on-site soil, a temporary shoring system may be required for deeper excavation, or whenever there is instability of the soil being excavated. Whenever the shoring systems are utilized, they should be designed by the Structural Engineer. Surcharge loads due to nearby structures or other live loads should be incorporated in the design of the shoring system.

DRAFT

Table 1

Seismic Design Coefficients

Parameter	Value
Site Class	D
Mapped Spectral Acceleration – Short Period Ss(g)	0.737
Mapped Spectral Acceleration – 1 Sec. Period, S1(g)	0.304
Site Coefficient – Short Period, Fa	1.21
MCE2 Spectral Response Acceleration-Short Period, SMS(g)	1.19
Design Spectral Response Acceleration – Short Period, SDS(g)	0.595
PGA	0.306
PGAm	0.396
F pga	1.294
Ie	1.0
Cv	1.169

Calculations using USGS program ASCE/SEI: 7-16
Site coordinates estimated from Google Earth: 32.493794; 114.797252, Risk Category II

All other information in the above referenced Geotechnical Report will remain the same.

Sincerely,

Geotechnical **T**esting **S**ervices**, I**nc.

Courtney M. Arviso P.E.

Registered Professional Engineer (Civil) CERTIFICATE NO. 30255 COURTNEY M. ARVISO Date Signed 07-14-25 ARIZONA U.S.A.

Expires 06/30/26

DRAFT

Appendix B – City-Purchased Equipment

DRAFT

SECTION 41 1213.37 – SHAFTLESS SCREW CONVEYOR

PART 1 – GENERAL

1.01 WORK INCLUDED

A. There shall be furnished a shaftless screw conveyor including support legs and inlet hopper with drivers and features specified in this Section and scheduled below. All equipment shall be provided by a single manufacturer. The shaftless screw conveyor shall be capable of conveying dewatered municipal aerobically digested sludge.

1.02 REFERENCES

A. American Bearing Manufacturers Association (ABMA)

B. American Gear Manufacturers Association (AGMA)

C. American National Standards Institute (ANSI).

D. American Society of Mechanical Engineers (ASME)

E. American Welding Society (AWS) D1.1, Structural Welding Code.

F. Conveyor Equipment Manufacturer's Associations (CEMA).

G. National Electric Code (NEC).

H. National Electrical Manufacturers Association (NEMA).

1.03 SCREW PRESS DESCRIPTION

A. Shaftless screw conveyor CV-001 system shall be capable of conveying dewatered municipal anaerobically digested sludge.

B. Shaftless screw conveyor with components as specified in this Section and shown on the Drawings and as required for a complete and functional shaftless screw conveyor, including:
   1. Shaftless screw conveyor with all 304 stainless steel wetted parts
   2. Spiral Flight, Shaftless
   3. End Shaft
   4. Speed Reducer
   5. Motor
   6. Trough and Liners
   7. Covers, bolt-on
   8. Inlet chute
   9. Support Legs, 304 stainless steel
   10. Zero Speed Switch
   11. Emergency Stop Pull-Cords
   12. Anchor age/seismic support calculations.

C. Design Requirements:
   1. Shaftless screw conveyor shall be suitable for both intermittent and continuous loading and operation.
   2. Shaftless screw conveyor minimum performance requirements

Type of Biosolids	Aerobically Digested Sludge
Dewatered Biosolids, % total solids (TS)	16 to 18% total solids

DRAFT

Design Capacity @ 35% Trough Loading	1,600 dry pounds per hour 10,000 wet pounds per hour 160 cubic feet per hour

3. Motor Characteristics – as described in this Section.

1.04 SUBMITTALS

A. Submit as specified in Section 01 3300 – Submittal Procedures, and elsewhere in these Specifications.

B. Product Data:
   1. Submit data completely describing product including plan and section views and listings of materials of construction.

C. Shop Drawings:
   1. Complete manufacturer fabrication/assembly drawings including location of conveyor relative to locations of associated feed equipment, inlet chute and leg supports.
   2. Certified drawings showing dimensions, weights, loading information and location of all components.
   3. Wiring diagrams for all motors and electrical field instrumentation furnished.

D. Structural Calculations
   1. Structural calculations prepared, sealed, and signed by a registered professional structural engineer in the State of California.
      a. Structural anchor points to concrete foundation
      b. Seismic loads on frame and anchor bolts

E. Resume of Technician to perform conveyor adjustments, inspections, observations of test operations, supervision of functional and performance testing, and training.

F. Training Course Outline

G. Operating and Maintenance Manuals: Include complete lubrication, maintenance, and operation instructions, including initial start-up instructions, and unloading and handling methods.

H. Manufacturer's references.

I. Quality Control Submittals:
   1. Special shipping storage, protection, and handling instructions
   2. Manufacturer's Installation Instructions
   3. Factory Test Results

1.05 QUALITY ASSURANCE

A. Manufacturer Qualifications: Consideration will be given only to the equipment of Manufacturers who are regularly engaged in such work and thoroughly experienced in the design and manufacture of screw press equipment specifically manufactured for municipal, secondary treated, waste activated sludge. Manufacturer shall meet the requirements below:
   1. Have a minimum of 5 years of experience of producing substantially similar equipment, and show evidence of satisfactory operation in North America for conveying municipal wastewater treatment plant sludge.
   2. Must have a company-owned service and parts facility within the continental United States.

DRAFT

1.06 DELIVERY, STORAGE, AND HANDLING

A. CONTRACTOR shall unload, store, and handle the equipment per the manufacturer's instructions.

1.07 WARRANTY

A. Warranty shall extend for 12 months after start-up or 18 months after delivery, whichever comes first.

B. Warranty shall include all parts, labor, and coatings for repairing or replacing equipment that fails during the warranty period. Defects occurring within the warranty period shall be repaired or replaced by the manufacturer at no cost to the OWNER.

1.08 PROJECT CONDITIONS

A. Deliver shaftless screw conveyor as completely assembled as practical to minimize field assembly. CONTRACTOR shall be responsible for unloading and any necessary field assembly. CONTRACTOR shall contact manufacturer for screw press field assembly requirements during bid.

1.09 SEQUENCING AND SCHEDULING

A. Coordinate work with restrictions as specified.

PART 2 – PRODUCTS

2.01 MANUFACTURER

A. Manufacturer: FKC Co., LTD or engineer-approved equal
   1. Shaftless screw conveyor shall be provided by one (1) manufacturer.

2.02 MATERIALS

A. Wetted Parts: Stainless Steel, Type 304, unless otherwise indicated.
   1. Troughs and inlet chute: 10 gauge
   2. Covers: 10 gauge
   3. Drive and end plates: 3/8-inch minimum

B. Support Legs: 304 stainless steel.

C. Spiral Flights: Cold-formed flat hot-rolled carbon, spring steel bar, Brinell 220 minimum.
   1. For 9-inch diameter conveyor, use 3/4 x 2-1/2 inch
   2. For 12-inch diameter conveyor, use 1 x 3 inch

D. Drive Shaft: AISI 1045

E. Drive Unit: As scheduled

F. Wear Liners: UHMW, 1/2-inch thickness, 1 color

G. Other parts: Coated carbon steel

H. Miscellaneous hardware, including bolts, nuts, and washers in the wetted area: 18-8 Stainless steel

2.03 SPIRAL FLIGHTING

A. Design spiral flighting to convey material without a center shaft and designed with the stability to prevent distortion and jumping in the trough.

B. Connect spiral flighting to the drive shaft:
   1. For 9-inch conveyors, connection by welding the spirals to a 3-1/2 O.D. x 1/4-inch thick inner shaft sleeve. Shaft is inserted into sleeve and fastened by two cross bolts.

DRAFT

2. For 12-inch conveyors, connection by welding the spirals to a 5-1/2 O.D. x 3/8-inch thick inner shaft sleeve. 1/2-inch plate is welded to sleeve. Another 1/2-inch plate is welded to the drive shaft. The two 1/2-inch plates are fastened to each other by four 1/2-inch 304 stainless steel bolts, nuts, and washers.

C. Spiral Flights to be concentric to within 1/16-inch.

2.04 DRIVE SYSTEM

A. The drive units shall be hollow shaft-mounted, roller-bearing gear motor rated a minimum AFMA Class II, single or double reduction or triple reduction.

B. Drive finish shall be severe duty wash-down surface protection finish as provided by manufacturer.

C. Drive system shall consist of an electric motor as required to provide full load capacity and also to withstand the full starting torque of the system.

D. Screw speed shall be electronically controlled by means of a motor starter in a NEMA 4X enclosure. Motor starter shall be provided as part of the Dewatering Control Panel SP-VCP-001.

E. Maximum conveyor shall be 32 revolutions per minute or lower.

F. V-belt driven speed reducer, or chain driven reducers are not permitted.

G. Speed Reducer:
1. Speed reducer shall be SEW Eurodrive Reducer or ENGINEER-approved equal.

H. Shaftless Screw Conveyor Motor :
1. Provide inverter rated, severe duty motor, 1.15 SF, NEMA Premium Efficiency, cast iron frame with manufacturer's standard, corrosion resistant, epoxy finish.
2. Minimum screw press motor requirements of 3.0 HP, (480v/3 phase)

I. Motors shall be mounted at the end of the conveyors as shown in the contract plan drawings.

2.05 TROUGH AND LINERS

A. Construction shall be of U-trough design with gasketing at each trough flange. Trough sections in 8-foot lengths.

B. Trough end plates shall be 3/8-inch minimum, removable, with waste-pack seal at drive end.

C. Provide each conveyor with a 2-inch NPT drain outlet at the lowest end of the conveyor.

D. Liner sections in 4-foot lengths. Liners are 1/2-inch minimum plastimeric-type ultra-high molecular weight (UHMW) polyethylene, 1 color.

2.06 INLET CHUTE

A. Purpose: Convey the dewatered cake from the screw press discharge box to the inlet trough of the shaftless screw conveyor.

B. Fabricated and provided by the shaftless screw conveyor manufacturer.

C. Construct of 12-gauge wall and flange thickness for connection to conveyors.

D. Provide chute with external body reinforcing stiffeners as required.

E. Provide chute with both the interior and exterior surfaces smooth, free from sharp edges, burrs, and projections, and with all welds ground smooth and all edges and corners rounded.

F. The minimum incline angle of the chute is 60 degrees.

DRAFT

G. The chute shall not be supported by any element of the screw press frame.

H. No part of the chute shall come in contact with the screw press drive, screw, flight, nor interfere with normal operation of the screw press.

I. Bolt hole pattern for fastening to screw press to match pattern at bottom of screw press discharge box. Bolts and washers for this connection included with shaftless screw conveyor.

2.07 INSTRUMENTATION AND CONTROLS

A. All electrical equipment shall conform to applicable standard of NEMA and the NEC.
   1. Both power and control equipment shall be insulated for not less than 600 volts even though operating voltages may be lower.

B. Shaftless screw conveyor motor CV-M-001 shall have power control from a motor starter housed in the screw press vendor control panel SP-VCP-001.

C. Shaftless screw conveyor manufacturer shall provide motion sensor probe and control relay box as follows:
   1. Manufacturer: Siemens Milltronics MFA 4P or ENGINEER-approved equal:
      a. 100/115.200 VAC, 50/60 Hz, 15 VA.
      b. 2 relay outputs with S.P.D.T. fail-safe contracts operating in unison.
      c. 2 to 3,000 pulses per minute adjustment setpoint range.
      d. Polycarbonate NEMA 4/4X Enclosure for relay circuit board
      e. MSP-12 standard probe, cast aluminum body and zinc flange.

D. Shaftless screw conveyor manufacturer shall provide emergency pull-cords and safety switches as follows:
   1. Manufacturer: Omron STI or ENGINEER-approved equal:
      a. Housing: Heavy-duty painted zinc-based die-cast alloy
      b. Indicator: Glass-filled nylon
      c. Switch color: Yellow body, blue reset button
      d. Switch lockout on cable pulled and cable slack
      e. Cable-status indicator on switch lid.
      f. 6A @120 VAC, 3A @ 240 VAC
      g. 2 N.C. direct-operating safety contacts
      h. 1 N.O. direct-opening auxiliary contacts
      i. IP67 enclosure type for switches
      j. All cables, eyebolts, hooks, springs, and clips necessary to run pull cords down both sides of the conveyor.

2.08 ANCHOR BOLTS

A. Anchor bolts will be sized by the screw press Manufacturer and provided by the CONTRACTOR.

2.09 FINISHES

A. Motors and gearboxes for the screw press and flocculation tank shall be prepared and coated with the manufacturer’s standard surface preparation, prime coat and top coat for corrosion resistance.

PART 3 – EXECUTION

3.01 INSTALLATION

A. Install products in accordance with manufacturer's instructions.

B. The CONTRACTOR shall provide all hardware and accessories required for installation.

DRAFT

C. Manufacturer's Field Services
   1. Include the following:
      a. Inspection, Functional / Operational Testing: Two trips for a total of 2 days, 8 hours per day.
   2. Additional trips resulting from failed tests shall be the sole responsibility of the manufacturer.

3.02 SHOP TESTING

A. Units shall be full assembled at the factory and test run for 15 minutes to check for equipment tolerances and proper operation.

B. Conveyors shall be corrected as necessary.

3.03 FIELD QUALITY CONTROL

A. Witnessing: All field testing shall be witnessed by the Engineer.

B. A representative of the screw press manufacturer shall be provided for the following:
   1. To inspect the equipment and installation
   2. To make any field adjustments to ensure proper equipment operation
   3. To furnish affidavit stating that the dewatering system has been tested and is ready for installation as specified.
   4. To inspect start-up

C. Manufacturer shall inspect system before initial start-up and certify that system has been correctly installed and prepared for start-up.

D. Training:
   1. Provide operator training for at least 1 day on-site by factory trained representative. Training can be coordinated and occur during same days as functional/operational testing. Operator training to include:
      a. Operations and inspection training
      b. Safety instruction
      c. Preventative maintenance instruction

END OF SECTION

DRAFT

SECTION 43 1133 – ROTARY LOBE POSITIVE DISPLACEMENT BLOWERS

PART 1 – GENERAL

1.01 SCOPE OF WORK

A. Furnish all labor, materials, equipment, and incidentals required new rotary positive displacement blowers and appurtenances, as shown on the Drawings and as specified herein.

B. The entire blower package and its components shall comply with all applicable safety and environmental regulations.

1.03 SUBMITTALS

A. Submit in accordance with Section 01 3300, copies of all materials required to establish compliance with this Section. Submittals shall include at least the following information:
   1. Certified general arrangement drawings showing materials, details of construction, dimensions, and connections.
   2. Complete Blower Performance Data including:
      a. RPM
      b. Capacity – scfm and icfm
      c. Discharge pressure
      d. dB(A) noise pressure level
      e. Maximum gear tip speed and rotor tip speed (fpm)
      f. HP required at rated capacity and pressure
      g. Rated maximum pressure rise of blowers
   3. List of recommended spare parts broken down into on hand parts and long term for 2 years operation and 3 to 5 years operation.
   4. Descriptive Brochures
   5. Performance Curves
   6. Motor Data
   7. Valves
   8. ISO-1217 Performance Test Results Slip test results are unacceptable as an alternate. Manufacturer must provide documented results for the purchased machines. Typical or average data is not acceptable.
   9. Declaration of Conformity, per Machinery Directive 2006/42/EC, Annex II, No.1 A.

B. Complete blower package operating and maintenance instructions professionally published, hard copy and electronic copy, shall be furnished for all equipment included under these specifications in accordance with Section 01 7823.

1.04 QUALITY ASSURANCE

A. Qualifications
   1. Package shall be Aerzen Generation 5 Delta Blower Model GM-Series or Engineer-approved equal. Regardless of manufacturer, the package will be produced by the manufacturer of the blower stage, to ensure single source responsibility for blower performance and compatibility of associated accessories. Packagers not permitted to bid.
   2. The equipment shall be designed, constructed, and installed in accordance with the best practices and methods and shall operate satisfactorily when installed as shown on the Drawings.
   3. The blower(s) shall be covered by a warranty for 24 months from date of

DRAFT

commissioning, or a maximum of 30 months from date of shipment.

4. The performance data and manufacturing methods shall achieve a Declaration of Conformity, per Machinery Directive 2006/42/EC, Annex II, No.1 A.

1.05 BLOWER PERFORMANCE CRITERIA

Project Location	San Luis, AZ
Quantity of Machines	Per Plan
Design Inlet Temperature	35 - 115 °F
Site Elevation	100 feet above sea level
Free Field Noise Guarantee	75 dB(A) at 1 meter (at design point)
Blower Process Name	Secondary Process Air
Design Flow	2125 scfm per machine
Design Discharge Pressure	10.5 psig
Motor Size	200 Hp (VFD)
Blower Process Name	MBR Process Air
Design Flow	767 scfm per machine
Design Discharge Pressure	10.5 psig
Motor Size	150 Hp (VFD)

1. Package BHP to include pressure loss through a clean inlet filter / silencer, pressure loss of the exhaust silencer and check valve.
2. Package Performance shall be guaranteed to ISO 1217 with a tolerance is +/- 5% on volume flow and +/- 5% on package horsepower. Manufacturer of blower must provide data for purchased machine.
3. Sound data shall be from an ISO 2151 method of measurement, in an ISO 3745 qualified test facility. Sound data shall be compliant with a Declaration of Conformity assessment standard.

1.06 DELIVERY, STORAGE AND HANDLING

A. All equipment shall be completely factory assembled, skid mounted, crated, and delivered to protect against damage during shipment.

B. All exposed flanges shall be covered and sealed with shrink-wrap to prevent the entrance of moisture. Finished iron or steel surfaces not painted shall be properly protected to prevent rust and corrosion.

C. All equipment delivered to the site shall be stored as specified in accordance with the manufacturer's instructions.

1.07 MAINTENANCE

A. Spare Parts

1. Furnish the following spare parts for each blower package specified:
   a. Complete set of matched V-belts
   b. One filter element
   c. Volume of oil change for first service interval
2. Spare parts shall be properly bound and labeled for easy identification without opening the packaging.

PART 2 – PRODUCTS

2.01 GENERAL

DRAFT

A. Blower packages shall be designed to minimize the life-cycle costs and maximize plant reliability. The design and the selection of the components shall be based on a minimum useful life of 15 years and a Mean Time Between Overhauls of 5 years of continuous operation. Bearing life must be submitted by manufacturer of service life, based on specified conditions.

B. No special foundations shall be required. The blower packages will be installed directly on a concrete slab without grouting the base frame. There shall only be 4 easily accessible anchor points.

C. Blower Casing:
   1. The blower casing shall be of one-piece construction, with separate side plates that are bolted and pinned to the housing.
   2. Materials shall be close-grained cast iron ASTM A48 suitably ribbed to prevent distortion under the specified operating conditions.
   3. Minimum blower casing pressure rating shall be 36 psig.
   4. Inlet and outlet shall be flanged connections.
   5. The casing shall incorporate a proven means of pulsation cancellation which achieves 90% of better reduction in vibration. Systems without a means of pulsation cancellation shall not be accepted.
   6. The vibration level as measured at the blower casing, in the X/Y planes of the bearings, shall not exceed ½ "/ sec RMS when operating at the specified maximum operating pressure and speed in the actual blower package.

D. Factory Testing:
   1. Each blower stage shall be factory tested in accordance with ISO 1217 performance test to verify flow and brake horsepower at blower maximum conditions. A slip test shall not be acceptable, nor is average data for the manufactured size.
   2. The acceptance criteria are +5% tolerance on power and –5% tolerance on flow regardless of the size of the machine.

E. Rotors:
   1. Each rotor shall be of the "stiff" design with first lateral critical speed at least 120% of the maximum allowable operating speed.
   2. The rotors shall be of the straight, three-lobe type, and shall operate without rubbing or liquid seals or lubrication.
   3. Rotor/shaft shall be one single piece. Cast, hollow rotors shall be capped, dust tight. Open rotors are not acceptable.
   4. The rotors shall be statically and dynamically balanced per ISO1940/ANSI S2.19 G6.3.

F. Bearings:
   1. Each rotor/shaft shall be supported by anti-friction bearings and fixed to control the axial location of the rotor/shaft in the unit.
   2. Regardless of theoretical bearing life calculations, the bearings shall be sized for a minimum expected life of 5 years between overhauls. Calculated bearing life shall be submitted, based on specified operating conditions.

G. Timing Gears:
   1. The rotors shall be timed by a pair of single helical AGMA 12 quality gears with hardened and ground teeth; minimum AGMA service factor of 1.70. Spur cut gears are unacceptable
   2. Gears shall be mounted on the shafts with a tapered interference fit and secured by a locknut. Pinned gears are unacceptable.

H. Seals:

DRAFT

1. Seal shall be designed to prevent lubricant from leaking into the air stream as well as to prevent oil from leaking out of the machine.
2. Four rotary piston ring shaft seals, an oil slinger and an O-ring seal shall be provided at the point where the shaft passes through the sideplates.
3. Further provision shall be made to vent the rotor side of the oil seal to atmosphere to eliminate any possible carry-over of lubricant into the air stream.

I. Lubrication:
1. The timing gears and the bearings shall be splash lubricated. Grease lubrication shall be not acceptable.

J. Oil Sight Glass:
1. A recessed oil sight glass must be provided on each oil sump.
2. Protruding sight glasses shall not be acceptable.

K. Painting:
1. Painting shall be per supplier's standard meeting the following criteria:
   a. Except for machined sealing and machined mounting surfaces, the package shall be painted dark blue.
   b. Aluminum, stainless steel, and brass shall not be painted.
   c. The supplied motor shall not be over sprayed and will be supplied with the motor manufacturer's standard protection and paint color.
   d. Painted Cast Iron and Carbon Steel shall be Alkyd Resin Primer and Final coat with a total dry film thickness of 70□m. Surface preparation SSPC10 or better.
   e. Sound enclosure shall be powder-coated polyester base total dry film thickness 80 mil.
   f. Galvanized components shall only be painted with appropriate surface preparation

2.02 BLOWER ACCESSORIES

A. Inlet Filter / Silencer:
1. Each package shall be supplied with one combination inlet filter silencer.
2. The inlet filter silencer shall be mounted directly to the inlet flange of the blower.
3. The filter media efficiency must meet the requirements of ASHRAE 52.2 MERV7 50-70% @3-10 microns corresponding to EN779 G4.
4. The silencer portion shall be located upstream of the inlet filter.
5. Filter and silencer performance losses shall be included in the blower performance calculation.
6. The filter element shall be designed to trap dirt on the inside so that upon changing, dirt does not fall into the machinery. Filters where dirt accumulates on the external surface of the filter will not be permitted.

B. Base Frame / Discharge Silencer:
1. Each package shall be supplied with one combination base frame / discharge silencer.
2. The silencer shall be a chamber type design for maximum sound attenuation and shall not use fibrous or absorption materials of any kind. Internal absorption material has been shown to degrade and internally foul diffusers and will not be permitted.
3. The silencer shall be fabricated of a single shell of pressure vessel quality steel with continuous welds.
4. The silencer shall be subject to a pressure test for tightness and strength at a minimum of 1.65 times the maximum blower operating pressure.
5. The silencer shall have a machined inlet connection where the discharge flange of the blower stage bolts directly to, with no intermediary pieces. Threaded connection

DRAFT

between the compressor stage and the discharge silencer is subject to leakage and misalignment and will not be permitted.

6. Discharge silencer performance losses shall be included by the blower vendor in the blower performance calculation. This is another reason why the blower accessories must be supplied by the manufacturer of the blower stage.
7. The base frame shall be constructed from welded carbon steel or cast iron that shall be designed to maintain alignment of the blower internal components and the drive during operation.
8. The base frame shall be designed to resist distortion while being installed on vibration isolating mounts.
9. The blower manufacturer shall supply a stainless-steel grounding lug fully welded to the base.

C. Flexible Connectors:

1. Each package shall be connected to the plant piping via flexible connector(s) located downstream of the discharge silencer and upstream of the inlet silencer.
2. Flexible connectors shall prevent the transmission of noise and vibrations from the blower package into the piping.
3. Flexible inlet connectors shall be a reinforced silicone sleeve secured by four (4) stainless steel clamps and terminating with a standard epoxy coated steel ANSI flange connection.
4. Flexible discharge connectors shall be a silicone rubber type pipe sleeve with stainless steel hose clamps, rated for 356°F at 17.4 psig.
5. Flexible discharge connectors shall be Proco Style 240, Type EE, EPDM, with a standard ANSI flange discharge connection, rated for 300°F at 20 psig.
6. Flexible discharge connectors shall be Proco Type KK, Silicone, with a standard ANSI flange discharge connection, rated for 392°F at 25 psig.
7. (GM 60S-DN200 & GM 150S-DN300) Flexible discharge connectors shall be a silicone reinforced sleeve secured with four (4) stainless steel sleeve clamps. The process connection will terminate with metal ANSI flange “stub pipe”, axially restrained by the external process piping (GM 60S-DN200 & GM 150S-DN300)

D. Electric Motor:

1. Each package shall be supplied with a WEG manufactured TEFC motor that shall operate on 460 Volts, 3 Phase, 60 Hertz current, 1800 /3600 RPM.
   a. Torque NEMA B
   b. Temperature Rise Class B
   c. Dust tight enclosures (Severe Duty)
   d. Class F inverter rated insulation with Class H applied varnish
   e. 3:1 constant torque
   f. All cast iron construction, including frame, end bells, conduit box and fan cover
   g. NPT threaded and gasketed F3 top mounted conduit box
   h. Copper windings
   i. Re-greaseable bearings, positive pressure lubrication system with automatic drawn plugs – pressure compensated (Frame sizes 254T and larger).
2. All frame sizes shall be NEMA standard, suitable for overhung belt drive and with the conduit box location on top of the motor. IEC frame motors shall not be allowed.
3. The motor shall be mounted on a pivoting base to provide automatic tensioning of the belts.
4. The motor nominal rating after any corrections for ambient conditions shall be 10% above the maximum operating bHp.
5. The motor shall have a 1.15 service factor.
6. Motor windings shall be supplied with a normally closed thermostat, one per phase, wired in series to form a fail-safe motor protection circuit for the external fault circuit

DRAFT

of the motor controller.

7. If the motor is VFD driven, the motors shall be equipped with an Aegis ring to mitigate the effects of stray motor currents. If the motor is 125 HP or greater than an insulated NDE bearing shall also be provided.
8. Blower manufacturer shall be responsible for coordinating the starting torque requirement of the blower and the motor.

E. V-Belt Drive:

1. Each package shall be supplied with a V-belt drive that shall be of the high-capacity type, oil and heat resistant. Drive shall be designed for a minimum service factor of 1.4 times operating power (bHp), or 1.1 times the motor nameplate Hp, whichever is larger to allow a minimum of 1.4-service factor based on the maximum blower bHp.
2. Belt tensioning shall be automatic without the use of any devices or interaction on the part of the operator. Neither slide rails nor load-adjusting springs shall be used.
3. Sheaves shall be dynamically balanced regardless of the operating speed.

F. Belt Guard:

1. The belt drive shall be guarded in compliance with OSHA regulations.
2. Portions of the guard shall be easily removable allowing for belt inspection and replacement.
3. Guard material shall be perforated carbon steel.

G. Vibration Isolators:

1. Each package shall be supplied with vibration isolating feet with a minimum efficiency of 80%.
2. Blower manufacture shall be responsible for attenuating noise and vibration in the blower package such that no special installation base shall be required, nor shall any additional measures be required to reduce vibrations from the blower package being transmitted to the base or the piping.

H. Pressure Safety Valve:

1. Each package shall be supplied with a single pressure safety valve on the discharge side of the blower mounted downstream of the discharge silencer and upstream of the check valve.
2. The safety valve shall be set to protect the blower from exceeding its maximum pressure rating and shall be sized to pass 100% of the design flow.
3. The safety valve shall be field adjustable, spring loaded, and have a certificate of conformity to PED.
4. The pressure relief valve shall be housed by the sound enclosure and shall relieve into a segmented section of the sound enclosure. Weighted relief valves inside in the enclosure are not permitted.
5. The valve shall be manufactured by Aerzen.

I. Check Valve:

1. Each package shall be supplied with one check valve that shall be installed on the discharge line.
2. The check valve shall be of the full-bore low pressure-drop, flapper type design with a steel body, and steel flap embedded in EPDM with full-contact seal.
3. The valve shall be removable without disturbing the piping. Pressure losses produced by the check valve shall be included in the blower performance calculation. Check valves requiring installation in the discharge piping shall not be considered unless installation cost of the external valve is included in supplier's proposal.
4. The valve shall be manufactured by Aerzen.

J. Instrumentation:

1. Each package shall be supplied with the following instrumentation:

DRAFT

a. Inlet Vacuum Gauge (4” Gauges)
   1) Aerzen standard gauge with 4” dial and scale from 0 to –40 inches of water column.
   2) Gauge to function as a filter maintenance indicator.
b. Inlet Vacuum Switch
   1) Ashcroft Model B4-64-B-XFS-XBP
   2) Type 400 pressure Switch in NEMA 4X enclosure
   3) DUAL general purpose 15A, 110-480V switches (2) SPDT snap-acting, NOT independently adjustable
   4) Buna-N Actuator Seal
   5) Factory set (-20-inches H20, decreasing)
   6) Mounting bracket
   7) Operating range of -30 to +30-inches H20.
c. Discharge Pressure Gauge (4” Gauges)
   1) Aerzen model 32-0053-02 with 4” dial and scale from 0 to 20 psig.
   2) The pressure gauge shall have a stainless-steel case.
   3) Gauge shall be dry (no fill) with no pulsation snubber required.
d. Discharge Pressure Switch
   1) Ashcroft Model B4-24-V-XRN-XJK-15 PSI
   2) Type 400 pressure Switch in NEMA 4X enclosure
   3) Single general purpose 15A, 110-480V switches (2) SPDT snap-acting, NOT independently adjustable
   4) Viton Actuator Seal
   5) Internal range scale and operating range of 0 to 15 PSIG.
e. Discharge Temperature Gauge / Switch (4” Gauges)
   1) Aerzen standard gauge with 4” dial and scale from 32°F to 397°F
   2) NEMA 4 enclosure, 5A @ 250volt, SA 28 SPDT microswitch
   3) UL & CSA approved.
f. E-Stop Switch
   1) Siemens model 52PX2V2
   2) Mounted on the face of the blower enclosure
   3) NEMA 4X rating
   4) Two (2) normally closed contacts
g. Terminal Strip
   1) The switches and motor thermostat shall be prewired to a labeled terminal junction box inside the blower enclosure.

K. Local Control Panel:
1. Each package shall be supplied with the following control functions and features:
   a. Intuitive TFT color touch screen display with NEMA 4X protective cover suitable for outdoor installation
   b. Display, monitoring, alarm, and shutdown of inlet pressure, discharge pressure, discharge temperature, enclosure cooling fan thermal overload, main drive motor thermal overload and oil temperature.
   c. Display run hours
   d. Log errors and first out indication
   e. Track and log maintenance
   f. E-Stop button mounted on front of blower enclosure
   g. Operation of enclosure cooling fan motor starter and oil demister
   h. Ability to transfer measured values, fault and status messages, as well as remaining times of the service intervals to the customer control system via

DRAFT

Modbus RTU or Ethernet IP. Controllers that use a non-industrial protocols such as CAN shall not be allowed.

i. Permissive control function of customer start and stop signals to a motor controller
j. Digital potentiometer
    1) LOCAL Operation: speed control of the VFD via the HMI screen.
    2) REMOTE Operation: transfer of VFD speed command from external controller to the VFD
    3) These signals can be communicated using either hard wire connection or the communication protocol
k. The local control panel shall be provided with the following digital outputs:
    1) Common alarm
    2) Common fault
    3) Ready to run
    4) Transfer of external start/stop command
    5) Status remote
    6) Maintenance required
    7) Alternatively, these outputs can be obtained using the communication protocol
l. The local control panel shall be provided with the following digital inputs:
    1) Remote start/stop
    2) Motor controller fault
    3) Customer E-stop
    4) Load/unload (if unloading valve solenoid is supplied)
    5) Alternatively, these inputs can be supplied using the communication protocol

2. Control Enclosure
    a. IP54 suitable for indoor/outdoor installation
    b. NEMA 4X
    c. NEMA 12
    d. Factory installed, integral to sound enclosure
3. Control Supply Power
    a. 460 VAC, 10 Amp feed with 24 VDC transformer
4. Monitoring Sensors
    a. Inlet Pressure Transducer
    b. Discharge Pressure Transducer
    c. PT 1,000 Discharge Temperature RTD
    d. PT 1,000 Oil Temperature RTD
    e. PT 1,000 Enclosure Temperature RTD
    f. Blower stage gear end vibration
    g. Blower stage drive end vibration
    h. System Pressure Transducer (downstream of check valve)
5. Local control panel shall be the Aerzen AERtronic Digital Controller

L. Each blower shall receive its initial oil filling at the factory, the synthetic oil shall be rated for a minimum of 16,000 hrs.

M. Acoustical Sound Enclosure:
1. Each package shall be supplied with a sound enclosure covering the entire blower package.
2. The enclosure shall provide suitable protection for outdoor installation under wind loads of 40 mph and snow loads of 25lbs/ft^2.
3. The enclosure shall be designed so as to be able to install them side-by-side with all maintenance done from the front or back of the package.
4. Details shall be as follows:

DRAFT

a. Panels shall be made of galvanized steel sheet, powder coated in a light reflecting, blue color per RAL 5001. The skid shall be of the same color.
b. The enclosure and the blower package shall both be mounted on a skid / oil-drip pan designed for meeting environment protection standards and for easy transportation and installation.
c. A grounding strap shall be installed between the blower base and the package skid to bypass any vibration isolating mounts.
d. Quick release panels, each less than 50 lb (as mandated by MSHA) must provide easy and quick access for routine maintenance of the blower and the package components.
e. Enclosure Cooling Fan:
    1) A high efficiency blower shaft driven ventilation fan shall provide ventilation and cooling integral to the sound enclosure.
    2) Cooling fan shall be sized for sufficient heat removal from the sound enclosure, even when the blower is operated with a VFD.
f. Electrical components, instrumentation and instrument connections shall not be mounted or interface with moving panels of the sound enclosure.
g. Both blower oil sumps shall be piped to a common fill and drain, located at the front of the package for easy maintenance. An oil level indicator shall be mounted on the outside of the enclosure, which gives an accurate oil level indication while the blower is in operation. All oil lines to be hydraulic hose with fittings. No plastic tubing with compression fittings is allowed.

N. External Inlet Silencer:
1. Each package shall include an external inlet silencer shipped loose for installation by the contractor on the building exterior.
2. The unit shall be finished with baked-on enamel and shall be equipped with an epoxy coated wire mesh element for the purpose of preventing large debris and wildlife from entering the inlet pipe connection. Final filtration of the process air will be accomplished local to the blower package.
3. The silencer shall be Endustra P09, with a standard ANSI flange discharge connection.

PART 3 – EXECUTION

3.01 INSTALLATION

A. The Manufacturer shall conduct a coordination conference call with the Contractor and Design Engineer to review the integration and installation requirements of the equipment after the Submittal documentation has been approved and prior to installation of the equipment.

B. The Contractor shall install the blowers in accordance with the Manufacturer’s written instructions.

C. The Contractor shall make all electrical and process connections to the blower package prior to the arrival of the manufacturer’s representative.

D. The Contractor shall complete and return the Manufacturer’s installation check list prior to having a Manufacturer’s representative come onsite.

E. Representatives of the blower manufacturer shall verify and adjust blower and motor alignment.

3.02 FIELD TESTING

DRAFT

A. After installation of all equipment has been completed and as soon as conditions permit, the manufacturer shall 1 trip for a total of (3) 8-hour days to verify the installation, conduct an acceptance test under actual operating conditions & training.
   1. The Manufacturer shall perform a physical check of the blower installation, perform safety checks, power up the equipment and perform functional testing.
   2. The functional test shall consist of 4 hours of operation of each blower with vibration, temperature, and pressure readings as well as motor amp readings taken and recorded at 60-minute intervals.
   3. The Manufacturer shall provide operations and maintenance training to the plant personnel. The training shall consist of 1 hour of classroom training using the Operation and Maintenance Manual for reference and 2 hours of hands-on training at the blower package.

B. If required, Contractor shall make any changes, at his own expense, to the installation that may be necessary to assure satisfactory operation. Contractor shall be held liable for changes needed in the installation.

C. Manufacturer shall provide a written field test / start up report after completion of testing.

D. The blower manufacturer shall have rental blower packages available that can be onsite within 24 hours.

END OF SECTION

DRAFT

SECTION 43 2413.33 – SUBMERSIBLE WASTEWATER PUMPS (AXIAL FLOW) – MBR FEED PUMPS

PART 1 – GENERAL

1.01 THE REQUIREMENT

A. Furnish and install submersible pumps with associated piping and appurtenances, complete and operable in accordance with the Contract Documents.

B. The Supplier shall examine the site conditions, intended application, and operation of the pump system and recommend the pump which will best satisfy the indicated requirements.

1.02 SUBMITTALS

A. Submittals shall be furnished in accordance with Sections 01 3300 – Submittals.

1.03 OPERATING AND MAINTENANCE MANUAL

A. Operation and Maintenance Manual shall be furnished in accordance with these Specifications.

1.04 QUALITY ASSURANCE

A. Pump manufacturer and model shall be as described on the Drawings or ENGINEER-approved equal.

B. The manufacturer shall provide a 2-year equipment warranty.

1.05 SPARE PARTS

A. Provide all spare parts anticipated to be required for the first 2 years of operation. Manufacturer shall clearly define quantity, description of part and associated part numbers as part of manufacturer's scope of supply.

B. Spare parts shall be placed in a separate container clearly marked as "Spare Parts." All parts shall be identified and clearly labeled with applicable part numbers.

PART 2 – PRODUCTS

2.01 GENERAL

A. Each pump shall be equipped with a submersible electric motor connected for operation on 460 volts, 3 phase, 60 Hz suitable for submersible pump applications.

B. Pumps shall be Flygt or approved equal.

C. Operating Conditions: The WORK of this Section shall be suitable for operation under the following conditions:

Pump Name	Quantity	Design Flow Capacity (gpm)	Total Dynamic Head Required (ft)	Rated HP	VFD Service
Feed Forward Pumps	3	6,800	6.5	26	Yes

DRAFT

2.02 AXIAL FLOW TYPE

A. Pump Design: The pumps shall be electrically operated submersible propeller pump/motor units. The pump/motor units shall be close coupled to form one integrated direct drive unit. The pump/motor unit shall be designed for installation into a discharge column onto a seat at the bottom of the column. The pump/motor unit shall be held in place by its own weight and the pumping head. Each pump/motor unit, hereafter called pumps or units, shall be equipped with a properly sized submersible electric motor connected for VFD operation on a 460 volt, 3-phase, 60 Hz service. The pumps shall be capable of delivering a minimum of the specified flow and head listed herein, and shall be non-overloading throughout the specified performance range.

B. Pump Installation: The vertical discharge columns (tubes) shall be permanently installed in a self-supported service application. The supplied columns/tubes shall be anchored into concrete via a collar/flange at the top portion of the tube discharge. The design shall include one column section, or several sections (joined via flanges), as needed, to provide a complete tube for the service depth noted in the plans. The design shall be such that the pump units will be automatically and firmly connected to the discharge tube when lowered into place. A locking device, located on the external surface of the pump housing and along the inner portion of the tube base assembly, shall prohibit rotational movement of the pump/motor units within the tubes. The pumps shall be easily removable for inspection or service with no need for personnel to enter the tube. The pumps shall not require any bolts, nuts, or fasteners for connection to the discharge column/tube. Stiffening and guiding webs shall be provided at the pump support seat to ensure concentric positioning of pump within the discharge column. An O-ring shall be provided on the bottom of the inlet (suction) bellmouth so that the weight of the pump unit, when acting on the O-ring, will provide an effective seal between pump and discharge column/tube.

C. Power Cables: The power cable shall be designed specifically for use with submersible pumps and shall be type SUBCAB (SUBmersible CABle). The cable shall be sized according to the National Electrical Code (NEC) and the Insulated Cable Engineers Association (ICEA). The outer jacket shall be lubricant resistant and the copper conductors shall be insulated. The filler and conductor separator materials shall be of non-wicking vulcanized rubber. The cable shall be rated for 600 volts and 90°C (194°F) with a 40°C (104°F) ambient temperature and shall be approved by Factory Mutual (FM). The cable length shall be adequate to reach the junction box without the need for splices. ENGINEER-approved cable protection and suspension system shall be provided on all installations with in-tube cable runs over 10 feet in length.

D. Cable Entry: The cable entry water seal design shall preclude specific torque requirements and ensure a watertight and submersible seal. The cable entry shall be comprised of one cylindrical elastomer grommet, flanked by two stainless steel washers, all having a close tolerance fit against the cable outside diameter and the cable entry inside diameter. This design shall provide the sealing function. The cable strain relief function shall be provided by a separate strain relief clamp located above the cable seal and acting independently from the sealing function. When the cable entry is mounted onto the junction box, the cable entry will be 100% watertight during immersion of 65 feet or greater, while providing sufficient strain relief to prevent the cable from pulling out when handling, installing, or operating the pump. The assembly shall bear against a shoulder in the pump top and direct the cable axially upwards. Epoxies, silicones, or other secondary sealing systems shall not be considered acceptable for the cable entry and sealing system.

DRAFT

E. Cable Junction Box: The junction chamber shall contain one terminal board, providing connections for both the power cables and signal wires. The terminal board shall be watertight and sealed from the motor by an elastomer compression seal (O-ring). Connection between the cable conductors and stator leads shall be made with threaded, compressed type binding posts, permanently affixed to the sealed terminal board and perfectly leakproof.

The junction box shall contain a collection cavity placed so that any leakage into the junction box shall terminate in the collection cavity. A mechanical float switch shall be mounted at the lowest point in the collection cavity. This sensor shall be wired to provide an alarm in the event of water intrusion into the cable junction box.

F. Electric Motor: The pump motor shall be specifically designed for submersible operation and be of a 3-phase, squirrel-cage induction, shell type design, housed in an air-filled, watertight chamber. The stator windings shall be insulated with moisture resistant Class H insulation rated for 180°C (356°F). The stator shall be insulated by the trickle impregnation method using Class H monomer-free polyester resin resulting in a winding fill factor of at least 95%. The motor shall be inverter duty rated in accordance with NEMA MG1, Part 31. The stator shall be heat-shrink fitted into the cast iron stator housing. The use of multiple step dip and bake-type stator insulation process is not acceptable. The motor shall be designed for continuous duty. The use of bolts, pins or other fastening devices requiring penetration of the stator housing is not acceptable.

Each unit shall be provided with an adequately designed cooling system. The motor shall be cooled by the pumped water flowing along the stator housing when the pump is working. A water jacket or any external cooling system shall not be considered acceptable designs.

Thermal switches shall be used to protect the stator windings from damage against high temperatures. The stator shall be equipped with three thermal switches embedded in the stator windings (one switch in each stator phase). This protection shall be used in conjunction with and supplemental to external motor overcurrent protection.

Each pump shall be equipped with a mechanical float switch in the stator housing. The float switch shall deactivate the pump, in the event of leakage, prior to liquid reaching the stator end coils, lubricants or the lower bearing assembly.

The motor/propeller shaft shall be a single piece of carbon steel ASTM A572 and shall be completely isolated from the pumped liquid. Units with multiple piece shafts or gearboxes are not acceptable.

G. Pump and Motor Bearing Arrangement: The motor shaft shall rotate on two grease-lubricated and sealed bearings. The upper motor bearing shall be a cylindrical roller bearing. The lower bearing arrangement shall consist of a double row angular contact ball bearing. The bearings shall have a minimum L10 bearing life of 100,000 Hrs.

The lower thrust bearing housing shall include a thermal sensor (RTD) of the platinum-100 type to monitor the temperature of the thrust bearing outer race during operation (optional).

H. Pump Construction: Major pump components shall be of gray cast iron, Class 35, with smooth surfaces devoid of blow holes and other irregularities. All exposed nuts and bolts shall be of stainless steel 304. The propeller shall be of a 3-bladed fixed pitch, grey cast iron. The blades shall be noticeably backward curved so that any clogging tendency is minimized. The fastening of the propeller to the shaft shall be made by a locking assembly.

All mating surfaces where watertight sealing is required shall be machined and fitted with nitrile rubber O-rings. Fitting shall be such that sealing is accomplished by metal-to-metal contact between machined surfaces. This will result in controlled compression of nitrile

DRAFT

rubber O-rings without requiring a specific torque limit. No secondary sealing compounds, rectangular gaskets, elliptical O-rings, grease, or other devices shall be used.

All metal surfaces coming into contact with the pumped media, other than stainless steel, shall be protected by a factory applied spray coating of acrylic dispersion zinc phosphate primer with a polyester resin paint finish on the exterior of the pump.

I. Mechanical Seals: Between the propeller and the motor there shall be a tandem mechanical rotating shaft seal system. Seals shall run in a lubricant reservoir. Lapped seal faces must be hydrodynamically lubricated at a constant rate. The lower seal unit, between the pump and lubricant chamber, shall contain one stationary and one positively driven rotating corrosion resistant tungsten carbide ring. The upper seal unit, between the lubricant reservoir and motor, shall contain one stationary corrosion resistant ring and one positively driven rotating corrosion resistant ring. Each interface shall be held in contact by its own spring system. The seals shall require neither maintenance nor adjustment, but shall be easily inspected and replaceable.

The following seal types shall not be considered acceptable nor equal to the dual independent seal specified.

- Seals with steels, carbon, or silicon carbide seal rings.
- Seals utilizing bellows type springs.
- Conventional double mechanical seals containing either a common single- or double-spring acting between the upper and lower units.

Each pump shall be provided with a lubricant chamber for the shaft sealing system. The lubricant chamber shall be designed for lubricant pressure compensation. The lubricant chamber drain and inspection plug, with positive anti-leak seal, shall be easily accessible from the outside.

Seal lubricant shall be FDA Approved, non-toxic.

J. Pump Monitoring: The pump manufacturer shall provide a self-contained pump control and status monitoring system that will supplement the pump control system by providing a single point within the control system for pump sensor output processing. This solid state module shall have inputs for the monitoring of water intrusion into the junction box (float switch), water intrusion into the stator housing (float switch), and stator overtemperature monitoring (thermal switches). Upon the detection of an alarm, the unit shall shut the pump down and annunciate the fault condition. The fault must be cleared before the unit allows pump restart.

2.03 PUMP CONTROLS

A. Pumps shall be controlled in accordance with these Specifications.

PART 3 – EXECUTION

3.01 SERVICES OF MANUFACTURER

A. Pump Test: The pump manufacturer shall perform the following inspections and tests on each pump before shipment from factory:
   1. Propeller, motor rating and electrical connections shall be checked for compliance to the customer's purchase order and the pump data plates.
   2. A motor and cable insulation test for insulation defects shall be made.
   3. Prior to submergence, the pump shall be run dry to establish correct rotation and mechanical integrity.

4. The pump shall be run for 30 minutes submerged.
5. A certified test curve (per HI standards) showing the performance of the pump shall be run and supplied to the ENGINEER upon request.
6. After operational test (4), the insulation test (2) is to be performed again.

The pump cable end shall be sealed with a high quality protective covering to make it impervious to moisture or water seepage prior to electrical installation.

B. Inspection, Startup, and Field Adjustment: The service representative of the Manufacturer shall be present at the Site to furnish the field services.

C. Services of manufacturer shall be in accordance with these Specifications.

D. Manufacturer shall define quantity of trips and days on site necessary to perform the specified services as a part of the manufacturer's scope of supply. Scope of supply shall be inclusive of travel and living expenses.

E. Site Tests: The pump shall be tested at startup. Voltage, current, and other significant parameters shall be measured and recorded. The manufacturer shall provide a formal test procedure and forms for recording data.

F. Upon completion of field services, representative of manufacturer shall prepare and submit a report in accordance with the requirements of these Specifications.

END OF SECTION

DRAFT

SECTION 46 2158 – HEADWORKS SCREEN (HYDRO DYNE)

PART 1 – GENERAL

1.01 SCOPE – Supply all labor, materials, equipment, and incidentals required to install and place into operation the fine and coarse screening system as shown on the Drawings and as specified herein.

1.02 REFERENCE STANDARDS – The properties of all materials, design, fabrication, and performance of the equipment to be furnished under this section shall be in accordance with the latest issue of applicable standard specifications. The governing authorities of these standards are listed below.

A. AISC, American Institute of Steel Construction

B. AISI American Iron and Steel Institute

C. ANSI, American National Standards Institute

D. ASCE, American Society of Civil Engineers

E. ASME, American Society of Mechanical Engineers

F. ASTM, American Society of Testing and Materials

G. AWS, American Welding Society

H. IBC, International Building Code

I. IEC, International Electric Code

J. IEEE, Institute of Electrical and Electronics Engineers

K. NEC, National Electrical Code

L. NEMA, National Electrical Manufacturers Association

M. Underwriters Laboratory (UL and cUL)

1.03 SUBMITTALS – Submittals shall be provided to the engineer that includes all the following information:

A. Certified shop drawings showing all important details of construction, dimensions, and anchor bolt locations.

B. Descriptive product literature.

C. Schematic electrical wiring diagram and electrical controls information.

D. Complete motor and drive data.

E. The total weight of the equipment.

F. A complete bill of materials of all equipment.

G. A valid certificate of registration naming manufacturer, and supplier if equipment is relabeled, as ISO 9001:2015 certified.

H. A certificate from an industry recognized, independent testing facility verifying compliance with Screening Capture Ratio requirement.

1.04 QUALIFICATIONS

A. All the equipment specified under this Section shall be supplied by a single manufacturer whose Quality Management System is ISO 9001:2015 certified and applicable to the manufacture of water and wastewater treatment equipment.

DRAFT

B. If equipment is not manufactured by supplier, including welding and machining, the name and contact information of manufacturing facility must be supplied. If more than one manufacturer is used all companies and facilities must be provided.

C. If patents protecting equipment are not owned by supplier, then an affidavit must be supplied stating owner of design and expiration of licensing agreement.

D. All equipment specified under this Section shall comply with Bipartisan Infrastructure Law's (BIL Public Law 117-58) Build America, Buy America (BABA) requirements for manufactured products. As defined in the Law, this requires:

1. The manufactured product was manufactured in the United States, and
2. The cost of the components of the manufactured product that are mined, produced, or manufactured in the United States is greater than 55 percent of the total cost of all components of the manufactured product.

Certifications attesting to compliance will be required prior to approval and shall be included with submittals and upon completion of manufacture.

1.05 DESIGN REQUIREMENTS

A. System Description

1. The fine screen herein specified will be of the center flow type. The flow enters the inside of the continuous belt and exits through both sides and the bottom of the belt.
2. The fine screen will have a continuous stainless steel belt that automatically rotates within the internal guide system of the static frame.
3. The screen shall have undergone performance testing by an industry recognized, independent testing facility. The results of this testing shall verify a Screening Capture Ratio of at least 80% (coarse screen)/ 90% (fine screen) for solids equal to or larger than the screen grid opening listed in System Performance below.
4. The screen will be installed into a widened chamber section of the channel as shown on the contract drawings to accommodate the flow pattern through the screen belt.
5. The solids will collect as a mat on the inside of the continuous belt. The belt will intermittently rotate and elevate the solids to the discharge point. Larger objects will be picked up by a series of hooks and/or trays placed at regular intervals.
6. The solids will be removed at the top of the screen by two spray bar headers positioned on the outside of the belt. The screenings will drop into an internal hopper and be fed to the screening handling system.
7. The continuous belt will be directly driven by drive sprockets that shall support and rotate the grid assembly.
8. The screen will be totally enclosed and have access covers that will be lightweight and easily removable for maintenance. Maintenance, inspection, access and lubrication points shall be no higher than 60 inches above grade level.
9. The Washing Compactor will be positioned next to the screening channels and will be fed by a sluice system.
10. The Washing Compactor will be adequately sized to handle all the screenings and wash water that will be generated by the screen at peak flow. The system will be required to wash the screenings to reduce the organic content and compact the remaining solids into a dry plug.
11. The Washing Compactor will generally comprise of a screw auger rotating within the washing and drainage trough, a wash water system, a compaction zone and an outlet chute arrangement.
12. All stainless steel (including frame, grid and drive components) mentioned below as stainless steel shall be T304 stainless steel. All hardware shall be T316 stainless steel.

DRAFT

B. System Performance – The fine screening system will be designed to meet the following design parameters:

COARSE SCREENS:

Number of screens	2
Peak flow per screen	7.5 MGD
Average flow to screen	3 MGD
Velocity through the grid	max 3.0 ft/s
Screen grid opening	6 mm
Head loss at peak flow	4.7 inches @ 50% blinding and 37 inches downstream water level
Structural design differential of frame/grid	48 inches minimum @ 100% blinding
Drive design differential (operating)	48 inches minimum
Screen grid supporting drive sprockets	2 minimum – all stainless steel
Channel width	18 inches
Channel Recess	36 inches
Channel height	66 inches
Number of Washing Compactors	2
Diameter of screw	8 inches
Minimum diameter of shaft	2.75 inches
Compactor discharge height above grade	48 inches
Screen wash water requirements	29 GPM @ 60 PSI each
Compactor wash water requirements	25 GPM @ 60 PSI each
Sluice wash water requirements	10-20 GPM @ 60 PSI intermittent

FINE SCREENS:

Number of screens	2
Peak flow per screen	7.5 MGD
Average flow to screen	3 MGD
Velocity through the grid	max 3.0 ft/s
Screen grid opening	2 mm
Head loss at peak flow	11.4 inches @ 65% blinding and 34 inches downstream water level
Structural design differential of frame/grid	48 inches minimum @ 100% blinding
Drive design differential (operating)	48 inches minimum
Screen grid supporting drive sprockets	3 minimum – all stainless steel
Channel width	18 inches
Channel Recess	36 inches
Channel height	102 inches
Number of Washing Compactors	2
Diameter of screw	6 inches
Minimum diameter of shaft	2.25 inches
Compactor discharge height above grade	48 inches
Screen wash water requirements	58 GPM @ 60 PSI each
Compactor wash water requirements	25 GPM @ 60 PSI each
Sluice wash water requirements	10-20 GPM @ 60 PSI intermittent

DRAFT

PART 2 – PRODUCTS

2.01 MANUFACTURER

A. The equipment shall be the Center Flow Screen and Washing Compactor as provided by Hydro-Dyne Engineering, Inc., Clearwater, FL or approved equal.

B. If submitted equipment requires arrangement differing from that specified, prepare and submit for review complete structural, mechanical, and electrical drawings and equipment lists showing all necessary changes and embodying all special features of equipment proposed. Any changes are at no additional compensation and the Manufacturer will be responsible for all engineering costs of redesign by the Engineer, if necessary.

2.02 THE CENTER FLOW SCREEN

A. Perforated Plate - The Continuous Screening Belt

1. The Fine screenings belt will consist of panels manufactured from stainless steel plate that shall be punched with perforations of the specified opening. The stainless steel plate shall be reinforced with a stainless steel frame.
2. The Coarse screenings belt will consist of panels manufactured from 3/8” thick UHMWPE with perforations of the specified opening.
3. The perforated panels will be supported by 12 gauge stainless steel vertical mounted lifting hooks horizontally spaced a maximum of 3 inches apart preventing deflection. The lifting hooks shall support the screening grid and bear tension loads across the entire length and width of the screen belt. Grids that do not have stainless steel vertical mounted lifting hooks horizontally spaced a maximum of 3 inches apart across the grid will not be acceptable.
4. The hooks on elements shall form horizontal lifting trays or shelves for removing large solids and rags every 8 inches around the entire screen grid.
5. The perforated panels will be connected by heavy duty stainless steel axles every 8 inches to form a continuous belt that will rotate within the frame’s guide system. The axle design will allow the plates to pivot and create a seal between the perforated panels to prevent the passage of solids.
6. The axles will include Delrin spacers that will maintain the 3 inch space between the vertical support elements. Delrin spacers will also form a seal between each perforated panel with clearance not to exceed 0.5mm.
7. The axles will be extended to fix a UHMWPE guide link to the side of each perforated plate. These guides will interlock to create a continuous guide link system that will slide within the frame.
8. Guide links shall be precision machined from solid virgin UHMWPE. Injection molded links are not acceptable.
9. The heavy duty guide links will be minimum 2 inches thick to protect against undue wear from grit and will be specially machined to form a closure seal between the rotating belt and the static frame.
10. The seal shall be continuous from grade level through the water flow forming an uninterrupted closure between the traveling screen grid and the stationary frame. The seal shall be heavy gauge stainless steel, fixed to the screen frame and be adjustable so it will remain in contact with the rotating screen belt at all times.
11. Screen designs that have gaps and/ or tolerances greater than 0.5mm between the screens grid plates and between the sides of the grid and screen frame, including the chain, are not acceptable.
12. Screen’s sealing materials are to consist of solid, non-flexible materials that will maintain the 0.5mm tolerance for the lifecycle of the screen.
13. Screen designs whose sealing materials will not last the lifecycle of the screen and require replacement by the owner/ operators, are not acceptable.

DRAFT

14. Guide systems that use rollers, stainless or hardened steel chains will not be acceptable.
15. Grid panel sealing systems that require the use of replaceable neoprene seals or stainless steel hinges will not be acceptable.
16. Grid to frame sealing systems that require the use of replaceable adjustable UHMWPE strips attached to the frame will not be acceptable.

B. The Frame

1. The continuous belt will rotate within a heavy duty stainless steel static support frame that shall be a rectangular box construction.
2. The guide link system will travel around a stainless steel guide wear track that is integral to the support frame. Top and bottom wear tracks shall be bolt in and field replaceable.
3. There shall be a removable inspection panel located directly beneath the drive allowing easy access to the grid drive sprockets, drive shaft and screenings collection hopper.
4. The design will ensure that the support frame meshes with the closure seal on each guide link to prevent passage of screening material and grit particles.
5. All components of the lower wear tracks shall be bolt in, field replaceable and manufactured from stainless steel.
6. The frame shall accommodate stainless steel protective covers designed to prevent leakage and contain spray wash. All maintenance and inspection access points shall have hinged and gasketed access covers. Screens with covers requiring neoprene, rubber, or plastic seals are not acceptable.
7. To minimize odors and nuisance, the screen frame shall have flanged connections for odor control.
8. The screen manufacturer will supply stainless steel angled filler plates to connect from the upstream corners of the support frame to the channel walls.

C. The Offloading of Screenings

1. Two stainless steel spray wash headers will be located in the head space of the screen to offload the screenings from the continuous belt.
2. The spray bar will incorporate brass nozzles at 2 inch spaces that can easily be replaced or removed for cleaning.
3. The spray bars will be positioned behind the rotating belt and will backwash the solids into an internal hopper manufactured from stainless steel. The wash water will be used to continuously flush the screenings from the internal hopper into the extended sluice.
4. The addition of a rotating or static brush system to aid offloading will not be acceptable.

D. Screen Drive Mechanism

1. Each screen will have a maximum 0.75 hp (0.56KW, FLA 1.1), inverter duty electric motor suitable for a 460/3/60 supply and rated for a Class 1 Div. 2 environment. As a minimum, the motor will have an IP55 enclosure rating and will conform to NEMA MG-1 requirements. The motor will be located outside of the screen covers and above the top of the channel.
2. The gear reducer shall be directly coupled to a heavy duty shaft machined from solid stainless steel round bar.
3. The drive shaft shall be supported on both ends by grease filled roller bearings. Separate grease-filled self-contained cartridge seals shall be mounted on drive shaft between bearings and frame to eliminate spray wash from entering bearings or gear reducer.
4. The continuous belt will be supported and rotated around heavy duty stainless steel sprockets located on the drive shaft in the head space of the screen.

DRAFT

5. These sprockets will have removable bolted-on lugs that transmit torque directly from the gear reducer to notches on the underside of the UHMWPE guide links. The drive shall be sized so that a minimum of four lugs are engaging guide links at all times. Driving forces shall be transmitted to areas located behind the screen's grid to prevent solids from contacting drive surfaces.
6. Chain driven systems or screens with wheels submerged in the wastewater are not acceptable.
7. Drive systems that use an external track and pinion to drive or push the band against grid weight supporting wear tracks will not be acceptable. Drive shall lift, and be capable of bearing, the full weight of the grid.

2.03 WEIR

A. The manufacturer shall design and supply a stainless steel weir that will be installed by the contractor downstream of the screen.

B. The weir will be designed to maintain a downstream water depth that will increase screen performance during periods of high flow.

C. The weir will be anchored to the sides of the channel with no horizontal supports across the channel to prevent the accumulation of solids.

2.04 THE SCREENINGS TRANSFER SLUICE

A. The manufacturer will design and supply a screenings launder sluice system that will collect screenings and wash water from the discharge hopper of the screen and transfer them into the washing compactors.
1. Collected screenings will transfer through the sluice by means of gravity. Mechanically driven conveyors will not be acceptable.
2. The manufacturer shall supply a solenoid valve that will be plumbed in field into the back plate of the sluice. The contractor will connect to a local plant water supply, and the water supply will provide supplementary transport water.
3. The sluice will be manufactured from stainless steel. It shall comprise of U-shaped lengths of trough that will be flange connected to the desired overall length.
4. A change in direction will be achieved using long swept bends that will prevent blockages from occurring.
5. The sluice system will be designed with a splitter that diverts flow into 1 of 2 compactors. The splitter will be fitted with a manual removable gates to divert into any branch of the sluice
6. The sluice system will include the support leg structure manufactured from stainless steel as needed. The legs will be suitable for anchoring to a concrete floor.
7. Covers will be lightweight, no more than 6 feet long and bolted for easy removal by a single operator.

2.05 THE WASHING COMPACTOR WITH ENHANCED WASHING AND DEWATERING

A. The main body will be the washing trough that will receive screenings and wash water directly from the end of the screenings transfer sluice.

B. The washing trough will house the screw auger and provide a dedicated section to reduce organic content.

C. The stainless steel drainage section will be perforations with 2mm or 5mm openings and be adjustable to maintain auger alignment. This drainage section shall be removable and easily replaceable in the field with no special tools. The flights of the screw may be fitted with a stiff nylon brush that will maintain contact with the drainage section, preventing blockages. The replaceable brushes will be supplied in pre-coiled lengths with stainless steel removable clamps.

DRAFT

D. The underside of the washing trough will be a catch pan chute that will divert the water that passes through the drainage section, back to the influent flow with dual outlet plain end pipe connections. The unconnected pipe side will be capped with a rubber compression cap so that it can be removed and the drain piping can be cleaned if necessary. The catch pan will include a flushing connection point for washing and cleaning.

E. The catch pan will include a separate wash water supply to purge the area of accumulated solids. A single spray nozzle will direct water across the length of the pan toward the outlet. The frequency of cleansing cycles will be controlled through the main control panel.

F. The AR400 hardened steel screw auger will sit in the washing trough. Washing compactors with shaftless screws are not acceptable as a shaft is required to support the flight and provide necessary torque and compaction. Screw auger will be primer coated to inhibit corrosion. Screw augers not made out of AR-400 hardened steel will not be acceptable.

G. The auger will be a varied pitch screw aligned at the compaction end by AR400 hardened steel wear and anti-rotation bars designed to prevent the compacted screening from spinning within the compaction zone.

H. The screw will rotate allowing wash water and free organic/fecal material finer than trough openings to escape and return to the plant flow. The wash water will flush the separated organic material through the drainage section in solution or as small particles.

I. Washing of screenings shall be achieved through an enhanced washing module consisting of the following minimum requirements manufactured out of stainless steel:
   1. Variable pitch flight for separate screening transport through the wash, dewatering and compaction zones.
   2. Washing Module Zone
      a. Flanged connections and a stainless steel orifice plate or nozzle
      b. Hardened steel wear and anti-rotation bars
      c. Separately controlled high pressure washing to sheer and break-up organic and fecal material for return to the channel.
      d. Cleansing cycles moving the auger in forward and reverse direction are controlled through the main control panel and operator adjustable up to 9 cycles
   3. Dewatering and Compaction Zone
      a. Stainless steel header feeding an external rinse shower
      b. Hardened steel wear and anti-rotation bars
      c. Full circumference perforations for dewatering and extrusion of organics and fecal material.
      d. Attached drainage catch pan with a separate wash water supply to purge the area of accumulated solids
      e. Removable covers for inspection access

J. Washing compactors that do not have a separate washing and rinse/dewatering zones will not be accepted.

K. The compacted screenings will be pushed through the compaction zone and pass through an elbow into an outlet chute. The outlet chute will provide for screening expansion and will elevate the dewatered screenings to discharge into a bagging system.

L. The outlet chute will terminate in a flange that will connect directly to a stainless steel discharge long radius elbow that will direct the compacted screenings downward into the screenings collection bag. The elbow will be designed to prevent bridging of solids and will be flanged for accessibility.

M. The outlet of the discharge elbow will be a stainless steel mounting assembly that will

DRAFT

allow a 24” diameter circular screenings collection bag to slide into position.

N. The screenings collection bag will house one 230 feet long continuous bag that will be released under the weight of compacted screenings dropping from the outlet chute.

O. The plastic bag shall be capable of cutting and tying off into operator determined sizes to effectively capture odor and all remaining water in screenings.

P. Each Washing Compactor will have a maximum 3 hp(2.2KW, FLA 3.8), inverter duty electric motor suitable for a 460/3/60 supply and rated for a Class 1 Div. 2 environment. As a minimum, the motor will have an IP55 enclosure rating and will conform to NEMA MG- 1 requirements.

2.06 SPARE PARTS – The manufacturer will supply the following spare parts, per screen supplied, with the equipment:

A. Ten (10) hook links and elements spacers

B. Two (2) grid axles

C. Two (2) guide links

D. Two (2) screen panels

E. One (1) center support link (fine screens only)

F. One (1) brush for each screw

G. Five (5) total screenings collection continuous bags

2.07 ACCESSORIES – The manufacturer will supply the following accessories, with the equipment:

A. Eight (8) 0.75” NEMA 7 brass body solenoid valve

B. Six (6) 1” NEMA 7 brass body solenoid valve

C. Two (2) 2” NEMA 7 brass body solenoid valve

D. Four (4) 2” wash water strainer

E. Eight (8) wash water pressure gauge

F. One (1) lot of anchor bolts.

G. One (1) lot of ball valves

2.08 ELECTRICAL CONTROLS AND ANCILLARY COMPONENTS

A. General Information - The manufacturer will supply two UL listed main control panels and fourteen local control stations that shall automatically control the equipment offered in this section.

B. The Main Control Panel – NEMA 4X stainless steel enclosure for outdoor installation – Each control panel shall consist of the following components for each screening system:

1 Enclosure, NEMA 4X, 304SS, 2-door, floor standing, 3-point latch with lighting fixture with door switch
1 Purge kit, exterior mount, leak compensation type
1 Main disconnect breaker with operating handle
1 480V surge suppressor
1 120V surge suppressor
1 Line filter
1 Control power transformer
1 ABB, ACS580 series VFD, 0.75HP, 480VAC/3Ph with fused protection (Coarse Screen)

DRAFT

1 Schneider, IEC starter, reversing type, 3HP, 480VAC/3Ph with circuit protection (Coarse Screen – WC)
1 ABB, ACS580 series VFD, 1.5HP, 480VAC/3Ph with fused protection (Fine Screen)
1 Schneider, IEC starter, reversing type, 1.5HP, 480VAC/3Ph with circuit protection (Fine Screen – WC)
1 Schneider, IEC starter, non-reversing type, 0.75HP, 480VAC/3Ph with circuit protection (Grit Trap)
1 Schneider, IEC starter, non-reversing type, 0.5HP, 480VAC/3Ph with circuit protection (Grit Classifier)
1 Schneider, IEC starter, non-reversing type, 5HP, 480VAC/3Ph with circuit protection (Grit Pump)
1 Allen Bradley, CompactLogix 1769-L33ER controller with standard I/O modules as required
1 Allen Bradley, PanelView Plus 7 series, 10'' HMI, standard model with window it
1 24VDC power supply
1 Unmanaged ethernet switch, 8-ports (10/100Mbps)
7 Hour meter
2 IS Barrier – Analog Signal
1 IS relay – 4 channels
1 Ethernet surge suppressor
1 APC, SMT1500C UPS, 120VAC with UPS maintenance bypass switch
1 Heater with thermostat
1 Vortex A/C enclosure cooler, hazardous location, 2500BTU
1 Ground bar
LOT of signal surge suppressors LOT of timer relays LOT of pilot lights as required
LOT of control relays, terminal blocks, fuse blocks, wire duct, supplementary circuit protection, UL label as required

C. Ancillary Control Components -
1. Float switch
2. Ultrasonic differential level system consisting of the following per screen:
   a. NEMA 4X enclosure with viewing window
   b. Milltronics Hydro-Ranger LT500 controller with real-time 4-20 mA output
   c. Two (2) NEMA 4X/7 transducers
3. Local Control Station – NEMA 7 - Each local station panel shall consist of the following components:
   a. NEMA 7 enclosure
   b. Hand/Off/Auto switch for each motor
   c. Forward/Off/Reverse switch for compactor motor
   d. Emergency stop
4. Sluice level limit switches

2.09 SURFACE PREPARATION AND PAINTING

A. The majority of stainless steel materials, flanges and piping shall be pickled by means of a four tank system that is in accordance with ASTMs A380. This process is for quality control, removal of heat affected discoloration, surface treatment for corrosive environments and to provide a uniform finish to stainless steel surfaces. Stainless steel components must be fully submerged in the tanks for complete coverage. Electro-chemical wanding is acceptable on weld finishes that cannot be submerged due to size. Sandblasting, pickling pastes and abrasive cleaners will not be accepted as forms of metal finishing. The drive and grid components do not require pickling.

DRAFT

Tank 1 – Detergent bath for the removal of soils, greases, oils, and dirt
Tank 2 – Rinsing process to remove detergent and residual soils
Tank 3 – Two part acid solution for the removal of tightly adhere oxide films
Tank 4 – Final rinse process to remove all residual acid

The four-tank pickling process must be conducted in-house at the manufacturer's own ISO 9001 certified manufacturing facility. Any screening equipment providers who are unable to perform this process in-house are not acceptable.

B. All ferrous surfaces (except stainless steel) shall be coated with a pre-primer, primer, and an exterior top coating, or fusion bonded polyester coating suitable for humid/wet environments for superior corrosion protection.

C. Motor(s) and gearbox(s) shall be surface prepared to withstand humid/wet environments for superior corrosion protection.

PART 3 – EXECUTION

3.01 WARRANTY - The Manufacturer of the equipment supplied under this specification shall provide a warranty for a period of 2 years commencing on startup and /or acceptance by the Owner but no later than 90 days from the date of shipment by the Manufacturer. The Manufacturer shall guarantee that the equipment furnished is suitable for the purpose intended and free from defects in design, materials, and workmanship. In the event that the equipment fails to perform as specified the Manufacturer shall, at his option, promptly repair, modify, or replace the defective equipment.

3.02 FACTORY TESTING

A. The screening system and all components shall be factory assembled. Equipment is tested for a minimum of 4 hours prior to shipment. The equipment shall be shipped fully assembled and shall be capable of being set in place and field erected by the Contractor with minimal field assembly.

B. During the factory test period the screening system shall be adjusted as required assuring proper operation on completion of the field installation. The Manufacturer shall supply a certification of the completion of the factory testing of the assembled screening system and appurtenances and shall certify as to the equipment being in satisfactory operating condition at time of shipment. The Engineer and/or Owner may, at their own option and expense, witness the factory test.

C.

3.03 DELIVERY AND STORAGE

A. The screening system shall be appropriately crated and delivered to protect against damage during shipment.

B. An authorized representative of the Contractor shall inspect the screens on delivery to the jobsite and shall report any damage or missing components to the Manufacturer and the Engineer within 72 hours of receipt of the shipment.

3.04 INSTALLATION **-** The installation of the equipment shall be as indicated on the drawings and in strict accordance with the Manufacturer's instructions and recommendations.

3.05 FIELD TESTS, ADJUSTMENTS AND COMMISSIONING

A. The equipment shall be shipped completely factory assembled. Contractor shall verify all access dimensions, channel dimensions, and any interior building dimensions to ensure equipment may be installed as factory assembled units.

B. After completion of the installation, the equipment shall be inspected and certified by an

DRAFT

authorized representative of the Manufacturer as complying with the Manufacturer's recommendations and requirements. At such time as the Manufacturer has deemed the installation to be acceptable, the Manufacturer's authorized service representative shall make any required adjustments and shall start the equipment to ensure proper operation.

C. The Manufacturer's authorized representative shall provide instruction to the plant personnel as to the operation and maintenance of the equipment including commissioning, shut down, on-line operations, lubrication, and preventative maintenance.

D. Manufacturer shall state field service rates for a Service Engineer to Owner and Contractor. In the event that the field service time required by this section should not be sufficient to properly place the equipment into operation, and the requirement for additional time is beyond the manufacturer's responsibility, additional time shall be purchased by Contractor to correct deficiencies in installation, equipment, or material without additional cost to Owner.

E. The Contractor shall include in his bid, the cost of the above referenced authorized service representative for a minimum of three (3) trips totaling five (5) eight hour days onsite to complete the certifications and training described in this specification section.

END OF SECTION

DRAFT

SECTION 46 2316 – VORTEX GRIT REMOVAL AND HANDLING SYSTEM (PUMP)

PART 1 – GENERAL

1.01 SCOPE – Supply all labor, materials, equipment, and incidentals required to install and place into operation the grit system as shown on the Drawings and as specified herein.

1.02 REFERENCE STANDARDS – The properties of all materials, design, fabrication, and performance of the equipment to be furnished under this section shall be in accordance with the latest issue of applicable standard specifications. The governing authorities of these standards are listed below.

A. AISC - American Institute of Steel Construction

B. AISI - American Iron and Steel Institute

C. ANSI - American National Standards Institute

D. ASCE - American Society of Civil Engineers

E. ASME - American Society of Mechanical Engineers

F. ASTM - American Society of Testing and Materials

G. AWS - American Welding Society

H. IBC - International Building Code

I. IEC - International Electric Code

J. IEEE - Institute of Electrical and Electronics Engineers

K. NEC - National Electrical Code

L. NEMA - National Electrical Manufacturers Association

M. Underwriters Laboratory (UL and cUL)

1.03 SUBMITTALS **–** Submittals shall be provided to the engineer that includes all the following information:

A. Certified shop drawings showing all important details of construction, dimensions and anchor bolt locations.

B. Descriptive product literature.

C. Schematic electrical wiring diagram and electrical controls information.

D. Complete motor and drive data.

E. The total weight of the equipment.

F. A complete bill of materials of all equipment.

G. A valid certificate of registration naming manufacturer, and supplier if equipment is relabeled, as ISO 9001:2015 certified.

1.04 QUALIFICATIONS

A. All the equipment specified under this Section shall be supplied by a single manufacturer whose Quality Management System is ISO 9001:2015 certified and applicable to the manufacture of water and wastewater treatment equipment.

B. If equipment is not manufactured by supplier, including welding and machining, the name and contact information of manufacturing facility must be supplied. If more than one manufacturer is used all companies and facilities must be provided.

DRAFT

C. If patents protecting equipment are not owned by supplier then an affidavit must be supplied stating owner of design and expiration of licensing agreement.

1.05 DESIGN REQUIREMENTS – VORTEX COLLECTOR

A. System Description

1. The Grit Trap will be a “vortex” style system designed to operate continuously.
2. The internal rotating mechanism will be installed into the circular concrete chamber as shown on the contract drawings. The chamber will consist of an upper separation chamber and a lower collection hopper.
3. The wastewater flow will enter the chamber tangentially, flow around the upper separation chamber and exit via an outlet channel running parallel to the inlet.
4. The grit solids will fall through the upper separation chamber to settle in the lower collection hopper. The transfer grit pump will regularly cycle and transport the grit particles to the de-watering Grit Classifier.
5. Consistent performance of the grit chamber throughout the flow ranges will be maintained by the motor driven impeller that continuously rotates within the upper separation chamber. The device will provide the ideal conditions to enhance grit settlement and maximize the ejection of light organic solids from the chamber.
6. The floor of the upper separation chamber must be sloped as shown on the contract drawings to prevent grit accumulation and allow the grit to fall be gravity into the collection hopper.
7. All stainless steel (including drive tube and impeller) mentioned below as stainless steel shall be T304 stainless steel. All hardware shall be T316 stainless steel.

B. System Performance

1. The Grit Trap will be designed to meet the following grit removal performance guarantee at all flows up to and including the peak flow. Grit is defined as silica sand; specific gravity = 2.65 g/cc:

a. Grit greater than 50 mesh/297 micron	95%
b. Grit greater than 60 mesh	90%
c. Grit greater than 70 mesh/210 micron but not less than 50 mesh	85%
d. Grit greater than 100 mesh/149 micron but not less than 70 mesh	65%

2. The Grit Trap model will be selected to meet the following design parameters:

a. Number of chambers required	1
b. Peak flow per chamber	7.5 MGD
c. Maximum allowable head loss at peak flow	1 inches
d. Average flow	3 MGD
e. Grit fluidizing water requirements	20gpm @ 40PSI

1.06 DESIGN REQUIREMENTS – GRIT PUMP

A. System Description

1. The manufacturer shall supply a grit pump to transfer the grit and liquid from the collection hopper to the grit screw classifier system.
2. The grit pump shall be mounted as shown on the contract drawings.
3. The CONTRACTOR shall supply the 4-inch pipe from the top of the suction pipe to the grit pump inlet and the grit pump outlet to the grit screw classifier.
4. System Performance – The grit pump will fully comply with the following criteria:

a. Number of grit pumps	1
b. Maximum pump capacity	250 GPM
c. Minimum Motor HP rating	5 hp
d. Inlet connection	4 inches

DRAFT

e. Outlet connection 4 inches

1.07 DESIGN REQUIREMENTS – GRIT CLASSIFIER SYSTEM

A. System Description

1. The Grit Classifier system will be adequately sized to receive and process a mixture of grit and liquid regularly pumped at the maximum specified rate from the vortex grit chamber.
2. A cyclone mounted on top of the Grit Classifier will provide initial dewatering. The excess liquid will be immediately returned to the main flow.
3. The partially dewatered grit will be deposited into the main body of the Grit Classifier. The heavy grit will settle in the collection hopper while the excess liquid will overflow an internal weir and be returned to the main flow.
4. The grit will be elevated by a rotating screw to a discharge point above the internal water level. By this time the grit material will be free of any free-standing liquid.
5. All stainless steel (including Grit Classifier and grit cyclone) mentioned below as stainless steel shall be T304 stainless steel. All hardware shall be T316 stainless steel.

B. System Performance – The Grit Classifier system will fully comply with the following criteria:

1.	Number of cyclones	1
2.	Maximum capacity of cyclone:	250 GPM
3.	Inlet flanged spool piece connection	4 inches
4.	Overflow flanged spool piece connection	6 inches
5.	Apex	2 inches
6.	Maximum underflow to screw classifier	30 GPM Maximum
7.	Number of screw classifiers	1
8.	Maximum capacity of screw classifier	30 GPM
9.	Diameter of screw	12 inches
10.	Diameter of screw shaft	3 inches
11.	Minimum length of screw	8 feet
12.	Speed of screw	12 RPM
13.	Motor Size	1/2 HP

PART 2 – PRODUCTS

2.01 MANUFACTURER

A. The equipment shall be the Grit Trap and the Grit Classifier as provided by Hydro-Dyne Engineering, Inc., Clearwater, FL. The grit pump shall be the Gorman Rupp T4A. Other than the named supplier, all manufacturers proposing equipment described herein, will provide a detailed submittal package, which will consist, at a minimum, of all information and details prescribed in section 2.2, including BABA compliance, of this specification. All pre-qualification submittals will be submitted to the ENGINEER at least 15 days prior to the bid date.

B. If submitted equipment requires arrangement differing from that specified, prepare, and submit for review complete structural, mechanical, and electrical drawings and equipment lists showing all necessary changes and embodying all special features of equipment proposed. Any changes are at no additional compensation and the Manufacturer will be responsible for all engineering costs of redesign by the ENGINEER, if necessary.

DRAFT

2.02 THE VORTEX GRIT TRAP

A. General

1. The internal mechanism of the Grit Trap will consist of a gear motor, a drive head, a drive tube, and a rotating impeller.
2. The grit chamber shall be a concrete structure provided by the CONTRACTOR that must have inlet and outlet channels as shown on the drawings.

B. The Drive Head Assembly

1. The drive head will be a composite unit consisting of a heavy duty steel base and cover. The base section will support a nominal 20-inch turntable bearing that has a minimum B-10 life of 20 years. The CONTRACTOR will be responsible for correctly mounting the drive head on the bridge.
2. The drive tube will be rotated at a nominal 15 RPM by a heavy duty spur tooth bull gear wheel securely bolted to the turntable bearing. This bull gear wheel will be driven by a steel drive pinion mounted on the output shaft of the helical gear motor. The pinion and the bull gear will have a service factor of 5.0 or greater at standard operating speeds.
3. The helical gear motor will be directly shaft mounted to the bull gear wheel. Each drive head will have a single 3/4 hp (0.56KW, FLA 1.1), continuous duty electric motor suitable for a 460/3/60 supply and rated for a Class 1 Div.2 environment. As a minimum, the motor will have an IP55 enclosure rating and will conform to NEMA MG-1 requirements.
4. The whole drive head assembly will be suitable for continuous operation.

C. The Rotating Mechanism

1. The drive tube will be 10-inch diameter pipe that will run down the center of the grit chamber. The drive tube will pass through an opening in bull gear wheel and terminate inside the drive head as an open pipe. This will allow passage for the suction pipe assembly detailed in 2.3 B1.
2. The impeller will be attached to the drive tube by means of a two piece collar. The impeller shall have four equally spaced blades fixed to a base plate. As the impeller rotates each blade will pass within 6 inches from the top of the collection hopper. The impeller blades will be set at 5 to 20 degrees to the vertical. The profile of the impeller blades will be designed to maximize grit capture and eject floating solids out of the chamber. The impeller will rotate at a nominal 15 RPM in the direction to the wastewater flow.
3. The rotating mechanism will be manufactured from stainless steel.

2.03 THE GRIT PUMP – TOP MOUNTED

A. General

1. The grit pump shall be supplied on a factory built fabricated steel base suitable for mounting as shown on the contract drawings.

B. The Internal Suction Pipe for Top Mounted Grit Pump

1. The grit pump suction arrangement will consist of a 4-inch diameter suction pipe and a parallel 1.5-inch fluidizing pipe that will run down the inside of the drive tube to within 4 inches off the bottom of the grit collection hopper floor. Both pipes will terminate immediately above the drive head. The manufacturer will supply a 1.0 inch solenoid valve and two manual PVC isolation valves that the CONTRACTOR will install at a convenient place in the fluidizing pipe above the drive head. The CONTRACTOR will bring and connect an air or water supply to the 1.5 inch pipe that will provide agitation of the grit before each pumping cycle.
2. The grit pump suction assembly will be manufactured from stainless steel.

DRAFT

3. The CONTRACTOR will connect the fluidizing pipe to a water supply that will deliver a minimum pressure of 40 psig at the suction point. This will provide a blast of water that will agitate the grit prior to each pumping cycle.
4. The manufacturer will control the solenoid valve and hence the fluidizing cycle through the control panel.
5. The CONTRACTOR will supply the pipe to the flanged connection of the center mounted 4-inch suction pipe that terminates above the drive head to the inlet of the grit pump.
6. The CONTRACTOR shall provide the 4-inch pipe from the outlet of the grit pump to the dewatering screw classifier.
7. The grit pump shall be designed to handle the passage of a 3-inch spherical solid.

C. Grit Pump Design

1. The foot supported pump casing will be designed to retain sufficient liquid for automatic re-priming between pumping cycles. It will allow a horizontal centerline suction and vertical discharge arrangement and incorporate a fill port with safety lock bar and Teflon gasket. A drain hole will be provided for connection to the drain kit. The kit shall contain 10' length of reinforced plastic hose with a female quick connect fitting at one end, and factory installed drain fittings in each pump. Fittings include a stainless steel pipe nipple, stainless steel bushing, stainless steel ball valve and aluminum male quick connect fitting.
2. A separate capped threaded port will be provided if a casing heater is required. If required thermostat control will be provided the main control panel.
3. The cover plate will be supplied with a removable wear liner. It will be sealed to the pump casing by two Buna-N O-rings. The cover plate also has a pressure relief valve to open at 75 PSI fitted with a handle pusher bolt capability.
4. The two vane impeller will be a semi-open, non-clog design that has integral pump-out vanes on the back shroud. The impeller will be threaded on to the pump shaft and secured with a lock screw.
5. The shaft bearings will be anti-friction ball or tapered roller type that will withstand loads associated with normal operation. A mechanical cartridge seal will seal the pump shaft against leakage. This seal will be double floating to prevent misalignment that might arise from vibration, deflection, or general movement.
6. Separate oil filled cavities, vented to the atmosphere will be provided for the shaft seal and bearings. The cavities will be cooled by the pumped liquid. The bearing and seal cavities will have an oil level sight gauge and fill plug with vent. The oil will be prevented from leaking by a three lip seal arrangement.

D. Grit Pump Drive Motor

1. The motor will 5 hp (3.7KW, FLA 6.5), minimum continuous duty electric motor suitable for a 460/3/60 supply and rated for a Class 1 Div.2 environment. As a minimum, the motor will have an IP55 enclosure rating and will conform to NEMA MG-1 requirements.
2. The V-belt transmission will transfer the power from the motor to the pump. The V-belt will have two belts and safety factor of 1.5. The drive transmission will be supplied with removable guards with openings less than ½ an inch.

E. Grit Pump Construction

1. The materials of construction will be as follows:
   a. Casing – Gray Iron No. 30
   b. Suction flap – molded neoprene with steel reinforcement.
   c. Cover plate – Iron 30 with replaceable wear plate
   d. Impeller – Cast ADI (Austempered Ductile Iron) with minimum Brinell hardness of 400.

DRAFT

e. Pump shaft – Alloy steel No. 4150
f. Shaft sleeve – Alloy steel No. 4130
g. Mechanical seal mating faces – Silicon Carbide
h. Replaceable seal plate.

2.04 THE GRIT CLASSIFIER SYSTEM

A. The Grit Cyclone

1. The grit pump will pump the grit mixture directly to a flanged inlet connection situated on the side of the cyclone through a 4-inch delivery pipe, supplied by the CONTRACTOR. The cyclone will be mounted on a support placed over the inlet hopper of the Grit Classifier.
2. The cyclone will be capable of receiving and processing pumped flow up to the maximum capacity per section 1.07.B.2. The excess water will be separated and returned to the main flow via a vortex finder and through a 6-inch flanged outlet connection situated on the top of the cyclone inlet head. The CONTRACTOR will supply and install the return pipe with siphon break. The remaining concentrated grit mixture will be removed and directed via the cone and apex into Grit Classifiers inlet hopper. The apex will have a fixed neoprene rubber liner and include quick release toggle clamps.
3. The cyclone will be designed to remove at least 98% of grit entering the feed inlet that is larger than 100 micron and having a specific gravity of 2.65 or greater.
4. The cyclone will work on the constant centrifugal principle and have no moving parts. Pressure must be maintained above 5 psi.
5. The cyclone casing will be fabricated from carbon steel plate sections. All sections shall be constructed with replaceable neoprene rubber liners.
6. The inlet adapter will include a 1.25” pressure gauge connection and the manufacturer shall supply a pressure gauge assembly complete with protective diaphragm, 0-30 PSI dial.
7. Cyclones must be painted with one coat gray Primer, 2-3 mils nominal dry film thickness. Finish Coat will be one part enamel, color blue, 2-3 mils nominal dry film thickness.

B. The Grit Classifier

1. The partially de-watered grit mixture will fall by gravity from the underside of the cyclone into the main body of the Grit Classifier. The main body is comprised of an inlet hopper and a screw trough that will be manufactured from stainless steel plate.
2. The inlet hopper will have sloping side walls and a minimum pool area of 6 ft^2. The design will guarantee retention of 95% of 100-micron grit particles (silica sand with specific gravity of 2.65) at the maximum inflow without added internal baffle plates.
3. The grit particles will settle on the bottom of the inlet hopper. The excess liquid will spill over an internal weir within the inlet hopper and be returned to the sewage flow. The manufacturer will terminate with a flanged 4-inch pipe connection within 12 inches of the main body of the Grit Classifier.
4. The retained grit particles will be elevated from the inlet hopper by a rotating screw that runs the full length of the Grit Classifier. The full pitch screw will be installed at a nominal 16 degree angle to the horizontal.
5. The screw assembly will move the grit particles from the submerged inlet hopper to the “drying zone” section of the screw trough. The length of the “drying zone” must be no less than 2 feet to ensure adequate de-watering. The dry grit will discharge from an outlet at the end of the screw trough and be directed into the dumpster (supplied by others).

DRAFT

6. The screw assembly will be supported within the main body by a top and bottom bearing arrangement specially designed to avoid premature wear by abrasive grit particles. The bearing arrangement must support the entire length of the screw and maintain a ½-inch nominal clearance between the screw flights and the full length of the Grit Classifier main body. This will allow a permanent grit layer to accumulate and act as a natural wear liner protection.
7. The bottom bearing shall be mounted externally to the main body of the classifier. A 2" full port drain and flush valve will be mounted below the bottom drive shaft bearing on the main body of the classifier.
8. The bottom drive shaft bearing shall be mounted to the main body of the classifier and will consist of a (4) bolt flanged housing that is accessed externally to the hopper.
9. The entire Screw Classifier will be provided complete with the support legs suitable for mounting directly to the concrete floor.
10. The manufacturer shall provide lightweight minimum 16 gauge stainless steel covers that are easily removed for maintenance and totally enclose the Grit Classifier.
11. The motor shall be 1/2 hp (0.37KW, FLA 0.81), continuous duty electric motor suitable for a 460/3/60 supply and rated for a Class 1 Div.2 environment. As a minimum, the motor will have an IP55 enclosure rating and will conform to NEMA MG-1 requirements.

2.05 THE CONTROL PANEL

A. The manufacturer will supply two (2) UL-listed main control panels and fourteen local control stations that shall automatically control the coarse and fine screen equipment and the grit system in this section. Details are included in the screening specification.

B. Sequence of operation and control:
1. The Grit Trap will run continuously.
2. The grit pump can be controlled manually but will normally operate automatically in timed on/off adjustable cycles as selected.
3. In automatic mode the grit pump cycle will be initiated by a 24 hour time clock.
4. The grit agitation cycle will start (0-5 minutes) and then stops.
5. The grit pump and screw classifier will then start immediately (0-10 minutes).
6. The signal is received to stop and the grit pump stops immediately.
7. The Screw Classifier initiates a run on cycle (0-5 minutes) and then stops.
8. End of cycle.

2.06 SURFACE PREPARATION AND PAINTING

A. The majority of stainless steel materials, flanges and piping shall be pickled by means of a four tank system that is in accordance with ASTMs A380. This process is for quality control, removal of heat affected discoloration, surface treatment for corrosive environments and to provide a uniform finish to the stainless steel surfaces. Stainless steel components must be fully submerged in the tanks for complete coverage. Electro-chemical wanding is acceptable on weld finishes that cannot be submerged due to size. Sandblasting, pickling pastes and abrasive cleaners will not be accepted as forms of metal finishing.

Tank 1 – Detergent bath for the removal of soils, greases, oils, and dirt
Tank 2 – Rinsing process to remove detergent and residual soils
Tank 3 – Two part acid solution for the removal of tightly adhere oxide films
Tank 4 – Final rinse process to remove all residual acid

B. All ferrous surfaces (except stainless steel) shall be coated with a pre-primer, primer, and an exterior top coating, or fusion bonded polyester coating suitable for humid/wet environments for superior corrosion protection.

DRAFT

C. Motor(s) and gearbox(s) shall be surface prepared to withstand humid/wet environments for superior corrosion protection.

2.07 SPARE PARTS – The manufacturer will supply the following spare parts:

A. One (1) rotating assembly O-Ring(s)

B. One (1) set of impeller clearance adjustment spacers

C. One (1) set of spare V-belts

2.08 ACCESSORIES **–** The manufacturer will supply the following accessories with the equipment:

A. One (1) 1” explosion proof brass body solenoid valve (GT Fluidizing)

B. Two (2) 1” manual isolation valve (GT Fluidizing)

C. Bagger system on Grit Classifier

D. One (1) lot of anchor bolts.

PART 3 – EXECUTION

3.01 WARRANTY – The Manufacturer of the equipment supplied under this specification shall provide a warranty for a period of twenty-four months commencing on acceptance and/or beneficial occupancy by the OWNER but no later than 90 days from the date of shipment by the Manufacturer. The Manufacturer shall guarantee that the equipment furnished is suitable for the purpose intended and free from defects in design, materials, and workmanship. In the event that the equipment fails to perform as specified the Manufacturer shall, at his option, promptly repair, modify, or replace the defective equipment.

3.02 FACTORY TESTING

A. The grit removal system and all components shall be factory assembled and operationally tested prior to shipment. The equipment shall be shipped fully assembled and shall be capable of being set in place and field erected by the CONTRACTOR with minimal field assembly.

B. During the factory test period the grit removal system shall be adjusted as required assuring proper operation on completion of the field installation. The Manufacturer shall supply a certification of the completion of the factory testing of the assembled system and appurtenances and shall certify as to the equipment being in satisfactory operating condition at time of shipment. The ENGINEER and/or OWNER may, at their own option and expense, witness the factory test.

3.03 DELIVERY AND STORAGE

A. The grit removal system shall be appropriately crated and delivered to protect against damage during shipment.

B. An authorized representative of the CONTRACTOR shall inspect the equipment on delivery to the jobsite and shall report any damage or missing components to the Manufacturer and the ENGINEER within 72 hours of receipt of the shipment.

3.04 INSTALLATION – The installation of the grit removal system shall be as indicated on the drawings and in strict accordance with the Manufacturer’s instructions and recommendations.

DRAFT

3.05 FIELD TESTS, ADJUSTMENTS AND COMMISSIONING

A. The equipment shall be shipped completely factory assembled. CONTRACTOR shall verify all access dimensions, channel dimensions, and any interior building dimensions to ensure equipment may be installed as a factory assembled units.

B. After completion of the installation, the equipment shall be inspected and certified by an authorized representative of the Manufacturer as complying with the Manufacturer's recommendations and requirements. At such time as the Manufacturer has deemed the installation to be acceptable, the Manufacturer's authorized service representative shall make any required adjustments and shall start the equipment to assure proper operation.

C. The Manufacturer's authorized representative shall provide instruction to the plant personnel as to the operation and maintenance of the equipment including commissioning, shut down, on-line operations, lubrication, and preventative maintenance.

D. Manufacturer shall state field service rates for a Service ENGINEER to OWNER and CONTRACTOR. In the event that the field service time required by this section should not be sufficient to properly place the equipment into operation, and the requirement for additional time is beyond the manufacturer's responsibility, additional time shall be purchased by CONTRACTOR to correct deficiencies in installation, equipment, or material without additional cost to OWNER.

E. The CONTRACTOR shall include in his bid, the cost of the above referenced authorized service representative. See screen specification for trip and days supplied.

END OF SECTION

DRAFT

SECTION 46 3323 – POLYMER BLENDING AND FEED EQUIPMENT

PART 1 – GENERAL

1.01 SUMMARY

A. Furnish one (1) polymer blending system with progressive cavity pump, motors, and controls, including all integral piping, valves, fitting, pipe supports, special equipment and appurtenances in accordance with these specifications, including all incidental work necessary to make it complete, satisfactory, and ready for operation.

B. The polymer dilution and feed system shall be capable of effectively activating and fully blending with water a homogenous polymer solution ranging from 0.1% to 1% concentration of emulsion polymers with active contents up to 75%.

1.02 SYSTEM DESCRIPTION

A. DESIGN CRITERIA
1. Polymer Type: Emulsion
2. Polymer Activity (percent active): 30 to 75
3. Solution Concentration Range: 0.1% to 1%

Neat Polymer Flow Range (GPH)	Dilution Water Range (GPH)
0.5 - 5	5 - 20

1.03 SUBMITTALS

A. Product Data:
1. Submit data completely describing product, including detailed scope of supply, detailed bill of materials and annotated specification sheets of all components.

B. Shop Drawings:
1. Submit detailed specifications and shop drawings with both shaded isometric and orthogonal views of the proposed system, including dimensions and weights.
2. Submit wiring, control schematics, and control logic diagrams for all electrical and control components furnished.

C. Provide detailed Operations and Maintenance Manuals including storage, installation start-up and operating instructions. Provide safety precautions and warnings of all hazards operating equipment.

1.04 QUALITY ASSURANCE

A. Prior to shipment the system shall be inspected for quality of construction verifying all fasteners and fittings are tight, all wires are secure and connections whisker-free. The system shall be tested under pressure for a minimum of one hour at 100 psi. If leaks are found they shall be fixed and a new test shall be conducted for one hour at 100 psi until the plumbing system is verified to be leak free.

1.05 DELIVERY & STORAGE

A. The equipment will be shipped in a new, high quality completely enclosed weather proof wooden crate constructed of 2” x 4” studs and 3/8”-thick plywood. Access to the crate shall be by a front panel removable by lag bolts. A skid shall be constructed of 4” x 4” or two 2” x 4” each, allowing fork-lifting. The crate shall include a shock sensor to warn of equipment mishandling during shipment.

DRAFT

1.06 WARRANTY

A. The system shall be covered by a one- (1) year limited warranty against defects in materials and workmanship.

1.07 SPARE PARTS

A. One (1) polymer injection check valve

PART 2 – PRODUCTS

2.01 MANUFACTURERS

A. Acceptable Manufacturers:
   1. FKC Co., Ltd., or ENGINEER-approved equal

2.02 IDENTIFICATION

A. Provide a name plate securely affixed to the unit providing Manufacturer with phone number, model number, serial number.

2.03 MATERIALS

A. The following material requirements will be strictly adhered to:
   1. System skid: 304 stainless steel
   2. Hardware: Type 18-8 stainless steel
   3. Piping & pipe fittings: schedule 80 PVC
   4. Tubing and tube fittings: polyethylene, polypropylene, stainless steel, and Viton
   5. Water solenoid valve: brass
   6. Pressure gauges: stainless steel, liquid filled
   7. Pressure switches: NEMA 4, brass connection
   8. Flow meter: acrylic, stainless steel, PVC and or polypropylene
   9. Water control valve: stainless steel with stainless steel seat
   10. Mixing chamber body / flanges: PVC
   11. Mixing chamber cover / chamber: clear polycarbonate
   12. Impeller: 304 stainless steel
   13. Impeller shaft seal: Viton, stainless steel, ceramic, carbon
   14. Mixing chamber pressure relief valve: brass, stainless steel, or PVC
   15. Metering pump wetted parts: stainless steel & Viton
   16. Seals: Viton, ceramic, Teflon, and or carbon
   17. Control enclosure: FRP

2.04 EQUIPMENT

A. Polymer Activation & Blending Chamber:
   1. These specifications are based on a multi-stage, multi-zone, Hydro-Mechanical polymer activation & blending technology. Alternate technologies will only be considered if proven to provide an equal level of performance, versatility, reliability, and quality, otherwise the following technology will be provided without exception.
   2. In order to provide control and versatility to optimize the performance of the wide range of polymers available and to optimize system reliability, a multi-stage Hydro-Mechanical polymer blending technology shall be provided with both a non-mechanical and mechanical mixing stage:
      a. Non-Mechanical Stage: To optimize reliability, the device shall be capable of activating and blending polymer based on plant water pressure alone at 30 psid or greater. Polymer shall be injected directly into a water jet by means of an injection quill positioned such that the non-mechanical mixing energy is no way diminished prior to polymer and water contact. The non-mechanical zone shall be designed

DRAFT

such that the velocity of the mixing energy- producing water jet is maintained or increases as flow decreases.

b. Hydro-Mechanical mixing Stage: In order to provide optimal polymer performance under all operating conditions and to provide total control over mixing energy, in addition to the non-mechanical mixing stage the device shall be capable of producing its mixing energy independent of plant water pressure through a variable intensity, controllable stainless steel hydro-mechanical mixer. The mixing impeller shall be fully controllable and capable of inducing ultra-high, non-damaging mixing energy at all flow rates. This shall be accomplished by controlling mixing intensity and preventing over exposure to, or damaging recirculation through the impeller. The polymer mixing impeller shall be designed to produce both axial and radial flow to optimize mixing effectiveness and to effectively inducing high, non-damaging mixing energy over the systems full flow range.

c. Mixers that rely solely on plant water pressure and or flow for mixing energy will not be acceptable. Mixers where performance is affected by flow rate and therefore retention time resulting in under or over exposure to mixing energy, or which rely on constant speed impellers or that rely on close tolerances for blending shall not be acceptable.

3. In order to prevent polymer build-up, the mixing chamber shall maintain high velocity in the entire chamber - at no time shall there be low velocity within any portion of the mixing chamber.
4. The mixing impeller shall be controlled by VFD motor controller and driven by a wash-down duty AC motor. The motor shall be mounted horizontally. Motors mounted under the mixing chamber where seal failure or leaks can damage the motor shall not be acceptable.
5. The mixer drive shaft shall be sealed by a mechanical seal which shall have an integrally mounted and factory plumbed seal flush. A drain port behind the seal shall be provided in the mixing chamber to drain the polymer solution in case of a seal failure. The seal shall be easily accessible for replacement. All bearings shall be external from the mixing chamber. Internal bearings shall not be acceptable.
6. Both mechanical and non-mechanical mixing zones shall be clear polycarbonate to view the mixing action and blending effectiveness. Acrylic chambers prone to becoming brittle over time and cracking, or opaque pipe shall not be acceptable to meet this requirement.
7. The mixing chamber shall have a maximum rated pressure of 100 psi. Provide a pressure relief on the mixing chamber factory set at 75 psi.
8. Provide a neat polymer check valve specifically designed to isolate neat polymer from dilution water.

B. Dilution Water Assembly:

1. The dilution water flow rate shall be monitored by a Rotameter type flow meter having the range as specified under paragraph 1.02 above. Unions or flanges shall be provided on the flow meter to allow easy removal for cleaning.
2. The unit shall have an electric solenoid valve for on/off control of total dilution water flow.
3. A differential pressure type low water differential pressure alarm shall be provided. The switch shall be adjustable between 25 and 100 psid. Proof pressure shall be 500 psi minimum. The pressure switch shall be as manufactured by Ashcroft.
4. Provide a 2-1/2” stainless steel liquid filled pressure gauge to monitor dilution water inlet pressure.

DRAFT

C. Progressive Cavity Neat Polymer Metering Pump
   1. The unit shall have one (1) neat polymer metering pump(s) integrally mounted on the systems skid. The metering pump(s) shall have a range as specified under paragraph 1.02 above. The pump shall be a positive displacement, progressive cavity type constructed of stainless steel and Viton. The shaft seal shall be mechanical seals, packing type shall not be used. A 240 VAC wash-down duty motor shall drive the pump. DC motor are not acceptable. A gear reducer shall be provided to produce a maximum pump shaft speed of not more than 545 RPM. The motor shall be controlled by an VFD located in the system control panel.
   2. Provide a calibration column with two full port PVC ball valves having Viton O-rings. The column shall be calibrated for a one minute draw-down and read in GPH and milliliters. The calibration column shall be rigidly mounted to the systems frame with a minimum of two heavy duty brackets. Mounting the calibration to the neat polymer inlet piping shall not be acceptable.
   3. Provide a thermal type loss of polymer flow sensor.

D. Solution Discharge Assembly:
   1. Provide a 2-1/2” stainless steel liquid filled pressure gauge to monitor system discharge pressure.

E. Controls:
   1. A control panel integral to the systems frame shall be provided. The enclosure shall be rated NEMA 4X and constructed of FRP. The control panel shall consist of all controllers, digital displays, potentiometers, switches, lights, relays, and other control devices required for a complete operable system. The control panel and all components shall be industrial duty. All skid mounted electrical components interconnected to the control panel shall terminate at numbered and labeled terminal blocks. The terminal blocks shall be sized for 14 gauge wire. Wires shall be neatly run through wire race-way and numbered with shrink tubing type labels. Adhesive labels shall not be used. The control panel shall be positioned such that there are no obstructions in front of the control panel per related NFPA requirements. Control.
   2. Power: 120 VAC, 1Ph, 60/50 Hz.
      D Control Series:
   3. Operator Interface – Discrete Selector Switch:
      a. System ON / OFF (reset) / Remote
      b. One-Turn Potentiometer – Mixer Speed
      c. Ten-Turn Potentiometer – Progressive Cavity Metering Pump Control
   4. Status / Alarm Indicators:
      a. Main Power ON Indication
      b. LED display of Metering Pump Rate
      c. Low Water Differential Pressure Alarm
      d. Low Polymer Flow Alarm
   5. Inputs (signals by others):
      a. Remote Start / Stop (discrete dry contact)
      b. Pacing Signal Based on Process Flow (4-20mA)
   6. Outputs:
      a. System Running (discrete dry contact)
      b. Remote Mode (discrete dry contact)
      c. Common Alarm (discrete dry contact)

F. System Skid:
   1. The system's frame shall be of rugged 304 stainless steel construction. No mild steel shall be used. All piping shall be rigidly supported.

DRAFT

2. Under no circumstance shall the pump suction exceed 5” from the bottom of the skid for progressive cavity pumps and 12” from the bottom of the skid for diaphragm pumps.
3. The overall system dimensions shall not exceed 36” W x 26” D X 60” H.

PART 3 – EXECUTION

3.01 FIELD SERVICES

A. Process equipment manufacturer shall provide the services of a qualified field service technician to inspect and certify the installation, start-up the equipment, trouble shoot any problems that may arise and providing complete and thorough training of operator personnel.

END OF SECTION

DRAFT

SECTION 46 4121 – SUBMERSIBLE MIXERS

PART 1 – GENERAL

1.01 THE REQUIREMENT

A. Furnish and install submersible mixers with associated appurtenances, complete and operable, in accordance with the Contract Documents.

1.02 SUBMITTALS

A. Submittals shall be made in accordance with Section 01 3300 – Submittal Procedures.

B. Shop Drawings: Furnish complete drawings and technical information for equipment, piping, valves, and controls. Where indicated or required by the ENGINEER, Shop Drawings shall include clear, concise calculations showing equipment and anchorage forces and the capacities of the anchorage elements.

C. Spare Parts List: A list of spare parts for each piece of equipment shall be obtained from the manufacturer and submitted at the same time as Shop Drawings. The name, address, and telephone number of the nearest distributor for each piece of equipment shall be furnished. This list shall contain all data necessary to allow the OWNER to purchase spare parts as necessary.

1.03 OPERATION AND MAINTENANCE MANUAL

A. Operation and Maintenance Manual shall be furnished in accordance with these Specifications.

B. Provide six (6) hard copies and one (1) electronic copy in PDF format.

1.04 QUALTY ASSURANCE

A. The Manufacturer shall provide a 2-year equipment warranty.

B. The mixing equipment specified herein shall be the design and fabrication of a single Manufacturer which shall have sole source responsibility for said equipment.

1.05 SPARE PARTS

A. Provide all spare parts anticipated to be required for the first 2 years of operation. Manufacturer shall clearly define quantity, description of part and associated part numbers as part of manufacturer's scope of supply.

B. Spare parts shall be placed in a separate container clearly marked as "Spare Parts." All parts shall be identified and clearly labeled with applicable part numbers.

PART 2 – PRODUCTS

2.01 GENERAL REQUIREMENTS

A. The mixer(s) shall be capable of handling raw, screened sewage. The mixer(s) shall be able to be raised and lowered and shall be easily removed for inspection or service without the need for personnel to enter the mixing vessel. A sliding guide bracket shall be an integral part of the mixer unit. The entire weight of the mixer unit shall be guided by a single bracket which must be able to handle all thrust created by the mixer. The standard mixer, with its appurtenances and cable, shall be capable of continuous submergence under water without loss of watertight integrity to a depth of 57 ft.

B. Operating Conditions: The WORK of this Section shall be suitable for operation under the following conditions:

Mixer Location	Rated HP
Anoxic Mixers	6

DRAFT

2.02 DIRECT DRIVE MIXER

A. Motor: The multi-pole motor shall be directly connected to the propeller. The mixer motor shall be squirrel cage, induction, shell type design, housed in an air filled, watertight chamber. The stator windings shall be insulated with moisture resistant Class F insulation rated for 315°F. The stator shall be insulated by the trickle impregnation method using Class H monomer-free polyester resin resulting in a winding fill factor of at least 95%. The motor shall be inverter duty rated in accordance with NEMA MG1, Part 31. The motor shall be designed for continuous duty, capable of sustaining a maximum of at least ten (10) evenly spaced starts per hour. The rotor bars and short circuit rings shall be made of aluminum.

B. Mixer Construction: Each mixer shall be of the integral design, close coupled, submersible type. All components of the mixer, including motor shall be capable of continuous underwater operation. Exposed mixer components shall be of 304 Stainless Steel construction. The oil housing cover plate shall be of corrosion resistant composite. All exposed nuts and bolts shall be made of stainless steel. All metal surfaces coming into contact with the mixed media, other than stainless steel, shall be protected by a factory applied spray coating of acrylic dispersion zinc phosphate primer with an epoxy finish coat on the exterior of the mixer.

C. Elastomers: All mating surfaces where watertight sealing is required shall be machined and fitted with a double set of Nitrile rubber or Viton O-rings. Fitting shall be such that sealing is accomplished by metal-to-metal contact between machined surfaces. This will result in controlled compression of the O-rings without requiring a specific torque limit. No secondary sealing compounds, rectangular gaskets, elliptical O-rings, grease, or other devices shall be used.

D. Propeller: The propeller shall be of 316 stainless steel dynamically balanced, non-clogging backward curved design. The propeller shall be capable of handling solids, fibrous materials, heavy sludge, and other matter found in normal sewage applications.

E. Cable Entry: The cable entry housing shall be an integral part of the back plate. The cable entry shall have a leak-proof seal. Epoxies, silicones, or other secondary sealing systems shall not be considered acceptable.

F. Bearings: All bearings shall have a minimum B-10 or L-10 rated life of 100,000 hours and shall have inner and outer races of metal construction. Bearings with races made of nonmetallic construction will not be deemed acceptable or meeting the load handling and environmental requirements of this application.

G. Thermal Sensors: Thermal sensors shall be used to monitor stator temperatures. The stator shall be equipped with three (3) thermal switches embedded in the end coils of the stator winding and set for 248°F. These shall be used in conjunction with, and supplemental to, external motor overload protection, and wired to the control panel.

H. Oil Housing: The oil housing shall contain two compartments consisting of an inner and an outer section with four ports to connect and facilitate oil flow. In the event that the mixed media bypasses the other seal, this design will allow the outer compartment to collect the heavier (denser) fluids by means of a simple gravity process.

DRAFT

I. Mechanical Seals:
   1. Each mixer shall be provided with two sets of lapped end face type mechanical seals running in oil reservoirs for cooling and lubrication. In order to avoid seal failure due to sticking, clogging, and misalignment from elements contained in the mixed media, only the seal faces of the outer seal assembly and its retaining clips shall be exposed to the mixed media. All other components shall be contained in the oil housing.
   2. The seals shall require neither maintenance nor adjustment, but shall be easy to check and replace.

J. Mixer Mount Assembly:
   1. A stainless steel, mixer mount/mast assembly shall be supplied by the mixer manufacturer and used to mount the mixer during operation and to guide the unit during installation and removal from service. The assembly shall consist of an upper, lower (stop) and intermediate bracket (if required, see plans) made of 304 stainless steel.
   2. The mixer mount assembly shall include a 40 ft. field adjustable length of 304 stainless steel mixer support cable assembly when up to one intermediate bracket is supplied. A 2”- or 3”-mast shall securely interface with the mixer manufacturer’s upper, lower, and intermediate brackets and integrate in such a way to securely support the mixer during operation. All support bracket assemblies shall be supplied by the mixer manufacturer only in order to ensure the integrity of the system under operational loads.
   3. The assembly shall also be provided with cable holders to secure the mixer electric power cable (one every 5 ft.). Their purpose shall be to prevent the electric cable from becoming entangled in the mixer propeller during operation. In addition, the mast shall be constructed with a positioning locking plate which will work in conjunction with a lock pin on the upper guide holder to positively lock the mast in place at various operating angles.
   4. The mixer must have the capability of redirecting the center line of its jet to 40 degrees in a vertical plane and 120 degrees in a horizontal plane. The above adjustment can be accomplished without draining the tank.
   5. The assembly shall include an integrated crane mount to allow for the installation of a removable crane.

K. Removable Crane Arm System (if required)
   1. One portable crane arm assembly shall be provided for the project to easily raise and lower the mixers for installation and inspection. It shall consist of a crane arm with telescopic capabilities, rotatable at 360 degrees, a hand winch with brake for load control with stainless steel wire, a hook, and an intermediate piece.

L. Classification: All submersible mixers supplied for the work in this Section shall be UL/FM approved for use in Class I, Division 1 areas (explosive proof).

M. Manufacturer shall be:

N. Approved Manufacturers:
   1. Flygt
   2. Or ENGINEER-approved equal.

DRAFT

PART 3 – EXECUTION

3.01 SERVICES OF MANUFACTURER

A. Inspection, Startup, and Field Adjustment: Where required by individual Sections, an authorized, experienced, and competent service representative of the manufacturer shall visit the Site to witness or perform the following in accordance with these Specifications, and to certify in writing that the equipment and controls have been properly installed, aligned, lubricated, adjusted, and readied for operation.
   1. Inspection, checking, and adjusting the equipment and approving its installation.
   2. Startup and field testing for proper operation, efficiency, and capacity.
   3. Performing field adjustments during the test period to ensure that the equipment installation and operation comply with requirements.
   4. Instruct plant operating personnel on proper operations, maintenance, and care.

3.02 INSTALLATION

A. Equipment shall be installed in accordance with the manufacturer's written recommendations and with the requirements of these Specifications.

3.03 PRE-PACKAGED EQUIPMENT

A. Coordination of all necessary space and structural requirements, clearances, utility connections, signals, and outputs shall be required to avoid later change orders when any system is furnished as pre-packaged equipment.

3.04 FIELD TESTS

A. Where indicated by the individual equipment Sections, equipment shall be field tested after installation to demonstrate satisfactory operation without excessive noise, vibration, or overheating of bearings or motor.

B. The following field testing shall be conducted:
   1. Start equipment, check, and operate the equipment over its entire operating range. Vibration level shall be within the amplitude limits as indicated or as recommended by the reference applicable Standards.
   2. Obtain concurrent readings of motor voltage, amperage, capacity, vibration and bearing temperatures.

C. In the event that any equipment fails to meet the test requirements, the equipment shall be modified and retested until it satisfies the requirement.

END OF SECTION

DRAFT

SECTION 46 5143 – FINE BUBBLE MEMBRANE DIFFUSERS

PART 1 – GENERAL

1.01 SECTION INCLUDES

A. Work necessary to deliver to the job site, the fine bubble tube diffuser aeration equipment, complete and ready for installation by others.

1.02 GENERAL

A. It is the intent of the OWNER that the fine bubble membrane diffuser aeration equipment Supplier/Manufacturer (hereafter called the "Manufacturer"), shall furnish completely engineered systems suitable for the operating conditions as outlined in these Specifications. Fine bubble membrane diffuser aeration equipment features such as drop leg size, air manifold sizes, and spacing, air manifold and header supports and spacing, diffuser spacing, etc., required to comply with all requirements of this section shall be defined by the Manufacturer and be furnished complete.

1.03 DEFINITIONS

A. SCFM: Standard Cubic Feet per Minute is understood to be air at 68°F, 14.7 psia, and 36 percent relative humidity flowing at a rate of 1 cubic foot per minute.

B. SOTR: Standard Oxygen Transfer Rate is understood to be the rate of oxygen transferred to tap water (pounds of oxygen per hour) at standard conditions of 20°C, 0.0 mg/l residual dissolved oxygen concentration, and a barometric pressure of 760 mm Hg (dry air).

C. SOTE: Standard Oxygen Transfer Efficiency is understood to be the fraction of oxygen transferred to tap water under standard conditions of 20°C, 0.0 mg/l residual dissolved oxygen concentration, and a barometric pressure of 760 mm Hg (dry air).

D. Side water Depth: Side water depth is understood to be the interior dimensions from the structure base to the water surface.

1.04 SUBMITTALS

A. Shop drawings shall be submitted in accordance with Section 01 3300. In addition, the following information shall be submitted in accordance with Section 01 3300:

1. Complete description and materials listing of the fine bubble membrane diffuser aeration equipment including equipment data sheets, description literature and bulletins which shall include the drop pipes, connections to the air manifolds, air manifolds, air distribution headers, diffusers, drain system, supports, anchorage details, expansion joints, air manifold and header joints, gaskets, bolts, nuts and washers, and all materials used.
2. Detailed Drawings of the proposed fine bubble membrane diffuser aeration equipment layout, elevation, and appropriate cross sections for each basin, showing all air line sizes and lengths, distances between air distribution headers, and the location of all diffuser holders, diffusers, supports, and expansion joints.
3. Aeration system performance data including standard oxygen transfer efficiency by independent testing facility.
4. Diffuser, diffuser connector, and system head loss curves covering the range of airflow rates specified under PERFORMANCE REQUIREMENTS.
5. Addresses and phone numbers of nearest manufacturer's representative.
6. Complete test data including 3rd party independent certified oxygen transfer performance curves, sufficient to determine the oxygenation capacity of the fine bubble membrane strip diffuser aeration equipment proposed. SOTE test data form non-3rd party accredited and independent testing services are not permissible.

DRAFT

7. Complete headless calculations for the aeration system from the Manufacturer's point of responsibility.

1.05 QUALITY ASSURANCE

A. Provide equipment furnished by a single manufacturer qualified and experienced in the production of similar equipment

1.06 OPERATION AND MAINTENANCE MANUAL

A. Installation, Operation and Maintenance Manual for the equipment specified herein shall contain as a minimum the following items:
   1. Equipment Data Sheets
   2. Installation instructions
   3. Operation and maintenance instructions
      a. Aeration system monitoring and maintenance
      b. Startup and test operations
      c. Normal operations
      d. Shutdown procedures
      e. Parts list
   4. Aeration equipment shop drawings
   5. Customer contact

PART 2 – PRODUCTS

2.01 GENERAL

A. The fine bubble membrane aeration equipment furnished under this section shall be the end products of one Manufacturer in order to achieve standardization for operation, maintenance, spare parts, and Manufacturer's service.

2.02 MANUFACTURERS

A. Fine bubble membrane strip diffuser aeration equipment for this project shall be manufactured by JAEGER AERATION LLC or ENGINEER-approved equal.

2.03 PROJECT CONDITIONS

Parameter	Value
Project Location	San Luis, AZ
Wastewater Type	Municipal/ Residential
Elevation above Sea Level	100-feet
Ambient Temperature Range	35°F - 115°F
Exposure	Submerged, tank opens to ambient condition
Water Temperature Range	55°F - 80°F

Design Parameter	Value
Type of Wastewater Treatment Process	MLE with MBR
Treatment Design Flow	3 MGD
Number of Aeration Basins	3
Basin Nominal Floor Dimensions	22 ft x 24ft
Basin Nominal Top Dimensions*	Same as Floor
Nominal Operating Water Depth**	14 - 17 ft
Nominal Volume per Basin	97,000 gallons
MLSS (mg/L)	8,000 -13,000
AOR, Lbs/Day per Basin	3600
α - Alpha Factor	0.60
B – Beta Factor	0.99

DRAFT

Design Dissolved Oxygen Concentration	2.0 mg/L
Aeration Period	24-hr continuous operation

2.04 EQUIPMENT DESCRIPTION - (Rectangular Flatten Panel Fine Bubble Membrane Diffuser)

A. General:

1. The diffuser equipment system shall be a fixed grid diffuser system type, where the fine bubble membrane diffuser:
   a. Shall be approx. 2.07 m [82”] long x 180mm [7”] wide rectangular flattened panel / strip diffuser.
   b. The flexible fine bubble diffuser membrane shall be constructed of Silicone rubber.
   c. Where the diffuser membrane shall act as a check valve
   d. Where there is a 2nd check valve shall be installed in the diffuser body acting independently of the diffuser membrane
   e. The diffuser panel shall be anchored directly to the basin floor using a bottom and top clamp bracket constructed of PP GF 30 material
2. Where the bottom mounting bracket shall be fixed to the floor with one centered anchor bolt for flat tank bottoms or two threaded anchor rods for leveling in sloped tanks.
   a. Where the diffuser assembly shall be attached to the air distribution piping with a flexible hose connection orientated perpendicular to the air distribution piping.
   b. Where two diffuser panels can be connected and mounted in line to each other.
   c. Where the panel diffuser shall not be using the air distribution pipe for anchoring the diffuser to the tank bottom.
3. The diffuser equipment system shall be suitable for installation in the structures shown on the Drawings.
4. The locations and size of the drop pipes to each diffuser grid are shown on the drawing. The diffuser equipment for each zone shall include, but not be limited to, a vertical section of drop pipe, a flexible connection to the drop pipe, an air manifold, air headers, diffusers, supports, expansion joints, air manifold and header joints, gaskets, bolts, nuts, and washers.
5. The design, fabrication, and installation of the diffuser equipment shall be such that, upon completion of installation, all diffusers are leveled to within +1/4-inch of a common horizontal plane.
6. The fine bubble membrane panel aeration equipment shall be designed for easy installation and shall include provisions for level adjustment, rotational adjustment, and thermal expansion.
7. The entire system shall be designed to allow for expansion and contraction over a temperature range of up to 140°F when installed.
8. All welded pipe supports and assemblies shall be shop fabricated from Type 304L stainless steel with a 2D finish conforming to AISI 304L and ASTM A240-78a. Unless specified otherwise, all non-welded pipe supports and pieces shall be shop fabricated from sheets and plates of 304 stainless steel conforming to AISI 304 and ASTM A240-78a.

B. Drop Pipe, Air Manifold, and Headers:

1. The installation contractor shall provide yard piping from the air supply main connection to the aeration basin.
2. Drop pipes:
   a. 304 STL schedule 10 drop pipes with a horizontal 150# ANSI flange.
   b. The SS drop pipe shall sweep horizontally at the tank bottom, continuing past a 90-degree elbow for 6” to a vertical 150# ANSI flange before transitioning to the PVC Sched 40 air distribution lateral pipes.
   c. The air headers shall be constructed of Distribution Manifolds will be constructed

DRAFT

of SCH.40 PVC pipe and will have a stub for connection to the SS drop pipe coupling. Both classes of pipe shall have a maximum SDR rating of 26. The headers shall connect to the air manifold as indicated above. The air headers shall be perpendicular to the air manifold. Headers shall be fabricated in sections up to a maximum of 25 feet in length. Sections shall be joined with fixed joints or expansion joints as required.

d. All PVC piping shall contain 1½ - 2 percent by weight titanium dioxide ultraviolet light inhibitor.

C. Purge System:

1. Each rectangular flattened diffuser panel / strip diffuser shall be equipped with an automatic moisture purge system; the diffuser air distribution header shall be mounted at a higher elevation than the strip diffusers so that the i.e. condensation in the air distribution system is purges through the diffuser bottom purge system.

D. Diffuser Assemblies:

1. Air diffuser assemblies shall be of the rectangular flattened diffuser panel / strip, oval shaped cross-section, non-clog, fine bubble type with a flexible perforated air release membrane. The membrane shall be fixed with a stainless steel band clamp to the diffuser body. The perforations shall be die cut I-shaped slits.
2. The diffuser membrane shall be constructed from extruded silicone rubber and be suitable for continuous or intermittent aeration. The membrane shall include UV inhibitor and compounds designed for resistance to chemical attack, weathering, and aging.
3. The diffuser assemblies shall have double backflow prevention / check valves to prevent liquid from passing into the aeration header of which the first check valve is composed of the flexible perforated diffuser membrane, and the second check valve is composed of a flexible flapper / membrane located over the air inlet opening of the diffuser body to the air distribution chamber between the diffuser body and the diffuser flexible perforated membrane.
4. The diffuser assembly shall be shipped completely assembled to the job site. Diffusers which require field assembly are not acceptable.
5. The membrane exterior surface shall be smooth as to inhibit biological film growth. The membrane shall inflate during aeration and deflate when the airflow is discontinued, further restricting biological film growth. The membrane shall be cleanable in place with water from a high pressure wash. Acid or other chemical cleaning methods shall not be required to restore the diffuser to like-new performance conditions.
6. Diffuser supports - strip diffusers:
   a. Each diffuser assembly shall by mounted directly to the tank floor with suitable cradle support mounting brackets. It shall not rely on the air distribution header for anchoring to basin floor. Each bottom cradle mount shall be anchored threaded anchor, with mounting hardware, all constructed entirely of 304 Stainless Steel.

E. Diffuser Connections:

1. The connection between the air distribution header and the diffuser connector shall be a flexible hose line. This connection shall be a shock absorbent type that is unaffected by system vibration.

DRAFT

F. Supports:
   1. Supports shall be fabricated of Type 304 stainless steel for non-welded and 304L for welded. The supports shall be designed to provide +1/2-inch lateral and +1-inch vertical adjustment of the header. Adjustment shall be continuous and possible without removing the air piping from the support. All pipe ends and joints shall be provided with a pipe support.
   2. Air manifold piping shall have a maximum spacing between supports of 10 feet. Manifold supports shall be attached to the tank floor with anchor bolts and shall be designed for ten (10) times the normal uplift force.
   3. Header supports, shall allow longitudinal movement of the header section to prevent stress buildup in the header due to thermal expansion/contraction forces. Maximum horizontal thrust of 20 pounds or less shall initiate movement of the header relative to the mechanism under full buoyant up-lift load.
   4. Anchor bolts for fastening the supports to the aeration basin concrete slab and walls shall by Type 304 stainless steel. Minimum anchor bolt diameter to be used is 3/8 inch. Supports shall be located such that concrete anchors are not installed within 6 inches of any concrete expansion joint.

G. Header Joints:
   1. Connections between sections of the air distribution header shall be special flanged joints. These joints shall be designed so that individual header sections can be rotated independently of adjacent header sections for alignment purposes. The flanged joints shall be structurally designed to transmit the longitudinal forces caused by expansion and contraction in the air distribution header. Slip joints shall be designed to allow for expansion and contraction of the air distribution header.
   2. Expansion joints shall be capable of handling the expansion and contraction of the air distribution system over a temperature range of up to 140°F.

H. Miscellaneous: Nuts, bolts, washers, and other non-welded parts directly exposed to the wastewater shall be Type 304 or 18-8 stainless steel. Threaded assemblies shall be chemically treated or lubricated prior to assembling to prevent galling.

I. Spare parts: The following spare parts shall be furnished and shall be suitably marked and boxed (protected from UV light) for shipment and storage:

Item:	Diffuser Assemblies (ready for installation on air header)
Quantity:	4 x

PART 3 – EXECUTION

3.01 FABRICATION

A. All assembly of the aeration equipment shall be completed in the factory.

B. Factory certified testing of pressure drop, leak free operation, and consistent air distribution at the specified flux rate range per diffuser model [SCFN/ft^2 of effective membrane area]. Factory testing data and cert shall be supplied with the shipping documents like bill of material as part of the project documentation.

C. All stainless steel welding shall be by the shielded arc, inert gas, MIG, or TIG method. Filler wire shall be added to all welds to provide a cross section of weld metal equal to, or greater than, the parent metal. Butt welds shall have full penetration to the interior surface, and gas shielding shall be provided to the interior and exterior of the joint.

D. Interior weld beads shall be smooth, evenly distributed, with an interior projection not exceeding 1/16 inch beyond the inner diameter of the air header or fitting.

E. All outside weld areas shall be wire-brushed to remove weld splatter. Brushes shall be of stainless steel and used only stainless steel.

DRAFT

F. Solvent weld of all PVC joints shall be completed in the factory.

3.02 PREPARATION FOR SHIPMENT

A. The fine bubble membrane strip diffuser aeration and air distribution lateral equipment shall be packaged and shipped by the Manufacturer ready for unloading, storage, and installation by the Installation Contractor. The OWNER will provide a suitable storage space for the aeration equipment.

3.03 MANUFACTURER'S CERTIFICATE

A. A Manufacturer's certificate of satisfactory installation and systems start up (sign-off sheet) is required for work under this section.

3.04 CLEAN WATER FUNCTIONAL TESTS

A. After installation of the fine bubble membrane panel / strip diffuser aeration equipment is complete, witness functional testing conducted by the Installation Contractor to check for leaks, uniformity of air release, and verification of level installation. Functional testing shall be performed with clean water at a depth over the diffusers as recommended by the aeration system Manufacturer. Any leaks in the headers, diffusers, pipes, or any part of the system shall be repaired by the Installation Contractor. The test shall be repeated until the installation is void of air leaks.

3.05 WARRANTY

A. The Manufacturer shall warrant all parts, including diffuser assemblies, distribution piping, and supports, free from defective material and workmanship for a period of 1 year (12 months) after the diffuser system contacts wastewater, system start-up, or 15 months after receipt of equipment at the job site of whatever comes first. Warranty shall be limited replacement of parts within the warranty period provided.

3.06 MANUFACTURERS' SERVICES

A. A technically-qualified Manufacturer's representative for the equipment specified herein shall be present at the job site and/or classroom designated by the OWNER for 2 minimum person-days for installation, testing, training, and assistance.

END OF SECTION

DRAFT

SECTION 46 5349 – MEMBRANE BIOREACTOR SYSTEM

PART 1 – GENERAL

1.01 WORK INCLUDED

A. This Section specifies the requirements for the furnishing, installing, testing, training, Startup, and Warranty Support of all process equipment required for the submerged membrane bioreactor (MBR) system for the treatment of wastewater. The CONTRACTOR, to be selected under a separate contract, will provide site civil and furnish all labor, rigging, and incidentals required for installation of the MBR System. Once installed, the MBR System shall be complete and operational with all control equipment and accessories as specified herein.

B. The MBR SYSTEM VENDOR shall assign a Project Manager to be the single point of contact for the CONTRACTOR and the OWNER for the entire duration of the project. The MBR SYSTEM VENDOR shall be responsible for coordinating all inquiries, activities, installation, support, delivery, start-up, commissioning, training and warranty support for components and equipment supplied by the MBR SYSTEM VENDOR.

C. The MBR SYSTEM VENDOR will design, manufacture, and deliver a full package MBR treatment system including, but not limited to the following:
   1. Anoxic Mixers
   2. Pre-aeration Fine Bubble Diffusers and Blowers
   3. Feed Forward Pumps
   4. MBR Submerge Membrane Unit / Cassettes
   5. MBR Scour Blowers
   6. Clean-In-Place (CIP) System
   7. MBR Process Instrumentation and Control Valves
   8. MBR PLC Control Panel and Remote I/O Panel
   9. MBR SYSTEM VENDOR is responsible for providing all components required for a fully functional system using their typical control and protective functions that may not be shown explicitly in the Plans or as specified herein.

1.02 DEFINITIONS

A. MBR System Supplier: The company responsible for supplying the membranes to be used in this project and for providing all equipment, instrumentation, controls and services as described in the proposal or described herein and for providing warranty support.

B. Membrane Manufacturer: The company who manufactures the Submerged Membrane Unit (SMU).

C. CONTRACTOR: The company responsible for construction and installation of the MBR System, including, but not limited to, site preparation, tank and basin construction, and mechanical and electrical installation.

D. ENGINEER: The ENGINEER is the prime professional with respect to the project.

E. MBR System: A collective term for all process and membrane zones that make a complete biological treatment system.

F. Process Train: A stand-alone combination of Process Zones designed and operated to achieve specific treatment objectives.

G. Process Zone: An area in a Process Train designed and operated to meet a specific biological treatment objective.

H. Membrane Zone: Any Membrane Tank or MBR containing membranes.

DRAFT

I. Membrane Tank: A tank or basin containing one or more large membrane sub-units that are operated as one unit. A Membrane Tank has an HRT at Average Design Flow (ADF) of less than 1.0hr.

J. MBR: A tank or basin containing one or more large membrane sub-units that are operated as one unit. An MBR has an HRT at Average Design Flow (ADF) of more than 1.0hr

K. Membrane Bank: A grouping of large membrane subunits which share a common permeate header, a common air supply header, and that are taken off-line as an entity for any type of Clean-In-Place (CIP) procedure.

L. Submerged Membrane Unit (SMU): An assembly consisting of one or more SMU Subunits ("racks", "cassettes", etc.) and an integral diffuser assembly.

M. Membrane Cartridge: The smallest assembled unit of a delivered system that is designed to be removed from a SMU and replaced as a complete unit. This may be flat sheets attached to a rigid support structure and may be referred to as a "module", "cassette", or other terms.

N. Plant Hydraulic Loading Criteria: The net permeate flow rate over a given period of continuous operation accounting for CIP procedures and relaxation. Production capacity requirements are given in terms of:
   1. Average Annual Flow (AAF): The net daily flow requirement generally occurring during dry weather conditions.
   2. Maximum Monthly Flow (MMF): The net daily flow requirement generally occurring during wet weather conditions.
   3. Peak Daily Flow (PDF): The net daily flow required during peak daily flow conditions.
   4. Peak Week Flow (PWF): A net daily flow total generally occurring during wet weather conditions.
   5. Peak Hourly Flow (PHF): A net peak hourly flow requirement generally occurring during wet weather flow conditions.
   6. Peak Instantaneous Flow: The highest allowable flow rate under any conditions.

O. Flux: Gallons of permeate flow per day per square foot of membrane area (gfd). Additional definitions of flux that are used to characterize design criteria and membrane performance include:
   1. Instantaneous Flux: Calculated by dividing measured permeate flow rate by working membrane area at any instant.
   2. Gross Flux: See Instantaneous Flux.
   3. Net Flux: Calculated by dividing the total amount of permeate produced (available for discharge) in a given time frame by the working membrane area.

P. Maintenance Clean: Synonymous with chemically enhanced backwash and CIP. A Maintenance Cleaning is performed in-situ and in mixed liquor or activated sludge. The procedure is conducted by charging cleaning chemicals to membranes in the reverse direction of permeate flow with a soak time lasting more than 0.5hr. Typical Maintenance Cleaning characteristics are provided below.

DRAFT

Parameter	Value (Condition)
Membrane Soak Time	> 0.5hr
Conducted In Mixed Liquor	Yes
Conducted In-Situ	Yes
Typical Duration	0.5hr – 4.0hr
Fill Direction	Reverse
Tank Fill/Drain	No
Chemicals Required	Yes

Q. Recovery Cleaning: Synonymous with intensive cleaning and CIP. A Recovery Cleaning is performed in-situ or ex-situ and in water or dilute chemical. The procedure is conducted by charging cleaning chemicals to membranes in either direction with variable soak times. Typical Recovery Cleaning characteristics are provided below.

Parameter	Value (Condition)
Membrane Soak Time	Optional
Conducted In Mixed Liquor	No
Conducted In-Situ	Optional
Typical Duration	6.0hr – 24.0hr
Fill Direction	Optional
Tank Fill/Drain	Optional
Chemicals Required	Yes

R. Mechanical Cleaning: Synonymous with manual cleaning, physical cleaning and hand cleaning. Mechanical Cleaning is any instance where membranes are cleaned by hand or machine (water jetting or other) for the purposes of removing fouling or localized dewatering.

S. Localized Dewatering: Synonymous with clogging, sludging and plugging. Localized dewatering is the excessive accumulation of solids at a membrane surface in the form of refractory cake and generally in discrete, localized areas. Often caused by excessive filtration in combination with unequal or inadequate air scouring.

T. Days: Defined as calendar days.

U. In-Situ: Inside the normal service area and submerged in mixed liquor.

V. MLSS: Mixed liquor suspended solids reported as mg/l.

W. Permeability: Equals the instantaneous flux rate divided by the transmembrane pressure (TMP). The units of permeability are gfd/psi.

X. Relaxation: A temporary suspension of membrane filtration with continued air scouring for the purpose maintaining treatment capacity or reducing CIP requirements.

Y. Transmembrane Pressure (TMP): The effective pressure differential across the membrane during normal operation.

1.03 DESCRIPTION OF WORK

A. This Section specifies the requirements for the furnishing, installing, testing, training, Startup, and Warranty Support of all process equipment required for upgrading the San Luis West Wastewater Treatment Plant submerged membrane microfiltration bioreactor system for the treatment of wastewater.

DRAFT

B. The MBR System supplier must be the Membrane manufacturer and shall furnish and commission the MBR System as describe in this specification, inclusive of all equipment, instrumentation, scope-specific piping systems, controls, integration, and warranty support.

C. The MBR System Supplier shall provide the MBR Product Engineering and Design Services in support of the treatment system design as described in this specification. The MBR System Supplier shall review the complete MBR system requirements as necessary to achieve the performance requirements specified herein with their specific equipment.

D. If any changes to the equipment, instrumentation, piping, controls, wiring, tank size and/or layout as depicted in the drawings are required to meet the treatment or hydraulic requirements, the MBR system supplier shall clearly define these items in the bid submittal and include all costs. These costs shall include a breakdown of the estimated engineering costs to complete the adjustments required to comply with their system requirements to provide a complete and operable MBR treatment system. The cost breakdown must be adequately supported, and will be verified. The MBR system supplier shall certify in writing that the system with changes noted meets their requirements necessary to achieve the performance requirements specified herein.

E. The CONTRACTOR shall furnish all labor, rigging, materials, and incidentals required for the installation of the MBR System in accordance with the installation instructions provided by the Supplier. Once installed, the MBR System shall be complete and operational with all control equipment and accessories as specified herein and described in the Contract Documents.

F. The ENGINEER is responsible for coordinating the Work with the services of others involved in the project. The ENGINEER shall decide as to the quality and acceptability of services and materials furnished and Work performed. All questions which may arise as to the interpretation of any or all Plans and Specifications and all questions as to the acceptable fulfillment of the Contract on the part of the CONTRACTOR and Suppliers shall be resolved by the ENGINEER.

G. The MBR System Supplier must clearly identify in detail any and all exceptions to the Services and Scope of Supply described in this Specification.

1.04 SUBMITTALS

A. Project Submittal: The MBR System Supplier which must also be the Membrane manufacturer shall submit to the ENGINEER the complete descriptive information for all equipment, instrumentation, and component in the Supplier's Scope of Supply for the ENGINEER's approval prior to purchase of equipment. The Supplier is to provide PDF file(s) containing all submittal information organized and by component, clearly marking options, models, materials, etc. The Project Submittal shall contain the following:

1. Membrane installation drawings, detailing membrane unit dimensions, materials, weights, locations of lifting lugs/points, and anchor bolt locations.
2. MBR basin mechanical layout drawings, detailing the number of membrane units, air and permeate piping distribution, piping supports, in-basin instrumentation and valves, and all other components comprising the MBR basin systems. Drawings with detail information in plan and elevation/section views and include details as necessary to completely describe the installation requirements. Drawings will be based on the basin/structural design provided by the ENGINEER.
3. Plan view equipment and instrument drawings showing the location of all components provided by the MBR Supplier. Locations and installation details are to be coordinated with the ENGINEER's drawings to avoid conflicting information.

DRAFT

4. MBR system supplier's literature for all equipment in the Scope of Supply will include (as applicable):
    a. Pump curves
    b. Blower curves
    c. Mixer velocity distribution profiles
    d. Materials of construction
    e. Shop drawings showing all dimensions, sizes and locations of anchors
    f. Minimum, maximum, and design duty points (flow rates and pressures/TDH)
    g. Unit performance and efficiency data
    h. Motor horsepower and voltage
    i. Complete wiring and control diagrams which show the point of connection for the power supply and control system
    j. All project-specific installation data for use by the CONTRACTOR.
5. Where manufacturers' standard literature is submitted, it shall be clearly marked to indicate which features are to be furnished under this contract.
6. Process and Instrumentation Diagrams (P&IDs) showing all equipment and instrumentation which will be controlled by the MBR system supplier control system, including components provided by others. P&IDs will show components supplied by MBR System Supplier. Unless otherwise directed by the ENGINEER, the MBR System supplier is responsible for establishing the tagging scheme for the P&IDs. Tagging scheme will assign a unique tag to all components and their associated I/O. Tagging scheme will organize components by subsystem and train.
7. Instrumentation list and manufacturers' literature and cut sheets, clearly identifying manufacturer, models, ranges, materials of construction, installation details, power supply voltage, wiring information.
8. Valve list and manufacturers' literature and cut sheets, clearly identifying manufacturer, models, Cv range, materials of construction, pressure rating, and dimensions.
9. Valve actuator manufacturers' literature and cut sheets, clearly identifying models, motor horsepower and voltage, control wiring, installation/connection details, torque rating, actuation times, duty cycle, and materials of construction.
10. Control panel drawings, detailing the interior and exterior layouts, components, panel dimensions, and panel materials of construction and NEMA rating.
11. Control panel component manufacturers' literature, clearly denoting model numbers of all PLC components, relays, terminal blocks, power supplies, buttons, switches, fuse blocks, etc.
12. Control panel wiring schematics
13. Warranty information
14. System start-up and test procedures

B. Installation and Operations Manual (IOM): The MBR System Supplier shall furnish an Installation and Operations Manual 2-4 weeks prior to the delivery of the Supplier's equipment on site. The IOM will include Supplier and manufacturer's manuals and drawings detailing dimensions, locations, wiring information, and any other information necessary to convey the correct assembly and installation of the MBR System components provided by the Membrane Manufacturer and MBR System Supplier. In addition to installation documents, the IOM shall include requirements for the Mechanical Inspection and a schedule of events for the System Commissioning. The Supplier is to provide PDF files containing all information organized by component.

DRAFT

C. Plant Operations Manual (POM): The MBR System Supplier shall furnish a Plant Operations Manual within 2-4 weeks after completion of the System Commissioning. The supplier is to provide three hard copies and two CDs containing the following information:
   1. HMI (Human machine Interface) User's manual, detailing screens, and functions within the operator interface program
   2. Process variables and final control narrative
   3. As-built P&IDs
   4. As-built electrical schematics and control panel drawings
   5. Safety guidelines

1.05 QUALITY ASSURANCE

A. MBR system design is based on Flat Plate Membrane equipment supplied by **KUBOTA Water and Environment U.S.A. Corporation or ENGINEER-approved equal** .

   If a non-specified MBR system supplier/Membrane manufacturer is being proposed, the MBR system supplier/Membrane manufacturer must meet the below requirements, and a request to provide the non-specified MBR system supplier must be submitted in writing to the OWNER and ENGINEER no fewer than fourteen (14) days before the bid due date.

B. Following requirement needs to be met for approval of non-specified MBR System Supplier and Membrane manufacturer.
   1. All the equipment and services specified under this Section shall be furnished by the Membrane Manufacturer as the MBR system supplier, and shall be standard units of proven ability as a competent organization that is fully experienced, reputable and qualified in the manufacture of the equipment to be furnished. The equipment shall be designed, constructed and installed in accordance with the best practice and methods of the Membrane Manufacturer, and shall operate satisfactorily when installed.
   2. To show evidence of being able to provide the quality of equipment and services described in this specification, the Membrane Manufacturer and System Supplier shall submit their quality system ISO certification. Certification shall remain in effect throughout the project startup.
   3. The membrane shall be a flat plate type membrane.
   4. Flux rate shall not exceed the values shown in the table below.
      a. The maximum fluxes permitted for microfiltration membranes and ultrafiltration membranes at the Max Month and Peak Hour Flows are listed in the table below.
      b. Microfiltration is a membrane that has an average pore size of 0.2um or larger.
      c. Ultrafiltration is a membrane that has an average pore size of below 0.2um.
   5. The Membrane Manufacturer shall have a minimum of 10-year history of manufacturing the flat plate membranes.
   6. The MBR System Supplier shall have a minimum of 10-year history of supplying the MBR system.
   7. The MBR System Supplier shall have a local certified service technician in the State of Washington who has worked for more than 1 year as an employee of the MBR System Supplier.
   8. Qualifications: The MBR System Supplier shall submit, as part of their proposal, the location, size, and start-up dates of five (5) representative installations in the that meet the following criteria in order to be considered qualified:
      a. Utilize the same type of membrane system proposed for this project.
      b. Have a plant or process train design capacity equal or similar to the listed MMF.
      c. Use MBR Manufacturer's aeration and CIP strategies as that of the proposed MBR Membrane Manufacturer
      d. Have been in operation for at least ten (10) years at time of bid.

DRAFT

e. Have operated within 35% of nominal rated capacity for a minimum of 12 months at time of bid.

1.06 WORK BY OTHERS

A. The following work and Scope of Supply is specifically excluded from the MBR Supplier scope:

1. Design and Engineering:
   a. Architectural
   b. Buried pipe, including soil requirements, thrust blocks, galvanic protection
   c. Concrete basins
   d. Wall penetrations
   e. Support of piping outside of MBR scope
   f. Seismic design or calculations other than for seismic anchorage of the SMUs
   g. Sealing of calculations and drawings
2. Structural:
   a. Building(s) for housing MBR
   b. Concrete tankage for process and membrane zones
   c. Imbedded wall spools, pipe sleeves, pipe seals in concrete tank walls for the various process pipe connections/penetrations
   d. Covers or grating over process and membrane zones
   e. Equipment access platforms, walkways, stairs, etc.
   f. Protective coatings for concrete
   g. Anchor bolts for any equipment outside of MBR basin
   h. Platform for fine screen
3. Mechanical:
   a. Mixed liquor recycle piping, including branch connections and headers
   b. Membrane CIP piping, including branch connections and headers
   c. Pipe supports and hangers unless otherwise noted
   d. Hoist equipment above the membrane basin for installation and removal of the membrane subunits.
   e. Membrane tank drain piping, valves, operators, and pumps, if required
   f. Installation of any kind, including equipment and piping within or outside of Scope of Supply
   g. Installation materials for instrumentation and automatic valves, including, but not limited to, air / sample line tubing, fittings, and mountings
4. Electrical:
   a. Electrical wiring interconnections (including wiring, conduit and other appurtenances required to provide power connections as needed) from the electrical power source to the MBR System Control Panel.
   b. Electrical wiring interconnections (including wiring, conduit and other appurtenances required to provide power connections as needed) from MCC and/or Panelboard(s) to all field equipment.
   c. Instrumentation wiring, conduit and other appurtenances required to provide connections as needed between all field devices and the membrane PLC control panel or MCC.
   d. Motor control centers, Variable Frequency Drives (VFDs), panel boards, transformers, and other equipment necessary to provide power distribution for equipment, unless specifically listed in **2.03** SUBSYSTEM SCOPE OF SUPPLY.
   e. Network communications connections, conduit, wiring or fiber optic cable including fiber terminations to the Plant SCADA and the MBR System HMI systems (if the two are different). Includes network communications connections from PLC control panels to remote I/O control panels.

DRAFT

f. Internet network provisions to permit remote access of MBR Control System

5. Other:
   a. Anything listed in the exclusion section described in Kubota's proposal.
   b. Receiving, unloading and safe storage of equipment at site or a storage facility until ready for installation.
   c. Equipment installation.
   d. Instrumentation installation including continuity checks and assistance with related loop checkout.
   e. Raw materials, chemicals and utilities during equipment testing. This includes potable water for system function testing and seed sludge per supplier requirements.
   f. Laboratory services, operating and maintenance personnel during equipment checkout, startup and operations.
   g. Onsite painting or touch-up painting of MBR, with the exception of painting required due to damage incurred prior to equipment being received onsite.
   h. Seeding

1.07 WARRANTY

A. MBR Manufacturer and System Supplier shall provide a warranty statement in the submittal.

B. MBR System Supplier shall warranty and replace the Membrane Cartridge under warranty for a period of 2 years after startup. The warranty shall not be pro-rated.

C. All warrantee support, as defined in the warranty statement, shall be provided by the MBR System Supplier directly or through certified sub-contractors.

D. MBR System Supplier shall warrant small membrane subunits under the following terms:
   1. MBR System Supplier shall replace any small membrane Subunits that fail before 2 years from the date of successful completion of the System Commissioning.
   2. Failure is defined as any of the following:
      a. Inability to meet production capacity requirements as specified herein.
      b. Inability to meet TSS and turbidity requirements as specified herein.
   3. The following are specifically excluded from warranted membrane failure conditions:
      a. Exceeding TSS or Turbidity limits due to physical damage of the membranes and/or loss of piping integrity.
      b. Loss of capacity due to failure to operate within design fluxes and permeability limits as defined in this Section.
      c. Loss of capacity due to failure to perform required Maintenance cleans.

E. Supplier shall warranty all other equipment, not specifically mentioned above, against defects in workmanship and materials for a period of 30 months after delivery or 24 months after successful completion of performance testing, whichever is shorter.

F. Supplier shall provide phone support for the MBR System for one year following successful completion of the System Commissioning.

PART 2 – PRODUCTS

2.01 MBR PRODUCT ENGINEERING AND DESIGN SERVICES

A. The MBR Manufacturer and System Supplier will provide the following design services related to the MBR product under a separate contract between the OWNER and Supplier:
   1. Biological Process Design Verification – The MBR Supplier shall support the ENGINEER in providing analysis and verification of the biological process design, based on the customer's influent mass loading, diurnal flow curves, peak flow/loading

DRAFT

numbers, and permit limits. The Supplier shall verify basin volumes, recycle rates, aerations requirements, chemical dosing requirements, and waste solids projections. The supplier shall provide a written report summarizing the design results.

2. Piping Hydraulic Analysis and Design – The MBR Supplier shall provide a detailed hydraulic analysis and mechanical design documentation of each process subsystem contained in the MBR system Scope of Supply. Piping design files shall be provided to the ENGINEER for integration into the design package. The subsystems included in the hydraulic analysis shall include:
   a. Recycle pump systems
   b. MBR air distributions systems
   c. Permeate systems
   d. WAS systems
3. Equipment Sizing and Installation Details – The MBR Supplier shall verify duty points and turn-down, supply voltages, materials of construction, communications IO, equipment access and serviceability, area classifications, and pressure ratings for the MBR system's pumps, blowers, mixers, and valves. In addition to identifying manufacturers and specific part numbers for each component, installation details and CAD drawings shall be provided for integration into the ENGINEER's design package.
4. Instrumentation Design – The MBR Supplier shall provide the ENGINEER with complete specification and documentation of all MBR system instrumentation. Installation details shall be provided in AutoCAD format for integration into the ENGINEER's design package.
5. Controls Design – The MBR Supplier shall supply MBR system Process and Instrumentation Diagrams utilizing the Supplier's standard symbols and tagging schemes,

2.02 SYSTEM PERFORMANCE REQUIREMENTS

A. The MBR System will be sized to hydraulically convey the flows shown in Table 2-1.

Table 2-1: Plant Hydraulic Loading Criteria

Parameter	Influent		Event Duration	Frequency	Total Duration
Maximum Month Daily Flow (MMADF)	3.0	MGD	30 days	3 year	90 days
Peak Hour Flow (PHF)*	3.9	MGD	3 hours	8/ year	1 days

*Flow will be equalized

B. The MBR system shall be designed to accommodate the diurnal pattern as indicated per ENGINEER.

C. The MBR System shall be capable of treating raw wastewater at listed flows to the specified effluent criteria shown in Table 2-2.

Table 2-2: Plant Pollutant Loading and Effluent Criteria

Parameter	Influent		Plant Loading @ Average Flow[1,2]		Effluent Limit/ Performance Requirement[7]
Maximum Month BOD_5	360	mg/l	9,013	lb/day	<10 mg/l
Maximum Month Daily Average TSS[1,2,3]	300	mg/l	7,511	lb/day	<10 mg/l
Maximum Month Daily Average TKN	80	mg/l	2,003	lb/day	TN: <10 mg/L
Design Minimum Temperature	18.3	Deg C	--	--	--

DRAFT

Table 2-2 Notes:

1. Measured turbidity shall be less than or equal to 0.2 NTU on 9 of 10 consecutive samples and no sample shall exceed 0.5 NTU.
2. Measured TSS shall be less than or equal to 2 mg/L on 9 of 10 consecutive samples and no sample shall exceed 5 mg/L.
3. Effluent limits are based on measurements using *Standard Methods for the Examination of Water and Wastewater (Latest Edition).*
4. Concentration of grit, defined as particles having a specific gravity of >1.6 and unable to pass through a 65-mesch screen (0.21mm), shall be less than 5 mg/l

D. System Configuration
   1. The MBR System shall consist of three (3) process trains, each consisting of
      a. One Pre-anoxic basin with a minimum volume of 138,240 gallons. Total system anoxic volume will be 415,000 gallons.
      b. One pre-aeration basin with a minimum volume of 96,770 gallons. Total system pre-aeration volume will be 290,310 gallons.
      c. One MBR Zones with a minimum volume of 77,020 gallons. Total system MBR volume will be 231,060 gallons.

E. The design MLSS in the MBR shall be 13,000 mg/l.

F. The allowable MLSS concentration in the Membrane Zones shall range between 8,000 mg/l and 15,000 mg/l.

G. The MBR basins shall be considered part of the biological process when calculating aerobic volume requirements.

H. Membrane CIP Procedures
   1. Membrane subunits shall be cleaned in place using any of the four CIP methods in order to maintain production capacity and meet performance requirements specified herein. The allowable frequency of listed CIP methods shall be as follows:
      a. Backwash frequency shall not exceed 1/hr
      b. Maintenance Clean frequency shall be as necessary
      c. Recovery Clean frequency shall not exceed 4/yr

I. For MBR Systems that require Recovery Cleaning as part of routine maintenance:
   1. Tank liners shall be required for Membrane Zones to protect against corrosion or deterioration of wall materials.
   2. All fasteners, including nuts, bolts, screws, cables, washers and other appurtenances, associated with the SMU shall be manufactured from Type 316L stainless steel.

J. The MBR shall be designed to operate at or below a trans-membrane pressure (TMP) of 3 psig.

K. Site Conditions
   1. The elevation above sea level is 100 ft.
   2. Influent wastewater shall contain less than 15% of the influent BOD_5 as fats, oils and grease (FOG).
   3. No substances shall be placed in the system in quantities which are not biodegradable or toxic to the biological system.
   4. The influent wastewater pH shall be between 6-8 SU.
   5. Water hardness shall not exceed 300 mg/l as CaCO3.

DRAFT

2.03 SUBSYSTEM SCOPE OF SUPPLY

MBR System Supplier shall furnish the Subsystem Components per the equipment list in Kubota proposal in accordance with the requirements of this the project Specifications and Contract Documents. All components shall be shipped loose for installation by installing CONTRACTOR unless otherwise noted.

A. Pre-Anoxic Basins
   1. Mixers
   2. Basin high and low level switches
   3. Basin level sensor/transmitter

B. Pre-Aeration Basins
   1. Basin high and low level switches
   2. Basin level sensor/transmitter
   3. Fine bubble diffusers
   4. Combination DO/temperature sensor/transmitter

C. Membrane Basins
   1. Membrane Submerged Membrane Units (SMUs)
   2. In-basin interconnecting air and permeate piping three (3) inches or less
   3. In-basin Pipe supports and support anchors for all Supplier-provided piping
   4. Basin high and low level switches

D. Permeate Collection System
   1. MBR permeate pumps if needed
   2. MBR permeate control valves
   3. MBR Permeate process instrumentation
   4. MBR Permeate turbidimeters

E. Cleaning Systems
   1. Maintenance Cleaning system

F. WAS Handling System
   1. WAS pumps (if needed)
   2. WAS control valves if required
   3. WAS instrumentation

G. Supplemental (Process) Aeration System
   1. Process air blowers with one standby of equal or greater capacity
   2. Process air flow control valves
   3. Process air instrumentation

H. Membrane Zone (Scour) Aeration System
   1. Scour air blowers with one standby of equal or greater capacity
   2. Scour air flow control valves
   3. Scour air instrumentation

I. Internal Recycle System (if needed)
   1. RAS pumps with standby of equal capacity
   2. RAS flow control valves
   3. RAS instrumentation

J. Feed Forward Pump (if needed)
   1. Feed Forward pumps with standby of equal capacity
   2. Feed Forward pump instrumentation

DRAFT

K. Controls
   1. MBR PLC control panel and if applicable remote I/O control panel(s)
   2. MBR Human-Machine Interface (HMI) Computer and runtime software licensed to OWNER
   3. HMI and PLC programming

2.04 GENERAL EQUIPMENT DESIGN AND FABRICATION REQUIREMENTS

The requirements listed below are in addition to those called out in the Specifications listed in Part 1.01 of this Specification.

A. Submersible Mixers
   1. Submersible mixers shall be direct driven, close-coupled, guide-rail-mounted, non-clogging propeller type designed for mixing of raw or processed sewage. All components of the mixer shall be capable of continuous submerged operation. The mixer shall be sized to provide complete mixing.
   2. All major components of the submersible mixers shall be manufactured of Cast Iron. All bearings shall have a minimum B-10 rated bearing life of 100,000 hours.
   3. Mixers shall have integral motor thermal overload protection and seal failure (moisture) sensor.
   4. The mixers shall be provided with guide rails, guide brackets, and lifting cables.

B. Mixed Liquor Recirculation Pumps if needed
   1. Mixed liquor recirculation pumps shall be capable of passing a three-inch spherical solid.
   2. Major pump components shall be cast iron, ductile iron, or stainless steel.
   3. Submersible pumps: Pumps shall have integral motor thermal overload protection and seal failure (moisture) sensor and be provided with guide rails, guide brackets, and lifting cables.
   4. Dry-mount pumps: Pumps shall be horizontal, self-priming centrifugal type, designed specifically for handling municipal waste.

C. Fine Bubble Diffuser Systems
   1. Fine bubble diffuser systems shall include in-basin aeration piping, pipe drops, submerged manifolds, laterals, diffusers, drain pipes, pipe supports, and purge system.

D. Submerged Membrane Unit (SMU)
   1. The SMU shall be the SP900 type as manufactured by KUBOTA.
   2. Depending on the membrane technology, a Membrane Zone can be classified as an MBR or a Membrane Tank (see Part 1.02 of this Specification).
   3. Each Membrane Zone shall include one or more Membrane Banks.
   4. Each Membrane Bank shall consist of one or more Submerged Membrane Units (SMU). Each SMU shall be:
      a. Prefabricated, preassembled and factory certified before shipment to the site.
      b. Provided complete, with all necessary components, accessories and appurtenances required to make a complete and operable system.
      c. Furnished with 304 SS housing, appurtenances and fasteners (including nuts, bolts, screws, cables, washers).
      d. Furnished with integral diffusers designed to promote efficient air scouring of Membrane Elements. The diffuser must be manufactured by membrane manufacturer.
      e. Equipped with one or more SMU Subunits.
   5. SMU sub-units contain multiple Membrane Elements. Membrane Elements shall be:
      a. Be assembled into a housing called a cassette or other.

DRAFT

b. Be constructed such that the membranes are held vertically and bonded firmly at the top and/or bottom of the Subunit.
c. Be manufactured using materials suitable for use in submerged MBR applications and:
1) Have an average pore size of 0.2 micron or less.
2) By physically strong enough to withstand the operating conditions associated with continuous operation in an aerated tank of mixed liquor at concentrations of up to the value as specified by SMU manufacturer in its operation manual.

6. The membrane module shall be approved by the California Department of Health Services (DHS) under the California Recycled Water Criteria (Title 22 of the California Code of Regulations). Submitters shall provide a copy of the DHS acceptance letter and test report.

E. Permeate Pumps if required
1. Permeate pumps shall be required when the hydraulic loading as described in this Specification cannot be met using gravity filtration.
2. Permeate pumps shall be sized to handle peak instantaneous flow as defined in this Specification -.
3. Permeate pumps shall be horizontal, self-priming centrifugal type or rotary lobe type, designed specifically for handling municipal waste.

F. Blowers
1. Blowers shall be provided as blower package.
2. Process aeration blowers shall be sized to maintain a residual DO of 2.0 mg/L at MMF flow rates and loadings and a minimum of a 2:1 turndown. Process aeration system shall include a standby blower of equal or greater capacity than the duty blowers.
3. MBR scour air blowers shall be sized such that sufficient scour air is provided to support MMF flows as described in this Specification without requiring additional maintenance cleans. The scour air system shall include a standby blower of equal or greater capacity than the duty blowers.
4. MBR scour air blowers shall accommodate a minimum surge or 1.5 psig under normal operating conditions.

G. Cleaning Systems
1. The Cleaning Systems shall include backwash, maintenance clean, and recovery clean systems as required by the Supplier's specific systems.
2. Cleaning Systems shall be inclusive of all valves, instrumentation, controls, and all other ancillary equipment necessary for a complete cleaning operation.
3. Supplier shall define building space to be allotted for all Cleaning Systems, including space for:
a. Chemical storage
b. Mix tanks if needed
c. Cleaning system equipment
d. Safety equipment
e. Containment and neutralization of spent chemicals. Containment space shall include space necessary for separation of incompatible materials to meet International Building Codes and International Fire Codes.

H. Waste Activated Sludge (WAS) Pumps (if needed)
1. WAS pumps shall be capable of passing a three-inch spherical solid.
2. The pumps shall be sized to transfer the expected MMF waste sludge volumes in less than 3 hours.
3. Major pump components shall be cast iron, ductile iron, or stainless steel.

DRAFT

4. Submersible pumps: Pumps shall have integral motor thermal overload protection and seal failure (moisture) sensor and be provided with guide rails, guide brackets, and lifting cables.

I. Dry-mount pumps: Pumps shall be horizontal, self-priming centrifugal type or rotary lobe type, designed specifically for handling municipal waste.

J. Valve Actuators

1. In order to reduce operating noise levels, it is preferred that all valves be electric actuated valves. Valves must have On/Off Manual options, at the valve and in HMI

K. Instrumentation

1. Identification Tags: All field instruments shall have identification tags meeting the following requirements:
   a. Tag number of instruments shall be established by the MBR System Supplier and approved by the ENGINEER
   b. Tags shall be made of stainless steel, engraved with 3/16-inch letters, and attached using a stainless steel cable.
   c. Instruments mounted on or within control panels and enclosures shall have the identification tag installed so that the engravings are easily visible to service personnel.

L. Membrane Tank In-Basin Piping

1. All in-basin MBR System air scour piping, on the inlet side, shall be Type 304 stainless steel schedule 10, until the piping becomes submerged in the MLSS. The air scour piping on the outlet side may be schedule 80 PVC, as submergence in the MLSS will have cooled the process air, reducing thermal stress on the piping.
2. In basin Permeate piping shall be schedule 80 PVC.
3. Piping shall have welded, glued, flanged, or mechanical groove (Victaulic) connections.
4. Pipe supports shall be 304 stainless steel Unistrut (or equivalent) systems or 304 stainless steel angle and structural shapes with stainless hardware, clamps, and guides
5. Transitions from MBR Supplier piping to CONTRACTOR's piping shall use ANSI 150-pound flanges unless otherwise noted or coordinated with the CONTRACTOR.
6. Insulation, heat tracing and or painting shall be provided by the CONTRACTOR.

M. MBR SYSTEM CONTROLS

1. The MBR System controls shall be housed in a NEMA 12 enclosure unless otherwise specified. The control panel assembly shall be a UL 508a listed Industrial Control Panel. The control panel will house the MBR system PLC and I/O modules as necessary, and valve Open/Close/Auto switches. The panel shall include the following features:
   a. UL1449 listed Type1/Type 2 incoming power supply surge protective device capable of 50kA 8x20us
   b. Redundant 24 VDC power supplies connected through a protective diode such that failure of one power supply does not affect the other.
   c. PLC sized to handle all I/O for components in the MBR System as indicated on the P&IDs plus 10% spare I/O terminated to terminal blocks in each PLC or I/O panel.
   d. Power to each I/O module shall be fused. All instrument power fed from panel shall be fused per UL requirements.
   e. PLC user memory greater than 2MB and processor capable of connection to 32 Ethernet Nodes minimum.
   f. PLC, HMI and remote I/O devices shall connect via Ethernet/IP to an industrial managed Ethernet switch.

DRAFT

g. System shall include an HMS Networks EWON flexy industrial VPN device for secure remote access or approved equal.
h. Control Panels shall include a pure sine wave UPS including UPS Maintenance/Bypass switch which permits seamless transfer of power to utility in case of UPS maintenance and relay contacts for UPS failure, on battery and low battery status.

2. The MBR System shall include one Human-Machine Interface (HMI), including Windows-based PC and HMI runtime software licensed to OWNER. System displays shall include graphical representations of all equipment and instrumentation and indication and trending of all process values.
3. The Supplier shall be responsible for all programming for the MBR System PLCs, database creation, generation of all graphic display screens, alarm configurations and trends for the operator stations.
4. MBR System controls shall be designed to allow for full manual (hand) operation in the event of PLC failure. Hand operations shall be manageable by two operators for a period of 72 hrs.

N. Unless otherwise specified in the Contract Documents or Drawings, none of the MBR equipment or instrumentation are required to meet the requirements for hazardous area installations (Class 1, Division 1 or Division 2).

2.05 HAZARDOUS AREAS

A. Unless otherwise specified in the Contract Documents or Drawings, none of the MBR equipment or instrumentation are required to meet the requirements for hazardous area installations (Class 1, Division 1 or Division 2).

2.06 SPARE PARTS AND SPECIAL TOOLS

A. The MBR Supplier shall provide the following spare parts:
1. Spare parts for pumps in accordance with these Specifications.
2. Spare parts for blowers in accordance with these Specifications.
3. Spare parts for mixers in accordance with these Specifications.

B. MBR Supplier shall furnish one set of special tools required for normal operation and maintenance of the MBR Units.

PART 3 – EXECUTION

2.07 PROJECT EXECUTION

A. Unless otherwise required in the Contract Documents, the MBR Supplier shall provide all submittal documentation as described in this Section no later than 10 weeks after receipt of purchase order and notice to proceed.

2.08 CONTROL SYSTEM FACTORY ACCEPTANCE TEST

A. The MBR System Supplier shall coordinate and conduct a factory acceptance test (FAT) of the MBR control system during which:
1. The PLC control logic and HMI operability shall be demonstrated by systematically forcing I/O to verify all controls functions and HMI screen representations defined in the system control narrative.
2. The MBR control panel shall be inspected for completeness, and workmanship.

B. The MBR System Supplier shall provide a minimum of 2 weeks' notice to the OWNER and ENGINEER prior to the FAT. The OWNER and ENGINEER may, at their option and the expense of others, choose to attend and witness the FAT.

C. Whether or not the OWNER and/or ENGINEER attend the FAT, the MBR Supplier shall provide written documentation and certification of the completed FAT.

DRAFT

2.09 MATERIALS INSPECTION

A. The CONTRACTOR shall inspect delivered equipment upon arrival on site for completeness of scope delivery and to verify that all components have arrived undamaged. The CONTRACTOR is responsible for notifying the Supplier of deficiencies in quantities or conditions within 28 days from the ship date.

B. The CONTRACTOR shall provide all labor, materials, and equipment for unloading, de-crating, organizing, and compiling take-off of received MBR equipment, components, and instrumentation.

C. The Supplier shall make available, upon the request of the CONTRACTOR, personnel to assist in the inspection of the Supplier's equipment upon unload at the site. Supplier's personnel shall provide services in accordance with their standard daily rates.

2.10 MECHANICAL INSPECTION PRIOR TO COMMISSIONING

A. The CONTRACTOR shall schedule with the MBR System Supplier to perform a Mechanical Inspection at least 2 weeks prior to the scheduled Commissioning of the System.

B. The MBR Suppler shall conduct a Mechanical Inspection of the MBR System to verify that the installation is complete and ready to begin Commissioning activities. The Supplier shall verify the following:
   1. Installation of all equipment per the ENGINEER's and Supplier's drawings and Supplier's IOM information.
   2. Installation of all instrumentation per the ENGINEER's drawings and IOM information.
   3. Completeness of all piping installations.
   4. Completeness of all electrical installations.
   5. Proper installation of the MBR SMU diffuser assemblies per the Submittal and IOM information.
   6. Completeness of all basins, including removal of all debris that may cause damage to the MBR SMU membranes.
   7. Review of all pipe integrity testing results.

C. Upon completion of the Mechanical Inspection, the Supplier shall provide written documentation of the inspection results.

D. Follow up to Mechanical Inspection
   8. If the MBR System is complete per the requirements of the Mechanical inspection, the MBR Supplier shall schedule the System Commissioning with the CONTRACTOR. The date for the System Commissioning is to be established within 2 weeks of the successful completion of the Mechanical Inspection.
   9. If the MBR System is not complete at the time of the Mechanical Inspection, the Supplier shall document system deficiencies to the CONTRACTOR, ENGINEER, and OWNER. The CONTRACTOR will then complete all necessary work and provide documentation (including digital photographs) of the completed work.
      a. Electrical and Control System Documentation Requirements
         1) Wire ring-out documentation signed by electrician
         2) Pictures of completed terminations (if terminations in CONTRACTOR scope) in field and PLC panel including wire labeling.
         3) Documentation of completed network cabling, Ethernet cable termination and fiber optic termination and patching.
         4) Documentation of all motor and valve terminations, motor cable Insulation resistance testing

DRAFT

After all noted deficiencies are resolved to the satisfaction of the ENGINEER, OWNER, and Supplier, the date for the System Commissioning is to be established within 2 weeks.

10. If the Mechanical Inspection deficiencies are deemed as sufficiently important by the Supplier, OWNER, or ENGINEER, the CONTRACTOR shall arrange for the Mechanical Inspection to be repeated at the CONTRACTOR's expense.
11. If electrical and control system wiring is incomplete prior to system commissioning scheduling, CONTRACTOR must complete all necessary work and provide documentation of the completed work (as described in 3.04 D. 2. above). The CONTRACTOR must update the ENGINEER, OWNER, and Supplier of the progress so that a revised system commissioning date can be organized as soon as possible. In this scenario, penalties for project delay will become the responsibility of the CONTRACTOR.

2.11 SYSTEM COMMISSIONING

A. The MBR System Supplier shall coordinate with the CONTRACTOR, ENGINEER, and OWNER for execution of the System Commissioning. In advance of System Commissioning, the MBR System Supplier shall perform an onsite Mechanical Inspection of the facility and generate a punch-list of inconsistencies. The CONTRACTOR is required to resolve the punch-list items to the satisfaction of the System Supplier, prior to scheduling System Commissioning. The System Commissioning will consist of the following:
   1. General inspection of systems (lubrication, rotation, calibration)
   2. Loop checking, instrumentation, and control system verification
   3. Clean Water diffuser testing
   4. Sludge re-seeding
   5. Training

B. The CONTRACTOR shall provide materials and personnel in support of the System Commissioning to fill basins with clean water, transfer fluids, repair/remedy any and all electrical and mechanical issues, provide temporary tie-ins, temporary piping, transfer pumps, etc.

C. The CONTRACTOR shall coordinate with the ENGINEER and OWNER to seed the MBR system with sludge at the conclusion of the clean water testing. The MBR Supplier is not responsible for supplying the seed sludge.

D. The System Commissioning shall begin at the CONTRACTOR's discretion, within the limits defined herein:
   1. Successful completion of a pre-commissioning Mechanical Inspection is required.
   2. Start of Commissioning shall be no later than 60 days after completion of Mechanical Inspection.

E. The OWNER shall operate the plant during the Commissioning Period; however, Supplier and CONTRACTOR shall be allowed to provide onsite assistance.

F. Supplier is responsible for monitoring operating conditions and performance during the Commissioning Period.

G. Supplier shall provide the OWNER with a Plant Operations Manual after the end of the Commissioning Period. The manual shall include at a minimum:
   1. As-built drawings
   2. Safety Manual
   3. HMI User's Manual
   4. As-built control schematics
   5. Process variables and control narrative.

DRAFT

H. Supplier shall submit the Plant Operations Manual within 2-4 weeks after the end of the Commissioning Period.

I. Membrane permeate quality shall be evaluated to determine compliance of the MBR System with Performance Requirements. If the MBR system fails to comply with requirements of membrane permeate quality, Supplier shall provide the OWNER and the ENGINEER a written plan of modifications to the system (such as repairing damaged membranes, replacing seals, complete replacement of system) to achieve compliance with the requirements. Upon implementation of modifications plan, the permeate quality tests shall re-commence in their entirety.

2.12 TRAINING

A. The MBR System Supplier shall provide Training in the maintenance and operation of all systems included in the Supplier's control system.

B. Training shall be completed prior to the completion of the System Commissioning. All training shall be performed by the Supplier or a factory-certified representative of the supplier or component supplier. Training is to include:
1. Navigation of all HMI screens and menus
2. Review of automatic operations and controls
3. Changing process set points
4. Overriding controls from the HMI
5. Manual operation of the system in the event of a power failure
6. Maintenance cleaning
7. Trouble shooting

END OF SECTION

DRAFT

SECTION 46 7626 – SLUDGE DEWATERING SCREW PRESS

PART 1 – GENERAL

1.01 WORK INCLUDED

A. There shall be furnished a dewatering system including in-line flocculation tank and dewatering screw press with drivers and features specified in this Section and scheduled below. All equipment shall be provided by a single manufacturer. The dewatering system line shall be capable of dewatering municipal waste activated sludge.

1.02 REFERENCES

A. American Bearing Manufacturers Association (ABMA)

B. American Gear Manufacturers Association (AGMA)

C. American Society of Mechanical Engineers (ASME)

D. Institute of Electrical and Electronics Engineers, Inc. (IEEE)

E. American Welding Society (AWS) D1.1, Structural Welding Code.

F. National Electric Code (NEC).

G. National Electrical Manufacturers Association (NEMA).

H. American National Standards Institute (ANSI).

1.03 SCREW PRESS DESCRIPTION

A. Screw press system shall be capable of municipal waste activated sludge described below.

B. Dewatering screw press with components as specified in this Section and shown on the Drawings and as required for a complete and functional screw press system, including:
1. Screw press with all 304 stainless steel wetted parts
2. Sludge inlet headbox
3. Removable drums
4. Removable drum covers
5. Three screen spray showers
6. Speed reducer
7. Galvanized carbon steel base
8. Flanged filtrate outlet
9. Back pressure cone
10. Flocculation tank with mixer
11. Equipment Motors
12. Anchor age/seismic support calculations
13. Pressure transducer type level element with indicating transmitter and high level probe

C. Design Requirements:
1. Screw Press Minimum Performance Requirements for Municipal Waste Activated Sludge

Feed Solids, % total solids (TS)	1% or greater
Discharge Solids, % TS	15.0% with polymer addition
Design Inlet Capacity	994 dry pounds per hour
Design Hydraulic Capacity	200 gpm at 1%
Max Polymer Usage	20 lbs/hr

DRAFT

2. Motor Characteristics – as described in this Section.

1.04 SUBMITTALS

A. Submit as specified in Section 01 3300 – Submittal Procedures.

B. Product Data:
   1. Submit data completely describing product including plan and section views and listings of materials of construction.
   2. Submit surface preparation and finishes to be applied to all equipment.

C. Shop Drawings:
   1. Complete manufacturer fabrication/assembly drawings stamped by a registered Engineer.
   2. Certified drawings showing dimensions, weights, loading information and location of all components; Include details on interconnecting piping, supports, and control panel.
   3. Wiring, control schematics, and control logic diagrams for all electrical and control components furnished.
   4. Manufacturer's Drawings shall be coordinated with the Contract Drawings, including equipment numbers and piping designations.
   5. List of Recommended Spare Parts with price information

D. Structural Calculations
   1. Structural anchor points to concrete foundation
   2. Seismic loads on frame and anchor bolts

E. Resume of Technician to perform thickener screw press adjustments, inspections, observations of test operations, supervision of functional and performance testing, and training.

F. Training Course Outline

G. Operating and Maintenance Manuals: Include complete lubrication, maintenance, and operation instructions, including initial start-up instructions, and unloading and handling methods.

H. Manufacturer's references

I. Quality Control Submittals:
   1. Special shipping storage, protection, and handling instructions
   2. Manufacturer's Installation Instructions
   3. Factory Test Results

1.05 QUALITY ASSURANCE

A. Manufacturer Qualifications: Consideration will be given only to the equipment of Manufacturers who are regularly engaged in such work and thoroughly experienced in the design and manufacture of screw press equipment specifically manufactured for municipal, secondary treated, waste activated sludge. Manufacturer shall meet the requirements below:
   1. Have a minimum of 10 years of experience of producing substantially similar equipment, and show evidence of satisfactory operation in North America for presses dewatering municipal waste activated sludge.
   2. Must have a company-owned service and parts facility within the continental United States.

1.06 DELIVERY, STORAGE, AND HANDLING

A. Contractor shall unload, store, and handle the equipment per the manufacturer's instructions.

DRAFT

1.07 WARRANTY

A. Warranty shall extend for 12 months after start-up or 18 months after delivery, whichever comes first.

B. Warranty shall include all parts, labor, and coatings for repairing or replacing equipment that fails during the warranty period. Defects occurring within the warranty period shall be repaired or replaced by the manufacturer at no cost to the OWNER.

C. An Extended Mechanical Warranty shall be offered for all mechanical components of the flocculation tank and dewatering screw press. The Extended Mechanical Warranty shall be for 10 years after start-up.
   1. Extended Warranty shall include coverage of:
      a. Gearboxes, bearings, bushings, spray showers, and any wear items.
   2. Extended Mechanical Warranty does not cover:
      a. Damage or failures due to lack of proper lubrication types, quantities, or schedules.
      b. Motors, field instrumentation, power control, logic control, or any other electronic component.
      c. Coatings.
   3. Extended Mechanical Warranty shall include all parts and labor for repairing or replacing components to maintain the screw press minimum performance requirements listed.

1.08 PROJECT CONDITIONS

A. Deliver screw press and flocculation tank as completely assembled as practical to minimize field assembly. Contractor shall be responsible for unloading and any necessary field assembly. Contractor shall contact manufacturer for screw press field assembly requirements during bid.

1.09 SEQUENCING AND SCHEDULING

A. Coordinate work with restrictions as specified.

1.10 MAINTENANCE

B. Special Tools: Provide standard manufacturer supplied toolbox with all tools needed to assemble and disassemble the screw press.

PART 2 – PRODUCTS

2.01 MANUFACTURER

A. Manufacturer: FKC Co., LTD or approved equal.
   1. Screw press, flocculation tank, and appurtenances shall be provided by one manufacturer.

2.02 MATERIALS

A. Wetted Parts: Stainless Steel, Type 304, unless otherwise indicated

B. Drive Unit: As scheduled

C. Galvanized carbon steel base

D. Other parts: Coated carbon steel

DRAFT

E. Miscellaneous hardware, including bolts, nuts, washers, and fastener clips in the wetted area: Stainless steel.

2.03 HOUSING

A. Housing shall be rigid Type 304 stainless steel weldment, supported by structural carbon steel base and shall have removable Type 304 stainless steel covers for screen access.

B. Sludge feed connections and filtrate discharge connections shall be Type 304 stainless steel 6-inch pipe stub and 4-inch (respectively) flanged meeting ANSI/ASME B 16.1, Class 125, or ANSI/ASME B 16.5, Class 150; provide higher pressure class as required to meet Design Working Pressure.

C. Press shall have Type 304 stainless steel discharge box with hinged lid. Dimensions as indicated on the Drawings.

D. Housing shall be designed for noise reduction, to act as a protective guard and to provide a complete enclosure for odor containment.

E. The screw press shall be provided with Type 304 stainless steel spray covers on the top and sides of the screw press drums where necessary for sanitation and personnel protection. Side covers shall be easily removable by a single person.

F. If applicable, include 304 stainless steel foul air connections suitable for flexible duct connections with clamps for as shown on the Drawings.

G. Headbox shall include hinged top inspection doors (12 inch by 12 inch min).

2.04 DRIVE SYSTEM

A. Drive system shall consist of an electric motor suitable to use with a variable speed drive system as required to provide full load capacity and also to withstand the full starting torque of the system. VFD shall be provided as part of the Dewatering Control Panel.

B. Screw speed shall be electronically controlled by means of a VFD in a NEMA 4X enclosure. Maximum screw speed shall be 4 rpm or lower.

C. Speed Reducer:
   1. Provide speed reducer rated for uniform shock load classification with a SUM ITOMO-CYCLO reducer service factor of 1.00.
   2. Speed reducer shall be Sumitomo Cyclo Reducer or ENGINEER-approved equal.

D. Shaft Seals shall be Musashi double lip spring-loaded Nitrite oil seal or ENGINEER-approved equal.

E. Bearings:
   1. Bearings:
      a. Screw press shall be designed so that the entire rotating assembly is supported on the discharge end by a grease lubricated ball or spherical roller type bearing. The bearing shall be conservatively designed to withstand all stresses of the service specified. Main bearings shall have a minimum B-10 life rating of 500,000 hours at standard operating speeds.
      b. Bearings for the screw shall be anti-friction with grease lubrication.

F. Flexible connectors for the drive motor and screw press junction boxes shall be furnished by the installing Contractor such that all local electrical codes are met.

G. Screw Press Motor
   1. Provide inverter rated, severe duty motor, 1.15 SF, NEMA Premium Efficiency, cast iron frame with manufacturer's standard, corrosion resistant, epoxy finish.
   2. Minimum screw press motor requirements of 5 HP, (480v/3 phase)

DRAFT

2.05 SCREW ASSEMBLY

A. Screw Shell: Stainless steel, Type 304

B. Helical flight welded to screw shell: Stainless steel Type 304 Brushless Flight

C. The screw supported in the head by a radial bearing

2.06 SCREEN ASSEMBLY

A. Type 304 stainless steel panels with punched holes

B. Wedge wire screens are not acceptable.

C. Screens shall offer a minimum total surface area of 21 m^2

2.07 DRUM ASSEMBLY

A. Drums shall be 0.5 to 1.0 meters in length and split into two, removable drum halves.

B. Drum configuration shall allow maintenance work in the screw press flight area without removal of the screw from the press.

C. The inner diameter for each drum shall be a minimum of 1200 mm.

2.08 PRESS ASSEMBLY

A. Screw press assembly shall be such that clearances around the entire perimeter of the unit for maintenance work shall not exceed 36 inches.

2.09 FLOCCULATION TANK

A. Flocculation tank wetted parts shall be constructed of 304 stainless steel throughout.

B. Flocculation tank shall be designed for a retention time of 2 to 4 minutes under the normal design flow rate. The inlet of the tank shall be located at the bottom of the tank and conditioned sludge shall overflow from the discharge pipe located near the top of the tank. Provide XX-inch discharge pipe stub with flexible rubber hose sleeve connection.

C. Flocculation tank shall be supplied complete with an agitator. The agitator drive shall be an SEW Eurodrive Varimot speed reducer/mechanical variator or ENGINEER-approved equal. Agitator speed shall be adjusted manually at the flocculation tank.

D. Flocculation tank, agitator, and agitator drive shall be designed to handle the entire flow capacity range of the screw press.

E. Motor for the drive shall be 480 v / 3-phase unit. Motor shall have an aluminum cast frame. Motor efficiency will be 77% or greater. Motor bearings shall be 6306 C3-2RS or ENGINEER-approved equal on the drive end and 6205 C3-2RS or ENGINEER-approved equal on the fan end.

F. Provide split flocculation tank cover with a hinged inspection port. Include a 4-inch pipe stub vent connection on the fixed portion of the cover.

2.010 INSTRUMENTATION AND CONTROLS

A. Screw press manufacturer shall provide the dewatering control panel, PLC, and field instrumentation for the dewatering system, as described and shown on the Drawings.

B. Within 180 days of Contract Notice to Proceed, screw press manufacturer shall provide a detailed written description of the modes of operation, interlocking and process control requirements for use by the Contractor, sufficient for proper operation of the dewatering system.

C. The PLC will be programmed by the screw press manufacturer. Screw press manufacturer is responsible to direct all programming changes required to meet the system performance standards.

DRAFT

D. The HMI will be programmed by the screw press manufacturer.

E. Screw press manufacturer shall provide a pressure sensing type level indicating transmitter as follows:
   1. Manufacturer: One of the following or ENGINEER-approved equal:
      a. Rosemount
      b. Fischer and Porter
      c. Leeds and Northrup
      d. Foxboro
   2. Level Indicating Transmitters: Pressure sensing, 24 volt direct current 2 wire type with the following:
      a. 3-inch ANSI B16.5, Class 150 carbon steel mounting flange
      b. 1/2 inch National Pipe Tread pressure or reference connection
      c. No mechanical fulcrum points
      d. Electronic span
      e. Zero adjustments
      f. Adjustable damping feature
      g. Positive over-range protection
      h. Field adjusted zero elevation or suppression
      i. 3-valve manifold
   3. Transmitters Housings: NEMA 4X corrosion resistant and weatherproof, with operation temperature range of from 0°F to 175°F with relative humidity of 0 to 100 percent.
   4. Wetted Material: Cadmium-plated carbon steel, stainless steel, or other corrosion-resistant materials, compatible with process fluid.
   5. Accuracy: Within 0.25 percent of span with repeatability of 0.10 percent.
   6. Output: 4 to 20 milliampere direct current without need for external load adjustments.
   7. Calibrate transmitters to required range.
   8. Provide flange on headbox for mounting the level element.

F. Conductivity Level Probe by Screw Press Manufacturer
   1. Manufacturers, Products: Omega LVC-E511 or ENGINEER-approved equal.
   2. 303 Stainless Steel electrodes, ¼" diameter.

2.011 ANCHOR BOLTS

A. Anchor bolts will be sized by the screw press Manufacturer and provided by the Contractor.

2.012 FINISHES

A. Surface preparation of carbon steel surfaces on the screw press and flocculation tank shall be in accordance with SSPC-SP6 standards and shall be coated as follows:
   1. Prime Coat: 5 mils of Carboline 890
   2. Top Coat: 2 mils of Carboline 890 (if outdoors & exposed to direct sunlight), 5 mils (if indoors or covered outdoors)

B. Motors and gearboxes for the screw press and flocculation tank shall be prepared and coated with the manufacturer's standard surface preparation, prime coat, and top coat for corrosion resistance.

DRAFT

PART 3 – EXECUTION

3.01 INSTALLATION

A. Install products in accordance with manufacturer's instructions.

B. The Contractor shall provide all hardware and accessories required for installation.

C. Manufacturer’s Field Services
   1. Include the following:
      a. Inspection and Functional/Operational Testing: One trip with 3 days service.
      b. Performance Testing/Training: One trip with 2 days service.
   2. Additional trips resulting from failed tests shall be the sole responsibility of the manufacturer.

3.02 EQUIPMENT STARTUP AND TESTING

A. Perform start-up and functional testing for entire dewatering system, with all units operating in AUTO mode. The Contractor shall complete all electrical/instrumentation and loop testing prior to functional performance testing

B. Provide Major Certificate of Proper Installation.

C. Operational Test:
   1. Functional/operational tests may be performed in the same trip.

D. Guaranteed Performance Testing:
   1. Include the minimum number of trips and duration of service as previously indicated.
   2. Include demonstration that dewatering system meets minimum specified performance requirements of this specification.
   3. Manufacturer’s representative shall supervise all performance testing and be solely responsible for operating the dewatering and ancillary equipment (e.g., sludge and polymer feed systems). The OWNER shall furnish personnel to assist in operating the equipment and take samples. Manufacturer shall provide certified test reports.
   4. After adjustments are made to achieve the operating requirements, the dewatering system will be operated at the design conditions to demonstrate consistent performance. Samples of feed, filtrate, and cake shall be collected by Engineer's appointed representative or Owner and evaluated by the Owner. The test will be deemed successful if average test results meet or exceed those specified.
   5. Sample testing and analysis costs shall be the responsibility of the Owner.
   6. Polymer shall be as selected by the polymer representative and supplied by the Owner for testing.
   7. Data collected during each test run used to complete guaranteed performance testing shall include, as a minimum:
      a. Run number
      b. Date
      c. Time
      d. Feed sludge percent total solids, %TS
      e. Sludge feed rate, gpm
      f. Polymer name
      g. Polymer percent active, %
      h. Polymer feed rate (neat), gph
      i. Screw press speed, rpm
      j. Amperage draw by the screw press drive
      k. Cake percent total solids, %TS
   8. Provide calculated values for the following:
      a. Solids throughput, lbs TS/hr
   9. Solids concentrations will be determined using “Standard Methods.”

DRAFT

10. Guaranteed Performance Test Runs:
    a. Test runs shall consist of two 5 hour steady state runs performed on two consecutive days. Maintain the average design solids throughput of 994 dry pounds per hour throughout the test runs.
    b. All test data and values and previously described and required to demonstrate compliance shall be recorded at the start of each run and every hour thereafter. The averaged results for each sample shall meet or exceed the minimum and guaranteed performance standards.
    c. The units shall be operated in AUTO mode at all times during the Guaranteed Performance test runs.
    d. Should the installed equipment fail to meet the specified minimum performance requirements, the manufacturer shall within 30 days make all necessary changes to the equipment and/or operation at no cost to the OWNER. The equipment shall be retested using the same procedure indicated above. If after the second test the equipment still does not meet the minimum performance requirements and/or guaranteed performance standards, damages will be assessed and/or equipment replaced. If assessed, damages will be limited to ten percent (10%) retention, if performance requirements are not met.
    e. The screw press dewatering system shall meet every item of the performance criteria as specified prior to acceptance of the OWNER.
11. MANUFACTURER shall prepare and submit a written report documenting the test data listed above.
12. Provide a computer spreadsheet compatible with Microsoft Excel (latest version) with the test data listed above.

E. Witnessing: All field testing shall be witnessed by the ENGINEER.

F. A representative of the screw press manufacturer shall be provided for the following:
    1. To inspect the equipment and installation
    2. To make any field adjustments to ensure proper equipment operation
    3. To furnish affidavit stating that the dewatering system has been tested and is ready for installation as specified.
    4. To inspect start-up

G. Manufacturer shall inspect system before initial start-up and certify that system has been correctly installed and prepared for start-up.

H. Training:
    1. Provide operator training for at least 2 days on-site by factory trained representative. Operator training to include:
        a. Operations and inspection training
        b. Safety instruction
        c. Preventative maintenance instruction
        d. Calibration and other pertinent services

END OF SECTION

DRAFT

Appendix C - City-Purchased Equipment Shop Drawings

DRAFT

SHOP DRAWING REVIEW

Project: **San Luis West WWTP Improvements**

Submittal No. **#46 73 63.23_002 FKC Control Panel & Instrumentation**

Date Received: **06/03/2025**

Job #: **B777**

Comments:

No Exceptions Taken..... ☐
Submit Specific Item ..... ☒
Accepted with Corrections Noted..... ☒
Revise and Resubmit..... ☐
Rejected ..... ☐

Note:
Review is only for general conformance with the design concept of the project and general compliance with the information included in the Contract Documents. Any action shown is subjected to the requirements of the drawings and the specifications. Contractor is responsible for correlating and confirming dimensions at the job site, choice of fabrication processes and techniques of construction: coordination of his work with that of other trades; and performing the work in a safe satisfactory manner.

DATE: 7/16/2025 BY: NT/NC

Submittal Comments:

1. **Submit Specific Item:** Please provide an updated 3-line diagram with correct VFD and motor sizes as soon as possible.

2. **Accepted with Corrections:** Vendor to note that the provided 3-line diagram has inconsistencies between this submittal and the previous mechanical submittal in regards to stated motor sizes. Verify all motor and VFD sizes and update in all future submittals.

DRAFT

8723 E. Via de Commercio, #A-204 | Scottsdale, AZ 85258
P: (480) 991-3595 F: (480) 751-1810 | www.pacewater.com

Technical Systems Inc.

Corporate Office
2303 196th Street SW
Lynnwood, WA 98036
Tel 425.775.5696
TSIcontrols.com

Control Panels & Instrumentation

Specification Section N/A

TSI Submittal #001

Project Name: San Luis AZ – West WWTP

Customer: FKC Company, LTD.

TSI Project No.: P25-026

Project Manager: Bryan Crutcher

Date: June 3, 2025

Prepared By: Technical Systems, Inc.
2303 196th St SW
Lynnwood, WA 98036
(425) 775-5696

DRAFT

Technical Systems Inc Control Panel BOM			FKC San Luis AZ - West WWTP City of San Luis AZ		Customer - FKC Company, LTD. Job Number - P25-026
PartID	**Qty**	**Manufacturer Part Number**	**Description**	**Manufacturer**	**Vendor**
			INSTRUMENTATION		
F-011D	1	5W4C1H-C6ELHA0DHA1K0A+AA	Magnetic Flow Meter, 4" Tube, Class 150 Carbon Steel Flange, Hard Rubber Liner, 316L Electrode, Proline Promag W 400 Transmitter, 100-240 VAC/24 VAC/DC, HART Enabled, Bluetooth, 1/2" Terminal Box Connections	Endress+Hauser	Endress+Hauser (Field Instr. & Controls)
F-017D	2	DK5GD-1HAHL	Magnetic Flow Meter Grounding Ring, 4", 316L SS, Class 150 Flange Mount	Endress+Hauser	Endress+Hauser (Field Instr. & Controls)
L-085C	1	3E2C	Threaded 2-Electrode Assembly, 2" NPT Mount, 316SS Body	Warrick	Branom Instrumentation
P-010A	1	PI-001BREZ02-MFRKG/US/ /P	PI2307, Pressure Sensor for Sanitary Application, 145 PSI Pressure Rating, 20-32VDC, 4-20 mA Output	IFM eFector	IFM eFector
P-010B	1	EVT006	Cable, 4-Wire Right Angle, M12 Connector, 316SS Coupling Nut	IFM eFector	IFM eFector

DRAFT

Technical Systems Inc Control Panel BOM			FKC San Luis AZ - West WWTP City of San Luis AZ		Customer - FKC Company, LTD. Job Number - P25-026
PartID	**Qty**	**Manufacturer Part Number**	**Description**	**Manufacturer**	**Vendor**
			CONTROL PANEL		
136A	1	SCE-60XEL4918SSLP	Flange Mount Disconnect Enclosure, 304SS, NEMA 3R/4/4X/12, Dual Door, 60.00" x 49.00" x 18.00"	Saginaw	Saginaw
138N	1	SCE-60P48	Enclosure Backpan, Painted Mild Steel, 56.00" x 44.00"	Saginaw	Saginaw
141A	1	SCE-LSA	Light Switch and Moutning Assembly	Saginaw	Saginaw
142A	1	0595682	LED Lighting Package, Under Cabinet Style, 10-Watt LED, Hard-wired 120 VAC, 24.00" x 1.61" x 2.13"	Utilitech	Utilitech
161G	1	SCE-AC3400B460VSS	Conditioner, Air - 3400 BTU/Hr. 460 Volt 304SS NEMA Type 3R, 4, 4X & 12 35.43" H x 12" W x 10.63" D, 2.5A Max Current	Saginaw	Saginaw
200B	150	3044102	Terminal Block, UT4, Gray, 26-10 AWG, 600V, 32A	Phoenix Contact	Graybar Electric Company Seattle
200C	20	3044131	Terminal Block, UT6, Gray, 24-8 AWG, 600V, 41A	Phoenix Contact	Graybar Electric Company Seattle
201B	12	3044128	Terminal Block, Grounded, UT4-PE, Yellow-Green, 26-10 AWG	Phoenix Contact	Graybar Electric Company Seattle
202A	10	3047028	Terminal Block End Barrier, UT2.5/10 Terminals	Phoenix Contact	Graybar Electric Company Seattle
203A	30	0800886	Terminal Block End Clamp, 9.5mm Wide	Phoenix Contact	Graybar Electric Company Seattle
204B	4	3030365	Terminal Block Plug-in Bridge, UT4, Red, 20 position (Trim as Required)	Phoenix Contact	Graybar Electric Company Seattle
210A	32	1492-WFB424	Fuse Terminal Block, 5x20mm Fuse, Black, Red LED Indicator, 30-12 AWG, 15A @ 10-57VAC/VDC	Allen-Bradley	North Coast Electric Company
210B	8	1492-WFB4250	Fuse Terminal Block, 5x20mm Fuse, Black, Neon LED Indicator, 30-12 AWG, 15A @ 100-300VAC	Allen-Bradley	North Coast Electric Company
211A	3	1492-SJFB8-10	Fuse Terminal Block Side Jumper, 10 Position Insulated (Trim as Required)	Allen-Bradley	North Coast Electric Company
221A	16	S500-250-R	Fuse, 0.25 A, Glass Body, 5x20mm, Fast Acting, 250VAC/60VDC	Bussmann	Graybar Electric Company Seattle
221B	16	S500-500-R	Fuse, 0.5 A, Glass Body, 5x20mm, Fast Acting, 250VAC/60VDC	Bussmann	Graybar Electric Company Seattle
221D	8	S500-2-R	Fuse, 2 A, Glass Body, 5x20mm, Fast Acting, 250VAC/60VDC	Bussmann	Graybar Electric Company Seattle
232A	1	1159037	Power Supply, TRIO Power, 24VDC (22.5-29.5VDC range setting), 5.0 A, 85-264VAC input	Phoenix Contact	Graybar Electric Company Seattle
241C	12	1489-M1C050	Miniature Circuit Breaker, 1-Pole, 5A, Din Rail Mount, 277VAC/48VDC Max, Trip Curve C, 10kA, UL 489 Listed	Allen-Bradley	North Coast Electric Company
241E	1	1489-M1C100	Miniature Circuit Breaker, 1-Pole, 10A, Din Rail Mount, 277VAC/48VDC Max, Trip Curve C, 10kA, UL 489 Listed	Allen-Bradley	North Coast Electric Company
241K	1	1489-M1C300	Miniature Circuit Breaker, 1-Pole, 30A, Din Rail Mount, 277VAC/48VDC Max, Trip Curve C, 10kA, UL 489 Listed	Allen-Bradley	North Coast Electric Company
245A	1	2907918	Surge Arrester, Pluggable Type, 150VAC/DC, 26A (20A for UL Applications)	Phoenix Contact	Graybar Electric Company Seattle
260A	1	UGB2/0-414-6	Ground Bus Bar, Tin Plated Copper, 5" x 5/8", 14 - 4 AWG, 6-port	Panduit	Graybar Electric Company Seattle

DRAFT

PartID	Qty	Manufacturer Part Number	Description	Manufacturer	Vendor
307F	16	700-HK36Z24-4	Slim Line Control Relay, SPDT, 16A Contacts, 24 VDC Coil, Pilot Light	Allen-Bradley	North Coast Electric Company
307G	1	700-HK36A1-4	Slim Line Control Relay, SPDT, 16A Contacts, 120 VAC Coil, Pilot Light	Allen-Bradley	North Coast Electric Company
307H	17	700-HN121	Slim Line Control Relay Base, Mini 5-Blade Base Socket, Screw Terminals	Allen-Bradley	North Coast Electric Company
308E	1	700-HC24Z24-4	Ice Cube Control Relay, 4PDT, 7A Contact, 24 VDC, Pilot Light	Allen-Bradley	North Coast Electric Company
308G	1	700-HN104	Ice Cube Control Relay Base, Mini 14-Blade Base Socket, Screw Terminals	Allen-Bradley	North Coast Electric Company
308H	1	700-HB32A1-3-4	Ice Cube Control Relay, DPDT, 15A Contact, 120 VAC, Pilot Light & Manual Override	Allen-Bradley	North Coast Electric Company
308J	1	700-HN153	Ice Cube Control Relay Base, 11-Blade Base Socket, Screw Terminals	Allen-Bradley	North Coast Electric Company
320A	1	0804155	Receptacle, 15A/125VAC, DIN rail mounting, simplex	Phoenix Contact	Graybar Electric Company Seattle
322B	1	1263628	Receptacle, GFCI, 15A/125VAC, DIN rail mounting, duplex, Slim Frame	Phoenix Contact	Graybar Electric Company Seattle
356B	5	800H-JR2B	Selector Switch, 3-Position, Maintained, 30mm, NEMA-4X, 2 NO/2 NC Contact	Allen-Bradley	North Coast Electric Company
357D	1	800H-FRXT6D4	Push Button, Non-Illuminated Mushroom Head, 2-Position Push-Pull Twist Release, Red, 30mm, NEMA-4X, 1 NO/1 NC Contact	Allen-Bradley	North Coast Electric Company
358A	5	800H-UR29	Potentiometer, 10k Ohms, 30mm, NEMA-4X	Allen-Bradley	North Coast Electric Company
364A	5	800H-QRBH2A	Pilot Light, Push-to-Test, LED, 12-130VAC/VDC, Amber, 30mm, NEMA-4X	Allen-Bradley	North Coast Electric Company
364B	5	800H-QRBH2G	Pilot Light, Push-to-Test, LED, 12-130VAC/VDC, Green, 30mm, NEMA-4X	Allen-Bradley	North Coast Electric Company
364D	1	800H-QRBH2W	Pilot Light, Push-to-Test, LED, 12-130VAC/VDC, White, 30mm, NEMA-4X	Allen-Bradley	North Coast Electric Company
400C	1	GXT5-1000LVRT2UXL	True Online UPS, 1000VA, 120VAC Output	Liebert	Graybar Electric Company Seattle
423B	1	1783-US8T	Unmanaged Ethernet Switch, 8-port 10/100 Copper, 18-60VDC Supply	Allen-Bradley	North Coast Electric Company
455A	1	cMT3092Xv2	Smart HMI, 9.7", Resolution 1024 x 768, Dark Grey Bezel, 1.6 GHz CPU, 4 GB Flash Memory, 1 GB DRAM, UL Listed, Ethernet, 24VDC	Maple Systems	Maple Systems, Inc.
460A	1	H87A485-4	Sunshield, Large, 11.25" H x 15.875", NEMA 4	Shade Aid	Smith & Loveless
540B	1	5069-L310ER	CompactLogix 5380 Controller, 1 MB, 8 I/Os, 24 nodes, Standard, ships with 5069-ECR end cap	Allen-Bradley	North Coast Electric Company
544B	2	5069-IB16	5069 Compact I/O 16 Channel 24V DC Sink Input Module	Allen-Bradley	North Coast Electric Company
545C	1	5069-OB16	5069 Compact I/O 16 Channel 24V DC Source Output Module	Allen-Bradley	North Coast Electric Company
546B	2	5069-IF8	5069 Compact I/O 8 Channel Voltage/Current Analog Input Module	Allen-Bradley	North Coast Electric Company
547B	1	5069-OF8	5069 Compact I/O 8 Channel Voltage/Current Analog Output Module	Allen-Bradley	North Coast Electric Company
549A	1	5069-RTB64-SCREW	5069 Compact I/O Power terminal RTB kit for both 4 and 6 pin Screw type	Allen-Bradley	North Coast Electric Company
549C	6	5069-RTB18-SCREW	5069 Compact I/O 18 pins Screw type terminal block	Allen-Bradley	North Coast Electric Company

DRAFT

Technical Systems Inc Control Panel BOM			FKC San Luis AZ - West WWTP City of San Luis AZ		Customer - FKC Company, LTD. Job Number - P25-026
PartID	**Qty**	**Manufacturer Part Number**	**Description**	**Manufacturer**	**Vendor**
701Q	1	140G-G6C3-D12	Molded Case Circuit Breaker, 125A, Thermal Magnetic, 65 kAIC Interrupt Rating, 3 Poles, 480VAC	Allen-Bradley	North Coast Electric Company
701R	1	140G-G-TLC13	Molded Case Circuit Breaker Terminal Lugs, Frame G, Qty 3, 1 x 14-1/0 AWG	Allen-Bradley	North Coast Electric Company
701S	1	140G-G-MTL63	Molded Case Circuit Breaker Terminal Lugs, Frame G, Qty 3, 6 x 14-2 AWG, Includes Lug Cover	Allen-Bradley	North Coast Electric Company
705D	1	140G-G-FCSB03	Flange Mount Handle Assembly, 3' Cable, Stainless Steel Handle	Allen-Bradley	North Coast Electric Company
710S	2	UD-80A	Distribution Block, 1-Pole, Line Side: (1) 16 AWG - 4 AWG, Load Side: (4) 16 AWG - 4 AWG, 600V, 85 Amps per Pole, IP20, DIN Rail Mount.	nVent Eriflex	Platt Electric Supply
715D	1	BSPMA3480WYGR	Surge Protector, 277/480 VAC 3 Phase WYE, 200kA (Phase), Din Rail Mount, UL 1449	Bussman	Graybar Electric Company Seattle
720E	3	LP-CC-5	Fuse, 5 Amp, Class CC-Rejection, 600VAC/200kAIC, Current limiting, Time delay	Bussmann	Graybar Electric Company Seattle
720Q	2	LP-CC-30	Fuse, 30 Amp, Class CC-Rejection, 600VAC/200kAIC, Current limiting, Time delay	Bussmann	Graybar Electric Company Seattle
725A	1	CCP2-2-30CC	Fuse Holder, 2 Pole w/ Indicator, Class CC-Rejection, 600VAC/30 Amp, 200kA Interrupt Rating, Branch Circuit Protection Rated, Padlockable in Open/Off Position	Bussmann	Graybar Electric Company Seattle
725B	1	CCP2-3-30CC	Fuse Holder, 3 Pole w/ Indicator, Class CC-Rejection, 600VAC/30 Amp, 200kA Interrupt Rating, Branch Circuit Protection Rated, Padlockable in Open/Off Position	Bussmann	Graybar Electric Company Seattle
732N	1	Q007LEKF6	Transformer, 7500 VA, Single Phase, 240/480 VAC Primary, 120/240 VAC Secondary	Hammond Power Solutions	Platt Electric Supply
736D	1	CRX03D4AC	Line Reactor, 3% Impedance, for 480 VAC 3 phase, 2.0 HP VFD, 3.4 A Max	Hammond Power Solutions	Platt Electric Supply
736F	1	CRX07D6AC	Line Reactor, 3% Impedance, for 480 VAC 3 phase, 5.0 HP VFD, 7.6 A Max	Hammond Power Solutions	Platt Electric Supply
736G	1	CRX0011BC	Line Reactor, 3% Impedance, for 480 VAC 3 phase, 7.5 HP VFD, 11.0 A Max	Hammond Power Solutions	Platt Electric Supply
736J	2	CRX0021AC	Line Reactor, 3% Impedance, for 480 VAC 3 phase, 15.0 HP VFD, 21.0 A Max	Hammond Power Solutions	Platt Electric Supply
738C	1	140MT-C3E-B63	Motor Protection Circuit Breaker, 4.0 - 6.3 A, Standard Performance, Frame Size C	Allen-Bradley	North Coast Electric Company
738E	1	140MT-D9E-C16	Motor Protection Circuit Breaker, 10.0 - 16.0 A, High Performance, Frame Size D	Allen-Bradley	North Coast Electric Company
738F	1	140MT-D9E-C20	Motor Protection Circuit Breaker, 14.5 - 20.0 A, High Performance, Frame Size D	Allen-Bradley	North Coast Electric Company
738G	2	140M-F8E-C32	Motor Protection Circuit Breaker, 23.0 - 32.0 A, High Performance, Frame Size F	Allen-Bradley	North Coast Electric Company
740C	1	25B-D4P0N104	PowerFlex 525 AC Drive, with Embedded EtherNet/IP and Safety, 480 VAC, 3 Phase, 2 HP, 1.5 kW Normal Duty; 2 HP, 1.5 kW Heavy Duty, Frame A, IP20 NEMA / Open Type, No Filter	Allen-Bradley	North Coast Electric Company
740E	1	25B-D010N104	PowerFlex 525 AC Drive, with Embedded EtherNet/IP and Safety, 480 VAC, 3 Phase, 5 HP, 4 kW Normal Duty; 5 HP, 4 kW Heavy Duty, Frame B, IP20 NEMA / Open Type, No Filter	Allen-Bradley	North Coast Electric Company
740F	1	25B-D013N104	PowerFlex 525 AC Drive, with Embedded EtherNet/IP and Safety, 480 VAC, 3 Phase, 7.5 HP, 5.5 kW Normal Duty; 7.5 HP, 5.5 kW Heavy Duty, Frame C, IP20 NEMA / Open Type, No Filter	Allen-Bradley	North Coast Electric Company
740H	2	25B-D024N104	PowerFlex 525 AC Drive, with Embedded EtherNet/IP and Safety, 480 VAC, 3 Phase, 15 HP, 11 kW Normal Duty; 15 HP, 11 kW Heavy Duty, Frame D, IP20 NEMA / Open Type, No Filter	Allen-Bradley	North Coast Electric Company
L-085D	1	16MA1B0	Level Switch Electronics Module, 1 NO / 1 NC Contact, 120VAC Supply, 12VAC Secondary Voltage	Warrick	Branom Instrumentation

DRAFT

Technical Systems Inc Control Panel BOM			FKC San Luis AZ - West WWTP City of San Luis AZ		Customer - FKC Company, LTD. Job Number - P25-026
PartID	**Qty**	**Manufacturer Part Number**	**Description**	**Manufacturer**	**Vendor**
			POLYMER SYSTEM CONTROL PANEL (PS-CP)		
135D	1	SCE-42EL3612SSLPPL	Wall Mount Flange Mount Disconnect Enclosure, 304SS, NEMA 3R/4/4X/12, Single Door 42.00" x 36.00" x 12.00"	Saginaw	Saginaw
138G	1	SCE-42P36	Enclosure Backpan, Painted Mild Steel, 39.00" x 33.00"	Saginaw	Saginaw
139A	1	SCE-ELMFK4	Enclosure Wall Mount Kit	Saginaw	Saginaw
140A	1	ALFSWD	Enclosure Switch, Door Activated	Hoffman	Seattle
142A	1	0595682	LED Lighting Package, Under Cabinet Style, 10-Watt LED, Hard-wired 120 VAC, 24.00" x 1.61" x 2.13"	Utilitech	Utilitech
161A	1	SCE-AC1000B120VSS	Conditioner, Air - 1000 BTU/Hr. 120 Volt 304SS NEMA Type 3R, 4, 4X & 12 - 18.9" H x 10" W x 7.5" D, 2.9A Max Current	Saginaw	Saginaw
200B	80	3044102	Terminal Block, UT4, Gray, 26-10 AWG, 600V, 32A	Phoenix Contact	Graybar Electric Company Seattle
200C	8	3044131	Terminal Block, UT6, Gray, 24-8 AWG, 600V, 41A	Phoenix Contact	Graybar Electric Company Seattle
201B	14	3044128	Terminal Block, Grounded, UT4-PE, Yellow-Green, 26-10 AWG	Phoenix Contact	Graybar Electric Company Seattle
202A	4	3047028	Terminal Block End Barrier, UT2.5/10 Terminals	Phoenix Contact	Graybar Electric Company Seattle
203A	20	0800886	Terminal Block End Clamp, 9.5mm Wide	Phoenix Contact	Graybar Electric Company Seattle
204B	1	3030365	Terminal Block Plug-in Bridge, UT4, Red, 20 position (Trim as Required)	Phoenix Contact	Graybar Electric Company Seattle
210A	18	1492-WFB424	Fuse Terminal Block, 5x20mm Fuse, Black, Red LED Indicator, 30-12 AWG, 15A @ 10-57VAC/VDC	Allen-Bradley	North Coast Electric Company
211A	1	1492-SJFB8-10	Fuse Terminal Block Side Jumper, 10 Position Insulated (Trim as Required)	Allen-Bradley	North Coast Electric Company
221A	6	S500-250-R	Fuse, 0.25 A, Glass Body, 5x20mm, Fast Acting, 250VAC/60VDC	Bussmann	Graybar Electric Company Seattle
221B	8	S500-500-R	Fuse, 0.5 A, Glass Body, 5x20mm, Fast Acting, 250VAC/60VDC	Bussmann	Graybar Electric Company Seattle
221D	4	S500-2-R	Fuse, 2 A, Glass Body, 5x20mm, Fast Acting, 250VAC/60VDC	Bussmann	Graybar Electric Company Seattle
232A	1	1159037	Power Supply, TRIO Power, 24VDC (22.5-29.5VDC range setting), 5.0 A, 85-264VAC input	Phoenix Contact	Graybar Electric Company Seattle
241C	5	1489-M1C050	Miniature Circuit Breaker, 1-Pole, 5A, Din Rail Mount, 277VAC/48VDC Max, Trip Curve C, 10kA, UL 489 Listed	Allen-Bradley	North Coast Electric Company
241E	1	1489-M1C100	Miniature Circuit Breaker, 1-Pole, 10A, Din Rail Mount, 277VAC/48VDC Max, Trip Curve C, 10kA, UL 489 Listed	Allen-Bradley	North Coast Electric Company
241K	1	1489-M1C300	Miniature Circuit Breaker, 1-Pole, 30A, Din Rail Mount, 277VAC/48VDC Max, Trip Curve C, 10kA, UL 489 Listed	Allen-Bradley	North Coast Electric Company
245A	1	2907918	Surge Arrester, Pluggable Type, 150VAC/DC, 26A (20A for UL Applications)	Phoenix Contact	Graybar Electric Company Seattle
260A	1	UGB2/0-414-6	Ground Bus Bar, Tin Plated Copper, 5" x 5/8", 14 - 4 AWG, 6-port	Panduit	Graybar Electric Company Seattle

DRAFT

Technical Systems Inc Control Panel BOM			FKC San Luis AZ - West WWTP City of San Luis AZ		Customer - FKC Company, LTD. Job Number - P25-026
PartID	**Qty**	**Manufacturer Part Number**	**Description**	**Manufacturer**	**Vendor**
307B	1	700-HK32Z24-4	Slim Line Control Relay, DPDT, 8A Contacts, 24 VDC Coil, Pilot Light	Allen-Bradley	North Coast Electric Company
307D	1	700-HN122	Slim Line Control Relay Base, Mini 8-Blade Base Socket, Screw Terminals	Allen-Bradley	North Coast Electric Company
307F	16	700-HK36Z24-4	Slim Line Control Relay, SPDT, 16A Contacts, 24 VDC Coil, Pilot Light	Allen-Bradley	North Coast Electric Company
307H	16	700-HN121	Slim Line Control Relay Base, Mini 5-Blade Base Socket, Screw Terminals	Allen-Bradley	North Coast Electric Company
356B	1	800H-JR2B	Selector Switch, 3-Position, Maintained, 30mm, NEMA-4X, 2 NO/2 NC Contact	Allen-Bradley	North Coast Electric Company
357D	1	800H-FRXT6D4	Push Button, Non-Illuminated Mushroom Head, 2-Position Push-Pull Twist Release, Red, 30mm, NEMA-4X, 1 NO/1 NC Contact	Allen-Bradley	North Coast Electric Company
364A	1	800H-QRBH2A	Pilot Light, Push-to-Test, LED, 12-130VAC/VDC, Amber, 30mm, NEMA-4X	Allen-Bradley	North Coast Electric Company
364B	1	800H-QRBH2G	Pilot Light, Push-to-Test, LED, 12-130VAC/VDC, Green, 30mm, NEMA-4X	Allen-Bradley	North Coast Electric Company
421A	1	2891152	Unmanaged Ethernet Switch, 5-port 10/100 Copper, 9-32VDC Supply	Phoenix Contact	Graybar Electric Company Seattle
454A	1	cMT2078X	Smart HMI, 7", Resolution 800 x 600, Dark Grey Bezel, 1.5 GHz CPU, 4 GB Flash Memory, 1 GB DRAM, UL Listed, Ethernet, 24VDC	Maple Systems	Maple Systems
460B	1	H87A582-4	Sunshield, Meduim, 9.0625" H x 12.00" W, NEMA 4, Aluminum Black	Shade Aid	Smith & Loveless
510K	1	1769-L24ER-QBFC1B	CompactLogix Controller, Dual Ethernet w/DLR capability, 750KB Memory, 16 DC Inputs, 16 DC Outputs, 4 Universal Analog Inputs, 2 Analog Outputs, 4 High Speed Counters, Up To 4 1769 I/O Expansion Modules, 8 EtherNet/IP And 120 TCP Connections, 24VDC, 1 USB	Allen-Bradley	North Coast Electric Company
516A	1	1769-IF4	Analog Input Module, 4 Channel, Voltage or Current	Allen-Bradley	North Coast Electric Company
706A	1	9421LJ4	Rotary Operating Mechanism, Complete Kit Includes Base, Handle & Rod, 5.50" to 21.38" Mounting Depth, 6" Handle	Square D	Graybar Electric Company Seattle
706D	1	140G-G-RVM21B	Rotary Handle Assembly, Frame G Base, Black Handle, 21" Maximum Depth	Allen-Bradley	North Coast Electric Company
706E	1	194U-A60-1753	Non-Fused Disconnect Switch, 60A Max	Allen-Bradley	North Coast Electric
738D	2	140MT-C3E-C10	Motor Protection Circuit Breaker, 6.3 - 10.0 A, Standard Performance, Frame Size C	Allen-Bradley	North Coast Electric Company
746L	2	25B-V2P5N104	PowerFlex 525 AC Drive, with Embedded EtherNet/IP and Safety, 120 VAC, 1 Phase, 0.5 HP, 0.4 kW Normal Duty; 0.5 HP, 0.4 kW Heavy Duty, Frame A, IP20 NEMA / Open Type, No Filter	Allen Bradley	North Coast Electric

DRAFT

TI01046D/06/EN/10.21
71535814
2021-09-01

Technical Information
Proline Promag W 400

Electromagnetic flowmeter



DRAFT

Versatile standard flowmeter for the water and wastewater industry

Application

- The bidirectional measuring principle is virtually independent of pressure, density, temperature and viscosity
- Ideal for water measurement, e.g. drinking water, utility water and industrial/municipal wastewater

Device properties

- International drinking water approvals
- Degree of protection IP68 (Type 6P enclosure)
- Approved for custody transfer to MI-001/OIML R49
- Transmitter housing made of durable polycarbonate or aluminum
- WLAN access
- Integrated data logger: measured values monitoring

Your benefits

- Reliable measurement at constant accuracy with 0 x DN run without pressure loss
- Flexible engineering – sensors with fixed flanges or lap joint flanges
- Application suitability – corrosion protection according to EN ISO 12944 for buried or underwater installations
- Improved plant availability – sensor compliant with industry-specific requirements
- Safe operation – no need to open device
- Time-saving local operation without additional software and hardware – integrated web server
- Built-in verification and build-up detection – Heartbeat Technology

Endress+Hauser
People for Process Automation

Table of contents

About this document 4
Symbols 4

Function and system design 5
Measuring principle 5
Measuring system 6
Equipment architecture 7
Safety 7

Input 8
Measured variable 8
Measuring range 8
Operable flow range 12
Input signal 13

Output 13
Output signal 13
Signal on alarm 15
Low flow cut off 17
Galvanic isolation 17
Protocol-specific data 17

Power supply 19
Terminal assignment 19
Pin assignment, device plug 22
Supply voltage 23
Power consumption 23
Current consumption 23
Power supply failure 23
Electrical connection 23
Potential equalization 27
Terminals 31
Cable entries 31
Cable specification 31

Performance characteristics 33
Reference operating conditions 33
Maximum measured error 34
Repeatability 35
Influence of ambient temperature 36

Installation 37
Mounting location 37
Orientation 39
Inlet and outlet runs 40
Adapters 42
Length of connecting cable 43
Special mounting instructions 43
Mounting the transmitter housing 45

Environment 45
Ambient temperature range 45
Storage temperature 46
Atmosphere 46
Degree of protection 46
Vibration- and shock-resistance 47
Mechanical load 48
Electromagnetic compatibility (EMC) 48

Process 48
Medium temperature range 48
Conductivity 48
Pressure/temperature ratings 48
Pressure tightness 51
Flow limit 52
Pressure loss 52
System pressure 53
Vibrations 53

Custody transfer mode 54

Mechanical construction 54
Dimensions in SI units 54
Dimensions in US units 74
Weight 86
Measuring tube specification 90
Materials 91
Fitted electrodes 94
Process connections 94
Surface roughness 94

Human interface 94
Operating concept 94
Languages 94
Local operation 95
Remote operation 95
Service interface 97
Supported operating tools 98
HistoROM data management 99

Certificates and approvals 100
CE mark 101
UKCA marking 101
RCM mark 101
Ex approval 101
Drinking water approval 101
HART certification 101
PROFIBUS conformity 101
Modbus RS485 certification 101
EtherNet/IP certification 101
Radio approval 101
Measuring instrument approval 101
Other standards and guidelines 102

Ordering information 102

Application packages 102
Cleaning 103
Diagnostics functions 103
Heartbeat Technology 103

Accessories 103
Device-specific accessories 103

DRAFT

Communication-specific accessories 104
Service-specific accessories 105
System components 105

Supplementary documentation 106
Standard documentation 106
Supplementary device-dependent documentation 106

Registered trademarks 107

DRAFT

About this document

Symbols

Electrical symbols

Symbol	Meaning
	Direct current
	Alternating current
	Direct current and alternating current
	**Ground connection** A grounded terminal which, as far as the operator is concerned, is grounded via a grounding system.
	**Protective Earth (PE)** A terminal which must be connected to ground prior to establishing any other connections. The ground terminals are situated inside and outside the device: ▪ Inner ground terminal: Connects the protectiv earth to the mains supply. ▪ Outer ground terminal: Connects the device to the plant grounding system.

Communication symbols

Symbol	Meaning
	**Wireless Local Area Network (WLAN)** Communication via a wireless, local network.
	**Bluetooth** Wireless data transmission between devices over a short distance.
	**LED** Light emitting diode is off.
	**LED** Light emitting diode is on.
	**LED** Light emitting diode is flashing.

Symbols for certain types of information

Symbol	Meaning
	**Permitted** Procedures, processes or actions that are permitted.
	**Preferred** Procedures, processes or actions that are preferred.
	**Forbidden** Procedures, processes or actions that are forbidden.
	**Tip** Indicates additional information.
	Reference to documentation
	Reference to page
	Reference to graphic
	Visual inspection

DRAFT

Symbols in graphics

Symbol	Meaning
1, 2, 3, ...	Item numbers
1., 2., 3., ...	Series of steps
A, B, C, ...	Views
A-A, B-B, C-C, ...	Sections
	Hazardous area
	Safe area (non-hazardous area)
	Flow direction

Function and system design

Measuring principle

Following *Faraday's law of magnetic induction*, a voltage is induced in a conductor moving through a magnetic field.

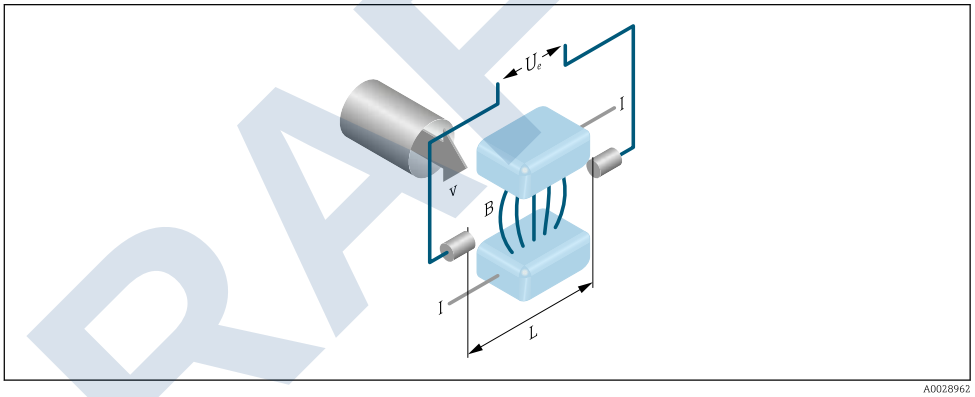

A0028962

Ue Induced voltage
B Magnetic induction (magnetic field)
L Electrode spacing
I Current
v Flow velocity

In the electromagnetic measuring principle, the flowing medium is the moving conductor. The voltage induced (U_e) is proportional to the flow velocity (v) and is supplied to the amplifier by means of two measuring electrodes. The flow volume (Q) is calculated via the pipe cross-section (A). The DC magnetic field is created through a switched direct current of alternating polarity.

Formulae for calculation

- Induced voltage $U_e = B \cdot L \cdot v$
- Volume flow $Q = A \cdot v$

DRAFT

Measuring system

The device consists of a transmitter and a sensor.

Two device versions are available:
- Compact version - transmitter and sensor form a mechanical unit.
- Remote version - transmitter and sensor are mounted in separate locations.

Transmitter

Proline 400
 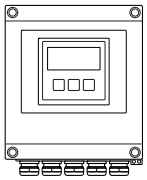
A0045222
	Device versions and materials:
	▪ Compact version: compact housing
	  ▪ Polycarbonate plastic
	  ▪ Aluminum, AlSi10Mg, coated
	▪ Remote version: wall-mount housing
	  ▪ Polycarbonate plastic
	  ▪ Aluminum, AlSi10Mg, coated
	Configuration:
	▪ External operation via four-line, illuminated local display with touch control and guided menus ("Make-it-run" wizards) for applications
	▪ Via operating tools (e.g. FieldCare)
	▪ Via Web browser (e.g. Microsoft Internet Explorer)
	▪ Also for device version with EtherNet/IP output:
	  ▪ Via Add-on Profile Level 3 for automation system from Rockwell Automation
	  ▪ Via Electronic Data Sheet (EDS)
	▪ Also for device version with PROFIBUS DP output:
	Via PDM driver for Siemens automation system

Sensor

Promag W *Lap joint flange, lap joint flange, stamped plate or fixed flange with aluminum half-shell housing: DN 25 to 300 mm (1 to 12 in)* 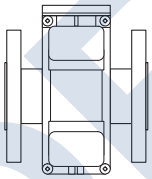 A0017040	▪ Nominal diameter range: DN 25 to 3 000 mm (1 to 120 in) ▪ Materials → 🖹 91
Fixed flange with fully welded housing made of carbon steel: DN 25 to 300 mm (1 to 12 in) 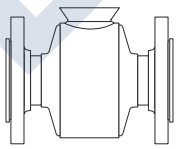 A0022673	

DRAFT

Fixed flange with fully welded housing made of carbon steel: DN 350 to 3 000 mm (14 to 120 in)

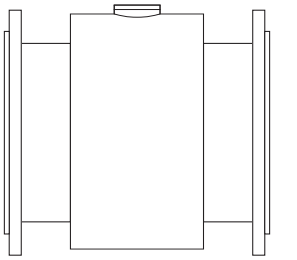

Equipment architecture

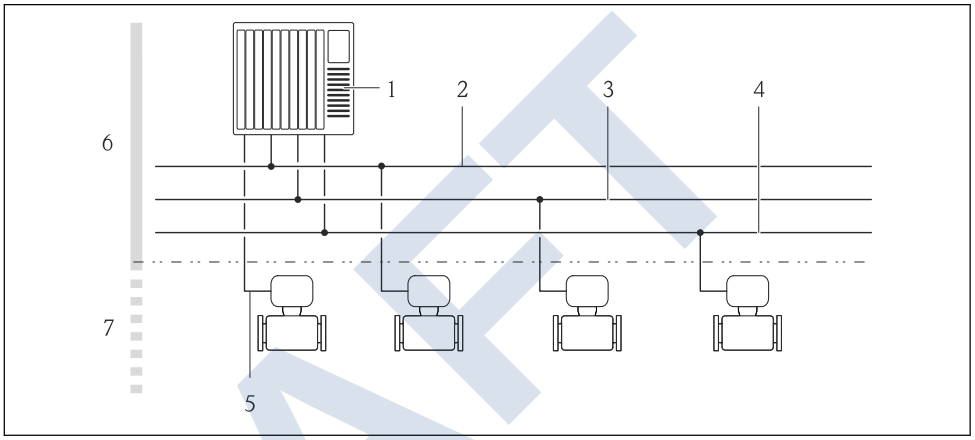

1 *Possibilities for integrating measuring devices into a system*

1 *Control system (e.g. PLC)*
2 *EtherNet/IP*
3 *PROFIBUS DP*
4 *Modbus RS485*
5 *4 to 20 mA HART, pulse/frequency/switch output*
6 *Non-hazardous area*
7 *Non-hazardous area and Zone 2/Div. 2*

Safety

IT security

Our warranty is valid only if the device is installed and used as described in the Operating Instructions. The device is equipped with security mechanisms to protect it against any inadvertent changes to the settings.

IT security measures, which provide additional protection for the device and associated data transfer, must be implemented by the operators themselves in line with their security standards.

Device-specific IT security

The device offers a range of specific functions to support protective measures on the operator's side. These functions can be configured by the user and guarantee greater in-operation safety if used correctly. An overview of the most important functions is provided in the following section.

Protecting access via a password

Different passwords are available to protect write access to the device parameters or access to the device via the WLAN interface.

- User-specific access code
  Protect write access to the device parameters via the local display, Web browser or operating tool (e.g. FieldCare, DeviceCare). Access authorization is clearly regulated through the use of a user-specific access code.
- WLAN passphrase
  The network key protects a connection between an operating unit (e.g. notebook or tablet) and the device via the WLAN interface which can be ordered as an option.

DRAFT

User-specific access code

Write access to the device parameters via the local display or operating tool (e.g. FieldCare, DeviceCare) can be protected by the modifiable, user-specific access code.

WLAN passphrase: Operation as WLAN access point

A connection between an operating unit (e.g. notebook or tablet) and the device via the WLAN interface, which can be ordered as an optional extra, is protected by the network key. The WLAN authentication of the network key complies with the IEEE 802.11 standard.

When the device is delivered, the network key is pre-defined depending on the device. It can be changed via the **WLAN settings** submenu in the **WLAN passphrase** parameter.

General notes on the use of passwords

- The access code and network key supplied with the device should be changed during commissioning.
- Follow the general rules for generating a secure password when defining and managing the access code or network key.
- The user is responsible for the management and careful handling of the access code and network key.

Access via Web server

The device can be operated and configured via a Web browser with the integrated Web server. The connection is via the service interface (CDI-RJ45) or the WLAN interface. For device versions with the EtherNet/IP and PROFINET communication protocols, the connection can also be established via the terminal connection for signal transmission with EtherNet/IP or PROFINET (RJ45 plug).

The Web server is enabled when the device is delivered. The Web server can be disabled if necessary (e.g. after commissioning) via the **Web server functionality** parameter.

The device and status information can be hidden on the login page. This prevents unauthorized access to the information.

For detailed information on device parameters, see:
The "Description of Device Parameters" document → 106

Input

Measured variable

Direct measured variables

- Volume flow (proportional to induced voltage)
- Electrical conductivity

In custody transfer: only volume flow

Calculated measured variables

Mass flow

Measuring range

Typically v = 0.01 to 10 m/s (0.03 to 33 ft/s) with the specified accuracy

Electrical conductivity: ≥ 5 µS/cm for liquids in general

Flow characteristic values in SI units: DN 25 to 125 mm (1 to 4 in)

Nominal diameter		Recommended flow	Factory settings		
		min./max. full scale value (v ~ 0.3...10 m/s)	Full scale value current output (v ~ 2.5 m/s)	Pulse value (~ 2 Pulse/s at v ~ 2.5 m/s)	Low flow cut off (v ~ 0.04 m/s)
[mm]	[in]	[dm³/min]	[dm³/min]	[dm³]	[dm³/min]
25	1	9 to 300	75	0.5	1
32	–	15 to 500	125	1	2

DRAFT

Nominal diameter		Recommended flow	Factory settings		
		min./max. full scale value (v ~ 0.3...10 m/s)	Full scale value current output (v ~ 2.5 m/s)	Pulse value (~ 2 Pulse/s at v ~ 2.5 m/s)	Low flow cut off (v ~ 0.04 m/s)
[mm]	[in]	[dm³/min]	[dm³/min]	[dm³]	[dm³/min]
40	1 ½	25 to 700	200	1.5	3
50	2	35 to 1 100	300	2.5	5
65	–	60 to 2 000	500	5	8
80	3	90 to 3 000	750	5	12
100	4	145 to 4 700	1 200	10	20
125	–	220 to 7 500	1 850	15	30

Flow characteristic values in SI units: DN 150 to 3 000 mm (6 to 120 in)

Nominal diameter		Recommended flow	Factory settings		
		min./max. full scale value (v ~ 0.3...10 m/s)	Full scale value current output (v ~ 2.5 m/s)	Pulse value (~ 2 Pulse/s at v ~ 2.5 m/s)	Low flow cut off (v ~ 0.04 m/s)
[mm]	[in]	[m³/h]	[m³/h]	[m³]	[m³/h]
150	6	20 to 600	150	0.025	2.5
200	8	35 to 1 100	300	0.05	5
250	10	55 to 1 700	500	0.05	7.5
300	12	80 to 2 400	750	0.1	10
350	14	110 to 3 300	1 000	0.1	15
375	15	140 to 4 200	1 200	0.15	20
400	16	140 to 4 200	1 200	0.15	20
450	18	180 to 5 400	1 500	0.25	25
500	20	220 to 6 600	2 000	0.25	30
600	24	310 to 9 600	2 500	0.3	40
700	28	420 to 13 500	3 500	0.5	50
750	30	480 to 15 000	4 000	0.5	60
800	32	550 to 18 000	4 500	0.75	75
900	36	690 to 22 500	6 000	0.75	100
1000	40	850 to 28 000	7 000	1	125
–	42	950 to 30 000	8 000	1	125
1200	48	1 250 to 40 000	10 000	1.5	150
–	54	1 550 to 50 000	13 000	1.5	200
1400	–	1 700 to 55 000	14 000	2	225
–	60	1 950 to 60 000	16 000	2	250
1600	–	2 200 to 70 000	18 000	2.5	300
–	66	2 500 to 80 000	20 500	2.5	325
1800	72	2 800 to 90 000	23 000	3	350
–	78	3 300 to 100 000	28 500	3.5	450
2000	–	3 400 to 110 000	28 500	3.5	450

DRAFT

Nominal diameter		Recommended flow	Factory settings		
		min./max. full scale value (v ~ 0.3...10 m/s)	Full scale value current output (v ~ 2.5 m/s)	Pulse value (~ 2 Pulse/s at v ~ 2.5 m/s)	Low flow cut off (v ~ 0.04 m/s)
[mm]	[in]	[m³/h]	[m³/h]	[m³]	[m³/h]
–	84	3 700 to 125 000	31 000	4.5	500
2200	–	4 100 to 136 000	34 000	4.5	540
–	90	4 300 to 143 000	36 000	5	570
2400	–	4 800 to 162 000	40 000	5.5	650
–	96	5 000 to 168 000	42 000	6	675
–	102	5 700 to 190 000	47 500	7	750
2600	–	5 700 to 191 000	48 000	7	775
–	108	6 500 to 210 000	55 000	7	850
2800	–	6 700 to 222 000	55 500	8	875
–	114	7 100 to 237 000	59 500	8	950
3000	–	7 600 to 254 000	63 500	9	1 025
–	120	7 900 to 263 000	65 500	9	1 050

Flow characteristic values in SI units: DN 50 to 200 mm (2 to 8 in) for order code for "Design", option C "Fixed flange, constricted measuring tube, 0 x DN inlet/outlet runs"

Nominal diameter		Recommended flow	Factory settings		
		min./max. full scale value (v ~ 0.12...5 m/s)	Full scale value current output (v ~ 2.5 m/s)	Pulse value (~ 4 Pulse/s at v ~ 2.5 m/s)	Low flow cut off (v ~ 0.01 m/s)
[mm]	[in]	[dm³/min]	[dm³/min]	[dm³]	[dm³/min]
50	2	15 to 600	300	1.25	1.25
65	–	25 to 1 000	500	2	2
80	3	35 to 1 500	750	3	3.25
100	4	60 to 2 400	1 200	5	4.75
125	–	90 to 3 700	1 850	8	7.5
150	6	145 to 5 400	2 500	10	11
200	8	220 to 9 400	5 000	20	19

Flow characteristic values in SI units: DN 250 to 300 mm (10 to 12 in) for order code for "Design", option C "Fixed flange, constricted measuring tube, 0 x DN inlet/outlet runs"

Nominal diameter		Recommended flow	Factory settings		
		min./max. full scale value (v ~ 0.12...5 m/s)	Full scale value current output (v ~ 2.5 m/s)	Pulse value (~ 4 Pulse/s at v ~ 2.5 m/s)	Low flow cut off (v ~ 0.01 m/s)
[mm]	[in]	[m³/h]	[m³/h]	[m³]	[m³/h]
250	10	20 to 850	500	0.03	1.75
300	12	35 to 1 300	750	0.05	2.75

DRAFT

Flow characteristic values in US units: DN 1 to 48 in (25 to 1200 mm)

Nominal diameter		Recommended flow	Factory settings		
		min./max. full scale value (v ~ 0.3...10 m/s)	Full scale value current output (v ~ 2.5 m/s)	Pulse value (~ 2 Pulse/s at v ~ 2.5 m/s)	Low flow cut off (v ~ 0.04 m/s)
[in]	[mm]	[gal/min]	[gal/min]	[gal]	[gal/min]
1	25	2.5 to 80	18	0.2	0.25
–	32	4 to 130	30	0.2	0.5
1 ½	40	7 to 185	50	0.5	0.75
2	50	10 to 300	75	0.5	1.25
–	65	16 to 500	130	1	2
3	80	24 to 800	200	2	2.5
4	100	40 to 1250	300	2	4
–	125	60 to 1950	450	5	7
6	150	90 to 2650	600	5	12
8	200	155 to 4850	1200	10	15
10	250	250 to 7500	1500	15	30
12	300	350 to 10600	2400	25	45
14	350	500 to 15000	3600	30	60
15	375	600 to 19000	4800	50	60
16	400	600 to 19000	4800	50	60
18	450	800 to 24000	6000	50	90
20	500	1000 to 30000	7500	75	120
24	600	1400 to 44000	10500	100	180
28	700	1900 to 60000	13500	125	210
30	750	2150 to 67000	16500	150	270
32	800	2450 to 80000	19500	200	300
36	900	3100 to 100000	24000	225	360
40	1000	3800 to 125000	30000	250	480
42	–	4200 to 135000	33000	250	600
48	1200	5500 to 175000	42000	400	600

Flow characteristic values in US units: DN 54 to 120 in (1400 to 3000 mm)

Nominal diameter		Recommended flow	Factory settings		
		min./max. full scale value (v ~ 0.3...10 m/s)	Full scale value current output (v ~ 2.5 m/s)	Pulse value (~ 2 Pulse/s at v ~ 2.5 m/s)	Low flow cut off (v ~ 0.04 m/s)
[in]	[mm]	[Mgal/d]	[Mgal/d]	[Mgal]	[Mgal/d]
54	–	9 to 300	75	0.0005	1.3
–	1400	10 to 340	85	0.0005	1.3
60	–	12 to 380	95	0.0005	1.3
–	1600	13 to 450	110	0.0008	1.7
66	–	14 to 500	120	0.0008	2.2
72	1800	16 to 570	140	0.0008	2.6

DRAFT

Nominal diameter		Recommended flow	Factory settings		
		min./max. full scale value (v ~ 0.3...10 m/s)	Full scale value current output (v ~ 2.5 m/s)	Pulse value (~ 2 Pulse/s at v ~ 2.5 m/s)	Low flow cut off (v ~ 0.04 m/s)
[in]	[mm]	[Mgal/d]	[Mgal/d]	[Mgal]	[Mgal/d]
78	–	18 to 650	175	0.0010	3.0
–	2000	20 to 700	175	0.0010	2.9
84	–	24 to 800	190	0.0011	3.2
–	2200	26 to 870	210	0.0012	3.4
90	–	27 to 910	220	0.0013	3.6
–	2400	31 to 1030	245	0.0014	4.0
96	–	32 to 1066	265	0.0015	4.0
102	–	34 to 1203	300	0.0017	5.0
–	2600	34 to 1212	305	0.0018	5.0
108	–	35 to 1300	340	0.0020	5.0
–	2800	42 to 1405	350	0.0020	6.0
114	–	45 to 1503	375	0.0022	6.0
–	3000	48 to 1613	405	0.0023	6.0
120	–	50 to 1665	415	0.0024	7.0

Flow characteristic values in US units: DN 2 to 12 in (50 to 300 mm) for order code for "Design", option C "Fixed flange, constricted measuring tube, 0 x DN inlet/outlet runs"

Nominal diameter		Recommended flow	Factory settings		
		min./max. full scale value (v ~ 0.12...5 m/s)	Full scale value current output (v ~ 2.5 m/s)	Pulse value (~ 4 Pulse/s at v ~ 2.5 m/s)	Low flow cut off (v ~ 0.01 m/s)
[in]	[mm]	[gal/min]	[gal/min]	[gal]	[gal/min]
2	50	4 to 160	75	0.3	0.35
–	65	7 to 260	130	0.5	0.6
3	80	10 to 400	200	0.8	0.8
4	100	16 to 650	300	1.2	1.25
–	125	24 to 1000	450	1.8	2
6	150	40 to 1400	600	2.5	3
8	200	60 to 2500	1200	5	5
10	250	90 to 3700	1500	6	8
12	300	155 to 5700	2400	9	12

Recommended measuring range

Flow limit → 52

For custody transfer, the applicable approval determines the permitted measuring range, the pulse value and the low flow cut off.

Operable flow range

Over 1000 : 1

For custody transfer, the operable flow range is 100 : 1 to 630 : 1, depending on the nominal diameter. Further details are specified by the applicable approval.

DRAFT

Input signal

External measured values

Various pressure transmitters and temperature measuring devices can be ordered from Endress +Hauser: see "Accessories" section → 105

It is recommended to read in external measured values to calculate the following measured variables: Mass flow

HART protocol

The measured values are written from the automation system to the measuring device via the HART protocol. The pressure transmitter must support the following protocol-specific functions:
- HART protocol
- Burst mode

Digital communication

The measured values can be written from the automation system to the measuring via:
- PROFIBUS DP
- Modbus RS485
- EtherNet/IP

Status input

Maximum input values	▪ DC 30 V ▪ 6 mA
Response time	Configurable: 5 to 200 ms
Input signal level	▪ Low signal (low): DC –3 to +5 V ▪ High signal (high): DC 12 to 30 V
Assignable functions	▪ Off ▪ Reset totalizers 1-3 separately ▪ Reset all totalizers ▪ Flow override

Output

Output signal

Current output

Current output	Can be set as: ▪ 4 to 20 mA NAMUR ▪ 4 to 20 mA US ▪ 4 to 20 mA HART ▪ 0 to 20 mA
Maximum output values	▪ DC 24 V (no flow) ▪ 22.5 mA
Load	0 to 700 Ω
Resolution	0.5 µA

DRAFT

Damping	Configurable: 0.07 to 999 s
Assignable measured variables	▪ Volume flow ▪ Mass flow ▪ Corrected volume flow ▪ Flow velocity ▪ Conductivity [1] ▪ Corrected conductivity [1] ▪ Temperature [1] ▪ Electronics temperature ▪ Reference electrode potential [1] ▪ Coil current rise time [1] ▪ Noise [1] ▪ Build-up measured value [1] ▪ Test points 1-3

1) Visible depending on order options or device settings

Pulse/frequency/switch output

Function	▪ With the order code for "Output; Input", option **H**: output 2 can be set as a pulse or frequency output ▪ With the order code for "Output; Input", option **I**: output 2 and 3 can be set as a pulse, frequency or switch output ▪ With the order code for "Output; Input", option **J**: output 2 firmly assigned as certified pulse output
Version	Passive, open collector
Maximum input values	▪ DC 30 V ▪ 250 mA
Voltage drop	At 25 mA: ≤ DC 2 V
Pulse output	
Pulse width	Configurable: 0.05 to 2 000 ms
Maximum pulse rate	10 000 Impulse/s
Pulse value	Configurable
Assignable measured variables	▪ Volume flow ▪ Mass flow ▪ Corrected volume flow
Frequency output	
Output frequency	Configurable: 0 to 12 500 Hz
Damping	Configurable: 0 to 999 s
Pulse/pause ratio	1:1
Assignable measured variables	▪ Volume flow ▪ Mass flow ▪ Corrected volume flow ▪ Flow velocity ▪ Conductivity [1] ▪ Corrected conductivity [1] ▪ Temperature [1] ▪ Electronics temperature ▪ Noise [1] ▪ Coil current rise time [1] ▪ Reference electrode potential [1] ▪ Build-up measured value [1] ▪ Test points 1-3
Switch output	
Switching behavior	Binary, conductive or non-conductive
Switching delay	Configurable: 0 to 100 s

DRAFT

Number of switching cycles	Unlimited

Assignable functions	▪ Off
	▪ On
	▪ Diagnostic behavior
	▪ Limit value:
	  ▪ Off
	  ▪ Volume flow
	  ▪ Corrected volume flow
	  ▪ Mass flow
	  ▪ Flow velocity
	  ▪ Conductivity [1]
	  ▪ Corrected conductivity [1]
	  ▪ Totalizer 1-3
	  ▪ Temperature [1]
	  ▪ Electronics temperature
	▪ Flow direction monitoring
	▪ Status:
	  ▪ Empty pipe detection
	  ▪ Low flow cut off
	  ▪ Build-up limit value [1]

1) Visible depending on order options or device settings

PROFIBUS DP

Signal encoding	NRZ code
Data transmission	9.6 kBaud...12 MBaud

Modbus RS485

Physical interface	In accordance with EIA/TIA-485-A standard
Terminating resistor	Integrated, can be activated via DIP switch on the transmitter electronics module

EtherNet/IP

Standards	In accordance with IEEE 802.3

Signal on alarm

Depending on the interface, failure information is displayed as follows:

Current output 4 to 20 mA

4 to 20 mA

Failure mode	Choose from: ▪ 4 to 20 mA in accordance with NAMUR recommendation NE 43 ▪ 4 to 20 mA in accordance with US ▪ Min. value: 3.59 mA ▪ Max. value: 22.5 mA ▪ Freely definable value between: 3.59 to 22.5 mA ▪ Actual value ▪ Last valid value

0 to 20 mA

Failure mode	Choose from: ▪ Maximum alarm: 22 mA ▪ Freely definable value between: 0 to 22.5 mA

DRAFT

HART current output

Device diagnostics	Device condition can be read out via HART Command 48

Pulse/frequency/switch output

Pulse output	
Failure mode	Choose from: ▪ Actual value ▪ No pulses
Frequency output	
Failure mode	Choose from: ▪ Actual value ▪ 0 Hz ▪ Defined value: 0 to 12 500 Hz
Switch output	
Failure mode	Choose from: ▪ Current status ▪ Open ▪ Closed

PROFIBUS DP

Status and alarm messages	Diagnostics in accordance with PROFIBUS PA Profile 3.02

Modbus RS485

Failure mode	Choose from: ▪ NaN value instead of current value ▪ Last valid value

EtherNet/IP

Device diagnostics	Device condition can be read out in Input Assembly

Local display

Plain text display	With information on cause and remedial measures
Backlight	Red backlighting indicates a device error.

Status signal as per NAMUR recommendation NE 107

Interface/protocol

- Via digital communication:
  - HART protocol
  - PROFIBUS DP
  - Modbus RS485
  - EtherNet/IP
- Via service interface
  - CDI-RJ45 service interface
  - WLAN interface

DRAFT

Plain text display	With information on cause and remedial measures

Additional information on remote operation → 95

Web browser

Plain text display	With information on cause and remedial measures

Light emitting diodes (LED)

Status information	Status indicated by various light emitting diodes The following information is displayed depending on the device version: ▪ Supply voltage active ▪ Data transmission active ▪ Device alarm/error has occurred ▪ EtherNet/IP network available ▪ EtherNet/IP connection established

Low flow cut off

The switch points for low flow cut off are user-selectable.

Galvanic isolation

The following connections are galvanically isolated from each other:
- Inputs
- Outputs
- Power supply

Protocol-specific data

HART

Manufacturer ID	0x11
Device type ID	0x1169
HART protocol revision	7
Device description files (DTM, DD)	Information and files under: www.endress.com
HART load	Min. 250 Ω
Dynamic variables PV, SV, TV, QV	▪ Read out the dynamic variables via HART command 3 ▪ The measured variables can be freely assigned to the dynamic variables
Device variables	▪ Read out the device variables via HART command 9 ▪ The measured variables can be freely assigned ▪ A maximum of 8 device variables can be transmitted
System integration	Operating Instructions for the device → 106

PROFIBUS DP

Manufacturer ID	0x11
Ident number	0x1562
Profile version	3.02
Device description files (GSD, DTM, DD)	Information and files under: ▪ www.endress.com ▪ www.profibus.org
Output values	Output values (from the measuring device to the automation system) ▪ 4 Analog input ▪ 2 Digital input ▪ 3 Totalizer

DRAFT

Input values	Input values (from the automation system to the measuring device) ▪ 2 Analog output (fixed assignment) ▪ 2 Digital output (fixed assignment) ▪ 3 Totalizer
Device address configuration options	Configuration of the device address ▪ Hardware: DIP switches on the I/O electronics module ▪ Software: Via operating tools (e.g. FieldCare)
Supported functions	▪ Identification & Maintenance: Simplest device identification on the part of the control system and nameplate ▪ PROFIBUS upload/download: Reading and writing parameters is up to ten times faster with PROFIBUS upload/download ▪ Condensed status: Simplest and self-explanatory diagnostic information by categorizing diagnostic messages that occur
System integration	Operating Instructions for the device → 106

Modbus RS485

Protocol	Modbus Applications Protocol Specification V1.1
Device type	Slave
Slave address range	1 to 247
Broadcast address range	0
Function codes	▪ 03: Read holding register ▪ 04: Read input register ▪ 06: Write single registers ▪ 08: Diagnostics ▪ 16: Write multiple registers ▪ 23: Read/write multiple registers
Broadcast messages	Supported by the following function codes: ▪ 06: Write single registers ▪ 16: Write multiple registers ▪ 23: Read/write multiple registers
Supported baud rate	▪ 1 200 BAUD ▪ 2 400 BAUD ▪ 4 800 BAUD ▪ 9 600 BAUD ▪ 19 200 BAUD ▪ 38 400 BAUD ▪ 57 600 BAUD ▪ 115 200 BAUD
Modus data transmission	▪ ASCII ▪ RTU
Data access	Each device parameter can be accessed via Modbus RS485. For detailed information on the "Modbus RS485 register information", see the Description of Device Parameters → 106
System integration	Operating Instructions for the device → 106

EtherNet/IP

Protocol	▪ The CIP Networks Library Volume 1: Common Industrial Protocol ▪ The CIP Networks Library Volume 2: EtherNet/IP Adaptation of CIP
Communication type	▪ 10Base-T ▪ 100Base-TX
Device profile	Generic device (product type: 0x2B)
Manufacturer ID	0x49E

DRAFT

ITEM F-011D

Device type ID	0x1069
Baud rates	Automatic 10/100 Mbit with half-duplex and full-duplex detection
Polarity	Auto-polarity for automatic correction of crossed TxD and RxD pairs
Supported CIP connections	Max. 3 connections
Explicit connections	Max. 5 connections
I/O connections	Max. 6 connections (scanner)
Configuration options for measuring device	Configuration options for measuring device ▪ DIP switches on the electronics module for IP addressing ▪ Manufacturer-specific software (FieldCare) ▪ Custom Add-on Profile for Rockwell Automation control systems ▪ Web browser ▪ Electronic Data Sheet (EDS) integrated in the measuring device
EtherNet interface configuration options	Configuration of the EtherNet interface ▪ Speed: 10 MBit, 100 MBit, auto (factory setting) ▪ Duplex: half-duplex, full-duplex, auto (factory setting)
Device address configuration options	Configuration of the device address ▪ DIP switches on the electronics module for IP addressing (last octet) ▪ DHCP ▪ Manufacturer-specific software (FieldCare) ▪ Custom Add-on Profile for Rockwell Automation control systems ▪ Web browser ▪ EtherNet/IP tools, e.g. RSLinx (Rockwell Automation)
Device Level Ring (DLR)	No
Assembly	▪ Legacy Input Assembly Fix (Assem 100) ▪ Legacy Input Assembly Configurable (Assem 101) ▪ Legacy Output Assembly Fix (Assem 102) ▪ Legacy Configuration Assembly (Assem 104) ▪ Input Assembly Fix (Assem 120) ▪ Input Assembly Configurable (Assem 121) ▪ Output Assembly Fix (Assem 122) ▪ Configuration Assembly (Assem 124) ▪ Volume Flow Extended Fix Input (Assem 126) ▪ Volume Flow Universal Fix Input (Assem 127) ▪ Dummy Output Assembly Fix (Assem 199)
Requested Packet Interval (RPI)	5 ms to 10 s (factory setting: 20 ms)
System integration	Operating Instructions for the device → 🖹 106

Power supply

Terminal assignment

Transmitter: 0 to 20 mA/4 to 20 mA HART

The sensor can be ordered with terminals.

Connection methods available		Possible options for order code "Electrical connection"
Outputs	**Power supply**	
Terminals	Terminals	▪ Option **A**: coupling M20x1 ▪ Option **B**: thread M20x1 ▪ Option **C**: thread G ½" ▪ Option **D**: thread NPT ½"

DRAFT

Supply voltage

Order code "Power supply"	Terminal numbers	terminal voltage		Frequency range
Option **L** (wide range power unit)	1 (L+/L), 2 (L-/N)	DC 24 V	±25%	–
		AC 24 V	±25%	50/60 Hz, ±4 Hz
		AC 100 to 240 V	−15 to +10%	50/60 Hz, ±4 Hz

Signal transmission with current output 0 to 20 mA/4 to 20 mA HART and other outputs and inputs

Order code for "Output" and "Input"	Terminal numbers							
	Output 1		Output 2		Output 3		Input	
	26 (+)	27 (-)	24 (+)	25 (-)	22 (+)	23 (-)	20 (+)	21 (-)
Option **H**	Current output ▪ 4 to 20 mA HART (active) ▪ 0 to 20 mA (active)		Pulse/frequency output (passive)		Switch output (passive)		-	
Option **I**	Current output ▪ 4 to 20 mA HART (active) ▪ 0 to 20 mA (active)		Pulse/frequency/ switch output (passive)		Pulse/frequency/ switch output (passive)		Status input	
Option **J**	Current output ▪ 4 to 20 mA HART (active) ▪ 0 to 20 mA (active)		Fixed assignment: Certified pulse output (passive)		Switch output		Status input	

Transmitter: PROFIBUS DP

The sensor can be ordered with terminals.

Connection methods available		Possible options for order code "Electrical connection"
Outputs	Power supply	
Terminals	Terminals	▪ Option **A**: coupling M20x1 ▪ Option **B**: thread M20x1 ▪ Option **C**: thread G ½" ▪ Option **D**: thread NPT ½"

Supply voltage

Order code "Power supply"	Terminal numbers	terminal voltage		Frequency range
Option **L** (wide range power unit)	1 (L+/L), 2 (L-/N)	DC 24 V	±25%	–
		AC 24 V	±25%	50/60 Hz, ±4 Hz
		AC 100 to 240 V	−15 to +10%	50/60 Hz, ±4 Hz

PROFIBUS DP signal transmission

Order code for "Output" and "Input"	Terminal numbers	
	26 (RxD/TxD-P)	27 (RxD/TxD-N)
Option **L**	B	A
Order code for "Output": Option L: PROFIBUS DP, for use in non-hazardous areas and Zone 2/Div. 2		

DRAFT

Transmitter: Modbus RS485

The sensor can be ordered with terminals.

Connection methods available		Possible options for order code "Electrical connection"
Outputs	**Power supply**	
Terminals	Terminals	▪ Option **A**: coupling M20x1 ▪ Option **B**: thread M20x1 ▪ Option **C**: thread G ½" ▪ Option **D**: thread NPT ½"

Supply voltage

Order code "Power supply"	Terminal numbers	terminal voltage		Frequency range
Option **L** (wide range power unit)	1 (L+/L), 2 (L-/N)	DC 24 V	±25%	–
		AC 24 V	±25%	50/60 Hz, ±4 Hz
		AC 100 to 240 V	–15 to +10%	50/60 Hz, ±4 Hz

Signal transmission with Modbus RS485 and other outputs

Order code for "Output" and "Input"	Terminal numbers							
	26 (+)	27 (-)	24 (+)	25 (-)	22 (+)	23 (-)	20 (+)	21 (-)
Option **M**	Modbus		-		-		-	
	B	A						
Option **O**	Current output 4 to 20 mA (active)		Pulse/frequency/ switch output (passive)		Pulse/frequency/ switch output (passive)		Modbus	
							B	A
Option **P**	Current output 4 to 20 mA (active)		Pulse output certified (passive)		Pulse/frequency/ switch output (passive)		Modbus	
							B	A

Transmitter: EtherNet/IP

The transmitter can be ordered with terminals or a device plug.

Connection methods available		Possible options for order code "Electrical connection"
Outputs	**Power supply**	
EtherNet/IP (RJ45 plug)	Terminals	Option **D**: thread NPT ½"
Device plug → 🖹 22	Terminals	▪ Option **L**: plug M12x1 + thread NPT ½" ▪ Option **N**: plug M12x1 + coupling M20 ▪ Option **P**: plug M12x1 + thread G ½" ▪ Option **U**: plug M12x1 + thread M20

Supply voltage

Order code "Power supply"	Terminal numbers	terminal voltage		Frequency range
Option **L** (wide range power unit)	1 (L+/L), 2 (L-/N)	DC 24 V	±25%	–
		AC 24 V	±25%	50/60 Hz, ±4 Hz
		AC 100 to 240 V	–15 to +10%	50/60 Hz, ±4 Hz

DRAFT

EtherNet/IP signal transmission

Order code for "Output"	Connection via
Option **N**	EtherNet/IP: RJ45 or M12 plug

Remote version

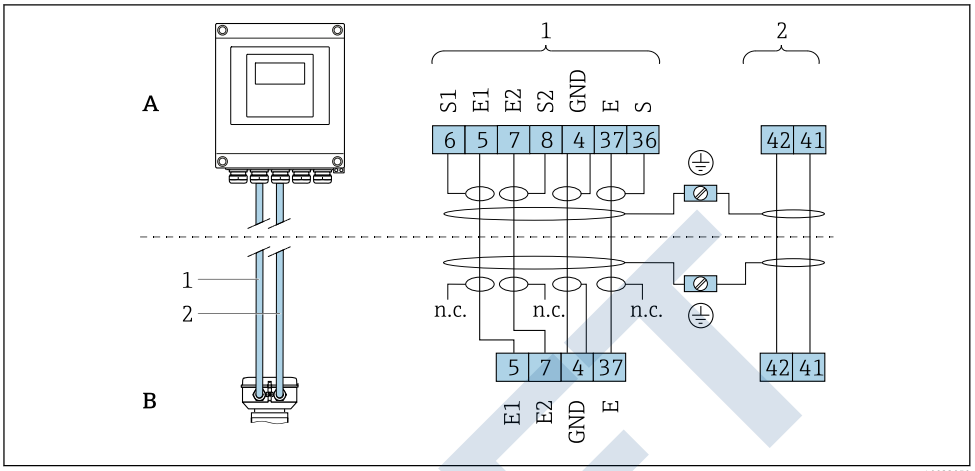

2 *Remote version terminal assignment*

A Transmitter wall-mount housing
B Sensor connection housing
1 Electrode cable
2 Coil current cable
n.c. Not connected, insulated cable shields

Terminal No. and cable colors: 6/5 = brown; 7/8 = white; 4 = green; 36/37 = yellow

Pin assignment, device plug

Order codes for the M12x1 plugs, see the "Order code for electrical connection" column: EtherNet/IP → 21

EtherNet/IP

Device plug for signal transmission (device side)

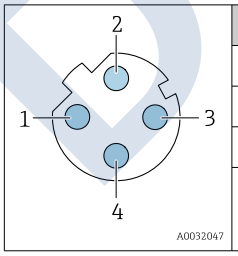

Pin		Assignment	Coding	Plug/socket
1	+	Tx	D	Socket
2	+	Rx		
3	-	Tx		
4	-	Rx		

Recommended plug:
- Binder, series 763, part no. 99 3729 810 04
- Phoenix, part no. 1543223 SACC-M12MSD-4Q
- The device plug is not permitted in the hazardous area, Class I Division 2. The device plug may only be used in the non-hazardous area (General Purpose).

DRAFT

Supply voltage

Transmitter

Order code for "Power supply"	terminal voltage		Frequency range
Option **L**	DC 24 V	±25%	–
	AC 24 V	±25%	50/60 Hz, ±4 Hz
	AC 100 to 240 V	−15 to +10%	50/60 Hz, ±4 Hz

Power consumption

Order code for "Output"	Maximum power consumption
Option **H**: 4-20mA HART, pulse/frequency output, switch output	30 VA/8 W
Option **I**: 4-20mA HART, 2 x pulse/frequency/switch output, status input	30 VA/8 W
Option **J**: 4-20mA HART, certified pulse output, switch output, status input	30 VA/8 W
Option **L**: PROFIBUS DP	30 VA/8 W
Option **M**: Modbus RS485	30 VA/8 W
Option **O**: Modbus RS485, 4-20mA, 2 x pulse/ frequency/switch output	30 VA/8 W
Option **P**: Modbus RS485, 4-20mA, certified pulse output, pulse/frequency/switch output	30 VA/8 W
Option **N**: EtherNet/IP	30 VA/8 W

Current consumption

Transmitter

Order code for "Power supply"	Maximum Current consumption	Maximum switch-on current
Option **L**: AC 100 to 240 V	145 mA	25 A (< 5 ms)
Option **L**: AC/DC 24 V	350 mA	27 A (< 5 ms)

Power supply failure

- Totalizers stop at the last value measured.
- Depending on the device version, the configuration is retained in the device memoryor in the pluggable data memory (HistoROM DAT).
- Error messages (incl. total operated hours) are stored.

Electrical connection

Connecting the transmitter

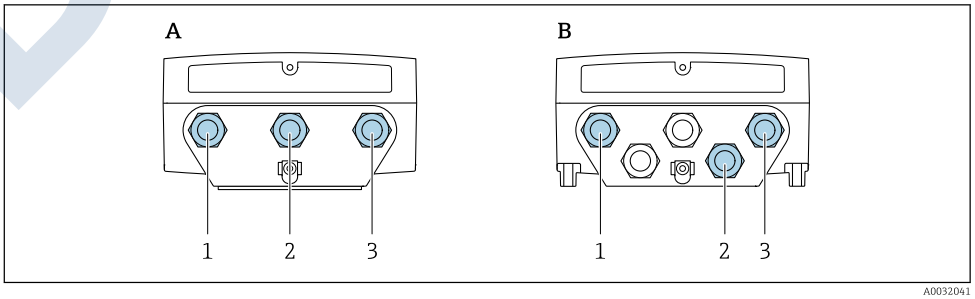

3 Supply voltage and signal transmission connection

A Compact version
B Remote version wall-mount housing
1 Cable entry for supply voltage
2 Cable entry for signal transmission
3 Cable entry for signal transmission

DRAFT

Remote version connection

Connecting cable

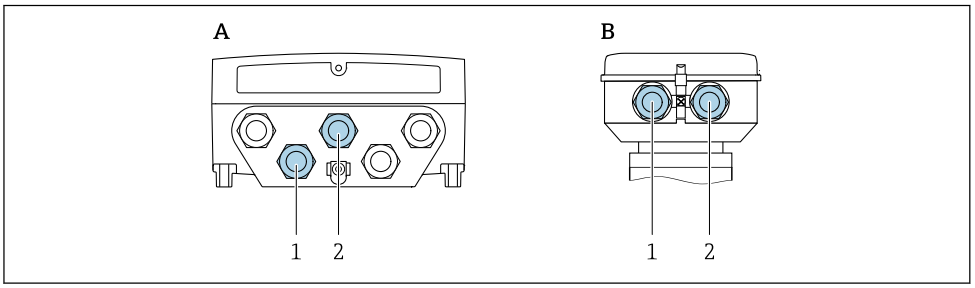

4 *Connecting cable connection: electrode and coil current cable*

A Transmitter wall-mount housing
B Sensor connection housing
1 Electrode cable
2 Coil current cable

- Fix the cable run or route it in an armored conduit.
  Cable movements can influence the measuring signal especially in the case of low fluid conductivities.
- Route the cable well clear of electrical machines and switching elements.
- Ensure potential equalization between the sensor and transmitter → 27.

Connection examples

Current output 4 to 20 mA HART

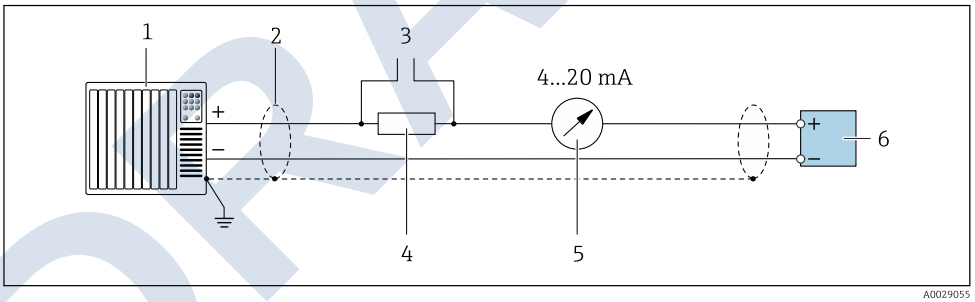

5 *Connection example for 4 to 20 mA HART current output (active)*

1 Automation system with current input (e.g. PLC)
2 Cable shield provided at one end. The cable shield must be grounded at both ends to comply with EMC requirements; observe cable specifications → 31
3 Connection for HART operating devices → 95
4 Resistor for HART communication (≥ 250 Ω): observe maximum load → 13
5 Analog display unit: observe maximum load → 13
6 Transmitter

DRAFT

Current output 4 to 20 mA

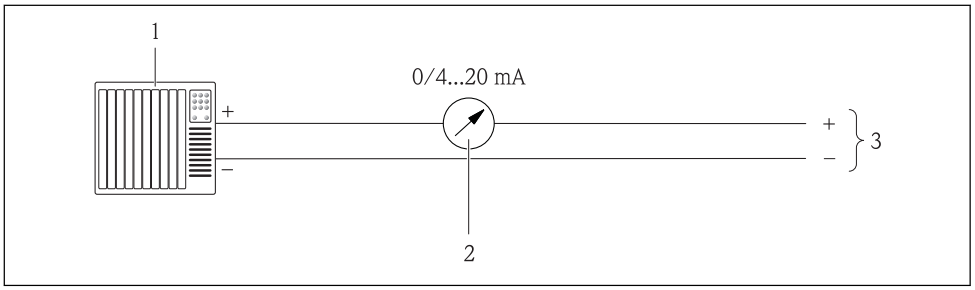

6 *Connection example for 0 to 20 mA (active) and 4 to 20 mA (active) current output*

1 *Automation system with current input (e.g. PLC)*
2 *Analog display unit: observe maximum load*
3 *Transmitter*

Pulse/frequency output

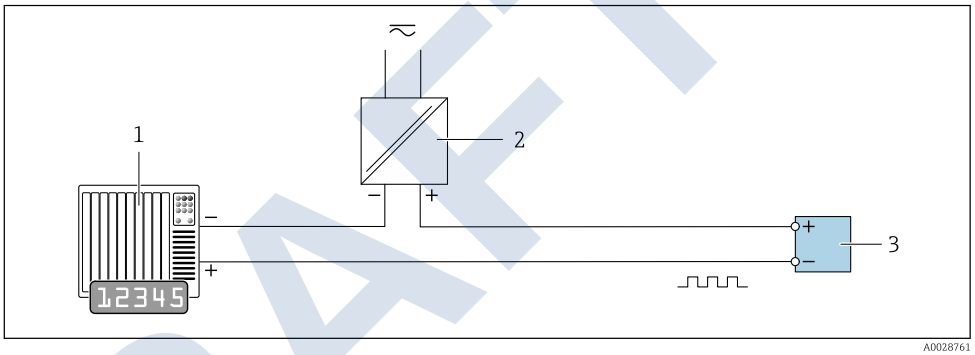

7 *Connection example for pulse/frequency output (passive)*

1 *Automation system with pulse/frequency input (e.g. PLC)*
2 *Power supply*
3 *Transmitter: Observe input values → 14*

Switch output

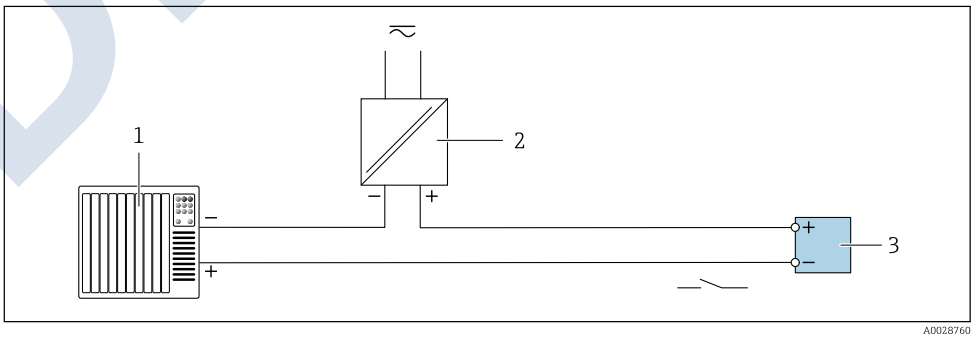

8 *Connection example for switch output (passive)*

1 *Automation system with switch input (e.g. PLC)*
2 *Power supply*
3 *Transmitter: Observe input values → 14*

DRAFT

PROFIBUS DP

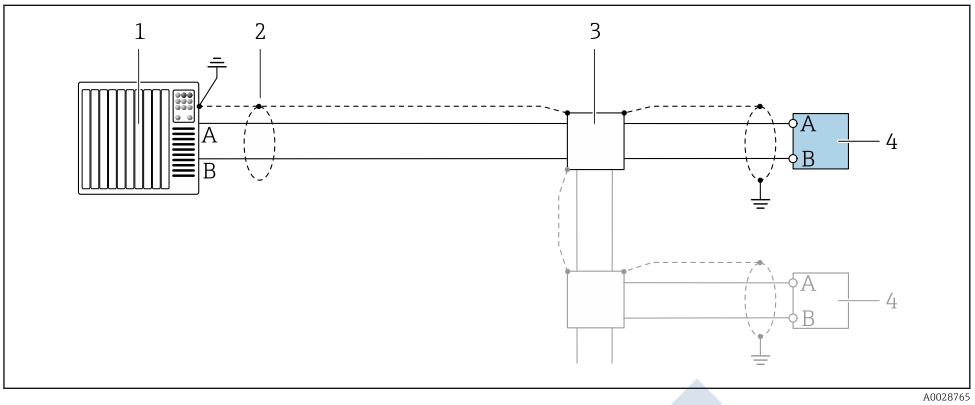

9 Connection example for PROFIBUS DP, non-hazardous area and Zone 2/Div. 2

1 Control system (e.g. PLC)
2 Cable shield provided at one end. The cable shield must be grounded at both ends to comply with EMC requirements; observe cable specifications
3 Distribution box
4 Transmitter

If baud rates > 1.5 MBaud an EMC cable entry must be used and the cable shield must continue as far as the terminal wherever possible.

Modbus RS485

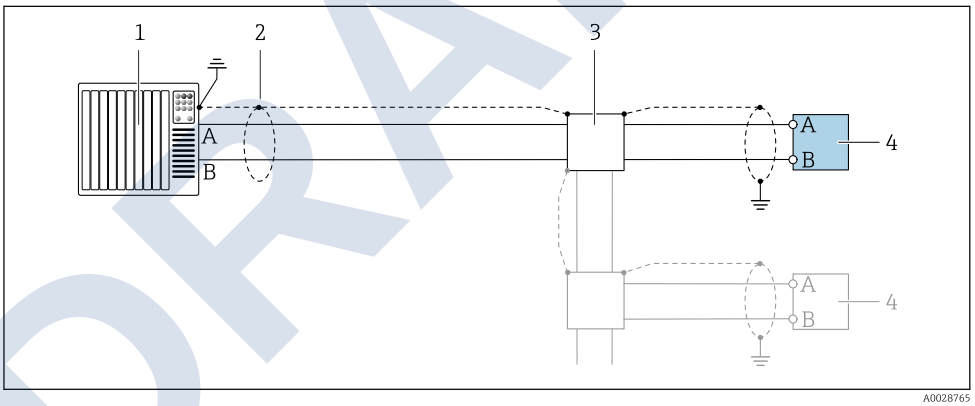

10 Connection example for Modbus RS485, non-hazardous area and Zone 2/Div. 2

1 Control system (e.g. PLC)
2 Cable shield provided at one end. The cable shield must be grounded at both ends to comply with EMC requirements; observe cable specifications
3 Distribution box
4 Transmitter

DRAFT

ITEM F-011D

EtherNet/IP

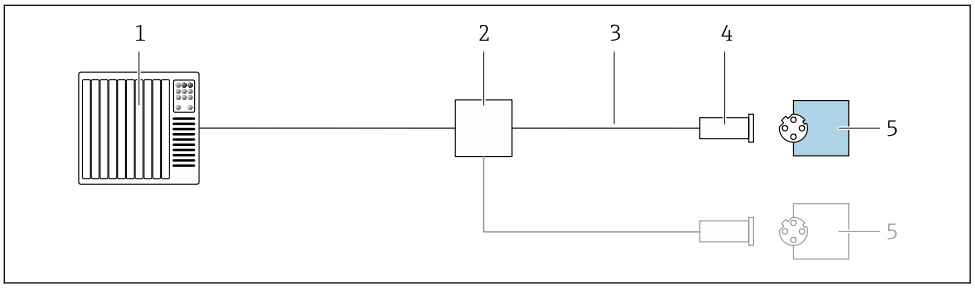

11 *Connection example for EtherNet/IP*

1 *Control system (e.g. PLC)*
2 *Ethernet switch*
3 *Observe cable specifications*
4 *Device plug*
5 *Transmitter*

Status input

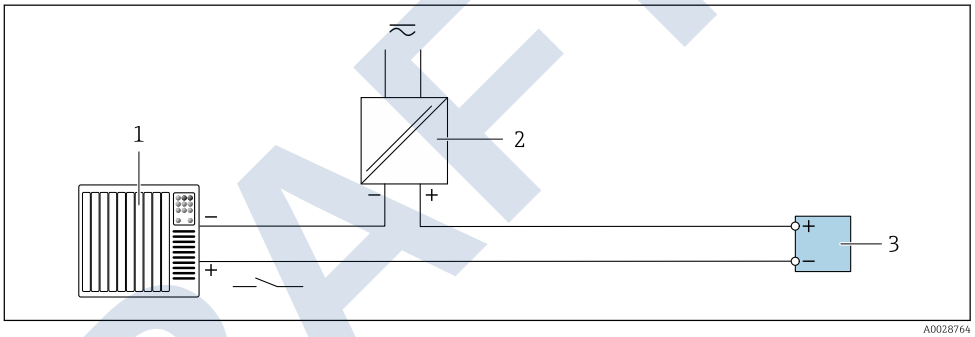

12 *Connection example for status input*

1 *Automation system with status output (e.g. PLC)*
2 *Power supply*
3 *Transmitter*

Potential equalization

Introduction

Correct potential equalization (equipotential bonding) is a prerequisite for stable and reliable flow measurement. Inadequate or incorrect potential equalization can result in device failure and present a safety hazard.

The following requirements must be observed to ensure correct, trouble-free measurement:
- The principle that the medium, the sensor and the transmitter must be at the same electrical potential applies.
- Take in-company grounding guidelines, materials and the grounding conditions and potential conditions of the pipe into consideration.
- Any necessary potential equalization connections must be established by ground cables with a minimum cross-section of 6 mm^2 (0.0093 in^2).
- For remote device versions, the ground terminal in the example always refers to the sensor and not to the transmitter.

You can order accessories like ground cables and ground disks from Endress+Hauser → 103

For devices intended for use in hazardous locations, observe the instructions in the Ex documentation (XA).

Abbreviations used

- PE (Protective Earth): potential at the protective earth terminals of the device
- P_P (Potential Pipe): potential of the pipe, measured at the flanges
- P_M (Potential Medium): potential of the medium

DRAFT

Connection examples for standard situations

Unlined and grounded metal pipe

- Potential equalization is via the measuring pipe.
- The medium is set to ground potential.

Starting conditions:
- Pipes are correctly grounded on both sides.
- Pipes are conductive and at the same electrical potential as the medium

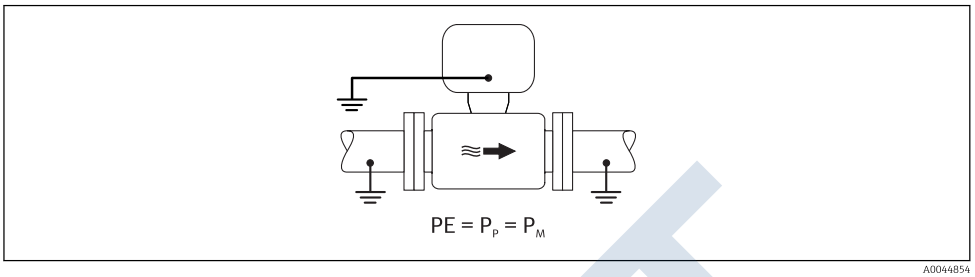

A0044854

► Connect the connection housing of the transmitter or sensor to ground potential by means of the ground terminal provided for this purpose.

Unlined metal pipe

- Potential equalization is via the ground terminal and pipe flanges.
- The medium is set to ground potential.

Starting conditions:
- Pipes are not sufficiently grounded.
- Pipes are conductive and at the same electrical potential as the medium

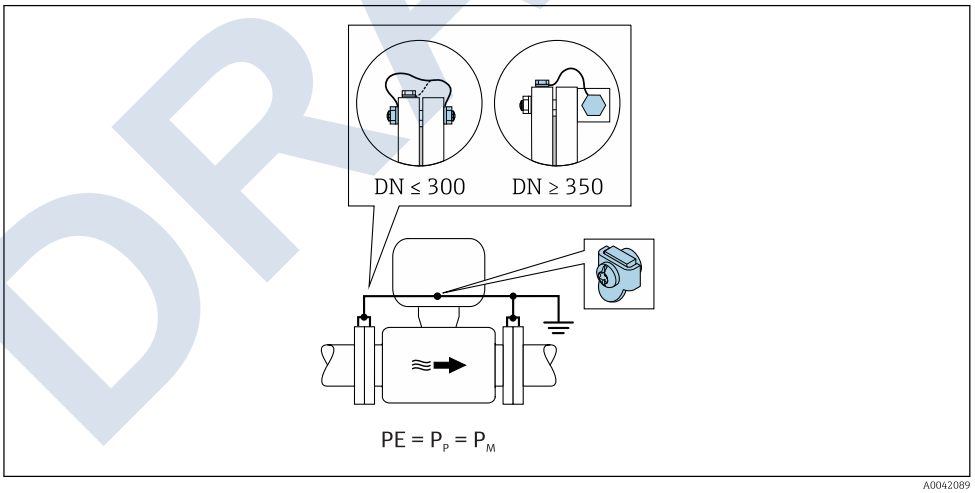

A0042089

1. Connect both sensor flanges to the pipe flange via a ground cable and ground them.
2. Connect the connection housing of the transmitter or sensor to ground potential by means of the ground terminal provided for this purpose.

- For DN ≤ 300 (12"): Mount the ground cable directly on the conductive flange coating of the sensor with the flange screws.
- For DN ≥ 350 (14"): Mount the ground cable directly on the metal transport bracket. Observe screw tightening torques: see the Brief Operating Instructions for the sensor.

Plastic pipe or pipe with insulating liner

- Potential equalization is via the ground terminal and ground disks.
- The medium is set to ground potential.

DRAFT

Starting conditions:
- The pipe has an insulating effect.
- Low-impedance medium grounding close to the sensor is not guaranteed.
- Equalizing currents through the medium cannot be ruled out.

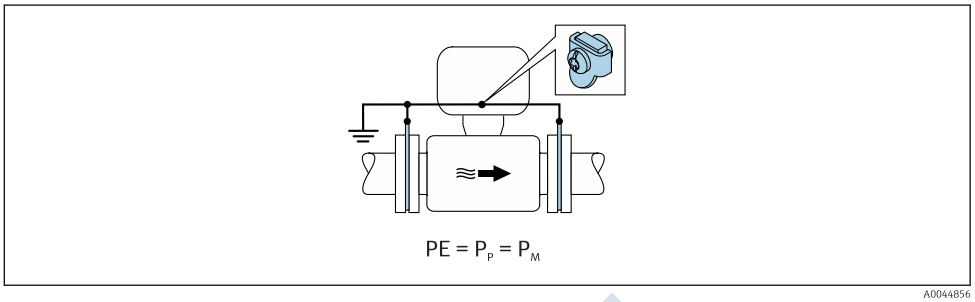

A0044856

1. Connect the ground disks to the ground terminal of the connection housing of the transmitter or sensor via the ground cable.
2. Connect the connection to ground potential.

Connection example with the potential of the medium not equal to the protective ground

In these cases, the medium potential can differ from the potential of the device.

Metal, ungrounded pipe

The sensor and transmitter are installed in a way that provides electrical insulation from PE, e.g. applications for electrolytic processes or systems with cathodic protection.

Starting conditions:
- Unlined metal pipe
- Pipes with an electrically conductive liner

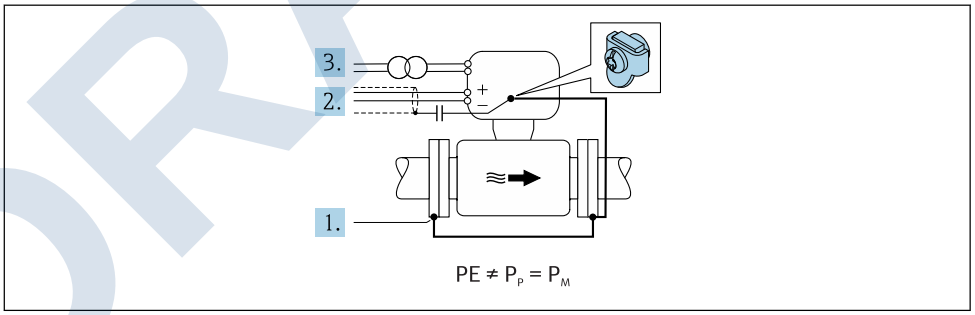

A0042253

1. Connect the pipe flanges and transmitter via the ground cable.
2. Route the shielding of the signal lines via a capacitor (recommended value 1.5µF/50V).
3. Device connected to power supply such that it is floating in relation to the protective earth (isolation transformer). This measure is not required in the case of 24V DC supply voltage without PE (= SELV power unit).

Connection examples with the potential of medium not equal to protective earth with the "Measurement isolated from ground" option

In these cases, the medium potential can differ from the potential of the device.

Introduction

The "Measurement isolated from ground" option enables the galvanic isolation of the measuring system from the device potential. This minimizes harmful equalizing currents caused by differences

DRAFT

in potential between the medium and the device. The "Measurement isolated from ground" option is optionally available: order code for "Sensor option", option CV

Operating conditions for the use of the "Measurement isolated from ground" option

Device version	Compact version and remote version (length of connecting cable ≤ 10 m)
Differences in voltage between medium potential and device potential	As small as possible, usually in the mV range
Alternating voltage frequencies in the medium or at ground potential (PE)	Below typical power line frequency in the country

To achieve the specified conductivity measuring accuracy, a conductivity calibration is recommended when the device is installed.

A full pipe adjustment is recommended when the device is installed.

Plastic pipe

Sensor and transmitter are correctly grounded. A difference in potential can occur between the medium and protective earth. Potential equalization between P_M and PE via the reference electrode is minimized with the "Measurement isolated from ground" option.

Starting conditions:
- The pipe has an insulating effect.
- Equalizing currents through the medium cannot be ruled out.

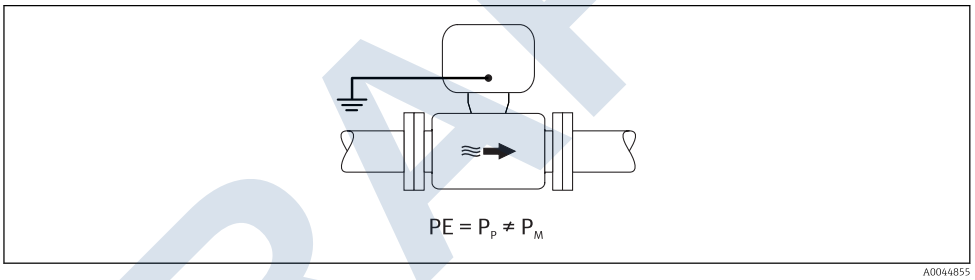

A0044855

1. Use the "Measurement isolated from ground" option, while observing the operating conditions for measurement isolated from ground.
2. Connect the connection housing of the transmitter or sensor to ground potential by means of the ground terminal provided for this purpose.

Metal, ungrounded pipe with insulating liner

The sensor and transmitter are installed in a way that provides electrical insulation from PE. The medium and pipe have different potentials. The "Measurement isolated from ground" option minimizes harmful equalizing currents between P_M and P_P via the reference electrode.

Starting conditions:
- Metal pipe with insulating liner
- Equalizing currents through the medium cannot be ruled out.

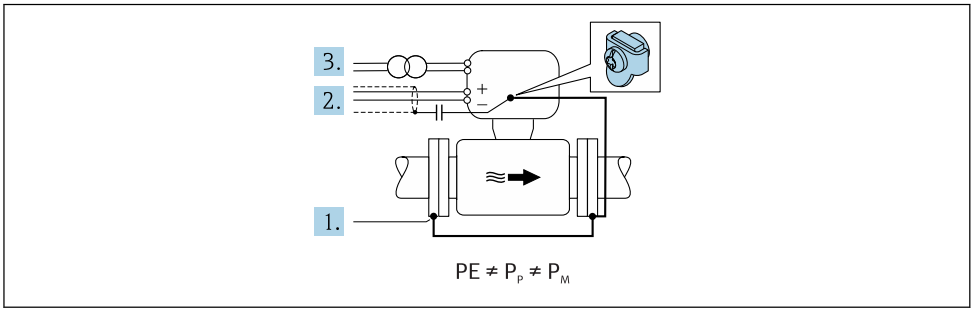

A0044857

DRAFT

1. Connect the pipe flanges and transmitter via the ground cable.
2. Route the shielding of the signal cables via a capacitor (recommended value 1.5µF/50V).
3. Device connected to power supply such that it is floating in relation to the protective earth (isolation transformer). This measure is not required in the case of 24V DC supply voltage without PE (= SELV power unit).
4. Use the "Measurement isolated from ground" option, while observing the operating conditions for measurement isolated from ground.

Terminals

Transmitter
- Supply voltage cable: plug-in spring terminals for wire cross-sections 0.5 to 2.5 mm² (20 to 14 AWG)
- Signal cable: plug-in spring terminals for wire cross-sections 0.5 to 2.5 mm² (20 to 14 AWG)
- Electrode cable: spring terminals for wire cross-sections 0.5 to 2.5 mm² (20 to 14 AWG)
- Coil current cable: spring terminals for wire cross-sections 0.5 to 2.5 mm² (20 to 14 AWG)

Sensor connection housing
Spring terminals for wire cross-sections 0.5 to 2.5 mm² (20 to 14 AWG)

Cable entries

Cable entry thread
- M20 x 1.5
- Via adapter:
  - NPT ½"
  - G ½"

Cable gland
- For standard cable: M20 × 1.5 with cable ⌀ 6 to 12 mm (0.24 to 0.47 in)
- For armored cable: M20 × 1.5 with cable ⌀ 9.5 to 16 mm (0.37 to 0.63 in)

If metal cable entries are used, use a grounding plate.

Cable specification

Permitted temperature range
- The installation guidelines that apply in the country of installation must be observed.
- The cables must be suitable for the minimum and maximum temperatures to be expected.

Power supply cable (incl. conductor for the inner ground terminal)

Standard installation cable is sufficient.

Signal cable

Current output 0/4 to 20 mA

Standard installation cable is sufficient.

Current output 4 to 20 mA HART

A shielded cable is recommended. Observe grounding concept of the plant.

Pulse/frequency/switch output

Standard installation cable is sufficient.

Status input

Standard installation cable is sufficient.

PROFIBUS DP

The IEC 61158 standard specifies two types of cable (A and B) for the bus line which can be used for every transmission rate. Cable type A is recommended.

Cable type	A
Characteristic impedance	135 to 165 Ω at a measuring frequency of 3 to 20 MHz
Cable capacitance	< 30 pF/m
Wire cross-section	> 0.34 mm² (22 AWG)

DRAFT

Cable type	Twisted pairs
Loop resistance	≤110 Ω/km
Signal damping	Max. 9 dB over the entire length of the cable cross-section
Shield	Copper braided shielding or braided shielding with foil shield. When grounding the cable shield, observe the grounding concept of the plant.

For further information on planning and installing PROFIBUS networks see:

Operating Instructions "PROFIBUS DP/PA: Guidelines for planning and commissioning" (BA00034S)

Modbus RS485

The EIA/TIA-485 standard specifies two types of cable (A and B) for the bus line which can be used for every transmission rate. Cable type A is recommended.

Cable type	A
Characteristic impedance	135 to 165 Ω at a measuring frequency of 3 to 20 MHz
Cable capacitance	< 30 pF/m
Wire cross-section	> 0.34 mm² (22 AWG)
Cable type	Twisted pairs
Loop resistance	≤110 Ω/km
Signal damping	Max. 9 dB over the entire length of the cable cross-section
Shield	Copper braided shielding or braided shielding with foil shield. When grounding the cable shield, observe the grounding concept of the plant.

EtherNet/IP

The standard ANSI/TIA/EIA-568-B.2 Annex specifies CAT 5 as the minimum category for a cable used for EtherNet/IP. CAT 5e and CAT 6 are recommended.

For more information on planning and installing EtherNet/IP networks, please refer to the "Media Planning and Installation Manual. EtherNet/IP" of ODVA Organization

Connecting cable for remote version

Electrode cable

Standard cable	3 ×0.38 mm² (20 AWG) with common, braided copper shield (ϕ ~9.5 mm (0.37 in)) and individual shielded cores
Cable for empty pipe detection (EPD)	4 ×0.38 mm² (20 AWG) with common, braided copper shield (ϕ ~9.5 mm (0.37 in)) and individual shielded cores
Conductor resistance	≤50 Ω/km (0.015 Ω/ft)
Capacitance: core/shield	≤420 pF/m (128 pF/ft)
Operating temperature	–20 to +80 °C (–4 to +176 °F)

Coil current cable

Standard cable	3 ×0.75 mm² (18 AWG) with common, braided copper shield (ϕ ~9 mm (0.35 in))
Conductor resistance	≤37 Ω/km (0.011 Ω/ft)
Capacitance: core/core, shield grounded	≤120 pF/m (37 pF/ft)

DRAFT

Operating temperature	–20 to +80 °C (–4 to +176 °F)
Test voltage for cable insulation	≤ AC 1433 V rms 50/60 Hz or ≥ DC 2026 V

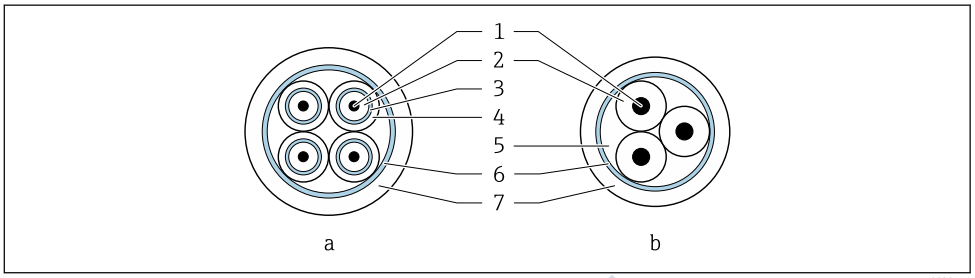

A0029151

13 *Cable cross-section*

a *Electrode cable*
b *Coil current cable*
1 *Core*
2 *Core insulation*
3 *Core shield*
4 *Core jacket*
5 *Core reinforcement*
6 *Cable shield*
7 *Outer jacket*

A connecting cable can be ordered from Endress+Hauser for IP68:
- Pre-terminated cables that are already connected to the sensor
- Pre-terminated cables, where the cables are connected by the customer onsite (incl. tools for sealing the connection compartment)

Armored connecting cable

Armored connecting cables with an additional, reinforcing metal braid should be used:
- When laying the cable directly in the ground
- Where there is a risk of damage from rodents
- Use as per IP68 degree of protection

Armored connecting cables with an additional, reinforcing metal braid can be ordered from Endress+Hauser → 103.

Operation in environments with strong electrical interference

The measuring system meets the general safety requirements → 102 and EMC specifications → 48.

Grounding is by means of the ground terminal provided for the purpose inside the connection housing. The stripped and twisted lengths of cable shield to the ground terminal must be as short as possible.

Performance characteristics

Reference operating conditions

- Error limits following DIN EN 29104, in future ISO 20456
- Water, typically +15 to +45 °C (+59 to +113 °F); 0.5 to 7 bar (73 to 101 psi)
- Data as indicated in the calibration protocol
- Accuracy based on accredited calibration rigs according to ISO 17025

DRAFT

Maximum measured error

Error limits under reference operating conditions

Volume flow

- ±0.5 % o.r. ± 1 mm/s (0.04 in/s)
- Optional: ±0.2 % o.r. ± 2 mm/s (0.08 in/s)

Fluctuations in the supply voltage do not have any effect within the specified range.

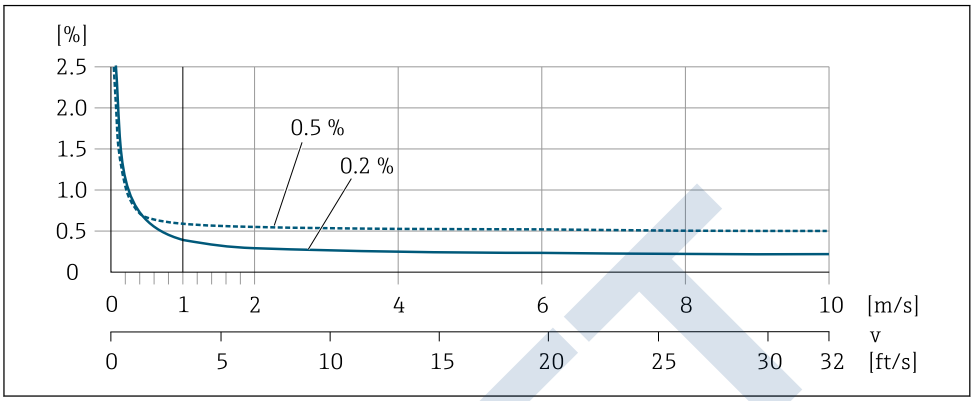

14 *Maximum measured error in % o.r.*

Flat Spec

For Flat Spec in the range $v_{0.5}$ ($v_{0.2}$) up to v_{max} the measured error is constant.

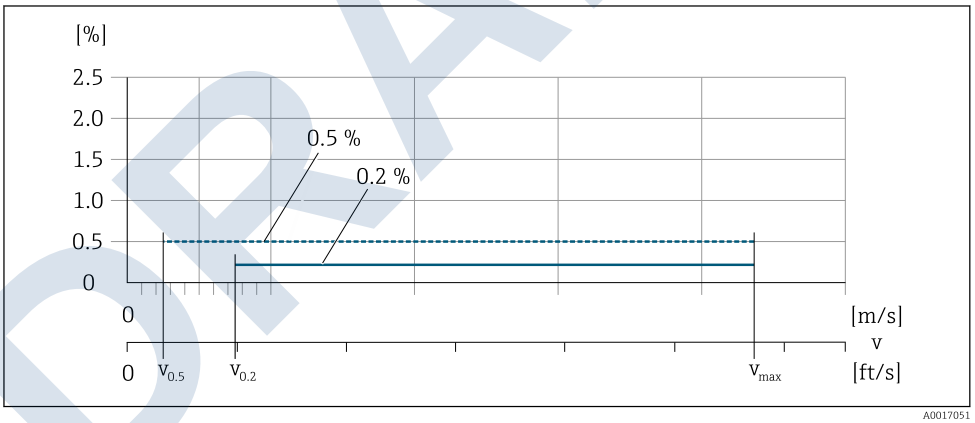

15 *Flat Spec in % o.r.*

Flat Spec flow values 0.5 %

Nominal diameter		$v_{0.5}$		v_{max}	
[mm]	[in]	[m/s]	[ft/s]	[m/s]	[ft/s]
25 to 600	1 to 24	0.5	1.64	10	32
50 to 300 [1)]	2 to 12	0.25	0.82	5	16

1) Order code for "Design", option C

DRAFT

Flat Spec flow values 0.2 %

Nominal diameter		$v_{0.2}$		v_{max}	
[mm]	[in]	[m/s]	[ft/s]	[m/s]	[ft/s]
25 to 600	1 to 24	1.5	4.92	10	32
50 to 300 [1]	2 to 12	0.6	1.97	4	13

1) Order code for "Design", option C

Electrical conductivity

The values apply for:
- Measurements at a reference temperature of 25 °C (77 °F)
  At different temperatures, attention must be paid to the temperature coefficient of the medium (typically 2.1 %/K)
- Device version: compact version - transmitter and sensor form a mechanical unit
- Devices installed in a metal pipe or in a non-metal pipe with ground disks
- Devices whose potential equalization was performed according to the instructions in the associated Operating Instructions

Conductivity [µS/cm]	Measured error [%] o. r.
5 to 20	± 20%
20 to 20 000	± 10%
20 000 to 100 000	± 20%

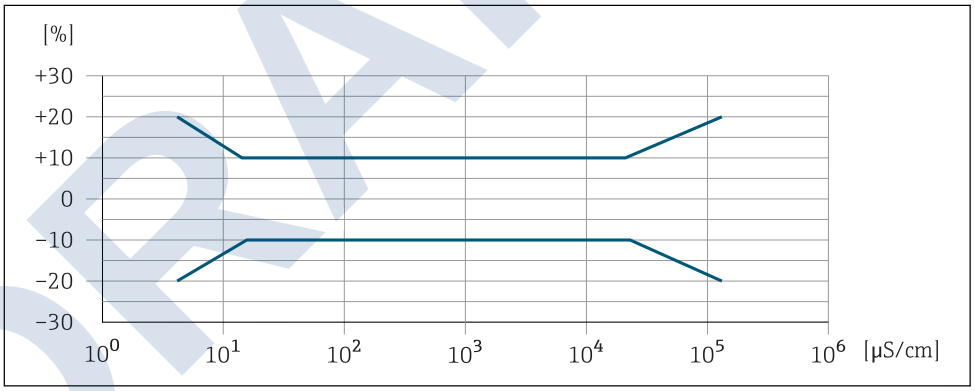

16 *Measured error*

Accuracy of outputs

The outputs have the following base accuracy specifications.

Current output

Accuracy	Max. ±5 µA

Pulse/frequency output

o.r. = of reading

Accuracy	Max. ±50 ppm o.r. (over the entire ambient temperature range)

Repeatability

o.r. = of reading

Volume flow
max. ±0.1 % o.r. ± 0.5 mm/s (0.02 in/s)

DRAFT

Electrical conductivity
Max. ±5 % o.r.

Influence of ambient temperature

Current output

o.r. = of reading

Temperature coefficient	Max. ±0.005 % o.r./°C

Pulse/frequency output

Temperature coefficient	No additional effect. Included in accuracy.

DRAFT

Installation

Mounting location

- Do not install the device at the highest point of the pipe.
- Do not install the device upstream from a free pipe outlet in a down pipe.

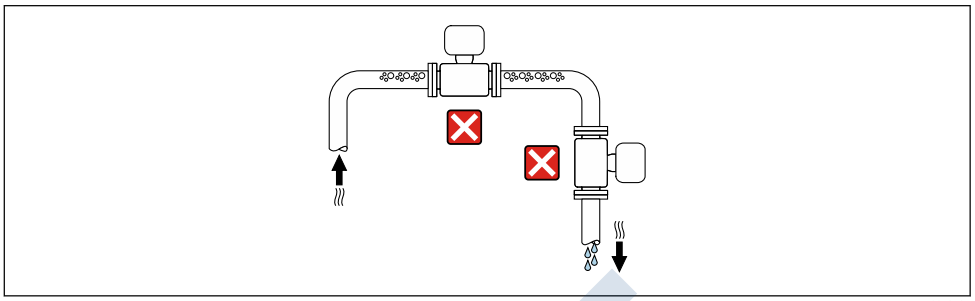

A0042131

The device should ideally be installed in an ascending pipe.

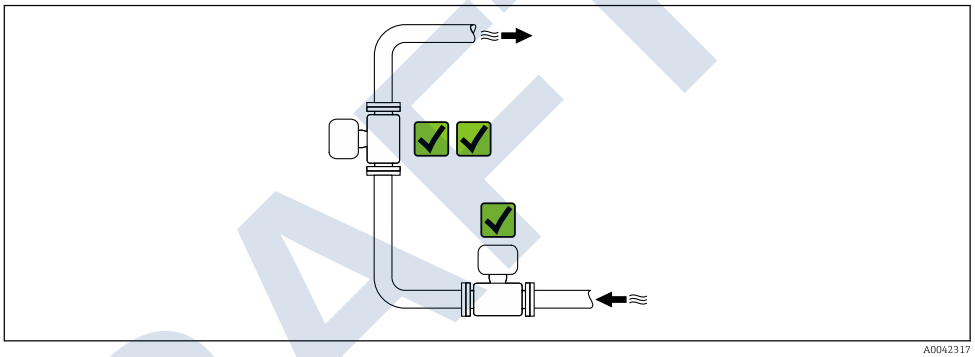

A0042317

Installation near valves

Install the device in the direction of flow upstream from the valve.

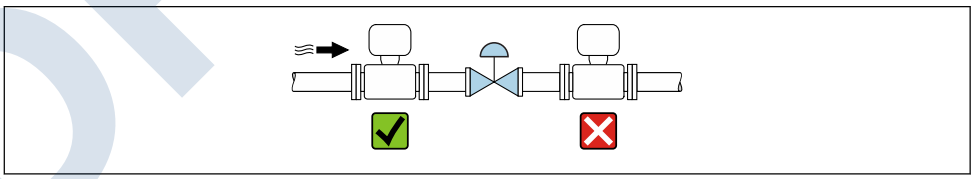

A0041091

Installation upstream from a down pipe

NOTICE

Negative pressure in the measuring pipe can damage the liner!

▶ If installing upstream from down pipes with a length h ≥ 5 m (16.4 ft), install a siphon with a vent valve downstream from the device.

This arrangement prevents the stoppage of liquid flow and the formation of air pockets.

DRAFT

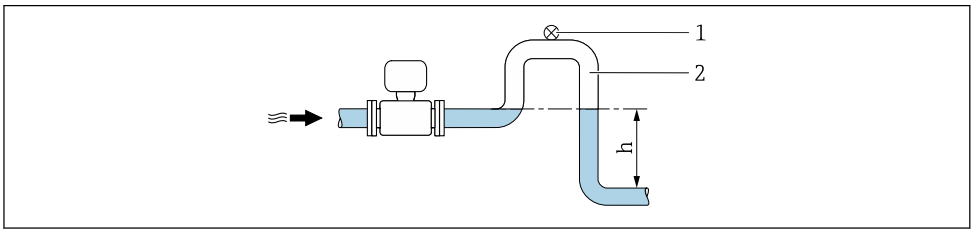

A0028981

1 Vent valve
2 Pipe siphon
h Length of down pipe

Installation with partially filled pipes

- Partially filled pipes with a gradient require a drain-type configuration.
- The installation of a cleaning valve is recommended.

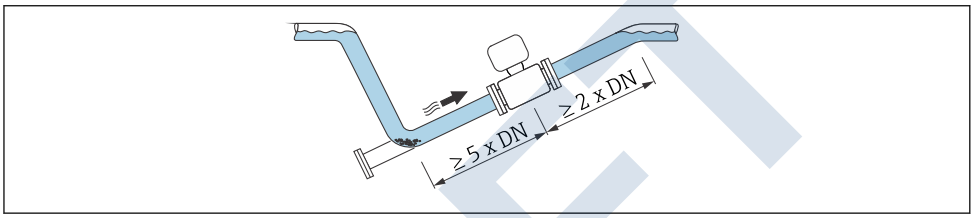

A0041088

No inlet and outlet runs for devices with the order code for "Design": Option C, H, I, J or K.

Installation near pumps

NOTICE

Negative pressure in the measuring pipe can damage the liner!

- ▶ In order to maintain the system pressure, install the device in the flow direction downstream from the pump.
- ▶ Install pulsation dampers if reciprocating, diaphragm or peristaltic pumps are used.

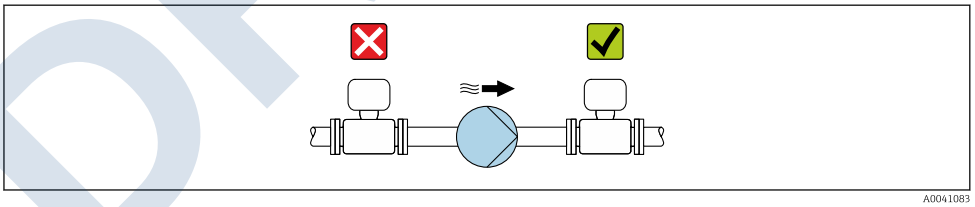

A0041083

- Information on the liner's resistance to partial vacuum → 51
- Information on the measuring system's resistance to vibration and shock → 47

Installation of very heavy devices

Support required for nominal diameters of DN ≥ 350 mm (14 in).

NOTICE

Damage to the device!

If incorrect support is provided, the sensor housing could buckle and the internal magnetic coils could be damaged.

- ▶ Only provide supports at the pipe flanges.

DRAFT

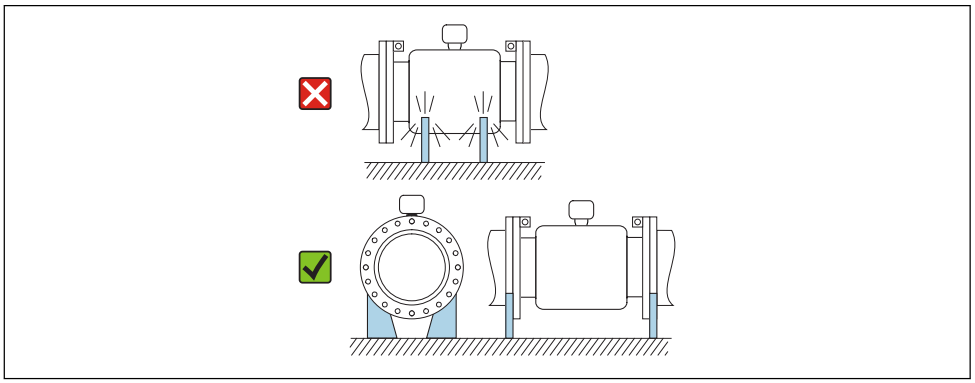

A0041087

Installation in event of pipe vibrations

A remote version is recommended in the event of strong pipe vibrations.

NOTICE

Pipe vibrations can damage the device!

- Do not expose the device to strong vibrations.
- Support the pipe and fix it in place.
- Support the device and fix it in place.
- Mount the sensor and transmitter separately.

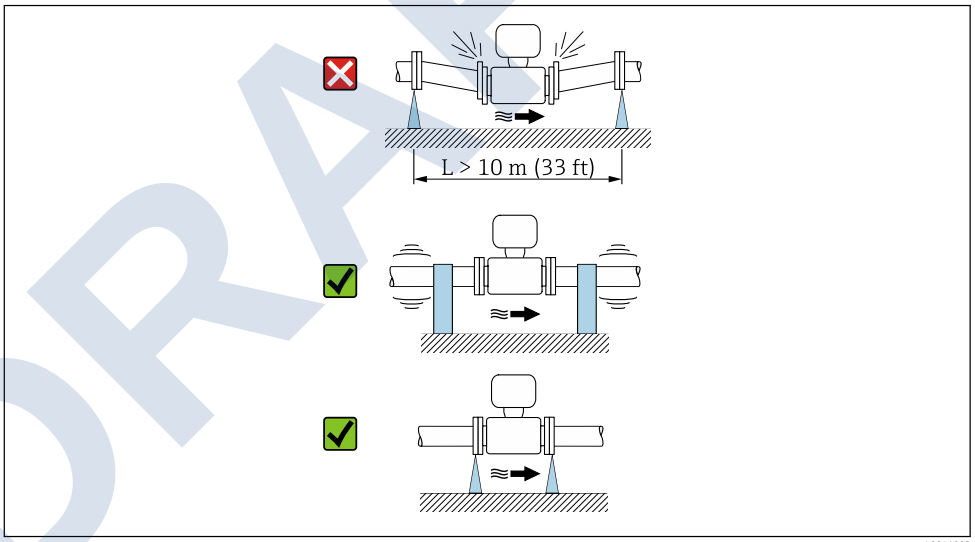

A0041092

Information on the measuring system's resistance to vibration and shock → 47

Orientation

The direction of the arrow on the sensor nameplate helps you to install the sensor according to the flow direction (direction of medium flow through the piping).

DRAFT

Orientation		Recommendation
Vertical orientation	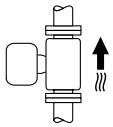 A0015591	✓✓
Horizontal orientation, transmitter at top	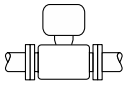 A0015589	✓✓ 1)
Horizontal orientation, transmitter at bottom	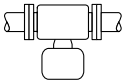 A0015590	✓✓ 2) 3) ✗ 4)
Horizontal orientation, transmitter at side	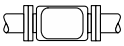 A0015592	✗

1) Applications with low process temperatures may decrease the ambient temperature. To maintain the minimum ambient temperature for the transmitter, this orientation is recommended.
2) Applications with high process temperatures may increase the ambient temperature. To maintain the maximum ambient temperature for the transmitter, this orientation is recommended.
3) To prevent the electronics module from overheating in the case of a sharp rise in temperature (e.g. CIP or SIP processes), install the device with the transmitter component pointing downwards.
4) With the empty pipe detection function switched on: empty pipe detection only works if the transmitter housing is pointing upwards.

Vertical

Optimum for self-emptying pipe systems and for use in conjunction with empty pipe detection.

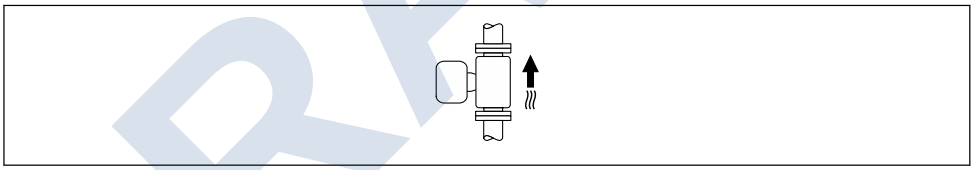

A0015591

Horizontal

- Ideally, the measuring electrode plane should be horizontal. This prevents brief insulation of the measuring electrodes by entrained air bubbles.
- Empty pipe detection only works if the transmitter housing is pointing upwards as otherwise there is no guarantee that the empty pipe detection function will actually respond to a partially filled or empty measuring tube.

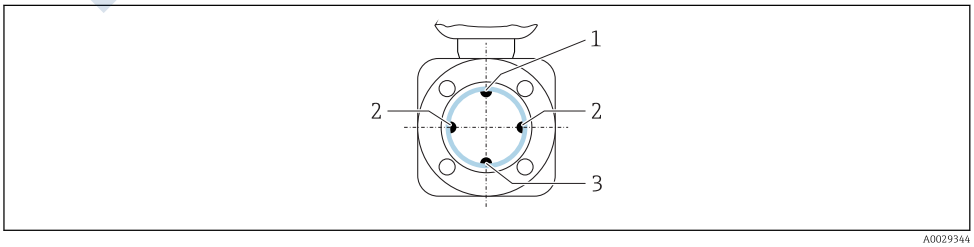

A0029344

1 EPD electrode for empty pipe detection
2 Measuring electrodes for signal detection
3 Reference electrode for potential equalization

Inlet and outlet runs

Installation with inlet and outlet runs

Installation requires inlet and outlet runs: devices with the order code for "Design", option D, E, F and G.

DRAFT

Installation with elbows, pumps or valves

To avoid a vacuum and to maintain the specified level of accuracy, install the device upstream from assemblies that produce turbulence (e.g. valves, T-sections) and downstream from pumps, wherever possible.

Maintain straight, unimpeded inlet and outlet runs.

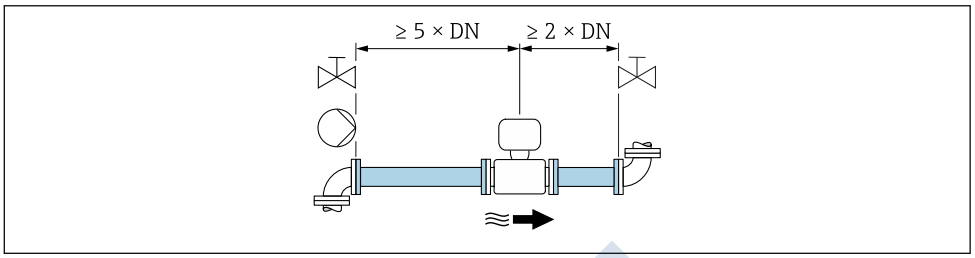

A0028997

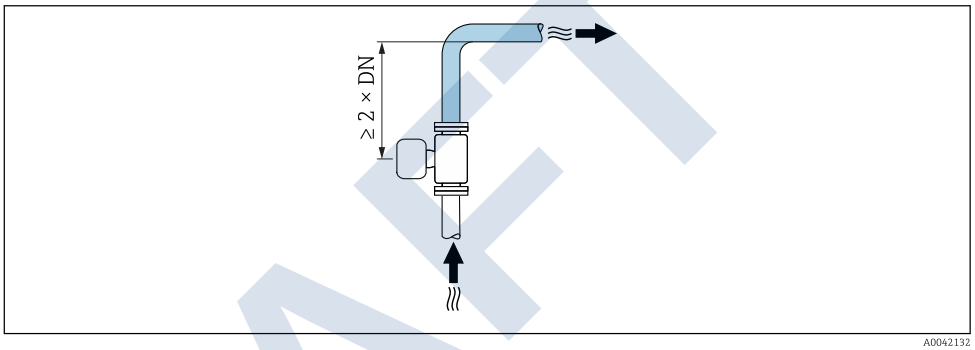

A0042132

Installation without inlet and outlet runs

Depending on the device design and installation location, the inlet and outlet runs can be reduced or omitted entirely.

Maximum measured error
When the device is installed with the inlet and outlet runs described, a maximum measured error of ±0.5 % of the reading ±1 mm/s (0.04 in/s) can be guaranteed.

Devices and possible order options

Order code for "Design"		
Option	**Description**	**Design**
C	Fixed flange, constricted measuring tube, 0 x DN inlet/outlet runs	Constricted measuring tube [1]
H	Lap joint flange, 0 x DN inlet/outlet runs	Full Bore [2]
I	Fixed flange, 0 x DN inlet/outlet runs	
J	Fixed flange, short installed length, 0 x DN inlet/ outlet runs	
K	Fixed flange, long installed length, 0 x DN inlet/ outlet runs	

1) "Constricted measuring tube" stands for a reduction of the internal diameter of the measuring tube. The reduced internal diameter causes a higher flow velocity inside the measuring tube.
2) "Full Bore" stands for the full diameter of the measuring tube. There is no pressure loss with a full diameter.

Installation before or after bends

Installation without inlet and outlet runs is possible: devices with the order code for "Design", option C, H, I, J and K.

DRAFT

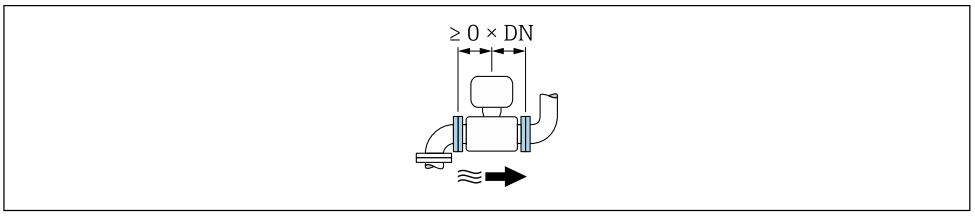

Installation downstream of pumps

Installation without inlet and outlet runs is possible: devices with the order code for "Design", option C, H and I.

In the case of devices with the order code for "Design", option J and K, an inlet run of only ≥ 2 x DN must be taken into consideration.

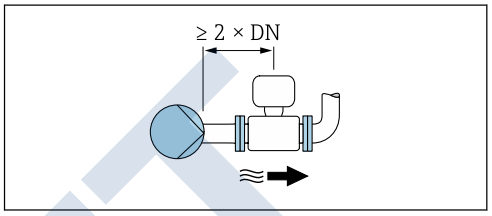

Installation upstream of valves

Installation without inlet and outlet runs is possible: devices with the order code for "Design", option C, H and I.

In the case of devices with the order code for "Design", option J and K, an outlet run of only ≥ 1 x DN must be taken into consideration.

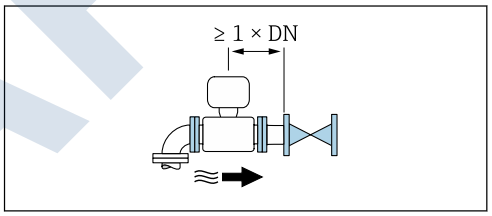

Installation downstream of valves

Installation without inlet and outlet runs is possible if the valve is 100% open during operation: devices with the order code for "Design", option C, H and I.

In the case of devices with the order code for "Design", option J and K, an inlet run of only ≥ 2 x DN must be taken into consideration if the valve is 100% open during operation.

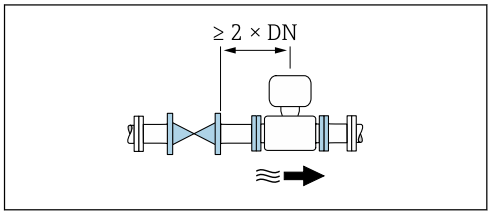

Adapters

Suitable adapters to DIN EN 545 (double-flange reducers) can be used to install the sensor in larger-diameter pipes. The resultant increase in the rate of flow improves measuring accuracy with very slow-moving fluids.

The nomogram shown here can be used to calculate the pressure loss caused by reducers and expanders:

- Calculate the ratio of the diameters d/D.
- From the nomogram read off the pressure loss as a function of flow velocity (downstream from the reduction) and the d/D ratio.

The nomogram only applies to liquids with a viscosity similar to that of water.

DRAFT

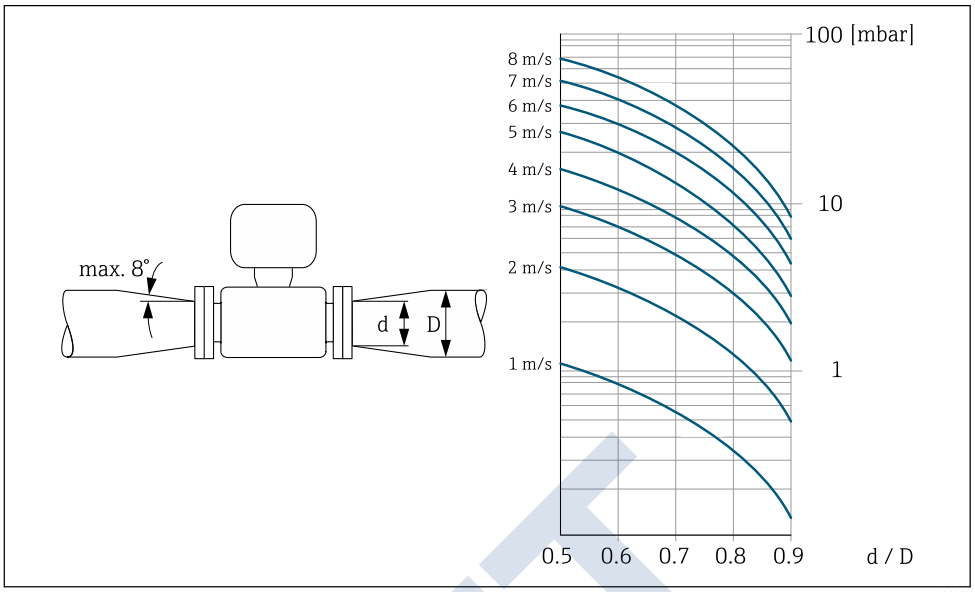

Length of connecting cable

To obtain correct measurement results, observe the permitted connecting cable length of L_{max}. This length is determined by the conductivity of the fluid. If measuring liquids in general: 5 µS/cm

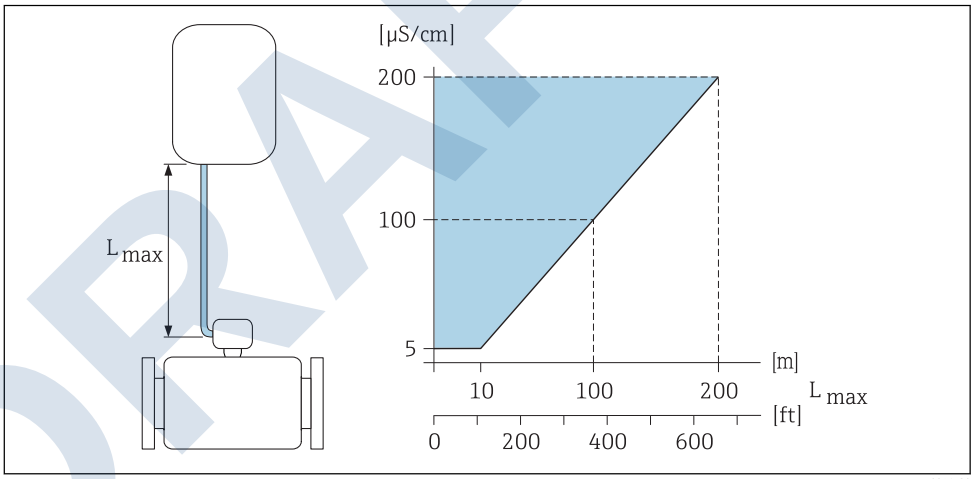

17 *Permitted length of connecting cable*

Colored area = permitted range
L_{max} = length of connecting cable in [m] ([ft])
[µS/cm] = fluid conductivity

Special mounting instructions

Display guard

To ensure that the optional display guard can be easily opened, maintain the following minimum head clearance: 350 mm (13.8 in)

Immersion in water

- Only the remote version of the device with IP68 protection, Type 6P is suitable for underwater use: order code for "Sensor option", options CB, CC, CD, CE and CQ.
- Pay attention to regional installation instructions.

NOTICE

If the maximum water depth and operating duration is exceeded, this can damage the device!

▶ Observe the maximum water depth and operating duration.

DRAFT

Order code for "Sensor option", options CB, CC

- For the operation of the device under water
- Operating duration at a maximum depth of:
  - 3 m (10 ft): permanent use
  - 10 m (30 ft): maximum 48 hours

Order code for "Sensor option", option CQ "Temporarily water-proof "

- For the temporary operation of the device under non-corrosive water
- Operating duration at a maximum depth of:
  3 m (10 ft): maximum 168 hours

Order code for "Sensor option", options CD, CE

- For the operation of the device under water and in saline water
- Operating duration at a maximum depth of:
  - 3 m (10 ft): permanent use
  - 10 m (30 ft): maximum 48 hours

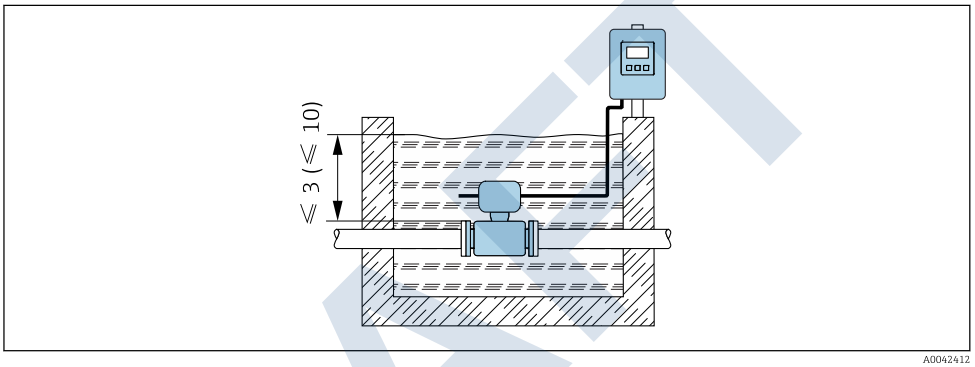

A0042412

Use in buried applications

- Only the remote version of the device with IP68 protection is suitable for use in buried applications: order code for "Sensor option", options CD and CE.
- Pay attention to regional installation instructions.

Order code for "Sensor option", options CD, CE

For the use of the device in buried applications.

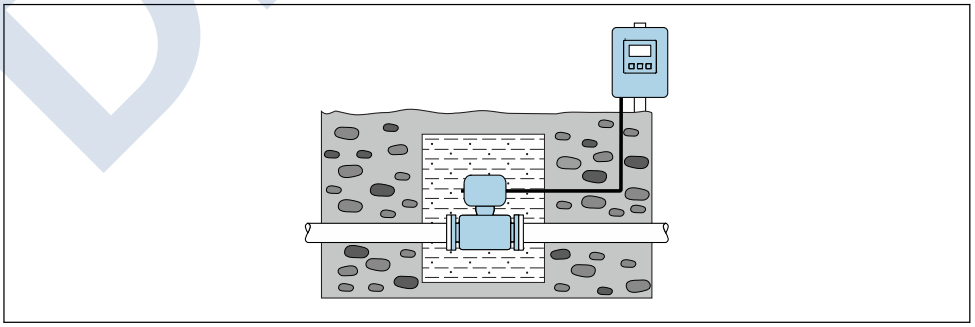

A0042646

DRAFT

Mounting the transmitter housing

Wall mounting

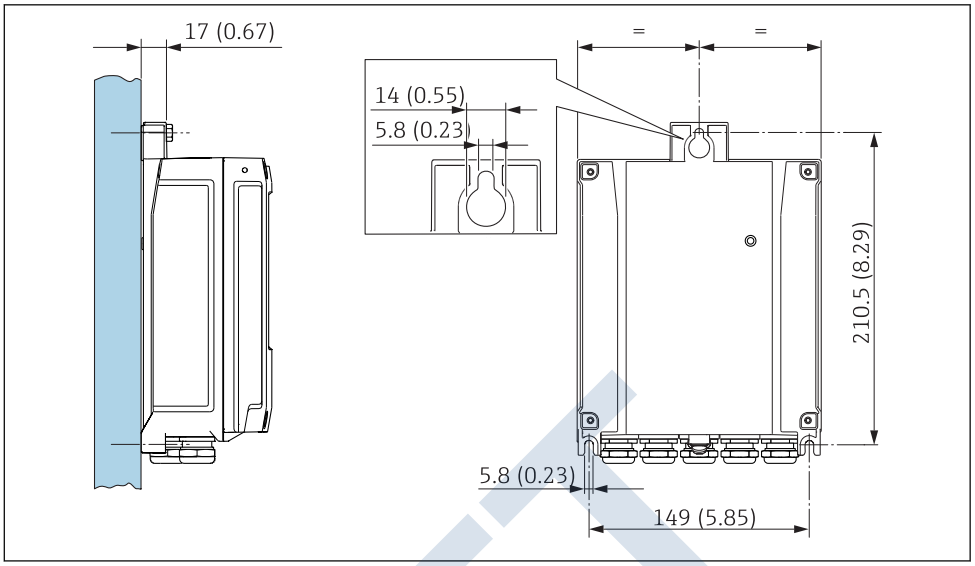

18 *Engineering unit mm (in)*

Post mounting

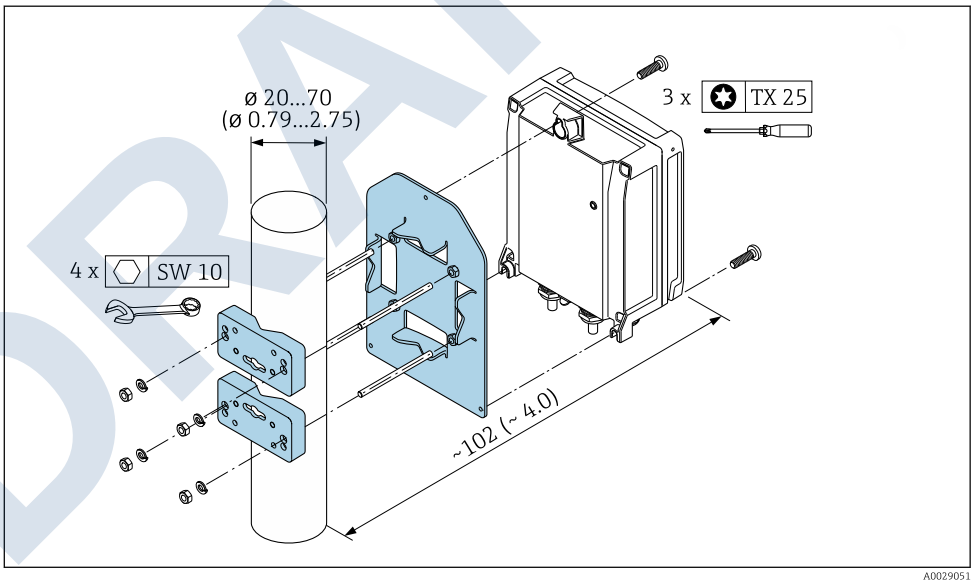

19 *Engineering unit mm (in)*

Environment

Ambient temperature range

Transmitter	−40 to +60 °C (−40 to +140 °F)
Local display	−20 to +60 °C (−4 to +140 °F), the legibility of the local display may be impaired at temperatures outside the temperature range.

DRAFT

Sensor	▪ Process connection material, carbon steel: −10 to +60 °C (+14 to +140 °F) ▪ Process connection material, stainless steel: −40 to +60 °C (−40 to +140 °F) If both the ambient and the medium temperatures are high, mount the sensor separately from the transmitter.
Liner	Do not exceed or fall below the permitted temperature range of the liner → 48.

If operating outdoors:
- Install the measuring device in a shady location.
- Avoid direct sunlight, particularly in warm climatic regions.
- Avoid direct exposure to weather conditions.
- If the compact version of the device is insulated at low temperatures, the insulation must also include the device neck.
- Protect the display against impact.
- Protect the display from abrasion, e.g. caused by sand in desert areas.

Display guard available as an accessory → 103.

Temperature tables

Observe the interdependencies between the permitted ambient and fluid temperatures when operating the device in hazardous areas.

For detailed information on the temperature tables, see the separate document entitled "Safety Instructions" (XA) for the device.

Storage temperature

The storage temperature corresponds to the operating temperature range of the transmitter and the sensor → 45.

- Protect the measuring device against direct sunlight during storage in order to avoid unacceptably high surface temperatures.
- Select a storage location where moisture cannot collect in the measuring device as fungus or bacteria infestation can damage the liner.
- If protection caps or protective covers are mounted these should never be removed before installing the measuring device.

Atmosphere

If a plastic transmitter housing is permanently exposed to certain steam and air mixtures, this can damage the housing.

In cases of doubt, please contact the Sales Center.

Degree of protection

Transmitter

- IP66/67, type 4X enclosure
- When housing is open: IP20, type 1 enclosure
- Display module: IP20, type 1 enclosure

Sensor

Compact and remote version

IP66/67, type 4X enclosure

Optionally available for compact and remote version:

Order code for "Sensor option", option CA, C3
- IP66/67, type 4X enclosure
- Fully welded, with protective coating as per EN ISO 12944 C5-M
- For the operation of the device in corrosive environments

DRAFT

Optionally available for remote version:

Order code for "Sensor option", option CB, CC
- IP68, type 6P enclosure
- Fully welded, with protective coating as per EN ISO 12944 C5-M/Im1 and EN 60529
- For the operation of the device under water
- Operating duration at a maximum depth of:
  - 3 m (10 ft): permanent use
  - 10 m (30 ft): maximum 48 hours

Order code for "Sensor option", option CQ
- IP68, type 6P, temporarily waterproof
- Sensor with aluminum half-shell housing
- For the temporary operation of the device under non-corrosive water
- Operating duration at a maximum depth of:
  3 m (10 ft): maximum 168 hours

Order code for "Sensor option", option CD, CE
- IP68, type 6P enclosure
- Fully welded, with protective coating as per EN ISO 12944 Im2/Im3 and EN 60529
- For the operation of the device in buried applications
- For the operation of the device under water and in saline water
- Operating duration at a maximum depth of:
  - 3 m (10 ft): permanent use
  - 10 m (30 ft): maximum 48 hours

Vibration- and shock-resistance

Sinusoidal vibration according to IEC 60068-2-6

Compact version; order code for "Housing", option A "Compact, aluminum, coated"
- 2 to 8.4 Hz, 3.5 mm peak
- 8.4 to 2 000 Hz, 1 g peak

Compact version; order code for "Housing", option M "Compact, polycarbonate"
- 2 to 8.4 Hz, 7.5 mm peak
- 8.4 to 2 000 Hz, 2 g peak

Remote version; order code for "Housing", option N "Remote, polycarbonate" and option P "Remote, aluminum, coated"
- 2 to 8.4 Hz, 7.5 mm peak
- 8.4 to 2 000 Hz, 2 g peak

Vibration broad-band random, according to IEC 60068-2-64

Compact version; order code for "Housing", option A "Compact, aluminum, coated"
- 10 to 200 Hz, 0.003 g^2/Hz
- 200 to 2 000 Hz, 0.001 g^2/Hz
- Total: 1.54 g rms

Compact version; order code for "Housing", option M "Compact, polycarbonate"
- 10 to 200 Hz, 0.01 g^2/Hz
- 200 to 2 000 Hz, 0.003 g^2/Hz
- Total: 2.70 g rms

Remote version; order code for "Housing", option N "Remote, polycarbonate" and option P "Remote, aluminum, coated"
- 10 to 200 Hz, 0.01 g^2/Hz
- 200 to 2 000 Hz, 0.003 g^2/Hz
- Total: 2.70 g rms

Shock half-sine, according to IEC 60068-2-27

- Compact version; order code for "Housing", option A "Compact, aluminum, coated"
  6 ms 30 g
- Compact version; order code for "Housing", option M "Compact, polycarbonate"
  6 ms 50 g
- Remote version; order code for "Housing", option N "Remote, polycarbonate" and option P "Remote, aluminum, coated"
  6 ms 50 g

Rough handling shocks according to IEC 60068-2-31

DRAFT

Mechanical load

- Protect the transmitter housing against mechanical effects, such as shock or impact; the use of the remote version is sometimes preferable.
- Never use the transmitter housing as a ladder or climbing aid.

Electromagnetic compatibility (EMC)

- As per IEC/EN 61326 and NAMUR Recommendation 21 (NE 21)
- Complies with emission limits for industry as per EN 55011 (Class A)
- Device version with PROFIBUS DP: Complies with emission limits for industry as per EN 50170 Volume 2, IEC 61784

The following applies for PROFIBUS DP: If baud rates > 1.5 MBaud, an EMC cable entry must be used and the cable shield must continue as far as the terminal wherever possible.

Details are provided in the Declaration of Conformity.

Process

Medium temperature range

- 0 to +80 °C (+32 to +176 °F) for hard rubber, DN 50 to 3000 (2 to 120")
- −20 to +50 °C (−4 to +122 °F) for polyurethane, DN 25 to 1200 (1 to 48")
- −20 to +90 °C (−4 to +194 °F) for PTFE, DN 25 to 300 (1 to 12")

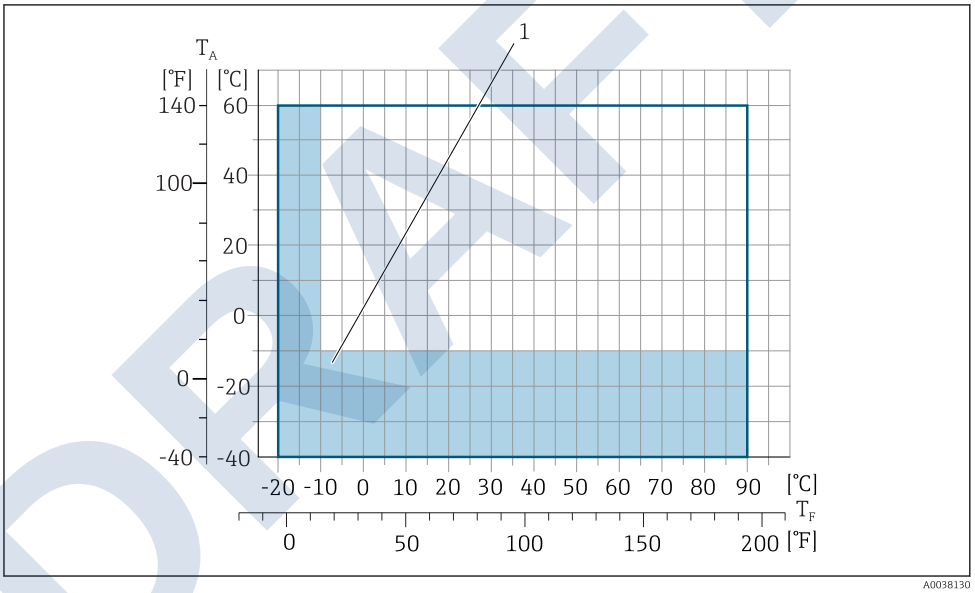

T_A *Ambient temperature*
T_F *Medium temperature*
1 *Colored area: The ambient temperature range of −10 to −40 °C (+14 to −40 °F) and the medium temperature range of −10 to −20 °C (+14 to −4 °F) only apply for stainless flanges*

The permitted fluid temperature in custody transfer is 0 to +50 °C (+32 to +122 °F).

Conductivity

≥5 µS/cm for liquids in general.

- Note that in the case of the remote version, the requisite minimum conductivity additionally depends on the length of the connecting cable → 43.
- Maximum measured error for electrical conductivity → 35.

Pressure/temperature ratings

The following pressure/temperature diagrams apply to all pressure-bearing parts of the device and not just the process connection. The diagrams show the maximum permissible medium pressure depending on the specific medium temperature.

DRAFT

Process connection: fixed flange according to EN 1092-1 (DIN 2501)

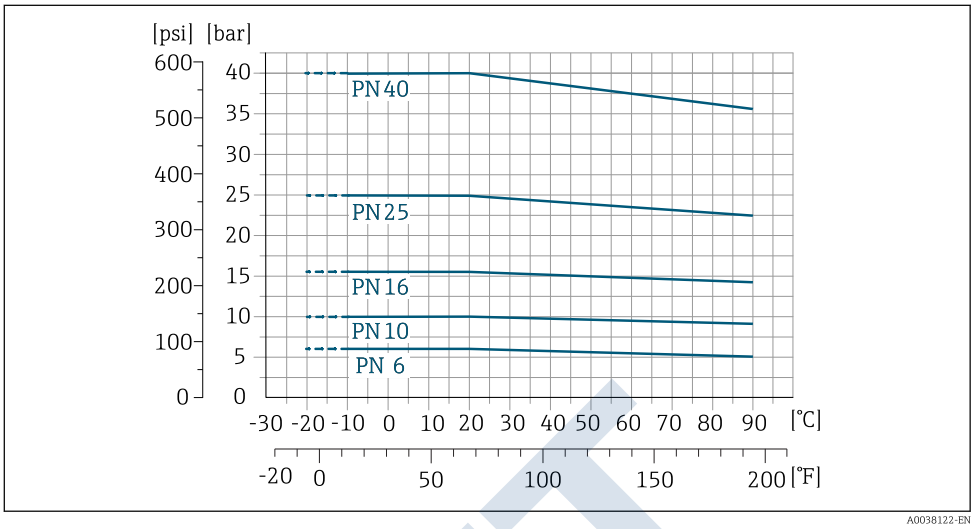

20 *Process connection material: stainless steel (−20 °C (−4 °F)); carbon steel (−10 °C (14 °F))*

Process connection: fixed flange according to ASME B16.5

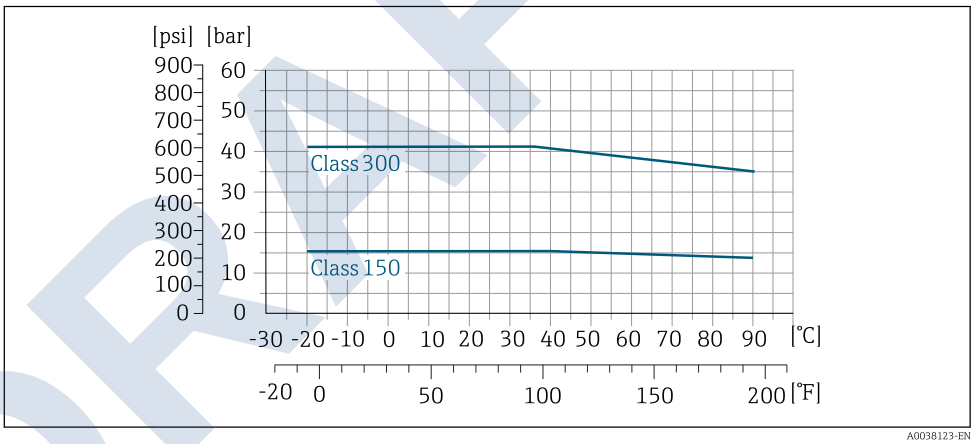

21 *Process connection material: stainless steel*

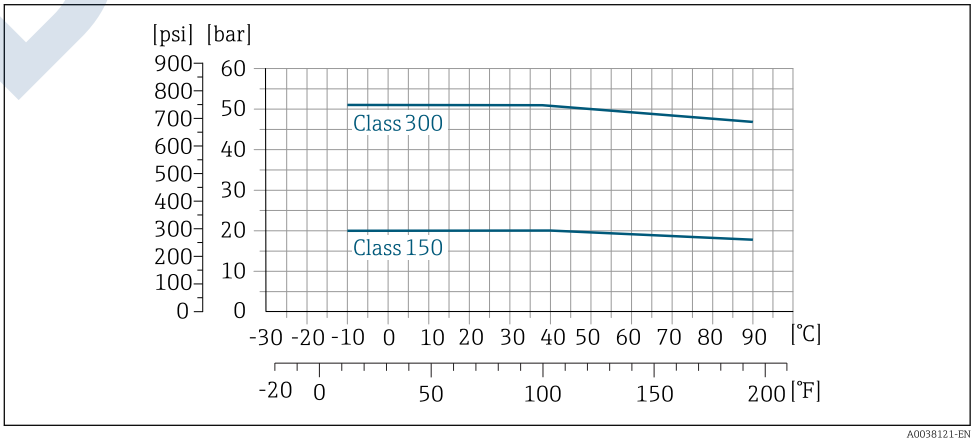

22 *Process connection material: carbon steel*

DRAFT

Process connection: fixed flange according to JIS B2220

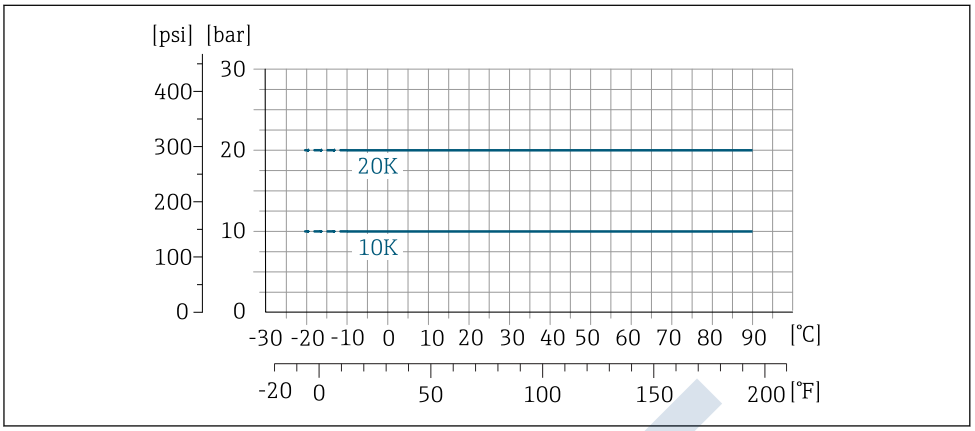

23 Process connection material: stainless steel (−20 °C (−4 °F)); carbon steel (−10 °C (14 °F))

Process connection: fixed flange according to AWWA C207

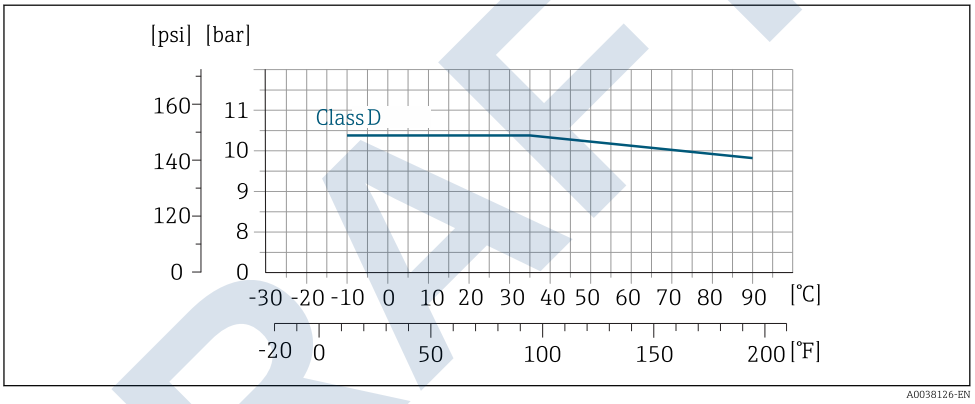

24 Process connection material: carbon steel

Process connection: fixed flange according to AS 2129

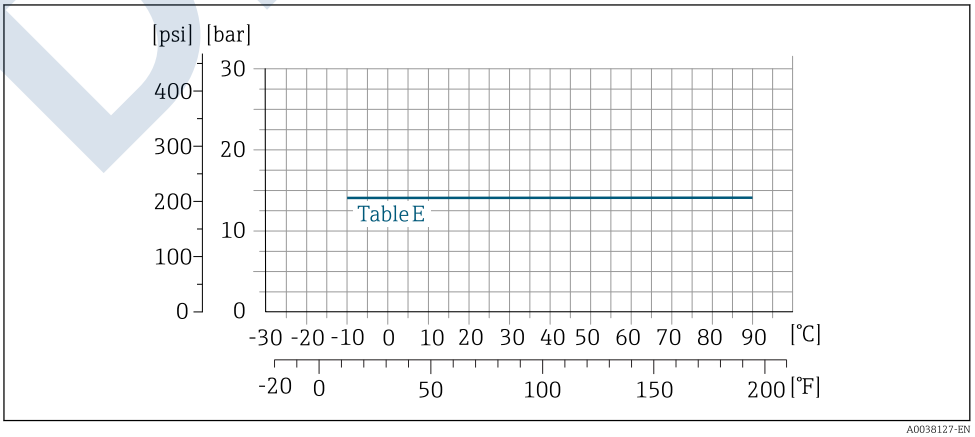

25 Process connection material: carbon steel

DRAFT

Process connection: fixed flange according to AS 4087

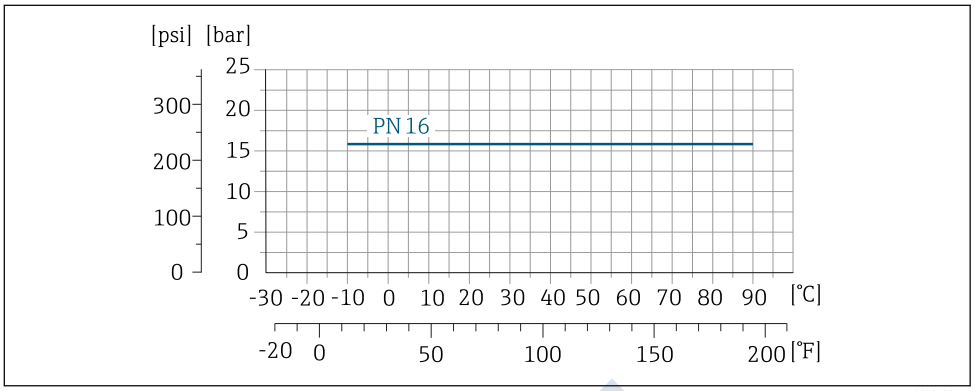

26 *Process connection material: carbon steel*

Process connection: lap joint flange/lap joint flange, stamped plate according to EN 1092-1 (DIN 2501) and ASME B16.5; DN 25 to 300 (1 to 12")

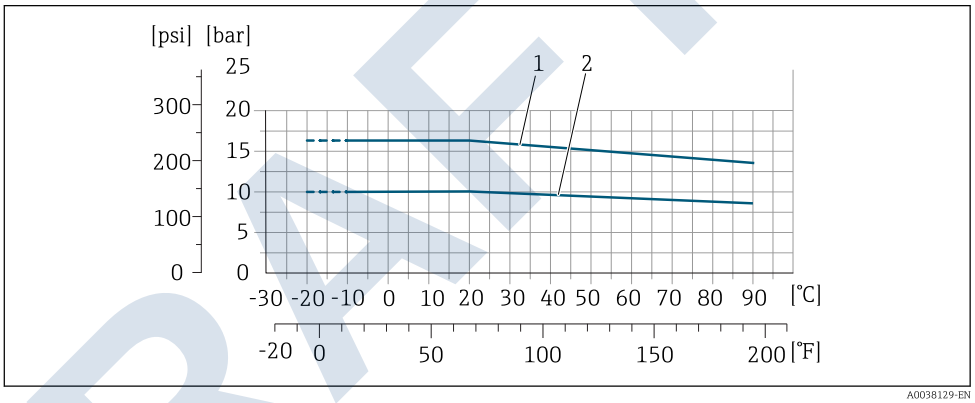

27 *Process connection material: stainless steel (−20 °C (−4 °F)); carbon steel (−10 °C (14 °F))*

1 Lap joint flange PN16/ Class150
2 Lap joint flange, stamped plate PN10, lap joint flange PN10

Pressure tightness

Liner: hard rubber

Nominal diameter		Limit values for absolute pressure in [mbar] ([psi]) for medium temperatures:		
[mm]	[in]	+25 °C (+77 °F)	+50 °C (+122 °F)	+80 °C (+176 °F)
50 … 3000	2 … 120	0 (0)	0 (0)	0 (0)

Liner: polyurethane

Nominal diameter		Limit values for absolute pressure in [mbar] ([psi]) for medium temperatures:	
[mm]	[in]	+25 °C (+77 °F)	+50 °C (+122 °F)
25 … 1200	1 … 48	0 (0)	0 (0)

Liner: PTFE

Nominal diameter		Limit values for absolute pressure in [mbar] ([psi]) for medium temperatures:	
[mm]	[in]	+25 °C (+77 °F)	+90 °C (+194 °F)
25	1	0 (0)	0 (0)
40	2	0 (0)	0 (0)

DRAFT

Nominal diameter		Limit values for absolute pressure in [mbar] ([psi]) for medium temperatures:	
[mm]	[in]	+25 °C (+77 °F)	+90 °C (+194 °F)
50	2	0 (0)	0 (0)
65	2 ½	0 (0)	40 (0.58)
80	3	0 (0)	40 (0.58)
100	4	0 (0)	135 (2.0)
125	5	135 (2.0)	240 (3.5)
150	6	135 (2.0)	240 (3.5)
200	8	200 (2.9)	290 (4.2)
250	10	330 (4.8)	400 (5.8)
300	12	400 (5.8)	500 (7.3)

Flow limit

The diameter of the pipe and the flow rate determine the nominal diameter of the sensor. The optimum velocity of flow is between 2 to 3 m/s (6.56 to 9.84 ft/s). Also match the velocity of flow (v) to the physical properties of the medium:

- v < 2 m/s (6.56 ft/s): for abrasive media (e.g. potter's clay, lime milk, ore slurry)
- v > 2 m/s (6.56 ft/s): for media producing buildup (e.g. wastewater sludge)

A necessary increase in the flow velocity can be achieved by reducing the sensor nominal diameter.

For an overview of the full scale values for the measuring range, see the "Measuring range" section → 8

For custody transfer, the applicable approval determines the permitted measuring range.

Pressure loss

- No pressure loss occurs if the sensor is installed in a pipe with the same nominal diameter.
- Pressure losses for configurations incorporating adapters according to DIN EN 545 → 42

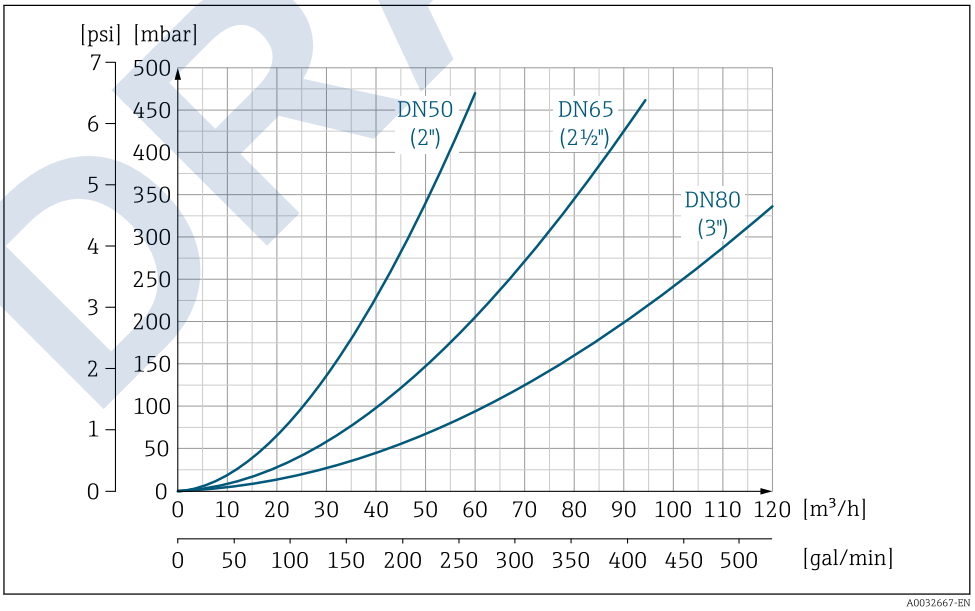

28 *Pressure loss DN 50 to 80 (2 to 3") for order code for "Design", option C "Fixed flange, constricted measuring tube", 0 x DN inlet/outlet runs"*

DRAFT

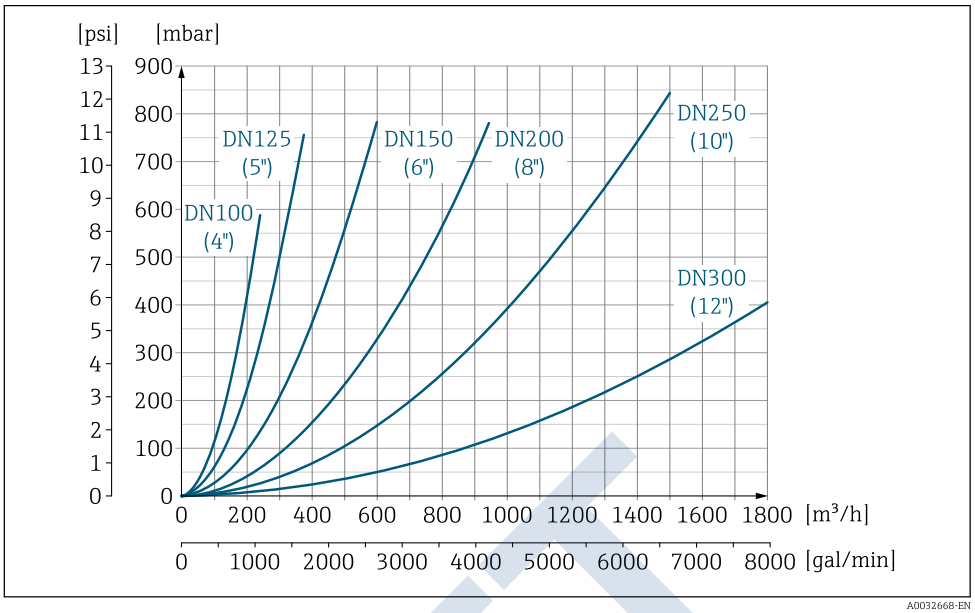

29 *Pressure loss DN 100 to 300 (4 to 12") for order code for "Design", option C "Fixed flange, constricted measuring tube", 0 x DN inlet/outlet runs"*

System pressure

Installation near pumps → 38

Vibrations

Installation in event of pipe vibrations → 39

DRAFT

Custody transfer mode

The measuring device is optionally tested in accordance with OIML R49 and has an EU type-examination certificate according to Measuring Instruments Directive 2014/32/EU for service subject to legal metrological control ("custody transfer") for cold water (Annex III).

The permitted medium temperature in these applications is 0 to +50 °C (+32 to +122 °F).

The device is used with a legally controlled totalizer on the local display and optionally with legally controlled outputs.

Measuring devices subject to legal metrological control totalize in both directions, i.e. all the outputs consider flow components in the positive (forward) and negative (reverse) flow direction.

Generally a measuring device subject to legal metrological control is secured against tampering by seals on the transmitter or sensor. These seals may normally only be opened by a representative of the competent authority for legal metrology controls.

After putting the device into circulation or after sealing the device, operation is only possible to a limited extent.

Detailed ordering information is available from your local Endress+Hauser sales center for national approvals (outside Europe) as cold water meters based on OIML R49.

Mechanical construction

Dimensions in SI units

Compact version

Order code for "Housing", option A "Compact, aluminum, coated" or option M "Compact, polycarbonate"

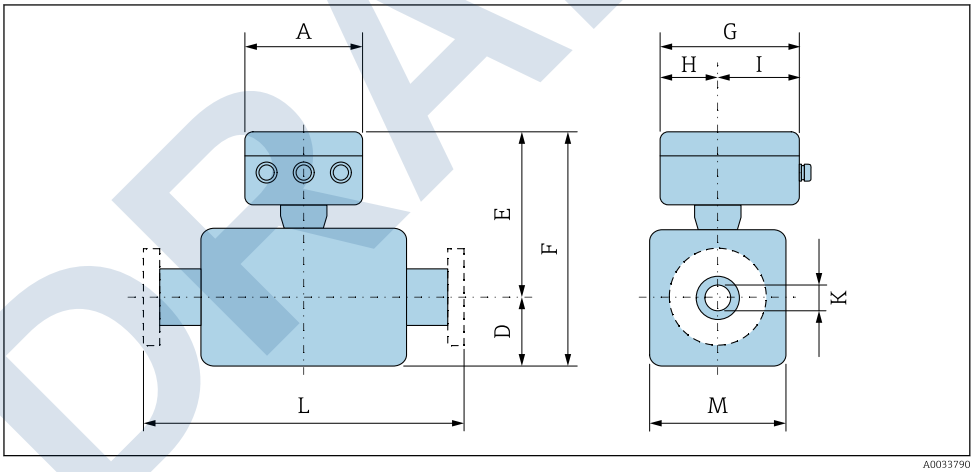

A [mm]	G [1] [mm]	H [mm]	I [1] [mm]
167	193	90	103

1) Depending on the cable gland used: values up to + 30 mm

DRAFT

DN 25 to 300 mm (1 to 12 in): Sensor with aluminum half-shell housing

DN		Order code for "Design"								K	L
		Options D, E, H, I				Option C					
		D [1]	E [1]	F [1]	M [1]	D [1]	E [1]	F [1]	M [1]		
[mm]	[in]	[mm]	[mm]	[mm]	[mm]	[mm]	[mm]	[mm]	[mm]	[mm]	[mm]
25	1	84	201	285	120	–	–	–	–	[2]	200
32	–	84	201	285	120	–	–	–	–	[2]	200
40	1 ½	84	201	285	120	–	–	–	–	[2]	200
50	2	84	201	285	120	84	201	285	120	[2]	200
65	–	109	226	335	180	84	201	285	120	[2]	200
80	3	109	226	335	180	84	201	285	120	[2]	200
100	4	109	226	335	180	109	226	335	180	[2]	250
125	–	150	266	416	260	109	226	335	180	[2]	250
150	6	150	266	416	260	109	226	335	180	[2]	300
200	8	180	291	471	324	150	266	416	260	[2]	350
250	10	205	316	521	400	150	266	416	260	[2]	450
300	12	230	341	571	460	180	291	471	324	[2]	500

1) The dimensions are reference values. They may vary depending on the pressure rating, design and order option.
2) Depends on the liner → 🖹 90

DN 350 to 400 mm (14 to 16 in)

DN		Order code for "Design" Options E, I				K	L
		D [1]	E [1]	F [1]	M [1]		
[mm]	[in]	[mm]	[mm]	[mm]	[mm]	[mm]	[mm]
350	14	282	379	679	564	[2]	550
375	15	308	423	731	616	[2]	600
400	16	308	423	731	616	[2]	600

1) The dimensions are reference values. They may vary depending on the pressure rating, design and order option.
2) Depends on the liner → 🖹 90

DN 450 to 900 mm (18 to 36 in)

DN		Order code for "Design"								K	L	
		Options F, J				Options G, K						
		D [1]	E [1]	F [1]	M [1]	D [1]	E [1]	F [1]	M [1]			
[mm]	[in]	[mm]	[mm]	[mm]	[mm]	[mm]	[mm]	[mm]	[mm]	[mm]	[mm]	
450	18	290	405	695	580	333	448	781	666	[2]	600 [3]	650 [4]
500	20	315	430	745	630	359	474	833	717	[2]	600 [3]	650 [4]
600	24	365	480	845	730	411	526	937	821	[2]	600 [3]	780 [4]
700	28	426	541	967	851	512	627	1139	1024	[2]	700 [3]	910 [4]
750	30	463	578	1041	926	512	627	1139	1024	[2]	750 [3]	975 [4]

DRAFT

DN		Order code for "Design"										
		Options F, J				Options G, K				K	L	
		D [1]	E [1]	F [1]	M [1]	D [1]	E [1]	F [1]	M [1]			
[mm]	[in]	[mm]	[mm]	[mm]	[mm]	[mm]	[mm]	[mm]	[mm]	[mm]	[mm]	
800	32	482	597	1079	964	534	649	1183	1065	[2]	800 [3]	1040 [4]
900	36	532	647	1179	1064	610	725	1335	1218	[2]	900 [3]	1170 [4]

1) The dimensions are reference values. They may vary depending on the pressure rating, design and order option.
2) Depends on the liner → 🖹 90
3) Order code for "Design", option F "Fixed flange, short installed length" and option J "Fixed flange, short installed length, 0 x DN inlet/outlet runs"
4) Order code for "Design", option G "Fixed flange, long installed length" and option K "Fixed flange, long installed length 0 x DN inlet/outlet runs"

DN 1000 to 2000 mm (40 to 78 in)

DN		Order code for "Design"						
		Options F, G, J, K						
		D [1]	E [1]	F [1]	M [1]	K	L	
[mm]	[in]	[mm]	[mm]	[mm]	[mm]	[mm]	[mm]	
1000	40	582	697	1279	1164	[2]	1000 [3]	1300 [4]
–	42	618	733	1351	1236	[2]	1050 [3]	1365 [4]
1200	48	696	811	1507	1392	[2]	1200 [3]	1560 [4]
–	54	809	924	1733	1617	[2]	1350 [3]	1755 [4]
1400	–	809	924	1733	1617	[2]	1400 [3]	1820 [4]
–	60	909	1024	1933	1817	[2]	1500 [3]	1950 [4]
1600	–	909	1024	1933	1817	[2]	1600 [3]	2080 [4]
–	66	960	1075	2035	1919	[2]	1650 [3]	2145 [4]
1800	72	1016	1131	2147	2032	[2]	1800 [3]	2340 [4]
–	78	1127	1242	2369	2254	[2]	2000 [3]	2600 [4]
2000	–	1127	1242	2369	2254	[2]	2000 [3]	2600 [4]

1) The dimensions are reference values. They may vary depending on the pressure rating, design and order option.
2) Depends on the liner → 🖹 90
3) Order code for "Design", option F "Fixed flange, short installed length" and option J "Fixed flange, short installed length, 0 x DN inlet/outlet runs"
4) Order code for "Design", option G "Fixed flange, long installed length" and option K "Fixed flange, long installed length 0 x DN inlet/outlet runs"

DN 2200 to 3000 mm (84 to 120 in)

DN		Order code for "Design"					
		Option F, J					
		D [1]	E [1]	F [1]	M [1]	K	L
[mm]	[in]	[mm]	[mm]	[mm]	[mm]	[mm]	[mm]
–	84	1227	1342	2569	2454	[2]	2200
2200	–	1227	1342	2569	2454	[2]	2200
–	90	1332	1447	2779	2664	[2]	2400
2400	–	1332	1447	2783	2664	[2]	2400
–	96	1431	1546	2977	2861	[2]	2450

DRAFT

DN		Order code for "Design" Option F, J				K	L
		D [1]	E [1]	F [1]	M [1]		
[mm]	[in]	[mm]	[mm]	[mm]	[mm]	[mm]	[mm]
–	102	1516	1631	3147	3032	[2]	2600
2600	–	1442	1557	2999	2883	[2]	2600
–	108	1602	1718	3320	3204	[2]	2750
2800	–	1547	1662	3209	3093	[2]	2800
–	114	1688	1803	3491	3375	[2]	2900
3000	–	1647	1762	3409	3293	[2]	3000
–	120	1774	1889	3663	3547	[2]	3050

1) The dimensions are reference values. They may vary depending on the pressure rating, design and order option.
2) Depends on the liner → 🖹 90

Remote version

Transmitter remote version

Order code for "Housing", option N "Remote, polycarbonate" or option P "Remote, aluminum coated"

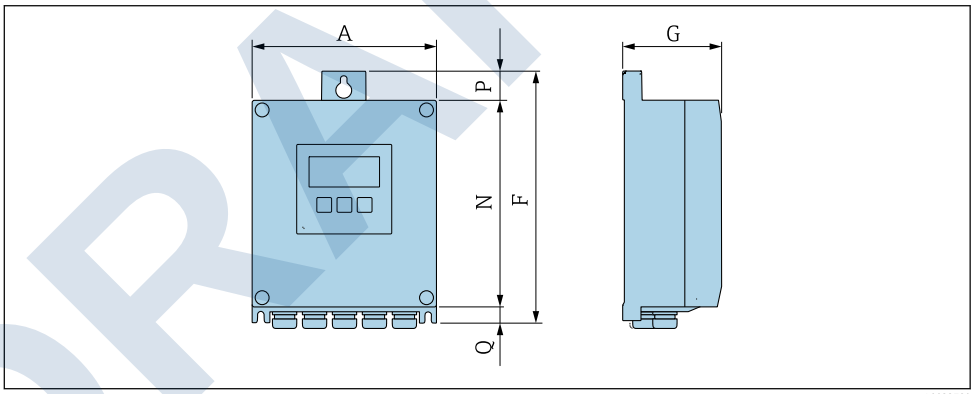

A0033789

Order code for "Transmitter housing", option P "Remote, aluminum, coated"

A [mm]	F [mm]	G [mm]	N [mm]	P [mm]	Q [mm]
167	232	80	187	24	21

Order code for "Transmitter housing", option N "Remote, polycarbonate"

A [mm]	F [mm]	G [mm]	N [mm]	P [mm]	Q [mm]
177	234	90	197	17	22

DRAFT

Sensor connection housing

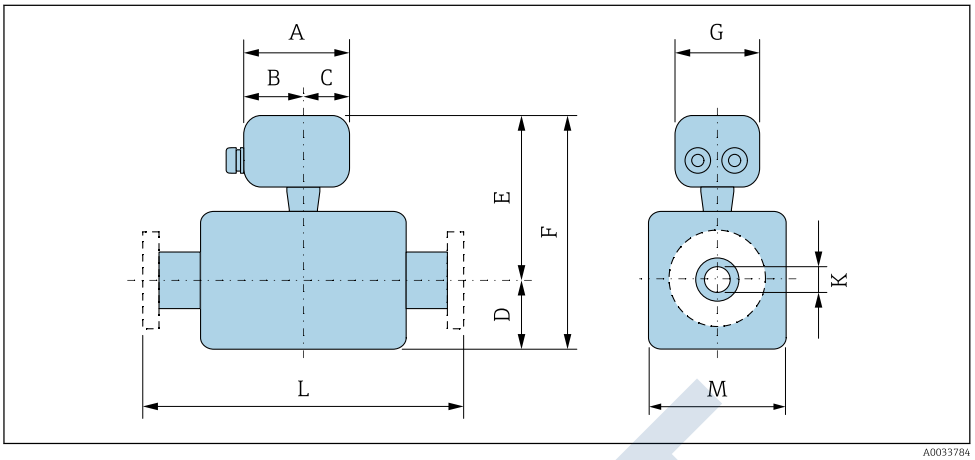

Aluminum, coated

A [mm]	B [mm]	C [mm]	G [mm]
148	94	54	136

Polycarbonate (only in conjunction with order code for "Sensor option", options CA...CE)

A [mm]	B [mm]	C [mm]	G [mm]
113	62	51	112

DN 25 to 300 mm (1 to 12 in): Sensor with aluminum half-shell housing

DN		Order code for "Design"								K	L
		Options D, E, H, I				Option C					
		D [1]	E [1]	F [1]	M [1]	D [1]	E [1]	F [1]	M [1]		
[mm]	[in]	[mm]	[mm]	[mm]	[mm]	[mm]	[mm]	[mm]	[mm]	[mm]	[mm]
25	1	84	200	284	120	–	–	–	–	[2]	200
32	–	84	200	284	120	–	–	–	–	[2]	200
40	1 ½	84	200	284	120	–	–	–	–	[2]	200
50	2	84	200	284	120	84	200	284	120	[2]	200
65	–	109	225	334	180	84	200	284	120	[2]	200
80	3	109	225	334	180	84	200	284	120	[2]	200
100	4	109	225	334	180	109	225	334	180	[2]	250
125	–	150	265	415	260	109	225	334	180	[2]	250
150	6	150	265	415	260	109	225	334	180	[2]	300
200	8	180	290	470	324	150	265	415	260	[2]	350
250	10	205	315	520	400	150	265	415	260	[2]	450
300	12	230	340	570	460	180	290	470	324	[2]	500

1) The dimensions are reference values. They may vary depending on the pressure rating, design and order option.
2) Depends on the liner → 🖹 90

DRAFT

DN 25 to 300 mm (1 to 12 in): Sensor with fully welded carbon steel housing

DN		Order code for "Design"								K	L
		Option E				Option C					
		D [1]	E [1]	F [1]	M [1]	D [1]	E [1]	F [1]	M [1]		
[mm]	[in]	[mm]	[mm]	[mm]	[mm]	[mm]	[mm]	[mm]	[mm]	[mm]	[mm]
25	1	70	200	270	140	–	–	–	–	[2]	200
32	–	70	200	270	140	–	–	–	–	[2]	200
40	1 ½	70	200	270	140	–	–	–	–	[2]	200
50	2	70	200	270	140	70	200	270	140	[2]	200
65	–	82	225	307	165	70	200	270	140	[2]	200
80	3	87	225	312	175	70	200	270	140	[2]	200
100	4	100	225	325	200	82	225	307	165	[2]	250
125	–	113	265	378	226	87	225	312	175	[2]	250
150	6	134	265	399	269	100	225	325	200	[2]	300
200	8	160	290	450	320	113	265	378	226	[2]	350
250	10	193	315	508	387	134	265	399	269	[2]	450
300	12	218	340	558	437	160	290	450	320	[2]	500

1) The dimensions are reference values. They may vary depending on the pressure rating, design and order option.
2) Depends on the liner → 🖹 90

DN 350 to 400 mm (14 to 16 in)

DN		Order code for "Design" Options E, I				K	L
		D [1]	E [1]	F [1]	M [1]		
[mm]	[in]	[mm]	[mm]	[mm]	[mm]	[mm]	[mm]
350	14	282	379	679	564	[2]	550
375	15	308	423	731	616	[2]	550
400	16	308	423	731	616	[2]	600

1) The dimensions are reference values. They may vary depending on the pressure rating, design and order option.
2) Depends on the liner → 🖹 90

DN 450 to 900 mm (18 to 36 in)

DN		Order code for "Design"								K	L	
		Options F, J				Options G, K						
		D [1]	E [1]	F [1]	M [1]	D [1]	E [1]	F [1]	M [1]			
[mm]	[in]	[mm]	[mm]	[mm]	[mm]	[mm]	[mm]	[mm]	[mm]	[mm]	[mm]	
450	18	290	405	695	580	333	448	781	666	[2]	600 [3]	650 [4]
500	20	315	430	745	630	359	474	833	717	[2]	600 [3]	650 [4]
600	24	365	480	845	730	411	526	937	821	[2]	600 [3]	780 [4]
700	28	426	541	967	851	512	627	1139	1024	[2]	700 [3]	910 [4]
750	30	463	578	1041	926	512	627	1139	1024	[2]	750 [3]	975 [4]

DRAFT

DN		Order code for "Design"										
		Options F, J				Options G, K				K	L	
		D [1]	E [1]	F [1]	M [1]	D [1]	E [1]	F [1]	M [1]			
[mm]	[in]	[mm]	[mm]	[mm]	[mm]	[mm]	[mm]	[mm]	[mm]	[mm]	[mm]	
800	32	482	597	1079	964	534	649	1183	1065	[2]	800 [3]	1040 [4]
900	36	532	647	1179	1064	610	725	1335	1218	[2]	900 [3]	1170 [4]

1) The dimensions are reference values. They may vary depending on the pressure rating, design and order option.
2) Depends on the liner → 🖹 90
3) Order code for "Design", option F "Fixed flange, short installed length" and option J "Fixed flange, short installed length, 0 x DN inlet/outlet runs"
4) Order code for "Design", option G "Fixed flange, long installed length" and option K "Fixed flange, long installed length 0 x DN inlet/outlet runs"

DN 1000 to 2000 mm (40 to 78 in)

DN		Order code for "Design"						
		Options F, G, J, K						
		D [1]	E [1]	F [1]	M [1]	K	L	
[mm]	[in]	[mm]	[mm]	[mm]	[mm]	[mm]	[mm]	
1000	40	582	697	1279	1164	[2]	1000 [3]	1300 [4]
–	42	618	733	1351	1236	[2]	1050 [3]	1365 [4]
1200	48	696	811	1507	1392	[2]	1200 [3]	1560 [4]
–	54	809	924	1733	1617	[2]	1350 [3]	1755 [4]
1400	–	809	924	1733	1617	[2]	1400 [3]	1820 [4]
–	60	909	1024	1933	1817	[2]	1500 [3]	1950 [4]
1600	–	909	1024	1933	1817	[2]	1600 [3]	2080 [4]
–	66	960	1075	2035	1919	[2]	1650 [3]	2145 [4]
1800	72	1016	1131	2147	2032	[2]	1800 [3]	2340 [4]
–	78	1127	1242	2369	2254	[2]	2000 [3]	2600 [4]
2000	–	1127	1242	2369	2254	[2]	2000 [3]	2600 [4]

1) The dimensions are reference values. They may vary depending on the pressure rating, design and order option.
2) Internal diameter depends on the liner, see the measuring tube specification → 🖹 90
3) Order code for "Design", option F "Fixed flange, short installed length" and option J "Fixed flange, short installed length, 0 x DN inlet/outlet runs"
4) Order code for "Design", option G "Fixed flange, long installed length" and option K "Fixed flange, long installed length 0 x DN inlet/outlet runs"

DN 2200 to 3000 mm (84 to 120 in)

DN		Order code for "Design"					
		Option F, J					
		D [1]	E [1]	F [1]	M [1]	K	L
[mm]	[in]	[mm]	[mm]	[mm]	[mm]	[mm]	[mm]
–	84	1227	1342	2569	2454	[2]	2200
2200	–	1227	1342	2569	2454	[2]	2200
–	90	1332	1447	2779	2664	[2]	2400
2400	–	1332	1447	2783	2664	[2]	2400
–	96	1431	1546	2977	2861	[2]	2450

DRAFT

DN		Order code for "Design" Option F, J				K	L
		D [1]	E [1]	F [1]	M [1]		
[mm]	[in]	[mm]	[mm]	[mm]	[mm]	[mm]	[mm]
–	102	1516	1631	3147	3032	[2]	2600
2600	–	1442	1557	2999	2883	[2]	2600
–	108	1602	1718	3320	3204	[2]	2750
2800	–	1547	1662	3209	3093	[2]	2800
–	114	1688	1803	3491	3375	[2]	2900
3000	–	1647	1762	3409	3293	[2]	3000
–	120	1774	1889	3663	3547	[2]	3050

1) The dimensions are reference values. They may vary depending on the pressure rating, design and order option.
2) Internal diameter depends on the liner, see the measuring tube specification → 90

DRAFT

Flange connections

Fixed flange

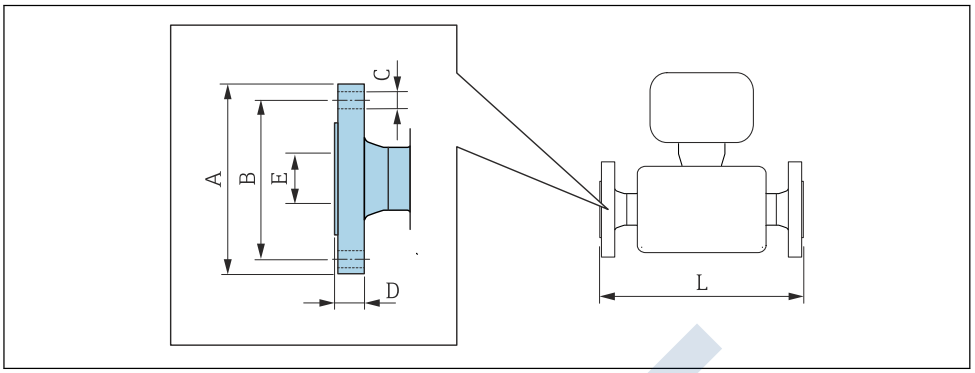

A0015621

Flange in accordance with EN 1092-1 (DIN 2501 / DIN 2512N): PN 6 **Carbon steel:** *order code for "Process connection", option* **D1K** **Stainless steel:** *order code for "Process connection", option* **D1S**						
DN **[mm]**	**A** **[mm]**	**B** **[mm]**	**C** **[mm]**	**D** **[mm]**	**E** **[mm]**	**L** **[mm]**
350	490	445	12 × Ø22	22	1)	2)
400	540	495	16 × Ø22	22		
450	595	565	20 × Ø26	26		
500	645	600	20 × Ø22	24		
600	755	705	20 × Ø26	30		
700	860	810	24 × Ø26	30		
800	975	920	24 × Ø30	30		
900	1075	1020	24 × Ø30	34		
1000	1175	1120	28 × Ø30	38		
1200	1405	1340	32 × Ø33	42		
1400	1630	1560	36 × Ø36	56		
1600	1830	1760	40 × Ø36	63		
1800	2045	1970	44 × Ø39	69		
2000	2265	2180	48 × Ø42	74		
2200	2475	2390	52 × Ø42	81		
2400	2685	2600	56 × Ø42	87		
2600	2905	2810	60 × Ø48	91		
2800	3115	3020	64 × Ø48	101		
3000	3315	3220	68 × Ø48	102		
Surface roughness (flange): EN 1092-1 Form B1 (DIN 2526 Form C), Ra 6.3 to 12.5 µm						

1) Depends on the liner → 🖹 90
2) Total installed length is independent of the process connections. Length according to DVGW (German Technical and Scientific Association for Gas and Water) → 🖹 54 (compact version) → 🖹 58 (remote version)

DRAFT

Flange in accordance with EN 1092-1 (DIN 2501 / DIN 2512N): PN 10
Carbon steel: *order code for "Process connection", option* **D2K**
Stainless steel: *order code for "Process connection", option* **D2S**

DN [mm]	A [mm]	B [mm]	C [mm]	D [mm]	E [mm]	L [mm]
200	340	295	8 × Ø22	26	1)	2)
250	395	350	12 × Ø22	28		
300	445	400	12 × Ø22	28		
350	505	460	16 × Ø22	26		
400	565	515	16 × Ø26	26		
450	615	565	20 × Ø26	26		
500	670	620	20 × Ø26	28		
600	780	725	20 × Ø30	30		
700	895	840	24 × Ø30	35		
800	1015	950	24 × Ø33	38		
900	1115	1050	28 × Ø33	38		
1000	1230	1160	28 × Ø36	44		
1200	1455	1380	32 × Ø39	55		
1400	1675	1590	36 × Ø42	65		
1600	1915	1820	40 × Ø48	75		
1800	2115	2020	44 × Ø48	85		
2000	2325	2230	48 × Ø48	90		
2200	2550	2440	52 × Ø56	100		
2400	2760	2650	56 × Ø56	110		
2600	2960	2850	60 × Ø56	110		
2800	3180	3070	64 × Ø56	124		
3000	3405	3290	68 × Ø62	132		

Surface roughness (flange): EN 1092-1 Form B1 (DIN 2526 Form C), Ra 6.3 to 12.5 µm

1) Depends on the liner → 🖹 90
2) Total installed length is independent of the process connections. Length according to DVGW (German Technical and Scientific Association for Gas and Water) → 🖹 54 (compact version) → 🖹 58 (remote version)

Flange in accordance with EN 1092-1 (DIN 2501 / DIN 2512N): PN 16
Carbon steel: *order code for "Process connection", option* **D3K**
Stainless steel: *order code for "Process connection", option* **D3S**

DN [mm]	A [mm]	B [mm]	C [mm]	D [mm]	E [mm]	L [mm]
65	185	145	8 × Ø18	20	1)	2)
80	200	160	8 × Ø18	20		
100	220	180	8 × Ø18	22		
125	250	210	8 × Ø18	24		
150	285	240	8 × Ø22	24		
200	340	295	12 × Ø22	26		
250	405	355	12 × Ø26	32		
300	460	410	12 × Ø26	32		

DRAFT

Flange in accordance with EN 1092-1 (DIN 2501 / DIN 2512N): PN 16 **Carbon steel:** *order code for "Process connection", option* **D3K** **Stainless steel:** *order code for "Process connection", option* **D3S**						
DN [mm]	**A [mm]**	**B [mm]**	**C [mm]**	**D [mm]**	**E [mm]**	**L [mm]**
350	520	470	16 × Ø26	30		
400	580	525	16 × Ø30	32		
450	640	585	20 × Ø30	34		
500	715	650	20 × Ø33	36		
600	840	770	20 × Ø36	40		
700	910	840	24 × Ø36	40		
800	1025	950	24 × Ø39	41		
900	1125	1050	28 × Ø39	48		
1000	1255	1170	28 × Ø42	59		
1200	1485	1390	32 × Ø48	78		
1400	1685	1590	36 × Ø48	84		
1600	1930	1820	40 × Ø56	102		
1800	2130	2020	44 × Ø56	110		
2000	2345	2230	48 × Ø62	124		
Surface roughness (flange): EN 1092-1 Form B1 (DIN 2526 Form C), Ra 6.3 to 12.5 µm						

1) Depends on the liner→ 🖹 90
2) Total length is independent of the process connections. Length according to DVGW (German Technical and Scientific Association for Gas and Water) → 🖹 54 (compact version) → 🖹 58 (remote version)

Flange in accordance with EN 1092-1 (DIN 2501 / DIN 2512N): PN 25 **Carbon steel:** *order code for "Process connection", option* **D4K** **Stainless steel:** *order code for "Process connection", option* **D4S**						
DN [mm]	**A [mm]**	**B [mm]**	**C [mm]**	**D [mm]**	**E [mm]**	**L [mm]**
200	360	310	12 × Ø26	32	1)	2)
250	425	370	12 × Ø30	36		
300	485	430	16 × Ø30	40		
350	555	490	16 × Ø33	38		
400	620	550	16 × Ø36	40		
450	670	600	20 × Ø36	46		
500	730	660	20 × Ø36	48		
600	845	770	20 × Ø39	48		
700	960	875	24 × Ø42	50		
800	1085	990	24 × Ø48	53		
900	1185	1090	28 × Ø48	57		
1000	1320	1210	28 × Ø56	63		
Surface roughness (flange): EN 1092-1 Form B1 (DIN 2526 Form C), Ra 6.3 to 12.5 µm						

1) Depends on the liner→ 🖹 90
2) Total length is independent of the process connections. Length according to DVGW (German Technical and Scientific Association for Gas and Water) → 🖹 54 (compact version) → 🖹 58 (remote version)

DRAFT

Flange in accordance with EN 1092-1 (DIN 2501 / DIN 2512N): PN 40 **Carbon steel:** *order code for "Process connection", option* **D5K** **Stainless steel:** *order code for "Process connection", option* **D5S**						
DN [mm]	**A [mm]**	**B [mm]**	**C [mm]**	**D [mm]**	**E [mm]**	**L [mm]**
25	115	85	4 × Ø14	16	1)	2)
32	140	100	4 × Ø18	18		
40	150	110	4 × Ø18	18		
50	165	125	4 × Ø18	20		
65	185	145	8 × Ø18	24		
80	200	160	8 × Ø18	26		
100	235	190	8 × Ø22	26		
125	270	220	8 × Ø26	28		
150	300	250	8 × Ø26	30		
Surface roughness (flange): EN 1092-1 Form B1 (DIN 2526 Form C), Ra 6.3 to 12.5 µm						

1) Depends on the liner→ 🖹 90
2) Total length is independent of the process connections. Length according to DVGW (German Technical and Scientific Association for Gas and Water) → 🖹 54 (compact version) → 🖹 58 (remote version)

Flange according to ASME B16.5, Class 150 **Carbon steel:** *order code for "Process connection", option* **A1K** **Stainless steel:** *order code for "Process connection", option* **A1S**							
DN		**A**	**B**	**C**	**D**	**E**	**L**
[mm]	**[in]**	**[mm]**	**[mm]**	**[mm]**	**[mm]**	**[mm]**	**[mm]**
25	1	108	79.2	4 × Ø16	12.6	1)	2)
40	1 ½	127	98.6	4 × Ø16	15.9		
50	2	152.4	120.7	4 × Ø19.1	17.5		
80	3	190.5	152.4	4 × Ø19.1	22.3		
100	4	228.6	190.5	8 × Ø19.1	22.3		
150	6	279.4	241.3	8 × Ø22.4	23.8		
200	8	342.9	298.5	8 × Ø22.4	26.8		
250	10	406.4	362	12 × Ø25.4	29.6		
300	12	482.6	431.8	12 × Ø25.4	30.2		
350	14	535	476.3	12 × Ø28.6	35.4		
400	16	595	539.8	16 × Ø28.6	37		
450	18	635	577.9	16 × Ø31.8	40.1		
500	20	700	635	20 × Ø31.8	43.3		
600	24	815	749.3	20 × Ø34.9	48.1		
Surface roughness (flange): Ra 6.3 to 12.5 µm							

1) Depends on the liner→ 🖹 90
2) Total length is independent of the process connections. Length according to DVGW (German Technical and Scientific Association for Gas and Water) → 🖹 54 (compact version) → 🖹 58 (remote version)

DRAFT

Flange according to ASME B16.5, Class 300
Carbon steel: *order code for "Process connection", option* **A2K**
Stainless steel: *order code for "Process connection", option* **A2S**

DN		A	B	C	D	E	L
[mm]	[in]	[mm]	[mm]	[mm]	[mm]	[mm]	[mm]
25	1	123.9	88.9	4 × Ø19.1	15.9	1)	2)
40	1 ½	155.4	114.3	4 × Ø22.4	19		
50	2	165.1	127	8 × Ø19.1	20.8		
80	3	209.6	168.1	8 × Ø22.4	26.8		
100	4	254	200.2	8 × Ø22.4	30.2		
150	6	317.5	269.7	12 × Ø22.4	35		
Surface roughness (flange): Ra 6.3 to 12.5 µm							

1) Depends on the liner→ 🖹 90
2) Total length is independent of the process connections. Length according to DVGW (German Technical and Scientific Association for Gas and Water) → 🖹 54 (compact version) → 🖹 58 (remote version)

Flange according to JIS B2220, 10K
Carbon steel: *order code for "Process connection", option* **N3K**
Stainless steel: *order code for "Process connection", option* **N3S**

DN [mm]	A [mm]	B [mm]	C [mm]	D [mm]	E [mm]	L [mm]
50	155	120	4 × Ø19	16	1)	2)
65	175	140	4 × Ø19	18		
80	185	150	8 × Ø19	18		
100	210	175	8 × Ø19	18		
125	250	210	8 × Ø23	20		
150	280	240	8 × Ø23	22		
200	330	290	12 × Ø23	22		
250	400	355	12 × Ø25	24		
300	445	400	16 × Ø25	24		
Surface roughness (flange): Ra 6.3 to 12.5 µm						

1) Depends on the liner→ 🖹 90
2) Total length is independent of the process connections. Length according to DVGW (German Technical and Scientific Association for Gas and Water) → 🖹 54 (compact version) → 🖹 58 (remote version)

Flange according to JIS B2220, 20K
Carbon steel: *order code for "Process connection", option* **N4K**
Stainless steel: *order code for "Process connection", option* **N4S**

DN [mm]	A [mm]	B [mm]	C [mm]	D [mm]	E [mm]	L [mm]
25	125	90	4 × Ø19	16	1)	2)
32	135	100	4 × Ø19	18		
40	140	105	4 × Ø19	18		
50	155	120	8 × Ø19	18		
65	175	140	8 × Ø19	20		
80	200	160	8 × Ø23	22		
100	225	185	8 × Ø23	24		

DRAFT

Flange according to JIS B2220, 20K
Carbon steel: *order code for "Process connection", option* **N4K**
Stainless steel: *order code for "Process connection", option* **N4S**

DN [mm]	A [mm]	B [mm]	C [mm]	D [mm]	E [mm]	L [mm]
125	270	225	8 × Ø25	26		
150	305	260	12 × Ø25	28		
200	350	305	12 × Ø25	30		
250	430	380	12 × Ø27	34		
300	480	430	16 × Ø27	36		
Surface roughness (flange): Ra 6.3 to 12.5 µm						

1) Depends on the liner→ 🖹 90
2) Total length is independent of the process connections. Length according to DVGW (German Technical and Scientific Association for Gas and Water) → 🖹 54 (compact version) → 🖹 58 (remote version)

Flange according to AWWA, Class D
Order code for "Process connection", option **W1K**

DN [mm]	DN [in]	A [mm]	B [mm]	C [mm]	D [mm]	E [mm]	L [mm]
700	28	927	863.6	28 × Ø35	33.4	1)	2)
750	30	984	914.4	28 × Ø35	35.0		
800	32	1060	977.9	28 × Ø42	38.1		
900	36	1168	1085.9	32 × Ø42	41.3		
1000	40	1289	1200.2	36 × Ø42	41.3		
–	42	1346	1257.3	36 × Ø42	44.5		
1200	48	1511	1422.4	44 × Ø42	47.7		
–	54	1683	1593.9	44 × Ø48	54.0		
–	60	1855	1759.0	52 × Ø48	57.2		
–	66	2032	1930.4	52 × Ø48	63.5		
1800	72	2197	2095.5	60 × Ø48	66.7		
–	78	2362	2260.6	64 × Ø54	69.9		
–	84	2535	2425.7	64 × Ø54	73.1		
–	90	2705	2717.8	68 × Ø60	76.2		
–	96	2877	2755.9	68 × Ø60.3	82.55		
–	102	3048	2908.3	68 × Ø66.7	82.55		
–	108	3219	3067.0	68 × Ø66.7	85.73		
–	114	3391	3219.5	68 × Ø73	88.90		
–	120	3562	3371.8	68 × Ø73	88.90		
Surface roughness (flange): Ra 6.3 to 12.5 µm							

1) Depends on the liner → 🖹 90
2) Total length is independent of the process connections. Installed length according to DVGW → 🖹 54 (compact version) → 🖹 58 (remote version)

DRAFT

Flange according to AS 2129, Tab. E
Order code for "Process connection", option **M2K**

DN [mm]	A [mm]	B [mm]	C [mm]	D [mm]	E [mm]	L [mm]
80	185	146	4 × Ø18	12	1)	2)
100	215	178	8 × Ø18	13		
150	280	235	8 × Ø22	17		
200	335	292	8 × Ø22	19		
250	405	356	12 × Ø22	22		
300	455	406	12 × Ø26	25		
350	525	470	12 × Ø26	30		
400	580	521	12 × Ø26	32		
450	640	584	16 × Ø26	35		
500	705	641	16 × Ø26	38		
600	825	756	16 × Ø33	48		
700	910	845	20 × Ø33	51		
750	995	927	20 × Ø36	54		
800	1060	984	20 × Ø36	54		
900	1175	1092	24 × Ø36	64		
1000	1255	1175	24 × Ø39	67		
1200	1490	1410	32 × Ø39	79		
Surface roughness (flange): Ra 6.3 to 12.5 µm						

1) Depends on the liner→ 🖹 90
2) Total length is independent of the process connections. Length according to DVGW (German Technical and Scientific Association for Gas and Water) → 🖹 54 (compact version) → 🖹 58 (remote version)

Flange according to AS 4087, PN 16
Order code for "Process connection", option **M3K**

DN [mm]	A [mm]	B [mm]	C [mm]	D [mm]	E [mm]	L [mm]
80	185	146	4 × Ø18	12	1)	2)
100	215	178	4 × Ø18	13		
150	280	235	8 × Ø18	13		
200	335	292	8 × Ø18	19		
250	405	356	8 × Ø22	19		
300	455	406	12 × Ø22	23		
350	525	470	12 × Ø26	30		
375	550	495	12 × Ø26	30		
400	580	521	12 × Ø26	32		
450	640	584	12 × Ø26	30		
500	705	641	16 × Ø26	38		
600	825	756	16 × Ø30	48		
700	910	845	20 × Ø30	56		
750	995	927	20 × Ø33	56		
800	1060	984	20 × Ø36	56		

DRAFT

Flange according to AS 4087, PN 16 *Order code for "Process connection", option* **M3K**						
DN [mm]	**A [mm]**	**B [mm]**	**C [mm]**	**D [mm]**	**E [mm]**	**L [mm]**
900	1175	1092	24 × Ø36	66		
1000	1255	1175	24 × Ø36	66		
1200	1490	1410	32 × Ø36	76		
Surface roughness (flange): Ra 6.3 to 12.5 µm						

1) Depends on the liner→ 🖹 90
2) Total length is independent of the process connections. Length according to DVGW (German Technical and Scientific Association for Gas and Water) → 🖹 54 (compact version) → 🖹 58 (remote version)

Lap joint flange

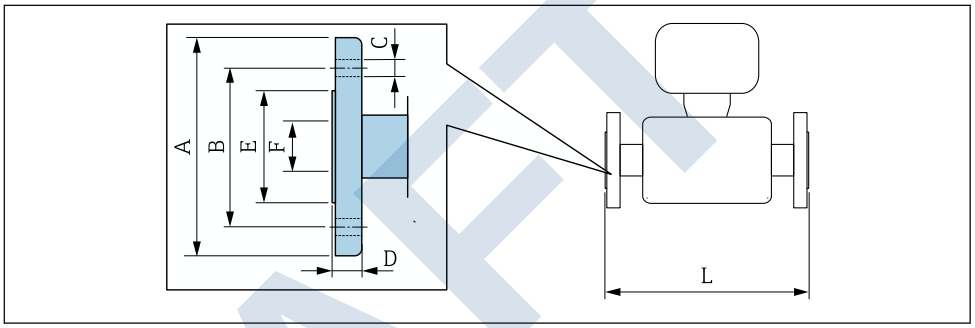

A0037862

Lap joint flange in accordance with EN 1092-1 (DIN 2501 / DIN 2512N): PN 10 **Carbon steel:** *order code for "Process connection", option* **D22** **Stainless steel:** *order code for "Process connection", option* **D24**								
DN		**A**	**B**	**C**	**D**	**E**	**F**	**L**
[mm]	**[in]**	**[mm]**	**[mm]**	**[mm]**	**[mm]**	**[mm]**	**[mm]**	**[mm]**
200	8	340	295	8 × Ø22	24	264	1)	2)
250	10	395	350	12 × Ø22	26	317		
300	12	445	400	12 × Ø22	26	367		
Surface roughness (flange): Ra 6.3 to 12.5 µm								

1) Depends on the liner→ 🖹 90
2) Total length is independent of the process connections. Length according to DVGW (German Technical and Scientific Association for Gas and Water) → 🖹 54 (compact version) → 🖹 58 (remote version)

Lap joint flange in accordance with EN 1092-1 (DIN 2501 / DIN 2512N): PN 16 **Carbon steel:** *order code for "Process connection", option* **D32** **Stainless steel:** *order code for "Process connection", option* **D34**								
DN		**A**	**B**	**C**	**D**	**E**	**F**	**L**
[mm]	**[in]**	**[mm]**	**[mm]**	**[mm]**	**[mm]**	**[mm]**	**[mm]**	**[mm]**
25	1	115	85	4 × Ø14	16	49	1)	2)
32	-	140	100	4 × Ø18	18	65		
40	1 ½	150	110	4 × Ø18	18	71		
50	2	165	125	4 × Ø18	20	88		
65	-	185	145	8 × Ø18	20	103		
80	3	200	160	8 × Ø18	20	120		

DRAFT

Lap joint flange in accordance with EN 1092-1 (DIN 2501 / DIN 2512N): PN 16 **Carbon steel:** *order code for "Process connection", option* **D32** **Stainless steel:** *order code for "Process connection", option* **D34**								
DN		**A**	**B**	**C**	**D**	**E**	**F**	**L**
[mm]	**[in]**	**[mm]**	**[mm]**	**[mm]**	**[mm]**	**[mm]**	**[mm]**	**[mm]**
100	4	220	180	8 × Ø18	22	148		
125	-	250	210	8 × Ø18	22	177		
150	6	285	240	8 × Ø22	24	209		
200	8	340	295	12 × Ø22	26	264		
250	10	405	355	12 × Ø26	29	317		
300	12	460	410	12 × Ø26	32	367		
Surface roughness (flange): Ra 6.3 to 12.5 µm								

1) Depends on the liner→ 🖹 90
2) Total length is independent of the process connections. Length according to DVGW (German Technical and Scientific Association for Gas and Water) → 🖹 54 (compact version) → 🖹 58 (remote version)

Lap joint flange according to ASME B16.5, Class 150 **Carbon steel:** *order code for "Process connection", option* **A12** **Stainless steel:** *order code for "Process connection", option* **A14**								
DN		**A**	**B**	**C**	**D**	**E**	**F**	**L**
[mm]	**[in]**	**[mm]**	**[mm]**	**[mm]**	**[mm]**	**[mm]**	**[mm]**	**[mm]**
25	1	110	80	4 × Ø16	14	49	1)	2)
40	1 ½	125	98	4 × Ø16	17.5	71		
50	2	150	121	4 × Ø19	19	88		
80	3	190	152	4 × Ø19	24	120		
100	4	230	190	8 × Ø19	24	148		
150	6	280	241	8 × Ø23	25	209		
200	8	345	298	8 × Ø23	29	264		
250	10	405	362	12 × Ø25	30	317		
300	12	485	432	12 × Ø25	32	378		
Surface roughness (flange): Ra 6.3 to 12.5 µm								

1) Depends on the liner→ 🖹 90
2) Total length is independent of the process connections. Length according to DVGW (German Technical and Scientific Association for Gas and Water) → 🖹 54 (compact version) → 🖹 58 (remote version)

Lap joint flange, stamped plate

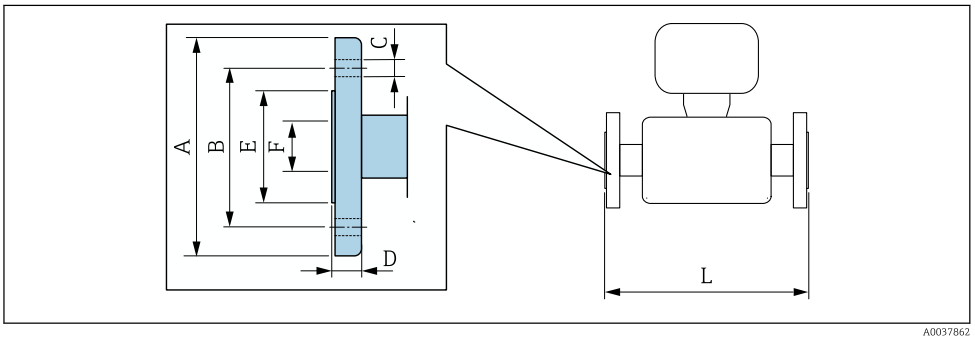

A0037862

DRAFT

Lap joint flange, stamped plate in accordance with EN 1092-1 (DIN 2501 / DIN 2512N): PN 10 **Carbon steel:** *order code for "Process connection", option* **D21** **Stainless steel:** *order code for "Process connection", option* **D23**							
DN [mm]	**A** [mm]	**B** [mm]	**C** [mm]	**D** [mm]	**E** [mm]	**F** [mm]	**L** [mm]
25	115	85	4 x Ø13.5	16.5	49	1)	2)
32	140	100	4 x Ø17.5	17	65		
40	150	110	4 x Ø17.5	16.5	71		
50	165	125	4 x Ø17.5	18.5	88		
65	185	145	4 x Ø17.5	20	103		
80	200	160	8 x Ø17.5	23.5	120		
100	220	180	8 x Ø17.5	24.5	148		
125	250	210	8 x Ø17.5	24	177		
150	285	240	8 x Ø21.5	25	209		
200	340	295	8 x Ø21.5	27.5	264		
250	405	350	12 x Ø21.5	30.5	317		
300	445	400	12 x Ø21.5	34.5	367		
Surface roughness (flange): Ra 6.3 to 12.5 µm							

1) Depends on the liner→ 🖹 90
2) Total length is independent of the process connections. Length according to DVGW (German Technical and Scientific Association for Gas and Water) → 🖹 54 (compact version) → 🖹 58 (remote version)

Accessories

Ground disks for flange connections

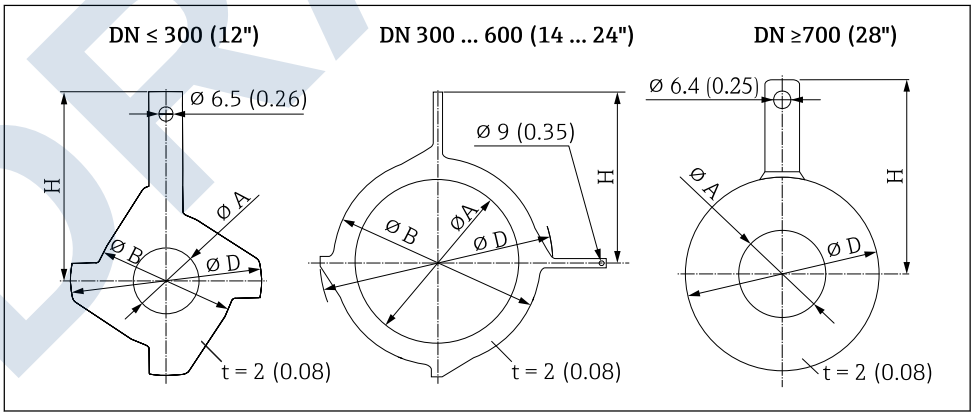

DN		**Pressure rating**	**A**		**B**		**D**		**H**	
[mm]	[inch]		[mm]	[inch]	[mm]	[inch]	[mm]	[inch]	[mm]	[inch]
25	1"	1)	26	1.02	62	2.44	77.5	3.05	87.5	3.44
32	1 ¼"	1)	35	1.38	80	3.15	87.5	3.44	94.5	3.72
40	1 ½"	1)	41	1.61	82	3.23	101	3.98	103	4.06
50	2"	1)	52	2.05	101	3.98	115.5	4.55	108	4.25
65	2 ½"	1)	68	2.68	121	4.76	131.5	5.18	118	4.65
80	3"	1)	80	3.15	131	5.16	154.5	6.08	135	5.31

DRAFT

DN		Pressure rating	A		B		D		H	
[mm]	[inch]		[mm]	[inch]	[mm]	[inch]	[mm]	[inch]	[mm]	[inch]
100	4"	1)	104	4.09	156	6.14	186.5	7.34	153	6.02
125	5"	1)	130	5.12	187	7.36	206.5	8.13	160	6.30
150	6"	1)	158	6.22	217	8.54	256	10.08	184	7.24
200	8"	1)	206	8.11	267	10.51	288	11.34	205	8.07
250	10"	1)	260	10.2	328	12.91	359	14.13	240	9.45
300	12"	PN 10 PN 16 Cl. 150	312	12.3	375	14.76	413	16.26	273	10.75
		PN 25 JIS 10K JIS 20K	310	12.2	375	14.76	404	15.91	268	10.55
350	14"	PN 6	420	16.5	420	16.54	479	18.86	365	14.37
		PN 10								
		PN 16								
375	15"	PN 16	461	18.2	461	18.2	523	20.6	395	15.6
400	16"	PN 6	470	18.5	470	18.50	542	21.34	395	15.55
		PN 10								
		PN 16								
450	18"	PN 6	525	20.7	525	20.67	583	22.95	417	16.42
		PN 10								
		PN 16								
500	20"	PN 6	575	22.6	575	22.64	650	25.59	460	18.11
		PN 10								
		PN 16								
600	24"	PN 6	676	26.6	676	26.61	766	30.16	522	20.55
		PN 10								
		PN 16								
700	28"	PN 6	697	27.4	–	–	786	30.94	460	18.11
		PN10	693	27.3	–	–	813	32.01	480	18.9
		PN16	687	27.1	–	–	807	31.77	490	19.29
		Cl, D	693	27.3	–	–	832	32.76	494	19.45
750	30"	Cl, D	743	29.3	–	–	833	32.8	523	20.59
800	32"	PN 6	799	31.5	–	–	893	35.16	520	20.47
		PN 10	795	31.3	–	–	920	36.22	540	21.26
		PN 16	789	31.1	–	–	914	35.98	550	21.65
		Cl, D	795	31.3	–	–	940	37.01	561	22.09
900	36"	PN 6	897	35.3	–	–	993	39.09	570	22.44
		PN 10	893	35.2	–	–	1020	40.16	590	23.23
		PN 16	886	34.9	–	–	1014	39.92	595	23.43
		Cl, D	893	35.2	–	–	1048	41.26	615	24.21
1000	40"	PN 6	999	39.3	–	–	1093	43.03	620	24.41
		PN 10	995	39.2	–	–	1127	44.37	650	25.59
		PN 16	988	38.9	–	–	1131	44.53	660	25.98

DRAFT

DN		Pressure rating	A		B		D		H	
[mm]	[inch]		[mm]	[inch]	[mm]	[inch]	[mm]	[inch]	[mm]	[inch]
		Cl, D	995	39.2	–	–	1163	45.79	675	26.57
–	42"	PN 6	1044	41.1	–	–	1220	48.03	704	27.72
1200	48"	PN 6	1203	47.4	–	–	1310	51.57	733	28.86
		PN 10	1196	47.1	–	–	1344	52.91	760	29.92
		PN 16	1196	47.1	–	–	1385	54.53	786	30.94
		Cl, D	1188	46.8	–	–	1345	52.95	775	30.51

1) In the case of DN 25 to 250, ground disks can be used for all the flange standards/pressure ratings which can be supplied in the standard version

DRAFT

Dimensions in US units

Compact version

Order code for "Housing", option A "Compact, aluminum, coated" or option M "Compact, polycarbonate"

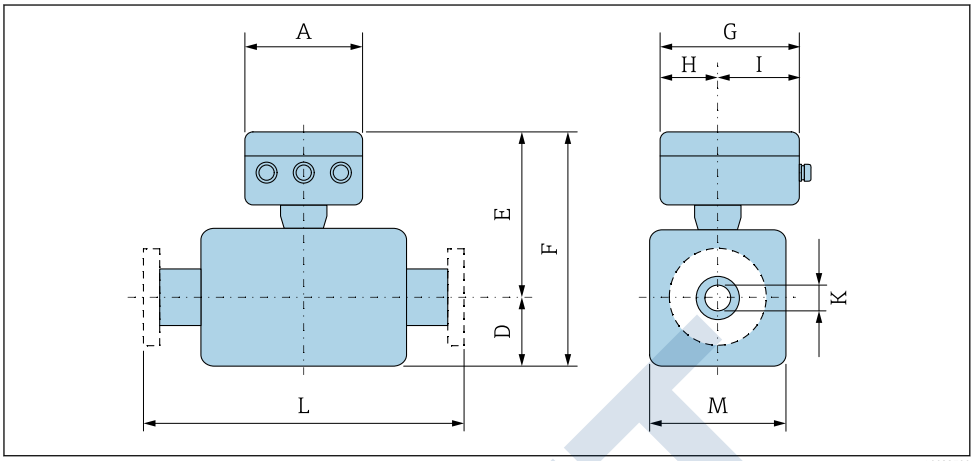

A [in]	G [1] [in]	H [in]	I [1] [in]
6.57	7.60	3.54	4.06

1) Depending on the cable gland used: values up to + 1.18 in

DN 1 to 12 in (25 to 300 mm): Sensor with aluminum half-shell housing

DN		Order code for "Design"									
		Options D, E, H, I				Option C					
		D [1]	E [1]	F [1]	M [1]	D [1]	E [1]	F [1]	M [1]	K	L
[mm]	[in]	[in]	[in]	[in]	[in]	[in]	[in]	[in]	[in]	[in]	[in]
25	1	3.31	7.91	11.22	4.72	–	–	–	–	[2]	7.87
32	–	3.31	7.91	11.22	4.72	–	–	–	–	[2]	7.87
40	1 ½	3.31	7.91	11.22	4.72	–	–	–	–	[2]	7.87
50	2	3.31	7.91	11.22	4.72	3.31	7.91	11.22	4.72	[2]	7.87
65	–	4.29	8.9	13.19	7.09	3.31	7.91	11.22	4.72	[2]	7.87
80	3	4.29	8.9	13.19	7.09	3.31	7.91	11.22	4.72	[2]	7.87
100	4	4.29	8.9	13.19	7.09	4.29	8.9	13.19	7.09	[2]	9.84
125	–	5.91	10.47	16.38	10.24	4.29	8.9	13.19	7.09	[2]	9.84
150	6	5.91	10.47	16.38	10.24	4.29	8.9	13.19	7.09	[2]	11.81
200	8	7.09	11.46	18.54	12.76	5.91	10.47	16.38	10.24	[2]	13.78
250	10	8.07	12.44	20.51	15.75	5.91	10.47	16.38	10.24	[2]	17.72
300	12	9.06	13.43	22.48	18.11	7.09	11.46	18.54	12.76	[2]	19.69

1) The dimensions are reference values. They may vary depending on the pressure rating, design and order option.
2) Depends on the liner → 90

DRAFT

DN 14 to 16 in (350 to 400 mm)

DN		Order code for "Design" Options E, I				K	L
		D [1]	E [1]	F [1]	M [1]		
[mm]	[in]	[in]	[in]	[in]	[in]	[in]	[in]
350	14	11.10	15.63	26.73	22.20	[2]	21.65
375	15	12.13	16.65	28.78	24.25	[2]	23.62
400	16	12.13	16.65	28.78	24.25	[2]	23.62

1) The dimensions are reference values. They may vary depending on the pressure rating, design and order option.
2) Depends on the liner → 🖹 90

DN 18 to 36 in (450 to 900 mm)

DN		Order code for "Design" Options F, J				Options G, K				K	L	
		D [1]	E [1]	F [1]	M [1]	D [1]	E [1]	F [1]	M [1]			
[mm]	[in]	[in]	[in]	[in]	[in]	[in]	[in]	[in]	[in]	[in]	[in]	
450	18	11.42	15.94	27.36	22.83	13.11	17.64	30.75	26.22	[2]	23.62 [3]	25.59 [4]
500	20	12.40	16.93	29.33	24.80	14.13	18.66	32.80	28.23	[2]	23.62 [2]	25.59 [4]
600	24	14.37	18.90	33.27	28.74	16.18	20.71	36.89	32.32	[2]	23.62 [2]	30.71 [4]
700	28	16.77	21.30	38.07	33.50	20.16	24.69	44.84	40.31	[2]	27.56 [2]	35.83 [4]
750	30	18.23	22.76	40.98	36.46	20.16	24.69	44.84	40.31	[2]	29.53 [2]	38.39 [4]
800	32	18.98	23.50	42.48	37.95	21.02	25.55	46.57	41.93	[2]	31.5 [2]	40.94 [4]
900	36	20.94	25.47	46.42	41.89	24.02	28.54	52.56	47.95	[2]	35.43 [2]	46.06 [4]

1) The dimensions are reference values. They may vary depending on the pressure rating, design and order option.
2) Depends on the liner → 🖹 90
3) Order code for "Design", option F "Fixed flange, short installed length" and option J "Fixed flange, short installed length, 0 x DN inlet/outlet runs"
4) Order code for "Design", option G "Fixed flange, long installed length" and option K "Fixed flange, long installed length 0 x DN inlet/outlet runs"

DN 40 to 78 in (1000 to 2000 mm)

DN		Order code for "Design" Options F, G, J, K				K	L	
		D [1]	E [1]	F [1]	M [1]			
[mm]	[in]	[in]	[in]	[in]	[in]	[in]	[in]	
1000	40	22.91	27.44	50.35	45.83	[2]	39.37 [3]	51.18 [4]
–	42	24.33	28.86	53.19	48.66	[2]	41.34 [3]	53.74 [4]
1200	48	27.40	31.93	59.33	54.80	[2]	47.24 [3]	61.42 [4]
–	54	31.85	36.38	68.23	63.66	[2]	53.15 [3]	69.09 [4]
1400	–	31.85	36.38	68.23	63.66	[2]	55.12 [3]	71.65 [4]
–	60	35.79	40.31	76.10	71.54	[2]	59.06 [3]	76.77 [4]
1600	–	35.79	40.31	76.10	71.54	[2]	62.99 [3]	81.89 [4]
–	66	37.80	42.32	80.12	75.55	[2]	64.96 [3]	84.45 [4]
1800	72	40.00	44.53	84.53	80.00	[2]	70.87 [3]	92.13 [4]

DRAFT

DN		Order code for "Design" Options F, G, J				K	L	
		D [1]	E [1]	F [1]	M [1]			
[mm]	[in]	[in]	[in]	[in]	[in]	[in]	[in]	
–	78	44.37	48.90	93.27	88.74	[2]	78.74 [3]	102.36 [4]
2000	–	44.37	48.90	93.27	88.74	[2]	78.74 [3]	102.36 [4]

1) The dimensions are reference values. They may vary depending on the pressure rating, design and order option.
2) Depends on the liner → 🖹 90
3) Order code for "Design", option F "Fixed flange, short installed length" and option J "Fixed flange, short installed length, 0 x DN inlet/outlet runs"
4) Order code for "Design", option G "Fixed flange, long installed length" and option K "Fixed flange, long installed length 0 x DN inlet/outlet runs"

DN 84 to 120 in (2200 to 3000 mm)

DN		Order code for "Design" Option F, J				K	L
		D [1]	E [1]	F [1]	M [1]		
[mm]	[in]	[in]	[in]	[in]	[in]	[in]	[in]
–	84	48.31	52.83	101.14	96.61	[2]	86.61
2200	–	48.31	52.83	101.14	96.61	[2]	86.61
–	90	52.44	56.97	109.41	104.88	[2]	94.49
2400	–	52.44	56.97	109.57	104.88	[2]	94.49
–	96	56.34	60.87	117.20	112.64	[2]	96.46
–	102	59.69	64.21	123.90	119.37	[2]	102.36
2600	–	56.77	61.30	118.07	113.50	[2]	102.36
–	108	63.07	67.64	130.71	126.14	[2]	108.27
2800	–	60.91	65.43	126.34	121.77	[2]	110.24
–	114	66.46	70.98	137.44	132.87	[2]	114.17
3000	–	64.84	69.37	134.21	129.65	[2]	118.11
–	120	69.84	74.37	144.21	139.65	[2]	120.08

1) The dimensions are reference values. They may vary depending on the pressure rating, design and order option.
2) Depends on the liner → 🖹 90

DRAFT

Remote version

Transmitter remote version

Order code for "Housing", option N "Remote, polycarbonate" or option P "Remote, aluminum coated"

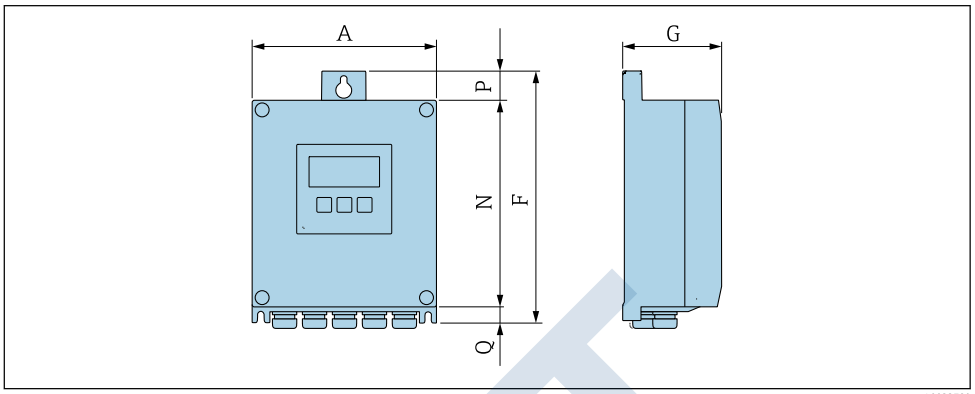

Order code for "Transmitter housing", option P "Remote, aluminum, coated"

A [in]	F [in]	G [in]	N [in]	P [in]	Q [in]
6.57	9.13	3.15	7.36	0.94	0.83

Order code for "Transmitter housing", option N "Remote, polycarbonate"

A [in]	F [in]	G [in]	N [in]	P [in]	Q [in]
6.97	9.21	3.54	7.76	0.67	0.87

Sensor connection housing

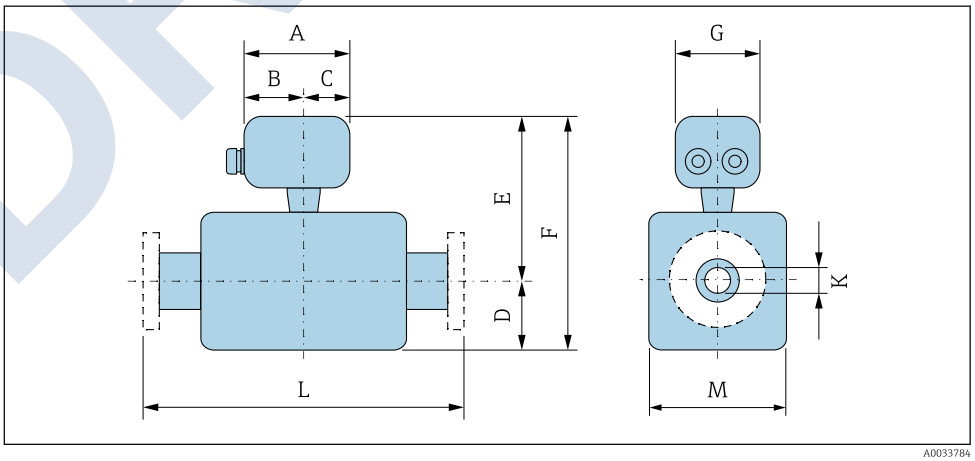

Aluminum, coated

A [in]	B [in]	C [in]	G [in]
5.83	3.7	2.13	5.35

DRAFT

Polycarbonate (only in conjunction with order code for "Sensor option", options CA...CE)

A [in]	B [in]	C [in]	G [in]
4.45	2.44	2.01	4.41

DN 1 to 12 in (25 to 300 mm): Sensor with aluminum half-shell housing

DN		Order code for "Design"									
		Options D, E, H, I				Option C					
		D [1]	E [1]	F [1]	M [1]	D [1]	E [1]	F [1]	M [1]	K	L
[mm]	[in]	[in]	[in]	[in]	[in]	[in]	[in]	[in]	[in]	[in]	[in]
25	1	3.31	7.87	11.18	4.72	–	–	–	–	[2]	7.87
32	–	3.31	7.87	11.18	4.72	–	–	–	–	[2]	7.87
40	1 ½	3.31	7.87	11.18	4.72	–	–	–	–	[2]	7.87
50	2	3.31	7.87	11.18	4.72	3.31	7.87	11.18	4.72	[2]	7.87
65	–	4.29	8.86	13.15	7.09	3.31	7.87	11.18	4.72	[2]	7.87
80	3	4.29	8.86	13.15	7.09	3.31	7.87	11.18	4.72	[2]	7.87
100	4	4.29	8.86	13.15	7.09	4.29	8.86	13.15	7.09	[2]	9.84
125	–	5.91	10.43	16.34	10.24	4.29	8.86	13.15	7.09	[2]	9.84
150	6	5.91	10.43	16.34	10.24	4.29	8.86	13.15	7.09	[2]	11.81
200	8	7.09	11.42	18.5	12.76	5.91	10.43	16.34	10.24	[2]	13.78
250	10	8.07	12.4	20.47	15.75	5.91	10.43	16.34	10.24	[2]	17.72
300	12	9.06	13.39	22.44	18.11	7.09	11.42	18.5	12.76	[2]	19.69

1) The dimensions are reference values. They may vary depending on the pressure rating, design and order option.
2) Depends on the liner → 90

DN 1 to 12 in (25 to 300 mm): Sensor with fully welded carbon steel housing

DN		Order code for "Design"									
		Option E				Option C					
		D [1]	E [1]	F [1]	M [1]	D [1]	E [1]	F [1]	M [1]	K	L
[mm]	[in]	[mm]	[in]	[in]	[in]	[in]	[in]	[in]	[in]	[in]	[in]
25	1	2.76	7.87	10.63	5.51	–	–	–	–	[2]	7.87
32	–	2.76	7.87	10.63	5.51	–	–	–	–	[2]	7.87
40	1 ½	2.76	7.87	10.63	5.51	–	–	–	–	[2]	7.87
50	2	2.76	7.87	10.63	5.51	2.76	7.87	10.63	5.51	[2]	7.87
65	–	3.23	8.86	12.09	6.5	2.76	7.87	10.63	5.51	[2]	7.87
80	3	3.43	8.86	12.28	6.89	2.76	7.87	10.63	5.51	[2]	7.87
100	4	3.94	8.86	12.8	7.87	3.23	8.86	12.09	6.5	[2]	9.84
125	–	4.45	10.43	14.88	8.9	3.43	8.86	12.28	6.89	[2]	9.84
150	6	5.28	10.43	15.71	10.59	3.94	8.86	12.8	7.87	[2]	11.81
200	8	6.3	11.42	17.72	12.6	4.45	10.43	14.88	8.9	[2]	13.78

DRAFT

DN		Order code for "Design"									
		Option E				Option C					
		D [1]	E [1]	F [1]	M [1]	D [1]	E [1]	F [1]	M [1]	K	L
[mm]	[in]	[mm]	[in]	[in]	[in]	[in]	[in]	[in]	[in]	[in]	[in]
250	10	7.6	12.4	20	15.24	5.28	10.43	15.71	10.59	2)	17.72
300	12	8.58	13.39	21.97	17.2	6.3	11.42	17.72	12.6	2)	19.69

1) The dimensions are reference values. They may vary depending on the pressure rating, design and order option.
2) Depends on the liner → 90

DN 14 to 16 in (350 to 400 mm)

DN		Order code for "Design" Options E, I					
		D [1]	E [1]	F [1]	M [1]	K	L
[mm]	[in]	[in]	[in]	[in]	[in]	[in]	[in]
350	14	11.10	15.63	26.73	22.20	2)	21.65
375	15	12.13	16.65	28.78	24.25	2)	23.62
400	16	12.13	16.65	28.78	24.25	2)	23.62

1) The dimensions are reference values. They may vary depending on the pressure rating, design and order option.
2) Depends on the liner → 90

DN 18 to 36 in (450 to 900 mm)

DN		Order code for "Design"										
		Options F, J				Options G, K						
		D [1]	E [1]	F [1]	M [1]	D [1]	E [1]	F [1]	M [1]	K	L	
[mm]	[in]	[in]	[in]	[in]	[in]	[in]	[in]	[in]	[in]	[in]	[in]	
450	18	11.42	15.94	27.36	22.83	13.11	17.64	30.75	26.22	2)	23.62 [3]	25.59 [4]
500	20	12.40	16.93	29.33	24.80	14.13	18.66	32.80	28.23	2)	23.62 [3]	25.59 [4]
600	24	14.37	18.90	33.27	28.74	16.18	20.71	36.89	32.32	2)	23.62 [3]	30.71 [4]
700	28	16.77	21.30	38.07	33.50	20.16	24.69	44.84	40.31	2)	27.56 [3]	35.83 [4]
750	30	18.23	22.76	40.98	36.46	20.16	24.69	44.84	40.31	2)	29.53 [3]	38.39 [4]
800	32	18.98	23.50	42.48	37.95	21.02	25.55	46.57	41.93	2)	31.5 [3]	40.94 [4]
900	36	20.94	25.47	46.42	41.89	24.02	28.54	52.56	47.95	2)	35.43 [3]	46.06 [4]

1) The dimensions are reference values. They may vary depending on the pressure rating, design and order option.
2) Depends on the liner → 90
3) Order code for "Design", option F "Fixed flange, short installed length" and option J "Fixed flange, short installed length, 0 x DN inlet/outlet runs"
4) Order code for "Design", option G "Fixed flange, long installed length" and option K "Fixed flange, long installed length 0 x DN inlet/outlet runs"

DRAFT

DN 40 to 78 in (1000 to 2000 mm)

DN		Order code for "Design" Options F, G, J, K				K	L	
		D [1]	E [1]	F [1]	M [1]			
[mm]	[in]	[in]	[in]	[in]	[in]	[in]	[in]	
1000	40	22.91	27.44	50.35	45.83	[2]	39.37 [3]	51.18 [4]
–	42	24.33	28.86	53.19	48.66	[2]	41.34 [3]	53.74 [4]
1200	48	27.40	31.93	59.33	54.80	[2]	47.24 [3]	61.42 [4]
–	54	31.85	36.38	68.23	63.66	[2]	53.15 [3]	69.09 [4]
1400	–	31.85	36.38	68.23	63.66	[2]	55.12 [3]	71.65 [4]
–	60	35.79	40.31	76.10	71.54	[2]	59.06 [3]	76.77 [4]
1600	–	35.79	40.31	76.10	71.54	[2]	62.99 [3]	81.89 [4]
–	66	37.80	42.32	80.12	75.55	[2]	64.96 [3]	84.45 [4]
1800	72	40.00	44.53	84.53	80.00	[2]	70.87 [3]	92.13 [4]
–	78	44.37	48.90	93.27	88.74	[2]	78.74 [3]	102.36 [4]
2000	–	44.37	48.90	93.27	88.74	[2]	78.74 [3]	102.36 [4]

1) The dimensions are reference values. They may vary depending on the pressure rating, design and order option.
2) Internal diameter depends on the liner, see the measuring tube specification → 🖹 90
3) Order code for "Design", option F "Fixed flange, short installed length" and option J "Fixed flange, short installed length, 0 x DN inlet/outlet runs"
4) Order code for "Design", option G "Fixed flange, long installed length" and option K "Fixed flange, long installed length 0 x DN inlet/outlet runs"

DN 84 to 120 in (2200 to 3000 mm)

DN		Order code for "Design" Option F, J				K	L
		D [1]	E [1]	F [1]	M [1]		
[mm]	[in]	[in]	[in]	[in]	[in]	[in]	[in]
–	84	48.31	52.83	101.14	96.61	[2]	86.61
2200	–	48.31	52.83	101.14	96.61	[2]	86.61
–	90	52.44	56.97	109.41	104.88	[2]	94.49
2400	–	52.44	56.97	109.57	104.88	[2]	94.49
–	96	56.34	60.87	117.20	112.64	[2]	96.46
–	102	59.69	64.21	123.90	119.37	[2]	102.36
2600	–	56.77	61.30	118.07	113.50	[2]	102.36
–	108	63.07	67.64	130.71	126.14	[2]	108.27
2800	–	60.91	65.43	126.34	121.77	[2]	110.24
–	114	66.46	70.98	137.44	132.87	[2]	114.17
3000	–	64.84	69.37	134.21	129.65	[2]	118.11
–	120	69.84	74.37	144.21	139.65	[2]	120.08

1) The dimensions are reference values. They may vary depending on the pressure rating, design and order option.
2) Internal diameter depends on the liner, see the measuring tube specification → 🖹 90

DRAFT

Flange connections

Fixed flange

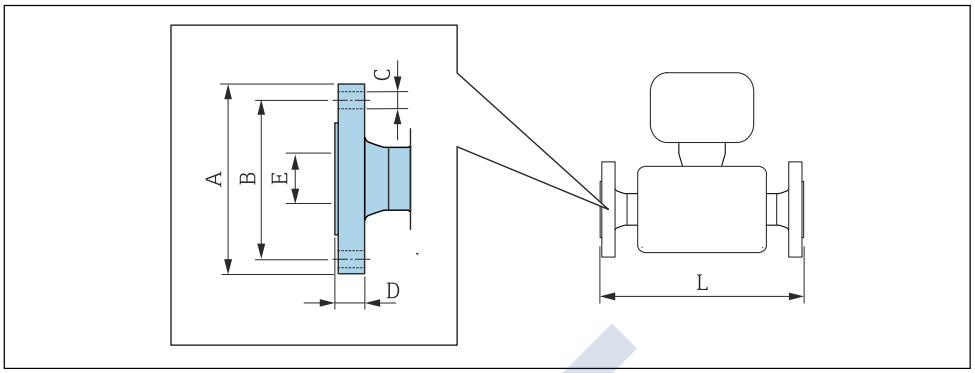

A0015621

Flange according to ASME B16.5, Class 150 **Carbon steel:** *order code for "Process connection", option* **A1K** **Stainless steel:** *order code for "Process connection", option* **A1S**							
DN		**A**	**B**	**C**	**D**	**E**	**L**
[mm]	**[in]**	**[in]**	**[in]**	**[in]**	**[in]**	**[in]**	**[in]**
25	1	4.25	3.12	4 × Ø0.63	0.5	1)	2)
40	1 ½	5	3.88	4 × Ø0.63	0.63		
50	2	6	4.75	4 × Ø0.75	0.69		
80	3	7.5	6	4 × Ø0.75	0.88		
100	4	9	7.5	8 × Ø0.75	0.88		
150	6	11	9.5	8 × Ø0.88	0.94		
200	8	13.5	11.75	8 × Ø0.88	1.06		
250	10	16	14.25	12 × Ø1	1.17		
300	12	19	17	12 × Ø1	1.19		
350	14	21.06	18.75	12 × Ø1.13	1.39		
400	16	23.43	21.25	16 × Ø1.13	1.46		
450	18	25	22.75	16 × Ø1.25	1.58		
500	20	27.56	25	20 × Ø1.25	1.7		
600	24	32.09	29.5	20 × Ø1.37	1.89		
Surface roughness (flange): Ra 250 to 492 µm							

1) Depends on the liner→ 🖹 90
2) Total length is independent of the process connections. Length according to DVGW (German Technical and Scientific Association for Gas and Water) → 🖹 74 (compact version) → 🖹 77 (remote version)

Flange according to ASME B16.5, Class 300 **Carbon steel:** *order code for "Process connection", option* **A2K** **Stainless steel:** *order code for "Process connection", option* **A2S**							
DN		**A**	**B**	**C**	**D**	**E**	**L**
[in]	**[mm]**	**[in]**	**[in]**	**[in]**	**[in]**	**[in]**	**[in]**
1	25	4.88	3.5	4 × Ø0.75	0.63	1)	2)
1 ½	40	6.12	4.5	4 × Ø0.88	0.75		
2	50	6.5	5	8 × Ø0.75	0.82		

DRAFT

Flange according to ASME B16.5, Class 300
Carbon steel: *order code for "Process connection", option* **A2K**
Stainless steel: *order code for "Process connection", option* **A2S**

DN		A	B	C	D	E	L
[in]	[mm]	[in]	[in]	[in]	[in]	[in]	[in]
3	80	8.25	6.62	8 × Ø0.88	1.06		
4	100	10	7.88	8 × Ø0.88	1.19		
6	150	12.5	10.62	12 × Ø0.88	1.38		
Surface roughness (flange): Ra 250 to 492 µm							

1) Depends on the liner→ 🖹 90
2) Total length is independent of the process connections. Length according to DVGW (German Technical and Scientific Association for Gas and Water) → 🖹 74 (compact version) → 🖹 77 (remote version)

Flange according to AWWA, Cl. D
Order code for "Process connection", option **W1K**

DN		A	B	C	D	E	L
[in]	[mm]	[in]	[in]	[in]	[in]	[in]	[in]
28	700	36.50	34.00	28 × Ø1.38	1.31	1)	2)
30	–	38.74	36.00	28 × Ø1.38	1.38		
32	800	41.73	38.50	28 × Ø1.65	1.50		
36	900	45.98	42.75	32 × Ø1.65	1.63		
40	1000	50.75	47.25	36 × Ø1.65	1.63		
42	–	52.99	49.50	36 × Ø1.65	1.75		
48	1200	59.49	56.00	44 × Ø1.65	1.88		
54	–	66.26	62.75	44 × Ø1.89	2.13		
60	–	73.03	69.25	52 × Ø1.89	2.25		
66	–	80.00	76.00	52 × Ø1.89	2.50		
72	1800	86.50	82.50	60 × Ø1.89	2.63		
78	–	92.99	89.00	64 × Ø2.13	2.75		
84	–	99.80	95.50	64 × Ø2.13	2.88		
90	–	106.50	107.00	68 × Ø2.36	3.00		
96	–	113.27	108.50	68 × Ø2.37	3.25		
102	–	120.00	114.50	68 × Ø2.63	3.25		
108	–	126.73	120.75	68 × Ø2.63	3.38		
114	–	133.50	126.75	68 × Ø2.87	3.50		
120	–	140.24	132.75	68 × Ø2.87	3.50		
Surface roughness (flange): Ra 250 to 492 µin							

1) Depends on the liner → 🖹 90
2) Total length is independent of the process connections. Installed length according to DVGW → 🖹 74 (compact version) → 🖹 77 (remote version)

DRAFT

Lap joint flange

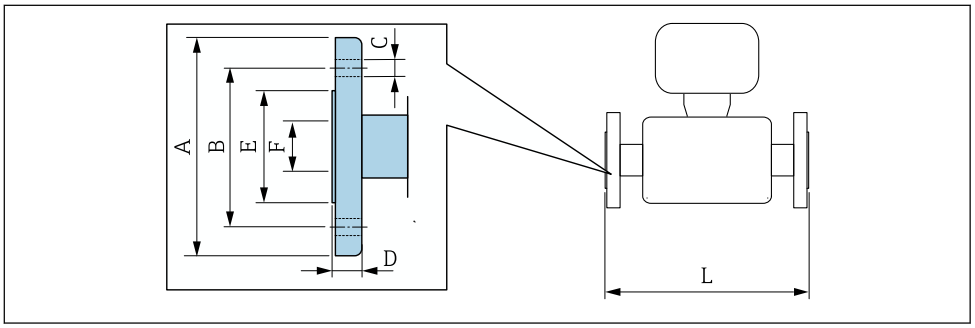

A0037862

Lap joint flange according to ASME B16.5, Class 150 **Carbon steel:** *order code for "Process connection", option* **A12** **Stainless steel:** *order code for "Process connection", option* **A14**								
DN		**A**	**B**	**C**	**D**	**E**	**F**	**L**
[mm]	**[in]**	**[in]**	**[in]**	**[in]**	**[in]**	**[in]**	**[in]**	**[in]**
25	1	4.33	3.15	4 × Ø0.63	0.55	1.93	1)	2)
40	1 ½	4.92	3.86	4 × Ø0.63	0.69	2.8		
50	2	5.91	4.76	4 × Ø0.75	0.75	3.46		
80	3	7.48	5.98	4 × Ø0.75	0.94	4.72		
100	4	9.06	7.48	8 × Ø0.75	0.94	5.83		
150	6	11.02	9.49	8 × Ø0.91	0.98	8.23		
200	8	13.58	11.73	8 × Ø0.91	1.14	10.39		
250	10	15.94	14.25	12 × Ø0.98	1.18	12.48		
300	12	19.09	17.01	12 × Ø0.98	1.26	14.88		
Surface roughness (flange): Ra 248 to 492 µin								

1) Depends on the liner→ 🖹 90
2) Total length is independent of the process connections. Length according to DVGW (German Technical and Scientific Association for Gas and Water) → 🖹 74 (compact version) → 🖹 77 (remote version)

Accessories

Ground disks for flange connections

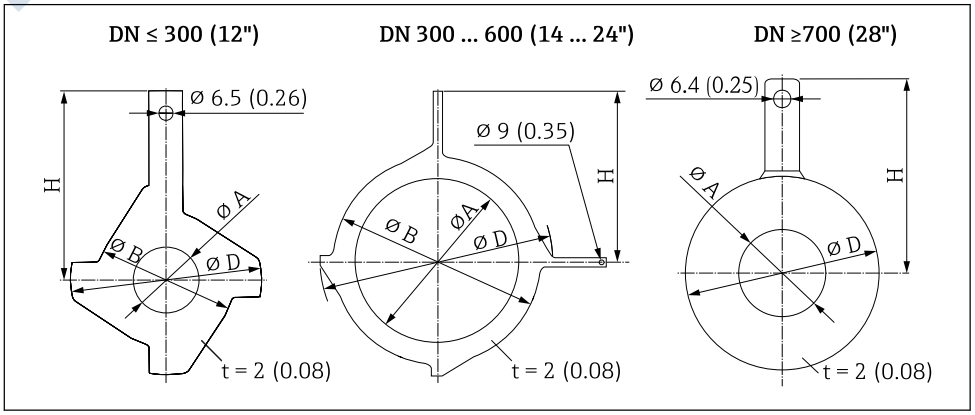

A0015442

DRAFT

DN		Pressure rating	A		B		D		H	
[mm]	[inch]		[mm]	[inch]	[mm]	[inch]	[mm]	[inch]	[mm]	[inch]
25	1"	1)	26	1.02	62	2.44	77.5	3.05	87.5	3.44
32	1 ¼"	1)	35	1.38	80	3.15	87.5	3.44	94.5	3.72
40	1 ½"	1)	41	1.61	82	3.23	101	3.98	103	4.06
50	2"	1)	52	2.05	101	3.98	115.5	4.55	108	4.25
65	2 ½"	1)	68	2.68	121	4.76	131.5	5.18	118	4.65
80	3"	1)	80	3.15	131	5.16	154.5	6.08	135	5.31
100	4"	1)	104	4.09	156	6.14	186.5	7.34	153	6.02
125	5"	1)	130	5.12	187	7.36	206.5	8.13	160	6.30
150	6"	1)	158	6.22	217	8.54	256	10.08	184	7.24
200	8"	1)	206	8.11	267	10.51	288	11.34	205	8.07
250	10"	1)	260	10.2	328	12.91	359	14.13	240	9.45
300	12"	PN 10 PN 16 Cl. 150	312	12.3	375	14.76	413	16.26	273	10.75
		PN 25 JIS 10K JIS 20K	310	12.2	375	14.76	404	15.91	268	10.55
350	14"	PN 6	420	16.5	420	16.54	479	18.86	365	14.37
		PN 10								
		PN 16								
375	15"	PN 16	461	18.2	461	18.2	523	20.6	395	15.6
400	16"	PN 6	470	18.5	470	18.50	542	21.34	395	15.55
		PN 10								
		PN 16								
450	18"	PN 6	525	20.7	525	20.67	583	22.95	417	16.42
		PN 10								
		PN 16								
500	20"	PN 6	575	22.6	575	22.64	650	25.59	460	18.11
		PN 10								
		PN 16								
600	24"	PN 6	676	26.6	676	26.61	766	30.16	522	20.55
		PN 10								
		PN 16								
700	28"	PN 6	697	27.4	–	–	786	30.94	460	18.11
		PN10	693	27.3	–	–	813	32.01	480	18.9
		PN16	687	27.1	–	–	807	31.77	490	19.29
		Cl, D	693	27.3	–	–	832	32.76	494	19.45
750	30"	Cl, D	743	29.3	–	–	833	32.8	523	20.59
800	32"	PN 6	799	31.5	–	–	893	35.16	520	20.47
		PN 10	795	31.3	–	–	920	36.22	540	21.26
		PN 16	789	31.1	–	–	914	35.98	550	21.65
		Cl, D	795	31.3	–	–	940	37.01	561	22.09
900	36"	PN 6	897	35.3	–	–	993	39.09	570	22.44

DRAFT

DN		Pressure rating	A		B		D		H	
[mm]	[inch]		[mm]	[inch]	[mm]	[inch]	[mm]	[inch]	[mm]	[inch]
		PN 10	893	35.2	–	–	1020	40.16	590	23.23
		PN 16	886	34.9	–	–	1014	39.92	595	23.43
		Cl, D	893	35.2	–	–	1048	41.26	615	24.21
1000	40"	PN 6	999	39.3	–	–	1093	43.03	620	24.41
		PN 10	995	39.2	–	–	1127	44.37	650	25.59
		PN 16	988	38.9	–	–	1131	44.53	660	25.98
		Cl, D	995	39.2	–	–	1163	45.79	675	26.57
–	42"	PN 6	1044	41.1	–	–	1220	48.03	704	27.72
1200	48"	PN 6	1203	47.4	–	–	1310	51.57	733	28.86
		PN 10	1196	47.1	–	–	1344	52.91	760	29.92
		PN 16	1196	47.1	–	–	1385	54.53	786	30.94
		Cl, D	1188	46.8	–	–	1345	52.95	775	30.51

1) In the case of DN 25 to 250, ground disks can be used for all the flange standards/pressure ratings which can be supplied in the standard version

DRAFT

Weight

All values (weight exclusive of packaging material) refer to devices with flanges of the standard pressure rating.
The weight may be lower than indicated depending on the pressure rating and design.

Weight in SI units

Order code for "Design", option C, D, E, H, I : DN 25 to 400 mm (1 to 16 in)			
Nominal diameter		Reference values EN (DIN), AS, JIS	
[mm]	[in]	Pressure rating	[kg]
25	1	PN 40	10
32	–	PN 40	11
40	1 ½	PN 40	12
50	2	PN 40	13
65	–	PN 16	13
80	3	PN 16	15
100	4	PN 16	18
125	–	PN 16	25
150	6	PN 16	31
200	8	PN 10	52
250	10	PN 10	81
300	12	PN 10	95
350	14	PN 6	106
375	15	PN 6	121
400	16	PN 6	121

Order code for "Design", option F, J: DN 450 to 2 000 mm (18 to 78 in)			
Nominal diameter		Reference values EN (DIN) (PN16)	AS (PN 16)
[mm]	[in]	[kg]	[kg]
450	18	142	138
500	20	182	186
600	24	227	266
700	28	291	369
–	30	–	447
800	32	353	524
900	36	444	704
1000	40	566	785
–	42	–	–
1200	48	843	1229
–	54	–	–
1400	–	1204	–
–	60	–	–
1600	–	1845	–
–	66	–	–

DRAFT

Order code for "Design", option F, J: DN 450 to 2 000 mm (18 to 78 in)			
Nominal diameter		Reference values	
		EN (DIN) (PN16)	AS (PN 16)
[mm]	[in]	[kg]	[kg]
1800	72	2 357	–
–	78	2 929	–
2000	–	2 929	–

Order code for "Design", option F, J: DN 2 200 to 3 000 mm (84 to 120 in)		
Nominal diameter		Reference values
		EN (DIN) (PN6)
[mm]	[in]	[kg]
–	84	–
2200	–	3 422
–	90	–
2400	–	4 094
–	96	–
–	102	–
2600	–	7 601.5
–	108	–
2800	–	9 466.5
–	114	–
3000	–	11 911
–	120	–

Order code for "Design", option G, K: DN 450 to 2 000 mm (18 to 78 in)		
Nominal diameter		Reference values
		EN (DIN) (PN 6)
[mm]	[in]	[kg]
450	18	161
500	20	156
600	24	208
700	28	304
–	30	–
800	32	357
900	36	485
1000	40	589
–	42	–
1200	48	850
–	54	850
1400	–	1 300
–	60	–
1600	–	1 845

DRAFT

Order code for "Design", option G, K: DN 450 to 2 000 mm (18 to 78 in)		
Nominal diameter		Reference values EN (DIN) (PN 6)
[mm]	[in]	[kg]
–	66	–
1800	72	2 357
–	78	2 929
2000	–	2 929

Weight in US units

Order code for "Design", option C, D, E, H, I: DN 1 to 16 in (25 to 400 mm)		
Nominal diameter		Reference values ASME (Class 150)
[mm]	[in]	[lb]
25	1	11
32	–	–
40	1 ½	15
50	2	20
65	–	–
80	3	31
100	4	42
125	–	–
150	6	73
200	8	115
250	10	198
300	12	284
350	14	379
375	15	–
400	16	448

Order code for "Design", option F, J: DN 18 to 120 in (450 to 3 000 mm)		
Nominal diameter		Reference values ASME (Class 150), AWWA (Class D)
[mm]	[in]	[lb]
450	18	421
500	20	503
600	24	666
700	28	587
–	30	701
800	32	845
900	36	1036
1000	40	1294
–	42	1477
1200	48	1987

DRAFT

Order code for "Design", option F, J: DN 18 to 120 in (450 to 3 000 mm)		
Nominal diameter		Reference values ASME (Class 150), AWWA (Class D)
[mm]	[in]	[lb]
–	54	2 807
1400	–	–
–	60	3 515
1600	–	–
–	66	4 699
1800	72	5 662
–	78	6 864
2000	–	6 864
–	84	8 280
2200	–	–
–	90	10 577
2400	–	–
–	96	15 574.6
–	102	18 023.9
2600	–	–
–	108	20 783.0
2800	–	–
–	114	24 060.2
3000	–	–
–	120	27 724.3

Order code for "Design", option G, K: DN 18 to 78 in (450 to 2 000 mm)		
Nominal diameter		Reference values ASME (Class 150), AWWA (Class D)
[mm]	[in]	[lb]
450	18	562
500	20	628
600	24	893
700	28	882
–	30	1 014
800	32	1 213
900	36	1 764
1000	40	1 984
–	42	2 426
1200	48	3 087
–	54	4 851
1400	–	–
–	60	5 954
1600	–	–
–	66	8 158

DRAFT

Order code for "Design", option G, K: DN 18 to 78 in (450 to 2 000 mm)		
Nominal diameter		Reference values ASME (Class 150), AWWA (Class D)
[mm]	[in]	[lb]
1800	72	9 040
–	78	10 143
2000	–	–

Measuring tube specification

The values are reference values and can vary depending on the pressure rating, design and order option.

Nominal diameter		Pressure rating				Measuring tube internal diameter					
		EN (DIN)	ASME AWWA	AS 2129 AS 4087	JIS	Hard rubber		Polyurethane		PTFE	
[mm]	[in]					[mm]	[in]	[mm]	[in]	[mm]	[in]
25	1	PN 40	Class 150	–	20K	–	–	24	0.93	25	1.00
32	–	PN 40	–	–	20K	–	–	32	1.28	34	1.34
40	1 ½	PN 40	Class 150	–	20K	–	–	38	1.51	40	1.57
50	2	PN 40	Class 150	Table E, PN 16	10K	50	1.98	50	1.98	52	2.04
50 [1]	2	PN 40	Class 150	Table E, PN 16	10K	32	1.26	–	–	–	–
65	–	PN 16	–	–	10K	66	2.60	66	2.60	68	2.67
65 [1]	–	PN 16	–	–	10K	38	1.50	–	–	–	–
80	3	PN 16	Class 150	Table E, PN 16	10K	79	3.11	79	3.11	80	3.15
80 [1]	3	PN 16	Class 150	Table E, PN 16	10K	50	1.97	–	–	–	–
100	4	PN 16	Class 150	Table E, PN 16	10K	101	3.99	104	4.11	104	4.09
100 [1]	4	PN 16	Class 150	Table E, PN 16	10K	66	2.60	–	–	–	–
125	–	PN 16	–	–	10K	127	4.99	130	5.11	129	5.08
125 [1]	–	PN 16	–	–	10K	79	3.11	–	–	–	–
150	6	PN 16	Class 150	Table E, PN 16	10K	155	6.11	158	6.23	156	6.15
150 [1]	6	PN 16	Class 150	Table E, PN 16	10K	102	4.02	–	–	–	–
200	8	PN 10	Class 150	Table E, PN 16	10K	204	8.02	207	8.14	202	7.96
200 [1]	8	PN 16	Class 150	Table E, PN 16	10K	127	5.00	–	–	–	–
250	10	PN 10	Class 150	Table E, PN 16	10K	258	10.14	261	10.26	256	10.09
250 [1]	10	PN 16	Class 150	Table E, PN 16	10K	156	6.14	–	–	–	–
300	12	PN 10	Class 150	Table E, PN 16	10K	309	12.15	312	12.26	306	12.03
300 [1]	12	PN 16	Class 150	Table E, PN 16	10K	204	8.03	–	–	–	–
350	14	PN 10	Class 150	Table E, PN 16	10K	337	13.3	340	13.4	–	–
375	15	–	–	PN 16	10K	389	15.3	392	15.4	–	–
400	16	PN 10	Class 150	Table E, PN 16	10K	387	15.2	390	15.4	–	–
450	18	PN 10	Class 150	–	10K	436	17.2	439	17.3	–	–
500	20	PN 10	Class 150	Table E, PN 16	10K	487	19.2	490	19.3	–	–
600	24	PN 10	Class 150	Table E, PN 16	10K	585	23.0	588	23.1	–	–
700	28	PN 10	Class D	Table E, PN 16	10K	694	27.3	697	27.4	–	–
750	30	–	Class D	Table E, PN 16	10K	743	29.3	746	29.4	–	–
800	32	PN 10	Class D	Table E, PN 16	–	794	31.3	797	31.4	–	–

DRAFT

Nominal diameter		Pressure rating				Measuring tube internal diameter					
		EN (DIN)	ASME AWWA	AS 2129 AS 4087	JIS	Hard rubber		Polyurethane		PTFE	
[mm]	[in]					[mm]	[in]	[mm]	[in]	[mm]	[in]
900	36	PN 10	Class D	Table E, PN 16	–	895	35.2	898	35.4	–	–
1000	40	PN 6	Class D	Table E, PN 16	–	991	39.0	994	39.1	–	–
–	42	–	Class D	–	–	1 043	41.1	1 043	41.1	–	–
1200	48	PN 6	Class D	Table E, PN 16	–	1 191	46.9	1 197	47.1	–	–
–	54	–	Class D	–	–	1 339	52.7	–	–	–	–
1400	–	PN 6	–	–	–	1 402	55.2	–	–	–	–
–	60	–	Class D	–	–	1 492	58.7	–	–	–	–
1600	–	PN 6	–	–	–	1 600	63.0	–	–	–	–
–	66	–	Class D	–	–	1 638	64.5	–	–	–	–
1800	72	PN 6	–	–	–	1 786	70.3	–	–	–	–
–	78	–	Class D	–	–	1 989	78.3	–	–	–	–
2000	–	PN 6	–	–	–	1 989	78.3	–	–	–	–
–	84	–	Class D	–	–	2 099	84.0	–	–	–	–
2200	–	PN 6	–	–	–	2 194	87.8	–	–	–	–
–	90	–	Class D	–	–	2 246	89.8	–	–	–	–
2400	–	PN 6	–	–	–	2 391	94.1	–	–	–	–
–	96	–	Class D	–		2 382	93.8	–	–	–	–
–	102	–	Class D	–		2 533	99.7	–	–	–	–
2600	–	PN 6	–	–		2 580	101.6	–	–	–	–
–	108	–	Class D	–		2 683	105.6	–	–	–	–
2800	–	PN 6	–	–		2 780	109.5	–	–	–	–
–	114	–	Class D	–		2 832	111.5	–	–	–	–
3000	–	PN 6	–	–		2 976	117.2	–	–	–	–
–	120	–	Class D	–		2 980	117.3	–	–	–	–

1) Order code for "Design", option C

Materials

Transmitter housing

Compact version

- Order code for "Housing", option **A** "Compact, alu, coated": Aluminum, AlSi10Mg, coated
- Order code for "Housing", option **M**: polycarbonate plastic
- Window material:
  - For order code for "Housing", option **A**: glass
  - For order code for "Housing", option **M**: plastic

Remote version (wall-mount housing)

- Order code for "Housing", option **P** "Remote, alu, coated": Aluminum, AlSi10Mg, coated
- Order code for "Housing", option **N**: polycarbonate plastic
- Window material:
  - For order code for "Housing", option **P**: glass
  - For order code for "Housing", option **N**: plastic

DRAFT

Sensor connection housing

- Aluminum, AlSi10Mg, coated
- Polycarbonate plastic (only in conjunction with order code for "Sensor option", options CA, C3, CB, CC, CD, CD)

Cable entries/cable glands

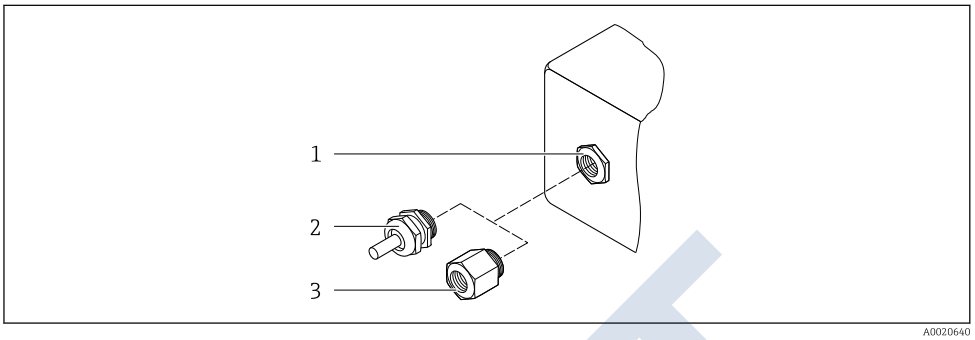

30 *Possible cable entries/cable glands*

1 *Female thread M20 × 1.5*
2 *Cable gland M20 × 1.5*
3 *Adapter for cable entry with female thread G ½" or NPT ½"*

Compact and remote versions and sensor connection housing

Cable entry/cable gland	Material
Cable gland M20 × 1.5	▪ Plastic ▪ Nickel-plated brass
Remote version: cable gland M20 × 1.5 Option of armored connecting cable	▪ Sensor connection housing: Nickel-plated brass ▪ Transmitter wall-mount housing: Plastic
Adapter for cable entry with female thread G ½" or NPT ½"	Nickel-plated brass

Device plug

Electrical connection	Material
Plug M12x1	▪ Socket: Stainless steel, 1.4404 (316L) ▪ Contact housing: Polyamide ▪ Contacts: Gold-plated brass

Remote version connecting cable

UV rays can impair the cable outer sheath. Protect the cable from exposure to sun as much as possible.

Electrode and coil current cable:
- Standard cable: PVC cable with copper shield
- Armored cable: PVC cable with copper shield and additional steel wire braided jacket

Sensor housing

- DN 25 to 300 (1 to 12")
  - Aluminum half-shell housing, aluminum, AlSi10Mg, coated
  - Fully welded carbon steel housing with protective varnish
- DN 350 to 3000 (14 to 120")
  Fully welded carbon steel housing with protective varnish

DRAFT

Measuring tubes

- DN 25 to 600 (1 to 24")
  Stainless steel: 1.4301, 1.4306, 304, 304L
- DN 700 to 3000 (28 to 120")
  Stainless steel: 1.4301, 304

Liner

- DN 25 to 300 (1 to 12"): PTFE
- DN 25 to 1200 (1 to 48"): polyurethane
- DN 50 to 3000 (2 to 120"): hard rubber

Electrodes

- Stainless steel, 1.4435 (316L)
- Alloy C22, 2.4602 (UNS N06022)
- Tantalum

Process connections

For flanges made of carbon steel:
- DN ≤ 300 (12"): with Al/Zn protective coating or protective varnish
- DN ≥ 350 (14"): protective varnish

All carbon steel lap joint flanges are supplied with a hot-dip galvanized finish.

EN 1092-1 (DIN 2501)

Fixed flange
- Carbon steel:
  - DN ≤ 300: S235JRG2, S235JR+N, P245GH, A105, E250C
  - DN 350 to 3000: P245GH, S235JRG2, A105, E250C
- Stainless steel:
  - DN ≤ 300: 1.4404, 1.4571, F316L
  - DN 350 to 600: 1.4571, F316L, 1.4404
  - DN 700 to 1000: 1.4404, F316L

Lap joint flange
- Carbon steel DN ≤ 300: S235JRG2, A105, E250C
- Stainless steel DN ≤ 300: 1.4306,1.4404, 1.4571, F316L

Lap joint flange, stamped plate
- Carbon steel DN ≤ 300: S235JRG2 similar to S235JR+AR or 1.0038
- Stainless steel DN ≤ 300: 1.4301 similar to 304

ASME B16.5

Fixed flange, lap joint flange
- Carbon steel: A105
- Stainless steel: F316L

JIS B2220

- Carbon steel: A105, A350 LF2
- Stainless steel: F316L

AWWA C207

Carbon steel: A105, P265GH, A181 Class 70, E250C, S275JR

AS 2129

Carbon steel: A105, E250C, P235GH, P265GH, S235JRG2

AS 4087

Carbon steel: A105, P265GH, S275JR

Seals

As per DIN EN 1514-1, form IBC

DRAFT

Accessories

Display guard

Stainless steel, 1.4301 (304L)

Ground disks

- Stainless steel, 1.4435 (316L)
- Alloy C22, 2.4602 (UNS N06022)
- Tantalum

Fitted electrodes

Measurement, reference and empty pipe detection electrodes available as standard with:
- 1.4435 (316L)
- Alloy C22, 2.4602 (UNS N06022)
- Tantalum

Process connections

- EN 1092-1 (DIN 2501)
- ASME B16.5
- JIS B2220
- AS 2129 Table E
- AS 4087 PN 16
- AWWA C207 Class D

For information on the different materials used in the process connections → 93

Surface roughness

Electrodes with 1.4435 (316L); Alloy C22, 2.4602 (UNS N06022); tantalum: < 0.5 µm (19.7 µin)

(All data relate to parts in contact with medium)

Human interface

Operating concept

Operator-oriented menu structure for user-specific tasks
- Commissioning
- Operation
- Diagnostics
- Expert level

Fast and safe commissioning
- Guided menus ("Make-it-run" wizards) for applications
- Menu guidance with brief descriptions of the individual parameter functions
- Access to the device via Web server
- WLAN access to the device via mobile handheld terminal, tablet or smart phone

Reliable operation
- Operation in local language
- Uniform operating philosophy applied to device and operating tools
- If replacing electronic modules, transfer the device configuration via the integrated memory (HistoROM backup) which contains the process and measuring device data and the event logbook. No need to reconfigure.

Efficient diagnostic behavior increases measurement availability
- Troubleshooting measures can be called up via the device and in the operating tools
- Diverse simulation options, logbook for events that occur and optional line recorder functions

Languages

Can be operated in the following languages:
- Via local operation:
  English, German, French, Spanish, Italian, Dutch, Portuguese, Polish, Russian, Turkish, Chinese, Japanese, Bahasa (Indonesian), Vietnamese, Czech, Swedish
- Via "FieldCare", "DeviceCare" operating tool:
  English, German, French, Spanish, Italian, Chinese, Japanese
- Via Web browser (only available for device versions with HART, PROFIBUS DP and EtherNet/IP):
  English, German, French, Spanish, Italian, Dutch, Portuguese, Polish, Russian, Turkish, Chinese, Japanese, Bahasa (Indonesian), Vietnamese, Czech, Swedish

DRAFT

Local operation

Via display module

Equipment:
- Standard features 4-line, illuminated, graphic display; touch control
- Order code for "Display; operation", option BA "WLAN" offers standard equipment features in addition to access via Web browser

Information about WLAN interface → 98

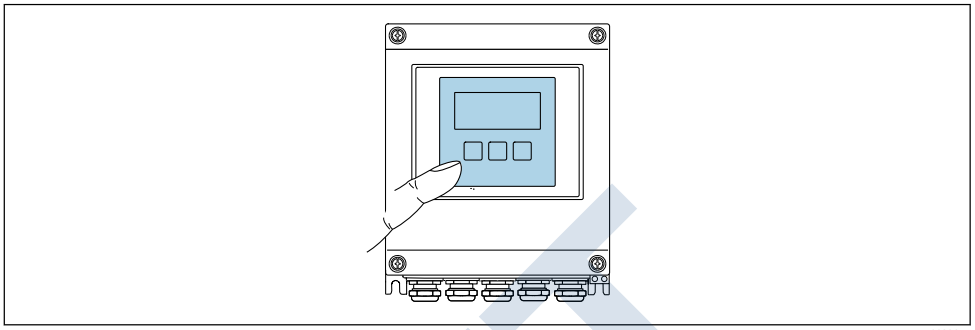

31 *Operation with touch control*

Display elements

- 4-line, illuminated, graphic display
- White background lighting; switches to red in event of device errors
- Format for displaying measured variables and status variables can be individually configured
- Permitted ambient temperature for the display: –20 to +60 °C (–4 to +140 °F)
  The readability of the display may be impaired at temperatures outside the temperature range.

Operating elements

- External operation via touch control (3 optical keys) without opening the housing: ⊞, ⊟, E
- Operating elements also accessible in the various zones of the hazardous area

Remote operation

Via HART protocol

This communication interface is available in device versions with a HART output.

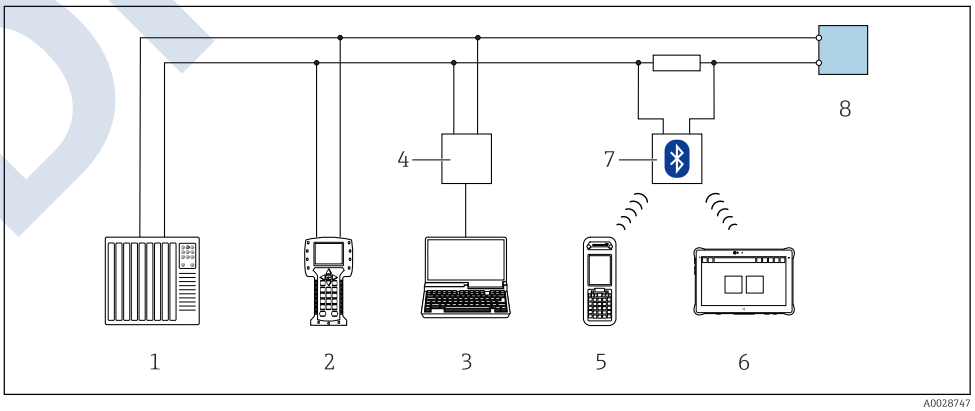

32 *Options for remote operation via HART protocol*

1 *Control system (e.g. PLC)*
2 *Field Communicator 475*
3 *Computer with operating tool (e.g. FieldCare, AMS Device Manager, SIMATIC PDM)*
4 *Commubox FXA195 (USB)*
5 *Field Xpert SFX350 or SFX370*
6 *Field Xpert SMT70*
7 *VIATOR Bluetooth modem with connecting cable*
8 *Transmitter*

DRAFT

Via PROFIBUS DP network

This communication interface is available in device versions with PROFIBUS DP.

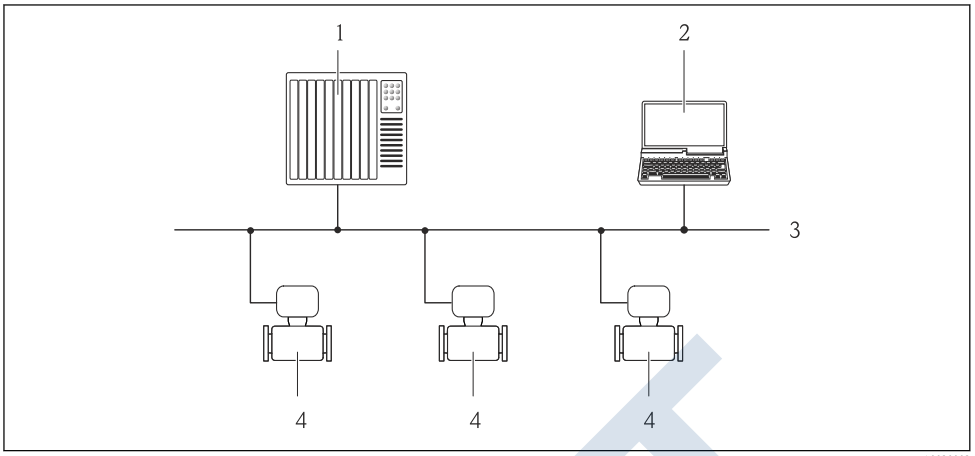

33 *Options for remote operation via PROFIBUS DP network*

1 *Automation system*
2 *Computer with PROFIBUS network card*
3 *PROFIBUS DP network*
4 *Measuring device*

Via Modbus RS485 protocol

This communication interface is available in device versions with a Modbus-RS485 output.

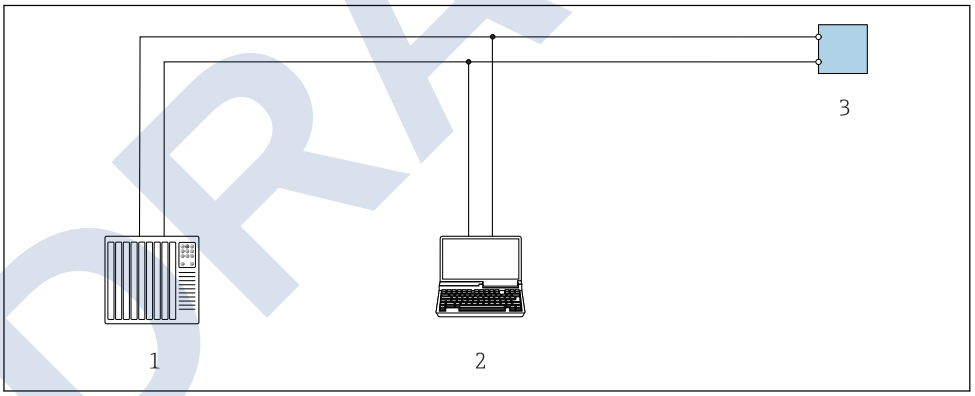

34 *Options for remote operation via Modbus-RS485 protocol (active)*

1 *Control system (e.g. PLC)*
2 *Computer with Web browser (e.g. Internet Explorer) for accessing the integrated device Web server or with operating tool (e.g. FieldCare, DeviceCare) with COM DTM "CDI Communication TCP/IP" or Modbus DTM*
3 *Transmitter*

Via EtherNet/IP network

This communication interface is available in device versions with EtherNet/IP.

DRAFT

ITEM F-011D

Star topology

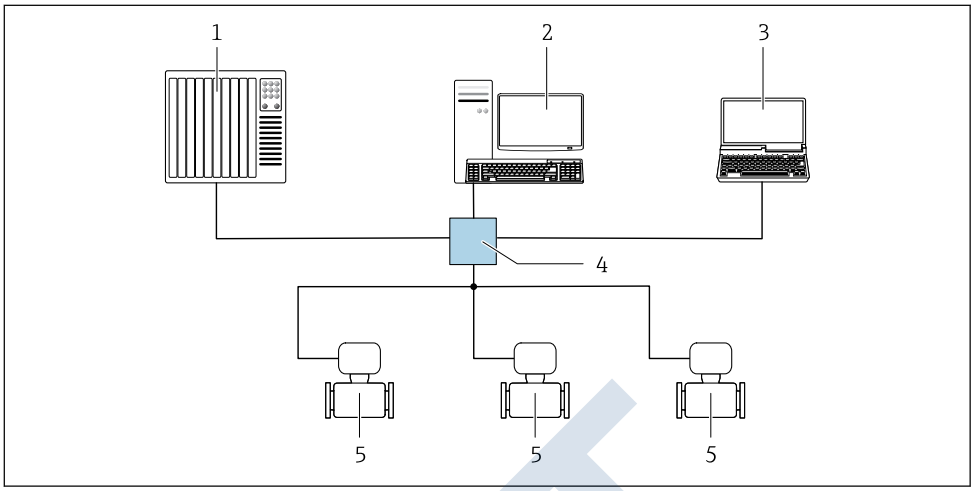

35 *Options for remote operation via EtherNet/IP network: star topology*

1 *Automation system, e.g. "RSLogix" (Rockwell Automation)*
2 *Workstation for measuring device operation: with Custom Add-On Profile for "RSLogix 5000" (Rockwell Automation) or with Electronic Data Sheet (EDS)*
3 *Computer with Web browser (e.g. Internet Explorer) for accessing the integrated device Web server or computer with operating tool (e.g. FieldCare, DeviceCare) with COM DTM "CDI Communication TCP/IP"*
4 *Ethernet switch*
5 *Measuring device*

Service interface

Via service interface (CDI-RJ45)

This communication interface is present in the following device version:
- Order code for "Output", option **H**: 4 to 20 mA HART, pulse/frequency output, switch output
- Order code for "Output", option **I**: 4 to 20 mA HART, 2 x pulse/frequency/switch output, status input
- Order code for "Output", option **J**: 4 to 20 mA HART, certified pulse output, switch output; status input
- Order code for "Output", option **L**: PROFIBUS DP
- Order code for "Output", option **M**: Modbus RS485
- Order code for "Output", option **O**: Modbus RS485, 4 to 20 mA, 2 x pulse/frequency/switch output
- Order code for "Output", option **P**: Modbus RS485, 4 to 20 mA, certified pulse output, pulse/frequency/switch output
- Order code for "Output", option **N**: EtherNet/IP

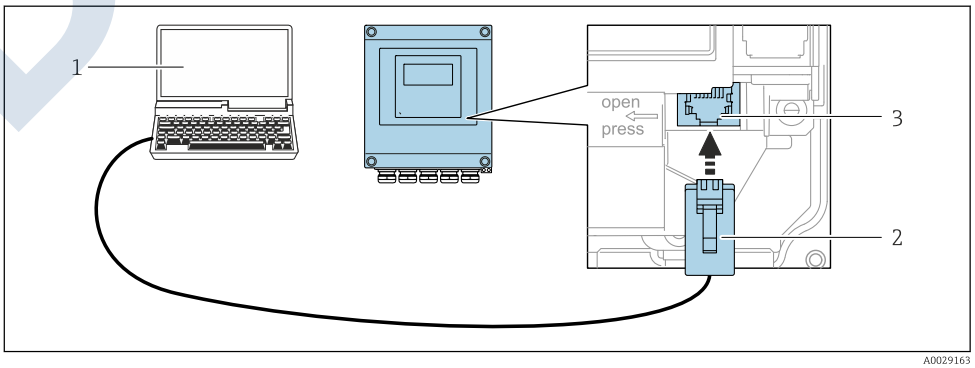

36 *Connection via service interface (CDI-RJ45)*

1 *Computer with Web browser (e.g. Microsoft Internet Explorer, Microsoft Edge) for accessing the integrated device Web server or with "FieldCare", "DeviceCare" operating tool with COM DTM "CDI Communication TCP/IP" or Modbus DTM*
2 *Standard Ethernet connecting cable with RJ45 plug*
3 *Service interface (CDI-RJ45) of the measuring device with access to the integrated Web server*

DRAFT

Via WLAN interface

The optional WLAN interface is available on the following device version:
Order code for "Display", option BA "WLAN":
4-line, illuminated, graphic display; touch control + WLAN

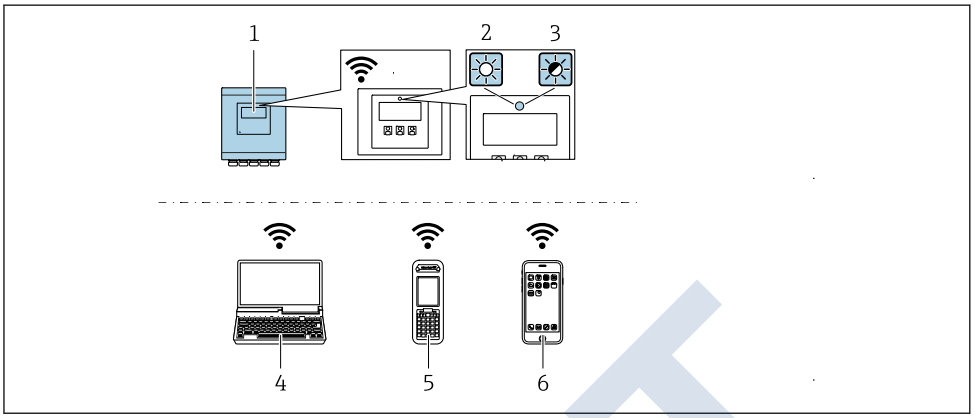

1 *Transmitter with integrated WLAN antenna*
2 *LED lit constantly: WLAN reception is enabled on measuring device*
3 *LED flashing: WLAN connection established between operating unit and measuring device*
4 *Computer with WLAN interface and Web browser (e.g. Microsoft Internet Explorer, Microsoft Edge) for accessing the integrated device Web server or with operating tool (e.g. FieldCare, DeviceCare)*
5 *Mobile handheld terminal with WLAN interface and Web browser (e.g. Microsoft Internet Explorer, Microsoft Edge) for accessing the integrated device Web server or operating tool (e.g. FieldCare, DeviceCare)*
6 *Smart phone or tablet (e.g. Field Xpert SMT70)*

Function	WLAN: IEEE 802.11 b/g (2.4 GHz) ▪ Access point with DHCP server (default setting) ▪ Network
Encryption	WPA2-PSK AES-128 (in accordance with IEEE 802.11i)
Configurable WLAN channels	1 to 11
Degree of protection	IP67
Available antenna	Internal antenna
Range	Typically 10 m (32 ft)

Supported operating tools

Different operating tools can be used for local or remote access to the measuring device. Depending on the operating tool used, access is possible with different operating units and via a variety of interfaces.

Supported operating tools	Operating unit	Interface	Additional information
Web browser	Notebook, PC or tablet with Web browser	▪ CDI-RJ45 service interface ▪ WLAN interface ▪ Ethernet-based fieldbus (EtherNet/IP)	Special Documentation for the device
DeviceCare SFE100	Notebook, PC or tablet with Microsoft Windows system	▪ CDI-RJ45 service interface ▪ WLAN interface ▪ Fieldbus protocol	→ 🖹 105

DRAFT

Supported operating tools	Operating unit	Interface	Additional information
FieldCare SFE500	Notebook, PC or tablet with Microsoft Windows system	▪ CDI-RJ45 service interface ▪ WLAN interface ▪ Fieldbus protocol	→ 🖹 105
Device Xpert	Field Xpert SFX 100/350/370	Fieldbus protocol HART	Operating Instructions BA01202S Device description files: Use update function of handheld terminal

Other operating tools based on FDT technology with a device driver such as DTM/iDTM or DD/EDD can be used for device operation. These operating tools are available from the individual manufacturers. Integration into the following operating tools, among others, is supported:

- FactoryTalk AssetCentre (FTAC) from Rockwell Automation → www.rockwellautomation.com
- Process Device Manager (PDM) from Siemens → www.siemens.com
- Asset Management Solutions (AMS) from Emerson → www.emersonprocess.com
- FieldCommunicator 375/475 from Emerson → www.emersonprocess.com
- Field Device Manager (FDM) from Honeywell → www.honeywellprocess.com
- FieldMate from Yokogawa → www.yokogawa.com
- PACTWare → www.pactware.com

The related device description files are available: www.endress.com → Downloads

Web server

Thanks to the integrated Web server, the device can be operated and configured via a Web browser and via a service interface (CDI-RJ45) or via a WLAN interface. The structure of the operating menu is the same as for the local display. In addition to the measured values, device status information is also displayed, allowing users to monitor the status of the device. Furthermore the device data can be managed and the network parameters can be configured.

A device that has a WLAN interface (can be ordered optionally) is required for the WLAN connection: order code for "Display", option BA "WLAN". The device acts as an Access Point and enables communication by computer or a mobile handheld terminal.

Supported functions
Data exchange between the operating unit (such as a notebook for example) and the measuring device:

- Upload the configuration from the measuring device (XML format, configuration backup)
- Save the configuration to the measuring device (XML format, restore configuration)
- Export event list (.csv file)
- Export parameter settings (.csv file or PDF file, document the measuring point configuration)
- Export the Heartbeat verification log (PDF file, only available with the "Heartbeat Verification" application package)
- Flash firmware version for device firmware upgrade, for instance
- Download driver for system integration
- Visualize up to 1000 saved measured values (only available with the **Extended HistoROM** application package → 🖹 103)

Web server special documentation → 🖹 106

HistoROM data management

The measuring device features HistoROM data management. HistoROM data management comprises both the storage and import/export of key device and process data, making operation and servicing far more reliable, secure and efficient.

DRAFT

Additional information on the data storage concept

There are different types of data storage units in which device data are stored and used by the device:

	HistoROM backup	T-DAT	S-DAT

Available data	▪ Event logbook such as diagnostic events for example
	▪ Device firmware package
	▪ Driver for system integration for exporting via Web server, e.g:
	  ▪ GSD for PROFIBUS DP
	  ▪ EDS for EtherNet/IP
		▪ Measured value logging ("Extended HistoROM" order option)
		▪ Current parameter data record (used by firmware at run time)
		▪ Peakhold indicator (min/max values)
		▪ Totalizer values
			▪ Sensor data: nominal diameter etc.
			▪ Serial number
			▪ Calibration data
			▪ Device configuration (e.g. SW options, fixed I/O or multi I/O)

Storage location	Fixed on the user interface board in the connection compartment	Attachable to the user interface board in the connection compartment	In the sensor plug in the transmitter neck part

Data backup

Automatic
- The most important device data (sensor and transmitter) are automatically saved in the DAT modules
- If the transmitter or measuring device is replaced: once the T-DAT containing the previous device data has been exchanged, the new measuring device is ready for operation again immediately without any errors
- If the sensor is replaced: once the sensor has been replaced, new sensor data are transferred from the S-DAT in the measuring device and the measuring device is ready for operation again immediately without any errors

Data transmission

Manual
- Transfer of a device configuration to another device using the export function of the specific operating tool, e.g. with FieldCare, DeviceCare or Web server: to duplicate the configuration or to store in an archive (e.g. for backup purposes)
- Transmission of the drivers for system integration via Web server, e.g.:
  - GSD for PROFIBUS DP
  - EDS for EtherNet/IP

Event list

Automatic
- Chronological display of up to 20 event messages in the events list
- If the **Extended HistoROM** application package (order option) is enabled: up to 100 event messages are displayed in the events list along with a time stamp, plain text description and remedial measures
- The events list can be exported and displayed via a variety of interfaces and operating tools e.g. DeviceCare, FieldCare or Web server

Data logging

Manual

If the **Extended HistoROM** application package (order option) is enabled:
- Record up to 1 000 measured values via 1 to 4 channels
- User configurable recording interval
- Record up to 250 measured values via each of the 4 memory channels
- Export the measured value log via a variety of interfaces and operating tools e.g. FieldCare, DeviceCare or web server

Certificates and approvals

Current certificates and approvals for the product are available via the Product Configurator at www.endress.com.

1. Select the product using the filters and search field.
2. Open the product page.

DRAFT

ITEM F-011D

The **Configuration** button opens the Product Configurator.

CE mark

The device meets the legal requirements of the applicable EU Directives. These are listed in the corresponding EU Declaration of Conformity along with the standards applied.

Endress+Hauser confirms successful testing of the device by affixing to it the CE mark.

UKCA marking

The device meets the legal requirements of the applicable UK regulations (Statutory Instruments). These are listed in the UKCA Declaration of Conformity along with the designated standards. By selecting the order option for UKCA marking, Endress+Hauser confirms a successful evaluation and testing of the device by affixing the UKCA mark.

Contact address Endress+Hauser UK:
Endress+Hauser Ltd.
Floats Road
Manchester M23 9NF
United Kingdom
www.uk.endress.com

RCM mark

The measuring system meets the EMC requirements of the "Australian Communications and Media Authority (ACMA)".

Ex approval

The devices are certified for use in hazardous areas and the relevant safety instructions are provided in the separate "Control Drawing" document. Reference is made to this document on the nameplate.

Drinking water approval

- ACS
- KTW/W270
- NSF 61
- WRAS BS 6920

HART certification

HART interface

The measuring device is certified and registered by the FieldComm Group. The measuring system meets all the requirements of the following specifications:
- Certified according to HART 7
- The device can also be operated with certified devices of other manufacturers (interoperability)

PROFIBUS conformity

PROFIBUS interface

The measuring device is registered with PI (PROFIBUS and PROFINET International). It meets all the requirements of PROFIBUS PA Profile 3.02 specifications and can also be operated with certified devices of other manufacturers (interoperability).

Modbus RS485 certification

The measuring device meets all the requirements of the MODBUS/TCP conformity test and has the "MODBUS/TCP Conformance Test Policy, Version 2.0". The measuring device has successfully passed all the test procedures carried out.

EtherNet/IP certification

The measuring device is certified and registered by the ODVA (Open Device Vendor Association). The measuring system meets all the requirements of the following specifications:
- Certified in accordance with the ODVA Conformance Test
- EtherNet/IP Performance Test
- EtherNet/IP PlugFest compliance
- The device can also be operated with certified devices of other manufacturers (interoperability)

Radio approval

The measuring device has radio approval.

For detailed information regarding radio approval, see the Special Documentation → 106

Measuring instrument approval

The measuring device is (optionally) approved as a cold water meter (MI-001) for volume measurement in service subject to legal metrological control in accordance with the European Measuring Instruments Directive 2014/32/EU (MID).

The measuring device is qualified to OIML R49: 2013.

DRAFT

Other standards and guidelines

- EN 60529
  Degrees of protection provided by enclosures (IP code)
- EN 61010-1
  Safety requirements for electrical equipment for measurement, control and laboratory use - general requirements
- IEC/EN 61326-3-2
  Emission in accordance with Class A requirements. Electromagnetic compatibility (EMC requirements).
- ANSI/ISA-61010-1 (82.02.01)
  Safety Requirements for Electrical Equipment for Measurement, Control and Laboratory Use - Part 1 General Requirements
- CAN/CSA-C22.2 No. 61010-1-12
  Safety Requirements for Electrical Equipment for Measurement, Control and Laboratory Use - Part 1 General Requirements
- NAMUR NE 21
  Electromagnetic compatibility (EMC) of industrial process and laboratory control equipment
- NAMUR NE 32
  Data retention in the event of a power failure in field and control instruments with microprocessors
- NAMUR NE 43
  Standardization of the signal level for the breakdown information of digital transmitters with analog output signal.
- NAMUR NE 53
  Software of field devices and signal-processing devices with digital electronics
- NAMUR NE 105
  Specifications for integrating fieldbus devices in engineering tools for field devices
- NAMUR NE 107
  Self-monitoring and diagnosis of field devices
- NAMUR NE 131
  Requirements for field devices for standard applications

DRAFT

Ordering information

Detailed ordering information is available for your nearest sales organization www.addresses.endress.com or in the Product Configurator under www.endress.com :

1. Click Corporate
2. Select the country
3. Click Products
4. Select the product using the filters and search field
5. Open the product page

The Configuration button to the right of the product image opens the Product Configurator.

Product Configurator - the tool for individual product configuration
- Up-to-the-minute configuration data
- Depending on the device: Direct input of measuring point-specific information such as measuring range or operating language
- Automatic verification of exclusion criteria
- Automatic creation of the order code and its breakdown in PDF or Excel output format
- Ability to order directly in the Endress+Hauser Online Shop

Application packages

Many different application packages are available to enhance the functionality of the device. Such packages might be needed to address safety aspects or specific application requirements.

The application packages can be ordered with the device or subsequently from Endress+Hauser. Detailed information on the order code in question is available from your local Endress+Hauser sales center or on the product page of the Endress+Hauser website: www.endress.com.

Cleaning

Package	Description
Electrode cleaning circuit (ECC)	The electrode cleaning circuit (ECC) function has been developed to have a solution for applications where magnetite (Fe_3O_4) deposits frequently occur (e.g. hot water). Since magnetite is highly conductive this build up leads to measuring errors and ultimately to the loss of signal. The application package is designed to avoid build-up of very conductive matter and thin layers (typical of magnetite).

Diagnostics functions

Package	Description
Extended HistoROM	Comprises extended functions concerning the event log and the activation of the measured value memory. Event log: Memory volume is extended from 20 message entries (standard version) to up to 100 entries. Data logging (line recorder): ▪ Memory capacity for up to 1000 measured values is activated. ▪ 250 measured values can be output via each of the 4 memory channels. The recording interval can be defined and configured by the user. ▪ Measured value logs can be accessed via the local display or operating tool e.g. FieldCare, DeviceCare or Web server.

Heartbeat Technology

Package	Description
Heartbeat Verification +Monitoring	**Heartbeat Verification** Meets the requirement for traceable verification to DIN ISO 9001:2008 Chapter 7.6 a) "Control of monitoring and measuring equipment". ▪ Functional testing in the installed state without interrupting the process. ▪ Traceable verification results on request, including a report. ▪ Simple testing process via local operation or other operating interfaces. ▪ Clear measuring point assessment (pass/fail) with high test coverage within the framework of manufacturer specifications. ▪ Extension of calibration intervals according to operator's risk assessment. **Heartbeat Monitoring** Continuously supplies data, which are characteristic of the measuring principle, to an external condition monitoring system for the purpose of preventive maintenance or process analysis. These data enable the operator to: ▪ Draw conclusions - using these data and other information - about the impact process influences (such as corrosion, abrasion, buildup etc.) have on the measuring performance over time. ▪ Schedule servicing in time. ▪ Monitor the process or product quality, e.g. gas pockets.

Accessories

Various accessories, which can be ordered with the device or subsequently from Endress+Hauser, are available for the device. Detailed information on the order code in question is available from your local Endress+Hauser sales center or on the product page of the Endress+Hauser website: www.endress.com.

Device-specific accessories

For the transmitter

Accessories	Description
Promag 400 transmitter	Transmitter for replacement or storage. Use the order code to define the following specifications: ▪ Approvals ▪ Output/input ▪ Display/operation ▪ Housing ▪ Software For details, see Installation Instructions EA00104D

DRAFT

Display guard	Is used to protect the display against impact or scoring, for example from sand in desert areas. Order number: 71228792 Installation Instructions EA01093D
Connecting cable for remote version	Coil current and electrode cables, various lengths, reinforced cables available on request.
Ground cable	Set, consisting of two ground cables for potential equalization.
Post mounting kit	Post mounting kit for transmitter.
Compact → Remote conversion kit	For converting a compact device version to a remote device version.
Conversion kit Promag 50/53 → Promag 400	For converting a Promag with transmitter 50/53 to a Promag 400.

For the sensor

Accessory	Description
Ground disks	Are used to ground the medium in lined measuring tubes to ensure proper measurement. For details, see Installation Instructions EA00070D

Communication-specific accessories

Accessories	Description
Commubox FXA195 HART	For intrinsically safe HART communication with FieldCare via the USB interface. Technical Information TI00404F
Commubox FXA291	Connects Endress+Hauser field devices with a CDI interface (= Endress+Hauser Common Data Interface) and the USB port of a computer or laptop. Technical Information TI405C/07
HART Loop Converter HMX50	Is used to evaluate and convert dynamic HART process variables to analog current signals or limit values. ▪ Technical Information TI00429F ▪ Operating Instructions BA00371F
Wireless HART adapter SWA70	Is used for the wireless connection of field devices. The WirelessHART adapter can be easily integrated into field devices and existing infrastructures, offers data protection and transmission safety and can be operated in parallel with other wireless networks with minimum cabling complexity. Operating Instructions BA00061S
Fieldgate FXA42	Is used to transmit the measured values of connected 4 to 20 mA analog measuring devices, as well as digital measuring devices ▪ Technical Information TI01297S ▪ Operating Instructions BA01778S ▪ Product page: www.endress.com/fxa42

DRAFT

Field Xpert SMT70	The Field Xpert SMT70 tablet PC for device configuration enables mobile plant asset management in hazardous and non-hazardous areas. It is suitable for commissioning and maintenance staff to manage field instruments with a digital communication interface and to record progress. This tablet PC is designed as an all-in-one solution with a preinstalled driver library and is an easy-to-use, touch-sensitive tool which can be used to manage field instruments throughout their entire life cycle. ▪ Technical Information TI01342S ▪ Operating Instructions BA01709S ▪ Product page: www.endress.com/smt70
Field Xpert SMT77	The Field Xpert SMT77 tablet PC for device configuration enables mobile plant asset management in areas categorized as Ex Zone 1. ▪ Technical Information TI01418S ▪ Operating Instructions BA01923S ▪ Product page: www.endress.com/smt77

Service-specific accessories

Accessory	Description
Applicator	Software for selecting and sizing Endress+Hauser measuring devices: ▪ Choice of measuring devices with industrial requirements ▪ Calculation of all the necessary data for identifying the optimum flowmeter: e.g. nominal diameter, pressure loss, flow velocity and accuracy. ▪ Graphic illustration of the calculation results ▪ Determination of the partial order code, administration, documentation and access to all project-related data and parameters over the entire life cycle of a project. Applicator is available: ▪ Via the Internet: https://portal.endress.com/webapp/applicator ▪ As a downloadable DVD for local PC installation.
W@M	W@M Life Cycle Management Improved productivity with information at your fingertips. Data relevant to a plant and its components is generated from the first stages of planning and during the asset's complete life cycle. W@M Life Cycle Management is an open and flexible information platform with online and on-site tools. Instant access for your staff to current, in-depth data shortens your plant's engineering time, speeds up procurement processes and increases plant uptime. Combined with the right services, W@M Life Cycle Management boosts productivity in every phase. For more information, see: www.endress.com/lifecyclemanagement
FieldCare	FDT-based plant asset management tool from Endress+Hauser. It can configure all smart field units in your system and helps you manage them. By using the status information, it is also a simple but effective way of checking their status and condition. Operating Instructions BA00027S and BA00059S
DeviceCare	Tool for connecting and configuring Endress+Hauser field devices. Innovation brochure IN01047S
Commubox FXA291	Connects Endress+Hauser field devices with a CDI interface (= Endress +Hauser Common Data Interface) and the USB port of a computer or laptop. Technical Information TI00405C

System components

Accessories	Description
Memograph M graphic data manager	The Memograph M graphic data manager provides information on all the relevant measured variables. Measured values are recorded correctly, limit values are monitored and measuring points analyzed. The data are stored in the 256 MB internal memory and also on a SD card or USB stick. ▪ Technical Information TI00133R ▪ Operating Instructions BA00247R

DRAFT

Configuration summary

Mat. no.	Description Order code	Quantity	Unit
71215558	Promag W 400, 5W4C1H, DN100 4" 5W4C1H-C6ELHA0DHA1K0A+AA	1	ST

010	Approval:	C6	CSA C/US NI Cl.I Div.2 Gr. ABCD
011	Design:	E	Fixed flange
015	Power Supply:	L	AC 100...240V, AC/DC 24V
020	Output; Input:	H	4-20mA HART, pulse/freq., switch output
040	Housing:	A	Compact, alu, coated
045	Cable, Remote Version:	0	Not used
050	Electrical Connection:	D	Thread NPT1/2
060	Liner:	H	Hard rubber
070	Process Connection:	A1K	Cl.150, carbon steel, flange ASME B16.5
075	Electrodes:	0	1.4435/316L
080	Calibration Flow:	A	0.5%
500	>Operation Language Display:	AA	English

DRAFT

ITEM F-017D

Device details

Product name	Promag, grounding disc/protection disc
Extended order code	DK5GD-1HAHL
Product status	No Information available

Configuration

Characteristic	Value	Description	TSP-No.	Marking Mat.
Nominal Diameter:	1HA	DN100 4", 1.4435/316L	-	-
Liner:	H	Hard rubber	-	-
Process Connection:	L	Cl.150 ANSI B16.5	-	-

DRAFT

3E	3N	3B
		
1" to 3" NPT	#10 Machine Screws from Underside	3/8" - 18NPT, 5/8" - 18UNF, 5/8" - 24UNEF
1 thru 7	1 thru 3	1
Series 3E fittings are cast metal, pressure-tight assemblies capable of handling 1-7 probes. Attachment to vessels is accomplished with external pipe threading. 3E Fittings require the use of 3R rigid or 3W wire suspended electrodes.	Series 3N fittings accommodate 1-3 probes operating at atmospheric pressure. The assembly mounts on a flat surface atop open tanks or closed vessels. 3N Fittings require the use of 3R rigid or 3W wire suspended electrodes.	Series 3B fittings are compact pressure tight assemblies that hold a single electrode probe for use in water and chemicals. These fittings incorporate a 1/4-20 female thread that must be combined with a Series 3R (rigid rod electrode) or Series 3W/3Y (wire suspended electrode) to make a complete assembly.
Die-cast aluminum, epoxy coated	Die-cast aluminum, epoxy coated	—
Cast iron, red brass, 316 stainless steel	PVC, red brass, 316 stainless steel	316 stainless steel
Teflon®	Teflon®	Teflon®
125 psig @ 353°F (cast iron) 250 psig @ 406°F (brass, 316 S.S.)	0 psig @ 150°F (PVC) 0 psig @ 500°F (brass, 316 S.S.)	250 psig @ 406°F 500 psig @ 75°F
U.L. File #MP2489, Vol. 1 Sec. 1; CSA	CSA File #LR11644	U.L. File #MP2489, Vol. 1 Sec. 1; CSA

	No. of Probes	Attachment to Vessel	Conduit Boss Thread Size	Terminal Housing Size (W" x D" x H")
3E	1	1" NPT	1/2" NPT	2-1/4 x 2-1/4 x 2-1/4
	2-3	2" NPT	1/2" NPT	3-1/4 x 3-1/4 x 2-3/8
	4	2-1/2" NPT	1/2" NPT	3-1/4 x 3-1/4 x 2-3/8
	5-7	3" NPT	3/4" NPT	4 x 4 x 2-1/2
3N	1-3	2-1/4" square flat pad, 1-1/2" dia. hole in top of vessel secured with #10 machine screws at the corners of a 1-1/2" square	1/2" NPT	2-1/4 x 2-1/4 x 2-1/4

3E X X

Series
3E

Number of Probes
1 thru **7**

Body Material
A – Cast Iron
B – Red Brass
C – 316 Stainless Steel

3N X X

Series
3N

Number of Probes
1 thru **3**

Body Material
A – PVC
B – Red Brass
C – 316 Stainless Steel

3B X B

Series
3B

Thread
1 – 3/8" - 18 NPT
2 – 5/8" - 18 UNF
3 – 5/8" - 24 UNEF

Metal Parts
B – 316 Stainless Steel

3R, 3W[1]	3R, 3W[1]	3R solid rod (up to 4') 3W[1] or 3Y[2] (greater than 4')

Custom options available. Consult factory.

DRAFT

Gems Sensors & Controls

Series 16 Modules
Controls – Solid State Plug-In Modules

- Compact Size
- Modular Plug-in Design
- Various Time Delays
- Low Voltage Sensor
- Solid State Reliability
- LED Monitoring
- U.L. "Motor Control"



Series 16M/16HM



Series 16DM/16VM

Series 16M – General Purpose Control

• New Microprocessor Design

Designed for either differential or single-level service. U.L. "Motor Controller" listing, 8 pin socket with screw-type connections make the unit easy to install and service. Sensitivity of up to 1 million ohm/cm.

Series 16HM – High Sensitivity Control

Series 16HM is similar to Series 16M but provides higher sensitivity up to 5.5 million ohm/cm. Probe voltage is 12 VDC for applications with low conductive media.

Series 16DM – DPDT Load Contact

Similar to Series 16M but with DPDT load contacts. Eliminates the need for slave relays. 11 pin octal plugs. Requires little panel space. General purpose single-level or differential applications. U.L. listed.

Series 16VM – Field Selectable Sensitivity

Similar to Series 16M but with the added flexibility of field adjustable sensitivity, made possible through external setpoint resistors. Uses 11pin octal socket. U.L. listed.

Specifications

Contact Design	
Series 16M & 16HM	1 N.O. & 1 N.C. (1 form C)
Series 16DM	2 N.O. & 2 N.C. (2 form C)
Series 16VM	1 N.O. & 1 N.C. (1 form C)
Contact Rating (120. 240 VAC)	
Series 16M & 16HM	10 amp Resistive 1/3 hp
Series 16DM	5 amp Resistive 1/10 hp
Series 16VM	10 amp Resistive 1/3 hp
Mode of Operation	Direct/Inverse, factory set
Sensitivity	
Series 16M	0-1M ohm, factory set
Series 16HM	0-5.5M ohm, factory set
Series 16DM	0-1M ohm, factory set
Series 16VM	0-1M ohm, field adjustable
Primary Voltage	24 VAC, 120 VAC, 240 VAC (+10%/-15%) 208/240: 187 V min. to 255 V max. VAC 50/60 Hz
Secondary Voltage	
Series 16M	12 VAC, 1.5 mA
Series 16HM	12 VDC
Series 16DM & 16VM	12 VAC, 1.5 mA
Temperature	-40°F to +150°F (-40°C to +65°C)
Approvals	U.L. 508 File #E44426
Terminal Style	Screw connector
Options	Time Delays

Applications

- Single-Level Service
- Point Level
- Valve Control
- Differential Service
- Alarms
- Pump Control

Dimensions

Series 16M & 16HM

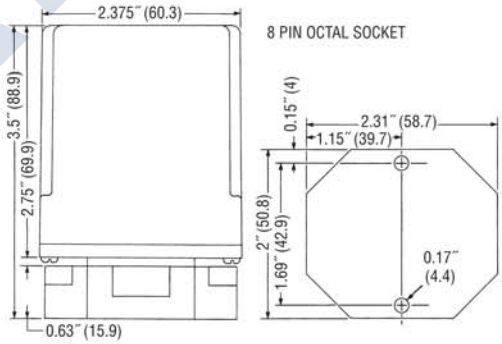

Series 16DM & 16VM

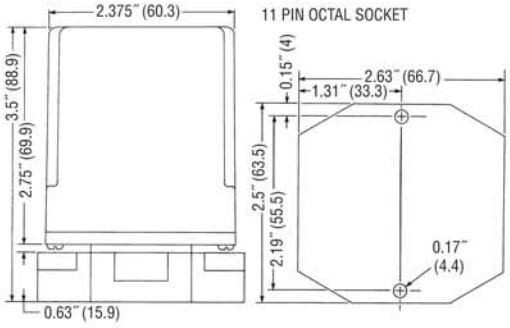

Note: Controls also available with DIN mount socket.

DRAFT

Wiring

Series 16M & 16HM

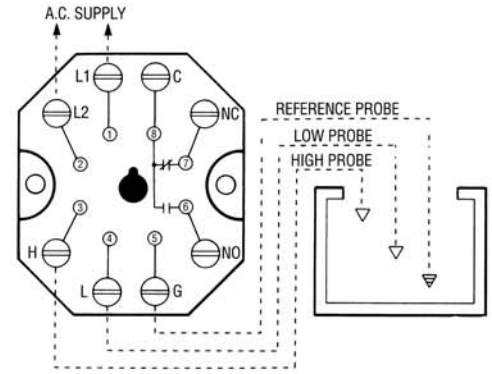

Note: For single level service, use "H" and "G" connections.

Series 16DM

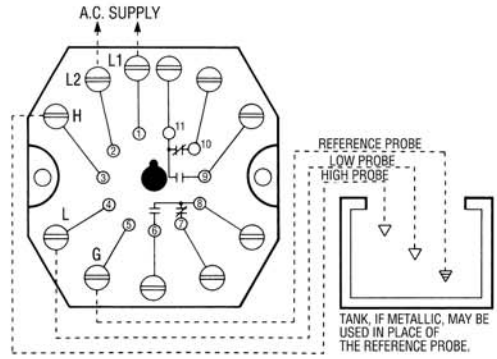

Series 16VM

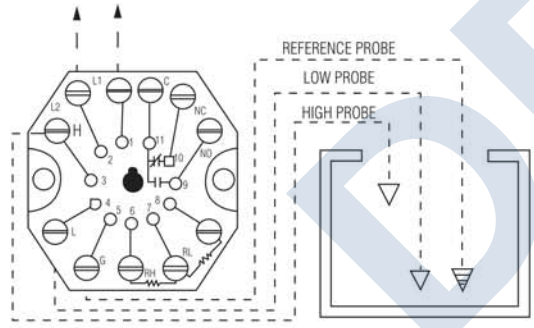

Variable Sensitivity Option

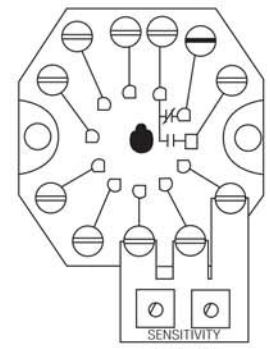

Part number 16Z1VG Potentiometer Board available for 16VM only. Consult factory.

How to Order

Use the **Bold** characters from the chart below to construct a product code.

16M Series – Microprocessor Version

16M **X** **X** **X** **X** **X** **XX** **XX**

1. Series
   16M General Purpose;
2. Mode of Operation

Direct		Inverse	
A – 4.7K	**E** – 100K	**K** – 4.7K	**P** – 100K
B – 10K	**F** – 470K	**L** – 10K	**R** – 470K
C – 26K	**G** – 1M	**M** – 26K	**S** – 1M
D – 50K		**N** – 50K	

3. Supply Voltage
   1 120 VAC; **2** 240 VAC; **3** 24 VAC; **8** 208/240 VAC
4. Socket Style*
   A 8 Pin Octal **M** Module Only
   B 8 Pin DIN
5. Enclosure
   0 None; **1** NEMA 1; **4** NEMA 4
6. Time Delay (increasing level) Option
   00-90 seconds
   Blank 0 seconds
7. Time Delay (decreasing level) Option
   00-90 seconds
   Blank 0 seconds
8. Time Out Option
   See page E-11, Chart A

*See page E-11 for descriptions.

16 HM, 16DM or 16VM Series

16HM **X** **X** **X** **X** **XX** **XX**

1. Series
   16HM High Sensitivity;
   16DM DPDT Load Contact;
   16VM Field Selectable Sensitivity[1]
2. Mode of Operation[2]

Direct		Inverse	
A – 4.7K[4]	**F** – 470K[4]	**K** – 4.7K[4]	**R** – 470K[4]
B – 10K[4]	**G** – 1M[4]	**L** – 10K[4]	**S** – 1M[4]
C – 26K[4]	**H** – 3M[3]	**M** – 26K[4]	**T** – 3M[3]
D – 50K[4]	**J** – 5.5M[3]	**N** – 50K[4]	**W** – 5.5M[3]
E – 100K[4]	**Y** – 0-700K[5, 7]	**P** – 100K[4]	**Z** – 0-700K[5, 7]

3. Supply Voltage
   1 120 VAC; **2** 240 VAC; **3** 24 VAC; **8** 208/240 VAC
4. Socket Style
   A 8 Pin Octal (16M & 16HM), 11 Pin Octal (16DM & 16VM);
   B DIN Mount; **M** None, Module Only[6]
5. Enclosure
   0 None; **1** NEMA 1; **4** NEMA 4
6. Time Delay (increasing level) Option
   01-20 seconds; **0V** variable (16VM only)
7. Time Delay (decreasing level) Option
   01-20 seconds; **0V** variable (16VM only)

Notes:
1. 16VM select modes **A**, **K**, **Y** or **Z** only.
2. 16HM & 16DM only. Series 16VM includes full set of the resistors listed above. Specify a sensitivity to determine mode of operation.
3. 16VM only.
4. All Series except 16HM.
5. 16VM only.
6. Socket style M requires enclosure **0** – None.
7. Mounting style A (11 pin octal only)

Socket Details and Option Availability are located on web site.

DRAFT

Gems Sensors & Controls

Sockets and Standoffs – 16, 26 and DF Series Only



Sockets

Warrick provides four different types of sockets for use with plug-in control modules.

8-PIN OCTAL SOCKET

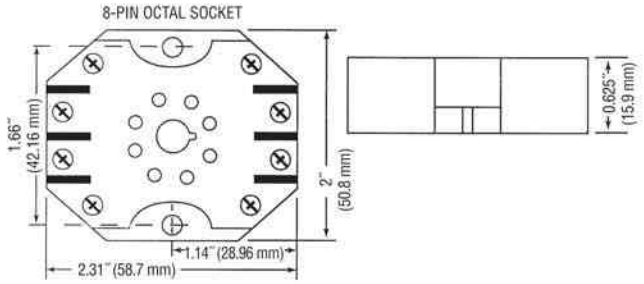

8-PIN DIN SOCKET

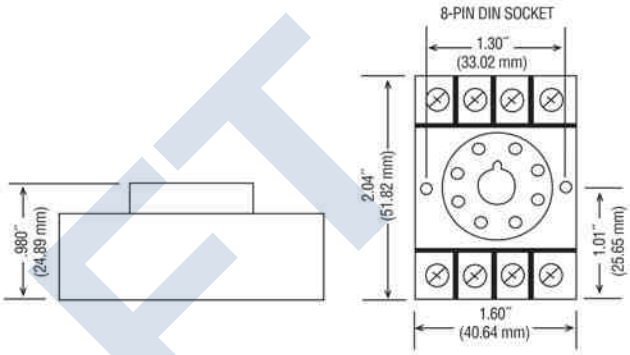

11-PIN OCTAL SOCKET

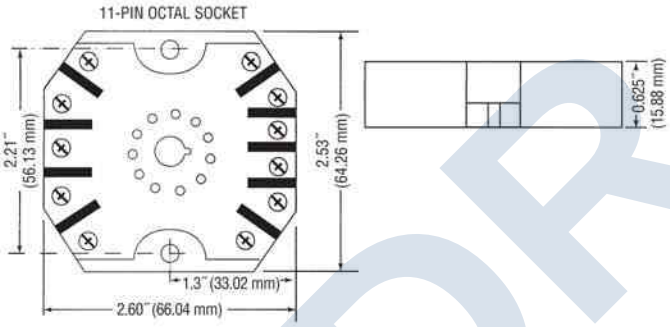

11-PIN DIN SOCKET

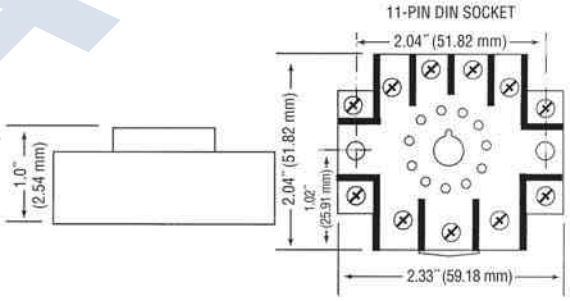

Standoffs

Warrick provides four different types of standoffs designed to connect circuit boards to panels.

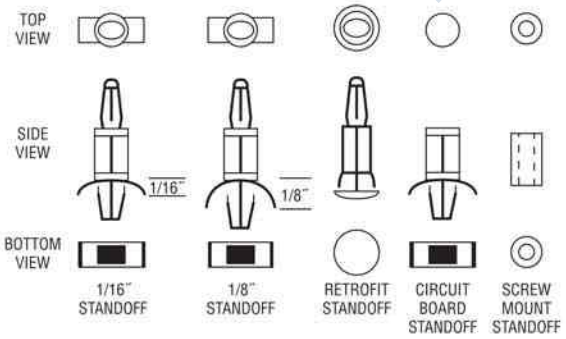

DRAFT

Optional Character Reference – 16, 26 and DF Series Only

Manual Reset

Available on Series 26, 26M and DF controls

(Normally closed pushbutton across reset terminals. Pushbutton ordered separately): Manual reset only applies to the function associated with terminal LLCO. When the liquid rises to the electrode on terminal LLCO, the control will remain de-energized (load contacts in original state) until the pushbutton is depressed. The control will then energize, (LED will be lit) changing the state of the contacts. The control remains energized until the liquid level recedes below electrode on terminal LLCO. The control then de-energizes, (LED will go off) returning load contacts to their original state. Unless otherwise specified, there is a three second time delay on decreasing level. Liquid must be below probe on terminal LLCO for full three seconds before control de-energizes.

Manual Reset with Power Outage Feature

Available on Series 26, 26M, and DF controls

Reset (Normally closed pushbutton across reset terminals. Pushbutton ordered separately) Control will ignore power loss to control. With liquid in contact with electrode on terminal LLCO, a power outage will cause the control to de-energize, but will automatically energize upon return of power. However, loss of liquid will cause control to de-energize and remain so until liquid again rises to electrode and pushbutton is depressed.

Time Delays Associated with Terminals H and L

Available on Series 16, 16M, and DF controls

With time delay on increasing level, the liquid must be in contact with the high electrode for the full duration of the time delay before control will operate. With delay on decreasing level, the liquid must be below the low electrode for the full duration of the time delay before control will operate. In single level service, terminals 3 and 4 must be jumpered together to achieve time delays on both increasing and decreasing levels or just decreasing level.

Time Delays Associated with Terminal LLCO

Available on Series 26, 26M, and DF controls

3 Second time delay on decreasing level is standard. Delay up to 90 seconds, can be specified and would act in the same manner as listed above.

Time Out Option

Available on Series 16, 16M, and DF controls

The latching circuit for the high and low electrode has an optional timer. In some applications the High or Low electrode may become short circuited or disconnected. Such an occurrence may potentially over fill in fill applications, or cause the pump to run dry in pump down applications. The time option is custom programmed up to 3 minutes. When a fault condition occurs, the FILL LED will have a blink sequence of .5 seconds on 2 seconds off. See Chart A for time delay options.

Test Feature

Available on Series 26, 26M, and DF controls

Allows LLCO circuit to be tested. Holding down the reset button for 3 seconds will allow the LLCO circuit to trip which simulates the loss of water, without the need of draining the water level in the boiler. The control will return to normal operation once the reset button is pressed a second time. (Test feature option only available with the manual reset function.)

Chart A – Time Out Option

Optional Character	Time Out (in seconds)					
	30	60	90	120	150	180
A						
B	•					
C		•				
D			•			
E				•		
F					•	
G						•
K	•					
L		•				
M			•			
N				•		
P					•	
Q						•

Chart B – Optional Character Information

Option Components					Control Series	Optional Character
Reset Function	Normally Closed Pushbutton*	Power Outage	Retrofit Plate	Test Feature		
•					DF "LLCO"	D
	•				26, 26M, 26NM	C
		•			26, 26M, 26NM	E
			•		16, 16D, 26, DF	R
•	•				DF "LLCO"	S
•		•			DF "LLCO"	K
•			•		DF	W
•				•	26, 26M, 26NM, DF"LLCO"	B
	•	•			26, 26M, 26NM	F
		•	•		26	N
•	•	•			DF "LLCO"	G
•	•		•		DF	T
•	•			•	26, 26M, 26NM, DF"LLCO"	Y
•		•	•		DF	L
•		•		•	26, 26M, 26NM, DF"LLCO"	Z
	•	•	•		26	P
•	•	•	•		DF	J
•	•	•		•	26, 26M, 26NM, DF"LLCO"	A
No options						X

* N.C. pushbutton when purchased in conjunction with open control must be remotely mounted by customer

RAFT

PI2307

Flush pressure sensor with display

PI-001BREZ02-MFRKG/US/ /P

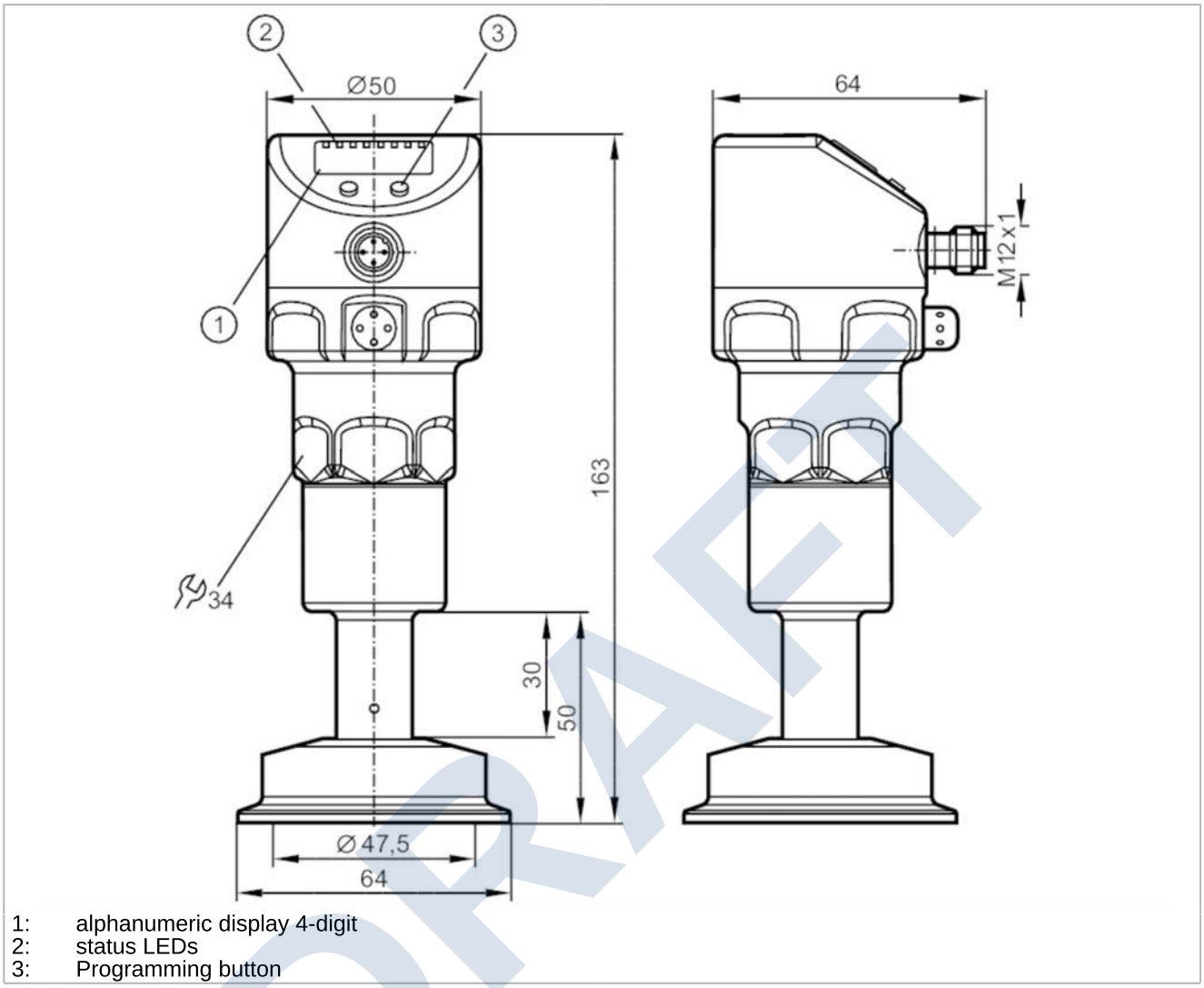

1: alphanumeric display 4-digit
2: status LEDs
3: Programming button

EC 1935/2004 EHEDG Certified FCM IO-Link

Application			
Application		hygienic systems	
Media		viscous media and liquids with suspended particles; liquids and gases	
Medium temperature	[°C]	-25...200; (-25...160 °C; Ambient temperature > 65 °C)	
Pressure rating		10000 mbar	145 psi
Min. bursting pressure		30000 mbar	435 psi
Type of pressure		relative pressure	
Electrical data			
Min. insulation resistance	[MΩ]	100; (500 V DC)	
Protection class		III	
Reverse polarity protection		yes	
Integrated watchdog		yes	

DRAFT

PI2307

Flush pressure sensor with display

PI-001BREZ02-MFRKG/US/ /P

2-wire			
Operating voltage	[V]	20...32 DC	
Current consumption	[mA]	3.6...21	
Power-on delay time	[s]	1	
3-wire			
Operating voltage	[V]	18...32 DC	
Current consumption	[mA]	< 45	
Power-on delay time	[s]	0.5	
Inputs / outputs			
Number of inputs and outputs		Number of digital outputs: 2; Number of analog outputs: 1	
Outputs			
Total number of outputs		2	
Output signal		switching signal; analog signal; IO-Link; (configurable)	
Electrical design		PNP/NPN	
Number of digital outputs		2	
Output function		normally open / closed; (configurable)	
Number of analog outputs		1	
Analog current output	[mA]	4...20, invertible; (scalable)	
Short-circuit protection		yes	
Type of short-circuit protection		yes (non-latching)	
Overload protection		yes	
2-wire			
Max. load	[Ω]	300	
3-wire			
Max. voltage drop switching output DC	[V]	2	
Permanent current rating of switching output DC	[mA]	250	
Switching frequency DC	[Hz]	125	
Max. load	[Ω]	(Ub - 10 V) / 20 mA	
Measuring/setting range			
Measuring range		-50...1000 mbar	-0.73...14.5 psi
Set point SP		-48...1000 mbar	-0.7...14.5 psi
Reset point rP		-50...998 mbar	-0.73...14.47 psi
Analog start point		-50...750 mbar	-0.73...10.88 psi
Analog end point		200...1000 mbar	2.9...14.5 psi
in steps of		1 mbar	0.01 psi
Factory setting			SP1 = 250 mbar / rP1 = 230 mbar
			SP2 = 750 mbar / rP2 = 730 mbar
			ASP = 0 mbar / AEP = 1000 mbar
Accuracy / deviations			
Switch point accuracy		< ± 0,2; (Turn down 1:1)	

DRAFT

PI2307

Flush pressure sensor with display

PI-001BREZ02-MFRKG/US/ /P

	[% of the span]	
Repeatability	[% of the span]	< ± 0,1; (with temperature fluctuations < 10 K; Turn down 1:1)
Characteristics deviation	[% of the span]	< ± 0,2; (Turn down 1:1 linearity, incl. hysteresis and repeatability limit value setting to DIN 16086)
Linearity deviation	[% of the span]	< ± 0,15; (Turn down 1:1)
Hysteresis deviation	[% of the span]	< ± 0,15; (Turn down 1:1)
Long-term stability	[% of the span]	< ± 0,1; (Turn down 1:1; per year)
Temperature coefficient zero point	[% of the span / 10 K]	< ± 0,3; (0...200 °C)
Temperature coefficient span	[% of the span / 10 K]	< ± 0,15; (0...200 °C)
Reaction times		
Damping for the switching output dAP	[s]	0...30
Damping for the analog output dAA	[s]	0.01...99.99
2-wire		
Step response time analogue output	[ms]	45
3-wire		
Min. response time of switching output (dAP)	[ms]	3
Step response time analogue output	[ms]	7
Interfaces		
Communication interface		IO-Link
Transmission type		COM2 (38,4 kBaud)
IO-Link revision		1.0
SDCI standard		IO-Link Communication Specification, Version 1.0, January 2009, Ordner No: 10.002
IO-Link device ID		106 d / 00 00 6A h
Profiles		no profile
SIO mode		yes
Required master port class		A
Process data analogue		1
Process data binary		2
Min. process cycle time	[ms]	2.3
Operating conditions		
Ambient temperature	[°C]	-25...80
Note on ambient temperature		-25...60 °C Medium temperature: > 160 °C
Storage temperature	[°C]	-25...100
Protection		IP 67; IP 68; IP 69K

DRAFT

PI2307

Flush pressure sensor with display

PI-001BREZ02-MFRKG/US/ /P

Tests / approvals			
EMC		DIN EN 61000-6-2	
		DIN EN 61000-6-3	
Shock resistance		DIN EN 60068-2-27	50 g (11 ms)
Vibration resistance		DIN EN 60068-2-6	20 g (10...2000 Hz)
MTTF	[years]	142	
Note on approval		Including free 6-point calibration certificate.	
Mechanical data			
Weight	[g]	1059.4	
Material		stainless steel (1.4404 / 316L); stainless steel (1.4435 / 316L); PBT; PEI; PFA	
Materials (wetted parts)		stainless steel (1.4435 / 316L)	
Min. pressure cycles		10 million	
Process connection		Clamp DN 51 / 2"	
Surface characteristics Ra/Rz of the wetted parts		< 0.38 / -	
Fill fluid for pressure transfer		medical white oil (suited for use in food applications, FDA compliant)	
Diaphragm diameter	[mm]	47.5	
Displays / operating elements			
Display		Display unit	LED, green
		Switching status	LED, yellow
		Function display	alphanumeric display, 4-digit
		Measured values	alphanumeric display, 4-digit
Display unit		mbar; kPa; psi; inH2O; mWS; % of the span	
Remarks			
Pack quantity		1 pcs.	

Electrical connection

Connector: 1 x M12; Contacts: gold-plated

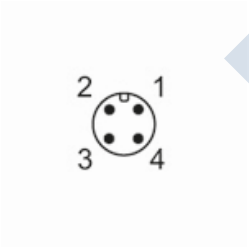

DRAFT

PI2307

Flush pressure sensor with display

PI-001BREZ02-MFRKG/US/ /P

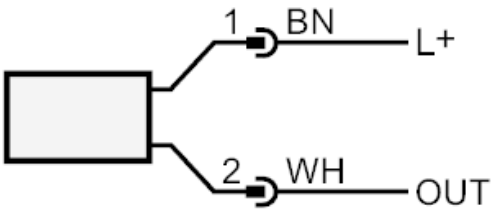

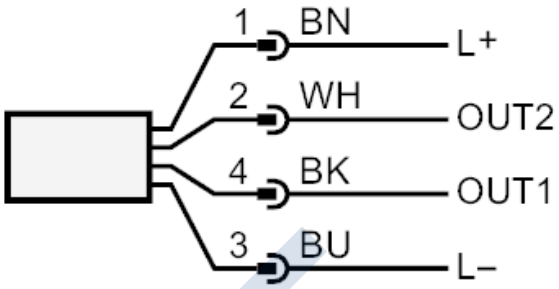

	connection for 2-wire operation :
OUT	analog output
	connection for 3-wire operation :
OUT1	Switching output
	IO-Link
OUT2	Switching output
	analog output
	Colours to DIN EN 60947-5-2
	Core colors :
BK =	black
BN =	brown
BU =	blue
WH =	white

DRAFT

EVT006

Connecting cable with socket

ADOAH040VAS0025E04

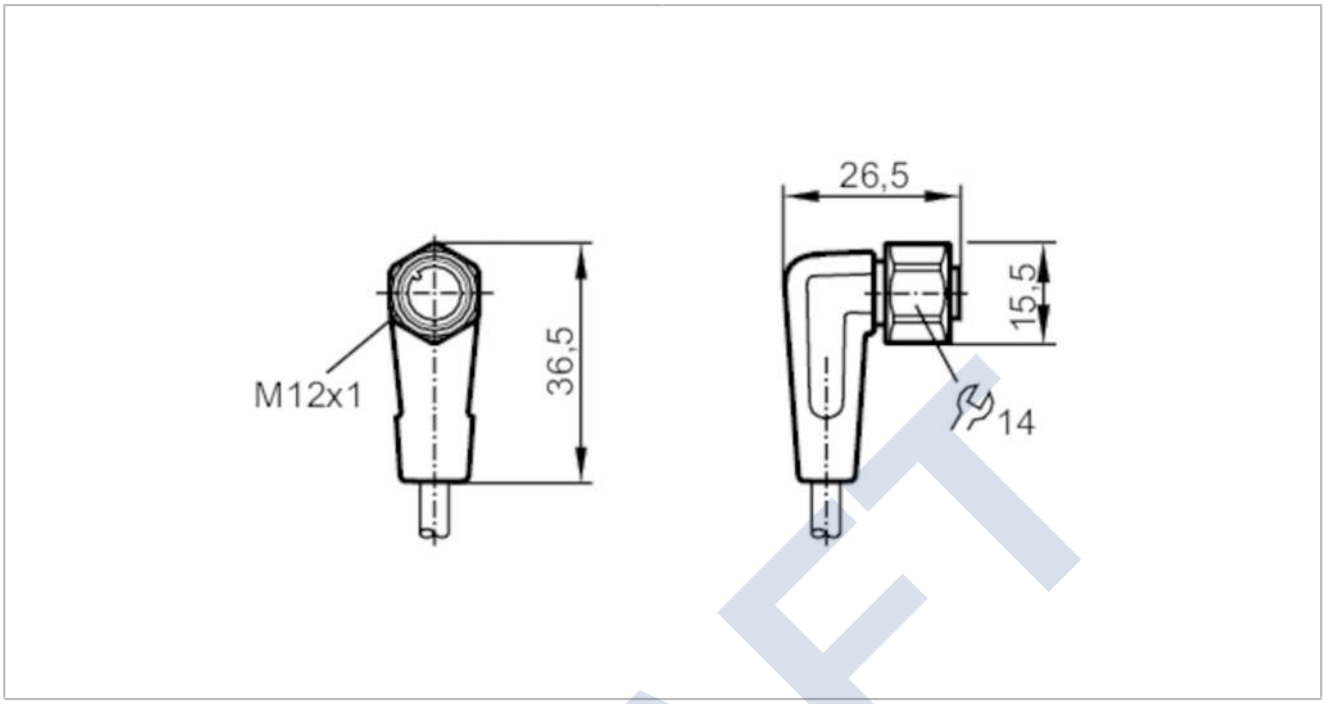

DRAFT

Application		
Application		hygienic and wet areas in the food industry
Free from silicone		yes
Electrical data		
Operating voltage	[V]	< 250 AC / < 300 DC
Protection class		II
Max. current load total	[A]	4
Operating conditions		
Ambient temperature	[°C]	-25...100
Note on ambient temperature		cULus: ...50
Ambient temperature (moving)	[°C]	5...100
Note on ambient temperature (moving)		cULus: ...50
Protection		IP 65; IP 67; IP 68; IP 69K

EVT006

Connecting cable with socket

ADOAH040VAS0025E04

Mechanical data			
Weight	[g]	916.4	
Dimensions	[mm]	26.5 x 15.5 x 36.5	
Materials		housing: PVC orange; Sealing: EPDM	
Material nut		stainless steel (1.4404 / 316L)	
Drag chain suitability		bending radius for flexible use	min. 10 x cable diameter
		travel speed	max. 3.3 m/s for a horizontal travel length of 5 m and max. acceleration of 5 m/s²
		bending cycles	> 1 Mio.
		torsional strain	± 180 °/m
Drag chain suitability		yes	

Remarks		
Pack quantity		1 pcs.

Electrical connection

Cable: 25 m, PVC, orange, Ø 4.9 mm; 4 x 0.34 mm² (42 x Ø 0.1 mm)

Electrical connection - socket

Connector: 1 x M12, angled; Locking: stainless steel (1.4404 / 316L); Contacts: gold-plated; Tightening torque: 0.6...1.5 Nm

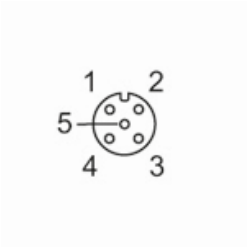

Connection

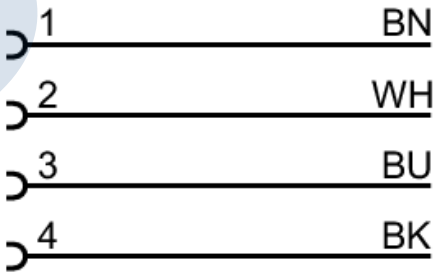

	Core colours :
BK =	black
BN =	brown
BU =	blue
WH =	white

DRAFT

SAGINAW CONTROL & ENGINEERING
Your Enclosure Source ®

STAINLESS STEEL ENVIROLINE® SERIES WALL-MOUNT ENCLOSURES WITH 3-POINT HARDWARE

Application
Designed to house electrical and electronic controls, instrumentation and components in indoor or outdoor locations. For outdoor applications a drip shield is recommended. For installation information, consult our installation manual at www.saginawcontrol.com.

Construction
- 0.075" stainless steel Type 304 & 316/316L.
- Seams continuously welded and ground smooth.
- Flange trough collar around all sides of door opening.
- Collar studs provided for mounting optional sub-panels.
- Mounting holes in back of the enclosure for wall-mounting.
- Mounting hardware, sealing washers and hole plugs included.
- Stainless steel concealed hinges.
- Removable and interchangeable doors.
- Black zinc die cast keylocking/padlocking handles.
- 3-point latching mechanism.
- Black quarter turn latches as required.
- Removable print pocket.
- Pour in place oil and water resistant gasket.
- Ground stud on door and body.

Finish
#4 brushed finish on all exterior surfaces. Optional sub-panels powder coated white.

IS6 Industry Standards
NEMA Type 3R, 4, 4X, 12 & Type 13
UL Listed Type 3R, 4, 4X & 12
CSA Type 3R, 4, 4X & 12
IEC 60529 IP66

***To maintain Type 3R listing, drainage is required. Install equally rated drainage device or drill a 1/8 to 1/4 inch hole in the bottom center of the enclosure, approximately 1 inch from the right, and 1 inch from the left for drainage, use listed rain-tight or wet location hubs. Drip shield over the door is recommended for all outdoor applications.

304 STAINLESS STEEL

Enclosure Product Code S9					Sub-Panel (P3`)		
Catalog No.	Height (A)	Width (B)	Depth (C)	Industry Standard	Catalog No.	Panel Height (D)	Panel Width (E)
SCE-24EL2010SSLPPL	24.00	20.00	10.00	IS6	SCE-24P20	21.00	17.00
SCE-24EL2410SSLPPL	24.00	24.00	10.00	IS6	SCE-24P24	21.00	21.00
SCE-30EL2412SSLPPL	30.00	24.00	12.00	IS6	SCE-30P24	27.00	21.00
SCE-30EL3012SSLPPL	30.00	30.00	12.00	IS6	SCE-30P30	27.00	27.00
SCE-36EL2412SSLPPL	36.00	24.00	12.00	IS6	SCE-36P24	33.00	21.00
SCE-36EL3012SSLPPL	36.00	30.00	12.00	IS6	SCE-36P30	33.00	27.00
SCE-36EL3612SSLPPL	36.00	36.00	12.00	IS6	SCE-36P30	33.00	27.00
SCE-42EL3612SSLPPL	42.00	36.00	12.00	IS6	SCE-42P36	39.00	33.00
SCE-48EL3612SSLPPL	48.00	36.00	12.00	IS6	SCE-48P36	45.00	33.00
SCE-48EL3616SSLPPL	48.00	36.00	16.00	IS6	SCE-48P36	45.00	33.00
SCE-60EL3612SSLPPL	60.00	36.00	12.00	IS6	SCE-60P36	57.00	33.00
SCE-60EL3616SSLPPL	60.00	36.00	16.00	IS6	SCE-60P36	57.00	33.00
SCE-60EL3624SSLPPL	60.00	36.00	24.00	IS6	SCE-60P36	57.00	33.00
SCE-72EL3624SSLPPL	72.00	36.00	24.00	IS6	SCE-72P36	69.00	33.00

316 STAINLESS STEEL

Enclosure Product Code S9					Sub-Panel (P3`)		
Catalog No.	Height (A)	Width (B)	Depth (C)	Industry Standard	Catalog No.	Panel Height (D)	Panel Width (E)
SCE-24EL2010SS6LPPL	24.00	20.00	10.00	IS6	SCE-24P20	21.00	17.00
SCE-24EL2410SS6LPPL	24.00	24.00	10.00	IS6	SCE-24P24	21.00	21.00
SCE-30EL2412SS6LPPL	30.00	24.00	12.00	IS6	SCE-30P24	27.00	21.00
SCE-30EL3012SS6LPPL	30.00	30.00	12.00	IS6	SCE-30P30	27.00	27.00
SCE-36EL2412SS6LPPL	36.00	24.00	12.00	IS6	SCE-36P24	33.00	21.00
SCE-36EL3012SS6LPPL	36.00	30.00	12.00	IS6	SCE-36P30	33.00	27.00
SCE-42EL3612SS6LPPL	42.00	36.00	12.00	IS6	SCE-42P36	39.00	33.00
SCE-48EL3612SS6LPPL	48.00	36.00	12.00	IS6	SCE-48P36	45.00	33.00
SCE-60EL3612SS6LPPL	60.00	36.00	12.00	IS6	SCE-60P36	57.00	33.00



DRAFT

www.saginawcontrol.com • 95 Midland Rd, Saginaw MI 48638 • Phone: 989-799-6871 Fax: 989-799-4524

SAGINAW CONTROL & ENGINEERING
Your Enclosure Source ®

STAINLESS STEEL ENVIROLINE® SERIES WALL-MOUNT ENCLOSURES WITH 3-POINT HARDWARE
TECHNICAL DATA

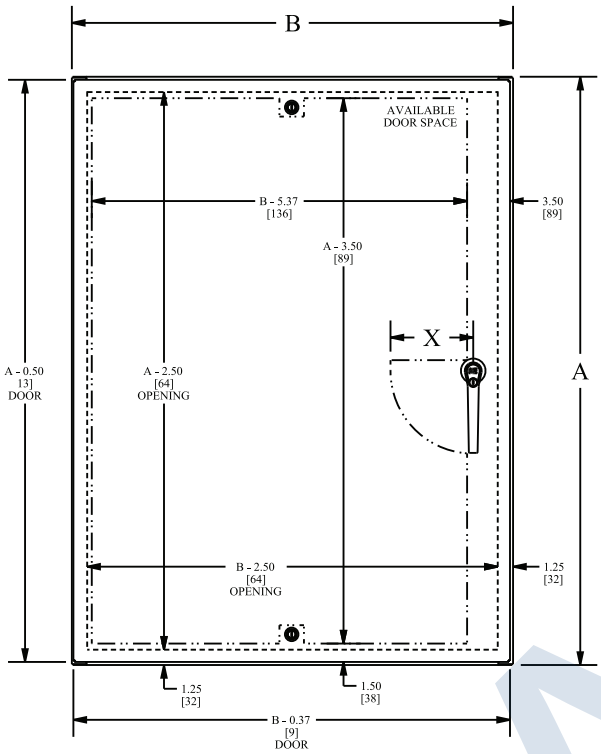

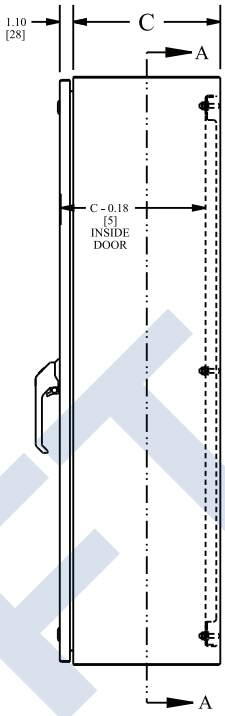

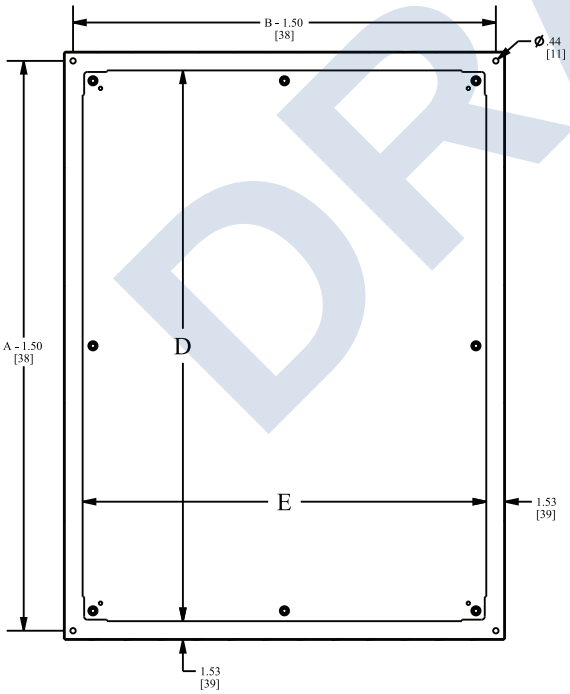

LATCH NOTES:

OMIT CENTER LATCH TOP AND BOTTOM OF DOOR WHEN DOOR WIDTH IS < 30.00 [762]

HANDLE NOTES:

WHEN ENCLOSURE HEIGHT <= 42.00 [1067] "X" = 5.50 [140]

WHEN ENCLOSURE HEIGHT > 42.00 [1067] "X" = 6.75 [172]

DRAFT

SAGINAW CONTROL & ENGINEERING
Your Enclosure Source®

STAINLESS STEEL ENVIROLINE ® SERIES TWO-DOOR ENCLOSURES FOR FLANGE-MOUNTED DISCONNECTS

Application
Designed to house most standard type disconnects. For outdoor application a drip shield is recommended. For installation information, consult our Installation Manual at www.saginawcontrol.com.

Construction
- 0.104" stainless steel Type 304 & 316/316L.
- Seams continuously welded and ground smooth.
- Pour in place oil and water resistant gasket.
- Flange trough collar around all sides of door opening.
- Stainless steel concealed hinges.
- Removable and interchangeable doors.
- 3-point latching mechanism.
- Black quarter turn latches as required.
- Removable print pocket on main door of disconnect enclosures.
- Lifting eyes for easy handling.
- Ground studs on door and body.
- Collar studs provided for mounting optional sub-panels.
- 15" removable floor stands.
- Removable center post.
- Mechanical interlock.
- No door stiffeners required.
- Black zinc die cast coinproof/padlocking handle on main door of disconnect enclosures.
- Black zinc die cast padlocking handle on all other doors.
- Provisions for light kit.

Finish
#4 brushed finish on all exterior surfaces. Optional sub-panels powder coated white.

Disconnect switch (or circuit breaker) and operating mechanism are not furnished with this enclosure

IS6 Industry Standards
NEMA Type 3R, 4, 4X, 12 & Type 13
UL Listed Type 3R, 4, 4X & 12
CSA Type 3R, 4, 4X & 12
IEC 60529 IP66

***To maintain Type 3R listing, Drainage is required. Install equally rated drainage device or drill a 1/8 to 1/4 inch hole in the bottom center of the enclosure, approximately 1 inch from the right, and 1 inch from the left for drainage, use listed rain-tight or wet location hubs. Drip shield over the door is recommended for all outdoor applications.

304 STAINLESS STEEL

Enclosure Product Code S4					Sub-Panel (P3)		
Catalog No.	Height (A)	Width (B)	Depth (C)	Industry Standard	Catalog No.	Panel Height (D)	Panel Width (E)
SCE-60XEL4912SSLP	60.00	49.00	12.00	IS6	SCE-60P48	56.00	44.00
SCE-60XEL4918SSLP	60.00	49.00	18.00	IS6	SCE-60P48	56.00	44.00
SCE-60XEL6112SSLP	60.00	61.00	12.00	IS6	SCE-60P60	56.00	56.00
SCE-60XEL6118SSLP	60.00	61.00	18.00	IS6	SCE-60P60	56.00	56.00
SCE-72XEL6112SSLP	72.00	61.00	12.00	IS6	SCE-72P60	68.00	56.00
SCE-72XEL6118SSLP	72.00	61.00	18.00	IS6	SCE-72P60	68.00	56.00
SCE-72XEL7312SSLP	72.00	73.00	12.00	IS6	SCE-72P72	68.00	68.00
SCE-72XEL7318SSLP	72.00	73.00	18.00	IS6	SCE-72P72	68.00	68.00
SCE-72XEL7324SSLP	72.00	73.00	24.00	IS6	SCE-72P72	68.00	68.00

316 STAINLESS STEEL

Enclosure Product Code S4					Sub-Panel (P3)		
Catalog No.	Height (A)	Width (B)	Depth (C)	Industry Standard	Catalog No.	Panel Height (D)	Panel Width (E)
SCE-60XEL4912SS6LP	60.00	49.00	12.00	IS6	SCE-60P48	56.00	44.00
SCE-60XEL4918SS6LP	60.00	49.00	18.00	IS6	SCE-60P48	56.00	44.00
SCE-60XEL6112SS6LP	60.00	61.00	12.00	IS6	SCE-60P60	56.00	56.00
SCE-60XEL6118SS6LP	60.00	61.00	18.00	IS6	SCE-60P60	56.00	56.00
SCE-72XEL6112SS6LP	72.00	61.00	12.00	IS6	SCE-72P60	68.00	56.00
SCE-72XEL6118SS6LP	72.00	61.00	18.00	IS6	SCE-72P60	68.00	56.00
SCE-72XEL7312SS6LP	72.00	73.00	12.00	IS6	SCE-72P72	68.00	68.00
SCE-72XEL7318SS6LP	72.00	73.00	18.00	IS6	SCE-72P72	68.00	68.00
SCE-72XEL7324SS6LP	72.00	73.00	24.00	IS6	SCE-72P72	68.00	68.00

DRAFT



SAGINAW CONTROL & ENGINEERING
Your Enclosure Source®

STAINLESS STEEL ENVIROLINE ® SERIES TWO-DOOR ENCLOSURES FOR FLANGE-MOUNTED DISCONNECTS
TECHNICAL DATA

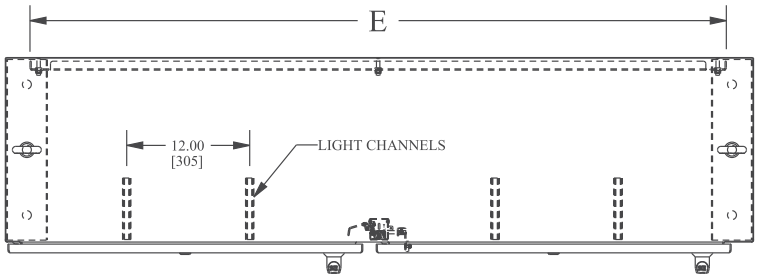

DISCONNECT NOTES:
F = 7.88 [200] when A = 60.00 [1524]
F = 13.38 [340] when A = 72.00 [1829]

LATCH NOTES:
"EL" part numbers with doors >= 30.00 [762] in width have additional latch centered top and bottom of door.

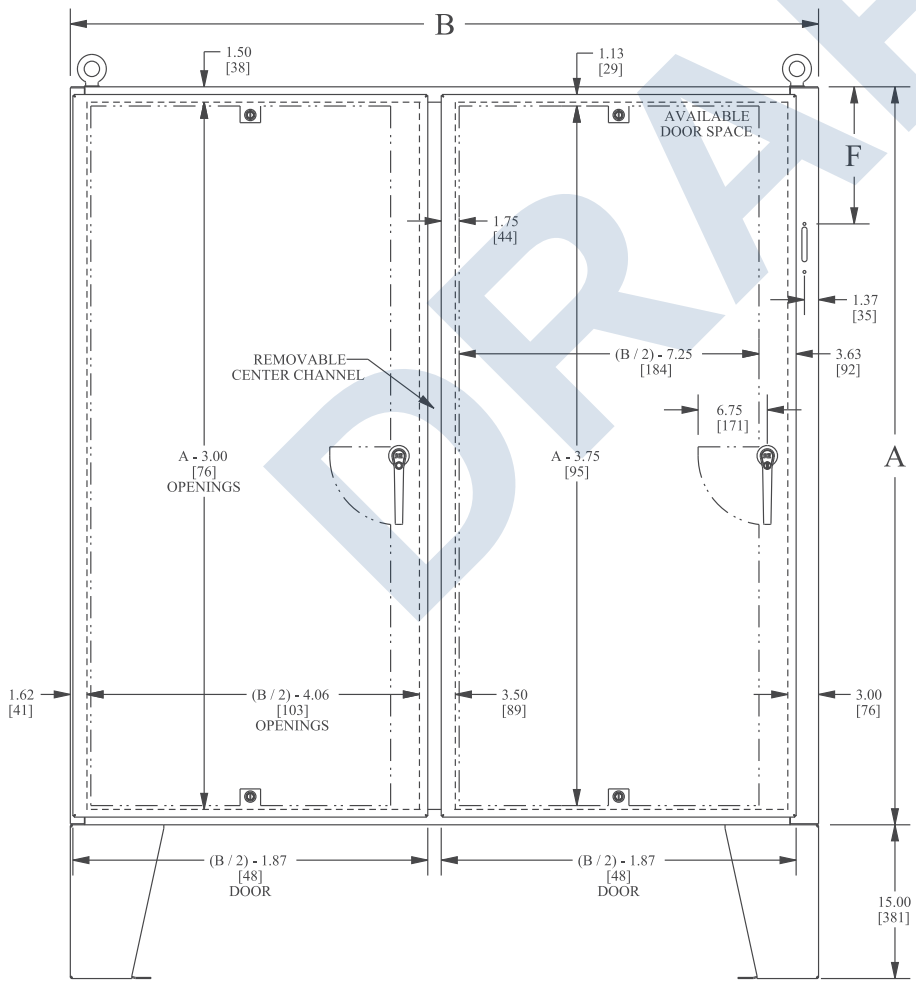

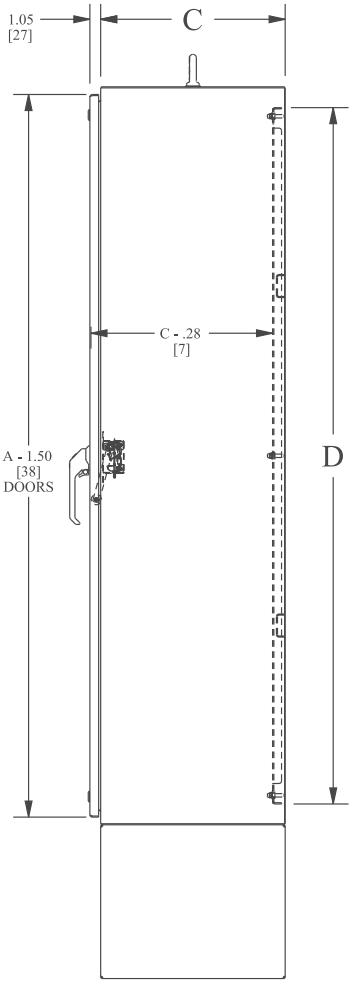

DRAFT

SAGINAW CONTROL & ENGINEERING
Your Enclosure Source®

MOUNTING OPTIONS

MOUNTING FOOT KIT

Made for use with all SCE Enviroline® Series enclosures and two-door wall-mount enclosures. Chemical and Corrosion resistant Polyamide material for use in type 3, 3R, 4, 4X and 12 enclosures.

Catalog No.	Fasteners	Qty Per Kit	NEMA Rating	Product Code
SCE-ELMFK4	Stainless Steel	4	4 & 12	P2
SCE-ELMFK6	Stainless Steel	6	4 & 12	P2
Bulk Parts				
SCE-ELMFK4-25	Stainless Steel	25 sets of 4	4 & 12	V1





Catalog No.	Fasteners	Qty Per Kit	NEMA Rating	Product Code
SCE-ELMFK4SS6-OS	Stainless Steel Type 316	4	4, 4X & 12	P2

S.S. MOUNTING FOOT KIT

Made for use with all SCE Enviroline® Series enclosures and two-door wall-mount enclosures. Made of heavy gauge stainless steel type 316/316L with stainless steel stud. Available in kits of four.

TYPE 3R MOUNTING FOOT KIT

Designed for use on large wall-mount type 3R enclosures. Four mounting feet per kit, made of heavy gauge carbon steel and powder coated ANSI-61 gray. Hardware is included to fasten mounting foot kit to the enclosure. .

Provided with UL Recognized sealing washer to maintain Environmental Rating of the enclosure.

Catalog No.	Height (A)	Width (B)	Depth (C)	Product Code
SCE-N3RMFK4	3.25	2.00	0.51	P2

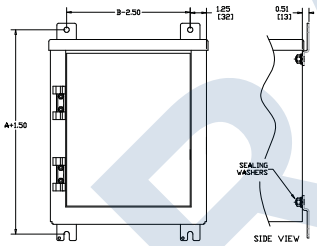

ENVIROLINE® JUNCTION ENCLOSURE (ELJ MOUNTING) FOOT KIT

Made for use with all SCE Enviroline® Series junction enclosures. Chemical and Corrosion resistant Polyamide material rated for type 3, 3R, 4, 4X and 12 with stainless steel fasteners. Four mounting feet per kit. Hardware is included to fasten mounting foot kit to the enclosure.

Catalog No.	Height (A)	Width (B)	Qty Per Kit	Product Code
SCE-ELJMFK	2.13	1.25	4	P2



S.S. ENVIROLINE® JUNCTION ENCLOSURE (ELJ MOUNTING) FOOT KIT

Made for use with all SCE Enviroline® Series junction enclosures. Four mounting feet per kit, made from type 304 stainless steel. Hardware is included to fasten the mounting foot kit to the enclosure.

Catalog No.	Height (A)	Width (B)	Qty Per Kit	Product Code
SCE-ELJMFKSS-OS	2.13	1.25	4	P2

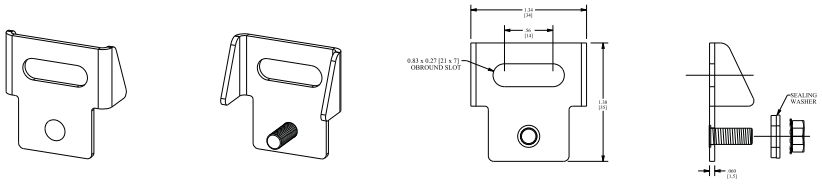

DRAFT

REMOTE DOOR SWITCHES



- The remote door switch can activate a light or other electrical component when the enclosure door is opened
- Mounts on enclosure frame and includes mounting hardware
- Mounting plate is 14 gauge steel with a plated finish
- Can be hard-wired to the PANELITE LED or Fluorescent light or connected via the PANELITE Door Switch Cable

BULLETIN: A80LT, P20

Catalog Number	Description
ALFSWD	Door switch assembly (order connection cable separately)
PLFSWD	Door switch assembly for PROLINE and PROLINE G2 (order connection cable separately)

TOUCH-SAFE UL LIGHT SWITCH



APPLICATION

The Touch-Safe light switch is designed to be used with Hoffman light kits (AC and DC). It provides a UL listed touch-safe switch that can be used on many enclosure types and includes hardware for most applications. The light switch maintains enclosure overall rating up to UL 508A Type 4X or 12.

FEATURES

- UL listed for a touch-safe wire connection
- Easily mounted to various enclosure types; common bracket and hardware included for many enclosure types (NEMA, CONCEPT/FUSION G7, PROLINE, Free-Stand Type 12)
- Cable PG compression hub
- Wide operating temperature range: -49°F to +158°F (-45°C to 70°C)
- Rugged die-cast anodized zinc construction
- Connection 3 cage clamps for solid and stranded wire AWG 20-14 (0.5-2.5mm²)
- Protection class I (grounded)

BULLETIN: A80LT

Catalog Number	Max. Cable Dia.	Max. Voltage
LDSWITCH	.375 in.	250 AC / 48 DC

MOUNTING BRACKET KIT FOR LIGHT PACKAGE



Kit simplifies mounting light package in Hoffman PROLINE disconnect enclosures. Includes brackets, all mounting hardware and complete instructions.

BULLETIN: A80LT

Catalog Number	Description
PDLFBRKT	Mounting Bracket Kit

LED PUCK LIGHT



The LED Puck Light is ideal for remote and darkened applications. This versatile light provides mounting flexibility; it can be magnetically attached to flat steel surfaces or can be hung with a swivel hook. This small form factor, light-weight LED light provides superior lighting performance with minimal power consumption. It can be used as a three-LED flashlight or as a 24-LED work light with operating temperature of 40 F to 120 F (4 C to 48 C). An on/off switch is incorporated in the light and three AAA batteries are included.

BULLETIN: A80LT

Catalog Number	AxBxC in./mm	Product Weight
LEDPUCK	2.25 x 3.75 x 1.38 57 x 95 x 35	0.22 lbs.

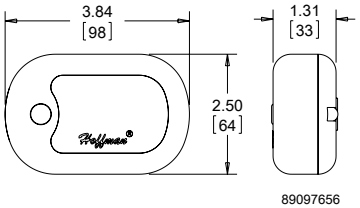

89097656

DRAFT

SAGINAW CONTROL & ENGINEERING
Your Enclosure Source®

GENERAL ACCESSORIES

Application
LED light fixture is designed to provide interior lighting for an enclosure. Can be mounted to light channels in the top of an enclosure or on the front flange of most enclosures.

Construction
- Door activated adjustable switch, switch can be removed and relocated.
- Terminal block on each end of fixture, making it easy to wire and daisy chain multiple lights continuously.
- LED bulb with PVC frosted white protective light diffuser included.
- Housing made from steel and powder coated white.
- Units with convenience receptacle outlet are 120 VAC with ground 50/60 Hz. Without convenience receptacle outlet 100 to 240 VAC 50/60 Hz.
- 4000K Frosted White
- 18 inch 750 Lumens
- 24 inch 900 Lumens
- 18 inch 24VDC 500 Lumens

IS24 Industry Standards
UL Component Recognized
Replacement Bulb see page 442

LED LIGHT FIXTURE

Catalog No.		Height (A)	Width (B)	Depth (C)	AMP	VAC	Hz	Product Code
SCE-LF18		2.75	18.18	4.00	0.105	100-125	50/60	P2
SCE-LF24		2.75	24.18	4.00	0.105	100-125	50/60	P2
SCE-LF18NO	(No Outlet)	2.75	18.18	4.00	0.105	100-240	50/60	P2
SCE-LF24NO	(No Outlet)	2.75	24.18	4.00	0.105	100-240	50/60	P2
SCE-LF1824VDC	(No Outlet)	2.75	18.18	4.00	0.3	24VDC	-----	P2



LIGHT SWITCH MOUNTING BRACKET

Designed to remote mount the door activated light switch when space is limited. Light Switch Mounting Bracket may be used with SCE-LF18, SCE-LF18NO, SCE-LF24 & SCE-LF24NO. For installation information, consult our Installation Manual at www.saginawcontrol.com.

IS24 - Industry Standards -
UL Component Recognized

Catalog No.	Height (A)	Width (B)	Depth (C)	Product Code
SCE-LSMB	2.00	2.68	1.00	P2

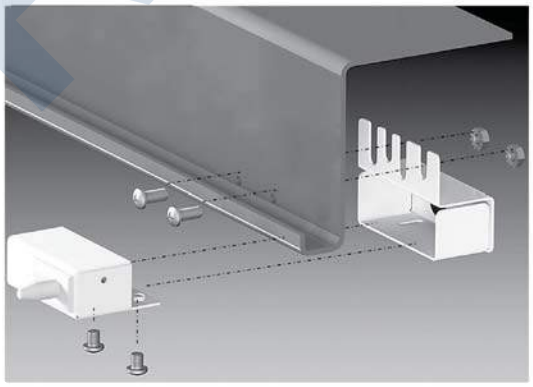

FULL LIGHT SWITCH ASSEMBLY

Designed to remote mount the light switch when space is limited.

Catalog No.	Product Code
SCE-LSA	P2



DRAFT

www.saginawcontrol.com • 95 Midland Rd, Saginaw MI 48638 • Phone: 989-799-6871 Fax: 989-799-4524

UTILITECH PRO

ITEM #0595682, 0595683, 0595684, 0595685

STRIP LIGHT

MODEL #MXL2005-LED1X10K840
MXL2005-LED1X20K840
MXL2005-LED2X10K840
MXL2005-LED2X20K840

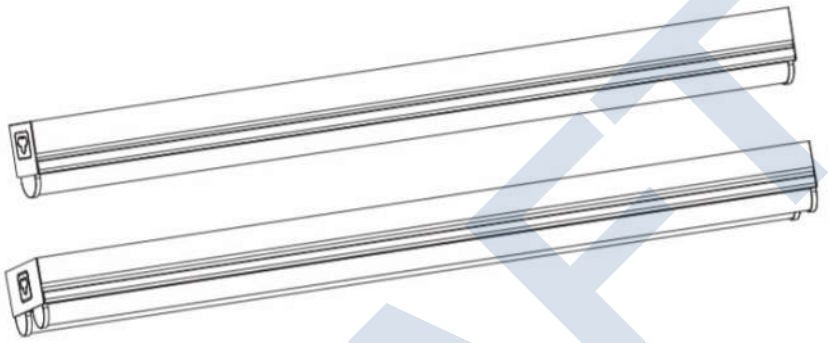

DRAFT

Description

Strip (Common: 2-ft; Actual: 2-ft)

- Energy saving LED uses 41% less electricity than a comparable 1-light T8 fluorescent light fixture
- LED lasts longer - rated to last 35,000 hours
- Produces 900 lumens of brightness using only 10 watts
- 10 watt integrated LED therefore no light bulbs will need to be replaced
- Easy to link up to thirty 24-inch, 1-light LED strip lights
- Gives off bright white light that is perfect for detailed tasks (4,000k CCT)
- UL rated for damp locations
- 3 year limited warranty
- White metal housing

Specifications

Type	Strip
Number of Bulbs Required (Count)	0
Bulb Length (Inches)	24
Ballast Grade	Residential/Commercial
ENERGY STAR Qualified	Yes
Maximum Fixture Wattage	10
Actual Fixture Length (Inches)	24
Actual Fixture Width (Inches)	1.61
Actual Fixture Height (Inches)	2.13
Common Fixture Length	2-ft
Weight (lbs.)	1.7
Lens Included	Yes
Lens Type	Frosted acrylic

Color/Finish Family	White
Motion Activated	No
Hardwired or Plug-In	Hardwired
Title 24 Compliant	No
UL Safety Listing	Yes
CSA Safety Listing	No
ETL Safety Listing	No
Bulbs Included	Yes
Light Bulb Base Type	LED
Recommended Light Bulb Shape	LED

Collection Name	N/A
Bulb Type	LED

SAFETY INFORMATION

NOTICE

- This equipment has been tested and found to comply with the limits for a Class B digital device, pursuant to part 15 of the FCC Rules. These limits are designed to provide reasonable protection against harmful interference in a residential installation. This equipment generates, uses and can radiate radio frequency energy and, if not installed and used in accordance with the instructions, may cause harmful interference to radio or television reception, which can be determined by turning the equipment off and on. The user is encouraged to try to correct the interference by one or more of the following measures:
  - Reorient or relocate the receiving antenna.
  - Increase the separation between the equipment and the receiver.
  - Connect the equipment into an outlet on a circuit different from that to which the receiver is connected.
  - Consult the dealer or an experienced radio/TV technician for help.

- This Class B digital apparatus complies with Canadian ICES-003.

ITEM #	MODEL #	MAXIMUM NUMBER OF LINKED FIXTURES
Item # 595682	MXL2005-LED1X10K840	Connect up to 30 fixtures.
Item # 595683	MXL2005-LED1X20K840	Connect up to 15 fixtures.
Item # 595684	MXL2005-LED2X10K840	Connect up to 15 fixtures.
Item # 595685	MXL2005-LED2X20K840	Connect up to 7 fixtures.

DRAFT

c UL us LISTED

SAGINAW CONTROL & ENGINEERING
Your Enclosure Source®

ENVIRO-THERM® THERMAL MANAGEMENT
AIR CONDITIONERS

Application
Enviro-Therm® Air Conditioners are designed with an internal closed loop system to provide protection from dust, oil and water. For indoor and outdoor application. Rugged, energy efficient, and reliable cooling system. For more details and Installation Information, consult our Installation Manual at www.saginawcontrol.com.

Construction
- Heavy gauge steel/stainless steel.
- Internal components are corrosion resistant.
- Coils are designed as filterless units, fin spacing and hydrophobic Nano coating to help reduce chance of clogging.
- Washable, Reusable 8 layer aluminum mesh filters included.
- Captive screw fastened filter cover.
- Compressor Heater.
- Enclosure Heater for low ambient temperatures.
- Easy Mounting Flange hangers for installation included.
- High temp alarm.
- High performance ball bearing fans.
- Door activated switch wiring provisions.
- Cage clamp terminal connector.
- Oil and water resistant gaskets installed.

Electrical
- cULus Listed
- CE
- Surge protected and EMI compliant - IEC61000 and CE requirement

Finish
Powder coated steel cover RAL 7035 River Texture over Aluzinc coated steel.
SS units: #4 brushed finish 304 Stainless Steel cover and frame.
SS6 units: #4 brushed finish 316 Stainless Steel cover.

IS19 Industry Standards
UL Recognized Type 3, 3R, 4 & 12
IEC 60529 IP56

IS20 Industry Standards
UL Recognized Type 3, 3R, 4, 4X & 12
IEC 60529 IP56

Air Conditioner Product Code P1

Catalog No.	BTU 95° @ 95°	Enclosure Heating Capacity (W)	Hz	Voltage	Line Amps	Startup Amps	Industry Standard
SCE-AC1000B120V	1000	150 W	60	120V	2.4	8.00	IS19
SCE-AC1000B230V	1000	150 W	50/60	230V	1.5	8.00	IS19
Stainless Steel Type 304							
SCE-AC1000B120VSS	1000	150 W	60	120V	2.4	8.00	IS20
SCE-AC1000B230VSS	1000	150 W	50/60	230V	1.5	8.00	IS20
Stainless Steel Type 316							
SCE-AC1000B120VSS6	1000	150 W	60	120V	2.4	8.00	IS20
SCE-AC1000B230VSS6	1000	150 W	50/60	230V	1.5	8.00	IS20

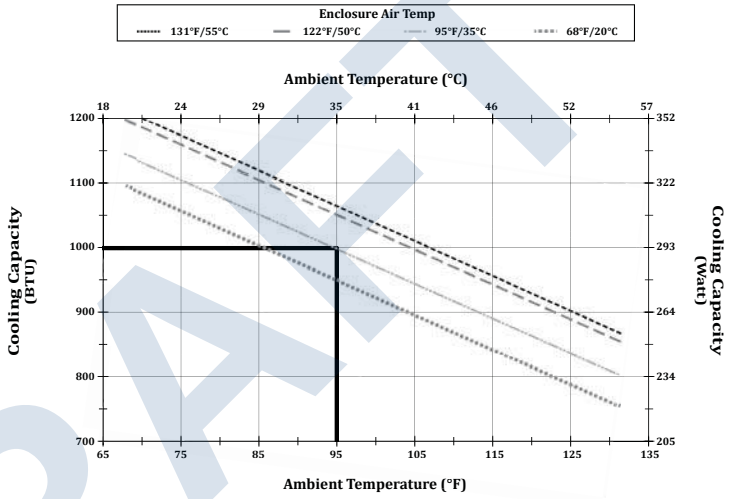

DRAFT



SEE OUR ENVIRO-THERM® THERMAL MANAGEMENT VIDEO

SAGINAW CONTROL & ENGINEERING
Your Enclosure Source®

ENVIRO-THERM® AIR CONDITIONERS
TECHNICAL DATA

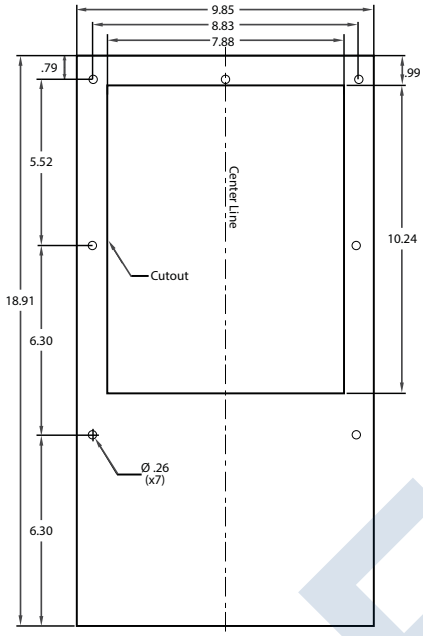

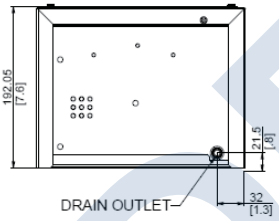

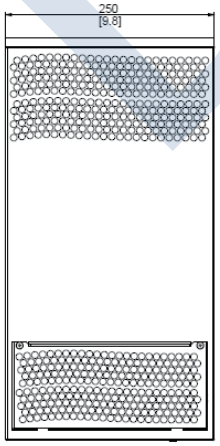

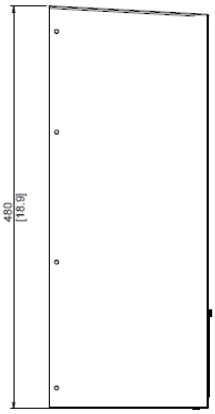

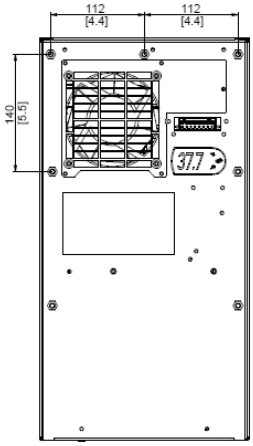

DRAFT

SAGINAW CONTROL & ENGINEERING
Your Enclosure Source ®

ENVIRO-THERM® THERMAL MANAGEMENT
AIR CONDITIONERS

Application
Enviro-Therm® Air Conditioners are designed with an internal closed loop system to provide protection from dust, oil and water. For indoor and outdoor application. Rugged, energy efficient, and reliable cooling system. For more details and installation information, consult our installation manual at www.saginawcontrol.com.

Construction
- Heavy gauge steel/stainless steel.
- Internal components are corrosion resistant.
- Coils are designed as filterless units, fin spacing and hydrophobic Nano coating to help reduce chance of clogging.
- Washable, Reusable 8 layer aluminum mesh filters included.
- Captive screw fastened filter cover.
- Compressor Heater.
- Enclosure Heater for low ambient temperatures.
- Easy Mounting Flange hangers for installation included.
- High temp alarm.
- High performance ball bearing fans.
- Door activated switch wiring provisions.
- Cage clamp terminal connector.
- Oil and water resistant gaskets installed.

Electrical
•cULus Listed
•CE
•Surge protected and EMI compliant - IEC61000 and CE requirement

Finish
Powder coated steel cover RAL 7035 River Texture over Aluzinc coated steel.
SS units: #4 brushed finish 304 Stainless Steel cover and frame.
SS6 units: #4 brushed finish 316 Stainless Steel cover.

IS19 Industry Standards
UL Recognized Type 3, 3R, 4 & 12
IEC 60529 IP56

IS20 Industry Standards
UL Listed & Recognized Type 3, 3R, 4, 4X & 12
IEC 60529 IP56

Air Conditioner Product Code P1

Catalog No.	BTU 95° @ 95°	Enclosure Heating Capacity (W)	Hz	Voltage	Line Amps	Startup Amps	Industry Standard
SCE-AC3400B120V	3400	400 W	50/60	120V	9.40	30.00	IS19
SCE-AC3400B230V	3400	400 W	50/60	230V	4.70	15.00	IS19
SCE-AC3400B460V	3400	400 W	50/60	460V	2.40	7.50	IS19
Stainless Steel Type 304							
SCE-AC3400B120VSS	3400	400 W	50/60	120V	9.40	30.00	IS20
SCE-AC3400B230VSS	3400	400 W	50/60	230V	4.70	15.00	IS20
SCE-AC3400B460VSS	3400	400 W	50/60	460V	2.40	7.50	IS20
Stainless Steel Type 316							
SCE-AC3400B120VSS6	3400	400 W	50/60	120V	9.40	30.00	IS20
SCE-AC3400B230VSS6	3400	400 W	50/60	230V	4.70	15.00	IS20
SCE-AC3400B460VSS6	3400	400 W	50/60	460V	2.40	7.50	IS20

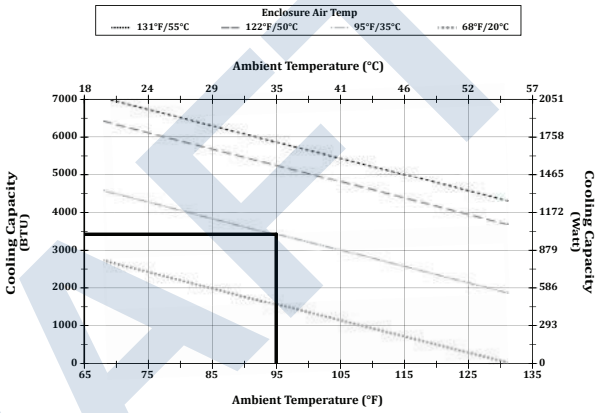



DRAFT

SAGINAW CONTROL & ENGINEERING
Your Enclosure Source ®

ENVIRO-THERM® AIR CONDITIONERS
TECHNICAL DATA

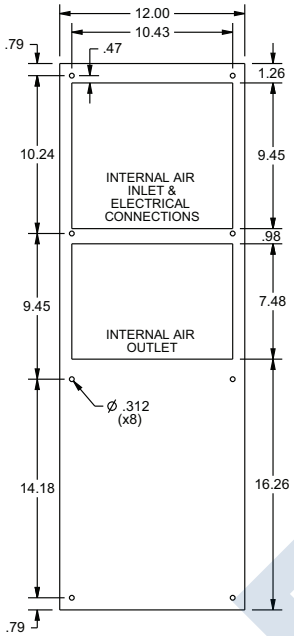

MOUNTING PATTERN

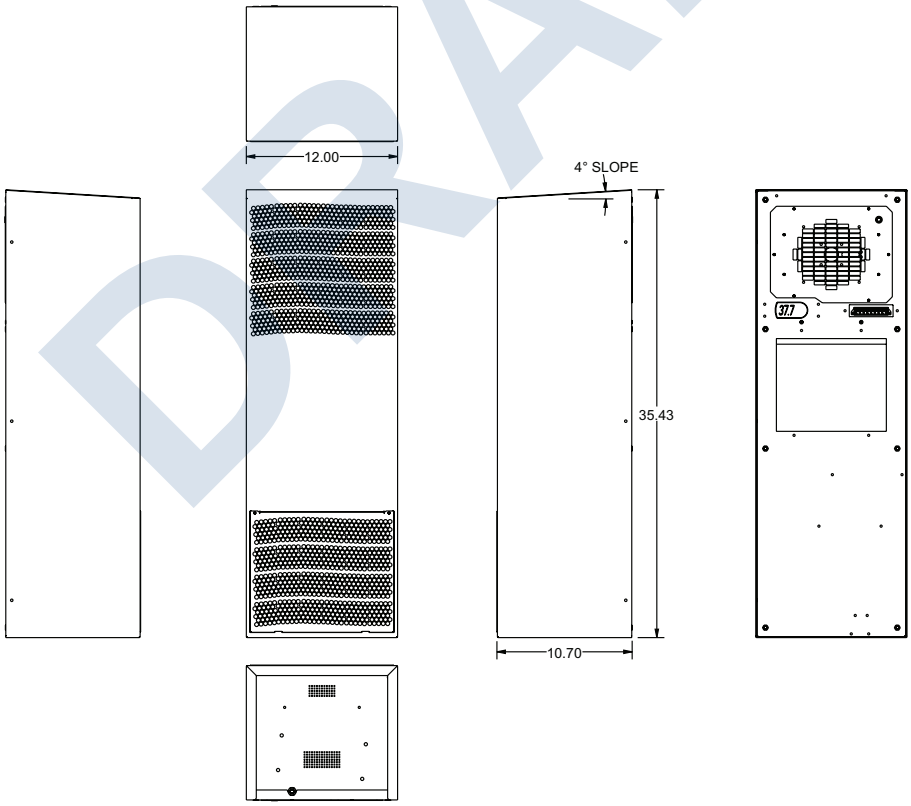

DRAFT

www.saginawcontrol.com • 95 Midland Rd, Saginaw MI 48638 • Phone: 989-799-6871 Fax: 989-799-4524

UT 4 - Feed-through terminal block

3044102

https://www.phoenixcontact.com/us/products/3044102

Please be informed that the data shown in this PDF document is generated from our online catalog. Please find the complete data in the user documentation. Our general terms of use for downloads are valid.



Feed-through terminal block, nom. voltage: 1000 V, nominal current: 32 A, number of connections: 2, connection method: Screw connection, Rated cross section: 4 mm^2, cross section: 0.14 mm^2 - 6 mm^2, mounting type: NS 35/7,5, NS 35/15, color: gray

Your advantages

- The large wiring space enables the connection of solid and stranded conductors without ferrules, even above the nominal cross section
- As well as saving space, the compact design enables user-friendly wiring in a small amount of space
- Optimum screwdriver guidance through closed screw shafts
- The cable entry funnel enables the use of conductors with ferrules and plastic collars within the nominal cross section
- Tested for railway applications

DRAFT

UT 4 - Feed-through terminal block

3044102

https://www.phoenixcontact.com/us/products/3044102

Technical data

Product properties

Product type	Feed-through terminal block
Product family	UT
Area of application	Railway industry
	Machine building
	Plant engineering
	Process industry
Number of connections	2
Number of rows	1
Potentials	1

Insulation characteristics

Overvoltage category	III
Degree of pollution	3

Electrical properties

Rated surge voltage	8 kV
Maximum power dissipation for nominal condition	1.02 W

Connection data

Number of connections per level	2
Nominal cross section	4 mm²
Screw thread	M3
Tightening torque	0.6 ... 0.8 Nm
Stripping length	9 mm
Internal cylindrical gage	A4
Connection in acc. with standard	IEC 60947-7-1
Conductor cross section rigid	0.14 mm² ... 6 mm²
Cross section AWG	26 ... 10 (converted acc. to IEC)
Conductor cross section flexible	0.14 mm² ... 6 mm²
Conductor cross section, flexible [AWG]	26 ... 10 (converted acc. to IEC)
Conductor cross-section flexible (ferrule without plastic sleeve)	0.25 mm² ... 4 mm²
Flexible conductor cross section (ferrule with plastic sleeve)	0.25 mm² ... 4 mm²
2 conductors with same cross section, solid	0.14 mm² ... 1.5 mm²
2 conductors with same cross section, flexible	0.14 mm² ... 1.5 mm²
2 conductors with same cross section, flexible, with ferrule without plastic sleeve	0.25 mm² ... 1.5 mm²
2 conductors with the same cross section, flexible, with TWIN ferrule with plastic sleeve	0.5 mm² ... 2.5 mm²
Nominal current	32 A (with 4 mm² conductor cross section)
Maximum load current	41 A (with 6 mm² conductor cross section)
Nominal voltage	1000 V

DRAFT

UT 4 - Feed-through terminal block

3044102

https://www.phoenixcontact.com/us/products/3044102

Note	Note: Product releases, connection cross sections and notes on connecting aluminum cables can be found in the download area.
Nominal cross section	4 mm²

Ex data

Rated data (ATEX/IECEx)

Identification	Ex II 2 GD Ex eb IIC Gb
Operating temperature range	-60 °C ... 110 °C
Ex-certified accessories	3047028 D-UT 2,5/10
	3047167 ATP-UT
	1205053 SZS 0,6X3,5
	3022276 CLIPFIX 35-5
	3022218 CLIPFIX 35
List of bridges	Plug-in bridge / FBS 2-6 / 3030336
	Plug-in bridge / FBS 3-6 / 3030242
	Plug-in bridge / FBS 4-6 / 3030255
	Plug-in bridge / FBS 5-6 / 3030349
	Plug-in bridge / FBS 10-6 / 3030271
	Plug-in bridge / FBS 20-6 / 3030365
	Plug-in bridge / FBS 50-6 / 3032224
Bridge data	27 A / 4 mm²
Ex temperature increase	40 K (33.3 A / 4 mm²)
Rated voltage	690 V
for bridging with bridge	690 V
- At bridging between non-adjacent terminal blocks	352 V
- At bridging between non-adjacent terminal blocks via PE terminal block	275 V
- At cut-to-length bridging with cover	220 V
- At cut-to-length bridging with partition plate	275 V
Rated insulation voltage	630 V
output	(Permanent)

Ex level General

Rated current	30 A
Maximum load current	38 A
Contact resistance	0.26 mΩ

Ex connection data General

Torque range	0.6 Nm ... 0.8 Nm
Nominal cross section	4 mm²
Rated cross section AWG	12
Connection capacity rigid	0.14 mm² ... 6 mm²
Connection capacity AWG	26 ... 10
Connection capacity flexible	0.14 mm² ... 4 mm²
Connection capacity AWG	26 ... 12

DRAFT

UT 4 - Feed-through terminal block

3044102

https://www.phoenixcontact.com/us/products/3044102

2 conductors with same cross section, solid	0.14 mm² ... 1.5 mm²
2 conductors with the same cross-section AWG rigid	26 ... 16
2 conductors with same cross section, stranded	0.14 mm² ... 1.5 mm²
2 conductors with the same cross-section AWG flexible	26 ... 16

Dimensions

Width	6.2 mm
End cover width	2.2 mm
Height	47.7 mm
Depth	46.9 mm
Depth on NS 35/7,5	47.5 mm
Depth on NS 35/15	55 mm

Material specifications

Color	gray
Flammability rating according to UL 94	V0
Insulating material group	I
Insulating material	PA
Static insulating material application in cold	-60 °C
Relative insulation material temperature index (Elec., UL 746 B)	130 °C
Fire protection for rail vehicles (DIN EN 45545-2) R22	HL 1 - HL 3
Fire protection for rail vehicles (DIN EN 45545-2) R23	HL 1 - HL 3
Fire protection for rail vehicles (DIN EN 45545-2) R24	HL 1 - HL 3
Fire protection for rail vehicles (DIN EN 45545-2) R26	HL 1 - HL 3
Surface flammability NFPA 130 (ASTM E 162)	passed
Specific optical density of smoke NFPA 130 (ASTM E 662)	passed
Smoke gas toxicity NFPA 130 (SMP 800C)	passed

Electrical tests

Surge voltage test

Test voltage setpoint	9.8 kV
Result	Test passed

Temperature-rise test

Requirement temperature-rise test	Increase in temperature ≤ 45 K
Result	Test passed
Short-time withstand current 4 mm²	0.48 kA
Short-time withstand current 6 mm²	0.72 kA
Result	Test passed

Power-frequency withstand voltage

Test voltage setpoint	2.2 kV
Result	Test passed

Mechanical properties

DRAFT

UT 4 - Feed-through terminal block

3044102

https://www.phoenixcontact.com/us/products/3044102

Mechanical data

Open side panel	Yes

Mechanical tests

Mechanical strength

Result	Test passed

Attachment on the carrier

DIN rail/fixing support	NS 35
Test force setpoint	1 N
Result	Test passed

Test for conductor damage and slackening

Rotation speed	10 rpm
Revolutions	135
Conductor cross section/weight	0.14 mm² / 0.2 kg
	4 mm² / 0.9 kg
	6 mm² / 1.4 kg
Result	Test passed

Environmental and real-life conditions

Needle-flame test

Time of exposure	30 s
Result	Test passed

Oscillation/broadband noise

Specification	DIN EN 50155 (VDE 0115-200):2008-03
Spectrum	Service life test category 1, class B, body mounted
Frequency	f_1 = 5 Hz to f_2 = 150 Hz
ASD level	1.857 (m/s²)²/Hz
Acceleration	0.8g
Test duration per axis	5 h
Test directions	X-, Y- and Z-axis
Result	Test passed

Shocks

Specification	DIN EN 50155 (VDE 0115-200):2008-03
Pulse shape	Half-sine
Acceleration	5g
Shock duration	30 ms
Number of shocks per direction	3
Test directions	X-, Y- and Z-axis (pos. and neg.)
Result	Test passed

Ambient conditions

DRAFT

UT 4 - Feed-through terminal block

3044102

https://www.phoenixcontact.com/us/products/3044102

Ambient temperature (operation)	-60 °C ... 110 °C (Operating temperature range incl. self-heating; for max. short-term operating temperature, see RTI Elec.)
Ambient temperature (storage/transport)	-25 °C ... 60 °C (for a short time, no longer than 24 h, -60°C to +70°C)
Ambient temperature (assembly)	-5 °C ... 70 °C
Ambient temperature (actuation)	-5 °C ... 70 °C
Permissible humidity (operation)	20 % ... 90 %
Permissible humidity (storage/transport)	30 % ... 70 %

Standards and regulations

Connection in acc. with standard	IEC 60947-7-1

Mounting

Mounting type	NS 35/7,5
	NS 35/15

Phoenix Contact 2024 © - all rights reserved
https://www.phoenixcontact.com

Phoenix Contact USA
586 Fulling Mill Road
Middletown, PA 17057, United States
(+717) 944-1300
info@phoenixcon.com

DRAFT

UT 6 - Feed-through terminal block

3044131

https://www.phoenixcontact.com/us/products/3044131

Please be informed that the data shown in this PDF document is generated from our online catalog. Please find the complete data in the user documentation. Our general terms of use for downloads are valid.



Feed-through terminal block, nom. voltage: 1000 V, nominal current: 41 A, number of connections: 2, connection method: Screw connection, Rated cross section: 6 mm^2, cross section: 0.2 mm^2 - 10 mm^2, mounting type: NS 35/7,5, NS 35/15, color: gray

Your advantages

- The large wiring space enables the connection of solid and stranded conductors without ferrules, even above the nominal cross section
- As well as saving space, the compact design enables user-friendly wiring in a small amount of space
- Optimum screwdriver guidance through closed screw shafts
- The cable entry funnel enables the use of conductors with ferrules and plastic collars within the nominal cross section
- Tested for railway applications

DRAFT

UT 6 - Feed-through terminal block

3044131

https://www.phoenixcontact.com/us/products/3044131

Technical data

Product properties

Product type	Feed-through terminal block
Product family	UT
Area of application	Railway industry
	Machine building
	Plant engineering
	Process industry
Number of connections	2
Number of rows	1
Potentials	1

Insulation characteristics

Overvoltage category	III
Degree of pollution	3

Electrical properties

Rated surge voltage	8 kV
Maximum power dissipation for nominal condition	1.31 W

Connection data

Number of connections per level	2
Nominal cross section	6 mm²
Rated cross section AWG	8

Level 1 above 1 below 1

Screw thread	M4
Tightening torque	1.5 ... 1.8 Nm
Stripping length	10 mm
Internal cylindrical gage	A5
Connection in acc. with standard	IEC 60947-7-1
Conductor cross section rigid	0.2 mm² ... 10 mm²
Cross section AWG	24 ... 8 (converted acc. to IEC)
Conductor cross section flexible	0.2 mm² ... 10 mm²
Conductor cross section, flexible [AWG]	24 ... 8 (converted acc. to IEC)
Conductor cross-section flexible (ferrule without plastic sleeve)	0.25 mm² ... 6 mm²
Flexible conductor cross section (ferrule with plastic sleeve)	0.25 mm² ... 6 mm²
2 conductors with same cross section, solid	0.2 mm² ... 2.5 mm²
2 conductors with same cross section, flexible	0.2 mm² ... 2.5 mm²
2 conductors with same cross section, flexible, with ferrule without plastic sleeve	0.25 mm² ... 1.5 mm²
2 conductors with the same cross section, flexible, with TWIN ferrule with plastic sleeve	0.5 mm² ... 4 mm²
Nominal current	41 A

DRAFT

UT 6 - Feed-through terminal block

3044131

https://www.phoenixcontact.com/us/products/3044131

Maximum load current	57 A (with 10 mm² conductor cross section)
Nominal voltage	1000 V
Note	Note: Product releases, connection cross sections and notes on connecting aluminum cables can be found in the download area.
Nominal cross section	6 mm²

Ex data

Rated data (ATEX/IECEx)

Identification	Ⓔx II 2 GD Ex eb IIC Gb
Operating temperature range	-60 °C ... 110 °C
Ex-certified accessories	3047028 D-UT 2,5/10
	3047167 ATP-UT
	1205066 SZS 1,0X4,0 VDE
	3022276 CLIPFIX 35-5
	3022218 CLIPFIX 35
List of bridges	Plug-in bridge / FBS 2-8 / 3030284
	Plug-in bridge / FBS 3-8 / 3030297
	Plug-in bridge / FBS 4-8 / 3030307
	Plug-in bridge / FBS 5-8 / 3030310
	Plug-in bridge / FBS 10-8 / 3030323
Bridge data	39 A / 6 mm²
Ex temperature increase	40 K (44.9 A / 6 mm²)
Rated voltage	690 V
for bridging with bridge	690 V
- At bridging between non-adjacent terminal blocks	275 V
- At bridging between non-adjacent terminal blocks via PE terminal block	176 V
- At cut-to-length bridging with cover	220 V
- At cut-to-length bridging with partition plate	275 V
Rated insulation voltage	630 V
output	(Permanent)

Ex level General

Rated current	40 A
Maximum load current	50 A
Contact resistance	0.2 mΩ

Ex connection data General

Torque range	1.5 Nm ... 1.8 Nm
Nominal cross section	6 mm²
Rated cross section AWG	10
Connection capacity rigid	0.2 mm² ... 10 mm²
Connection capacity AWG	24 ... 8
Connection capacity flexible	0.2 mm² ... 6 mm²
Connection capacity AWG	24 ... 10

DRAFT

UT 6 - Feed-through terminal block

3044131

https://www.phoenixcontact.com/us/products/3044131

2 conductors with same cross section, solid	0.2 mm² ... 2.5 mm²
2 conductors with the same cross-section AWG rigid	24 ... 14
2 conductors with same cross section, stranded	0.2 mm² ... 2.5 mm²
2 conductors with the same cross-section AWG flexible	24 ... 14

Dimensions

Width	8.2 mm
End cover width	2.2 mm
Height	47.7 mm
Depth	46.9 mm
Depth on NS 35/7,5	47.5 mm
Depth on NS 35/15	55 mm

Material specifications

Color	gray
Flammability rating according to UL 94	V0
Insulating material group	I
Insulating material	PA
Static insulating material application in cold	-60 °C
Temperature index of insulation material (DIN EN 60216-1 (VDE 0304-21))	125 °C
Relative insulation material temperature index (Elec., UL 746 B)	130 °C
Fire protection for rail vehicles (DIN EN 45545-2) R22	HL 1 - HL 3
Fire protection for rail vehicles (DIN EN 45545-2) R23	HL 1 - HL 3
Fire protection for rail vehicles (DIN EN 45545-2) R24	HL 1 - HL 3
Fire protection for rail vehicles (DIN EN 45545-2) R26	HL 1 - HL 3
Calorimetric heat release NFPA 130 (ASTM E 1354)	27,5 MJ/kg
Surface flammability NFPA 130 (ASTM E 162)	passed
Specific optical density of smoke NFPA 130 (ASTM E 662)	passed
Smoke gas toxicity NFPA 130 (SMP 800C)	passed

Electrical tests

Surge voltage test

Test voltage setpoint	9.8 kV
Result	Test passed

Temperature-rise test

Requirement temperature-rise test	Increase in temperature ≤ 45 K
Result	Test passed
Short-time withstand current 6 mm²	0.72 kA
Short-time withstand current 10 mm²	1.2 kA
Result	Test passed

Power-frequency withstand voltage

Test voltage setpoint	2.2 kV

DRAFT

UT 6 - Feed-through terminal block

3044131

https://www.phoenixcontact.com/us/products/3044131

Result	Test passed

Mechanical properties

Mechanical data

Open side panel	Yes

Mechanical tests

Mechanical strength

Result	Test passed

Attachment on the carrier

DIN rail/fixing support	NS 35
Test force setpoint	5 N
Result	Test passed

Test for conductor damage and slackening

Rotation speed	10 rpm
Revolutions	135
Conductor cross section/weight	0.2 mm² / 0.2 kg
	6 mm² / 1.4 kg
	10 mm² / 2 kg
Result	Test passed

Environmental and real-life conditions

Needle-flame test

Time of exposure	30 s
Result	Test passed

Oscillation/broadband noise

Specification	DIN EN 50155 (VDE 0115-200):2008-03
Spectrum	Service life test category 1, class B, body mounted
Frequency	f_1 = 5 Hz to f_2 = 150 Hz
ASD level	1.857 $(m/s^2)^2/Hz$
Acceleration	0.8g
Test duration per axis	5 h
Test directions	X-, Y- and Z-axis
Result	Test passed

Shocks

Specification	DIN EN 50155 (VDE 0115-200):2008-03
Pulse shape	Half-sine
Acceleration	5g
Shock duration	30 ms
Number of shocks per direction	3
Test directions	X-, Y- and Z-axis (pos. and neg.)

DRAFT

UT 6 - Feed-through terminal block

3044131

https://www.phoenixcontact.com/us/products/3044131

Result	Test passed

Ambient conditions

Ambient temperature (operation)	-60 °C ... 110 °C (Operating temperature range incl. self-heating; for max. short-term operating temperature, see RTI Elec.)
Ambient temperature (storage/transport)	-25 °C ... 60 °C (for a short time, no longer than 24 h, -60°C to +70°C)
Ambient temperature (assembly)	-5 °C ... 70 °C
Ambient temperature (actuation)	-5 °C ... 70 °C
Permissible humidity (operation)	20 % ... 90 %
Permissible humidity (storage/transport)	30 % ... 70 %

Standards and regulations

Connection in acc. with standard	IEC 60947-7-1

Mounting

Mounting type	NS 35/7,5
	NS 35/15

Phoenix Contact 2024 © - all rights reserved
https://www.phoenixcontact.com

Phoenix Contact USA
586 Fulling Mill Road
Middletown, PA 17057, United States
(+717) 944-1300
info@phoenixcon.com

DRAFT

UT 4-PE - Ground terminal

3044128

https://www.phoenixcontact.com/us/products/3044128

Please be informed that the data shown in this PDF document is generated from our online catalog. Please find the complete data in the user documentation. Our general terms of use for downloads are valid.



Ground terminal, number of connections: 2, connection method: Screw connection, cross section: 0.14 mm^2 - 6 mm^2, mounting type: NS 35/7,5, NS 35/15, color: green-yellow

Your advantages

- Tested for railway applications

DRAFT

UT 4-PE - Ground terminal

3044128

https://www.phoenixcontact.com/us/products/3044128

Technical data

Product properties

Product type	Ground terminal block
Area of application	Railway industry
	Machine building
	Plant engineering
	Process industry
Number of connections	2
Number of rows	1

Insulation characteristics

Overvoltage category	III
Degree of pollution	3

Electrical properties

Rated surge voltage	8 kV
Maximum power dissipation for nominal condition	1.02 W

Connection data

Grounding foot	Yes
Number of connections per level	2
Nominal cross section	4 mm²

Level 1 above 1 below 1

Screw thread	M3
Note	Please observe the current carrying capacity of the DIN rails.
Tightening torque	0.6 ... 0.8 Nm
Stripping length	9 mm
Internal cylindrical gage	A4
Connection in acc. with standard	IEC 60947-7-2
Conductor cross section rigid	0.14 mm² ... 6 mm²
Cross section AWG	26 ... 10 (converted acc. to IEC)
Conductor cross section flexible	0.14 mm² ... 6 mm²
Conductor cross section, flexible [AWG]	26 ... 10 (converted acc. to IEC)
Conductor cross-section flexible (ferrule without plastic sleeve)	0.25 mm² ... 4 mm²
Flexible conductor cross section (ferrule with plastic sleeve)	0.25 mm² ... 4 mm²
Note	Note: Product releases, connection cross sections and notes on connecting aluminum cables can be found in the download area.

Ex data

Rated data (ATEX/IECEx)

Identification	Ⓔx II 2 GD Ex eb IIC Gb
Operating temperature range	-60 °C ... 110 °C

DRAFT

UT 4-PE - Ground terminal

3044128

https://www.phoenixcontact.com/us/products/3044128

Ex-certified accessories	3047028 D-UT 2,5/10
	1205053 SZS 0,6X3,5
	3022276 CLIPFIX 35-5
	3022218 CLIPFIX 35
output	(Permanent)

Ex connection data General

Torque range	0.6 Nm ... 0.8 Nm
Nominal cross section	4 mm²
Rated cross section AWG	12
Connection capacity rigid	0.14 mm² ... 6 mm²
Connection capacity AWG	26 ... 10
Connection capacity flexible	0.14 mm² ... 4 mm²
Connection capacity AWG	26 ... 12

Dimensions

Width	6.2 mm
End cover width	2.2 mm
Height	47.7 mm
Depth	46.9 mm
Depth on NS 35/7,5	47.5 mm
Depth on NS 35/15	55 mm

Material specifications

Color	green-yellow
Flammability rating according to UL 94	V0
Insulating material group	I
Insulating material	PA
Static insulating material application in cold	-60 °C
Temperature index of insulation material (DIN EN 60216-1 (VDE 0304-21))	125 °C
Relative insulation material temperature index (Elec., UL 746 B)	130 °C
Fire protection for rail vehicles (DIN EN 45545-2) R22	HL 1 - HL 3
Fire protection for rail vehicles (DIN EN 45545-2) R23	HL 1 - HL 3
Fire protection for rail vehicles (DIN EN 45545-2) R24	HL 1 - HL 3
Fire protection for rail vehicles (DIN EN 45545-2) R26	HL 1 - HL 3
Calorimetric heat release NFPA 130 (ASTM E 1354)	27,5 MJ/kg
Surface flammability NFPA 130 (ASTM E 162)	passed
Specific optical density of smoke NFPA 130 (ASTM E 662)	passed
Smoke gas toxicity NFPA 130 (SMP 800C)	passed

Mechanical properties

Mechanical data

Open side panel	Yes

DRAFT

UT 4-PE - Ground terminal

3044128

https://www.phoenixcontact.com/us/products/3044128

Environmental and real-life conditions

Ambient conditions

Ambient temperature (operation)	-60 °C ... 110 °C (Operating temperature range incl. self-heating; for max. short-term operating temperature, see RTI Elec.)
Ambient temperature (storage/transport)	-25 °C ... 60 °C (for a short time, no longer than 24 h, -60°C to +70°C)
Ambient temperature (assembly)	-5 °C ... 70 °C
Ambient temperature (actuation)	-5 °C ... 70 °C
Permissible humidity (operation)	20 % ... 90 %
Permissible humidity (storage/transport)	30 % ... 70 %

Standards and regulations

Connection in acc. with standard	IEC 60947-7-2

Mounting

Mounting type	NS 35/7,5
	NS 35/15

Phoenix Contact 2024 © - all rights reserved
https://www.phoenixcontact.com

Phoenix Contact USA
586 Fulling Mill Road
Middletown, PA 17057, United States
(+717) 944-1300
info@phoenixcon.com

DRAFT

D-UT 2,5/10 - End cover

3047028

https://www.phoenixcontact.com/us/products/3047028

Please be informed that the data shown in this PDF document is generated from our online catalog. Please find the complete data in the user documentation. Our general terms of use for downloads are valid.



End cover, depth: 39.8 mm, width: 2.2 mm, height: 47 mm, color: gray

DRAFT

D-UT 2,5/10 - End cover

3047028

https://www.phoenixcontact.com/us/products/3047028

Technical data

Product properties

Product type	End cover

Environmental and real-life conditions

Ambient conditions

Ambient temperature (operation)	-60 °C ... 105 °C (max. short-term operating temperature RTI Elec.)
Ambient temperature (storage/transport)	-25 °C ... 60 °C (for a short time, not exceeding 24 h, -60 °C to +70 °C)
Ambient temperature (assembly)	-5 °C ... 70 °C
Ambient temperature (actuation)	-5 °C ... 70 °C
Permissible humidity (storage/transport)	30 % ... 70 %

Material specifications

Color	gray
Material	PA
Flammability rating according to UL 94	V0
Static insulating material application in cold	-60 °C
Temperature index of insulation material (DIN EN 60216-1 (VDE 0304-21))	125 °C
Relative insulation material temperature index (Elec., UL 746 B)	130 °C
Fire protection for rail vehicles (DIN EN 45545-2) R22	HL 1 - HL 3
Fire protection for rail vehicles (DIN EN 45545-2) R23	HL 1 - HL 3
Fire protection for rail vehicles (DIN EN 45545-2) R24	HL 1 - HL 3
Fire protection for rail vehicles (DIN EN 45545-2) R26	HL 1 - HL 3
Calorimetric heat release NFPA 130 (ASTM E 1354)	27,5 MJ/kg
Surface flammability NFPA 130 (ASTM E 162)	passed
Specific optical density of smoke NFPA 130 (ASTM E 662)	passed
Smoke gas toxicity NFPA 130 (SMP 800C)	passed

Dimensions

Width	2.2 mm
Height	47 mm
Depth	39.8 mm

DRAFT

D-UT 2,5/10 - End cover

3047028

https://www.phoenixcontact.com/us/products/3047028

Phoenix Contact 2024 © - all rights reserved
https://www.phoenixcontact.com

Phoenix Contact USA
586 Fulling Mill Road
Middletown, PA 17057, United States
(+717) 944-1300
info@phoenixcon.com

DRAFT

E/NS 35 N - End bracket

0800886

https://www.phoenixcontact.com/us/products/0800886

Please be informed that the data shown in this PDF document is generated from our online catalog. Please find the complete data in the user documentation. Our general terms of use for downloads are valid.



End clamp, width: 9.5 mm, color: gray

Your advantages

- Large-surface marking

DRAFT

E/NS 35 N - End bracket

0800886

https://www.phoenixcontact.com/us/products/0800886

Technical data

Product properties

Product type	End bracket

Connection data

Screw thread	M3
Tightening torque	0.5 ... 0.8 Nm

Dimensions

Dimensional drawing	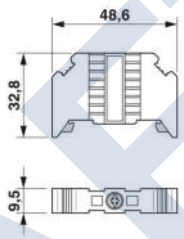
Width	9.5 mm
Height	48.6 mm
Depth	32.8 mm
Depth on NS 35/7,5	34.3 mm
Length	48.6 mm

Material specifications

Color	gray
Material	PA
Flammability rating according to UL 94	V0
Static insulating material application in cold	-60 °C
Temperature index of insulation material (DIN EN 60216-1 (VDE 0304-21))	125 °C
Relative insulation material temperature index (Elec., UL 746 B)	130 °C

Environmental and real-life conditions

Ambient conditions

Ambient temperature (operation)	-60 °C ... 105 °C (max. short-term operating temperature RTI Elec.)
Ambient temperature (storage/transport)	-25 °C ... 60 °C (for a short time, not exceeding 24 h, -60 °C to +70 °C)
Ambient temperature (assembly)	-5 °C ... 70 °C
Ambient temperature (actuation)	-5 °C ... 70 °C
Permissible humidity (storage/transport)	30 % ... 70 %

Mounting

DRAFT

E/NS 35 N - End bracket

0800886

https://www.phoenixcontact.com/us/products/0800886

Mounting type	NS 35/7,5
	NS 35/15

Phoenix Contact 2024 © - all rights reserved
https://www.phoenixcontact.com

Phoenix Contact USA
586 Fulling Mill Road
Middletown, PA 17057, United States
(+717) 944-1300
info@phoenixcon.com

DRAFT

FBS 20-6 - Plug-in bridge

3030365

https://www.phoenixcontact.com/us/products/3030365

Please be informed that the data shown in this PDF document is generated from our online catalog. Please find the complete data in the user documentation. Our general terms of use for downloads are valid.



Plug-in bridge, pitch: 6.2 mm, number of positions: 20, color: red

Your advantages

- The 2- to 50-pos. jumpers can bridge up to 50 terminal blocks in the two bridge shafts of the CLIPLINE complete system in one step

DRAFT

FBS 20-6 - Plug-in bridge

3030365

https://www.phoenixcontact.com/us/products/3030365

Technical data

Product properties

Product type	Jumper
Number of positions	20
Pitch	6.2 mm

Electrical properties

Maximum load current	32 A (The current values for the jumpers can deviate when used in different modular terminal blocks. The precise values can be found in the accessories data for the respective modular terminal blocks.)

Connection data

Maximum load current	32 A (The current values for the jumpers can deviate when used in different modular terminal blocks. The precise values can be found in the accessories data for the respective modular terminal blocks.)

Dimensions

Width	122.3 mm
Height	23 mm
Depth	23 mm
Pitch	6.2 mm

Material specifications

Color	red
Material	Copper
Flammability rating according to UL 94	V0
Insulating material	PA

Mounting

Mounting type	Plug-in mounting

DRAFT

Phoenix Contact 2024 © - all rights reserved
https://www.phoenixcontact.com

Phoenix Contact USA
586 Fulling Mill Road
Middletown, PA 17057, United States
(+717) 944-1300
info@phoenixcon.com

Bulletin 1492

IEC Terminal Blocks

Fuse Blocks

	1492-WFB4			1492-WFB424			1492-WFB4250		
Dimensions are not intended to be used for manufacturing purposes. **Note:** Height dimension is measured from top of rail to top of terminal block.	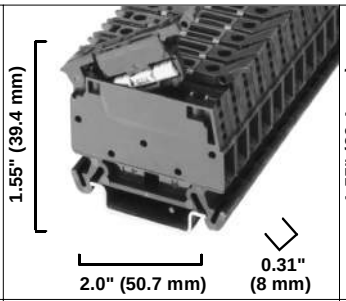			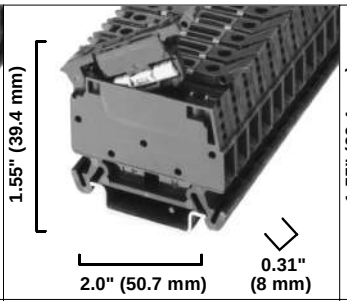			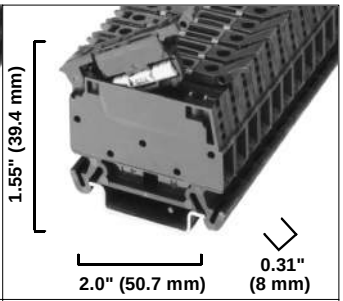		
Specifications	*Single-circuit fuse block.*			*Single-circuit fuse block with LED blown fuse indicator.*			*Single-circuit fuse block with neon blown fuse indicator.*		
Approvals	cULus	CSA	IEC	cULus	CSA	IEC	cULus	CSA	IEC
Voltage Rating	300V AC/DC	300V AC/DC	500V AC/DC	300V AC/DC	300V AC/DC	500V AC/DC	300V AC/DC	300V AC/DC	500V AC/DC
Maximum Current	15 A	15 A	15 A ❶	15 A	15 A	15 A ❶	15 A	15 A	15 A ❶
Wire Range (Rated Cross Section)	#22… #12 AWG	#22… #12 AWG	0.5… 4 mm^2	#22… #12 AWG	#22… #12 AWG	0.5… 4 mm^2	#22… #12 AWG	#22… #12 AWG	0.5… 4 mm^2
Indicator Type	Non-Indicating			LED			Neon		
Leakage Current	—			2mA @ 24V			1mA @ 264V		
Working Voltage	Per Fuse Rating			10-57V AC/DC			85-264V AC		
Fuse Size (Not Supplied)	5 x 20 mm			5 x 20 mm			5 x 20 mm		
Wire Strip Length	0.31" (8 mm)			0.31" (8 mm)			0.31" (8 mm)		
Recommended Tightening Torque	5.0…5.6 lb-in. (0.6 Nm)			5.0…5.6 lb-in. (0.6 Nm)			5.0…5.6 lb-in. (0.6 Nm)		
Density	38 pcs./ft (125/m)			38 pcs./ft (125/m)			38 pcs./ft (125/m)		
Insulation Temperature Range	–40…+195°F (–40…+90°C)			–40…+195°F (–40…+90°C)			–40…+195°F (–40…+90°C)		
Terminal Blocks	**Cat. No.**		**Pcs./ Pkg.**	**Cat. No.**		**Pcs./ Pkg.**	**Cat. No.**		**Pcs./ Pkg.**
Terminal Block	1492-WFB4		50	1492-WFB424		50	1492-WFB4250		50
Accessories (page 12-172)	**Cat. No.**		**Pcs./ Pkg.**	**Cat. No.**		**Pcs./ Pkg.**	**Cat. No.**		**Pcs./ Pkg.**
Mounting Rails: 1 m Symmetrical DIN (Steel)	199-DR1		5	199-DR1		5	199-DR1		5
1 m Symmetrical DIN (Aluminum)	1492-DR5		5	1492-DR5		5	1492-DR5		5
1 m Hi-Rise Sym. DIN (Aluminum)	1492-DR6		2	1492-DR6		2	1492-DR6		2
1 m Angled Hi-Rise Sym. DIN (Steel)	1492-DR7		2	1492-DR7		2	1492-DR7		2
End Barrier	Not Required		—	Not Required		—	Not Required		—
End Anchors: DIN Rail — Normal Duty	1492-EA35		50	1492-EA35		50	1492-EA35		50
DIN Rail — Heavy Duty	1492-EAH35		10	1492-EAH35		10	1492-EAH35		10
Jumpers: Side Jumper — 10-pole Insulated	1492-SJFB8-10		10	1492-SJFB8-10		10	1492-SJFB8-10		10
Other Accessories: Partition Plate	1492-PPSL3		50	1492-PPSL3		50	1492-PPSL3		50
Group Marking Carrier	1492-GM35		10	1492-GM35		10	1492-GM35		10
Marking Systems: Snap-in Marker Card — For Base Block	1492-SM8X12		5	1492-SM8X12		5	1492-SM8X12		5
For Handle	1492-SM6X9		5	1492-SM6X9		5	1492-SM6X9		5
Individual Marker Tabs (single char.)	1492-MP ❷		10	1492-MP ❷		10	1492-MP ❷		10

❶ IEC standards for 5 x 20 mm fuses do not include ratings above 6.3 A.
❷ Cat. no. is not complete. See page 12-173.

DRAFT

COOPER Bussmann

5 x 20mm, Fast-Acting, Glass Tube Fuses

S500 Series

Description

- Fast-acting, low breaking capacity
- Optional axial leads available
- 5 x 20mm physical size
- Glass tube with silver-plated (32-125mA) and nickel-plated (160mA-10A) endcaps
- Designed to IEC 60127-2 (160mA-10A)

Electrical Characteristics							
In	1.5 In min	2.1 In max	2.75 In min	2.75 In max	4 In min	4 In max	10 In max
32mA-125mA	60min	30min	–	–	–	–	–
160mA-6.3A	60min	30min	50ms	2sec	10ms	300ms	20ms
8A-10A	30min	30min	50ms	2sec	10ms	400ms	40ms

Agency Information

- cURus: File E19180, Guide JDYX2, JDYX8
- SEMKO Approval: File 913796
- VDE Approval: File 40014109
- BSI Approval: File KM55676
- IMQ Approval: File CA03.00097
- CCC Approval: File 2005010207155694
- PSE Approval File: JET1641-31003-1013, JET1641-31003-1014, JET1641-31003-1015, JET1641-31003-1016

Dimensions - mm

Drawing Not to Scale

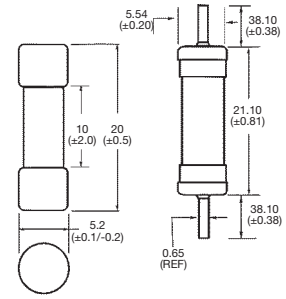



- Ratings above 6.3A have a 0.8mm diameter lead
- With TR2 packaging code, lead wire length is 19.05mm

Ordering

Specify product code

- Insert packaging code prefix before part number. E.g., BK/S500-32-R

Specify option code if desired

- For axial leads, insert “V” between catalog series and amp rating. E.g., S500-V-100-R

DRAFT

Specifications													
Part Number	Voltage Rating Vac	Interrupting Rating at Rated Voltage (50Hz) Vac (amps)	Typical DC Cold Resistance (Ω)*	Typical Melting I^2t AC†	Max Voltage Drop (mV)‡	Agency Information						
						cURus	CCC	BSI	VDE	PSE	SEMKO	IMQ
S500-32-R	250	35	40	0.000047	3200							
S500-40-R	250	35	25	0.00011	2500							
S500-50-R	250	35	17	0.0002	2400							
S500-63-R	250	35	12.5	0.00057	2000							
S500-80-R	250	35	5	0.0012	1200							
S500-100-R	250	35	3.8	0.003	1100							
S500-125-R	250	35	2.8	0.005	1000							
S500-160-R	250	35	9.1	0.008	2000	X	X	X	X		X	X
S500-200-R	250	35	6.8	0.016	1700	X	X	X	X		X	X
S500-250-R	250	35	4.3	0.28	1400	X	X	X	X		X	X
S500-315-R	250	35	3.1	0.58	1300	X	X	X	X		X	X
S500-400-R	250	35	2	0.18	1100	X	X	X	X		X	X
S500-500-R	250	35	0.26	0.18	220	X	X	X	X		X	X
S500-630-R	250	35	0.2	0.35	220	X	X	X	X		X	X
S500-800-R	250	35	0.14	0.67	190	X	X	X	X		X	X
S500-1-R	250	35	0.125	0.6	200	X	X	X	X	X	X	X
S500-1.25-R	250	35	0.096	0.84	200	X	X	X	X	X	X	X
S500-1.6-R	250	35	0.066	1.6	190	X	X	X	X	X	X	X
S500-2-R	250	35	0.043	4.2	150	X	X	X	X	X	X	X
S500-2.5-R	250	35	0.034	6.1	150	X	X	X	X	X	X	X
S500-3.15-R	250	35	0.025	13	130	X	X	X	X	X	X	X
S500-4-R	250	40	0.021	22	130	X	X	X	X	X	X	X
S500-5-R	250	50	0.014	42	120	X	X	X	X	X	X	X
S500-6.3-R	250	63	0.01	69	120	X	X	X	X	X	X	X
S500-8-R	250	80	0.01	NA	120	X		X	X	X	X	
S500-10-R	250	100	0.008	NA	120	X		X	X	X	X	

* DC Cold Resistance (Measured at <10% of rated current)
† Typical Melting I^2t (I^2t was measured at listed interrupting rating and rated voltage)
‡ Maximum Voltage Drop (Voltage drop was measured at 20°C ambient temperature at rated current)

Time-current Curve

Nominal Time/Current Characteristics

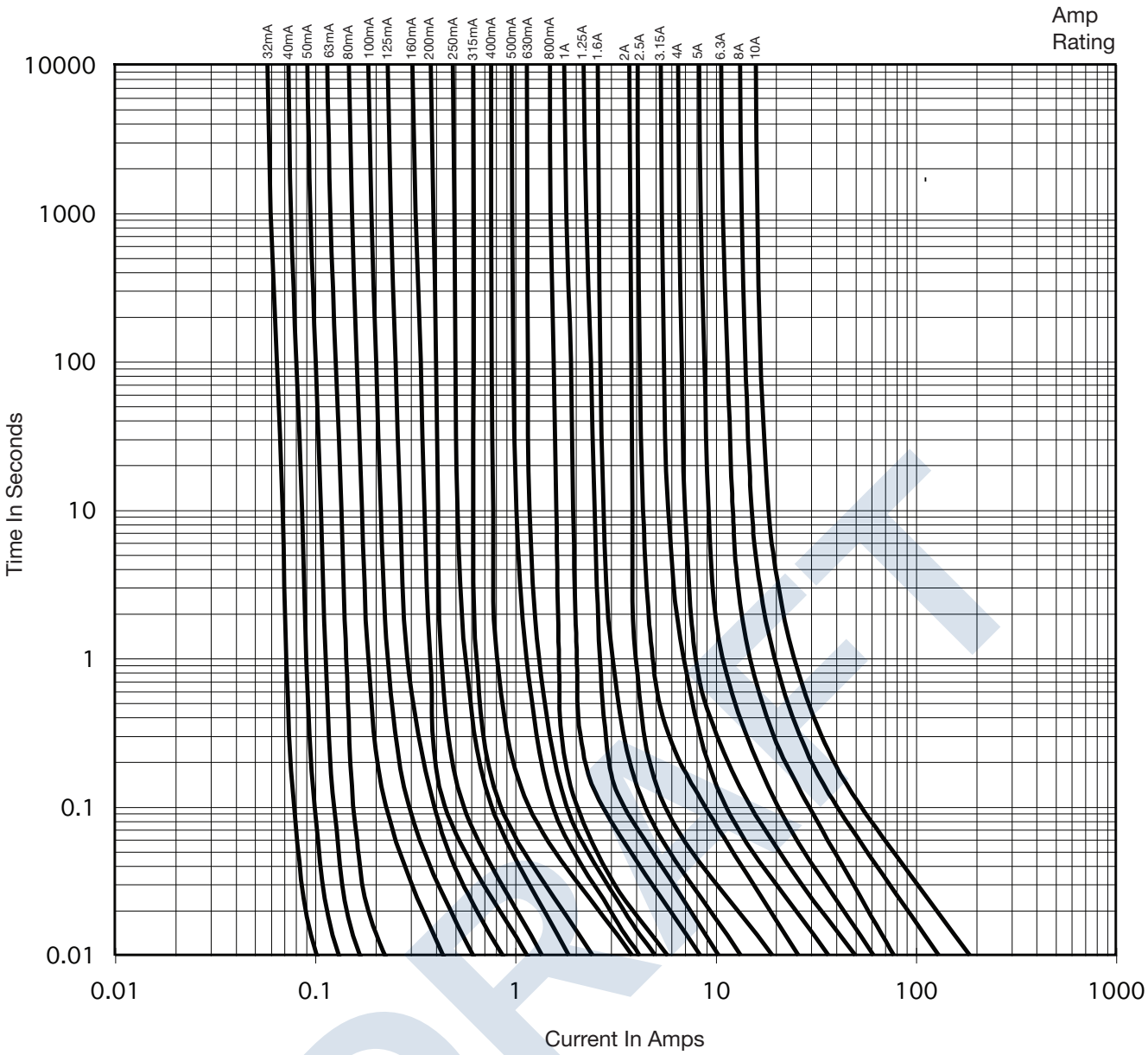

DRAFT

Packaging Code	
Packaging Prefix	**Description**
BK	100 fuses packed into a cardboard carton
BK1	1000 fuses packed into a poly bag
TR2	1500 fuses packed into tape on a reel (19.05mm lead wire length)

Option Code	
Option Code	**Description**
V	Axial leads - copper tinned wire with nickel plated brass endcaps

The only controlled copy of this Data Sheet is the electronic read-only version located on the Cooper Bussmann Network Drive. All other copies of this document are by definition uncontrolled. This bulletin is intended to clearly present comprehensive product data and provide technical information that will help the end user with design applications. Cooper Bussmann reserves the right, without notice, to change design or construction of any products and to discontinue or limit distribution of any products. Cooper Bussmann also reserves the right to change or update, without notice, any technical information contained in this bulletin. Once a product has been selected, it should be tested by the user in all possible applications.

'2013 Cooper Bussmann
www.cooperbussmann.com

TRIO3-PS/1AC/24DC/5 - Power supply unit

1159037

https://www.phoenixcontact.com/us/products/1159037

Please be informed that the data shown in this PDF document is generated from our online catalog. Please find the complete data in the user documentation. Our general terms of use for downloads are valid.



Primary-switched power supply unit, TRIO POWER, Push-in connection, DIN rail mounting, input: 1-phase, output: 24 V DC / 5 A, adjustable from 24 V DC ... 28 V DC

DRAFT

Product description

All TRIO POWER power supplies feature smart diagnostics with multicolor LEDs and a collective alarm contact. This is used to signal all relevant states such as DC OK, overload, and short circuit. Devices with integrated multi-channel device protection and an IO-Link interface for diagnostics and parameterization are optionally available. The compact devices reduce the installation work, space requirements in the control cabinet, and material costs. TRIO POWER power supplies therefore provide power reliability in one device.

Your advantages

- Space-saving due to its low overall width and capability of being mounted side by side
- Robust and reliable due to dynamic boost with a powerful output characteristic curve
- Easy handling with Push-in connection technology
- Smart diagnostics with multicolor LEDs and collective relay contact for a clear status display, with optional IO-Link
- High system availability: power reliability in one device due to the integrated compact multi-channel circuit breaker

Commercial data

Item number	1159037
Packing unit	1 pc
Minimum order quantity	1 pc
Sales key	CM29
Product key	CMPD13
GTIN	4063151166618
Weight per piece (including packing)	502.7 g
Weight per piece (excluding packing)	443 g
Customs tariff number	85044095
Country of origin	CN

TRIO3-PS/1AC/24DC/5 - Power supply unit

1159037

https://www.phoenixcontact.com/us/products/1159037

Technical data

Input data

AC operation

Supply system configuration	Star network (TN, TT, IT (PE))
Nominal input voltage range	100 V AC ... 240 V AC
Input voltage range	100 V AC ... 240 V AC -15 % ... +10 %
	115 V AC ... 240 V AC ±10 % (UL)
Derating	< 100 V AC (1 %/V)
	2.5 %/K, > 60 °C
Typical national grid voltage	120 V AC
	230 V AC
Voltage type of supply voltage	AC
Inrush current	< 33 A (25 °C)
Inrush current integral (I^2t)	< 0.55 A^2s
Frequency range (f_N)	50 Hz ... 60 Hz ±10 %
Mains buffering time	typ. 28 ms (120 V AC)
	typ. 28 ms (230 V AC)
Current consumption	1.3 A (100 V AC)
	1.1 A (120 V AC)
	0.6 A (230 V AC)
	0.59 A (240 V AC)
Protective circuit	Transient protection; Varistor
Power factor (cos phi)	0.93 (230 V AC)
Device mains fuse	6.3 A internal (device protection)
Recommended breaker for input protection	6 A ... 16 A (Characteristic B, C, D, K or comparable)
Discharge current to PE	< 3.5 mA

DC operation

Input voltage range	100 V DC ... 240 V DC ±10 %
	160 V DC ... 240 V DC ±10 % (UL)
Derating	< 140 V DC (1 %/V)
Current consumption	1.29 A (100 V DC)
	0.53 A (240 V DC)

Output data

Efficiency	typ. 93 % (120 V AC)
	typ. 94 % (230 V AC)
Nominal output voltage	24 V DC
Setting range of the output voltage (U_{Set})	24 V DC ... 28 V DC (> 24 V DC, constant capacity restricted)
Nominal output current (I_N)	5 A
Dynamic Boost ($I_{Dyn.Boost}$)	max. 7.5 A (5 s)
Short-circuit-proof	yes

DRAFT

TRIO3-PS/1AC/24DC/5 - Power supply unit

1159037

https://www.phoenixcontact.com/us/products/1159037

No-load proof	yes
Derating	60 °C ... 70 °C
Crest factor	typ. 1.72 (120 V AC)
	typ. 1.89 (230 V AC)
Output power (P_N)	120 W
Output power ($P_{Dyn. Boost}$)	max. 180 W (5 s)
Connection in parallel	yes, for increased efficiency and redundancy
Connection in series	yes, for increased output voltage (observe SELV limit)
Feedback voltage resistance	≤ 35 V DC
Protection against overvoltage at the output (OVP)	≤ 35 V DC
Residual ripple	typ. 50 mV_{PP} (with nominal values)
Control deviation	< 1 % (change in load, static 10 % ... 90 %)
	< 3 % (change in load, dynamic 10 % ... 90 %)
	< 0.1 % (change in input voltage ±10 %)
Rise time	≤ 1 s (U_{Out} = 10 % ... 90 %)
Minimum no-load power dissipation	< 2.14 W (120 V AC)
Maximum no-load power dissipation	< 1.75 W (230 V AC)
Minimum nominal load power dissipation	< 8.54 W (120 V AC)
Power loss nominal load max.	< 6.51 W (230 V AC)
Integrated fuse protection	no

Signal relay 13/14

Position	3.x
Position marking	3.1 (13), 3.2 (14)
Switch contact (floating)	OptoMOS
Switching voltage	max. 30 V DC (SELV)
Current carrying capacity	max. 100 mA
State condition	U_{Out} > 21 V DC and I_{Out} < 0.9 x I_N (Contact closed)
	U_{Out} < 21 V DC or I_{Out} > 0.9 x I_N (averaging over 60 s) (Contact open)

Connection data

Input

Position	1.x

Connection technology

Position marking	1.1 (L/+), 1.2 (N/-), 1.3 (⏚)

Conductor connection

Connection method	Push-in connection
rigid	0.2 mm² ... 4 mm²
	1.5 mm² (recommended)
flexible	0.2 mm² ... 2.5 mm²
	1.5 mm² (recommended)
flexible with ferrule without plastic sleeve	0.25 mm² ... 2.5 mm²

DRAFT

TRIO3-PS/1AC/24DC/5 - Power supply unit

1159037

https://www.phoenixcontact.com/us/products/1159037

	1.5 mm² (recommended)
flexible with ferrule with plastic sleeve	0.25 mm² ... 2.5 mm²
	1.5 mm² (recommended)
rigid (AWG)	24 ... 12 (Cu)
	16 (recommended)
Stripping length	10 mm (Rigid/flexible/ferrule)

Output

Position	2.x

Connection technology

Position marking	2.1, 2.2 (+), 2.3, 2.4, 2.5 (-)

Conductor connection

Connection method	Push-in connection
rigid	0.2 mm² ... 4 mm²
	1.5 mm² (recommended)
flexible	0.2 mm² ... 2.5 mm²
	1.5 mm² (recommended)
flexible with ferrule without plastic sleeve	0.25 mm² ... 2.5 mm² (Cu)
	1.5 mm² (recommended)
flexible with ferrule with plastic sleeve	0.25 mm² ... 2.5 mm²
	1.5 mm² (recommended)
rigid (AWG)	24 ... 12 (Cu)
	16 (recommended)
Stripping length	10 mm (Rigid/flexible/ferrule)

Signal

Position	3.x

Connection technology

Position marking	3.1 (13), 3.2 (14)

Conductor connection

Connection method	Push-in connection
rigid	0.2 mm² ... 1.5 mm²
	0.5 mm² (recommended)
flexible	0.2 mm² ... 1.5 mm²
	0.5 mm² (recommended)
flexible with ferrule without plastic sleeve	0.25 mm² ... 1.5 mm² (Cu)
	0.5 mm² (recommended)
flexible with ferrule with plastic sleeve	0.25 mm² ... 0.75 mm²
	0.5 mm² (recommended)
rigid (AWG)	24 ... 16 (Cu)
	20 (recommended)
Stripping length	10 mm (Rigid/flexible/ferrule)

DRAFT

TRIO3-PS/1AC/24DC/5 - Power supply unit

1159037

https://www.phoenixcontact.com/us/products/1159037

Signaling

LED signaling

Types of signaling	LED DC OK – signal state operation (U_N = 24 V DC, I_{Out} = I_N)
Function	Visual operating state display
Color	red, yellow, green (multicolor LED)
LED off	Supply voltage input AC not present (Off)
LED on (green), DC OK	U_{Out} > 21 V DC and I_{Out} < 0.9 x I_N (On (green), DC OK)
LED on (yellow), IOut > 90%	U_{Out} > 21 V DC and I_{Out} > 0.9 x I_N (On (yellow), I_{Out} > 90%)
LED on (red), ISHORT	U_{Out} < 21 V DC and I_{Out} > 0.9 x I_N (On (red), I_{SHORT})
LED on (flashing red) OVP	U_{OUT} > OVP (Over voltage protection) (On (flashing red))

Electrical properties

Number of phases	1.00
Insulation voltage input/output	3 kV AC (type test)
	3.1 kV DC (routine test)

Product properties

Product type	Power supply
Product family	TRIO POWER
MTBF (IEC 61709, SN 29500)	> 3300000 h (25 °C)
	> 1900000 h (40 °C)
	> 880000 h (60 °C)
Environmental protection directive	RoHS Directive 2011/65/EU
	WEEE
	Reach

Data management status

Article revision	02

Insulation characteristics

Protection class	I
Degree of pollution	2

Dimensions

Item dimensions

Width	35 mm
Height	135 mm
Depth	120 mm
	115 mm (Device depth (DIN rail mounting))

Installation dimensions

Installation distance right/left	0 mm / 0 mm
Installation distance top/bottom	50 mm / 50 mm

DRAFT

TRIO3-PS/1AC/24DC/5 - Power supply unit

1159037

https://www.phoenixcontact.com/us/products/1159037

Mounting

Mounting type	DIN rail mounting
Assembly note	alignable: 0 mm horizontally, 30 mm vertically
Mounting position	horizontal DIN rail NS 35, EN 60715
With protective coating	no

Material specifications

Flammability rating according to UL 94	V0 (Housing, terminal blocks)
Hood version	Polycarbonate
Side element version	Aluminum

Environmental and real-life conditions

Ambient conditions

Degree of protection	IP20
Ambient temperature (operation)	-25 °C ... 70 °C (> 60 °C Derating: 2,5 %/K)
Ambient temperature (storage/transport)	-40 °C ... 85 °C
Ambient temperature (start-up type tested)	-40 °C
Maximum altitude	≤ 5000 m (> 2000 m, Derating: 10 %/1000 m)
Max. permissible relative humidity (operation)	≤ 95 % (at 25 °C, non-condensing)
Shock (operation)	18 ms, 30g, per spatial direction (IEC 60068-2-27)
Vibration (operation)	10 Hz ... 50 Hz, amplitude ±0.2 mm (IEC 60068-2-6)
	50 Hz ... 150 Hz, 2.3g, 90 min.
Temp code	T4 (-25 ... +70 °C; > 60 °C, Derating: 2,5 %/K)

Standards and regulations

Overvoltage category

EN 61010-1	III (≤ 2000 m)
	II (≤ 5000 m)

Overvoltage category

EN 61010-2-201	III (≤ 2000 m)
	II (≤ 5000 m)

Safety of power supply units up to 1100 V (insulation distances)

Standard designation	Safety of power supply units up to 1100 V (insulation distances)
Standards/specifications	DIN EN 61558-2-16

Electrical safety

Standard designation	Electrical safety
Standards/specifications	IEC 61010-2-201 (SELV)

Electronic equipment for use in power installations

Standard designation	Equipping high voltage installations with electronic equipment
Standards/specifications	EN 50178/VDE 0160 (PELV)

DRAFT

TRIO3-PS/1AC/24DC/5 - Power supply unit

1159037

https://www.phoenixcontact.com/us/products/1159037

Safety for measurement, control, and laboratory equipment

Standard designation	Safety for equipment for measurement, control, and laboratory use
Standards/specifications	IEC 61010-1

Protective extra-low voltage

Standard designation	Protective extra-low voltage
Standards/specifications	IEC 61010-1 (SELV)
	IEC 61010-2-201 (PELV)

Safe isolation

Standard designation	Safe isolation
Standards/specifications	IEC 61558-2-16
	IEC 61010-2-201

Limitation of harmonic line currents

Standard designation	Limitation of harmonic line currents
Standards/specifications	EN 61000-3-2

Mains variation/undervoltage

Standard designation	Mains variation/undervoltage
Standards/specifications	SEMI F47
	EN 61000-4-11

Approvals

UL

Identification	UL/C-UL Listed UL 61010-1

UL

Identification	UL/C-UL Listed UL 61010-2-201

ANSI/UL 121201

Identification	PROCESS CONTROL EQUIPEMENT FOR HAZARDOUS LOCATIONS
	(EN) • This equipment is suitable for use in Class I, Division 2, Groups A, B, C and D, Hazardous Locations, or non-hazardous locations only. (FR) • Cet appareil convient uniquement pour une utilisation en atmosphères explosibles de classe I, division 2, groupes A, B, C et D ou en atmosphères non explosibles.
	(EN) • WARNING: Explosion Hazard - Do not connect or disconnect equipment unless power has been switched off or the area is known to be non-hazardous. (FR) • AVERTISSEMENT : risque d'explosion - ne pas connecter ou déconnecter les équipements sauf si l'alimentation a été coupée ou si la zone est réputée non dangereuse.

DRAFT

TRIO3-PS/1AC/24DC/5 - Power supply unit

1159037

https://www.phoenixcontact.com/us/products/1159037

	(EN) • If the equipment is used in a manner not specified by the manufacturer, the protection provided by the equipment may be impaired. (FR) • Si l'équipement est utilisé d'une manière non spécifiée par le fabricant, la protection fournie par cet équipement peut être altérée.
	(EN) • This equipement must be installed in a suitable, tool secured/key locked enclosure. (FR) • Cet équipement doit être installé dans un boîtier approprié, verrouillé par une clé ou dont l'ouverture nécessite l'utilisation d'un outil.

EMC data

Electromagnetic compatibility	Conformance with EMC Directive 2014/30/EU
Low Voltage Directive	Conformance with Low Voltage Directive 2014/35/EC
Interference emission	Interference emission in accordance with EN 61000-6-3 (residential and commercial) and EN 61000-6-4 (industrial)
Noise immunity	Immunity in accordance with EN 61000-6-1 (residential), EN 61000-6-2 (industrial)
Conducted noise emission	EN 55016
	EN 61000-6-3 (Class B)
Noise emission	EN 55016
	EN 61000-6-3 (Class B)

Harmonic currents

Standards/regulations	EN 61000-3-2
	EN 61000-3-2 (Class A)
Frequency range	0 kHz ... 2 kHz

Flicker

Standards/regulations	EN 61000-3-3
	EN 61000-3-3
Frequency range	0 kHz ... 2 kHz

Electrostatic discharge

Standards/regulations	EN 61000-4-2

Electrostatic discharge

Contact discharge	6 kV (Test Level 3)
Discharge in air	8 kV (Test Level 3)
Comments	Criterion B

Electromagnetic HF field

Standards/regulations	EN 61000-4-3

Electromagnetic HF field

Frequency range	80 MHz ... 1 GHz
Test field strength	10 V/m (Test Level 3)
Frequency range	1 GHz ... 6 GHz
Test field strength	10 V/m (Test Level 3)

DRAFT

TRIO3-PS/1AC/24DC/5 - Power supply unit

1159037

https://www.phoenixcontact.com/us/products/1159037

Comments	Criterion A

Fast transients (burst)

Standards/regulations	EN 61000-4-4

Fast transients (burst)

Input	asymmetrical 2 kV (Test Level 3)
Output	asymmetrical 2 kV (Test Level 3)
Signal	asymmetrical 1 kV (Test Level 3)
Comments	Criterion A

Surge voltage load (surge)

Standards/regulations	EN 61000-4-5

Surge voltage load (surge)

Input	symmetrical 1 kV (Test Level 3)
	asymmetrical 2 kV (Test Level 3)
Output	symmetrical 0.5 kV (Test Level 2)
	asymmetrical 1 kV (Test Level 2)
Signal	asymmetrical 1 kV (Test Level 2)
Comments	Criterion B

Conducted interference

Standards/regulations	EN 61000-4-6

Conducted interference

I/O/S	asymmetrical
Frequency range	0.15 MHz ... 80 MHz
Comments	Criterion A
Voltage	10 V (Test Level 3)

Voltage dips

Standards/regulations	EN 61000-4-11
Voltage	230 V AC
Frequency	50 Hz
Voltage dip	70 %
Number of periods	25 periods
Additional text	Class 3
Comments	Criterion A
Voltage dip	40 %
Number of periods	10 periods
Additional text	Class 3
Comments	Criterion B
Voltage dip	0 %
Number of periods	1 period
Additional text	Class 3
Comments	Criterion A

DRAFT

TRIO3-PS/1AC/24DC/5 - Power supply unit

1159037

https://www.phoenixcontact.com/us/products/1159037

Criteria

Criterion A	Normal operating behavior within the specified limits.
Criterion B	Temporary impairment to operational behavior that is corrected by the device itself.
Criterion C	Temporary adverse effects on the operating behavior, which the device corrects automatically or which can be restored by actuating the operating elements.

DRAFT

TRIO3-PS/1AC/24DC/5 - Power supply unit

1159037

https://www.phoenixcontact.com/us/products/1159037

Drawings

Block diagram

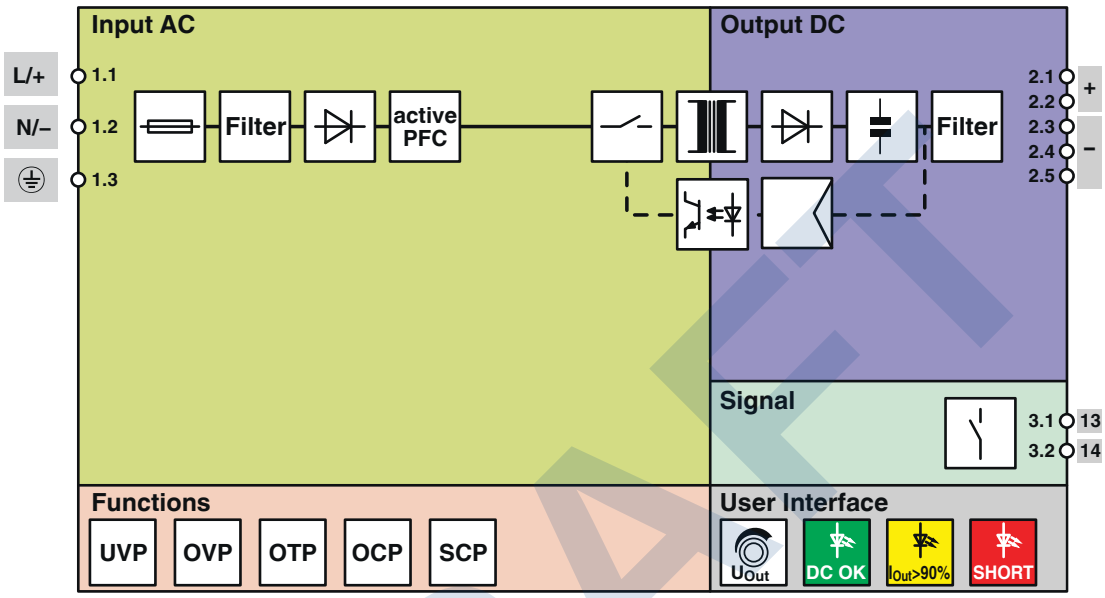

Block diagram

Diagram

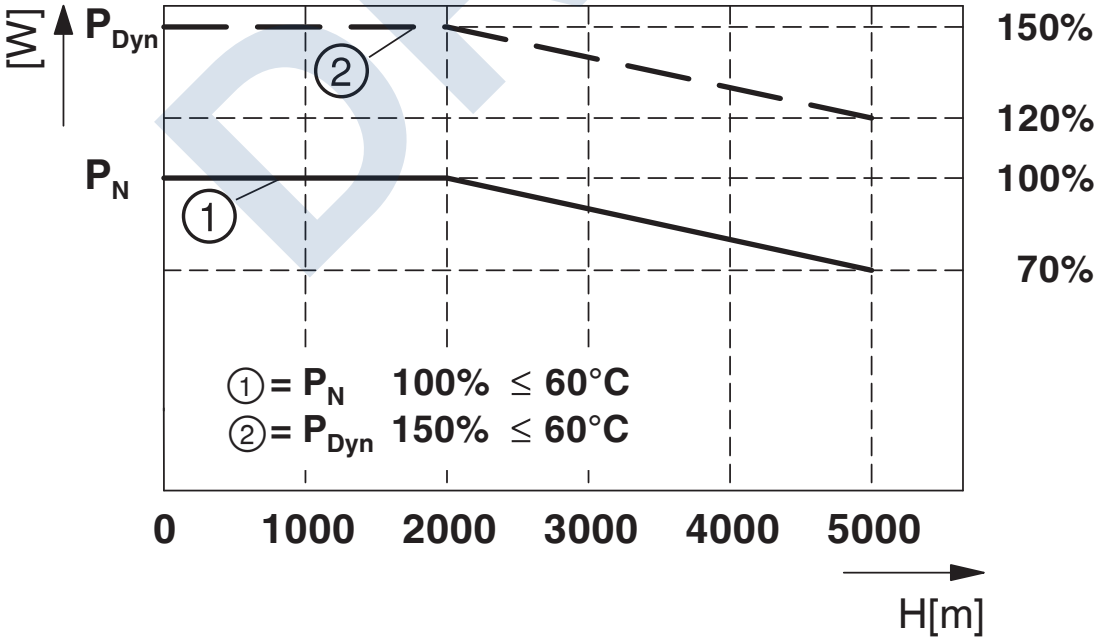

Altitude-dependent derating

DRAFT

TRIO3-PS/1AC/24DC/5 - Power supply unit

1159037

https://www.phoenixcontact.com/us/products/1159037

Dimensional drawing

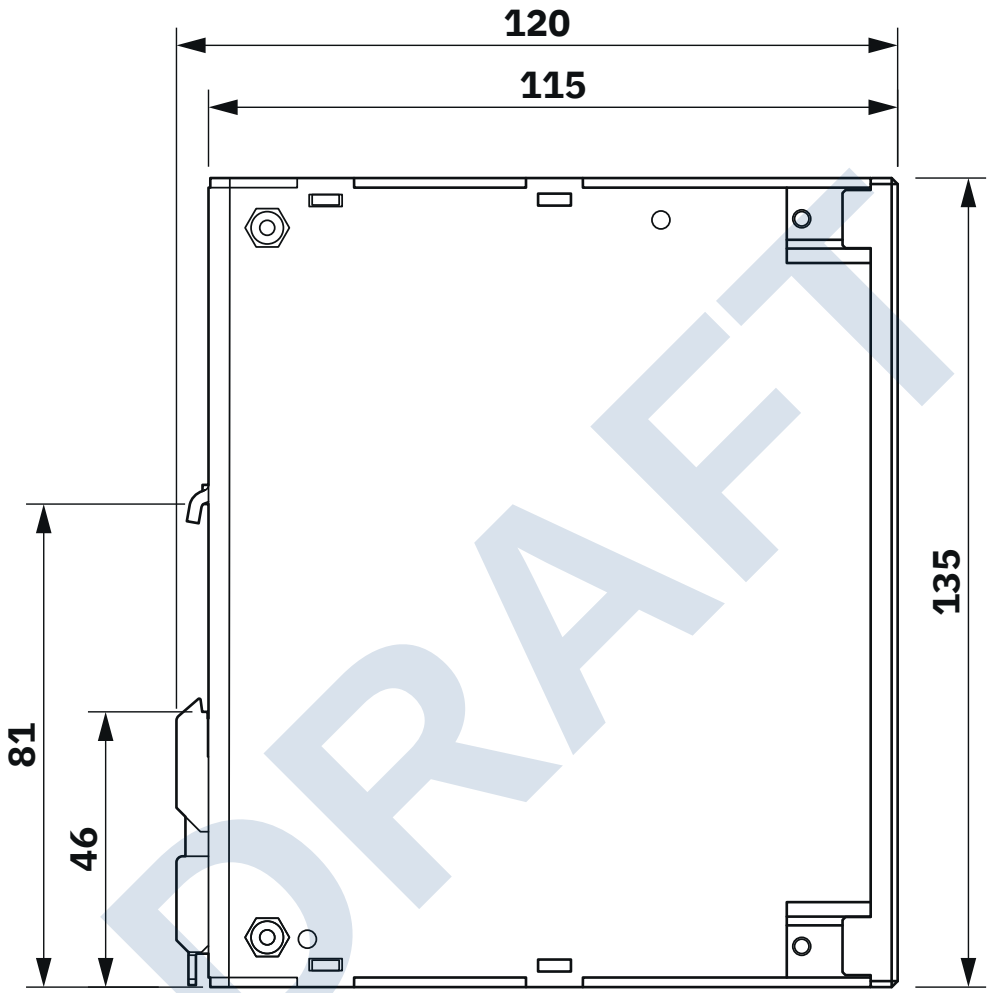

Device dimensions (dimensions in mm)

DRAFT

TRIO3-PS/1AC/24DC/5 - Power supply unit

1159037

https://www.phoenixcontact.com/us/products/1159037

Diagram

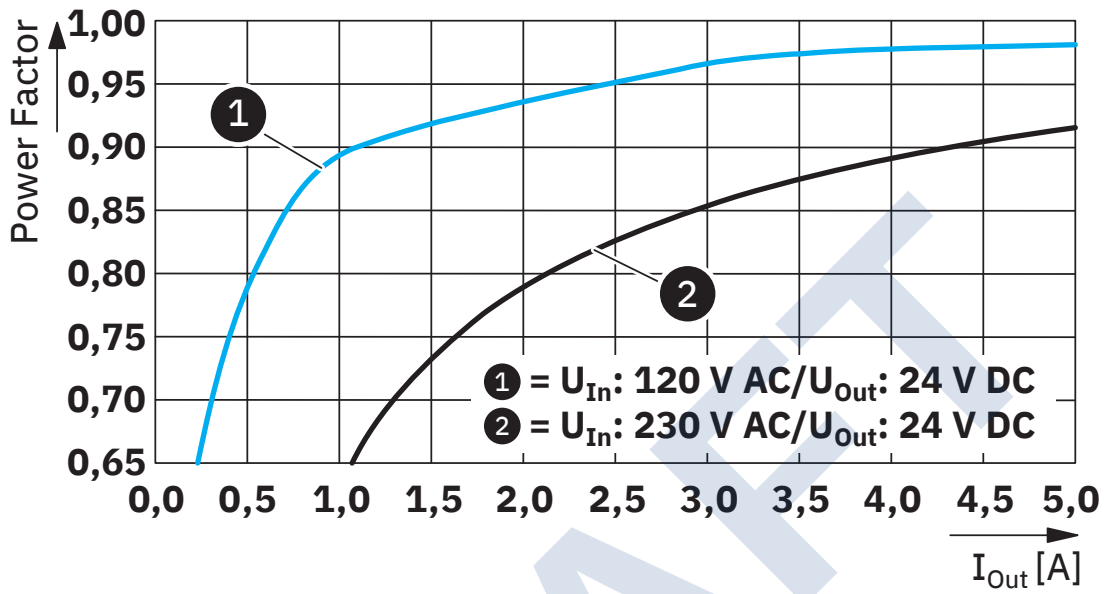

Power factor

DRAFT

TRIO3-PS/1AC/24DC/5 - Power supply unit

1159037

https://www.phoenixcontact.com/us/products/1159037

Dimensional drawing

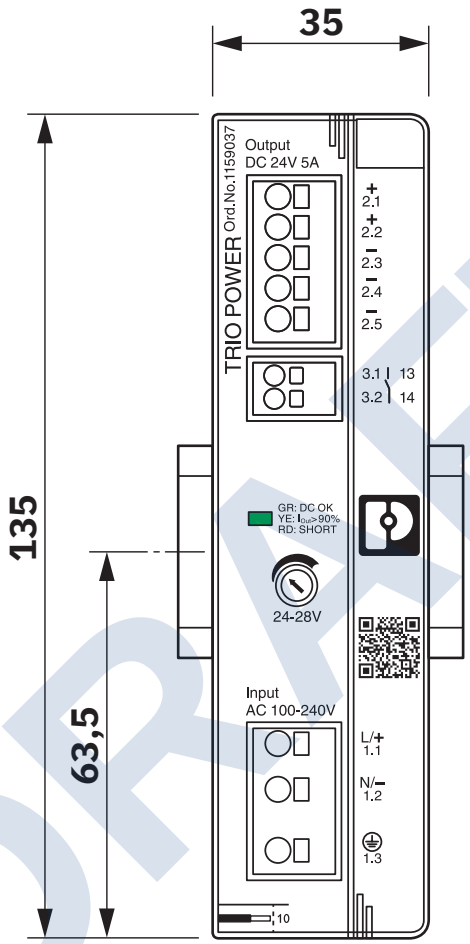

Device dimensions (dimensions in mm)

DRAFT

TRIO3-PS/1AC/24DC/5 - Power supply unit

1159037

https://www.phoenixcontact.com/us/products/1159037

Schematic diagram

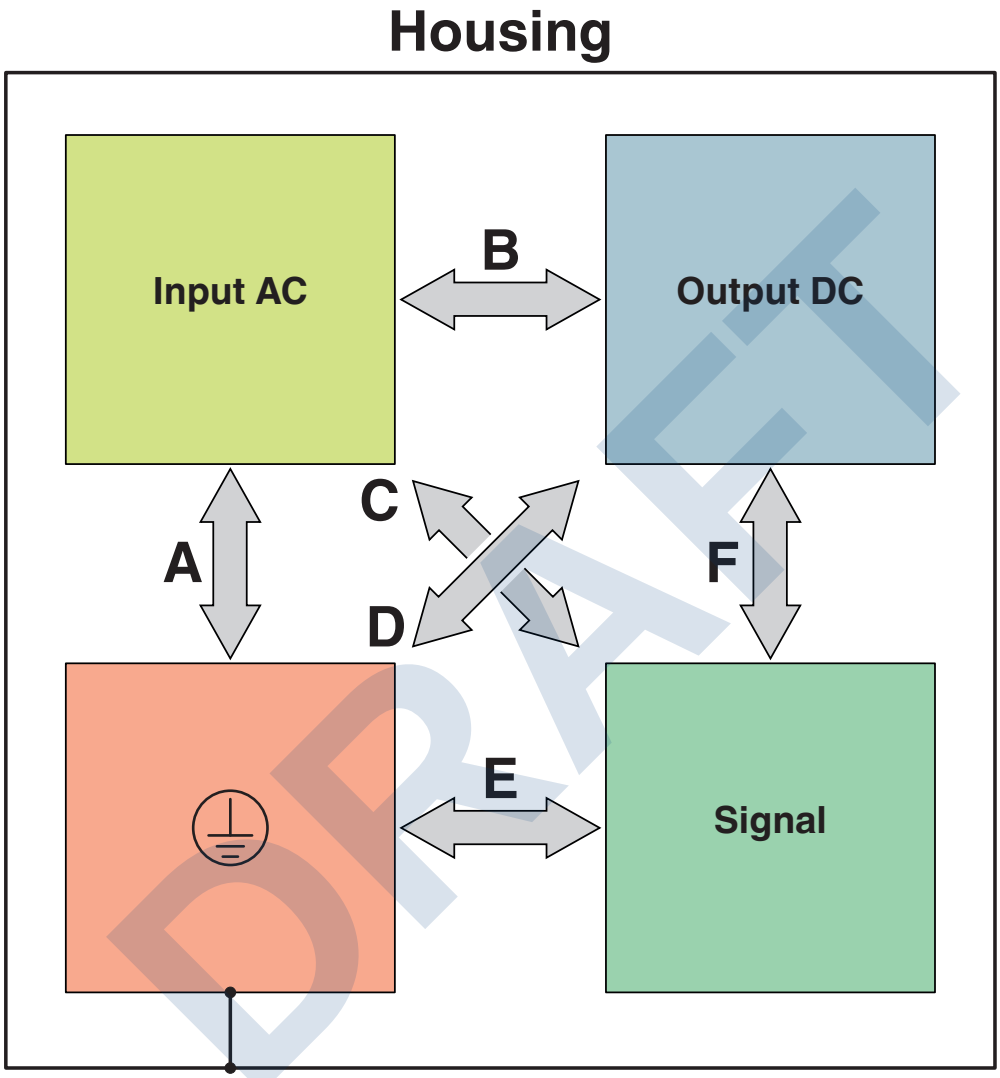

Test sections, insulation voltage

TRIO3-PS/1AC/24DC/5 - Power supply unit

1159037

https://www.phoenixcontact.com/us/products/1159037

Diagram

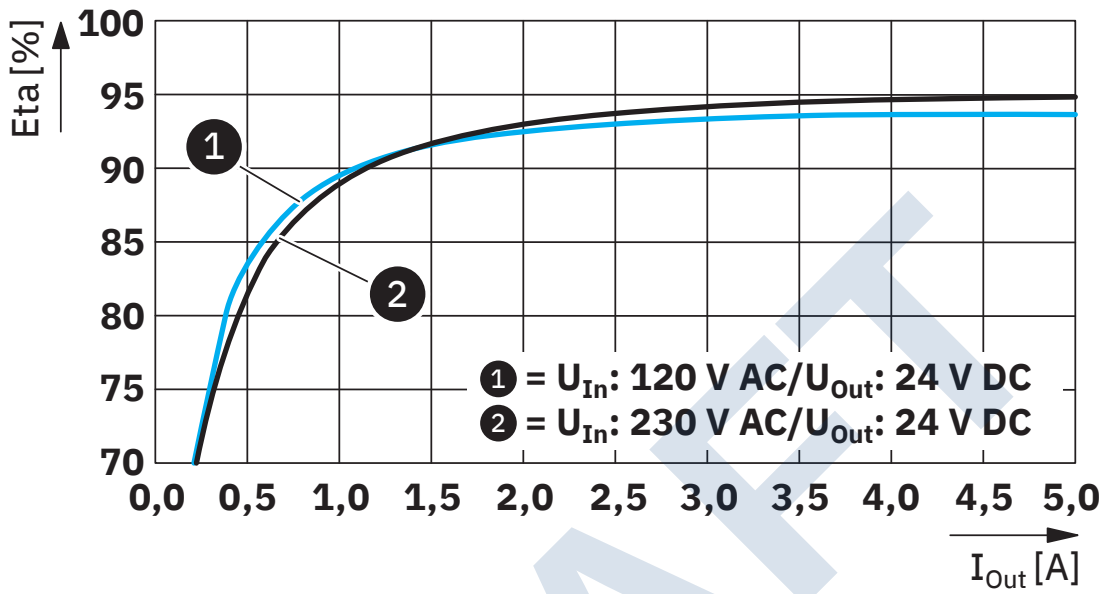

Efficiency

Diagram

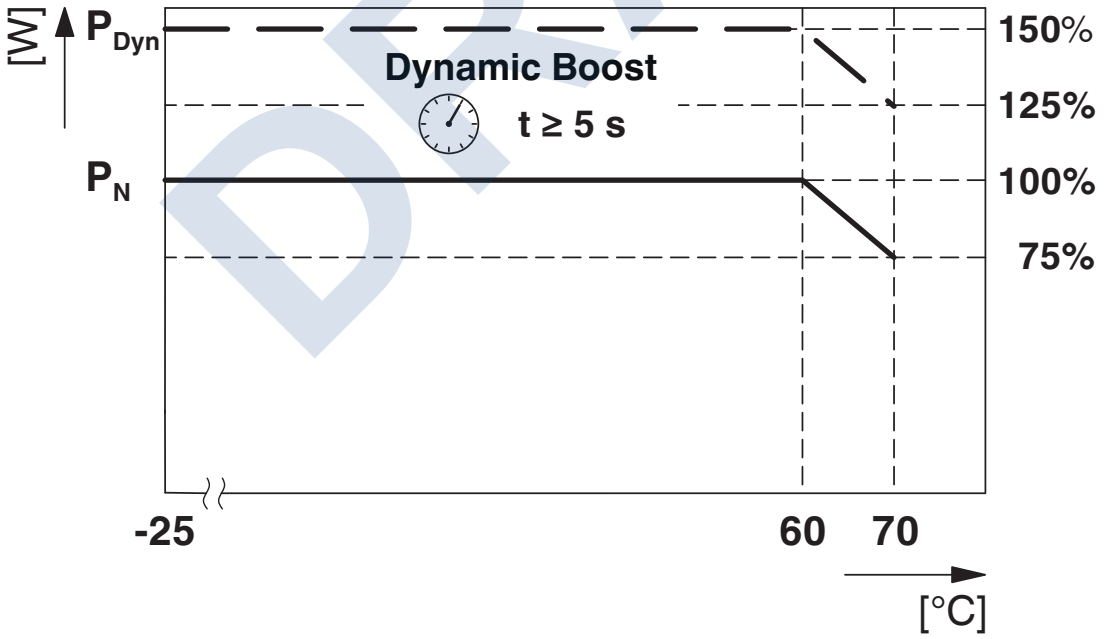

Temperature-dependent derating

DRAFT

TRIO3-PS/1AC/24DC/5 - Power supply unit

1159037

https://www.phoenixcontact.com/us/products/1159037

Diagram

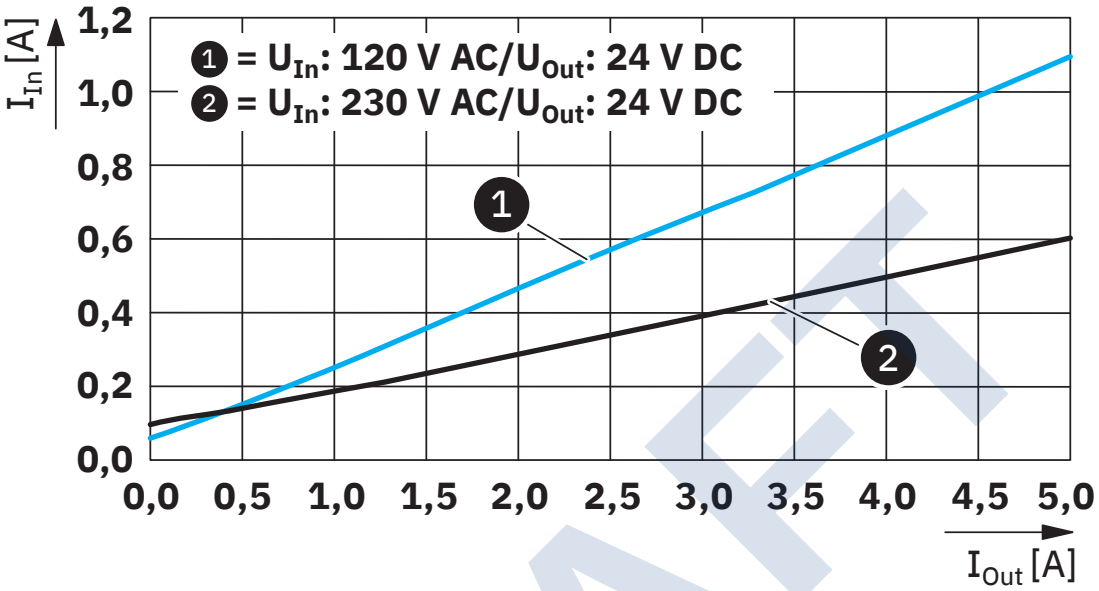

Input current/output current

DRAFT

TRIO3-PS/1AC/24DC/5 - Power supply unit

1159037

https://www.phoenixcontact.com/us/products/1159037

Approvals

To download certificates, visit the product detail page: https://www.phoenixcontact.com/us/products/1159037

cULus Listed
Approval ID: FILE E 123528

DNV
Approval ID: TAA00000BM

cULus Listed
Approval ID: FILE E 199827

DRAFT

TRIO3-PS/1AC/24DC/5 - Power supply unit

1159037

https://www.phoenixcontact.com/us/products/1159037

Classifications

ECLASS

ECLASS-11.0	27040701
ECLASS-12.0	27040701
ECLASS-13.0	27040701

ETIM

ETIM 9.0	EC002540

DRAFT

Control Circuit & Load Protection

LOGIC

Miniature Circuit Breakers 1489

- UL/CSA Listed for branch circuit protection
- Current limiting
- Reversible line and load connections
- Attachments available for Lockout/Tagout
- Trip curves: C and D



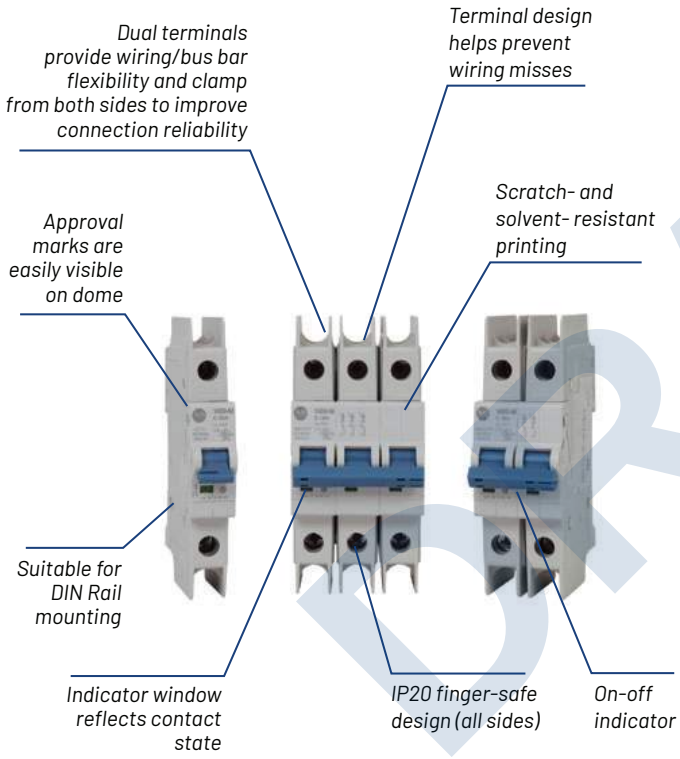

1489-M thermal-magnetic circuit breakers are approved for branch circuit protection in the United States and Canada, and are certified as Miniature circuit breakers for IEC applications.

These branch protectors are compatible with many accessories to meet diverse application needs, including UL 508 Listed bus bars for convenience in panel assembly, auxiliary contacts, signal contacts and shunt trips for versatility, and lockout attachments for safety during maintenance.



DRAFT

Product Selection

Miniature Circuit Breakers

Continuous Current Rating (I_n) [A]	Trip Curve C [1] – Inductive, 5...10 I_n		
	1-Pole	2-Pole	3-Pole
	Cat. No.	Cat. No.	Cat. No.
0.5	1489-M1C005	1489-M2C005	1489-M3C005
1	1489-M1C010	1489-M2C010	1489-M3C010
1.6	1489-M1C016	1489-M2C016	1489-M3C016
2	1489-M1C020	1489-M2C020	1489-M3C020
3	1489-M1C030	1489-M2C030	1489-M3C030
4	1489-M1C040	1489-M2C040	1489-M3C040
5	1489-M1C050	1489-M2C050	1489-M3C050
6	1489-M1C060	1489-M2C060	1489-M3C060
7	1489-M1C070	1489-M2C070	1489-M3C070
8	1489-M1C080	1489-M2C080	1489-M3C080
10	1489-M1C100	1489-M2C100	1489-M3C100
13	1489-M1C130	1489-M2C130	1489-M3C130
15	1489-M1C150	1489-M2C150	1489-M3C150
16	1489-M1C160	1489-M2C160	1489-M3C160
20	1489-M1C200	1489-M2C200	1489-M3C200
25	1489-M1C250	1489-M2C250	1489-M3C250
30	1489-M1C300	1489-M2C300	1489-M3C300
32	1489-M1C320	1489-M2C320	1489-M3C320
35	1489-M1C350	1489-M2C350	1489-M3C350

[1] The catalog number listed represents Trip Curve C: Inductive. To order Trip Curve D (highly inductive), replace the **C** in the catalog number with **D**. Example: Catalog number 1489-M1**C**005 becomes Catalog number 1489-M1**D**005.

Specifications

Standards Compliance	UL 489, CSA C22.2 No. 235, EN 60947-2, GB 14048.2
Certifications	UL Listed, File No. E197878, CSA Certified, CE Marked, CCC Certified, VDE Certified, RoHS Compliant, EAC Certified
Rated Voltage	UL/CSA: Max. 480Y/277V AC IEC: Ue 230/400V AC
Interrupting Capacity	UL/CSA: 10 kA IEC: 15 kA

Accessories

Description	Contacts	Cat. No.
Shunt trip 110...415V AC/110...250V DC	–	1489-AMST1
Shunt trip 12...60V AC/DC	–	1489-AMST2
Signal contact	1 N.O./N.C. (1 C.O.)	1489-AMRS3
Auxiliary contact	1 N.O./N.C. (1 C.O.)	1489-AMRA3

Bus Bars

Description	No. of Pins	No. of Circuit Breakers	Cat. No. [2, 3, 4]
1-phase	6	6	1489-AMCL106
	12	12	1489-AMCL112
	18	18	1489-AMCL118
2-phase	6	3	1489-AMCL206
	12	6	1489-AMCL212
	18	9	1489-AMCL218
3-phase	6	2	1489-AMCL306
	12	4	1489-AMCL312
	18	6	1489-AMCL318

Bus Bar Accessories	
Description	**Cat. No.**
Terminal power feed, 35 mm²	1489-AMCLT35
Dedicated power feed, 50 mm²	1489-AMCLT50D
Protective shroud (for unused pins)	1489-AMCLPS

[2] Package quantity of 10

[3] cULus, UL 508, EN 60947-1, CE Marked

[4] Maximum of three bus bars allowed



Looking for More?

This catalog highlights only our most essential components; for a complete product selection, visit us at:

https://rok.auto/directory

DRAFT

PLT-SEC-T3-120-FM-UT - Type 3 surge protection device

2907918

https://www.phoenixcontact.com/us/products/2907918

Please be informed that the data shown in this PDF document is generated from our online catalog. Please find the complete data in the user documentation. Our general terms of use for downloads are valid.



Type 2/3 surge protection, consisting of protective plug and base element, with integrated status indicator and remote signaling for single-phase power supply networks. Nominal voltage: 120 V AC/DC

Your advantages

- Surge protection family for universal use with optimum energy coordination from the lightning current arrester to the device protection
- Easy to maintain due to consistently pluggable protection modules
- Excellent level of information provided by mechanical/visual status indicator and remote indication contact
- Your preferred connection technology can be selected as both screw connection and Push-in connection are available
- Optimal additional protection of the industrial power supply for a longer service life and increased availability of the system
- 5-year warranty on your QUINT 4 power supply when installed together with PLT-SEC, see document in the download area

DRAFT

PLT-SEC-T3-120-FM-UT - Type 3 surge protection device

2907918

https://www.phoenixcontact.com/us/products/2907918

Technical data

Product properties

Product type	Device protection
Product family	SEC Family
IEC power supply system	TN-S
	TT
Type	DIN rail module, two-section, divisible
Number of positions	2
Surge protection fault message	Optical, remote indicator contact

Insulation characteristics

Overvoltage category	III
Pollution degree	2
IEC test classification	II / III
	T2 / T3
EN type	T2 / T3
Number of ports	One

Electrical properties

Indicator/remote signaling

Connection name	Remote fault indicator contact
Switching function	Changeover contact
Operating voltage	250 V AC
	125 V DC (200 mA DC)
Operating current	0.5 A AC
	0.5 A DC (75 V DC)

Connection data

Connection method	Screw connection
Screw thread	M3
Tightening torque	0.5 Nm
Conductor cross section flexible	0.2 mm² ... 2.5 mm²
Conductor cross section rigid	0.2 mm² ... 4 mm²
Conductor cross section AWG	24 ... 12

Dimensions

Dimensional drawing	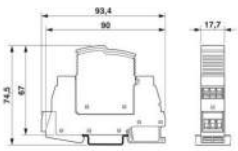
Width	17.7 mm

DRAFT

PLT-SEC-T3-120-FM-UT - Type 3 surge protection device

2907918

https://www.phoenixcontact.com/us/products/2907918

Height	93.4 mm
Depth	74.5 mm (incl. DIN rail 7.5 mm)
Horizontal pitch	1 Div.

Material specifications

Color (Male connector)	light grey (RAL 7035)
Color (Base element)	gray (RAL 7042)
Flammability rating according to UL 94	V-0
CTI value of material	600
Insulating material	PA 6.6-FR 20 % GF
	PA 6.6-FR
Housing material	PA 6.6-FR 20 % GF
	PA 6.6-FR

Protective circuit

Mode of protection	L-N
	L-PE
	N-PE
Direction of action	1L-N & N-PE
Nominal voltage U_N	120 V AC (TN-S)
	120 V AC (TT)
Nominal frequency f_N	50 Hz (60 Hz)
Maximum continuous voltage U_C	150 V AC
Rated load current I_L	26 A (at 30 °C)
Residual current I_{PE}	≤ 5 µA
Standby power consumption P_C	≤ 10.60 mVA (at U_{REF})
	≤ 13.50 mVA (at U_C)
Reference test voltage U_{REF}	132 V AC
Nominal discharge current I_n (8/20) µs	5 kA
Maximum discharge current I_{max} (8/20) µs	10 kA
Combination wave U_{OC}	6 kV
Voltage protection level U_p (L-N)	≤ 0.75 kV (at U_{OC})
	≤ 0.95 kV (at I_n)
Voltage protection level U_p (L-PE)	≤ 0.85 kV
Voltage protection level U_p (N-PE)	≤ 0.85 kV
TOV behavior at U_T (L-N)	240 V AC (5 s / withstand mode)
	240 V AC (120 min / withstand mode)
TOV behavior at U_T (L-PE)	240 V AC (5 s / withstand mode)
	240 V AC (120 min / withstand mode)
	1332 V AC (200 ms / safe failure mode)
TOV behavior at U_T (N-PE)	1200 V AC (200 ms / safe failure mode)
Response time t_A (L-N)	≤ 25 ns
Response time t_A (L-PE)	≤ 100 ns
Response time t_A (N-PE)	≤ 100 ns

DRAFT

PLT-SEC-T3-120-FM-UT - Type 3 surge protection device

2907918

https://www.phoenixcontact.com/us/products/2907918

Short-circuit current rating I_{SCCR}	10 kA AC
Max. backup fuse with branch wiring	32 A (gG / B / C)

Additional technical data

Short-circuit current rating I_{SCCR}	0.25 kA DC (Without additional backup fuse in the DC branch wiring)
	5 kA DC (for 20 A gG / B backup fuse)
Residual voltage U_{res} (L-N)	≤ 0.68 kV (at 2 kA)
	≤ 0.75 kV (at 3 kA)
	≤ 0.64 kV (at U_{OC} = 4 kV)
Residual voltage U_{res} (L-PE)	≤ 0.58 kV (at 2 kA)
	≤ 0.65 kV (at 3 kA)
	≤ 0.75 kV (at U_{OC} = 4 kV)
Residual voltage U_{res} (N-PE)	≤ 0.58 kV (at 2 kA)
	≤ 0.65 kV (at 3 kA)
	≤ 0.75 kV (at U_{OC} = 4 kV)
Maximum continuous voltage U_C	150 V DC
Mode of protection	(DC+) - (DC-)
	(DC+/DC-) - PE
IEC test classification (in accordance with IEC 61643-21)	D1
Impulse durability (wire-wire)	D1 - 500 A
Impulse durability (line-earth)	D1 - 500 A
Pulse discharge current I_{imp} (10/350) µs (line-line)	0.5 kA
Pulse discharge current I_{imp} (10/350) µs (line-earth)	0.5 kA

Environmental and real-life conditions

Ambient conditions

Degree of protection	IP20
Ambient temperature (operation)	-40 °C ... 80 °C
Ambient temperature (storage/transport)	-40 °C ... 80 °C
Altitude	≤ 2000 m (operating voltage remote contact ≤ 250 V)
	≤ 6000 m (operating voltage remote contact ≤ 150 V)
Permissible humidity (operation)	5 % ... 95 %
Shock (operation)	30g (Half-sine / 11 ms / 3x ±X, ±Y, ±Z)
Vibration (operation)	5g (5 ... 500 Hz / 2.5 h / X, Y, Z)

Approvals

UL specifications

Maximum continuous operating voltage MCOV	150 V AC
	150 V DC
Short-circuit current rating (SCCR)	10 kA AC
	5 kA DC
Voltage protection rating VPR (L-N)	700 V
Voltage protection rating VPR (L-G)	700 V

DRAFT

PLT-SEC-T3-120-FM-UT - Type 3 surge protection device

2907918

https://www.phoenixcontact.com/us/products/2907918

Voltage protection rating VPR (N-G)	900 V
Voltage protection rating VPR (DC+) - (DC-)	700 V
Voltage protection rating VPR (DC+) - G	900 V
Voltage protection rating VPR (DC-) - G	900 V
Nominal discharge current I_n	5 kA
Mode of protection	L-N
	L-G
	N-G
	(DC+) - (DC-)
	(DC+) - G
	(DC-) - G
Nominal voltage	150 V DC
Rated load current I_L	20 A
Power distribution system	Single phase
	DC
Nominal frequency	50/60 Hz
SPD Type	2 (Open-Type SPD)

UL indicator/remote signaling

Operating voltage	250 V AC (0.5 A)
DC operating voltage	12 V DC (4 A)
	24 V DC (2 A)
	48 V DC (1 A)

UL connection data

Tightening torque	4.4 lb_f-in.
Conductor cross section AWG	16 ... 12

Standards and regulations

Standards/specifications	IEC 61643-11
Note	2011

EN 61643-11

Standards/specifications	EN 61643-11
Note	2012

Mounting

Mounting type	DIN rail: 35 mm

DRAFT

PLT-SEC-T3-120-FM-UT - Type 3 surge protection device

2907918

https://www.phoenixcontact.com/us/products/2907918

Phoenix Contact 2024 © - all rights reserved
https://www.phoenixcontact.com

Phoenix Contact USA
586 Fulling Mill Road
Middletown, PA 17057, United States
(+717) 944-1300
info@phoenixcon.com

DRAFT

StructuredGround™ Universal Ground Bar System

PANDUIT®

SPECIFICATION SHEET

specifications

Provide a field wiring terminal for the connection of an equipment grounding conductor in each control panel and enclosure. The terminal shall be UL 467 Listed or CSA 22.2 certified. The equipment grounding conductor shall have electrical continuity with the enclosure or sub-panel. The field wiring terminal may also provide multiple locations or ports for terminating equipment ground conductors from devices inside the panel or enclosure, functioning as the ground bar within the panel or enclosure. The ground bar shall provide a means to attach and to identify the main equipment grounding conductor.

PATENT PENDING



technical information

Performance level:	UL 467 Listed and CSA 22.2 Certified for grounding and bonding an equipment grounding conductor up to 2/0 AWG; meets UL 508A requirements
Main:	Provides a location for the main equipment grounding conductor using a compression or mechanical connector
Wire ports:	Accept bare stripped copper wire from #14 to #4 AWG Accept wire ferrules from #14 AWG to #6 AWG Top of ground bar accepts ring terminals, compression connectors or mechanical connectors with a ¼" stud hole size and maximum width of 0.55"
Materials:	Ground bars and bonding stand-offs precision machined from 110 electrolytic copper with a 99.9% copper content and then tin-plated for additional corrosion resistance
Packaging:	Each part is provided with all fasteners required for terminating wires and for each mounting option

key features and benefits

Flexible design	Works with all types of wire termination methods including stripped wire, ferrules, terminals, and compression or mechanical connectors; compatible with over 140 Panduit connectors
Multiple mounting options	In addition to surface mounting, two mounting stand-off options are available, one that bonds to the mounting surface and one that isolates from the mounting surface; both options provide additional finger wiring space in tight places
Unique geometry	The unique shape of the universal ground bar allows more surface contact between the wire connectors and the ground bar

applications

The StructuredGround™ Universal Ground Bar System (UGB) offers multiple termination methods and mounting options making it ideal for any control panel or enclosure application. The UGB enables the end user to choose the method in which to terminate conductors with connectors of their choice or simply cut and strip the wires. The UGB system will help reduce the types of ground bars that a panel shop or distributor needs to keep in stock to meet the various applications and customer requirements.

Universal Ground Bar System

6-port ground bar:	UGB2/0-414-6
12-port ground bar:	UGB2/0-414-12
18-port ground bar:	UGB2/0-414-18
Isolation standoffs:	UGB-IN-SO
Bonding standoffs:	UGB-B-SO

Recommended Connectors for Main Equipment Ground Conductor, Maximum 2/0 AWG

Copper Mechanical with Anti-Rotation

#14 – 2/0 AWG:	CLMAR2/0-14-Q

Two-Hole Copper Compression, 1/4" Stud Hole with 5/8" Spacing; #14 to 2/0 AWG

#14 – 10 AWG:	LCA10-14A-L
#8 AWG:	LCD8-14A-L
#6 AWG:	LCD6-14A-L
#4 AWG:	LCD4-14A-L
#2 AWG:	LCD2-14A-Q
#1 AWG:	LCD1-14A-E
1/0 AWG:	LCD1/0-14A-X
2/0 AWG:	LCD2/0-14A-X

One-Hole Copper Compression, 1/4" Stud Hole; #14 to 2/0 AWG

#14 – 10 AWG:	LCA10-14-L
#8 AWG:	LCAS8-14-L
#6 AWG:	LCAS6-14-L
#4 AWG:	LCAS4-14-L
#2 AWG:	LCAS2-14-Q
#1 AWG:	LCAS1-14-E
1/0 AWG:	LCAS1/0-14-X
2/0 AWG:	LCAS2/0-14-X

One and two-hole copper compression connectors available for both code and flex conductors, with narrow tongue and bent tongue configurations.

Recommended Connectors for Port Connections

Ring Terminals, ¼" Stud Hole, Maximum Width of 0.55"; #22 to #4 AWG

Ring terminals available with vinyl, nylon, KYNAR*, high-temp, or heavy duty insulation or non-insulated.

Compression Connectors, Maximum Width of 0.55"; up to #4 AWG Typical

Ferrules, Minimum Pin Depth of 12mm; #14 to #6 AWG

*KYNAR is a registered trademark of Atofina Chemicals, Inc.

DRAFT

ITEM 260A

StructuredGround™ Universal Ground Bar System

CLMAR2/0-14-Q: Tin-plated copper connector with anti-rotational feature.

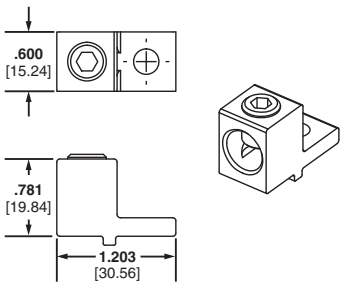

UGB2/0-414-18: 18-port UGB mounted directly to surface with the equipment grounding conductor terminated in an anti-rotational, copper mechanical connector.

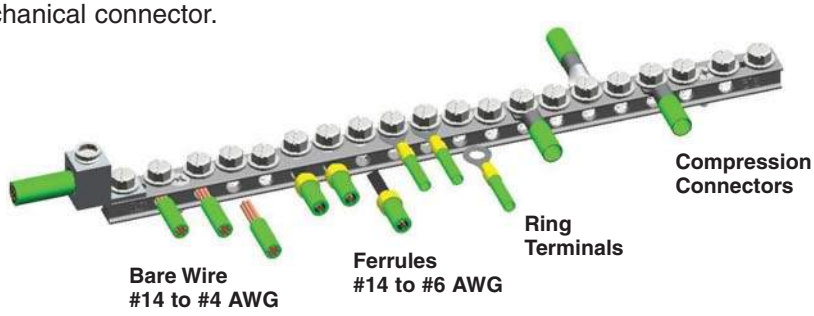

UGB-B-SO: Bonding stand-off.

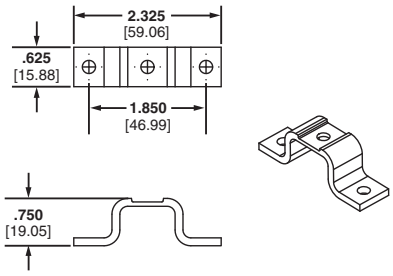

UGB2/0-414-12: 12-port UGB mounted on bonding stand-offs with the equipment grounding conductor terminated in a two-hole compression lug.



UGB-IN-SO: Isolation stand-off.

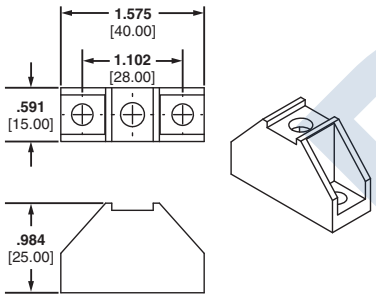

UGB2/0-414-6: 6-port UGB mounted on isolation stand-offs with the equipment grounding conductor terminated in an anti-rotational, copper mechanical connector.

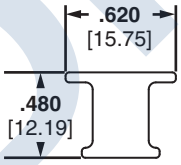



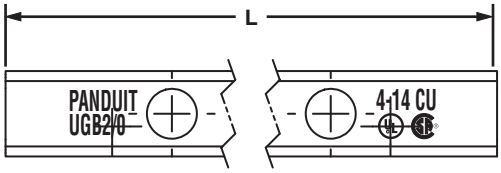

Part Number	"L" Dim.
UGB2/0-414-6	4.92" (125mm)
UGB2/0-414-12	8.28" (210mm)
UGB2/0-414-18	11.64" (295mm)

DRAFT

WORLDWIDE SUBSIDIARIES AND SALES OFFICES

PANDUIT CANADA
Markham, Ontario
cs-cdn@panduit.com
Phone: 800.777.3300

PANDUIT EUROPE LTD.
London, UK
cs-emea@panduit.com
Phone: 44.20.8601.7200

PANDUIT SINGAPORE PTE. LTD.
Republic of Singapore
cs-ap@panduit.com
Phone: 65.6305.7575

PANDUIT JAPAN
Tokyo, Japan
cs-japan@panduit.com
Phone: 81.3.6863.6000

PANDUIT LATIN AMERICA
Guadalajara, Mexico
cs-la@panduit.com
Phone: 52.33.3777.6000

PANDUIT AUSTRALIA PTY. LTD.
Victoria, Australia
cs-aus@panduit.com
Phone: 61.3.9794.9020

For a copy of Panduit product warranties, log on to www.panduit.com/warranty

For more information

Visit us at www.panduit.com

Contact Customer Service by email: cs@panduit.com or by phone: 800.777.3300 and reference GRSP08

©2011 Panduit Corp.
ALL RIGHTS RESERVED.
Printed in the U.S.A.

SA-GRSP08
5/2011

Relays & Timers

LOGIC

Slim Line Relays 700-HK

- 8 A (2-pole) or 16 A (1-pole) contact ratings
- DPDT or SPDT
- Blade-style
- ON/OFF flag indicator
- LED, push-to-test and manual override options
- Standard or gold-plated AgNi contacts
- Maximum duty version available
- Screw or push-in socket terminals

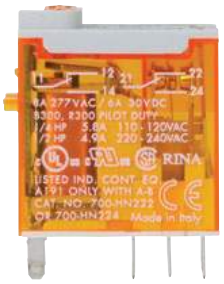



The 700-HK relays are designed for a variety of high-density isolation and interposing applications. Installation is easy and cost effective through the use of the 8-way jumper wiring system that requires only one wire connection to a coil, common or contact power distribution terminal. Optional gold contacts switch low-energy loads reliably as low as 5V, 10 mA, 50 mW.

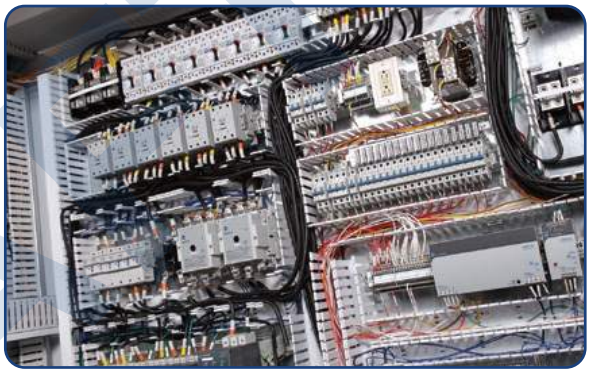

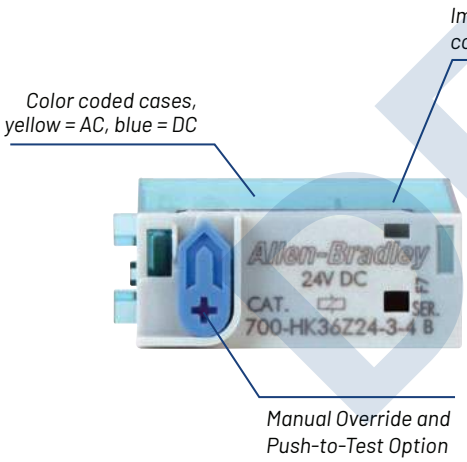

Ideal Applications

- Provides longer life for PLC, saving money and increasing efficiency
- Switching currents or voltages too high for PLC outputs to handle
- Interfacing two or more system voltages – for example, 24V to 120V
- Multiplies PLC outputs by using relays to turn two devices on and off simultaneously
- Provides isolation from solid-state output leakage current

DRAFT

Product Selection

Slim Line Relay

Description	Contact Rating	Coil Voltage	Pkg. Qty.	Cat. No. [1, 2, 3]
SPDT 1-pole 1 form C AgNi contacts	16 A	24V AC	1	700-HK36A24
		120V AC		700-HK36A1
		240V AC		700-HK36A2
		12V DC		700-HK36Z12
		24V DC		700-HK36Z24
		110V DC		700-HK36Z1
DPDT 2-pole 2 form C AgNi contacts	8 A	24V AC	1	700-HK32A24
		120V AC		700-HK32A1
		240V AC		700-HK32A2
		12V DC		700-HK32Z12
		24V DC		700-HK32Z24
		110V DC		700-HK32Z1

1 LED option: Add suffix **-4** to the selected 700-HK relay catalog number; for the 240V AC units, add -**4L**.

2 Push-to-test and LED option: Add suffix **-3-4** to the selected 700-HK relay catalog number; for 240V AC units, add suffix **-3-4L**.

3 For AgNi contact with gold plating: Replace **3** with **X** in catalog number For example, catalog number 700-HK**3**6A1 becomes catalog number 700-HK**X**6A1.

Accessories

Description		Pkg. Qty.	Cat. No.
Screw terminal socket – guarded terminal style, accepts forked lug conductors. [5]	1-pole, 5-blade, 10 A	10	700-HN121
	2-pole, 8-blade, 5 A		700-HN122
Push-in terminal socket [5]	1-pole, 5-blade	10	700-HN223
Screw terminal socket for use with or without timing/surge suppression module – guarded terminal style [4, 5]	1-pole, 5-blade, 16 A	10	700-HN221
	2-pole, 8-blade, 8 A		700-HN222
Push-in terminal socket [5]	2-pole, 8-blade	10	700-HN224
8-way jumper (can be cut to length)	Red	1	700-HN180R
	Grey	1	700-HN180G
	Blue	1	700-HN180B



700-HN221



700-HN223



700-HN222



700-HN224

4 Suppressors and time modules easily plug into socket (catalog number 700-HN221). For use with 700-HK relays.

5 Socket includes retainer clip.

DRAFT

Sales Offices and Distributors

Our network of sales offices and distributors offers exceptional knowledge and service to help you design, implement and support your automation investment.

https://rok.auto/buy



For more information on our complete family of general-purpose relay products, please visit:
https://rok.auto/general-purpose-relays

Relays & Timers

LOGIC

Miniature Ice Cube Relays 700-HC

- 7 or 10 A contact ratings
- DPDT or 4PDT
- Blade-style
- ON/OFF flag indicator
- LED, push-to-test with manual override options
- Optional bifurcated gold-plated contacts available for low energy switching



700-HC Miniature Square Base Relays are 2-pole or 4-pole plug-in relays for your low-energy switching applications. The same sockets can be used for DPDT or 4PDT versions, which improves flexibility and reduces inventory.

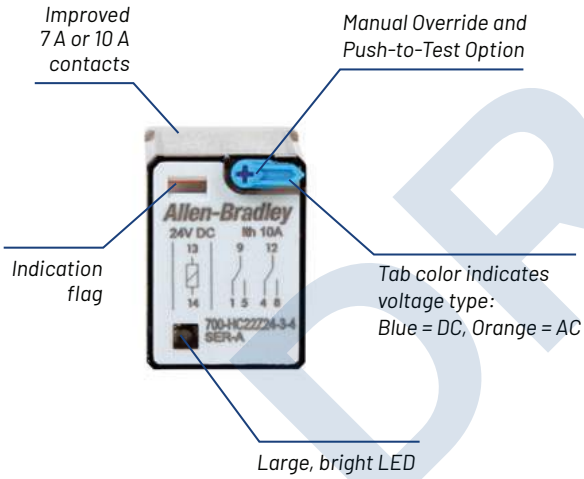



Ideal Applications

- Provides longer life for PLC, saving money and increasing efficiency
- Switching currents or voltages too high for PLC outputs to handle
- Interfacing two or more system voltages – for example, 24V to 120V
- Multiplies PLC outputs by using relays to turn many devices on and off simultaneously
- Provides isolation from solid-state output leakage current

DRAFT

Product Selection

Miniature Ice Cube Relays

Description	Contact Rating	Coil Voltage	Pkg. Qty.	Cat. No. [1,2,3,4]
DPDT 2-pole 2 form C contacts: 10 A = AgNi contacts	10 A C300 R300 Low energy rating; (10V, 10 mA)	24V DC	1	700-HC22Z24
		120V AC		700-HC22A1
4PDT 4-pole 4 form C contacts: 7 A = AgNi contacts	7 A C300 R300 Low energy rating; (10V, 10 mA)	24V AC	1	700-HC24A24
		120V AC		700-HC24A1
		240V AC		700-HC24A2
		12V DC		700-HC24Z12
		24V DC		700-HC24Z24
		48V DC		700-HC24Z48

1 LED option: Add suffix **-4** to the selected 700-HC relay catalog number; for the 240V AC units, add **-4L**.

2 Push-to-test and LED option: Add suffix **-3-4** to the selected 700-HC relay catalog number; for the 240V AC units, add **-3-4L**.

3 Push-to-test and Manual Override option: Add suffix **-3** to the selected 700-HC relay.

4 For Gold-plated bifurcated contacts, please visit *https://rok.auto/directory*.



700-HN103



700-HN104

Accessories

Description	Pkg. Qty.	Cat. No.
Screw terminal socket – guarded terminal style	10	700-HN103
Screw terminal socket for use with or without timing/surge suppression module – guarded terminal style	10	700-HN104
Screw terminal base socket – Open-style construction	10	700-HN128
Diode with LED surge suppressor [5]	10	700-ADL1R
Diode surge suppressor [5]	10	700-ADR
RC surge suppressor [5]	10	700-AR2
Timing module [5]	1	700-AT3
Varistor with LED surge suppressor [5]	10	700-AV3R
Multi-function multi-range time module [5,6]	1	700-HT3

5 Suppressors and Time Modules easily plug into socket (catalog number 700-HN104). For use with 700-HC relays.

6 Catalog number 700-HT3 is wired with signal "S" connected to "A1." See wiring diagram marked on the timer module.

DRAFT

For more information on our complete family of general-purpose relay products, please visit:
https://rok.auto/general-purpose-relays

700-HB Square Base Relay



- 15 A contact rating
- DPDT, 3PDT
- Blade-style quick connect /solder terminals (Faston 187 - 4.8 x 0.5 mm)
- Standard ON/OFF flag indicator
- Options: LED, push-to-rest, and manual override

Photo	Description	Contact Rating	Wiring Diagrams		Coil Voltage	Cat. No.(1)
			U.S./Canada	International		
	DPDT 2-Pole 2 Form C Single AgCdO Contact	15 A B300	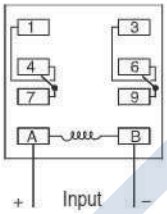	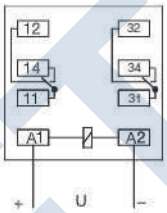	6V AC	700-HB32A06
					12V AC	700-HB32A12
					24V AC	700-HB32A24
					120V AC	700-HB32A1
					240V AC	700-HB32A2
					6V DC	700-HB32Z06
					12V DC	700-HB32Z12
					24V DC	700-HB32Z24
					48V DC	700-HB32Z48
	Sockets		700-HN154	700-HN153	110V DC	700-HB32Z1
	3PDT 3-Pole 3 Form C Single AgCdO Contact	15 A B300	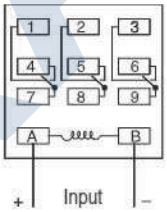	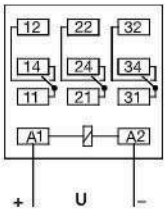	6V AC	700-HB33A06
					12V AC	700-HB33A12
					24V AC	700-HB33A24
					120V AC	700-HB33A1
					240V AC	700-HB33A2
					6V DC	700-HB33Z06
					12V DC	700-HB33Z12
					24V DC	700-HB33Z24
					48V DC	700-HB33Z48
	Sockets		700-HN154	700-HN153	110V DC	700-HB33Z1

(1) LED Option: Add suffix (-4) to the selected 700-HB Relay Cat. No., except for the 240V AC Units, add (-4L).
Push-to-test, Manual Override, and LED Option: Add suffix (-3-4) to the selected 700-HB Relay Cat. No., except for the 240V AC units, add (-3-4L)
Push-to-test and Manual Override option: Add suffix (-3) to the selected 700-HB relay.

DRAFT

Photo	Description	Pkg. Qty.	Cat. No.
	**Screw Terminal Socket — Panel or DIN Rail Mounting. Guarded Terminal Construction** 11-blade socket for use with 700-HB relays. This socket has coil and contact separation as well as the ability to use optional plug-in modules (700-A___ accessories, LED, surge suppression, timing modules).	10	700-HN153
	**Screw Terminal Base Socket — Panel or DIN Rail Mounting. Open Style Construction** 11-blade for use with 700-HB relays.	10	700-HN154
	**DIN (#3) symmetrical hat rail** 35 x 7.5 x 1 m	10	199-DR1
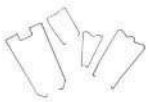	**Retainer Clip** **For Cat. Nos. 700-HN154 Sockets with 700-HB Relays** Secures relay in socket. Order must be for 10 clips or multiples of 10.	10	700-HN156
	Retainer Clip **For Cat. Nos. 700-HN153 Sockets with 700-HB Relays** Secures relay in socket. Order must be for 10 clips or multiples of 10.	10	700-HN158
	**Relay Identification Snap-in Markers** Snap-in markers fit on top of product covers. The following are blank cards. Squares slip into molded slot on top of product covers.	100	1492-MS5X12 1492-MS6X9 1492-MS6X12 1492-MS8X9 1492-MS8X12 1492-MP-Blank
	**Pre-Printed Identification Tags —** contains 10 sheets of pre-printed and blank tags. Each sheet contains 13 sets of the markings CR…9CR, TR…9TR, M…9M, F, R, 1S, and 117 blank tags. Tags are peel-off with sticky backing for easy placement on relays.	10	700-N40
	Blank Identification Tags — contains 10 sheets of blank identification tags for customer specialized printing. Each sheet contains 546 blank tags. Tags are peel-off with sticky backing for easy placement on relays.	10	700-N41

Socket and Retainer Clip Reference

Relay Type	Socket Cat. No.	Retainer Clip Cat. No.
700-HB	700-HN153 700-HN154	700-HN158 700-HN156

DRAFT

EO-AB/UT/LED/15 - Socket

0804155

https://www.phoenixcontact.com/us/products/0804155

Please be informed that the data shown in this PDF document is generated from our online catalog. Please find the complete data in the user documentation. Our general terms of use for downloads are valid.



Socket, Pin connector pattern type AB 15A, Screw connection, for USA and other countries, with LED display, gray, for mounting on a DIN rail in the service interface or direct mounting, 125 V AC, 15 A, -20 °C, 60 °C, UL 508

DRAFT

EO-AB/UT/LED/15 - Socket

0804155

https://www.phoenixcontact.com/us/products/0804155

Technical data

Product properties

Product type	Socket
Country ID	USA

Data management status

Article revision	03

Electrical properties

Nominal voltage U_N	125 V AC (60 Hz)
Nominal current I_N	15 A

Connection data

Connection method	Screw connection
Stripping length	8 mm
Tightening torque	0.5 ... 0.6 Nm
Conductor cross section flexible	0.2 mm² ... 2.5 mm²
Conductor cross section rigid	0.2 mm² ... 4 mm²
Cross section AWG	24 ... 12
Screw thread	M3

Signaling

Status display	yes

Dimensions

Width	45 mm
Height	75 mm
Depth	75 mm

Material specifications

Color	gray
Flammability rating according to UL 94	V0
Insulating material	PA
Contact material	CuZn37
Static insulating material application in cold	-60 °C
Temperature index of insulation material (DIN EN 60216-1 (VDE 0304-21))	130 °C
Relative insulation material temperature index (Elec., UL 746 B)	130 °C
Fire protection for rail vehicles (DIN EN 45545-2) R22	HL 1 - HL 3
Fire protection for rail vehicles (DIN EN 45545-2) R23	HL 1 - HL 3
Fire protection for rail vehicles (DIN EN 45545-2) R24	HL 1 - HL 3
Fire protection for rail vehicles (DIN EN 45545-2) R26	HL 1 - HL 3
Surface flammability NFPA 130 (ASTM E 162)	passed
Specific optical density of smoke NFPA 130 (ASTM E 662)	passed

DRAFT

EO-AB/UT/LED/15 - Socket

0804155

https://www.phoenixcontact.com/us/products/0804155

Smoke gas toxicity NFPA 130 (SMP 800C)	passed

Connector

Type of plug	Pin connector pattern type AB 15A

Environmental and real-life conditions

Ambient conditions

Degree of protection	IP20
Ambient temperature (operation)	-20 °C ... 60 °C (max. short-term operating temperature RTI Elec.)
Ambient temperature (storage/transport)	-25 °C ... 60 °C (for a short time, not exceeding 24 h, -60 °C to +70 °C)
Permissible humidity (storage/transport)	30 % ... 70 %

Standards and regulations

Standards

Standards/regulations	UL 508

Mounting

Mounting type	for mounting on a DIN rail in the service interface or direct mounting

Phoenix Contact 2024 © - all rights reserved
https://www.phoenixcontact.com

Phoenix Contact USA
586 Fulling Mill Road
Middletown, PA 17057, United States
(+717) 944-1300
info@phoenixcon.com

DRAFT

EO-AB/UT/LED/DUO/V/GFI/15 - Double socket

1263628

https://www.phoenixcontact.com/us/products/1263628

Please be informed that the data shown in this PDF document is generated from our online catalog. Please find the complete data in the user documentation. Our general terms of use for downloads are valid.



Double socket in vertical arrangement, pin connector pattern type AB, screw connection, LED display, integrated residual current device (GFCI), gray, for mounting on a DIN rail or direct mounting, 125 V AC, 60 Hz, 15 A, -20°C, 60°C, UL 508 A

DRAFT

EO-AB/UT/LED/DUO/V/GFI/15 - Double socket

1263628

https://www.phoenixcontact.com/us/products/1263628

Technical data

Product properties

Product type	Socket
Country ID	USA
Response time	25 ms (6 mA)

Electrical properties

Nominal voltage U_N	125 V AC (60 Hz)
Nominal current I_N	15 A

Connection data

Connection method	Screw connection
Conductor cross section flexible	0.2 mm² ... 2.5 mm²
Conductor cross section rigid	0.2 mm² ... 4 mm²
Cross section AWG	24 ... 12

Signaling

Status display	Yes

Dimensions

Dimensional drawing	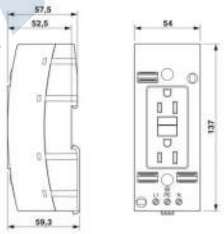
Width	54 mm
Height	137 mm
Depth	137 mm

Material specifications

Color	gray
Flammability rating according to UL 94	V2
Insulating material	PA
Contact material	CuZn37
Static insulating material application in cold	-60 °C
Temperature index of insulation material (DIN EN 60216-1 (VDE 0304-21))	130 °C
Relative insulation material temperature index (Elec., UL 746 B)	130 °C
Fire protection for rail vehicles (DIN EN 45545-2) R22	HL 1 - HL 3
Fire protection for rail vehicles (DIN EN 45545-2) R23	HL 1 - HL 3

DRAFT

EO-AB/UT/LED/DUO/V/GFI/15 - Double socket

1263628

https://www.phoenixcontact.com/us/products/1263628

Fire protection for rail vehicles (DIN EN 45545-2) R24	HL 1 - HL 3
Fire protection for rail vehicles (DIN EN 45545-2) R26	HL 1 - HL 3
Surface flammability NFPA 130 (ASTM E 162)	passed
Specific optical density of smoke NFPA 130 (ASTM E 662)	passed
Smoke gas toxicity NFPA 130 (SMP 800C)	passed

Connector

Type of plug	Pin connector pattern type AB 15A

Environmental and real-life conditions

Ambient conditions

Degree of protection	IP20
Ambient temperature (operation)	-20 °C ... 60 °C (max. short-term operating temperature RTI Elec.)

Standards and regulations

Standards

Standards/regulations	UL 508A

Mounting

Mounting type	for mounting on a DIN rail in the service interface or direct mounting

Phoenix Contact 2024 © - all rights reserved
https://www.phoenixcontact.com

Phoenix Contact USA
586 Fulling Mill Road
Middletown, PA 17057, United States
(+717) 944-1300
info@phoenixcon.com

DRAFT

Bulletin 800T/H

30.5 mm Push Buttons

Selector Switches

3-Position Selector Switch Devices, Non-Illuminated



Standard Knob Operator
Cat. No. 800T-J2A



Knob Lever Operator
Cat. No. 800T-J17A



Standard Knob Operator
Cat. No. 800H-JR2A

Contact Type	Operator Position			M = Maintained S = Spring Return	Type 4/13 Standard Knob Cat. No.	Type 4/13 Knob Lever Cat. No.	Type 4/4X/13 Standard Knob Cat. No.
No Contacts	—	—	—	M M M	**800T-J2**	**800T-J17**	**800H-JR2**
				S→M M	**800T-J4**	800T-J18	**800H-JR4**
				M M←S	**800T-J5**	800T-J19	**800H-JR5**
				S→M←S	**800T-J91**	**800T-J20**	**800H-JR91**
 1 N.O. - 1 N.C.	O X	O O	X O	M M M	**800T-J2A**	**800T-J17A**	**800H-JR2A**
				S→M M	**800T-J4A**	**800T-J18A**	**800H-JR4A**
				M M←S	**800T-J5A**	**800T-J19A**	**800H-JR5A**
				S→M←S	**800T-J91A**	**800T-J20A**	**800H-JR91A**

Note: X = Closed/O = Open

800 T ___ – J 2 ___ C
a b c d e f

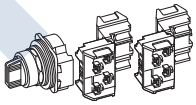

a

Protection Rating	
Code	Description
T	Metal, Type 4/13
H	Plastic, Type 4/4X/13

b

Finger-Safe Guards	
Code	Description
Blank	No guards
C	Guards on terminals

c

Knob Insert Colors		
800T Type 4/13 Code	Description	800H Type 4/4X/13 Code
J	White	JR
JX	Packet of colored inserts∗	JRX
Metal Wing Lever Colors❄		
Code	Color	Code
JA	Red	—
JG	Grey	—

d

Knob/Lever Type Operators	
Standard Knob	
Code	Operator Function
2	Maintained
4	Spring return from left
5	Spring return from right
91	Spring return from both
Knob Lever❄	
Code	Operator Function
17	Maintained
18	Spring return from left
19	Spring return from right
20	Spring return from both
Metal Wing Lever❄	
Code	Operator Function
11	Maintained
15	Spring return from left
16	Spring return from right
141	Spring return from both
Coin Slot❄	
Code	Operator Function
10	Spring return from both

e

Cam Option‡♣	
Code	Description
Blank	KB7 cam (std.)
KA1	KA1 cam
KA7	KA7 cam

e (cont'd)

Cam Option‡♣	
Code	Description
KC1	KC1 cam
KC7	KC7 cam
KD7	KD7 cam
KE7§	KE7 cam
KQ1	KQ1 cam
KQ7	KQ7 cam
KR1§	KR1 cam
KR7§	KR7 cam
KT1§	KT1 cam
KT7§	KT7 cam
KU7§	KU7 cam

f

Contact Blocks	
Code	Description
Blank	No contacts on operator
Standard	
A	1 N.O. - 1 N.C. 1-**800T-XA** on white side
B	2 N.O. - 2 N.C. 2-**800T-XA**s — 1 on white side/1 on black side
PenTUFF (Low Voltage)	
AV	1 N.O. - 1 N.C. 1-**800T-XAV** on white side
BV	2 N.O. - 2 N.C. 2-**800T-XAV**s — 1 on white side/1 on black side

f (cont'd)

Contact Blocks♣	
Code	Description
Blank	No contacts
Class 1, Div. 2/Zone 2	
Logic Reed	
AR	1 N.O. - 1 N.C. 1-**800T-XAR** on white side
BR	2 N.O. - 2 N.C. 2-**800T-XAR**s — 1 on white side/1 on black side
Sealed Switch	
AP	1 N.O. - 1 N.C. 1-**800T-XAP** on white side
BP	2 N.O. - 2 N.C. 2-**800T-XAP**s — 1 on white side/1 on black side
Stackable Sealed Switch	
AY	1 N.O. - 1 N.C. 1-**800T-XAY** on white side
BY	2 N.O. - 2 N.C. 2-**800T-XAY**s — 1 on white side/1 on black side

∗ One insert of each color (blue, green, orange, red, and yellow).
❄ Only available on Bul. 800T, Type 4/13 operators.
‡ If an overlapping cam is required, consult your local distributor.
§ Not available with wing levers.
♣ See Table 1 for cam selections and associated targets.

Table 1. Cam and Contact Block Functionality Table

Contact Block Suffix Code	Contact Block Side	Circuits	Cam Codes: KB7 (Std.)	KA1	KA7	KC1	KC7	KD7	KE7	KQ1	KQ7	KR1	KR7	KT1	KT7	KU7
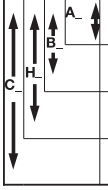	White	A	X O O	X O O	O O X	O O X	X O O	O O X	X O O	X O O	X O X	X O X	X O X	O O X	X O O	O X O
		B	O O X	O X O	O X O	O X O	O O X	O X O	O X O	O X O	O O X	O O X	O X O	O X O	O O X	O X O
	Black	A	X O O	X O O	O O X	O X O	X O O	O X O	O O X	O X O	X O O	O O X	X O O	O O X	X O O	O O X
		B	O O X	O X O	O X O	O X O	O O X	O X O	X O O	O X O	O O X	X O O	O X X	X X O	O X X	X X O
	White	A	X O O	X O O	O O X	O X O	X O O	O X O	O O X	O X O	X O O	X O O	X O X	O X O	X O O	O O X
		B	O O X	O X O	O X O	O X O	O O X	O X O	X O O	O X O	O O X	O X O	O X O	O X O	O O X	O X O
	Black	A	X O O	X O O	O O X	O X O	X O O	O X O	O O X	O X O	X O O	O O X	X O O	O O X	X O O	O O X
		B	O O X	O X O	O X O	O X O	O O X	O X O	X O O	O X O	O O X	X O O	O X X	X X O	O X X	X X O

Note: X = Closed/O = Open

www.ab.com/catalogs Preferred availability cat. nos. are **bold**.
Publication A117-CA001A-EN-P

Allen-Bradley

2-Position Red Push-Pull and Push-Pull/Twist Release Devices, Non-Illuminated

Note: A jumbo or large legend plate is recommended, if space allows.



2-Position Push-Pull
Cat. No. 800T-FX6D4



2-Position Metal Push-Pull
Cat. No. 800T-FXLE6D4S



2-Position Push-Pull / Twist
Cat. No. 800T-FXT6D4



2-Position Push-Pull / Twist
Cat. No. 800H-FRXT6D4

Contact Type	Operator Position: Out	Operator Position: In	Type 4/13: Push-Pull — 40 mm Cat. No.	Type 4/13: Push-Pull — 63 mm Metal Cat. No.	Type 4/13: Push-Pull/Twist Release Cat. No.	Type 4/4X/13: Push-Pull/Twist Release Cat. No.
N.C.L.B.∗	X	O	**800T-FX6D4**	**800T-FXLE6D4**	**800T-FXT6D4**	**800H-FRXT6D4**
N.O. - N.C.L.B.∗	O X	X O	**800T-FX6A1**	800T-FXLE6A1	**800T-FXT6A1**	**800H-FRXT6A1**
N.C.L.B. - N.C.L.B.∗	X X	O O	**800T-FX6A5**	800T-FXLE6A5	**800T-FXT6A5**	**800H-FRXT6A5**
S.M.C.B.∗❄	X	O	**800TC-FX6D4S**	800TC-FXLE6D4S	800TC-FXT6D4S	800HC-FRXT6D4S
N.O. - S.M.C.B.∗❄	O X	X O	800TC-FX6A1S	800TC-FXLE6A1S	800TC-FXT6A1S	800HC-FRXT6A1S
S.M.C.B. - S.M.C.B∗❄	X X	O O	**800TC-FX6A5S**	**800TC-FXLE6A5S**	**800TC-FXT6A5S**	**800HC-FRXT6A5S**

Note: X = Closed/O = Open **Note:** These caps are only available in plastic.

Note: Emergency stop push buttons are compliant with EN ISO 13850 and EN/IEC 60947-5-5 Standards when using N.C.L.B. contact blocks.

❄ The Self Monitoring Contact Block (S.M.C.B.) is composed of a N.C.L.B. contact wired in series with a N.O. monitoring contact. The N.O. monitoring contact automatically closes when the S.M.C.B. is properly installed onto the E-stop operator. If the S.M.C.B. is separated from the E-stop operator, the N.O. monitoring contact will automatically open.

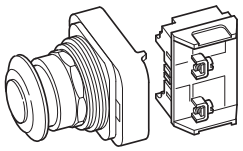

800 T ___ – FX 1 A1
a b c d e

a

Protection Rating	
Code	**Description**
T	Metal, Type 4/13
H	Plastic, Type 4/4X/13

b

Finger-Safe Guards	
Code	**Description**
Blank	No guards
C	Guards on terminals

c

Head Type‡		
800T Type 4/13 Code	**Description**	**800H Type 4/4X/13 Code**
FX	Mushroom head (push-pull)	—
FXC	90 mm anodized aluminum head (push-pull)	—
FXJ	Jumbo mushroom head (push-pull)	—
FXJE	Jumbo mushroom head (push-pull) with "E-Stop"	—
FXL	63 mm anodized aluminum head (push-pull)	—
FXLE	63 mm anodized aluminum head (push-pull) with "E-Stop"	—
FXT	Push-pull/twist-to-release	FRXT
FXJT	Jumbo head push-pull with twist-to-release	FRXJT

d

Color Cap	
Code	**Color**
Blank	No cap§
1	Green
2	Black
3	Orange
4	Grey
5	White
6	Red
7	Blue
9	Yellow

e

Contact Block(s)			
Code	**Operator Position: Out**	**Operator Position: In**	**Description**
Blank	—	—	No contacts on operator
Standard			
D1	O	X	1 N.O.
D2	X	O	1 N.C.
D4	X	O	1 N.C.L.B.
A	O X	X O	1 N.O. - 1 N.C.
A1	O X	X O	1 N.O. - 1 N.C.L.B.
A5	X X	O O	2 N.C.L.B.

e (cont'd)

Contact Block(s)			
Code	**Operator Position: Out**	**Operator Position: In**	**Description**
Blank	—	—	No contacts
Pen*TUFF* (Low Voltage)			
D1V	O	X	1 N.O.
D2V	X	O	1 N.C.
D4V	X	O	1 N.C.L.B.
AV	O X	X O	1 N.O. - 1 N.C.
Class 1, Div. 2/Zone 2 Logic Reed			
D1R	O	X	1 N.O.
D2R	X	O	1 N.C.
AR	O X	X O	1 N.O. - 1 N.C.
Sealed Switch			
D1P	O	X	1 N.O.
D2P	X	O	1 N.C.
AP	O X	X O	1 N.O. 1 N.C.
Stackable Sealed Switch			
D1Y	O	X	1 N.O.
D2Y	X	O	1 N.C.
AY	O X	X O	1 N.O. - 1 N.C.

Note: X = Closed/O = Open

∗ Normally closed late break contact. When button is pushed from the OUT to IN position, the mechanical detent action of the operator occurs before electrical contacts change state. When the button is pulled from the IN in the OUT position, the electrical contacts change state before the mechanical detent occurs.

‡ Devices with N.C.L.B. contacts meet EN ISO 13850 and IEC 60947-5-5 standards for emergency stop applications.

§ Not valid with head Type J or JT.

DRAFT

Bulletin 800H

30.5 mm Push Buttons

Type 4/4X/13, Corrosion-Resistant/Watertight/Oiltight

4-Position Selector Switch Units, Non-Illuminated



Standard Knob Operator
Cat. No. 800H-NR2KF4AAXX

Contact Type	Contact Location			Operator Position				Operator Type M=Maintained S=Spring Return	Standard Knob
	Side	Actuator Color	Contact						Cat. No.
No Contacts	—	—	—	—	—	—	—	M M M M	800H-NR2KF4
								S→M M M	800H-NR3KF4
								M M M←S	800H-NR9KF4
2 N.O. - 2 N.C.	1	White	A	X	O	O	O	M M M M	800H-NR2KF4AAXX
	1	White	B	O	X	O	O	S→M M M	800H-NR3KF4AAXX
	2	Black	A	O	O	O	X		
	2	Black	B	O	O	X	O	M M M←S	800H-NR9KF4AAXX

Note: X=Closed/O=Open

Potentiometer Units



Potentiometer Unit
Cat. No. 800H-UR4

Resistance	Potentiometer ❶ Cat. No.	Resistance	Potentiometer ❶ Cat. No.
Operator Only (without Resistive Element)	800H-N102 ❷	25 kΩ	800H-UR37
		50 kΩ	800H-UR41
150 Ω	800H-UR4	75 kΩ	800H-UR46
500 Ω	800H-UR12	0.1 MΩ	800H-UR49
1000 Ω	800H-UR13	0.15 MΩ	800H-UR50
1500 Ω	800H-UR16	0.4 MΩ	800H-UR54
2500 Ω	800H-UR19	0.5 MΩ	800H-UR55
5000 Ω	800H-UR24	1.0 MΩ	800H-UR57
10 kΩ	800H-UR29	2.0 MΩ	800H-UR59
15 kΩ	800H-UR34	3.0 MΩ	800H-UR62
20 kΩ	800H-UR35	4.0 MΩ	800H-UR64

❶ Rated for 300V AC/DC maximum, 6V AC/DC minimum, and 2 W maximum.
❷ For use with Type J potentiometers having a shaft length of 7/8" (22.2 mm) and a shaft diameter of 1/4" (6.3 mm).

Accessories — Page 10-85
Legend Plates — Page 10-96
Approximate Dimensions — Page 10-99

DRAFT

Bulletin 800T/H

30.5 mm Push Buttons

Push Button Operators

Momentary Contact Push Button Devices, Illuminated



Extended Head Without Guard
Cat. No. 800T-PB16R



Extended Head without Guard
Cat. No. 800H-PRB16R

Type	Lamp Type	Volts	Color	Type 4/13 Extended Head Without Guard∗ Cat. No.	Type 4/13 Extended Head With Guard∗ Cat. No.	Type 4/4X/13 Extended Head without Guard∗ Cat. No.	Type 4/4X/13 Extended Head with Guard∗ Cat. No.
Operator Only❄				**800T-SB00XX**	800T-SA00XX	800H-SRB00XX	800H-SRA00XX
Full Voltage	Incandescent	24V AC/DC	Red	**800T-QB24R**	**800T-QA24R**	**800H-QRB24R**	800H-QRA24R
			Green	**800T-QB24G**	**800T-QA24G**	**800H-QRB24G**	**800H-QRA24G**
			Amber	**800T-QB24A**	**800T-QA24A**	**800H-QRB24A**	800H-QRA24A
	No Lamp	0…250V AC/DC	No Lens	800T-QBN25	800T-QAN25	800H-QRBN25	800H-QRAN25
Universal	LED	12…130V AC/DC	Red	**800T-QBH2R**	**800T-QAH2R**	**800H-QRBH2R**	**800H-QRAH2R**
			Green	**800T-QBH2G**	**800T-QAH2G**	**800H-QRBH2G**	**800H-QRAH2G**
			Amber	**800T-QBH2A**	**800T-QAH2A**	**800H-QRBH2A**	**800H-QRAH2A**
Transformer	Incandescent	120V AC, 50/60 Hz	Red	**800T-PB16R**	**800T-PA16R**	**800H-PRB16R**	**800H-PRA16R**
			Green	**800T-PB16G**	**800T-PA16G**	**800H-PRB16G**	**800H-PRA16G**
			Amber	**800T-PB16A**	**800T-PA16A**	**800H-PRB16A**	**800H-PRA16A**
	LED		Red	**800T-PBH16R**	**800T-PAH16R**	**800H-PRBH16R**	800H-PRAH16R
			Green	**800T-PBH16G**	**800T-PAH16G**	**800H-PRBH16G**	**800H-PRAH16G**
			Amber	**800T-PBH16A**	**800T-PAH16A**	800H-PRBH16A	800H-PRAH16A
	No Lamp		No Lens	800T-PBN16	800T-PAN16	800H-PRBN16	800H-PRAN16

∗ Includes as standard one Cat. No. 800T-XA (1 N.O. - 1 N.C.) contact block.
❄ Operator only supplied without power module, lamp, lens cap, or contact blocks.

800 T ___ – P B H 16 R ___
a b c d e f g h

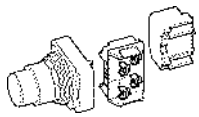

a

Protection Rating	
Code	Description
T	Metal, Type 4/13
H	Plastic, Type 4/4X/13

b

Finger-Safe Guards	
Code	Description
Blank	No guards
C	Guards on terminals

c

Power Module Type		
800T Type 4/13 Code	Description	800H Type 4/4X/13 Code
P	Transformer (or dual input)	PR
Q	Full voltage/ Universal	QR

d

Head Type	
Code	Description
A	Extended head with guard
B	Extended head without guard
M	Mushroom
MJ	Jumbo mushroom

e

Illumination Options	
Code	Description
Blank	Incandescent
H	LED
Dual Input	
D	Diode type‡
T	Transformer — relay type
TH	Transformer — relay type LED

f

Voltage	
Transformer	
Code	Description
16	120V AC, 50/60 Hz
26	240V AC, 50/60 Hz
46	480V AC, 50/60 Hz
56	600V AC, 50/60 Hz
Full Voltage — Incandescent	
12	12V AC/DC
24	24V AC/DC
48	48V AC/DC
10	120V AC/DC
20	240V AC/DC
Universal — LED	
2	12…130V AC/DC
Dual Input	
16	120V AC
24	24V AC/DC➢

g

Lens Color	
Code	Description
Blank	No lens with standard contacts 1 N.O. - 1 N.C.
X	No lens if ordering any contacts other than standard 1 N.O. - 1 N.C.
A	Amber
B	Blue
C	Clear
G	Green
R	Red
W	White

h

Contact Block(s)	
Code	Description
X	No contacts
Standard	
Blank	1 N.O. - 1 N.C.
D1	1 N.O.
Pen*TUFF* (Low Voltage)	
AV	1 N.O. - 1 N.C.
Class 1, Div. 2/Zone 2	
Logic Reed	
AR	1 N.O. - 1 N.C.
Sealed Switch	
AP	1 N.O. - 1 N.C.
Stackable Sealed Switch	
AY	1 N.O. - 1 N.C.

‡ Diode type dual input provides circuit isolation via opposing diodes. Not recommended for use with solid-state outputs.
➢ Dual input diode only.

DRAFT

ITEM 400C

Vertiv™ Liebert® GXT5 UPS

500 - 3000VA 120V

Intelligent and Efficient UPS for Protection of Your Mission-Critical Applications



DRAFT

Vertiv™ Liebert® GXT5 | 500 - 3000VA 120V UPS

Intelligent and Efficient UPS for Protection of Your Mission-Critical Applications

The Vertiv™ Liebert® GXT5 UPS is an online double conversion UPS solution which offers premium power outage protection and continuous power conditioning in a compact and flexible rack/tower form factor.

The Liebert GXT5 single-phase UPS operates with high power efficiency, making it ideally suited to protect critical infrastructure in both centralized and edge network applications.

Scalable runtime options with matching external battery cabinets offer additional flexibility when extended uninterrupted power is required. Plus, the Liebert GXT5 provides battery health status and replacement date prediction for intelligent battery health management.

The UPS system is easy to deploy and maintain due to its user-friendly LCD interface and remote management capabilities supported by the Vertiv RDU101 communications card which makes the Liebert GXT5 compatible with Vertiv infrastructure management solutions such as LIFE™ Services, environmental sensors, *Trellis*™ Power Insight, and more.

With market leading efficiency and unity power factor operation, the Liebert GXT5 will meet your critical application needs. And you can rest assured that your business is protected with this Vertiv solution that includes a standard, three-year advanced exchange product warranty.

What's in the box

- UPS
- Tower stand
- 4-Post Rack Mounting Kit
- USB Cable
- Quick Start Guide
- Safety Manual
- Power Insight management software (free download from Vertiv.com)

ENERGY STAR

Liebert GXT5 Features

Leading UPS Technology

- High output power factor = up to 1.0
- Full-color graphic LCD with gravity sensing orientation
- Individually controllable output power sockets
- External battery cabinets with auto-detection
- Battery health status and replacement date prediction
- Remote management, update, and configuration capabilities
- Optimized thermal management and variable speed fan

Efficient and Green Product

- High efficiency in online mode
- Energy Star® 2.0 certified
- Even higher efficiency (up to 98%) in Active ECO mode
- Programmable outlets for power cycling hung equipment and optimum battery usage
- Compliance with Restriction of Hazardous Substances (RoHS) directive and the Registration, Evaluation, Authorization and Restriction of Chemicals (REACH) regulation

Solutions Wide

- Compact rack/tower design
- Broad range of services and extended warranty
- Easy to install, configure and operate
- Vertiv RDU101 network communications card with advanced features
- Compatibility with environmental sensors
- Integrated dry-contacts with selectable definition
- Free *Trellis*™ Power Insight management software
- Serial port for out-of-band management with Avocent® serial consoles
- Automatic internal bypass and external maintenance bypass options

DRAFT

Vertiv™ Liebert® GXT5 Features

High power factor (0.9-1.0)
More usable power enables more connected loads saving space and costs.

Efficiency (up to 95%) in online mode
Energy Star 2.0 certification. Higher efficiency means an optimized energy management and lower heat dissipation, for energy savings and improved reliability.



Efficiency (up to 98%) in Active ECO mode
Superior protection with maximum efficiency.

Colored graphic LCD with gravity sensitive orientation
User-friendly interface provides insight to UPS status for easy installation, configuration and operation.

Compact rack/tower design
Space-saving UPS provides rack space optimization and flexible installation.

Battery cabinets with auto-detection
Be confident the UPS is set up correctly to report available runtime when used with external battery cabinets.

Product warranty
Comprehensive coverage through a standard three-year advanced exchange warranty.

DRAFT

Vertiv™ Liebert® GXT5 | 500 - 3000VA 120V UPS

How You Benefit from the Vertiv™ Liebert® GXT5 UPS

Designed for high availability



- The higher power factor (0.9 - 1.0) ensures the connection of more loads and IT equipment
- With individually controlled output receptacles, you can manage power to individual devices without impacting other critical network equipment operation
- Minimum downtime of the device provided by hot-swappable, user-replaceable battery modules which can be changed during operation
- LIFE™ Services helps to enhance uptime, as well as operational efficiency with continuous remote monitoring, expert analysis, and proactive response
- Automatic self-test

User-friendly installation and operation



- Easy-to-read, gravity-sensing graphical color display
- Intuitive user interface for local configuration and management
- Support for the Vertiv suite of remote management tools (*Trellis™* Power Insight, RDU101 network interface card, and serial connectivity support)
- Auto-detection of external battery cabinets enables faster deployment and accurate runtime information
- Remote UPS firmware upgrade capability ensures the UPS has the latest features and enhancements

Longer service life and runtime of the batteries



- Extended runtimes provided by the addition of external battery cabinets
- Improved battery care by temperature-compensated battery charging
- Intelligent battery health management ensures a longer service life (optimized battery maintenance and replacement when needed)

Optimized energy and capacity management



- Active ECO operating mode with up to 98% efficiency
- Efficiency in online double conversion mode up to 95%
- Energy Star 2.0 certified
- Four individually programmable output receptacles can be use to extend runtime for the most critical loads and smart disconnection of the less critical ones

Seamless connectivity



- Four onboard, user-definable dry contact I/O for integration of support management systems
- Supports SNMP, web, and environmental sensors with the optional RDU101 communications card
- Serial connection for integration of Avocent® ACS product or direct serial management and control of the UPS

DRAFT

Power Assurance Package: Comprehensive Service Support for Critical Systems

- **Five-year protection plan** with 100% parts coverage and 24x7 emergency service
- **On-site installation and startup** of UPS and internal batteries (excludes hard-wired applications); configuration of new UPS and accessories; and if purchased, safe removal and disposal of legacy UPS and batteries
- **On-site service support** available 24x7 (within 150 miles of regional service center) and includes 100% labor and travel coverage
- **100% parts coverage** for UPS and includes internal batteries, POD (power output distribution), and web card
- **24x7 access** to customer resolution center and online access to Customer Services Network

Key benefits:

- Hassle-free management of multi-site rollouts
- Frees up time-strapped IT staff by managing and tracking UPS health, maintenance and service
- Reduces the worry of critical equipment downtime
- Ensures rapid recovery in the event of failure (within 24-48 hours)
- Frees you from the responsibility of handling and documenting the disposal of legacy UPS and batteries

Remote Diagnostic Services for Rapid Response

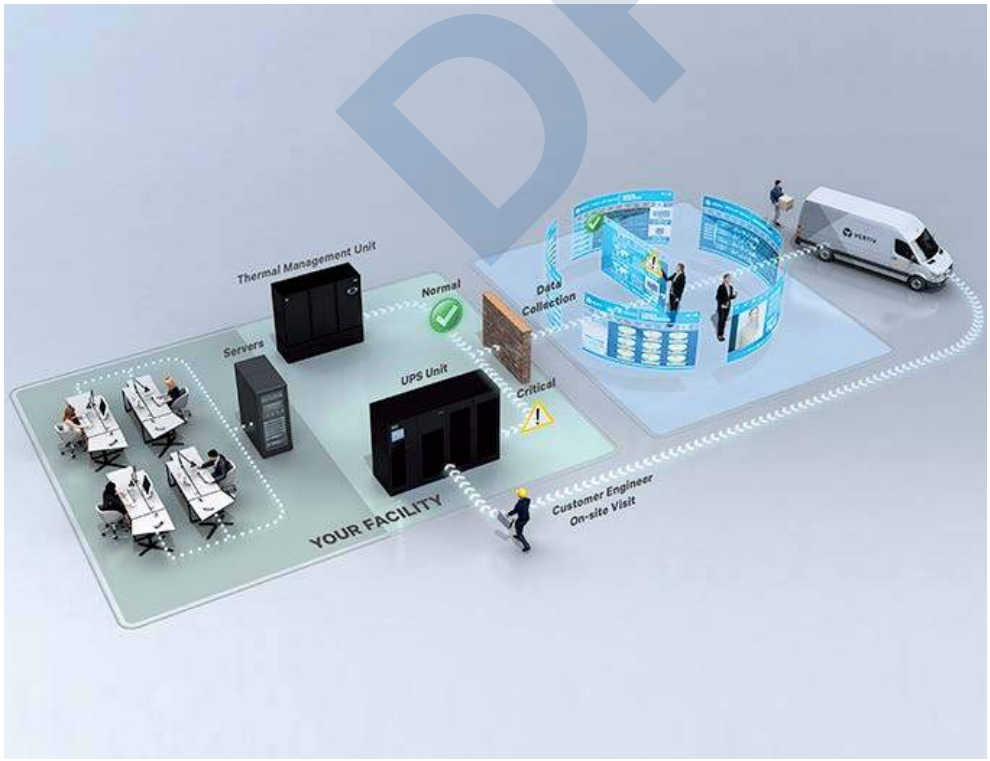

Uptime assurance

- Continuous monitoring for early detection of trends and operating anomalies
- Analysis and interpretation of alarm and status messages

Rapid incident response

- Automatic transmission of data for analysis
- Concurrent diagnosis and dispatch of engineer to site
- Shipment of parts for corrective maintenance

Increased insight and ease of management

- Notification of operating conditions that may impact system health
- Periodic trend and analysis reports
- Integration of remote and on-site services to ensure business continuity

Refer to page 11 for service offerings' SKUs

DRAFT

Vertiv™ Liebert® GXT5 | 500 - 3000VA 120V UPS

Technical Specifications

	GXT5-500LVRT2UXL	GXT5-750LVRT2UXL	GXT5-1000LVRT2UXL	GXT5-1500LVRT2UXL	GXT5-2000LVRT2UXL	GXT5-3000LVRT2UXL
Ratings (VA/W)	500VA/500W	750VA/750W	1000VA/1000W	1500VA/1350W	2000VA/1800W	3000VA/2700W
Dimensions, inches (mm)						
Unit W x D X H	16.9 x 15.7 x 3.4 (430 x 400 x 85)	16.9 x 15.7 x 3.4 (430 x 400 x 85)	16.9 x 15.7 x 3.4 (430 x 400 x 85)	16.9 x 18.5 x 3.4 (430 x 470 x 85)	16.9 x 18.5 x 3.4 (430 x 470 x 85)	16.9 x 21.3 x 3.4 (430 x 540 x 85)
Weight, pounds (kg)						
Unit	37 (16.8)	37 (16.8)	37 (16.8)	46.2 (21)	47.5 (21.6)	66(30)
Input AC Parameters						
Range	Typical 120V Range: 60-150V	Typical 120V Range: 60-150V	Typical 120V Range: 60-150V	Typical 120V Range: 60-150V	Typical 120V Range: 60-150V	Typical 120V Range: 60-150V
Frequency	40-70Hz; Auto Sensing	40-70Hz; Auto Sensing	40-70Hz; Auto Sensing	40-70Hz; Auto Sensing	40-70Hz; Auto Sensing	40-70Hz; Auto Sensing
Input Power Cord	10 ft. attached w/ NEMA 5-15P plug	10 ft. attached w/ NEMA 5-15P plug	10 ft. attached w/ NEMA 5-15P plug	10 ft. attached w/ NEMA 5-15P A plug	10 ft. attached w/ NEMA L5-20P A plug	10 ft. attached w/ NEMA L5-30P plug
Output AC Parameters						
Output Receptacles	5-15R × 6	5-15R × 6	5-15R × 6	5-15R × 6	L5-20R+5-20R × 6	L5-30R+5-20R × 6
Typical 120V User selectable output	110/115/120/125VAC (user-configurable); ±3%	110/115/120/125VAC (user-configurable); ±3%	110/115/120/125VAC (user-configurable); ±3%	110/115/120VAC (user-configurable); ±3%	110/115/120VAC (user-configurable); ±3%	110/115/120VAC (user-configurable); ±3%
Waveform	Sine wave	Sine wave	Sine wave	Sine wave	Sine wave	Sine wave
Utility (AC) Mode Overload	>200% for 250ms; 150- 200% for 50 seconds; 125- 150% for 60 seconds; 105-125% for 60 seconds	>200% for 250ms; 150- 200% for 50 seconds; 125- 150% for 60 seconds; 105-125% for 60 seconds	>200% for 250ms; 150- 200% for 50 seconds; 125- 150% for 60 seconds; 105-125% for 60 seconds	>200% for 250ms; 150- 200% for 2 seconds; 125- 150% for 50 seconds; 105-125% for 60 seconds	>200% for 250ms; 150- 200% for 2 seconds; 125- 150% for 50 seconds; 105-125% for 60 seconds	>200% for 250ms; 150- 200% for 2 seconds; 125- 150% for 10 seconds; 105-125% for 15 seconds
Battery						
Type	Valve-regulated, non-spillable, lead acid	Valve-regulated, non-spillable, lead acid	Valve-regulated, non-spillable, lead acid	Valve-regulated, non-spillable, lead acid	Valve-regulated, non-spillable, lead acid	Valve-regulated, non-spillable, lead acid
Backup Time (100% Load)	17.9	10.4	6.7	6.7	4	4
Backup Time (50% Load)	40.4	25.5	17.9	18.8	12.3	12.6
+1 External Battery Cabinet (100% Load)	76.3	45.4	32.6	32.4	22	22.2
+1 External Battery Cabinet (50% Load)	147.8	102.4	76.5	79.7	53.6	54.6
Environmental Requirements						
Operating Temperature, °F (°C)	+32 to +104 (0 to 40)	+32 to +104 (0 to 40)	+32 to +104 (0 to 40)	+32 to +104 (0 to 40)	+32 to +104 (0 to 40)	+32 to +104 (0 to 40)
Storage Temperature, °F (°C)	-4 to +140 (-20 to 60) contain batteries will be from -15 to 40°C.	-4 to +140 (-20 to 60) contain batteries will be from -15 to 40°C.	-4 to +140 (-20 to 60) contain batteries will be from -15 to 40°C.	-4 to +140 (-20 to 60) contain batteries will be from -15 to 40°C.	-4 to +140 (-20 to 60) contain batteries will be from -15 to 40°C.	-4 to +140 (-20 to 60) contain batteries will be from -15 to 40°C.
Relative Humidity	0% to 95%, non-condensing	0% to 95%, non-condensing	0% to 95%, non-condensing	0% to 95%, non-condensing	0% to 95%, non-condensing	0% to 95%, non-condensing
Operating Elevation	10,000 ft. (3,000m)	10,000 ft. (3,000m)	10,000 ft. (3,000m)	10,000 ft. (3,000m)	10,000 ft. (3,000m)	10,000 ft. (3,000m)
Storage Elevation	50,000 ft. (15,000m)	50,000 ft. (15,000m)	50,000 ft. (15,000m)	50,000 ft. (15,000m)	50,000 ft. (15,000m)	50,000 ft. (15,000m)
Audible Noise	<46dBA max @ 3 ft. (1m) front and sides < 43dBA, at 3 ft. (1m) rear	<46dBA max @ 3 ft. (1m) front and sides < 43dBA, at 3 ft. (1m) rear	<46dBA max @ 3 ft. (1m) front and sides < 43dBA, at 3 ft. (1m) rear	< 46dBA at 3 ft. (1m) front and side < 45dBA at 3 ft. (1m) rear	<48dBA max @ 3 ft. (1m) front and side <48dBA max @ 3 ft. (1m) rear	<48dBA max @ 3 ft. (1m) front and side <48dBA max @ 3 ft. (1m) rear
Agency						
Surge Immunity	ANSI C62.41 Category B	ANSI C62.41 Category B	ANSI C62.41 Category B	ANSI C62.41 Category B	ANSI C62.41 Category B	ANSI C62.41 Category B
Transportation	ISTA Procedure 1A	ISTA Procedure 1A	ISTA Procedure 1A	ISTA Procedure 1A	ISTA Procedure 1A	ISTA Procedure 1A
Safety	UL 1778 4th Edition and CSA 22.2 No. 107.1	UL 1778 4th Edition and CSA 22.2 No. 107.1	UL 1778 4th Edition and CSA 22.2 No. 107.1	UL 1778 4th Edition and CSA 22.2 No. 107.1	UL 1778 4th Edition and CSA 22.2 No. 107.1	UL 1778 4th Edition and CSA 22.2 No. 107.1
Emissions	FCC Part 15 (Class A) - CISPR22 Class A (RFI)	FCC Part 15 (Class A) - CISPR22 Class A (RFI)	FCC Part 15 (Class A) - CISPR22 Class A (RFI)	FCC Part 15 (Class A) - CISPR22 Class A (RFI)	FCC Part 15 (Class A) - CISPR22 Class A (RFI)	FCC Part 15 (Class A) - CISPR22 Class A (RFI)
Environmental	WEEE and ROHS2 REACH	WEEE and ROHS2 REACH	WEEE and ROHS2 REACH	WEEE and ROHS2 REACH	WEEE and ROHS2 REACH	WEEE and ROHS2 REACH
Warranty						
	Std. 3 year; Opt. 2 year	Std. 3 year; Opt. 2 year	Std. 3 year; Opt. 2 year	Std. 3 year; Opt. 2 year	Std. 3 year; Opt. 2 year	Std. 3 year; Opt. 2 year

GXT5 UPS + RDU101 Network Communication card bundles available — Add an "N" to the end of the model number. Available through select distributors.

DRAFT

Vertiv™ VR Rack
Supports a wide variety of equipment and gives you the flexibility you need with easy installation

Vertiv™ Geist™ rPDU
Reliably distributes power to the rack, supporting dynamic data center operations and DCIM



Vertiv™ SwitchAir
Prevents overheating of network switches by directing cool air to switch intakes, keeping hot exhaust air out

Vertiv™ ACS Console
Enables integrated remote monitoring, out-of-band management, and IoT connectivity

Vertiv™ KVM Switch
Enables single-point access for switching between multiple computers

Vertiv™ Rack Cooling
Provides energy-efficient cooling close to the IT equipment and UPS units

Vertiv™ Liebert® GXT5
Helps protect mission-critical equipment from all power disturbances due to blackouts, brownouts, sags, surges or noise interference

Accessories

Racks and enclosures: Support a wide variety of equipment with the Vertiv™ VR Rack including servers, storage, switches, routers, PDUs, UPS units, console port servers, and KVM switches.

Rails and mounting hardware: Install equipment with a four-post rail kit and hardware for mounting in a 19- or 23-inch rack or choose a two-post telecom rack for front- or mid-chassis, wall, or Zero U configuration.

Rack mount PDUs: For basic or intelligent power distribution that helps prevent overloaded circuits in the data center, choose from products such as upgradable PDUs, inline power meters, transfer switches, and monitoring sensors.

Extended battery modules: Enable scalable runtime for support during extended power outage situations by adding reliable power and protection to new or existing deployments.

Environmental sensor: Maintain knowledge of remote environments with temperature, humidity and leak detection, or monitor available dry-contact sensors for security access control or smoke detection.

DRAFT

Vertiv™ Liebert® GXT5 | 500 - 3000VA 120V UPS

Available Accessories for the Vertiv™ Liebert® GXT5 UPS



External battery cabinets and replacement battery kits

UPS	External battery cabinets	Replacement battery kits
GXT5-500LVRT2UXL	GXT5-EBC36VRT2U	GXT5-36VBATKIT
GXT5-750LVRT2UXL	GXT5-EBC36VRT2U	GXT5-36VBATKIT
GXT5-1000LVRT2UXL	GXT5-EBC36VRT2U	GXT5-36VBATKIT
GXT5-1500LVRT2UXL	GXT5-EBC48VRT2U	GXT5-48VBATKIT
GXT5-2000LVRT2UXL	GXT5-EBC48VRT2U	GXT5-48VBATKIT
GXT5-3000LVRT2UXL	GXT5-EBC72VRT2U	GXT5-72VBATKIT



Network communications and environmental sensors

Network Communications	RDU101	Intellislot web card for SNMP and web management. Supports environmental sensors.
	IS-RELAY	Intellislot Interface Kit for Relay Contacts
Environmental Sensors	SN-Z01	Integrated cable with single temperature sensor
	SN-Z02	Integrated cable with three temperature sensors
	SN-Z03	Integrated cable with three temperature and one humidity sensors
	SN-T	Modular with single temperature sensor
	SN-TH	Modular with single temperature and single humidity sensor
	SN-2D	Modular with two door contact inputs
	SN-3C	Modular with three dry contact inputs
	SN-L20	Modular leak zone sensor with 20 foot cable (Liebert RDU-S only)
UPS manageability options	*Trellis*™ Power Insight Software Management	*Trellis*™ Power Insight is a complimentary web-based software designed to monitor up to 100 Vertiv™ UPSs and rPDUs



MicroPOD - Maintenance bypass and output distribution

The Liebert® MicroPOD (Power Output Distribution) is a maintenance bypass option for UPS products, 3 kVA and below. It allows removal of the UPS without powering down the connected equipment. The 2U POD's can be installed on the floor or mounted to a Liebert GXT5 UPS using the included mounting brackets.

UPS VA rating	POD model number	Output receptacles	Plug to utility
500-1500VA UPS	MP2-115HW	Hard Wired	Hardwired
	MP2-115A	8 x 5-15R	5-15P
2000VA UPS	MP2-120HW	Hard Wired	Hardwired
	MP2-120C	8 x 5-15/20R	5-20P
	MP2-120E	4 x 5-15/20R; 1 x L5-20R	5-20P
3000VA UPS	MP2-130HW	Hard Wired	Hardwired
	MP2-130C	8 x 5-15/20R	L5-30P
	MP2-130E	2 x 5-15/20R; 1 x L5-30R; 4 x 5-15/20R	L5-30P
	MP2-130P	4 x 5-15R; 2 x L5-20R	L5-30P

DRAFT



2POSTRMKIT

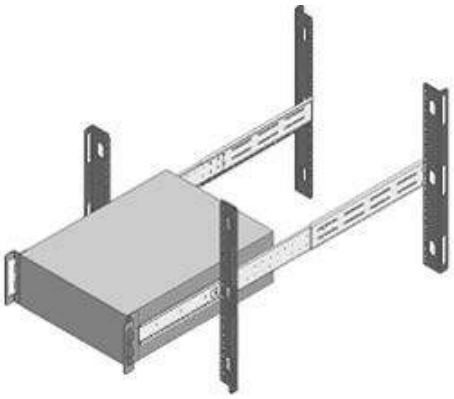

Rack Slide Kits for all Liebert GXT5 Rack Tower Models (RMKIT 18-32)

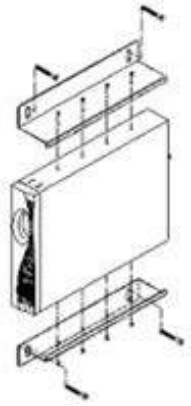

Wall Mount Bracket Kit for GXT5 500VA – 3000VA models WMBKT2U and WBMKT2U-SS

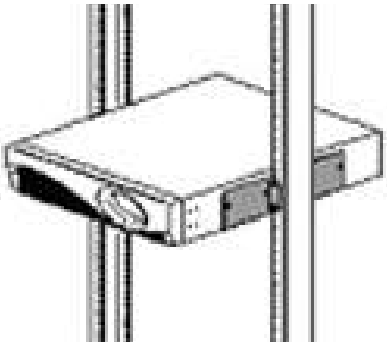

2UTELECOMRKIT

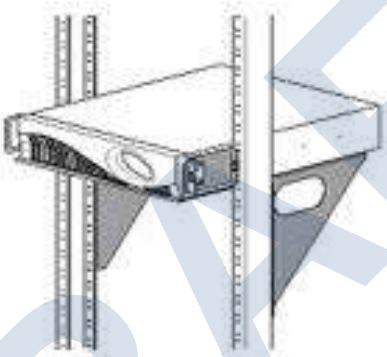

Rack Shelves - Center mount shown RS600 / RS800

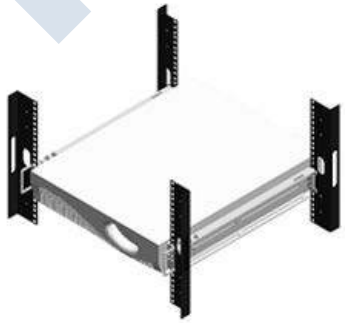

Standard Kit included inside the UPS box 201193G1L

DRAFT

Mounting Kit Options

Application	Model Supported	Style	Model	Description
2 Post- Telecom rack	Entire GXT5 UPS family (500VA to 10kVA)	Shelf	RS500	Flush-mount shelf for 19" rack wide
		Shelf	RS600	Center-mount shelf for 19" rack wide
		Shelf	RS700	Flush-mount shelf for 23" rack wide
		Shelf	RS800	Center-mount shelf for 23" rack wide
	GXT5 up to 3kVA	Bracket	2UTELECOMRKIT	Only center-mount bracket for 19" rack wide
		Bracket	2POSTRMKIT	Front flush/ center-mount bracket - 4-piece design
Wall Mount	GXT5 up to 3kVA	Bracket	WMBKT2U	Wall mount bracket holds (1) GXT5 2U or (1) PSI5 2U product, steel painted black
		Bracket	WMBKT2USS	Wall mount bracket holds (1) GXT5 2U or (1) PSI5 2U product, stainless steel
4 Post rack	Entire GXT5 UPS family (500VA to 10kVA)	Bracket	RMKIT18-32	Cabinet/racks with 18" - 32" deep support rails - Telescopic rail

Note: RS600 and RS800 kits include adapter brackets for installation of up to (2) Liebert GXT5 2U model

Vertiv™ Liebert® GXT5 | 500 - 3000VA 120V UPS

Liebert® GXT5 UPS - Power Assurance Services

Power Assurance Package

Bundled Start-up Service AND 5-Year On-site Emergency Response	Standard	With LIFE™ Services	With Removal	With LIFE and Removal
Equipment Model / Type	**Part Number**	**Part Number**	**Part Number**	**Part Number**
Liebert GXT5 UP TO 3 KVA	PAPGXT-1K3K	PAPGXT-1K3KLF	PAPGXT-1K3KRMV	PAPGXT-1K3KRLF
External Battery Cabinet (36V or 48V or 72V)	PAPGXT-BATT	PAPGXT-	N/A	N/A

Power Startup Services

Startup Service Only	Standard	With Removal
Equipment Model / Type	**Part Number**	**Part Number**
Liebert GXT5 UP TO 3 KVA	SUGXT-1K3K	SUGXT-1K3KRMV
External Battery Cabinet (36V or 48V or 72V)	SUGXT-EXTBTCB	SUGXT-EXTBTCBRMV

Power Emergency Services

5-Year On-site Emergency Coverage - Only	Standard	With LIFE Services
Equipment Model / Type	**Part Number**	**Part Number**
Liebert GXT5 UP TO 1 KVA	PEPGXT-1K5YR	PEPGXT-1KLF
Liebert GXT5 1.5 kVA	PEPGXT-15005YR	PEPGXT-1500LF
Liebert GXT5 2.0 kVA	PEPGXT-20005YR	PEPGXT-2000LF
Liebert GXT5 3.0 kVA	PEPGXT-30005YR	PEPGXT-3000LF
External Battery Cabinet 36V	PEPGXT-36VBAT5YR	N/A
External Battery Cabinet 48V	PEPGXT-48VBAT5YR	N/A
External Battery Cabinet 72V	PEPGXT-72VBAT5YR	N/A

Power Assurance Package - Summary

- Includes all below "Power Start-up Services" and "Power Emergency Services" support
- One Preventative Maintenance visit after 3rd year (5-10kVA UPS only)

Power Startup Services - Summary

- Installation includes mounting and start-up of new UPS or EBC (excludes hard-wired applications)
- Services performed by Vertiv factory trained technician
- Services performed 7 X 24, excluding national holidays within the 48 contiguous states and Hawaii
- Removal and disposal of existing UPS or EBC equipment, if selected

Power Emergency Services - Summary

- On Site Service Support
- Full-service five (5) year contract term commencing upon the start-up date
- 100% parts coverage, including internal batteries, POD and web card
- 100% labor and travel coverage 7 days/week, 24 hours/day
- 24-Hour Customer Resolution Center via 1-800-LIEBERT
- Access to Customer Services Network portal

LIFE Services includes above plus:

- Continuous Monitoring, Expert Analysis, and Proactive Response

Note: LIFE Services requires an RDU101 card, which is included on all 5000VA to 10000VA models.
Please refer to the Scopes of Work for full and additional details.

DRAFT

500-1500VA – 120V Rack/Tower

External Battery Connector
Scalable runtime solution supported for extended outage protection

4 x Individually Controllable Receptacle
Manage load on battery and control unauthorized access to UPS receptacle



Communications
SNMP, Serial, Dry contact, Local USB Local and remote configuration and UPS Management

NEMA 5/15P input with over current protection
Simple installation and power on with connected input cord

2000VA – 120V Rack/Tower

External Battery Connector
Scalable runtime solution supported for extended outage protection

NEMA L5-20R
Support larger devices or rack PDU

4x Individually Controllable Receptacle, 2x Always on Receptacles
Manage load on battery and control unauthorized access to UPS receptacle



Communications
SNMP, Serial, Dry contact, Local USB Local and remote configuration and UPS Management

NEMA L5-20P input with over current protection
Includes NEMA 5-20 Adapter Cable for non-locking receptacles

3000VA – 120V Rack/Tower

External Battery Connector
Scalable runtime solution supported for extended outage protection

NEMA L5-30R
Support larger devices or rack PDU

4x Individually Controllable Receptacle, 2x Always on Receptacles
Manage load on battery and control unauthorized access to UPS receptacle



Communications
SNMP, Serial, Dry contact, Local USB Local and remote configuration and UPS Management

NEMA L5-30P input with over current protection
Simple installation and power on with connected input cord

DRAFT

FL SWITCH SFN 5TX - Industrial Ethernet Switch

2891152

https://www.phoenixcontact.com/us/products/2891152

Please be informed that the data shown in this PDF document is generated from our online catalog. Please find the complete data in the user documentation. Our general terms of use for downloads are valid.



Ethernet switch, 5 TP RJ45 ports, automatic detection of data transmission speed of 10 or 100 Mbps (RJ45), autocrossing function

Your advantages

- RJ45 ports support a transmission speed of 10/100 Mbps
- Fiber-optic ports support 100 Mbps
- QoS-prioritized (Quality of Service) messages
- Local diagnostic indicators with LEDs
- The switch also offers cable locking and port blocking

DRAFT

FL SWITCH SFN 5TX - Industrial Ethernet Switch

2891152

https://www.phoenixcontact.com/us/products/2891152

Technical data

Dimensions

Width	30 mm
Height	120 mm
Depth	70 mm

Material specifications

Housing material	Aluminum

Mounting

Mounting type	DIN rail mounting

Interfaces

Ethernet (RJ45)

Connection method	RJ45
Note on the connection method	Auto negotiation and autocrossing
Transmission speed	10/100 Mbps
Transmission physics	Ethernet in RJ45 twisted pair
No. of channels	5 (RJ45 ports)

Product properties

Product type	Switch
Product family	Unmanaged Switch SFN
Type	Block design
MTTF	192.9 Years (MIL-HDBK-217F standard, temperature 25°C, operating cycle 100%)

Insulation characteristics

Protection class	III (IEC 61140, EN 61140, VDE 0140-1)

Switch functions

Basic functions	Unmanaged switch / auto negotiation, complies with IEEE 802.3, store and forward switching mode
Status and diagnostic indicators	LEDs: U_S, link and activity per port
Additional functions	Autonegotiation

Security functions

Basic functions	Unmanaged switch / auto negotiation, complies with IEEE 802.3, store and forward switching mode

Electrical properties

Local diagnostics	US Supply voltage Green LED
	LNK/ACT Link status/data transmission Green LED
	100 Data transmission speed Yellow LED
Maximum power dissipation for nominal condition	2.16 W

DRAFT

FL SWITCH SFN 5TX - Industrial Ethernet Switch

2891152

https://www.phoenixcontact.com/us/products/2891152

Test section	500 V DC 1 min.
Transmission medium	Copper

Supply

Supply voltage (DC)	24 V DC
Supply voltage range	9 V DC ... 32 V DC
Power supply connection	Via COMBICON, max. conductor cross section 2.5 mm²
Residual ripple	3.6 V_{PP} (within the permitted voltage range)
Max. current consumption	205 mA (at 9 V DC)
Typical current consumption	90 mA (at U_S = 24 V DC)

Connection data

Connection technology

Connection name	Power supply
pluggable	yes

Power supply

Connection method	Screw connection
Conductor cross section, rigid	0.2 mm² ... 2.5 mm²
Conductor cross section, flexible	0.2 mm² ... 2.5 mm²
Conductor cross section AWG	24 ... 12
Stripping length	7 mm

Environmental and real-life conditions

Ambient conditions

Degree of protection	IP20
Ambient temperature (operation)	0 °C ... 60 °C
Ambient temperature (storage/transport)	-20 °C ... 70 °C
Permissible humidity (operation)	5 % ... 95 % (non-condensing)
Permissible humidity (storage/transport)	5 % ... 95 % (non-condensing)
Vibration (operation)	in acc. with IEC 60068-2-6: 5g, 150 Hz
Air pressure (operation)	86 kPa ... 5 kPa (up to 1500 m above sea level)
Air pressure (storage/transport)	66 kPa ... 108 kPa (up to 3500 m above sea level)
Resistance to gases that may endanger the functions, in acc. with DIN 40046-36, DIN 40046-37	Sulfur dioxide (SO_2) 10 ±0.3 cm^3/m^3, hydrogen sulfide (H_2S) 1 ±0.3 cm^3/m^3, at 25°C and 75% humidity and exposure of four days

Standards and regulations

Free from substances that could impair the application of coating	In acc. with VW specification

Approvals

Conformity/Approvals

Conformance	CE-compliant
UL, USA / Canada	Class I, Div. 2, Groups A, B, C, D, T4

DRAFT

FL SWITCH SFN 5TX - Industrial Ethernet Switch

2891152

https://www.phoenixcontact.com/us/products/2891152

EMC data

Conformance with EMC directives	IEC 61000-6-2 IEC 61000-4-2 (ESD) Criterion B
	IEC 61000-4-3 (immunity to radiated interference) Criterion A
	IEC 61000-4-4 (burst) Criterion B
	IEC 61000-4-5 (surge) Criterion B
	IEC 61000-4-6 (immunity to conducted interference) Criterion A
	IEC 61000-4-8 (immunity to magnetic fields) Criterion A
	EN 55022 (emitted interference) Criterion A
Noise immunity	EN 61000-6-2:2005
Electromagnetic compatibility	Conformance with EMC Directive 2004/108/EC
Noise emission	EN 61000-6-4

System properties

Functionality

Basic functions	Unmanaged switch / auto negotiation, complies with IEEE 802.3, store and forward switching mode

Signaling

Status display	LEDs: U_S, link and activity per port

Phoenix Contact 2024 © - all rights reserved
https://www.phoenixcontact.com

Phoenix Contact USA
586 Fulling Mill Road
Middletown, PA 17057, United States
(+717) 944-1300
info@phoenixcon.com

DRAFT

ITEM 423B

Stratix 2000 Ethernet Unmanaged Switches

Cat. No.	Description	Total Ports	RJ45 Ports	Fiber Ports	SFP Slots
1783-US4T1F	4 ports RJ45 10/100 1 port fiber multi mode	5	4	1 multi mode	1
1783-US4T1H	4 ports RJ45 10/100 1 port fiber single mode	5	4	1 single mode	1
1783-US5T	5 ports RJ45 10/100	5	5	—	—
1783-US5TG	5 ports RJ45 10/100/1000	5	5	—	—
1783-US6T2F	6 ports RJ45 10/100 2 port fiber multi mode	8	6	2 multi mode	2
1783-US6T2H	6 ports RJ45 10/100 2 port fiber single mode	8	6	2 single mode	2
1783-US6TG2CG	6 ports RJ45 10/100/1000	8	6	2 GB combo	2
1783-US7T1F	7 ports RJ45 10/100 1 port fiber multi mode	8	7	1 multi mode	1
1783-US7T1H	7 ports RJ45 10/100 1 port fiber single mode	8	7	1 single mode	1
1783-US8T	8 ports RJ45 10/100	8	8	—	—
1783-US14T2S	14 ports RJ45 10/100	16	14	2	2
1783-US16T	16 ports RJ45 10/100	16	16	—	—

Table 33 - Technical Specifications - Stratix 2000 Switches

Attribute	1783-US4T1F 1783-US4T1H	1783-US5TG	1783-US6T2F 1783-US6T2H 1783-US7T1F 1783-US7T1H	1783-US6TG2CG	1783-US14T2S	1783-US16T	1783-US5T	1783-US8T
Inrush current, max	—						2.2 A	
Power supply voltage	24V (18...60V DC, 18...30V AC 50/60 Hz), Class 2/SELV							
Current rating	230.5 mA	432.1 mA	442.3 mA	1242.7 mA	663.2 mA	555.5 mA	250 mA	361 mA
Power dissipation, max	2.841 W	5.491 W	5.927 W	13.643 W	7.991 W	6.72 W	2 W @ 24V AC/DC	4.04 W @ 24V AC/DC
Isolation voltage	30V (continuous), basic insulation type, power to network channels No isolation between individual network channels Type tested at 500V AC for 60 s							
Ethernet connections[1]	RJ45 connector according to IEC 60603-7, 2-pair or 4-pair Category 5e minimum cable according to TIA 568-B.1 or Category 5 cable according to ISO/IEC 24702 rated 82 °C (180 °F) min						RJ45 connector according to IEC 60603-7, 2-pair or 4-pair Category 5e minimum cable according to TIA 568-B.1 or Category 5 cable according to ISO/IEC 24702	
DC power connections	0.82…2.5 mm^2 (18…14 AWG) twisted-pair copper wire suitable for 82 °C (180 °F) above surrounding ambient temperature outside the enclosure						0.75…2.5 mm^2 (18…14 AWG) twisted-pair copper wire suitable for 30 °C (86 °F) above surrounding ambient temperature outside the enclosure	

DRAFT

ITEM 423B

Table 33 - Technical Specifications - Stratix 2000 Switches (Continued)

Attribute	1783-US4T1F 1783-US4T1H	1783-US5TG	1783-US6T2F 1783-US6T2H 1783-US7T1F 1783-US7T1H	1783-US6TG2CG	1783-US14T2S	1783-US16T	1783-US5T	1783-US8T
Functional earth connection	2.5 mm^2 (14 AWG) copper wire suitable for 82 °C (180 °F) above surrounding ambient temperature outside the enclosure, with a suitable ring terminal						2.5 mm^2 (14 AWG) copper wire suitable for 30 °C (86 °F) above surrounding ambient temperature outside the enclosure, with a suitable ring terminal	
SFP modules	SFP modules are preinstalled on the switches and not required as separate purchases.							
Torque, max recommended	1.82 N•m (16 lb•in) on power /functional earth connector							
Wiring category(2)	1 - on power ports 2 - on communication ports							
Enclosure type rating	None (open-style)							
North American temp code	T4						T5	
IEC temp code	T4						T5	
MAC addresses, max supported	1 K	1K	8 K	8 K	8 K	8 K	1K	8 K

(1) See page 56 for recommended products.
(2) Use this conductor category information for planning conductor routing. Refer to Industrial Automation Wiring and Grounding Guidelines, publication 1770-4.1.

Table 34 - Environmental Specifications - Stratix 2000 Switches

Attribute	1783-US4T1F, 1783-US4T1H, 1784-US5TG, 1783-US6T2F, 1783-US6T2H, 1783-US6TG2CG, 1783-US7T1F, 1783-US7T1H, 1783-US14T2S, 1783-US16T	1783-US5T	1783-US8T
Temperature, operating IEC 60068-2-1 (Test Ad, Operating Cold), IEC 60068-2-2 (Test Bd, Operating Dry Heat), IEC 60068-2-14 (Test Nb, Operating Thermal Shock)	-40…70 °C (-40…158 °F)	0…60 °C (32…140 °F)	
Temperature, surrounding air, max	70 °C (158 °F)	60 °C (140 °F)	
Temperature, nonoperating IEC 60068-2-1 (Test Ab, Unpackaged Nonoperating Cold) IEC 60068-2-2 (Test Bb, Unpackaged Nonoperating Dry Heat) IEC 60068-2-14 (Test Na, Unpackaged Nonoperating Thermal Shock)	-40…85 °C (-40…185 °F)	-40…85 °C (-40…185 °F)	
Relative humidity IEC 60068-2-30 (Test Db, Unpackaged Damp Heat)	5…95% noncondensing	5…95% noncondensing	
Vibration IEC 60068-2-6 (Test Fc, Operating)	2 g @ 10…150 Hz	2 g @ 10…150 Hz	2 g @ 10…500 Hz
Operating shock IEC 60068-2-27 (Test Ea, Unpackaged Shock)	15 g		
Nonoperating shock IEC 60068-2-27 (Test Ea, Unpackaged Shock)	30 g		
Emissions CISPR11 (IEC 61000-6-4)	Class A		
ESD immunity IEC 61000-4-2	8 kV contact discharges 15 kV air discharges	8 kV contact discharges 15 kV air discharges	6 kV contact discharges 8 kV air discharges

DRAFT

ITEM 423B

Table 34 - Environmental Specifications - Stratix 2000 Switches (Continued)

Attribute	1783-US4T1F, 1783-US4T1H, 1784-US5TG, 1783-US6T2F, 1783-US6T2H, 1783-US6TG2CG, 1783-US7T1F, 1783-US7T1H, 1783-US14T2S, 1783-US16T	1783-US5T	1783-US8T
Radiated RF immunity IEC 61000-4-3	10V/m with 1 kHz sine-wave 80% AM from 80…2000 MHz 3V/m with 1 kHz sine-wave 80% AM from 2000…2700 MHz		
EFT/B immunity IEC 61000-4-4	±4 kV at 5 kHz on power ports ±3 kV at 5 kHz on communication ports		
Surge transient immunity IEC 61000-4-5	±2 kV line-line (DM) and ±4 kV line-earth (CM) on DC power ports ±2 kV line-earth (CM) on communication port		
Conducted RF immunity IEC 61000-4-6	10V rms with 1 kHz sine-wave 80% AM from 150 kHz…80 MHz		
Magnetic field immunity IEC 61000-4-8	30 A/m long duration and 300 A/m short duration at 50 Hz		
Magnetic pulse immunity IEC 61000-4-9	—	—	30 A/m pulse
Environmental rating	IP20		

Table 35 - Certifications- Stratix 2000 Switches

Certifications (when product is marked)(1)	1783-US4T1F, 1783-US4T1H, 1784-US5TG, 1783-US6T2F, 1783-US6T2H, 1783-US6TG2CG, 1783-US7T1F, 1783-US7T1H, 1783-US14T2S, 1783-US16T	1783-US5T, 1783-US8T
c-UL-us	UL Listed for Class I, Division 2 Group A,B,C,D Hazardous Locations, certified for U.S. and Canada. See UL File E194810.	UL Listed Industrial Control Equipment, certified for US and Canada. See UL File E65584. UL Listed for Class I, Division 2 Group A,B,C,D Hazardous Locations, certified for U.S. and Canada. See UL File E194810.
CE	European Union 2004/108/EC EMC Directive, compliant with: • EN 61326-1; Meas./Control/Lab., Industrial Requirements • EN 61000-6-2; Industrial Immunity • EN 61000-6-4; Industrial Emissions • EN 61131-2; Programmable Controllers (Clause 8, Zone A & B) European Union 2011/65/EU RoHS, compliant with: • EN 50581; Technical Documentation	
RCM	Australian Radiocommunications Act, compliant with: • EN 61000-6.4; Industrial Emissions	
Ex	European Union 94/9/EC ATEX Directive, compliant with: • EN 60079-15; Potentially Explosive Atmospheres, Protection "n" • EN 60079-0; General Requirements II 3 G Ex nA IIC T4 Gc X	European Union 94/9/EC ATEX Directive, compliant with: • EN 60079-15; Potentially Explosive Atmospheres, Protection "n" • EN 60079-0; General Requirements II 3 G Ex nA IIC T5 Gc
KC	Korean Registration of Broadcasting and Communications Equipment, compliant with: • Article 58-2 of Radio Waves Act, Clause 3	

(1) See the Product Certification link at http://www.ab.com for Declarations of Conformity, Certificates, and other certification details.

DRAFT

Dimensions—Stratix 2000 Switches

1783-US4T1F, 1783-US4T1H,1783-US5TG Switch Dimensions

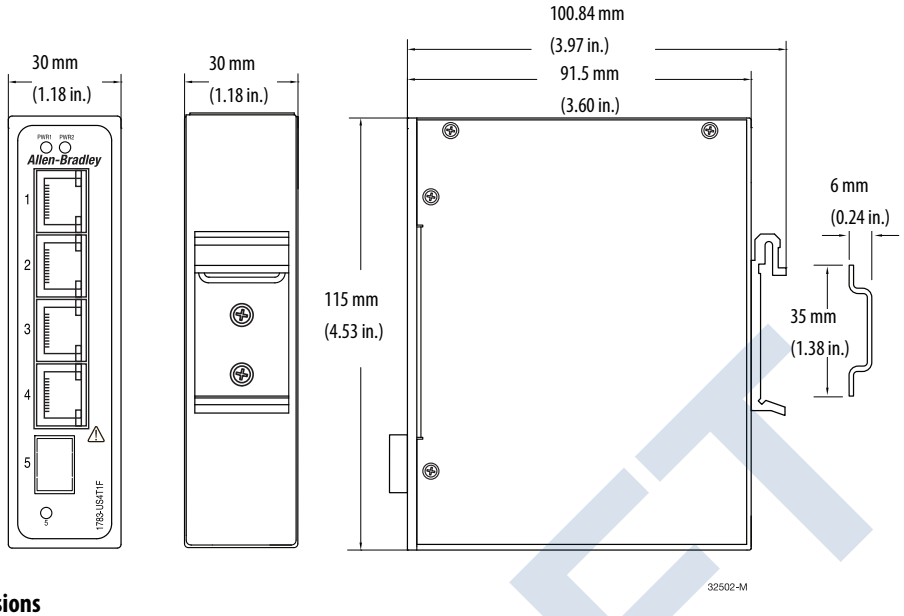

1783-US5T Switch Dimensions

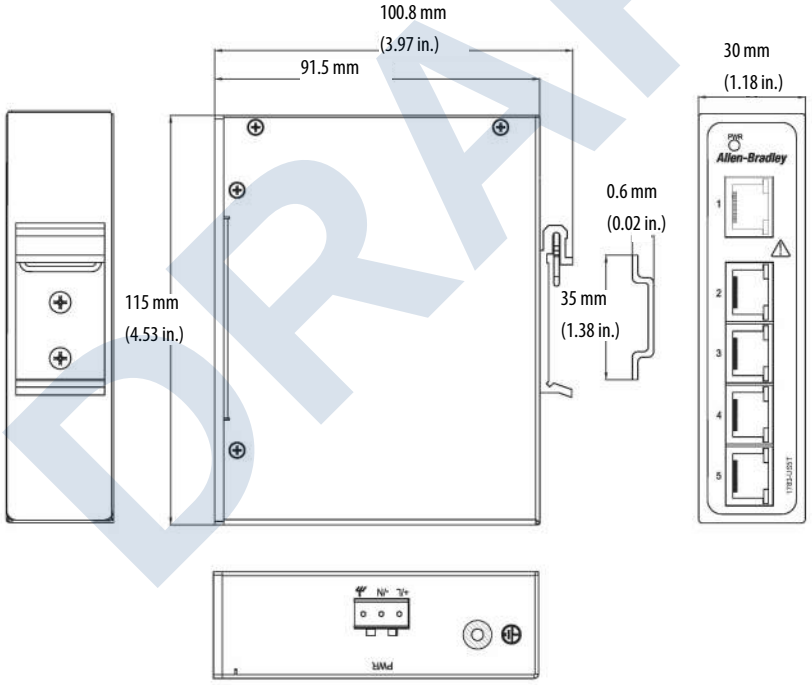

DRAFT

cMT2078X | Advanced HMI Series

7.0” Touchscreen HMI with IIoT Features



- High Speed Screen Update
- Dual Ethernet Ports
- Built-in Edge Gateway Function
- Enhanced Graphics & Security
- Email Alarm Notification and Recipe Functionality
- PDF Reader

System	**CPU**	Quad-Core 64-bit RISC, 1.5 GHz
	Memory (RAM)	1 GB
	Memory (Flash)	4 GB
	RTC	Built-in
I/O Ports	**Serial**	1 x DE9P COM1: RS-232, COM3: RS-232*
		1 x DE9S COM2: RS-485 2 or 4 wire, COM3: RS-485 2 wires
	LAN	2 x 10/100 Base-T RJ-45
	CANbus	N/A
	USB Host	1 x USB 2.0
	USB Client	N/A
	Audio	N/A
	Video	N/A
	Wi-Fi	N/A
	HDMI®	N/A
	SD Card Slot	N/A
Display	**Display Type**	7” TFT LCD
	Size (W x H)	6.02 x 3.39 inches [153 x 86 mm]
	Max. Resolution	800 x 480
	Max. Colors	16.7 M
	Luminance (cd/m²)	400
	View Angle (H°/V°)	160/140
	Contrast Ratio	800:1
	Backlight Lifetime (Hours)	30,000+
Touch Screen	**Type**	4-wire resistive touch
	Active Area Accuracy	Length (X) ±2%, width (Y) ±2%
Electrical	**Input Voltage**	24 ±20% VDC
	Input Current	820mA @ 24 VDC
	Input Power	19.7 W
	Power Isolation	Built-in
	Isolation Resistance	Exceed 50 MΩ at 500 VDC
Mechanical	**Enclosure**	Plastic, Black
	PCB Coating	Yes
	Dimensions (W x H x D)	7.89 x 5.76 x 1.38 inches [200.3 x 146.3 x 35 mm]
	Panel Cutout (W x H)	7.56 x 5.43 inches [192.0 x 138.0 mm]
	Net Weight	Approx. 1.32 lbs. [0.6 kg]
	Mounting	Panel mounting
Environmental	**Operating Temperature**	32° ~ 131°F [0° ~ 55°C]
	Storage Temperature	-4° ~ 140°F [-20° ~ 60°C]
	Relative Humidity	10% ~ 90% (non-condensing)
	Vibration Endurance	10 to 25 Hz (X, Y, Z direction, 2G, 30 minutes)
	Rating	UL Type 4X (indoor use only), NEMA 4, IP66 compliant front panel
	Certifications	cULus, CE, RoHS
Software	EBPro (v6.05.02 or later), EasyAccess 2.0 (optional), CODESYS (optional), IIoT Ready, MQTT, Sparkplug B, VNC, CMTViewer, Webview	
Notes	*Only Tx and Rx may be used for COM1 RS-232 while COM3 RS-232 is in use. MPI is not supported. Specifications subject to change without notice	

DRAFT

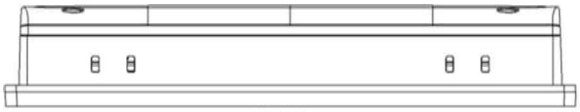

Top View

Dimensions are in inches [mm]

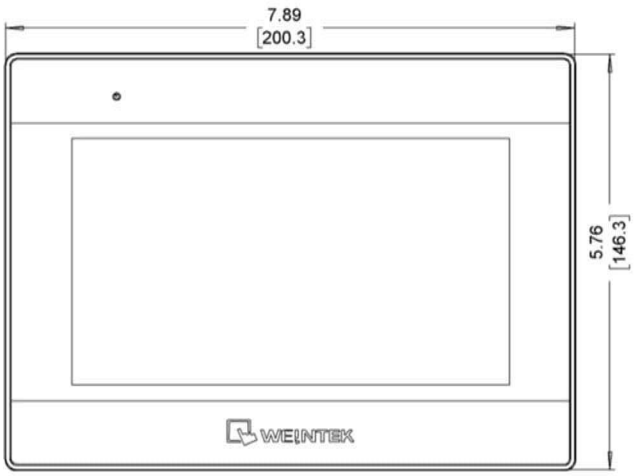

Front View

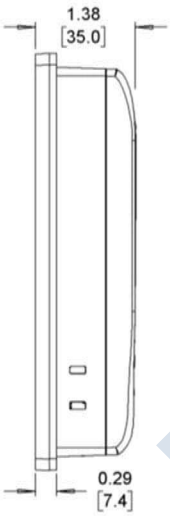

Side View

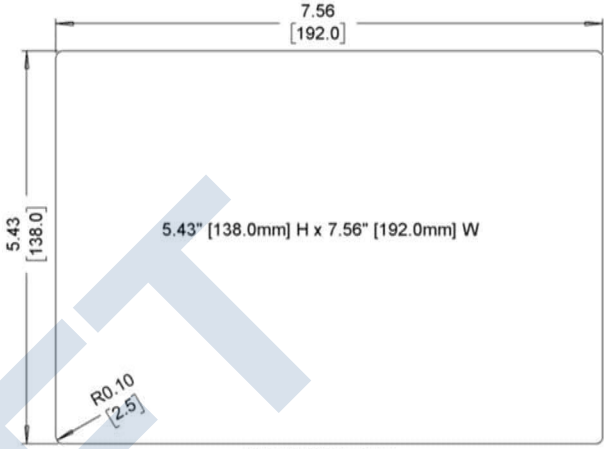

Cutout Dimensions

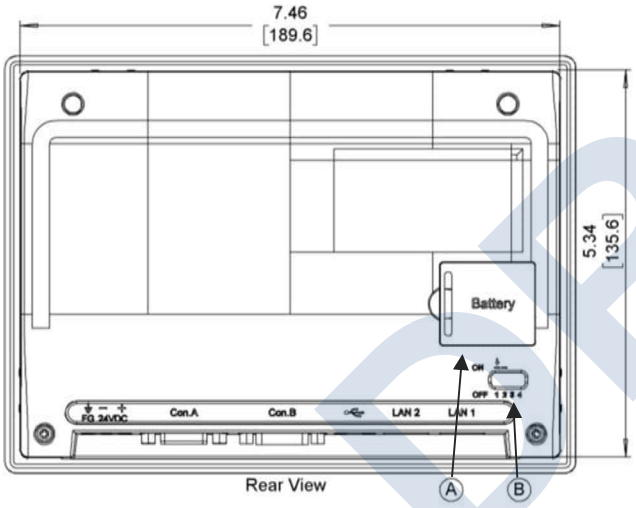

Rear View

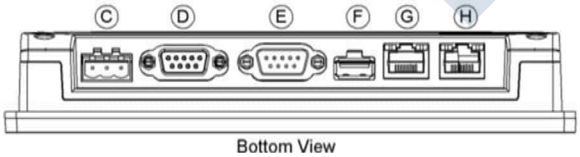

Bottom View

A Battery Compartment
B DIP Switches
C Power Connector
D COM Port DE9S
E COM Port DE9P
F USB 2.0 Host Port
G Ethernet Port
H Ethernet Port

DRAFT

Why Buy A Maple HMI

In addition to our powerful and affordable hardware, we'll also continue to support your company long after a sale. Wide product selection, large in-stock inventory, outstanding product warranty, free technical support and software, and in-house repairs with quick turnaround times, Maple Systems has your business covered.



Add Remote IO for PLC Functionality

Select Maple Advanced and High-Performance HMIs have a sleek hardware platform that runs both an HMI application created with our free HMI software and PLC logic programmed with CODESYS; each on its own dedicated processor. Unlike the typical multicore set up, where the operating system scheduler is responsible for allocating tasks to each processor, these HMIs have a hard separation between cores. One core is dedicated to the HMI application, the other to executing PLC logic of the CODESYS project. This ensures taxing graphics processing operations will not interfere with deterministic real time control tasks executing on the other processor.

After selecting your HMI, choose from a suite of easy to use powerful I/O modules to connect to your field equipment. We offer a complete set of I/O modules which can be combined with one of our communication couplers to create a remote I/O block.

Remote Access and the IIoT

Remote access is the ability to access an HMI or connected device, from another device, at any time, and from anywhere. With our free HMI software and supported hardware solutions, you have the freedom to access the HMI, and all its data and applications, from another device and control it as if you were standing in front of it. Our Advanced and High-Performance HMIs support cMT Viewer, WebView, Web Streaming, and EasyAccess 2.0 and are designed to make accessing your HMI and data fast and streamlined.

Let us serve as your guide, making it an easy process to join the next evolution of automated control. Our Advanced and High-Performance HMIs can act as an access point enabling operating equipment on the plant floor to connect to information technologies of the Industrial Internet of Things (IIoT). With our IIoT solutions, that are already included in the EBPro software, we can help you achieve better access to invaluable data and open a world of possibilities for your business. Read more about our IIoT solutions.

Build your SCADA

We offer all the components you need to create your own unique level of supervisory data acquisition and control, from the simplest stand-alone machine to sophisticated multi-device networked production line(s), all the way to enterprise-level operations and IIoT functionalities leveraging cloud connectivity.

Our products can help you standardize communications between devices, gluing different systems together for one source to your SCADA. No need to redesign your entire application. Keep the components that are already working for you, just add Maple Systems components to grow your abilities to supervise, control, and acquire data.

DRAFT

Incredible Functionality Out of the Box

- Easily and quickly create the project with functional objects including numeric object, lamp object, combo-button, alarms, and recipes
- Pick and place objects, pictures, and shapes
- Import/export recipes
- Create trend display, graphs, XY plots, and pie charts
- Add passwords and security levels
- Assign communication (PLC) drivers easily and more with our Free HMI software

Additionally our HMIs support remote access solutions with VNC, MQTT, and OPC UA. For additional features see our High-Performance HMI series.



User Friendly HMI Configuration Software

Because designing the layout of screens and user-interface (UI) of the HMI is typically where most of the development time is spent, we've made our Free HMI configuration software easy to use.

- Import tags feature
- Tools to diagnose and monitor PLC to HMI connection
- Debugging tools
- Pre-built libraries
- Off-line and on-line simulation

These are just a few of the ways our software makes creating your project easier. We also have controller information sheets, cable drawings, sample projects, Getting Started Guides, and videos/tutorials available in our support center 24/7.



Allen-Bradley ABB babcock
BALDOR Danfoss SIEMENS
MITSUBISHI Parker
TOSHIBA YASKAWA Koyo
Matsushita

Programmable Logic Controller (PLC) Connectivity

With over 300 PLC & Controller communication protocols, these HMIs will easily integrate with your preferred PLC brands, including:

Allen-Bradley
Siemens
Omron
Emerson
GE
Panasonic
Mitsubishi
...and many more

ITEM 454A

Panel Mount HMI Feature Overview

With few exceptions, all our Standard HMIs support (this covers all the HMI prefix models, ex: HMI5043L/LB, HMI5070L/LB):	With few exceptions, all our Advanced HMIs support (this covers all the cMT2xxx series):	With few exceptions, all our High Performance HMIs support (this covers all the cMT3xxx series HMIs):
Alarm & Event Messages	Alarm & Event Messages	Alarm & Event Messages
Animation - Flow Block	Animation - Flow Block	Animation - Flow Block
ASCII Characters	ASCII Characters	ASCII Characters
Bar Graphs	Bar Graphs	Bar Graphs
Combo Button	Combo Button	Combo Button
Data Logging and Sampling	Data Logging and Sampling	Data Logging and Sampling
Date / Time	Date / Time	Date / Time
Dynamic Drawing	Dynamic Drawing	Dynamic Drawing
Dynamic Scale	Dynamic Scale	Dynamic Scale
EasyAccess 2.0	EasyAccess 2.1	EasyAccess 2.0
EasyWatch	EasyWatch	EasyWatch
Enhanced Security Mode	Enhanced Security Mode	Enhanced Security Mode
Event Alarm Log	Event Alarm Log	Event Alarm Log
File Browser	File Browser	File Browser
Grid Display	Grid Display	Grid Display
Languages (Up to 24)	Languages (Up to 24)	Languages (Up to 24)
Libraries	Libraries	Libraries
Macros	Macros	Macros
Meters & Gauges	Meters & Gauges	Meters & Gauges
Modbus	Modbus	Modbus
Objects (Grouping, Layering, Aligning, Flip)	Objects (Grouping, Layering, Aligning, Flip)	Objects (Grouping, Layering, Aligning, Flip)
Off-line / On-line Simulation	Off-line / On-line Simulation	Off-line / On-line Simulation
OPC UA Client	OPC UA Client	OPC UA Client
Operation Log	Operation Log	Operation Log
Pass-Through Mode	Pass-Through Mode	Pass-Through Mode
Picture Object	Picture Object	Picture Object
Picture Viewer	Picture Viewer	Picture Viewer
Pie Chart	Pie Chart	Pie Chart
PLC Tag Embedded in Project	PLC Tag Embedded in Project	PLC Tag Embedded in Project
Project Password	Project Password	Project Password
Recipes	Recipes	Recipes
Remote Access	Remote Access	Remote Access
Scheduler	Scheduler	Scheduler
Security Levels (Enhanced)	Security Levels (Enhanced)	Security Levels (Enhanced)
System Setting Editor	System Setting Editor	System Setting Editor
Table	Table	Table
Text Object	Text Object	Text Object
Timer Object	Timer Object	Timer Object
Trend Display (Graphs)	Trend Display (Graphs)	Trend Display (Graphs)
User-Defined Start-Up Screen	User-Defined Start-Up Screen	User-Defined Start-Up Screen
Utility Manager	Utility Manager	Utility Manager
VNC Server	VNC Server	VNC Server
XY Plot	XY Plot	XY Plot
Email (1)	Email	Email
Macro Windows Open / Cycle / Close (1)	Macro Windows Open / Cycle / Close	Macro Windows Open / Cycle / Close
MQTT (1)	MQTT	MQTT
String Table (1)	String Table	String Table
Time Synchronization (1)	Time Synchronization	Time Synchronization
USB Tethering (1)	USB Tethering	USB Tethering
VNC Viewer (1)	VNC Viewer	VNC Viewer
	IP Camera	IP Camera
	USB Camera	USB Camera
	Animation (Objects, Word Lamp, GIFs, Moving Shape)	Animation (Objects, Word Lamp, GIFs, Moving Shape)
	BACnet	BACnet
	CANbus	CANbus
	cMT Diagnoser	cMT Diagnoser
	cMT Viewer Support	cMT Viewer Support
	CODESYS (2)	CODESYS (2)
	Media Player	Media Player
	MQTT - Advanced JSON	MQTT - Advanced JSON
	MQTT - AWS IoT, Sparkplug B, Azure IoT Hub, Google Cloud IoT Core	MQTT - AWS IoT, Sparkplug B, Azure IoT Hub, Google Cloud IoT Core
	PDF Reader	PDF Reader
	Web Streaming	Web Streaming
	WebView	WebView
		Barcode Scanner (Android Camera)
		Database Server
		File Transfer Protocol (FTP)
		OPC UA Server
		PLC Web Browser
		SQL Database Server Integration

This table is for illustration only and subject to change. Always check the software to see if a feature is supported in your specific hardware.

(1) Not supported in the B Series

(2) Not supported on the cMT2166X

DRAFT

ITEM 455A

cMT3092Xv2 | High-Performance HMI Series

9.7” Touchscreen HMI with IIoT Features



- High Speed Display Update
- Built-in Edge Gateway Function
- Enhanced Graphics & Security
- Email Alarm Notification
- Recipe, PDF Reader
- SQL Database, Database Server, OPC-UA Server

MQTT SQL OPC UA EasyAccess2.0 Modbus Sparkplug™ VNC CMT Viewer amazon web services Azure Google Cloud Platform CODESYS

System	**CPU**	Quad-Core RISC Cortex-A17
	Memory (RAM)	1 GB
	Memory (Flash)	4 GB
	RTC	Built-in
I/O Ports	**Serial**	1 x DE9P COM1: RS-232, COM3: RS-232*
		1 x DE9S COM2: RS-485 2 or 4 wire, COM3: RS-485 2 wire, CANBus
	LAN	1 x 10/100 Base-T RJ-45, 1x GbE RJ-45
	CANbus	Yes
	USB Host	1 x USB 2.0
	USB Client	N/A
	Audio	Built-in Mono Speaker
	Video	N/A
	Wi-Fi	N/A
	HDMI®	N/A
	SD Card Slot	N/A
Display	**Display Type**	9.7” TFT LCD
	Size (W x H)	7.78 x 5.84 inches [197.6 x 148.5 mm]
	Max. Resolution	1024 x 768
	Max. Color	262K
	Luminance (cd/m²)	350
	View Angle (H°/V°)	140/130
	Contrast Ratio	500:1
	Backlight Lifetime (Hours)	30,000+
Touch Screen	**Type**	4-wire resistive touch
	Active Area Accuracy	Length (X) ±2%, width (Y) ±2%
Electrical	**Input Voltage**	24 ± 20% VDC
	Input Current	1 A @ 24 VDC
	Input Power	24 W
	Power Isolation	Built-in
	Isolation Resistance	Exceed 50 MΩ at 500 VDC
Mechanical	**Enclosure**	Plastic, charcoal grey
	PCB Coating	Yes
	Dimensions (W x H x D)	10.26 x 8.00 x 1.75 inches [260.6 x 203.1 x 44.5 mm]
	Net Weight	Approx. 2.2 lbs. [1 kg]
	Mounting	Panel mounting, VESA 75 x 75 mm
Environmental	**Operating Temperature**	32° ~ 122°F [0° ~ 50°C]
	Storage Temperature	-4° ~ 140°F [-20° ~ 60°C]
	Relative Humidity	10% ~ 90% (non-condensing)
	Vibration Endurance	10 to 25 Hz (X, Y, Z direction, 2G, 30 minutes)
	Rating	UL Type 4X (indoor use only), NEMA 4, IP66 compliant front panel
	Certifications	cULus, CE, RoHS
Software	EBPro (v6.07.02 or later), EasyAccess 2.0 (optional), CODESYS (optional), IIoT Ready, MQTT, Sparkplug B, VNC, CMTViewer, Webview, SQL	
Notes	*Only Tx and Rx may be used for COM1 RS-232 while COM3 RS-232 is in use. Specifications subject to change without notice	

DRAFT

Dimensions are in inches [mm]

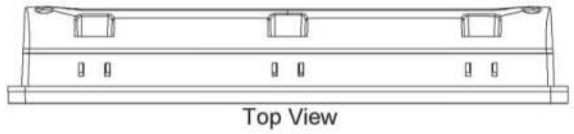

Top View

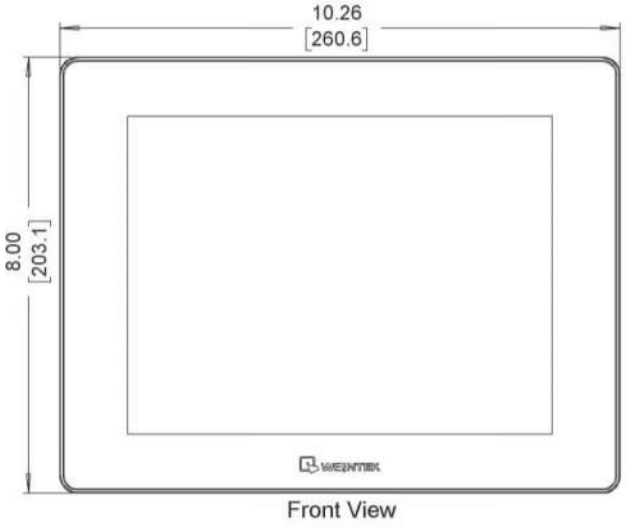

Front View

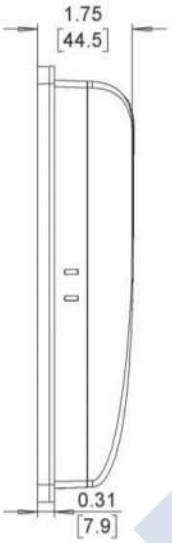

Side View

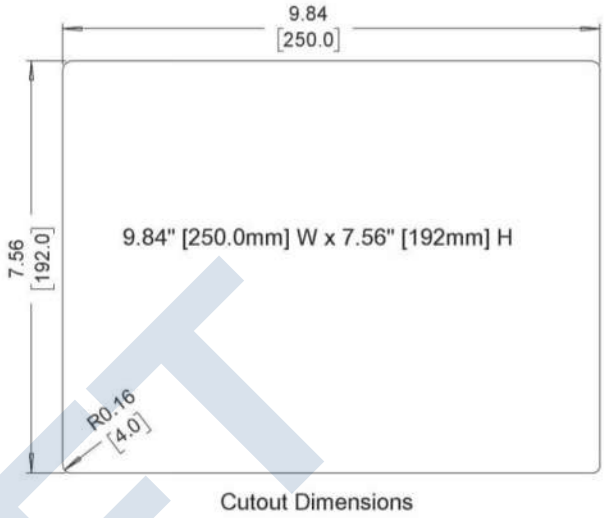

Cutout Dimensions

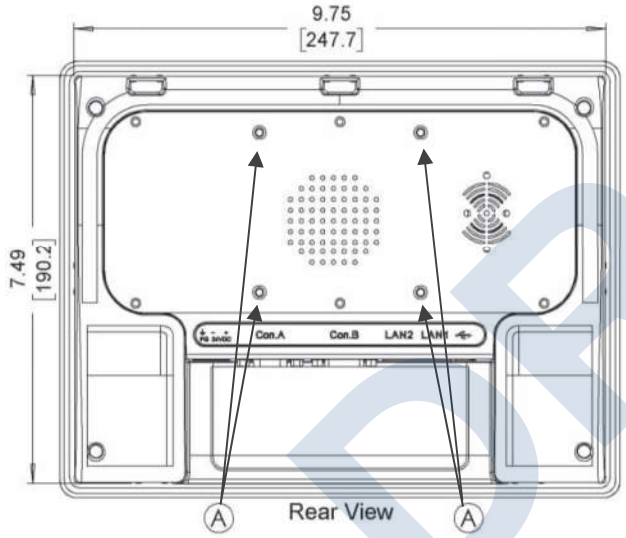

Rear View

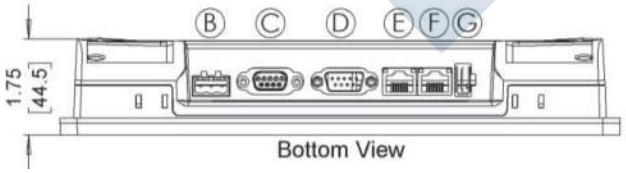

Bottom View

A	VESA 75 mm Screw Holes	E	Ethernet Port
B	Power Connector	F	Gigabit Ethernet Port
C	COM Port DE9S	G	USB 2.0 Host Port
D	COM Port DE9P		

DRAFT

Why Buy A Maple HMI

In addition to our powerful and affordable hardware, we'll also continue to support your company long after a sale. Wide product selection, large in-stock inventory, outstanding product warranty, free technical support and software, and in-house repairs with quick turnaround times, Maple Systems has your business covered.



Add Remote IO for PLC Functionality

Select Maple Advanced and High-Performance HMIs have a sleek hardware platform that runs both an HMI application created with our free HMI software and PLC logic programmed with CODESYS; each on its own dedicated processor. Unlike the typical multicore set up, where the operating system scheduler is responsible for allocating tasks to each processor, these HMIs have a hard separation between cores. One core is dedicated to the HMI application, the other to executing PLC logic of the CODESYS project. This ensures taxing graphics processing operations will not interfere with deterministic real time control tasks executing on the other processor.

After selecting your HMI, choose from a suite of easy to use powerful I/O modules to connect to your field equipment. We offer a complete set of I/O modules which can be combined with one of our communication couplers to create a remote I/O block.

Remote Access and the IIoT

Remote access is the ability to access an HMI or connected device, from another device, at any time, and from anywhere. With our free HMI software and supported hardware solutions, you have the freedom to access the HMI, and all its data and applications, from another device and control it as if you were standing in front of it. The enhanced features in our High-Performance HMIs support SQL Database Servers, Web Browser, OPC UA Server, and FTP, in addition to cMT Viewer, WebView, Web Streaming, and EasyAccess 2.0 and are designed to make accessing your HMI and data fast and streamlined.

Our High-Performance HMIs can act as an access point enabling operating equipment on the plant floor to connect to information technologies of the Industrial Internet of Things (IIoT). With our IIoT solutions, that are already included in the EBPro software, we can help you achieve better access to invaluable data and open a world of possibilities for your business. Read more about our IIoT solutions.

Build your SCADA

We offer all the components you need to create your own unique level of supervisory data acquisition and control, from the simplest stand-alone machine to sophisticated multi-device networked production line(s), all the way to enterprise-level operations and IIoT functionalities leveraging cloud connectivity.

Our products can help you standardize communications between devices, gluing different systems together for one source to your SCADA. No need to redesign your entire application. Keep the components that are already working for you, just add Maple Systems components to grow your abilities to supervise, control, and acquire data.

DRAFT

Incredible Functionality Out of the Box

- Easily and quickly create the project with functional objects including numeric object, lamp object, combo-button, alarms, and recipes
- Pick and place objects, pictures, and shapes
- Import/export recipes
- Create trend display, graphs, XY plots, and pie charts
- Add passwords and security levels
- Assign communication (PLC) drivers easily and more with our Free HMI software

Additionally our HMIs support remote access solutions with VNC, MQTT, and OPC UA. For additional features see our High-Performance HMI series.



User Friendly HMI Configuration Software

Because designing the layout of screens and user-interface (UI) of the HMI is typically where most of the development time is spent, we've made our Free HMI configuration software easy to use.

- Import tags feature
- Tools to diagnose and monitor PLC to HMI connection
- Debugging tools
- Pre-built libraries
- Off-line and on-line simulation

These are just a few of the ways our software makes creating your project easier. We also have controller information sheets, cable drawings, sample projects, Getting Started Guides, and videos/tutorials available in our support center 24/7.



Allen-Bradley ABB babcock BALDOR Danfoss SIEMENS MITSUBISHI Parker TOSHIBA YASKAWA Koyo Matsushita

Programmable Logic Controller (PLC) Connectivity

With over 300 PLC & Controller communication protocols, these HMIs will easily integrate with your preferred PLC brands, including:

Allen-Bradley
Siemens
Omron
Emerson
GE
Panasonic
Mitsubishi
...and many more

Panel Mount HMI Feature Overview

ITEM 455A

With few exceptions, all our Standard HMIs support (this covers all the HMI prefix models, ex: HMI5043L/LB, HMI5070L/LB):	With few exceptions, all our Advanced HMIs support (this covers all the cMT2xxx series):	With few exceptions, all our High Performance HMIs support (this covers all the cMT3xxx series HMIs):
Alarm & Event Messages	Alarm & Event Messages	Alarm & Event Messages
Animation - Flow Block	Animation - Flow Block	Animation - Flow Block
ASCII Characters	ASCII Characters	ASCII Characters
Bar Graphs	Bar Graphs	Bar Graphs
Combo Button	Combo Button	Combo Button
Data Logging and Sampling	Data Logging and Sampling	Data Logging and Sampling
Date / Time	Date / Time	Date / Time
Dynamic Drawing	Dynamic Drawing	Dynamic Drawing
Dynamic Scale	Dynamic Scale	Dynamic Scale
EasyAccess 2.0	EasyAccess 2.1	EasyAccess 2.0
EasyWatch	EasyWatch	EasyWatch
Enhanced Security Mode	Enhanced Security Mode	Enhanced Security Mode
Event Alarm Log	Event Alarm Log	Event Alarm Log
File Browser	File Browser	File Browser
Grid Display	Grid Display	Grid Display
Languages (Up to 24)	Languages (Up to 24)	Languages (Up to 24)
Libraries	Libraries	Libraries
Macros	Macros	Macros
Meters & Gauges	Meters & Gauges	Meters & Gauges
Modbus	Modbus	Modbus
Objects (Grouping, Layering, Aligning, Flip)	Objects (Grouping, Layering, Aligning, Flip)	Objects (Grouping, Layering, Aligning, Flip)
Off-line / On-line Simulation	Off-line / On-line Simulation	Off-line / On-line Simulation
OPC UA Client	OPC UA Client	OPC UA Client
Operation Log	Operation Log	Operation Log
Pass-Through Mode	Pass-Through Mode	Pass-Through Mode
Picture Object	Picture Object	Picture Object
Picture Viewer	Picture Viewer	Picture Viewer
Pie Chart	Pie Chart	Pie Chart
PLC Tag Embedded in Project	PLC Tag Embedded in Project	PLC Tag Embedded in Project
Project Password	Project Password	Project Password
Recipes	Recipes	Recipes
Remote Access	Remote Access	Remote Access
Scheduler	Scheduler	Scheduler
Security Levels (Enhanced)	Security Levels (Enhanced)	Security Levels (Enhanced)
System Setting Editor	System Setting Editor	System Setting Editor
Table	Table	Table
Text Object	Text Object	Text Object
Timer Object	Timer Object	Timer Object
Trend Display (Graphs)	Trend Display (Graphs)	Trend Display (Graphs)
User-Defined Start-Up Screen	User-Defined Start-Up Screen	User-Defined Start-Up Screen
Utility Manager	Utility Manager	Utility Manager
VNC Server	VNC Server	VNC Server
XY Plot	XY Plot	XY Plot
Email (1)	Email	Email
Macro Windows Open / Cycle / Close (1)	Macro Windows Open / Cycle / Close	Macro Windows Open / Cycle / Close
MQTT (1)	MQTT	MQTT
String Table (1)	String Table	String Table
Time Synchronization (1)	Time Synchronization	Time Synchronization
USB Tethering (1)	USB Tethering	USB Tethering
VNC Viewer (1)	VNC Viewer	VNC Viewer
	IP Camera	IP Camera
	USB Camera	USB Camera
	Animation (Objects, Word Lamp, GIFs, Moving Shape)	Animation (Objects, Word Lamp, GIFs, Moving Shape)
	BACnet	BACnet
	CANbus	CANbus
	cMT Diagnoser	cMT Diagnoser
	cMT Viewer Support	cMT Viewer Support
	CODESYS (2)	CODESYS (2)
	Media Player	Media Player
	MQTT - Advanced JSON	MQTT - Advanced JSON
	MQTT - AWS IoT, Sparkplug B, Azure IoT Hub, Google Cloud IoT Core	MQTT - AWS IoT, Sparkplug B, Azure IoT Hub, Google Cloud IoT Core
	PDF Reader	PDF Reader
	Web Streaming	Web Streaming
	WebView	WebView
		Barcode Scanner (Android Camera)
		Database Server
		File Transfer Protocol (FTP)
		OPC UA Server
		PLC Web Browser
		SQL Database Server Integration

DRAFT

This table is for illustration only and subject to change. Always check the software to see if a feature is supported in your specific hardware.

(1) Not supported in the B Series

(2) Not supported on the cMT2166X

ITEMS 460A, B

shade aide®

PROTECTING YOUR HMI

Look for your HMI model on our sizing chart on page 3 to find out which **SHADE AIDE®** you need.

NOW IP66 & UL RATED



DRAFT

Smith & Loveless Inc.

MEASURING GUIDE

WHY BUY A ONE-SIZE-FITS-ALL HMI PROTECTOR?

The **SHADE AIDE®** HMI protector comes in many different sizes and colors. Built for rugged, industrial environments, the **SHADE AIDE®** is sure to fit your HMI.

NOT SURE WHAT SIZE **SHADE AIDE®** TO GET?

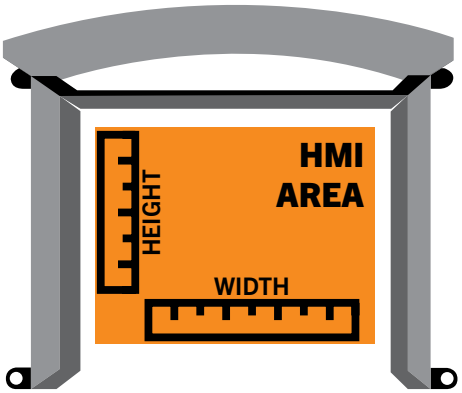

Select Your Maximum HMI Area



DEPTH

Measure your HMI's length and width, making sure to measure edge to edge from the plastic casing of the HMI.

Account for how far the HMI face sticks out from the control panel to determine the depth.

Check what is behind the door. Your measurement should make it so none of the holes you drill will run into wiring or buttons on the back!

Find the distance from your HMI to any buttons or labels on the panel door. You will need 9/16" or 15mm clearance.

Find the **SHADE AIDE®** that is closest to your measurements and you're ready to order!

See page 3 for model sizes.

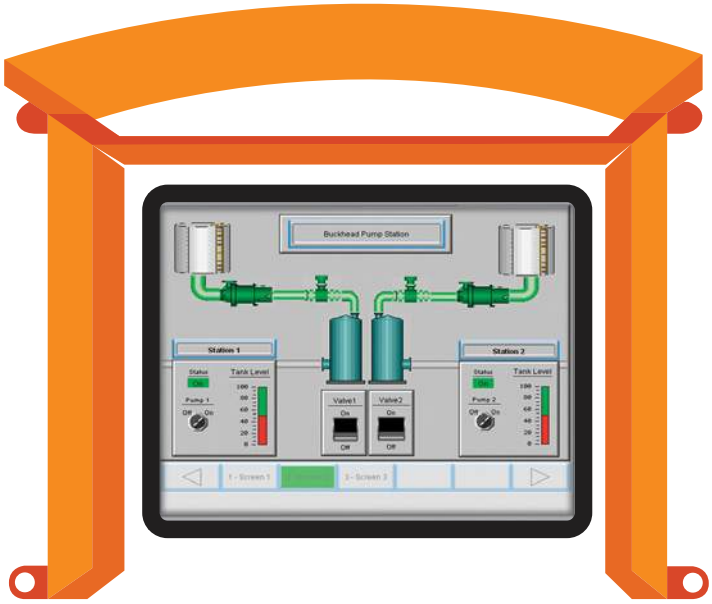

DRAFT

TO ORDER, CALL **1-800-922-9048**

SIZES & COLORS

MINI | SMALL | MEDIUM

Model Name	NEMA 4/IP66 PN	NEMA 4X/IP66 PN	Maximum HMI Area - US	Maximum HMI Area - Metric
Mini [1]	H87A556-4	H87A556-4X [4]	5" W x 2.875" H x 1" D	127mm W x 73mm H x 25mm D
Mini Tall [4]	TBA	TBA	5" W x 12" H x 1" D	127mm W x 304mm H x 25mm D
Modified Mini [1]	H87A570-4	H87A570-4X [4]	5.75" W x 3.9375" H x 1" D	146mm W x 100mm H x 25mm D
Mini Square [1]	H87A575-4	H87A575-4X [4]	7" W x 7.0625" H x 1" D	177mm W x 179mm H x 25mm D
Small [2]	H87A379-4	H87A379-4X	9.875" W x 7.4375" H x 1" D	250mm W x 188mm H x 25mm D
Medium [1]	H87A582-4	H87A582-4X [4]	12" W x 9.0625" H x 1" D	304mm W x 230mm H x 25mm D

LARGE | X-LARGE | XX-LARGE

Model Name	NEMA 4/IP66 PN	NEMA 4X/IP66 PN	Maximum HMI Area - US	Maximum HMI Area - Metric
Large Square [1]	H87A584-4	H87A584-4X [4]	11.5" W x 11.5625" H x 1" D	292mm W x 293mm H x 25mm D
Large Modified [1]	H87A548-4	H87A548-4X	13.875" W x 11.4375" H x 1" D	352mm W x 290mm H x 25mm D
Large [2]	H87A485-4	H87A485-4X	15.875" W x 11.4375" H x 1" D	403mm W x 290mm H x 25mm D
Large Deep [1]	H87A555-4	H87A555-4X [4]	15.875" W x 11.4375" H x 2" D	403mm W x 290mm H x 50mm D
X-Large Modified [3]	H87A578-4	H87A578-4X [4]	17" W x 14.8125" H x 1" D	431mm W x 376mm H x 25mm D
X-Large [2]	H87A503A-4	H87A503D-4X	19.875" W x 14.4375" H x 1" D	504mm W x 366mm H x 25mm D
X-Large X-Tall [1]	H87A498-4	H87A498-4X	19.875" W x 18.4375" H x 1" D	504mm W x 468mm H x 25mm D
X-Large Long [1]	H87A503-LONG-4	H87A503-LONG-4X	22.5" W x 14.4375" H x 1" D	571mm W x 366mm H x 25mm D
XX-Large [4]	H87A580-4	H87A580-4X	24.125"W x 16.0625"H x 1" D	612mm W x 407mm H x 25mm D

MEGA

Model Name	NEMA 4/IP66 PN	NEMA 4X/IP66 PN	Maximum HMI Area - US	Maximum HMI Area - Metric
Mega [4]	H87A526A-4	H87A526B-4X	28.5" W x 24.875" H x 13.5625" D	723mm W x 631mm H x 344mm D
Mega Shallow [1]	H87A526D-4	H87A526E-4X [4]	28.5" W x 24.875" H x 1" D	723mm W x 631mm H x 25mm D

HIGH-SPEED (for HMIs on Vehicles)

Model Name	NEMA 4/IP66 PN	NEMA 4X/IP66 PN	Maximum HMI Area - US	Maximum HMI Area - Metric
X-Large High-Speed [4]	H87A503C-4	H87A503E-4X	19.875" W x 14.4375" H x 1" D	504mm W x 366mm H x 25mm D
Mega Shallow High-Speed [4]	H87A526F-4	H87A526G-4X	28.5" W x 24.875" H x 1" D	723mm W x 631mm H x 25mm D

Custom Order

Any Size, Any Color + SST

Order any **SHADE AIDE®** in the custom color of your choice!

NEMA 4/IP66

Powder-Coated Aluminum

Black | White | Gray

NEMA 4X/IP66

Stainless Steel

SST

SCAN HERE

[1] Available in stock in black.
[2] Available in stock colors black, white, gray and stainless steel.
[3] Available in stock colors black, white or gray. Contact us for more information.
[4] Not in stock and will be custom ordered. Contact us for more information.

DRAFT



SHADE AIDE®
MODIFIED MINI

The New Modified Mini **SHADE AIDE®** protects many 5” HMI displays with its 5.75” W x 3.9325” H size.

Modified Mini
Part #: H87A570-4 or H87A570-4X
5.75” W x 3.9375” H x 1” D
146mm W x 100mm H x 25mm D

SHADE AIDE®
MEDIUM

With its easy-to-use design and snug fit, this medium-sized **SHADE AIDE®** is the ideal choice for anyone looking to keep their HMI screen in top condition with it’s easy to view technology.

Medium
Part #: H87A582-4 or H87A582-4X
12” W x 9.0625” x 1” D
304mm W x 230mm H x 25mm D



SCAN HERE

AND MORE!

Check out our other models that will fit your specific needs or order a custom size for your unique application.

DRAFT

NEW MODELS

SHADE AIDE® LARGE DEEP



For HMIs with added depth, the new Large Deep **SHADE AIDE®** protects against sun, water and dust with it's **NEMA** and **IP66** ratings.

Large Deep
Part #: H87A555-4 or H87A555-4X
15.875" W x 11.4375" H x 2" D
403mm W x 290mm H x 50mm D



SHADE AIDE® X-LARGE MODIFIED

Whether you need to protect your screen from the elements or want to keep it looking its best, our X-Large Modified HMI cover protects even the largest of screens. Clearly see your HMI screen every time.

X-Large Modified
Part #: H87A578-4 or H87A578-4X
17" W x 14.8125" H x 1" D
431mm W x 376mm H x 25mm D

DRAFT





CLEARLY SEE YOUR SCREEN WITH **SHADE AIDE®** TECHNOLOGY!

No more glares or reflections on sunny days to prevent you from getting your work done effectively.

ITEMS 460A, B

CERTIFIED PROTECTION

TO PROTECT YOUR HMIs FROM DUST AND WATER!

NOW IP66 & UL RATED

Sun, dust or water, **SHADE AIDE**® has you covered.
Every **SHADE AIDE**® now comes standard with IP66 quality to protect against dust and water, in addition to its shading capabilities.

Choose between the UL ratings of NEMA 4 or NEMA 4x, and let **SHADE AIDE**® do the rest with its IP66 rating. Select the **SHADE AIDE**® model for your unique HMI today!



DRAFT

KEEP SECURITY A PRIORITY!

Don’t let unsecure systems get in your way!

SHADE AIDE® has locking capability to give you peace of mind that your HMIs are safe with the padlock-compatible design. This secure feature keeps out unwanted users to your most important controls. Upgrade your security now when you visit ShadeAide.com

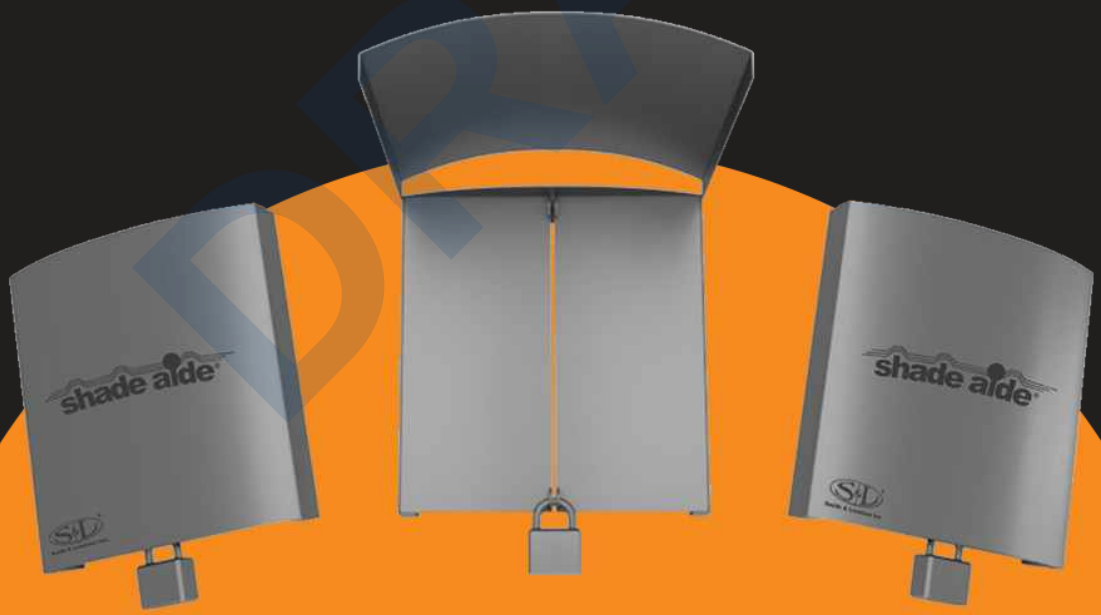

shade aide®

DRAFT



OUR VIDEOS

SCAN HERE

Check out our **SHADE AIDE®** videos to see our different variations, beneficial features, how to install it and more at ShadeAide.com!

Technical Data

Original Instructions

Allen-Bradley by ROCKWELL AUTOMATION

CompactLogix Controllers Specifications

Bulletins 1769 and 1768

Topic	Page
Summary of Changes	2
Catalog Numbers	2
CompactLogix 5370 Controllers	3
Armor CompactLogix and Armor Compact GuardLogix Controllers	25
1769 Packaged CompactLogix Controllers with Embedded I/O	29
1769 Modular CompactLogix Controllers	35
1768 CompactLogix Controllers	38
Controller Memory Use	41
Controller Compatibility	41
Controller Connections	43
CompactLogix Controller Accessories	45
Additional Resources	47

DRAFT



Rockwell Automation

Summary of Changes

This publication contains the following new or updated information. This list includes substantive updates only and is not intended to reflect all changes.

Topic	Pages
Removed EAC certification for CompactLogix™ 5370 and Compact GuardLogix® 5370 Controllers, and Armor™ CompactLogix and Armor Compact GuardLogix Controllers	5, 26

Catalog Numbers

This publication is applicable to the following catalog numbers.

CompactLogix 5370 and Compact GuardLogix 5370 Controllers	1769-L16ER-BB1B, 1769-L18ER-BB1B, 1769-L18ERM-BB1B, 1769-L18ERM-BB1BK, 1769-L19ER-BB1B, 1769-L19ER-BB1BK, 1769-L24ER-QB1B, 1769-L24ER-QBFC1B, 1769-L24ER-QBFC1BK, 1769-L27ERM-QBFC1B, 1769-L30ER, 1769-L30ER-NSE, 1769-L30ERK, 1769-L30ERM, 1769-L30ERMK, 1769-L30ERMS, 1769-L33ER, 1769-L33ERK, 1769-L33ERM, 1769-L33ERMK, 1769-L33ERMS, 1769-L33ERMSK, 1769-L36ERM, 1769-L36ERMS, 1769-L37ERM, 1769-L37ERMK, 1769-L37ERMS, 1769-L37ERMSK, 1769-L38ERM, 1769-L38ERMK, 1769-L38ERMS, 1769-L38ERMSK
Armor CompactLogix and Armor Compact GuardLogix Controllers	1769-L33ERMO, 1769-L33ERMOS, 1769-L36ERMO, 1769-L36ERMOS, 1769-L37ERMO, 1769-L37ERMOS, 1769-L38ERMO, 1769-L38ERMOS
1769 Packaged Controllers	1769-L23-QBFC1B, 1769-L23E-QB1B, 1769-L23E-QBFC1B
1769 Modular Controllers	1769-L31, 1769-L32C, 1769-L35CR, 1769-L32E, 1769-L32EK, 1769-L35E
1768 Controllers	1768-L43, 1768-L43S, 1768-L45, 1768-L45S
Memory Cards	1784-CF128, 1784-SD1, 1784-SD2

DRAFT

CompactLogix 5370 Controllers

CompactLogix 5370 L1 Control System

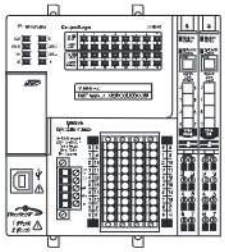

CompactLogix 5370 L2 Control System

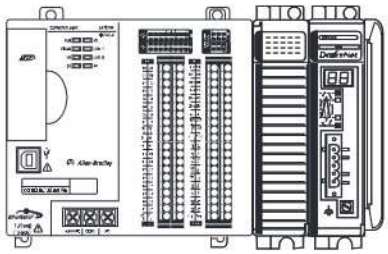

CompactLogix 5370 L3 Control System

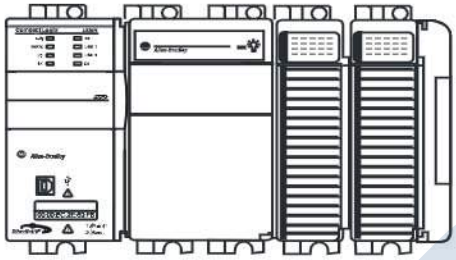

CompactLogix 5370 controllers provide scalable controller solutions to address a wide variety of applications. All CompactLogix 5370 controllers provide the following functionality:

- Two Ethernet ports
- One USB port
- Support for local expansion modules
- Control of local and distributed I/O modules
- Use of 1784-SD1 or 1784-SD2 Secure Digital (SD) card for nonvolatile memory
- A battery is no longer necessary because of the internal energy-storage solution

Some CompactLogix 5370 controllers provide the following functionality:

- Built-in power supply
- Some combination of embedded digital, analog, and high-speed counter modules
- Support for Integrated Motion over an EtherNet/IP™ network
- Access to DeviceNet® networks

Compact GuardLogix 5370 Control System

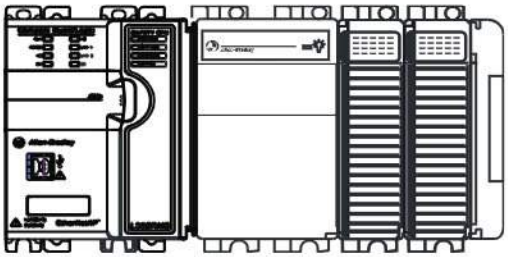

The Compact GuardLogix controller is a 1769-L3 CompactLogix controller that provides safety control to achieve SIL CL 3 according to EN62061 / EN 61511-1 / IEC 61508 and PLe according to EN ISO 13849-1. A major benefit of this system is that it's still one project; safety and standard control together.

Application	Description
SIL 1, 2, 3	The Compact GuardLogix controller system is type-approved and certified for use in safety applications up to and including SIL 3 according to IEC 61508, and applications up to and including PLe/Cat.4 according to ISO 13849-1. For more information, see these manuals: • GuardLogix 5570 and Compact GuardLogix 5370 Controllers Systems Safety Reference Manual, publication 1756-RM099 • Compact GuardLogix 5370 Controllers User Manual, publication 1769-UM002 • GuardLogix Safety Application Instruction Set Reference Manual, publication 1756-RM095

During development, safety and standard have the same rules. The following are allowed:

- Multiple programmers
- Online editing
- Forcing

Once the project is tested and ready for final validation, apply the safety application signature and safety-lock the application. This process sets the safety task to a SIL 3 integrity level. The Compact GuardLogix controller enforces the SIL 3 integrity level. When safety memory is locked and protected, the safety logic can't be modified and all safety functions operate with SIL 3 integrity. On the standard side of the Compact GuardLogix controller, all functions operate like a regular Logix controller. Thus online editing, forcing, and other activities are all allowed.

Standard logic and external devices, like HMIs or other controllers, can read safety memory with this level of integration. This level of integration removes the need to condition safety memory for use elsewhere. The result is easy systemwide integration and the ability to display safety status on displays or marquees. Use Guard I/O™ modules for field device connectivity. For safety interlocking between Compact GuardLogix controllers, use Ethernet or ControlNet® networks. Multiple Compact GuardLogix controllers can share safety data for zone to zone interlocking, or one Compact GuardLogix controller can use remote distributed safety I/O between different cells/areas.

DRAFT

Features - CompactLogix 5370 Controllers and Compact GuardLogix 5370 Controllers

Feature	1769-L16ER-BB1B 1769-L18ER-BB1B 1769-L18ERM-BB1B, 1769-L18ERM-BB1BK 1769-L19ER-BB1B, 1769-L19ER-BB1BK	1769-L24ER-QB1B 1769-L24ER-QBFC1B, 1769-L24ER-QBFC1BK 1769-L27ERM-QBFC1B	1769-L30ER, 1769-L30ERK 1769-L30ER-NSE 1769-L30ERM, 1769-L30ERMK 1769-L33ER, 1769-L33ERK 1769-L33ERM, 1769-L33ERMK, 1769-L36ERM, 1769-L37ERM, 1769-L37ERMK, 1769-L38ERM, 1769-L38ERMK	1769-L30ERMS 1769-L33ERMS, 1769-L33ERMSK 1769-L36ERMS 1769-L37ERMS, 1769-L37ERMSK 1769-L38ERMS, 1769-L38ERMSK
Controller tasks Continuous Periodic	32 tasks 100 programs/task			
Built-in communication ports	• Two Ethernet ports - CompactLogix 5370 controllers have two Ethernet ports. The ports carry the same network traffic as part of the embedded switch of the controller. However, the controller uses only one IP address. • One USB port (only for temporary connection).			
Communication options	EtherNet/IP	• EtherNet/IP • DeviceNet via 1769-SDN scanner		
EtherNet/IP node, max	• 1769-L16ER-BB1B: Up to 4 nodes • 1769-L18ER-BB1B, 1769-L18ERM-BB1B, 1769-L18ERM-BB1BK, 1769-L19ER-BB1B, 1769-L19ER-BB1BK: Up to 8 nodes	• 1769-L24ER-QB1B, 1769-L24ER-QBFC1B, 1769-L24ER-QBFC1BK: Up to 8 nodes • 1769-L27ERM-QBFC1B: Up to 16 nodes	• 1769-L30ER, 1769-L30ER-NSE, 1769-L30ERK, 1769-L30ERM, 769-L30ERMK, 1769-L30ERMS: Up to 16 nodes • 1769-L33ER, 1769-L33ERK, 1769-L33ERM, 1769-L33ERMK, 1769-L33ERMS, 1769-L33ERMSK: Up to 32 nodes • 1769-L36ERM, 1769-L36ERMS: Up to 48 nodes • 1769-L37ERM, 1769-L37ERMK, 1769-L37ERMS, 1769-L37ERMSK: Up to 64 nodes • 1769-L38ERM, 1769-L38ERMK, 1769-L38ERMS, 1769-L38ERMSK: Up to 80 nodes	
Controller connections	256			
Embedded I/O modules	• 16 DC digital inputs • 16 DC digital outputs	All controllers: • 16 DC digital inputs • 16 DC digital outputs Only 1769-L24ER-QBFC1B, 1769-L24ER-QBFC1BK, and 1769-L27ERM-QBFC1B: • 4 high-speed counter modules • 4 high-speed counter module outputs • 4 universal analog inputs • 2 analog output points	–	
Sockets, max	32			
Integrated Motion over an EtherNet/IP network	1769-L18ERM-BB1B, 1769-L18ERM-BB1BK: 1 or 2 axes	1769-L27ERM-QBFC1B - As many as 4 axes	• 1769-L30ERM, 1769-L30ERMK, 1769-L30ERMS: As many as 4 axes • 1769-L33ERM, 1769-L33ERMK, 1769-L33ERMS, 1769-L33ERMSK: As many as 8 axes • 1769-L36ERM, 1769-L36ERMS: As many as 16 axes • 1769-L37ERM, 1769-L37ERMK, 1769-L37ERMS, 1769-L37ERMSK: As many as 16 axes • 1769-L38ERM, 1769-L38ERMK, 1769-L38ERMS, 1769-L38ERMSK: As many as 16 axes	
Programming languages	• Relay ladder[1] • Structured Text • Function block • SFC			
Integrated safety	–			Yes

(1) The Compact GuardLogix 5370 controllers support only the relay ladder programming language in the safety task. The Compact GuardLogix 5370 controllers support all listed programming languages in the standard task.

DRAFT

Certifications - CompactLogix 5370 Controllers and Compact GuardLogix 5370 Controllers

Certification[1]	1769-L16ER-BB1B 1769-L18ER-BB1B 1769-L18ERM-BB1B, 1769-L18ERM-BB1BK 1769-L19ER-BB1B, 1769-L19ER-BB1BK	1769-L24ER-QB1B 1769-L24ER-QBFC1B, 1769-L24ER-QBFC1BK 1769-L27ERM-QBFC1B	1769-L30ER, 1769-L30ERK 1769-L30ER-NSE 1769-L30ERM, 1769-L30ERMK 1769-L33ER, 1769-L33ERK 1769-L33ERM, 1769-L33ERMK 1769-L36ERM 1769-L37ERM, 1769-L37ERMK 1769-L38ERM, 1769-L38ERMK	1769-L30ERMS 1769-L33ERMS, 1769-L33ERMSK 1769-L36ERMS 1769-L37ERMS, 1769-L37ERMSK 1769-L38ERMS, 1769-L38ERMSK
c-UL-us	UL Listed Industrial Control Equipment, certified for US and Canada. See UL File E65584. UL Listed for Class I, Division 2 Group A,B,C,D Hazardous Locations, certified for U.S. and Canada. See UL File E194810.	UL Listed Industrial Control Equipment, certified for US and Canada. See UL File E322657. UL Listed for Class I, Division 2 Group A,B,C,D Hazardous Locations, certified for U.S. and Canada. See UL File E334470.	UL Listed Industrial Control Equipment, certified for US and Canada. See UL File E65584. UL Listed for Class I, Division 2 Group A,B,C,D Hazardous Locations, certified for U.S. and Canada. See UL File E194810.	
UKCA and CE	UK Statutory Instrument 2016 No. 1091 and European Union 2014/30/EU EMC Directive, compliant with: EN 61131-2; Programmable Controllers (Clause 8, Zone A & B) EN 61326-1; Meas./Control/Lab., Industrial Requirements EN 61000-6-4; Industrial Emissions EN 61000-6-2; Industrial Immunity		UK Statutory Instrument 2016 No. 1091 and European Union 2014/30/EU EMC Directive, compliant with: EN 61131-2; Programmable Controllers (Clause 8, Zone A & B) EN 61000-6-4; Industrial Emissions EN 61000-6-2; Industrial Immunity	UK Statutory Instrument 2016 No. 1091 and European Union 2014/30/EU EMC Directive, compliant with: EN 61131-2; Programmable Controllers (Clause 8, Zone A & B) EN 61326-3-1; Meas./Control/Lab., Immunity Requirements for safety systems and functions EN 61000-6-4; Industrial Emissions EN 61000-6-2; Industrial Immunity
				UK Statutory Instrument 2008 No. 1597 and European Union 2006/42/EC MD Directive, compliant with: EN 61508-1...7; General requirements EN ISO 13849-1; Safety-related parts of control systems EN 62061; Functional safety of safety-related control systems
	UK Statutory Instrument 2012 No. 3032 and European Union 2011/65/EU RoHS Directive, compliant with: EN IEC 63000; Technical documentation			
RCM	Australian Radiocommunications Act, compliant with: EN 61000-6-4; Industrial Emissions			
IECEx	–	IECEx System, compliant with: IEC 60079-0; General Requirements IEC 60079-7; Explosive Atmospheres, Protection "e" II 3 G Ex ec IIC T4 Gc IECEx UL 21.0112X	–	
Ex	European Union 2014/34/EU ATEX Directive, compliant with: EN 60079-0; General Requirements EN 60079-15; Potentially Explosive Atmospheres, Protection "n"			-
	II 3 G Ex nA IIC T4 Gc ITS 12 ATEX 47611X (until Rev. 3)	II 3 G Ex nA IIC T4 Gc DEMKO 12 ATEX 1116807X (until Rev. 3)	II 3 G Ex nA IIC T4 Gc ITS 09 ATEX 46118X (until Rev. 6)	
	Or			
	UK Statutory Instrument 2016 No. 1107 and European Union 2014/34/EU ATEX Directive, compliant with: EN 60079-0; General Requirements EN 60079-7; Potentially Explosive Atmospheres, Protection "e"			
	II 3 G Ex ec IIC T4 Gc UL 21 ATEX 2603X (from Rev. 1) UL 22 UKEX 2515X (from Rev. 0)	II 3 G Ex ec IIC T4 Gc DEMKO 12 ATEX 1116807X (from Rev. 4) UL 22 UKEX 2516X (from Rev. 0)	II 3 G Ex ec IIC T5 Gc UL 21 ATEX 2603X (from Rev. 0) UL 22 UKEX 2515X (from Rev. 0)	II 3 G Ex ec IIC T5 Gc DEMKO 15 ATEX 1388X UL 22 UKEX 2514X (from Rev. 0)
TÜV	–			TÜV Certified for Functional Safety Capable of SIL 3
Morocco	Arrêté ministériel n° 6404-15 du 29 ramadan 1436			
CCC	CNCA-C23-01:2019 强制性产品认证实施规则 防爆电气 CNCA-C23-01:2019 CCC Implementation Rule Explosion-Proof Electrical Products CCC: 2020122309111609, 2021122309113974, 2021312309000565			
KC	Korean Registration of Broadcasting and Communications Equipment, compliant with: Article 58-2 of Radio Waves Act, Clause 3			
EtherNet/IP	ODVA conformance tested to EtherNet/IP specifications.			

(1) When marked. See the Product Certification link at rok.auto/certifications for Declarations of Conformity, Certificates, and other certification details.

DRAFT

Environmental Specifications - CompactLogix 5370 Controllers and Compact GuardLogix 5370 Controllers

Attribute	1769-L16ER-BB1B 1769-L18ER-BB1B 1769-L18ERM-BB1B, 1769-L18ERM-BB1BK 1769-L19ER-BB1B, 1769-L19ER-BB1BK	1769-L24ER-QB1B 1769-L24ER-QBFC1B, 1769-L24ER-QBFC1BK 1769-L27ERM-QBFC1B	1769-L30ER, 1769-L30ERK 1769-L30ER-NSE 1769-L30ERM, 1769-L30ERMK 1769-L33ER, 1769-L33ERK 1769-L33ERM, 1769-L33ERMK 1769-L36ERM, 1769-L37ERM, 1769-L37ERMK 1769-L38ERM, 1769-L38ERMK	1769-L30ERMS 1769-L33ERMS, 1769-L33ERMSK 1769-L36ERMS 1769-L37ERMS, 1769-L37ERMSK 1769-L38ERMS, 1769-L38ERMSK	1769-L23-QBFC1B 1769-L23E-QB1B 1769-L23E-QBFC1B
Temperature, operating IEC 60068-2-1 (Test Ad, Operating Cold), IEC 60068-2-2 (Test Bd, Operating Dry Heat), IEC 60068-2-14 (Test Na, Operating Thermal Shock)	-20...+60 °C (-4...+140 °F)	0...60 °C (32...140 °F)			
Temperature, storage IEC 60068-2-1 (Test Ab, Unpackaged Nonoperating Cold), IEC 60068-2-2 (Test Bb, Unpackaged Nonoperating Dry Heat), IEC 60068-2-14 (Test Na, Unpackaged Nonoperating Thermal Shock)	-40...+85 °C (-40...+185 °F)				
Temperature, surrounding air, max	60 °C (140 °F)				
Relative humidity IEC 60068-2-30 (Test Db, Unpackaged Damp Heat)	5...95% noncondensing				
Vibration IEC 60068-2-6 (Test Fc, Operating)	2 g @ 10...500 Hz(1)		5 g @ 10...500 Hz		
Shock, operating IEC 60068-2-27 (Test Ea, Unpackaged Shock)	30 g(1)		20 g - DIN rail 30 g - Panel		
Shock, nonoperating IEC 60068-2-27 (Test Ea, Unpackaged Shock)	50 g(1)(2)		30 g - DIN rail 40 g - Panel		
Emissions CISPR 11	IEC 61000-6-4				
ESD immunity IEC 61000-4-2	6 kV contact discharges 8 kV air discharges				4 kV contact discharges 8 kV air discharges
Radiated RF immunity IEC 61000-4-3	10V/m with 1 kHz sine wave 80% AM from 80...6000 MHz				10V/m with 200 Hz 50% Pulse 100% AM at 900 MHz 10V/m with 200 Hz 50% Pulse 100% AM at 1890 MHz 10V/m with 1 kHz sine wave 80% AM from 80...2000 MHz 10V/m with 1 kHz sine wave 80% AM from 2000...2700 MHz
EFT/B immunity IEC 61000-4-4	±3 kV at 5 kHz on power ports ±3 kV at 5 kHz on signal ports ±3 kV at 5 kHz on communication ports		±3 kV at 5 kHz on communication ports	±3 kV at 5 kHz on communication ports ±4 kV at 5 kHz on Protective Earth (PE)	±2 kV at 5 kHz on power ports ±2 kV at 5 kHz on signal ports ±2 kV at 5 kHz on communication ports
Surge transient immunity IEC 61000-4-5	±1 kV line-line (DM) and ±2 kV line-earth (CM) on power ports ±1 kV line-line (DM) and ±2 kV line-earth (CM) on signal ports ±2 kV line-earth (CM) on communication ports	±1 kV line-line (DM) and ±2 kV line-earth (CM) on power ports ±1 kV line-line (DM) and ±2 kV line-earth (CM) on signal ports ±2 kV line-earth (CM) on shielded ports ±2 kV line-earth (CM) on communication ports	±2 kV line-earth (CM) on communication ports		±1 kV line-line (DM) and ±2 kV line-earth (CM) on power ports ±1 kV line-line (DM) and ±2 kV line-earth (CM) on signal ports ±2 kV line-earth (CM) on shielded ports ±2 kV line-earth (CM) on communication ports
Conducted RF immunity IEC 61000-4-6	10V rms with 1 kHz sine wave 80% AM from 150 kHz...80 MHz				

(1) If you are mounting a CompactLogix™ 5370 L1 controller on an EN 50 022 - 35 x 15 mm (1.38 x 0.59 in.) DIN rail, you must first adhere a bumper on the back of the controller. Failure to install the bumper before mounting the controller causes the system to fail to meet this specification. For more information, see the CompactLogix 5370 Controllers User Manual, publication 1769-UM021.

(2) If you are mounting a CompactLogix 5370 L1 controller on an EN 50 022 - 35 x 15 mm (1.38 x 0.59 in.) DIN rail, the Shock, nonoperating specification = 30 g.

DRAFT

Technical Specifications - CompactLogix 5370 Controllers and Compact GuardLogix 5370 Controllers

Attribute	1769-L16ER-BB1B 1769-L18ER-BB1B 1769-L18ERM-BB1B,1769-L18ERM-BB1BK 1769-L19ER-BB1B, 1769-L19ER-BB1BK	1769-L24ER-QB1B 1769-L24ER-QBFC1B, 1769-L24ER-QBFC1BK 1769-L27ERM-QBFC1B	1769-L30ER, 1769-L30ERK 1769-L30ER-NSE 1769-L30ERM, 1769-L30ERMK 1769-L33ER, 1769-L33ERK, 1769-L33ERM, 1769-L33ERMK 1769-L36ERM 1769-L37ERM, 1769-L37ERMK 1769-L38ERM, 1769-L38ERMK	1769-L30ERMS 1769-L33ERMS, 1769-L33ERMSK 1769-L36ERMS 1769-L37ERMS, 1769-L37ERMSK 1769-L38ERMS, 1769-L38ERMSK
User memory	• 1769-L16ER-BB1B: 384 KB • 1769-L18ER-BB1B, 1769-L18ERM-BB1B, 1769-L18ERM-BB1BK: 512 KB • 1769-L19ER-BB1B, 1769-L19ER-BB1BK: 1 MB	• 1769-L24ER-QB1B, 1769-L24ER-QBFC1B, 1769-L24ER-QBFC1BK: 750 KB • 1769-L27ERM-QBFC1B: 1 MB	• 1769-L30ER, 1769-L30ER-NSE, 1769-L30ERK, 1769-L30ERM, 1769-L30ERM: 1 MB • 1769-L33ER, 1769-L33ERK, 1769-L33ERM, 1769-L33ERM: 2 MB • 1769-L36ERM: 3 MB • 1769-L37ERM, 1769-L37ERMK: 4 MB • 1769-L38ERM, 1769-L38ERMK: 5 MB	• 1769-L30ERMS: 1 MB standard + 0.5 MB safety • 1769-L33ERMS, 1769-L33ERMSK: 2 MB standard + 1 MB safety • 1769-L36ERMS: 3 MB standard + 1.5 MB safety • 1769-L37ERMS, 1769-L37ERMSK: 4 MB standard + 1.5 MB safety • 1769-L38ERMS, 1769-L38ERMSK: 5 MB standard + 1.5 MB safety
Optional nonvolatile memory	1784-SD1 card with 1 Gb of available memory (shipped with controller) 1784-SD2 card with 2 Gb of available memory (available for separate ordering)			
Number of local expansion modules, max[1]	• 1769-L16ER-BB1B: 6 - 1734 POINT I/O™ modules • 1769-L18ER-BB1B, 1769-L18ERM-BB1B, 1769-L18ERM-BB1BK, 1769-L19ER-BB1B 1769-L19ER-BB1BK: 8 - 1734 POINT I/O modules	4 - 1769 Compact I/O™ modules	• 1769-L30ER, 1769-L30ER-NSE, 1769-L30ERK, 1769-L30ERM, 1769-L30ERMK, 1769-L30ERMS: 8 - 1769 Compact I/O modules • 1769-L33ER, 1769-L33ERK, 1769-L33ERM, 1769-L33ERMK, 1769-L33ERMS, 1769-L33ERMSK: 16 - 1769 Compact I/O modules • 1769-L36ERM, 1769-L36ERMS: 30 - 1769 Compact I/O modules • 1769-L37ERM, 1769-L37ERMK, 1769-L37ERMS, 1769-L37ERMSK: 31 - 1769 Compact I/O modules • 1769-L38ERM, 1769-L38ERMK, 1769-L38ERMS, 1769-L38ERMSK: 31 - 1769 Compact I/O modules	
Number of I/O module banks, max	–	1	3	
Current draw @ 5V DC, controller power	1 A	• 1769-L24ER-QB1B: 1.54 A • 1769-L24ER-QBFC1B, 1769-L27ERM-QBFC1B: 1 A Values rated at these ambient temperatures: 40 °C (104 °F), 55 °C (131 °F), 60 °C (140 °F).	500 mA	850 mA
Current draw @ 24V DC, controller power	–	• 1769-L24ER-QB1B: 0.95 A • 1769-L24ER-QBFC1B, 1769-L27ERM-QBFC1B: 0.8 A Values rated at these ambient temperatures: 40 °C (104 °F), 55 °C (131 °F), 60 °C (140 °F).	225 mA	700 mA
Current draw @ 24V DC, field power, max	3 A - Combined total for all devices that draw current from field power connections Input: 5 mA Output: 500 mA	–		
Power dissipation, max	11.5 W	• 1769-L24ER-QB1B: 12 W • 1769-L24ER-QBFC1B, L27ERM-QBFC1B: 21 W	4.5 W	6.5 W
Isolation voltage	50V (continuous), Basic Insulation Type Tested at 500V AC for 60 s, System to Field	30V (continuous), Basic Insulation Type, USB to system, Ethernet to system and Ethernet to Ethernet Type tested at 500V AC for 60 s		50V, Basic Insulation Type Tested at 500V AC for 60 s, System to Communication ports.
Short circuit protection, field power	Internal fuse, Non-replaceable	–		
Recommended external short circuit protection, field power	User-provided 4...5 A @ 3.15...5.5 A^2t fuse	–		
Weight, approx	0.66 kg (1.5 lb)	• 1769-L24ER-QB1B: 0.63 kg (1.39 lb) • 1769-L24ER-QBFC1B, 1769-L27ERM-QBFC1B: 0.9 kg (1.9 lb)	0.31 kg (0.68 lb)	0.54 kg (1.18 lb)
Module width	100.00 mm (3.94 in.)	• 1769-L24ER-QB1B: 115.00 mm (4.53 in.) • 1769-L24ER-QBFC1B and 1769-L27ERM-QBFC1B: 140 mm (5.51 in.)	55.00 mm (2.17 in.)	89.00 mm (3.50 in.)
Module location	DIN rail mount	DIN rail or panel mount		
Panel-mount screw torque	–	1.1...1.8 N•m (10...16 lb•in) - use M4 or #8 screws		
Embedded power supply	24V DC input, isolated	24V DC Input, isolated	1769-PA2, 1769-PB2, 1769-PA4, 1769-PB4	

DRAFT

Technical Specifications - CompactLogix 5370 Controllers and Compact GuardLogix 5370 Controllers (Continued)

Attribute	1769-L16ER-BB1B 1769-L18ER-BB1B 1769-L18ERM-BB1B,1769-L18ERM-BB1BK 1769-L19ER-BB1B, 1769-L19ER-BB1BK	1769-L24ER-QB1B 1769-L24ER-QBFC1B, 1769-L24ER-QBFC1BK 1769-L27ERM-QBFC1B	1769-L30ER, 1769-L30ERK 1769-L30ER-NSE 1769-L30ERM, 1769-L30ERMK 1769-L33ER, 1769-L33ERK, 1769-L33ERM, 1769-L33ERMK 1769-L36ERM 1769-L37ERM, 1769-L37ERMK 1769-L38ERM, 1769-L38ERMK	1769-L30ERMS 1769-L33ERMS, 1769-L33ERMSK 1769-L36ERMS 1769-L37ERMS, 1769-L37ERMSK 1769-L38ERMS, 1769-L38ERMSK
Power supply distance rating	–		• Controller and 1769-SDN: 4 • 1769 Compact I/O modules: 4...8, depending on module	4 (3 I/O modules between controller and power supply)
Wire category[2]	1 - signal ports 1 - power ports 2 - communication ports		2 - communication ports	
Wire type, Ethernet	RJ45 connector according to IEC 60603-7, 2 or 4 pair Category 5e minimum cable according to TIA 568 B.1 or Category 5 cable according to ISO/IEC 24702			
Wire type, power terminals, and embedded I/O connections	Copper		–	
Wire size, power terminals[3]	0.051...3.31 mm^2 (30...12 AWG) solid or stranded copper wire rated at 90 °C (194 °F), or greater, 1.2 mm (3/64 in.) insulation, max Each terminal accepts 1 or 2 wires	0.25...2.50 mm^2 (22...14 AWG) solid copper wire rated at 75 °C (167 °F), or greater 1.2 mm (3/64 in.) insulation, max Each terminal accepts only 1 wire	–	
Wire stripping length, power terminals[3]	10 mm (0.39 in)	8 mm (0.31 in)	–	
Screw torque, power terminals [3]	0.5...0.6 N•m (4.4...5.3 lb•in)	1.0...1.2 N•m (8.9...10.6 lb•in)	–	
Wire size, embedded I/O connections	0.205...1.31 mm^2 (24...16 AWG) solid or stranded copper wire rated at 90 °C (194 °F), or greater 1.2 mm (3/64 in.) insulation, max or 90 °C (194 °F) Each terminal accepts only 1 wire		–	
Wire stripping length, embedded I/O connections	10 mm (0.39 in)		–	
North American temperature code	T4A	T3C	T5	
IECEx temperature code	–	T4	–	
UKEX/ATEX temperature code	T4		T5	
Enclosure type rating	None (open-style)			

(1) You can use up to the maximum number of local expansion modules with the CompactLogix 5370 L1 controllers that are listed. This condition applies only if the total current drawn by the embedded I/O and local expansion modules does not exceed both the available POINTBus™ backplane current of 1 A and the field power current of 3 A. For more information on POINTBus backplane current and field-power current considerations when installing local expansion modules, see page 9.

(2) Use this Conductor Category information to plan conductor routing. See the Industrial Automation Wiring and Grounding Guidelines, publication 1770-4.1 and the appropriate system-level installation manual.

(3) In regard to the CompactLogix 5370 L1 controllers, this specification applies to connecting wires to the power connector that is inserted in the controller. In regard to the CompactLogix 5370 L2 controllers, this specification applies to connecting wires to power terminals built into the controller.

DRAFT

Real-time Clock Accuracy

This table lists the real-time clock accuracy specifications for the CompactLogix 5370 controllers.

Ambient Temperature	Accuracy
0 °C (32 °F)	-143...+42 s/mo
25 °C (77 °F)	-78...+91 s/mo
40 °C (104 °F)	-101...+73 s/mo
60 °C (140 °F)	-204...-4.50 s/mo

Real-time Clock Hold-up Times

This table lists the typical real-time clock hold-up specifications for the CompactLogix 5370 controllers.

IMPORTANT The values in this table are typical and can vary with some CompactLogix 5370 control systems.

Ambient Temperature	Holdup Time, Typical
0 °C (32 °F)	40 days
25 °C (77 °F)	35 days
40 °C (104 °F)	28 days
60 °C (140 °F)	16 days

The I/O module support for CompactLogix 5370 controller systems varies by controller.

I/O Module Support - CompactLogix 5370 L1 Controllers

The CompactLogix 5370 L1 controllers offer an embedded I/O module and the option to use 1734 POINT I/O modules as local expansion modules.

The embedded I/O module provides the following:

- 16 sinking 24V DC digital input points
- 16 sourcing 24V DC digital output points

To use 1734 POINT I/O modules as local expansion modules, keep in mind the following:

- Local expansion modules must be installed in the same system as the CompactLogix 5370 L1 controller.
- The modules are installed to the right of the controller.
- The maximum number of local expansion modules available depends on the controller catalog of that system.

This table lists the number of 1734 POINT I/O modules the CompactLogix 5370 L1 controllers support. The minimum RPI of each I/O module is 1.0 ms and can be changed by 0.5 ms increments. You can use the maximum number of 1734 POINT I/O modules with these CompactLogix 5370 L1 controllers. The total current that the embedded I/O and local expansion modules draw can't exceed both the available POINTBus backplane current of 1 A and the field power current of 3 A.

1769-L1 Controllers - Local I/O Module Support

Cat. No.	Local 1734 POINT I/O Modules Supported, Max
1769-L16ER-BB1B	6
1769-L18ER-BB1B	8
1769-L18ERM-BB1B, 1769-L18ERM-BB1BK	
1769-L19ER-BB1B, 1769-L19ER-BB1BK	

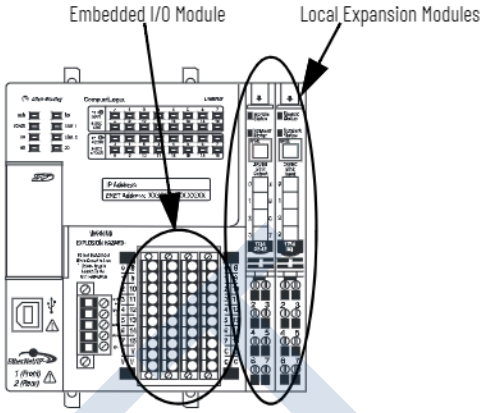

Depending on the configuration of your application, you can use one of these devices to make additional POINTBus backplane current or field power current available:

Device	Description
1734-EP24DC	POINT I/O Expansion Power Supply - An expansion power supply is installed between embedded I/O modules and local expansion modules or between local expansion modules. The expansion power supply breaks the available POINTBus backplane current between the modules to its left and right. With the expansion power supply installed, the modules to its left can draw up to 1 A of POINTBus backplane current. The modules to the right of the expansion power supply can draw as much current as the current provided by the expansion power supply. Additionally, the expansion power supply breaks the available field power current between the modules to its left and right. With the expansion power supply installed, the modules to its left can draw up to 3 A of field power current. The modules to the right of the expansion power supply can draw as much field power current as allowed by the expansion power supply. For more information on the 1734-EP24DC expansion power supply, see the POINT I/O 24V DC Expansion Power Supply Installation Instructions, publication 1734-IN058.
1734-FPD	POINT I/O Field Power Distributor Module - A field power distributor module can also be installed between embedded I/O modules and local expansion modules or between local expansion modules. The field power distributor module breaks the available field power current between the modules to its left and right. With the field power distributor module installed, the modules to its left can draw up 3 A of field power current. The modules to the right of the field power distributor can draw as much field power current as allowed by the field power distributor. For more information on the 1734-FPD POINT I/O Field Power Distributor module, see the POINT I/O Field Power Distributor Module Installation Instructions, publication 1734-IN059. **IMPORTANT:** Remember, the field power distributor module changes only the level of field power current available in the system. The module does not affect the level of POINTBus backplane current available.

DRAFT

Local I/O Performance of the CompactLogix 5371 L1 Controllers

The requested packet interval (RPI) defines the frequency at which the controller sends data to and receives data from I/O modules. You set an RPI rate for each I/O module in your system.

CompactLogix 5370 L1 controllers always attempt to scan an I/O module at the configured RPI rate. For individual I/O modules, a Module RPI Overlap minor fault occurs if there are enough I/O modules with RPI rates set too fast that they can't all be serviced in the allotted interval.

The specific configuration parameters for a system determine the impact on actual RPI rates. These configuration factors can impact the effective scan frequency for any individual module:

- Rates at which the RPI rates of other 1734 POINT I/O modules are set
- Number of other 1734 POINT I/O modules in the system
- Types of other 1734 POINT I/O modules in the system
- Application user task priorities

In general, follow these guidelines when setting the RPI rates in a CompactLogix 5370 L1 control system:

Module Type	Guidelines
Digital	• 1...2 modules can be scanned in 2 ms. • 3...4 modules can be scanned in 4 ms. • 5...8 modules can be scanned in 8 ms. **IMPORTANT:** Remember that digital modules can be the embedded I/O module on the controller or 1734 POINT I/O modules that are used as local expansion modules. Therefore, the consideration for using two modules can be the embedded I/O module and a 1734 POINT I/O module or two 1734 POINT I/O modules.
Specialty and Analog	• 1 module can be scanned at 20 ms. • For each additional module, add 20 ms. For example, if a CompactLogix 5370 L1 control system uses two analog modules, the module can be scanned in 40 ms.
1734-485ASC	The total data size for all ASC modules determines the RPI rates: • For total data size less than 20 bytes, each module can be scanned in 20 ms. • For data size greater than 20 bytes, use the size value as the RPI. For example, if the total data size is 40 bytes, each ASC module can be scanned in 40 ms.

You aren't required to set the RPI values of an individual 1734 POINT I/O module to the values listed previously. For example, if your application scans one or two modules, you do not have to use RPI rates of 2 ms. Remember, though, that higher RPI rates result in scanning the data less frequently.

The RPI shows how quickly modules can be scanned, not how quickly an application can use the data. The RPI is asynchronous to the program scan. Other factors, such as program execution duration, affect I/O throughput.

Embedded Specifications - CompactLogix 5371 L1 Controllers

Attribute	1769-L16ER-BB1B, 1769-L18ER-BB1B, 1769-L18ERM-BB1B, 1769-L18ERM-BB1BK, 1769-L19ER-BB1B, 1769-L19ER-BB1BK
Embedded DC Input Specifications	
Inputs	16
Voltage category	24V DC sink
Operating voltage range	10...28.8V DC 24V DC nom
Digital filter, off to on/on to off	0.5 ms hardware plus 0...65 ms (selectable)
Input delay, off to on/on to off	
Off-state voltage, max	5V DC
Off-state current, max	1 mA
On-state current, min	2 mA @ 24V DC
Input impedance, max	5.4 kΩ
Cyclic update time	1...750 ms
Isolation voltage	50V DC (continuous), Basic Insulation Type Tested at 500V AC for 60 s, system to field No isolation between individual channels
IEC input compatibility	Type 3
Isolated groups	None
Embedded DC Output Specifications	
Outputs	16
Voltage category	24V DC source
Operating voltage range	10...28.8V DC 24V DC nom
Output delay, off to on	0.1 ms
Output delay, on to off	0.1 ms
Off-state leakage current, max	0.5 mA @ 24V DC
On-state current, min	1 mA per channel
On-state voltage drop, max	0.6V DC
Current per point, max	0.5 A
Current per module, max	3 A
Surge current per point, max	1 A for 100 ms per point, repeatable every 2 s
Isolation voltage	50V DC (continuous), Basic Insulation Type Tested at 500V AC for 60 s, system to field No isolation between individual channels
Isolated groups	None
Pilot duty rating	0.5 A
Embedded Power Supply Specifications	
Input voltage range	10...28.8V DC
Input voltage, nom	24V DC
Line requirement (VDC), min	30VA
Available 5V DC POINTBus backplane current	1 A @ 5V DC
Current draw @ 24V DC, field power, max	3 A(1)
Inrush, max	10 A
Line loss ride-through	10 ms...10 s
Output bus current capacity, max	0.1...3 A @ 5V DC
Load current, min	300 mA
Power dissipation, max	12 W
Short circuit protection	Internal fuse Not replaceable
Overvoltage protection	Yes

(1) Combined total for all devices that draw current from field power connections.

DRAFT

I/O Module Support - CompactLogix 5370 L2 Controllers

The CompactLogix 5370 L2 controllers offer embedded I/O modules and the option to use 1769 Compact I/O modules as local expansion modules. This table describes the embedded I/O modules and local expansion modules that the CompactLogix 5370 L2 controllers support.

Cat. No.	Embedded I/O Module Support						Local Expansion Modules Support
	Sinking/Sourcing 24V DC Digital Input Points	Sourcing 24V DC Digital Output Points	High-speed Counter Modules	High-speed Counter Module Output Points	Universal Analog Input Points	Analog Output Points	1769 Compact I/O Modules
1769-L24ER-QB1B	16	16	-	-	-	-	As many as 4 modules
1769-L24ER-QBFC1B, 1769-L24ER-QBFC1BK			4	4	4	2	
1769-L27ERM-QBFC1B							

IMPORTANT Remember the following when using the embedded I/O modules on CompactLogix 5370 L2 controllers:

- 1769-L24ER-QB1B controller - The digital input points and digital output points are on one embedded I/O module. Therefore, the 1769-L24ER-QB1B controller is considered to have one embedded I/O module.
- 1769-L24ER-QBFC1B, 1769-L24ER-QBFC1BK, and 1769-L27ERM-QBFC1B controllers - The digital input points and digital output points are on one embedded I/O module. The high-speed counter module input/output points, universal analog input points, and analog output points are on another single embedded I/O module. Therefore, the 1769-L24ER-QBFC1B, 1769-L24ER-QBFC1BK, and 1769-L27ERM-QBFC1B controllers are considered to have two embedded I/O modules.

You configure an RPI rate for the embedded I/O modules to establish specific time intervals at which data is transmitted between the controller and the embedded I/O modules. The available RPI range of the embedded I/O modules is 0.5...750.0 ms and can be changed by 0.5 ms increments. The default setting is 20 ms.

To use 1769 Compact I/O modules as local expansion modules, keep in mind the following:

- Local expansion modules must be installed in the same system as the CompactLogix 5370 L2 controller.
- Local expansion modules are installed to the right of the embedded I/O modules.
- You must install a 1769-ECR Compact I/O end cap on the right side of the control system. The end cap can be installed on the right side of the embedded I/O module. If local expansion modules are used, the end cap can be installed on the right side of the 1769 Compact I/O module.

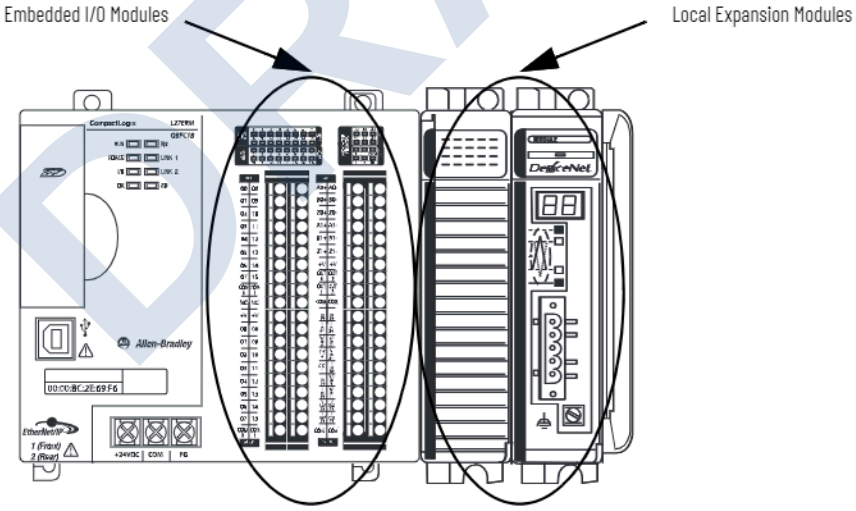

DRAFT

CompactLogix 5370 L2 Controller Local I/O Performance

The Requested Packet Interval (RPI) defines the frequency at which the controller sends data to and receives data from I/O modules. You set an RPI rate for each I/O module in your system in the programming software. You also set RPI rates through the programming software for embedded I/O modules, local expansion modules, and distributed I/O modules over an EtherNet/IP network.

The CompactLogix 5370 L2 controllers always attempt to scan an I/O module at the configured RPI rate. The controller scans distributed I/O modules at the configured RPI rates.

With embedded I/O modules and local expansion modules, however, some specific system-configuration parameters determine the actual rate at which the controller scans the modules. That is, the controller can be configured to scan an I/O module at one rate, but actually scan the module at another rate.

For individual I/O modules, a Module RPI Overlap minor fault occurs if there is at least one I/O module that can't be serviced within its RPI time.

The specific configuration parameters for a system determine the impact on actual RPI rates. These configuration factors can impact the effective scan frequency for any individual embedded or local expansion module:

- Rates at which the RPI values of the embedded I/O modules are set
- Number of embedded I/O modules that are used in the system
- Types of embedded I/O modules that are used in the system
- Rates at which RPI values for the 1769 Compact I/O module are set
- Number of 1769 Compact I/O modules in the system
- Types of 1769 Compact I/O modules in the system
- Application user task priorities

RPI Rate Guidelines

Type of Module	Guidelines
Digital and analog (any mix)	The following guidelines apply: • 1...2 modules can be scanned in 0.5 ms. • 3...4 modules can be scanned in 1 ms. • 5...6 modules can be scanned in 2 ms. • Some input modules have a fixed 8 ms filter, so selection of a faster RPI has no effect.
Specialty	The following conditions apply: • For every full-sized 1769-SDN module in the system, increase the RPI of every other module by 2 ms. • For every 1769-HSC module in the system, increase the RPI of every other module by 1 ms. • For every full-sized 1769-ASCII module system, increase the RPI of every other module by 1 ms. • For every 1769-SM2 module in the system, increase the RPI of every other module by 2 ms. For example, the system includes four I/O modules that are configured with an RPI = 1 ms and you add a 1769-SDN module to the system. You must increase the RPI value for all four I/O modules by 2 ms. Therefore, when the 1769-SDN module is added to the system, the four I/O modules use an RPI = 3 ms. If, in the same system, you add a second 1769-SDN module, the RPI value of the four I/O modules is increased to 5 ms.

IMPORTANT The number of I/O modules can be the embedded I/O modules on the controller or 1769 Compact I/O modules that are used as local expansion modules.

Therefore, the consideration for using modules can be any of the following system configurations:

- Only embedded I/O modules
- Only 1769 Compact I/O modules
- Some combination of embedded I/O modules and 1769 Compact I/O modules

You can set individual RPI rates for 1769 Compact I/O modules higher than those values listed in this table. The RPI shows how quickly modules can be scanned, not how quickly an application can use the data. The RPI is asynchronous to the program scan. Other factors, such as program execution duration, affect I/O throughput.

DRAFT

Embedded DC Specifications - CompactLogix 5370 L2 Controllers

Attribute	1769-L24ER-QB1B	1769-L24ER-QBFC1B 1769-L24ER-QBFC1BK 1769-L27ERM-QBFC1B
Embedded DC Input Specifications		
Inputs	16	
Voltage category	24V DC sink/source	
Operating voltage range	10...28.8V DC @ 40 °C (104 °F) 10...26.4V DC @ 60 °C (140 °F) 24V DC nom	10...28.8V DC @ 40 °C (104 °F) 10...27.0V DC @ 55 °C (131 °F) 10...26.4V DC @ 60 °C (140 °F) 24V DC nom
Digital filter, off to on and on to off	0 s, 100 µs, 500 µs, 1 ms, 2 ms, 4 ms, 8 ms	
Input delay, off to on and on to off	100 µs, min 8 ms, max	
Off-state voltage, max	5V DC	
Off-state current, max	1.5 mA	
On-state current, min	2 mA @ 24V DC per channel	
On-state current, max	5 mA @ 24V DC per channel	
Input impedance, max	5.2 kΩ @ 24V DC 6.1 kΩ @ 30V DC	
Cyclic update time	0.5...750 ms	
Isolation voltage	75V (continuous), Reinforced Insulation Type Type tested at 1200V AC for 1 s and at 1700V DC for 1 s; group to system, group to group	
IEC input compatibility	Type 3	
Isolated groups	Group 1: inputs 0...7 Group 2: inputs 8...15 Isolated groups operate in either sink or source configurations	
Embedded DC Output Specifications		
Outputs	16	
Voltage category	24V DC source	
Operating voltage range	20.4...26.4V DC 24V DC nom	
Output delay, off to on	0.05 ms	
Output delay, on to off	0.5 ms	
Off-state leakage current, max	0.1 mA @ 26.4V DC	
On-state current, max	0.5 mA @ 24V DC per channel	
On-state voltage drop, max	1.0V DC @ 1.0 A	
Current per point, max	0.83 A @ 40 °C (104 °F) 0.5 A @ 60 °C (140 °F)	0.83 A @ 40 °C (104 °F) 0.58 A @ 55 °C (131 °F) 0.5 A @ 60 °C (140 °F)
Current per module, max	6.64 A @ 40 °C (104 °F) 4.0 A @ 60 °C (140 °F)	6.64 A @ 40 °C (104 °F) 4.64 A @ 55 °C (131 °F) 4.0 A @ 60 °C (140 °F)
Surge current per point, max	2.0 A for 10 ms per point, repeatable every 2 s	
Isolation voltage	75V (continuous), Reinforced Insulation Type Type tested at 1200V AC for 1 s and at 1700V DC for 1 s; group to system, group to group	
Isolated groups	Group 1: Outputs 0...7 Group 2: Outputs 8...15	

Embedded DC Output Temperature Derating

The area within the curves represents the safe operating range for the embedded DC outputs under various conditions of user-supplied voltages and ambient temperatures.

Maximum Amperes per Point Versus Temperature

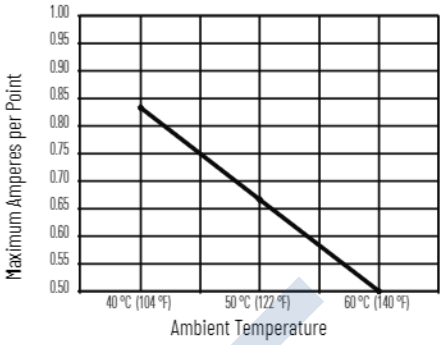

Maximum Amperes per Module Versus Temperature

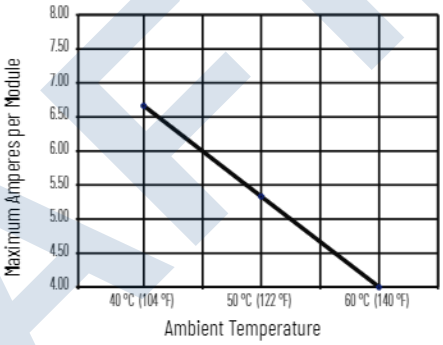

DRAFT

Embedded Analog Input Specifications - CompactLogix 5370 L2 Controllers

Attribute	1769-L24ER-QBFC1B, 1769-L24ER-QBFC1BK, 1769-L27ERM-QBFC1B
Inputs	4 channels of thermocouple/voltage/current 2 channels of RTD/Resistance inputs
Operating voltage range	2.6...30.0V DC @ 40 °C (104 °F) 2.6...26.4V DC @ 55 °C (131 °F) 2.6...5V DC @ 60 °C (140 °F)
Input types	• Thermocouple: J, K, T, E, R, S, B, N, and C • Voltage • Current • RTD: Platinum 385, Platinum 3916, Copper 426, Nickel 672, Nickel 618, Nickel-Iron 518 • Resistance
Input ranges[1]	Thermocouple: • K at 1370...1372 °C (2498...2501.6 °F) • K at -170...+1370 °C (-274...+2498 °F) • K at -200...+1370 °C (-328...+2498 °F) • S and R at 0...1768 °C (32...3214.4 °F) • S and R at -50...0 °C (-58...+32 °F) • B at 300...1820 °C (572...3308 °F) • B at 250...300 °C (482...572 °F) • J at -210...+1200 °C (-328...+2192 °F) • T at -170...+400 °C (-274...+752 °F) • T at -200...-170 °C (-328...-274 °F) • E at -200...+1000 °C (-328...+1832 °F) • N at -110...+1300 °C (-166...+2372 °F) • N at -200...-110 °C (-328...-166 °F) • C at 0...2315 °C (32...4199 °F) Voltage: • -50...+50 mV • -100...+100 mV • 0...5V • 1...5V • 0...10V • -10V...+10V Current: • 0...20 mA • 4...20 mA RTD: • 0...100 Ω Platinum 385 • 0...200 Ω Platinum 385 • 0...500 Ω Platinum 385 • 0...1000 Ω Platinum 385 • 0...100 Ω Platinum 3916 • 0...200 Ω Platinum 3916 • 0...500 Ω Platinum 3916 • 0...1000 Ω Platinum 3916 • 0...10 Ω Copper 426 • 0...120 Ω Nickel 618 • 0...120 Ω Nickel 672 • 0...604 Ω Nickel-Iron 518 Resistance: • 0...150 Ω • 0...500 Ω • 0...1000 Ω • 0...3000 Ω
Resolution, max	15 bits plus sign (Bipolar) 16 bits (Unipolar)
Input impedance	Voltage: 10 MΩ Current: 250 Ω
Converter type	Sigma-Delta
Cyclic update time	11...5000 ms dependent on user configuration
Rated working voltage	30V AC/30V DC
Common mode voltage	±10V DC per channel
Common mode rejection ratio, min	115 dB at 50 Hz at 10V 115 dB at 60 Hz at 10V
Normal mode rejection ratio, min	85 dB at 50 Hz at 1.5V 85 dB at 60 Hz at 1.5V

Embedded Analog Input Specifications - CompactLogix 5370 L2 Controllers

Attribute	1769-L24ER-QBFC1B, 1769-L24ER-QBFC1BK, 1769-L27ERM-QBFC1B
Accuracy, overall at 25 °C (77 °F)[2]	Thermocouple types: • J at -210...+1200 °C (-328...+2192 °F): ±0.6 °C (1.1 °F) • N at -110...+1300 °C (-166...+2372 °F): ±1.0 °C (1.8 °F) • N at -200...-110 °C (-328...-166 °F): ±1.0 °C (1.8 °F) • T at -170...+400 °C (-274...+752 °F): ±1.0 °C (1.8 °F) • T at -200...-170 °C (-328...-274 °F): ±1.0 °C (1.8 °F) • K at 1370...1372 °C (2498...2501.6 °F): ±1.2 °C (2.2 °F) • K at -200...+1370 °C (-328...+2498 °F): ±1.0 °C (1.8 °F) • E at -200...+1000 °C (-328...+1832 °F): ±0.5 °C (0.9 °F) • S and R at 0...1768 °C (32...3214.4 °F): ±1.7 °C (3.1 °F) • S and R at -50...0 °C (-58...+32 °F): ±4.0 °C (7.2 °F) • B at 300...1820 °C (572...3308 °F): ±3.0 °C (5.4 °F) • B at 250...300 °C (482...572 °F): ±6.0 °C (10.8 °F) • C at 0...2315 °C (32...4199 °F): ±1.8 °C (3.2 °F) Voltage inputs: • ±50 mV: +15 µV • ±100 mV: ±20 µV • 0...5V: ±2.5 mV • 1...5V: ±2 mV • 0...10V: ±5 mV • ±10V: ±10 mV Current inputs: • 0...20 mA: ±20 µA • 4...20 mA: ±16 µA RTD types: • Platinum 385: ±0.5 °C (0.9 °F) • Platinum 3916: ±0.4 °C (0.7 °F) • Nickel: ±0.2 °C (0.4 °F) • Nickel-Iron: ±0.3 °C (0.5 °F) • Copper: ±0.6 °C (1.1 °F) Resistance types: • 0...150 Ω: ±0.15 Ω • 0...500 Ω: ±0.5 Ω • 0...1000 Ω: ±1.0 Ω • 0...3000 Ω: ±1.5 Ω
Accuracy, overall at 0...60 °C (32...140 °F)[2]	Thermocouple types: • J at -210...+1200 °C (-328...+2192 °F): ±0.9 °C (1.6 °F) • N at -110...+1300 °C (-166...+2372 °F): ±1.5 °C (2.7 °F) • N at -200...-110 °C (-328...-166 °F): ±1.5 °C (2.7 °F) • T at -170...+400 °C (-274...+752 °F): ±1.5 °C (2.7 °F) • T at -200...-170 °C (-328...-274 °F): ±1.5 °C (2.7 °F) • K at 1370...1372 °C (2498...2501.6 °F): ±1.8 °C (3.2 °F) • K at -200...+1370 °C (-328...+2498 °F): ±1.5 °C (2.7 °F) • E at -200...+1000 °C (-328...+1832 °F): ±0.8 °C (1.4 °F) • S and R at 0...1768 °C (32...3214.4 °F): ±3.5 °C (6.3 °F) • S and R at -50...0 °C (-58...+32 °F): ±4.0 °C (7.2 °F) • B at 300...1820 °C (572...3308 °F): ±4.5 °C (8.1 °F) • B at 250...300 °C (482...572 °F): ±9.0 °C (16.2 °F) • C at 0...2315 °C (32...4199 °F): ±3.5 °C (6.3 °F) Voltage inputs: • ±50 mV: ±25 µV • ±100 mV: ±30 µV • 0...5V: ±5 mV • 1...5V: ±4 mV • 0...10V: ±10 mV • ±10V: ±20 mV Current inputs: • 0...20 mA: ±50 µA • 4...20 mA: ±40 µA RTD types: • Platinum 385: ±0.9 °C (1.6 °F) • Platinum 3916: ±0.8 °C (1.4 °F) • Nickel: ±0.4 °C (0.7 °F) • Nickel-Iron: ±0.5 °C (0.9 °F) • Copper: ±1.1 °C (2.0 °F) Resistance types:[2] • 0...150 Ω: ±0.25 Ω • 0...500 Ω: ±0.8 Ω • 0...1000 Ω: ±1.5 Ω • 0...3000 Ω: ±2.5 Ω

DRAFT

Embedded Analog Input Specifications - CompactLogix 5370 L2 Controllers

Attribute	1769-L24ER-QBFC1B, 1769-L24ER-QBFC1BK, 1769-L27ERM-QBFC1B
Cold junction compensation accuracy at 0...60 °C (32...140 °F)(2)	±1.3 °C (34.34 °F)
Calibration	Cyclic calibration by user configuration
Non-linearity (in percent full-scale)	±0.05%
Repeatability at 25 °C (77 °F) with 10 Hz filter	Thermocouple types: • J at -210...+1200 °C (-328...+2192 °F): ±0.1 °C (0.2 °F) • N at -110...+1300 °C (-166...+2372 °F): ±0.1 °C (0.2 °F) • N at -200...-110 °C (-328...-166 °F): ±0.25 °C (0.5 °F) • T at -170...+400 °C (-274...+752 °F): ±0.1 °C (0.2 °F) • T at -200...-170 °C (-328...-274 °F): ±1.5 °C (2.7 °F) • K at 1370...1372 °C (2498...2501.6 °F): ±0.15 °C (0.3 °F) • K at -170...+1370 °C (-274...+2498 °F): ±0.1° (0.2 °F) • K at -200...-170 °C (-328...-274 °F): ±2.0 °C (3.6 °F) • E at -200...+1000 °C (-328...+1832 °F): ±0.1° (0.2 °F) • S and R at 0...1768 °C (32...3214.4 °F): ±0.4 °C (0.7 °F) • S and R at -50...0 °C (-58...+32 °F): ±1.0 °C (1.8 °F) • B at 300...1820 °C (572...3308 °F): ±0.7 °C (1.3 °F) • B at 250...300 °C (482...572 °F): ±1.5 °C (2.7 °F) • C at 0...2315 °C (32...4199 °F): ±0.2 °C (0.4 °F) Voltage inputs: • ±50 mV: ±6 µA • ±100 mV: ±6 µV • 0...5V: ±150 mV • 1...5V: ±150 mV • 0...10V: ±150 mV • ±10V: ±150 mV Current inputs: • 0...20 mA: ±0.3 µA • 4...20 mA: ±0.3 µA RTD types: • Platinum 385: ±0.2 °C (0.4 °F) • Platinum 3916: ±0.2 °C (0.4 °F) • Nickel: ±0.01 °C (0.02 °F) • Nickel-Iron: ±0.01 °C (0.02 °F) • Copper: ±0.2 °C (0.4 °F) Resistance types: • 0...150 Ω: ±0.04 Ω • 0...500 Ω: ±0.2 Ω • 0...1000 Ω: ±0.2 Ω • 0...3000 Ω: ±0.2 Ω
Overload at input terminals, max	Voltage: ±35V DC continuous Current: 32 mA continuous, ±7.6V DC
Channel diagnostics	Invalid configuration, Over-, or underrange by bit reporting, open circuit
Isolation voltage	30V AC/30V DC (continuous), reinforced insulation type Type tested at 720V DC for 60 s; inputs to system backplane

(1) Values for these input types rated at the following ambient temperatures: 40 °C (104 °F), 55 °C (131 °F), 60 °C (140 °F).
(2) These specification values are based on cyclic calibration and a 4-wire device that is connected to the module.

Embedded Analog Output Specifications - CompactLogix 5370 L2 Controllers

Attribute	1769-L24ER-QBFC1B, 1769-L24ER-QBFC1BK, 1769-L27ERM-QBFC1B
Outputs	2 single-ended
Output types	• Voltage • Current
Output ranges(1)	Voltage: • 0...5V • 1...5V • 0...10V • -10V...+10V Current: • 0...20 mA • 4...20 mA
Converter type	R-2R Ladder Voltage Switching
Resolution, max	15 bits plus sign (Bipolar) 16 bits (Unipolar)
Cyclic update time, nom	2.5 ms
Cyclic update time, max	9.5 ms
Current load on voltage output	10 mA max
Resistive load on current output	0...300 Ω
Load range on voltage output	> 1 kΩ at 10V DC
Inductive load, max (current outputs)	0.1 mH
Capacitive load, max (Voltage Outputs)	1 µF
Accuracy, overall at 25 °C (77 °F)	Voltage: ±0.5% full-scale Current: ±0.5% full-scale
Accuracy, overall at 0...60 °C (32...140 °F)	Voltage: ±0.8% full-scale Current: ±0.8% full-scale
Accuracy drift with temperature	Voltage: ±0.0086% full-scale per °C Current: ±0.0086% full-scale per °C
Output ripple range 0...50 kHz (referred to output range)	±0.05%
Non-linearity	±0.05% (in percent full-scale)
Repeatability	± 0.05%
Output impedance	Voltage: <1 Ω Current: >1 MΩ
Short circuit protection	Yes
Short circuit, nom	Current: 16 mA
Open circuit, max	16V
Output response at system power-up and powerdown	Current: ± 1.0V spike for < 5 ms Voltage: ± 1.0V DC spike < 5 ms
Isolation voltage	30V AC/30V DC (continuous), reinforced insulation type Type tested at 500V AC or 710V DC for 60 s; outputs to system backplane

(1) Values for these input types rated at the following ambient temperatures: 40 °C (104 °F), 55 °C (131 °F), 60 °C (140 °F).

DRAFT

Analog Input Ranges - CompactLogix 5370 L2 Controllers

Input Type Normal Op. Range	Full Range[1]	Raw/Prop. Data Units for Full Range	Eng. Unit Values for Full Range x 1		Eng. Unit Values for Full Range x 10		Scaled-for-PID Values for Normal Operating Range	Scaled-for-PID Values for Full Range	Percent of Normal Op. Range Values	Percent of Full Range Values
			°C	°F	°C	°F				
-10...+10V DC	-10.5V...+10.5V	-32767...+32767	-10500...+10500		-1050...+1050		0...16,383	-410...+16793	-10000...+10000	-10500...+10500
0...5V DC	-0.5V...+5.25V		-500...+5250		-50...+525			-1638...+17202	0...10000	-1000...+10500
0...10V DC	-0.5V...+10.5V		-500...+10500		-50...+1050			-819...+17202		-500...+10500
4...20 mA	3.2...21 mA		3200...21000		320...2100			-819...+17407		-500...+10625
1...5V DC	0.5V...5.25V		500...5250		50...525			-2048...+17407		-1250...+10625
0...20 mA	0...21 mA		0...21000		0...2100			0...17202		0...10500
J (-210...+1200)			-2100...+12000	-3460...+21920	-210...+1200	-346...+2192				
K (-200...+1372)			-2000...+13720	-3280...+25020	-200...+1372	-328...+2502				
T (-200...+400)			-2000...+4000	-3280...+7520	-200...+400	-328...+752				
E (-200...+1000)			-2000...+10000	-3280...+18320	-200...+1000	-328...+1832				
R (-50...+1768)			-500...+17680	-580...+32140	-50...+1768	-58...+3214				
S (-50...+1768)			-500...+17680	-580...+32140	-50...+1768	-58 ...+3214				
B (250...1820)			2500...18200	4820...32767	250...1820	482...3308				
N (-200...+1300)			-2000...+13000	-3280...+23720	-200...+1300	-328...+2372				
C (0...2315)			0...23150	320...32767	0...2315	32...4199				
-50...+50 mV			-5000...+5000		-500...+500					
-100...+100 mV			-10000...+10000		-1000...+1000			0...16,383		0...10000
0...150 Ω			0...15000		0...1500					
0...500 Ω			0...5000		0...500					
0...1000 Ω			0...10000		0...1000					
0...3000 Ω			0...30000		0...3000					
Platinum 385 (-200...+850)			-2000...+8500	-3280...+15620	-200...+850	-328...+1562				
Platinum 3916 (-200...+510)			-2000...+5100	-3280...+9500	-200...+510	-328...+950				
Copper 426 (-70...+150)			-700...+1500	-940...+3020	-70...+1500	-94...+302				
Nickel 618 (-60...+250)			-600...+2500	-760...+4820	-60...+250	-76...+482				
Nickel 672 (-80...+260)			-800...+2600	-1120...+5000	-80...+260	-112...+500				
Nickel-Iron 518 (-100...+200)			-1000...+2000	-1480...+3920	-100...+200	-148...+392				

(1) Includes amount over and under normal operating.

DRAFT

Embedded Analog Output Module Data[1] - CompactLogix 5370 L2 Controllers

Analog Output Module Range	Input Value	Example Data		Output Range State	Raw/Proportional Data		Engineering Unit		Scaled-for-PID		Percent Full Range	
					Decimal Range		Decimal Range		Decimal Range		Decimal Range	
		Controller Ordered	Embedded Analog Module Output		Controller Ordered	Embedded Analog Module Output	Controller Ordered	Embedded Analog Module Output	Controller Ordered	Embedded Analog Module Output	Controller Ordered	Embedded Analog Module Output
±10V	Over 10.5V	+11.0V	+10.5V	Over	–	–	11000	–	17202	–	11000	–
	+10.5V	+10.5V	+10.5V	Over	32767	32767	10500	10500	16793	16793	10500	10500
	±10V	+10.0V	+10.0V	Normal	31207	31207	10000	10000	16383	16383	10000	10000
		0.0V	0.0V	Normal	0	0	0	0	8192	8192	0	0
		-10.0V	-10.0V	Normal	-31207	-31207	-10000	-10000	0	0	-10000	-10000
	-10.5V	-10.5V	-10.5V	Under	-32767	-32767	-10500	-10500	-410	-410	-10500	-10500
	Under 10.5V	-11.0V	-10.5V	Under	–	–	-11000	-10500	-819	-410	-11000	-10500
0...5V	Over 5.25V	5.5V	+5.25V	Over	–	–	5500	5250	18021	17202	11000	10500
	5.25V	5.25V	+5.25V	Over	32767	32767	5250	5250	17202	17202	10500	10500
	0...5.0V	5.0V	+5.0V	Normal	31207	31207	5000	5000	16383	16383	10000	10000
		0.0V	0.0V	Normal	0	0	0	0	0	0	0	0
	-0.5V	-0.5V	-0.5V	Under	-3121	-3121	-500	-500	-1638	-1638	-1000	-1000
	Under -0.5V	-1.0V	-0.5V	Under	-6241	-3121	-500	-500	-3277	-1638	-2000	-1000
0...10V	Over 10.5V	11.0V	+10.5V	Over	–	–	11000	10500	18021	17202	11000	10500
	+10.5V	+10.5V	+10.5V	Over	32767	32767	10500	10500	17202	17202	10500	10500
	0...10.0V	+10.0V	+10.0V	Normal	31207	31207	10000	10000	16383	16383	10000	10000
		0.0V	0.0V	Normal	0	0	0	0	0	0	0	0
	-0.5V	-0.5V	-0.5V	Under	-1560	-1560	-500	-500	-819	-819	-500	-500
	Under -5.0V	-1.0V	-0.5V	Under	-3121	-1560	-1000	-500	-1638	-819	-1000	-500
4...20 mA	Over 21.0 mA	+22.0 mA	21 mA	Over	–	–	22000	21000	18431	17407	11250	10625
	21.0 mA	+21.0 mA	21 mA	Over	32767	32767	21000	21000	17407	17407	10625	10625
	4...20.0 mA	+20.0 mA	20 mA	Normal	31207	31207	20000	20000	16383	16383	10000	10000
		+4.0 mA	+4.0 mA	Normal	6241	6241	4000	4000	0	0	0	0
	3.2 mA	+3.2 mA	+3.2 mA	Under	4993	4993	3200	3200	-819	-819	-500	-500
	Under 3.2	0.0 mA	+3.2 mA	Under	0	4993	0	3200	-4096	-819	-2500	-500
1...5V	Over 5.25V	+5.5V	+5.25V	Over	–	–	5500	5250	18431	17407	11250	10625
	+5.25V	+5.25V	+5.25V	Over	32767	32767	5250	5250	17407	17407	10625	10625
	1...5.0V	+5.0V	+5.0V	Normal	31207	31207	5000	5000	16383	16383	10000	10000
		+1.0V	+1.0V	Normal	6241	6241	1000	1000	0	0	0	0
	0.5V	+0.5V	+0.5V	Under	3121	3121	500	500	-2048	-2048	-1250	-1250
	Under 0.5V	0.0V	0.0V	Under	0	3121	0	500	-4096	-2048	-2500	-1250
0...20 mA	Over 21.0 mA	+22.0 mA	21 mA	Over	–	–	22000	21000	18201	17202	11000	10500
	21.0 mA	21.0 mA	21 mA	Over	32767	32767	21000	21000	17202	17202	10500	10500
	0...20.0 mA	20.0 mA	20 mA	Normal	31207	31207	20000	20000	16383	16383	10000	10000
		0.0 mA	0.0 mA	Normal	0	0	0	0	0	0	0	0
	Under 0.0 mA	-1.0 mA	0.0 mA	Under	-1560	0	0	-1000	-819	0	-500	0

(1) If Clamping is enabled, the output value is the clamped value that is defined in the configuration.

DRAFT

Embedded HSC Module Specifications - CompactLogix 5370 L2 Controllers

Attribute	1769-L24ER-QBFC1B, 1769-L24ER-QBFC1BK 1769-L27ERM-QBFC1B
Input Specifications	
Input frequency, max	250 kHz
Input current, max	15 mA per channel
Input current, min	6.8 mA
Input voltage range	2.6...30V DC(1)
On-state voltage, max	30V DC
On-state current, min	6.8 mA
Off-state voltage, max	1.0V DC
Off-state current, max	1.5 mA
Off-state leakage current, max	1.5 mA
Input impedance, nom	1950 Ω
Pulse width, min	2.5 µs
Phase separation, min	1.3 µs
Isolation voltage	75V (continuous), reinforced insulation type Type tested at 1200V AC for 60 s; inputs to system backplane and input to input
Output Specifications	
Output voltage range	5...30V DC
On-state voltage, max	User power - 0.1V DC
On-state output current, max	0.25 A per channel
On-state output current, min	1 mA
On-state voltage drop, max	0.5V DC
Off-state leakage current, max	5 µA
Turn-on time, max	400 µs
Turn-off time, max	200 µs
Reverse polarity protection	30V DC
Isolation voltage	75V (continuous), reinforced insulation type Type tested at 1200V AC for 60 s; inputs to system backplane and input to input
Current per channel, max	1.0 A @ 40 °C (104 °F) 0.5 A @ 55 °C (131 °F) 0.25 A @ 60 °C (140 °F)
Current per module, max	4.0 A @ 40 °C (104 °F) 2.0 A @ 55 °C (131 °F) 1.0 A @ 60 °C (140 °F)

(1) See Maximum Input Voltage - 24V DC Operation temperature derating.

Embedded HSC Module Temperature Derating

Maximum Input Voltage - 24V DC Operation

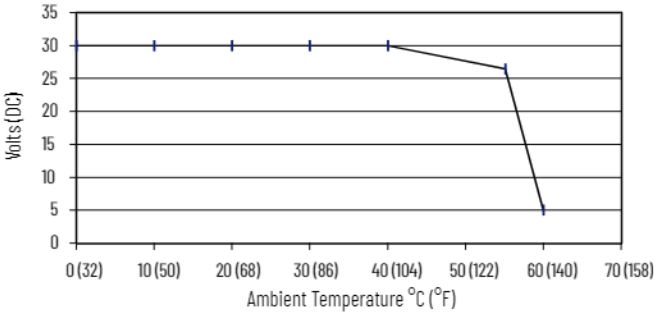

Temperature	Derated Voltage(1)
40 °C (104 °F)	30V DC
55 °C (131 °F)	26.4V DC
60 °C (140 °F)	5V DC

(1) You achieve an input voltage derating of 55...60 °C (131...140 °F) by using a dropping resistor.
For 24V DC input voltage, use a 2.4 kΩ, 1/2 W resistor.
For input voltages other than 24V DC, use a 1/2 W resistor with value: 125 x (V_{in} - 5V).

Maximum Output Voltage - 24V DC Operation

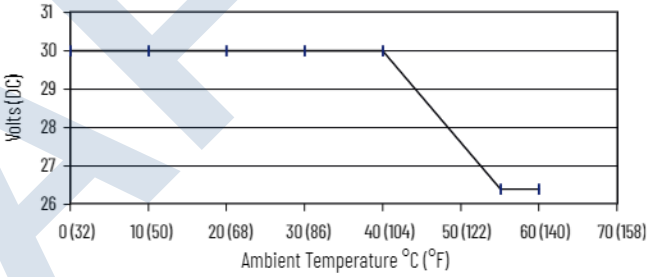

Temperature	Derated Voltage
40 °C (104 °F)	30V DC
55...60 °C (131...140 °F)	26.4V DC

Maximum Input Current Per Point - 5V DC Operation

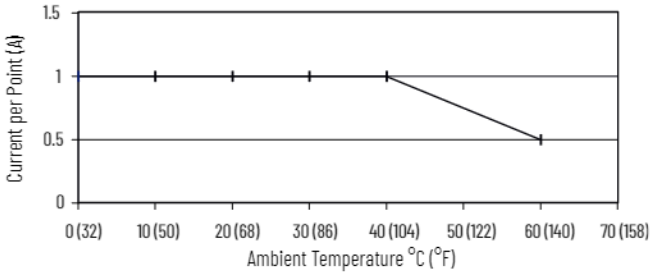

Temperature	Derated Current
0...40 °C (32...104 °F)	1 A
60 °C (140 °F)	0.5 A

DRAFT

Maximum Output Current Per Point - 5V DC Operation

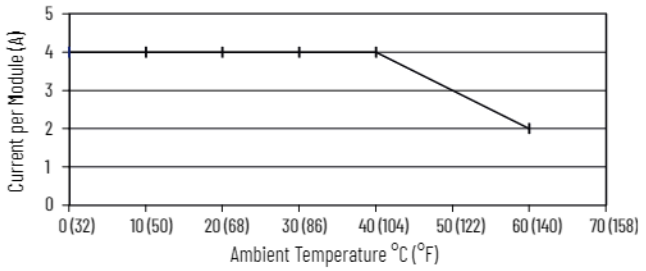

Temperature	Derated Current
0...40 °C (32...104 °F)	4 A
60 °C (140 °F)	2 A

Maximum Output Current Per Point - 24V DC Operation

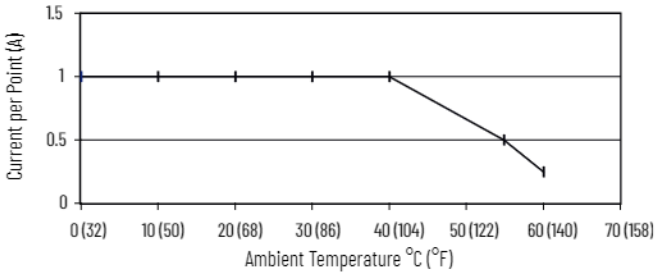

Temperature	Derated Current
0...40 °C (32...104 °F)	1 A
55 °C (131 °F)	0.5 A
60 °C (140 °F)	0.25 A

Maximum Output Current Per Module - 24V DC Operation

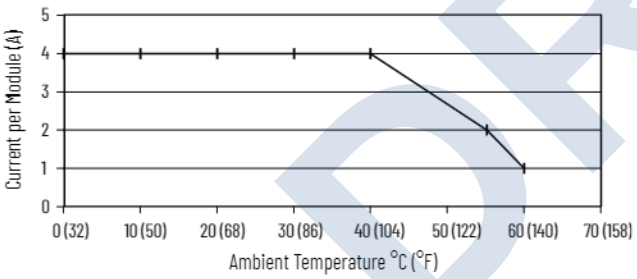

Temperature	Derated Current
40 °C (104 °F)	4 A
55 °C (131 °F)	2 A
60 °C (140 °F)	1 A

Embedded Power Supply Specifications - CompactLogix 5370 L2 Controllers

Attribute	1769-L24ER-QB1B	1769-L24ER-QBFC1B, 1769-L24ER-QBFC1BK, 1769-L27ERM-QBFC1B
Input voltage range	19.2...31.2V DC	
Input voltage, nom	24V DC	
Line requirement, max[1]	2.1 A @ 24V DC, Class 2/SELV	
Available 5V DC bus current	1.54 A	1.0 A
Available 24V DC bus current	0.95 A	0.8 A
Inrush, max	< 30 A @ 19.2...31.2V DC	
Line loss ride-through	10 ms...10 s	
Short circuit protection	Internal fuse Not replaceable	
Overvoltage protection	Yes	
Isolation voltage	30V AC/30V DC (continuous), reinforced insulation type Type tested at 500V AC or 710V DC for 60 s; outputs to system backplane	

(1) Value rated at the following ambient temperatures: 40 °C (104 °F), 55 °C (131 °F), 60 °C (140 °F).

DRAFT

I/O Module Support - CompactLogix 5370 L3 and Compact GuardLogix 5370 Controllers

The CompactLogix 5370 L3 controllers offer local expansion modules that are installed across up to three banks of modules. You must use 1769 Compact I/O modules with these controllers.

Remember the following when using I/O modules with the CompactLogix 5370 L3 and Compact GuardLogix 5370 controllers:

- The controller must be the leftmost module in the local bank of the system.
- The number of I/O modules that are supported in a controller system varies by controller catalog number.

Cat. No.	Local 1769 Compact I/O Modules Supported, Max
1769-L30ER, 1769-L30ERK 1769-L30ER-NSE 1769-L30ERM, 1769-L30ERMK 1769-L30ERMS	8
1769-L33ER, 1769-L33ERK 1769-L33ERM, 1769-L33ERMK 1769-L33ERM, 1769-L33ERMSK	16
1769-L36ERM 1769-L36ERMS 1769-L37ERM, 1769-L37ERMK 1768-L37ERMS, 1768-L37ERMSK 1769-L38ERM, 1769-L38ERMK 1769-L38ERMS, 1769-L38ERMSK	30

- You can install I/O modules in as many as three banks, that is, the local bank and two additional banks.
- You can install as many as three I/O modules between the controller and power supply.
- You can install as many as eight I/O modules to the right of the power supply in the local bank.
- You can install as many as eight I/O modules on both the left and right sides of the power supply in additional banks.
- You must consider the distance rating and current draw of the controller and all I/O modules when designing your system.
- Systems with multiple banks can be installed vertically or horizontally.
- You must use expansion cables to connect banks in multi-bank systems.
- You must use an end cap at the end of the last bank in a system.

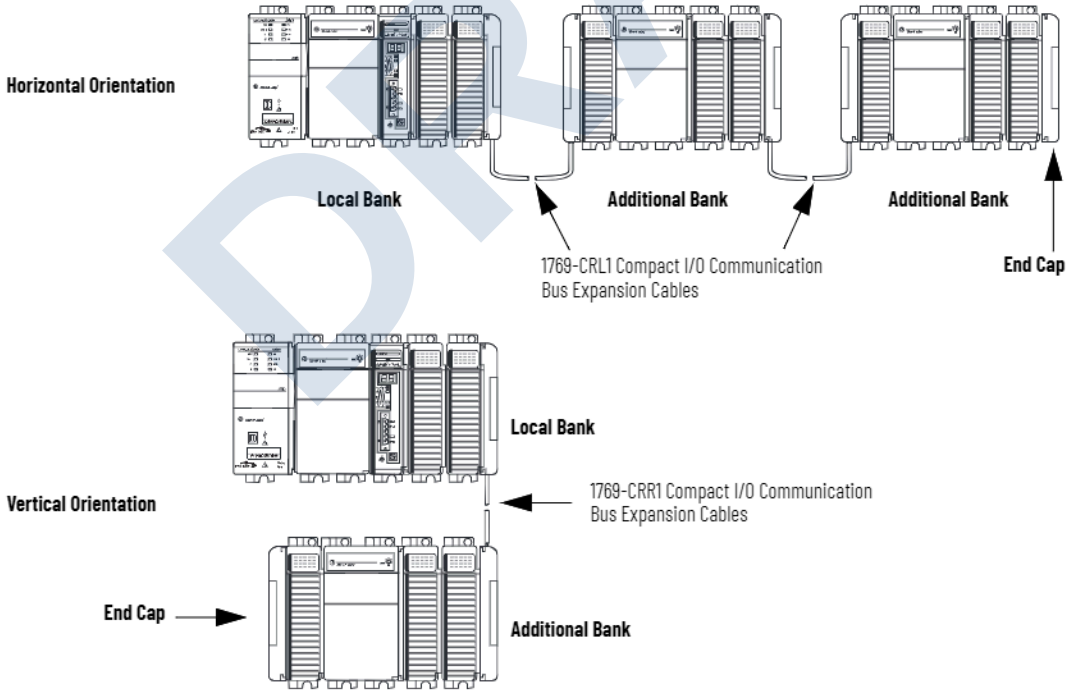

DRAFT

Local I/O Performance of CompactLogix 5370 L3 Controllers

The requested packet interval (RPI) defines the frequency at which the controller sends data to and receives data from I/O modules. In the programming software, you set an RPI rate for each I/O module in your system.

The CompactLogix 5370 L3 controllers always attempt to scan an I/O module at the configured RPI rate. An I/O Task Overlap minor fault occurs if there isn't enough system bandwidth. This fault occurs if other, higher priority tasks help prevent the 1769 Compact I/O subsystem from completing before the next scheduled time for it to run again, which consumes system bandwidth. Higher priority tasks that help prevent the 1769 Compact I/O subsystem task from completing before the next scheduled time for it to run again use up system bandwidth.

For individual I/O modules, a Module RPI Overlap minor fault occurs if there is at least one I/O module that can't be serviced within its RPI time.

The specific configuration parameters for a system determine the impact on actual RPI rates. These configuration factors can impact the effective scan frequency for any individual module:

- Rates at which the RPI rates of other 1769 Compact I/O are set
- Number of other 1769 Compact I/O modules in the system
- Types of other 1769 Compact I/O modules in the system
- Application user task priorities

RPI Rate Guidelines

Type of Module	Guidelines
1769 Compact I/O digital and analog (any mix) modules	The following guidelines apply: • 1...2 modules can be scanned in 0.5 ms. • 3...4 modules can be scanned in 1 ms. • 5...30 modules can be scanned in 2 ms. • Some input modules have a fixed 8 ms filter, so selection of a faster RPI has no effect.
1769 Compact I/O specialty modules	The following conditions apply: • For every full-sized 1769-SDN module in the system, increase the RPI of every other module by 2 ms. • For every 1769-HSC module in the system, increase the RPI of every other module by 1 ms. • For every full-sized 1769-ASCII module system, increase the RPI of every other module by 1 ms. For every 1769-SM2 module in the system, increase the RPI of the other module by 2 ms. For example, the system includes four I/O modules that are configured with an RPI = 1 ms and you add a 1769-SDN module to the system. You must increase the RPI value for all four I/O modules by 2 ms. Therefore, when the 1769-SDN module is added to the system, the four I/O modules use an RPI = 3 ms. If, in the same system, you add a second 1769-SDN module, the RPI value of the four digital I/O modules is increased to 5 ms.

You can set individual RPI values of the 1769 Compact I/O module higher than these values. For example, if your application scans one or two modules, you do not have to use RPI values = 0.5 ms. You can set the RPI to a higher value, such as 1.0 ms, if necessary. Remember, higher RPI values result in scanning the data less frequently.

The RPI is asynchronous to the program scan. Other factors, such as program execution duration, affect I/O throughput.

DRAFT

Minimum Spacing Requirements - CompactLogix 5370 Controllers and Compact GuardLogix 5370 Controllers

CompactLogix 5370 L1 Controllers

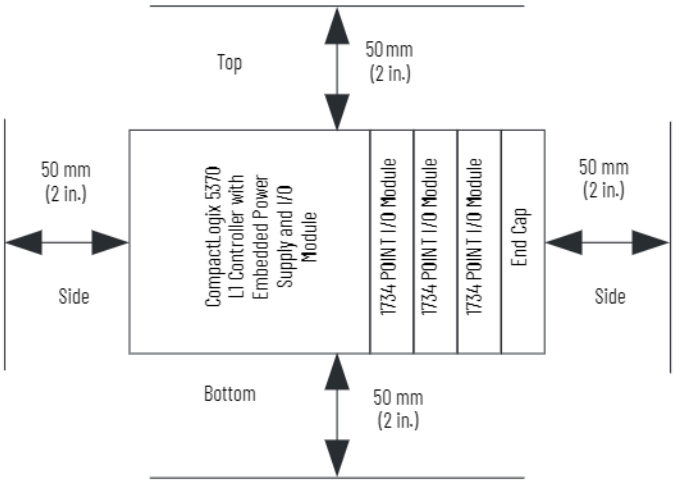

CompactLogix 5370 L3 and Compact GuardLogix 5370 L3 Controllers

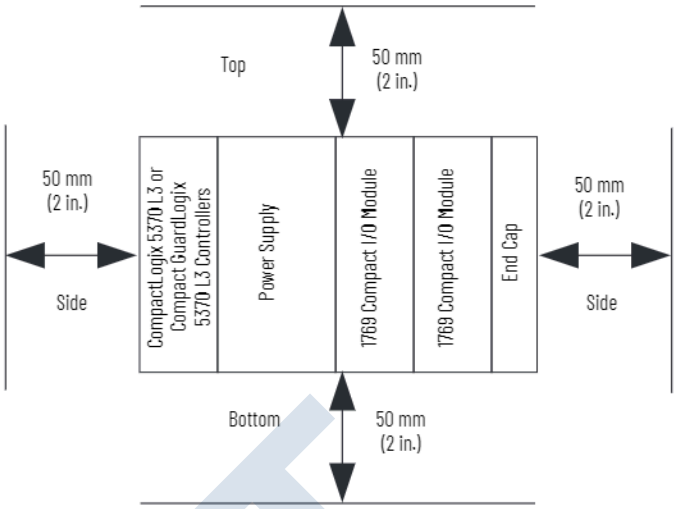

CompactLogix 5370 L2 Controllers

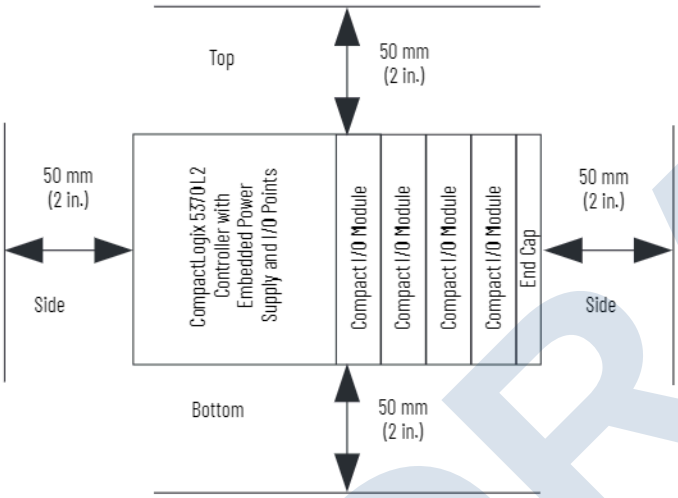

DRAFT

Dimensions - CompactLogix 5370 L1 Controllers

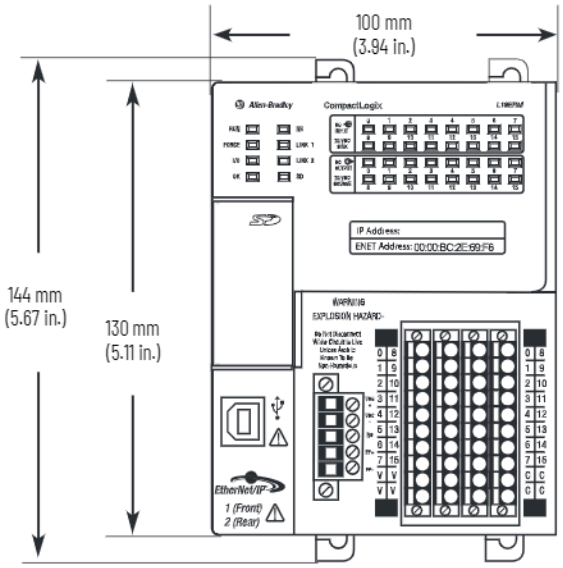

Side View

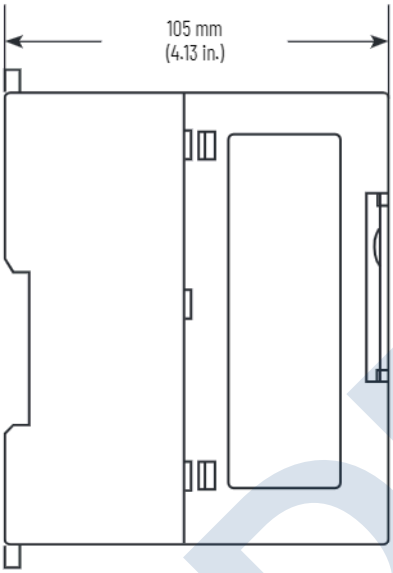

Dimensions - CompactLogix 5370 L2 Controllers

1769-L24ER-QB1B

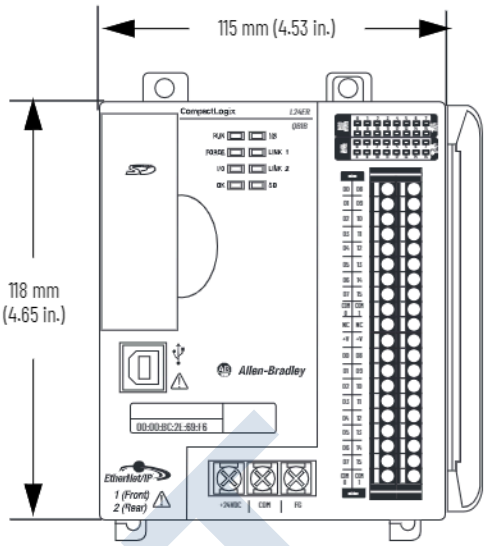

1769-L24ER-QBFC1B, 1769-L24ER-QBFC1BK, 1769-L27ERM-QBFC1B

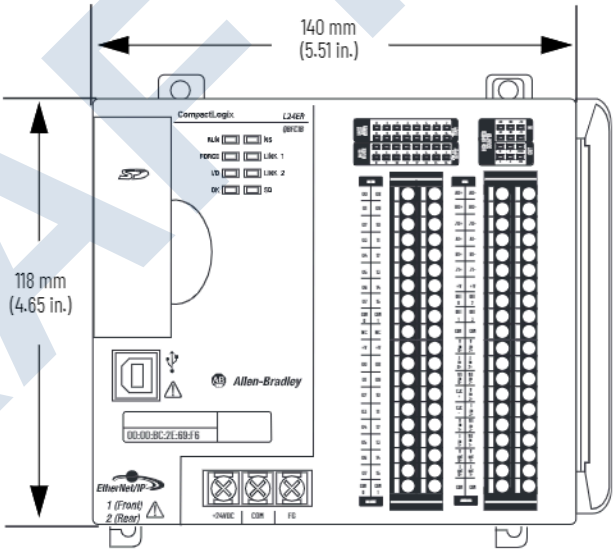

All CompactLogix 5370 L2 Controllers
Side View

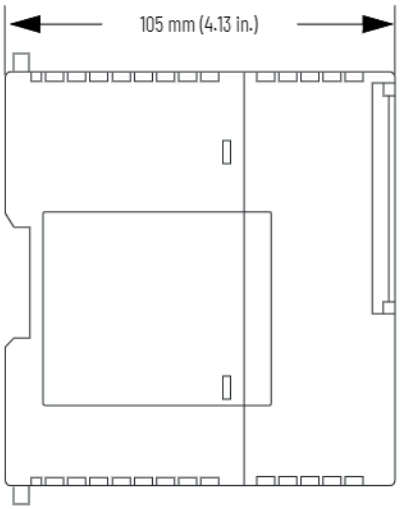

DRAFT

Dimensions - CompactLogix 5370 L3 Controllers

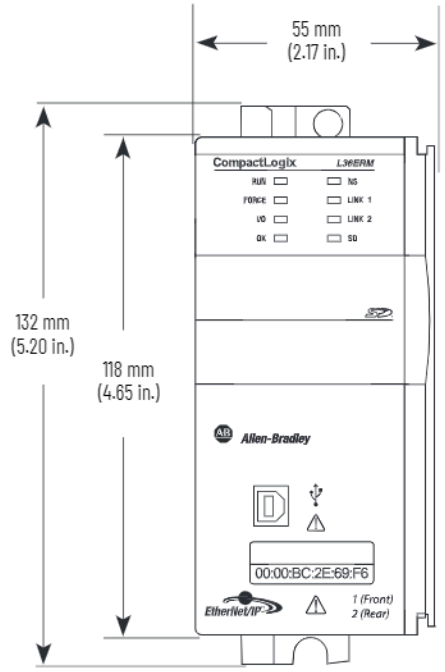

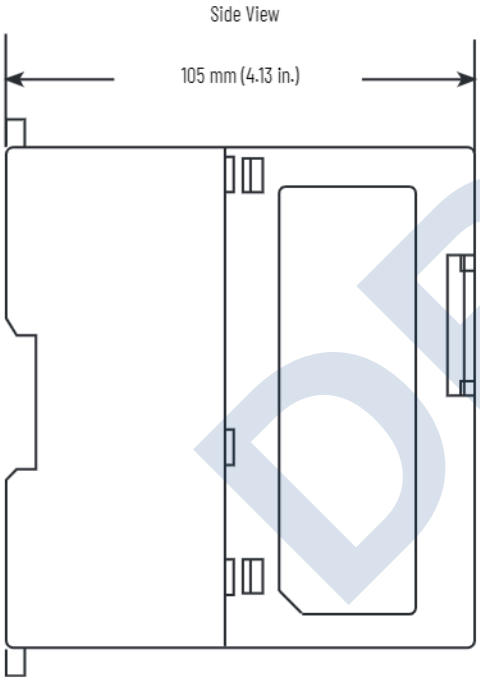

Dimensions - Compact GuardLogix 5370 Controllers Dimensions

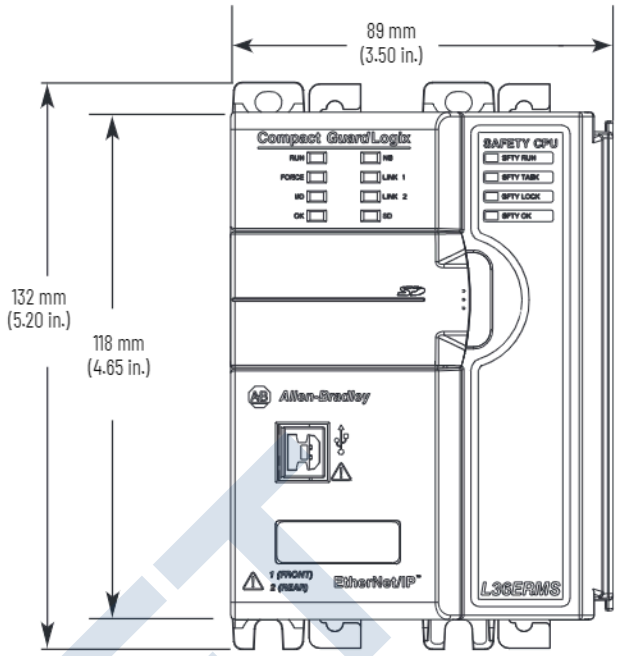

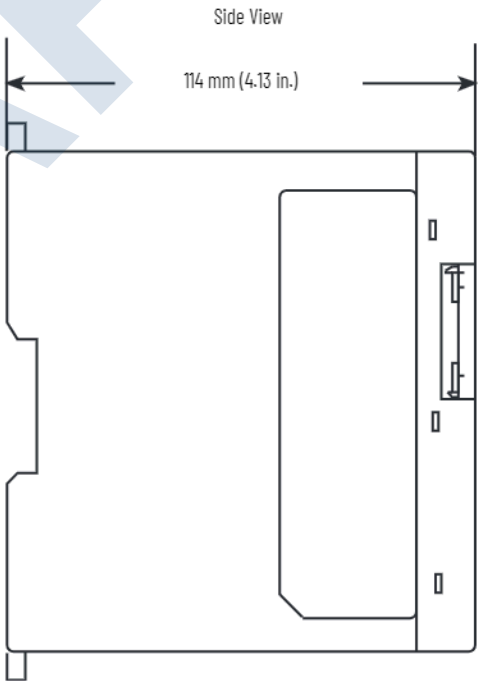

DRAFT

Armor CompactLogix and Armor Compact GuardLogix Controllers

Armor CompactLogix

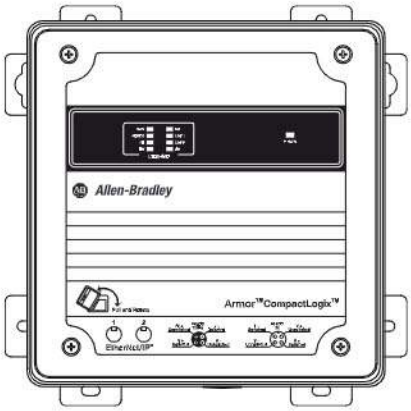

Armor Compact GuardLogix

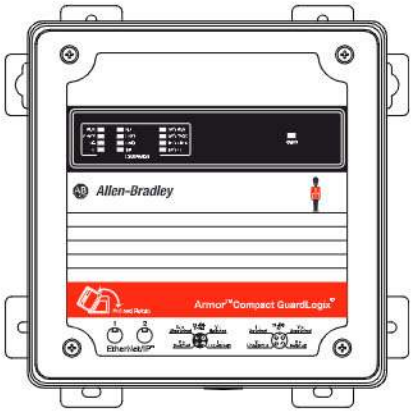

The Armor CompactLogix and Armor Compact GuardLogix controllers extend the CompactLogix platform to the On-Machine™ space, this puts industrial control closer to the application and sometimes onto the machine itself. The safety controllers provide standard and safety memory. The memory that each catalog number supports is listed in the Technical Specifications table on page 27. The controllers also support two independent Ethernet ports to connect to an EtherNet/IP network.

This safety controller supports the full temperature range as CompactLogix controllers, while offering global certifications and ratings for IP67 dust and water protection. It's certified for use in safety applications up to and including safety integrity level (SIL) 3 and Performance Level (e) in which the de-energized state is the safe state. With so many hardware functions in one device, the Armor CompactLogix and Armor Compact GuardLogix controllers provide the following benefits:

- Minimized cabinet hardware
- Simplified wiring layouts
- No required tools or specialty personnel for component replacement
- Improve Mean Time to Restoration (MTTR)
- Simplified troubleshooting
- Readily available system status without the need to open a cabinet or visit a control room

The Armor CompactLogix and Armor Compact GuardLogix controllers provide memory capacity for the most demanding applications. In some applications, for example, when you use these controllers on a Device Level Ring (DLR) network, resiliency is provided from the loss of one network connection and you can replacement devices while production is in progress.

Similar to the Compact GuardLogix controllers, the Armor Compact GuardLogix controllers offer the standard features of a CompactLogix controller and safety features. One difference is that the Armor Compact GuardLogix controllers can use I/O modules that are on-machine and are accessible over an EtherNet/IP network.

Features - Armor CompactLogix and Armor Compact GuardLogix Controllers

Feature	1769-L33ERM0 1769-L36ERM0 1769-L37ERM0 1769-L38ERM0	1769-L33ERMOS 1769-L36ERMOS 1769-L37ERMOS 1769-L38ERMOS
Controller tasks Continuous Periodic	32 tasks 100 programs/task	
Built-in communication ports	• Two Ethernet ports - CompactLogix 5370 controllers have two Ethernet ports. The ports carry the same network traffic as part of the embedded switch of the controller. However, the controller uses only one IP address. • One USB port (only for temporary connection)	
Communication options	EtherNet/IP	
EtherNet/IP node, max	• 1769-L33ERM0, 1769-L33ERMOS: Up to 32 nodes • 1769-L36ERM0, 1769-L36ERMOS: Up to 48 nodes • 1769-L37ERM0, 1769-L37ERMOS: Up to 64 nodes • 1769-L38ERM0, 1769-L38ERMOS: Up to 80 nodes	
Controller connections	256	
Sockets, max	32	
Integrated Motion over an EtherNet/IP network	• 1769-L33ERM0, 1769-L33ERMOS: As many as 8 axes • 1769-L36ERM0, 1769-L36ERMOS: As many as 16 axes • 1769-L37ERM0, 1769-L37ERMOS: As many as 16 axes • 1769-L38ERM0, 1769-L38ERMOS: As many as 16 axes	
Programming languages	• Relay ladder(1) • Structured Text • Function block • SFC	
Integrated safety	–	Yes

(1) The Armor Compact GuardLogix controllers support only the relay ladder programming language in the safety task. The Armor Compact GuardLogix controllers support all listed programming languages in the standard task.

DRAFT

Certifications - Armor CompactLogix and Armor Compact GuardLogix Controllers

Certification[1]	1769-L33ERM0 1769-L36ERM0 1769-L37ERM0 1769-L38ERM0	1769-L33ERM0S 1769-L36ERM0S 1769-L37ERM0S 1769-L38ERM0S
c-UL-us	UL Listed Industrial Control Equipment, certified for US and Canada. See UL File E65584.	
UKCA and CE	UK Statutory Instrument 2016 No. 1091 and European Union 2014/30/EU EMC Directive, compliant with: EN 61131-2; Programmable Controllers (Clause 8, Zone A & B) EN 61000-6-4; Industrial Emissions EN 61000-6-2; Industrial Immunity	UK Statutory Instrument 2016 No. 1091 and European Union 2014/30/EU EMC Directive, compliant with: EN 61131-2; Programmable Controllers (Clause 8, Zone A & B) EN 61326-3-1; Meas./Control/Lab., Immunity Requirements for safety systems and functions EN 61000-6-4; Industrial Emissions EN 61000-6-2; Industrial Immunity
		UK Statutory Instrument 2008 No. 1597 and European Union 2006/42/EC MD Directive, compliant with: EN 61508-1...7; General requirements EN ISO 13849-1; Safety-related parts of control systems EN 62061; Functional safety of safety-related control systems
	UK Statutory Instrument 2012 No. 3032 and European Union 2011/65/EU RoHS Directive, compliant with: EN IEC 63000; Technical documentation	
RCM	Australian Radiocommunications Act, compliant with: EN 61000-6-4; Industrial Emissions	
TÜV certified for Functional Safety[2]	-	Capable of Cat. 4/PL e according to EN ISO 13849-1 and SIL 3 according to EN 62061/IEC 61508
KC	Korean Registration of Broadcasting and Communications Equipment, compliant with: Article 58-2 of Radio Waves Act, Clause 3	
Morocco	Arrêté ministériel n° 6404-15 du 29 ramadan 1436	

(1) When marked. See the Product Certification link at rok.auto/certifications for Declarations of Conformity, Certificates, and other certification details.
(2) When used with specified firmware revisions.

Environmental Specifications - Armor CompactLogix and Armor Compact GuardLogix Controllers

Feature	1769-L33ERM0, 1769-L33ERM0S 1769-L36ERM0, 1769-L36ERM0S 1769-L37ERM0, 1769-L37ERM0S 1769-L38ERM0, 1769-L38ERM0S
Temperature, operating IEC 60068-2-1 (Test Ad, Operating Cold) IEC 60068-2-2 (Test Bd, Operating Dry Heat) IEC 60068-2-14 (Test Na, Operating Thermal Shock)	0 °C < Ta < 60 °C (32 °F < Ta < 140 °F)
Temperature, ambient, max	60 °C (140 °F)
Temperature, nonoperating IEC 60068-2-1 (Test Ab, Unpackaged Nonoperating Cold) IEC 60068-2-2 (Test Bb, Unpackaged Nonoperating Dry Heat) IEC 60068-2-14 (Test Na, Unpackaged Nonoperating Thermal Shock)	-40...+85 °C (-40...+185 °F)
Relative humidity IEC 60068-2-30 (Test Db, Unpackaged Damp Heat)	5...95% noncondensing
Vibration IEC 60068-2-6 (Test Fc, Operating)	2 g @ 10...500 Hz
Shock, operating IEC 60068-2-27 (Test Ea, Unpackaged Shock)	30 g
Shock, nonoperating IEC 60068-2-27 (Test Ea, Unpackaged Shock)	30 g
Emissions	IEC 61000-6-4
ESD immunity IEC 61000-4-2	6 kV contact discharges 8 kV air discharges
Radiated RF immunity IEC 61000-4-3	10V/m with 1 kHz sine wave 80% AM from 80...6000 MHz
EFT/B immunity IEC 61000-4-4	±3 kV at 5/100 kHz on power ports ±3 kV at 5/100 kHz on Ethernet ports
Surge transient immunity IEC 61000-4-5	±1 kV line-line (DM) and ± 2 kV line-earth (CM) on power ports ±2 kV line-earth (CM) on Ethernet ports
Conducted RF immunity IEC 61000-4-6	10V rms with 1 kHz sine wave 80% AM from 150 kHz...80 MHz

DRAFT

Technical Specifications - Armor CompactLogix and Armor Compact GuardLogix Controller

Attribute	1769-L33ERM0 1769-L36ERM0 1769-L37ERM0 1769-L38ERM0	1769-L33ERM0S 1769-L36ERM0S 1769-L37ERM0S 1769-L38ERM0S
User memory	• 1769-L33ERM0: 2 MB • 1769-L36ERM0: 3 MB • 1769-L37ERM0: 4 MB • 1769-L38ERM0: 5 MB	• 1769-L33ERM0S: 2 MB standard + 1 MB safety • 1769-L36ERM0S: 3 MB standard + 1.5 MB safety • 1769-L37ERM0S: 4 MB standard + 1.5 MB safety • 1769-L38ERM0: 5 MB + 1.5 MB safety
Optional nonvolatile memory	• 1784-SD1 card with 1 Gb of available memory (shipped with controller) • 1784-SD2 card with 2 Gb of available memory (available for separate ordering)	
Voltage and current ratings	IN (Pins 2, 3) 18...32V DC, 8 A SELV IN (Pins 1, 4) 18...32V DC, 8 A SELV Out (Pins 1, 4) 18...32V DC, 8 A Out (Pins 2, 3) 18...32V DC, 6 A	
Power dissipation, max	7.5 W	
Power consumption, max	50VA @ 24V DC	
Isolation voltage	30V (continuous), Basic Insulation Type, Power to enclosure, Ethernet channels to Power, and non-redundant Ethernet channels to non-redundant Ethernet channels. No isolation between redundant Ethernet channels. Type tested at 2257V rms for 60 seconds between Input and pass through power to Ethernet ports. Type tested at 2257V rms for 60 seconds between Input power and pass through power.	
Weight, approx (with mounting feet)	5.40 kg (11.90 lb)	5.62 kg (12.40 lb)
Module location	Panel mount	
Panel-mount screw torque	6.6 N•m (58 lb•in) - use M6 screw	
Wire category[1]	3 - on USB ports 2 - on power ports 2 - on Ethernet ports	
Wire type, Ethernet	RJ45 connector according to IEC 60603-7, 2 or 4 pair Category 5e minimum cable according to TIA 568-B.1 or Category 5 cable according to ISO/IEC 24702	M12, D-code, IP67 rated, quick disconnect cables Input and pass-through power connections are made via MINI sized, D-code, IP67 rated, quick disconnect cables
Wire size	PE Ground: 1.3...5.2 mm^2 (16...10 AWG) Torque grounding screw to 2.0 N•m (17.7 lb•in)	
Enclosure type rating	UL Type 4x Meets IP67 (when marked) with receptacle dust caps or cable termination	

(1) Use this Conductor Category information to plan conductor routing. See Industrial Wiring and Grounding Guidelines, publication 1770-4.1.

Minimum Spacing Requirements - Armor CompactLogix Controllers and Armor Compact GuardLogix Controllers

Armor CompactLogix Controllers

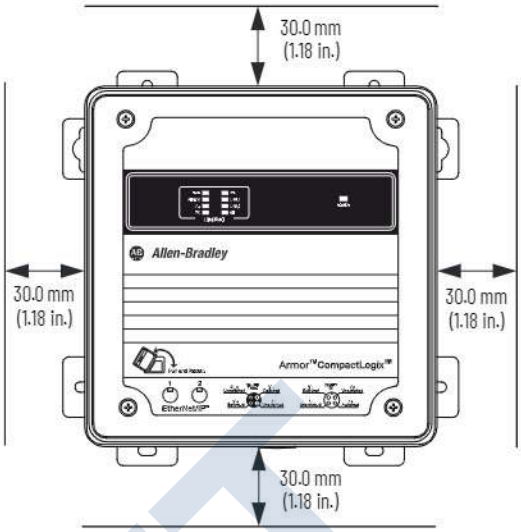

Armor Compact GuardLogix Controllers

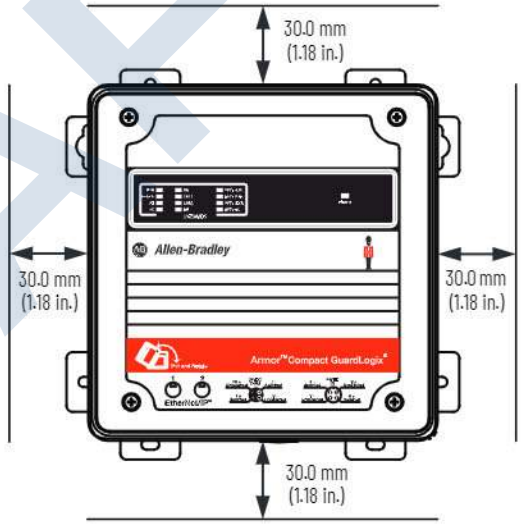

DRAFT

Dimensions - Armor CompactLogix Controllers and Armor Compact GuardLogix Controllers

Armor CompactLogix Controllers

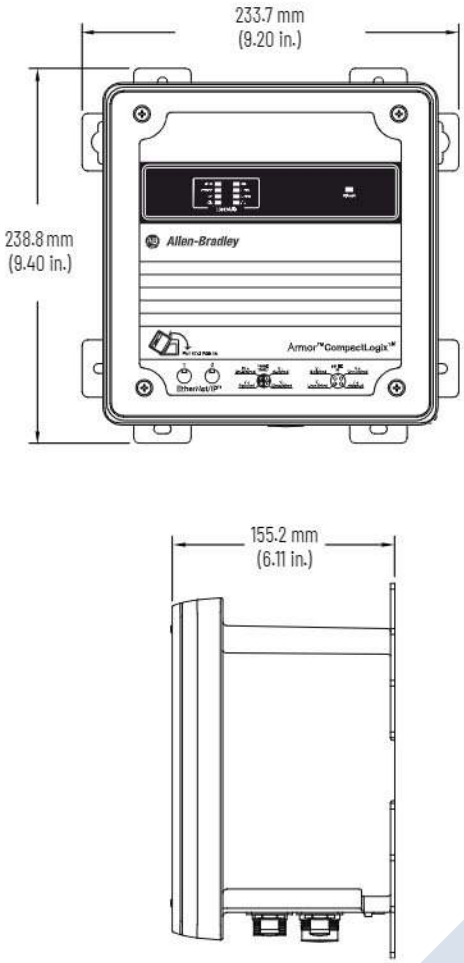

Armor Compact GuardLogix Controllers

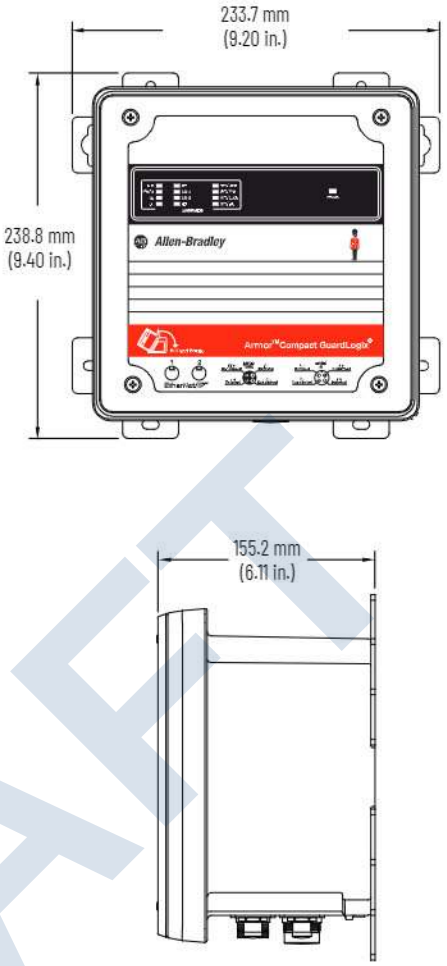

DRAFT

1769 Packaged CompactLogix Controllers with Embedded I/O

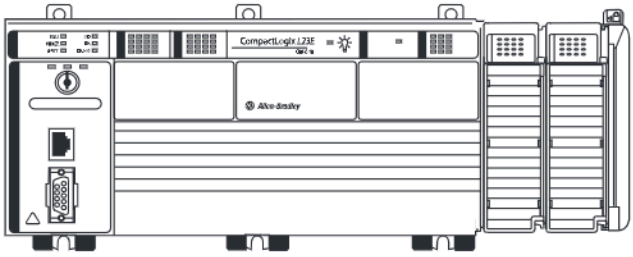

The 1769-L23*x* controllers provide the following functionality:

- Built-in power supply
- Either two serial ports or one serial and one Ethernet port, depending on controller catalog number
- Combination of embedded digital, analog, and high-speed counter module I/O modules
- 1769-ECR right-end cap

Features - 1769 Packaged CompactLogix Controllers

Characteristic	1769-L23E-QB1B	1769-L23E-QBFC1B	1769-L23-QBFC1B
Available user memory	512 KB		
CompactFlash card	-		
Communication ports	1 Ethernet port 1 RS-232 serial port (DF1 or ASCII)		2 RS-232 ports (isolated DF1 or ASCII; only nonisolated DF1)
Embedded I/O	16 DC inputs 16 DC outputs	16 DC inputs 16 DC outputs 4 analog inputs 2 analog outputs 4 high-speed counter modules	
Module expansion capacity	Up to three additional 1769 modules	Up to two additional 1769 modules	
Embedded power supply	24V DC		

You can add one or two additional 1769 modules to the right of the controller package. The modules that you can add depend on their current draw. Each packaged controller has the following amount of 5V DC bus current.

1769-L23*x* Available DC Current

Controller	Available 5V DC Bus Current
1769-L23E-QB1B	1000 mA
1769-L23E-QBFC1B	450 mA
1769-L23-QBFC1B	800 mA

Local I/O Performance - 1769 Packaged CompactLogix L23 Controllers

The requested packet interval (RPI) defines the frequency at which the controller sends and receives all I/O data on the backplane. The default RPI is 5 ms. The combination of embedded I/O in the packaged controllers determines the fastest RPI that you can configure.

Controller	Guideline
1769-L23E-QB1B	1...4 modules can be scanned in 1.0 ms
1769-L23E-QBFC1B 1769-L23-QBFC1B	1...4 modules can be scanned in 1.5 ms 5...6 modules can be scanned in 2.0 ms

You can always select an RPI that is slower than listed previously. These considerations show how fast modules can be scanned—not how fast an application can use the data. The RPI is asynchronous to the program scan. Other factors, such as program execution duration, affect I/O throughput.

Certifications - 1769 Packaged CompactLogix Controllers

Certification(1)	1769-L23-QBFC1B, 1769-L23E-QB1B, 1769-L23E-QBFC1B
c-UL-us	UL Listed Industrial Control Equipment, certified for US and Canada. See UL File E65584. UL Listed for Class I, Division 2 Group A,B,C,D Hazardous Locations, certified for U.S. and Canada. See UL File E194810.
CE	European Union 2004/108/EC EMC Directive, compliant with: EN 61326-1; Meas./Control/Lab., Industrial Requirements EN 61000-6-2; Industrial Immunity EN 61000-6-4; Industrial Emissions EN 61131-2; Programmable Controllers (Clause 8, Zone A & B)
RCM	Australian Radiocommunications Act, compliant with: AS/NZS CISPR 11; Industrial Emissions
EtherNet/IP	ODVA conformance tested to EtherNet/IP specifications
KC	Korean Registration of Broadcasting and Communications Equipment, compliant with: Article 58-2 of Radio Waves Act, Clause 3

(1) When marked. see the Product Certification link at rok.auto/certifications for Declarations of Conformity, Certificates, and other certification details.

DRAFT

Environmental Specifications - CompactLogix 5370 Controllers and Compact GuardLogix 5370 Controllers

Attribute	1769-L23-QBFC1B, 1769-L23E-QB1B, 1769-L23E-QBFC1B
Temperature, operating IEC 60068-2-1 (Test Ad, Operating Cold), IEC 60068-2-2 (Test Bd, Operating Dry Heat), IEC 60068-2-14 (Test Na, Operating Thermal Shock)	0...60 °C (32...140 °F)
Temperature, storage IEC 60068-2-1 (Test Ab, Unpackaged Nonoperating Cold), IEC 60068-2-2 (Test Bb, Unpackaged Nonoperating Dry Heat), IEC 60068-2-14 (Test Na, Unpackaged Nonoperating Thermal Shock)	-40...+85 °C (-40...+185 °F)
Temperature, surrounding air, max	60 °C (140 °F)
Relative humidity IEC 60068-2-30 (Test Db, Unpackaged Damp Heat)	5...95% noncondensing
Vibration IEC 60068-2-6 (Test Fc, Operating)	5 g @ 10...500 Hz
Shock, operating IEC 60068-2-27 (Test Ea, Unpackaged Shock)	20 g - DIN rail 30 g - Panel
Shock, nonoperating IEC 60068-2-27 (Test Ea, Unpackaged Shock)	30 g - DIN rail 40 g - Panel
Emissions CISPR 11	IEC 61000-6-4
ESD immunity IEC 61000-4-2	4 kV contact discharges 8 kV air discharges
Radiated RF immunity IEC 61000-4-3	10V/m with 200 Hz 50% Pulse 100% AM at 900 MHz 10V/m with 200 Hz 50% Pulse 100% AM at 1890 MHz 10V/m with 1 kHz sine wave 80% AM from 80...2000 MHz 10V/m with 1 kHz sine wave 80% AM from 2000...2700 MHz
EFT/B immunity IEC 61000-4-4	±2 kV at 5 kHz on power ports ±2 kV at 5 kHz on signal ports ±2 kV at 5 kHz on communication ports
Surge transient immunity IEC 61000-4-5	±1 kV line-line (DM) and ±2 kV line-earth (CM) on power ports ±1 kV line-line (DM) and ±2 kV line-earth (CM) on signal ports ±2 kV line-earth (CM) on shielded ports ±2 kV line-earth (CM) on communication ports
Conducted RF immunity IEC 61000-4-6	10V rms with 1 kHz sine wave 80% AM from 150 kHz...80 MHz

Technical Specifications - 1769 Packaged CompactLogix Controllers

Attribute	1769-L23E-QB1B	1769-L23E-QBFC1B	1769-L23-QBFC1B
User memory	512 KB		
Optional nonvolatile memory	None		
Number of expansion I/O modules, max	3 (limited by current draw of module)	2 (limited by current draw of module)	2 (limited by current draw of module)
Replacement battery	1769-BA		
Current draw @ 5V DC	1000 mA	450 mA	800 mA
Current draw @ 24V DC	700 mA	500 mA	600 mA
Power dissipation	7.01 W	13.58 W	10.73 W
Isolation voltage	30V (continuous), basic insulation type Type tested at 710V DC for 60 s; RS-232 to system backplane, Ethernet to system backplane, and RS-232 to Ethernet		30V (continuous), basic insulation type Type tested at 710V DC for 60 s; RS-232 channel 0 to system backplane, no isolation between RS-232 channel 1 and system
Serial communication ports	CH0 - RS-232 DF1, DH-485, ASCII Fully isolated 38.4 Kbps max		CH0 - RS-232 DF1, DH-485, ASCII Fully isolated 38.4 Kbps max CH1 - RS-232 DF1, DH-485 Nonisolated 38.4 Kbps max
Serial cables	1756-CP3 or 1747-CP3, right angle connector to controller, straight to serial port, 3 m (9.84 ft)		
Weight, approx	0.91 kg (2 lb)	1.22 kg (2.7 lb)	1.22 kg (2.7 lb)
Slot width	1		
Module location	DIN rail or panel mount		
Mounting screw torque	1.1...1.8 N•m (10...16 lb•in) - use M4 or #8 screws		
Wire category[1]	2 - on signal ports 2 - on power ports 2 - on communication ports		
Wire type, Ethernet	RJ45 connector according to IEC 60603-7, 2 or 4 pair Category 5e minimum cable according to TIA 568-B.1 or Category 5 cable according to ISO/IEC 24702	–	
Wire size, DC power	0.25...2.5 mm^2 (22...14 AWG) solid or stranded copper wire rated at 75 °C (167 °F) or greater, 1.2 mm (3/64 in.) insulation max		
Wire size, digital I/O connections	0.5...0.8 mm^2 (20...18 AWG) solid or stranded copper wire rated at 75 °C (167 °F) or greater, 1.2 mm (3/64 in.) insulation max		
Wire size, embedded analog and high-speed counter module connections	0.5...0.8 mm^2 (20...18 AWG) solid or stranded shielded copper wire rated at 75 °C (167 °F) or greater, 1.2 mm (3/64 in.) insulation max		
North American temperature code	T3C		
Enclosure type rating	None (open-style)		

(1) Use this conductor category information to plan conductor routing. See the Industrial Automation Wiring and Grounding Guidelines, publication 1770-4.1.

DRAFT

Embedded DC Input Specifications

Attribute	1769-L23E-QB1B, 1769-L23E-QBFC1B, 1769-L23-QBFC1B
Inputs	16 (8 points/group)
Voltage category	24V DC sink/source
Operating voltage range	10...30V DC @ 30 °C (86 °F) 10...26.4V DC @ 60 °C (140 °F)
Digital filter, off to on	0 s, 100 µs, 500 µs, 1 ms, 2 ms
Input delay, off to on	100 µs (typical), 300 µs (max)
Digital filter, on to off	0 s, 100 µs, 500 µs, 1 ms, 2 ms
Input delay, on to off	250 µs (typical), 1 ms (max)
Off-state voltage, max	5V DC
Off-state current, max	1.5 mA
On-state current, min	2 mA @ 10V DC
Inrush current, max	250 mA
Input impedance, max	3 kΩ
Cyclic update time	100 µs...750 ms
Isolation voltage	75V (continuous), basic insulation type Type tested at 1200V AC for 60 s; inputs to system backplane and input group to input group
IEC input compatibility	Type 3
Isolated groups	Group 1: inputs 0...7 Group 2: inputs 8...15 Isolated groups operate in either sink or source configurations

Embedded DC Output Specifications

Attribute	1769-L23E-QB1B, 1769-L23E-QBFC1B, 1769-L23-QBFC1B
Outputs	16
Voltage category	24V DC source
Operating voltage range	20.4...26.4V DC
Output delay, off to on	0.1 ms
Output delay, on to off	1.0 ms
Off-state leakage current, max	1.0 mA @ 26.4V DC
On-state current, min	1.0 mA
On-state voltage drop, max	1.0V DC @ 1.0 A
Current per point, max	0.5 A @ 60 °C (140 °F) 1.0 A @ 30 °C (86 °F) Also see the derating graphs
Current per module, max	4.0 A @ 60 °C (140 °F) 8.0 A @ 30 °C (86 °F) Also see the derating graphs on page 31
Surge current per point	2 A for 10 ms per point, repeatable every 2 s
Load current, min	3 mA per point
Isolation voltage	75V (continuous), basic insulation type Type tested at 1200V AC for 60 s; outputs to system backplane
Isolated groups	Group 1: Outputs 0...15 (internally connected to common)
Pilot duty rating	0.5 A, 24V DC @ 60 °C (140 °F) 1.0 A, 24V DC @ 30 °C (86 °F)

Embedded DC Output Temperature Derating

Maximum Amperes Per Point Versus Temperature

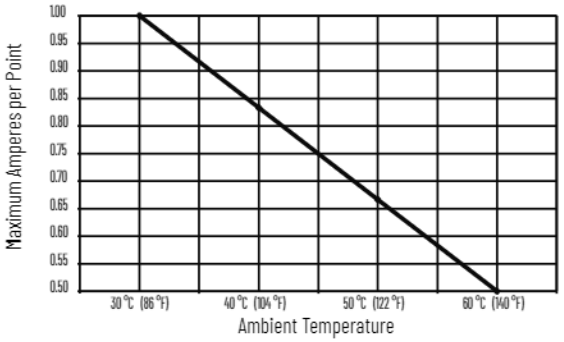

Maximum Amperes Per Module Versus Temperature

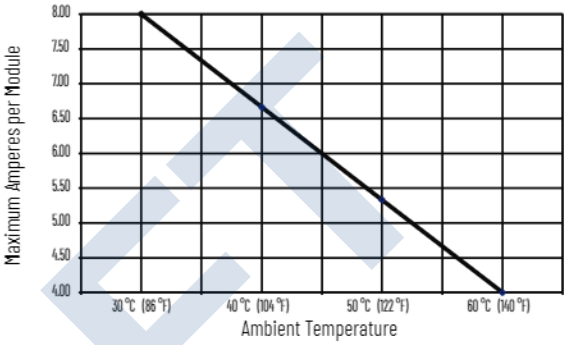

Embedded Analog Input Specifications

Attribute	1769-L23E-QB1B, 1769-L23E-QBFC1B, 1769-L23-QBFC1B
Inputs	4 differential or single-ended
Input range	0...10.5V 0...21 mA
Resolution	8 bits plus sign (sign is always positive).
Input impedance	Voltage: 150 kΩ nom Current: 150 Ω nom
Converter type	Successive approximation
Response speed per channel	5 ms
Rated working voltage	30V AC/30V DC
Common mode voltage	10V DC max per channel
Common mode rejection	Greater than 60 dB at 60 Hz at 10V between inputs and analog common
Normal mode rejection ratio	None
Accuracy, overall at 25 °C (77 °F)(1)	Voltage: ±0.7% full-scale, Current: ±0.6% full-scale
Accuracy, overall at 0...60 °C (32...140 °F)	Voltage: ±0.9% full-scale, Current: ±0.8% full-scale
Accuracy drift	Voltage: ±0.006% per °C, Current: ±0.006% per °C
Calibration	Not required; components provide accuracy
Non-linearity (in percent full-scale)	±0.4%
Repeatability	±0.4%
Overload at input terminals, max	Voltage: 20V continuous, 0.1 mA Current: 32 mA continuous, +5V DC
Channel diagnostics	Overrange by bit reporting
Isolation voltage	30V (continuous), basic insulation type Type tested at 500V AC for 60 s; inputs to system backplane and outputs to system backplane

(1) Includes offset, gain, non-linearity, and repeatability error terms.

DRAFT

Embedded Analog Output Specifications

Attribute	1769-L23E-QB1B, 1769-L23E-QBFC1B, 1769-L23-QBFC1B
Outputs	2 single-ended
Output range	0...10.5V 0...21 mA
Converter type	Resistor string
Resolution, max	8 bits plus sign (sign is always positive, Bit 15 = 0)
Response speed per channel	0.3 ms for rated resistance and rated inductance 3.0 ms for rated capacitance
Current load on voltage output	10 mA max
Resistive load on current output	0...300 Ω (includes wire resistance)
Load range on voltage output	> 1 kΩ at 10V DC
Inductive load, max (current outputs)	0.1 mH
Capacitive load, max (voltage outputs)	1 µF
Accuracy, overall at 25 °C (77 °F)(1)	Voltage: ±0.5% full-scale Current: ±0.5% full-scale
Accuracy, overall at 0...60 °C (32...140 °F)	Voltage: ±0.6% full-scale Current: ±1.0% full-scale
Accuracy drift with temperature	Voltage: ±0.01% full-scale per °C Current: ±0.01% full-scale per °C
Output ripple range 0...50 kHz (referred to output range)	±0.05%
Non-linearity	±0.4% (in percent full-scale)
Repeatability	±0.05% (in percent full-scale)
Output impedance	10 Ω nom
Open and short circuit protection	Yes
Short circuit, max	Current: 40 mA
Open circuit, max	Voltage: 15V
Output response at system power-up and powerdown	+2.0...-1.0V DC spike for less than 6 ms
Isolation voltage	30V (continuous), basic insulation type Type tested at 500V AC for 60 s; inputs to system backplane and outputs to system backplane

(1) Includes offset, gain, drift, non-linearity, and repeatability error terms.

Embedded HSC Module Input Specifications

Attribute	1769-L23E-QB1B, 1769-L23E-QBFC1B, 1769-L23-QBFC1B
Input frequency, max	250 kHz
Input current, max	15 mA
Input current, min	6.8 mA
Input voltage range	-30...+30V DC(1)
On-state voltage range	2.6...30V DC
On-state current, min	6.8 mA
Off-state voltage, max	1.0V DC
Off-state current, max	1.5 mA
Off-state leakage current, max	1.5 mA
Input impedance, nom	1950 Ω
Pulse width, min	2.5 µs
Phase separation, min	1.084 µs
Isolation voltage	75V (continuous), basic insulation type Type tested at 1200V AC for 60 s; inputs to system backplane and input to input

(1) See Embedded HSC Module Temperature Derating temperature derating.

Embedded HSC Module Output Specifications

Attribute	1769-L23E-QB1B, 1769-L23E-QBFC1B, 1769-L23-QBFC1B
Output voltage range	5...30V DC
On-state voltage, max	User power - 0.1V DC
On-state output current, max	1 A per point
	4 A per module
On-state output current, min	1 mA
On-state voltage drop, max	0.5V DC
Off-state leakage current, max	5 µA
Turn-on time, max	400 µs
Turn-off time, max	200 µs
Reverse polarity protection	30V DC
Isolation voltage	75V (continuous), basic insulation type Type tested at 1200V AC for 60 s; inputs to system backplane and input to input

DRAFT

Embedded HSC Module Temperature Derating

Maximum Input Voltage - 24V DC Operation

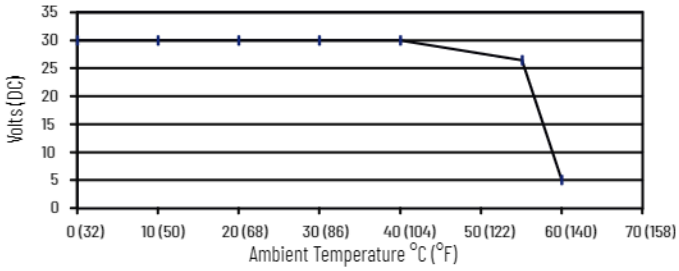

Temperature	Derated Voltage[1]
0...40 °C (32...104 °F)	30V DC
55 °C (131 °F)	26.4V DC
60 °C (140 °F)	5V DC

(1) You achieve an input voltage derating 55...60 °C (131...140 °F) by using a drop resistor.
For 24V DC input voltage, use a 2.4 kΩ, 1/2 Watt resistor.
For input voltages other than 24V DC, use a 1/2 W resistor with value: 125 x (V_{in} - 5V).

Maximum Output Current Per Module - 5V DC Operation

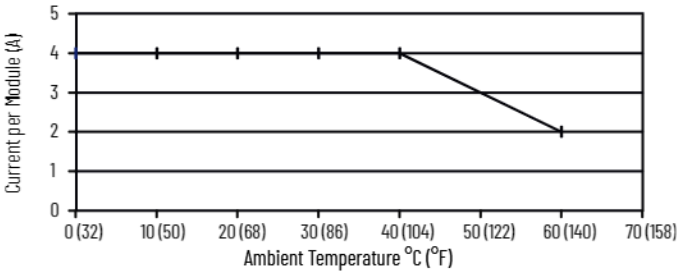

Temperature	Derated Current
0...40 °C (32...104 °F)	4 A
60 °C (140 °F)	2 A

Maximum Output Voltage - 24V DC Operation

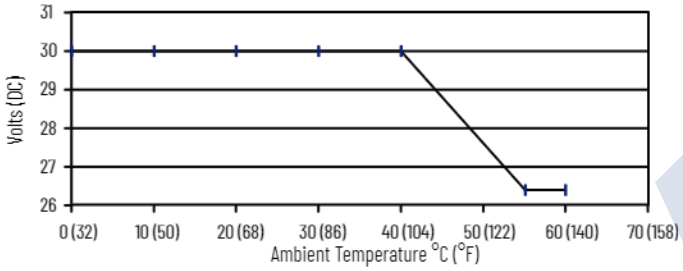

Temperature	Derated Voltage
0...40 °C (32...104 °F)	30V DC
55...60 °C (131...140 °F)	26.4V DC

Maximum Output Current Per Point - 24V DC Operation

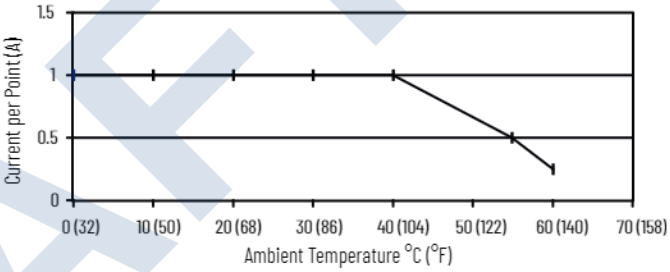

Temperature	Derated Current
0...40 °C (32...104 °F)	1 A
55 °C (131 °F)	0.5 A
60 °C (140 °F)	0.25 A

Maximum Output Current Per Point - 5V DC Operation

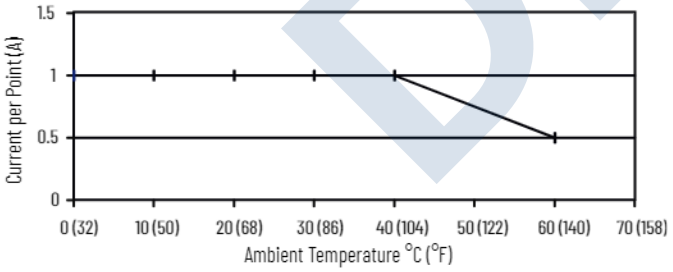

Temperature	Derated Current
0...40 °C (32...104 °F)	1 A
60 °C (140 °F)	0.5 A

Maximum Output Current Per Module - 5V DC Operation

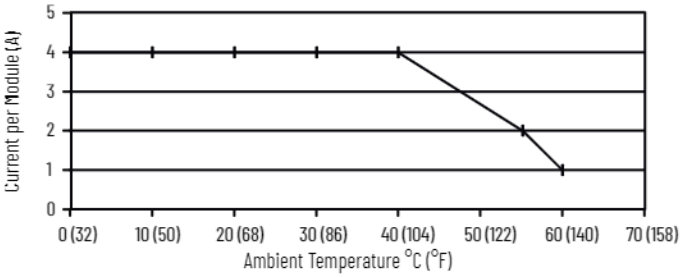

Temperature	Derated Current
0...40 °C (32...104 °F)	4 A
55 °C (131 °F)	2 A
60 °C (140 °F)	1 A

DRAFT

Embedded Power Supply

Attribute	1769-L23E-QB1B, 1769-L23E-QBFC1B, 1769-L23-QBFC1B
Input voltage range	19.2...31.2V DC
Input voltage, nom	24V AC
Line requirement, max	50VA at 24V DC
Available 5V DC bus current	1769-L23E-QB1B: 1 A (1000 mA) 1769-L23E-QBFC1B: 450 mA 1769-L23-QBFC1B: 800 mA
Inrush, max	30 A @ 31.2V DC
Line loss ride-through	10 ms...10 s
Output bus current capacity 0...55 °C (32...131 °F) 55...60 °C (131...140 °F)	2 A @ 5V DC 0.8 A @ 24V DC See temperature derating graphs
Load current, min	0 mA @ 5V DC 0 mA @ 24V DC
Short circuit protection	Front access fuse Replacement part number: Wickmann 19193-6.3A
Overvoltage protection	Yes
Isolation voltage	75V (continuous), basic insulation type Type tested at 1200V AC for 60 s; power to system backplane

Embedded Power Supply Temperature Derating

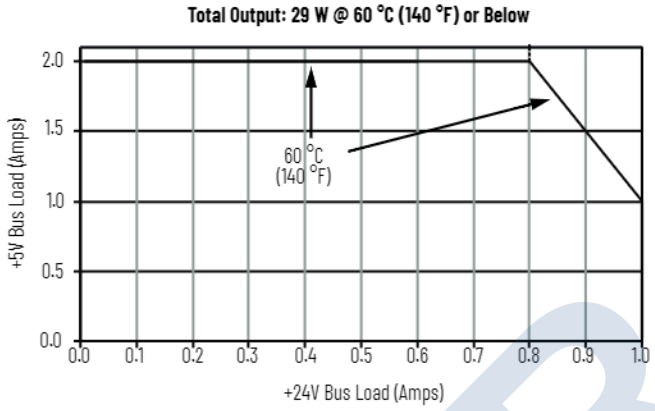

Minimum Spacing Requirements - 1769 Packaged CompactLogix Controllers

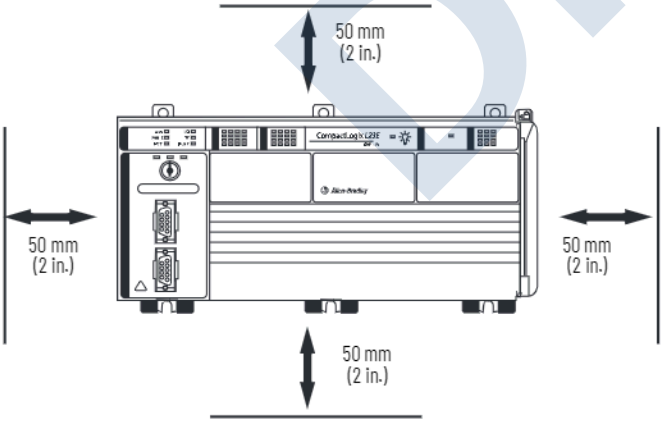

Dimensions - 1769 Packaged CompactLogix Controllers

1769-L23E-QB1B

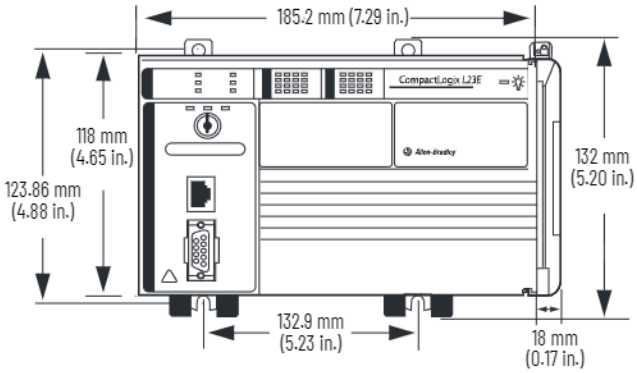

1769-L23E-QBFC1B

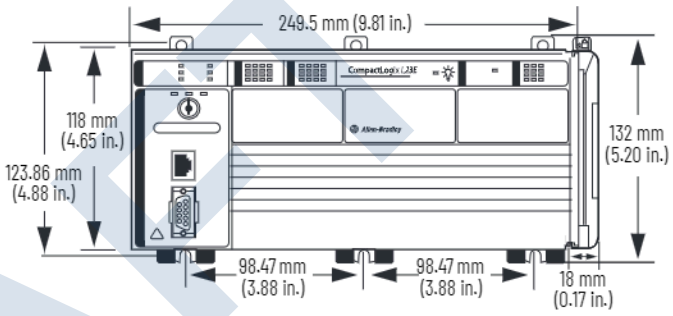

1769-L23-QBFC1B

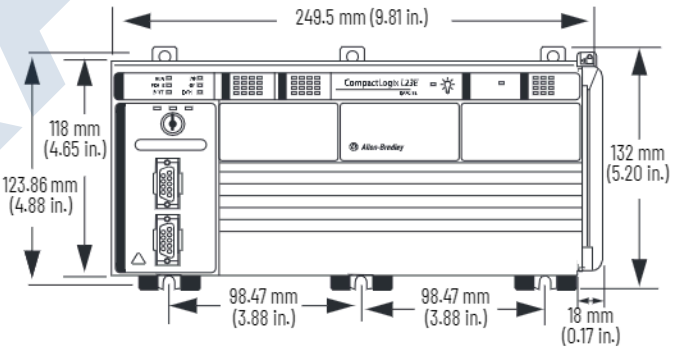

DRAFT

1769 Modular CompactLogix Controllers

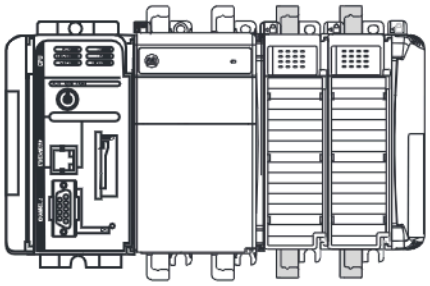

In a 1769-L3*x* controller system, the 1769 I/O modules can be placed to the left and the right of the power supply. As many as eight modules can be placed on each side of the power supply.

Features - 1769 Modular CompactLogix Controllers

Characteristic	1769-L31	1769-L32C	1769-L32E, 1769-L32EK	1769-L35CR	1769-L35E
Available user memory	512 KB	750 KB		1.5 MB	
CompactFlash card	1784-CF128				
Communication ports	2 RS-232 ports (isolated DF1 or ASCII; only nonisolated DF1)	1 ControlNet port	1 Ethernet port	1 ControlNet port	1 Ethernet port
		1 RS-232 serial port (DF1 or ASCII)			
Module expansion capacity	16 1769 modules			30 1769 modules	
Power supply distance rating	4 modules				

The CompactLogix controller has a power supply distance-rating of four modules. The controller must be the leftmost module in the first bank of the system. The maximum configuration for the first bank of a CompactLogix controller includes the following:

- The controller
- Three I/O modules to the left of the power supply
- Eight I/O modules to the right of the power supply

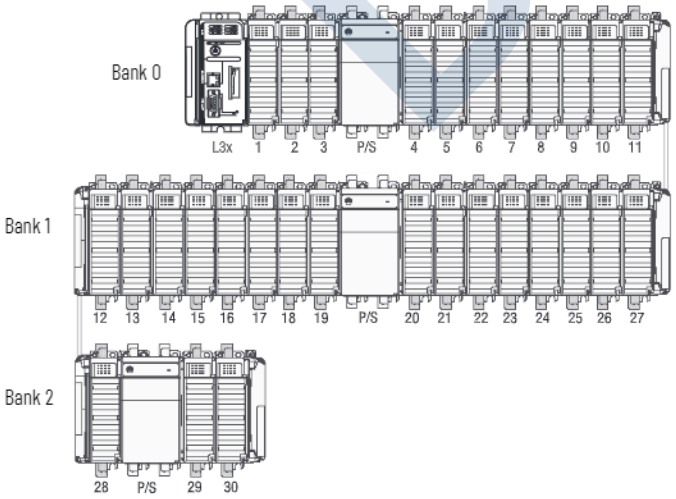

Local I/O Performance - 1769 CompactLogix L3 *Controllers*

You can configure an individual RPI for each local 1769 Compact I/O module. The RPI defines the frequency at which the controller sends and receives all I/O data on the backplane.

Type of Module	Guideline
Digital and analog (any mix)	1...4 modules can be scanned in 1 ms 5...30 modules can be scanned in 2 ms Some input modules have a fixed 8 ms filter, so selection of a faster RPI has no effect
Specialty	Full-sized 1769-SDN modules add 2 ms per module 1769-HSC modules add 1 ms per module Full-sized 1769-ASCII modules add 1 ms per module

You can always select an RPI that is slower than listed previously. These considerations show how fast modules can be scanned—not how fast an application can use the data. The RPI is asynchronous to the program scan. Other factors, such as program execution duration, affect I/O throughput.

Certifications - 1769 Modular CompactLogix Controllers

Certification(1)	1769-L31	1769-L32C 1769-L35CR	1769-L32E, 1769-L32EK 1769-L35E
c-UL-us	UL Listed Industrial Control Equipment, certified for US and Canada. See UL File E65584. UL Listed for Class I, Division 2 Group A,B,C,D Hazardous Locations, certified for U.S. and Canada. See UL File E194810.		
CE	European Union 2004/108/EC EMC Directive, compliant with: EN 61000-6-2; Industrial Immunity EN 61000-6-4; Industrial Emissions		
	EN 61326-1; Meas./Control/Lab., Industrial Requirements EN 61131-2; Programmable Controllers (Clause 8, Zone A & B)		–
RCM	Australian Radiocommunications Act, compliant with: AS/NZS CISPR 11; Industrial Emissions		
EX	–		European Union 94/9/EC ATEX Directive, compliant with: EN 60079-15; Potentially Explosive Atmospheres, Protection 'n' EN 60079-0; General Requirements (Zone 2) II 3 G Ex nA IIC T4 Gc
ODVA	–	ControlNet International conformance tested to ControlNet specifications	ODVA conformance tested to EtherNet/IP specifications.
KC	Korean Registration of Broadcasting and Communications Equipment, compliant with: Article 58-2 of Radio Waves Act, Clause 3		

(1) When marked. See the Product Certification link at rok.auto/certifications for Declarations of Conformity, Certificates, and other certification details.

DRAFT

Environmental Specifications - 1769 Modular CompactLogix Controllers

Attribute	1769-L31	1769-L32C 1769-L35CR	1769-L32E, 1769-L32EK 1769-L35E
Temperature, operating IEC 60068-2-1 (Test Ad, Operating Cold), IEC 60068-2-2 (Test Bd, Operating Dry Heat), IEC 60068-2-14 (Test Na, Operating Thermal Shock)	0...60 °C (32...140 °F)		
Temperature, storage IEC 60068-2-1 (Test Ab, Unpackaged Nonoperating Cold), IEC 60068-2-2 (Test Bb, Unpackaged Nonoperating Dry Heat), IEC 60068-2-14 (Test Na, Unpackaged Nonoperating Thermal Shock)	-40...+85 °C (-40...+185 °F)		
Temperature, surrounding air, max	60 °C (140 °F)		
Relative humidity IEC 60068-2-30 (Test Db, Unpackaged Damp Heat)	5...95% noncondensing		
Vibration IEC 60068-2-6 (Test Fc, Operating)	5 g @ 10...500 Hz		
Shock, operating IEC 60068-2-27 (Test Ea, Unpackaged Shock)	20 g - DIN rail 30 g - Panel		
Shock, nonoperating IEC 60068-2-27 (Test Ea, Unpackaged Shock)	30 g - DIN rail 40 g - Panel		
Emissions CISPR 11	IEC 61000-6-4		
ESD immunity IEC 61000-4-2	6 kV contact discharges 8 kV air discharges		
Radiated RF immunity IEC 61000-4-3	10V/m with 1 kHz sine wave 80% AM from 80...2000 MHz 10V/m with 200 Hz 50% Pulse 100% AM @ 900 MHz 10V/m with 200 Hz 50% Pulse 100% AM @ 1890 MHz		
	-		3V/m with 1 kHz sine wave 80% AM from 2000...2700 MHz
EFT/B immunity IEC 61000-4-4	±2 kV at 5 kHz on communication ports		±3 kV at 5 kHz on power ports ±3 kV at 5 kHz on communication ports
Surge transient immunity IEC 61000-4-5	Channel 0: ±2 kV line-earth (CM) on shielded ports Channel 1: ±1 kV line-earth (CM) on shielded ports	±2 kV line-earth (CM) on communication ports	
Conducted RF immunity IEC 61000-4-6	10V rms with 1 kHz sine wave 80% AM from 150 kHz...80 MHz		

Technical Specifications - 1769 Modular CompactLogix Controllers

Attribute	1769-L31	1769-L32E, 1769-L32EK	1769-L32C	1769-L35CR	1769-L35E
User memory	512 KB	750 KB		1.5 MB	
Optional nonvolatile memory	1784-CF128				
Number of I/O modules, max	16			30	
Number of I/O banks, max	3				
Number of expansion I/O modules, max	16 - 1769 modules			30 - 1769 modules	
Replacement battery	1769-BA				
Current draw @ 5V DC	330 mA	660 mA	650 mA	680 mA	660 mA
Current draw @ 24V DC	40 mA	90 mA	40 mA		90 mA
Power dissipation	2.61 W	5.5 W	4.21 W	4.36 W	5.5 W
Isolation voltage	30V (continuous), basic insulation type Type tested at 710V DC for 60 s				
	RS-232 channel 0 to system No isolation between RS-232 channel 1 and system	RS-232 to system, Ethernet to system, RS-232 to Ethernet	RS-232 to system, ControlNet to system, RS-232 to ControlNet, ControlNet channel A to ControlNet channel B		RS-232 to system, Ethernet to system, RS-232 to Ethernet
Communication ports	CH0 - RS-232 DF1, DH-485, ASCII Fully isolated 38.4 Kbps max CH1 - RS-232 DF1, DH-485 Nonisolated 38.4 Kbps max	RS-232 Fully isolated 38.4 Kbps max Ethernet port 10/100 BASE-T	RS-232 Fully isolated 38.4 Kbps max ControlNet port		RS-232 Fully isolated 38.4 Kbps max Ethernet port 10/100 BASE-T
Serial cables	1756-CP3 or 1747-CP3, right angle connector to controller, straight to serial port, 3 m				
Weight, approx	0.30 kg (0.66 lb)		0.32 kg (0.70 lb)		0.30 kg (0.66 lb)
Slot width	1				
Module location	DIN rail or panel mount				
Panel-mount screw torque	1.1...1.8 N•m (10...16 lb•in) - use M4 or #8 screws				
Power supply distance rating	4 modules				
Power supply	1769-PA2, 1769-PB2, 1769-PA4, 1769-PB4				
Wire category[1]	2 - on communication ports				
North American temp code	T5	T4A			
IEC temp code	–	T4	-		T4
Enclosure type rating	None (open-style)				

(1) Use this conductor category information to plan conductor routing. See the Industrial Automation Wiring and Grounding Guidelines, publication 1770-4.1.

DRAFT

Real-time Clock Accuracy

This table lists the real-time clock accuracy specifications for the 1769 Modular CompactLogix controllers.

Ambient Temperature	Accuracy
0 °C (32 °F)	+54...-56 s/mo
25 °C (77 °F)	+9...-124 s/mo
40 °C (104 °F)	-84...-234 s/mo
55 °C (131 °F)	-228...-394 s/mo
60 °C (140 °F)	-287...-459 s/mo

Minimum Spacing Requirements - 1769 Modular CompactLogix Controllers

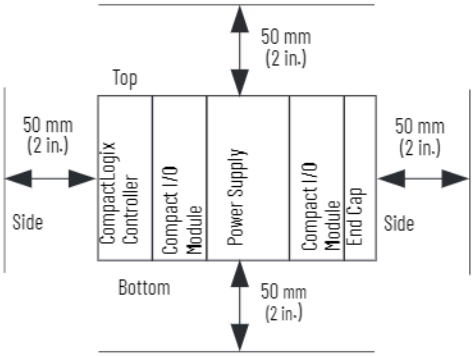

Dimensions - 1769 Modular CompactLogix Controllers

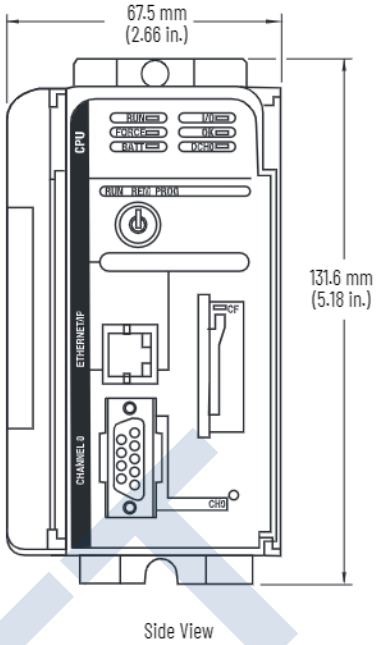

Side View

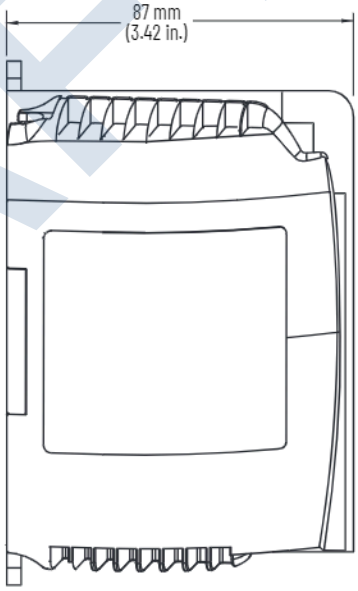

DRAFT

1768 CompactLogix Controllers

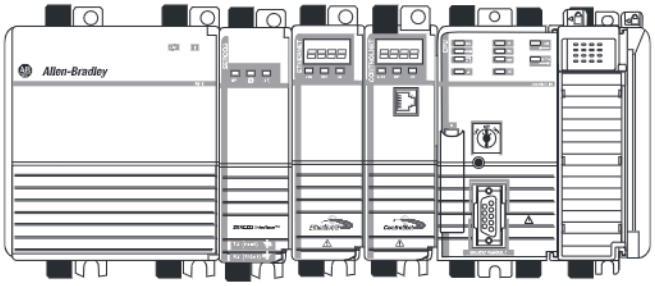

The 1768-L4*x* controller combines both a 1768 backplane and a 1769 backplane. The 1768 backplane supports the 1768 controller, the 1768 power supply, and a maximum of four 1768 modules. The 1769 backplane supports 1769 modules.

Features - 1768 CompactLogix Controllers

Characteristic	1768-L43	1768-L45	1768-L43S	1768-L45S
Available user memory	2 MB	3 MB	2 MB standard 0.5 MB safety	3 MB standard 1 MB safety
CompactFlash card	1784-CF128			
Communication options	EtherNet/IP (standard and safety) ControlNet (standard and safety) DeviceNet (standard)			
Serial communication port	1 RS-232 port			
Module expansion capacity	Two 1768 modules Sixteen 1769 modules			
Power supply distance rating	-			
Programming languages	Relay ladder Structured Text Function block Sequential Function Chart		Standard task: all languages Safety task: relay ladder, safety application instructions	

Compact GuardLogix Safety System

The Compact GuardLogix controller is a 1768-L4xS CompactLogix controller that provides safety control to achieve SIL 3/PLe according to ISO 13849. A major benefit of this system is that it's still one project; safety and standard control together. See page 3 for more information on how to develop projects with Compact GuardLogix controllers.

Placement - 1768 CompactLogix L4 Controllers

In a 1768-L4*x* controller system, place 1768 modules between the power supply and the controller.

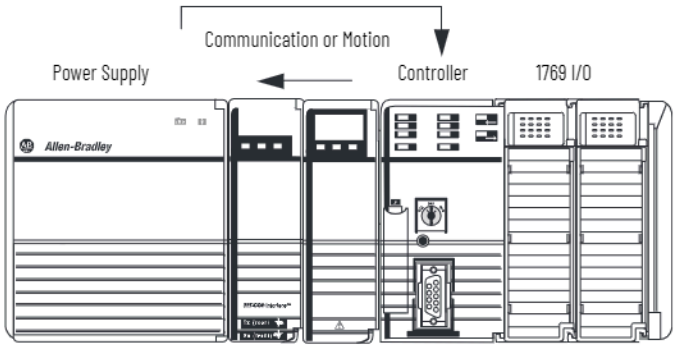

Place the 1769 modules to the right of the 1768 backplane:

- As many as eight 1769 modules can be attached to the right of the 1768 system.
- The 1769 I/O connected directly to the 1768 backplane does not need a 1769 power supply.
- Additional 1769 modules must be in additional I/O banks.
- Each additional I/O bank must have its own 1769 power supply.

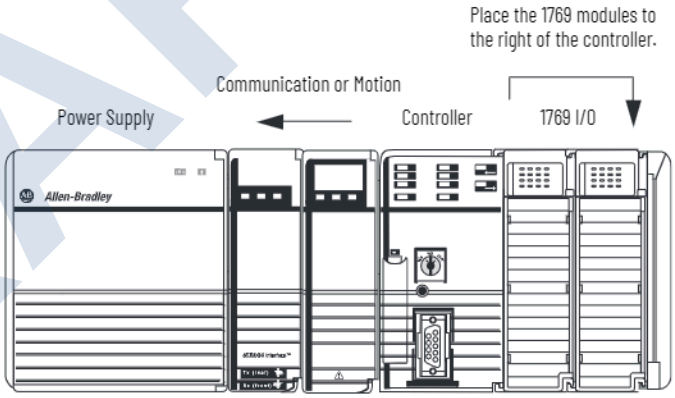

Local I/O Performance - 1768 CompactLogix L4 Controllers

Configure an individual RPI for each local 1769 Compact I/O module. Use the default RPI numbers that the programming software automatically assigns or select faster RPI values as fast as 1 ms. I/O module update times do not affect overall 1768 bus performance in the following situations:

- Use faster RPI values for time critical I/O without impacting overall 1769 Compact I/O performance.
- Use Immediate Output (IOT) instructions for further reduction in I/O module update times.

DRAFT

Certifications - 1768 CompactLogix Controllers

Certification[1]	1768-L43 1768-L45	1768-L43S 1768-L45S
c-UL-us	UL Listed Industrial Control Equipment, certified for US and Canada. See UL File E65584. UL Listed for Class I, Division 2 Group A,B,C,D Hazardous Locations, certified for U.S. and Canada. See UL File E194810.	
CE	European Union 2004/108/EC EMC Directive, compliant with: EN 61326-1; Meas./Control/Lab., Industrial Requirements EN 61000-6-2; Industrial Immunity EN 61000-6-4; Industrial Emissions EN 61131-2; Programmable Controllers (Clause 8, Zone A & B)	
		European Union 2006/42/EC MD, compliant with: EN 60204-1; Electrical equipment of machines EN ISO 13849-1; Safety-related parts of control systems EN 62061; Functional safety of safety-related control systems
RCM	Australian Radiocommunications Act, compliant with: AS/NZS CISPR 11; Industrial Emissions	
Ex	-	European Union 94/9/EC ATEX Directive, compliant with: EN 60079-15; Potentially Explosive Atmospheres, Protection 'n' EN60079-0; General Requirements II 3 G Ex nA nL IIC T4 Gc
KC	Korean Registration of Broadcasting and Communications Equipment, compliant with: Article 58-2 of Radio Waves Act, Clause 3	
Functional Safety[2]	-	Certified by TÜV: capable of SIL 1 to 3, according to IEC 61508; and PLe/Cat. 4 according to ISO 13849-1

(1) When marked. See the Product Certification link at rok/auto/certifications for Declarations of Conformity, Certificates, and other certification details.
(2) When used with specified programming software versions.

Environmental Specifications - 1768 CompactLogix Controllers

Attribute	1768-L43, 1768-L43S, 1768-L45, 1768-L45S
Temperature, operating IEC 60068-2-1 (Test Ad, Operating Cold) IEC 60068-2-2 (Test Bd, Operating Dry Heat) IEC 60068-2-14 (Test Na, Operating Thermal Shock)	0...60 °C (32...140 °F)
Temperature, storage IEC 60068-2-1 (Test Ab, Unpackaged Nonoperating Cold), IEC 60068-2-2 (Test Bb, Unpackaged Nonoperating Dry Heat), IEC 60068-2-14 (Test Na, Unpackaged Nonoperating Thermal Shock)	-40...+85 °C (-40...+185 °F)
Temperature, surrounding air, max	60 °C (140 °F)
Relative humidity IEC 60068-2-30 (Test Db, Unpackaged Damp Heat)	5...95% noncondensing
Vibration IEC 60068-2-6 (Test Fc, Operating)	5 g @ 10...500 Hz
Shock, operating IEC 60068-2-27 (Test Ea, Unpackaged Shock)	30 g
Shock, nonoperating IEC 60068-2-27 (Test Ea, Unpackaged Shock)	50 g
Emissions CISPR 11	IEC 61000-6-4
ESD immunity IEC 61000-4-2	6 kV contact discharges 8 kV air discharges
Radiated RF immunity IEC 61000-4-3	10V/m with 1 kHz sine wave 80% AM from 80...2000 MHz 10V/m with 200 Hz 50% Pulse 100% AM @ 900 MHz 10V/m with 200 Hz 50% Pulse 100% AM @ 1890 MHz 3V/m with 1 kHz sine wave 80% AM from 2000...2700 MHz

Environmental Specifications - 1768 CompactLogix Controllers

Attribute	1768-L43, 1768-L43S, 1768-L45, 1768-L45S
EFT/B immunity IEC 61000-4-4	±4 kV at 5 kHz on communication ports
Surge transient immunity IEC 61000-4-5	±2 kV line-earth (CM) on communication ports
Conducted RF immunity IEC 61000-4-6	10V rms with 1 kHz sine wave 80% AM from 150 kHz...80 MHz

Technical Specifications - 1768 CompactLogix Controllers

Attribute	1768-L43	1768-L43S	1768-L45	1768-L45S
User memory	2 MB	2 MB standard 0.5 MB safety	3 MB	3 MB standard 1 MB safety
Optional nonvolatile memory	1784-CF128			
Number of 1768 modules, max	2		4	
Number of 1768 communication modules, max	2			
Number of 1768 motion modules, max	2		4	
Number of 1769 I/O modules, max	16		30	
Number of I/O banks, max	2		3	
Replacement battery	–			
Backplane current draw @ 24V DC	1.3 A	1.4 A	2.0 A	2.1 A
1768 current draw @ 5V DC	2.8 A		5.6 A	
1769 current draw @ 5V DC	2.0 A		2.0 A	
Total 1768 and 1769 current draw @ 5V DC	4.8 A		7.6 A	
Power dissipation	6.3 W	7.5 W	8.3 W	9.5 W
Power consumption	31.3 W	33.6 W	48.0 W	50.4 W
Isolation voltage	30V (continuous), functional insulation type Type tested at 500V AC for 60 s; RS-232 to system			
Communication ports	RS-232 Fully isolated, 38.4 Kbps max			
Serial cables	1756-CP3 or 1747-CP3, right angle connector to controller, straight to serial port, 3 m			
Weight, approx	0.34 kg (11.99 oz)	0.45 kg (15.9 oz)	0.34 kg (11.99 oz)	0.45 kg (15.9 oz)
Dimensions (HxWxD)	131.1 x 56.4 x 121.1 mm (5.18 x 2.22 x 4.81 in.)	131.6 x 89.6 x 122.1 mm (5.18 x 3.53 x 4.81 in.)	131.1 x 56.4 x 121.1 mm (5.18 x 2.22 x 4.81 in.)	131.6 x 89.6 x 122.1 mm (5.18 x 3.53 x 4.81 in.)
Slot width	1	1.5	1	1.5
Module location	DIN rail or panel mount			
Panel-mount screw torque	1.16 N•m (10 lb•in) - use M4 or #8 screws			
Power supply distance rating	4 modules			
Power supply	1768-PA3, 1768-PB3			
Wire category[1]	2 - on communication ports			
IEC temperature code	–	T4	–	T4
North American temperature code	T4			
Enclosure type rating	None (open-style)			

(1) Use this conductor category information to plan conductor routing as described in the system-level installation manual. See the Industrial Automation Wiring and Grounding Guidelines, publication 1770-4.1.

DRAFT

Power Dissipation - 1768 CompactLogix Controllers

1768-L43 and 1768-L43S

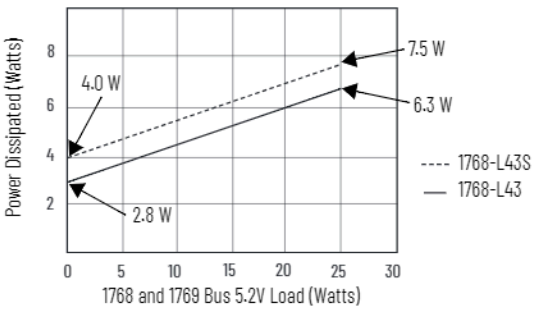

1768-L45 and 1768-L45S

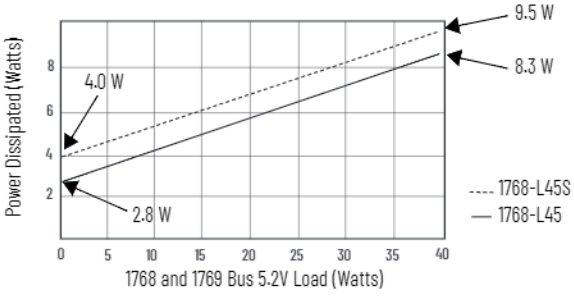

Slot Numbering - 1768 CompactLogix Controllers

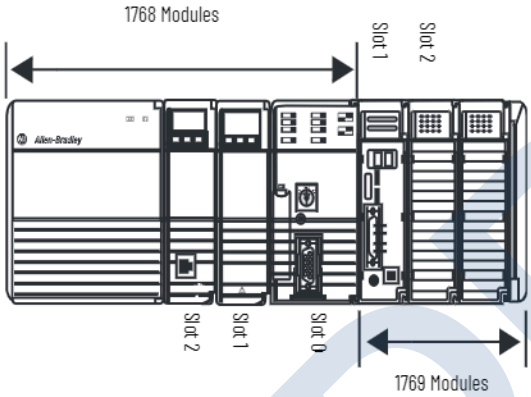

Minimum Spacing Requirements - 1768 CompactLogix Controllers

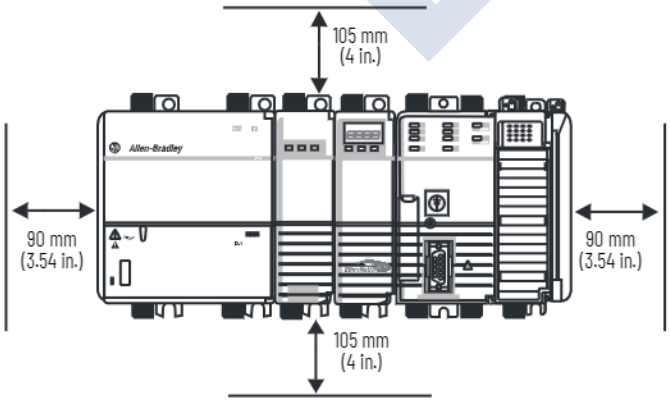

Dimensions - 1768 CompactLogix Controllers

1768-L43 and 1768-L45

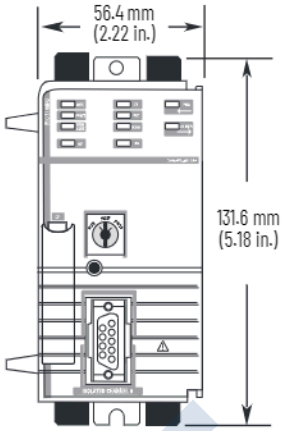

1768-L43S and 1768-L45S

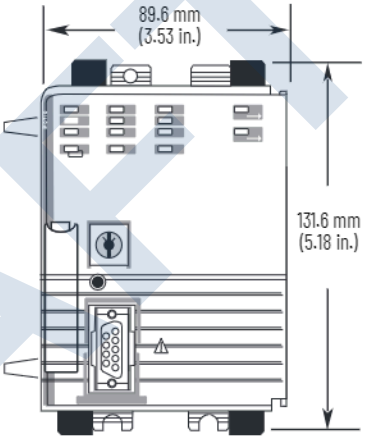

All 1768 L4 Controllers
Side View

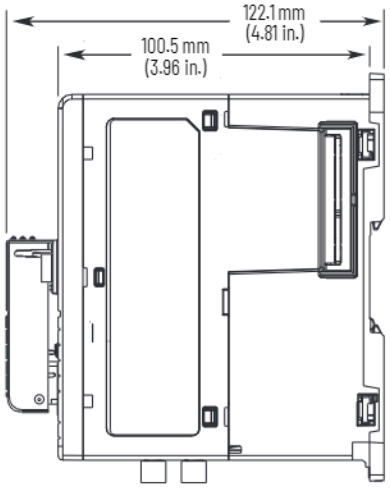

DRAFT

Controller Memory Use

These equations provide an estimate of the memory that is needed for a controller. These numbers are rough estimates.

Controller tasks	_____ * 4000	=	_____ bytes (minimum 1 task)
Digital I/O points	_____ * 400	=	_____ bytes
Analog I/O points	_____ * 2600	=	_____ bytes
DeviceNet modules(1)	_____ * 7400	=	_____ bytes
Other communication modules(2)	_____ * 2000	=	_____ bytes
Motion axes	_____ * 8000	=	_____ bytes
FactoryTalk® alarm instruction	_____ * 1000	=	_____ bytes (per alarm)
FactoryTalk subscriber	_____ * 10000	=	_____ bytes

(1) The first DeviceNet module is 7400 bytes. Additional DeviceNet modules are 5800 bytes each.
(2) Count all communication modules in the system, not just the modules in the local chassis. This total includes device connection modules, adapters, and ports on PanelView™ terminals.

Reserve 20...30% of the controller memory for future expansion.

Controller Compatibility

This section details the other devices that your controller can control and communicate with.

Control Distributed I/O Modules

The controller can control these distributed I/O modules.

I/O Modules	CompactLogix 5370 1768-ENBT 1769-L23Ex 1769-L32E, 1769-L32EK, 1769-L35E EtherNet/IP Network(1)	1768-CNB, 1768-CNBR 1769-L32C, 1769-L35CR ControlNet Network	CompactLogix 5370 L2 and L3 1769-SDN DeviceNet Network(2) (3)
Chassis-based I/O			
1746 SLC™ I/O	Yes	No	No
1756 ControlLogix® I/O	Yes	Yes	Yes
1769 Compact I/O	No	No	Yes
1771 Universal I/O	No	No	No
In-cabinet I/O			
1734 POINT I/O	Yes	Yes	Yes
1734D POINTBlock I/O	Yes	Yes	Yes
1790, 1790D, 1790P CompactBlock™ LDX I/O	No	No	Yes
1791D, 1791P, 1791R CompactBlock I/O	No	No	Yes
1794 FLEX™ I/O	Yes	Yes	Yes
1797 FLEX Ex™ I/O	Yes	Yes	No
On-machine I/O			
1732 ArmorBlock® I/O	Yes	No	Yes
1738 ArmorPOINT® I/O	Yes	Yes	No
1792D ArmorBlock® MaXum™ I/O	No	No	Yes
1799 Embedded I/O	No	No	Yes

(1) A non-EtherNet/IP CompactLogix controller requires a 1761-NET-ENI interface to connect to an EtherNet/IP network. This interface is only a messaging bridge.
(2) To control I/O, use a 1769-SDN scanner to connect the controller to the DeviceNet network.
(3) The 1769-SDN does not support safety communication to Guard I/O modules on a DeviceNet network.

Control Safety I/O Modules

The Compact GuardLogix controller can control these safety I/O modules in a safety system.

I/O Modules	EtherNet/IP	ControlNet
1791ES CompactBlock™ Guard I/O™	Yes	No
1734 POINT Guard I/O™	Yes	No

DRAFT

Communicate with Devices

The controller can communicate with these devices.

Device	EtherNet/IP[1] Network	ControlNet Network	DeviceNet[2] Network	RS-232 (DF1) Network	DH-485 Network
Programmable controllers					
1756 ControlLogix and 1756 GuardLogix	Yes	Yes	Yes	Yes	Yes
CompactLogix 5370	Yes	No	Yes[3]	Yes[4]	Yes[5]
1768-L4*x* CompactLogix	Yes	Yes	Yes	Yes	Yes
1769-L3*x* CompactLogix	Yes	Yes	Yes	Yes	Yes
1769-L23*x* CompactLogix	Yes	No	Yes	Yes	Yes
1789 SoftLogix™ 5800	Yes	Yes	Yes	Yes	No
1794 FlexLogix™	Yes	Yes	Yes	Yes	Yes
PowerFlex® with DriveLogix™	Yes	Yes	Yes	Yes	Yes
1785 PLC-5®	Yes[6] [7]	Yes	Yes[8]	Yes	–
1747 SLC	Yes[9]	Yes	Yes[4]	Yes	Yes
1761 MicroLogix™	Yes	No	Yes[4]	Yes	Yes
1762 MicroLogix	Yes	No	Yes[4]	Yes	Yes
1763 MicroLogix	Yes	No	Yes[4]	Yes	Yes
1764 MicroLogix	Yes	No	Yes[4]	Yes	Yes
1772 PLC-2®	-	-	-	Yes	-
1775 PLC-3®	-	-	-	Yes	-
5250 PLC-5/250	-	-	No	Yes	-
Industrial Computers					
Allen-Bradley® industrial computers (all)[10]	Yes	Yes	Yes	Yes	Yes
Graphic Terminals					
PanelView™ Plus and PanelView CE terminals	Yes	Yes	Yes	Yes	Yes
PanelView standard terminals	Yes	Yes	Yes	Yes	Yes
PanelView™ e terminals	No	No	No	No	No
Message Displays					
InView™ message displays	Yes	Yes	Yes	Yes	Yes
Communication Devices					
Linking device (only ControlLogix controllers)	1788-EN2DN	1788-CN2DN 1788-CN2FF	1788-EN2DN[11] 1788-CN2DN		
PCMCIA card		1784-PCC	1784-PCD		
PCI card		1784-PCIC 1784-PCICS	1784-PCID 1784-PCIDS 1784-CPCIDS		
Drives SCANport™ module		1203-FM1 1203-FB1[12]	-	-	
Communication module	-	1203-CN[13] 1770-KFC15 1770-KFCD15 1747-KFC15	1770-KFD 1770-KFG		
Communication card		1784-PKTCS 1784-KTCS 1784-KTCX15	1784-PKTX 1784-PKTXD		
USB communication device		1784-U2CN	1784-U2DN		

(1) A non-EtherNet/IP CompactLogix controller requires a 1761-NET-ENI interface to connect to an EtherNet/IP network. This interface is only a messaging bridge.
(2) For DeviceNet access, use either a 1769-SDN scanner (control I/O and send/receive messages) or a 1761-NET-DNI interface (messaging bridge).
(3) The CompactLogix 5370 L1 controllers can't access a DeviceNet network and, therefore, can't communicate with other controllers on a DeviceNet network.
(4) The CompactLogix 5370 controllers do not have an embedded serial port. You must add external modules to communicate over an RS-232 (DF1) network.
(5) The CompactLogix 5370 controllers do not have an embedded serial port. You must add external modules to communicate over a DH-485 network.
(6) The Ethernet PLC-5 controller must be series C, firmware revision N.1 or later; series D, firmware revision E.1 or later; or series E, firmware revision D.1 or later.
(7) The 1785-ENET Ethernet communication interface module must be series A, firmware revision D or later.
(8) The PLC-5, SLC, and MicroLogix processors appear as I/O points to the Logix controller. Use the appropriate DeviceNet interface for the controller.
(9) Use a 1747-L55*x* controller with OS501 or later.
(10) Includes: Allen-Bradley integrated display computers with rotating media (HDD) or solid-state drives (SSD), Allen-Bradley non-display computers, and Allen-Bradley integrated display computers with keypad.
(11) The 1788-EN2DN does not support safety communication (CIP Safety™).
(12) Use a CIP™ generic MSG instruction to communicate with the 1203-FM1 SCANport module on a DIN rail that is remote to the controller. The remote DIN rail also requires a 1794-ACN15 or 1794-ACNR15 ControlNet adapter.
(13) Use the generic module configuration to configure the 1203-CN1 module and a CIP generic MSG instruction to communicate with the module.

DRAFT

Controller Connections

A CompactLogix system uses the connection types to establish communication links between devices:	• Controller-to-local I/O modules or local communication modules • Controller-to-remote I/O or remote communication modules • Controller-to-remote I/O (rack-optimized) modules • Produced and consumed tags • Messages • Controller access by the programming software • Controller access by RSLinx® Classic software for HMI or other applications
You indirectly determine the number of connections the controller uses by configuring the controller to communicate with other devices in the system. The limit of connections can ultimately reside in the communication module you use for the connection. If a message path routes through a communication module, the connection that is related to the message also counts toward the connection limit of that communication module.	

CompactLogix 5370 Controller Ethernet Node Limits and Connections

When designing a CompactLogix 5370 control system, you must consider the following:	• Maximum number of Ethernet nodes available for the project of your controller • Connections
The controller that you select determines the number of Ethernet nodes available.	

Cat. No.	Ethernet Nodes Supported
1769-L16ER-BB1B	4
1769-L18ER-BB1B	8
1769-L18ERM-BB1B, 1769-L18ERM-BB1BK	
1769-L19ER-BB1B, 1769-L19ER-BB1BK	
1769-L24ER-QB1B	8
1769-L24ER-QBFC1B, 1769-L24ER-QBFC1BK	
1769-L27ERM-QBFC1B	16
1769-L30ER, 1769-L30ERK	
1769-L30ERM, 1769-L30ERMK	
1769-L30ER-NSE	
1769-L33ER, 1769-L33ERK	32
1769-L33ERM, 1769-L33ERMK	
1769-L33ERMO	
1769-L36ERM	48
1769-L36ERMO	
1769-L37ERM, 1769-L37ERMK	64
1769-L37ERMO[1]	
1769-L38ERM, 1769-L38ERMK	80
1769-L38ERMO[1]	

All CompactLogix 5370 controllers support 256 CIP™ connections and 120 TCP/IP connections.

1769-L23x CompactLogix Connections

The controller that you select determines the connections for I/O and messages.

Controller	Supports
1769-L23EQB1B	32 CIP connections 8 TCP/IP connections
1769-L23EQBFC1B	

The total connection requirements for a 1769 CompactLogix system include both local and remote (distributed) connections. The controller supports 100 connections. The available remote connections depend on the network interface.

1769-L3x CompactLogix Connections

The controller that you select determines the connections for I/O and messages.

Controller	Supports
1769-L32C 1769-L35CR	32 CIP connections
1769-L32E, 1769-L32EK 1769-L35E	32 CIP connections 32 TCP/IP connections

The total connection requirements for a 1769 CompactLogix system include both local and remote (distributed) connections. The controller supports 100 connections. The available remote connections depend on the network interface.

1768-L4x CompactLogix Connections

The communication module that you select determines the connections for I/O and messages.

Communication Module	Supports
1768-ENBT 1768-EWEB	128 CIP connections 64 TCP/IP connections
1768-CNB 1768-CNBR	48 CIP connections

The total connection requirements for a 1768 CompactLogix system include both local and remote (distributed) connections. The controller supports 250 connections. The available remote connections depend on the network interface.

(1) Available at software version 31 and firmware revision 31.

DRAFT

Determine Total Connection Use

The total connection requirements for a CompactLogix system include remote (distributed) connections. The available remote connections depend on the network interface.

The controllers support these numbers of total connections:	• 1769-L23x and 1769-L3x controllers support 100 total connections. • 1768-L4x controllers support 250 total connections. • CompactLogix 5370 controllers support 256 total connections.

When designing your CompactLogix system, to estimate the number of connections per connection type and the total connections that are used, use this table or the EtherNet/IP Capacity Tool Wizard that is embedded in the Integrated Architecture® Builder (IAB) software from Rockwell Automation.

Connection Type	Device Quantity	Connections Per Device	Total Connections
Remote ControlNet communication module Configured as a direct (none) connection Configured as a rack-optimized connection		 0 1	
Remote I/O module over a ControlNet network (direct connection)		1	
Remote Ethernet communication module Configured as a direct (none) connection Configured as a rack-optimized connection		 0 1	
Remote I/O module over an EtherNet/IP network (Direct connection)		1	
Remote device over a DeviceNet network (Accounted for in rack-optimized connection for local 1756-DNB module)		0	
Produced tag and first consumer Each additional consumer		2 1	
Consumed tag		1	
Cached message		1	
Message		1	
FactoryTalk® Linx subscriber (16 maximum)		1	
Total			

DRAFT

CompactLogix Controller Accessories

These accessories are compatible with the indicated CompactLogix controllers.

Memory Cards

Memory cards offer nonvolatile memory to store a user program and tag data on a controller. You can use the programming software to prompt the controller to save to or load from nonvolatile memory or you can configure the controller to load from nonvolatile memory on power-up.

IMPORTANT The 1769-L23x packaged CompactLogix controllers do not offer a nonvolatile memory option.

The CompactLogix 5370 controllers come with a 1784-SD1 Secure Digital (SD) card installed. Order a 1784-SD2 SD card separately for additional nonvolatile memory with the CompactLogix 5370 controllers.

You can use a 1784-CF128 CompactFlash card with the 1768 L4 and L3 modular CompactLogix controllers for a nonvolatile memory option. Insert the CompactFlash card into the memory card slot on the controller.

Certifications - 1784 Memory Cards

Certification(1)	1784-CF128, 1784-SD1, 1784-SD2
CE	European Union 2014/30/EU EMC Directive, compliant with: • EN 61000-6-4; Industrial Emissions • EN 61326-1; Meas./Control/Lab., Industrial Requirements • EN 61000-6-2; Industrial Immunity • EN 61131-2; Programmable Controllers (Clause 8, Zone A & B) European Union 2011/65/EU RoHS, compliant with: • EN IEC 63000; Technical documentation
RCM	Australian Radiocommunications Act, compliant with: AS/NZS CISPR 11; Industrial Emissions
KC	Korean Registration of Broadcasting and Communications Equipment, compliant with: Article 58-2 of Radio Waves Act, Clause 3

(1) When marked. See the Product Certification link at rok.auto/certifications for Declarations of Conformity, Certificates, and other certification details.

Environmental Specifications - 1784 Memory Cards

Attribute	1784-CF128, 1784-SD1, 1784-SD2
Temperature, operating IEC 60068-2-1 (Test Ad, Operating Cold), IEC 60068-2-2 (Test Bd, Operating Dry Heat), IEC 60068-2-14 (Test Nb, Operating Thermal Shock)	-25...+70 °C (-13...+158 °F)
Temperature, storage IEC 60068-2-1 (Test Ab, Unpackaged Nonoperating Cold), IEC 60068-2-2 (Test Bb, Unpackaged Nonoperating Dry Heat), IEC 60068-2-14 (Test Na, Unpackaged Nonoperating Thermal Shock)	-40...+85 °C (-40...+185 °F)
Relative humidity IEC 60068-2-30 (Test Db, Unpackaged Damp Heat)	5...95% noncondensing
Vibration IEC 60068-2-6 (Test Fc, Operating)	2 g @ 10...500 Hz
Shock, operating IEC 60068-2-27 (Test Ea, Unpackaged Shock)	30 g
Shock, nonoperating IEC 60068-2-27 (Test Ea, Unpackaged Shock)	50 g

Environmental Specifications - 1784 Memory Cards

Attribute	1784-CF128, 1784-SD1, 1784-SD2
Emissions CISPR 11	Group 1, Class A
ESD immunity IEC 61000-4-2	6 kV contact discharges 8 kV air discharges
Radiated RF immunity IEC 61000-4-3	10V/m with 1 kHz sine wave 80% AM from 80...2000 MHz 10V/m with 200 Hz 50% Pulse 100% AM @ 900 MHz 10V/m with 200 Hz 50% Pulse 100% AM @ 1890 MHz 3V/m with 1 kHz sine wave 80% AM from 2000...2700 MHz

Technical Specifications - 1784-CF128, 1784-SD1, 1784-SD2

Attribute	1784-CF128	1784-SD1	1784-SD2
Memory	128 MB	1 GB	2 GB
Supported controllers	1769 modular controllers 1768 controllers	CompactLogix 5370 controllers	
Weight, approx	14.2 g (0.5 oz)	1.76 g (0.062 oz)	

1769 CompactLogix Batteries

The 1769 L23 and L3*x* controllers come with one 1769-BA lithium battery.

The 1768 controllers and the CompactLogix 5370 controllers do not require a battery. The controller uses internal nonvolatile memory to store its program during shutdown. Energy that is stored in the system maintains controller power long enough to store the program to internal nonvolatile memory, but not the external CompactFlash card nor SD card respectively.

Technical Specifications - 1769-BA

Attribute	1769-BA
Description	Lithium battery (0.59 g)
CompactLogix controllers	1769-L23-QBFC1B, 1769-L23E-QB1B, 1769-L23E-QBFC1B 1769-L31 1769-L32C, 1769-L35CR 1769-L32E, 1769-L35E

Removable Terminal Kits

You can order removable terminal kits separately for the CompactLogix 5370 L1 and L2 controllers.

Cat. No.	Controllers Supported	Description
1769-RTB45	CompactLogix 5370 L1	• Four 10-pin connectors are used to connect the wiring to the embedded digital I/O module of the controller. • One 5-pin connector is used to connect an external 24V DC power source to the controller.
1769-RTB40DI0	CompactLogix 5370 L2	Four 10-pin connectors are used to connect the wiring to the embedded digital I/O module of the controller.
1769-RTB40AI0	1769-L24ER-QBFC1B, 1769-L27ERM-QBFC1B	Four 10-pin connectors are used to connect the wiring to the embedded analog I/O module of the controller.

DRAFT

Cold Junction Compensation

The CompactLogix 5370 L2 controllers require the use of the 1769-CJC CompactLogix CJC Sensor when the embedded analog input of the controller is configured for Thermocouple mode.

Ethernet Communication Cables

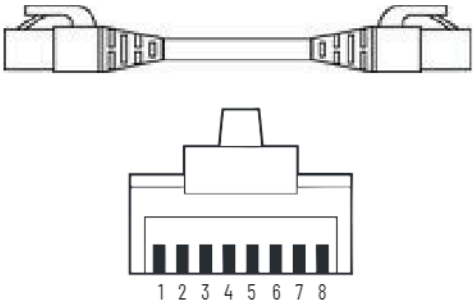

Connector Number	Color	1585J-M8xBJM-2	1585J-M4TBJM-2
1	White/Orange	TxData +	
2	Orange	TxData -	
3	White/Green	Recv Data +	
4	Blue	Unused	-
5	White/Blue	Unused	-
6	Green	Recv Data -	
7	White/Brown	Unused	-
8	Brown	Unused	-

Attribute	Value
Connector type	RJ45 Male to RJ45 Male
Connector angle	Straight-through
Length	Varies by catalog number

Serial Communication Cables

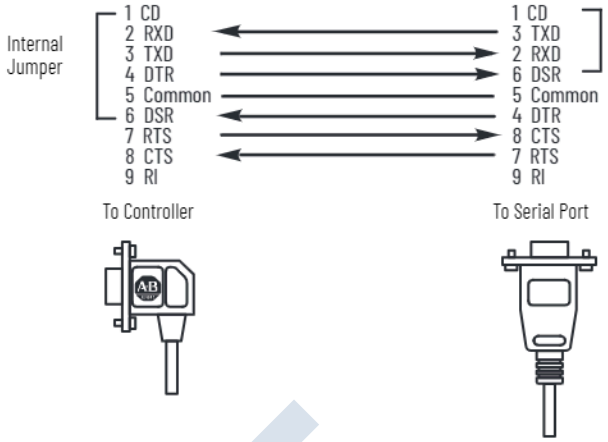

Attribute	1756-CP3	1747-CP3
Connector type	Female 9-pin D-shell	
Connector angle	Right angle connector to controller, straight to serial port	
Length	3 m (118 in.)	

DRAFT

1769-IF4, 1769-IF4K

Compact voltage/current analog input module

Differential Input Wiring

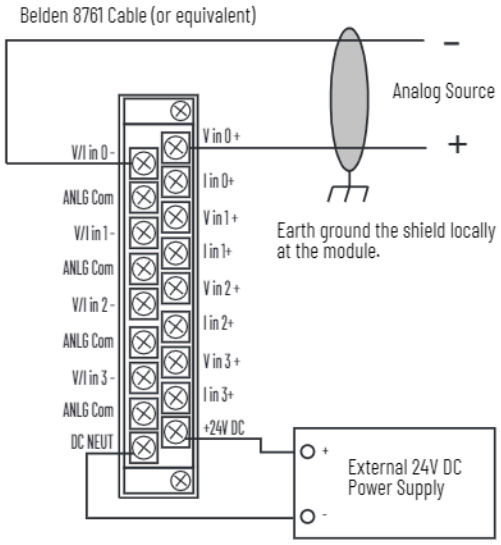

The external power supply must be rated Class 2, with a 24V DC range of 20.4...26.4V DC and 60 mA minimum. Series B and later modules support this option.

Single-ended Sensor/Transmitter Input Wiring

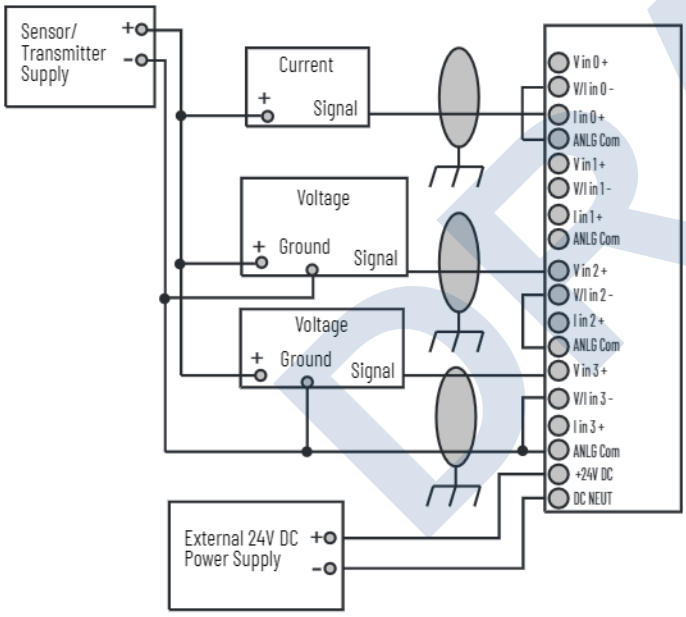

Mixed Transmitter Input Wiring

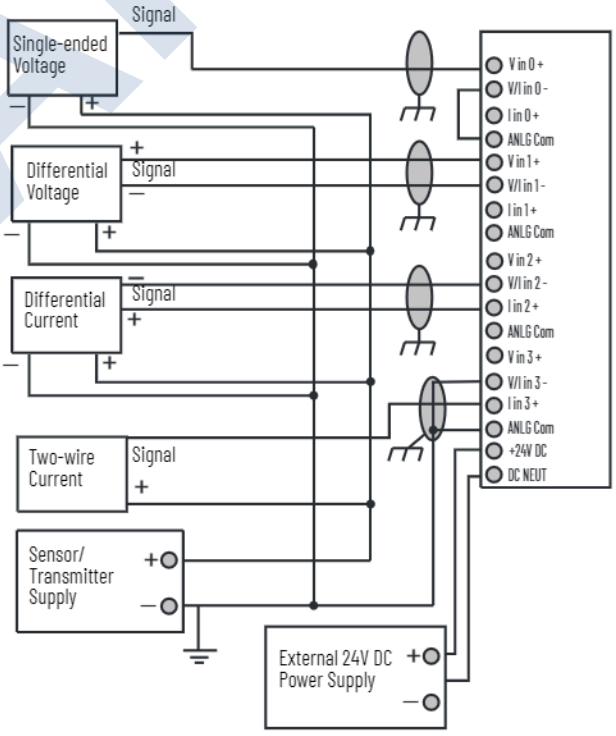

DRAFT

Technical Specifications - 1769-IF4, 1769-IF4K

Attribute	1769-IF4, 1769-IF4K
Inputs	4 differential or single-ended
Input range	±10V 0...10V 0...5V 1...5V 0...20 mA 4...20 mA
Full-scale range(1)	±10.5V -0.5...10.5V -0.5...5.25V 0.5...5.25V, 0...21 mA 3.2...21 mA
Current draw @ 5.1V	120 mA
Current draw @ 24V	60 mA
Heat dissipation, max	2.52 W
Converter type	Delta Sigma
Resolution (2)	14 bits (unipolar) 14 bits plus sign (bipolar)
Rated working voltage(3)	30V AC/30V DC
Common mode voltage range(4)	±10V DC max per channel
Common mode rejection	> 60 dB @ 50 Hz and 60 Hz with the 50 Hz or 60 Hz filter selected, respectively
Normal mode rejection ratio	-50 dB @ 50 Hz and 60 Hz and 60 Hz with the 50 Hz or 60 Hz or 60 Hz filter selected, respectively
Input impedance	Voltage: 220 kΩ Current: 250 Ω
Accuracy(5)	Voltage: ±0.2% full-scale @ 25 °C (77 °F) Current: ±0.35% full-scale @ 25 °C (77 °F)
Accuracy drift with temperature	Voltage: ±0.003% per °C Current: ±0.0045% per °C
Nonlinearity	±0.03%
Repeatability(6)	±0.03%
Module error	Voltage: ±0.3% Current: ±0.5%
Overload at input terminals, max(7)	Voltage: ±30V DC continuous, 0.1 mA Current: ±32 mA continuous, ±7.6V DC
Isolation voltage	500V AC or 710V DC for 1 minute (qualification test), group to bus 30V AC/30V DC working voltage (IEC Class II reinforced insulation)
Weight, approx	300 g (0.65 lb)
Dimensions (HxWxD), approx	118 x 35 x 87 mm (4.65 x 1.38 x 3.43 in.) Height with mounting tabs 138 mm (5.43 in.)
Slot width	1
Module location	DIN rail or panel mount
Power supply	1769-PA2, 1769-PB2, 1769-PA4, 1769-PB4
Optional 24V DC Class 2 power supply voltage range(8)	20.4...26.4V DC
Power supply distance rating	8 modules

Technical Specifications - 1769-IF4, 1769-IF4K

Attribute	1769-IF4, 1769-IF4K
Terminal screw torque	0.68 N•m (6 lb•in)
Retaining screw torque	0.46 N•m (4.1 lb•in)
Wire size	(22...14 AWG) solid (22...16 AWG) stranded
Wire type	Cu-90 °C (194 °F)
Replacement terminal block	1769-RTBN18 (1 per kit)
Replacement door label	1769-RL2 series B (2 per kit)
Replacement door	1769-RD (2 per kit)
Vendor ID code	1
Product type code	10
Product code	35
Enclosure type rating	None (open-style)

(1) The over- or underrange flag comes on when the normal operating range (over/under) is exceeded. The module continues to convert the analog input up to the maximum full-scale range. The flag automatically resets when within the normal operating range.
(2) Resolution is dependent upon your filter selection. The maximum resolution is achieved with either the 50 Hz or 60 Hz filter selected.
(3) Rated working voltage is the maximum continuous voltage that can be applied at the input terminal, including the input signal and the value that floats above ground potential. For example, a 10V DC input signal and 20V DC potential above ground at the input terminals.
(4) For proper operation, both the plus and minus input terminals must be within ±10V DC of analog common.
(5) Includes offset, gain, nonlinearity, and repeatability error terms.
(6) Repeatability is the ability of the input module to register the same reading in successive measurements for the same input signal.
(7) Damage can occur to the input circuit if this value is exceeded.
(8) If the optional 24V DC Class 2 power supply is used, the 24V DC current draw from the bus is 0 mA.

Response Speed - 1769-IF4, 1769-IF4K

Filter Frequency	Cutoff Frequency	Step Response	Channel Update
50 Hz	13.1 Hz	60 ms	22 ms
60 Hz	15.7 Hz	50 ms	19 ms
250 Hz	65.5 Hz	12 ms	6 ms
500 Hz	131 Hz	6 ms	4 ms

For **Environmental Specifications**, see page 2.

For **Certifications**, see page 3.

DRAFT

Technical Data

Allen-Bradley

CompactLogix 5380 Controllers Specifications

Catalog Numbers 5069-L306ER, 5069-L306ERM, 5069-L310ER, 5069-L310ER-NSE, 5069-L310ERM, 5069-L320ER, 5069-L320ERM, 5069-L330ER, 5069-L330ERM, 5069-L340ER, 5069-L340ERM, 5069-L350ERM, 5069-L380ERM, 5069-L3100ERM

Topic	Page
Summary of Changes	2
Controller Use With Other Devices	8
Ethernet Node Limits	11
CompactLogix 5380 Controller Accessories	12
Additional Resources	15

The CompactLogix™ 5380 controllers are part of the Logix5000™ family of controllers. The controllers provide a scalable controller solution to address a wide variety of applications. The controllers are DIN rail mounted.

CompactLogix 5380 controllers can monitor and control local and remote I/O modules, and other devices connected to an EtherNet/IP network. The controllers provide the following functionality:

- Two EtherNet/IP ports with the option to use Dual-IP mode or Linear/DLR mode
- Use of 5069 Compact I/O™ module as local I/O modules
- One USB port
- Use of 1784-SD1 or 1784-SD2 Secure Digital (SD) card for nonvolatile memory
- Support for Integrated Motion over an EtherNet/IP network (not all CompactLogix 5380 controllers)

DRAFT

ITEM 540B

Summary of Changes

This publication revision includes information about the following CompactLogix 5380 controllers:

- 5069-L350ERM
- 5069-L380ERM
- 5069-L3100ERM

Features - CompactLogix 5380 Controllers

Feature	5069-L306ER, 5069-L306ERM	5069-L310ER, 5069-L310ER-NSE, 5069-L310ERM	5069-L320ER, 5069-L320ERM	5069-L330ER, 5069-L330ERM	5069-L340ER, 5069-L340ERM	5069-L350ERM	5069-L380ERM	5069-L3100ERM
Controller tasks • Continuous • Periodic • Event	32 tasks 1000 programs/task All event triggers							
Built-in communication ports	1 USB port 2 EtherNet/IP ports **IMPORTANT**: Consider the following: – When the controller operates in Dual-IP mode, each Ethernet port requires a unique IP address. – When the controller operates in Linear/DLR mode, the controller uses only one IP address.							
USB port communication	USB 2.0, Type B Full speed (12 Mbps) Programming, configuration, firmware flash, and on-line edits only							
Ethernet performance	10 Mbps, 100 Mbps, 1 Gbps Full Duplex only							
EtherNet/IP modes supported	Dual-IP mode (Available with the Logix Designer application, version 29.00.00 or later) Linear/DLR mode							
EtherNet/IP network topologies supported	• DLR • Star • Linear							
EtherNet/IP nodes supported, max	16	24	40	50	55	60	70	80
Socket interfaces supported, max	32							
Integrated motion	5069-L306ERM controller only – As many as 2 axes	5069-L310ERM controller only – As many as 4 axes	5069-L320ERM controller only – As many as 8 axes	5069-L330ERM controller only – As many as 16 axes	5069-L340ERM controller only – As many as 20 axes	As many as 24 axes	As many as 28 axes	As many as 32 axes
Programming languages	Ladder Diagram (LD) Structured Text (ST) Function Block Diagram (FBD) Sequential Function Chart (SFC)							
Integrated safety	N/A							

DRAFT

Technical Specifications - CompactLogix 5380 Controllers

Attribute	5069-L306ER, 5069-L306ERM	5069-L310ER, 5069-L310ER-NSE, 5069-L310ERM	5069-L320ER, 5069-L320ERM	5069-L330ER, 5069-L330ERM	5069-L340ER, 5069-L340ERM	5069-L350ERM	5069-L380ERM	5069-L3100ERM
Controller capacity	0.6 MB	1 MB	2 MB	3 MB	4 MB	5 MB	8 MB	10 MB
Optional nonvolatile memory	1784-SD1 card 1784-SD2 card (shipped with the controller)							
Local I/O modules, max	8	8	16	31[4]	31	31	31	31
Module Power bus (MOD Power) voltage range	18…32V DC							
Module Power bus (MOD Power) current, max	450 mA							
Module Power bus (MOD Power) inrush	850 mA for 125 ms							
Module Power bus (MOD Power) Passthrough voltage range	18…32V DC							
Module Power bus (MOD Power) current rating, max[1]	9.55 A							
Sensor Actuator (SA) Field Power voltage ranges	0…32V DC 0…240V AC, 47…63 Hz ATEX/IECEX, 125V AC max							
Sensor Actuator (SA) Field Power current, max	10 mA (DC power) 25 mA (AC power)							
Sensor Actuator Power bus (SA Power) Passthrough voltage ranges	0…32V DC 0…240V AC, 47…63 Hz ATEX/IECEX, 125V AC max							
Sensor Actuator Power bus (SA Power) current rating, max[2]	9.95 A (DC power) 9.975 A (AC power)							
Power dissipation, max	8.5 W							
Thermal dissipation, max	29 BTU/hr							
Isolation voltage	300V (continuous), Basic Insulation Type, SA and MOD Power to Backplane 300V (continuous), Basic Insulation Type, SA to MOD Power 300V (continuous), Basic Insulation Type, Ethernet to Backplane 300V (continuous), Double Insulation Type, Ethernet to MOD Power 300V (continuous), Double Insulation Type, Ethernet to SA Power 50V (continuous), Functional Insulation Type, Ethernet to USB 300V (continuous), Basic Insulation Type, USB to Backplane 300V (continuous), Double Insulation Type, USB to MOD Power 300V (continuous), Double Insulation Type, USB to SA Power No isolation between Ethernet ports Type tested at 1500V AC for 60 s							

DRAFT

Technical Specifications - CompactLogix 5380 Controllers

Attribute	5069-L306ER, 5069-L306ERM	5069-L310ER, 5069-L310ER-NSE, 5069-L310ERM	5069-L320ER, 5069-L320ERM	5069-L330ER, 5069-L330ERM	5069-L340ER, 5069-L340ERM	5069-L350ERM	5069-L380ERM	5069-L3100ERM
Weight, approx	0.768 kg (1.693 lb)							
Dimensions (HxWxD), approx	143.97 x 98.10 x 136.81 mm (5.67 x 3.86 x 5.39 in.)							
Location	DIN rail mount (horizontal mount only)							
DIN rail	Compatible zinc-plated, chromate steel DIN rail. EN50022 - 35 x 7.5 mm (1.38 x 0.30 in.)							
Removable terminal block	RTBs are available in separately ordered 5069 RTB kits. The MOD power connection uses a 4-point RTB, and the SA power connection uses a 6-point RTB. The following kits are available: • Kit catalog number 5069-RTB64-SCREW contains RTB catalog numbers 5069-RTB6-SCREW and 5069-RTB4-SCREW • Kit catalog number 5069-RTB64-SPRING contains RTB catalog numbers 5069-RTB6-SPRING and 5069-RTB4-SPRING							
Terminal block torque	5069-RTB4-SCREW & 5069-RTB6-SCREW: 0.4 N•m (3.5 lb•in) 5069-RTB4-SPRING & 5069-RTB6-SPRING: N/A							
Wire size	5069-RTB4-SCREW, 5069-RTB6-SCREW connections: 0.5…1.5 mm^2 (22…16 AWG) solid or stranded copper wire rated at 105 °C (221 °F), or greater, 3.5 mm (0.14 in.) max diameter including insulation, single wire connection only 5069-RTB4-SPRING, 5069-RTB6-SPRING connections: 0.5…1.5 mm^2 (22…16 AWG) solid or stranded copper wire rated at 105 °C (221 °F), or greater, 2.9 mm (0.11 in.) max diameter including insulation, single wire connection only Ethernet connections: Ethernet Cabling and Installation according to IEC 61918 and IEC 61784-5-2							
Insulation stripping length	5069-RTB4-SCREW, 5069-RTB6-SCREW connections: 12 mm (0.47 in.) 5069-RTB4-SPRING, 5069-RTB6-SPRING connections: 10 mm (0.39 in.)							
Wire category(3)	3 - on USB port 1 - on power ports 2 - on Ethernet ports							
Enclosure	None (open-style)							
North American temperature code	T4							
ATEX temperature code	T4							
IECEx temperature code	T4							

(1) Maximum level of MOD Power current that the module can pass through to the next module in the system. The specific level of current passed through varies based on system configuration. You must limit the external power supply that provides MOD power to 10 A, max, at 18…32V DC.

(2) Maximum level of SA Power current that the module can pass through to the next module in the system. The specific level of current passed through varies based on system configuration. You must limit the external power supply that provides SA power to 10 A, max at 18…32V DC in DC applications and to 10 A, max at 18…240V AC in AC applications.

(3) Use this Conductor Category information for planning conductor routing. See the Industrial Automation Wiring and Grounding Guidelines, publication 1770-4.1.

(4) When you use these controllers with the Logix Designer application, version 29.00.00, the application limits the number of local I/O modules in the project to 16. For more information, see the Rockwell Automation Knowledgebase article #942580, '5380 CompactLogix controllers limited to 16 local 5069 modules in V29 of Studio 5000.' The document is available at http://www.rockwellautomation.com/knowledgebase.
With the Logix Designer application, version 30.00.00 or later, the controllers support as many as 31 local I/O modules.

DRAFT

Environmental Specifications - CompactLogix 5380 Controllers

Attribute	5069-L306ER, 5069-L306ERM, 5069-L310ER, 5069-L310ER-NSE, 5069-L310ERM, 5069-L320ER, 5069-L320ERM, 5069-L330ER, 5069-L330ERM, 5069-L340ER, 5069-L340ERM, 5069-L350ERM, 5069-L380ERM, 5069-L3100ERM
Temperature, operating IEC 60068-2-1 (Test Ad, Operating Cold), IEC 60068-2-2 (Test Bd, Operating Dry Heat), IEC 60068-2-14 (Test Na, Operating Thermal Shock)	0 °C < Ta < +60 °C (+32 °F <Ta < +140 °F)
Temperature, nonoperating IEC 60068-2-1 (Test Ab, Unpackaged Nonoperating Cold), IEC 60068-2-2 (Test Bb, Unpackaged Nonoperating Dry Heat), IEC 60068-2-14 (Test Na, Unpackaged Nonoperating Thermal Shock)	-40…+85 °C (-40…+185 °F)
Temperature, surrounding air, max	60 °C (140 °F)
Relative humidity IEC 60068-2-30 (Test Db, Unpackaged Damp Heat)	5…95% noncondensing
Vibration IEC 60068-2-6 (Test Fc, Operating)	5 g @ 10…500 Hz
Shock, operating IEC 60068-2-27 (Test Ea, Unpackaged Shock)	30 g
Shock, nonoperating IEC 60068-2-27 (Test Ea, Unpackaged Shock)	50 g
Emissions	IEC 61000-6-4
ESD immunity IEC 61000-4-2	6 kV contact discharges 8 kV air discharges
Radiated RF immunity IEC 61000-4-3	10V/m with 1 kHz sine-wave 80% AM from 80…2000 MHz 10V/m with 200 Hz 50% Pulse 100% AM @ 900 MHz 10V/m with 200 Hz 50% Pulse 100% AM @ 1890 MHz 3V/m with 1 kHz sine-wave 80% AM from 2000…2700 MHz
EFT/B immunity IEC 61000-4-4	± 4 kV at 5 kHz on power ports ± 2 kV at 5 kHz on Ethernet ports
Surge transient immunity IEC 61000-4-5	± 1 kV line-line (DM) and ± 2 kV line-earth (CM) on power ports ± 2 kV line-earth (CM) on Ethernet ports
Conducted RF immunity IEC 61000-4-6	10 Vrms with 1 kHz sine-wave 80% AM from 150 kHz…80 MHz
Voltage variation IEC 61000-4-29	10 ms interruption on MOD Power port

DRAFT

ITEM 540B

Certifications - CompactLogix 5380 Controllers

Certification[1]	5069-L306ER, 5069-L306ERM, 5069-L310ER, 5069-L310ER-NSE, 5069-L310ERM, 5069-L320ER, 5069-L320ERM, 5069-L330ER, 5069-L330ERM, 5069-L340ER, 5069-L340ERM, 5069-L350ERM, 5069-L380ERM, 5069-L3100ERM
c-UL-us	UL Listed Industrial Control Equipment, certified for US and Canada. See UL File E65584. UL Listed for Class I, Division 2 Group A,B,C,D Hazardous Locations, certified for U.S. and Canada. See UL File E194810.
CE	European Union 2004/108/EC EMC Directive, compliant with: • EN 61326-1; Meas./Control/Lab., Industrial Requirements • EN 61000-6-2; Industrial Immunity • EN 61000-6-4; Industrial Emissions • EN 61131-2; Programmable Controllers (Clause 8, Zone A & B) European Union 2006/95/EC LVD, compliant with: • EN 61010-2-201; Control Equipment Safety Requirements
RCM	Australian Radiocommunications Act, compliant with: • EN 61000-6-4; Industrial Emissions
Ex	European Union 94/9/EC ATEX Directive, compliant with: • EN 60079-0; General Requirements • EN 60079-15; Potentially Explosive Atmospheres, Protection "n" • II 3 G Ex nA IIC T4 Gc • DEMKO 15 ATEX 1455X when used at or below 125V AC
IECEx	IECEx System, compliant with: • IEC 600079-0: General Requirements • IEC 60079-15; Potentially Explosive Atmospheres, Protection "n" • II 3 G Ex nA IIC T4 Gc • IECEx UL 15.0007X when used at or below 125V AC
KC	Korean Registration of Broadcasting and Communications Equipment, compliant with: • Article 58-2 of Radio Waves Act, Clause 3
EtherNet/IP	ODVA conformance tested to EtherNet/IP specifications

(1) See the Product Certification link at http://www.ab.com for Declarations of Conformity, Certificates, and other certification details.

DRAFT

ITEM 540B

Controller Minimum Spacing Requirements

The minimum distance between the CompactLogix 5380 system and enclosure walls, wireways, and adjacent equipment varies based on the current operating temperature. The minimum distance on all sides of the system is as follows:

- 50.80 mm (2.00 in.) at 55 °C (131 °F)
- 101.60 mm (4.00 in) at 60 °C (140 °F)

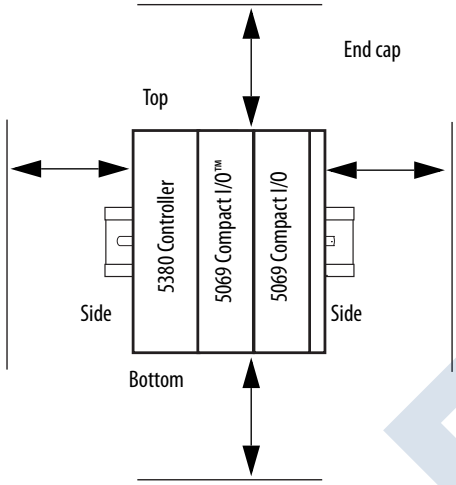

IMPORTANT CompactLogix 5380 systems can only be mounted horizontally.

Controller Dimensions

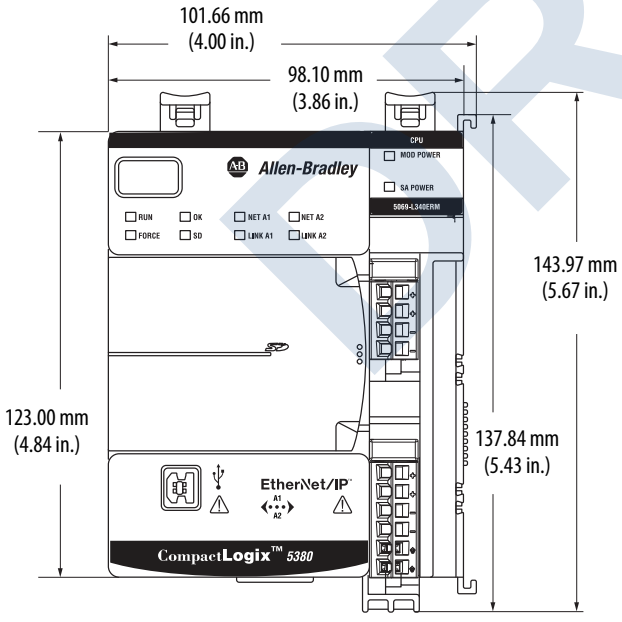

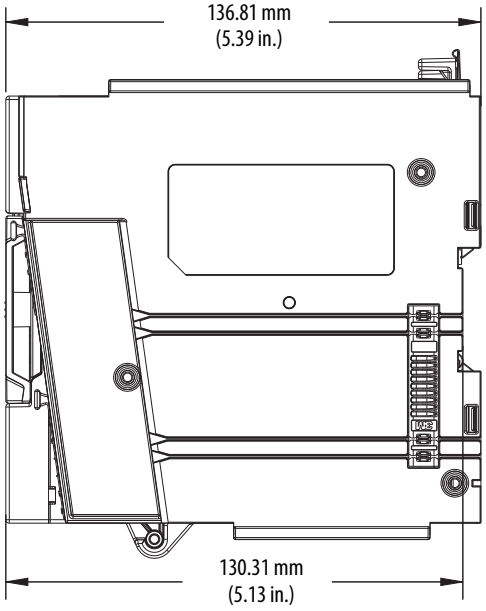

DRAFT

ITEM 540B

Controller Use With Other Devices

Your controller can control and communicate with the following devices:

- Control I/O Modules
- Communicate with Display Devices
- Communicate with Other Controllers

Control I/O Modules

The CompactLogix 5380 controllers can monitor and control local and remote I/O modules.

Local I/O Modules

A CompactLogix 5380 system uses 5069 Compact I/O modules as its local I/O modules. The number of local I/O modules that are supported in a CompactLogix 5380 system varies by controller catalog number.

Cat. No.	Local 5069 Compact I/O Modules Supported, Max
5069-L306ER, 5069-L306ERM	8
5069-L310ER, 5069-L310ER-NSE, 5069-L310ERM	8
5069-L320ER, 5069-L320ERM	16
5069-L330ER, 5069-L330ERM(1)	31
5069-L340ER, 5069-L340ERM	31
5069-L350ERM	31
5069-L380ERM	31
5069-L3100ERM	31

(1) When you use these controllers with the Logix Designer application, version 29.00.00, the application limits the number of local I/O modules in the project to 16. For more information, see the Rockwell Automation Knowledgebase article #942580, '5380 CompactLogix controllers limited to 16 local 5069 modules in V29 of Studio 5000.' The document is available at http://www.rockwellautomation.com/knowledgebase.
With the Logix Designer application, version 30.00.00 or later, the controllers support 31 local I/O modules.

DRAFT

ITEM 540B

Remote I/O Modules

The controller can connect to these remote I/O modules over an EtherNet/IP network.

IMPORTANT For maximum performance, we recommend that you use 5069 Compact I/O modules when you use remote I/O modules.

Module Type	I/O Module Family
Chassis-based I/O	1746 SLC™ I/O
	1756 ControlLogix® I/O
	1769 Compact I/O
	5069 Compact I/O
In-cabinet I/O	1734 POINT I/O™
	1794 FLEX™ I/O
On-Machine™ I/O	1732 ArmorBlock® I/O
	1738 ArmorPOINT® I/O

Communicate with Display Devices

The controller can communicate with these display devices over an EtherNet/IP network.

Device Type	Display
Industrial computers	Allen-Bradley® integrated-display rotating media (HDD) and solid-state (SSD) computers
	Allen-Bradley integrated-display computers with keypad
	Allen-Bradley non-display computers
Graphic terminals	PanelView™ Plus and PanelView CE terminals
	PanelView standard terminals
Message displays	InView™ message displays

DRAFT

ITEM 540B

Communicate with Other Controllers

The controller can communicate with these programmable controllers.

Controller Type	Controller Family
Programmable automation controller	CompactLogix 5370
	CompactLogix 5380
	Compact GuardLogix® 5370 (safety)
	ControlLogix 5570
	ControlLogix 5580
	GuardLogix 5570 (safety)
	1756 Armor™ ControlLogix (safety)
	1756 Armor GuardLogix (safety)
	1768 Compact GuardLogix (safety)
	1768 CompactLogix
	1769 Modular CompactLogix
	1769 Packaged CompactLogix
Programmable logic controllers	1789 SoftLogix™ 5800
	PowerFlex® with DriveLogix™
	1785 PLC-5®(1)
	1747 SLC™(1)
	1761 MicroLogix™(2)
	1762 MicroLogix(2)
	1763 MicroLogix
	1764 MicroLogix(2)
	1766 MicroLogix

(1) These controllers require a built-in Ethernet port or a 1761-NET-ENI, EtherNet/IP RS-232-C interface to communicate with a CompactLogix 5380 controller over an EtherNet/IP network.

(2) These controllers require a 1761-NET-ENI, EtherNet/IP RS-232-C interface to communicate with a CompactLogix 5380 controller over an EtherNet/IP network.

DRAFT

ITEM 540B

Ethernet Node Limits

When you configure a CompactLogix 5380 control system, you must account for the number of Ethernet nodes that you include in the I/O configuration section in the Studio 5000 Logix Designer® application project.

Maximum Number of Ethernet Nodes

The number of nodes that are supported in a Logix Designer application project varies by CompactLogix 5380 controller.

Cat. No.	Ethernet Nodes Supported
5069-L306ER, 5069-L306ERM	16
5069-L310ER, 5069-L310ER-NSE, 5069-L310ERM	24
5069-L320ER, 5069-L320ERM	40
5069-L330ER, 5069-L330ERM	50
5069-L340ER, 5069-L340ERM	55
5069-L350ERM	60
5069-L380ERM	70
5069-L3100ERM	80

Any devices that you add directly to the I/O configuration section are counted toward the Ethernet node limit. The following are examples of devices that must be counted:

- Remote communication adapters
- Devices with an embedded EtherNet/IP port, such as I/O modules, drives, and linking devices
- Remote controllers when a produce/consume connection is established between the two controllers
- HMI devices that are included in the I/O configuration tree
- Third-party devices that are directly connected to the EtherNet/IP network

DRAFT

5069-IB16, 5069-IB16K, and 5069-IB16F Digital 16-point Sinking Input Modules

The following figure shows a wiring diagram for the 5069-IB16, 5069-IB16K, and 5069-IB16F modules.

5069-IB16, 5069-IB16K, and 5069-IB16F Wiring Diagram

Channel Connections

The example shows devices that are connected to channels 0, 3, and 6. You aren't restricted to using only those channels.
You can connect devices to any channel or combination of channels as needed.

SA Power

Connections to an external power supply that provides SA power via the SA power RTB on one of the following:

- CompactLogix 5380 controller
- Compact GuardLogix 5380 controller
- CompactLogix 5480 controller
- 5069-AENTR or 5069-AEN2TR EtherNet/IP Adapter
- 5069-FPD field potential distributor

IMPORTANT: Remember the following:

- The 5069-IB16, 5069-IB16K, and 5069-IB16F modules use DC SA power. You must connect DC power to the component, that is, controller, adapter, or field potential distributor, that provides SA power to the modules.
- The 5069-IB16, 5069-IB16K, and 5069-IB16F module inputs use a shared common. The inputs have a return through internal module circuitry to the SA (–) terminal on the SA power RTB.
- If you install modules in a system that use AC SA power and DC SA power, you must install them on separate SA power buses.
- You use a 5069-FPD field potential distributor to establish a new SA power bus in a system. SA power buses are isolated from each other. To keep the modules on separate SA power buses, complete these steps.
  1. Install the modules that use one type of SA power, for example DC, to the right of the adapter or controller, that is, the first SA power bus.
  2. Install the 5069-FPD field potential distributor to establish a second SA power bus.
  3. Install the modules that use the other type of SA power, for example AC, on the second SA power bus.

IMPORTANT: The 5069-IB16K and 5069-IB16K modules are wired the same as the wiring diagram that is shown for the 5069-IB16 module.

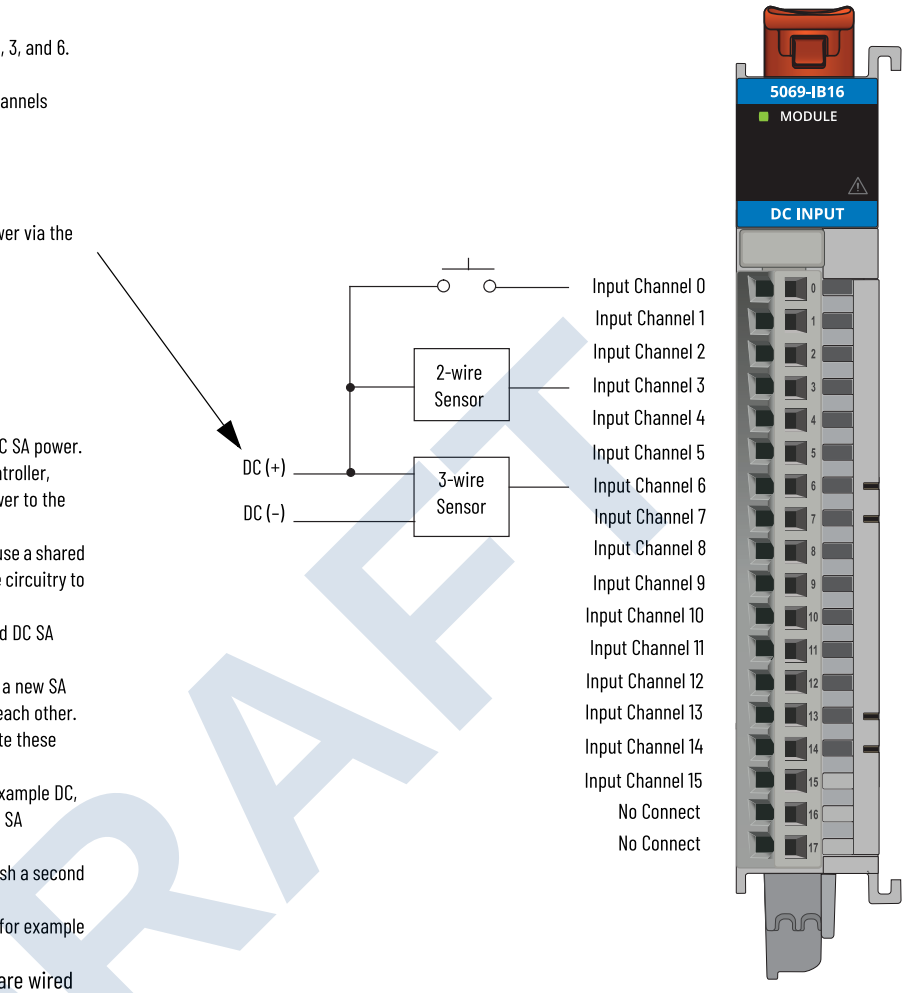

DRAFT

The following figure shows a functional block diagram for the 5069-IB16, 5069-IB16K, and 5069-IB16F modules.

5069-IB16, 5069-IB16K, and 5069-IB16F Functional Block Diagram

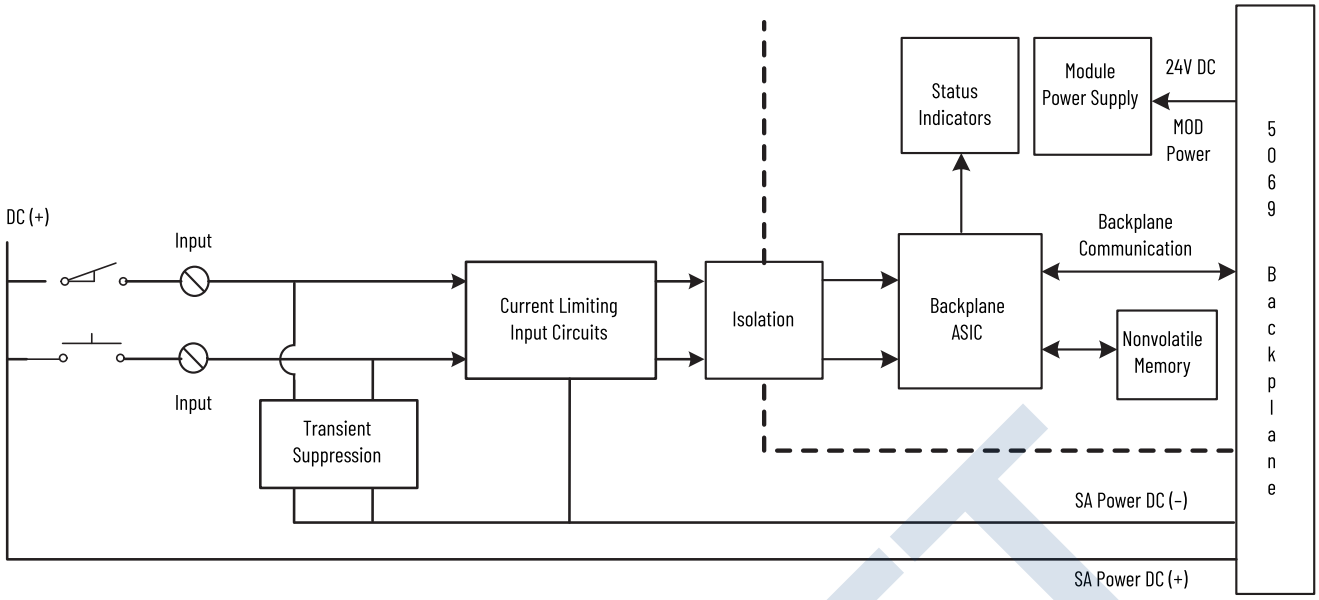

Technical Specifications - 5069-IB16, 5069-IB16K, and 5069-IB16F

Attribute	5069-IB16, 5069-IB16K	5069-IB16F
On-state voltage, min	10V DC	
On-state voltage, nom	24V DC	
On-state voltage, max	32V DC	
On-state current, min	4 mA @ 10V	
On-state current, nom	6 mA @ 24V DC	
On-state current, max	7.4 mA @ 32V DC	
Off-state voltage, max	5V DC	
Off-state current, max	1.5 mA	
Input impedance, min	1.33 kΩ	
Input impedance, nom	4.1 kΩ	
Input impedance, max	7.0 kΩ	
Inrush current, max	< 250 mA peak (decaying to, 37% in 22 ms, without activation)	
Input delay time (screw to backplane)		
Off to On	≤ 100 µs, ±10 µs @ 25 °C (77 °F)	≤ 10 µs, ±1 µs @ 25 °C (77 °F)
On to Off	≤ 100 µs, ±10 µs @ 25 °C (77 °F)	≤ 10 µs, ±1 µs @ 25 °C (77 °F)
Input drift over temperature span	±100 ns/°C (55.6 ns/°F) from 0...60 °C (32...140 °F)	< 10 ns/°C (5.56 ns/°F) from 0...60 °C (32...140 °F)
Input On to Off minimum pulse width	60 µs	6 µs
Input Off to On minimum pulse width	60 µs	6 µs

DRAFT

Technical Specifications - 5069-IB16, 5069-IB16K, and 5069-IB16F

Attribute	5069-IB16, 5069-IB16K	5069-IB16F
Input filter time		
Off to On	Hardware delay: 50 µs + filter time User-selectable filter time: 0...50 ms	Hardware delay: 2 µs + filter time User-selectable filter time: 0...50 ms
On to Off	Hardware delay: 50 µs + filter time User-selectable filter time: 0...50 ms	Hardware delay: 3 µs + filter time User-selectable filter time: 0...50 ms
Reverse polarity protection	Yes	
Overvoltage protection, max	36V (fuse protected)	
Pulse and period measurements	Not supported	±2 µs
Counter frequency	0 - f_{max} = 500 Hz (Inv period 2 ms)	0 - f_{max} = 30 kHz (Inv period 33.3 µs)
Frequency counter	0 - f_{max} = 500 Hz (Inv period 2 ms)	0 - f_{max} = 30 kHz (Inv period 33.3 µs)
Time stamp of inputs	Not supported	±10 µs accuracy 1 ns resolution
Overrides	Not supported	
Pulse latching	Not supported	Supported
Events	Not supported	Four events supported (triggered by any input or simple counters)
Pattern matching	Not supported	Supported
Extended counters	Not supported	

General Specifications - 5069-IB16, 5069-IB16K, and 5069-IB16F

Attribute	5069-IB16, 5069-IB16K	5069-IB16F
Inputs	16 Channels (1 group of 16), sinking	
Voltage category	12/24V DC Sink	
Voltage and current ratings		
Input ratings	4...7.4 mA per channel @ 10...32V DC	
Mod power	75 mA @ 18...32V DC	
Mod power Passthrough, max[1]	9.55 A @ 18...32V DC	
SA Power	200 mA @ 10...32V DC	
SA Power Passthrough, max[2]	9.95 A @ 10...32V DC	
Power dissipation, max	3.9 W	
Thermal dissipation, max	13.3 BTU/hr	
Isolation voltage	250V (continuous), Basic Insulation Type No isolation between SA power and input ports No isolation between individual input ports	
Module keying	Electronic keying via programming software	
Indicators	1 green/red module status indicator 16 yellow/red I/O status indicators	
Slot width	1	
Dimensions (HxWxD), approx	144.57 x 22 x 105.42 mm (5.69 x 0.87 x 4.15 in.)	
DIN rail	Compatible zinc-plated chromate-passivated steel DIN rail. You can use the EN50022 - 35 x 7.5 mm (1.38 x 0.30 in.) DIN rail.	

DRAFT

General Specifications - 5069-IB16, 5069-IB16K, and 5069-IB16F

Attribute	5069-IB16, 5069-IB16K	5069-IB16F
RTB	One of these RTB types. • 5069-RTB18-SPRING RTB • 5069-RTB18-SCREW RTB **IMPORTANT**: You must order RTBs separately. RTBs do not ship with Compact 5000 I/O modules. We recommend that you order only the RTB type that your system requires.	
RTB torque (5069-RTB18-SCREW RTB only)	0.4 N·m (3.5 lb·in)	
RTB keying	None	
Wire category[3]	2 - input ports 2 - power ports 1 wire per terminal for each signal port	
Wire size		
5069-RTB18-SPRING connections	0.5...1.5 mm^2 (22...16 AWG) solid or stranded shielded copper wire rated at 105 °C (221 °F), or greater, 2.9 mm (0.11 in.) max diameter including insulation, single wire connection only.	
5069-RTB18-SCREW connections	0.5...1.5 mm^2 (22...16 AWG) solid or stranded shielded copper wire rated at 105 °C (221 °F), or greater, 3.5 mm (0.14 in.) max diameter including insulation, single wire connection only.	
Insulation-stripping length	5069-RTB18-SPRING connections: 10 mm (0.39 in.) 5069-RTB18-SCREW connections: 12 mm (0.47 in.)	
Weight, approx	175 g (0.39 lb)	
Enclosure type	None (open-style)	
North American temp code	T4	
ATEX/IECEx temp code	T4	
IECEx temp code	T4	

(1) Level of Mod power current that passes through the module depends on the system configuration, such as, module slot location and the other module types that are used in the system. For more information, see the CompactLogix 5380 and Compact GuardLogix 5380 Controllers User Manual, 5069-UM001, CompactLogix 5480 Controllers User Manual, 5069-UM002, and Compact 5000 EtherNet/IP Adapters User Manual, 5069-UM004.

(2) Level of SA power current that passes through the module depends on the system configuration, such as, module slot location and the other module types that are used in the system. For more information, see the CompactLogix 5380 and Compact GuardLogix 5380 Controllers User Manual, 5069-UM001, CompactLogix 5480 Controllers User Manual, 5069-UM002, and Compact 5000 EtherNet/IP Adapters User Manual, 5069-UM004.

(3) Use this Conductor Category information for planning conductor routing. See the Industrial Automation Wiring and Grounding Guidelines, publication 1770-4.1.

Environmental Specifications - 5069-IB16, 5069-IB16K, and 5069-IB16F

Attribute	5069-IB16, 5069-IB16K, 5069-IB16F
Temperature, operating IEC 60068-2-1 (Test Ad, Operating Cold), IEC 60068-2-2 (Test Bd, Operating Dry Heat), IEC 60068-2-14 (Test Nb, Operating Thermal Shock)	0...60 °C (32...140 °F)
Temperature, surrounding air, max	60 °C (140 °F)
Temperature, nonoperating IEC 60068-2-1 (Test Ab, Unpackaged Nonoperating Cold), IEC 60068-2-2 (Test Bb, Unpackaged Nonoperating Dry Heat), IEC 60068-2-14 (Test Na, Unpackaged Nonoperating Thermal Shock)	-40...+85 °C (-40...+185 °F)
Relative humidity IEC 60068-2-30 (Test Db, Unpackaged Damp Heat)	5...95% noncondensing
Vibration IEC 60068-2-6 (Test Fc, Operating)	5 g @ 10...500 Hz

DRAFT

Environmental Specifications - 5069-IB16, 5069-IB16K, and 5069-IB16F

Attribute	5069-IB16, 5069-IB16K, 5069-IB16F
Shock, operating IEC 60068-2-27 (Test Ea, Unpackaged Shock)	30 g
Shock, nonoperating IEC 60068-2-27 (Test Ea, Unpackaged Shock)	50 g
Emissions	IEC 61000-6-4
ESD immunity IEC 61000-4-2	6 kV contact discharges 8 kV air discharges
Radiated RF immunity IEC 61000-4-3	10V/m with 1 kHz sine wave 80% AM from 80...2000 MHz 10V/m with 200 Hz 50% pulse 100% AM at 900 MHz 10V/m with 200 Hz 50% pulse 100% AM at 1890 MHz 3V/m with 1 kHz sine wave 80% AM from 2000...2700 MHz
EFT/B immunity IEC 61000-4-4	±4 kV @ 5 kHz on power ports ±3 kV @ 5 kHz on input ports
Surge transient immunity IEC 61000-4-5	±1 kV line-line (DM) and ±2 kV line-earth (CM) on power ports ±1 kV line-line (DM) and ±2 kV line-earth (CM) on input ports
Conducted RF immunity IEC 61000-4-6	10V rms with 1 kHz sine wave 80% AM from 150 kHz...80 MHz
Voltage variation IEC 61000-4-29	10 ms interruption on Mod power port

Certifications - 5069-IB16, 5069-IB16K, and 5069-IB16F

Certification[1]	5069-IB16, 5069-IB16K, 5069-IB16F
c-UL-us	UL Listed Industrial Control Equipment, certified for US and Canada. See UL File E65584. UL Listed for Class I, Division 2 Group A,B,C,D Hazardous Locations, certified for U.S. and Canada. See UL File E194810.
CE	European Union 2014/30/EU EMC Directive, compliant with: • EN 61326-1; Meas./Control/Lab., Industrial Requirements • EN 61000-6-2; Industrial Immunity • EN 61000-6-4; Industrial Emissions • EN 61131-2; Programmable Controllers (Clause 8, Zone A & B) European Union 2014/35/EU LVD, compliant with: • EN 61010-2-201; Control Equipment Safety Requirements European Union 2011/65/EU RoHS, compliant with: • EN 50581; Technical documentation
RCM	Australian Radiocommunications Act, compliant with: EN 61000-6-4; Industrial Emissions
Ex	European Union 2014/34/EU ATEX Directive, compliant with: • EN 60079-0; General Requirements • EN 60079-15; Potentially Explosive Atmospheres, Protection "n" • II 3 G Ex nA IIC T4 Gc • DEMKO 15 ATEX 1484X
IECEx	IECEx System, compliant with: • IEC 60079-0; General Requirements • IEC 60079-15; Potentially Explosive Atmospheres, Protection "n" • II 3 G Ex nA IIC T4 Gc • IECEx UL 15.0055X
KC	Korean Registration of Broadcasting and Communications Equipment, compliant with: Article 58-2 of Radio Waves Act, Clause 3
EAC	Russian Customs Union TR CU 020/2011 EMC Technical Regulation Russian Customs Union TR CU 004/2011 LV Technical Regulation

(1) When marked. See the Product Certification link at http://www.ab.com for Declarations of Conformity, Certificates, and other certification details.

DRAFT

5069-OB16, 5069-OB16K, and 5069-OB16F Digital 16-point Sourcing Output Modules

The following figure shows a wiring diagram for the 5069-OB16, 5069-OB16K, and 5069-OB16F modules.

5069-OB16, 5069-OB16K, and 5069-OB16F Wiring Diagram

Channel Connections

The diagram shows devices that are connected to channels 0, 2, 4, and 6. You aren't restricted to using only those channels.
You can connect devices to any channel or combination of channels as needed.

LA Power

The Local Actuator (LA+ and LA –) connections are used to supply field-side power to the module.

The 5069-OB16, 5069-OB16K, and 5069-OB16F modules **do not draw current from the SA power bus**.
Still, the modules are DC type modules, and you must install them on a DC SA power bus.

- If you install modules in a system that use AC SA power and DC SA power, you must install them on separate SA power buses.
- You use a 5069-FPD field potential distributor to establish a new SA power bus in a system. SA power buses are isolated from each other. To keep the modules on separate SA power buses, complete these steps.
  1. Install the modules that use one type of SA power, for example DC, to the right of the adapter or controller, that is, the first SA power bus.
  2. Install the 5069-FPD field potential distributor to establish a second SA power bus.
  3. Install the modules that use the other type of SA power, for example AC, on the second SA power bus.

IMPORTANT: The 5069-OB16K and 5069-OB16K modules are wired the same as the wiring diagram that is shown for the 5069-OB16 module.

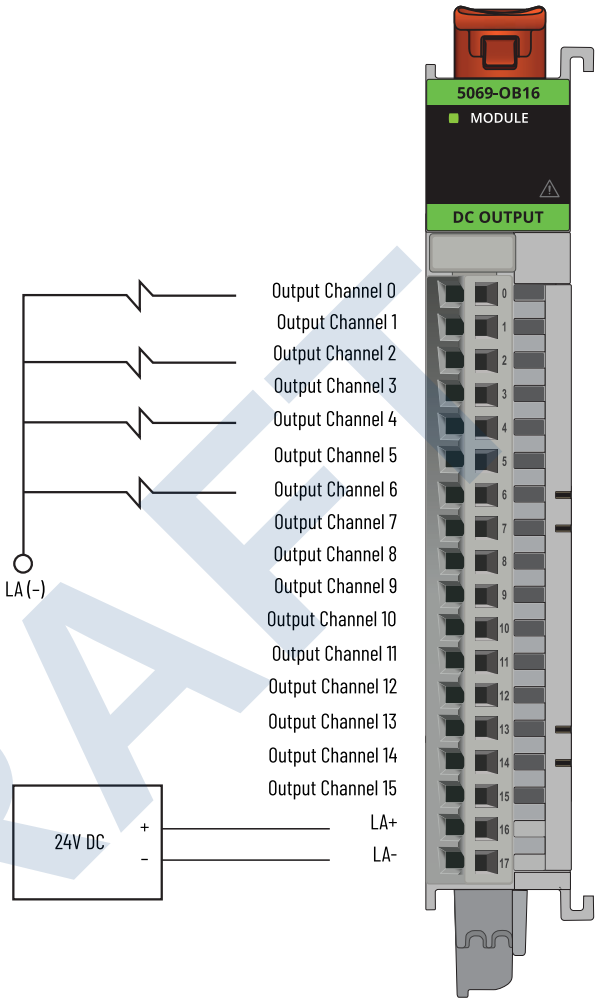

DRAFT

The following figure shows a functional block diagram for the 5069-OB16, 5069-OB16K, and 5069-OB16F modules.

5069-OB16, 5069-OB16K, and 5069-OB16F Functional Block Diagram

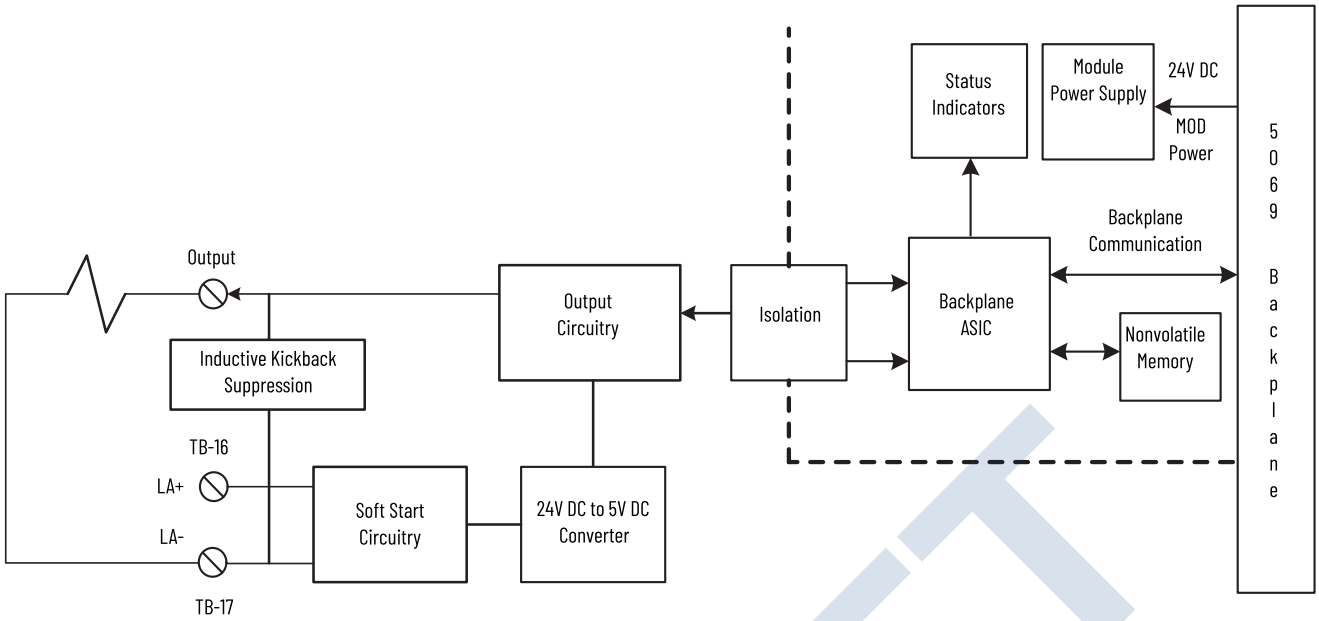

Technical Specifications - 5069-OB16, 5069-OB16K, and 5069-OB16F

Attribute	5069-OB16, 5069-OB16K	5069-OB16F
On-state voltage, min[1]	10V DC	
On-state voltage, nom[1]	24V DC	
On-state voltage, max[1]	32V DC	
On-state voltage drop, max[1]	< 0.2V DC	
On-state current per channel, min[1]	1 mA	
Off-state voltage, max[1]	5V DC with 1 mA min load	
Off-state leakage current per point, max[2]	< 0.5 mA per point	
Output current rating	0.5 A resistive per channel @ 10...32V DC 8 A resistive per module @ 10...32V DC, max	
Surge current per point	1 A max for 10 ms per point, repeatable every 2 s	
Output delay time (backplane to screw)		
Off to On	≤ 100 µs, ±10 µs @ 25 °C (77 °F) @ 0.5 A	10 µs, ±1 µs @ 25 °C (77 °F) @ 0.5 A
On to Off	≤100 µs, ±10 µs @ 25 °C (77 °F) @ 0.5 A	10 µs, ±1 µs @ 25 °C (77 °F) @ 0.5 A
Pulse width, min	200 µs @ 0.5 A @ 25 °C (77 °F)	20 µs @ 0.5 A @ 25 °C (77 °F)
Output drift over temperature span	±100 ns/°C (55.6 ns/°F) from 0...60 °C (32...140 °F) @ 0.5 A	±10 ns/°C (5.56 ns/°F) from 0...60 °C (32...140 °F) @ 0.5 A
Field power loss detection[3]	Yes	

DRAFT

Technical Specifications - 5069-OB16, 5069-OB16K, and 5069-OB16F

Attribute	5069-OB16, 5069-OB16K	5069-OB16F
No load detection diagnostics	Yes (per channel diagnostics)	
Output short circuit/overload/overtemp detection	Yes (per channel diagnostics)	
Output short circuit/overload protection	Yes	
Reverse voltage protection	Yes	
Overvoltage protection, max	36V (fuse protected)	
Pilot duty rating	0.5 A pilot duty rating per channel @ 10...32V DC	
Output control in fault state per point	• Hold Last State • On • Off (default)	
Output states in program mode per point	• Hold Last State • On • Off (default)	
Output states in fault mode per point	• Hold Last State • On • Off (default)	
Duration of fault mode per point	• 1 s • 2 s • 5 s • 10 s • Forever (default)	
Scheduled outputs	Not supported	±10 µs accuracy 1 ns resolution

(1) Local Actuator (LA) Field Power related attributes.

(2) Recommended Loading Resistor - To limit the effects of leakage current through solid-state outputs, you can connect a loading resistor in parallel with your load. For 24V DC operation, use a 5.6 KΩ, 0.5 W resistor for transistor operation.

(3) Supported only on Series B hardware.

General Specifications - 5069-OB16, 5069-OB16K, and 5069-OB16F

Attribute	5069-OB16, 5069-OB16K	5069-OB16F
Outputs	16 Channels (1 group of 16), sourcing	
Voltage category	12/24V DC source	
Voltage and current ratings		
Mod power	75 mA @ 18...32V DC	
Mod power Passthrough, max(1)	9.55 A @ 18...32V DC	
LA Power	0.5 A per channel @ 10...32V DC 8 A per module @ 10...32V DC	
SA power Passthrough, max(2) The module does not draw SA power current.	9.95 A @ 10...32V DC	
Do not exceed 10 A MOD or SA power (Passthrough) current draw		
Power dissipation, max	3.25 W (16 channels @ 0.5 A)	
Thermal dissipation, max	11.09 BTU/hr	

DRAFT

General Specifications - 5069-OB16, 5069-OB16K, and 5069-OB16F

Attribute	5069-OB16, 5069-OB16K	5069-OB16F
Isolation voltage	250V (continuous), Basic Insulation Type No isolation between LA power and output ports No isolation between individual output ports	
Module keying	Electronic, module keying, software configurable	
Indicators	1 green/red module status indicator 16 yellow/red I/O status indicators	
Slot width	1	
Dimensions (HxWxD), approx	144.57 x 22 x 105.42 mm (5.69 x 0.87 x 4.15 in.)	
DIN rail	Compatible zinc-plated chromate-passivated steel DIN rail. You can use the EN50022 - 35 x 7.5 mm (1.38 x 0.30 in.) DIN rail.	
RTB	One of these RTB types. • 5069-RTB18-SPRING RTB • 5069-RTB18-SCREW RTB **IMPORTANT**: You must order RTBs separately. RTBs do not ship with Compact 5000 I/O modules. We recommend that you order only the RTB type that your system requires.	
RTB torque (5069-RTB18-SCREW RTB only)	0.4 N•m (3.5 lb•in)	
RTB keying	None	
Wire category[3]	2 - output ports 2 - power ports 1 wire per terminal for each signal port	
Wire size		
5069-RTB18-SPRING removable terminal block	0.5...1.5 mm^2 (22...16 AWG) solid or stranded copper wire rated at 105 °C (221 °F), or greater, 2.9 mm (0.11 in.) max diameter including insulation	
5069-RTB18-SCREW removable terminal block	0.5...1.5 mm^2 (22...16 AWG) solid or stranded copper wire rated at 105 °C (221 °F), or greater, 3.5 mm (0.14 in.) max diameter including insulation	
Insulation-stripping length		
5069-RTB18-SPRING connections	10 mm (0.39 in.)	
5069-RTB18-SCREW connections	12 mm (0.47 in.)	
Weight, approx	175 g (0.39 lb)	
Enclosure type	None (open - style)	
North American temp code	T4	
ATEX temp code	T4	
IECEx temp code	T4	

(1) Level of Mod power current that passes through the module depends on the system configuration, such as, module slot location and the other module types that are used in the system. For more information, see the CompactLogix 5380 and Compact GuardLogix 5380 Controllers User Manual, 5069-UM001, CompactLogix 5480 Controllers User Manual, 5069-UM002, and Compact 5000 EtherNet/IP Adapters User Manual, 5069-UM004.

(2) Level of SA power current that passes through the module depends on the system configuration, such as, module slot location and the other module types that are used in the system. For more information, see the CompactLogix 5380 and Compact GuardLogix 5380 Controllers User Manual, 5069-UM001, CompactLogix 5480 Controllers User Manual, 5069-UM002, and Compact 5000 EtherNet/IP Adapters User Manual, 5069-UM004.

(3) Use this Conductor Category information for planning conductor routing. See the Industrial Automation Wiring and Grounding Guidelines, publication 1770-4.1.

DRAFT

Environmental Specifications - 5069-OB16, 5069-OB16K, and 5069-OB16F

Attribute	5069-OB16, 5069-OB16K, 5069-OB16F
Temperature, operating IEC 60068-2-1 (Test Ab, Operating Cold), IEC 60068-2-2 (Test Bb, Unpackaged Nonoperating Dry Heat), IEC 60068-2-14 (Test Na, Operating Thermal Shock)	0...60 °C (32...140 °F)
Temperature, surrounding air, maximum	60 °C (140 °F)
Temperature, nonoperating IEC 60068-2-1 (Test Ab, Unpackaged Nonoperating Cold), IEC 60068-2-2 (Test Bb, Unpackaged Nonoperating Dry Heat), IEC 60068-2-14 (Test Na, Unpackaged Nonoperating Thermal Shock)	-40...+85 °C (-40...+185 °F)
Relative humidity IEC 60068-2-30 (Test Db, Unpackaged Damp Heat)	5...95% noncondensing
Vibration IEC 60068-2-6 (Test Fc, Operating)	5 g @ 10...500 Hz
Shock, operating IEC 60068-2-27 (Test Ea, Unpackaged Shock)	30 g
Shock, nonoperating IEC 60068-2-27 (Test Ea, Unpackaged Shock)	50 g
Emissions	IEC 61000-6-4
ESD immunity IEC 61000-4-2	6 kV contact discharges 8 kV air discharges
Radiated RF immunity IEC 61000-4-3	10V/m with 1 kHz sine wave 80% AM from 80...2000 MHz 10V/m with 200 Hz 50% pulse 100% AM at 900 MHz 10V/m with 200 Hz 50% pulse 100% AM at 1890 MHz 3V/m with 1 kHz sine wave 80% AM from 2000...2700 MHz
EFT/B immunity IEC 61000-4-4	±4 kV @ 5 kHz on power ports ±3 kV @ 5 kHz on output ports
Surge transient immunity IEC 61000-4-5	±1 kV line-line (DM) and ±2 kV line-earth (CM) on power ports ±1 kV line-line (DM) and ±2 kV line-earth (CM) on output ports
Conducted RF immunity IEC 61000-4-6	10V rms with 1 kHz sine wave 80% AM from 150 kHz...80 MHz
Voltage variation IEC 61000-4-29	10 ms interruption on Mod power port

DRAFT

Certifications - 5069-OB16, 5069-OB16K, and 5069-OB16F

Certification[1]	5069-OB16, 5069-OB16K, 5069-OB16F
c-UL-us	UL Listed Industrial Control Equipment, certified for US and Canada. See UL File E65584. UL Listed for Class I, Division 2 Group A,B,C,D Hazardous Locations, certified for U.S. and Canada. See UL File E194810.
CE	European Union 2014/30/EU EMC Directive, compliant with: • EN 61326-1; Meas./Control/Lab., Industrial Requirements • EN 61000-6-2; Industrial Immunity • EN 61000-6-4; Industrial Emissions • EN 61131-2; Programmable Controllers (Clause 8, Zone A & B) European Union 2014/35/EU, compliant with: • EN 61010-2-201; Control Equipment Safety Requirements European Union 2011/65/EU RoHS, compliant with: • EN 50581; Technical documentation
RCM	Australian Radiocommunications Act, compliant with: EN 61000-6-4; Industrial Emissions
Ex	European Union 2014/34/EU ATEX Directive, compliant with: • EN 60079-0; General Requirements • EN 60079-15; Potentially Explosive Atmospheres, Protection "n" • II 3 G Ex nA IIC T4 Gc • DEMKO 15 ATEX 1484X
IECEx	IECEx System, compliant with: • IEC 60079-0; General Requirements • IEC 60079-15; Potentially Explosive Atmospheres, Protection "n" • II 3 G Ex nA IIC T4 Gc • IECEx UL 15.0055X
KC	Korean Registration of Broadcasting and Communications Equipment, compliant with: Article 58-2 of Radio Waves Act, Clause 3
EAC	Russian Customs Union TR CU 020/2011 EMC Technical Regulation Russian Customs Union TR CU 004/2011 LV Technical Regulation

(1) When marked. See the Product Certification link at http://www.ab.com for Declarations of Conformity, Certificates, and other certification details.

DRAFT

Analog I/O Modules

I/O Type	Cat. No.	Description	Page
Analog input	5069-IF8	8-channel current/voltage input module	50
	5069-IY4	4-channel current/voltage/RTD/Thermocouple input module	58
	5069-IY4K	4-channel conformal coated current/voltage/RTD/Thermocouple input module	
Analog output	5069-OF4	4-channel current/voltage output module	73
	5069-OF4K	4-channel conformal coated current/voltage output module	
	5069-OF8	8-channel current/voltage output module	

5069-IF8 Analog 8-channel Current/Voltage Input Module

The following table lists the devices that are supported with the 5069-IF8 module.

Device	Mode(s)[1]	Supported	Wiring Diagram Example
2-wire analog device 4-wire analog device[2]	Current	Yes	page 51
	Voltage		page 52
	Combination of current and voltage	Yes	page 53
1-wire analog device 3-wire analog device	N/A - These devices aren't supported regardless of the channel mode configuration.	No	–
2-wire Thermocouple device			
2-wire RTD device 3-wire RTD device			

(1) Make sure that the channel configuration in your Logix Designer application project matches the input device type that is connected to the channel. You choose the input type in the Channels category on the Module Properties dialog box. For example, if a current input device is connected to channel 0 on the module, the module configuration for channel must be Input Type = Current.

(2) These devices are 2-wire current and voltage devices with 2-wire sensor power connections.

DRAFT

The following figure shows a wiring diagram for the 5069-IF8 module with channels configured for current mode.

5069-IF8 Wiring Diagram - Current Mode

Channel Connections

The diagram shows devices that are connected to channels 0, 2, 5, and 7. You aren't restricted to using only this channel. You can connect devices to any channel or combination of channels as needed.

IMPORTANT: Remember the following:

- Place additional loop devices, for example, strip chart recorders, at either **A** location in the current loop.
- Use separate external power supplies to provide SA power to the system and to power external devices that are connected to the module.
- This module has only two shield terminals. Compact 5000 I/O module RTBs only support one wire per terminal.
- If you connect more than two devices to the module, you can ground two devices at the shield terminals.
  You must ground the remaining devices somewhere else, such as, to the DIN rail via a terminal strip. In this case, use the same power supply to power the additional devices. If separate power supplies are used to power the additional devices, ground the power supplies at the same ground location.

SA Power

Connections to an external power supply that provides SA power are made via the SA power RTB on one of the following:

- CompactLogix 5380 controller
- Compact GuardLogix 5380 controller
- CompactLogix 5480 controller
- 5069-AENTR or 5069-AEN2TR EtherNet/IP Adapter
- 5069-FPD field potential distributor

IMPORTANT: Remember the following:

- The 5069-IF8 module uses DC SA power. You must connect DC power to the component, that is, controller, adapter, or field potential distributor, that provides SA power to the modules.
- If you install modules in a system that use AC SA power and DC SA power, you must install them on separate SA power buses.
- You use a 5069-FPD field potential distributor to establish a new SA power bus in a system. SA power buses are isolated from each other. To keep the modules on separate SA power buses, complete these steps.
  1. Install the modules that use one type of SA power, for example DC, to the right of the adapter or controller, that is, the first SA power bus.
  2. Install the 5069-FPD field potential distributor to establish a second SA power bus.
  3. Install the modules that use the other type of SA power, for example AC, on the second SA power bus.

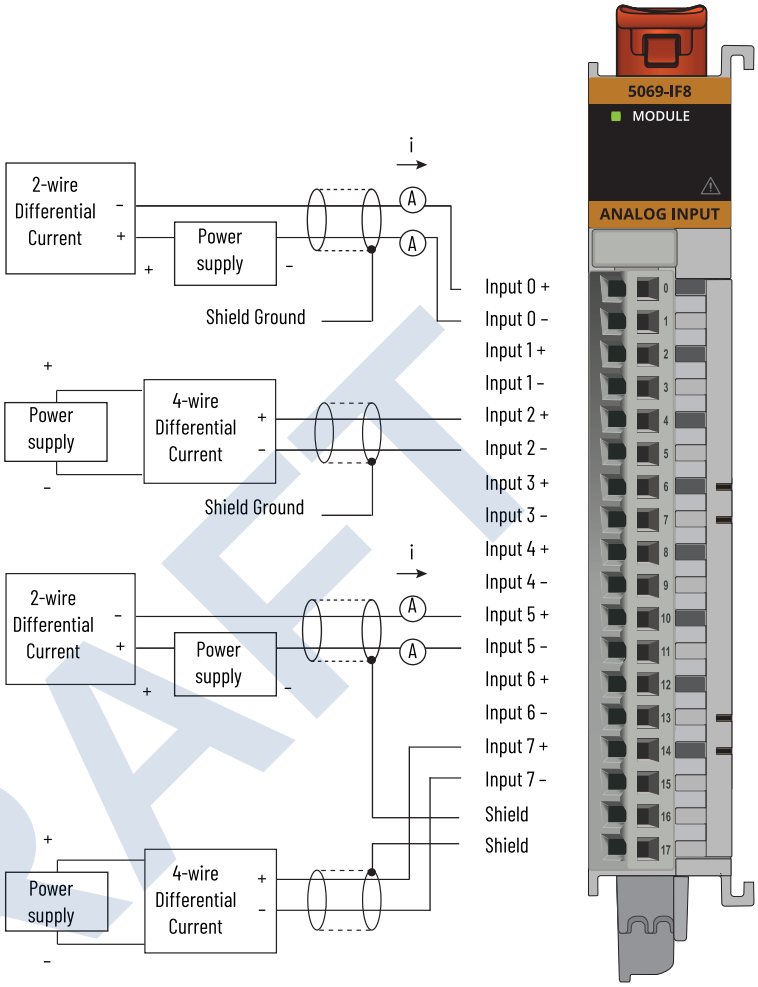

DRAFT

The following figure shows a wiring diagram for the 5069-IF8 module with channels configured for voltage mode.

5069-IF8 Wiring Diagram - Voltage Mode

Channel Connections

The diagram shows devices that are connected to channels 0, 2, 5, and 7. You aren't restricted to using only this channel. You can connect devices to any channel or combination of channels as needed.

IMPORTANT: Remember the following:

- Use separate external power supplies to provide SA power to the system and to power external devices that are connected to the module.
- This module has only two shield terminals. Compact 5000 I/O module RTBs only support one wire per terminal.
  If you connect more than two devices to the module, you can ground two devices at the shield terminals.
  You must ground the remaining devices somewhere else, such as, to the DIN rail via a terminal strip. In this case, use the same power supply to power the additional devices. If separate power supplies are used to power the additional devices, ground the power supplies at the same ground location.

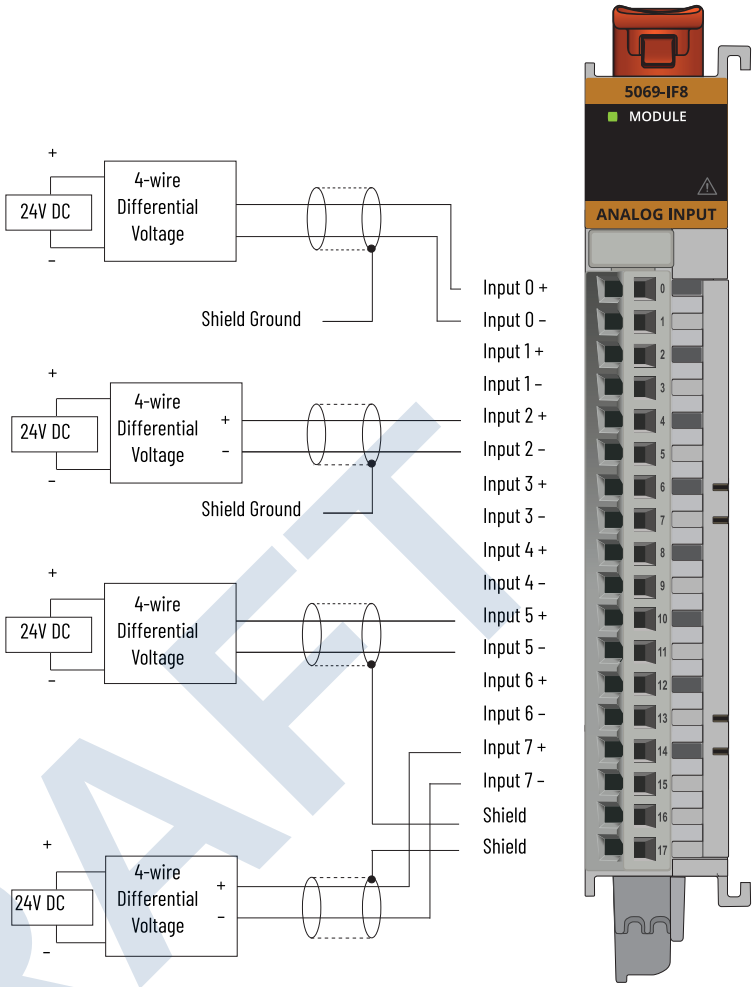

DRAFT

The following figure shows a wiring diagram for the 5069-IF8 module with different device types connected to different channels. The device type and mode configuration for each channel must match.

5069-IF8 Wiring Diagram - Combination of Device Types Connected to the Module

Channel Connections

The diagram shows devices that are connected to channels 0, 2, 5, and 7. You aren't restricted to using only this channel.
You can connect devices to any channel or combination of channels as needed.

IMPORTANT: Remember the following:

- Place additional loop devices, for example, strip chart recorders, at either **A** location in the current loop.
- Use separate external power supplies to provide SA power to the system and to power external devices that are connected to the module.
- This module has only two shield terminals. Compact 5000 I/O module RTBs only support one wire per terminal.
  If you connect more than two devices to the module, you can ground two devices at the shield terminals.
  You must ground the remaining devices somewhere else, such as, to the DIN rail via a terminal strip. In this case, use the same power supply to power the additional devices. If separate power supplies are used to power the additional devices, ground the power supplies at the same ground location.

SA Power

Connections to an external power supply that provides SA power are made via the SA power RTB on one of the following:

- CompactLogix 5380 controller
- Compact GuardLogix 5380 controller
- CompactLogix 5480 controller
- 5069-AENTR or 5069-AEN2TR EtherNet/IP Adapter
- 5069-FPD field potential distributor

IMPORTANT: Remember the following:

- The 5069-IF8 module uses DC SA power. You must connect DC power to the component, that is, controller, adapter, or field potential distributor, that provides SA power to the modules.
- If you install modules in a system that use AC SA power and DC SA power, you must install them on separate SA power buses.
- You use a 5069-FPD field potential distributor to establish a new SA power bus in a system. SA power buses are isolated from each other. To keep the modules on separate SA power buses, complete these steps.
  1. Install the modules that use one type of SA power, for example DC, to the right of the adapter or controller, that is, the first SA power bus.
  2. Install the 5069-FPD field potential distributor to establish a second SA power bus.
  3. Install the modules that use the other type of SA power, for example AC, on the second SA power bus.

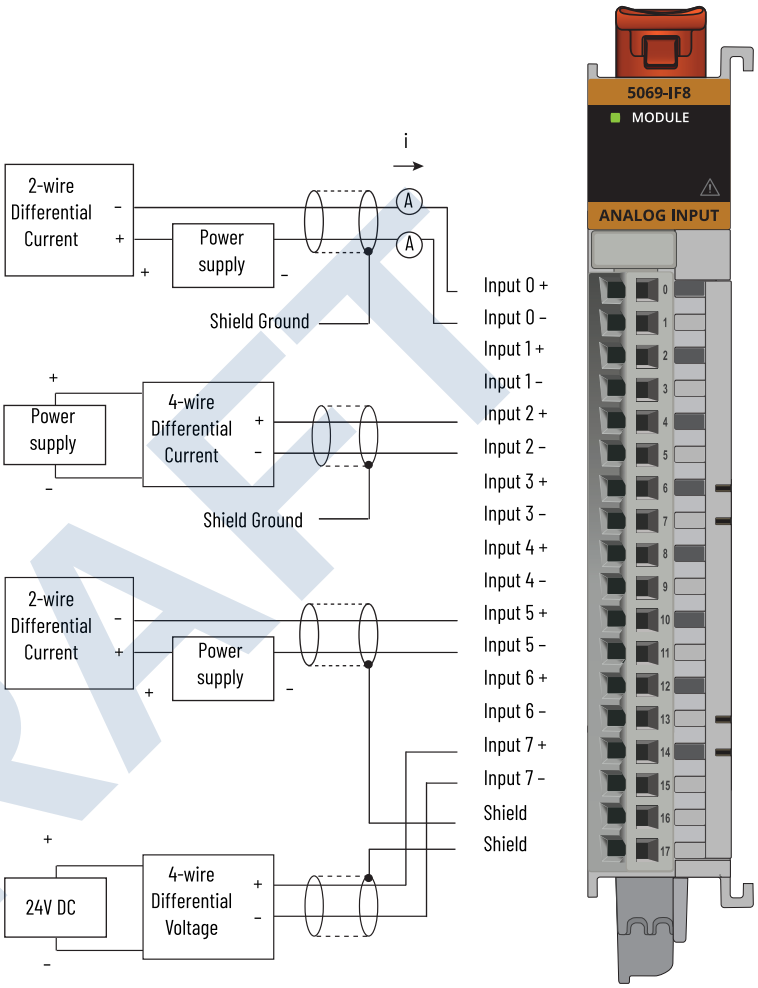

DRAFT

The following figure shows a functional block diagram for the 5069-IF8 module.

5069-IF8 Functional Block Diagram

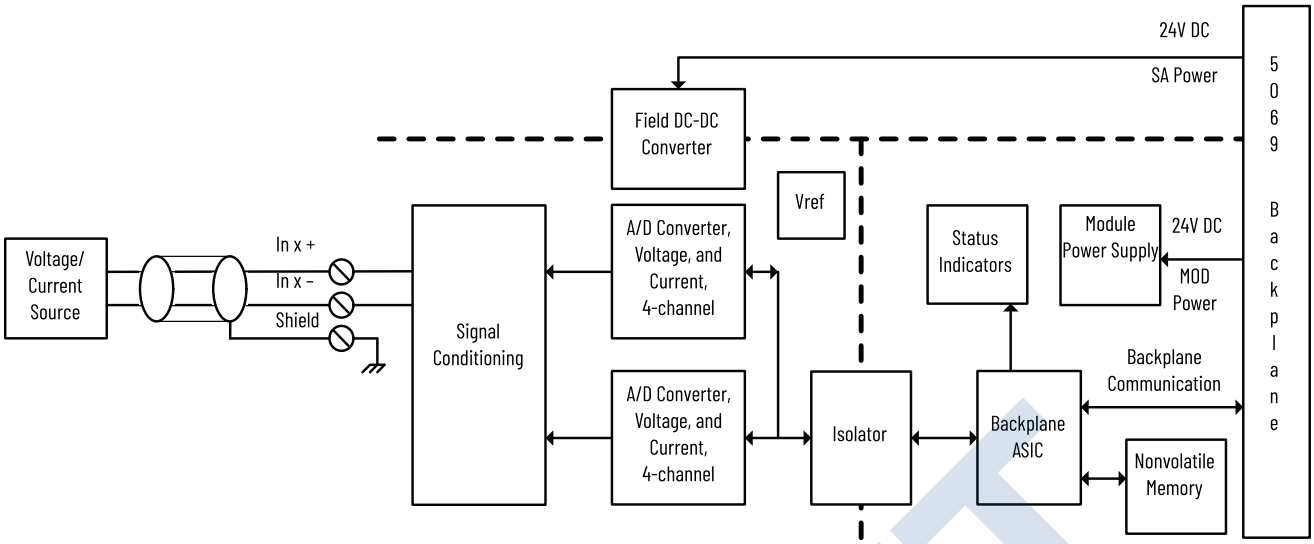

Technical Specifications - 5069-IF8

Attribute	5069-IF8
Inputs	8 differential
Input range, voltage	±10V 0...10V 0...5V
Input range, current	0...20 mA 4...20 mA
Input impedance	Voltage: >1 MΩ Current: 90 Ω typical, 70...110 Ω range
Common mode voltage (channel to channel)	±10V (Current mode) ±2V (Voltage mode)
Module conversion method	Sigma-Delta, Two 24-bit multiplexed ADC
Resolution, voltage(1) (16 bits at 10 Hz notch filter)	±10.5V: <320 µV/count (15 bits plus sign bipolar) 0...10.5V: <160 µV/count (16 bits unipolar) 0...5.25V: <80 µ/V count (16 bits unipolar)
Resolution, current(1) (16 bits at 10 Hz notch filter)	0...21 mA: <0.32 µA/count (16 bits) 3.6...21 mA: <0.27 µA/count (16 bits)
Calibrated accuracy at 25 °C	Voltage 0.10% full scale Current 0.10% full scale
Accuracy drift with temperature	Voltage 0.20% full scale Current 0.30% full scale
Input Total Unadjusted Error (TUE)(2) (Over full temperature range)	Voltage 0.30% full scale Current 0.40% full scale
Scan Time Per channel Per group (channel group 0...3 or channel group 4...7)	 625 µs 2.5 ms
Notch filter at minimum RPI (0.2 ms, 1 channel enabled)	62.5 kHz

DRAFT

Technical Specifications - 5069-IF8

Attribute	5069-IF8
Minimum notch filter frequency at RPI of 2.5 ms	10 kHz
Step response time to 63% of value (Notch filter 10 kHz)	7.5 ms
Input notch filter (Hz) selections	5, 10 (50/60 Default), 15, 20, 50, 60, 100, 200, 500, 1000, 2500, 5000, 10000, 15625, 25000, 31250, 62500
Input anti-aliasing filter cutoff frequency, nom	500 Hz
Input digital filter	First order lag, 0 ms (Default)...32,767 ms (32.767 s)
HART handheld compliance	Add an external 250 Ω resistor into the current loop for HART transmitter compliance.
Overvoltage protection, max	Voltage and Current modes: ± 30V DC
Overcurrent protection, max	Current mode: ±30 mA
Data value during overload condition	Full scale, overrange flag, Data uncertain / data bad
Open circuit detection time	Voltage: + full scale, < 2 s Current: 4...20 mA range, <2 s
Onboard data alarming	Yes
Scaling to engineering units	Yes
Real-time channel sampling	Yes
Data format	IEEE 32-bit floating point

(1) Notch filter dependent.
(2) Includes offset, gain, non-linearity, and repeatability error terms.

General Specifications - 5069-IF8

Attribute	5069-IF8
Voltage and current ratings	
Mod power	75 mA @ 18...32V DC
Mod power Passthrough, max(1)	9.55 A @ 18...32V DC
SA power	100 mA @ 18...32V DC
SA power Passthrough, max(2)	9.95 A @ 18...32V DC
Do not exceed 10 A MOD or SA power (Passthrough) current draw.	
Power dissipation, max	Voltage mode: 2.1 W Current mode: 2.4 W
Thermal dissipation, max	Voltage mode: 7.2 BTU/hr Current mode: 8.2 BTU/hr
Isolation voltage	250V (continuous), Basic Insulation Type 50V Functional Isolation between SA power and input ports No isolation between individual Input ports
Calibration methods	Factory calibrated User-performed (optional)
Module keying	Electronic keying via programming software
Indicators	1 green/red module status indicator 8 yellow/red I/O status indicator
Slot width	1
Common mode noise rejection ratio	130 dB @ 50/60 Hz
Normal mode noise rejection ratio	65 dB @ 50/60 Hz, notch filter dependent
Dimensions (HxWxD), approx	144.57 x 22 x 105.42 mm (5.69 x 0.87 x 4.15 in.)

DRAFT

General Specifications - 5069-IF8

Attribute	5069-IF8
DIN rail	Compatible zinc-plated chromate-passivated steel DIN rail. You can use the EN50022 - 35 x 7.5 mm (1.38 x 0.30 in.) DIN rail.
RTB	One of these RTB types. • 5069-RTB18-SPRING RTB • 5069-RTB18-SCREW RTB **IMPORTANT**: You must order RTBs separately. RTBs do not ship with Compact 5000 I/O modules. We recommend that you order only the RTB type that your system requires.
RTB torque (5069-RTB18-SCREW RTB only)	0.4 N•m (3.5 lb•in)
RTB keying	None
Wire category(3)	2 - shielded input ports 2 - power ports 1 wire per terminal for each signal port
Wire size	
5069-RTB18-SPRING removable terminal block	0.5...1.5 mm^2 (22...16 AWG) solid or stranded copper wire rated at 105 °C (221 °F), or greater, 2.9 mm (0.11 in.) max diameter including insulation
5069-RTB18-SCREW removable terminal block	0.5...1.5 mm^2 (22...16 AWG) solid or stranded copper wire rated at 105 °C (221 °F), or greater, 3.5 mm (0.14 in.) max diameter including insulation
Insulation-stripping length	
5069-RTB18-SPRING connections	10 mm (0.39 in.)
5069-RTB18-SCREW connections	12 mm (0.47 in.)
Weight, approx	175 g (0.39 lb)
Enclosure type	None (open-style)
North American temperature code	T4
ATEX temp code	T4
IECEx temp code	T4

(1) Level of Mod power current that passes through the module depends on the system configuration, such as, module slot location and the other module types that are used in the system. For more information, see the CompactLogix 5380 and Compact GuardLogix 5380 Controllers User Manual, 5069-UM001, CompactLogix 5480 Controllers User Manual, 5069-UM002, and Compact 5000 EtherNet/IP Adapters User Manual, 5069-UM004.

(2) Level of SA power current that passes through the module depends on the system configuration, such as, module slot location and the other module types that are used in the system. For more information, see the CompactLogix 5380 and Compact GuardLogix 5380 Controllers User Manual, 5069-UM001, CompactLogix 5480 Controllers User Manual, 5069-UM002, and Compact 5000 EtherNet/IP Adapters User Manual, 5069-UM004.

(3) Use this Conductor Category information for planning conductor routing. See the Industrial Automation Wiring and Grounding Guidelines, publication 1770-4.1.

Environmental Specifications - 5069-IF8

Attribute	5069-IF8
Temperature, operating IEC 60068-2-1 (Test Ab, Operating Cold), IEC 60068-2-2 (Test Bb, Unpackaged Nonoperating Dry Heat), IEC 60068-2-14 (Test Na, Operating Thermal Shock)	0...60 °C (32...140 °F)
Temperature, surrounding air, max	60 °C (140 °F)
Temperature, nonoperating IEC 60068-2-1 (Test Ab, Unpackaged Nonoperating Cold), IEC 60068-2-2 (Test Bb, Unpackaged Nonoperating Dry Heat), IEC 60068-2-14 (Test Na, Unpackaged Nonoperating Thermal Shock)	-40...+85 °C (-40...+185 °F)
Relative humidity IEC 60068-2-30 (Test Db, Unpackaged Damp Heat)	5...95% noncondensing
Vibration IEC 60068-2-6 (Test Fc, Operating)	5 g @ 10...500 Hz
Shock, operating IEC 60068-2-27 (Test Ea, Unpackaged Shock)	30 g

DRAFT

Environmental Specifications - 5069-IF8

Attribute	5069-IF8
Shock, nonoperating IEC 60068-2-27 (Test Ea, Unpackaged Shock)	50 g
Emissions	IEC 61000-6-4
ESD immunity IEC 61000-4-2	6 kV contact discharges 8 kV air discharges
Radiated RF immunity IEC 61000-4-3	10V/m with 1 kHz sine wave 880% AM from 80...2000 MHz 10V/m with 200 Hz 50% pulse 100% AM at 900 MHz 10V/m with 200 Hz 50% pulse 100% AM at 1890 MHz 3V/m with 1 kHz sine wave 80% AM from 2000...2700 MHz
EFT/B immunity IEC 61000-4-4	±4 kV @ 5 kHz on power ports ±3 kV @ 5 kHz on shielded input ports
Surge transient immunity IEC 61000-4-5	±1 kV line-line (DM) and ±2 kV line-earth (CM) on power ports ±2 kV line-earth (CM) on shielded input ports
Conducted RF immunity IEC 61000-4-6	10V rms with 1 kHz sine wave 80% AM from 150 kHz...80 MHz
Voltage variation IEC 61000-4-29	10 ms interruption on Mod power port

Certifications - 5069-IF8

Certification[1]	5069-IF8
c-UL-us	UL Listed Industrial Control Equipment, certified for US and Canada. See UL File E65584. UL Listed for Class I, Division 2 Group A,B,C,D Hazardous Locations, certified for U.S. and Canada. See UL File E194810.
CE	European Union 2014/30/EU EMC Directive, compliant with: • EN 61326-1; Meas./Control/Lab., Industrial Requirements • EN 61000-6-2; Industrial Immunity • EN 61000-6-4; Industrial Emissions • EN 61131-2; Programmable Controllers (Clause 8, Zone A & B) European Union 2014/35/EU LVD, compliant with: • EN 61010-2-201; Control Equipment Safety Requirements European Union 2011/65/EU RoHS, compliant with: • EN 50581; Technical documentation
RCM	Australian Radiocommunications Act, compliant with: EN 61000-6-4; Industrial Emissions
Ex	European Union 2014/34/EU ATEX Directive, compliant with: • EN 60079-0; General Requirements • EN 60079-15; Potentially Explosive Atmospheres, Protection "n" • II 3 G Ex nA IIC T4 Gc • DEMKO 15 ATEX 1484X
IECEx	IECEx System, compliant with: • IEC 60079-0; General Requirements • IEC 60079-15; Potentially Explosive Atmospheres, Protection "n" • II 3 G Ex nA IIC T4 Gc • IECEx UL 15.0055X
KC	Korean Registration of Broadcasting and Communications Equipment, compliant with: Article 58-2 of Radio Waves Act, Clause 3
EAC	Russian Customs Union TR CU 020/2011 EMC Technical Regulation Russian Customs Union TR CU 004/2011 LV Technical Regulation

(1) When marked. See the Product Certification link at http://www.ab.com for Declarations of Conformity, Certificates, and other certification details.

DRAFT

5069-OF4, 5069-OF4K, and 5069-OF8 Analog Current/Voltage Output Modules

The following figure shows a wiring diagram for the 5069-OF4 and 5069-OF4K modules when used in current mode.

5069-OF4 and 5069-OF4K Wiring Diagram - Current Mode

Channel Connections

The diagram shows a device that is connected to channels 0, 2, and 3. You aren't restricted to using only these channels. You can connect devices to any channel or combination of channels as needed.

IMPORTANT: Remember the following:

- Place more loop devices, for example, strip chart recorders, at either **A** location in the current loop.
- This module has only two shield terminals. Compact 5000 I/O module RTBs only support one wire per terminal.
- If you connect more than two devices to the module, you can ground two devices at the shield terminals. You must ground the remaining devices somewhere else, such as, to the DIN rail via a terminal strip

SA Power

Connections to an external power supply that provides SA power are made via the SA power RTB on one of the following:

- CompactLogix 5380 controller
- Compact GuardLogix 5380 controller
- CompactLogix 5480 controller
- 5069-AENTR or 5069-AEN2TR EtherNet/IP Adapter
- 5069-FPD field potential distributor

IMPORTANT: Remember the following:

- The 5069-OF4 module uses DC SA power. You must connect DC power to the component, that is, controller, adapter, or field potential distributor, that provides SA power to the modules.
- If you install modules in a system that use AC SA power and DC SA power, you must install them on separate SA power buses.
- You use a 5069-FPD field potential distributor to establish a new SA power bus in a system. SA power buses are isolated from each other. To keep the modules on separate SA power buses, complete these steps.
  1. Install the modules that use one type of SA power, for example DC, to the right of the adapter or controller, that is, the first SA power bus.
  2. Install the 5069-FPD field potential distributor to establish a second SA power bus.
  3. Install the modules that use the other type of SA power, for example AC, on the second SA power bus.

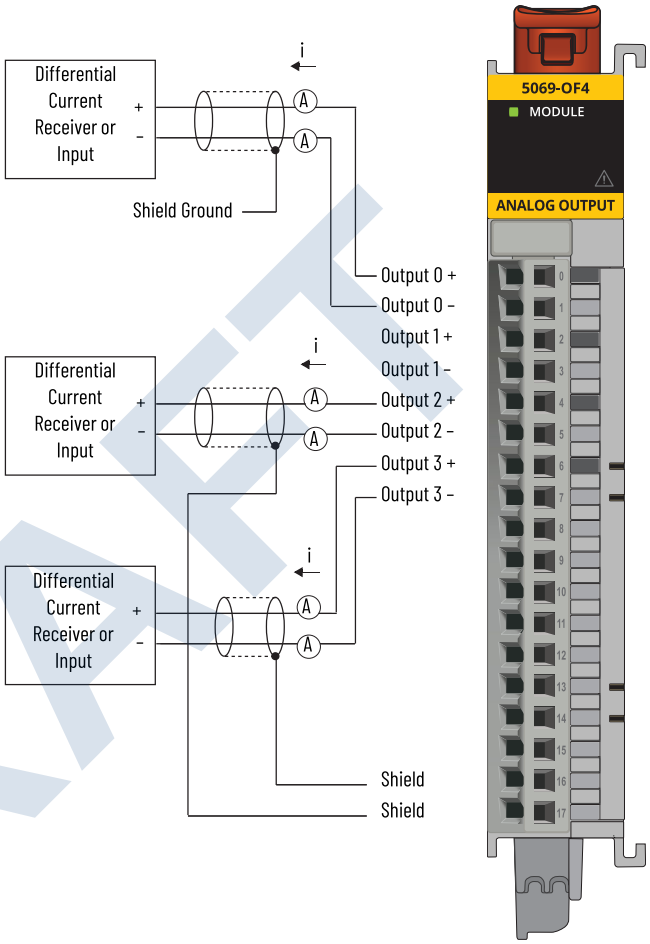

DRAFT

The following figure shows a wiring diagram for the 5069-OF8 module when used in current mode.

5069-OF8 Wiring Diagram - Current Mode

Channel Connections

The diagram shows devices that are connected to channels 0, 4, and 7. You aren't restricted to using only those channels. You can connect devices to any channel or combination of channels as needed.

IMPORTANT: Remember the following:

- Place more loop devices, for example, strip chart recorders, at either **A** location in the current loop.
- This module has only two shield terminals. Compact 5000 I/O module RTBs only support one wire per terminal.
- If you connect more than two devices to the module, you can ground two devices at the shield terminals. You must ground the remaining devices somewhere else, such as, to the DIN rail via a terminal strip.

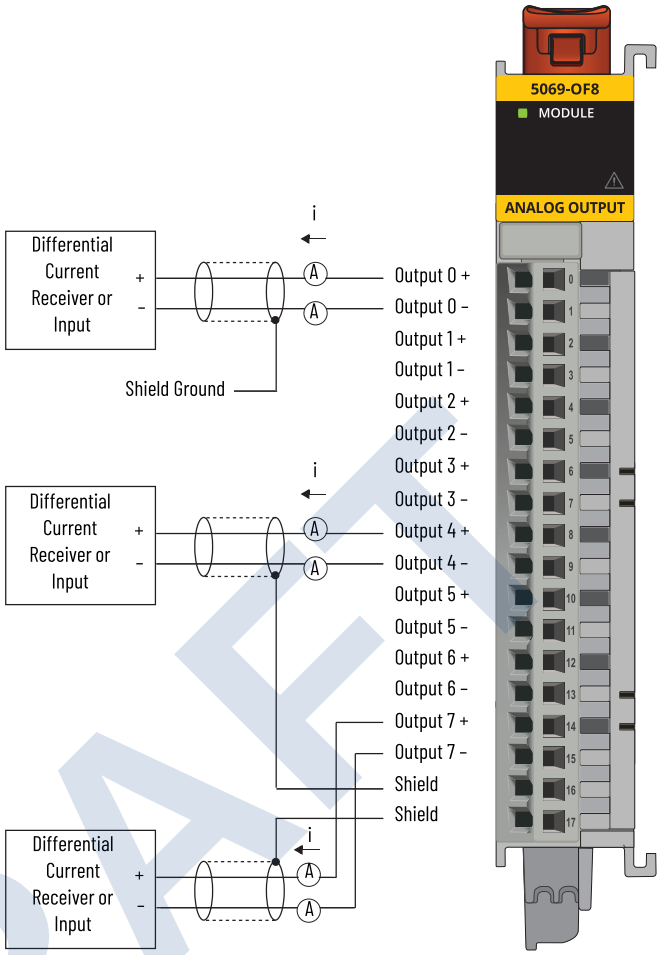

DRAFT

The following figure shows a wiring diagram for the 5069-OF4 and 5069-OF4K modules when used in voltage mode.

5069-OF4 and 5069-OF4K Wiring Diagram - Voltage Mode

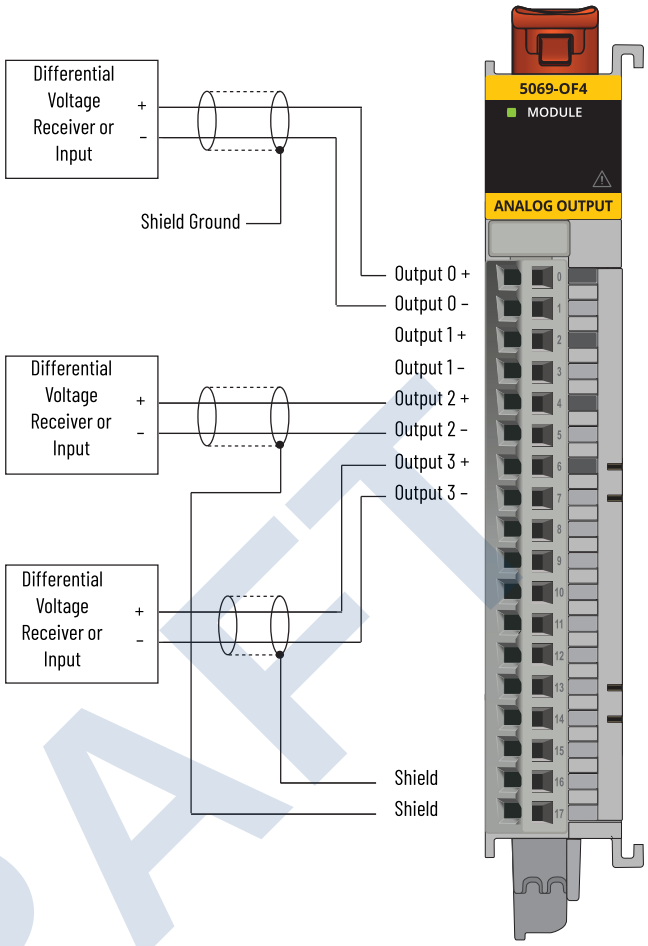

Channel Connections

The diagram shows a device that is connected to channels 0, 2, and 3. You aren't restricted to using only these channels. You can connect devices to any channel or combination of channels as needed.

IMPORTANT: Remember the following:

- This module has only two shield terminals. Compact 5000 I/O module RTBs only support one wire per terminal.
- If you connect more than two devices to the module, you can ground two devices at the shield terminals. You must ground the remaining devices somewhere else, such as, to the DIN rail via a terminal strip.
- The 5069-OF4K module uses the same wiring diagram as shown for the 5069-OF4 module.

DRAFT

The following figure shows a wiring diagram for the 5069-OF8 module when used in voltage mode.

5069-OF8 Wiring Diagram - Voltage Mode

Channel Connections

The diagram shows a device that is connected to channels 0, 2, and 3. You aren't restricted to using only these channels. You can connect devices to any channel or combination of channels as needed.

IMPORTANT: This module has only two shield terminals. Compact 5000 I/O module RTBs only support one wire per terminal.

If you connect more than two devices to the module, you can ground two devices at the shield terminals. You must ground the remaining devices somewhere else, such as, to the DIN rail via a terminal strip.

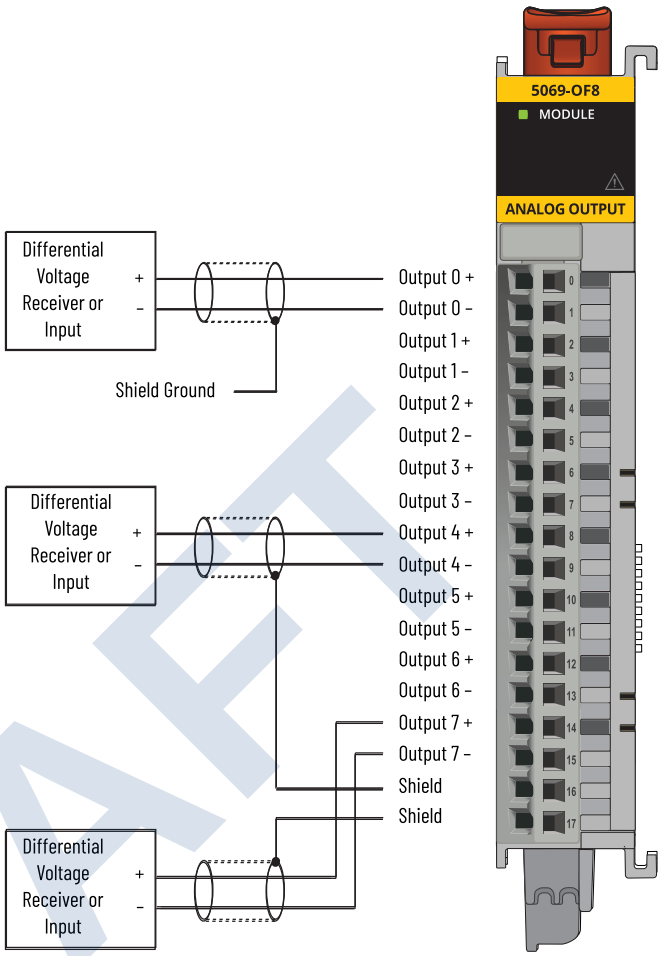

DRAFT

The following figure shows a functional block diagram for the 5069-OF4 and 5069-OF4K modules.

5069-OF4 and 5069-OF4K Functional Block Diagram

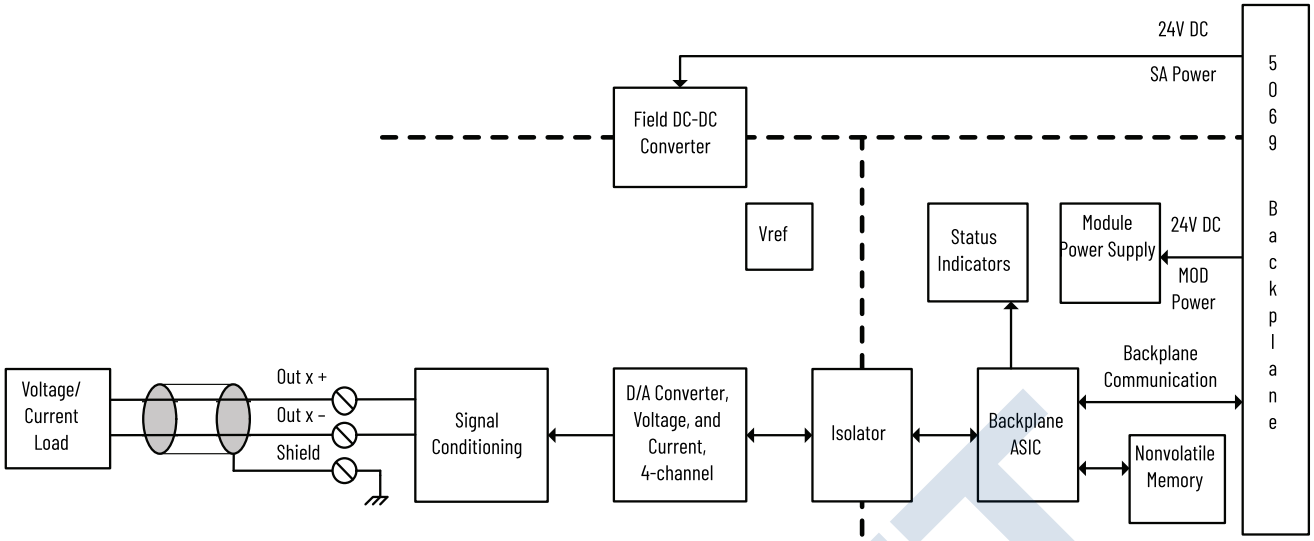

The following figure shows a functional block diagram for the 5069-OF8 module.

5069-OF8 Functional Block Diagram

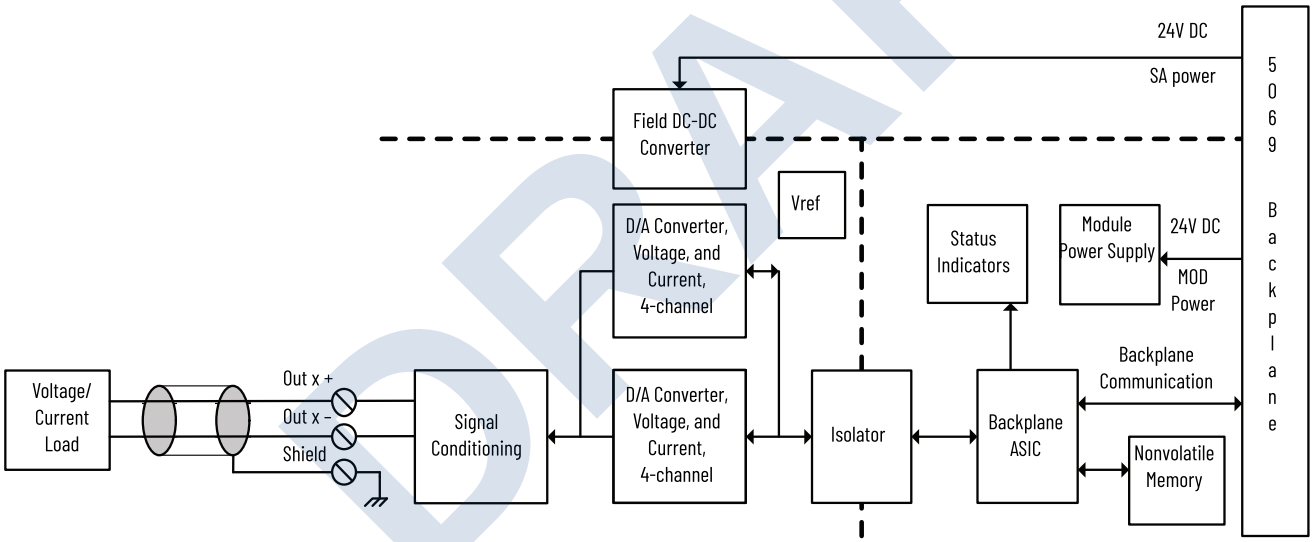

DRAFT

Technical Specifications - 5069-OF4, 5069-OF4K, 5069-OF8

Attribute	5069-OF4, 5069-OF4K	5069-OF8
Outputs	4 voltage or current	8 voltage or current
Output range, voltage	± 10V 0...10V 0...5V	
Output range, current	0...20 mA 4...20 mA	
Resolution	16 bits across ± 10.5V - 320 µV/bit 16 bits across 10.5V - 160 µV/bit 16 bits across 5.25V - 80 µV/bit 16 bits across 21 mA - 320 nA/bit	
Drive capability	Voltage - 1000 Ω min Current - 500 Ω max	
Capacitive load, max (voltage mode only)	1 µF	
Inductive load, max (current mode only)	1 mH	
Open circuit detection	Current mode only	
Short circuit detection	Voltage mode only – output electronically limited to 16 mA or less	
Data format	IEEE 32-bit floating point	
Module conversion method	R-Ladder DAC, monotonicity with no missing codes	
Conversion time per channel	25 µs	
Scan time • Per group 0...3 (OF4/OF8) • Per group 0...7 (OF8 only)	 1.0 ms 2.0 ms	
Step response time to 63% of value	Voltage mode – 18 µs max Current mode – 1 ms max	
Overvoltage protection, max	± 32V DC	
Repeatability	0.05%	
Calibrated accuracy at 25 °C (77 °F)	Voltage - 0.10% full scale Current - 0.10% full scale	
Accuracy drift with temperature	Voltage - 0.30% full scale Current - 0.50% full scale	

DRAFT

General Specifications - 5069-OF4, 5069-OF4K, and 5069-OF8

Attribute	5069-OF4, 5069-OF4K	5069-OF8
Voltage and current ratings		
Analog output ratings	+/–10V DC, 0…20 mA per channel	
Mod power	75 mA @ 18…32V DC	
Mod power Passthrough, max[1]	9.55 A @ 18…32V DC	
SA power	150 mA @ 18…32V DC	250 mA @ 18…32V DC
SA power Passthrough, max[2]	9.95 A @ 18…32V DC	
Power dissipation, max	3.3 W	5.3 W
Thermal dissipation, max	11.3 BTU/hr	18.1 BTU/hr
Isolation voltage	250V (continuous), Basic Insulation Type 50V Functional Isolation between SA power and output ports No isolation between individual output ports	
Calibration methods	Factory Calibrated User-performed (optional)	
Module keying	Electronic keying via programming software	
Indicators	1 green/red module status indicator 4 yellow/red I/O status indicators	1 green/red module status indicator 8 yellow/red I/O status indicators
Slot width	1	
Dimensions (HxWxD), approx	144.57 x 22 x 105.42 mm (5.69 x 0.87 x 4.15 in.)	
DIN rail	Compatible zinc-plated chromate-passivated steel DIN rail. You can use the EN50022 - 35 x 7.5 mm (1.38 x 0.30 in.) DIN rail.	
RTB	One of these RTB types. • 5069-RTB18-SPRING RTB • 5069-RTB18-SCREW RTB **IMPORTANT**: You must order RTBs separately. RTBs do not ship with Compact 5000 I/O modules. We recommend that you order only the RTB type that your system requires.	
RTB torque (5069-RTB18-SCREW RTB only)	0.4 N•m (3.5 lb•in)	
RTB keying	None	
Wire category[3]	2 - shielded input ports 2 - power ports 1 wire per terminal for each signal port	
Wire size		
5069-RTB18-SPRING removable terminal block	0.5…1.5 mm^2 (22…16 AWG) solid or stranded copper wire rated at 105 °C (221 °F), or greater, 2.9 mm (0.11 in.) max diameter including insulation	
5069-RTB18-SCREW removable terminal block	0.5…1.5 mm^2 (22…16 AWG) solid or stranded copper wire rated at 105 °C (221 °F), or greater, 3.5 mm (0.14 in.) max diameter including insulation	
Insulation-stripping length		
5069-RTB18-SPRING connections	10 mm (0.39 in.)	
5069-RTB18-SCREW connections	12 mm (0.47 in.)	

DRAFT

General Specifications - 5069-OF4, 5069-OF4K, and 5069-OF8

Attribute	5069-OF4, 5069-OF4K	5069-OF8
Weight, approx	175 g (0.39 lb)	
Enclosure type	None (open-style)	
North American temp code	T4	
ATEX temp code	T4	
IECEx temp code	T4	

(1) Level of Mod power current that passes through the module depends on the system configuration, such as, module slot location and the other module types that are used in the system. For more information, see the CompactLogix 5380 and Compact GuardLogix 5380 Controllers User Manual, 5069-UM001, CompactLogix 5480 Controllers User Manual, 5069-UM002, and Compact 5000 EtherNet/IP Adapters User Manual, 5069-UM004.

(2) Level of SA power current that passes through the module depends on the system configuration, such as, module slot location and the other module types that are used in the system. For more information, see the CompactLogix 5380 and Compact GuardLogix 5380 Controllers User Manual, 5069-UM001, CompactLogix 5480 Controllers User Manual, 5069-UM002, and Compact 5000 EtherNet/IP Adapters User Manual, 5069-UM004.

(3) Use this Conductor Category information for planning conductor routing. See the Industrial Automation Wiring and Grounding Guidelines, publication 1770-4.1.

Environmental Specifications - 5069-OF4, 5069-OF4K, and 5069-OF8

Attribute	5069-OF4, 5069-OF4K, 5069-OF8
Temperature, operating IEC 60068-2-1 (Test Ab, Operating Cold), IEC 60068-2-2 (Test Bb, Unpackaged Nonoperating Dry Heat), IEC 60068-2-14 (Test Na, Operating Thermal Shock)	0...60 °C (32...140 °F)
Temperature, surrounding air, max	60 °C (140 °F)
Temperature, nonoperating IEC 60068-2-1 (Test Ab, Unpackaged Nonoperating Cold), IEC 60068-2-2 (Test Bb, Unpackaged Nonoperating Dry Heat), IEC 60068-2-14 (Test Na, Unpackaged Nonoperating Thermal Shock)	-40...+85 °C (-40...+185 °F)
Relative humidity IEC 60068-2-30 (Test Db, Unpackaged Damp Heat)	5...95% noncondensing
Vibration IEC 60068-2-6 (Test Fc, Operating)	5 g @ 10...500 Hz
Shock, operating IEC 60068-2-27 (Test Ea, Unpackaged Shock)	30 g
Shock, nonoperating IEC 60068-2-27 (Test Ea, Unpackaged Shock)	50 g
Emissions	IEC 61000-6-4
ESD immunity IEC 61000-4-2	6 kV contact discharges 8 kV air discharges
Radiated RF immunity IEC 61000-4-3	10V/m with 1 kHz sine wave 80% AM from 80...200 MHz 10V/m with 200 Hz 50% pulse 100% AM at 900 MHz 10V/m with 200 Hz 50% pulse 100% AM at 1890 MHz 3V/m with 1 kHz sine wave 80% AM from 2000...2700 MHz

DRAFT

Environmental Specifications - 5069-OF4, 5069-OF4K, and 5069-OF8

Attribute	5069-OF4, 5069-OF4K, 5069-OF8
EFT/B immunity IEC 61000-4-4	±4 kV @ 5 kHz on power ports ±3 kV @ 5 kHz on shielded output ports
Surge transient immunity IEC 61000-4-5	±1 kV line-line (DM) and ±2 kV line-earth (CM) on power ports ±2 kV line-earth (CM) on shielded output ports
Conducted RF immunity IEC 61000-4-6	10V rms with 1 kHz sine wave 80% AM from 150 kHz...80 MHz
Voltage variation IEC 61000-4-29	10 ms interruption on Mod power port

Certifications - 5069-OF4, 5069-OF4K, and 5069-OF8

Certification(1)	5069-OF4, 5069-OF4K, 5069-OF8
c-UL-us	UL Listed Industrial Control Equipment, certified for US and Canada. See UL File E65584. UL Listed for Class I, Division 2 Group A,B,C,D Hazardous Locations, certified for U.S. and Canada. See UL File E194810.
CE	European Union 2014/30/EU EMC Directive, compliant with: • EN 61326-1; Meas./Control/Lab., Industrial Requirements • EN 61000-6-2; Industrial Immunity • EN 61000-6-4; Industrial Emissions • EN 61131-2; Programmable Controllers (Clause 8, Zone A & B) European Union 2014/35/EU LVD, compliant with: • EN 61010-2-201; Control Equipment Safety Requirements European Union 2011/65/EU RoHS, compliant with: • EN 50581; Technical documentation
RCM	Australian Radiocommunications Act, compliant with: EN 61000-6-4; Industrial Emissions
Ex	European Union 2014/34/EU ATEX Directive, compliant with: • EN 60079-0; General Requirements • EN 60079-15; Potentially Explosive Atmospheres, Protection "n" • II 3 G Ex nA IIC T4 Gc • DEMKO 15 ATEX 1484X
IECEx	IECEx System, compliant with: • IEC 60079-0; General Requirements • IEC 60079-15; Potentially Explosive Atmospheres, Protection "n" • II 3 G Ex nA IIC T4 Gc • IECEx UL 15.0055X
KC	Korean Registration of Broadcasting and Communications Equipment, compliant with: Article 58-2 of Radio Waves Act, Clause 3
EAC	Russian Customs Union TR CU 020/2011 EMC Technical Regulation Russian Customs Union TR CU 004/2011 LV Technical Regulation

(1) When marked. See the Product Certification link at http://www.ab.com for Declarations of Conformity, Certificates, and other certification details.

DRAFT

Removable Terminal Kits

You must order 5069 RTB kits to connect MOD power and SA power to CompactLogix 5380 controllers. The MOD power connection uses a 4-point RTB, and the SA power connection uses a 6-point RTB. The following kits are available.

CompactLogix 5380 Controllers Removable Terminal Block Kits

Cat. No.	Description
5069-RTB64-SCREW	Contains the following: • 5069-RTB6-SCREW - 6-point RTB that uses screw-type terminals • 5069-RTB4-SCREW - 4-point RTB that uses screw-type terminals
5069-RTB64-SPRING	Contains the following: • 5069-RTB6-SPRING - 6-point RTB that uses spring-type terminals to connect SA power to the controller. • 5069-RTB4-SPRING - 4-point RTB that uses spring-type terminals to connect MOD power to the controller.

Ethernet Communication Cables

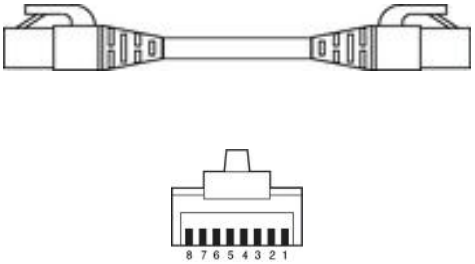

Connector Number	Color	1585J 8-pin Cables with Support for 10/100/1000 Mbps	1585J 8-pin Cables with Support for 10/100 Mbps	1585J 4-pin Cables with Support for 10/100 Mbps
1	White/Orange	BI_DA+	TxData +	
2	Orange	BI_DA-	TxData -	
3	White/Green	BI_DB+	Recv Data +	
4	Blue	BI_DC+	Unused	N/A
5	White/Blue	BI_DC-	Unused	N/A
6	Green	BI_DB-	Recv Data -	
7	White/Brown	BI_DD+	Unused	N/A
8	Brown	BI_DD-	Unused	N/A

Attribute	Value
Connector type	RJ45 male to RJ45 male
Connector angle	Straight-through
Length	Varies by catalog number

DRAFT

Product Information

Allen-Bradley

5069 Removable Terminal Blocks

This publication describes the 5069 removable terminal blocks (RTB).

The 5069 RTBs are available only in 5069 RTB kits. Each kit has a unique catalog number that represents the RTB type contained in it.

	Cat. No.			
Attribute	**5069-RTB4-SPRING(1)**	**5069-RTB6-SPRING**	**5069-RTB4-SCREW(2)**	**5069-RTB6-SCREW**
Voltage, max	300V AC			
Current, max	10 A			
Wire size (AWG conductor range)	0.5…1.5 mm^2 (22…16 AWG) solid or stranded copper wire rated at 105 °C (221 °F), or greater, 2.9 mm (1/8 in.) insulated max diameter		0.5…1.5 mm^2 (22…16 AWG) solid or stranded copper wire rated at 105 °C (221 °F), or greater, 3.5 mm (9/64 in.) insulated max diameter	
Wire strip length, max	10 mm (0.39 in.)		12 mm (0.47 in.)	
Torque	N/A		0.4 N·m (3.5 lb·in)	

(1) This RTB ships with the 5069 RTB kit catalog number 5069-RTB64-SPRING.

(2) This RTB ships with the 5069 RTB kit catalog number 5069-RTB64-SCREW.

	Cat. No.			
Attribute	**5069-RTB18-SPRING**	**5069-RTB14CJC-SPRING**	**5069-RTB18-SCREW**	**5069-RTB14CJC-SCREW**
Voltage, max	300V AC			
Current, max	10 A			
Wire size (AWG conductor range)	0.5…1.5 mm^2 (22…16 AWG) solid or stranded copper wire rated at 105 °C (221 °F), or greater, 2.9 mm (1/8 in.) insulated max diameter		0.5…1.5 mm^2 (22…16 AWG) solid or stranded copper wire rated at 105 °C (221 °F), or greater, 3.5 mm (9/64 in.) insulated max diameter	
Wire strip length, max	10 mm (0.39 in.)		12 mm (0.47 in.)	
Torque	N/A		0.4 N·m (3.5 lb·in)	

Bulletin 140G

Molded Case Circuit Breakers

Overview



Cat. No. 140G-G6C3-D12

Bulletin 140G Molded Case Circuit Breakers

- 10..3000 A current range
- 3- & 4-pole devices
- Space-saving dimensions
- Thermal/Magnetic protection: 15..800 A
- Electronic protection: 10..3000 A
- Approved for global application: UL, CSA, CCC, and IEC performance interrupting/breaking capacity
- Wide range of mounting options
- Extensive range of factory- or field-installed accessories

The Bulletin 140G family of Molded Case Circuit Breakers (MCCBs) offers a wide range of features include thermal/magnetic and electronic protection devices, high interrupting/breaking capacities and a complete line of factory and field installed accessories. The Bulletin 140G MCCBs are ideal for use in line protection of control panels.

Table of Contents

Overview 3
Product Selection 5
Accessories 50
Specifications 64
Approximate Dimensions 68

Standards Compliance

IEC 60947-2
UL489
CSA22.2, No. 5

Certifications

CE Marked
CCC
CSA Certified
UL Listed



G-Frame



H-Frame



I-Frame



J-Frame



K-Frame



M-Frame



N-, NS-Frame



R-Frame

DRAFT

Frame Reference	G-Frame	H-Frame	I-Frame	J-Frame	K-Frame	M-Frame	N-Frame	NS-Frame	R-Frame
Rated Current I_n	125 A	125 A	225 A	250 A	400 A	800 A	1200 A	1200 A	3000 A
No. of Poles	3, 4	3, 4	3, 4	3, 4	3, 4	3, 4	3, 4	3, 4	3, 4
Interrupting Rating [kA]									
240V	50 65 100	65 100 150 200 200	50 65	65 100 150 200	100 150 200 200	100 200 200	65 100 150	65 100 150	125
480V	25 35 65	25 35 65 100 150	25 35	25 35 65 100	35 65 100 150	50 65 100	50 65 100	50 65 100	125
600Y/347V	10 14 25	—	10 10	—	—	—	—	—	—
600V	—	14 18 25 35	10 10	14 18 25 35	25 35 65 100	25 35 42	25 50 65	25 50 65	100
Breaking Capacity [I_{cu} (kA)]									
220…240V	65 85 100	65 85 100 150 200	65 85	65 85 100 150	85 100 200 200	85 100 200	85 100 200	85 100 200	130
415V	36 50 70	36 50 70 120 150	36 50	36 50 70 120	50 70 120 200	36 70 100	50 70 120	50 70 120	80
440V	36 50 65	36 50 65 100 150	25 40	36 50 65 100	40 65 100 180	35 50 65	50 65 100	50 65 100	80
690V	6 8 10	10 12 15 18 20	5 8	10 12 15 20	25 40 70 80	22 25 30	30 42 50	30 42 50	40
250V DC	36 50 70	36 50 70 85 100	36 50	36 50 70 85	—	36 50 65	—	—	—
500V DC	36 50 70	36 50 70 85 100	36 50	36 50 70 85	36 50 70 100	—	—	—	—
750V DC	—	—	—	—	25 36 70 70	16 36 50	—	—	—
Protection Type									
Thermal Magnetic	✓	✓	✓	✓	✓	✓	—	—	—
Electronic	—	✓	—	✓	✓	✓	✓	✓	✓
Molded Case Switch	✓	✓	✓	✓	✓	✓	✓	✓	✓
Internal Accessories									
Auxiliary Contact	✓	✓	✓	✓	✓	✓	✓	✓	✓
Alarm Contact	✓	✓	✓	✓	✓	✓	✓	✓	✓
AX/AL Combo	✓	✓	✓	✓	✓	✓	✓	✓	✓
Trip Unit Contact	—	✓	—	✓	—	—	✓	✓	✓
Shunt Trip	✓	✓	✓	✓	✓	✓	✓	✓	✓
Shunt Close	—	—	—	—	—	—	✓	✓	✓
UV Relay	✓	✓	✓	✓	✓	✓	✓	✓	✓
Field Installable	✓	✓	✓	✓	✓	✓	✓	✓	✓
External Accessories									
End Cap	STD	STD	STD	STD	STD	STD	STD	STD	—
25 mm Phase Barriers	STD	STD	STD	STD	STD	—	—	—	—
Insulators	STD	STD	STD	STD	STD	STD	—	—	—
Terminal Lugs	✓	✓	✓	✓	✓	✓	✓	✓	✓
Extended Terminal	✓	✓	✓	✓	✓	✓	✓	✓	—
Spreader Terminal	✓	✓	✓	✓	✓	✓	✓	✓	✓
Rear Terminal	—	—	—	—	—	—	✓	✓	✓
Phase barriers	✓	✓	✓	✓	✓	✓	✓	✓	✓
Terminal Cover	✓	✓	✓	✓	✓	✓	✓	✓	—
Direct Rotary	✓	✓	✓	✓	✓	✓	✓	—	—
Variable Depth (Door)	✓	✓	✓	✓	✓	✓	✓	—	—
Internal NFPA 79	✓	✓	✓	✓	✓	✓	✓	—	—
Flange Operator	✓	✓	✓	✓	✓	✓	✓	—	—
Flange Cable	✓	✓	✓	✓	✓	✓	✓	—	—
Motor Operator	✓	✓	✓	✓	✓	✓	—	✓	✓
Field Installable	✓	✓	✓	✓	✓	✓	✓	✓	✓

DRAFT

Bulletin 140G

Molded Case Circuit Breakers

Catalog Number Explanation — 125 A, G-Frame

Complete Circuit Breaker Assemblies with Factory-Installed Options

Examples given in this section are not intended to be used for product selection. Use ProposalWorks to configure the molded case circuit breaker. Use these configurations only to select all factory-installed options for shunt trips, undervoltage release units, auxiliary contacts, and alarm contacts. Use the codes from Table g to add on to the molded case circuit breaker cat. no. selected on the previous pages to form a complete cat. no. for a complete assembly with factory-installed options.



140G	–	G		6		C		4	–	C70	–	SD	–	KA
a		*b*		*c*		*d*		*e*		*f*		*g*		

Cat. No. 140G-G6C3-D12

a

Bulletin No.	
Code	Description
140G	Global Molded Case Circuit Breaker

b

Frame/Rating	
Code	Description
G	125 A, Fixed

c

Interrupting Rating/Breaking Capacity (based on I_c at 480V)	
Code	Description
2	25 kA
3	35 kA
6	65 kA

d

Protection Type	
Code	Description
C	Fixed thermal/fixed magnetic
E	Adjust thermal/fixed magnetic
S	Molded case switch (Isolator)

e

Poles	
Code	Description
3	3 poles
4	4 poles

f

Current Range	
Code	Description
C	e.g., C30 = 30 A
D	e.g., D16 = 160 A

g

Factory-Installed Internal Options♦	
Shunt Trip and Undervoltage Release Units	
Code	Description
SJ	Shunt Trip, 24…30V AC/DC
SK	Shunt Trip, 48…60V AC/DC
SD	Shunt Trip, 110…127V AC; 110…125V DC
SA	Shunt Trip, 220…240V AC; 220…250V DC
SB	Shunt Trip, 380…440V AC
SC	Shunt Trip, 480…525V DC
UJ	Undervoltage Release, 24…30V AC/DC
UR	Undervoltage Release, 48V AC/DC
UD	Undervoltage Release, 110…127V AC; 110…125V DC
UA	Undervoltage Release, 220…240V AC; 220…250V DC
UB	Undervoltage Release, 380…440V AC
UC	Undervoltage Release, 480…525V AC
No Digit	No Selection
Auxiliary and Alarm Contacts	
Code	Description
KA	1 Aux. Contact, 250V
TA	1 Alarm Contact, 250V
AA	1 Aux., 1 Alarm Contact, 250V
BA	2 Aux., 1 Alarm Contact, 250V
AJ	1 Aux., 1 Alarm Contact, 24V

♦ Select up to two internal options: 1 for left side mounting (shunt trip or undervoltage release), 1 for right (auxiliary or alarm contact). Consult your local Rockwell automation sales office or Allen-Bradley distributor for further assistance.

DRAFT

Assembled Molded Case Circuit Breakers — 125 A, G-Frame



Interrupting Rating/Breaking Capacity — Thermal-Magnetic Circuit Breakers

Interrupting Rating (50/60 Hz), UL 489/CSA C22.2-5, No. 5-02 [kA]			Breaking Capacity (50/60 Hz), IEC 60947-2 I_{cu} [kA]/I_{cs} %								Breaking Capacity (DC), IEC 60947-2				
			220V★		415V		440V★		690V		250V DC (2-pole in series)		500V DC (3-pole in series)		
240V	480V	600Y/347V	I_{cu} [kA]	I_{cs} [%I_{cu}]	I_{cu} [kA]	I_{cs} [%I_{cu}]	I_{cu} [kA]	I_{cs} [%I_{cu}]	I_{cu} [kA]	I_{cs} [%I_{cu}]	I_{cu} [kA]	I_{cs} [%I_{cu}]	I_{cu} [kA]	I_{cs} [%I_{cu}]	Interrupting Code‡
50	25	10	65	75	36	100	36	50	6	75	36	100	36	100	G2
65	35	14	85	75	50	75	50	50	8	50	50	100	50	100	G3
100	65	25	100	75	70	50	65	50	10	50	70	75	70	75	G6

★ These ratings have not been tested for the CCC listing.

‡ See table below for Cat. No. selection

Thermal-Magnetic, Fixed Thermal-Fixed Magnetic

Rated Current I_n [A]	Thermal Trip [A] $I_r = I_n$ (Fixed)	Magnetic Trip [A] I_m	Interrupting Code G2 Cat. No.		Interrupting Code G3 Cat. No.		Interrupting Code G6 Cat. No.	
			3 Poles	4 Poles	3 Poles	4 Poles	3 Poles	4 Poles
15	15	500	140G-G2C3-C15	140G-G2C4-C15	140G-G3C3-C15	140G-G3C4-C15	140G-G6C3-C15	140G-G6C4-C15
16	16	500	140G-G2C3-C16	140G-G2C4-C16	140G-G3C3-C16	140G-G3C4-C16	140G-G6C3-C16	140G-G6C4-C16
20	20	500	140G-G2C3-C20	140G-G2C4-C20	140G-G3C3-C20	140G-G3C4-C20	140G-G6C3-C20	140G-G6C4-C20
25	25	500	140G-G2C3-C25	140G-G2C4-C25	140G-G3C3-C25	140G-G3C4-C25	140G-G6C3-C25	140G-G6C4-C25
30	30	500	140G-G2C3-C30	140G-G2C4-C30	140G-G3C3-C30	140G-G3C4-C30	140G-G6C3-C30	140G-G6C4-C30
32	32	500	140G-G2C3-C32	140G-G2C4-C32	140G-G3C3-C32	140G-G3C4-C32	140G-G6C3-C32	140G-G6C4-C32
35	35	500	140G-G2C3-C35	140G-G2C4-C35	140G-G3C3-C35	140G-G3C4-C35	140G-G6C3-C35	140G-G6C4-C35
40	40	500	140G-G2C3-C40	140G-G2C4-C40	140G-G3C3-C40	140G-G3C4-C40	140G-G6C3-C40	140G-G6C4-C40
45	45	500	140G-G2C3-C45	140G-G2C4-C45	140G-G3C3-C45	140G-G3C4-C45	140G-G6C3-C45	140G-G6C4-C45
50	50	500	140G-G2C3-C50	140G-G2C4-C50	140G-G3C3-C50	140G-G3C4-C50	140G-G6C3-C50	140G-G6C4-C50
60	60	600	140G-G2C3-C60	140G-G2C4-C60	140G-G3C3-C60	140G-G3C4-C60	140G-G6C3-C60	140G-G6C4-C60
63	63	630	140G-G2C3-C63	140G-G2C4-C63	140G-G3C3-C63	140G-G3C4-C63	140G-G6C3-C63	140G-G6C4-C63
70	70	700	140G-G2C3-C70	140G-G2C4-C70	140G-G3C3-C70	140G-G3C4-C70	140G-G6C3-C70	140G-G6C4-C70
80	80	800	140G-G2C3-C80	140G-G2C4-C80	140G-G3C3-C80	140G-G3C4-C80	140G-G6C3-C80	140G-G6C4-C80
90	90	900	140G-G2C3-C90	140G-G2C4-C90	140G-G3C3-C90	140G-G3C4-C90	140G-G6C3-C90	140G-G6C4-C90
100	100	1000	140G-G2C3-D10	140G-G2C4-D10	140G-G3C3-D10	140G-G3C4-D10	140G-G6C3-D10	140G-G6C4-D10
110	110	1100	140G-G2C3-D11	140G-G2C4-D11	140G-G3C3-D11	140G-G3C4-D11	140G-G6C3-D11	140G-G6C4-D11
125	125	1250	140G-G2C3-D12	140G-G2C4-D12	140G-G3C3-D12	140G-G3C4-D12	140G-G6C3-D12	140G-G6C4-D12
160★	‡	1600	140G-G2E3-D16	140G-G2E4-D16	140G-G3E3-D16	140G-G3E4-D16	140G-G6E3-D16	140G-G6E4-D16

★ IEC only.

‡ Adjustable thermal trip. 112 A min., 136 A med., 160 A max.

Molded Case Switch — UL489§

Rated Current I_n [A]	Magnetic Trip [A] I_m	Cat. No. 3 Poles	Cat. No. 4 Poles
125	1250	140G-G6S3-D12	140G-G6S4-D12

§ Does not provide overcurrent protection; may open above 1250 A.



Cat. No. 140G-G6C3-D12

Accessories Table of Contents

Description	Page	Description	Page
Internal Electrical Accessories			
Auxiliary/Alarm Contact (AX/AL)	50	Undervoltage Release (UVR)	53
Shunt Trip (SNT)	52	Residual Current Release Module	53
Shunt Close (SNC)	52	Current Transformer for Neutral Current	54
Mechanical Accessories			
Terminal Lugs	54	Terminal Covers	56
Extended Terminals	55	Variable Depth Rotary Operating Kits	58
Spreader Terminals	55	Flex Cable Operators	59
Rear Terminals	56	Direct Rotary Operators	60
Phase Barriers	56	Motor Operators	60
Bulletin 1494V Variable Depth Flange-Mounted Circuit Breaker Operating Mechanism			
Components	61		
Additional Accessories	62	**Replacement Parts**	63

Internal Electrical Accessories

Auxiliary/Alarm Contact (AX/AL)

Auxiliary and alarm contacts are supplied in multiple variations for customer application.

- Auxiliary Contacts (AX) : Indicate ON/OFF status of the MCCB.
- Alarm Contacts (AL): Indicate trip status of the MCCB. Alarm trip can be initiated by pressing the test button on the molded case circuit breaker, a trip due to overcurrent, short circuit; or trip due to residual current, shunt, or undervoltage release signals.
- Thermal Trip Contacts (TU): Trips only when the MCCB has detected an overcurrent, short-circuit, or protection trip. H- and J-Frame MCCBs have a button to test this feature. Available only for H, J, N, NS, and R frames.

These contacts are installed by removing the MCCB cover and accessing right-side pockets within the breaker with snap-in mounting provisions. Frames G…M are supplied with pig tail wiring, with each terminal wire marked. Frames N, NS, and R are wired internal to the breaker and are terminated for connection using a 3-pin quick connector.

	Description	Designation	Diagram	Frame Size	Cat. No.
	(1) TU Alarm Contact 250V	TU AL	C	H, J	140G-H-EA1TA
	(1) Auxiliary (1) Alarm Contact 250V	AX2/AL1	D	G, H, I, J	140G-G-EA1R1A
	(2) Auxiliary (1) Alarm Contact 250V	AX1/AX2/AL1	E	G, H, I, J	140G-G-EA2R1A
	(3) Auxiliary (1) Alarm Contact 250V	AX1/AX2/AX3/AL1	F	H, I, J	140G-H-EA3R1A
	(3) Auxiliary (2) Alarm Contact 250V	AX1/AX2/AX3/AL1/AL2	G	H, J	140G-H-EA3R2A
	(2) Auxiliary (2) Alarm (1) TU AL Contact 250V	AX2/AX3/AL1/AL2/TU AL	H	H, J	140G-H-EA2R2TA
	(1) Auxiliary Contact 250V	AX2	A	G, H, I, J	140G-G-EA1A
	(1) Auxiliary Contact 250V or (1) Alarm Contact 250V	AX2	A	G, H, I, J	140G-G-EA1AU★
		AL1	B		
	(1) Auxiliary Contact 24V	AX2	A	G, H, I, J	140G-G-EA1J★
	(1) TU Alarm Contact 24V	TU AL	C	H, J	140G-H-EA1TJ
	(1) Auxiliary (1) Alarm Contact 24V	AX2/AL1	D	G, H, I, J	140G-G-EA1R1J
	(3) Auxilary (1) Alarm Contact, 24V	AX1/AX2/AX3/AL1	F	H, I, J	140G-H-EA3R1J
	(1) Auxilary (1) Alarm Contact, 400V	AX2/AL1	D	H, J	140G-H-EA1R1B
	(2) Auxiliary Contact 400V	AX1/AX2	I	H, J	140G-H-EA2B
	(1) Auxiliary (1) Alarm Contact 250V	AX1/AL1	J	K, M	140G-K-EA1R1A
	(3) Auxiliary (1) Alarm Contact 250V	AX1/AX2/AX3/AL1	F	K, M	140G-K-EA3R1A
	(3) Auxiliary (1) Alarm Contact 24V	AX1/AX2/AX3/AL1	F	K, M	140G-K-EA3R1J
	(1) Auxiliary (1) Alarm Contact 400V	AX1/AL1	J	K, M	140G-K-EA1R1B
	(2) Auxiliary Contact 400V	AX1/AX2	I	K, M	140G-K-EA2B
	(1) Auxiliary (1) Alarm Contact 24V	AX2/AL1	D	N	140G-N-EA1R1J
	(2) Auxiliary Contact 24V	AX1/AX2	I	N, NS	140G-N-EA2J
	(1) Auxiliary (1) Alarm Contact 400V	AX2/AL1	D	N	140G-N-EA1R1B
	(2) Auxiliary Contact 400V	AX1/AX2	I	N, NS	140G-N-EA2B
	(1) TU Alarm Contact 250V	TU AL	C	N, NS	140G-N-EA1TA
	(4) Auxiliary Contact 24V	AX1/AX2/AX3/AX4	K	R	140G-R-EA4J
	(4) Auxiliary Contact 400V	AX1/AX2/AX3/AX4	K	R	140G-R-EA4A
Representative Photo	(1) TU Alarm Contact 250V	TU AL	L	R	140G-R-EA1TA

★ This contact is supplied with unmarked wires. Contact can function as either an auxiliary or alarm contact, depending on connection method.

DRAFT

Diagrams

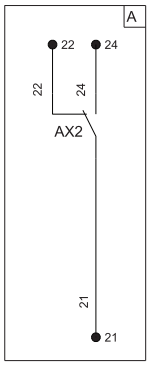

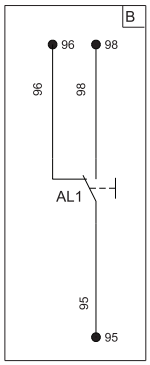

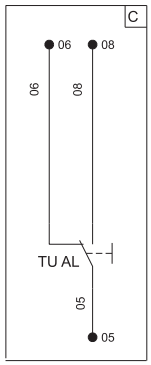

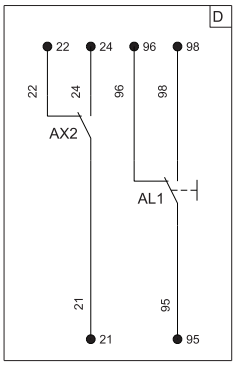

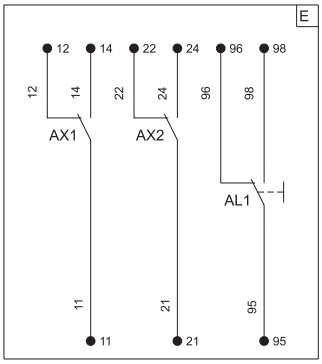

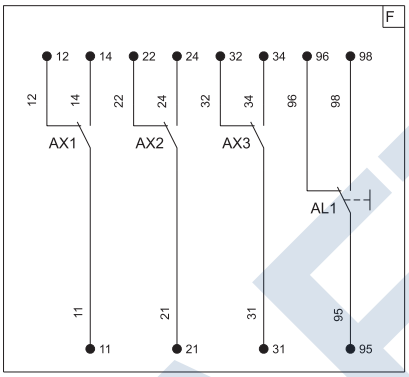

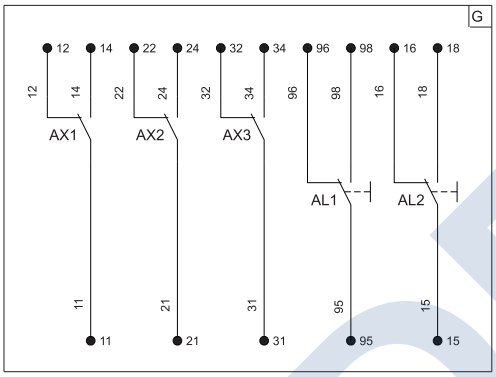

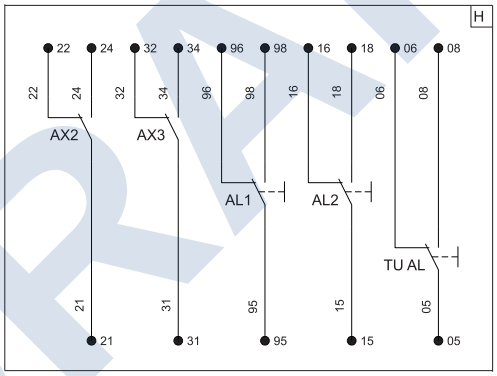

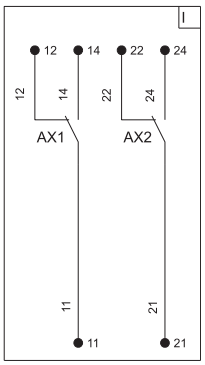

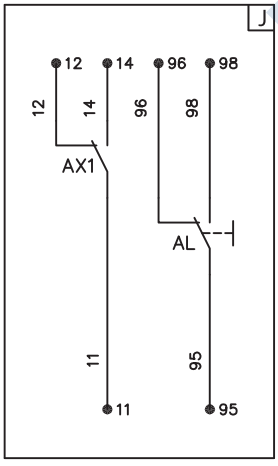

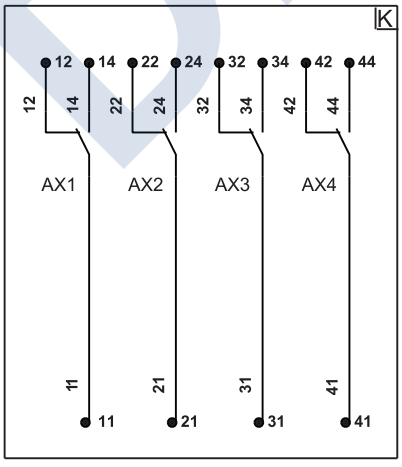

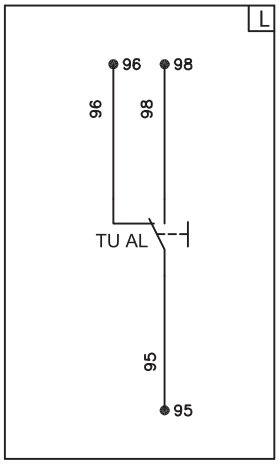

DRAFT

Bulletin 140G

Molded Case Circuit Breakers

Accessories

Current Transformer for Neutral Current



Representative Photo

Rated Current [A]	Frame Size	Cat. No.
300	K ★	140G-K-NCTD30
400	K ★	140G-K-NCTD40
600	M ★	140G-M-NCTD60
800	M ★	140G-M-NCTD80
400…1600	N, NS	140G-N-NCTE16
1000…3200	R	140G-R-NCTE30

★ Order with connector (Cat. No. 140G-K-CC).

Mechanical Accessories

Terminal Lugs

	Description	Frame Size	Cat. No. (Pkg. Qty. 3)	Cat. No. (Pkg. Qty. 4)
 *Representative Photo*	**Cu wire, MCCB only** (1) 14…1/0 AWG or 2.5…70 mm^2	G	140G-G-TLC13	140G-G-TLC14
	Cu wire, MCP only (1) 14…1/0 AWG or 1.5…70 mm^2		140G-G-TLC13A	—
	Multiple cable - Cu wire (6) 14…2 AWG or 2.5…35 mm^2		140G-G-MTL63	140G-G-MTL64
	Cu wire only (1) 14…1/0 AWG or 2.5…95 mm^2	H	140G-H-TLC13	140G-H-TLC14
	Multiple cable - Cu wire (6) 14…2 AWG or 2.5…35 mm^2		140G-H-MTL63	140G-H-MTL64
 *Representative Photo*	**Al or Cu wire** (1) 14…1/0 AWG or 2.5…50 mm^2	I	140G-I-TLA13	140G-I-TLA14
	Al or Cu wire (1) 4…300 MCM or 25…150 mm^2		140G-I-TLA1A3	140G-I-TLA1A4
	Cu wire only (1) 10…250 MCM or 6…185 mm^2		140G-I-TLC13	140G-I-TLC14
	Multiple cable - Cu wire (6) 12…2 AWG or 2.5…35 mm^2		140G-I-MTL63	140G-I-MTL64
 *Representative Photo*	**Al or Cu wire** (1) 14…1/0 AWG or 2.5…50 mm^2	J	140G-J-TLA13	140G-J-TLA14
	Al or Cu wire (1) 4…300 MCM or 25…150 mm^2		140G-J-TLA1A3	140G-J-TLA1A4
	Al or Cu wire (1) 6 (Al)/10 (Cu)…350 MCM or 2.5…185 mm^2 (Al)		140G-J-TLA1B3	140G-J-TLA1B4
	Cu wire only (1) 10…350 MCM or 6…185 mm^2		140G-J-TLC13	140G-J-TLC14
	Multiple cable - Cu wire (6) 12…2 AWG or 2.5…35 mm^2		140G-J-MTL63	140G-J-MTL64
 *Representative Photo*	**Al or Cu wire** (1) 250…500 MCM or 120…240 mm^2	K	140G-K-TLA13	140G-K-TLA14
	Al or Cu wire (2) 2/0…250 MCM or 95…120 mm^2		140G-K-TLA23	140G-K-TLA24
	Cu wire only (1) 250…500 MCM or 120…240 mm^2		140G-K-TLC13	140G-K-TLC14
	Cu wire only (2) 2/0…250 MCM or 95…120 mm^2		140G-K-TLC23	140G-K-TLC24
	Multiple cable - Cu wire (6) 6…1/0 AWG or 16…50 mm^2		140G-K-MTL63	140G-K-MTL64
 *Representative Photo*	**Al or Cu wire** (2) 250…500 MCM or 120…240 mm^2	M	140G-M-TLA23	140G-M-TLA24
	Al or Cu wire (3) 2/0…400 MCM or 70…185 mm^2		140G-M-TLA33	140G-M-TLA34
	Cu wire only (2) 3/0…350 MCM or 85…185 mm^2		140G-M-TLC23	140G-M-TLC24
	Cu wire only (3) 2/0…350 MCM or 70…185 mm^2		140G-M-TLC33	140G-M-TLC34
 *Representative Photo*	**Al or Cu wire** (4) 4/0…500 MCM or 70…240 mm^2	N, NS	140G-N-TLA43	140G-N-TLA44
	Cu wire only (4) 4/0…500 MCM or 70…240 mm^2		140G-N-TLC43	140G-N-TLC44
	Al or Cu wire (6) 1/0…750 MCM or 50…400 mm^2	R	140G-R-TLA63	—
	Cu wire only (6) 1/0…750 MCM or 50…400 mm^2		140G-R-TLC63	—

DRAFT

Variable Depth Rotary Operating Kits

Rotary, Variable Depth Operators

- Supplied with external handle, operating shaft, and MCCB mounted operating mechanism.
- Refer to page 56 to select as components.
- Frames G, H, I, and J use a Bul. 140U P-style handle.
- Frames K, M, and N use a Bul. 140U medium style handle.

	Frame Size	Handle Color	Shaft Length	Cat. No.
 *Representative Photo*	G, I	Black	12 in. (30.48 mm)	140G-G-RVM12B
		Red/Yellow		140G-G-RVM12R
		Black	21 in. (53.34 mm)	140G-G-RVM21B
		Red/yellow		140G-G-RVM21R
	H, J	Black	12 in. (30.48 mm)	140G-H-RVM12B
		Red/yellow		140G-H-RVM12R
		Black	21 in. (53.34 mm)	140G-H-RVM21B
		Red/yellow		140G-H-RVM21R
 *Representative Photo*	K	Black	12.6 in. (320 mm)	140G-K-RVM12B
		Red/yellow		140G-K-RVM12R
		Black	22.8 in. (580 mm)	140G-K-RVM21B
		Red/yellow		140G-K-RVM21R
	M	Black	12.6 in. (320 mm)	140G-M-RVM12B
		Red/yellow		140G-M-RVM12R
		Black	22.8 in. (580 mm)	140G-M-RVM21B
		Red/yellow		140G-M-RVM21R
	N	Black	12.6 in. (320 mm)	140G-N-RVM12B
		Red/yellow		140G-N-RVM12R
		Black	22.8 in. (580 mm)	140G-N-RVM21B
		Red/yellow		140G-N-RVM21R

Rotary, Variable Depth Operators with Internal NFPA 79 Operating Handle

- Supplied with external handle, NFPA handle with operating shaft, support bracket, and MCCB mounted operating mechanism.
- Refer to page 58 to select as components.
- Frames G, H, I, and J use a Bul. 140U P-style handle.
- Frames K, M, and N use a Bul. 140U medium style handle.

	Frame Size	Handle Color	Shaft Length	Cat. No.
 *Representative Photo*	G, I	Black	12 in. (30.48 mm)	140G-G-NVM12B
		Red/yellow		140G-G-NVM12R
		Black	21 in. (53.34 mm)	140G-G-NVM21B
		Red/yellow		140G-G-NVM21R
	H, J	Black	12 in. (30.48 mm)	140G-H-NVM12B
		Red/yellow		140G-H-NVM12R
		Black	21 in. (53.34 mm)	140G-H-NVM21B
		Red/yellow		140G-H-NVM21R
 *Representative Photo*	K	Black	12.6 in. (320 mm)	140G-K-NVM12B
		Red/yellow		140G-K-NVM12R
		Black	22.8 in. (580 mm)	140G-K-NVM21B
		Red/yellow		140G-K-NVM21R
	M	Black	12.6 in. (320 mm)	140G-M-NVM12B
		Red/yellow		140G-M-NVM12R
		Black	22.8 in. (580 mm)	140G-M-NVM21B
		Red/yellow		140G-M-NVM21R
	N	Black	12.6 in. (320 mm)	140G-N-NVM12B
		Red/yellow		140G-N-NVM12R
		Black	22.8 in. (580 mm)	140G-N-NVM21B
		Red/yellow		140G-N-NVM21R

DRAFT

Bulletin 140G

Molded Case Circuit Breakers

Specifications — G- and H-Frame

		G-Frame				H-Frame‡					
Max. Rated Current	[A]	125			160★	125					160★
Rated insulation voltage, U_i, IEC	[V]	800				1000					
NEMA, UL, CSA											
Interrupting Rating Code		G2	G3	G6	G2 G3 G6	H2	H3	H6	H0	H15	H2 H3 H6 H0 H15
240V AC, 50/60Hz	[kA]	50	65	100	50 65 100	65	100	150	200	200	65 100 150 200 200
480V AC, 50/60Hz	[kA]	25	35	65	25 35 65	25	35	65	100	150	25 35 65 100 150
600Y/347V AC, 50/60Hz	[kA]	10	14	25	10 14 25	—	—	—	—	—	—
600V AC, 50/60 Hz	[kA]	—	—	—	—	14	18	25	35	42	14 18 35 35 42
IEC 60947-2											
Rated ultimate short-circuit breaking capacity, I_{cu}											
220/230/240V AC, 50/60Hz	[kA]	65	85	100	65 85 100	65	85	100	150	200	65 85 100 150 200
380V AC, 50/60Hz	[kA]	36	50	70	36 60 70	36	50	70	120	150	26 50 70 120 150
415V AC, 50/60Hz	[kA]	36	50	70	36 50 70	36	50	70	120	150	36 50 70 120 150
440V AC, 50/60Hz	[kA]	36	50	65	36 50 65	36	50	65	100	150	36 50 65 100 150
500V AC, 50/60Hz	[kA]	30	36	50	36 50 65	30	36	50	60	70	30 36 50 60 70
525V AC, 50/60Hz	[kA]	22	35	35	22 35 35	20	25	30	36	50	20 25 30 36 50
690V AC, 50/60Hz	[kA]	6	8	10	6 8 10	10	12	15	18	20	10 12 15 18 20
250V DC, 2 Poles in Series	[kA]	36	50	70	36 50 70	36	50	70	85	100	36 50 70 85 100
500V DC, 2 Poles in Series	[kA]	—	—	—	—	—	—	—	—	—	—
500V DC, 3 Poles in Series	[kA]	36	50	70	36 50 70	36	50	70	85	100	36 50 70 85 100
750V DC, 3 Poles in Series	[kA]	—	—	—	—	—	—	—	—	—	—
Rated service short-circuit breaking capacity, I_{cs}											
220/230/240V AC, 50/60Hz	[kA]	75% (50)	75%	75%	75% 75% 75%	100%	100%	100%	100%	100%	100% 100% 100% 100% 100%
380V AC, 50/60Hz	[kA]	100%	100%	75%	100% 100% 75%	100%	100% 100%	100%	100%	100%	100% 100% 100% 100% 100%
415V AC, 50/60Hz	[kA]	100%	75%	50%	100% 75% 50%	100%	100%	100%	100%	100%	100% 100% 100% 100% 100%
440V AC, 50/60Hz	[kA]	50%	50%	50%	50% 50% 50%	100%	100%	100%	100%	100%	100% 100% 100% 100% 100%
500V AC, 50/60Hz	[kA]	50%	50%	50%	50% 50% 50%	100%	100%	100%	100%	100%	100% 100% 100% 100% 100%
525V AC, 50/60Hz	[kA]	50%	50%	50%	50% 50% 50%	100%	100%	100%	100%	100%	100% 100% 100% 100% 100%
690V AC, 50/60Hz	[kA]	75%	50%	50%	75 50 50%	100%	100%	100%	75%	75%	100% 100% 100% 75% 75%
250V DC, 2 Poles in Series	[kA]	100%	100%	75%	100% 100% 75%	100%	100%	100%	100%	100%	100% 100% 100% 100% 100%
500V DC, 2 Poles in Series	[kA]	—	—	—	—	—	—	—	—	—	—
500V DC, 3 Poles in Series	[kA]	100%	100%	75%	100% 100% 75%	100%	100%	100%	100%	100%	100% 100% 100% 100% 100%
750V DC, 3 Poles in Series	[kA]	—	—	—	—	—	—	—	—	—	—
Mechanical Life	[No. Ops]	25 000				25 000					
	[Ops/hr]	240				240					
Electrical Life @ 415V AC	[No. Ops]	8000				8000					
	[Ops/hr]	120				120					
Ambient Temp. w/out derating	°F [°C]	104 °F [40 °C]				104 °F [40 °C]					
Storage Temperature	°F [°C]	-40...+176 °F [-40…+80 °C]				-40...+176 °F [-40…+80 °C]					
Dimensions [Width/Depth/Height]	[mm]	3 poles: 76.2x70x130				3 poles: 90x82.5x130					
	[mm]	4 poles: 101.6x70x130				4 poles: 120x82.5x130					

★ IEC version with a 160 A I_{cu} rating

‡ Cannot be reverse fed above 480V

DRAFT

Bulletin 140G

Molded Case Circuit Breakers

Approximate Dimensions — 125 A, G-Frame

Dimensions are in millimeters. Dimensions are not intended to be used for manufacturing purposes.

Panel Mounted Molded Case Circuit Breaker

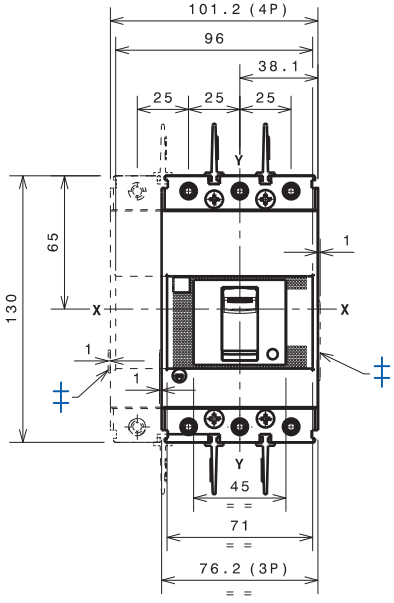

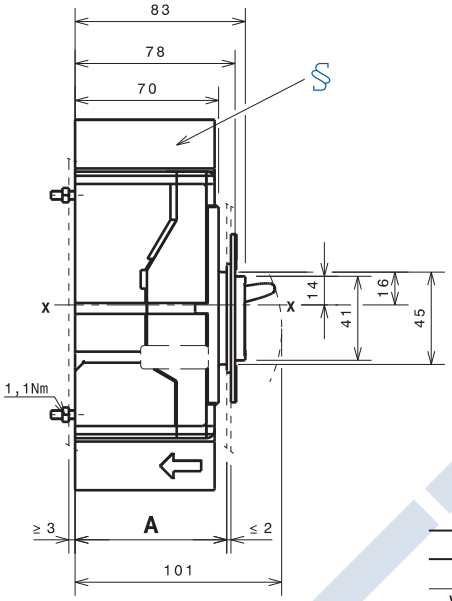

Description	No. of Poles	A
With flange	3...4	74
Without flange	3...4	71
	3...4	79

‡ Overall dimensions of optional wiring ducts
§ Required 25 mm insulating phase barriers provided

DIN Rail Mounted Molded Case Circuit Breaker

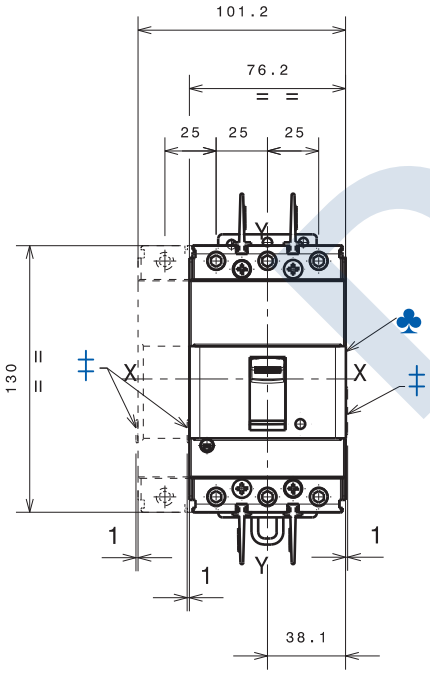

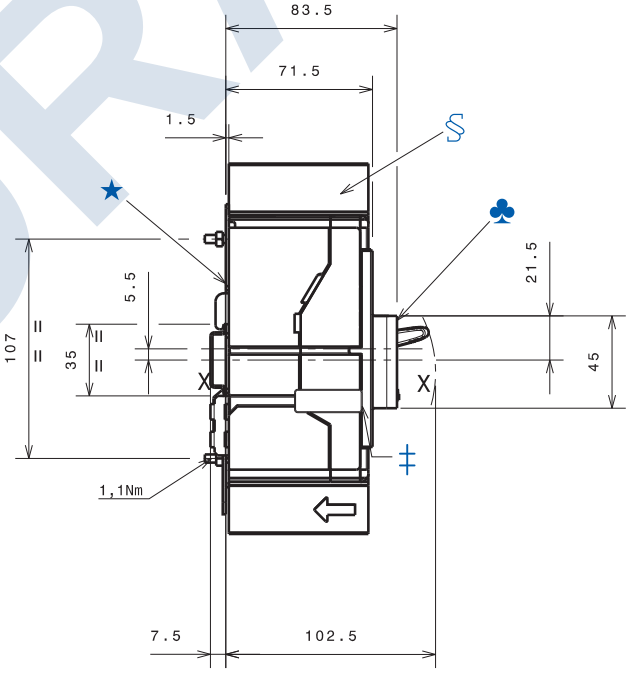

★ Mounting bracket
‡ Overall dimensions of optional wiring ducts
§ Required 25 mm insulating phase barriers provided
♣ Optional front cover for DIN Rail

DRAFT

Drilling Template for Molded Case Circuit Breaker Mounting

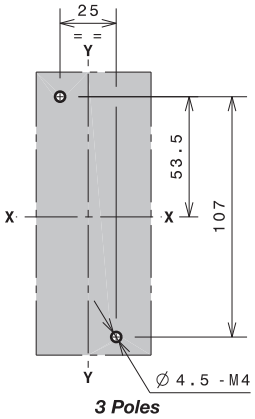

3 Poles

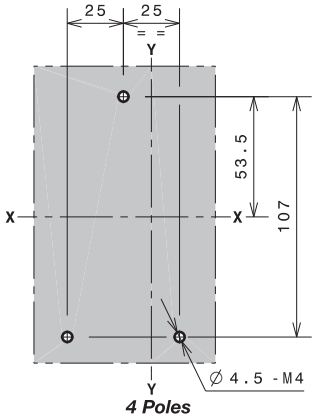

4 Poles

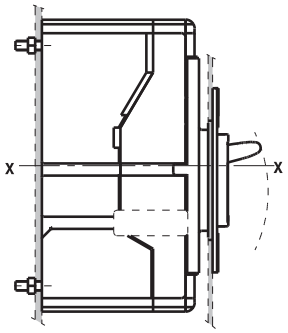

Cat. Nos. 140G-G-ECM, -ECM4 Terminals

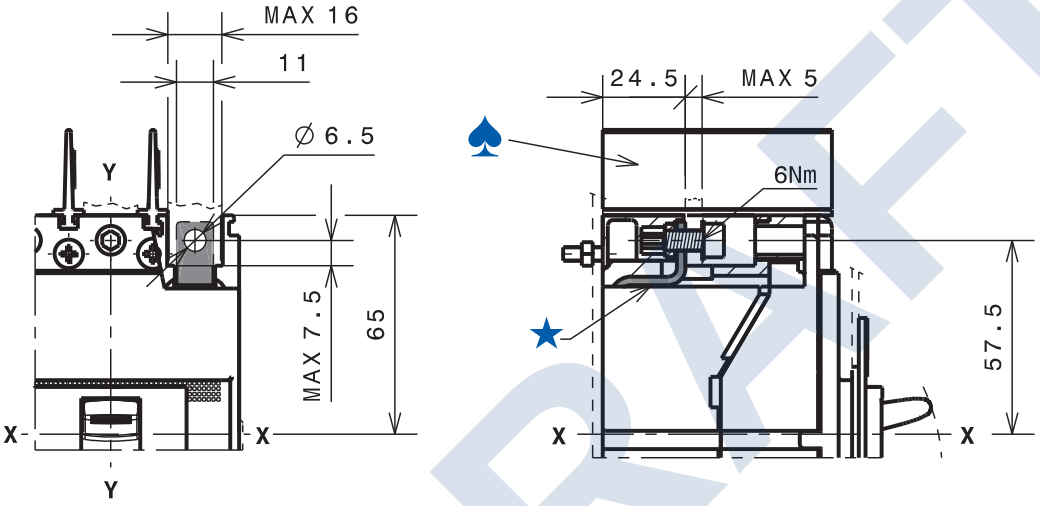

★ Mounting bracket
♠ Required 25 mm insulating phase barriers provided

DRAFT

Cat. Nos. 140G-G-TLC13, 140G-G-TLC14 Terminals (Copper Only Lug)

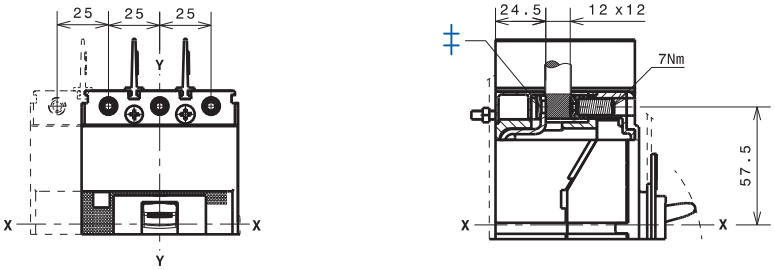

‡ Front terminals

Cat. No. 140G-G-MTL63, -MTL64 Terminal (Multi-Cable Terminal Lug)

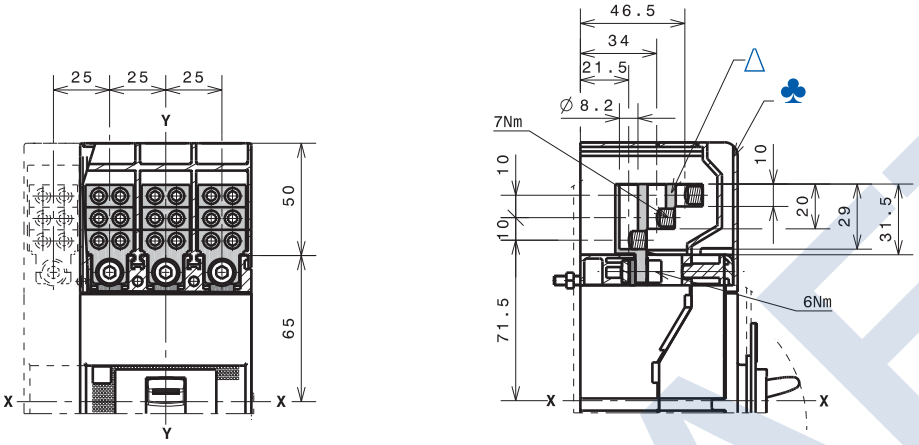

♣ Required terminal covers with IP40 protection provided
Δ Terminal lugs for multi-cable connection

Cat. No. 140G-G-RMB or 140G-G-RMY Direct Rotary Operating Handle

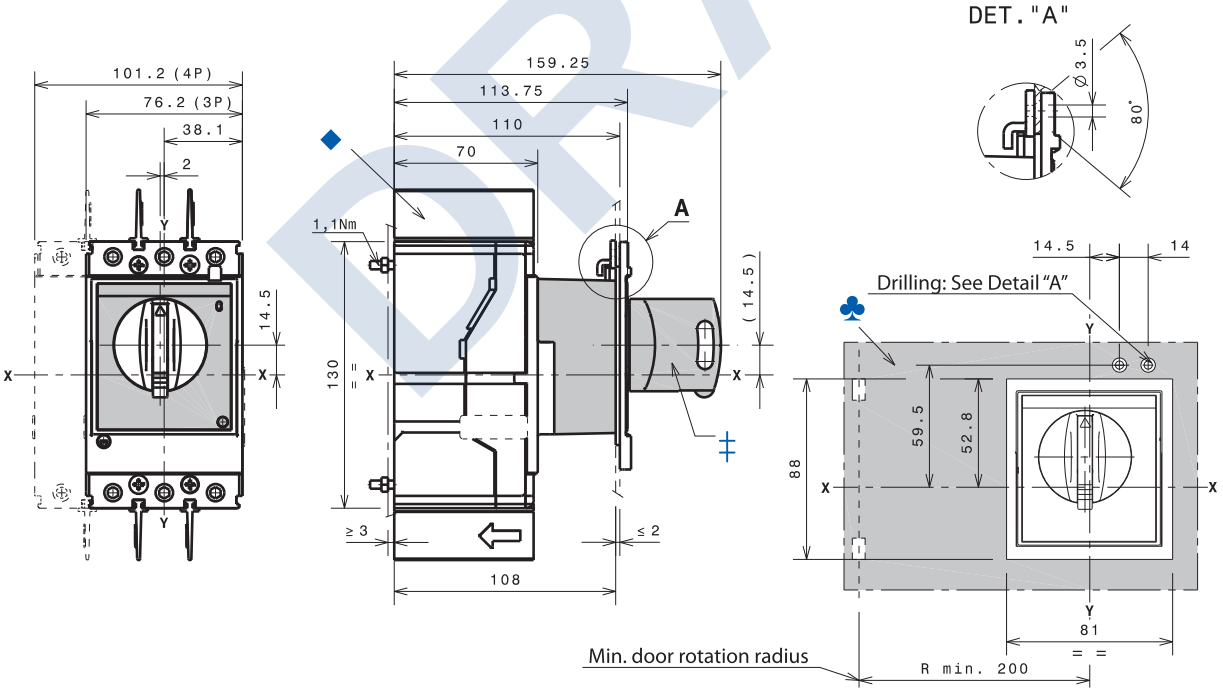

‡ Rotary handle operating mechanism on molded case circuit breaker
♣ Door drilling template with direct rotary handle
♦ Required 25 mm insulating phase barriers provided

DRAFT

Bulletin 140G

Molded Case Circuit Breakers

Approximate Dimensions — 125 A, G-Frame

Cat. Nos. 140G-G-RVM...Variable Depth Rotary Mechanism with Door Mounted Handle

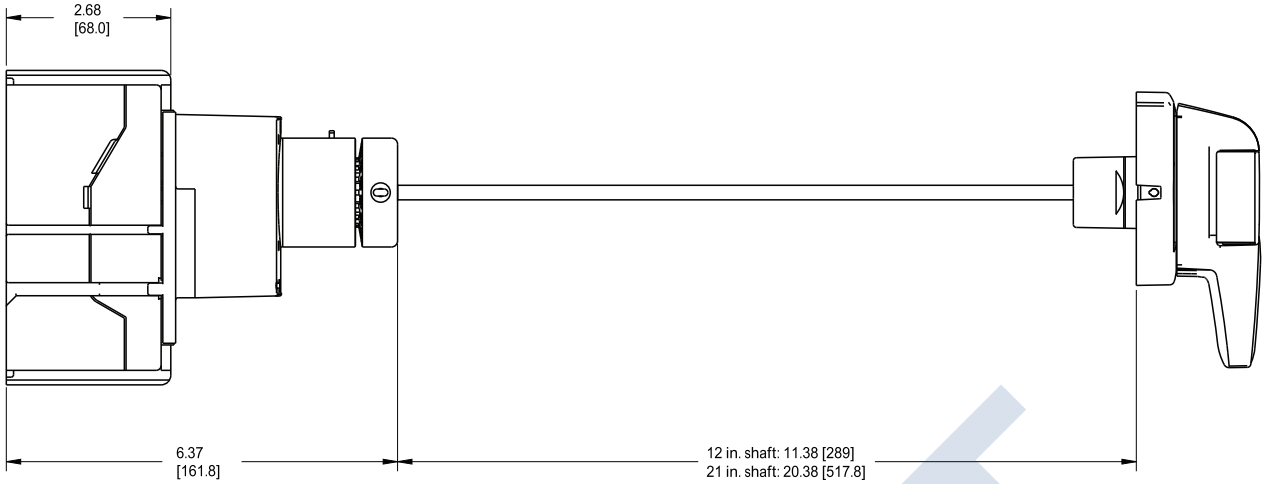

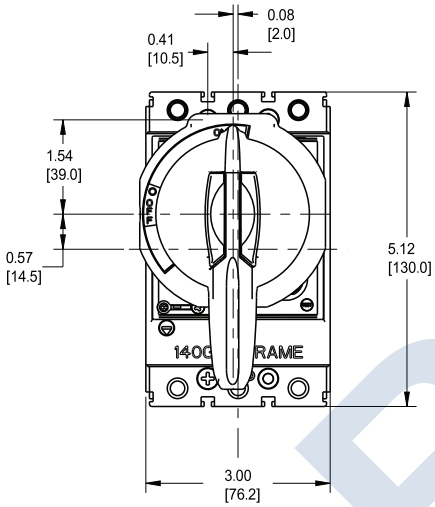

3-Pole

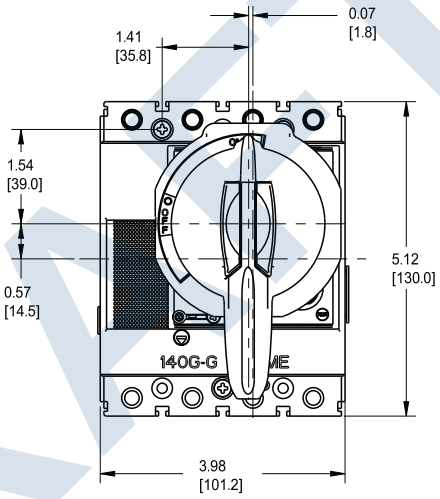

4-Pole

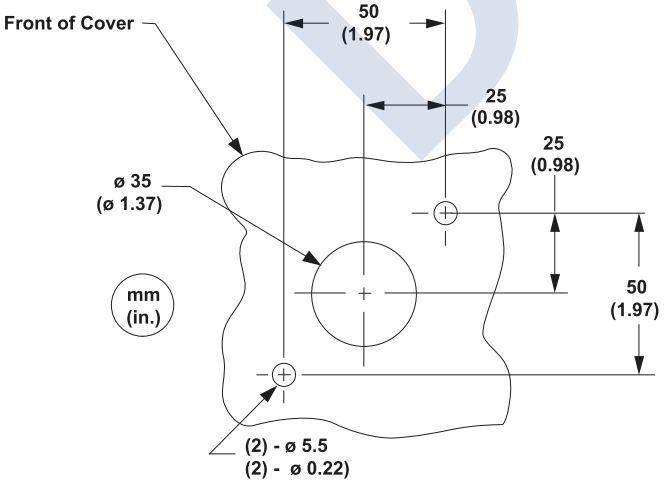

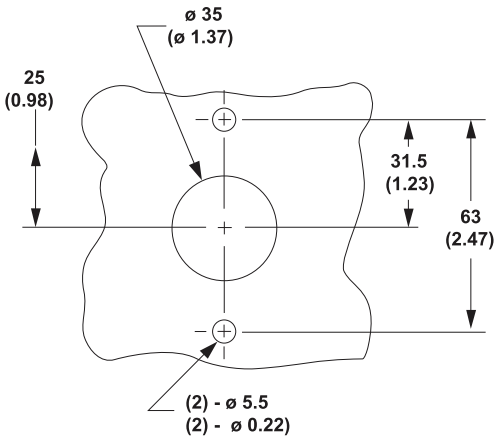

DRAFT

Circuit Breakers

Accessories

140G Assembled Molded Case Circuit Breakers

Operating Mechanisms

Description	Frame Size	Handle Color	Shaft Length	Cat. No.
Rotary, variable depth operator kits	G, I	Black	12 in (305 mm)	140G-G-RVM12B
		Red/Yellow		140G-G-RVM12R
		Black	21 in (533 mm)	140G-G-RVM21B
		Red/Yellow		140G-G-RVM21R
	H, J	Black	12 in (305 mm)	140G-H-RVM12B
		Red/Yellow		140G-H-RVM12R
		Black	21 in (533 mm)	140G-H-RVM21B
		Red/Yellow		140G-H-RVM21R
	K	Black	12 in (305 mm)	140G-K-RVM12B
		Red/Yellow		140G-K-RVM12R
		Black	22 in (559 mm)	140G-K-RVM21B
		Red/Yellow		140G-K-RVM21R
	M	Black	12 in (305 mm)	140G-M-RVM12B
		Red/Yellow		140G-M-RVM12R
		Black	22 in (559 mm)	140G-M-RVM21B
		Red/Yellow		140G-M-RVM21R

Description	Frame Size	Handle Type	Cable Length	Cat. No.
Flex cable operator kits	G	Non-metallic Handle, Type 1/3/12/4/4X	3 ft (.91 m)	140G-G-FCXB03
			4 ft (1.3 m)	140G-G-FCXB04
			6 ft (1.9 m)	140G-G-FCXB06
			10 ft (3.0 m)	140G-G-FCXB10
		Stainless Steel Handle, Type 4/4X	3 ft (.91 m)	140G-G-FCSB03
			4 ft (1.3 m)	140G-G-FCSB04
			6 ft (1.9 m)	140G-G-FCSB06
			10 ft (3.0 m)	140G-G-FCSB10
	H	Non-metallic Handle, Type 1/3/12/4/4X	3 ft (.91 m)	140G-H-FCXB03
			4 ft (1.3 m)	140G-H-FCXB04
			6 ft (1.9 m)	140G-H-FCXB06
			10 ft (3.0 m)	140G-H-FCXB10
		Stainless Steel Handle, Type 4/4X	3 ft (.91 m)	140G-H-FCSB03
			4 ft (1.3 m)	140G-H-FCSB04
			6 ft (1.9 m)	140G-H-FCSB06
			10 ft (3.0 m)	140G-H-FCSB10
	I	Non-metallic Handle, Type 1/3/12/4/4X	3 ft (.91 m)	140G-I-FMXB03
			6 ft (1.9 m)	140G-I-FMXB06

DRAFT

Allen-Bradley

Accessories

140G Assembled Molded Case Circuit Breakers

Operating Mechanisms

Description	Frame Size	Handle Type	Cable Length	Cat. No.
Flex cable operator kits	J	Non-metallic Handle, Type 1/3/12/4/4X	3 ft (.91 m)	140G-J-FCXB03
			4 ft (1.3 m)	140G-J-FCXB04
			6 ft (1.9 m)	140G-J-FCXB06
			10 ft (3.0 m)	140G-J-FCXB10
		Stainless Steel Handle, Type 4/4X	3 ft (.91 m)	140G-J-FCSB03
			4 ft (1.3 m)	140G-J-FCSB04
			6 ft (1.9 m)	140G-J-FCSB06
			10 ft (3.0 m)	140G-J-FCSB10
	K	Non-metallic Handle, Type 1/3/12/4/4X	3 ft (.91 m)	140G-K-FCXB03
			4 ft (1.3 m)	140G-K-FCXB04
			6 ft (1.9 m)	140G-K-FCXB06
			10 ft (3.0 m)	140G-K-FCXB10
		Stainless Steel Handle, Type 4/4X	3 ft (.91 m)	140G-K-FCSB03
			4 ft (1.3 m)	140G-K-FCSB04
			6 ft (1.9 m)	140G-K-FCSB06
			10 ft (3.0 m)	140G-K-FCSB10

Auxiliary Contacts

Description	Designation	For Use With	Cat. No.
(1) Auxiliary contact, 250V	AX2	140G-G, H, I, J	140G-G-EA1A
(1) Auxiliary, (1) alarm contact, 250V	AX2/AL1		140G-G-EA1R1A
(1) Auxiliary contact, 24V	1		140G-G-EA1J
(1) Auxiliary, (1) alarm contact, 24V	2		140G-G-EA1R1J
(1) Auxiliary, (1) alarm contact, 250V	AX2/AL1	K,M	140G-K-EA1R1A
(1) Auxiliary, (1) alarm contact, 24V			140G-K-EA1R1J

Shunt Trips

Description	Frame Size	Cat. No.
24...30V AC/DC	G, H, I, J	140G-G-SNJ
48...60V AC/DC		140G-G-SNKY
110...127V AC/110...125V DC		140G-G-SND
220...240V AC/220...250V DC		140G-G-SNA
24...30V AC/DC	K, M	140G-G-SNJ
48...60V AC/DC		140G-G-SNKY
110...127V AC/110...125V DC		140G-G-SND
220...240V AC/220...250V DC		140G-G-SNA

Undervoltage Release

Description	Frame Size	Cat. No.
24...30V AC/DC	G, H, I, J	140G-G-UVJ
48V AC/DC		140G-G-UVKY
60V AC/DC		140G-G-UVY
110...127V AC/110...125V DC		140G-G-UVD
220...240V AC/220...250V DC		140G-G-UVA
380...440V AC		140G-G-UVB
480...525V AC		140G-G-UVC
24...30V AC/DC	K, M	140G-K-UVJ
48V AC/DC		140G-K-UKY
60V AC/DC		140G-K-UVY
110...127V AC/110...125V DC		140G-K-UVD
220...240V AC/220...250V DC		140G-K-UVA
380...440V AC		140G-K-UVB



Product Selection Tools

Available online or for download, our tools help you access info while in the office or on the go.

https://rok.auto/selection

DRAFT



For more information on our complete family of circuit protection products, please visit:
http://ab.rockwellautomation.com/Circuit-and-Load-Protection
https://rok.auto/circuit+load-protection

Product data sheet

Specifications



Circuit breaker accessory, PowerPacT H/J, handle kit, rotary, 6 inch, 150A to 250A, operating mechanism, 3 pole, long shaft

9421LJ4

Main

Product Type	Circuit Breaker Mechanism
Product Range	9421L

Complementary

Handle Length	6 in (152.4 mm)
Shaft Type	Long
Product Weight	6.68 lb(US) (3.03 kg)

Environmental

Enclosure Type	NEMA 1/3R/12 enclosure

Ordering and shipping details

Category	US10CP121731
Discount Schedule	0CP1
GTIN	785901700463
Returnability	Yes
Country of origin	MX

Packing Units

Unit Type of Package 1	PCE
Number of Units in Package 1	1
Package 1 Height	7.70 in (19.558 cm)
Package 1 Width	7.50 in (19.050 cm)
Package 1 Length	18.90 in (48.006 cm)
Package 1 Weight	6.629 lb(US) (3.007 kg)
Unit Type of Package 2	PAL
Number of Units in Package 2	20
Package 2 Height	23.00 in (58.420 cm)
Package 2 Width	42.00 in (106.680 cm)
Package 2 Length	42.00 in (106.680 cm)
Package 2 Weight	162.999 lb(US) (73.935 kg)

Price is “List Price” and may be subject to a trade discount – check with your local distributor or retailer for actual price.

DRAFT

Disclaimer: This documentation is not intended as a substitute for and is not to be used for determining suitability or reliability of these products for specific user applications

Contractual warranty

Warranty	18 months

DRAFT

Environmental Data

Schneider Electric aims to achieve Net Zero status by 2050 through supply chain partnerships, lower impact materials, and circularity via our ongoing “Use Better, Use Longer, Use Again” campaign to extend product lifetimes and recyclability.

Environmental Data explained >

How we assess product sustainability >

Use Better

Materials and Substances

Packaging made with recycled cardboard	No
Packaging without single use plastic	No
EU RoHS Directive	Compliant with Exemptions
California proposition 65	"WARNING: This product can expose you to chemicals including: Lead and lead compounds, which is known to the State of California to cause cancer and birth defects or other reproductive harm. For more information go to www.P65Warnings.ca.gov"
Halogen content performance	Halogen free plastic parts product
PVC free	Yes

Use Again

Repack and remanufacture

Circularity Profile	No need of specific recycling operations
Take-back	No

DRAFT

ITEM 706E

SIDE 1

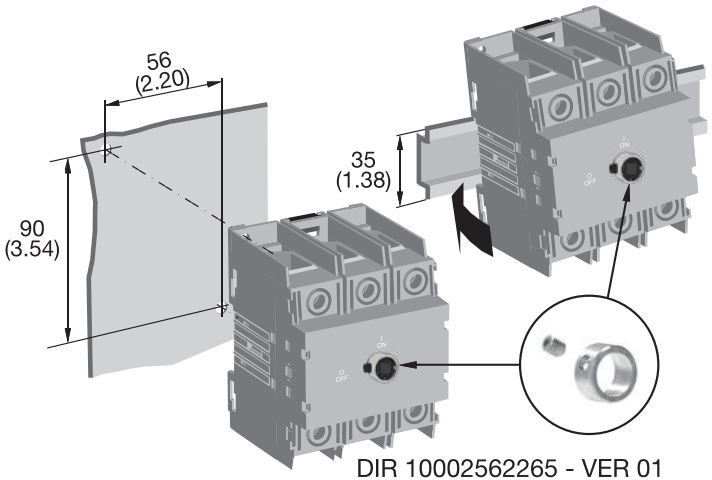

mm
(in)

DIR 10002562265 - VER 01
Publication 194U-IN001B-EN-E

SIDE 2

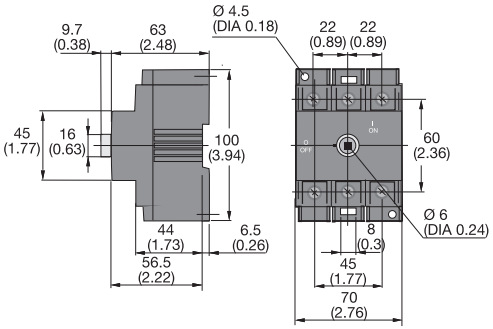

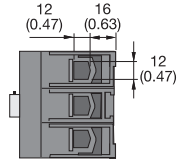

mm
(in)

Min. enclosure
30-100 A
204 x 153 x 102
(8.0 x 6.0 x 4.0)

SIDE 3

194U-A30-1753 194U-A60-1753	194U-A100-1753
2,5...25 mm² 14...4 AWG	10...70 mm² 8...1/0 AWG

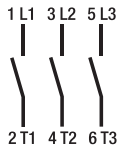

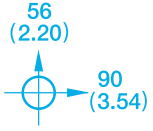

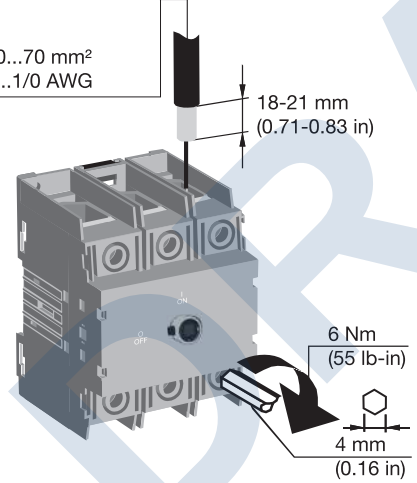

SIDE 4

WARNING: To prevent electrical shock, disconnect from power source before installing or servicing. Install in suitable enclosure. Keep free from contaminants.

WARNUNG: Vor Installations- oder Servicearbeiten Stromversorgung unterbrechen, um Unfälle zu vermeiden. Die Geräte müssen in einem passenden Gehäus und gegen Verschmutzung geschützt werden.

AVERTISSEMENT: Avant le montage et la mise en service, couper l'alimentation secteur afn d'éviter tout accident. Prévoir une mise en coffret ou armoire Protéger le produit contre les environnements agressifs.

AVVERTENZA: Per prevenire infortuni, togliere tensione prima dell'installazione o manutenzione. Installare in custodia indonea. Tenere lontano da contaminanti.

ADVERTENCIA: Desconectar la alimentación eléctrica antes de realizar el montaje y la puesta en servicio, con el objeto de evitar accidentes. Instalado en un apropiado. Proteger el producto de los ambientes agresivos.

ПРЕДУПРЕЖДЕНИЕ: Во избежание поражения электрическим током, отсоединить от источника питания перед установкой или обслуживанием. Устанавливать в соответствующем корпусе. Предохранять от загрязнений.

警告：为了防止触电，在安装或维修之前必须先切断电源。安装在合适的设备箱内，防止接触污染物。

DRAFT

SINGLE POLE DIST. BLOCK, 85 A UL/CSA, CABLE LINE, 6 CABLES LOAD, COPPER

CATALOG NUMBER

UD-80A



CERTIFICATIONS

FEATURES

- Tinned copper or aluminum block allows for copper or aluminum conductor direct connections, or using ferrule
- Screw retaining cover is hinged and removable
- Design allows for visual inspection of conductor and confirmation of connection
- Modular snap-together blocks for building multi-pole power blocks
- Easily clips onto DIN rail or mounts to panel with screws
- 95% fill ratio
- RoHS compliant
- Conforms to EN 45545 obtaining an HL3 classification for chapter R23 and HL2 classification for chapter R22
- Halogen free

PRODUCT ATTRIBUTES

- Article Number: 569010
- Finish: Tinned
- Max Current Rating, IEC: 80A

DRAFT

- Max Current Rating, UL/CSA: 85A
- Line Side Connection: Cable
- Load Side Connection: 6 Cables
- Material: Copper;Thermoplastic
- Line Side Max Conductor Size, UL: #4
- Load Side Max Conductor Size, UL: #4
- Max Working Voltage, IEC (Ui): 1000
- Max Working Voltage, UL (Vin): 600
- Short Term Withstand Current (Icw) 1s: 3kA
- Peak Short Circuit Current (Ipk): 22kA
- Rated Conditional Short-Circuit Current (Icc): 11kA
- Short Circuit Current Rating (SCCR): 100kA
- Line Side Number of Connections: 1
- Line Side Compact Stranded Wire Size: 6 - 16 mm²
- Line Side Wire Size: 16 Min
- Load Side Number of Connections: 6
- Load Side Compact Stranded Wire Size: (2) 2,5 - 16 mm²;(4) 2,5 - 6 mm²
- Load Side Stranded Wire Size - Ferrule: (2) 2,5 - 16 mm²;(4) 2,5 - 6 mm²
- Load Side Wire Size: (2) #16 - #4;(4) #16 - #8
- Enclosure Rating: IP 20
- Depth (D): 1.84
- Height (H): 2.72"
- Width (W): 1.18"
- Unit Weight: 0.15 lb
- Certification Details: UL® 1059
- Flammability Rating: UL® 94V-0
- Complies With: IEC® 60947-7-1

DRAFT

ADDITIONAL PRODUCT DETAILS

Increase the number of outputs with one input using a jumper on blocks with a Max Current Rating, IEC up to 160 A.

Blocks with 1,000 VAC/DC Max Working Voltage, UL are ideal for solar applications.

Design Guideline for Distribution Blocks, Power Blocks and Power Terminals										
Derating according to Ambient* Temperature (°F) to maintain working temperature of 185°F										
Ambient Temperature (°F)	86°	95°	104°	113°	122°	131°	140°	149°	158°	167°
Derating Coefficient (d)	1	1	1	0.94	0.88	0.82	0.75	0.67	0.58	0.47
*environment around the terminal blocks inside the enclosure										

DIAGRAMS

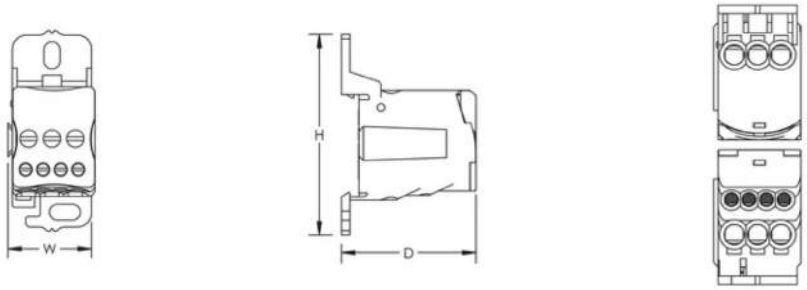

WARNING

nVent products shall be installed and used only as indicated in nVent's product instruction sheets and training materials. Instruction sheets are available at www.nvent.com and from your nVent customer service representative. Improper installation, misuse, misapplication or other failure to completely follow nVent's instructions and warnings may cause product malfunction, property damage, serious bodily injury and death and/or void your warranty.

DRAFT

North America
+1.800.753.9221
Option 1 – Customer Care
Option 2 – Technical Support

Europe
Netherlands:
+31 800-0200135
France:
+33 800 901 793

Europe
Germany:
800 1890272
Other Countries:
+31 13 5835404

APAC
Shanghai:
+ 86 21 2412 1618/19
Sydney:
+61 2 9751 8500

Our powerful portfolio of brands:
nVent.com CADDY ERICO HOFFMAN RAYCHEM SCHROFF TRACER

© 2025 nVent. All nVent marks and logos are owned or licensed by nVent Services GmbH or its affiliates. All other trademarks are the property of their respective owners.

nVent reserves the right to change specifications without notice.

Technical Data 10773 Effective November 2018

BUSSMANN SERIES

3-Pole, UL Type 1 DIN-Rail high SCCR surge protective devices

RoHS 2011/65/EU



Catalog symbol:

BSPMA3_WYGR

- BSPMA3_DLGR

Description:

The Bussmann™ series three-pole DIN-Rail UL® Listed open Type 1 surge protective devices feature a high 200 kA SCCR. Replaceable arrestor modules are mechanically coded with the base to ensure against installing an incorrect replacement. The unique module locking system fixes the module to the base, and allows it to be easily replaced without tools by simply depressing the release buttons.

Standard local visual status indication:

The module's visual indicator shows the protective status at a glance: green = good, red = replace.

Remote contact signaling:

The standard three-pole terminal remote Form C contact signaling relay has a floating changeover contact for use as a break or make contact, according to circuit concept.

Ratings:

- System volts/types
  - 120/208 Vac 3-phase Wye
  - 277/480 Vac 3-phase Wye
  - 347/600 Vac 3-phase Wye
  - 240 Vac 3-phase Delta
  - 480 Vac 3-phase Delta
- Short-circuit Current Rating (SCCR) 200 kA

Agency information:

- UL Listed open Type 1, ANSI/ UL 1449 4th Edition, Guide VZCA, VZCA7
- CSA® Type 4-1 Component Assembly, C22.2 No. 269.1-14, Class 2157-27
- RoHS compliant

Mounting

- 35mm Din-Rail

Warranty

- Five years

Dimensions — mm

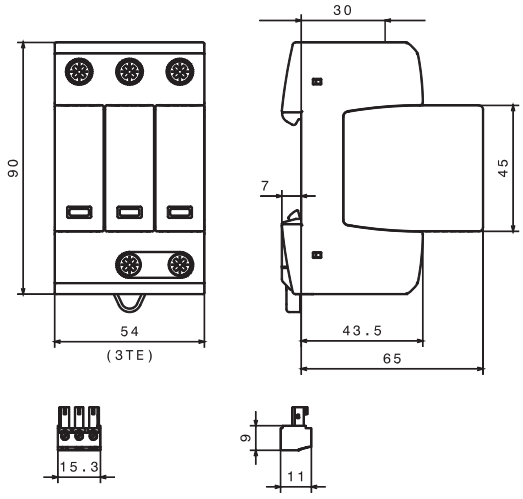

DRAFT

Powering Business Worldwide

ITEM 715D

Technical Data 10773

Effective November 2018

3-Pole, UL Type 1 DIN-Rail high SCCR surge protective devices

Specifications/ordering information					
System voltage/type	120/208 Vac 3-phase Wye	277/480 Vac 3-phase Wye	347/600 Vac 3-phase Wye	240 Vac 3-phase Delta	480 Vac 3-phase Delta
Catalog number	BSPMA3208WYGR	BSPMA3480WYGR	BSPMA3600WYGR	BSPMA3240DLGR	BSPMA3480DLGR
Replacement module catalog number (qty.)	BPMA180UL (3)	BPMA385UL (3)	BPMA510UL (3)	BPMA275UL (3)	BPMA550UL (3)
SPD class acc. to ANSI/UL 1449 4th Ed.	Open-Type 1 SPD				
SPD class acc. to CSA - C22.2 No. 269.1-14	Type 4-1 Component Assembly				
Nominal system voltage (U_N) [L-G] / [L-L]	120 Vac / 208 Vac	277 Vac / 480 Vac	347 Vac / 600 Vac	240 Vac / 240 Vac	480 Vac / 480 Vac
Nominal power frequency	50 / 60 Hz				
Max. continuous operating voltage AC (MCOV) [L-G] / [L-L]	180 Vac / 360 Vac	385 Vac / 770 Vac	510 Vac / 1020 Vac	275 Vac / 550 Vac	550 Vac / 1100 Vac
Nominal discharge current (I_n) (8x20µs)	20 kA				
Max. discharge current (I_{max}) (8/20)	50 kA				
Voltage Protection Rating (VPR) [L-G] / [L-L]	600 V_{pk} / 1200 V_{pk}	1200 V_{pk} / 2500 V_{pk}	1500 V_{pk} / 3000 V_{pk}	800 V_{pk} / 1500 V_{pk}	1800 V_{pk} / 3000 V_{pk}
Short Circuit Current Rating (SCCR)	200 kA				
Operating temperature range (T_U) °F (°C)	-31 to 185 (-35 to 85)				
Operating state / fault indication	Green = good ; Red = replace				
Wire range (60/75°C Cu, solid/stranded)	4-14 AWG (2.5-25 mm²)				
Terminal torque	35-45 (4-5.1)				
Mounting	35 mm DIN-Rail per EN 60715				
Enclosure material	Thermoplastic, UL 94 V0				
Protection	IP20 (finger-safe)				
Capacity	3 module(s), DIN 43880				
Agency information	UL Listed, Guide VZCA, VZCA7/CSA Component Acceptance Class 2157-27, RoHS				
Weight - oz (g)	10.93 (310)	12.24 (347)	13.05 (370)	11.46 (325)	13.4 (380)
Contact signaling					
Signaling type	Floating (dry), Form C (SPDT)				
NEC Circuits	NEC Class 2 circuits only				
Switching capacity AC (DC)	250 V/5 A (250 V/0.1 A, 125 V/0.2 A, 75 V/0.5 A)				
Wire range (60/75°C Cu, solid/stranded)	16-22 AWG (1.5-0.34mm²)				
Terminal torque - lb-in (N•m)	1.8 (0.2)				

Typical installation/system application:

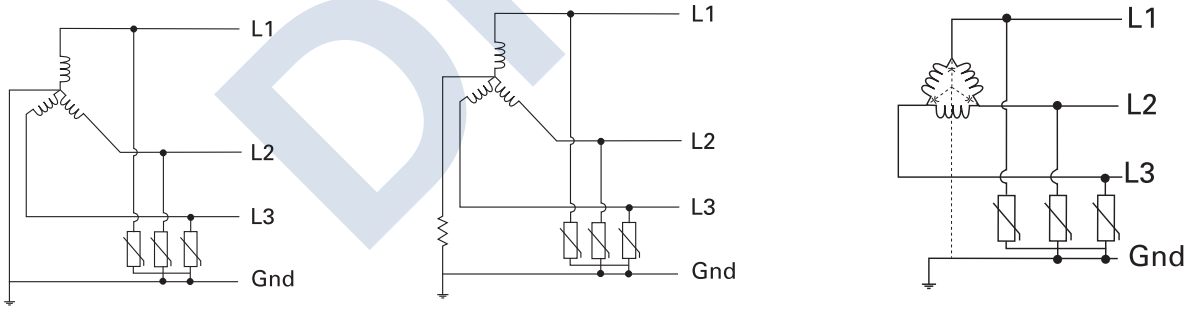

DRAFT

The only controlled copy of this data sheet is the electronic read-only version located on the Eaton network drive. All other copies of this document are by definition uncontrolled. This bulletin is intended to clearly present comprehensive product data and provide technical information that will help the end user with design applications. Eaton reserves the right, without notice, to change design or construction of any products and to discontinue or limit distribution of any products. Eaton also reserves the right to change or update, without notice, any technical information contained in this bulletin. Once a product has been selected, it should be tested by the user in all possible applications.

Eaton
1000 Eaton Boulevard
Cleveland, OH 44122
Eaton.com

Bussmann Division
114 Old State Road
Ellisville, MO 63021
United States
Eaton.com/bussmannseries

© 2018 Eaton
All Rights Reserved
Printed in USA
Publication No. 10773 — BU-MC18007
November 2018

Eaton, and Bussmann are valuable trademarks of Eaton in the U.S. and other countries. You are not permitted to use the Eaton trademarks without prior written consent of Eaton.

CSA is a registered trademark of the Canadian Standards Group.
NEC is a registered trademark of the National Fire Protection Association, Inc.
UL is a registered trademark of the Underwriters Laboratories, Inc.

For Eaton's Bussmann series product information, call **1-855-287-7626** or visit: **Eaton.com/bussmannseries**

Follow us on social media to get the latest product and support information.

Powering Business Worldwide

Technical Data 1023

Effective October 2019
Supersedes October 2017

BUSSMANN SERIES

Low-Peak™ LP-CC Class CC 600 Vac/300 Vdc, 1/2-30 A time-delay fuses

RoHS



Catalog numbers (amps)				
LP-CC-1/2	LP-CC-1-1/2	LP-CC-3	LP-CC-6	LP-CC-12
LP-CC-6/10	LP-CC-1-6/10	LP-CC-3-2/10	LP-CC-6-1/4	LP-CC-15
LP-CC-8/10	LP-CC-1-8/10	LP-CC-3-1/2	LP-CC-7	LP-CC-20
LP-CC-1	LP-CC-2	LP-CC-4	LP-CC-7-1/2	LP-CC-25
LP-CC-1-1/8	LP-CC-2-1/4	LP-CC-4-1/2	LP-CC-8	LP-CC-30
LP-CC-1-1/4	LP-CC-2-1/2	LP-CC-5	LP-CC-9	
LP-CC-1-4/10	LP-CC-2-8/10	LP-CC-5-6/10	LP-CC-10	

Carton quantity:

Amp rating	Carton qty.
1/2-30	10

Dimensions - in (mm)

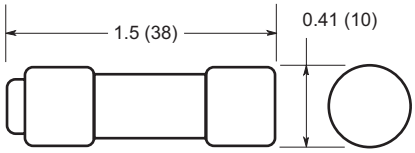

Catalog symbol:

- LP-CC-(amp)

Description:

Bussmann™ series Ultimate protection Low-Peak Class CC current-limiting, time-delay fuses. Time-delay – 12 seconds (minimum) at 200% of rated current.

Specifications:

Ratings

- Volts
  - 600 Vac
  - 300 Vdc (1/2 to 2-8/10 A, 20-30 A)
  - 150 Vdc (3-15 A)
- Amps 1/2-30 A
- IR
  - 200 kA Vac RMS Sym.
  - 20 kA Vdc

Agency information

- UL® Listed Class CC, Std. 248-4, Guide JDDZ, File E4273
- CSA® Certified; Class 1422-02, File 53787
- CE
- RoHS compliant

Features:

- 200 kA interrupting rating complies with NEC® Section 110.9 for today's large capacity systems.
- Fast short-circuit protection and dual-element, time-delay performance provide ultimate protection.
- Reduces existing fuse inventory by up to 33% when upgrading to Low-Peak fuses.
- Consistent 2:1 amp rating ratios for all Low-Peak fuses make selective coordination easy.
- Time-delay characteristic avoids unwanted fuse openings from surge currents while fast response speed under fault conditions provides a high degree of current limitation.
- Current-limitation protects downstream components against damaging thermal and magnetic effects of fault currents.
- A superior, all-purpose, space-saving branch circuit fuse that meets most protection requirements up to 30 A.
- Very compact physical size that's only 13/32" x 1-1/2" (10 x 38 mm) with rejction tip.
- Proper sizing can provide "No Damage" Type 2 coordinated protection for NEMA and IEC motor controllers.
- Can be used where either a time-delay or a fast-acting fuse is needed, making selection easier and reducing spare fuse inventories for substantial cost reduction.
- Superior protection for small horsepower motor circuits.

DRAFT

EATON
Powering Business Worldwide

Recommended fuse blocks and holders:

Fuse amps	1-pole	2-pole	3-pole
Modular open blocks			
up to 30	BCM603-1_	BCM603-2_	BCM603-3_
DIN-Rail holders			
Up to 30	CHCC1D_	CHCC2D_	CHCC3D_
	—	—	OPM-NG-_
	—	—	OPM-1038_
	—	—	OPM-1038_SW
Panel mount holders			
Up to 30	HPS-RR	—	—
	HPF-RR	—	—
In-line holders			
Up to 30	—	HEY	—
	HEZ	—	—

For additional information on Class CC fuse blocks and holders, see data sheets:

- Modular open blocks No. 10241 (BCM)
- DIN-Rail holders No. 10430 (CHCC), No. 1109 (OPM-NG), No. 1102 (OPM-1038), No. 1103 (OPM-1038_SW)
- Panel mount holders No. 2113 (HPS), No. 2114 (HPF)
- In-line holders No. 2126 (HEY), No. 2130 (HEZ)

DRAFT

Time-current curves - average melt:

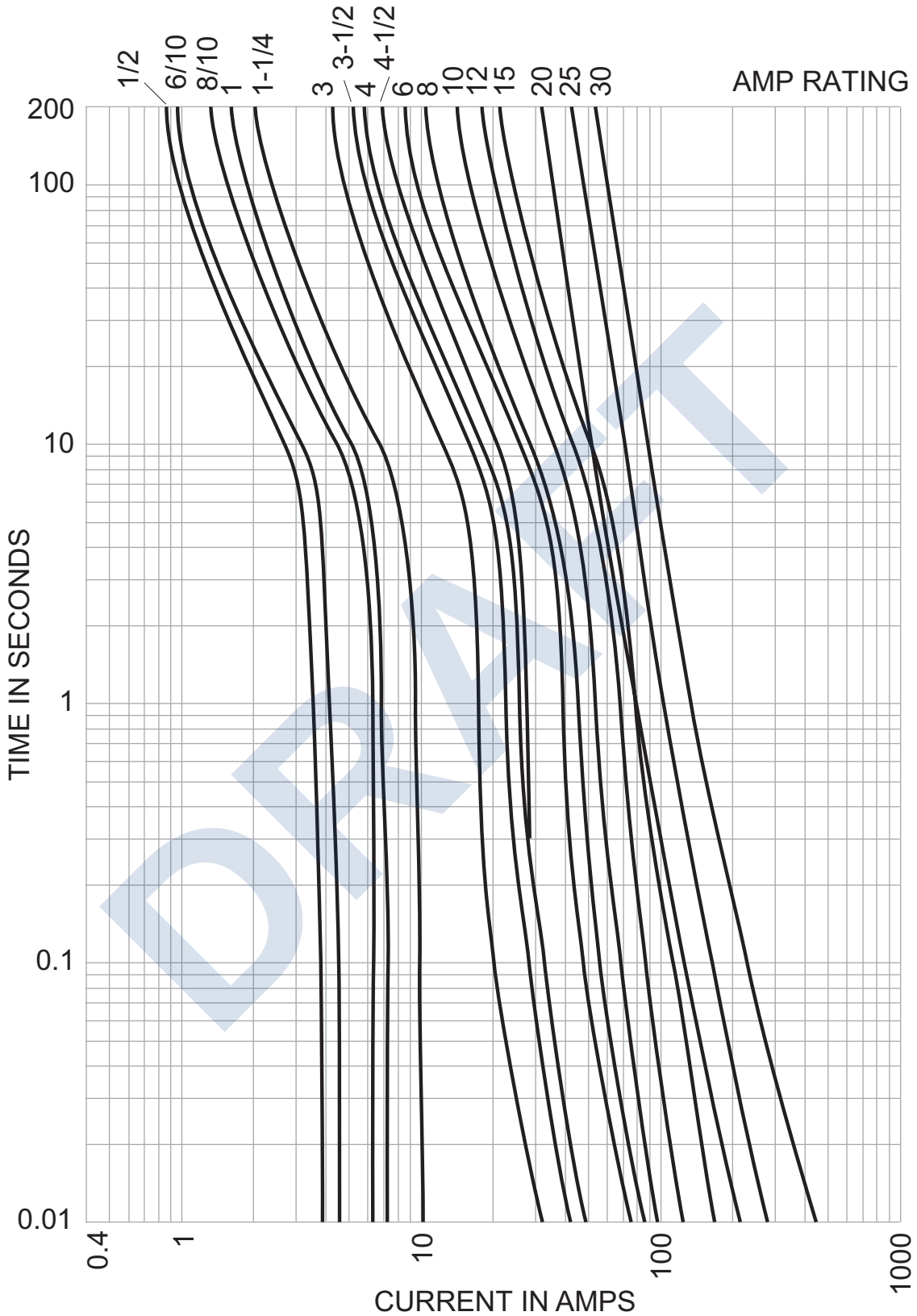

DRAFT

Current-limitation curves:

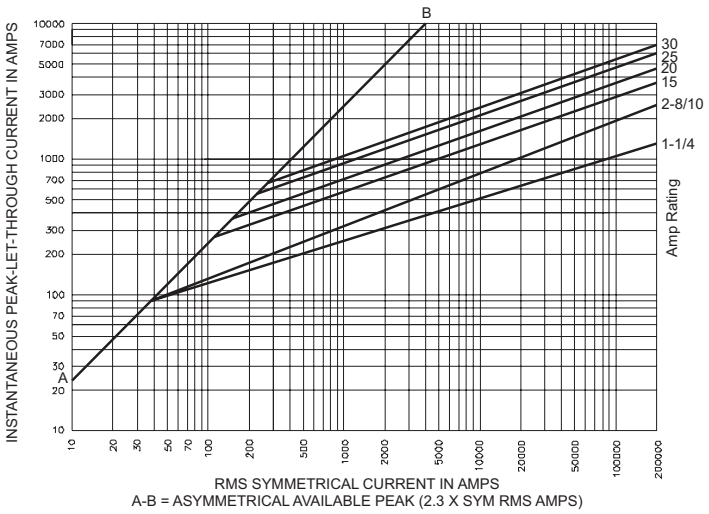

Current-limiting effects:

Prospective S.C.C.	Let-through current (apparent RMS symmetrical vs. fuse rating)					
	1-1/4 A	2-8/10 A	15 A	20 A	25 A	30 A
1000	100	135	240	305	380	435
3000	140	210	350	440	575	580
5000	165	255	420	570	690	710
10,000	210	340	540	700	870	1000
20,000	260	435	680	870	1090	1305
30,000	290	525	800	1030	1300	1520
40,000	315	610	870	1150	1390	1700
50,000	340	650	915	1215	1520	1820
60,000	350	735	1050	1300	1650	1980
80,000	390	785	1130	1500	1780	2180
100,000	420	830	1210	1600	2000	2400
200,000	525	1100	1600	2000	2520	3050

NOTE: To calculate I_p (I_{peak}) multiply I_{RMS} value by 2.3.

DRAFT

The only controlled copy of this data sheet is the electronic read-only version located on the Eaton network drive. All other copies of this document are by definition uncontrolled. This bulletin is intended to clearly present comprehensive product data and provide technical information that will help the end user with design applications. Eaton reserves the right, without notice, to change design or construction of any products and to discontinue or limit distribution of any products. Eaton also reserves the right to change or update, without notice, any technical information contained in this bulletin. Once a product has been selected, it should be tested by the user in all possible applications.

Eaton
1000 Eaton Boulevard
Cleveland, OH 44122
Eaton.com

Bussmann Division
114 Old State Road
Ellisville, MO 63021
United States
Eaton.com/bussmannseries

© 2019 Eaton
All Rights Reserved
Publication No. 1023
October 2019

Eaton, Bussmann and Low-Peak are valuable trademarks of Eaton in the US and other countries. You are not permitted to use the Eaton trademarks without prior written consent of Eaton.

UL is a registered trademark of the Underwriters Laboratories, Inc.
CSA is a registered trademark of the Canadian Standards Group.
NEC is a registered trademark of the National Fire Protection Association, Inc.

For Eaton's Bussmann series product information, call **1-855-287-7626** or visit: **Eaton.com/bussmannseries**

Follow us on social media to get the latest product and support information.

Powering Business Worldwide

Technical Data 10789

Effective January 2019
Supersedes October 2018

BUSSMANN SERIES

Next generation Compact Circuit Protector (cat. no. CCP2)

For use with Class CC, Supplemental and IEC 10x38 mm fuses

RoHS 2011/65/EU



CCP2 switch

Contents **Page**

Description and specifications. 2-3
Catalog numbers 4
Conductor information and available fuses 5
Dimensions 5
Accessories. 6
Multi-wire lug kit 6
Selector and pistol handles 7
Shafts. 7
NFPA 79 compliant handle 7
Auxiliary contacts 8
PLC fuse monitor 9-10
How to order tables 11
Switches only 11
Clockwise rotary operated switches 12-13
Counterclockwise rotary operates switches 14
Motor fuse sizing table 15



CCP2 right front rotary switch



CCP2 left front rotary switch



CCP2 right side rotary switch



CCP2 left side rotary switch

DRAFT

EATON
Powering Business Worldwide

Catalog symbols

Symbol	Fuse type	Description
CCP2-(poles)-30CC	Class CC	Switch only
CCP2-(poles)-30M	UL sup./IEC 10x38	
CCP2-1-DCC	Class CC Vdc	1-pole switch only
CCP2-1-DCM	UL sup./IEC 10x38 Vdc	
CCP2R-(pole)-30CC	Class CC	Right front rotary switch
CCP2R-(pole)-30M	UL sup./IEC 10x38	
CCP2RL-(pole)-30CC	Class CC	Left front rotary switch
CCP2RL-(pole)-30M	UL sup./IEC 10x38	
CCP2S-(pole)-30CC	Class CC	Right side rotary switch
CCP2S-(pole)-30M	UL sup./IEC 10x38	
CCP2SL-(pole)-30CC	Class CC	Left side rotary switch
CCP2SL-(pole)-30M	UL sup./IEC 10x38	

Description

The revolutionary next generation Bussmann™ series Compact Circuit Protector (cat. no. CCP2) fused disconnect switch is 3/5 the footprint of a traditional fusible switch and provides up to a high 200 kA Short-Circuit Current Rating (SCCR) to help improve panel and assembly SCCR.

The 35 mm DIN-Rail mount CCP is available in a variety of configurations to meet many application needs including rotary operation.

Application flexibility is extended with an optional multi-wire lug kit, with finger-safe shrouds, that provides three additional wire ports on each pole for power distribution applications.

Other accessories include a PLC interface device for open fuse monitoring and NO/NC auxiliary contacts that easily integrate into many monitoring systems.

Front and side rotary operated versions are easily applied for through-the-door or through the left or right side operation to enhance safety.

Ratings

- Volts
  - 600 Vac (UL® Class CC)
  - 240 Vac (UL Supplemental)
  - 400 Vac (IEC 10x38 mm)
  - 80 Vdc (DC Class CC, DC UL Supplemental/IEC)
- Amps
  - 30 A (UL)
  - 32 A (IEC)
- SCCR
  - 200 kA (UL Class CC)
  - 10 kA (UL Supplemental)
  - 120 kA (IEC 10x38 mm max)
  - 20 kA (DC Class CC/UL)
  - 10 kA (DC UL Supplemental/IEC)

Poles

- 1-, 2- and 3-poles catalog number dependent

Agency information

- UL Class CC fuse versions
  - UL 98 Listed, Guide WHTY, File E302370
  - cULus to Canadian Standard 22.2 No. 4-04, UL Guide WHTY7, File 302370
- UL Supplemental and IEC 10x38 mm fuse versions
  - UL 508 Listed, Guide NRNT, File E320230
  - cULus Certified 22.2 No. 14-05
  - IEC 60947-3 AC-23A
- DC voltage UL Class CC version (CCP2-1-DCC)
  - UL 508 Listed, cULus 22.2, No. 1405
- DC IEC 10x38 version (CCP2-1-DCM)
  - IEC 60947-3, DC-23A
- RoHS compliant
- CE

Conductors/terminals

- 75°C Cu/Al, see conductor tables for size, type and torque information
- Box lug, single/dual conductor
- Fork terminal suitable for line, load or accessory connection
- Multi-wire lug kit — see accessories for details

Storage and operating temperature

- - 20°C to 75°C (-4°F to 167°F)*

* For fuse performance under or above 25°C, consult fuse performance derating charts in the Bussmann Division publication no. 3002, titled Selecting Protective Devices (SPD)

Lockout/tagout provisions

- Switch only — 4 mm lock or Brady pin-out device part number 90850
- Switch with rotary operating mechanism — 1/4" lock

Minimum enclosure size

- 10" x 8" x 6" (254 x 203 x 152 mm)

Mounting

- 35 mm DIN-Rail

Local open fuse indication minimum voltage**

- 90 Vac for AC switches
- 12 Vdc for DC switches

** Open fuse indication requires an open fuse to be in the CCP2 and the switch in the ON position.

Accessories

- Multi-wire lug kit with terminal shrouds
- Selector and pistol handles for use with rotary operated switches
- 8 mm shafts for use with selector and pistol handles
- Auxiliary contacts
- PLC fuse monitor

Carton quantity and shipping weight

Item	Poles	Weight lbs (kg)
Switch only	12	2.84 (1.29)
Switch with side rotary mechanism	2	0.9 (0.404)
	3	1.12 (0.509)
Switch with front rotary mechanism	2	0.95 (0.431)
	3	1.18 (0.537)

DRAFT

Compact Circuit Protector disconnect switches
For use with Class CC, Supplemental and IEC 10x38 mm fuses

Technical Data 10789
Effective January 2019

Features

- Extremely compact (18 mm wide per pole) design
- High SCCR up to 200 kA (UL Class CC) and 120 kA (IEC)
- Disconnect rated for load isolation
- Full voltage rated up to 600 Vac or 80 Vdc
- UL 98 Listed Class CC version is horsepower rated and suitable for branch circuit protection and disconnect
- IEC 10x38 version complies with IEC 60947-3 and suitable for branch circuit protection and disconnect
- Suitable for global installations, the switches comply with UL, cULus and IEC standards accepting UL Class CC, Supplemental or IEC aM and gG/gL fuses
- Open fuse indication
  - Standard local open fuse indicating light for each pole
  - Optional PLC fuse monitor can be utilized to signal a PLC and open a contactor to de-energize all phases, if required
- IP20 finger-safe with 10 AWG (6 mm^2) or larger wire (box lug terminals only)
- Built-in switch interlock prohibits removing the fuse under load
- Padlockable handle for lockout/tagout
  - 4 mm lock for switch only
  - 1/4" lock for rotary operated switches
- Rotary operated versions provide for through-the-door and through-the-side operation flexibility and enhanced safety with:
  - Right front switch operation
  - Left front switch operation
  - Right side switch operation
  - Left side switch operation
- Optional selector, pistol and NFPA 79 compliant handles available for use with rotary operated versions
- Multi-wire lug kit with terminal shrouds allows for power distribution to multiple loads. Each lug has three ports rated for single and dual wires (see lug kit in accessories for conductor and torque details).



Right front rotary operated CCP2 switch with PLC fuse monitor.

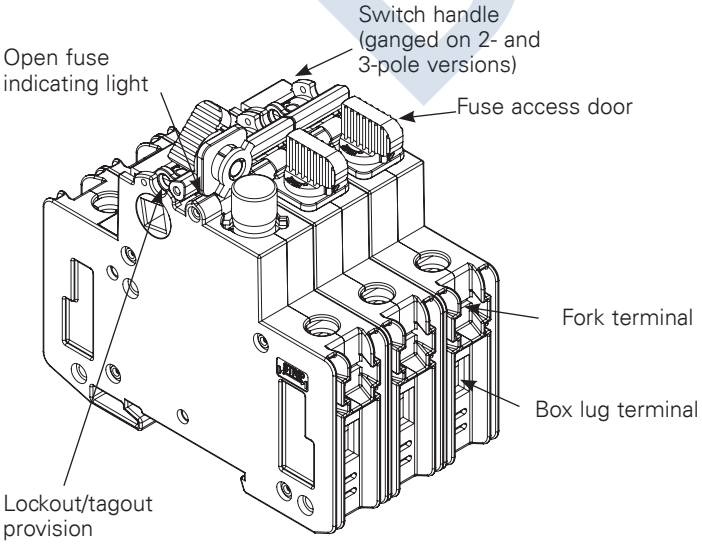

Rotary operating switch versions

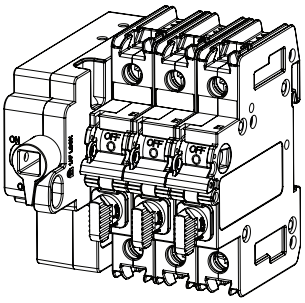

Left front rotary switch
Clockwise operating handles

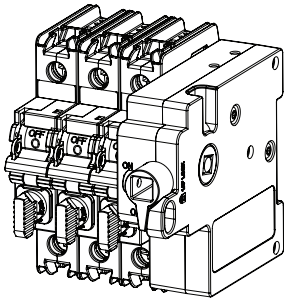

Right front rotary switch
Clockwise operating handles

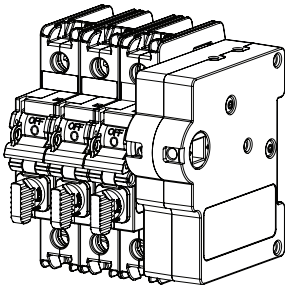

Right side rotary switch
Clockwise operating handles

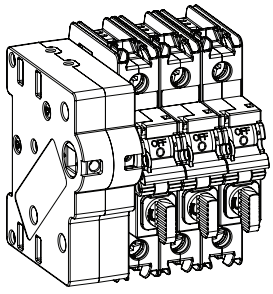

Left side rotary switch
Counterclockwise operating handles

DRAFT

Catalog numbers

Catalog no.	Poles	Description	Amps	Volts	SCCR	Max horsepower rating (Vac) 120	240	480	600	Wire type/ size*
Class CC										
CCP2-1-30CC	1	Switch only	30 A	347 Vac	200 kA	1/2	—	—	—	75°C Cu/Al 18-4 AWG Fork terminal††
CCP2-2-30CC	2			600 Vac		—	2	—	—	
CCP2-3-30CC	3					3/4	3	5	7.5	
CCP2R-2-30CC	2	Switch with right front rotary operation		600 Vac		—	2			
CCP2R-3-30CC	3					3/4	3	5	7.5	
CCP2RL-2-30CC	2	Switch with left front rotary operation		600 Vac		—	2	—	—	
CCP2RL-3-30CC	3					3/4	3	5	7.5	
CCP2S-2-30CC	2	Switch with right side rotary operation		600 Vac		—	2	—	—	
CCP2S-3-30CC	3					3/4	3	5	7.5	
CCP2SL-2-30CC	2	Switch with left side rotary operation		600 Vac		—	2	—	—	
CCP2SL-3-30CC	3					3/4	3	5	7.5	
UL Supplemental and IEC 10x38 mm										
CCP2-1-30M	1	Switch only	UL 30 A IEC 32 A**	UL 240 Vac† IEC 400 Vac†	UL 10 kA† IEC 120 kA†	—	—	—	—	75°C Cu/Al 18-4 AWG Fork terminal††
CCP2-2-30M	2									
CCP2-3-30M	3									
CCP2R-2-30M	2	Switch with right front rotary operation								
CCP2R-3-30M	3									
CCP2RL-2-30M	2	Switch with left front rotary operation								
CCP2RL-3-30M	3									
CCP2S-2-30M	2	Switch with right side rotary operation								
CCP2S-3-30M	3									
CCP2SL-2-30M	2	Switch with left side rotary operation								
CCP2SL-3-30M	3									
Single-pole DC switches										
CCP2-1-DCC	1	UL Class CC	30 A	80 Vdc†	20 kA†	—	—	—	—	75°C Cu/Al 18-4 AWG Fork terminal††
CCP2-1-DCM	1	UL supplemental	30 A	80 Vdc†	10 kA†	—	—	—	—	
		IEC 10x38	32 A**							

* See box lug terminal conductor data table for details.
**32 A Class aM, 25 A Class gG.
† SCCR may be lower, refer to installed fuse data sheet for interrupting rating at applied voltage.
††Fork terminal with a 4.3 mm gap for a #8-32 stud, 30 A max, insulated flange, wire size 12-10 AWG.

DRAFT

Box lug terminal conductor data

Type	AWG range	Class	Quantity	Torque N•m (lb-in)
Cu	4-18	Stranded, Class B to K	Single	2.26 (20)
	6-8	Stranded, Class B/C	Dual	3.39 (30)
	6-8	Stranded, Class K	Dual	2.26 (20)
	10-18	Stranded, Class B to K		
	10-18	Solid	Single/dual	
	4-18	Stranded, UL ferrule, Class B/C	Single	3.39 (30)
	6-18		Twin†	
	4-18	Stranded, UL ferrule, Class K	Single	2.82 (25)
	6-18		Twin†	
Al	4-8	Stranded	Single	2.26 (20)
	6		Dual	2.82 (25)
	8			2.26 (20)

† Two stranded conductors placed in one UL Listed twin ferrule.

Available Bussmann series fuses

Fuse class	Type/description	Volts	Data sheet no.
CC	LP-CC time-delay	600 Vac/300 Vdc*	1023
	FNQ-R time-delay	600 Vac/300 Vdc	1014
	KTK-R fast-acting	600 Vac	1015
M	FNM time-delay	250 Vac	2028
	FNQ time-delay	500 Vac	1012
	KTK fast-acting	600 Vac	1011
	BAF fast-acting	250 Vac	2011
	KLM fast-acting	600 Vac/dc	2020
gG/gL	C10G	500 V (400 V@32 A)	720115
aM	C10M	500 V (400 V@20@25 A)	720115

* 1/2 to 2-1/2 and 20 to 30 A are 300 Vdc, 2-8/10 to 15 A are 150 Vdc.

Dimensions – mm (in)

Switch

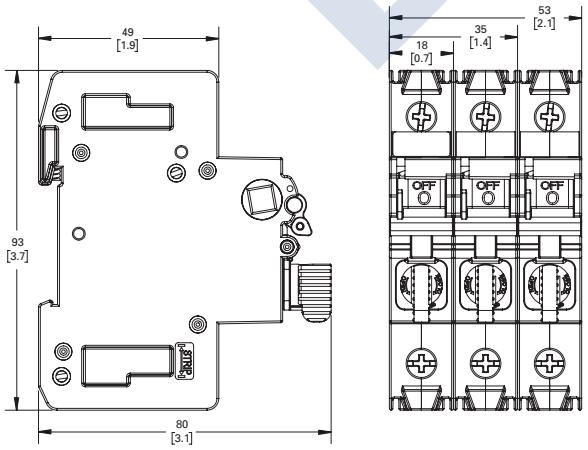

Left front and right front rotary switches

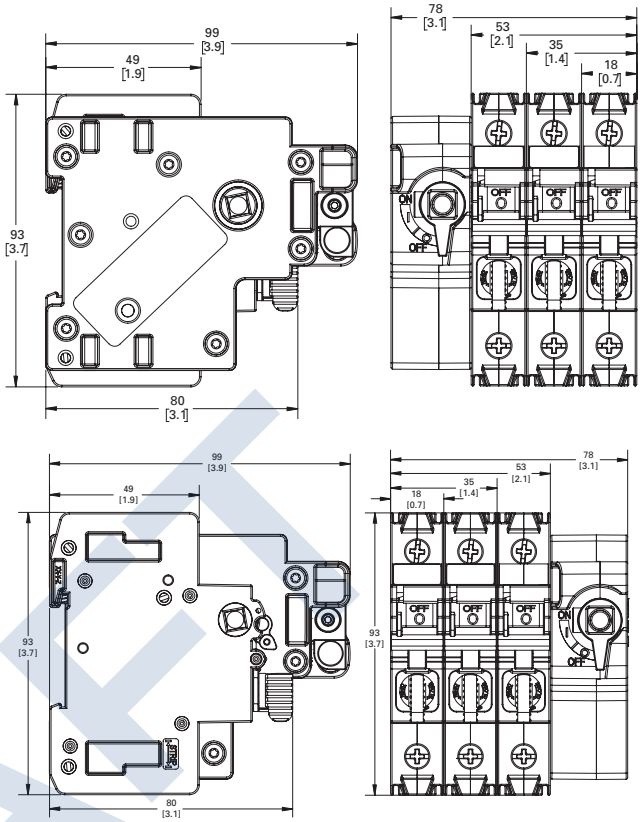

Left side and right side rotary switches

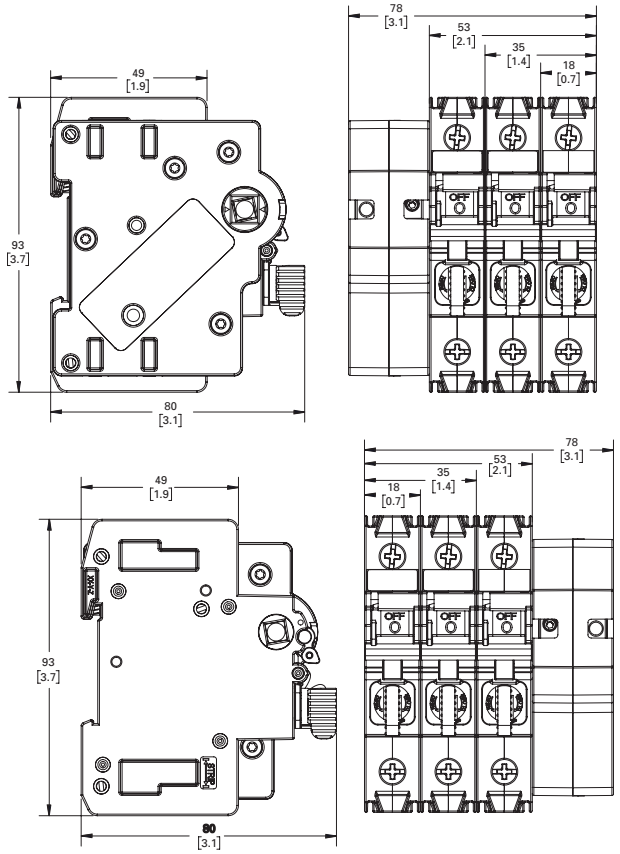

DRAFT

Multi-wire lug kit

Catalog number

- CCP2-MW1-3

Description

The multi-wire lug kit permits expanding each box lug terminal on the switch into a three-port terminal for power distribution applications.

Each multi-wire lug kit comes with three (3) three-port lugs and three terminal shrouds. Shrouds provide finger-safe protection when properly installed.

Lugs may be mounted on either the loadside or lineside to meet various application needs.

Ports on any one lug accept any conductor combination listed, e.g., one of the three ports may have dual 14 AWG wires and the other two ports single 10 AWG wires.

Ratings

- Volts 600 V
- Amps 60 A max
- SCCR 200 kA

Agency information

- UL Recognized (lug only)
- RoHS compliant

Storage and operating temperature

- - 20°C to 75°C (-4°F to 167°F)

Multi-wire lug conductor information

- 75°C Cu/AL
- AWG size and quantity per port - see table below

Type	AWG range	Class	Quantity	Torque N•m (lb-in)
Cu/Al	4-6	Stranded, Class B/C	Single	3.95 (35)
	8			2.82 (25)
Cu	10-14	Stranded, Class B/C	Single/dual*	2.26 (20)
	10-14	Solid	Single	2.26 (20)
	8	UL ferrule, Class B to K	Single/twin†	2.82 (25)
	10-14			2.26 (20)

* Dual wire to be same size and type.
† Two stranded conductors placed in one UL Listed twin ferrule.

CCP2 box lug torque for multi-wire lug

- 4.52 N•m (40 lb-in)

Terminal shroud accessory

Terminal shrouds are available without multi-wire terminals.

Catalog no.	Description
CCP2-TS1-3	Pack of three



Installed on CCP2-3-xx

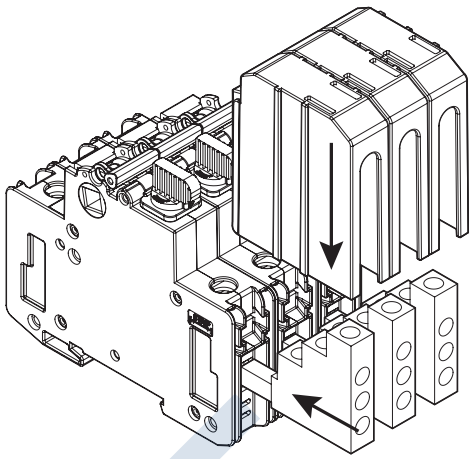

Multi-wire lugs mount in switch box lug terminals to provide three additional wire ports per pole. Lugs can be mounted on the switch lineside or loadside. Each multi-wire lug kit comes with three lugs and three shrouds.

Wire insulation strip lengths

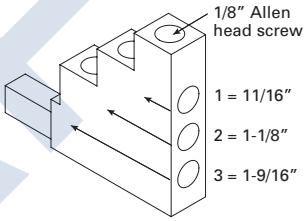

Strip back wire insulation to the lengths as indicated in the illustration above and the table below.

Lug port	Strip wire insulation back (inch)
1	11/16
2	1-1/8
3	1-9/16



Wiring versatility is provided by single/dual rated box lug terminals on the switch, or by the three-port multi-wire lug kit that's also single/dual wire rated.

DRAFT

Selector and pistol handles

Catalog symbol

- CCP2-H4X-_

Description

Selector and pistol handles for use with any 2- and 3-pole CCP2 rotary operated switch. Both selector and pistol handles are available in black/grey and red/yellow colors and clockwise/counterclockwise operating modes. Applying clockwise and counterclockwise operation depends upon the CCP2 rotary switch configuration. Installation requires an 8 mm shaft (ordered separately).

Each handle is rated NEMA 4X and capable of accepting up to three (3) 1/4" diameter shank locks for lockout/tagout in the OFF position. They can also be field configured for lock-on.

In application, only the clockwise operating handles in combination with either the left front or right front rotary switches provide a door interlock means to ensure the enclosure door remains shut during lockout/tagout or lock-on. Both clockwise and counterclockwise operating handles when mounted on the enclosure's left or right side do NOT provide a door interlock means.

See the catalog number table below for applicable rotary switch, handle and shaft combinations.

Agency information

- UL Listed, Guide DIHS, File E140305
- NEMA 4X rating
- RoHS complaint
- CE

Storage and operating temperature

- -20°C to 75°C (-4°F to 167°F)

Packaging

- Each handle is packaged individually

Handle shafts

Catalog symbol

- CCP2-SH1-_

Description

Eight millimeter square shafts available in 290 and 490 millimeter (11.5 and 19.3 inch) lengths. Shafts are indexed to ensure handle/switch orientation for correct operation. Shafts are cut to length when installed.

Packaging

- Each shaft is packaged separately

Selector handles

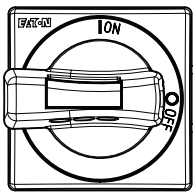

Counterclockwise

- CCP2-H4X-B1L
- CCP2-H4X-R1L

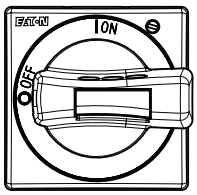

Clockwise

- CCP2-H4X-B1
- CCP2-H4X-R1

Pistol handles

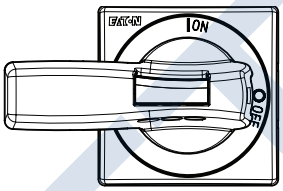

Counterclockwise

- CCP2-H4X-B2L
- CCP2-H4X-R2L

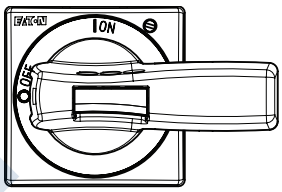

Clockwise

- CCP2-H4X-B2
- CCP2-H4X-R2

Handle shafts



NFPA 79 compliant handles



Catalog number

- CCP2-NFPA-1

Description

NFPA 79 handle mounts on the shaft of front rotary operated switch installations and provides a lockout means independent of the door position.

Carton quantity

Catalog no.	Fits shaft size	Qty.
CCP2-NFPA-1	8 mm	1

For these switch catalog numbers	Description/operation	Order these handle catalog numbers (description)	Order either shaft catalog number
CCP2R-(pole)-30CC	Right front rotary, clockwise	• CCP2-H4X-B1 (selector, black/grey) • CCP2-H4X-R1(selector, red/yellow) • CCP2-H4X-B2 (pistol, black/grey) • CCP2-H4X-R2 (pistol, red/yellow)	• CCP2-SH1-290 (11.5"/290 mm) • CCP2-SH1-490 (19.3"/490 mm)
CCP2R-(pole)-30M			
CCP2RL-(pole)-30CC	Left front rotary, clockwise		
CCP2RL-(pole)-30M			
CCP2S-(pole)-30CC	Right side rotary, clockwise		
CCP2S-(pole)-30M			
CCP2SL-(pole)-30CC	Left side rotary, counterclockwise	• CCP2-H4X-B1L (selector, black/grey) • CCP2-H4X-R1L (selector, red/yellow) • CCP2-H4X-B2L (pistol, black/grey) • CCP2-H4X-R2L (pistol, red/yellow)	
CCP2SL-(pole)-30M			

DRAFT

Auxiliary contacts



Catalog number

- CCP2-AUX

Description

NO+NC contact output to indicate the switching mechanism status on the CCP2. A single unit can be mounted on any 1-, 2- or 3-pole CCP2 switch and the left front/left side rotary operated switches.

Ratings

- Amps up to 5 A
- Volts up to 240 Vac
- NC/NO contacts are closed/open when the CCP2 switch is in the "ON" position (closed)

Description	Max per CCP2*	Signal output
Auxiliary contacts NO+NC for switch status	1 per CCP2 (1-, 2- or 3-pole)	5 A / 240 Vac

* The CCP2-AUX CANNOT be mounted on the right front and right side rotary operated versions.
De-energize all circuits and follow all prevailing safety procedures before installing or removing the CCP2-AUX.

Agency information

- UL 98 Recognized, Guide WHTY2, File E155130
- cURus to Canadian Standard 22.2 No. 4-04
- IP20 finger-safe in installed state
- RoHS compliant
- CE

Wiring

- 75°C Cu, 20-16 AWG (0.5 to 1.5 mm²) wire
- Torque 0.56 N•m (5 lb-in)

Packaging

- The CCP2-AUX is packaged individually

Installation technique

- Mounts on the CCP2's right side ONLY and mechanically interlocks with the CCP2 switch handle with provided hardware. The CCP2-AUX CANNOT be mounted on the right front and right side rotary operated versions.

Storage and operating temperature

- -20°C to 75°C (-4°F to 167°F)

Installed on a CCP2-3-xx

Note: CCP2-AUX **CANNOT** be mounted on the right front and right side rotary operated versions.

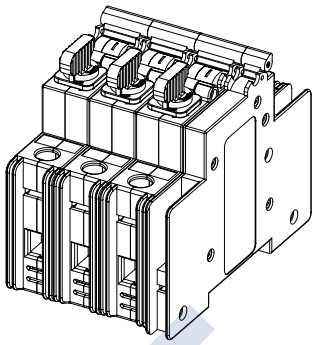

Dimensions — in

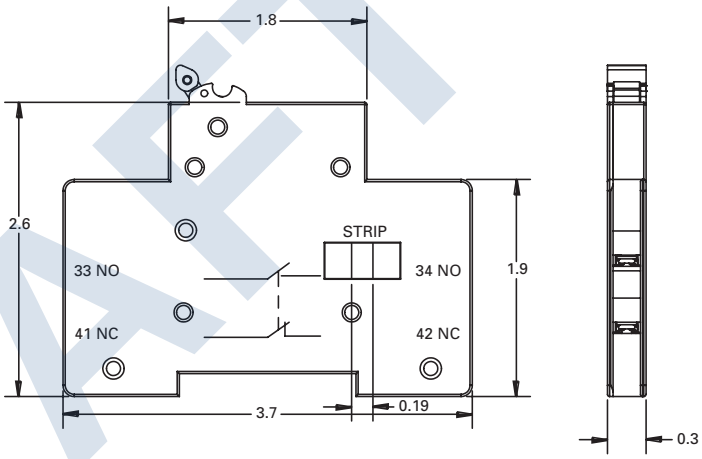



CCP2-AUX auxiliary contacts mounted on a 3-pole CCP2 switch.

DRAFT

PLC fuse monitor

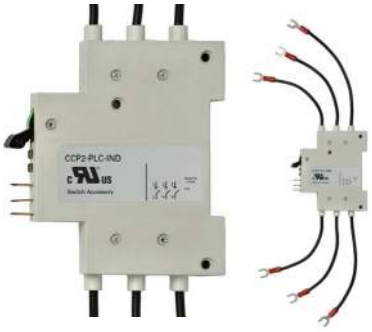

Catalog number

- CCP2-PLC-IND

Description

A resettable three-phase fuse monitor that integrates with the I/O card in a Programmable Logic Controller (PLC). A single unit can be mounted on any 1-, 2- or 3-pole CCP2 switch and the right front/ right side rotary operated switches. A single unit monitors up to three phases. When used on 1- and 2-pole switches unused conductor(s) are removed after installation.

The CCP2-PLC-IND **CANNOT** be mounted on the left front/left side rotary operated versions or if the multi-wire lug kit is installed.

Ratings

- Signal output to PLC*
  - +24 Vdc, 10 mA max
- Output signals
  - Digital 0 Vdc (low), 24 Vdc max (high)
  - 0 Vdc Low – fuse is good
  - 24 Vdc High – fuse has opened

* When the fuse opens, the output signal is sent high and will remain high until the unit is reset.

Emissions and immunity testing

- IEC 60947-1: Voltage Switchgear and Control Gear
- IEC 61000-6-2: Electromagnetic Compatibility (EMC)
  - IEC 61000-4-2: Electrostatic Discharge Immunity - Test at level 3 (6 kV-Contact Discharge) and level 2 (4 kV-Air Discharge)
  - IEC 61000-4-3: Electromagnetic Compatibility - Radiated, Radio-frequency, Electromagnetic Field Immunity test at level x (20 V/m)
  - IEC 61000-4-4: Electromagnetic Compatibility - Testing and Measurement Techniques at level 3 (± 2 kV - Power Port and ±1 kV - I/O Ports)
  - IEC 61000-4-5: Electromagnetic Compatibility - Surge Immunity test at level 4 (±4 kV)
  - IEC 61000-4-6: Immunity to Conducted Disturbances at level 3 (10 V)

Description	Max per CCP2**	Signal output to PLC	Min. circuit volts
Wired remote fuse indication for PLC applications	1 per CCP2 (1, 2- or 3-pole)	24 Vdc/ 10 mA	100 Vac

**The CCP2-PLC-IND CANNOT be mounted on the left front/left side rotary operated versions or if the multi-wire lug kit is installed.

De-energize all circuits and follow all prescribed safety procedures before installing or removing the CCP2-PLC-IND.

Agency information

- UL 98 Recognized, Guide WHTY2, File E155130
- cURus to Canadian, Standard 22.2 No. 4-04

Local indication

- Two distinct LEDs indicate unit power (green) and open fuse (red). Open fuse LED is resettable upon fuse replacement and actuating the reset switch.

Wiring

- For power, signal and ground connections use shielded twisted pair 22-24 AWG (0.34-0.25 mm^2) 300 V rated wire

Packaging

- The CCP2-PLC-IND is packaged individually
- Includes 0.110" (2.8 mm) quick connects for power, signal and ground connections

Installation technique

- Mounts on the left side ONLY of the CCP2 and mechanically interlocks with the CCP2 switch handle with hardware provided. The CCP2-PLC-IND **CANNOT** be mounted on the left front/ left side rotary operated versions or if the multi-wire lug kit is installed.

IP20 rating — yes

Storage and operating temperature

- -20°C to 75°C (-4°F to 167°F)

PLC programming

- The CCP2-PLC-IND signal line is designed to provide a digital input to a PLC I/O card. In this case, a Programmable Logic Control program must be written to properly interpret the input signal to the PLC. The PLC program should check for consecutive high signals before taking action on a critical process.

Installed on a CCP2-3-xx

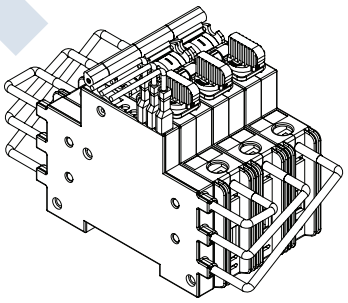

CCP2-PLC-IND mounted on a 3-pole switch and using the fork terminals. When mounted on a 2- or 1-pole switch, remove unused leads.

Note: The CCP2-PLC-IND **CANNOT** be mounted on the left front/left side rotary operated versions or if the multi-wire lug kit is installed.



CCP2-PLC-IND fuse monitor mounted on a right front rotary operated switch.

DRAFT

PLC wiring schematic

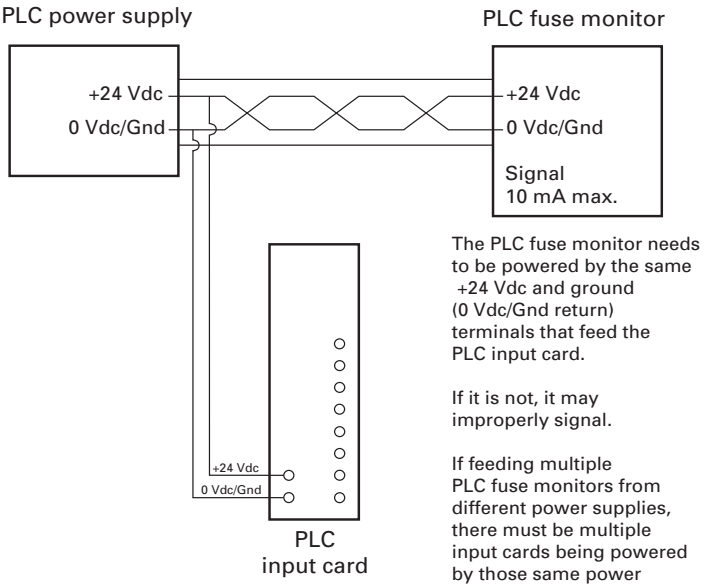

The PLC fuse monitor needs to be powered by the same +24 Vdc and ground (0 Vdc/Gnd return) terminals that feed the PLC input card.

If it is not, it may improperly signal.

If feeding multiple PLC fuse monitors from different power supplies, there must be multiple input cards being powered by those same power supplies as well.

CCP2-PLC-IND connections from a CCP2-3-xx to a remote monitoring device

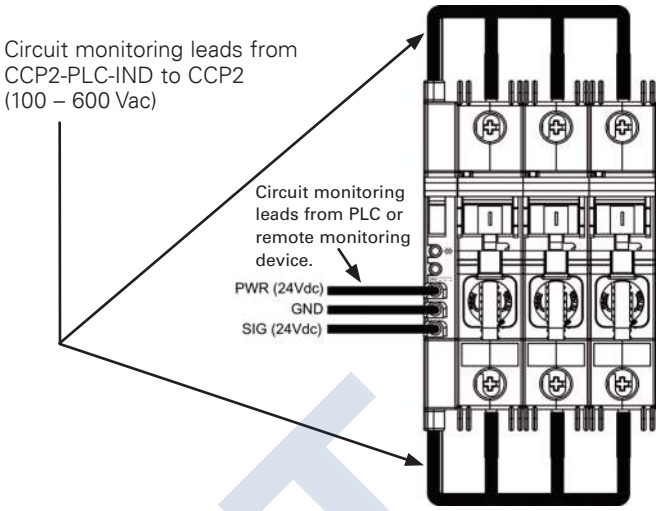

Connection from CCP2-PLC-IND to CCP2-3-xx

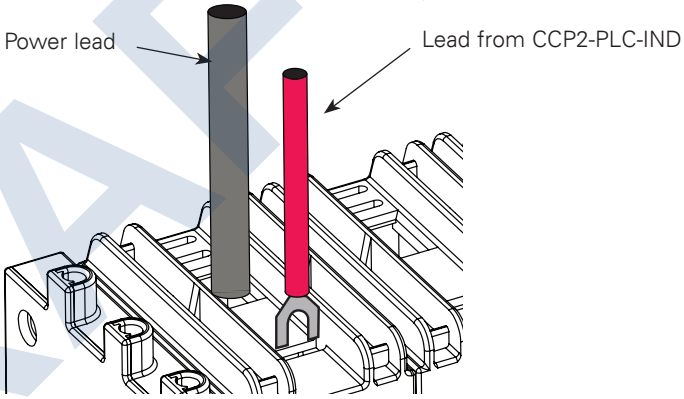

Leads from CCP2-PLC-IND are connected to the fork terminals as shown.

Note: When monitoring a 1- or 2-pole switch, remove unused leads.

Dimensions — in

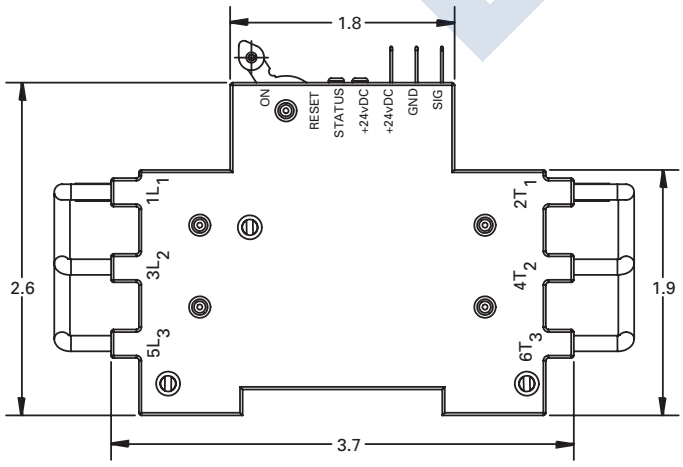

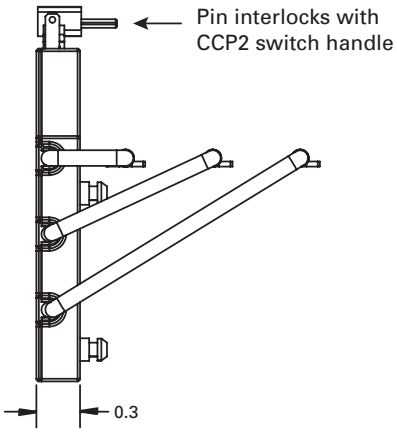

DRAFT

Class CC and UL Supplemental (IEC 10x38) Switches

For a complete assembly, select from the following required and optional components, and accessories.

		Catalog no.		
		Switches	**Amps**	**Poles**
		Switch		
Required		CCP2-1-30CC	30	1
		CCP2-2-30CC		2
		CCP2-3-30CC		3
		CCP2-1-30M		1
		CCP2-2-30M		2
		CCP2-3-30M		3
And				
Optional		**Lug kits**	**Description**	
		CCP2-MW1-3	3-port multi-wire, 75°C Cu/Al, 6-14, includes terminal shrouds, pack of 3	
And				
Accessories		**Terminal shrouds**	**Description**	
		CCP2-TS1-3	Pack of 3	
		**Auxiliary contacts**	**Description**	
		CCP2-AUX	NO + NC, 5 A / 240 V	
		**PLC fuse monitor**	**Description**	
		CCP2-PLC-IND	Signal output 24 Vdc / 10 mA	

DRAFT

Class CC and UL Supplemental (IEC 10x38) clockwise rotary switches

For a complete assembly, select from the following required and optional components, and accessories.

Required		**Catalog no.**		
		Switches	**Amps**	**Poles**
		Right front rotary		
		CCP2R-2-30CC	30	2
		CCP2R-3-30CC		3
		CCP2R-2-30M		2
		CCP2R-3-30M		3
		**Left front rotary**		
		CCP2RL-2-30CC	30	2
		CCP2RL-3-30CC		3
		CCP2RL-2-30M		2
		CCP2RL-3-30M		3
		**Right side rotary**		
		CCP2S-2-30CC	30	2
		CCP2S-3-30CC		3
		CCP2S-2-30M		2
		CCP2S-3-30M		3
		**And**		
		Rotary handles	**Description**	**NEMA rating**
		CCP2-H4X-B1	Selector handle — black/grey	4X
		CCP2-H4X-R1	Selector handle — red/yellow	
		CCP2-H4X-B2	Pistol handle — black/grey	
		CCP2-H4X-R2	Pistol handle — red/yellow	
		**And**		
		Shafts (8 mm)	**Length**	
		CCP2-SH1-290	290 mm	
		CCP2-SH1-490	490 mm	
		**NFPA 79 compliant handle**	**Color**	
		CCP2-NFPA-1	Red	
		And		
Optional		**Lug kits**	**Description**	
		CCP2-MW1-3	3-port multi-wire, 75°C Cu/Al, 6-14, includes terminal shrouds, pack of 3	

DRAFT

		And	
Accessories		**Terminal shrouds**	**Description**
		CCP2-TS1-3	Pack of 3
		**Auxiliary contacts**	**Description — cannot be used on right front or right side operated switches**
		CCP2-AUX	NO + NC, 5 A / 240 V
		**PLC fuse monitor**	**Description — Cannot be used on left front operated switches**
		CCP2-PLC-IND	Signal output 24 Vdc / 10 mA

DRAFT

Class CC and UL Supplemental (IEC 10x38) counterclockwise switches

For a complete assembly, select from the following required and optional components, and accessories.

		Catalog no.		
		Switches	**Amps**	**Poles**
Required		**Left side rotary**		
		CCP2SL-2-30CC	30	2
		CCP2SL-3-30CC		3
		CCP2SL-2-30M		2
		CCP2SL-2-30M		2
		**And**		
		Rotary handles	**Description**	**NEMA rating**
		CCP2-H4X-B1L	Selector handle — black/grey	4X
		CCP2-H4X-R1L	Selector handle — red/yellow	
		CCP2-H4X-B2L	Pistol handle — black/grey	
		CCP2-H4X-R2L	Pistol handle — red/yellow	
		**And**		
		Shafts (8 mm)	**Length**	
		CCP2-SH1-290	290 mm	
		CCP2-SH1-490	490 mm	
		And		
Optional		**Lug kits**	**Description**	
		CCP2-MW1-3	3-port multi-wire, 75°C Cu/Al, 6-14, includes terminal shrouds, pack of 3	
		And		
Accessories		**Terminal shrouds**	**Description**	
		CCP2-TS1-3	Pack of 3	
		**Auxiliary contacts**	**Description —mounts on right side**	
		CCP2-AUX	NO + NC, 5 A / 240 V	

DRAFT

Motor fuse sizing table:

LP-CC time-delay Class CC fuses

Voltage	Motor size (Hp)	Motor FLA (amps)	Min (amps)	Code max (amps)	Heavy start (amps)
115 Vac, 1-phase	1/6	4.4	9	15	15
	1/4	5.8	12	20	20
	1/3	7.2	15	25	25
	1/2	9.8	30	30	30
230 Vac, 1-phase	1/6	2.2	4.5	10	10
	1/4	2.9	6	10	10
	1/3	3.6	7	15	15
	1/2	4.9	10	15	15
	3/4	6.9	15	25	25
	1	8	25	25	30
	1-1/2	10	30	30	30
200 Vac, 3-phase	1/2	2.5	5	10	10
	3/4	3.7	7.5	15	15
	1	4.8	10	15	15
	1-1/2	6.9	15	25	25
	2	7.8	25	25	30
208 Vac, 3-phase	1/2	2.4	5	10	10
	3/4	3.5	7	15	15
	1	4.6	10	15	15
	1-1/2	6.6	15	20	25
	2	7.5	15	25	30
230 Vac, 3-phase	1/2	2.2	4.5	10	10
	3/4	3.2	7	10	12
	1	4.2	9	15	15
	1-1/2	6	12	20	20
	2	6.8	15	25	25
	3	9.6	30	30	30
460 Vac, 3-phase	1/2	1.1	2.25	6	6
	3/4	1.6	3.2	6	6.25
	1	2.1	4.5	10	10
	1-1/2	3	6	10	12
	2	3.4	7	15	15
	3	4.8	10	15	15
	5	7.6	25	25	30
575 Vac, 3-phase	1/2	0.9	1.8	3	3.5
	3/4	1.3	2.8	6	6
	1	1.7	3.5	6	6.25
	1-1/2	2.4	5	10	10
	2	2.7	5.6	10	10
	3	3.9	8	15	15
	5	6.1	15	20	20
	7-1/2	9	30	30	30

Note: NEMA motors only (no IEC or design B energy efficient). Minimum size if no more than 1 start/hour. Code max if low to moderate reverse/jog/plug applications. Heavy start permitted only if code max does not allow motor start-up. For high reverse/jog/plug applications or larger horsepower motors.

DRAFT

Technical Data 10789
Effective January 2019

Compact Circuit Protector disconnect switches
For use with Class CC, Supplemental and IEC 10x38 mm fuses

DRAFT

The only controlled copy of this data sheet is the electronic read-only version located on the Eaton network drive. All other copies of this document are by definition uncontrolled. This bulletin is intended to clearly present comprehensive product data and provide technical information that will help the end user with design applications. Eaton reserves the right, without notice, to change design or construction of any products and to discontinue or limit distribution of any products. Eaton also reserves the right to change or update, without notice, any technical information contained in this bulletin. Once a product has been selected, it should be tested by the user in all possible applications.

Eaton
1000 Eaton Boulevard
Cleveland, OH 44122
United States
Eaton.com

Bussmann Division
114 Old State Road
Ellisville, MO 63021
United States
Eaton.com/bussmannseries

© 2019 Eaton
All Rights Reserved
Printed in USA
Publication No. 10789 – BU-MC18031
January 2019

Eaton and Bussmann are valuable trademarks of Eaton in the US and other countries. You are not permitted to use the Eaton trademarks without prior written consent of Eaton.

CSA is a registered trademark of the Canadian Standards Group
UL is a registered trademark of the Underwriters Laboratories, Inc.

For Eaton's Bussmann series product information, call **1-855-287-7626** or visit: **Eaton.com/bussmannseries**

Follow us on social media to get the latest product and support information.

Powering Business Worldwide

Hammond Power Solutions Inc.

ENCAPSULATED TRANSFORMERS FOR HAZARDOUS LOCATIONS



HPS Titan® has been designed to operate in harsh environments/hazardous locations where dangerous gases, liquids, dust, etc., could lead to series consequences. HPS Titan® encapsulated transformers are used in installations where safety is your priority, efficiency is a concern and the environment, location and application are key. Typical applications include institutional, commercial, industrial, petrochemical, marine, mining, etc.

HPS Titan® series transformers are UL Listed for "Class 1, Divison 2, Groups A, B, C and D Hazardous Locations" and are ABS Type Approved for "Marine Duty Service and Offshore Applications - Electrical Distribution and Propulsion". And with a North American Temperature Classification of T3C, the HPS Titan® series will remain cool under load.

Key features:

- Single phase ratings from .05 kVA to 37.5 kVA; three phase ratings from 2 kVA to 150 kVA
- 60 Hz frequency (50/60 Hz on units with 380V primary)
- Primary volts: 120, 208/240/277, 347/380, 240x480, 600, export model: 190/200/208/220x380/400/416/440
- UL 1604 approval, Class 1 Division2
- ABS type approval
- Electrostatic shield standard on all three phase units and single phase units over 0.50 kVA
- 10 year warranty

For more information, click one of the links below:

- HPS Titan Series Encapsulated Transformer Brochure
- HPS Titan Series Catalog Information (HTP-08 Catalog Sec. 9)
- Enclosure Drawings, Electrical Connection Diagrams, Termination Details (HTP-08 Catalog Sec. General Info)
- HPS Titan Installation Manual for single phase units up to 50 kVA (IOMGE Installation Manual)
- HPS Titan Installation Manual for three phase units up to 150 kVA (IOMGE3 Installation Manual)
- HPS Titan 1.2kV Class Typical Specification (SPS 09, Rev 03)

DRAFT

©2008 Hammond Power Solutions Inc. All Rights Reserved

HPS TITAN Series of Products

HPS has over 85 years of experience in the design and manufacture of dry-type transformers including those for harsh environments and hazardous location applications.

The terms “Harsh Environments” and “Hazardous Location” in many industries brings to the forefront the many difficult environments which may contain dangerous gases, liquids, dust, etc., that could lead to serious consequences. Products which are designed to operate in these hazardous environmental conditions must be safe, reliable and affordable.

Other manufacturers of harsh environment and hazardous location transformers can design a functional transformer. But what makes HPS the leader in the industry is our investment in providing a complete solution.

- **Advanced Encapsulated Harsh Environment and Hazardous Location Transformer Designs**
- **Standard Features Expected in the Industry**
- **Superior Quality in Materials and Workmanship**
- **Options and Accessories that Enhance the Product Line**
- **Value, Customer Service and Support**

The new **HPS TITAN** line of encapsulated transformers have been designed for installation where safety is your priority, efficiency is a concern and the environment, location and application are key. Typical applications include institutional, commercial, industrial, petrochemical, marine, mining etc. HPS designs provide:

- **Safe Superior Performance**
- **Compact Efficient Design**
- **Easy Installation and Hook-up**

HPS TITAN series transformers are ***UL Listed*** for **“Class 1, Division 2, Groups A, B, C and D Hazardous Locations”** and are ***ABS Type Approved*** for “**Marine Duty Service and Offshore Applications - Electrical Distribution and Propulsion”**. And with a North American Temperature Classification of **T3C**, the **HPS TITAN** series will remain cool under load.

The **HPS TITAN** series of products are competitively priced for the rugged, industrial and commercial indoor and outdoor distribution transformer markets. HPS facilities have the most modern testing equipment for the requirements of ANSI, OSHA, UL, CSA, IEC, NEMA, ABS, DNV, BV, CE, etc.

Hammond Power Solutions . . . helping customers solve tough applications in today’s environments!

DRAFT

© Hammond Power Solutions Inc.
Data subject to change without notice.

HPS TITAN Features and Benefits

- **Ratings:** Three phase from 2 kVA thru to 150 kVA; single phase from .05 kVA thru to 37.5 kVA
- **Approvals:** UL 1604 - File No. E258346 (**Class 1, Division 2, Groups A, B, C and D Hazardous Locations**)
  ABS Type Approval - Certificate No. 04-MO523208-X (Marine Duty Service and Offshore Applications)
- **Electrostatic Shield:** Standard on all three phase units and single phase units over 0.50 kVA; provides quality power and superior protection.
- **Quality Design:** All units are encapsulated with electrical grade silica sand and resin compounds which completely enclose the core and coil to seal out moisture, airborne contaminants and eliminates corrosion and deterioration.
- **Insulation:** Offering UL class 130°C insulation, 80°C temperature rise up to 1 kVA on single phase and 5 kVA three phase; 180°C insulation, 115°C temperature rise on all units over 1 kVA on single phase and 5 kVA three phase. Quiet operation with sound levels below NEMA standards.
- **Enclosures:** NEMA 3R enclosures meet or exceed listing criteria including NEMA, ANSI, ABS and OSHA standards for indoor and outdoor service. On three phase units, convert to a NEMA 4 or 12 enclosure rating quickly and easily by ordering the HPS NEMA 4/12 Gasket Kit.
  Competitively priced stainless steel enclosures with stainless steel nameplates are also available.
- **Conduit knockouts:** Rear and side entry into an easily accessible and roomy wiring compartment.
- **Wiring compartment:** Provides copper lead wire terminations or copper tab and standard ground lug assembly for easy cable installation.
- **Installation made quick and easy:** Via keyhole mounting slots. Wall mounting available on single phase units from .05 to 37.5 kVA and three phase from 2 to 15 kVA (excluding Q015QKKF). Lifting provisions are included on all single phase units from 5 to 37.5 kVA and three phase units from 6 to 150 kVA.
- **Dual Nameplates:** All three phase units come standard with two nameplates. One on the front and an additional nameplate is located on the inside of the top cover. (1ph units have one standard nameplate only.)
- **Additional voltage groups and kVA sizes** are available upon request.
- **Warranty:** All HPS standard catalog encapsulated transformers come with a 10 year limited* warranty. *(Please refer to the Hammond Power Solutions "standard Catalog Transformer Products Warranty for full details.)

DRAFT

HPS TITAN
Single Phase



c UL us LISTED

ABS TYPE APPROVAL PROGRAM

HPS TITAN
Three Phase



SECTION 9

© Hammond Power Solutions Inc. Data subject to change without notice.

HPS TITAN SERIES TRANSFORMERS FOR HARSH ENVIRONMENTS AND HAZARDOUS LOCATIONS

SINGLE PHASE STANDARD SPECIFICATIONS





	.05 kVA to 1 kVA	1.5 to 37.5 kVA
UL 1604, Class I, Division 2	File: E258346	File: E258346
ABS Type Approval (RQS)	Certificate No.: 04-MO523208-X	Certificate No.: 04-MO523208-X
Frequency	60 Hz (50/60 Hz on units with 380V primary)	60 Hz (50/60 Hz on units with 380V primary)
Insulation System	130°C (80°C rise) standard on all units	180°C (115°C rise) standard on all units. Optional 130°C (80°C rise) available.
Electrostatic Shield	Optional on units up to .500 kVA. Standard on .750 kVA and 1 kVA units.	Standard on all units.
Encapsulation	All units are encapsulated with electrical grade silica sand and resin compounds.	All units are encapsulated with electrical grade silica sand and resin compounds.
Enclosure Type	Heavy Duty Encapsulated NEMA Type 3R Optional NEMA 4, 4X (stainless steel) and 12	Heavy Duty Encapsulated NEMA Type 3R Optional NEMA 4, 4X (stainless steel) and 12
Enclosure Finish	ANSI 61 Grey, UL50	ANSI 61 Grey, UL50
Termination	Front accessible separate high and low voltage lead wires or copper tabs.	Front accessible separate high and low voltage lead wires or copper tabs.
Conduit Knock-Outs	Standard side and rear knock-outs on all units.	Standard side and rear knock-outs on all units.
Impedance	Typically 1 to 5%.	Typically 1 to 5%.
Mounting	Standard Wall Mounting.	Standard Wall Mounting. Lifting ears provided on all units 5 kVA and up.
Sound Level	Meets NEMA ST-20 standards. (optional low noise units available on request)	Meets NEMA ST-20 standards. (optional low noise units available on request)

Other voltages not listed in this section are available upon request. Please contact customer service for details, price and availability.

All HPS TITAN single phase transformers are UL Listed for "Class 1, Division 2, Groups A, B, C and D Hazardous Locations" and are ABS Type Approved for "Marine Duty Service and Offshore Applications - Electrical Distribution and Propulsion". And with a North American Temperature Classification of T3C, the HPS TITAN series will remain cool under load.

DRAFT

© Hammond Power Solutions Inc. Data subject to change without notice.

SINGLE PHASE, NEMA 3R STYLE ENCLOSURE

c UL us LISTED

240 X 480 Primary Volts 120/240 Secondary Volts 60 Hz

kVA	Catalog Number	Case Style (Page 249)	Approx. Dimensions (Inches) Width	Depth	Height	Approx. Weight (Lbs.)	Mtg Type W - Wall	Wiring Diagram (Pages 258-268)
0.05	**QC05LECB**	NQ0	3.75	5.25	7.25	6	W	SCD 1
0.10	**QC10LECB**	NQ0	3.75	5.25	7.25	7	W	SCD 1
0.15	**QC15LECB**	NQ0	3.75	5.25	7.25	8	W	SCD 1
0.20	**QC20LECB**	NQ1	4.50	5.75	7.25	11	W	SCD 1
0.25	**QC25LECB**	NQ1	4.50	5.75	7.25	13	W	SCD 1
0.35	**QC35LECB**	NQ1	4.50	5.75	7.25	14	W	SCD 1
0.5	**QC50LECB**	NQ2	5.00	4.75	9.25	15	W	SCD 1
0.75	**QC75LEKB**	NQ2	5.00	4.75	9.25	18	W	SCD 1
1	**Q1C0LEKB**	NQ3	5.88	5.50	10.00	22	W	SCD 1
1.5	**Q1C5LEKF**	NQ3	5.88	5.50	10.00	25	W	SCD 1
2	**Q002LEKF**	NQ4	7.00	6.50	11.25	40	W	SCD 1
3	**Q003LEKF**	NQ4	7.00	6.50	11.25	55	W	SCD 1
5	**Q005LEKF**	NQ5	10.00	7.75	17.25	90	W	SCD 1
7.5	**Q007LEKF**	NQ5	10.00	7.75	17.25	115	W	SCD 2
10	**Q010LEKF**	NQ6	12.25	9.25	20.88	165	W	SCD 2
15	**Q015LEKF**	NQ6	12.25	9.25	20.88	225	W	SCD 2
25	**Q025LEKF**	NQ7	14.50	10.75	21.38	285	W	SCD 2
37.5	**Q037LEKF**	NQ8	14.50	10.75	27.38	410	W	SCD 2

For shielded units up to 0.50 kVA, replace the suffix "CB" with a "KB".

6 = Custom 304SS

600 Primary Volts 120/240 Secondary Volts 60 Hz

kVA	Catalog Number	Case Style (Page 249)	Approx. Dimensions (Inches) Width	Depth	Height	Approx. Weight (Lbs.)	Mtg Type W - Wall	Wiring Diagram (Pages 258-268)
0.05	**QC05PECB**	NQ0	3.75	5.25	7.25	6	W	SCD 4
0.10	**QC10PECB**	NQ0	3.75	5.25	7.25	7	W	SCD 4
0.15	**QC15PECB**	NQ0	3.75	5.25	7.25	8	W	SCD 4
0.20	**QC20PECB**	NQ1	4.50	5.75	7.25	11	W	SCD 4
0.25	**QC25PECB**	NQ1	4.50	5.75	7.25	13	W	SCD 4
0.35	**QC35PECB**	NQ1	4.50	5.75	7.25	14	W	SCD 4
0.50	**QC50PECB**	NQ2	5.00	4.75	9.25	15	W	SCD 4
0.75	**QC75PEKB**	NQ2	5.00	4.75	9.25	18	W	SCD 4
1	**Q1C0PEKB**	NQ3	5.88	5.50	10.00	22	W	SCD 4
1.5	**Q1C5PEKF**	NQ3	5.88	5.50	10.00	25	W	SCD 4
2	**Q002PEKF**	NQ4	7.00	6.50	11.25	40	W	SCD 4
3	**Q003PEKF**	NQ4	7.00	6.50	11.25	55	W	SCD 4
5	**Q005PEKF**	NQ5	10.00	7.75	17.25	90	W	SCD 4
7.5	**Q007PEKF**	NQ5	10.00	7.75	17.25	115	W	SCD 6
10	**Q010PEKF**	NQ6	12.25	9.25	20.88	165	W	SCD 6
15	**Q015PEKF**	NQ6	12.25	9.25	20.88	225	W	SCD 6
25	**Q025PEKF**	NQ7	14.50	10.75	21.38	285	W	SCD 6
37.5	**Q037PEKF**	NQ8	14.50	10.75	27.38	410	W	SCD 6

For shielded units up to 0.50 kVA, replace the suffix "CB" with a "KB".

DRAFT

HPS Centurion® R
Line Reactor

HPS Centurion® R Reactor

The new HPS Centurion® R reactor provides a unique blend of improved performance and reliability while reducing the traditional product footprint. HPS Centurion® R reactors deliver protection for your motors and drives. They are available in standard ratings from 0.5 HP (373 Watts) to 1200 HP (895 kilowatts), up to 600 V (690 V with de-rating) and are fully compliant with UL, CSA, CE, IEC, and NEMA standards.

The efficient and cost effective HPS Centurion® R reactors are built to satisfy the power quality needs of demanding AC drive applications.



Why Choose a Reactor?

HPS reactors are designed to address line-side issues associated with variable frequency drives. They attenuate voltage and current transients that can cause nuisance tripping of a drive. Reactors also minimize harmonic current levels within the drive supply circuit. When used on the output side of IGBT-based, PWM-type AC drives, HPS reactors reduce the motor operating temperature and audible noise by moderating line transients seen by the motor. The use of HPS reactors enhances the overall system performance, life expectancy, and efficiency of the motor.

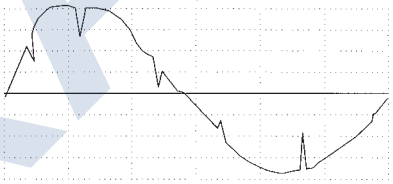

Voltage waveform illustrating line notching caused by the DC rectifier in typical AC drives

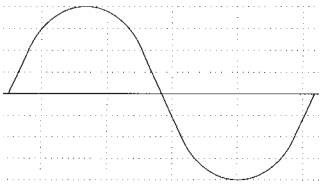

Ideal sine wave from the utility supply

Connection Diagram

(a) single motor

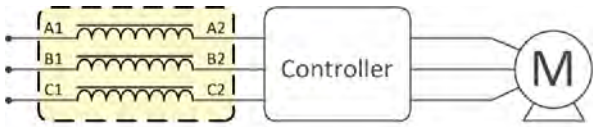

(b) multiple motors

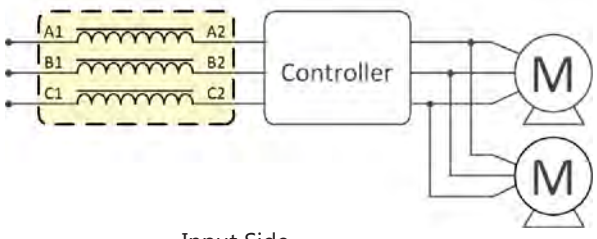

Input Side

(a) single motor

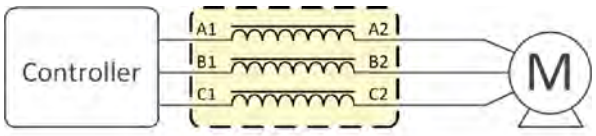

(b) multiple motors

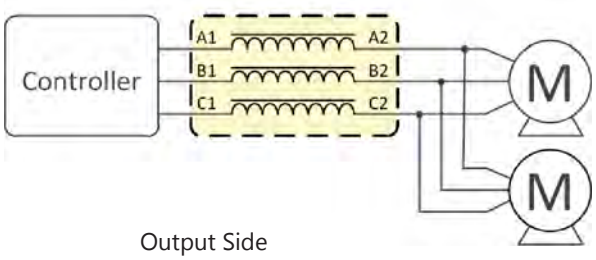

Output Side

DRAFT

Hammond Power Solutions

CONSTRUCTION

Assembly

- The impedance of the reactors is accurately controlled by maintaining the core gaps in the flux path.
- In some HP ranges, bobbins are used to provide exceptional mechanical strength and increase the product reliability.
- Every reactor is vacuum pressure impregnated (VPI) with VT (vinyl-toluene) Polyester Resin to minimize audible noise.

Terminations

- Finger-proof terminal blocks are provided on rated currents of approximately below 65 Amps.
- Terminal pads are supplied on approximately 65 Amps and above.
  - Terminal pads are brazed to ensure electrical integrity.

Enclosures

- Open core & coil or Type 1 standard (3R available; consult HPS for availability of enclosed units)
- Rugged steel enclosures with UL50 ANSI 61 grey paint

Specials

- For special applications or for any features that you may require beyond the standard line listed, please contact our sales office.

BENEFITS

- Mitigate nuisance tripping
- Extend the life of switching components and motors
- Reduce audible motor noise and motor operating temperature
- Mitigate the effect of long lead length
- Minimize harmonic distortion
- Reduce line notching

SPECIFICATIONS

Impedance Rating: 3% and 5%

System Frequency: 50/60 Hertz

System Voltage Ratings: 208 V, 240 V, 480 V, 575 V, 600 V (690 V de-rated)

Altitude (de-rating): Comply with NEMA ST20

Inductance Tolerance: +15/-10%

Inductance Curve:

% Nominal Inductance	% Rated Current
100	100
95	110
80	150
50	200

Dielectric strength to ground: 4000 volts for 1 minute or equivalent

Cooling Method: Natural convection

Temperature Rise:
- 80°C for 130°C Temperature Insulation Class
- 115°C for 180°C or 220°C Temperature Insulation Class

specifications subject to change

APPLICATIONS


Oil & Gas


Irrigation Fields


Wastewater


Food Processing


HVAC


Pharmaceutical


Steel


Pulp & Paper


Automotive

COMPLIANCE & APPROVALS

HPS Centurion® R is certified to the following standards:

- UL 508
- CSA C9
- CSA C22.2 No. 47 standards
- CE Mark (IEC 61558-2-20:2000)
- UL Listed (up to 600V), file No. E61431
- CSA Certified file No. LR3902
- IEC 61558-2-20

DRAFT

HPS Centurion® R
Line Reactor

HPS Centurion® R Features

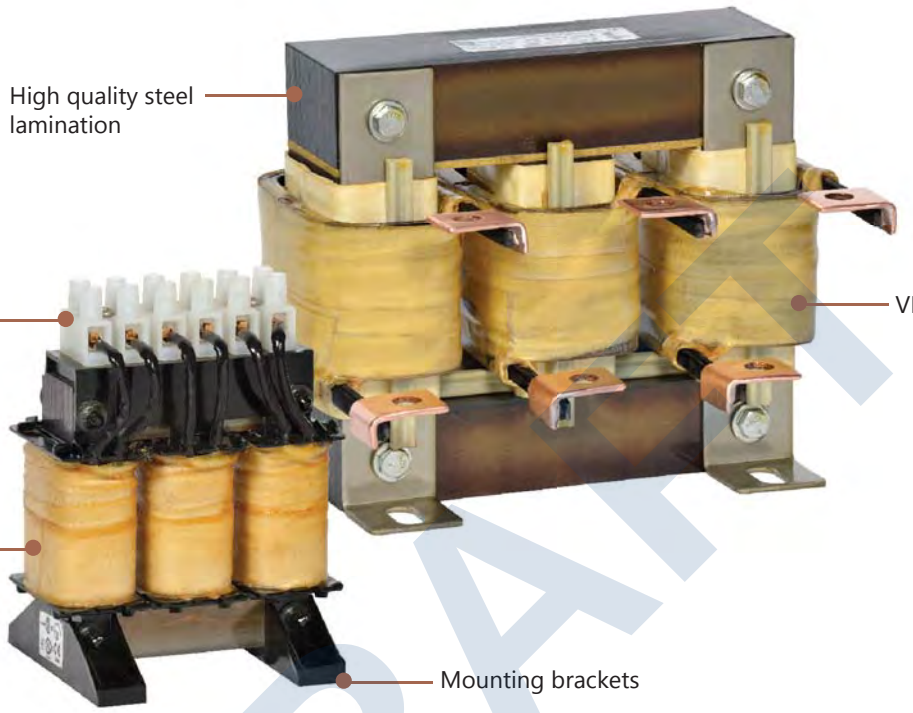

HPS Centurion® R Part Number Guide

C	R	X	1	2	3	4	A	E

Open or Enclosed
C for Core & Coil
E for Enclosed

Relative Impedance

Rated Current
D for Decimal
i.e. 02D4 is 2.4

Product Line

DRAFT

Hammond Power Solutions

SELECTION TABLES

HP Rating	208 Volt - 60Hz					
	3% Impedance			5% Impedance		
	Amps	Core & Coil Part Num.	Enclosed Part Num.	Amps	Core & Coil Part Num.	Enclosed Part Num.
0.5	2.4	CRX02D4BC	CRX02D4BE	2.4	CRX02D4DC	CRX02D4DE
0.75	3.5	CRX03D5AC	CRX03D5AE	3.5	CRX03D5DC	CRX03D5DE
1	4.6	CRX04D6BC	CRX04D6BE	4.6	CRX04D6CC	CRX04D6CE
1.5	6.6	CRX06D6BC	CRX06D6BE	6.6	CRX06D6CC	CRX06D6CE
2	7.5	CRX07D5AC	CRX07D5AE	7.5	CRX07D5DC	CRX07D5DE
3	10.7	CRX10D7BC	CRX10D7BE	10.7	CRX10D7DC	CRX10D7DE
5	16.7	CRX16D7BC	CRX16D7BE	16.7	CRX16D7DC	CRX16D7DE
7.5	24	CRX0024AC	CRX0024AE	24	CRX0024CC	CRX0024CE
10	31	CRX0031BC	CRX0031BE	31	CRX0031CC	CRX0031CE
15	46	CRX0046BC	CRX0046BE	46	CRX0046CC	CRX0046CE
20	59	CRX0059AC	CRX0059AE	59	CRX0059CC	CRX0059CE
25	75	CRX0075AC	CRX0075AE	75	CRX0075CC	CRX0075CE
30	88	CRX0088BC	CRX0088BE	88	CRX0088CC	CRX0088CE
40	114	CRX0114AC	CRX0114AE	114	CRX0114CC	CRX0114CE
50	143	CRX0143AC	CRX0143AE	143	CRX0143DC	CRX0143DE
60	170	CRX0170BC	CRX0170BE	170	CRX0170DC	CRX0170DE
75	211	CRX0211BC	CRX0211BE	211	CRX0211CC	CRX0211CE
100	273	CRX0273BC	CRX0273BE	273	CRX0273CC	CRX0273CE
125	343	CRX0343BC	CRX0343BE	343	CRX0343CC	CRX0343CE
150	396	CRX0396BC	CRX0396BE	396	CRX0396DC	CRX0396DE
200	528	CRX0528BC	CRX0528BE	528	CRX0528CC	CRX0528CE

HP Rating	240 Volt - 60Hz					
	3% Impedance			5% Impedance		
	Amps	Core & Coil Part Num.	Enclosed Part Num.	Amps	Core & Coil Part Num.	Enclosed Part Num.
0.5	2.4	CRX02D4AC	CRX02D4AE	2.4	CRX02D4CC	CRX02D4CE
0.75	3.5	CRX03D5BC	CRX03D5BE	3.5	CRX03D5CC	CRX03D5CE
1	4.6	CRX04D6AC	CRX04D6AE	4.6	CRX04D6DC	CRX04D6DE
1.5	6.6	CRX06D6AC	CRX06D6AE	6.6	CRX06D6DC	CRX06D6DE
2	7.5	CRX07D5BC	CRX07D5BE	7.5	CRX07D5CC	CRX07D5CE
3	10.7	CRX10D7AC	CRX10D7AE	10.7	CRX10D7CC	CRX10D7CE
5	16.7	CRX16D7AC	CRX16D7AE	16.7	CRX16D7CC	CRX16D7CE
7.5	24	CRX0024BC	CRX0024BE	24	CRX0024DC	CRX0024DE
10	31	CRX0031AC	CRX0031AE	31	CRX0031DC	CRX0031DE
15	46	CRX0046AC	CRX0046AE	46	CRX0046DC	CRX0046DE
20	59	CRX0059BC	CRX0059BE	59	CRX0059DC	CRX0059DE
25	75	CRX0075BC	CRX0075BE	75	CRX0075DC	CRX0075DE
30	88	CRX0088AC	CRX0088AE	88	CRX0088DC	CRX0088DE
40	114	CRX0114BC	CRX0114BE	114	CRX0114DC	CRX0114DE
50	143	CRX0143BC	CRX0143BE	143	CRX0143CC	CRX0143CE
60	170	CRX0170AC	CRX0170AE	170	CRX0170CC	CRX0170CE
75	211	CRX0211AC	CRX0211AE	211	CRX0211DC	CRX0211DE
100	273	CRX0273AC	CRX0273AE	273	CRX0273DC	CRX0273DE
125	343	CRX0343AC	CRX0343AE	343	CRX0343DC	CRX0343DE
150	396	CRX0396AC	CRX0396AE	396	CRX0396CC	CRX0396CE
200	528	CRX0528AC	CRX0528AE	528	CRX0528DC	CRX0528DE

HP Rating	480 Volt - 60Hz					
	3% Impedance			5% Impedance		
	Amps	Core & Coil Part Num.	Enclosed Part Num.	Amps	Core & Coil Part Num.	Enclosed Part Num.
0.5	1.1	CRX01D1AC	CRX01D1AE	1.1	CRX01D1BC	CRX01D1BE
0.75	1.6	CRX01D6AC	CRX01D6AE	1.6	CRX01D6BC	CRX01D6BE
1	2.1	CRX02D1AC	CRX02D1AE	2.1	CRX02D1BC	CRX02D1BE
1.5	3	CRX0003AC	CRX0003AE	3	CRX0003BC	CRX0003BE
2	3.4	CRX03D4AC	CRX03D4AE	3.4	CRX03D4BC	CRX03D4BE
3	4.8	CRX04D8AC	CRX04D8AE	4.8	CRX04D8BC	CRX04D8BE
5	7.6	CRX07D6AC	CRX07D6AE	7.6	CRX07D6BC	CRX07D6BE
7.5	11	CRX0011BC	CRX0011BE	11	CRX0011CC	CRX0011CE
10	14	CRX0014AC	CRX0014AE	14	CRX0014BC	CRX0014BE
15	21	CRX0021AC	CRX0021AE	21	CRX0021BC	CRX0021BE
20	27	CRX0027BC	CRX0027BE	27	CRX0027CC	CRX0027CE
25	34	CRX0034AC	CRX0034AE	34	CRX0034BC	CRX0034BE
30	40	CRX0040AC	CRX0040AE	40	CRX0040BC	CRX0040BE
40	52	CRX0052BC	CRX0052BE	52	CRX0052DC	CRX0052DE
50	65	CRX0065AC	CRX0065AE	65	CRX0065BC	CRX0065BE
60	77	CRX0077AC	CRX0077AE	77	CRX0077DC	CRX0077DE
75	96	CRX0096AC	CRX0096AE	96	CRX0096BC	CRX0096BE
100	124	CRX0124AC	CRX0124AE	124	CRX0124BC	CRX0124BE
125	156	CRX0156AC	CRX0156AE	156	CRX0156BC	CRX0156BE
150	180	CRX0180AC	CRX0180AE	180	CRX0180BC	CRX0180BE
200	240	CRX0240AC	CRX0240AE	240	CRX0240BC	CRX0240BE
250	302	CRX0302AC	CRX0302AE	302	CRX0302BC	CRX0302BE
300	361	CRX0361AC	CRX0361AE	361	CRX0361BC	CRX0361BE
350	414	CRX0414AC	CRX0414AE	414	CRX0414BC	CRX0414BE
400	477	CRX0477AC	CRX0477AE	477	CRX0477BC	CRX0477BE
450	515	CRX0515AC	CRX0515AE	515	CRX0515BC	CRX0515BE
500	590	CRX0590AC	CRX0590AE	590	CRX0590BC	CRX0590BE
600	720	CRX0720AC	CRX0720AE			
700	840	CRX0840AC	CRX0840AE			
800	960	CRX0960AC	CRX0960AE			
900	1080	CRX1080AC	CRX1080AE			
1000	1200	CRX1200AC	CRX1200AE			

HP Rating	600 Volt - 60Hz					
	3% Impedance*			5% Impedance*		
	Amps	Core & Coil Part Num.	Enclosed Part Num.	Amps	Core & Coil Part Num.	Enclosed Part Num.
0.5	1	CRX0001AC	CRX0001AE	1	CRX0001BC	CRX0001BE
0.75	1.4	CRX01D4AC	CRX01D4AE	1.4	CRX01D4BC	CRX01D4BE
1	1.8	CRX01D8AC	CRX01D8AE	1.8	CRX01D8BC	CRX01D8BE
1.5	2.6	CRX02D6AC	CRX02D6AE	2.6	CRX02D6BC	CRX02D6BE
2	2.7	CRX02D7AC	CRX02D7AE	2.7	CRX02D7BC	CRX02D7BE
3	3.9	CRX03D9AC	CRX03D9AE	3.9	CRX03D9BC	CRX03D9BE
5	6.1	CRX06D1AC	CRX06D1AE	6.1	CRX06D1BC	CRX06D1BE
7.5	9	CRX0009AC	CRX0009AE	9	CRX0009BC	CRX0009BE
10	11	CRX0011AC	CRX0011AE	11	CRX0011DC	CRX0011DE
15	17	CRX0017AC	CRX0017AE	17	CRX0017BC	CRX0017BE
20	22	CRX0022AC	CRX0022AE	22	CRX0022BC	CRX0022BE
25	27	CRX0027AC	CRX0027AE	27	CRX0027DC	CRX0027DE
30	32	CRX0032AC	CRX0032AE	32	CRX0032BC	CRX0032BE
40	41	CRX0041AC	CRX0041AE	41	CRX0041BC	CRX0041BE
50	52	CRX0052AC	CRX0052AE	52	CRX0052CC	CRX0052CE
60	62	CRX0062AC	CRX0062AE	62	CRX0062BC	CRX0062BE
75	77	CRX0077BC	CRX0077BE	77	CRX0077CC	CRX0077CE
100	99	CRX0099AC	CRX0099AE	99	CRX0099BC	CRX0099BE
125	125	CRX0125AC	CRX0125AE	125	CRX0125BC	CRX0125BE
150	144	CRX0144AC	CRX0144AE	144	CRX0144BC	CRX0144BE
200	192	CRX0192AC	CRX0192AE	192	CRX0192BC	CRX0192BE
250	242	CRX0242AC	CRX0242AE	242	CRX0242BC	CRX0242BE
300	289	CRX0289AC	CRX0289AE	289	CRX0289BC	CRX0289BE
350	336	CRX0336AC	CRX0336AE	336	CRX0336BC	CRX0336BE
400	382	CRX0382AC	CRX0382AE	382	CRX0382BC	CRX0382BE
450	412	CRX0412AC	CRX0412AE	412	CRX0412BC	CRX0412BE
500	472	CRX0472AC	CRX0472AE	472	CRX0472BC	CRX0472BE

*De-rated for 690V
All dimensions in inches
Refer to page 13 for drawings

HPS Centurion® R
Line Reactor

Open Core & Coil Specification Charts Continued

RMS Amp	Core & Coil	Inductance (mH)	Watts Loss	Width	Depth	Height	Mtg. Width	Mtg. Depth	Mtg. Slot w x d	Diagram Figure	Termination Style Ref.	Frame Size	Enclosure Part Number	Weight (lb)
52	CRX0052CC	0.91	130	7.12	5.19	6.38	4.80	3.77	0.38 x 0.50	2	3	2B	CREN2	25
	CRX0052DC	0.74	170	7.12	5.19	6.38	4.80	3.77	0.38 x 0.50	2	3	2B	CREN2	25
59	CRX0059AC	0.17	55	6.50	5.00	6.13	4.38	4.00	0.28 x 0.38	1	3	1D	CREN1	11.5
	CRX0059BC	0.22	85	7.25	5.88	5.63	4.80	3.27	0.38 x 0.50	3	4	3A	CREN2	18
	CRX0059CC	0.30	75	7.12	4.69	6.38	4.80	3.27	0.38 x 0.50	2	3	2A	CREN2	16
	CRX0059DC	0.36	110	7.25	6.00	5.63	4.80	3.77	0.38 x 0.50	3	4	3C	CREN2	25
62	CRX0062AC	0.45	130	7.12	4.69	6.38	4.80	3.27	0.38 x 0.50	2	3	2A	CREN2	19
	CRX0062BC	0.74	170	7.12	5.19	6.38	4.80	3.77	0.38 x 0.50	2	3	2B	CREN2	25
65	CRX0065AC	0.34	110	7.25	6.00	5.63	4.80	3.77	0.38 x 0.50	3	4	3C	CREN2	25
	CRX0065BC	0.57	120	7.25	6.00	5.63	4.80	3.77	0.38 x 0.50	3	4	3C	CREN2	25
75	CRX0075AC	0.12	70	7.25	5.88	5.63	4.80	3.27	0.38 x 0.50	3	4	3A	CREN2	17
	CRX0075BC	0.19	95	7.25	5.88	5.63	4.80	3.27	0.38 x 0.50	3	4	3A	CREN2	18
	CRX0075CC	0.22	85	7.25	5.88	5.63	4.80	3.27	0.38 x 0.50	3	4	3A	CREN2	18
	CRX0075DC	0.29	105	7.25	6.00	5.63	4.80	3.77	0.38 x 0.50	3	4	3C	CREN2	21
77	CRX0077AC	0.29	105	7.25	6.00	5.63	4.80	3.77	0.38 x 0.50	3	4	3C	CREN2	21
	CRX0077BC	0.36	110	7.25	6.00	5.63	4.80	3.77	0.38 x 0.50	3	4	3C	CREN2	25
	CRX0077CC	0.60	216	9.25	6.25	7.00	6.00	3.70	0.44 x 1.0	3	4	3E	CREN2	30
	CRX0077DC	0.49	160	7.25	6.00	5.63	4.80	3.77	0.38 x 0.50	3	4	3C	CREN2	24
88	CRX0088AC	0.12	70	7.25	5.88	5.63	4.80	3.27	0.38 x 0.50	3	4	3A	CREN2	17
	CRX0088BC	0.12	70	7.25	5.88	5.63	4.80	3.27	0.38 x 0.50	3	4	3A	CREN2	17
	CRX0088CC	0.19	95	7.25	5.88	5.63	4.80	3.27	0.38 x 0.50	3	4	3A	CREN2	18
	CRX0088DC	0.24	120	7.25	6.00	5.63	4.80	3.77	0.38 x 0.50	3	4	3C	CREN2	24
96	CRX0096AC	0.24	120	7.25	6.00	5.63	4.80	3.77	0.38 x 0.50	3	4	3C	CREN2	24
	CRX0096BC	0.39	170	9.25	8.25	7.00	6.00	5.70	0.44 x 1.0	3	4	3N	CREN2	49
99	CRX0099AC	0.28	125	7.25	6.00	5.63	4.80	3.77	0.38 x 0.50	3	4	3C	CREN2	26
	CRX0099BC	0.48	210	9.25	8.00	7.00	6.00	5.45	0.44 x 1.0	3	4	3L	CREN2	48
114	CRX0114AC	0.09	70	7.25	6.00	5.63	4.80	3.27	0.38 x 0.50	3	5	3B	CREN2	18
	CRX0114BC	0.11	140	9.25	6.75	7.00	6.00	3.83	0.44 x 1.0	3	5	3F	CREN2	28
	CRX0114CC	0.14	110	9.25	7.25	7.00	6.00	4.33	0.44 x 1.0	3	5	3J	CREN2	33
	CRX0114DC	0.19	190	10.80	8.25	10.00	7.20	5.21	0.44 x 1.0	4	5	4A	CRECH2	52
124	CRX0124AC	0.19	190	10.80	8.25	10.00	7.20	5.21	0.44 x 1.0	4	5	4A	CRECH2	52
	CRX0124BC	0.30	185	9.25	8.63	7.00	6.00	5.20	0.44 x 1.0	3	5	3Q	CREN2	48
125	CRX0125AC	0.23	160	9.25	7.63	7.00	6.00	4.70	0.44 x 1.0	3	5	3K	CREN2	41
	CRX0125BC	0.38	250	10.80	9.13	10.00	7.20	6.08	0.44 x 1.0	4	5	4C	CRECH2	67
143	CRX0143AC	0.07	88	7.25	6.00	5.63	4.80	3.27	0.38 x 0.50	3	5	3B	CREN2	20
	CRX0143BC	0.10	130	9.25	7.00	7.00	6.00	3.95	0.44 x 1.0	3	5	3H	CREN2	34
	CRX0143CC	0.11	140	9.25	6.75	7.00	6.00	3.83	0.44 x 1.0	3	5	3F	CREN2	28
	CRX0143DC	0.11	140	9.25	6.75	7.00	6.00	3.83	0.44 x 1.0	3	5	3F	CREN2	28
144	CRX0144AC	0.19	190	10.80	8.25	10.00	7.20	5.21	0.44 x 1.0	4	5	4A	CRECH2	52
	CRX0144BC	0.35	240	10.80	9.50	10.00	7.20	6.33	0.44 x 1.0	4	5	4D	CRECH4	74
156	CRX0156AC	0.15	210	9.25	7.00	7.00	6.00	4.08	0.44 x 1.0	3	5	3G	CREN2	32
	CRX0156BC	0.24	260	9.25	8.63	7.00	6.00	5.70	0.44 x 1.0	3	5	3R	CRECH2	32
170	CRX0170AC	0.06	100	7.25	6.25	5.63	4.80	3.77	0.38 x 0.50	3	5	3D	CREN2	23
	CRX0170BC	0.06	100	7.25	6.25	5.63	4.80	3.77	0.38 x 0.50	3	5	3D	CREN2	23
	CRX0170CC	0.10	130	9.25	7.00	7.00	6.00	3.95	0.44 x 1.0	3	5	3H	CREN2	34
	CRX0170DC	0.10	130	9.25	7.00	7.00	6.00	3.95	0.44 x 1.0	3	5	3H	CREN2	34
180	CRX0180AC	0.13	180	9.25	8.88	7.00	6.00	5.95	0.44 x 1.0	3	5	3S	CRECH2	54
	CRX0180BC	0.21	250	10.80	8.38	10.00	7.20	5.33	0.44 x 1.0	4	5	4B	CRECH2	63
192	CRX0192AC	0.15	200	9.25	8.25	7.00	6.00	5.45	0.44 x 1.0	3	5	3P	CRECH2	53
	CRX0192BC	0.25	325	10.80	10.50	10.00	7.20	7.33	0.44 x 1.0	4	5	4E	CRECH2	90
200	CRX0200CC	0.11	195	9.25	7.63	7.00	6.00	4.70	0.44 x 1.0	3	5	3K	CRECH2	44

All dimensions in inches
Refer to page 13 for drawings

HPS Centurion® R
Line Reactor

Diagrams

Figure #1

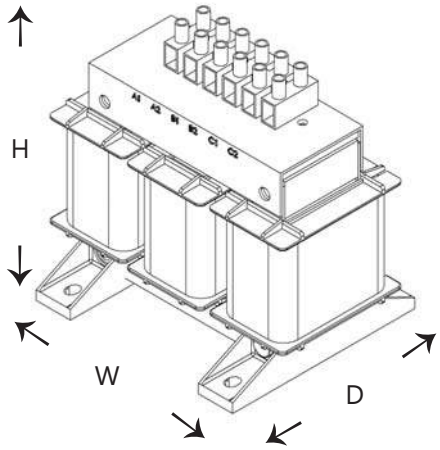

Mounting hardware
(not included)
4 pcs - 1/4 in. bolts
4 pcs - 1/4 in. nuts
8 pcs - 1/4 in. flat washers
4 pcs - 1/4 in. lock washers
Max. tightening torque: 5.5 ft-lb

Figure #2

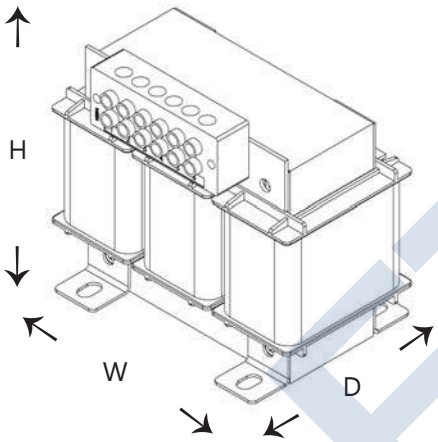

Mounting hardware
(not included)
4 pcs - 5/16 in. bolts
4 pcs - 5/16 in. nuts
8 pcs - 5/16 in. flat washers
4 pcs - 5/16 in. lock washers
Max. tightening torque: 18 ft-lb

Figure #3

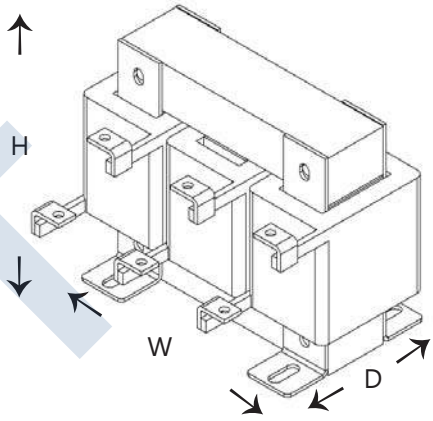

Mounting hardware (not included)	**.38x.5 slot**	**.44x1.0 slot**
4 pcs bolts	5/16 in.	3/8 in.
4 pcs nuts	5/16 in.	3/8 in.
8 pcs flat washers	5/16 in.	3/8 in.
4 pcs lock washers	5/16 in.	3/8 in.
Max. tightening torque	18 ft-lb	28 ft-lb

Figure #4

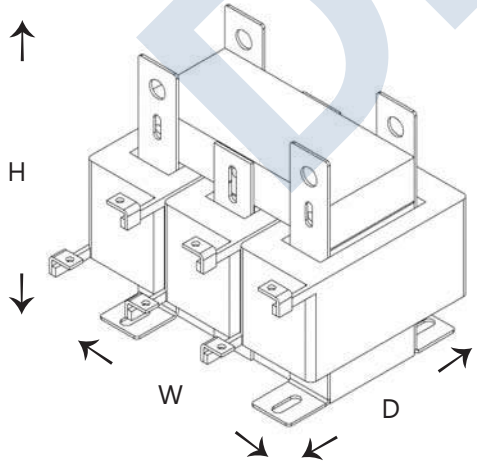

Mounting hardware
(not included)
4 pcs - 3/8 in. bolts
4 pcs - 3/8 in. nuts
8 pcs - 3/8 in. flat washers
4 pcs - 3/8 in. lock washers
Max. tightening torque: 28 ft-lb

Figure #5

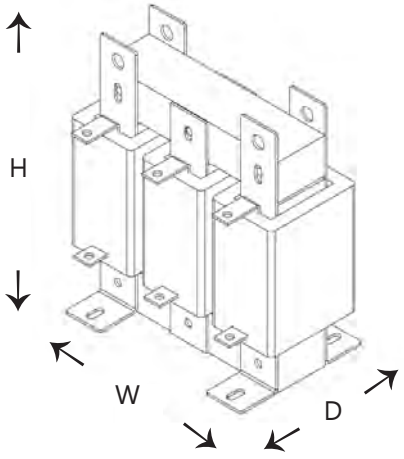

Mounting hardware
(not included)
4 pcs - 3/8 in. bolts
4 pcs - 3/8 in. nuts
8 pcs - 3/8 in. flat washers
4 pcs - 3/8 in. lock washers
Max. tightening torque: 28 ft-lb

DRAFT

Technical Data

Original Instructions

Allen-Bradley by ROCKWELL AUTOMATION

Motor Protection Circuit Breaker and Motor Circuit Protector Specifications

Bulletin 140MP, 140MT, 140M

Topic	Page
Summary of Changes	2
Product Line Overview	3
Bulletin 140MP Motor Protection Circuit Breakers	5
Product Overview	5
Group Installation with MPCBs	5
Catalog Number Explanation	6
Product Selection	7
Accessories	8
Specifications	12
MPCB Specifications	12
Application Ratings	13
Accessory Specifications	17
Wiring Diagrams	19
Approximate Dimensions	20
Bulletin 140MT Motor Protective Switching Devices and Motor Circuit Protectors	22
Product Overview	22
Application Diagrams	23
Catalog Number Explanation	25
C- and D-Frame Devices	25
F-Frame Devices	25
Product Selection	26
Selection Using Current and Hp/kW Ratings	26
Selection Using Application Ratings	29
Accessories	34
Specifications	41
Combination Ratings	43
Accessory Specifications	50
Time-Current Characteristic	54
Approximate Dimensions	55
140MT-C, 140MT-D Devices and Accessories	55
140M-F Devices and Accessories	58
Additional Resources	59

DRAFT

Catalog Number Explanation

C- and D-Frame Devices

140MT	-	C	3	E	-	B63	-	KN	-	MT	-	XC	-	GK
a		b	c	d		e		f		g		h		i

a	
Bulletin Number	
Code	**Description**
140MT	140MT Motor Protective Switching Device (Thermal)

b	
Current Rating/ Frame Size	
Code	**Description**
C	32 A, Frame C
D	40 A, Frame D

c	
Interrupting Rating/ Breaking Capacity	
Code	**Description**
3	Normal break
9	High break

d	
Function	
Code	**Description**
E	Adjustable Thermal/Fixed Magnetic (14 x I_n) MPCB
N	Fixed Magnetic (14 x I_n) MCP
T	Adjustable Thermal/Fixed Magnetic (18...22 x I_n) MPCB
V	Fixed Magnetic (application at output of VFD multi-motor)

e	
Current Range	
Code	**Description**
A	0.10 (example: A16 = 0.16 A)
B	1.0 (example: B16 = 1.6 A)
C	10 (example: C16 = 16 A)

f	
Knob and Adapters	
Code	**Description**
KN	Black lockable knob
KY	Red/yellow lockable knob
KB	Blue lockable knob (C-Frame only)
TE	Normal break

g	
Mounting Type	
Code	**Description**
MT	Standard busbar mount, top

h	
Auxiliary Contacts(1)	
Bottom Front	
1st Code	**Description**
X	No contact
B	1 N.O.
C	1 N.O. + 1 N.C.
D	2 N.O.
R	1 N.C. + 1 N.O. (SC+OL)
S	1 N.O. + 1 N.O. (SC+OL)
M	1 N.O. + 1 N.C. (SC+OL)
N	1 N.O. (SC+OL) + 1 N.O. (SC)
Right Side	
2nd Code	**Description**
X	No contact
C	1 N.O. + 1 N.C.
D	2 N.C.
E	2 N.C.

i	
Undervoltage and Shunt Trips	
Code	**Description**
Undervoltage Trip Units	
GK	24V, 50 Hz
GD	110V, 50 Hz/120V, 60 Hz
GF	220...230V, 50 Hz
GA	240...260V, 60 Hz
GN	380...400V, 50 Hz
GB	480V, 60 Hz/415V, 50 Hz
Shunt Trip Units	
PK	24V, 50 Hz
PD	110V, 50 Hz / 120V 60 Hz
PF	220...230V, 50 Hz
PA	240...260V, 60 Hz
PT	240V, 50 Hz/277V, 60 Hz
PN	380...400V, 50 Hz
PB	480V, 60 Hz/415V, 50 Hz
PZJ	24V DC

(1) Choose up to two auxiliary contacts. Use the first character in the code to specify the front mounted auxiliary contact; use the second character to specify the right side-mounted auxiliary contact. Example: code -XC is for no front-mounted contact, and a side-mounted auxiliary contact with 1 N.O. and 1 N.C. contact.

F-Frame Devices

140M	-	F	8	E	-	C10
a		b	c	d		e

a	
Bulletin Number	
Code	**Description**
140M	140M Motor Protection Circuit Breaker)

b	
Current Rating/ Frame Size	
Code	**Description**
F	45 A, Frame F

c	
Interrupting Rating/ Breaking Capacity	
Code	**Description**
8	High break

d	
Function	
Code	**Description**
E	Adjustable Thermal/Fixed Magnetic (14 x I_n) MPCB
N	Fixed Magnetic (14 x I_n) MCP
T	Adjustable Thermal/Fixed Magnetic (18...22 x I_n) MPCB

e	
Current Range	
Code	**Description**
C	10 (example: C16 = 16 A)

DRAFT

Product Selection

Selection Using Current and Hp/kW Ratings

Table 27 - Motor Protective Switching Devices

Rated Operational Current (I_e) [A]	Motor Current Adjustment Range [A]	Nominal Magnetic Trip Current [A]	Max Short-circuit Current [kA]		Max. 3-phase Hp Ratings[1]				Max. kW, 3-Phase — AC-3[1]				Cat. No.
			400V (I_{cu})	480V (group motor)	200V	230V	460V	575V	230V	400/415V	500V	690V	
C-Frame, Adjustable Thermal/Fixed Magnetic (14 x I_n)													
0.16	0.10...0.16	2.2	100	65	—	—	—	—	—	0.02	0.06	0.06	140MT-C3E-A16
0.25	0.16...0.25	3.5	100	65	—	—	—	—	—	0.04	0.09	0.09	140MT-C3E-A25
0.4	0.25...0.40	5.6	100	65	—	—	—	—	0.06	0.09	0.12	0.18	140MT-C3E-A40
0.63	0.40...0.63	8.8	100	65	—	—	—	—	0.09	0.18	0.18	0.25	140MT-C3E-A63
1	0.63...1.0	14	100	65	—	—	0.5	0.5	0.18	0.25	0.37	0.55	140MT-C3E-B10
1.6	1.0...1.6	22	100	65	—	—	0.75	—	0.25	0.55	0.75	1.1	140MT-C3E-B16
2.5	1.6...2.5	35	100	65	0.5	0.5	1	1.5	0.37	0.75	1.1	1.8	140MT-C3E-B25
4	2.5...4.0	56	100	65	0.75	0.75	2	3	0.75	1.5	2.2	3	140MT-C3E-B40
6.3	4.0...6.3	88	100	65	1	1.5	3	5	1.5	2.2	3	4	140MT-C3E-B63
10	6.3...10	140	100	65	2	2	5	7.5	2.2	4	6.3	7.5	140MT-C3E-C10
16	10...16	224	65	30	3	5	10	10	4	7.5	10	13	140MT-C3E-C16
20	14.5...20	280	50	30	5	5	10	15	5.5	10	11	17	140MT-C3E-C20
25	18...25	350	15	30	5	7.5	15	20	5.5	11	15	22	140MT-C3E-C25
29	23...29	406	15	30	7.5	10	20	25	7.5	13	18.5	25	140MT-C3E-C29
32	26.5...32	448	15	30	7.5	10	20	30	7.5	15	20	25	140MT-C3E-C32
D-Frame, Adjustable Thermal/Fixed Magnetic (14 x I_n)													
0.63	0.40...0.63	8.8	100	65	—	—	—	—	0.09	0.18	0.18	0.25	140MT-D9E-A63
1	0.63...1.0	14	100	65	—	—	0.5	0.5	0.18	0.25	0.37	0.55	140MT-D9E-B10
1.6	1.0...1.6	22	100	65	—	—	0.75	—	0.25	0.55	0.75	1.1	140MT-D9E-B16
2.5	1.6...2.5	35	100	65	0.5	0.5	1	1.5	0.37	0.75	1.1	1.8	140MT-D9E-B25
4	2.5...4.0	56	100	65	0.75	0.75	2	3	0.75	1.5	2.2	3	140MT-D9E-B40
6.3	4.0...6.3	88	100	65	1	1.5	3	5	1.5	2.2	3	4	140MT-D9E-B63
10	6.3...10	140	100	65	2	2	5	7.5	2.2	4	6.3	7.5	140MT-D9E-C10
16	10...16	224	100	65	3	5	10	10	4	7.5	10	13	140MT-D9E-C16
20	14.5...20	280	100	65	5	5	10	15	5.5	10	11	17	140MT-D9E-C20
25	18...25	350	65	50	5	7.5	15	20	5.5	11	15	22	140MT-D9E-C25
29	23...29	406	50	50	7.5	10	20	25	7.5	13	18.5	25	140MT-D9E-C29
32	26.5...32	448	50	50	7.5	10	20	30	7.5	15	20	25	140MT-D9E-C32
36	30...36	432	50	30	10	10	25	30		18.5	20	25	140MT-D9E-C36[2]
40	34...40	480	50	30	10	10	30	30	11	20	24	30	140MT-D9E-C40[2]
D-Frame, Fixed Magnetic (application at output of VFD multi-motor)													
1.6	1.0...1.6	88	100	65	—	—	0.75	—	0.25	0.55	0.75	—	140MT-D9V-B16
2.5	1.6...2.5	88	100	65	0.5	0.5	1	—	0.37	0.75	1.1	—	140MT-D9V-B25
4	2.5...4.0	88	100	65	0.75	0.75	2	—	0.75	1.5	2.2	—	140MT-D9V-B40
6.3	4.0...6.3	88	100	65	1	1.5	3	—	1.5	2.2	3	—	140MT-D9V-B63
10	6.3...10	140	100	65	2	2	5	—	2.2	4	6.3	—	140MT-D9V-C10
16	10...16	224	100	65	3	5	10	—	4	7.5	10	—	140MT-D9V-C16
20	14.5...20	280	100	65	5	5	10	—	5.5	10	11	—	140MT-D9V-C20
25	18...25	350	65	50	5	7.5	15	—	5.5	11	15	—	140MT-D9V-C25
29	23...29	406	50	50	7.5	10	20	—	7.5	13	18.5	—	140MT-D9V-C29
32	26.5...32	448	50	50	7.5	10	20	—	7.5	15	20	—	140MT-D9V-C32
36	30...36	432	50	30	10	10	25	—	—	18.5	20	—	140MT-D9V-C36[2]
40	34...40	480	50	30	10	10	30	—	11	20	24	—	140MT-D9V-C40[2]

DRAFT

Table 29 - Motor Circuit Protectors

Rated Operational Current (I_e) [A]	Motor Current Adjustment Range [A]	Nominal Magnetic Trip Current [A]	Max. Short Circuit Current [kA]		Max. 3-phase Hp Ratings(1)				Max. kW, 3-Phase — AC-3(1)				Cat. No.
			400V	480V	200V	230V	460V	575V	230V	400/415V	500V	690V	
			(I_{cu})	(group motor)									
D-Frame, Fixed Magnetic (14 x I_n)													
0.16	—	2.2	100	65	—	—	—	—	—	0.02	0.06	0.06	140MT-D9N-A16
0.25	—	3.5	100	65	—	—	—	—	—	0.04	0.09	0.09	140MT-D9N-A25
0.4	—	5.6	100	65	—	—	—	—	0.06	0.09	0.12	0.18	140MT-D9N-A40
0.63	—	8.8	100	65	—	—	—	—	0.09	0.18	0.18	0.25	140MT-D9N-A63
1	—	14	100	65	—	—	0.5	0.5	0.18	0.25	0.37	0.55	140MT-D9N-B10
1.6	—	22	100	65	—	—	0.75	—	0.25	0.55	0.75	1.1	140MT-D9N-B16
2.5	—	35	100	65	0.5	0.5	1	1.5	0.37	0.75	1.1	1.8	140MT-D9N-B25
4	—	56	100	65	0.75	0.75	2	3	0.75	1.5	2.2	3	140MT-D9N-B40
6.3	—	88	100	65	1	1.5	3	5	1.5	2.2	3	4	140MT-D9N-B63
10	—	140	100	65	2	2	5	7.5	2.2	4	6.3	7.5	140MT-D9N-C10
16	—	224	100	65	3	5	10	10	4	7.5	10	13	140MT-D9N-C16
20	—	280	100	65	5	5	10	15	5.5	10	11	17	140MT-D9N-C20
25	—	350	65	50	5	7.5	15	20	5.5	11	15	22	140MT-D9N-C25
29	—	406	50	50	7.5	10	20	25	7.5	13	18.5	25	140MT-D9N-C29
32	—	448	50	50	7.5	10	20	30	7.5	15	20	25	140MT-D9N-C32
36	—	432	50	30	10	10	25	30	—	18.5	20	25	140MT-D9N-C36(2)
40	—	480	50	30	10	10	30	30	11	20	24	30	140MT-D9N-C40(2)
F-Frame, Fixed Magnetic (13 x I_n)													
25	—	325	100	65	7.5	10	20	25	6.3	11	15	22	140M-F8N-C25
32	—	416	65	65	7.5	10	25	30	7.5	15	20	30	140M-F8N-C32
45	—	585	65	65	10	15	30	40	13	22	30	40	140M-F8N-C45

(1) Horsepower/kW ratings shown are for reference. The final selection of the MCP depends on the actual motor full load current.
(2) Suitable for continuous operation at 90% current rating at 480V only if used in a minimum enclosure size of 250 x 175 x 150 mm (10 x 7 x 6 in).

Motor Circuit Protectors (Cat. No. 140MT-D9N, 140M-F8N) do not provide thermal protection for themselves nor for downstream components. You must install a separate protective device against thermal overload, such as an overload relay as part of a starter combination. In applications that use these devices as the short-circuit protection device of heavy-duty starting motors, the rated operational current I_e of the devices must be over-sized using the factors in Table 30.

Table 30 - Oversizing for Heavy-duty Starting

Current Range [A]	Device Type	Class 10	Class 20	Class 30
0.16...10	140MT-D9N	—	—	—
16...29		—	—	1.41
32...40		—	1.41	1.73
25...45	140M-F8N	—	1.41	1.73

DRAFT

Selection Using Application Ratings

See page 42 for combination ratings.

Table 31 - UL/CSA Listed Application Ratings, Motor Protective Switching Devices

UL 60947-4-1 — Manual Motor Controller							UL 60947-4-1 Self-Protected (Type E) Combination Motor Controller		Cat. No.
Max. Fuse or Circuit Breaker per NEC [A]	Max Short-circuit Current [kA]						Max Short-circuit Current [kA]		
	Group Motor Installation		Motor Disconnect		Tap Conductor Protection				
	480V	600V	480V	600V	480Y/277V(1)	600Y/347V(1)	480Y/277V(1)	600Y/347V(1)	
C-Frame, Adjustable Thermal/Fixed Magnetic (14 x I_n)									
450	65	50	65	50	65	50	65	50	140MT-C3E-A16
450	65	50	65	50	65	50	65	50	140MT-C3E-A25
450	65	50	65	50	65	50	65	50	140MT-C3E-A40
450	65	50	65	50	65	50	65	50	140MT-C3E-A63
450	65	50	65	50	65	50	65	50	140MT-C3E-B10
450	65	50	65	50	65	50	65	50	140MT-C3E-B16
450	65	30	65	30	65	30	65	30	140MT-C3E-B25
450	65	30	65	30	65	30	65	30	140MT-C3E-B40
450	65	30	65	30	65	–	65	–	140MT-C3E-B63
450	65	30	65	30	65	–	65	–	140MT-C3E-C10
450	30	30	30	30	30	–	30	–	140MT-C3E-C16
450	30	30	30	10	–	–	–	–	140MT-C3E-C20
450	30	18	30	5	–	–	–	–	140MT-C3E-C25
450	30	10	10	--	–	–	–	–	140MT-C3E-C29
450	30	10	10	--	–	–	–	–	140MT-C3E-C32
D-Frame, Adjustable Thermal/Fixed Magnetic (14 x I_n)									
450	65	50	65	50	65	50	65	50	140MT-D9E-A63
450	65	50	65	50	65	50	65	50	140MT-D9E-B10
450	65	50	65	50	65	50	65	50	140MT-D9E-B16
450	65	30	65	30	65	30	65	30	140MT-D9E-B25
450	65	30	65	30	65	30	65	30	140MT-D9E-B40
450	65	30	65	30	65	30	65	30	140MT-D9E-B63
450	65	30	65	30	65	30	65	30	140MT-D9E-C10
450	65	30	65	30	65	30	65	30	140MT-D9E-C16
450	65	30	65	30	65	–	65	–	140MT-D9E-C20
450	50	30	50	30	50	–	50	–	140MT-D9E-C25
450	50	30	50	30	50	–	50	–	140MT-D9E-C29
450	50	30	30	18	30	–	30	–	140MT-D9E-C32
450	30	30	30	18	30	–	30	–	140MT-D9E-C36(2)
450	30	30	30	18	30	–	30	–	140MT-D9E-C40(2)
D-Frame, Adjustable Thermal/Fixed Magnetic (application at output of VFD multi-motor)									
450	65	–	65	–	65	–	65	–	140MT-D9V-B16
450	65	–	65	–	65	–	65	–	140MT-D9V-B25
450	65	–	65	–	65	–	65	–	140MT-D9V-B40
450	65	–	65	–	65	–	65	–	140MT-D9V-B63
450	65	–	65	–	65	–	65	–	140MT-D9V-C10
450	65	–	65	–	65	–	65	–	140MT-D9V-C16
450	65	–	65	–	65	–	65	–	140MT-D9V-C20
450	50	–	50	–	50	–	50	–	140MT-D9V-C25
450	50	–	50	–	50	–	50	–	140MT-D9V-C29
450	50	–	30	–	30	–	30	–	140MT-D9V-C32
450	30	–	30	–	30	–	30	–	140MT-D9V-C36(2)

DRAFT

Table 31 - UL/CSA Listed Application Ratings, Motor Protective Switching Devices (Continued)

UL 60947-4-1 — Manual Motor Controller							UL 60947-4-1 Self-Protected (Type E) Combination Motor Controller		Cat. No.
Max. Fuse or Circuit Breaker per NEC [A]	Max Short-circuit Current [kA]						Max Short-circuit Current [kA]		
	Group Motor Installation		Motor Disconnect		Tap Conductor Protection				
	480V	600V	480V	600V	480Y/277V(1)	600Y/347V(1)	480Y/277V(1)	600Y/347V(1)	
450	30	—	30	—	30	—	30	—	140MT-D9V-C40(2)
D-Frame, Adjustable Thermal/Fixed Magnetic (18...22 x I_n)									
450	65	50	65	50	65	50	65	50	140MT-D9T-A16
450	65	50	65	50	65	50	65	50	140MT-D9T-A25
450	65	50	65	50	65	50	65	50	140MT-D9T-A40
450	65	50	65	50	65	50	65	50	140MT-D9T-A63
450	65	50	65	50	65	50	65	50	140MT-D9T-B10
450	65	50	65	50	65	50	65	50	140MT-D9T-B16
450	65	30	65	30	65	30	65	30	140MT-D9T-B25
450	65	30	65	30	65	30	65	30	140MT-D9T-B40
450	65	30	65	30	65	30	65	30	140MT-D9T-B63
450	65	30	65	30	65	30	65	30	140MT-D9T-C10
450	65	30	65	30	65	30	65	—	140MT-D9T-C16
450	65	30	65	30	65	—	65	—	140MT-D9T-C20
450	50	30	50	18	50	—	50	—	140MT-D9T-C25
F-Frame, Adjustable Thermal/Fixed Magnetic (13 x I_n)									
600	65	30	65	30	65	30	65	30	140M-F8E-C10
600	65	30	65	30	65	30	65	30	140M-F8E-C16
600	65	30	65	30	65	30	65	30	140M-F8E-C20
600	65	30	65	30	65	30	65	30	140M-F8E-C25
600	65	30	65	30	65	30	65	30	140M-F8E-C32
600	65	18	65	18	65	—	65	—	140M-F8E-C45
F-Frame, Adjustable Thermal/Fixed Magnetic (16...22 x I_n)									
600	65	30	65	30	65	30	65	30	140M-F8T-C25
600	65	18	65	18	65	18	65	18	140M-F8T-C32

(1) For full voltage (delta) ratings above 277V or 347V, follow the NEC or CEC rules for group motor applications.
(2) Suitable for continuous operation at 90% current rating at 480V only if used in a minimum enclosure size of 250 x 175 x 150 mm (10 x 7 x 6 in).

DRAFT

Table 32 - UL/CSA Listed Application Ratings, Motor Circuit Protectors

UL 60947-4-1 — Manual Motor Controller							Cat. No.
Max. Fuse or Circuit Breaker per NEC [A]	Max. Short Circuit Current [kA]						
	Group Motor Installation		Motor Disconnect		Tap Conductor Protection		
	480V	600V	480V	600V	480Y/277V(1)	600Y/347V(1)	
D-Frame, Fixed Magnetic (14 x I_n)							
450	65	50	65	50	65	50	140MT-D9N-A16
450	65	50	65	50	65	50	140MT-D9N-A25
450	65	50	65	50	65	50	140MT-D9N-A40
450	65	50	65	50	65	50	140MT-D9N-A63
450	65	50	65	50	65	50	140MT-D9N-B10
450	65	50	65	50	65	50	140MT-D9N-B16
450	65	30	65	30	65	30	140MT-D9N-B25
450	65	30	65	30	65	30	140MT-D9N-B40
450	65	30	65	30	65	30	140MT-D9N-B63
450	65	30	65	30	65	30	140MT-D9N-C10
450	65	30	65	30	65	30	140MT-D9N-C16
450	65	30	65	30	65	—	140MT-D9N-C20
450	50	30	50	30	50	—	140MT-D9N-C25
450	50	30	50	30	50	—	140MT-D9N-C29
450	50	30	30	18	30	—	140MT-D9N-C32
450	30	30	30	18	30	—	140MT-D9N-C36(2)
450	30	30	30	18	30	—	140MT-D9N-C40(2)
F-Frame, Fixed Magnetic (13 x I_n)							
600	65	30	65	30	—	—	140M-F8N-C25
600	65	30	65	30	—	—	140M-F8N-C32
600	65	18	65	18	—	—	140M-F8N-C45

(1) For full voltage (delta) ratings above 277V or 347V, follow the NEC or CEC rules for group motor applications.
(2) Suitable for continuous operation at 90% current rating at 480V only if used in a minimum enclosure size of 250 x 175 x 150 mm (10 x 7 x 6 in).

Table 33 - IEC Application Ratings, Interrupting Rating/Breaking Capacity

Breaking Capacity, IEC 60947-2																Cat. No.
230/240V AC			400/415V AC			440/460V AC			500/525V AC			690V AC				
I_{cu} [kA]	I_{cs} [kA]	Back-up Fuse Rating(1) [A]	I_{cu} [kA]	I_{cs} [kA]	Back-up Fuse Rating(1) [A]	I_{cu} [kA]	I_{cs} [kA]	Back-up Fuse Rating(1) [A]	I_{cu} [kA]	I_{cs} [kA]	Back-up Fuse Rating(1) [A]	I_{cu} [kA]	I_{cs} [kA]	Back-up Fuse Rating(1) [A]		
C-Frame, Adjustable Thermal/Fixed Magnetic (14 x I_n)																
100	100		100	100		100	100		100	100		100	100			140MT-C3E-A16
100	100		100	100		100	100		100	100		100	100			140MT-C3E-A25
100	100		100	100		100	100		100	100		100	100		—(2)	140MT-C3E-A40
100	100		100	100		100	100		100	100		100	100			140MT-C3E-A63
100	100		100	100	—(2)	100	100	—(2)	100	100	—(2)	100	100			140MT-C3E-B10
100	100	—(2)	100	100		100	100		100	100		4	4	16		140MT-C3E-B16
100	100		100	100		100	100		100	100		4	4	20		140MT-C3E-B25
100	100		100	100		100	100		100	100		4	4	35		140MT-C3E-B40
100	100		100	100		100	100		100	100		3	3	50		140MT-C3E-B63
100	100		100	50	80	50	50	80	50	50	63	3	3	50		140MT-C3E-C10
100	100		65	50	80	10	6	80	10	6	80	3	3	63		140MT-C3E-C16
65	50	100	50	15	100	6	6	80	6	6	80	3	2	63		140MT-C3E-C20
65	50	100	15	15	100	6	4	80	6	4	80	3	2	63		140MT-C3E-C25
50	25	125	15	10	125	6	4	100	6	4	100	3	2	80		140MT-C3E-C29
50	25	125	15	10	125	6	4	100	6	4	100	3	2	80		140MT-C3E-C32

DRAFT

Table 33 - IEC Application Ratings, Interrupting Rating/Breaking Capacity (Continued)

Breaking Capacity, IEC 60947-2																Cat. No.
230/240V AC			400/415V AC			440/460V AC			500/525V AC			690V AC				
I_{cu} [kA]	I_{cs} [kA]	Back-up Fuse Rating[1] [A]	I_{cu} [kA]	I_{cs} [kA]	Back-up Fuse Rating[1] [A]	I_{cu} [kA]	I_{cs} [kA]	Back-up Fuse Rating[1] [A]	I_{cu} [kA]	I_{cs} [kA]	Back-up Fuse Rating[1] [A]	I_{cu} [kA]	I_{cs} [kA]	Back-up Fuse Rating[1] [A]		
D-Frame, Adjustable Thermal/Fixed Magnetic (14 x I_n)																
100	100		100	100		100	100		100	100		100	100			140MT-D9E-A63
100	100		100	100		100	100		100	100		100	100			140MT-D9E-B10
100	100		100	100		100	100		100	100		100	100			140MT-D9E-B16
100	100		100	100		100	100		100	100		6	4	20		140MT-D9E-B25
100	100		100	100		100	100		100	100		6	4	35		140MT-D9E-B40
100	100		100	100		100	100		100	100		6	4	50		140MT-D9E-B63
100	100		100	100		100	100		100	100		6	3	50		140MT-D9E-C10
100	100		100	50	80	50	25	80	50	25	80	4	3	63		140MT-D9E-C16
100	100		100	25	100	50	25	100	50	25	80	4	3	63		140MT-D9E-C20
100	100		65	25	100	35	20	100	35	20	80	4	3	63		140MT-D9E-C25
65	50	125	50	25	125	25	15	125	25	15	100	4	3	80		140MT-D9E-C29
65	50	125	50	25	125	25	15	125	25	15	100	4	3	80		140MT-D9E-C32
50	35	125	50	25	125	12	6	125	12	6	100	3	2	100		140MT-D9E-C36[3]
50	35	125	50	25	125	12	6	125	12	6	100	3	2	100		140MT-D9E-C40[3]
D-Frame, Fixed Magnetic (application at output of VFD multi-motor)																
100	100		100	100		100	100		100	100		–	–			140MT-D9V-B16
100	100		100	100		100	100		100	100		–	–			140MT-D9V-B25
100	100		100	100		100	100		100	100		–	–			140MT-D9V-B40
100	100		100	100		100	100		100	100		–	–			140MT-D9V-B63
100	100		100	100		100	100		100	100		–	–			140MT-D9V-C10
100	100		100	50	80	50	25	80	50	25	80	–	–			140MT-D9V-C16
100	100		100	25	100	50	25	100	50	25	80	–	–			140MT-D9V-C20
100	100		65	25	100	35	20	100	35	20	80	–	–			140MT-D9V-C25
65	50	125	50	25	125	25	15	125	25	15	100	–	–			140MT-D9V-C29
65	50	125	50	25	125	25	15	125	25	15	100	–	–			140MT-D9V-C32
50	35	125	50	25	125	12	6	125	12	6	100	–	–			140MT-D9V-C36[3]
50	35	125	50	25	125	12	6	125	12	6	100	–	–			140MT-D9V-C40[3]
F-Frame, Adjustable Thermal/Fixed Magnetic (13 x I_n)																
100	100		100	50	80	65	50	80	50	50	80	10	10	63		140M-F8E-C10
100	100		100	50	100	65	50	100	50	50	100	10	10	80		140M-F8E-C16
100	100		100	50	100	65	50	100	50	50	100	10	10	80		140M-F8E-C20
100	100		100	50	100	65	50	100	50	50	100	10	10	80		140M-F8E-C25
100	100		65	50	125	65	50	125	50	50	125	10	6	100		140M-F8E-C32
100	100		65	50	125	50	50	125	50	50	125	10	6	100		140M-F8E-C45

DRAFT

Specifications

Table 41 - General Data

Attribute			140MT-C	140MT-D	140M-F
Standards compliance		IEC	IEC/EN 60947-2, IEC/EN 60947-4-1		
		cULus	UL 60947-4-1, CSA C22.2, No. 60947-4-1		
Certifications		Regional	cULus Listed (File No. E54612, NLRV(7); E205542, NKJH(7); E518407		
			CCC, EAC, CE, IEC, CB Scheme		CCC, EAC, CE
Rated Insulation Voltage U_i	IEC	[V]	690		
	UL/CSA	[V]	600		
Rated Impulse Withstand Voltage U_{imp}	Pollution degree		3		
	Main circuits U_{imp}/Overvoltage Category		6 kV/III, 8 kV (Disconnect)		
	Auxiliary circuits U_{imp} /Overvoltage Category		6 kV/III		
Rated Frequency		[Hz]	45-65		
Utilization Category	IEC 60947-2 (Circuit breaker)		A		
	IEC 60947-4-1 (Motor starter)		AC-3		
Life Span	Mechanical	[operations]	100,000		30,000
	Electrical (I_e max.)	[operations]	100,000		30,000
Switching Frequency		[operations/hour]	max. 25		
Ambient Temperature	Storage	[°C (°F)]	-40...+85 (-40...185)		
	Operation	[°C (°F)]	-25...+70 (-13...158)		
Climatic resistance	Operating Humidity/Moisture heat (60068-2-3)		5...95% Non-condensing		
Site Altitude		[m]	to 2000 N.N. (6561 ft)		
Protection Class			IP2X from all directions		
Resistance to Shock, Transport (60068-2-27)		ON	15 G/11 ms		
		OFF	30 G/11 ms		
Resistance to Vibration, Operation (60068-2-6)			5 G		
Rated Thermal Current I_{th}	up to 40 °C (104 °F) ambient temperature	[A]	0.1...32	0.63...40	6.3...45
	up to 60 °C (140 °F) ambient temperature	[A]	0.1...32	0.63...40	6.3...45
Rated Supply Current I_e		[A]	0.1...32	0.63...40	6.3...45
Dependence on Temperature	40 °C (104 °F)	[A]	no reduction		
	50 °C (122 °F)	[A]	no reduction		
	60 °C (140 °F)	[A]	no reduction		
	70 °C (158 °F)	[A]	15% current reduction of the upper rated current I_e		
Overload Protection Characteristics			IEC 60947-4-1 Motor protection (except Cat. Nos. 140MT-D9N, 140M-F9N)		
Ambient Temperature Compensation		[°C (°F)]	-25...+60 (-13...+140)		
Phase-loss Protection			Differential release		
Trip class			10 (except Cat. Nos. 140MT-D9N, 140M-F8N) fixed setting		
Magnetic Release			fixed setting		
Release current (±20%)	for E, N Version	[A]	14 x I_e max.(1)		13 x I_e max
	for E, N Version C36, C40	[A]	12 x I_e max.(1)		–
	for T Version	[A]	18...22 x I_e max.(2)		
Total Power loss P_v	Circuit Breaker at rated load/ operating temp.	[W]	4...11	4...14	7...22
Main Disconnect Switch Application			Yes, with accessories		
Application Conditions	140MT-D...C36, -C40: Suitable for continuous operation at 90% current rating at 480V only if used in a minimum enclosure size of 250 x 175 x 150 mm (10 x 7 x 6 in).				
	For utilization outside North America, assemblies (of products) shall comply to the IEC 61439-1 requirements				
	140M and 140MT manual motor starters are intended for use in closed areas without hazardous operating conditions such as dust or explosive or corrosive gases. Enclosures of appropriate manner need to be in place to protect devices in such environments. See Table 42.				

(1) I_e max. = maximum values of setting ranges fixed magnetic setting for 140MT-D9V; see ratings.
(2) I_e max. = maximum values of setting ranges; see ratings.

DRAFT

Table 42 - Minimum Enclosure Size for 140MT-C and 140MT-D Devices

Rated Current [A]		Application Type			
		480V Group Installation and At-motor Disconnect	600V Group Installation and At-motor Disconnect	480Y/277V Self-protected (Type E) Combination Motor Controller	600Y/347V Self-protected (Type E) Combination Motor Controller
≤ 6.3	[mm]	166 x 68 x 125	166 x 68 x 125	166 x 68 x 125	166 x 68 x 125
	[in]	6.5 x 2.7 x 5	6.5 x 2.7 x 5	6.5 x 2.7 x 5	6.5 x 2.7 x 5
10...16	[mm]	166 x 68 x 125	166 x 68 x 125	200 x 68 x 125	250 x 68 x 125
	[in]	6.5 x 2.7 x 5	6.5 x 2.7 x 5	7.9 x 2.7 x 5	10 x 2.7 x 5
20...32	[mm]	166 x 68 x 125	250 x 68 x 125	200 x 68 x 125	–
	[in]	6.5 x 2.7 x 5	10 x 2.7 x 5	7.9 x 2.7 x 5	
36...40	[mm]	250 x 175 x 150	250 x 175 x 150	250 x 175 x 150	
	[in]	10 x 7 x 6	10 x 7 x 6	10 x 7 x 6	

Table 43 - MPCB Connecting Characteristics

Connection			No. of Conductors	140MT-C, 140MT-D ≤ 16 A	140MT-C, 140MT-D > 16 A	140M-F
Type of terminals						
				Screw Clamp up to 16 A, M4	Screw Clamp greater than 16 A, M4	
Connection Screw				Pozidriv No.2/Blade No.3	Pozidriv No.2/Blade No.3	Pozidriv No.2/Blade No.3
Wiring	Solid or stranded		1	1...6 mm^2	1.5...10 mm^2	2.5...25 mm^2
			2	1...2.5 mm^2 2.5...6 mm^2	1.5...4 mm^2 4...10 mm^2	2.5...25 mm^2
	Flexible with ferrule (end sleeve)		1	1...6 mm^2	1.5...10 mm^2	2.5...25 mm^2
			2	1...2.5 mm^2 2.5...4 mm^2	1.5...4 mm^2 4...10 mm^2	2.5...25 mm^2
	Finely stranded		1	1.5...6 mm^2	2.5...10 mm^2	16...25 mm^2
			2	1.5...4 mm^2 2.5...6 mm^2	2.5...6 mm^2 4...10 mm^2	16...25 mm^2
	Cross section per UL/CSA solid, stranded		1	No. 14...10 AWG	No. 14...8 AWG	No.14...8
			2	No. 14...10 AWG	No. 14...10 AWG No. 12...8 AWG	No.14...8
	Stripping length			10 mm (0.39 in.)	10 mm (0.39 in.)	10 mm (0.39 in.)
Tightening torques			[N•m]/[lb•in]	2...2.5/18...22	2...2.5/18...22	3...3.5/27...30

DRAFT

Combination Ratings

Bulletin 140MT Devices with Bulletin 100-K Miniature IEC Contactors

Table 44 - UL 60947 Application Ratings, MPSDs and MCPs with Bulletin 100-K Miniature IEC Contactors

Cat. No.	UL 60947-4-1 Manual Motor Controller						UL 60947-4-1 Type F		
	Max. Fuse or Circuit Breaker per NEC [A]	Minimum Contactor Size(1)	Group Motor Installation		Motor Disconnect		Combination Motor Controller		
			Max Short-circuit Current [kA]		Max Short-circuit Current [kA]		Minimum Contactor Size(1)	Max Short-circuit Current [kA]	
			480V	600V	480V	600V		480Y/277V(2)	600Y/347V(2)
C-Frame, Adjustable Thermal/Fixed Magnetic (14 x I_n)									
140MT-C3E-A16	450	100-K05	65	50	65	50	100-K05	65	50
140MT-C3E-A25	450	100-K05	65	50	65	50	100-K05	65	50
140MT-C3E-A40	450	100-K05	65	50	65	50	100-K05	65	50
140MT-C3E-A63	450	100-K05	65	50	65	50	100-K05	65	50
140MT-C3E-B10	450	100-K05	65	50	65	50	100-K05	65	50
140MT-C3E-B16	450	100-K05	65	50	65	50	100-K05	65	50
140MT-C3E-B25	450	100-K05	65	30	65	30	100-K05	65	30
140MT-C3E-B40	450	100-K05	65	30	65	30	100-K05	65	30
140MT-C3E-B63	450	100-K05	65	30	65	30	100-K05	65	–
140MT-C3E-C10	450	100-K09	65	30	65	30	100-K09	65	–
140MT-C3E-C16	450	100-K12	30	30	30	30	100-K12	30	–
D-Frame, Adjustable Thermal/Fixed Magnetic (14 x I_n)									
140MT-D9E-A63	450	100-K05	65	50	65	50	100-K05	65	50
140MT-D9E-B10	450	100-K05	65	50	65	50	100-K05	65	50
140MT-D9E-B16	450	100-K05	65	50	65	50	100-K05	65	50
140MT-D9E-B25	450	100-K05	65	30	65	30	100-K05	65	30
140MT-D9E-B40	450	100-K05	65	30	65	30	100-K05	65	30
140MT-D9E-B63	450	100-K05	65	30	65	30	100-K05	65	30
140MT-D9E-C10	450	100-K09	65	30	65	30	100-K09	65	30
140MT-D9E-C16	450	100-K12	65	30	65	30	100-K12	65	30

(1) Similar for other contactor configurations (100-K, 104-K)
(2) For full voltage (delta) ratings above 277V or 347V, follow the NEC or CEC rules for group motor applications.

DRAFT

Table 45 - IEC 60947-4-1, Type 1 Coordination Ratings, MPSDs with Bulletin 100-K IEC Contactors

Cat. No.	415V	
Standard Motor Protection	**Max Short-circuit Current [kA]**	**Min Contactor Size[1]**
C-Frame, Adjustable Thermal/Fixed Magnetic (14 x I_n)		
140MT-C3E-A16	65	100-K05
140MT-C3E-A25	65	100-K05
140MT-C3E-A40	65	100-K05
140MT-C3E-A63	65	100-K05
140MT-C3E-B10	65	100-K05
140MT-C3E-B16	65	100-K05
140MT-C3E-B25	65	100-K05
140MT-C3E-B40	65	100-K05
140MT-C3E-B63	65	100-K05
140MT-C3E-C10	65	100-K09
140MT-C3E-C16	30	100-K12
D-Frame, Adjustable Thermal/Fixed Magnetic (14 x I_n)		
140MT-D9E-A63	65	100-K05
140MT-D9E-B10	65	100-K05
140MT-D9E-B16	65	100-K05
140MT-D9E-B25	65	100-K05
140MT-D9E-B40	65	100-K05
140MT-D9E-B63	65	100-K05
140MT-D9E-C10	65	100-K09
140MT-D9E-C16	65	100-K12

(1) Similar for other contactor configurations (100-K, 104-K)

DRAFT

Bulletin 140MT/M Devices with Bulletin 100-C IEC Contactors

Table 46 - UL 60947 Application Ratings, MPSDs with Bulletin 100-C IEC Contactors

Cat. No.	UL 60947-4-1 Manual Motor Controller						UL 60947-4-1 Type F		
	Max. Fuse or Circuit Breaker per NEC [A]	Minimum Contactor Size[1]	Group Motor Installation		Motor Disconnect		Combination Motor Controller		
			Max Short-circuit Current [kA]		Max Short-circuit Current [kA]		Minimum Contactor Size[1]	Max Short-circuit Current [kA]	
			480V	600V	480V	600V		480Y/277V[2]	600Y/347V[2]
C-Frame, Adjustable Thermal/Fixed Magnetic (14 x I_n)									
140MT-C3E-A16	450	100-C09	65	50	65	50	100-C09	65	50
140MT-C3E-A25	450	100-C09	65	50	65	50	100-C09	65	50
140MT-C3E-A40	450	100-C09	65	50	65	50	100-C09	65	50
140MT-C3E-A63	450	100-C09	65	50	65	50	100-C09	65	50
140MT-C3E-B10	450	100-C09	65	50	65	50	100-C09	65	50
140MT-C3E-B16	450	100-C09	65	50	65	50	100-C09	65	50
140MT-C3E-B25	450	100-C09	65	30	65	30	100-C09	65	30
140MT-C3E-B40	450	100-C09	65	30	65	30	100-C09	65	30
140MT-C3E-B63	450	100-C09	65	30	65	30	100-C09	65	–
140MT-C3E-C10	450	100-C09	65	30	65	30	100-C09	65	–
140MT-C3E-C16	450	100-C12	30	30	30	30	100-C12	30	–
140MT-C3E-C20	450	100-C16	30	30	30	10	–	–	–
140MT-C3E-C25	450	100-C23	30	18	10	5	–	–	–
	450	100-C30	30	18	30	5	–	–	–
140MT-C3E-C29	450	100-C30	30	10	10	–	–	–	–
140MT-C3E-C32	450	100-C37	30	10	10	–	–	–	–
D-Frame, Adjustable Thermal/Fixed Magnetic (14 x I_n)									
140MT-D9E-A63	450	100-C09	65	50	65	50	100-C09	65	50
140MT-D9E-B10	450	100-C09	65	50	65	50	100-C09	65	50
140MT-D9E-B16	450	100-C09	65	50	65	50	100-C09	65	50
140MT-D9E-B25	450	100-C09	65	30	65	30	100-C09	65	30
140MT-D9E-B40	450	100-C09	65	30	65	30	100-C09	65	30
140MT-D9E-B63	450	100-C09	65	30	65	30	100-C09	65	30
140MT-D9E-C10	450	100-C09	65	30	65	30	100-C09	65	30
140MT-D9E-C16	450	100-C12	65	30	65	30	100-C12	65	30
140MT-D9E-C20	450	100-C23	65	30	65	30	100-C23	65	–
140MT-D9E-C25	450	100-C23	50	30	50	30	100-C23	50	–
140MT-D9E-C29	450	100-C30	50	30	50	30	100-C30	50	–
140MT-D9E-C32	450	100-C37	50	30	30	18	100-C37	30	–
140MT-D9E-C36	450	100-C37	30	30	30	18	100-C37	30	–
140MT-D9E-C40	450	100-C37	30	30	30	18	100-C37	30	–
F-Frame, Adjustable Thermal/Fixed Magnetic (13 x I_n)									
140M-F8E-C10	600	100-C30	65	30	65	30	100-C30	65	30
140M-F8E-C16	600	100-C30	65	30	65	30	100-C30	65	30
140M-F8E-C20	600	100-C30	65	30	65	30	100-C30	65	30
140M-F8E-C25	600	100-C30	65	30	65	30	100-C30	65	30
140M-F8E-C32	600	100-C30	65	30	65	30	100-C30	65	30
140M-F8E-C45	600	100-C37	65	18	65	18	100-C37	65	–

(1) Similar for other contactor configurations (100-C, 104-C, 100S-C, 104S-C)
(2) For full-voltage (delta) ratings above 277V or 347V, follow the NEC or CEC rules for group motor applications.

DRAFT

Table 47 - UL 60947 Application Ratings, MCPs with Bulletin 100-C IEC Contactors

Cat. No.	UL 60947-4-1 Manual Motor Controller					
	Max. Fuse or Circuit Breaker per NEC [A]	Minimum Contactor Size	Group Motor Installation		Motor Disconnect	
			Max Short-circuit Current [kA]		Max Short-circuit Current [kA]	
			480V	600V	480V	600V
D-Frame, Motor Circuit Protectors, Fixed Magnetic (14 x I_n)						
140MT-D9N-A16	450	100-C09	65	50	65	50
140MT-D9N-A25	450	100-C09	65	50	65	50
140MT-D9N-A40	450	100-C09	65	50	65	50
140MT-D9N-A63	450	100-C09	65	50	65	50
140MT-D9N-B10	450	100-C09	65	50	65	50
140MT-D9N-B16	450	100-C09	65	50	65	50
140MT-D9N-B25	450	100-C09	65	30	65	30
140MT-D9N-B40	450	100-C09	65	30	65	30
140MT-D9N-B63	450	100-C09	65	30	65	30
140MT-D9N-C10	450	100-C09	65	30	65	30
140MT-D9N-C16	450	100-C12	65	30	65	30
140MT-D9N-C20	450	100-C23	65	30	65	30
140MT-D9N-C25	450	100-C23	50	30	50	30
140MT-D9N-C29	450	100-C30	50	30	50	30
140MT-D9N-C32	450	100-C37	50	30	30	18
140MT-D9N-C36	450	100-C37	30	30	30	18
140MT-D9N-C40	450	100-C37	30	30	30	18
F-Frame, Motor Circuit Protectors, Fixed Magnetic (13 x I_n)						
140M-F8N-C25	600	100-C23	65	30	65	30
140M-F8N-C32	600	100-C30	65	30	65	30
140M-F8N-C45	600	100-C37	65	18	65	18

DRAFT

Table 48 - IEC 60947-4-1, Type 2 Coordination Ratings, MPSDs with Bulletin 100-C IEC Contactors

Cat. No.			400V		480V		600V	
Standard Motor Protection	High Inrush Motor Protection	Motor Circuit Protection	Max Short-circuit Current [kA]	Min Contactor Size(1)	Max Short-circuit Current [kA]	Min Contactor Size(1)	Max Short-circuit Current [kA]	Min Contactor Size(1)
C-Frame, Adjustable Thermal/Fixed Magnetic (14 x I_n)								
140MT-C3E-A16	–	–	100	100-C09	–	–	–	–
140MT-C3E-A25	–	–	100	100-C09	–	–	–	–
140MT-C3E-A40	–	–	100	100-C09	–	–	–	–
140MT-C3E-A63	–	–	100	100-C09	–	–	–	–
140MT-C3E-B10	–	–	100	100-C09	–	–	–	–
140MT-C3E-B16	–	–	100	100-C09	–	–	–	–
140MT-C3E-B25	–	–	65	100-C23	–	–	–	–
140MT-C3E-B40	–	–	65	100-C23	–	–	–	–
140MT-C3E-B63	–	–	65	100-C23	–	–	–	–
140MT-C3E-C10	–	–	65	100-C23	–	–	–	–
140MT-C3E-C16	–	–	50	100-C30	–	–	–	–
140MT-C3E-C20	–	–	50	100-C30	–	–	–	–
140MT-C3E-C25	–	–	15	100-C30	–	–	–	–
140MT-C3E-C29	–	–	15	100-C30	–	–	–	–
140MT-C3E-C32	–	–	15	100-C30	–	–	–	–
D-Frame, Adjustable Thermal/Fixed Magnetic (14 x I_n)								
140MT-D9E-A63	–	–	100	100-C09	–	–	–	–
140MT-D9E-B10	140MT-D9T-A63	140MT-D9N-B10	100	100-C09	–	–	–	–
140MT-D9E-B16	140MT-D9T-B10	140MT-D9N-B16	100	100-C09	–	–	–	–
140MT-D9E-B25	140MT-D9T-B16	140MT-D9N-B25	100	100-C09	–	–	–	–
140MT-D9E-B40	140MT-D9T-B25	140MT-D9N-B40	65	100-C09	–	–	–	–
140MT-D9E-B63	140MT-D9T-B40	140MT-D9N-B63	65	100-C09	–	–	–	–
140MT-D9E-C10	140MT-D9T-B63	140MT-D9N-C10	65	100-C09	–	–	–	–
140MT-D9E-C16	140MT-D9T-C10	140MT-D9N-C16	65	100-C23	–	–	–	–
140MT-D9E-C20	140MT-D9T-C16	140MT-D9N-C20	65	100-C23	–	–	–	–
140MT-D9E-C25	140MT-D9T-C20	140MT-D9N-C25	65	100-C23	–	–	–	–
140MT-D9E-C29	140MT-D9T-C25	140MT-D9N-C29	65	100-C30	–	–	–	–
140MT-D9E-C32	140MT-D9T-C29	140MT-D9N-C32	65	100-C30/C37	–	–	–	–
140MT-D9E-C36	140MT-D9T-C32	–	65	100-C30/C37	–	–	–	–
140MT-D9E-C40	140MT-D9T-C36	140MT-D9N-C40	65	100-C30/C37	–	–	–	–
F-Frame, Adjustable Thermal/Fixed Magnetic (13 x I_n)								
140M-F8E-C10	–	–	100	100-C09	65	100-C09	30	100-C30
140M-F8E-C16	–	–	100	100-C12	65	100-C12	30	100-C30
140M-F8E-C20	–	–	100	100-C23	65	100-C23	30	100-C30
140M-F8E-C25	–	140M-F8N-C25	100	100-C30	65	100-C30	30	100-C30
140M-F8E-C32	140M-F8T-C25	140M-F8N-C32	100	100-C30	65	100-C30	30	100-C30
140M-F8E-C45	140M-F8T-C32	140M-F8N-C45	100	100-C37	65	100-C37	10	100-C37

(1) Similar for other contactor configurations (100-C, 104-C, 100S-C, 104S-C)

DRAFT

Bulletin 140MT/M Devices with Bulletin 100-E IEC Contactors

Table 49 - UL 60947 Application Ratings, MPSDs with Bulletin 100-E IEC Contactors

Cat. No.	UL 60947-4-1 Manual Motor Controller						UL 60947-4-1 Type F		
			Group Motor Installation		Motor Disconnect		Combination Motor Controller		
	Max. Fuse or Circuit Breaker per NEC [A]	Minimum Contactor Size(1)	Max Short-circuit Current [kA]		Max Short-circuit Current [kA]		Minimum Contactor Size(1)	Max Short-circuit Current [kA]	
			480V	600V	480V	600V		480Y/277V(2)	600Y/347V(2)
C-Frame, Adjustable Thermal/Fixed Magnetic (14 x I_n)									
140MT-C3E-A16	450	100-E09	65	50	65	50	100-E09	65	50
140MT-C3E-A25	450	100-E09	65	50	65	50	100-E09	65	50
140MT-C3E-A40	450	100-E09	65	50	65	50	100-E09	65	50
140MT-C3E-A63	450	100-E09	65	50	65	50	100-E09	65	50
140MT-C3E-B10	450	100-E09	65	50	65	50	100-E09	65	50
140MT-C3E-B16	450	100-E09	65	50	65	50	100-E09	65	50
140MT-C3E-B25	450	100-E09	65	30	65	30	100-E09	65	30
140MT-C3E-B40	450	100-E09	65	30	65	30	100-E09	65	30
140MT-C3E-B63	450	100-E09	65	30	65	30	100-E09	65	–
140MT-C3E-C10	450	100-E09	65	30	65	30	100-E09	65	–
140MT-C3E-C16	450	100-E12	30	30	30	30	100-E12	30	–
140MT-C3E-C20	450	100-E16	30	30	30	10	–	–	–
140MT-C3E-C25	450	100-E26	30	18	10	5	–	–	–
	450	100-E30	30	18	30	5	–	–	–
140MT-C3E-C29	450	100-E30	30	10	10	–	–	–	–
140MT-C3E-C32	450	100-E38	30	10	10	–	–	–	–
D-Frame, Adjustable Thermal/Fixed Magnetic (14 x I_n)									
140MT-D9E-A63	450	100-E09	65	50	65	50	100-E09	65	50
140MT-D9E-B10	450	100-E09	65	50	65	50	100-E09	65	50
140MT-D9E-B16	450	100-E09	65	50	65	50	100-E09	65	50
140MT-D9E-B25	450	100-E09	65	30	65	30	100-E09	65	30
140MT-D9E-B40	450	100-E09	65	30	65	30	100-E09	65	30
140MT-D9E-B63	450	100-E09	65	30	65	30	100-E09	65	30
140MT-D9E-C10	450	100-E09	65	30	65	30	100-E09	65	30
140MT-D9E-C16	450	100-E12	65	30	65	30	100-E12	65	30
140MT-D9E-C20	450	100-E26	65	30	65	30	100-E26	65	–
140MT-D9E-C25	450	100-E26	50	30	50	30	100-E26	50	–
140MT-D9E-C29	450	100-E30	50	30	50	30	100-E30	50	–
140MT-D9E-C32	450	100-E38	50	30	30	18	100-E38	30	–
140MT-D9E-C36	450	100-E38	30	30	30	18	100-E38	30	–
140MT-D9E-C40	450	100-E38	30	30	30	18	100-E38	30	–
140MT-D9E-C40	450	100-E40	30	30	30	18	100-E40	30	–

(1) Similar for other contactor configurations (100-E, 104-E, 100S-E, 104S-E)
(2) For full-voltage (delta) ratings above 277V or 347V, follow the NEC or CEC rules for group motor applications.

DRAFT

Table 50 - IEC 60947-4-1, Type 2 Coordination Ratings, MPSDs with Bulletin 100-E IEC Contactors

Cat. No.		415V	
Standard Motor Protection	High Inrush Motor Protection	Max Short-circuit Current [kA]	Min Contactor Size[1]
C-Frame, Adjustable Thermal/Fixed Magnetic (14 x I_n)			
140MT-C3E-A16	–	100	100-E09
140MT-C3E-A25	–	100	100-E09
140MT-C3E-A40	–	100	100-E09
140MT-C3E-A63	–	100	100-E09
140MT-C3E-B10	–	100	100-E09
140MT-C3E-B16	–	100	100-E09
140MT-C3E-B25	–	65	100-E26
140MT-C3E-B40	–	65	100-E26
140MT-C3E-B63	–	65	100-E26
140MT-C3E-C10	–	65	100-E26
140MT-C3E-C16	–	50	100-E26
140MT-C3E-C20	–	50	100-E26
140MT-C3E-C25	–	15	100-E30
140MT-C3E-C29	–	15	100-E30
140MT-C3E-C32	–	15	100-E30
D-Frame, Adjustable Thermal/Fixed Magnetic (14 x I_n)			
140MT-D9E-A63	–	100	100-E09
140MT-D9E-B10	–	100	100-E09
140MT-D9E-B16	–	100	100-E09
140MT-D9E-B25	–	100	100-E09
140MT-D9E-B40	–	65	100-E26
140MT-D9E-B63	–	65	100-E26
140MT-D9E-C10	–	65	100-E26
140MT-D9E-C16	–	65	100-E26
140MT-D9E-C20	–	65	100-E26
140MT-D9E-C25	–	65	100-E26
140MT-D9E-C29	–	65	100-E26
140MT-D9E-C32	–	65	100-E30
140MT-D9E-C36	–	65	100-E30
140MT-D9E-C40	–	66	100-E30
140MT-D9E-C40	–	65	100-E40
–	140MT-D9T-A63	100	100-E09
–	140MT-D9T-B10	100	100-E09
–	140MT-D9T-B16	100	100-E09
–	140MT-D9T-B25	65	100-E26
–	140MT-D9T-B40	65	100-E26
–	140MT-D9T-B63	65	100-E26
–	140MT-D9T-C10	65	100-E26
–	140MT-D9T-C16	65	100-E26
–	140MT-D9T-C20	65	100-E26
–	140MT-D9T-C25	65	100-E26

(1) Similar for other contactor configurations (100-E, 104-E, 100S-E, 104S-E)

DRAFT

Accessory Specifications

Table 51 - Auxiliary Contact Specifications—For 140MT-C... and 140MT-D... Devices

Attribute				Front-mounted Auxiliary Contacts Cat. Nos. 140MT-C-AFA, -AFAR/ -AFAR10M10	Right Side-mounted Auxiliary Contacts Cat. No. 140MT-C-ASA
Rated Thermal Current I_{th}	at 40 °C (104 °F) ambient temperature		[A]	5	10
	at 60 °C (140 °F) ambient temperature		[A]	4	6
Back-up Fuses gG, gL			[A]	10	10
General Use current			[A]	5	10
Rated insulation voltage U_i	IEC		[V]	250	690
	UL/CSA		[V]	240	600
Contact rating code designation (UL/CSA)			AC	B300	A600
			DC	R300	Q600
Rated Supply Current I_e	AC-15	24V	[A]	4	6
		120V	[A]	3	5
		240V	[A]	1.5	3
		415V	[A]	–	2
		690V	[A]	–	1
	DC-13	24V	[A]	1.2	2
		125V	[A]	0.22	0.55
		250V	[A]	0.11	0.27
		400V	[A]	–	0.15
		500V	[A]	–	0.13
Type of Terminals					
Recommended screwdriver				Pozidriv No. 2/Blade No.3	Pozidriv No. 2/Blade No.3
Flexible with insulated ferrule 		1 or 2 conductors		0.5...1.5 mm^2/No. 18...14 AWG	0.5...2.5 mm^2/No. 18...14 AWG
Flexible 		1 or 2 conductors		0.5...1.5 mm^2/No. 18...14 AWG	0.75...2.5 mm^2/No. 18...14 AWG
Stranded per UL/CSA 		1 or 2 conductors		0.5...1.5 mm^2/No. 18...14 AWG	0.75...2.5 mm^2/No. 18...14 AWG
Solid 		1 or 2 conductors		0.5...1.5 mm^2/No. 18...14 AWG	0.5...2.5 mm^2/No. 18...14 AWG
Conductor steps				Max 2 conductor steps allowed	Max 2 conductor steps allowed
Tightening torque				1...1.2 N•m/8.9...10.6 lb•in	1...1.2 N•m/8.9...10.6 lb•in1...1.2

DRAFT

Table 52 - Auxiliary Contact Specifications—For 140M-F... Devices

Attribute				Front-mounted Auxiliary Contacts Cat. Nos. 140M-C-AFA..., 140M-C-AFAR...	Right Side-mounted Auxiliary Contacts Cat. Nos. 140M-C-ASA..., 140M-C-ASAR...
Rated Thermal Current I_{th}	at 40 °C (104 °F) ambient temperature		[A]	5	10
	at 60 °C (140 °F) ambient temperature		[A]	4	6
Back-up Fuses gG, gL			[A]	10	10
Contact rating code designation (UL/CSA)			AC	B300	B600
			DC	Q300	Q600
Rated Supply Current I_e	AC-15	24V	[A]	4	6
		120V	[A]	3	5
		240V	[A]	1.5	3
		415V	[A]	–	2
		690V	[A]	–	0.7
	DC-13	24V	[A]	2	2
		120V	[A]	0.5	0.5
		240V	[A]	0.25	0.25
		415V	[A]	–	0.15
Type of Terminals					
Recommended screwdriver				Pozidriv No. 2/Blade No.3	Pozidriv No. 2/Blade No.3
Flexible with insulated ferrule 		1 conductor		0.5...1.5 mm^2	0.5...2.5 mm^2
		2 conductors		0.75...1.5 mm^2	0.75...2.5 mm^2
Stranded per UL/CSA 		1 or 2 conductors		0.75...1.5 mm^2/No. 18...14 AWG	0.75...2.5 mm^2/No. 18...14 AWG
Solid 		1 or 2 conductors		0.75...1.5 mm^2/No. 18...14 AWG	0.75...2.5 mm^2/No. 18...14 AWG
Tightening torque				1.2...1.5 N•m/10.6...13 lb•in	1.2...1.5 N•m/10.6...13 lb•in

DRAFT

Table 53 - Undervoltage and Shunt Trip Specifications—For 140MT-C... and 140MT-D... Devices

Attribute				Undervoltage Trip for Left-side Mounting Cat. No. 140MT-C-UX	Shunt Trip for Left-side Mounting Cat. No. 140MT-C-SN
Actuating Voltage	Pick-up		[V]	0.85...1.1 x U_s	0.7...1.1 x U_s
	Drop-out		[V]	0.7...0.35 x U_s	0.7...1.1 x U_s
Rated AC Control Voltage	140MT-C-UXK	50 Hz	[V AC]	24	–
		60 Hz	[V AC]	28	–
	140MT-C-UXD	50 Hz	[V AC]	110	–
		60 Hz	[V AC]	120	–
	140MT-C-UXF	50 Hz	[V AC]	220...230	–
		60 Hz	[V AC]	–	–
	140MT-C-UXA	50 Hz	[V AC]	–	–
		60 Hz	[V AC]	240...260	–
	140MT-C-UXN	50 Hz	[V AC]	380...400	–
		60 Hz	[V AC]	440...460	–
	140MT-C-UXB	50 Hz	[V AC]	415	–
		60 Hz	[V AC]	480	–
	140MT-C-SNK	50 Hz	[V AC]	–	24
		60 Hz	[V AC]	–	24...28
	140MT-C-SND	50 Hz	[V AC]	–	110
		60 Hz	[V AC]	–	120
	140MT-C-SNF	50 Hz	[V AC]	–	220...230
		60 Hz	[V AC]	–	–
	140MT-C-SNA	50 Hz	[V AC]	–	–
		60 Hz	[V AC]	–	240...260
	140MT-C-SNT	50 Hz	[V AC]	–	240
		60 Hz	[V AC]	–	277
	140MT-C-SNN	50 Hz	[V AC]	–	380...400
		60 Hz	[V AC]	–	440...460
	140MT-C-SNB	50 Hz	[V AC]	–	415
		60 Hz	[V AC]	–	480
	On-time			Continuous duty	Continuous duty
	Coil consumption	Pick-up	[VA/W]	8.5/8	8.5/8
		Hold-in	[VA/W]	4/2	4/2
Rated DC Control Voltage	140MT-C-SNZJ		[V DC]	–	24
	On-time				Max 5 s
	Coil consumption	Pick-up	[W]		50
Type of Terminals					
Recommended screwdriver				Pozidriv No. 2/Blade No.3	Pozidriv No. 2/Blade No.3
Flexible with insulated ferrule		1 or 2 conductors		0.5...2.5 mm^2/ No. 18...14 AWG	0.5...2.5 mm^2/ No. 18...14 AWG
Flexible		1 or 2 conductors		0.75...2.5 mm^2/ No. 18...14 AWG	0.75...2.5 mm^2/ No. 18...14 AWG
Stranded per UL/CSA		1 or 2 conductors		0.75...2.5 mm^2/ No. 18...14 AWG	0.75...2.5 mm^2/ No. 18...14 AWG
Solid		1 or 2 conductors		0.5...2.5 mm^2/ No. 18...14 AWG	0.5...2.5 mm^2/ No. 18...14 AWG
Conductor steps				Max 2 conductor steps allowed	Max 2 conductor steps allowed
Tightening torque				1...1.2 N•m/8.9...10.6 lb•in	1...1.2 N•m/8.9...10.6 lb•in1...1.2

DRAFT

Table 54 - Undervoltage and Shunt Trip Specifications—For 140M-F... Devices

Attribute				Undervoltage Trip for Left-side Mounting Cat. No. 140M-C-UX..., -UC...	Shunt Trip for Left-side Mounting Cat. No. 140M-C-SN...
Actuating Voltage	Pick-up		[V]	0.85...1.1 x U_s	0.7...1.1 x U_s
	Drop-out		[V]	0.7...0.35 x U_s	0.7...1.1 x U_s
Rated AC Control Voltage	Min	50 Hz	[V AC]	21	21
		60 Hz	[V AC]	24	24
	Max	60 Hz	[V AC]	600	600
	On-time			Continuous duty	Continuous duty
	Coil consumption	Pick-up	[VA/W]	8.5/8	8.5/8
		Hold-in	[VA/W]	4/2	4/2
Type of Terminals					
Recommended screwdriver				Pozidriv No. 2/Blade No.3	Pozidriv No. 2/Blade No.3
Flexible with insulated ferrule 		1 conductor		0.5...2.5 mm^2	0.5...2.5 mm^2
		2 conductors		0.75...2.5 mm^2	0.75...2.5 mm^2
Stranded per UL/CSA 		1 or 2 conductors		0.75...2.5 mm^2/No. 18...14 AWG	0.75...2.5 mm^2/No. 18...14 AWG
Solid 		1 or 2 conductors		0.75...2.5 mm^2/No. 18...14 AWG	0.75...2.5 mm^2/No. 18...14 AWG
Tightening torque				1.2...1.5 N•m/10.6...13.3 lb•in	1.2...1.5 N•m/10.6...13.3 lb•in

Table 55 - Feeder Terminals

		Compact Busbar Feeder Terminal		Compact Busbar	
		140MT-C-WTEN	140M-F-WTE	140MT-C-W...(1)	140M-F-W...
Rated Thermal Current I_{th} at 60 °C (140 °F) ambient temperature	[A]	64	120	64	120
Flexible with insulated ferrule 	1 conductor	2.5...25 mm^2/No. 14...4 AWG	–	–	–
Stranded per UL/CSA 	1 conductor	2.5...25 mm^2/No. 14...4 AWG	4...50 mm^2/No. 12...1/0 MCM	–	–
Solid 	1 conductor	2.5...25 mm^2/No. 14...4 AWG	2.5...50 mm^2/No. 12...1/0 MCM	–	–
De-isolation (stripping) length	[mm (in)]	14 (0.55)		–	–
Tightening torque		3...3.5 N•m/27...31 lb•in	5...6 N•m/45...54 lb•in	–	–

(1) Rated thermal current is 57 A at 70 °C (158 °F) ambient temperature.

Table 56 - Feeder Blocks for Compact Busbars

		IEC 60947		UL 60947/CAN/CSA-C22.2 No. 60947			
		140MT-C-WBE 1, 3, 5	140MT-C-WBE 2, 4, 6	140MT-C-WBE L1, L2, L3	140MT-C-WBE T1, T2, T3	140M-F-WBE L1, L2, L3	140M-F-WBE T1, T2, T3
Rated Thermal Current I_{th} at 60 °C (140 °F) ambient temperature	[A]	64		64		IEC120/UL115	
Flexible with insulated ferrule 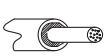	1 conductor	4...25 mm^2	for use with 140MT-C-W	No. 10...4 AWG	for use with 140MT-C-W	4...50 mm^2/ No. 10...4 AWG	for use with 140M-F-W
Flexible 	1 conductor	4...25 mm^2	for use with 140MT-C-W	No. 10...4 AWG	for use with 140MT-C-W	–	–
Stranded per UL/CSA 	1 conductor	4...25 mm^2	for use with 140MT-C-W	No. 10...4 AWG	for use with 140MT-C-W	4...25 mm^2/ No. 10...4 AWG	for use with 140M-F-W
Solid 	1 conductor	2.5...25 mm^2	for use with 140MT-C-W	No. 14...4 AWG	for use with 140MT-C-W	2.5...25 mm^2/ No. 14...4 AWG	for use with 140M-F-W
Tightening torque		3...3.5 N•m	2...2.5 N•m	27...31 lb•in	18...22 lb•in	5...6 N•m/45...54 lb•in	

DRAFT

Time-Current Characteristic

Figure 10 - Motor Protection Circuit Breakers Time-Current Characteristic

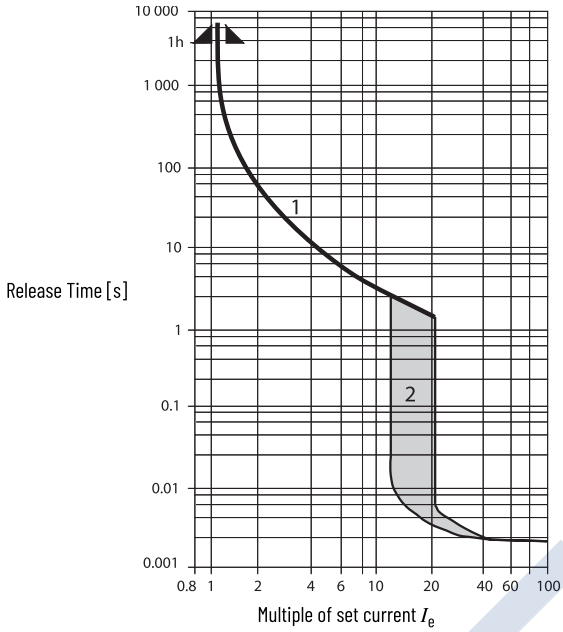

140MT-C, -D, 140M-F Motor Protection Circuit Breakers (for 140MT-D9V, see ratings)

Thermal Release Trip Current

The adjustable current-dependent delayed bimetal release protects motors against overload. The curve shows the mean operating current at an ambient temperature of 20 °C (68 °F) starting from the cold state. Careful testing and setting ensures effective motor protection even in the case of single phasing. The overload characteristic is also valid for transformer protection.

Magnetic Release Trip Current

The instantaneous magnetic trip has a fixed operating current setting. This corresponds to 13...14 times the maximum value of the setting range. (Transformer protection up to 20 x I_e max.) At a lower setting, it is correspondingly higher.

Current Setting I_eF

The overload trip corresponds to a thermal overload relay in a motor starter conforming to IEC 60947-4-1. If a different value is prescribed (for example, reduced I_e for cooling medium having a temperature higher than 40 °C (104 °F) or a place of installation higher than 2000 m (6561 ft) above sea level), the setting current is equal to the reduced rated current I_e of the motor.

DRAFT

Approximate Dimensions

Dimensions are in millimeters (inches) and are not intended for manufacturing purposes.

140MT-C, 140MT-D Devices and Accessories

Figure 11 - Mounting Position

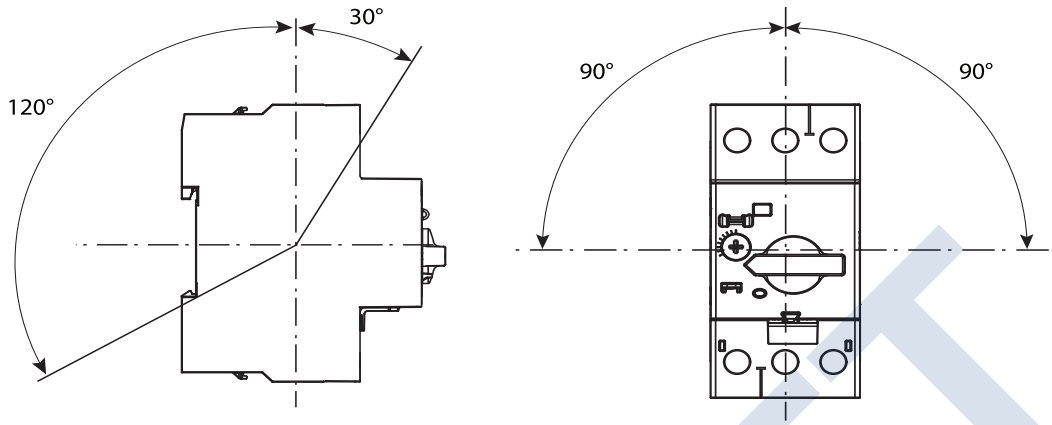

Figure 12 - Spacing Requirements

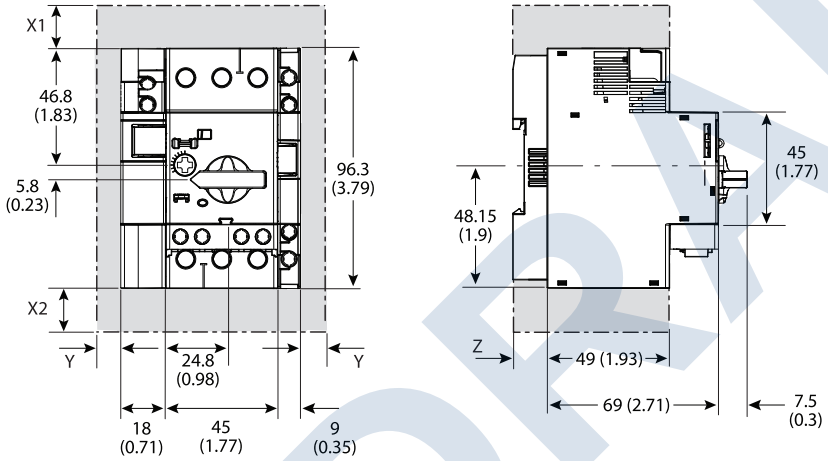

Frame Size	Voltage [V AC]	Minimum Distance to Grounded Parts or Walls [mm (in)]			Z
		X1	X2	Y	
C-Frame	400	30 (1-3/16)	30 (1-3/16)	9 (23/64)	7.5 (19/64)
	500	30 (1-3/16)	30 (1-3/16)	9 (23/64)	
	690	50 (1-31/32)	50 (1-31/32)	30 (1-3/16)	
D-Frame	400	30 (1-3/16)	30 (1-3/16)	9 (23/64)	13.5 (17/32)
	500	30 (1-3/16)	30 (1-3/16)	9 (23/64)	
	690	50 (1-31/32)	50 (1-31/32)	30 (1-3/16)	

DRAFT

Figure 13 - Motor Protection Circuit Breaker (C-Frame), Cat. No. 140MT-C3...

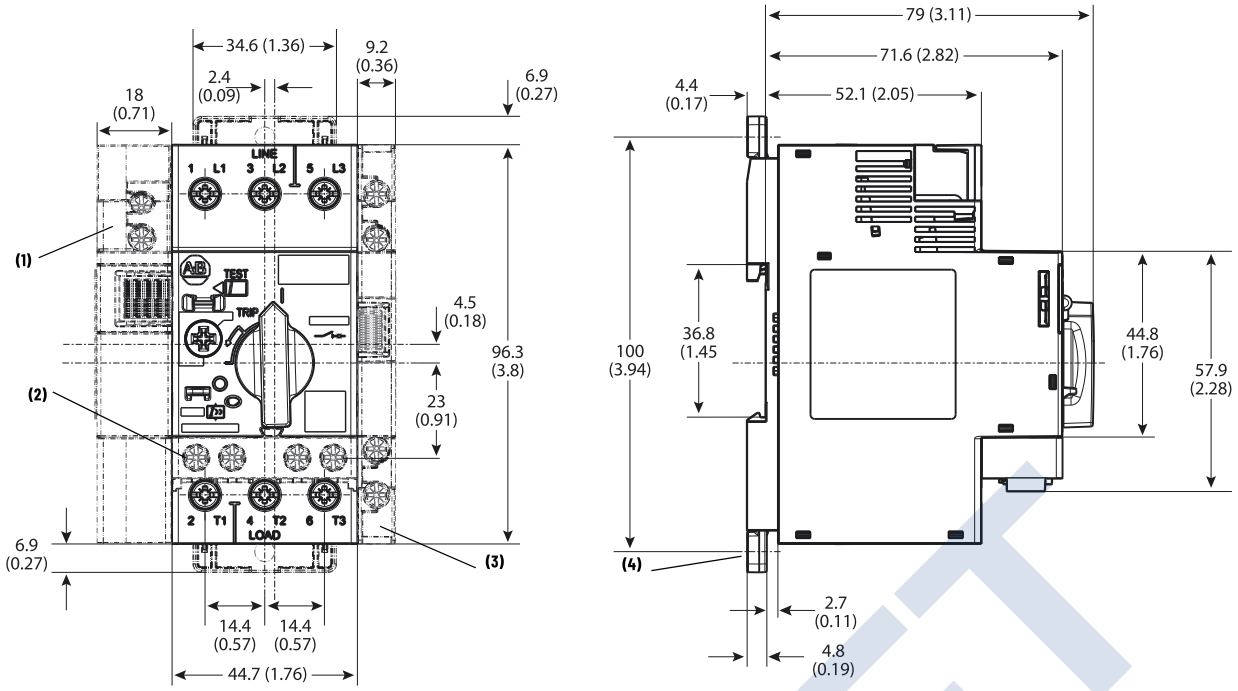

Note	Information
1	Undervoltage/shunt trip
2	Auxiliary contact (front mounted)

Note	Information
3	Auxiliary contact (side mounted)
4	Screw mounting adapter

Figure 14 - Motor Protection Circuit Breaker (D-Frame), Cat. No. 140MT-D9...

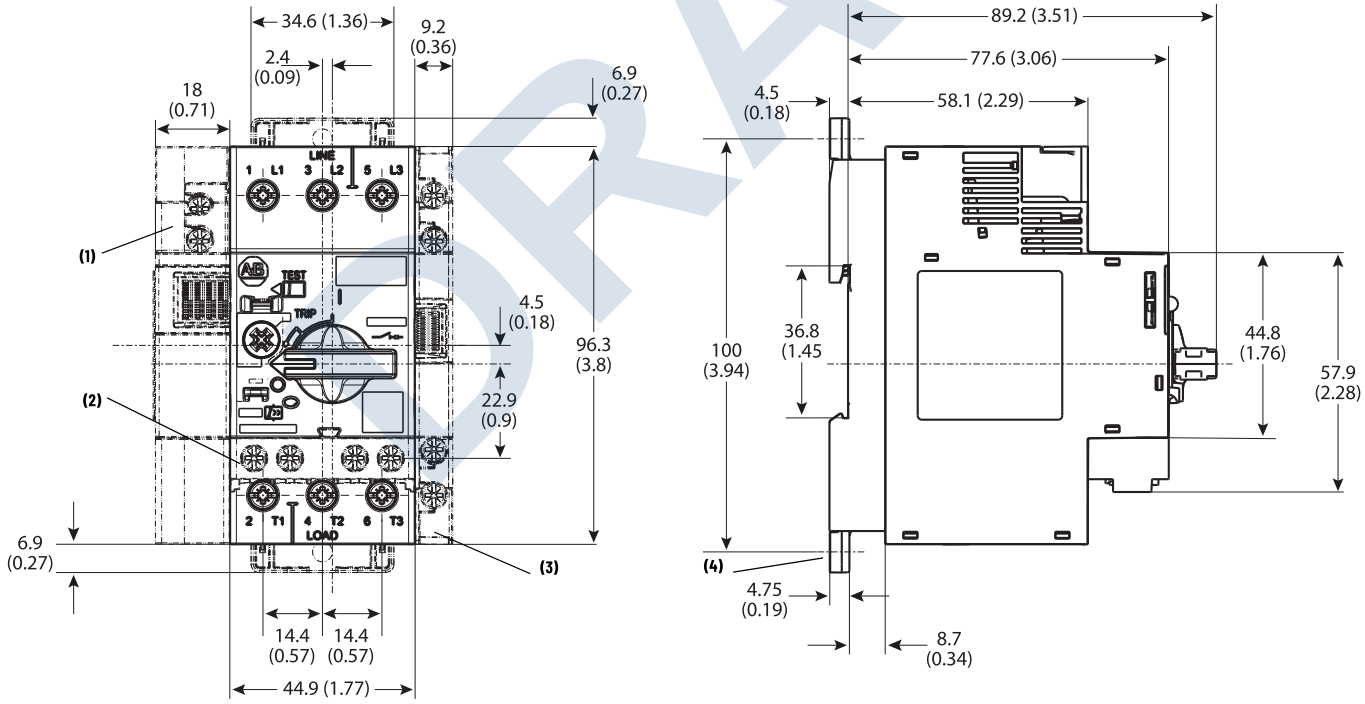

Note	Information
1	Undervoltage/shunt trip
2	Auxiliary contact (front mounted)

Note	Information
3	Auxiliary contact (side mounted)
4	Screw mounting adapter

DRAFT

Figure 15 - Feeder Terminal for Compact Busbar, Cat. No. 140MT-C-WTEN

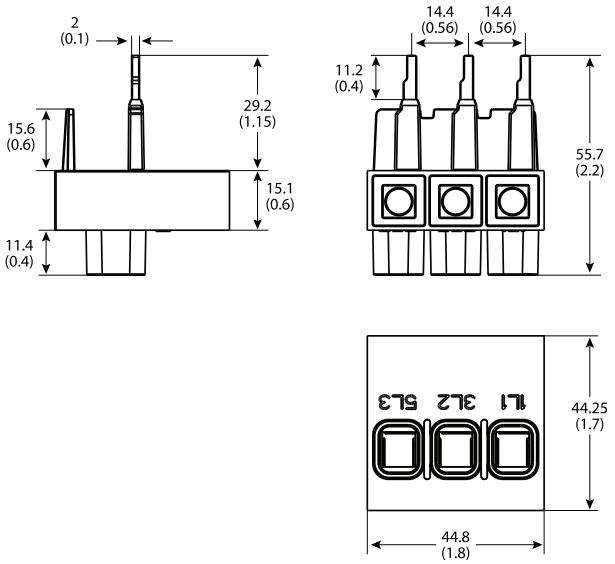

Figure 16 - Terminal Cover, Cat. No. 140MT-C-WSN

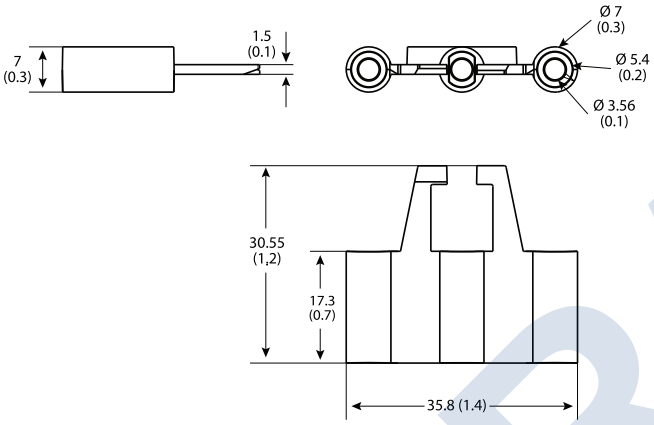

Figure 17 - 140MT-C and 140MT-D with Cat. No. 140MT-C-TE Type E Adapter

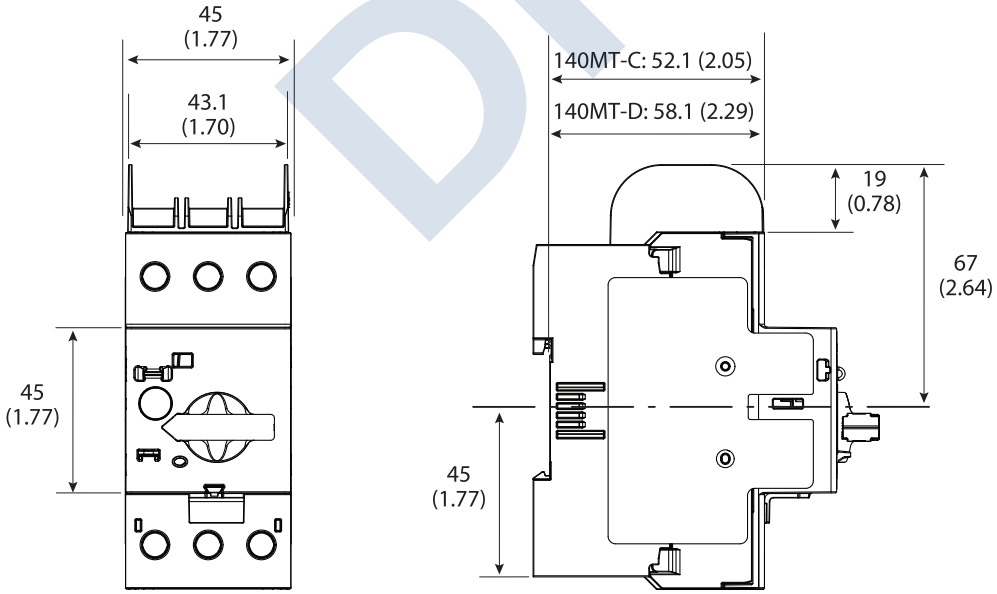

DRAFT

Allen-Bradley® PowerFlex® 525 AC Drive

The Next Generation of Powerful Performance. Flexible Control.

Allen-Bradley PowerFlex 525 AC drives are ideal for networked applications that require a range of motor control options, embedded EtherNet/IP™, energy savings and standard safety features.

- Power ratings of 0.4...22 kW / 0.5...30 Hp in global voltage classes from 100-600V to meet a wide range of applications
- The modular design eases installation and configuration
- A standard USB connection helps you upload and download configuration files quickly
- An embedded port for EtherNet/IP supports seamless integration into the Logix environment and EtherNet/IP networks
- An optional dual port EtherNet/IP card supports ring topologies and device level ring (DLR) functionality
- Help protect personnel with standard embedded Safe Torque-Off
- An integral LCD human interface module (HIM) supports multiple languages and features scrolling text to explain parameters and codes, easing configuration
- AppView™ parameter groups help speed configuration for applications like conveyors, mixers, pumps and fans
- CustomView™ configuration helps speed machine commissioning with user-defined groups of parameters
- Economizer control mode and permanent magnet motor control* can help reduce energy costs
- Drives operate in low and high ambient temperatures from -20°C (-4°F) up to 70°C (158°F) with current derating and a control module fan kit
- A compact footprint helps save space inside a panel
- A wide range of motor control options, including volts per hertz, sensorless vector control, closed loop velocity vector control and control for permanent magnet motors support many applications

* Permanent magnet motor control is scheduled for a future firmware release



Innovative Modular Design

PowerFlex 525 AC drives are made up of two modules that can be detached for simultaneous and independent wiring installation and software configuration. This innovative design allows you to begin mounting the power modules while configuration of the control modules is performed elsewhere, helping speed up installation. The same control module accommodates the entire power range of PowerFlex 525 AC drives, offering installation flexibility and helping reduce spare part inventory.

Ease of Configuration

There are several ways to quickly and easily configure PowerFlex 525 AC drives. From the integral HIM that features QuickView™ scrolling text, to Connected Components Workbench™ software or the Studio 5000 Logix Designer™ application, these tools are designed to help you reduce development time so you can deliver machines faster and more efficiently.

The Studio 5000 Logix Designer application provides complete support for PowerFlex 525 AC drives. One software tool to configure your Logix system can help reduce programming time and allow you to configure, control and monitor your system from one platform.

Automatic Device Configuration (ADC) is another productivity enhancing feature available with the Studio 5000 Logix Designer application and PowerFlex 525 AC drives. This feature allows a Logix controller to automatically detect a replaced PowerFlex 525 drive and download firmware and all configuration parameters, minimizing the need for manual reconfiguration.

DRAFT

Specifications

Power Ratings	100 - 120V: 0.4...1.1 kW / 0.5...1.5 Hp 200 - 240V: 0.4...15 kW / 0.5...20 Hp	380 - 480V: 0.4...22 kW / 0.5...30 Hp 525 - 600V: 0.4...22 kW / 0.5...30 Hp	
Motor Control	Volts per hertz Sensorless vector control	Closed loop velocity vector control Permanent magnet motor control*	Sensorless vector control with Economizer
Application	Open loop speed regulation	Closed loop speed regulation	
Overload Capability	Normal duty application: 110% for 60 seconds, 150% for 3 sec	Heavy duty application: 150% for 60 seconds, 180% for 3 sec (200% programmable)	
Input Specification	1 phase Voltage: 100 … 120V/200 … 240V 3 phase Voltage: 200 … 240V/380 ... 480V/525 … 600V Frequency: 50 to 60 Hz 1/2 DC bus operation (selectable)	Voltage: Adjustable 0V to rated motor voltage; -15% / +10% voltage tolerance Logic control ride through: >0.5 seconds, 2 seconds typical Maximum short circuit rating: 100,000 amps symmetrical	
Output Voltage Range	Adjustable 0V to rated motor voltage	Intermittent current: 150% for 60 seconds	
Frequency Range	Max output frequency 500 Hz	Input frequency variation 47 to 63 Hz	
Ambient Operating Temperatures* *	-20°C to 50°C (-4°F to 122°F) -20°C to 60°C (-4°F to 140°F) with current derating -20°C to 70°C (-4°F to 158°F) with current derating (with optional control module fan kit)		
Altitude	1000 m (3280 ft) with derating guideline for up to max 4000 m (13,123 ft), with the exception of 600V at max 2000 m (6,561ft)		
Enclosures	IP20 NEMA/Open	IP30 NEMA/UL Type 1 (with conduit kit)	
Mounting	50mm (1.96 in) air-flow gap at the top and bottom*** DIN rail (frames A,B and C)	Zero Stacking (side-by-side mounting) Horizontal Mounting (with control module fan kit)	
Configuration	Integral HIM, LCD, 5 digits, 16 segments, multi-language	Connected Components Workbench software	Studio 5000 Logix Designer™ application
Integral Human Interface Module (HIM) Languages	English, French, Spanish, Italian, German, Portuguese, Polish, Turkish, Czech		
Control I/O	7 digital inputs (24V DC, 6 programmable) 2 analog inputs (1 bipolar voltage, 1 current)	2 digital outputs 2 relays (1 form A relay & 1 form B relay; 24V DC, 120V AC, 240V AC)	1 analog output (1 unipolar voltage or current)
Dynamic Braking	7th IGBT braking, DC braking		
Carrier Frequency	2 to 16 kHz. 4 kHz default		
EMC Filtering	Embedded 1 ph 240V and 3 ph 480V. Available as an external option for all voltages		
Safety	Embedded ISO 13849-1 SIL2/PLd Cat 3 Safe Torque-Off		
Communications	Embedded EtherNet/IP port Integral RS485 with Modbus RTU/DSI	Dual port EtherNet/IP option card PROFIBUS® DP option card	DeviceNet option card
Feedback Types	Line driver type encoder quadrature (dual channel) or single channel - single ended or differential (A, B channel); Duty cycle of 50%, +10% Pulse-train input (1 to 100kHz) - configurable input voltage: 5VDC (±10%); 10-12VDC (±10%), or 24V DC (±15%) Allowance pulse frequency - DC to 250 kHz Frequency controlled PWM allowable pulse frequency		
Protection	Fault history log, password-lock security		
Standards	UL TUV C-Tick Semi F47 ATEX CE Marine (Lloyds) RoHS ACS 156 CE cUL GOST-R KCC		
Control Features	Flying start V/F ratio Bus regulator Process PID PTC input compatible	Fiber application specific features Common DC bus 1/2 DC bus operation Regulation with encoder feedback or analog input Mutli-drive connectivity (requires communication option card)	8 datalinks (4 in and 4 out, requires communication option card) Position control StepLogic Function (Relay & Timers) 16 preset speeds
Accessories	NEMA/UL Type 1 kits Line reactors 70°C (158°F) control module fan kit (may require external power)	EMC line filters EMC plates	Incremental encoder Dynamic brake resistors
Dimensions mm (in)	Frame A: 152 (5.98) H x 72 (2.83) W x 172 (6.77) D Frame D: 260 (10.23) H x 130 (5.11) W x 212 (8.34) D	Frame B: 180 (7.08) H x 87 (3.42) W x 172 (6.77) D Frame E: 300 (11.81) H 185 (7.28) W x 279 (10.98) D	Frame C: 220 (8.66) H x 109 (4.29) W x 184 (7.24) D

* Permanent magnet motor control is scheduled for a future firmware release
** These temperatures are for typical vertical drive mounting. For other mounting options and temperatures, please refer to the user manual (520-UM001). Environmental considerations may apply.
*** Frame E at 60°C to 70°C requires 95mm (3.74 in) airflow gap at the top of the drive and a control module fan kit

Follow ROKAutomation on Facebook & Twitter. Connect with us on Linkedin.

Allen-Bradley, AppView, Connected Components Workbench, CustomView, LISTEN. THINK. SOLVE., PowerFlex, QuickView, Rockwell Software and Studio 5000 are trademarks of Rockwell Automation, Inc. Trademarks not belonging to Rockwell Automation are property of their respective companies.

www.rockwellautomation.com www.ab.com/powerflex525

Power, Control and Information Solutions Headquarters

Americas: Rockwell Automation, 1201 South Second Street, Milwaukee, WI 53204-2496 USA, Tel: (1) 414.382.2000, Fax: (1) 414.382.4444
Europe/Middle East/Africa: Rockwell Automation NV, Pegasus Park, De Kleetlaan 12a, 1831 Diegem, Belgium, Tel: (32) 2 663 0600, Fax: (32) 2 663 0640
Asia Pacific: Rockwell Automation, Level 14, Core F, Cyberport 3, 100 Cyberport Road, Hong Kong, Tel: (852) 2887 4788, Fax: (852) 2508 1846

Publication 525-PP001A-EN-P - August 2013

Copyright © 2013 Rockwell Automation, Inc. All Rights Reserved. Printed in USA.

DRAFT

PowerFlex 525 AC Drive

PowerFlex 525 AC drives feature an innovative, modular design offering fast and easy installation and configuration. These cost-effective compact drives come with embedded EtherNet/IP™ communications, safety, USB configuration and a high ambient operating temperature. PowerFlex 525 AC drives also provide a variety of motor control including volts per hertz, sensorless vector control and closed loop velocity vector control, making these drives ideal for a vast array of applications.

PowerFlex 525 at a glance

Ratings	
100…120V:	0.4…1.1 kW / 0.5…1.5 Hp / 2.5…6 A
200…240V:	0.4…15 kW / 0.5…20 Hp / 2.5…62.1 A
380…480V:	0.4…22 kW / 0.5…30 Hp / 2.5…62.1 A
525…600V:	0.4…22 kW / 0.5…30 Hp / 0.9…32 A
Motor Control	• V/Hz Control • Sensorless Vector Control • Closed Loop Velocity Vector Control • Permanent Magnet Motor Control ♣
Enclosures	• IP20, NEMA/UL Type Open • IP30, NEMA/UL Type 1 (with optional kit)
Safety	Safe Torque-Off PLd/SIL2 Cat 3 (meets ISO 13849-1)
Additional Features	• Modular design eases installation • Operating temperatures up to 50 °C. Up to 70 °C with current derating and optional control module fan kit. • Embedded EtherNet/IP port with option for dual port EtherNet/IP card which supports DLR functionality • LCD HIM with multi-language support • MainsFree™ Programming via USB • Configure using Connected Components Workbench Software • Add-on Profiles for Studio 5000™ Logix Designer Software • Automatic Device Configuration • Economizer motor control for energy savings • Application specific parameter groups • Simple positioning control with optional encoder card • Conformal coating to IEC 60721 3C2 standards
Certifications	• ACS 156 • ATEX • C-Tick • c-UL, UL • CE • EPRI/SEMI F47 • GOST-R • KCC • RINA • RoHS • TÜV FS ISO/EN13849-1 (EN954-1) with Safe Torque-Off option
Options	See pages 52…56

♣ Permanent magnet motor control is scheduled for a future firmware release.

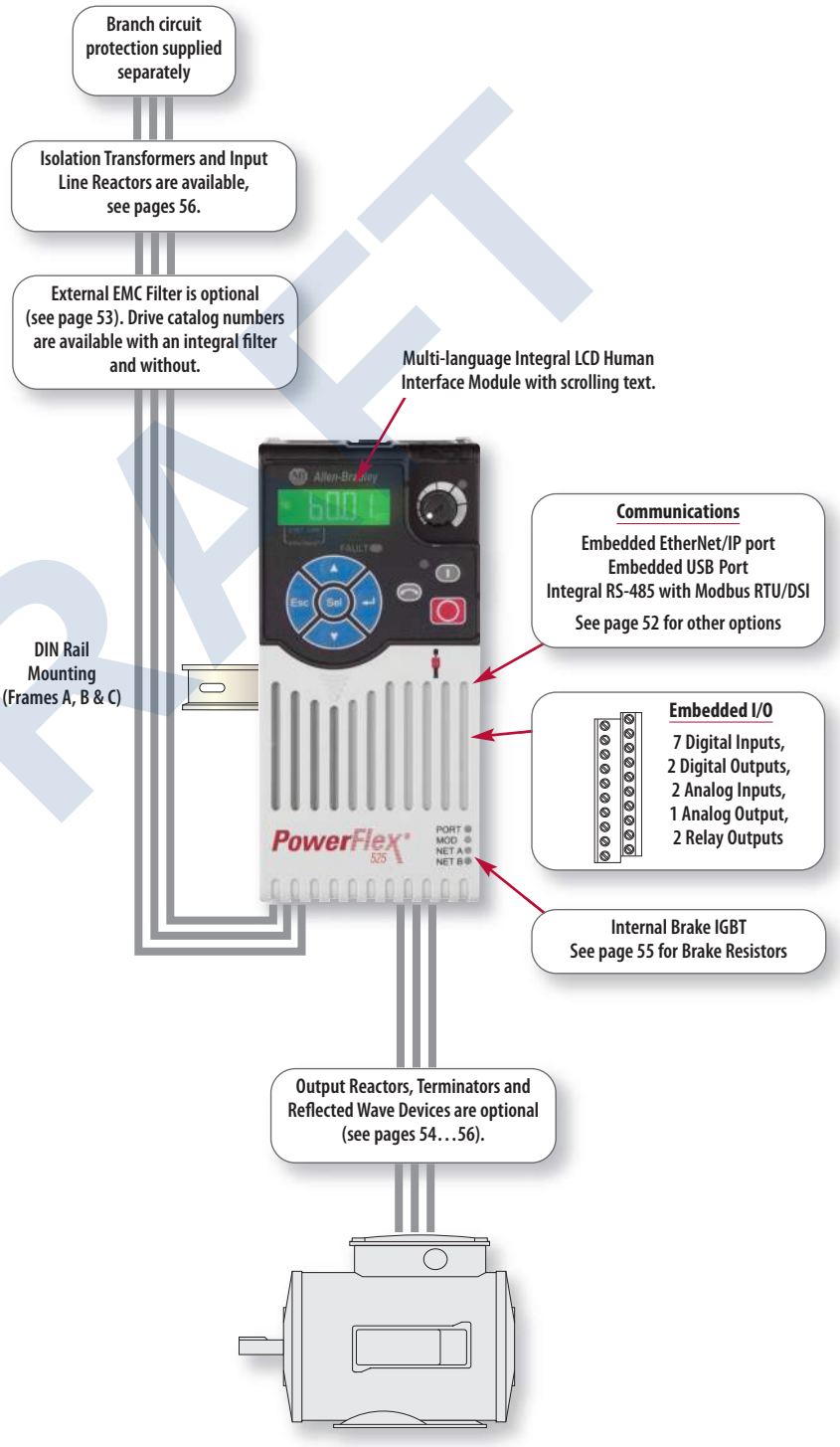

DRAFT



Additional Information

PowerFlex 525 Technical Data, publication 520-TD001
PowerFlex 525 User Manual, publication 520-UM001

Catalog Number Explanation

25B –	D	6P0	N	1	1	4
	Voltage Rating	Rating	Enclosure		Internal EMC Filter 0 = No 1 = Yes	

Product Selection

100…120V AC, Single-Phase, 50/60 Hz

Drive Ratings						No Filter	with Integral EMC Filter
Normal Duty		Heavy Duty		Output Current			
kW	Hp	kW	Hp	A	Frame Size	Cat. No.	Cat. No.
0.4	0.5	0.4	0.5	2.5	A	**25B-V2P5N104**	—
0.75	1	0.75	1	4.8	B	**25B-V4P8N104**	—
1.1	1.5	1.1	1.5	6	B	**25B-V6P0N104**	—

200…240V AC, Single-Phase, 50/60 Hz

Drive Ratings						No Filter	with Integral EMC Filter ‡
Normal Duty		Heavy Duty		Output Current			
kW	Hp	kW	Hp	A	Frame Size	Cat. No.	Cat. No.
0.4	0.5	0.4	0.5	2.5	A	**25B-A2P5N104**	**25B-A2P5N114**
0.75	1	0.75	1	4.8	A	**25B-A4P8N104**	**25B-A4P8N114**
1.5	2	1.5	2	8	B	**25B-A8P0N104**	**25B-A8P0N114**
2.2	3	2.2	3	11	B	**25B-A011N104**	**25B-A011N114**

‡ This filter is suitable for use with a cable length of up to 10 meters for C2 spec.

DRAFT

200…240V AC, Three-Phase, 50/60 Hz

Drive Ratings						No Filter	with Integral EMC Filter
Normal Duty		Heavy Duty		Output Current			
kW	Hp	kW	Hp	A	Frame Size	Cat. No.	Cat. No.
0.4	0.5	0.4	0.5	2.5	A	**25B-B2P5N104**	—
0.75	1	0.75	1	5	A	**25B-B5P0N104**	—
1.5	2	1.5	2	8	A	**25B-B8P0N104**	—
2.2	3	2.2	3	11	A	**25B-B011N104**	—
4	5	4	5	17.5	B	**25B-B017N104**	—
5.5	7.5	5.5	7.5	24	C	**25B-B024N104**	—
7.5	10	7.5	10	32.2	D	**25B-B032N104**	—
11	15	11	15	48.3	E	**25B-B048N104**	—
15	20	11	15	62.1	E	**25B-B062N104**	—

380…480V AC, Three-Phase, 50/60 Hz

Drive Ratings						No Filter	with Integral EMC Filter ‡
Normal Duty		Heavy Duty		Output Current			
kW	Hp	kW	Hp	A	Frame Size	Cat. No.	Cat. No.
0.4	0.5	0.4	0.5	1.4	A	**25B-D1P4N104**	**25B-D1P4N114**
0.75	1	0.75	1	2.3	A	**25B-D2P3N104**	**25B-D2P3N114**
1.5	2	1.5	2	4	A	**25B-D4P0N104**	**25B-D4P0N114**
2.2	3	2.2	3	6	A	**25B-D6P0N104**	**25B-D6P0N114**
4	5	4	5	10.5	B	**25B-D010N104**	**25B-D010N114**
5.5	7.5	5.5	7.5	13	C	**25B-D013N104**	**25B-D013N114**
7.5	10	7.5	10	17	C	**25B-D017N104**	**25B-D017N114**
11	15	11	15	24	D	**25B-D024N104**	**25B-D024N114**
15	20	11	15	30	D	**25B-D030N104**	**25B-D030N114**
18.5	25	15	20	37	E	**25B-D037N114** §	**25B-D037N114**
22	30	18.5	25	43	E	**25B-D043N114** §	**25B-D043N114**

‡ This filter is suitable for use with a cable length of up to 10 meters for C2 spec.
§ With EMC filter.

525…600V AC, Three-Phase, 50/60 Hz

Drive Ratings						No Filter	with Integral EMC Filter
Normal Duty		Heavy Duty		Output Current			
kW	Hp	kW	Hp	A	Frame Size	Cat. No.	Cat. No.
0.4	0.5	0.4	0.5	0.9	A	**25B-E0P9N104**	—
0.75	1	0.75	1	1.7	A	**25B-E1P7N104**	—
1.5	2	1.5	2	3	A	**25B-E3P0N104**	—
2.2	3	2.2	3	4.2	A	**25B-E4P2N104**	—
4	5	4	5	6.6	B	**25B-E6P6N104**	—
5.5	7.5	5.5	7.5	9.9	C	**25B-E9P9N104**	—
7.5	10	7.5	10	12	C	**25B-E012N104**	—
11	15	11	15	19	D	**25B-E019N104**	—
15	20	11	15	22	D	**25B-E022N104**	—
18.5	25	15	20	27	E	**25B-E027N104**	—
22	30	18.5	25	32	E	**25B-E032N104**	—

DRAFT

Approximate Dimensions and Weights

Dimensions are in mm (in.) - weights are in kg (lb)

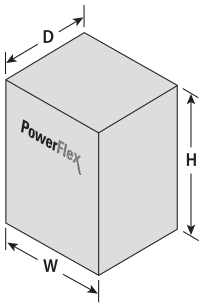

IP20, NEMA/UL Type Open

Frame	H	W	D	Weight
A	152.0 (5.98)	72.0 (2.83)	172.0 (6.77)	1.10 (2.4)
B	180.0 (7.08)	87.0 (3.42)	172.0 (6.77)	1.60 (3.5)
C	220.0 (8.66)	109.0 (4.29)	184.0 (7.24)	2.30 (5.1)
D	260.0 (10.23)	130.0 (5.11)	212.0 (8.34)	3.20 (7.1)
E	300.0 (11.81)	185.0 (7.28)	279.0 (10.98)	12.90 (28.4)

DRAFT

Technical Data

Allen-Bradley

PowerFlex 520-Series AC Drive Specifications

Original Instructions



DRAFT

Topic	Page
Product Overview	2
Catalog Number Explanation	8
Technical Specifications	9
Environmental Specifications	12
Certifications	13
Dimensions and Weights	14
Design Considerations	16
Fuses and Circuit Breaker Ratings	27
Accessories and Dimensions	32
Safe-Torque-Off Function	42
Additional Resources	47

Drive Features: **AppView**™, **CustomView**™, **QuickView**™, and **MainsFree**™ configuration and programming tools.

LISTEN. THINK. SOLVE.®

Product Overview

The PowerFlex® 520-Series AC drive delivers an innovative design that is remarkably versatile and can accommodate systems ranging from standalone machines to simple system integration. The PowerFlex 523 drive provides general purpose control for applications ranging up to 30 HP and 22 kW. The PowerFlex 525 drive provides maximum flexibility and performance ranging up to 30 HP and 22 kW.

By combining a variety of motor control options, communications, energy savings and standard safety features in a cost-effective drive, the PowerFlex 520-Series drive is suitable for a wide array of applications.

Maximize your system performance and productivity by taking advantage of the following key features offered in a PowerFlex 520-Series drive.

PowerFlex 520-Series AC Drives Feature

Modular Design

- Detachable control module and power module allow **simultaneous configuration and installation**.
- Each drive has **a standard control module** used across the entire power range.
- **MainsFree™ configuration** allows you to simply connect your control module to a PC with a standard USB cable and quickly upload, download, and flash the drive with new settings.
- **Support for accessory cards** without affecting footprint.
  (PowerFlex 523 drives support one, PowerFlex 525 drives support two)

Packaging and Mounting

- Installation can be quick and easy using the **DIN rail mounting** feature on A, B, and C frame drives. Panel mounting is also available, providing added flexibility.
- **Zero Stacking™** is allowed for ambient temperatures up to 45 °C, saving valuable panel space.
- **Integral filtering** is available on all 200V and 400V ratings, providing a cost-effective means of meeting EN61800-3 Category C2 and C3 EMC requirements. External filters provide compliance to EN61800-3 Category C1, C2, and C3 EMC requirements for all PowerFlex 520-Series ratings.
- An optional **IP 30, NEMA/UL Type 1 conduit box** is easily adapted to the standard IP 20 (NEMA Type Open) product, providing increased environmental ratings.

Optimized Performance

- **Removable MOV** to ground provides trouble-free operation when used on ungrounded distribution systems.
- A **relay pre-charge** limits inrush current.
- **Integral brake transistor**, available on all ratings, provides dynamic braking capability with simple low cost brake resistors.
- A jumper to switch between **24V DC sink or source control** for control wiring flexibility.
- **Dual Overload Rating** available for drives above 15 HP/11 kW. Normal duty: 110% overload for 60 seconds or 150% for 3 seconds. Heavy duty: 150% overload for 60 seconds or 180% overload (200% programmable) for 3 seconds provides robust overload protection.
- **Adjustable PWM frequency up to 16 kHz** ensures quiet operation.

DRAFT

PowerFlex 520-Series AC Drive Advanced Features

Control Performance

- **Variety of motor control options, including:**
  - Volts per hertz (V/Hz)
  - Sensorless Vector Control (SVC)
  - Closed loop velocity vector control (PowerFlex 525 drives only)
  - Permanent Magnet motor control (PowerFlex 525 drives only)
- **Variety of Positioning Control, including:**
  - PointStop™ stops motor load in a consistent position without encoder feedback
  - Closed loop feedback with an optional encoder card (PowerFlex 525 drives only)
  - Point-to-point positioning mode (PowerFlex 525 drives only)
- **Integral PID** functionality enhances application flexibility (PowerFlex 523 drives have one PID loop, PowerFlex 525 drives have two PID loops)

I/O Wiring

PowerFlex 523

- **One (1) Analog Input** (unipolar voltage or current) independently isolated from the rest of the drive I/O.
- **Five (5) Digital Inputs** (four programmable) provide application versatility.
- **One (1) Analog Output**(1) which is jumper selectable between either 0-10V or 0-20 mA. This scalable, 10-bit output is suitable for metering or as a speed reference to another device.
- **One (1) Relay Output** (form C) can be used to indicate various drive, motor or logic conditions.

(1) Analog output (terminal 15) is only available on PowerFlex 523 series B drive and requires firmware 3.001 and later to configure the analog output parameters.

PowerFlex 523 Series B Control I/O Wiring Block Diagram

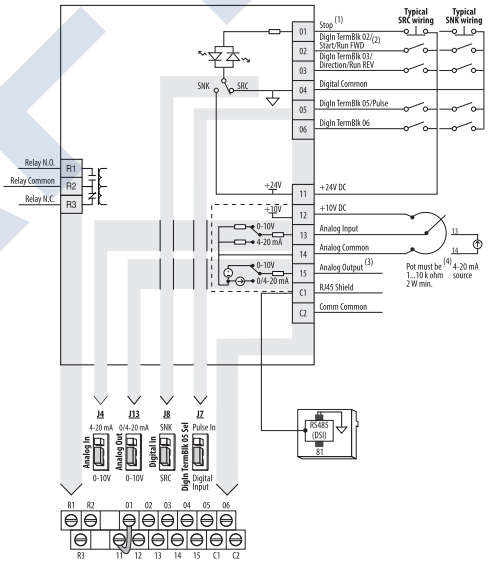

PowerFlex 525

- **Two (2) Analog Inputs** (one unipolar and one bipolar) are independently isolated from the rest of the drive I/O. These inputs can be toggled via a digital input.
- **Seven (7) Digital Inputs** (six programmable) provide application versatility.
- **One (1) Analog Output** which is jumper selectable between either 0-10V or 0-20 mA. This scalable, 10-bit output is suitable for metering or as a speed reference to another drive.
- **Two (2) Opto Outputs and two (2) Relay Outputs** (one form A and one form B) can be used to indicate various drive, motor or logic conditions.

PowerFlex 525 Control I/O Wiring Block Diagram

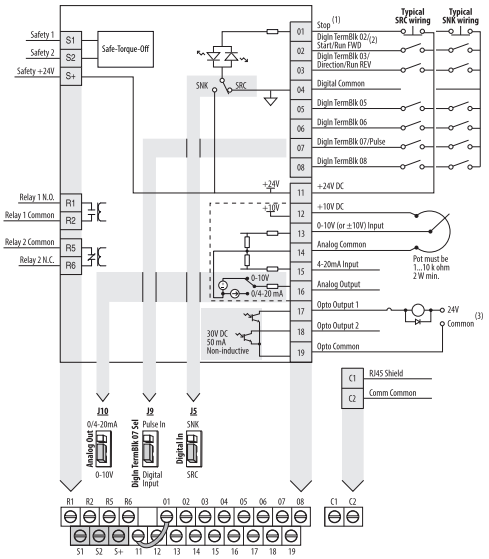

DRAFT

Communications

- **Embedded EtherNet/IP™ port** allows easy configuration, control, and collection of drive data over the network. (PowerFlex 525 drives only)
- **Dual port EtherNet/IP option card** supports Device Level Ring (DLR) topologies, providing **fault-tolerant connectivity** for optimum drive availability.
- **Integral RS485/DSI communications** enable the drives to be used in a multi-drop network configuration.
- Optional communication cards such as **DeviceNet™**, and **PROFIBUS DP™** can improve machine performance.
- **Online EDS file creation** with RSNetWorx™ providing ease of set-up on a network.

Optimized for Common DC Bus Installations

Enhanced Control of Internal Pre-charge

Common DC Bus offers additional inherent breaking capabilities by utilizing all the drives/loads on the bus for energy absorption offering higher efficiency and cost savings. The PowerFlex 520-Series drive has been optimized for use in **Common DC Bus** or **Shared DC Bus installation**s.

- Configurable pre-charge control using digital inputs.
- Direct DC Bus connection to power terminal blocks.

Improved Ride Through

Operation Down to 1/2 Line Voltage

The PowerFlex 520-Series drive allows for the selection of **1/2 DC Bus operation**, for use in critical applications where continued drive output is desired even in the event of brown out or low voltage conditions. The PowerFlex 520-Series drive also supports **enhanced inertia ride through** for additional low voltage mitigation.

- Selectable 1/2 line voltage operation.
- Increased power loss ride through.

DRAFT

Additional Features of PowerFlex 525 Drives

Closed Loop Feedback

Encoder/Pulse Train Input

The PowerFlex 525 drive allows for configurable closed loop control with an optional encoder card for either speed or position feedback for improved speed regulation, basic position control, or other pulse inputs for motor control.

- Improved speed regulation
- Basic position control

Basic Position Control

Local Position Control

- Position regulator with StepLogic™
  - 8 positions (local logic)

Outer Position Control Loop

- **Analog input bipolar mode** offers improved zero-cross performance.
- **Simple motion control** applications with more complex position profiles.
- **Speed reference** supplied to drive via Analog Input or multiple field bus network options.
- **Speed ratio** available for simple draw applications.

Feedback Details

Line Driver Type Incremental Encoder Option Card

- Quadrature (dual channel) or Single Channel
- 5V/12V DC supply, 10 mA min per channel
- Single Ended or Differential (A, B Channel)
- Duty Cycle of 50%, +10%
- Input Frequency up to 250 kHz

Pulse Train Input

- Configurable Input Voltage 5V/12V/24V DC autodetect
- Input Frequency up to 100 kHz

Encoder Wiring Examples

I/O	Connection Example	I/O	Connection Example
Encoder Power – Internal Drive Power Internal (drive) 12V DC, 250 mA	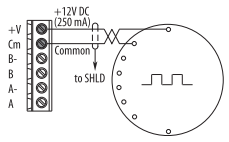	**Encoder Power – External Power Source**	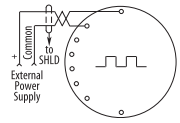
Encoder Signal – Single-Ended, Dual Channel	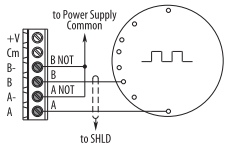	**Encoder Signal – Differential, Dual Channel**	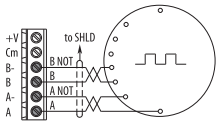

Safety Inside using Safe-Torque-Off Function

Safe Torque-Off is a standard safety feature of the PowerFlex 525 drive to help protect personnel and equipment. Safe Torque-off allows you to restart your application faster after a safety-related situation.

- Safe Torque-Off functionality **removes rotational power without powering down the drive**.
- Embedded safety **reduces wiring and saves on installation space**.
- Meets ISO 13849-1 standards and provides safety ratings up to and including **SIL 2/PLd**.

DRAFT

Communications and Software

Versatile Programming and Network Solutions

- PowerFlex 520-Series drives are compatible with any device that acts as a **RTU Master** and supports standard 03 and 06 RTU commands.
- A network can be configured using PowerFlex 520-Series drives for **high performance and flexible configuration** capabilities.
  - Embedded port for EtherNet/IP (PowerFlex 525 drives only)
  - EtherNet/IP dual-port option card
  - DeviceNet option card
  - PROFIBUS DP option card
- A **multi-drive solution** can be reached using a single PowerFlex 520-Series drive, with the ability for up to five (5) drives to reside on one (1) node.
- **Integral RS485** communications enable the drives to be used in a multi-drop network configuration. A serial converter module (SCM) provides connectivity to any controller with a DF1 port. The SCM can be eliminated if the controller acts as a RTU Master.

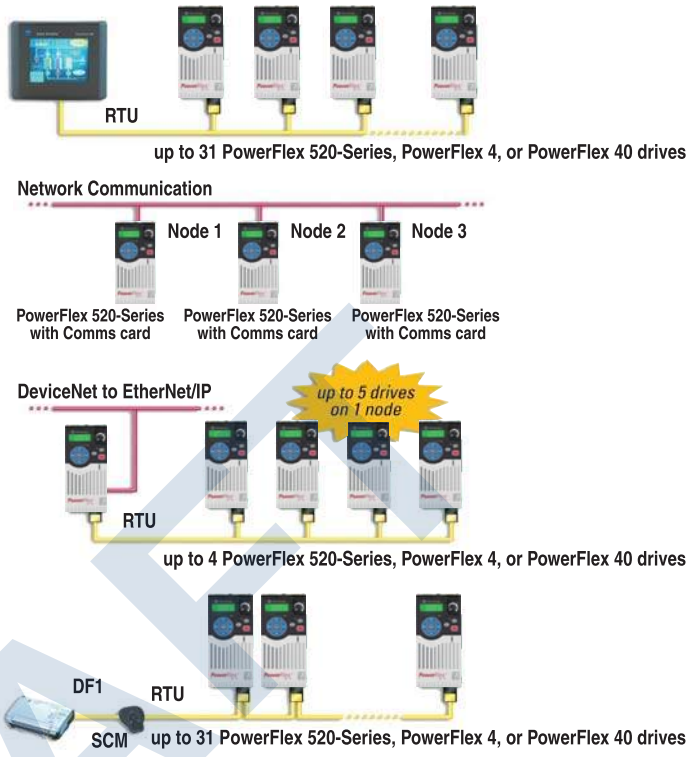

PC Programming Software

Connected Components Workbench™

- Supports plug-and-play connectivity through a standard USB connection.
- AppView™ tool provides parameter groups for several of the most common applications.
- Create and save custom parameter groups using the CustomView™ tool.
- Supports PowerFlex drives, Micro800™ controllers and PanelView™ component graphic terminals.

Studio 5000™ Logix Designer

- Add-on profiles (AOPs) for PowerFlex 520-seriers AC drives provide seamless integration into the Logix environment.
- Configuration files from Studio 5000 Logix Designer(1) can be transferred directly to the PowerFlex 520-Series drive over EtherNet/IP.
- Automatic Device Configuration (ADC) uploads configuration parameters to a replaced drive, minimizing the need for a manual reconfiguration.

(1) The Logix Designer application is the rebranding of RSLogix 5000 software. You can also use RSLogix 5000 version 17 or greater.

DRAFT

PowerFlex 523 Drive Family



Frame A | Frame B | Frame C | Frame D | Frame E

PowerFlex 525 Drive Family



Frame A | Frame B | Frame C | Frame D | Frame E

DRAFT

Catalog Number Explanation

1-3	4	5	6-8	9	10	11	12	13	14
25B	**–**	**B**	**2P3**	**N**	**1**	**1**	**4**	**–**	**–**
Drive	Dash	Voltage Rating	Rating	Enclosure	Reserved	Emission Class	Reserved	Dash	Dash

Code	Type
25A	PowerFlex 523
25B	PowerFlex 525

Code	Voltage	Phase
V	120V AC	1
A	240V AC	1
B	240V AC	3
D	480V AC	3
E	600V AC	3

Code	Enclosure
N	IP20 NEMA / Open

Code	Interface Module
1	Standard

Code	EMC Filter
0	No Filter
1	Filter

Code	Braking
4	Standard

Output Current @ 1 Phase, 100...120V Input

Code	Amps	Frame	ND		HD	
			HP	kW	HP	kW
1P6[1]	1.6	A	0.25	0.2	0.25	0.2
2P5	2.5	A	0.5	0.4	0.5	0.4
4P8	4.8	B	1.0	0.75	1.0	0.75
6P0	6.0	B	1.5	1.1	1.5	1.1

Output Current @ 1 Phase, 200...240V Input

Code	Amps	Frame	ND		HD	
			HP	kW	HP	kW
1P6[1]	1.6	A	0.25	0.2	0.25	0.2
2P5	2.5	A	0.5	0.4	0.5	0.4
4P8	4.8	A	1.0	0.75	1.0	0.75
8P0	8.0	B	2.0	1.5	2.0	1.5
011	11.0	B	3.0	2.2	3.0	2.2

Output Current @ 3Phase, 200...240V Input

Code	Amps	Frame	ND		HD	
			HP	kW	HP	kW
1P6[1]	1.6	A	0.25	0.2	0.25	0.2
2P5	2.5	A	0.5	0.4	0.5	0.4
5P0	5.0	A	1.0	0.75	1.0	0.75
8P0	8.0	A	2.0	1.5	2.0	1.5
011	11.0	A	3.0	2.2	3.0	2.2
017	17.5	B	5.0	4.0	5.0	4.0
024	24.0	C	7.5	5.5	7.5	5.5
032	32.2	D	10.0	7.5	10.0	7.5
048[2]	48.3	E	15.0	11.0	10.0	7.5
062[2]	62.1	E	20.0	15.0	15.0	11.0

Output Current @ 3 Phase, 380...480V Input

Code	Amps	Frame	ND		HD	
			HP	kW	HP	kW
1P4	1.4	A	0.5	0.4	0.5	0.4
2P3	2.3	A	1.0	0.75	1.0	0.75
4P0	4.0	A	2.0	1.5	2.0	1.5
6P0	6.0	A	3.0	2.2	3.0	2.2
010	10.5	B	5.0	4.0	5.0	4.0
013	13.0	C	7.5	5.5	7.5	5.5
017	17.0	C	10.0	7.5	10.0	7.5
024	24.0	D	15.0	11.0	15.0	11.0
030[2]	30.0	D	20.0	15.0	15.0	11.0
037[2]	37.0	E	25.0	18.5	20.0	15.0
043[2]	43.0	E	30.0	22.0	25.0	18.5

Output Current @ 3 Phase, 525...600V Input

Code	Amps	Frame	ND		HD	
			HP	kW	HP	kW
0P9	0.9	A	0.5	0.4	0.5	0.4
1P7	1.7	A	1.0	0.75	1.0	0.75
3P0	3.0	A	2.0	1.5	2.0	1.5
4P2	4.2	A	3.0	2.2	3.0	2.2
6P6	6.6	B	5.0	4.0	5.0	4.0
9P9	9.9	C	7.5	5.5	7.5	5.5
012	12.0	C	10.0	7.5	10.0	7.5
019	19.0	D	15.0	11.0	15.0	11.0
022[2]	22.0	D	20.0	15.0	15.0	11.0
027[2]	27.0	E	25.0	18.5	20.0	15.0
032[2]	32.0	E	30.0	22.0	25.0	18.5

(1) This rating is only available for PowerFlex 523 drives.

(2) Normal and Heavy Duty ratings are available for this drive.

DRAFT

Technical Specifications

Protection

Specifications	PowerFlex 523	PowerFlex 525
Bus Overvoltage Trip		
100...120V AC Input:	405V DC bus (equivalent to 150V AC incoming line)	
200...240V AC Input:	405V DC bus (equivalent to 290V AC incoming line)	
380...480V AC Input:	810V DC bus (equivalent to 575V AC incoming line)	
525...600V AC Input:	1005V DC bus (equivalent to 711V AC incoming line)	
Bus Undervoltage Trip		
100...120V AC Input:	190V DC bus (equivalent to 75V AC incoming line)	
200...240V AC Input:	190V DC bus (equivalent to 150V AC incoming line)	
380...480V AC Input:	390V DC bus (equivalent to 275V AC incoming line)	
525...600V AC Input		
P038 = 3 "600V":	487V DC bus (equivalent to 344V AC incoming line)	
P038 = 2 "480V":	390V DC bus (equivalent to 275V AC incoming line)	
Power Ride-Thru:	100 ms	
Logic Control Ride-Thru:	0.5 s minimum, 2 s typical	
Electronic Motor Overload Protection:	Provides class 10 motor overload protection according to NEC article 430 and motor over-temperature protection according to NEC article 430.126 (A) (2). UL 508C File 29572.	
Overcurrent:	200% hardware limit, 300% instantaneous fault	
Ground Fault Trip:	Phase-to-ground on drive output	
Short Circuit Trip:	Phase-to-phase on drive output	

Electrical

Specifications	PowerFlex 523	PowerFlex 525
Voltage Tolerance:	-15% / +10%	
Frequency Tolerance:	47...63 Hz	
Input Phases:	Three-phase input provides full rating. Single-phase input provides 35% rating on three-phase drives.	
Displacement Power Factor:	0.98 across entire speed range	
Maximum Short Circuit Rating:	100,000 Amps Symmetrical	
Actual Short Circuit Rating:	Determined by AIC Rating of installed fuse/circuit breaker	
Transistor Type:	Isolated Gate Bipolar Transistor (IGBT)	
Internal DC Bus Choke	Only for Frame E drive ratings	
200...240V AC Input:	11 kW (15 HP)	
380...480V AC Input:	15...18.5 kW (20...25 HP) – Heavy Duty	
525...600V AC Input:	15...18.5 kW (20...25 HP) – Heavy Duty	

Control

Specifications	PowerFlex 523	PowerFlex 525
Method	Sinusoidal PWM, Volts/Hertz, Sensorless Vector Control, Economizer SVC motor control, Closed Loop Velocity Vector Control, Surface Mount and Interior Permanent Magnet Motor (without encoder), Interior Permanent Magnet Motor (with encoder) (Closed Loop Velocity Vector Control and PM motor control are not applicable to PowerFlex 523 drives)	
Carrier Frequency	2...16 kHz, Drive rating based on 4 kHz	
Frequency Accuracy		
Digital Input:	Within ±0.05% of set output frequency	
Analog Input:	Within 0.5% of maximum output frequency, 10-Bit resolution	
Analog Output:	±2% of full scale, 10-Bit resolution	

DRAFT

ITEM 746L

Specifications	PowerFlex 523	PowerFlex 525
Performance		
V/Hz (Volts per Hertz):	±1% of base speed across a 60:1 speed range	
SVC (Sensorless Vector):	±0.5% of base speed across a 100:1 speed range	
SVC Economizer:	±0.5% of base speed across a 100:1 speed range	
	(Applicable to PowerFlex 525 drives only)	
VVC (Velocity Vector Control):	±0.5% of base speed across a 60:1 speed range	
PM Motor(1):	±0.5% of base speed, up to a 20:1 speed range	
Performance with Encoder	(Applicable to PowerFlex 525 drives only)	
SVC (Sensorless Vector):	±0.1% of base speed across a 100:1 speed range(2)	
SVC Economizer:	±0.1% of base speed across a 100:1 speed range(2)	
VVC (Velocity Vector Control):	±0.1% of base speed across a 1000:1 speed range(2)	
PM Motor (iPM motor, 10 HP rating and below)(1):	±0.1% of base speed, up to a 60:1 speed range	
Output Voltage Range:	0V to rated motor voltage	
Output Frequency Range:	0...500 Hz (programmable)	
Efficiency:	97.5% (typical)	
Stop Modes:	Multiple programmable stop modes including – Ramp, Coast, DC-Brake, and Ramp-to-Stop	
Accel/Decel:	Four independently programmable accel and decel times. Each time may be programmed from 0...600 s in 0.01 s increments.	
Intermittent Overload		
Normal Duty:	110% Overload capability for up to 60 s, 150% for up to 3 s Applies for power rating above 15 kW (20 HP) only. Based on 480V drive rating.	
Heavy Duty:	150% Overload capability for up to 60 s, 180% for up to 3 s (200% programmable)	

(1) For details on specific motor performance, see Knowledge Base article "PowerFlex 525 PM Motor Performance Testing Summary".

(2) For more information, see the PowerFlex 520-Series Adjustable Frequency AC Drive User Manual, publication 520-UM001.

Control Inputs

Specifications		PowerFlex 523	PowerFlex 525
Digital	Bandwidth:	10 Rad/s for open and closed loop	
	Quantity:	(1) Dedicated for stop (4) Programmable	(1) Dedicated for stop (6) Programmable
	Current:	6 mA	
	Type		
	Source Mode (SRC):	18...24V = ON, 0...6V = OFF	
	Sink Mode (SNK):	0...6V = ON, 18...24V = OFF	
	Pulse Train		
	Quantity:	(1) Shared with one of the programmable digital input terminals.	
	Input Signal:	Transistor contact (open collector)	
	Input Frequency:	0...100 kHz	
	Current Consumption:	7 mA @ 24V DC maximum	
Analog	Quantity:	(1) Isolated, 0-10V and 4-20 mA	(2) Isolated, -10-10V and 4-20 mA
	Specification		
	Resolution:	10-bit	
	0-10V DC Analog:	100k ohm input impedance	
	4-20 mA Analog:	250 ohm input impedance	
	External Pot:	1...10k ohm, 2 W minimum	

DRAFT

ITEM 746L

Control Outputs

Specifications		PowerFlex 523	PowerFlex 525
Relay	Quantity:	(1) Programmable Form C	(2) 1 Programmable Form A and 1 Programmable Form B
	Specification Resistive Rating: Inductive Rating:	 3.0 A @ 30V DC, 3.0 A @ 125V, 3.0 A @ 240V AC 0.5 A @ 30V DC, 0.5 A @ 125V, 0.5 A @ 240V AC	
Opto	Quantity:	–	(2) Programmable
	Specification:		30V DC, 50 mA Non-inductive
Analog	Quantity:	(1) Non-Isolated 0-10V or 4-20 mA[1]	
	Specification Resolution: 0-10V DC Analog: 4-20 mA Analog:	 10-bit 1 k ohm minimum 525 ohm maximum	

(1) Feature is not applicable to PowerFlex 523 series A drives.

Encoder

Specifications	PowerFlex 523	PowerFlex 525
Type:	–	Incremental, dual channel
Supply:		12V, 250 mA
Quadrature:		90°, ±27° @ 25 °C
Duty Cycle:		50%, +10%
Requirements:		Encoders must be line driver type, quadrature (dual channel) or pulse (single channel), 3.5...26V DC output, single-ended or differential and capable of supplying a minimum of 10 mA per channel. Allowable input is DC up to a maximum frequency of 250 kHz. The encoder I/O automatically scales to allow 5V, 12V and 24V DC nominal voltages.

DRAFT

Environmental Specifications

Specifications	PowerFlex 523	PowerFlex 525
Altitude	See Current Derating Curves on page 18 for derating guidelines.	
Without derating:	1000 m (3300 ft) max.	
With derating:	Up to 4000 m (13,200 ft) max., with the exception of 600V drives at 2000 m (6600 ft) max.	
Surrounding Air Temperature, max.	See Current Derating Curves on page 18 for derating guidelines.	
Without derating:	-20...50 °C (-4...122 °F)	
With derating:	-20...60 °C (-4...140 °F) or -20...70 °C (-4...158 °F) with optional Control Module Fan kit.	
Storage Temperature		
Frame A...D:	-40...85 °C (-40...185 °F)	
Frame E:	-40...70 °C (-40...158 °F)	
Atmosphere:	**IMPORTANT** Drive **must not** be installed in an area where the ambient atmosphere contains volatile or corrosive gas, vapors or dust. If the drive is not going to be installed for a period of time, it must be stored in an area where it will not be exposed to a corrosive atmosphere.	
Relative Humidity:	0...95% noncondensing	
Shock:	Complies with IEC 60068-2-27	
Vibration:	Complies with IEC 60068-2-6:1995	

Frame Size	Operating and Nonoperating		Nonoperating (Transportation)	
	Force (Shock/Vibration)	Mounting Type	Force (Shock/Vibration)	Mounting Type
A	15 g / 2 g	DIN rail or screw	30 g/ 2.5 g	Screw only
B	15 g / 2 g	DIN rail or screw	30 g/ 2.5 g	Screw only
C	15 g / 2 g	DIN rail or screw	30 g/ 2.5 g	Screw only
D	15 g / 2 g	Screw only	30 g/ 2.5 g	Screw only
E	15 g / 1.5 g	Screw only	30 g/ 2.5 g	Screw only

Conformal Coating:	Complies with: IEC 60721-3-3 to level 3C2 (chemical and gases only)
Surrounding Environment Pollution Degree	
Pollution Degree 1 & 2:	All enclosures acceptable.
Sound Pressure Level (A-weighted)	Measurements are taken 1 m from the drive.
Frame A & B:	Maximum 53 dBA
Frame C:	Maximum 57 dBA
Frame D:	Maximum 64 dBA
Frame E:	Maximum 68 dBA

DRAFT

Certifications

Certification	PowerFlex 523	PowerFlex 525
c-UL-us	Listed to UL508C and CAN/CSA-C22.2 No. 14-05.	
RCM	Australian Communications and Media Authority In conformity with the following: Radiocommunications Act: 1992 Radiocommunications Standard: 2008 Radiocommunications Labelling Notice: 2008 Standards applied: EN 61800-3	
CE	In conformity with the following European Directives: 2014/35/EU Low Voltage Directive (LVD) 2014/30/EU EMC Directive (EMC) 2014/34/EU ATEX Directive (ATEX) 2006/42/EC Machinery Directive (MD) Standards applied: EN 61800-3 EN 61800-5-1	
TUV	(Applicable to PowerFlex 525 drives only) TÜV Rheinland Standards applied: EN ISO 13849-1 EN 61800-5-2 EN 61508 PARTS 1-7 EN 62061 EN 60204-1 Certified to ISO 13849-1 SIL2/PLd with embedded Safe-Torque-Off function Meets Functional Safety (FS) when used with embedded Safe-Torque-Off function	
ATEX **II (2) G D** **TUV 12 ATEX 7199 X**	(Applicable to PowerFlex 525 drives only) Certified to ATEX directive 2014/34/EU Group II Category (2) GD Applications with ATEX Approved Motors	
KCC	Korean Registration of Broadcasting and Communications Equipment Compliant with the following standards: Article 58-2 of Radio Waves Act, Clause 3	
EAC	Standards applied: Low Voltage TP TC 004/2011 EMC TP TC 020/2011	
AC 156	Tested by Trentec to be compliant with AC156 Acceptance Criteria for Seismic Qualification Testing of Nonstructural Components and 2003 International Building Code for worst-case seismic level for USA excluding site class F	
SEMI F47	Electric Power Research Institute Certified compliant with the following standards: SEMI F47 IEC 61000-4-11 IEC 61000-4-34	
Lloyds Register	(Applicable to PowerFlex 525 drives only) Lloyd's Register Type Approval Certificate 12/10068(E1)	
RoHS	Compliant with the European "Restriction of Hazardous Substances" Directive	

The drive is also designed to meet the appropriate portions of the following specifications:

NFPA 70 - US National Electrical Code

NEMA ICS 7.1 - Safety standards for Construction and Guide for Selection, Installation and Operation of Adjustable Speed Drive Systems.

DRAFT

Dimensions and Weights

Frame/Rating Cross-Reference

Catalog Number Description

25B	-	V	2P5	N	1	0	4
Drive		Voltage Rating	Rating	Enclosure	HIM	Emission Class	Version

PowerFlex 520-Series Drive Ratings

PowerFlex 523	PowerFlex 525	Output Ratings					Input		
		Normal Duty		Heavy Duty		Output			
Catalog No.	Catalog No.	HP	kW	HP	kW	Current (A)	Voltage Range	Total Watts Loss	Frame Size
100...120V AC (-15%, +10%) – 1-Phase Input, 0...230V 3-Phase Output									
25A-V1P6N104	–	0.25	0.2	0.25	0.2	1.6	85...132	20.0	A
25A-V2P5N104	25B-V2P5N104	0.5	0.4	0.5	0.4	2.5	85...132	27.0	A
25A-V4P8N104	25B-V4P8N104	1.0	0.75	1.0	0.75	4.8	85...132	53.0	B
25A-V6P0N104	25B-V6P0N104	1.5	1.1	1.5	1.1	6.0	85...132	67.0	B
200...240V AC (-15%, +10%) – 1-Phase Input, 0...230V 3-Phase Output									
25A-A1P6N104	–	0.25	0.2	0.25	0.2	1.6	85...132	20.0	A
25A-A2P5N104	25B-A2P5N104	0.5	0.4	0.5	0.4	2.5	170...264	29.0	A
25A-A4P8N104	25B-A4P8N104	1.0	0.75	1.0	0.75	4.8	170...264	50.0	A
25A-A8P0N104	25B-A8P0N104	2.0	1.5	2.0	1.5	8.0	170...264	81.0	B
25A-A011N104	25B-A011N104	3.0	2.2	3.0	2.2	11.0	170...264	111.0	B
200...240V AC (-15%, +10%) – 1-Phase Input with EMC Filter, 0...230V 3-Phase Output									
25A-A1P6N114	–	0.25	0.2	0.25	0.2	1.6	85...132	20.0	A
25A-A2P5N114	25B-A2P5N114	0.5	0.4	0.5	0.4	2.5	170...264	29.0	A
25A-A4P8N114	25B-A4P8N114	1.0	0.75	1.0	0.75	4.8	170...264	53.0	A
25A-A8P0N114	25B-A8P0N114	2.0	1.5	2.0	1.5	8.0	170...264	84.0	B
25A-A011N114	25B-A011N114	3.0	2.2	3.0	2.2	11.0	170...264	116.0	B
200...240V AC (-15%, +10%) – 3-Phase Input, 0...230V 3-Phase Output									
25A-B1P6N104	–	0.25	0.2	0.25	0.2	1.6	85...132	20.0	A
25A-B2P5N104	25B-B2P5N104	0.5	0.4	0.5	0.4	2.5	170...264	29.0	A
25A-B5P0N104	25B-B5P0N104	1.0	0.75	1.0	0.75	5.0	170...264	50.0	A
25A-B8P0N104	25B-B8P0N104	2.0	1.5	2.0	1.5	8.0	170...264	79.0	A
25A-B011N104	25B-B011N104	3.0	2.2	3.0	2.2	11.0	170...264	107.0	A
25A-B017N104	25B-B017N104	5.0	4.0	5.0	4.0	17.5	170...264	148.0	B
25A-B024N104	25B-B024N104	7.5	5.5	7.5	5.5	24.0	170...264	259.0	C
25A-B032N104	25B-B032N104	10.0	7.5	10.0	7.5	32.2	170...264	323.0	D
25A-B048N104	25B-B048N104	15.0	11.0	10.0	7.5	48.3	170...264	584.0	E
25A-B062N104	25B-B062N104	20.0	15.0	15.0	11.0	62.1	170...264	708.0	E
380...480V AC (-15%, +10%) – 3-Phase Input, 0...460V 3-Phase Output[1]									
25A-D1P4N104	25B-D1P4N104	0.5	0.4	0.5	0.4	1.4	323...528	27.0	A
25A-D2P3N104	25B-D2P3N104	1.0	0.75	1.0	0.75	2.3	323...528	37.0	A
25A-D4P0N104	25B-D4P0N104	2.0	1.5	2.0	1.5	4.0	323...528	62.0	A
25A-D6P0N104	25B-D6P0N104	3.0	2.2	3.0	2.2	6.0	323...528	86.0	A
25A-D010N104	25B-D010N104	5.0	4.0	5.0	4.0	10.5	323...528	129.0	B
25A-D013N104	25B-D013N104	7.5	5.5	7.5	5.5	13.0	323...528	170.0	C
25A-D017N104	25B-D017N104	10.0	7.5	10.0	7.5	17.0	323...528	221.0	C
25A-D024N104	25B-D024N104	15.0	11.0	15.0	11.0	24.0	323...528	303.0	D
25A-D030N104	25B-D030N104	20.0	15.0	15.0	11.0	30.0	323...528	387.0	D

DRAFT

PowerFlex 523	PowerFlex 525	Output Ratings					Input		
		Normal Duty		Heavy Duty		Output			
Catalog No.	Catalog No.	HP	kW	HP	kW	Current (A)	Voltage Range	Total Watts Loss	Frame Size
380...480V AC (-15%, +10%) – 3-Phase Input with EMC Filter, 0...460V 3-Phase Output									
25A-D1P4N114	25B-D1P4N114	0.5	0.4	0.5	0.4	1.4	323...528	27.0	A
25A-D2P3N114	25B-D2P3N114	1.0	0.75	1.0	0.75	2.3	323...528	37.0	A
25A-D4P0N114	25B-D4P0N114	2.0	1.5	2.0	1.5	4.0	323...528	63.0	A
25A-D6P0N114	25B-D6P0N114	3.0	2.2	3.0	2.2	6.0	323...528	88.0	A
25A-D010N114	25B-D010N114	5.0	4.0	5.0	4.0	10.5	323...528	133.0	B
25A-D013N114	25B-D013N114	7.5	5.5	7.5	5.5	13.0	323...528	175.0	C
25A-D017N114	25B-D017N114	10.0	7.5	10.0	7.5	17.0	323...528	230.0	C
25A-D024N114	25B-D024N114	15.0	11.0	15.0	11.0	24.0	323...528	313.0	D
25A-D030N114	25B-D030N114	20.0	15.0	15.0	11.0	30.0	323...528	402.0	D
25A-D037N114	25B-D037N114	25.0	18.5	20.0	15.0	37.0	323...528	602.0	E
25A-D043N114	25B-D043N114	30.0	22.0	25.0	18.5	43.0	323...528	697.0	E
525...600V AC (-15%, +10%) – 3-Phase Input, 0...575V 3-Phase Output									
25A-E0P9N104	25B-E0P9N104	0.5	0.4	0.5	0.4	0.9	446...660	22.0	A
25A-E1P7N104	25B-E1P7N104	1.0	0.75	1.0	0.75	1.7	446...660	32.0	A
25A-E3P0N104	25B-E3P0N104	2.0	1.5	2.0	1.5	3.0	446...660	50.0	A
25A-E4P2N104	25B-E4P2N104	3.0	2.2	3.0	2.2	4.2	446...660	65.0	A
25A-E6P6N104	25B-E6P6N104	5.0	4.0	5.0	4.0	6.6	446...660	95.0	B
25A-E9P9N104	25B-E9P9N104	7.5	5.5	7.5	5.5	9.9	446...660	138.0	C
25A-E012N104	25B-E012N104	10.0	7.5	10.0	7.5	12.0	446...660	164.0	C
25A-E019N104	25B-E019N104	15.0	11.0	15.0	11.0	19.0	446...660	290.0	D
25A-E022N104	25B-E022N104	20.0	15.0	15.0	11.0	22.0	446...660	336.0	D
25A-E027N104	25B-E027N104	25.0	18.5	20.0	15.0	27.0	446...660	466.0	E
25A-E032N104	25B-E032N104	30.0	22.0	25.0	18.5	32.0	446...660	562.0	E

(1) A non-filtered drive is not available for 380...480V AC 25 HP (18.5 kW) and 30 HP (22.0 kW) ratings. Filtered drives are available, however you must verify that the application will support a filtered drive.

DRAFT

ITEM 746L

Drive Dimensions and Weight

Dimensions are in mm and (in.). Weights are in kg and (lb).

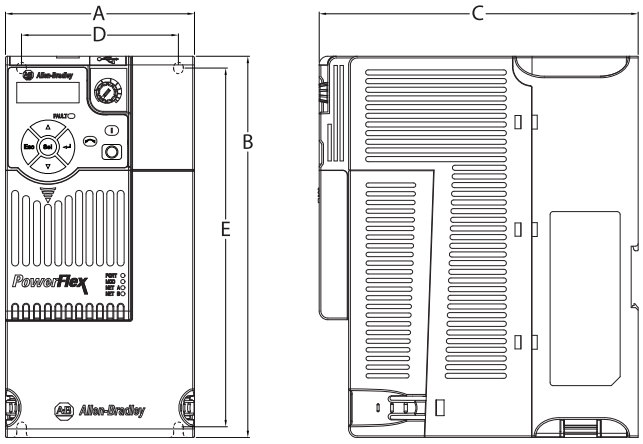

Frame Size	A	B	C	D	E	Weight
A	72.0 (2.83)	152.0 (5.98)	172.0 (6.77)	57.5 (2.26)	140.0 (5.51)	1.1 (2.4)
B	87.0 (3.43)	180.0 (7.09)	172.0 (6.77)	72.5 (2.85)	168.0 (6.61)	1.6 (3.5)
C	109.0 (4.29)	220.0 (8.66)	184.0 (7.24)	90.5 (3.56)	207.0 (8.15)	2.3 (5.0)
D	130.0 (5.12)	260.0 (10.24)	212.0 (8.35)	116.0 (4.57)	247.0 (9.72)	3.9 (8.6)
E	185.0 (7.28)	300.0 (11.81)	279.0 (10.98)	160.0 (6.30)	280.0 (11.02)	12.9 (28.4)

Design Considerations

Mounting Considerations

- Mount the drive upright on a flat, vertical and level surface.

Frame	Screw Size	Screw Torque
A	M5 (#10...24)	1.56...1.96 Nm (14...17 lb-in.)
B	M5 (#10...24)	1.56...1.96 Nm (14...17 lb-in.)
C	M5 (#10...24)	1.56...1.96 Nm (14...17 lb-in.)
D	M5 (#10...24)	2.45...2.94 Nm (22...26 lb-in.)
E	M8 (5/16 in.)	6.0...7.4 Nm (53...65 lb-in.)

- Protect the cooling fan by avoiding dust or metallic particles.
- Do not expose to a corrosive atmosphere.
- Protect from moisture and direct sunlight.

DRAFT

Minimum Mounting Clearances

See Dimensions and Weights on page 14 for mounting dimensions.

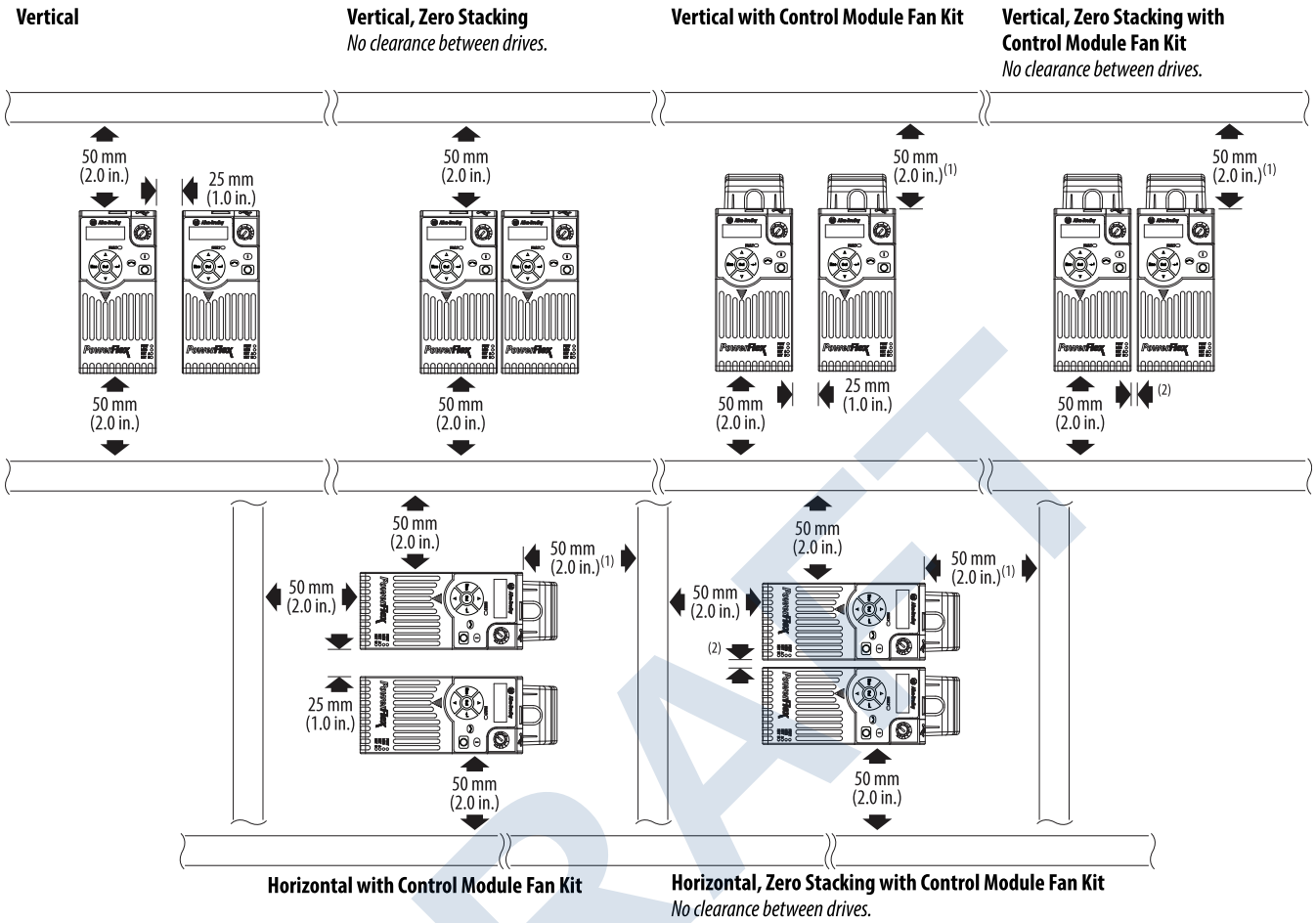

(1) For Frame E with Control Module Fan Kit only, clearance of 95 mm (3.7 in.) is required.
(2) For Frame E with Control Module Fan Kit only, clearance of 12 mm (0.5 in.) is required.

Ambient Operating Temperatures

See Accessories and Dimensions on page 32 for option kits.

Mounting	Enclosure Rating[1]	Ambient Temperature			
		Minimum	Maximum (No Derate)	Maximum (Derate)[2]	Maximum with Control Module Fan Kit (Derate)[3][5]
Vertical	IP 20/Open Type	-20 °C (-4 °F)	50 °C (122 °F)	60 °C (140 °F)	70 °C (158 °F)
	IP 30/NEMA 1/UL Type 1		45 °C (113 °F)	55 °C (131 °F)	–
Vertical, Zero Stacking	IP 20/Open Type		45 °C (113 °F)	55 °C (131 °F)	65 °C (149 °F)
	IP 30/NEMA 1/UL Type 1		40 °C (104 °F)	50 °C (122 °F)	–
Horizontal with Control Module Fan Kit[4][5]	IP 20/Open Type		50 °C (122 °F)	–	70 °C (158 °F)
Horizontal, Zero Stacking with Control Module Fan Kit[4][5]	IP 20/Open Type		45 °C (113 °F)	–	65 °C (149 °F)

(1) IP 30/NEMA 1/UL Type 1 rating requires installation of the PowerFlex 520-Series IP 30/NEMA 1/UL Type 1 option kit, catalog number 25-JBAx.
(2) For catalogs 25x-D1P4N104 and 25x-E0P9N104, the temperature listed under the Max. (Derate) column is reduced by 5 °C (9 °F) for all mounting methods.
(3) For catalogs 25x-D1P4N104 and 25x-E0P9N104, the temperature listed under the Max. with Control Module Fan Kit (Derate) column is reduced by 10 °C (18 °F) for vertical and vertical with zero stacking mounting methods only.
(4) Catalogs 25x-D1P4N104 and 25x-E0P9N104 cannot be mounted using either of the horizontal mounting methods.
(5) Requires installation of the PowerFlex 520-Series Control Module Fan Kit, catalog number 25-FANx-70C.

DRAFT

Current Derating Curves

Vertical Mounting

Single Drive

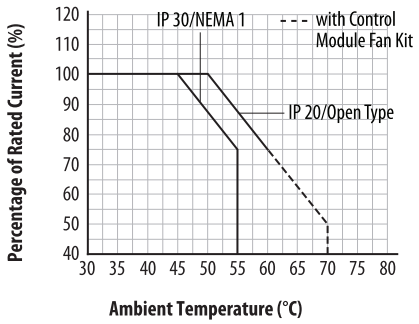

Zero Stacking

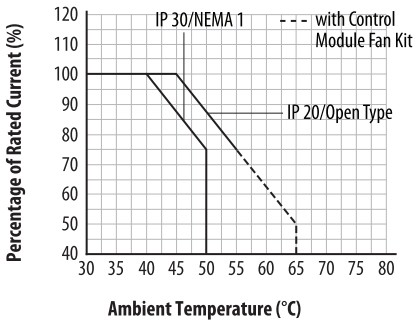

Horizontal Mounting/Floor

Single Drive

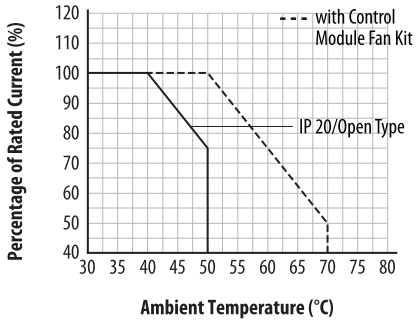

Zero Stacking

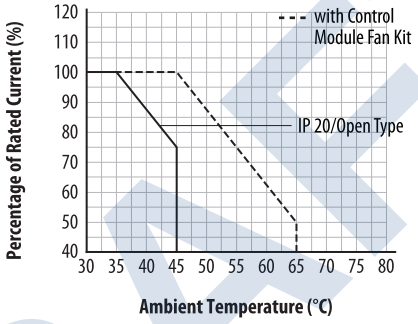

Derating Guidelines for High Altitude

The drive can be used without derating at a maximum altitude of 1000 m (3300 ft).
If the drive is used above 1000 m (3300 ft):

- Derate the maximum ambient temperature by 5 °C (9 °F) for every additional 1000 m (3300 ft), subject to limits listed in the Altitude Limit (Based on Voltage) table below.

  Or

- Derate the output current by 10% for every additional 1000 m (3300 ft), subject to limits listed in the Altitude Limit (Based on Voltage) table below.

Altitude Limit (Based on Voltage)

Drive Rating	Center Ground (Wye Neutral)	Corner Ground, Impedance Ground, or Ungrounded
100...120V 1-Phase	6000 m	6000 m
200...240V 1-Phase	2000 m	2000 m
200...240V 3-Phase	6000 m	2000 m
380...480V 3-Phase	4000 m	2000 m
525...600V 3-Phase	2000 m	2000 m

DRAFT

ITEM 746L

High Altitude

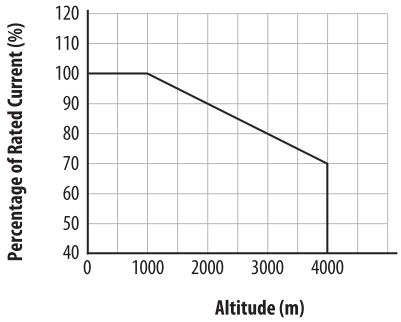

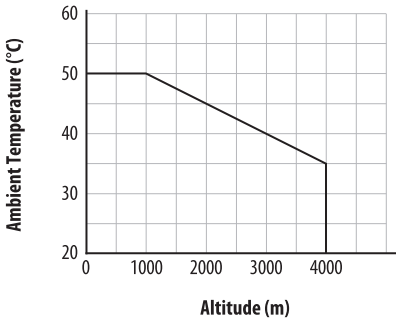

Debris Protection

Take precautions to prevent debris from falling through the vents of the drive housing during installation.

Storage

- Store within an ambient temperature range of -40...85 °C(1).
- Store within a relative humidity range of 0...95%, noncondensing.
- Do not expose to a corrosive atmosphere.

(1) The maximum ambient temperature for storing a Frame E drive is 70 °C.

AC Supply Source Considerations

Ungrounded Distribution Systems

ATTENTION: PowerFlex 520-Series drives contain protective MOVs that are referenced to ground. These devices must be disconnected if the drive is installed on an ungrounded or resistive grounded distribution system.

ATTENTION: Removing MOVs in drives with an embedded filter will also disconnect the filter capacitor from earth ground.

Disconnecting MOVs

To prevent drive damage, the MOVs connected to ground shall be disconnected if the drive is installed on an ungrounded distribution system (IT mains) where the line-to-ground voltages on any phase could exceed 125% of the nominal line-to-line voltage. To disconnect these devices, remove the jumper shown in the diagrams below.

1. Turn the screw counterclockwise to loosen.
2. Pull the jumper completely out of the drive chassis.
3. Tighten the screw to keep it in place.

DRAFT

ITEM 746L

Jumper Location (Typical)

Power Module

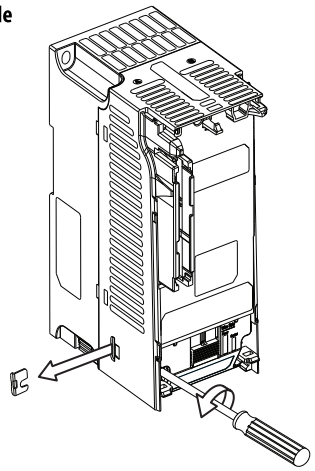

IMPORTANT Tighten screw after jumper removal.

Phase to Ground MOV Removal

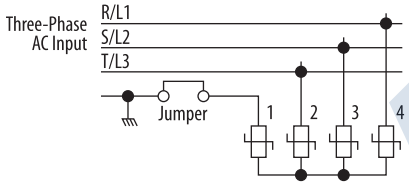

Input Power Conditioning

The drive is suitable for direct connection to input power within the rated voltage of the drive (see Input Power Conditions on page 20). Listed in the Input Power Conditions table below are certain input power conditions which may cause component damage or reduction in product life. If any of these conditions exist, install one of the devices listed under the heading Corrective Action on the line side of the drive.

IMPORTANT Only one device per branch circuit is required. It should be mounted closest to the branch and sized to handle the total current of the branch circuit.

Input Power Conditions

Input Power Condition	Corrective Action
Low Line Impedance (less than 1% line reactance)	• Install Line Reactor(2) • or Isolation Transformer
Greater than 120 kVA supply transformer	
Line has power factor correction capacitors	• Install Line Reactor(2) • or Isolation Transformer
Line has frequent power interruptions	
Line has intermittent noise spikes in excess of 6000V (lightning)	
Phase to ground voltage exceeds 125% of normal line to line voltage	• Remove MOV jumper to ground. • or Install Isolation Transformer with grounded secondary if necessary.
Ungrounded distribution system	
B-phase grounded distribution system	
240V open delta configuration (stinger leg)(1)	• Install Line Reactor(2)

DRAFT

(1) For drives applied on an open delta with a middle phase grounded neutral system, the phase opposite the phase that is tapped in the middle to the neutral or earth is referred to as the "stinger leg," "high leg," "red leg," etc. This leg should be identified throughout the system with red or orange tape on the wire at each connection point. The stinger leg should be connected to the center Phase B on the reactor. See Bulletin 1321-3R Series Line Reactors on page 37 for specific line reactor part numbers.

(2) See Accessories and Dimensions on page 32 for accessory ordering information.

General Grounding Requirements

The drive Safety Ground - (PE) must be connected to system ground. Ground impedance must conform to the requirements of national and local industrial safety regulations and/or electrical codes. The integrity of all ground connections should be periodically checked.

Typical Grounding

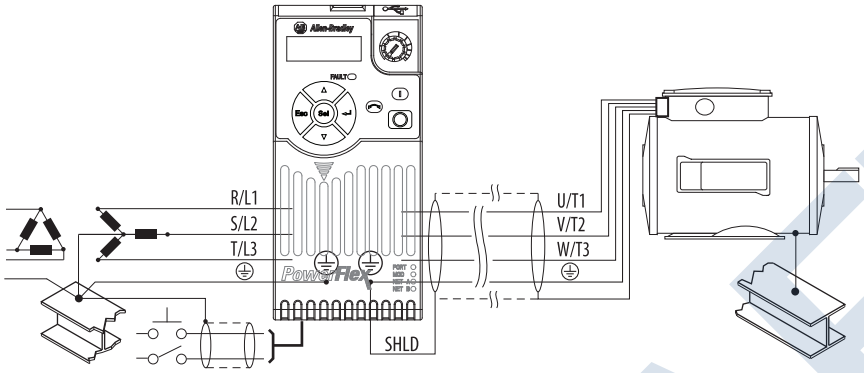

Ground Fault Monitoring

If a system ground fault monitor (RCD) is to be used, only Type B (adjustable) devices should be used to avoid nuisance tripping.

Safety Ground - ⏚ (PE)

This is the safety ground for the drive that is required by code. One of these points must be connected to adjacent building steel (girder, joist), a floor ground rod or bus bar. Grounding points must comply with national and local industrial safety regulations and/or electrical codes.

Motor Ground

The motor ground must be connected to one of the ground terminals on the drive.

Shield Termination - SHLD

Either of the safety ground terminals located on the power terminal block provides a grounding point for the motor cable shield. The **motor cable** shield connected to one of these terminals (drive end) should also be connected to the motor frame (motor end). Use a shield terminating or EMI clamp to connect the shield to the safety ground terminal. The earthing plate or conduit box option may be used with a cable clamp for a grounding point for the cable shield.

When shielded cable is used for **control and signal wiring**, the shield should be grounded at the source end only, not at the drive end.

DRAFT

ITEM 746L

RFI Filter Grounding

Using a drive with filter may result in relatively high ground leakage currents. Therefore, the **filter must only be used in installations with grounded AC supply systems and be permanently installed and solidly grounded** (bonded) to the building power distribution ground. Ensure that the incoming supply neutral is solidly connected (bonded) to the same building power distribution ground. Grounding must not rely on flexible cables and should not include any form of plug or socket that would permit inadvertent disconnection. Some local codes may require redundant ground connections. The integrity of all connections should be periodically checked.

Power Wiring

ATTENTION: National Codes and standards (NEC, VDE, BSI, etc.) and local codes outline provisions for safely installing electrical equipment. Installation must comply with specifications regarding wire types, conductor sizes, branch circuit protection and disconnect devices. Failure to do so may result in personal injury and/or equipment damage.

ATTENTION: To avoid a possible shock hazard caused by induced voltages, unused wires in the conduit must be grounded at both ends. For the same reason, if a drive sharing a conduit is being serviced or installed, all drives using this conduit should be disabled. This will help minimize the possible shock hazard from "cross coupled" power leads.

Motor Cable Types Acceptable for 100...600 Volt Installations

A variety of cable types are acceptable for drive installations. For many installations, unshielded cable is adequate, provided it can be separated from sensitive circuits. As an approximate guide, allow a spacing of 0.3 m (1 ft) for every 10 m (32.8 ft) of length. In all cases, long parallel runs must be avoided. Do not use cable with an insulation thickness less than 15 mils (0.4 mm/0.015 in.). Do not route more than three sets of motor leads in a single conduit to minimize "cross talk". If more than three drive/motor connections per conduit are required, shielded cable must be used.
UL installations above 50 °C ambient must use 600V, 90 °C wire.
UL installations in 50 °C ambient must use 600V, 75 °C or 90 °C wire.
UL installations in 40 °C ambient should use 600V, 75 °C or 90 °C wire.

Use copper wire only. Wire gauge requirements and recommendations are based on 75 °C. Do not reduce wire gauge when using higher temperature wire.

Unshielded

THHN, THWN or similar wire is acceptable for drive installation in dry environments provided adequate free air space and/or conduit fill rates limits are provided. Any wire chosen must have a minimum insulation thickness of 15 mils and should not have large variations in insulation concentricity.

ATTENTION: Do not use THHN or similarly coated wire in wet areas.

DRAFT

Shielded/Armored Cable

Shielded cable contains all of the general benefits of multi-conductor cable with the added benefit of a copper braided shield that can contain much of the noise generated by a typical AC Drive. Strong consideration for shielded cable should be given in installations with sensitive equipment such as weigh scales, capacitive proximity switches and other devices that may be affected by electrical noise in the distribution system. Applications with large numbers of drives in a similar location, imposed EMC regulations or a high degree of communications / networking are also good candidates for shielded cable.

Shielded cable may also help reduce shaft voltage and induced bearing currents for some applications. In addition, the increased impedance of shielded cable may help extend the distance that the motor can be located from the drive without the addition of motor protective devices such as terminator networks. Refer to Reflected Wave in "Wiring and Grounding Guide, (PWM) AC Drives," publication DRIVES-IN001.

Consideration should be given to all of the general specifications dictated by the environment of the installation, including temperature, flexibility, moisture characteristics and chemical resistance. In addition, a braided shield should be included and be specified by the cable manufacturer as having coverage of at least 75%. An additional foil shield can greatly improve noise containment.

A good example of recommended cable is Belden® 295xx (xx determines gauge). This cable has four (4) XLPE insulated conductors with a 100% coverage foil and an 85% coverage copper braided shield (with drain wire) surrounded by a PVC jacket.

Other types of shielded cable are available, but the selection of these types may limit the allowable cable length. Particularly, some of the newer cables twist 4 conductors of THHN wire and wrap them tightly with a foil shield. This construction can greatly increase the cable charging current required and reduce the overall drive performance. Unless specified in the individual distance tables as tested with the drive, these cables are not recommended and their performance against the lead length limits supplied is not known.

Recommended Shielded Wire

Location	Rating/Type	Description
Standard (Option 1)	600V, 90 °C (194 °F) XHHW2/RHW-2 Anixter B209500-B209507, Belden 29501-29507, or equivalent	• Four tinned copper conductors with XLPE insulation. • Copper braid/aluminum foil combination shield and tinned copper drain wire. • PVC jacket.
Standard (Option 2)	Tray rated 600V, 90 °C (194 °F) RHH/RHW-2 Anixter OLF-7xxxxx or equivalent	• Three tinned copper conductors with XLPE insulation. • 5 mil single helical copper tape (25% overlap min.) with three bare copper grounds in contact with shield. • PVC jacket.
Class I & II; Division I & II	Tray rated 600V, 90 °C (194 °F) RHH/RHW-2 Anixter 7V-7xxxx-3G or equivalent	• Three bare copper conductors with XLPE insulation and impervious corrugated continuously welded aluminum armor. • Black sunlight resistant PVC jacket overall. • Three copper grounds on #10 AWG and smaller.

Reflected Wave Protection

The drive should be installed as close to the motor as possible. Installations with long motor cables may require the addition of external devices to limit voltage reflections at the motor (reflected wave phenomena). Refer to Reflected Wave in "Wiring and Grounding Guide, (PWM) AC Drives," publication DRIVES-IN001.

The reflected wave data applies to all carrier frequencies 2...16 kHz.

For 240V ratings and lower, reflected wave effects do not need to be considered.

DRAFT

Output Disconnect

The drive is intended to be commanded by control input signals that will start and stop the motor. A device that routinely disconnects then reapplies output power to the motor for the purpose of starting and stopping the motor should not be used. If it is necessary to disconnect power to the motor with the drive outputting power, an auxiliary contact should be used to simultaneously disable drive (Aux Fault or Coast-to-Stop).

Power Terminal Block Wire Specifications

Frame	Maximum Wire Size(1)	Minimum Wire Size(1)	Torque
A	5.3 mm^2 (10 AWG)	0.8 mm^2 (18 AWG)	1.76...2.16 Nm (15.6...19.1 lb-in.)
B	8.4 mm^2 (8 AWG)	2.1 mm^2 (14 AWG)	1.76...2.16 Nm (15.6...19.1 lb-in.)
C	8.4 mm^2 (8 AWG)	2.1 mm^2 (14 AWG)	1.76...2.16 Nm (15.6...19.1 lb-in.)
D	13.3 mm^2 (6 AWG)	5.3 mm^2 (10 AWG)	1.76...2.16 Nm (15.6...19.1 lb-in.)
E	26.7 mm^2 (3 AWG)	8.4 mm^2 (8 AWG)	3.09...3.77 Nm (27.3...33.4 lb-in.)

(1) Maximum/minimum sizes that the terminal block will accept – these are not recommendations.

Common Bus/Precharge Notes

If drives are used with a disconnect switch to the common DC bus, then an auxiliary contact on the disconnect must be connected to a digital input of the drive.

I/O Wiring

Motor Start/Stop Precautions

ATTENTION: A contactor or other device that routinely disconnects and reapplies the AC line to the drive to start and stop the motor can cause drive hardware damage. The drive is designed to use control input signals that will start and stop the motor. If used, the input device must not exceed one operation per minute or drive damage can occur.

ATTENTION: The drive start/stop control circuitry includes solid-state components. If hazards due to accidental contact with moving machinery or unintentional flow of liquid, gas or solids exist, an additional hardwired stop circuit may be required to remove the AC line to the drive. When the AC line is removed, there will be a loss of any inherent regenerative braking effect that might be present - the motor will coast to a stop. An auxiliary braking method may be required. Alternatively, use the drive's safety input function.

Important points to remember about I/O wiring:

- Always use copper wire.
- Wire with an insulation rating of 600V or greater is recommended.
- Control and signal wires should be separated from power wires by at least 0.3 m (1 ft).

IMPORTANT I/O terminals labeled "Common" are not referenced to the safety ground (PE) terminal and are designed to greatly reduce common mode interference.

ATTENTION: Driving the 4-20 mA analog input from a voltage source could cause component damage. Verify proper configuration prior to applying input signals.

DRAFT

Signal and Control Wire Types

Recommendations are for 50 °C ambient temperature.
75 °C wire must be used for 60 °C ambient temperature.
90 °C wire must be used for 70 °C ambient temperature.

Recommended Signal Wire

Signal Type/Where Used	Belden Wire Type(s)*(or equivalent)*(1)	Description	Min. Insulation Rating
Analog I/O & PTC	8760/9460	0.750 mm^2 (18 AWG), twisted pair, 100% shield with drain(2)	300V, 60 °C (140 °F)
Remote Pot	8770	0.750 mm^2 (18 AWG), 3 conductor, shielded	
Encoder/Pulse I/O	9728/9730	0.196 mm^2 (24 AWG), individually shielded pairs	

(1) Stranded or solid wire.
(2) If the wires are short and contained within a cabinet which has no sensitive circuits, the use of shielded wire may not be necessary, but is always recommended.

Recommended Control Wire for Digital I/O

Type	Wire Type(s)	Description	Min. Insulation Rating
Unshielded	Per US NEC or applicable national or local code	–	300V, 60 °C (140 °F)
Shielded	Multi-conductor shielded cable such as Belden 8770 (or equivalent)	0.750 mm^2 (18 AWG), 3 conductor, shielded.	

Maximum Control Wire Recommendation

Do not exceed control wiring length of 30 m (100 ft). Control signal cable length is highly dependent on electrical environment and installation practices. To improve noise immunity, the I/O terminal block Common may be connected to ground terminal/protective earth. If using the RS485 (DSI) port, I/O Terminal C1 should also be connected to ground terminal/protective earth. Additionally, communication noise immunity can also be improved by connecting I/O Terminal C2 to ground terminal/protective earth.

Control I/O Terminal Block Wire Specifications

Frame	Maximum Wire Size(1)	Minimum Wire Size(1)	Torque
A...E	1.3 mm^2 (16 AWG)	0.13 mm^2 (26 AWG)	0.71...0.86 Nm (6.2...7.6 lb-in.)

(1) Maximum/minimum sizes that the terminal block will accept – these are not recommendations.

Machinery Directive (2006/42/EC)

- EN ISO 13849-1 – Safety of machinery – Safety related parts of control systems -Part 1: General principles for design.
- EN 62061 – Safety of machinery – Functional safety of safety-related electrical, electronic and programmable electronic control systems.
- EN 60204-1 – Safety of machinery – Electrical equipment of machines - Part 1: General requirements.
- EN 61800-5-2 – Adjustable speed electrical power drive systems - Part 5-2: Safety requirement – Functional.

DRAFT

ITEM 746L

Connections and Grounding

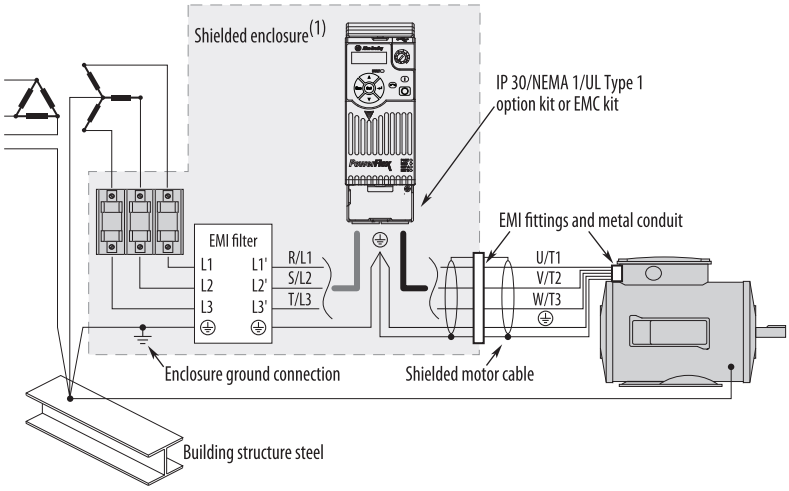

(1) Some installations require a shielded enclosure. Keep wire length as short as possible between the enclosure entry point and the EMI filter.

PowerFlex 520-Series RF Emission Compliance and Installation Requirements

	Standard/Limits		
Filter Type	**EN61800-3 Category C1 EN61000-6-3 CISPR11 Group 1 Class B**	**EN61800-3 Category C2 EN61000-6-4 CISPR11 Group 1 Class A (Input power ≤ 20 kVA)**	**EN61800-3 Category C3 (I ≤ 100 A) CISPR11 Group 1 Class A (Input power > 20 kVA)**
Internal	–	10 m (33 ft)	20 m (66 ft)
External(1)	30 m (16 ft)	100 m (328 ft)	100 m (328 ft)

(1) See Accessory Dimensions on page 39 for more information on optional external filters.

DRAFT

Fuses and Circuit Breaker Ratings

The PowerFlex 520-Series drive does not provide branch short circuit protection. This product should be installed with either input fuses or an input circuit breaker. National and local industrial safety regulations and/or electrical codes may determine additional requirements for these installations.

The tables on pages 28...31 provide drive ratings and recommended AC line input fuse and circuit breaker information. Both types of short circuit protection are acceptable for UL and IEC requirements. Sizes listed are the recommended sizes based on 40 °C (104 °F) and the U.S. N.E.C. Other country, state or local codes may require different ratings.

Fusing

The recommended fuse types are listed in the tables found on pages 28...31. If available current ratings do not match those listed in the tables provided, choose the next higher fuse rating.

- IEC – BS88 (British Standard) Parts 1 & 2(1), EN60269-1, Parts 1 & 2, type GG or equivalent should be used.
- UL – UL Class CC, T, RK1, or J should be used.

(1) Typical designations include, but may not be limited to the following;
Parts 1 & 2: AC, AD, BC, BD, CD, DD, ED, EFS, EF, FF, FG, GF, GG, GH.

Circuit Breakers

The "non-fuse" listings in the tables found on pages 28...31 include inverse time circuit breakers, instantaneous trip circuit breakers (motor circuit protectors) and 140M self-protected combination motor controllers. If one of these is chosen as the desired protection method, the following requirements apply:

- IEC – Both types of circuit breakers and 140M self-protected combination motor controllers are acceptable for IEC installations.
- UL – Only inverse time circuit breakers and the specified 140M selfprotected combination motor controllers are acceptable for UL installations.

Bulletin 140M (Self-Protected Combination Controller)/UL489 Circuit Breakers

When using Bulletin 140M or UL489 rated circuit breakers, the guidelines listed below must be followed in order to meet the NEC requirements for branch circuit protection.

- Bulletin 140M can be used in single motor applications.
- Bulletin 140M can be used up stream from the drive **without** the need for fuses.

DRAFT

Fuses and Circuit Breakers for PowerFlex 520-Series Drives

100...120V 1-Phase Input Protection Devices – Frames A...B

Catalog No.		Output Ratings					Input Ratings		Frame Size	Contactor Catalog No.	IEC Applications (Non-UL)				UL Applications			
PF 523	PF 525	ND		HD		Amps	kVA	Max Amps[1]			Fuses (Rating)		Circuit Breakers		Fuses (Max. Rating)	Circuit Breakers		Min. Enclosure Vol. (in.^{3})
		HP	kW	HP	kW						Min.	Max.	140U/140G	140M	Class / Catalog No.	140U/140G	140M[2][3][4]	
25A-V1P6N104	–	0.25	0.2	0.25	0.2	1.6	0.8	6.4	A	100-C09	10	16	140U-D6D2-B80	140M-C2E-B63	CLASS RK5, CC, J, or T / DLS-R-15	140U-D6D2-B80	140M-C2E-B63	–
25A-V2P5N104	25B-V2P5N104	0.5	0.4	0.5	0.4	2.5	1.3	9.6	A	100-C12	16	20	140U-D6D2-C12	140M-C2E-C10	CLASS RK5, CC, J, or T / DLS-R-20	140U-D6C2-C12	140M-C2E-C10	–
25A-V4P8N104	25B-V4P8N104	1.0	0.75	1.0	0.75	4.8	2.5	19.2	B	100-C23	25	40	140U-D6D2-C25	140M-D8E-C20	CLASS RK5, CC, J, or T / DLS-R-40	140U-D6D2-C25	140M-D8E-C20	–
25A-V6P0N104	25B-V6P0N104	1.5	1.1	1.5	1.1	6.0	3.2	24.0	B	100-C23	32	50	140U-D6D2-C30	140M-F8E-C25	CLASS RK5, CC, J, or T / DLS-R-50	140U-D6D2-C30	140M-F8E-C25	–

200...240V 1-Phase Input Protection Devices – Frames A...B

Catalog No.		Output Ratings					Input Ratings		Frame Size	Contactor Catalog No.	IEC Applications (Non-UL)				UL Applications			
PF 523	PF 525	ND		HD		Amps	kVA	Max Amps[1]			Fuses (Rating)		Circuit Breakers		Fuses (Max. Rating)	Circuit Breakers		Min. Enclosure Vol. (in.^{3})
		HP	kW	HP	kW						Min.	Max.	140U/140G	140M	Class / Catalog No.	140U/140G	140M[2][3][4]	
25A-A1P6N104	–	0.25	0.2	0.25	0.2	1.6	1.4	5.3	A	100-C09	6	10	140U-D6D2-C10	140M-C2E-B63	CLASS RK5, CC, J, or T / DLS-R-15	140U-D6D2-C10	140M-C2E-B63	–
25A-A1P6N114	–	0.25	0.2	0.25	0.2	1.6	1.4	5.3	A	100-C09	6	10	140U-D6D2-C10	140M-C2E-B63	CLASS RK5, CC, J, or T / DLS-R-15	140U-D6D2-C10	140M-C2E-B63	–
25A-A2P5N104	25B-A2P5N104	0.5	0.4	0.5	0.4	2.5	1.7	6.5	A	100-C09	10	16	140U-D6D2-C10	140M-C2E-C10	CLASS RK5, CC, J, or T / DLS-R-15	140U-D6D2-C10	140M-C2E-C10	–
25A-A2P5N114	25B-A2P5N114	0.5	0.4	0.5	0.4	2.5	1.7	6.5	A	100-C09	10	16	140U-D6D2-C10	140M-C2E-C10	CLASS RK5, CC, J, or T / DLS-R-15	140U-D6D2-C10	140M-C2E-C10	–
25A-A4P8N104	25B-A4P8N104	1.0	0.75	1.0	0.75	4.8	2.8	10.7	A	100-C12	16	25	140U-D6D2-C15	140M-C2E-C16	CLASS RK5, CC, J, or T / DLS-R-25	140U-D6D2-C15	140M-C2E-C16	–
25A-A4P8N114	25B-A4P8N114	1.0	0.75	1.0	0.75	4.8	2.8	10.7	A	100-C12	16	25	140U-D6D2-C15	140M-C2E-C16	CLASS RK5, CC, J, or T / DLS-R-25	140U-D6D2-C15	140M-C2E-C16	–
25A-A8P0N104	25B-A8P0N104	2.0	1.5	2.0	1.5	8.0	4.8	18.0	B	100-C23	25	40	140U-D6D2-C25	140M-F8E-C25	CLASS CC, J, or T / 40	140U-D6D2-C25	140M-F8E-C25	–
25A-A8P0N114	25B-A8P0N114	2.0	1.5	2.0	1.5	8.0	4.8	18.0	B	100-C23	25	40	140U-D6D2-C25	140M-F8E-C25	CLASS CC, J, or T / 40	140U-D6D2-C25	140M-F8E-C25	–
25A-A011N104	25B-A011N104	3.0	2.2	3.0	2.2	11.0	6.0	22.9	B	100-C37	32	50	140G-G6C3-C35	140M-F8E-C25	CLASS CC, J, or T / 50	–[5]	140M-F8E-C25	–
25A-A011N114	25B-A011N114	3.0	2.2	3.0	2.2	11.0	6.0	22.9	B	100-C37	32	50	140G-G6C3-C35	140M-F8E-C25	CLASS CC, J, or T / 50	–[5]	140M-F8E-C25	–

(1) When the drive is controlling motors with lower amp ratings, refer to the drive nameplate for drive intput current rating.
(2) The AIC ratings of the Bulletin 140M Motor Protector Circuit Breakers may vary. See Bulletin 140M Motor Protection Circuit Breakers Application Ratings.
(3) Bulletin 140M with adjustable current range should have the current trip set to the minimum range that the device will not trip.
(4) Manual Self-Protected (Type E) Combination Motor Controller, UL listed for 480Y/277 and 600Y/347 AC input. Not UL listed for use on 480V or 600V Delta/Delta, corner ground, or high-resistance ground systems.
(5) Circuit breaker selection is not available for this drive rating.

DRAFT

Fuses and Circuit Breakers for PowerFlex 520-Series Drives *(continued)*

200...240V 3-Phase Input Protection Devices – Frames A...E

Catalog No.[1]		Output Ratings					Input Ratings		Frame Size	Contactor Catalog No.	IEC Applications (Non-UL)				UL Applications			
PF 523	PF 525	ND		HD		Amps	kVA	Max Amps[2]			Fuses (Rating)		Circuit Breakers		Fuses (Max. Rating)	Circuit Breakers		Min. Enclosure Vol. (in.^{3})
		HP	kW	HP	kW						Min.	Max.	140U/140G	140M	Class / Catalog No.	140U/140G	140M[3][4][5]	
25A-B1P6N104	–	0.25	0.2	0.25	0.2	1.6	0.9	1.9	A	100-C09	3	6	140U-D6D3-B30	140M-C2E-B25	CLASS RK5, CC, J, or T / DLS-R-15	140U-D6D3-B30	140M-C2E-B25	–
25A-B2P5N104	25B-B2P5N104	0.5	0.4	0.5	0.4	2.5	1.2	2.7	A	100-C09	6	6	140U-D6D3-B40	140M-C2E-B40	CLASS RK5, CC, J, or T / DLS-R-6	140U-D6D3-B40	140M-C2E-B40	–
25A-B5P0N104	25B-B5P0N104	1.0	0.75	1.0	0.75	5.0	2.7	5.8	A	100-C09	10	16	140U-D6D3-B80	140M-C2E-B63	CLASS RK5, CC, J, or T / DLS-R-15	140U-D6D3-B80	140M-C2E-B63	–
25A-B8P0N104	25B-B8P0N104	2.0	1.5	2.0	1.5	8.0	4.3	9.5	A	100-C12	16	20	140U-D6D3-C10	140M-C2E-C10	CLASS RK5, CC, J, or T / DLS-R-20	140U-D6D3-C10	140M-C2E-C10	–
25A-B011N104	25B-B011N104	3.0	2.2	3.0	2.2	11.0	6.3	13.8	A	100-C23	20	32	140U-D6D3-C15	140M-C2E-C16	CLASS RK5, CC, J, or T / DLS-R-30	140U-D6D3-C15	140M-C2E-C16	–
25A-B017N104	25B-B017N104	5.0	4.0	5.0	4.0	17.5	9.6	21.1	B	100-C23	32	45	140U-D6D3-C25	140M-F8E-C25	CLASS CC, J, or T / 45	140U-D6D3-C25	140M-F8E-C25	–
25A-B024N104	25B-B024N104	7.5	5.5	7.5	5.5	24.0	12.2	26.6	C	100-C37	35	63	140G-G6C3-C35	140M-F8E-C32	CLASS CC, J, or T / 60	–[7]	140M-F8E-C32	–
25A-B032N104	25B-B032N104	10.0	7.5	10.0	7.5	32.2	15.9	34.8	D	100-C43	45	70	140G-G6C3-C60	140M-F8E-C45	CLASS RK5, CC, J, or T / DLS-R-70	–[7]	140M-F8E-C45	–
25A-B048N104	25B-B048N104	15.0	11.0	10.0	7.5	48.3	20.1	44.0	E	100-C60	63	90	140G-G6C3-C70	140M-F8E-C45	CLASS CC, J, or T / 90	–[7]	140M-F8E-C45	1416.0[6]
25A-B062N104	25B-B062N104	20.0	15.0	15.0	11.0	62.1	25.6	56.0	E	100-C72	70	125	140G-G6C3-C90	–[7]	CLASS CC, J, or T / 125	–[7]	–	–

(1) Normal and Heavy Duty ratings are available for this drive.

(2) When the drive is controlling motors with lower amp ratings, refer to the drive nameplate for drive intput current rating.

(3) The AIC ratings of the Bulletin 140M Motor Protector Circuit Breakers may vary. See Bulletin 140M Motor Protection Circuit Breakers Application Ratings.

(4) Bulletin 140M with adjustable current range should have the current trip set to the minimum range that the device will not trip.

(5) Manual Self-Protected (Type E) Combination Motor Controller, UL listed for 480Y/277 and 600Y/347 AC input. Not UL listed for use on 480V or 600V Delta/Delta, corner ground, or high-resistance ground systems.

(6) When using a Manual Self-Protected (Type E) Combination Motor Controller with this drive power rating, the drive must be installed in a ventilated or non-ventilated enclosure with the minimum volume specified in this column. Application specific thermal considerations may require a larger enclosure.

(7) Circuit breaker selection is not available for this drive rating.

DRAFT

Fuses and Circuit Breakers for PowerFlex 520-Series Drives *(continued)*

380...480V 3-Phase Input Protection Devices – Frames A...E

Catalog No.[1]		Output Ratings					Input Ratings		Frame Size	Contactor Catalog No.	IEC Applications (Non-UL)				UL Applications			
PF 523	PF 525	ND		HD		Amps	kVA	Max Amps[2]			Fuses (Rating)		Circuit Breakers		Fuses (Max. Rating)	Circuit Breakers		Min. Enclosure Vol. (in.^{3})
		HP	kW	HP	kW						Min.	Max.	140U/140G	140M	Class / Catalog No.	140U/140G	140M[3][4][5]	
25A-D1P4N104	25B-D1P4N104	0.5	0.4	0.5	0.4	1.4	1.7	1.9	A	100-C09	3	6	140U-D6D3-B30	140M-C2E-B25	CLASS RK5, CC, J, or T / DLS-R-6	–[7]	140M-C2E-B25	–
25A-D1P4N114	25B-D1P4N114	0.5	0.4	0.5	0.4	1.4	1.7	1.9	A	100-C09	3	6	140U-D6D3-B30	140M-C2E-B25	CLASS RK5, CC, J, or T / DLS-R-6	–[7]	140M-C2E-B25	–
25A-D2P3N104	25B-D2P3N104	1.0	0.75	1.0	0.75	2.3	2.9	3.2	A	100-C09	6	10	140U-D6D3-B60	140M-C2E-B40	CLASS RK5, CC, J, or T / DLS-R-10	–[7]	140M-C2E-B40	–
25A-D2P3N114	25B-D2P3N114	1.0	0.75	1.0	0.75	2.3	2.9	3.2	A	100-C09	6	10	140U-D6D3-B60	140M-C2E-B40	CLASS RK5, CC, J, or T / DLS-R-10	–[7]	140M-C2E-B40	–
25A-D4P0N104	25B-D4P0N104	2.0	1.5	2.0	1.5	4.0	5.2	5.7	A	100-C09	10	16	140U-D6D3-B60	140M-C2E-B63	CLASS RK5, CC, J, or T / DLS-R-15	–[7]	140M-C2E-B63	–
25A-D4P0N114	25B-D4P0N114	2.0	1.5	2.0	1.5	4.0	5.2	5.7	A	100-C09	10	16	140U-D6D3-B60	140M-C2E-B63	CLASS RK5, CC, J, or T / DLS-R-15	–[7]	140M-C2E-B63	–
25A-D6P0N104	25B-D6P0N104	3.0	2.2	3.0	2.2	6.0	6.9	7.5	A	100-C09	10	16	140U-D6D3-C10	140M-C2E-C10	CLASS RK5, CC, J, or T / DLS-R-15	–[7]	140M-C2E-C10	–
25A-D6P0N114	25B-D6P0N114	3.0	2.2	3.0	2.2	6.0	6.9	7.5	A	100-C09	10	16	140U-D6D3-C10	140M-C2E-C10	CLASS RK5, CC, J, or T / DLS-R-15	–[7]	140M-C2E-C10	–
25A-D010N104	25B-D010N104	5.0	4.0	5.0	4.0	10.5	12.6	13.8	B	100-C23	20	32	140U-D6D3-C15	140M-C2E-C16	CLASS RK5, CC, J, or T / DLS-R-30	–[7]	140M-C2E-C16	–
25A-D010N114	25B-D010N114	5.0	4.0	5.0	4.0	10.5	12.6	13.8	B	100-C23	20	32	140U-D6D3-C15	140M-C2E-C16	CLASS RK5, CC, J, or T / DLS-R-30	–[7]	140M-C2E-C16	–
25A-D013N104	25B-D013N104	7.5	5.5	7.5	5.5	13.0	14.1	15.4	C	100-C23	20	35	140U-D6D3-C25	140M-D8E-C20	CLASS CC, J, or T / 35	–[7]	140M-D8E-C20	–
25A-D013N114	25B-D013N114	7.5	5.5	7.5	5.5	13.0	14.1	15.4	C	100-C23	20	35	140U-D6D3-C25	140M-D8E-C20	CLASS CC, J, or T / 35	–[7]	140M-D8E-C20	–
25A-D017N104	25B-D017N104	10.0	7.5	10.0	7.5	17.0	16.8	18.4	C	100-C23	25	40	140U-D6D3-C25	140M-D8E-C20	CLASS CC, J, or T / 40	–[7]	140M-D8E-C20	–
25A-D017N114	25B-D017N114	10.0	7.5	10.0	7.5	17.0	16.8	18.4	C	100-C23	25	40	140U-D6D3-C25	140M-D8E-C20	CLASS CC, J, or T / 40	–[7]	140M-D8E-C20	–
25A-D024N104	25B-D024N104	15.0	11.0	15.0	11.0	24.0	24.1	26.4	D	100-C37	35	63	140G-G6C3-C40	140M-F8E-C32	CLASS CC, J, or T / 60	–[7]	140M-F8E-C32	656.7[6]
25A-D024N114	25B-D024N114	15.0	11.0	15.0	11.0	24.0	24.1	26.4	D	100-C37	35	63	140G-G6C3-C40	140M-F8E-C32	CLASS CC, J, or T / 60	–[7]	140M-F8E-C32	656.7[6]
25A-D030N104	25B-D030N104	20.0	15.0	15.0	11.0	30.0	30.2	33.0	D	100-C43	45	70	140G-G6C3-C50	140M-F8E-C45	CLASS CC, J, or T / 70	–[7]	140M-F8E-C45	656.7[6]
25A-D030N114	25B-D030N114	20.0	15.0	15.0	11.0	30.0	30.2	33.0	D	100-C43	45	70	140G-G6C3-C50	140M-F8E-C45	CLASS CC, J, or T / 70	–[7]	140M-F8E-C45	656.7[6]
25A-D037N114	25B-D037N114	25.0	18.5	20.0	15.0	37.0	30.8	33.7	E	100-C43	45	70	140G-G6C3-C50	140M-F8E-C45	CLASS CC, J, or T / 70	–[7]	140M-F8E-C45	–
25A-D043N114	25B-D043N114	30.0	22.0	25.0	18.5	43.0	35.6	38.9	E	100-C60	50	80	140G-G6C3-C60	140M-F8E-C45	CLASS CC, J, or T / 80	–[7]	140M-F8E-C45	–

(1) Normal and Heavy Duty ratings are available for this drive

(2) When the drive is controlling motors with lower amp ratings, refer to the drive nameplate for drive intput current rating.

(3) The AIC ratings of the Bulletin 140M Motor Protector Circuit Breakers may vary. See Bulletin 140M Motor Protection Circuit Breakers Application Ratings.

(4) Bulletin 140M with adjustable current range should have the current trip set to the minimum range that the device will not trip.

(5) Manual Self-Protected (Type E) Combination Motor Controller, UL listed for 480Y/277 and 600Y/347 AC input. Not UL listed for use on 480V or 600V Delta/Delta, corner ground, or high-resistance ground systems.

(6) When using a Manual Self-Protected (Type E) Combination Motor Controller with this drive power rating, the drive must be installed in a ventilated or non-ventilated enclosure with the minimum volume specified in this column. Application specific thermal considerations may require a larger enclosure.

(7) Circuit breaker selection is not available for this drive rating.

DRAFT

Fuses and Circuit Breakers for PowerFlex 520-Series Drives *(continued)*

525...600V 3-Phase Input Protection Devices – Frames A...E

Catalog No.[1]		Output Ratings					Input Ratings		Frame Size	Contactor Catalog No.	IEC Applications (Non-UL)				UL Applications			
PF 523	PF 525	ND		HD		Amps	kVA	Max Amps[2]			Fuses (Rating)		Circuit Breakers		Fuses (Max. Rating)	Circuit Breakers		Min. Enclosure Vol. (in.^{3})
		HP	kW	HP	kW						Min.	Max.	140U/140G	140M	Class / Catalog No.	140U/140G	140M[3][4][5]	
25A-E0P9N104	25B-E0P9N104	0.5	0.4	0.5	0.4	0.9	1.4	1.2	A	100-C09	3	6	140U-D6D3-B20	140M-C2E-B25	CLASS RK5, CC, J, or T / DLS-R-6	–[8]	140M-C2E-B25	–
25A-E1P7N104	25B-E1P7N104	1.0	0.75	1.0	0.75	1.7	2.6	2.3	A	100-C09	3	6	140U-D6D3-B30	140M-C2E-B25	CLASS RK5, CC, J, or T / DLS-R-6	–[8]	140M-C2E-B25	–
25A-E3P0N104	25B-E3P0N104	2.0	1.5	2.0	1.5	3.0	4.3	3.8	A	100-C09	6	10	140U-D6D3-B50	140M-C2E-B40	CLASS RK5, CC, J, or T / DLS-R-10	–[8]	140M-C2E-B40	–
25A-E4P2N104	25B-E4P2N104	3.0	2.2	3.0	2.2	4.2	6.1	5.3	A	100-C09	10	16	140U-D6D3-B80	140M-C2E-B63	CLASS RK5, CC, J, or T / DLS-R-15	–[8]	140M-D8E-B63	–
25A-E6P6N104	25B-E6P6N104	5.0	4.0	5.0	4.0	6.6	9.1	8.0	B	100-C09	10	20	140U-D6D3-C10	140M-C2E-C10	CLASS RK5, CC, J, or T / DLS-R-20	–[8]	140M-D8E-C10	–
25A-E9P9N104	25B-E9P9N104	7.5	5.5	7.5	5.5	9.9	12.8	11.2	C	100-C16	16	25	140U-D6D3-C15	140M-C2E-C16	CLASS RK5, CC, J, or T / DLS-R-25	–[8]	140M-D8E-C16[6]	–
25A-E012N104	25B-E012N104	10.0	7.5	10.0	7.5	12.0	15.4	13.5	C	100-C23	20	32	140U-D6D3-C20	140M-C2E-C16	CLASS RK5, CC, J, or T / DLS-R-30	–[8]	140M-D8E-C16	–
25A-E019N104	25B-E019N104	15.0	11.0	15.0	11.0	19.0	27.4	24.0	D	100-C30	32	50	140G-G6C3-C30	140M-F8E-C25	CLASS CC, J, or T / 50	–[8]	140M-F8E-C25	656.7[7]
25A-E022N104	25B-E022N104	20.0	15.0	15.0	11.0	22.0	31.2	27.3	D	100-C30	35	63	140G-G6C3-C35	140M-F8E-C32	CLASS CC, J, or T / 60	–[8]	140M-F8E-C32	656.7[7]
25A-E027N104	25B-E027N104	25.0	18.5	20.0	15.0	27.0	28.2	24.7	E	100-C30	35	50	140G-G6C3-C35	140M-F8E-C32	CLASS CC, J, or T / 50	–[8]	140M-F8E-C32	1416.0[7]
25A-E032N104	25B-E032N104	30.0	22.0	25.0	18.5	32.0	33.4	29.2	E	100-C37	40	63	140G-G6C3-C50	140M-F8E-C32	CLASS CC, J, or T / 60	–[8]	140M-F8E-C32	1416.0[7]

(1) Normal and Heavy Duty ratings are available for this drive

(2) When the drive is controlling motors with lower amp ratings, refer to the drive nameplate for drive intput current rating.

(3) The AIC ratings of the Bulletin 140M Motor Protector Circuit Breakers may vary. See Bulletin 140M Motor Protection Circuit Breakers Application Ratings.

(4) Bulletin 140M with adjustable current range should have the current trip set to the minimum range that the device will not trip.

(5) Manual Self-Protected (Type E) Combination Motor Controller, UL listed for 480Y/277 and 600Y/347 AC input. Not UL listed for use on 480V or 600V Delta/Delta, corner ground, or high-resistance ground systems.

(6) When used with the 140M circuit breaker, the 25A-E9P9104 must be installed in a ventilated or non-ventilated enclosure with the minimum size of 457.2 x 457.2 x 269.8 mm (18 x 18 x 10.62 in.).

(7) When using a Manual Self-Protected (Type E) Combination Motor Controller with this drive power rating, the drive must be installed in a ventilated or non-ventilated enclosure with the minimum volume specified in this column. Application specific thermal considerations may require a larger enclosure.

(8) Circuit breaker selection is not available for this drive rating.

DRAFT

Accessories and Dimensions

Dynamic Brake Resistors

Drive Ratings			Minimum Resistance	Resistance	
Input Voltage	HP	kW	Ω ± 10%	Ω ± 5%	Catalog No.(1)(2)
100...120V 50/60 Hz 1-Phase	0.25	0.2	56	91	AK-R2-091P500
	0.5	0.4	56	91	AK-R2-091P500
	1.0	0.75	56	91	AK-R2-091P500
	1.5	1.1	41	91	AK-R2-091P500
200...240V 50/60 Hz 1-Phase	0.25	0.2	56	91	AK-R2-091P500
	0.5	0.4	56	91	AK-R2-091P500
	1.0	0.75	56	91	AK-R2-091P500
	2.0	1.5	41	91	AK-R2-091P500
	3.0	2.2	32	47	AK-R2-047P500
200...240V 50/60 Hz 3-Phase	0.25	0.2	56	91	AK-R2-091P500
	0.5	0.4	56	91	AK-R2-091P500
	1.0	0.75	56	91	AK-R2-091P500
	2.0	1.5	41	91	AK-R2-091P500
	3.0	2.2	32	47	AK-R2-047P500
	5.0	4.0	18	47	AK-R2-047P500
	7.5	5.5	16	30	AK-R2-030P1K2
	10.0	7.5	14	30	AK-R2-030P1K2
	15.0	11.0	14	15	AK-R2-030P1K2(3)
	20.0	15.0	10	15	AK-R2-030P1K2(3)
380...480V 50/60 Hz 3-Phase	0.5	0.4	89	360	AK-R2-360P500
	1.0	0.75	89	360	AK-R2-360P500
	2.0	1.5	89	360	AK-R2-360P500
	3.0	2.2	89	120	AK-R2-120P1K2
	5.0	4.0	47	120	AK-R2-120P1K2
	7.5	5.5	47	120	AK-R2-120P1K2
	10.0	7.5	47	120	AK-R2-120P1K2
	15.0	11.0	43	60	AK-R2-120P1K2(3)
	20.0	15.0	43	60	AK-R2-120P1K2(3)
	25.0	18.5	27	40	AK-R2-120P1K2(4)
	30.0	22.0	27	40	AK-R2-120P1K2(4)
525...600V 50/60 Hz 3-Phase	0.5	0.4	112	360	AK-R2-360P500
	1.0	0.75	112	360	AK-R2-360P500
	2.0	1.5	112	360	AK-R2-360P500
	3.0	2.2	112	120	AK-R2-120P1K2
	5.0	4.0	86	120	AK-R2-120P1K2
	7.5	5.5	59	120	AK-R2-120P1K2
	10.0	7.5	59	120	AK-R2-120P1K2
	15.0	11.0	59	60	AK-R2-120P1K2(3)
	20.0	15.0	59	60	AK-R2-120P1K2(3)
	25.0	18.5	53	60	AK-R2-120P1K2(3)
	30.0	22.0	34	40	AK-R2-120P1K2(4)

(1) The resistors listed in this tables are rated for 5% duty cycle.

(2) Use of Rockwell Automation resistors is always recommended. The resistors listed have been carefully selected for optimizing performance in a variety of applications. Alternative resistors may be used, however, care must be taken when making a selection. See the PowerFlex Dynamic Braking Resistor Calculator, publication PFLEX-AT001.

(3) Requires two resistors wired in parallel.

(4) Requires three resistors wired in parallel.

DRAFT

ITEM 746L

EMC Line Filters

Short Circuit Current Rating = 100 kA					
Drive Ratings					
Input Voltage	**HP**	**kW**	**Current (A)**	**Frame Size**	**Catalog No.**
100...120V 50/60 Hz 1-Phase	0.25	0.2	1.6	A	25-RF011-AL
	0.5	0.4	2.5	A	25-RF011-AL
	1.0	0.75	4.8	B	25-RF023-BL
	1.5	1.1	6.0	B	25-RF023-BL
200...240V 50/60 Hz 1-Phase	0.25	0.2	1.6	A	25-RF011-AL
	0.5	0.4	2.5	A	25-RF011-AL
	1.0	0.75	4.8	A	25-RF011-AL
	2.0	1.5	8.0	B	25-RF023-BL
	3.0	2.2	11.0	B	25-RF023-BL
200...240V 50/60 Hz 3-Phase	0.25	0.2	1.6	A	25-RF014-AL
	0.5	0.4	2.5	A	25-RF014-AL
	1.0	0.75	5.0	A	25-RF014-AL
	2.0	1.5	8.0	A	25-RF014-AL
	3.0	2.2	11.0	A	25-RF014-AL
	5.0	4.0	17.5	B	25-RF021-BL
	7.5	5.5	24.0	C	25-RF027-CL
	10.0	7.5	32.2	D	25-RF035-DL
	15.0	11.0	48.3	E	25-RF056-EL
	20.0	15.0	62.1	E	25-RF056-EL
380...480V 50/60 Hz 3-Phase	0.5	0.4	1.4	A	25-RF7P5-AL
	1.0	0.75	2.3	A	25-RF7P5-AL
	2.0	1.5	4.0	A	25-RF7P5-AL
	3.0	2.2	6.0	A	25-RF7P5-AL
	5.0	4.0	10.5	B	25-RF014-BL
	7.5	5.5	13.0	C	25-RF018-CL
	10.0	7.5	17.0	C	25-RF018-CL
	15.0	11.0	24.0	D	25-RF033-DL
	20.0	15.0	30.0	D	25-RF033-DL
	25.0	18.5	37.0	E	25-RF039-EL
	30.0	22.0	43.0	E	25-RF039-EL(1)
525...600V 50/60 Hz 3-Phase	0.5	0.4	0.9	A	25-RF8P0-BL(2)
	1.0	0.75	1.7	A	25-RF8P0-BL(2)
	2.0	1.5	3.0	A	25-RF8P0-BL(2)
	3.0	2.2	4.2	A	25-RF8P0-BL(2)
	5.0	4.0	6.6	B	25-RF8P0-BL
	7.5	5.5	9.9	C	25-RF014-CL
	10.0	7.5	12.0	C	25-RF014-CL
	15.0	11.0	19.0	D	25-RF027-DL
	20.0	15.0	22.0	D	25-RF027-DL
	25.0	18.5	27.0	E	25-RF029-EL
	30.0	22.0	32.0	E	25-RF029-EL(1)

(1) EMC Line Filter size is based on the input current of the drive. See the tables on page 30 and page 31 for more information.

(2) This 600V drive rating needs to be matched with a frame B EMC Line Filter.

DRAFT

ITEM 746L

EMC Plates

Item	Description	Frame Size	Catalog No.
EMC Plate	Optional grounding plate for shielded cables.	A	25-EMC1-FA
		B	25-EMC1-FB
		C	25-EMC1-FC
		D	25-EMC1-FD
		E	25-EMC1-FE

Human Interface Modules (HIM) Option Kits and Accessories

Item	Description	Catalog No.
LCD Display, Remote Panel Mount	Digital speed control CopyCat capable IP 66 (NEMA Type 4X/12) indoor use only Includes 2.9 meter cable	22-HIM-C2S
LCD Display, Remote Handheld	Digital speed control Full numeric keyboard CopyCat capable IP 30 (NEMA Type 1) Includes 1.0 m cable Panel mount with optional Bezel Kit	22-HIM-A3
Bezel Kit	Panel mount for LCD Display, Remote Handheld unit, IP 30 (NEMA Type 1) Includes 2.0 m DSI cable	22-HIM-B1
DSI HIM Cable (DSI HIM to RJ45 cable)	1.0 m (3.3 ft)	22-HIM-H10
	2.9 m (9.51 ft)	22-HIM-H30

IP 30/NEMA 1/UL Type 1 Kit

Item	Description	Frame Size	Catalog No.
IP 30/NEMA 1/UL Type 1 Kit	Field installed kit. Converts drive to IP 30/NEMA 1/UL Type 1 enclosure. Includes conduit box with mounting screws and plastic top panel.	A	25-JBAA
		B	25-JBAB
		C	25-JBAC
		D	25-JBAD
		E	25-JBAE

Control Module Fan Kit

Item	Description	Frame Size	Catalog No.
Control Module Fan Kit	For use with drive in environments with ambient temperatures up to 70 °C or horizontal mounting.	A...D	25-FAN1-70C
		E	25-FAN2-70C

Incremental Encoder Input Option

Item	Description	Catalog No.
Incremental Encoder	Incremental encoder input option board.	25-ENC-1

WARNING: Only the 25-ENC-1 Encoder will work properly in the PowerFlex 525 drive. Installing an incorrect encoder card, such as the PowerFlex 527 25-ENC-2 will cause damage to the PowerFlex 525 drive.

DRAFT

Bulletin 160 to PowerFlex 520-Series Mounting Adapter Plate

Item	Description	B160 Frame Size	Catalog No.
Mounting Adapter Plate	For use with drive when replacing Bulletin 160 drives in existing installations to a PowerFlex 520-Series drive. Select the catalog number based on the frame size of your Bulletin 160 drive.	A	25-MAP-FA
		B	25-MAP-FB

Replacement Parts

PowerFlex 520-Series Power Module

Item	Description
PowerFlex 520-Series Power Module	Replacement power module for use with PowerFlex 520-Series drives. Includes: • Power Module • Power Module Front Cover • Power Terminal Guard • Heatsink Fan

Output Ratings					Input Voltage Range	Frame Size	Catalog No.
Normal Duty		Heavy Duty					
HP	kW	HP	kW	Output Current (A)			
100...120V AC (-15%, +10%) – 1-Phase Input, 0...230V 3-Phase Output							
0.25	0.2	0.25	0.2	1.6	85...132	A	25-PM1-V1P6
0.5	0.4	0.5	0.4	2.5	85...132	A	25-PM1-V2P5
1.0	0.75	1.0	0.75	4.8	85...132	B	25-PM1-V4P8
1.5	1.1	1.5	1.1	6.0	85...132	B	25-PM1-V6P0
200...240V AC (-15%, +10%) – 1-Phase Input, 0...230V 3-Phase Output							
0.25	0.2	0.25	0.2	1.6	170...264	A	25-PM1-A1P6
0.5	0.4	0.5	0.4	2.5	170...264	A	25-PM1-A2P5
1.0	0.75	1.0	0.75	4.8	170...264	A	25-PM1-A4P8
2.0	1.5	2.0	1.5	8.0	170...264	B	25-PM1-A8P0
3.0	2.2	3.0	2.2	11.0	170...264	B	25-PM1-A011
200...240V AC (-15%, +10%) – 1-Phase Input with EMC Filter, 0...230V 3-Phase Output							
0.25	0.2	0.25	0.2	1.6	170...264	A	25-PM2-A1P6
0.5	0.4	0.5	0.4	2.5	170...264	A	25-PM2-A2P5
1.0	0.75	1.0	0.75	4.8	170...264	A	25-PM2-A4P8
2.0	1.5	2.0	1.5	8.0	170...264	B	25-PM2-A8P0
3.0	2.2	3.0	2.2	11.0	170...264	B	25-PM2-A011
200...240V AC (-15%, +10%) – 3-Phase Input, 0...230V 3-Phase Output							
0.25	0.2	0.25	0.2	1.6	170...264	A	25-PM1-B1P6
0.5	0.4	0.5	0.4	2.5	170...264	A	25-PM1-B2P5
1.0	0.75	1.0	0.75	5.0	170...264	A	25-PM1-B5P0
2.0	1.5	2.0	1.5	8.0	170...264	A	25-PM1-B8P0
3.0	2.2	3.0	2.2	11.0	170...264	A	25-PM1-B011
5.0	4.0	5.0	4.0	17.5	170...264	B	25-PM1-B017
7.5	5.5	7.5	5.5	24.0	170...264	C	25-PM1-B024
10.0	7.5	10.0	7.5	32.2	170...264	D	25-PM1-B032
15.0	11.0	10.0	7.5	48.3	170...264	E	25-PM1-B048
20.0	15.0	15.0	11.0	62.1	170...264	E	25-PM1-B062
380...480V AC (-15%, +10%) – 3-Phase Input, 0...460V 3-Phase Output							
0.5	0.4	0.5	0.4	1.4	323...528	A	25-PM1-D1P4
1.0	0.75	1.0	0.75	2.3	323...528	A	25-PM1-D2P3

DRAFT

Output Ratings					Input Voltage Range	Frame Size	Catalog No.
Normal Duty		Heavy Duty					
HP	kW	HP	kW	Output Current (A)			
2.0	1.5	2.0	1.5	4.0	323...528	A	25-PM1-D4P0
3.0	2.2	3.0	2.2	6.0	323...528	A	25-PM1-D6P0
5.0	4.0	5.0	4.0	10.5	323...528	B	25-PM1-D010
7.5	5.5	7.5	5.5	13.0	323...528	C	25-PM1-D013
10.0	7.5	10.0	7.5	17.0	323...528	C	25-PM1-D017
15.0	11.0	15.0	11.0	24.0	323...528	D	25-PM1-D024
20.0	15.0	15.0	11.0	30.0	323...528	D	25-PM1-D030
380...480V AC (-15%, +10%) – 3-Phase Input with EMC Filter, 0...460V 3-Phase Output							
0.5	0.4	0.5	0.4	1.4	323...528	A	25-PM2-D1P4
1.0	0.75	1.0	0.75	2.3	323...528	A	25-PM2-D2P3
2.0	1.5	2.0	1.5	4.0	323...528	A	25-PM2-D4P0
3.0	2.2	3.0	2.2	6.0	323...528	A	25-PM2-D6P0
5.0	4.0	5.0	4.0	10.5	323...528	B	25-PM2-D010
7.5	5.5	7.5	5.5	13.0	323...528	C	25-PM2-D013
10.0	7.5	10.0	7.5	17.0	323...528	C	25-PM2-D017
15.0	11.0	15.0	11.0	24.0	323...528	D	25-PM2-D024
20.0	15.0	15.0	11.0	30.0	323...528	D	25-PM2-D030
25.0	18.5	20.0	15.0	37.0	323...528	E	25-PM2-D037
30.0	22.0	25.0	18.5	43.0	323...528	E	25-PM2-D043
525...600V AC (-15%, +10%) – 3-Phase Input, 0...575V 3-Phase Output							
0.5	0.4	0.5	0.4	0.9	446...660	A	25-PM1-E0P9
1.0	0.75	1.0	0.75	1.7	446...660	A	25-PM1-E1P7
2.0	1.5	2.0	1.5	3.0	446...660	A	25-PM1-E3P0
3.0	2.2	3.0	2.2	4.2	446...660	A	25-PM1-E4P2
5.0	4.0	5.0	4.0	6.6	446...660	B	25-PM1-E6P6
7.5	5.5	7.5	5.5	9.9	446...660	C	25-PM1-E9P9
10.0	7.5	10.0	7.5	12.0	446...660	C	25-PM1-E012
15.0	11.0	15.0	11.0	19.0	446...660	D	25-PM1-E019
20.0	15.0	15.0	11.0	22.0	446...660	D	25-PM1-E022
25.0	18.5	20.0	15.0	27.0	446...660	E	25-PM1-E027
30.0	22.0	25.0	18.5	32.0	446...660	E	25-PM1-E032

PowerFlex 520-Series Control Module

Item	Description	Frame Size	Catalog No.
PowerFlex 523 Control Module	Replacement control module for use with PowerFlex 520-Series drives. Includes: • Control Module • Control Module Front Cover	A...E	25A-CTM1
PowerFlex 525 Control Module			25B-CTM1

Other Parts

Item	Description	Frame Size	Catalog No.
PowerFlex 523 Control Module Front Cover	Replacement cover for the control module I/O terminals, EtherNet/IP and DSI ports.	A...E	25A-CTMFC1
PowerFlex 525 Control Module Front Cover			25B-CTMFC1
PowerFlex 520-Series Power Module Front Cover	Replacement cover for the PowerFlex 520-Series power module.	B	25-PMFC-FB
		C	25-PMFC-FC
		D	25-PMFC-FD
		E	25-PMFC-FE

DRAFT

Other Parts

Item	Description	Frame Size	Catalog No.
PowerFlex 520-Series Power Terminal Guard	Replacement finger guard for power terminals.	A	25-PTG1-FA
		B	25-PTG1-FB
		C	25-PTG1-FC
		D	25-PTG1-FD
		E	25-PTG1-FE
PowerFlex 520-Series Heatsink Fan Kit	Replacement fan for drive power module.	A	25-FAN1-FA
		B	25-FAN1-FB
		C	25-FAN1-FC
		D	25-FAN1-FD
		E	25-FAN1-FE

Communication Option Kits and Accessories

Item	Description	Catalog No.
Communication Adapters	Embedded communication options for use with the PowerFlex 520-Series drives: • DeviceNet • Dual Port EtherNet/IP • PROFIBUS DP-V1	25-COMM-D 25-COMM-E2P 25-COMM-P
Compact I/O Module	Three channel	1769-SM2
Universal Serial Bus™ (USB) Converter Module	Provides serial communication via DF1 protocol for use with Connected Components Workbench software. Includes: • 2m USB cable (1) • 20-HIM-H10 cable (1) • 22-HIM-H10 cable (1)	1203-USB
Serial Converter Module (RS485 to RS232)	Provides serial communication via DF1 protocol for use with Connected Components Workbench software. Includes: • DSI to RS232 serial converter (1) • 1203-SFC serial cable (1) • 22-RJ45CBL-C20 cable (1)	22-SCM-232
DSI Cable	2.0 m RJ45 to RJ45 cable, male to male connectors.	22-RJ45CBL-C20
Serial Cable	2.0 m serial cable with a locking low profile connector to connect to the serial converter and a 9-pin sub-miniature D female connector to connect to a computer.	1203-SFC
Splitter Cable	RJ45 one to two port splitter cable (Modbus only)	AK-U0-RJ45-SC1
Terminating Resistors	RJ45 120 Ohm resistors (2 pieces)	AK-U0-RJ45-TR1
Terminal Block	RJ45 Two position terminal block (5 pieces)	AK-U0-RJ45-TB2P
Connected Components Workbench Software (Download or DVD-ROM)	Windows-based software packages for programming and configuring Allen-Bradley drives and other Rockwell Automation products. Compatibility: Windows XP, Windows Vista and Windows 7	http://ab.rockwellautomation.com/programmable-controllers/connected-components-workbench-software

Bulletin 1321-3R Series Line Reactors

Output Ratings[1]				Input Line Reactor[3][4]		Output Line Reactor[3][4]	
Normal Duty		Heavy Duty		IP 00 (Open Style)	IP 11 (NEMA/UL Type 1)	IP 00 (Open Style)	IP 11 (NEMA/UL Type 1)
HP	kW	HP	kW	Catalog No.	Catalog No.	Catalog No.	Catalog No.
200...240V 50/60 Hz 1-Phase[2]							
0.25	0.2	0.25	0.2	1321-3R4-A	1321-3RA4-A	1321-3R2-D	1321-3RA2-D
0.5	0.4	0.5	0.4	1321-3R8-A	1321-3RA8-A	1321-3R2-D	1321-3RA2-D
1.0	0.75	1.0	0.75	1321-3R8-A	1321-3RA8-A	1321-3R4-A	1321-3RA4-A
2.0	1.5	2.0	1.5	1321-3R18-A	1321-3RA18-A	1321-3R8-A	1321-3RA8-A
3.0	2.2	3.0	2.2	1321-3R18-A	1321-3RA18-A	1321-3R12-A	1321-3RA12-A
200...240V 50/60 Hz 3-Phase							

DRAFT

Bulletin 1321-3R Series Line Reactors

Output Ratings[1]				Input Line Reactor[3][4]		Output Line Reactor[3][4]	
Normal Duty		Heavy Duty		IP 00 (Open Style)	IP 11 (NEMA/UL Type 1)	IP 00 (Open Style)	IP 11 (NEMA/UL Type 1)
HP	kW	HP	kW	Catalog No.	Catalog No.	Catalog No.	Catalog No.
0.25	0.2	0.25	0.2	1321-3R2-D	1321-3RA2-D	1321-3R2-D	1321-3RA2-D
0.5	0.4	0.5	0.4	1321-3R2-D	1321-3RA2-D	1321-3R2-D	1321-3RA2-D
1.0	0.75	1.0	0.75	1321-3R4-A	1321-3RA4-A	1321-3R4-A	1321-3RA4-A
2.0	1.5	2.0	1.5	1321-3R8-A	1321-3RA8-A	1321-3R8-A	1321-3RA8-A
3.0	2.2	3.0	2.2	1321-3R12-A	1321-3RA12-A	1321-3R12-A	1321-3RA12-A
5.0	4.0	5.0	4.0	1321-3R18-A	1321-3RA18-A	1321-3R18-A	1321-3RA18-A
7.5	5.5	7.5	5.5	1321-3R25-A	1321-3RA25-A	1321-3R25-A	1321-3RA25-A
10.0	7.5	10.0	7.5	1321-3R35-A	1321-3RA35-A	1321-3R35-A	1321-3RA35-A
15.0	11.0	10.0	7.5	1321-3R45-A	1321-3RA45-A	1321-3R45-A	1321-3RA45-A
20.0	15.0	15.0	11.0	1321-3R55-A (ND) 1321-3R45-A (HD)	1321-3RA55-A (ND) 1321-3RA45-A (HD)	1321-3R55-A (ND) 1321-3R45-A (HD)	1321-3RA55-A (ND) 1321-3RA45-A (HD)
380...480V 50/60 Hz 3-Phase							
0.5	0.4	0.5	0.4	1321-3R2-B	1321-3RA2-B	1321-3R2-B	1321-3RA2-B
1.0	0.75	1.0	0.75	1321-3R4-C	1321-3RA4-C	1321-3R4-C	1321-3RA4-C
2.0	1.5	2.0	1.5	1321-3R4-B	1321-3RA4-B	1321-3R4-B	1321-3RA4-B
3.0	2.2	3.0	2.2	1321-3R8-C	1321-3RA8-C	1321-3R8-C	1321-3RA8-C
5.0	4.0	5.0	4.0	1321-3R12-B	1321-3RA12-B	1321-3R12-B	1321-3RA12-B
7.5	5.5	7.5	5.5	1321-3R12-B	1321-3RA12-B	1321-3R12-B	1321-3RA12-B
10.0	7.5	10.0	7.5	1321-3R18-B	1321-3RA18-B	1321-3R18-B	1321-3RA18-B
15.0	11.0	15.0	11.0	1321-3R25-B	1321-3RA25-B	1321-3R25-B	1321-3RA25-B
20.0	15.0	15.0	11.0	1321-3R35-B (ND) 1321-3R25-B (HD)	1321-3RA35-B (ND) 1321-3RA25-B (HD)	1321-3R35-B (ND) 1321-3R25-B (HD)	1321-3RA35-B (ND) 1321-3RA25-B (HD)
25.0	18.5	20.0	15.0	1321-3R35-B	1321-3RA35-B	1321-3R35-B	1321-3RA35-B
30.0	22.0	25.0	18.5	1321-3R45-B (ND) 1321-3R35-B (HD)	1321-3RA45-B (ND) 1321-3RA35-B (HD)	1321-3R45-B (ND) 1321-3R35-B (HD)	1321-3RA45-B (ND) 1321-3RA35-B (HD)
525...600V 50/60 Hz 3-Phase							
0.5	0.4	0.5	0.4	1321-3R1-C	1321-3RA1-C	1321-3R1-C	1321-3RA1-C
1.0	0.75	1.0	0.75	1321-3R2-B	1321-3RA2-B	1321-3R2-B	1321-3RA2-B
2.0	1.5	2.0	1.5	1321-3R4-C	1321-3RA4-C	1321-3R4-C	1321-3RA4-C
3.0	2.2	3.0	2.2	1321-3R4-B	1321-3RA4-B	1321-3R4-B	1321-3RA4-B
5.0	4.0	5.0	4.0	1321-3R8-C	1321-3RA8-C	1321-3R8-C	1321-3RA8-C
7.5	5.5	7.5	5.5	1321-3R12-B	1321-3RA12-B	1321-3R12-B	1321-3RA12-B
10.0	7.5	10.0	7.5	1321-3R12-B	1321-3RA12-B	1321-3R12-B	1321-3RA12-B
15.0	11.0	15.0	11.0	1321-3R18-B	1321-3RA18-B	1321-3R18-B	1321-3RA18-B
20.0	15.0	15.0	11.0	1321-3R25-B (ND) 1321-3R18-B (HD)	1321-3RA25-B (ND) 1321-3RA18-B (HD)	1321-3R25-B (ND) 1321-3R18-B (HD)	1321-3RA25-B (ND) 1321-3RA18-B (HD)
25.0	18.5	20.0	15.0	1321-3R35-C (ND) 1321-3R25-C (HD)	1321-3RA35-C (ND) 1321-3RA25-C (HD)	1321-3R35-C (ND) 1321-3R25-C (HD)	1321-3RA35-C (ND) 1321-3RA25-C (HD)
30.0	22.0	25.0	18.5	1321-3R35-C (ND) 1321-3R25-B (HD)	1321-3RA35-C (ND) 1321-3RA25-B (HD)	1321-3R35-C (ND) 1321-3R25-B (HD)	1321-3RA35-C (ND) 1321-3RA25-B (HD)

(1) Normal Duty and Heavy Duty ratings for 15 HP (11 kW) and below are identical except for 200...240V 3-Phase 15 HP (11 kW) drive.

(2) Standard 3-phase reactors can be used for 1-phase applications by routing each of the two supply conductors through an outside coil and leaving the center open.

(3) Catalog numbers listed are for 3% impedance. 5% impedance reactor types are also available. See 1321 Power Conditioning Products Technical Data, publication 1321-TD001.

(4) Input line reactors were sized based on the NEC fundamental motor amps. Output line reactors were sized based on the VFD rated output currents.

DRAFT

Accessory Dimensions

IP 30/NEMA 1/UL Type 1 Kit – Dimensions are in mm and (in.).

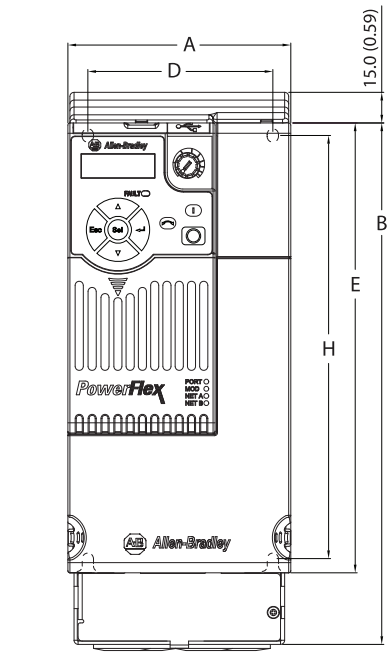

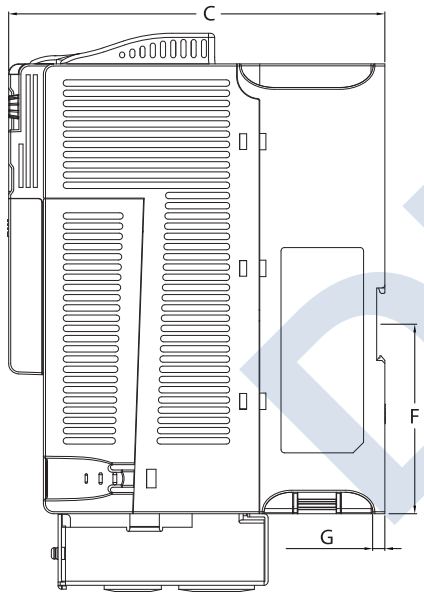

Frame A

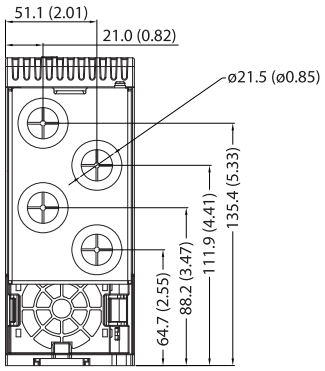

Frame B

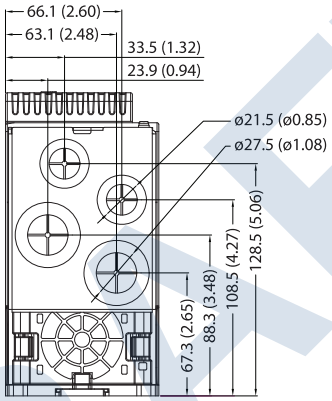

Frame C

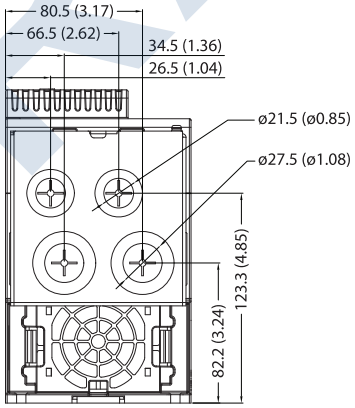

Frame D

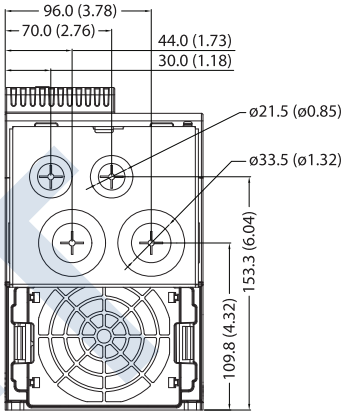

Frame E

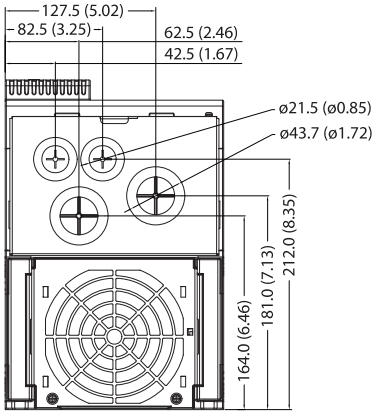

Frame Size	A	B	C	D	E	F	G	H
A	72.0 (2.83)	219.0 (8.62)	172.0 (6.77)	57.5 (2.26)	152.0 (5.98)	92.7 (3.65)	6.0 (0.24)	140.0 (5.51)
B	87.0 (3.43)	218.0 (8.58)	172.0 (6.77)	72.5 (2.85)	180.0 (7.09)	92.7 (3.65)	6.0 (0.24)	168.0 (6.61)
C	109.0 (4.29)	255.0 (10.04)	184.0 (7.24)	90.5 (3.56)	222.0 (8.66)	92.7 (3.65)	6.0 (0.24)	207.0 (8.15)
D	130.0 (5.12)	295.0 (11.61)	212.0 (8.35)	116.0 (4.57)	260.0 (10.24)	–	6.0 (0.24)	247.0 (9.74)
E	185.0 (7.28)	350.0 (13.78)	279.0 (10.98)	160.0 (6.30)	300.0 (11.81)	–	7.6 (0.30)	280.0 (11.02)

DRAFT

Control Module Fan Kit – Dimensions are in mm and (in.).

Frame A...D

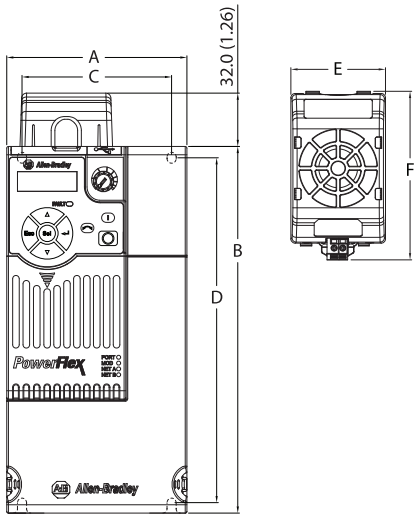

Frame E

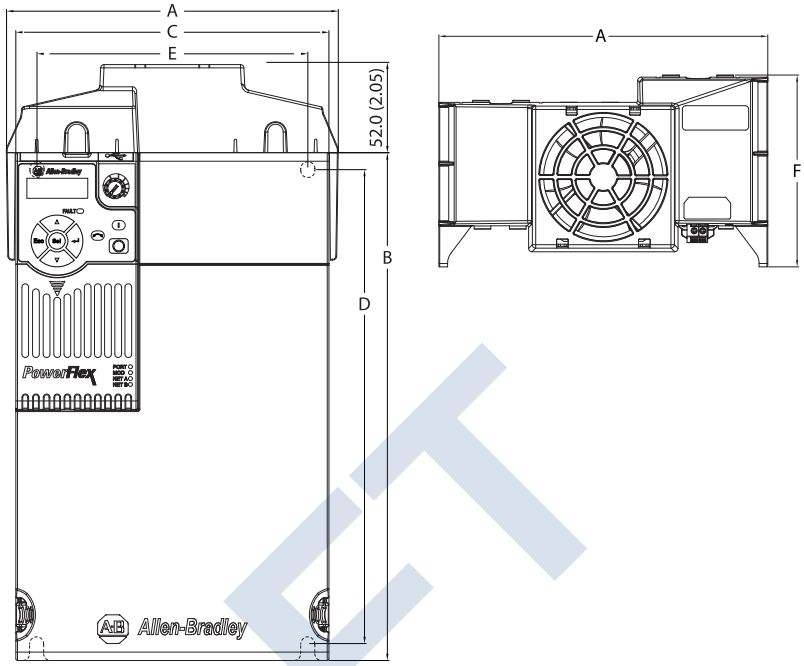

Frame Size	A	B	C	D	E	F
A	72.0 (2.83)	152.0 (5.98)	57.5 (2.26)	140.0 (5.51)	56.0 (2.20)	99.8 (3.93)
B	87.0 (3.43)	180.0 (7.09)	72.5 (2.85)	168.0 (6.61)	56.0 (2.20)	99.8 (3.93)
C	109.0 (4.29)	220.0 (8.66)	90.5 (3.56)	207.0 (8.15)	56.0 (2.20)	99.8 (3.93)
D	130.0 (5.12)	260.0 (10.24)	116.0 (4.57)	247.0 (9.72)	56.0 (2.20)	99.8 (3.93)
E	196.0 (7.72)	300.0 (11.81)	185.0 (7.28)	280.0 (11.02)	196.0 (7.72)	114.3 (4.50)

Specifications	25-FAN1-70C	25-FAN2-70C
Rated Voltage	24V DC	
Operation Voltage	14...27.6V DC	
Input Current	0.1 A	0.15 A
Speed (Reference)	7000 rpm	4500 ± 10% rpm
Maximum Air Flow (At zero static pressure)	0.575 m^3/min	1.574 m^3/min
Maximum Air Pressure (At zero air flow)	7.70 mmH_2O	9.598 mmH_2O
Acoustical Noise	40.5 dB-A	46.0 dB-A
Insulation Type	UL Class A	
Frame Size	Frame A...D	Frame E
Wire Size	0.32 mm^2 (22 AWG)	
Torque	0.29...0.39 Nm (2.6...3.47 lb-in.)	

DRAFT

EMC Line Filter – Dimensions are in mm and (in.).

Frame A...D

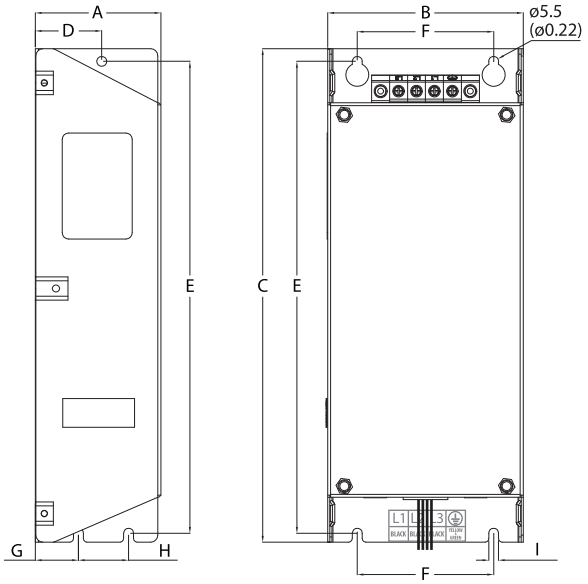

Frame E

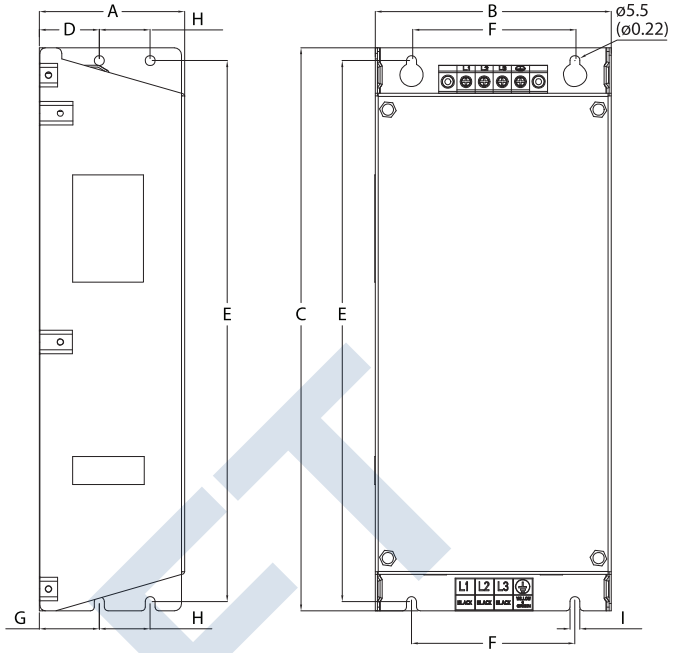

Frame Size	A	B	C	D	E	F	G	H	I
A	55.0 (2.17)	72.0 (2.83)	234.0 (9.21)	30.0 (1.18)	223.0 (8.78)	54.0 (2.13)	20.0 (0.79)	23.0 (0.91)	5.5 (0.22)
B	70.0 (2.76)	87.0 (3.43)	270.0 (10.63)	35.0 (1.38)	258.0 (10.16)	58.0 (2.28)	25.0 (0.98)	24.0 (0.94)	5.5 (0.22)
C	70.0 (2.76)	109.0 (4.29)	275.0 (10.83)	37.0 (1.46)	263.0 (10.35)	76.0 (2.99)	25.0 (0.98)	28.0 (1.10)	5.5 (0.22)
D	80.0 (3.15)	130.0 (5.12)	310.0 (12.20)	33.0 (1.30)	298.0 (11.73)	90.0 (3.54)	33.0 (1.30)	28.0 (1.10)	5.5 (0.22)
E	80.0 (3.15)	155.0 (6.10)	390.0 (15.35)	33.0 (1.30)	375.0 (14.76)	110.0 (4.33)	33.0 (1.30)	28.0 (1.10)	5.5 (0.22)

DRAFT

Safe-Torque-Off Function

The PowerFlex 525 Safe-Torque-Off function, when used with other safety components, helps provide protection according to EN ISO 13849 and EN62061 for safe-off and protection against restart. The PowerFlex 525 Safe-Torque-Off function is just one component in a safety control system. Components in the system must be chosen and applied appropriately to achieve the desired level of operator safeguarding.

PowerFlex 525 Safe-Torque-Off Overview

The PowerFlex 525 Safe-Torque-Off function:

- Provides the Safe-Torque-Off (STO) function defined in EN IEC 61800-5-2.
- Blocks gate-firing signals from reaching the Insulated Gate Bipolar Transistor (IGBT) output devices of the drive. This prevents the IGBTs from switching in the sequence necessary to generate torque in the motor.
- Can be used in combination with other safety devices to fulfill the requirements of a system "safe torque off" function which satisfies Category 3 / PL (d) according to EN ISO 13849-1 and SIL CL2 according to EN 62061, IEC 61508, and EN 61800-5-2.

IMPORTANT The function is suitable for performing mechanical work on the drive system or affected area of a machine only. It does not provide electrical safety.

EC Type Examination Certification

TÜV Rheinland has certified the PowerFlex 525 Safe-Torque-Off function compliant with the requirements for machines defined in Annex I of the EC Directive 2006/42/EC, and that it complies with the requirements of the relevant standards listed below:

- EN ISO 13849-1 Safety of machinery – Safety related parts of control systems – Part 1: General principles for design. (PowerFlex 525 STO achieves Category 3 / PL(d))
- EN 61800-5-2 Adjustable speed electrical power drive systems – Part 5-2 Safety requirements – Functional. (PowerFlex 525 STO achieves SIL CL 2)
- EN 62061 Safety of machinery – Functional safety of safety-related electrical, electronic and programmable electronic control systems.
- IEC 61508 Part 1-7 Functional safety of electrical/electronic/programmable electronic safety-related systems – Parts 1-7.

TÜV also certifies that the PowerFlex 525 STO may be used in applications up to Category 3/ PL(d) according to EN ISO 13849-1 and SIL 2 according to EN 62061 / EN 61800-5-2 / IEC 61508.

The TÜV Rheinland certificate may be found at http://www.rockwellautomation.com/products/certification/.

DRAFT

ITEM 746L

Safety Concept

The PowerFlex 525 Safe-Torque-Off function is suitable for use in safety applications up to and including Category 3 / PL(d) according to EN ISO 13849-1 and SIL 2 according to EN 62061 / EN 61800-5-2 / IEC 61508.

In addition, the PowerFlex 525 STO function may be used together with other components in a safety application to achieve an overall Category 3 / PL(e) according to EN ISO 13849-1 and SIL 3 according to EN 62061 and IEC 61508. This is illustrated in Example 3 on page 46.

Safety requirements are based on the standards current at the time of certification.

The PowerFlex 525 STO function is intended for use in safety-related applications where the de-energized state is considered to be the safe state. All of the examples shown here are based on achieving de-energization as the safe state for typical Machine Safety and Emergency Shutdown (ESD) systems.

PFD and PFH Data

PFD and PFH calculations are based on the equations from Part 6 of EN 61508.

This table provides data for a 20-year proof test interval and demonstrates the worst-case effect of various configuration changes on the data.

PFD and PFH for 20-year Proof Test Interval

Attribute	Value
PFD	6.62E-05 (MTTF = 3593 years)
PFH_D	8.13E-10
SFF	83%
DC	62.5%
CAT	3
HFT	1 (1oo2)
PTI	20 YEARS
Hardware Type	Type A

Safety Reaction Time

The safety reaction time from an input signal condition that triggers a safe stop, to the initiation of the configured Stop Type, is 100 ms (maximum).

DRAFT

Connection Examples

Example 1 – Safe-Torque-Off Connection with Coast-to-Stop Action, SIL 2/PL d

Stop Category 0 – Coast

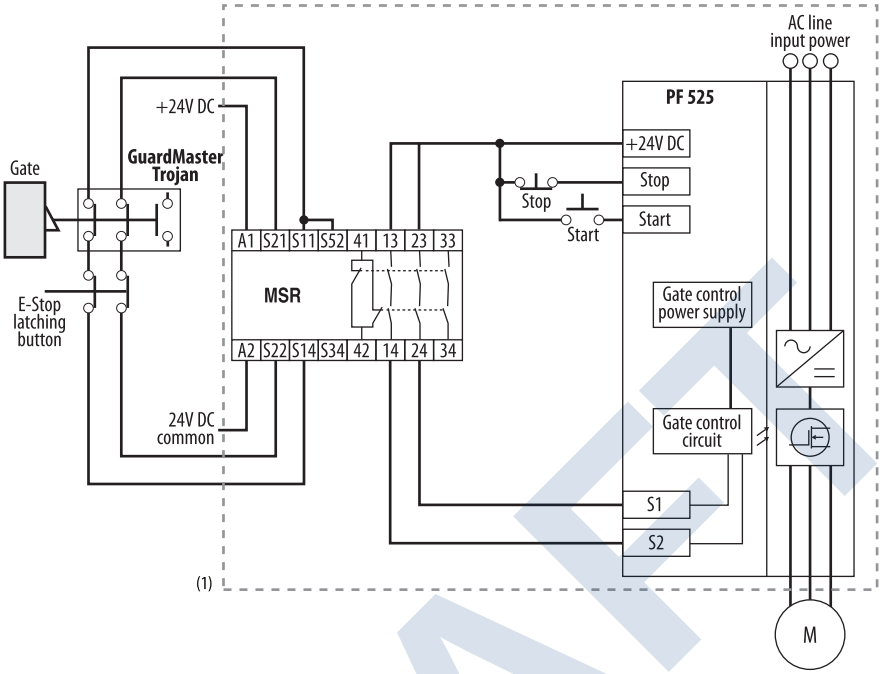

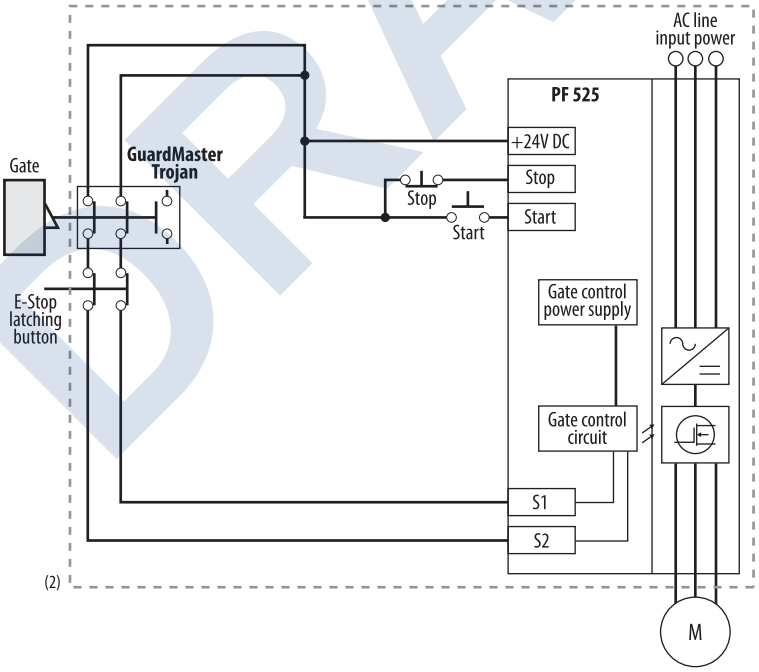

(1) Enclosure Recommended. Note: External wiring failure modes must be considered as described in EN ISO 13849-2. Enclosure or other measure to exclude these failure modes should be used.

(2) In some situations, a safety relay is not required if both the switch and PowerFlex 525 are installed in the same enclosure.

DRAFT

Stop Category 0 – Coast with Two PowerFlex 525 Drives

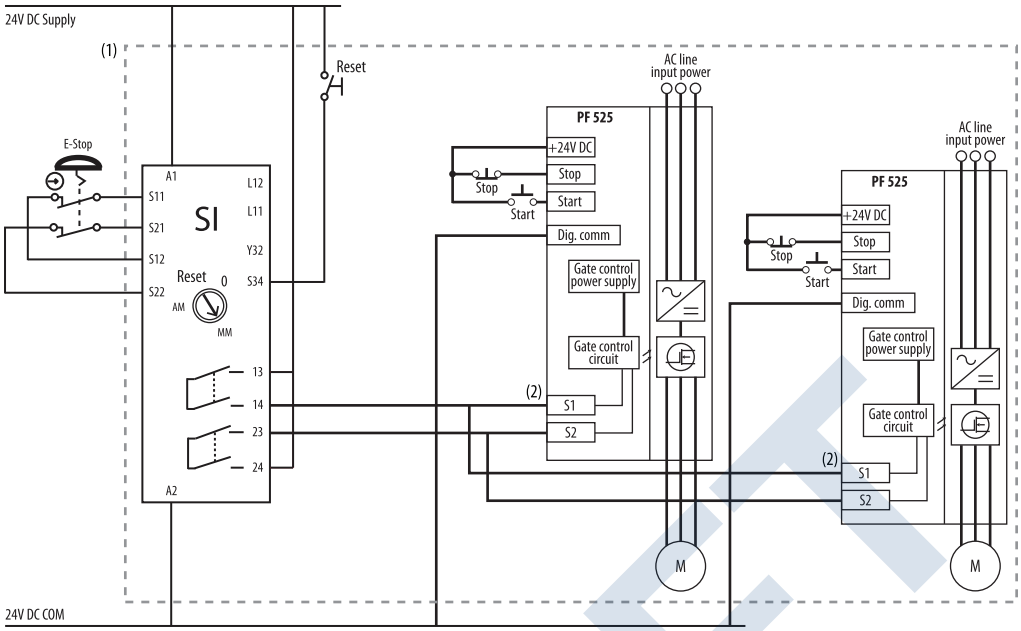

(1) Enclosure Recommended. Note: External wiring failure modes must be considered as described in EN ISO 13849-2. Enclosure or other measure to exclude these failure modes should be used.
(2) Each safety input draws 6 mA from the supply.

Example 2 – Safe-Torque-Off Connection with Controlled Stop Action, SIL 2/PL d

Stop Category 1– Controlled

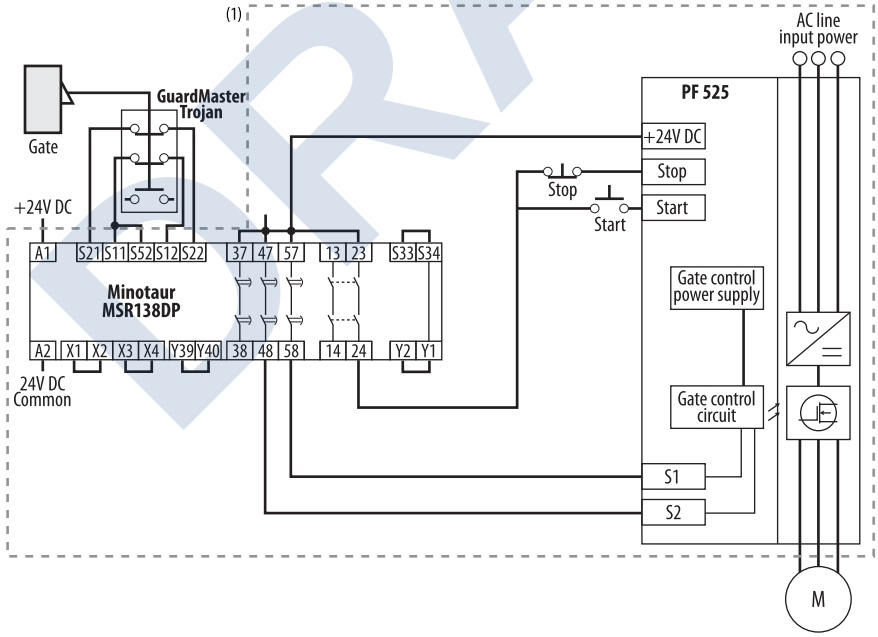

(1) Enclosure Recommended. Note: External wiring failure modes must be considered as described in EN ISO 13849-2. Enclosure or other measure to exclude these failure modes should be used.

DRAFT

Example 3 – Safe-Torque-Off Connection with Coast-to-Stop Action Using External +24V supply, SIL 3/PL e

Stop Category 0 – Coast

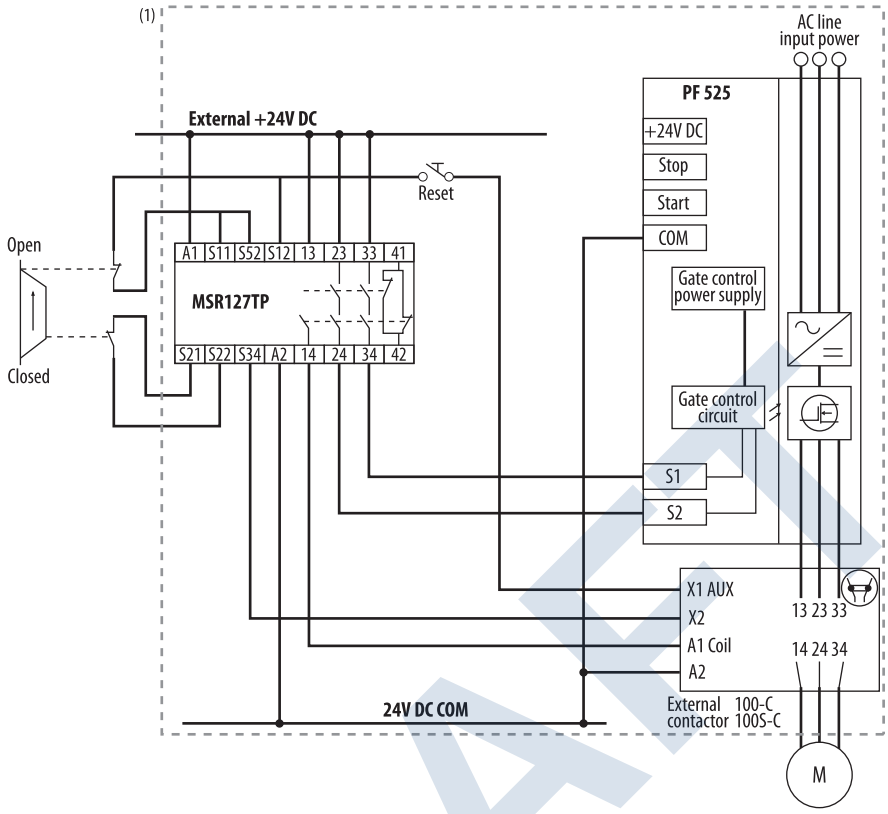

(1) Enclosure Recommended. Note: External wiring failure modes must be considered as described in EN ISO 13849-2. Enclosure or other measure to exclude these failure modes should be used.

DRAFT

ITEM 746L

Additional Resources

These documents contain additional information concerning related products from Rockwell Automation.

Title	Publication
PowerFlex 520-Series Adjustable Frequency AC Drive User Manual	520-UM001
PowerFlex 4-Class Human Interface Module (HIM) DSI Quick Reference	22HIM-QR001
PowerFlex 525 Embedded EtherNet/IP Adapter User Manual	520COM-UM001
PowerFlex 25-COMM-D DeviceNet Adapter User Manual	520COM-UM002
PowerFlex 25-COMM-E2P EtherNet/IP Adapter User Manual	520COM-UM003
PowerFlex 25-COMM-P PROFIBUS DP Adapter User Manual	520COM-UM004
Dynamic Braking Resistor Calculator	PFLEX-AT001
Wiring and Grounding Guidelines for PWM AC Drives	DRIVES-IN001
Preventive Maintenance of Industrial Control and Drive System Equipment	DRIVES-TD001
Safety Guidelines for the Application, Installation and Maintenance of Solid State Control	SGI-1.1

You can view or download publications at http://www.rockwellautomation.com/literature/. To order paper copies of technical documentation, contact your local Allen-Bradley distributor or Rockwell Automation sales representative.

DRAFT

Important Information

Solid-state equipment has operational characteristics differing from those of electromechanical equipment. Safety Guidelines for the Application, Installation and Maintenance of Solid State Controls (publication SGI-1.1 available from your local Rockwell Automation sales office or online at http://www.rockwellautomation.com/literature/) describes some important differences between solid-state equipment and hard-wired electromechanical devices. Because of this difference, and also because of the wide variety of uses for solid-state equipment, all persons responsible for applying this equipment must satisfy themselves that each intended application of this equipment is acceptable.

In no event will Rockwell Automation, Inc. be responsible or liable for indirect or consequential damages resulting from the use or application of this equipment.

The examples and diagrams in this publication are included solely for illustrative purposes. Because of the many variables and requirements associated with any particular installation, Rockwell Automation, Inc. cannot assume responsibility or liability for actual use based on the examples and diagrams.

No patent liability is assumed by Rockwell Automation, Inc. with respect to use of information, circuits, equipment, or software described in this manual.

Reproduction of the contents of this manual, in whole or in part, without written permission of Rockwell Automation, Inc., is prohibited.

Documentation Feedback

Your comments will help us serve your documentation needs better. If you have any suggestions on how to improve this document, complete this form, publication RA-DU002, available at http://www.rockwellautomation.com/literature/.

DRAFT

Allen-Bradley, Rockwell Software, Rockwell Automation, PowerFlex, Connected Components Workbench, Studio 5000, DriveTools SP, AppView, CustomView, QuickView, MainsFree Programming, and PointStop are trademarks of Rockwell Automation, Inc.

Trademarks not belonging to Rockwell Automation are property of their respective companies.

www.rockwellautomation.com

Power, Control and Information Solutions Headquarters

Americas: Rockwell Automation, 1201 South Second Street, Milwaukee, WI 53204-2496 USA, Tel: (1) 414.382.2000, Fax: (1) 414.382.4444
Europe/Middle East/Africa: Rockwell Automation NV, Pegasus Park, De Kleetlaan 12a, 1831 Diegem, Belgium, Tel: (32) 2 663 0600, Fax: (32) 2 663 0640
Asia Pacific: Rockwell Automation, Level 14, Core F, Cyberport 3, 100 Cyberport Road, Hong Kong, Tel: (852) 2887 4788, Fax: (852) 2508 1846

Publication 520-TD001E-EN-E - July 2016
Supersedes Publication 520-TD001D-EN-E – January 2014

Copyright © 2016 Rockwell Automation, Inc. All rights reserved.

DRAWING LIST

Standard Detail Drawings

00.01	Control Panel Wiring & Fabrication Specifications
00.02	Electrical & Instrument Symbols

Screw Press Control Panel (CP-1)

CP1-10.00	Layout - Panel - Front Elevation
CP1-10.02	Layout - Panel - Left & Right Elevations
CP1-10.05	Layout - Panel - Backpan Elevation
CP1-10.07	Layout - Panel - PLC Rack 1
CP1-10.10	Layout - Panel - Controls Details
CP1-10.20	Layout - Panel - Nameplate Details
CP1-20.00	COMM - Network Overview Block Diagram
CP1-23.00	Network Switch (NS-1), Port Schedule
CP1-30.00	480VAC Power Distribution Diagram
CP1-31.00	120VAC Power Distribution Diagram
CP1-31.50	120VAC UPS Power Distribution Diagram
CP1-32.00	24VDC Power Distribution Diagram
CP1-40.101A	Discrete Input Module, Rack 1, Slot 01 - Wiring Diagram
CP1-40.101B	Discrete Input Module, Rack 1, Slot 01 - Wiring Diagram
CP1-40.102A	Discrete Input Module, Rack 1, Slot 02 - Wiring Diagram
CP1-40.102B	Discrete Input Module, Rack 1, Slot 02 - Wiring Diagram
CP1-40.103A	Discrete Output Module, Rack 1, Slot 03 - Wiring Diagram
CP1-40.103B	Discrete Output Module, Rack 1, Slot 03 - Wiring Diagram
CP1-40.104A	Analog Input Module, Rack 1, Slot 04 - Wiring Diagram
CP1-40.104B	Analog Input Module, Rack 1, Slot 04 - Wiring Diagram
CP1-40.105A	Analog Input Module, Rack 1, Slot 05 - Wiring Diagram
CP1-40.105B	Analog Input Module, Rack 1, Slot 05 - Wiring Diagram
CP1-40.106A	Analog Output Module, Rack 1, Slot 06 - Wiring Diagram
CP1-40.106B	Analog Output Module, Rack 1, Slot 06 - Wiring Diagram
CP1-50.00	Sludge Feed Pump 1, VFD Control Wiring Diagram
CP1-50.01	Sludge Feed Pump 2, VFD Control Wiring Diagram
CP1-50.02	Floc Tank Mixer, VFD Control Wiring Diagram
CP1-50.03	Scrw Press, VFD Control Wiring Diagram
CP1-50.04	Conveyor, VFD Control Wiring Diagram

Polymer System Control Panel (PS-CP)

PSCP-10.00	Layout - Panel - Front Elevation
PSCP-10.02	Layout - Panel - Side Elevation
PSCP-10.03	Layout - Panel - Bottom View
PSCP-10.05	Layout - Panel - Backpan Elevation
PSCP-10.07	Layout - Panel - PLC Rack 1
PSCP-10.10	Layout - Panel - Controls Details
PSCP-10.20	Layout - Panel - Nameplate Details
PSCP-20.00	COMM - Network Overview Block Diagram
PSCP-20.30	Network Switch (NS-1), Port Schedule
PSCP-30.00	120VAC Power Distribution Diagram
PSCP-31.00	120VAC Power Distribution Diagram
PSCP-32.00	24VDC Power Distribution Diagram
PSCP-40.101A	PLC Base Unit, Discrete Inputs, Rack 1, Slot 01 - Wiring Diagram
PSCP-40.101B	PLC Base Unit, Discrete Inputs, Rack 1, Slot 01 - Wiring Diagram
PSCP-40.101C	PLC Base Unit, Discrete Outputs, Rack 1, Slot 01 - Wiring Diagram
PSCP-40.101D	PLC Base Unit, Discrete Outputs, Rack 1, Slot 01 - Wiring Diagram
PSCP-40.102A	PLC Base Unit, Analog Inputs, Rack 1, Slot 02 - Wiring Diagram
PSCP-40.102B	PLC Base Unit, Analog Outputs, Rack 1, Slot 02 - Wiring Diagram
PSCP-40.103A	PLC Base Unit, HSC Inputs, Rack 1, Slot 03 - Wiring Diagram
PSCP-40.103B	PLC Base Unit, HSC Outputs, Rack 1, Slot 03 - Wiring Diagram
PSCP-40.104	Analog Input Module, Rack 1, Slot 04 - Wiring Diagram
PSCP-50.00	Neat Polymer Pump, VFD Control Wiring Diagram
PSCP-50.01	Polymer Mixer, VFD Control Wiring Diagram

DRAFT

CONTROL PANEL WIRING SPECIFICATIONS

APPLICATION	COLOR	SIZE / TYPE
480 VAC POWER	BLACK	STRANDED COPPER, MTW, 12 AWG (MINIMUM)
480 VAC GROUND	GREEN	STRANDED COPPER, MTW, 12 AWG (MINIMUM)
120 VAC POWER (UNSWITCHED)	BLACK	STRANDED COPPER, MTW, 16 AWG (MINIMUM)
120 VAC CONTROL	RED	STRANDED COPPER, MTW, 16 AWG (MINIMUM)
120 VAC NEUTRAL	WHITE	STRANDED COPPER, MTW, 16 AWG (MINIMUM)
120 VAC GROUND	GREEN	STRANDED COPPER, MTW, 16 AWG (MINIMUM)
5–24 VDC POWER	BLUE	STRANDED COPPER, MTW, 16 AWG (MINIMUM)
5–24 VDC COMMON	WHITE/BLUE	STRANDED COPPER, MTW, 16 AWG (MINIMUM)
FOREIGN (EXTERNAL) POWER	YELLOW	STRANDED COPPER, MTW, 14 AWG (MINIMUM)
FOREIGN (EXTERNAL) NEUTRAL	WHITE/YELLOW	STRANDED COPPER, MTW, 14 AWG (MINIMUM)
INTRINSICALLY SAFE	LIGHT BLUE	STRANDED COPPER, MTW, 16 AWG (MINIMUM)
SIGNAL (+) SIGNAL (–) SHIELD	WHITE BLACK BARE	2–CONDUCTOR TWISTED SHIELDED, 18 AWG
SIGNAL OR POWER SIGNAL (+) SIGNAL (–) SHIELD	RED WHITE BLACK BARE	3–CONDUCTOR (TRIAD) SHIELDED, 18 AWG
CAT6 CABLE	BLACK	300V CAT6
CAT6 CABLE	BLACK	600V CAT6 (MOTOR CONTROL PANEL)

WIRING SIZED PER UL 508A, TABLES 28.1 AND 38.1 FOR 75° COPPER.
WIRING SIZED LARGER THAN 12 AWG WILL BE LABELED & IDENTIFIED ON THE PANEL WIRING DIAGRAMS.
WIRING IS RATED FOR 600VAC.

DRAWING DESIGNATIONS

00.XX – STANDARDS & SYMBOLS
01.XX – INDEX & BILL OF MATERIALS
10.XX – PANEL LAYOUT DRAWINGS
20.XX – COMMUNICATION BLOCK DIAGRAMS
30.XX – POWER DISTRIBUTION WIRING DIAGRAMS
40.XX – ELECTRICAL DRAWINGS
45.XX – ELECTRICAL DRAWINGS
50.XX – MOTOR DRAWINGS
60.XX – LOOP DRAWINGS
70.XX – INTERCONNECT DRAWINGS
95.XX – INTRINSIC DRAWINGS

TERMINAL AND WIRING IDENTIFICATION

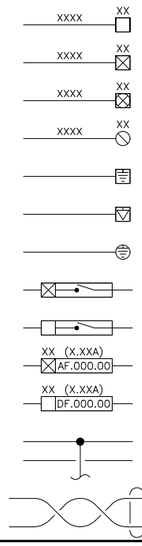

DC TERMINAL BLOCK WITHIN PANEL (WIRE & TERMINAL ARE SAME NUMBER IF POSSIBLE)
AC TERMINAL BLOCK WITHIN PANEL (WIRE & TERMINAL ARE SAME NUMBER IF POSSIBLE)
DEVICE CONNECTION WITHIN PANEL
FIELD DEVICE OR TERMINAL
GROUNDING TERMINAL BLOCK
ISOLATED GROUNDING TERMINAL BLOCK
GROUNDING BAR LUG
AC KNIFE DISCONNECT TERMINAL BLOCK
DC KNIFE DISCONNECT TERMINAL BLOCK
AC FUSED TERMINAL BLOCK
DC FUSED TERMINAL BLOCK
(AMPERAGE INDICATED)
CONNECTION (NODE)
NO CONNECTION (BREAK)
CONTINUATION
TWISTED SHIELDED PAIR WIRE

PANEL WIRING DIAGRAMS LINETYPE STANDARDS

INTERNAL CONTROL PANEL WIRING BY TSI
EXTERNAL FIELD WIRING BY OTHERS
SM — SINGLE MODE FIBER CABLE
MM — MULTIMODE FIBER CABLE
CAT6 — CAT–6 CABLE

TERMINAL MOUNTING AND RACEWAYS SYSTEMS

MANUFACTURER	PART NUMBER	DESCRIPTION
PANDUIT	F1X4LG6	WIRE DUCT, TYPE F NARROW SLOT, 1" W x 4.0" H x 6.0' L, PVC, LIGHT GRAY
PANDUIT	F1.5X4LG6	WIRE DUCT, TYPE F NARROW SLOT, 1.5" W x 4.0" H x 6.0' L, PVC, LIGHT GRAY
PANDUIT	F2X4LG6	WIRE DUCT, TYPE F NARROW SLOT, 2" W x 4.0" H x 6.0' L, PVC, LIGHT GRAY
PANDUIT	F3X4LG6	WIRE DUCT, TYPE F NARROW SLOT, 3" W x 4.0" H x 6.0' L, PVC, LIGHT GRAY
PANDUIT	F4X4LG6	WIRE DUCT, TYPE F NARROW SLOT, 4" W x 4.0" H x 6.0' L, PVC, LIGHT GRAY
PANDUIT	C1LG6	DUCT COVER, 1" W x 6' L, PVC, LIGHT GRAY
PANDUIT	C1.5LG6	DUCT COVER, 1.5" W x 6' L, PVC, LIGHT GRAY
PANDUIT	C2LG6	DUCT COVER, 2" W x 6' L, PVC, LIGHT GRAY
PANDUIT	C3LG6	DUCT COVER, 3" W x 6' L, PVC, LIGHT GRAY
PANDUIT	C4LG6	DUCT COVER, 4" W x 6' L, PVC, LIGHT GRAY
PHOENIX CONTACT	0801733	DIN RAIL, 6.56' x 1.38" x 0.3", STEEL, PERFORATED
PHOENIX CONTACT	5604188	RAISED DIN RAIL, 6.56' x 1.38" x 2.26", ALUMINUM, PERFORATED

CUSTOM NOTES:

REV	DESCRIPTION/INIT	DATE
0.0	ENGINEERING STAGE	4/22/25
1.0	SUBMITTAL/MTN	06/03/25

LISTING: N/A

Technical Systems Inc.
2303 196TH ST. S.W.
LYNNWOOD, WA. 98036
(425) 775–5696

CUSTOMER: FKC CO., LTD.
EN / PM / CHK: BC/BC/AP
DRAWN: MTN
CITY OF SAN LUIS, AZ

FKC SAN LUIS, AZ – WEST WWTP
DRAWING STANDARDS
CONTROL PANEL WIRING AND FABRICATION SPECIFICATIONS

DATE CREATED: 4/22/25
REV.: 1.0
JOB NO.: P25–026
DWG. NO.: 00.01

DRAFT

DRAWING SYMBOLS

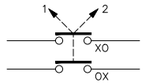

2 POSITION MAINTAINED SELECTOR SWITCH
CLOSED IN POSITION–1
CLOSED IN POSITION–2

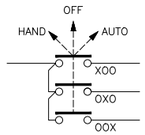

3 POSITION MAINTAINED SELECTOR SWITCH
CLOSED IN POSITION–1
CLOSED IN POSITION–2
CLOSED IN POSITION–3

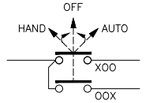

3 POSITION MOMENTARY SELECTOR SWITCH
CLOSED IN POSITION–1, SPRING RETURN TO CENTER
CLOSED IN POSITION–3, SPRING RETURN TO CENTER



CONTACT – NORMALLY OPEN



CONTACT – NORMALLY CLOSED



TIMED CONTACT –NORMALLY CLOSED ON DELAY



TIMED CONTACT –NORMALLY OPEN ON DELAY

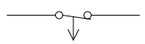

TIMED CONTACT –NORMALLY CLOSED OFF DELAY

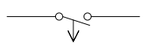

TIMED CONTACT –NORMALLY OPEN OFF DELAY

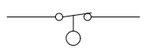

FLOAT SWITCH – NORMALLY CLOSED OPEN ON RISING LEVEL

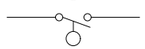

FLOAT SWITCH – NORMALLY OPEN CLOSE ON RISING LEVEL

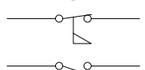

FLOW SWITCH – NORMALLY CLOSED OPEN ON INCREASING FLOW

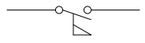

FLOW SWITCH – NORMALLY OPEN CLOSE ON INCREASING FLOW

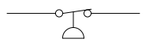

PRESSURE SWITCH – NORMALLY CLOSED OPEN ON RISING PRESSURE

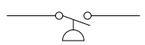

PRESSURE SWITCH – NORMALLY OPEN CLOSE ON RISING PRESSURE



TEMPERATURE SWITCH – NORMALLY CLOSED OPEN ON RISING TEMPERATURE

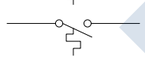

TEMPERATURE SWITCH – NORMALLY OPEN CLOSE ON RISING TEMPERATURE

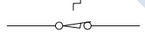

LIMIT SWITCH – NORMALLY CLOSED

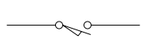

LIMIT SWITCH – NORMALLY OPEN



PUSHBUTTON – NORMALLY CLOSED



PUSHBUTTON – NORMALLY OPEN

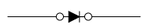

DIODE

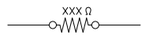

RESISTOR

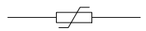

METAL OXIDE VARISTOR (MOV)

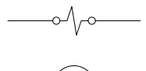

SOLENOID

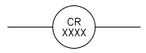

COIL – CONTROL RELAY

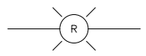

PILOT LIGHT A–AMBER R–RED B–BLUE W–WHITE G–GREEN Y–YELLOW



PILOT LIGHT – PUSH–TO–TEST

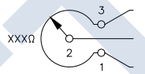

POTENTIOMETER



THERMOCOUPLE

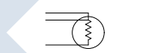

RTD (3–WIRE)



HORN (VIBRATION)

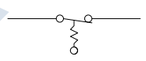

PULL CORD E–STOP



HEATER



BATTERY



ELAPSED TIME METER



CIRCUIT BREAKER – SINGLE POLE

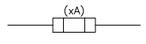

POWER FUSE

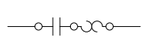

MAGNETIC STARTER W/ OVERLOAD

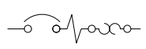

MOTOR CIRCUIT PROTECTOR

INSTRUMENT IDENTIFICATION ISA–S5 LETTER CODES TABLE

	FIRST LETTER(S)		SUCCEEDING LETTERS		
LETTER	MEASURED or PROCESS VARIABLE	MODIFIER	READOUT or PASSIVE FUNCTION	OUTPUT FUNCTION	MODIFIER
A	ANALYSIS		ALARM		
B	BURNER / COMBUSTION		USER'S CHOICE *	USER'S CHOICE *	USER'S CHOICE *
C	USER'S CHOICE *			CONTROL	
D	USER'S CHOICE *		DIFFERENTIAL		
E	VOLTAGE		SENSOR (PRIMARY ELEMENT)		
F	FLOW RATE	RATIO (FRACTION)			
G	USER'S CHOICE *		GLASS, VIEWING DEVICE		
H	HAND (MANUAL)				HIGH
I	CURRENT		INDICATION		
J	POWER	SCAN			
K	TIME, TIME SCHEDULE	TIME RATE OF CHANGE		CONTROL STATION	
L	LEVEL		LIGHT (PILOT)		LOW
M	USER'S CHOICE *	MOMENTARY			MIDDLE, INTERMEDIATE
N	USER'S CHOICE *	USER'S CHOICE *	USER'S CHOICE *	USER'S CHOICE *	USER'S CHOICE *
O	USER'S CHOICE *		ORIFICE, RESTRICTION		
P	PRESSURE / VACUUM		PRESSURE, VACUUM POINT (TEST CONNECTION)		
Q	QUANTITY	INTEGRATE			
R	RADIATION		RECORD or PRINT		
S	SPEED/FREQUENCY	SAFETY		SWITCH	
T	TEMPERATURE			TRANSMIT	
U	MULTIVARIABLE		MULTIFUNCTION *	MULTIFUNCTION *	MULTIFUNCTION *
V	VIBRATION/MECHANICAL ANALYSIS			VALVE, DAMPER, LOUVER	
W	WEIGHT / FORCE		WELL		
X	UNCLASSIFIED	X AXIS	UNCLASSIFIED *	UNCLASSIFIED *	UNCLASSIFIED *
Y	EVENT/STATE/PRESENCE	Y AXIS		RELAY, COMPUTE *	
Z	POSITION / DIMENSION	Z AXIS		DRIVE, ACTUATE	

* WHEN USED, EXPLANATION IS SHOWN ADJACENT TO INSTRUMENT SYMBOL. SEE ABBREVIATION AND LETTER SYMBOLS.

INSTRUMENT IDENTIFICATION

CORIOLIS FLOWMETER

RADAR LEVEL

ULTRASONIC LEVEL

MAGNETIC FLOWMETER

ROTAMETER

ULTRASONIC FLOWMETER

MASS AIR FLOWMETER

TURBINE FLOWMETER

VENTURI FLOWMETER

DRAFT

REV	DESCRIPTION/INIT	DATE
0.0	ENGINEERING STAGE	4/22/25
1.0	SUBMITTAL/MTN	06/03/25

LISTING: N/A

Technical Systems Inc.
2303 196TH ST. S.W.
LYNNWOOD, WA. 98036
(425) 775–5696

CUSTOMER: FKC CO., LTD.

EN / PM / CHK: BC/BC/AP

DRAWN: MTN

CITY OF SAN LUIS, AZ

FKC SAN LUIS, AZ – WEST WWTP

DRAWING STANDARDS
ELECTRICAL & INSTRUMENT SYMBOLS

DATE CREATED: 4/22/25 | REV.: 1.0

JOB NO.: P25–026

DWG. NO.: 00.02

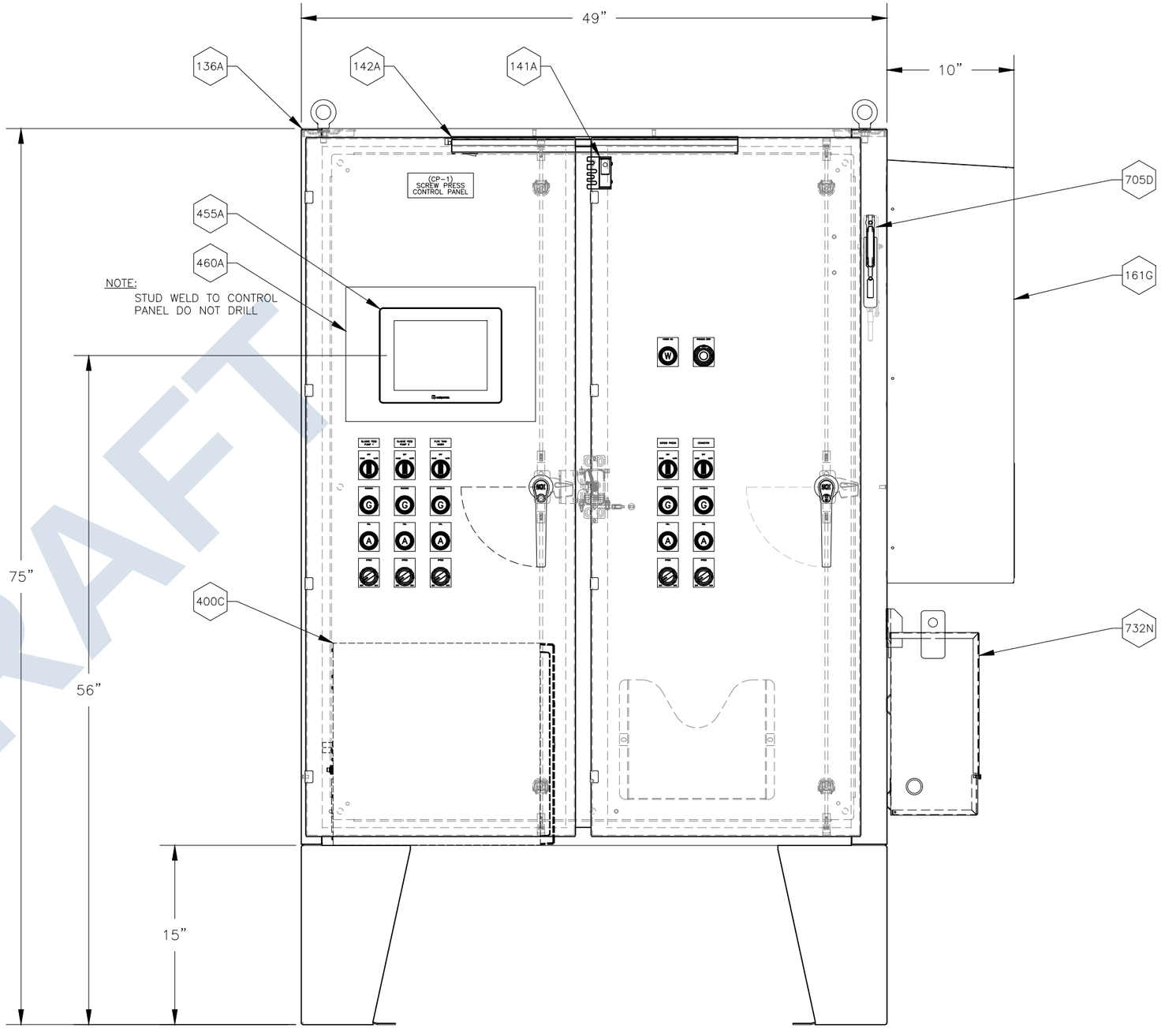

DEPTH OF PANEL = 18”

PANEL POWER SOURCE

PANEL: xx
CIRCUIT: xx

VOLTAGE: 480 VAC HERTZ: 60 PHASE: 3

FULL LOAD AMPS: 105.83A
SHORT CIRCUIT RATING: 65 KAIC
LARGEST MOTOR FLA: 12A

CONDUIT ENTRY
BOTTOM

NEMA RATING
4X

MATERIAL
304 STAINLESS STEEL

BUILD TYPE (FOR INTERNAL USE)
STANDARD

XXX BOM ITEM NUMBER

REV	DESCRIPTION/INIT	DATE
0.0	ENGINEERING/RJC	5/21/25
1.0	SUBMITTAL/MTN	06/03/25

LISTING
UL508A
S/N:

Technical Systems Inc.
2303 196TH ST. S.W.
LYNNWOOD, WA. 98036
(425) 775-5696

CUSTOMER
FKC CO., LTD.

EN / PM / CHK
BC/BC/AP

DRAWN
RJC

CITY OF SAN LUIS, AZ

FKC SAN LUIS, AZ – WEST WWTP
SCREW PRESS CONTROL PANEL (CP-1)

LAYOUT – PANEL – FRONT ELEVATION

DATE CREATED 4/22/25
REV. 1.0
JOB NO. P25-026
DWG. NO. CP1-10.00

DRAFT

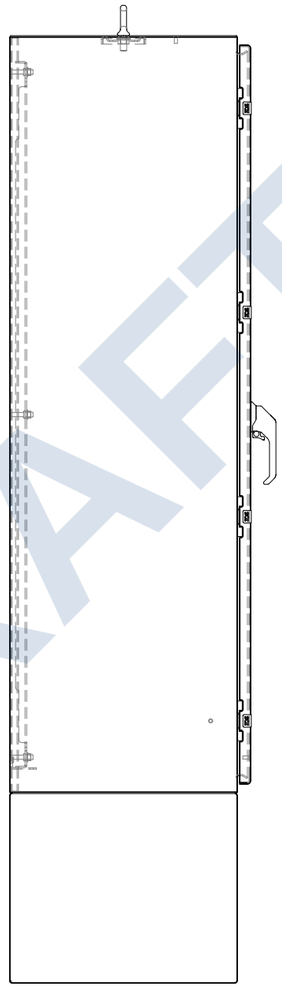

LEFT SIDE VIEW

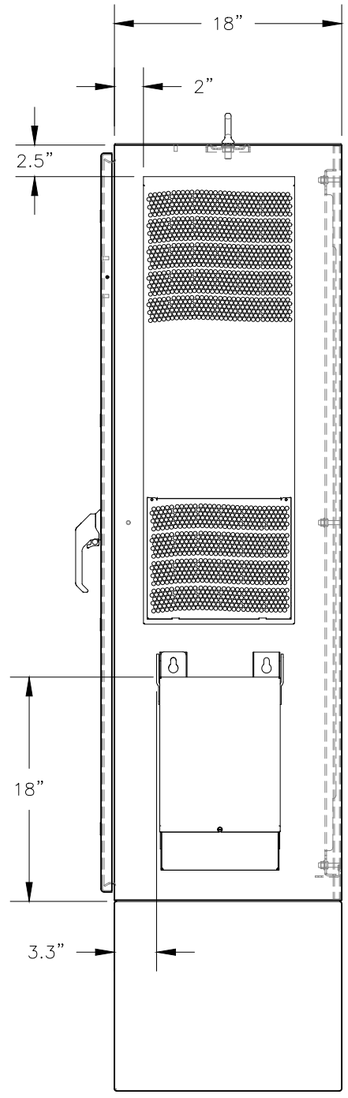

RIGHT SIDE VIEW

XXX BOM ITEM NUMBER

REV	DESCRIPTION/INIT	DATE
0.0	ENGINEERING/RJC	5/21/25
1.0	SUBMITTAL/MTN	06/03/25

LISTING

UL508A

S/N:

Technical Systems Inc.
2303 196TH ST. S.W.
LYNNWOOD, WA. 98036
(425) 775-5696

CUSTOMER

FKC CO., LTD.

EN / PM / CHK
BC/BC/AP

DRAWN
RJC

CITY OF SAN LUIS, AZ

FKC SAN LUIS, AZ – WEST WWTP
SCREW PRESS CONTROL PANEL (CP-1)

LAYOUT – PANEL – LEFT & RIGHT ELEVATIONS

DATE CREATED 4/22/25 | REV. 1.0

JOB NO. P25-026

DWG. NO. CP1-10.02

DRAFT

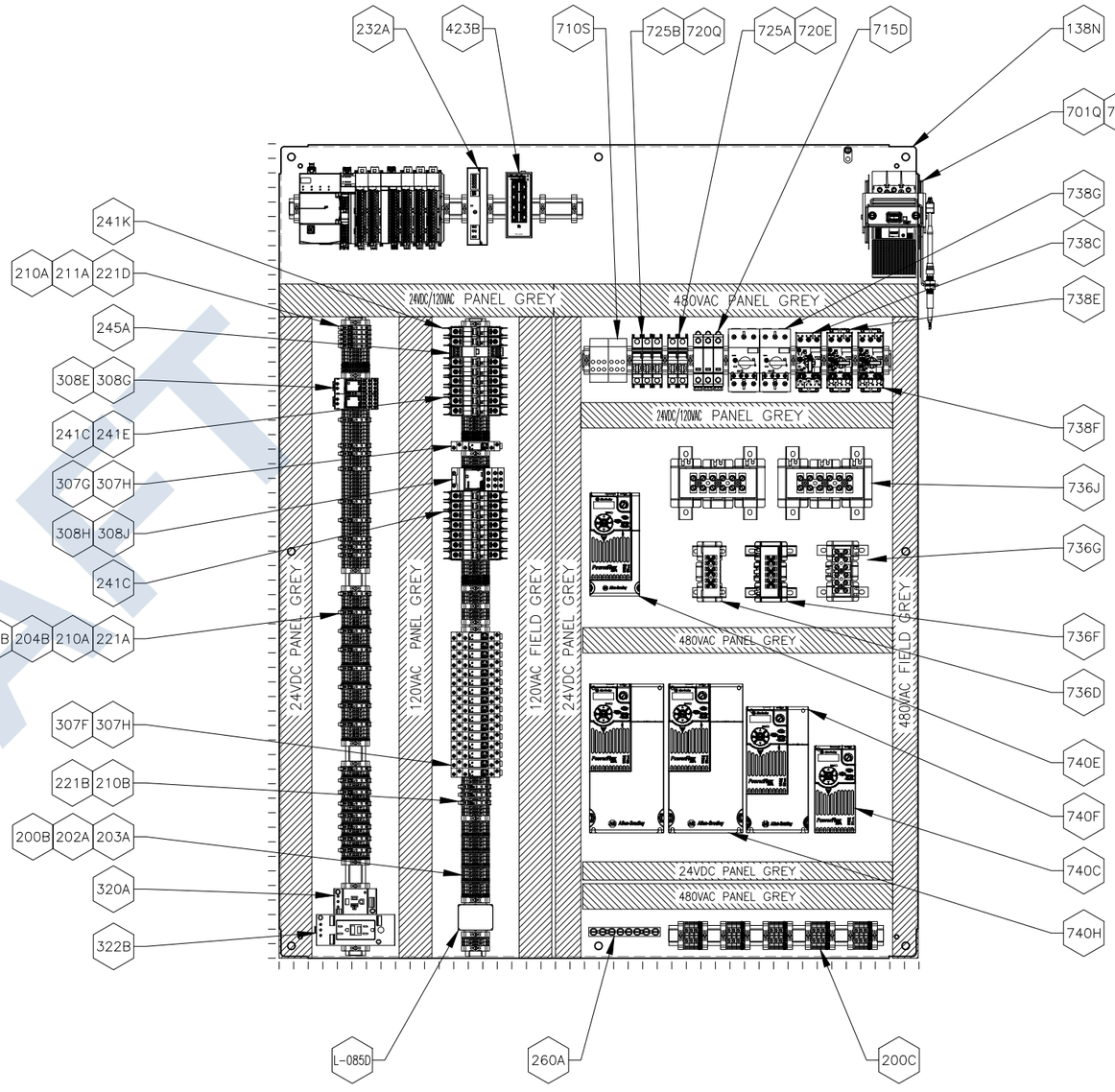

BACKPAN

XXX BOM ITEM NUMBER

REV	DESCRIPTION/INIT	DATE
0.0	ENGINEERING/RJC	5/21/25
1.0	SUBMITTAL/MTN	06/03/25

LISTING

UL508A

S/N:

Technical Systems Inc.
2303 196TH ST. S.W.
LYNNWOOD, WA. 98036
(425) 775-5696

CUSTOMER

FKC CO., LTD.

EN / PM / CHK
BC/BC/AP

DRAWN
RJC

CITY OF SAN LUIS, AZ

FKC SAN LUIS, AZ – WEST WWTP
SCREW PRESS CONTROL PANEL (CP–1)

LAYOUT – PANEL – BACKPAN ELEVATION

DATE CREATED 4/22/25 | REV. 1.0

JOB NO. P25–026

DWG. NO. CP1–10.05

DRAFT

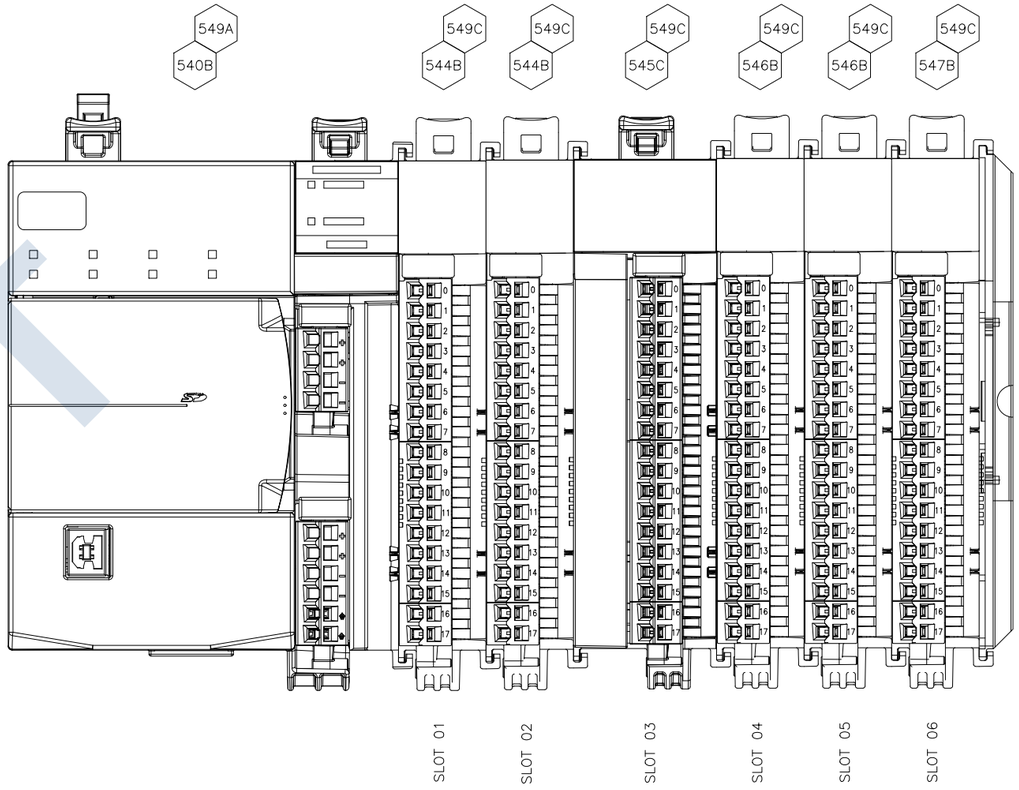

RACK 1

DRAFT

REV	DESCRIPTION/INIT	DATE
0.0	ENGINEERING/RJC	5/21/25
1.0	SUBMITTAL/MTN	06/03/25

LISTING

UL508A

S/N:

Technical Systems Inc.
2303 196TH ST. S.W.
LYNNWOOD, WA. 98036
(425) 775-5696

CUSTOMER

FKC CO., LTD.

EN / PM / CHK
BC/BC/AP

DRAWN
RJC

CITY OF SAN LUIS, AZ

FKC SAN LUIS, AZ – WEST WWTP
SCREW PRESS CONTROL PANEL (CP–1)

LAYOUT – PANEL – PLC RACK 1

DATE CREATED 4/22/25 | REV. 1.0

JOB NO. P25–026

DWG. NO. CP1–10.07

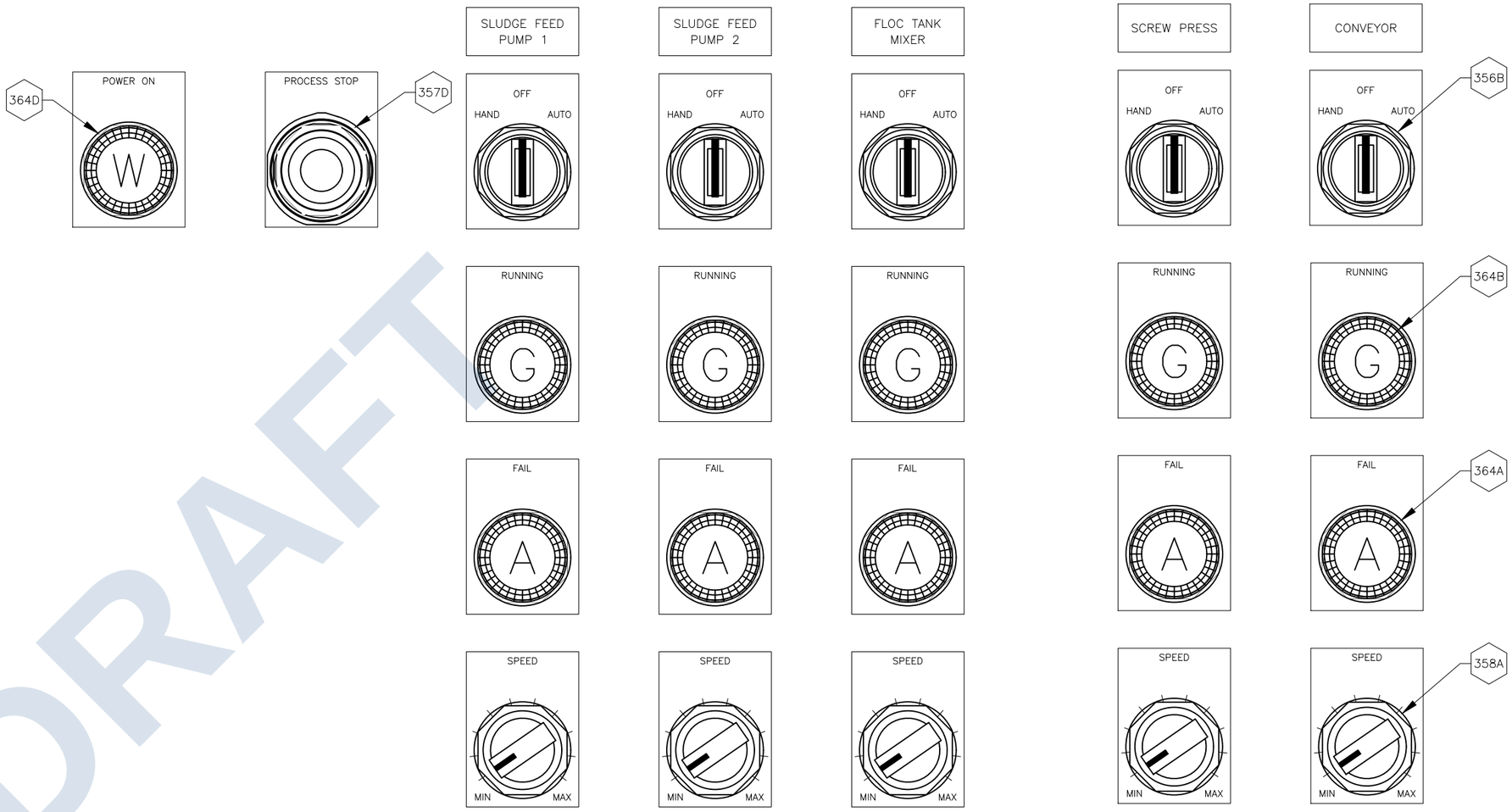

DRAFT

REV	DESCRIPTION/INIT	DATE
0.0	ENGINEERING/RJC	5/21/25
1.0	SUBMITTAL/MTN	06/03/25

LISTING: UL508A
S/N:

Technical Systems Inc.
2303 196TH ST. S.W.
LYNNWOOD, WA. 98036
(425) 775-5696

CUSTOMER: FKC CO., LTD.
EN / PM / CHK: BC/BC/AP
DRAWN: RJC

CITY OF SAN LUIS, AZ

FKC SAN LUIS, AZ – WEST WWTP
SCREW PRESS CONTROL PANEL (CP-1)

LAYOUT – PANEL – CONTROLS DETAILS

DATE CREATED: 4/22/25
REV.: 1.0
JOB NO.: P25-026
DWG. NO.: CP1-10.10

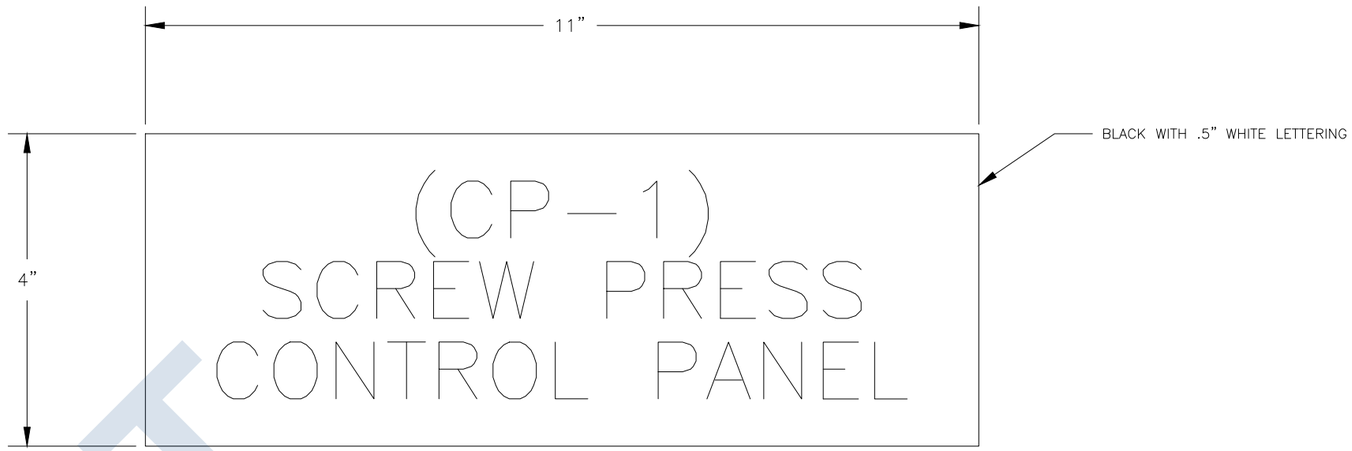



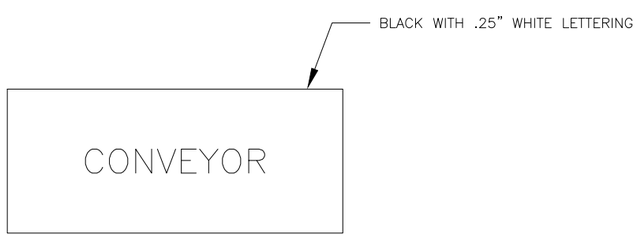

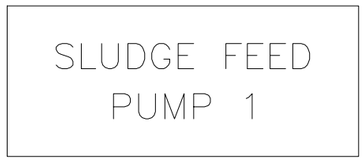

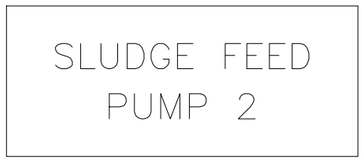



DRAFT

XXX BOM ITEM NUMBER

REV	DESCRIPTION/INIT	DATE
0.0	ENGINEERING/RJC	5/21/25
1.0	SUBMITTAL/MTN	06/03/25

LISTING
UL508A
S/N:

Technical Systems Inc.
2303 196TH ST. S.W.
LYNNWOOD, WA. 98036
(425) 775-5696

CUSTOMER
FKC CO., LTD.

EN / PM / CHK
BC/BC/AP

DRAWN
RJC

CITY OF SAN LUIS, AZ

FKC SAN LUIS, AZ – WEST WWTP
SCREW PRESS CONTROL PANEL (CP-1)

LAYOUT – PANEL – NAMEPLATE DETAILS

DATE CREATED 4/22/25
REV. 1.0
JOB NO. P25-026
DWG. NO. CP1-10.20

DRAFT

CP–1

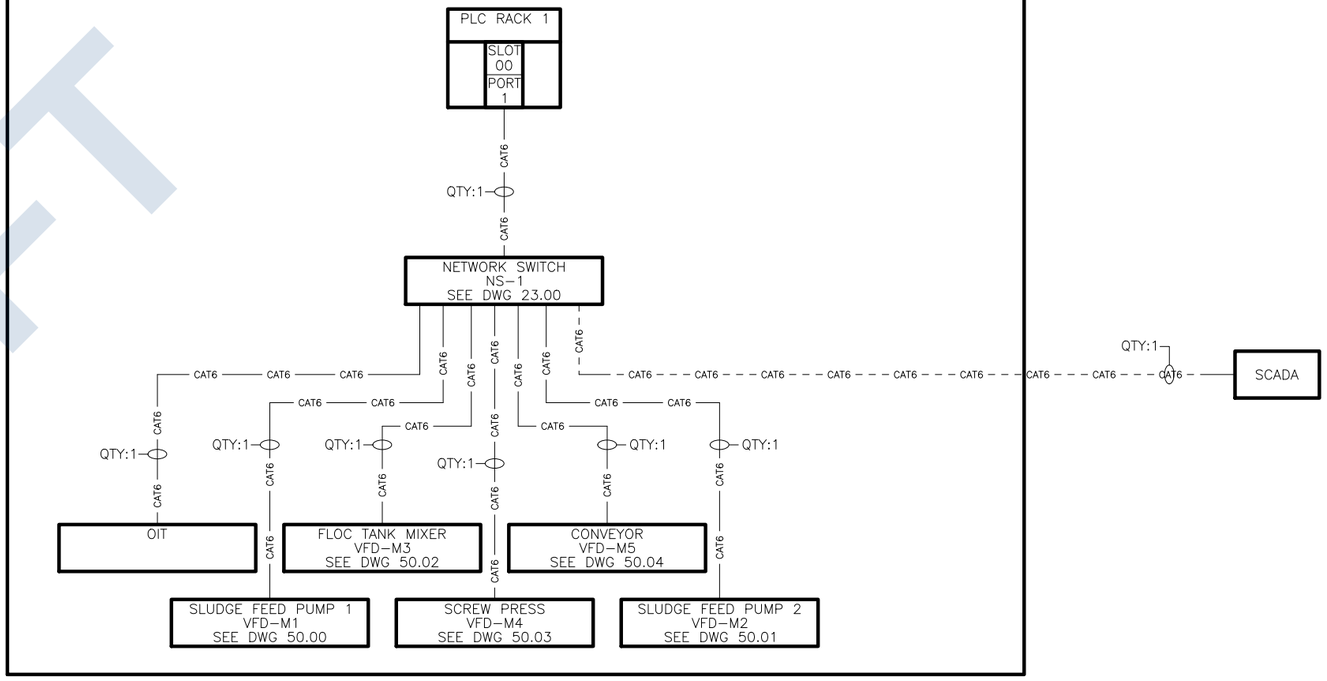

REV	DESCRIPTION/INIT	DATE
0.0	ENGINEERING/RJC	5/21/25
1.0	SUBMITTAL/MTN	06/03/25

LISTING

UL508A

S/N:

Technical Systems Inc.
2303 196TH ST. S.W.
LYNNWOOD, WA. 98036
(425) 775–5696

CUSTOMER
FKC CO., LTD.

EN / PM / CHK
BC/BC/AP

DRAWN
RJC

CITY OF SAN LUIS, AZ

FKC SAN LUIS, AZ – WEST WWTP
SCREW PRESS CONTROL PANEL (CP–1)

COMM – NETWORK OVERVIEW BLOCK DIAGRAM

DATE CREATED 4/22/25
REV. 1.0
JOB NO. P25–026
DWG. NO. CP1–20.00

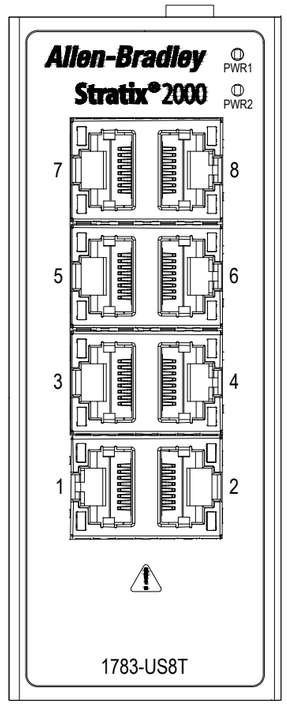

DRAFT

NETWORK SWITCH NS–1					
				DESTINATION DEVICE	
PORT#	CABLE TYPE	NETWORK DESCRIPTION	CABLE LABEL	DESCRIPTION	PORT #
1	CAT6	SCADA NETWORK	SCADA	SCADA NETWORK	1
2					
3	CAT6		PLC	PLC	1
4	CAT6		OIT	OPERATOR INTERFACE TERMINAL	1
5	CAT6		VFD–M1	SLUDGE FEED PUMP 1 VFD	1
6	CAT6		VFD–M2	FLOC TANK MIXER VFD	1
7	CAT6		VFD–M3	SCREW PRESS VFD	1
8	CAT6		VFD–M4	CONVEYOR VFD	1
9	CAT6		VFD–M5	SLUDGE FEED PUMP 2 VFD	1
10					

REV	DESCRIPTION/INIT	DATE
0.0	ENGINEERING/RJC	5/21/25
1.0	SUBMITTAL/MTN	06/03/25

LISTING

UL508A

S/N:

TSI **Technical Systems Inc.**
2303 196TH ST. S.W.
LYNNWOOD, WA. 98036
(425) 775–5696

CUSTOMER
FKC CO., LTD.

EN / PM / CHK
BC/BC/AP

DRAWN
RJC

CITY OF SAN LUIS, AZ

FKC SAN LUIS, AZ – WEST WWTP
SCREW PRESS CONTROL PANEL (CP–1)
NETWORK SWITCH (NS–1)
PORT SCHEDULE

DATE CREATED 4/22/25
REV. 1.0
JOB NO. P25–026
DWG. NO. CP1–23.00

CP–1

480 VAC
3 PHASE
60 HZ
3 W

CB–MAIN
125A

L1
L2
L3

SURGE PROTECTOR

F01
5A

12 AWG MIN.

AIR CONDITIONER
MAXIMUM INPUT
2.5A

MCP–M1
SET FOR 32A
8 AWG MIN.
LINE REACTOR
VFD–M1
15 HP RATED
MAXIMUM INPUT
26.4A
SEE DWG 40.101A
SLUDGE FEED PUMP 1
15 HP
12 FLA

MCP–M2
SET FOR 32A
8 AWG MIN.
LINE REACTOR
VFD–M2
15 HP RATED
MAXIMUM INPUT
26.4A
SEE DWG 40.101B
SLUDGE FEED PUMP 2
15 HP
12 FLA

MCP–M3
SET FOR 6.3A
12 AWG MIN.
LINE REACTOR
VFD–M3
2 HP RATED
MAXIMUM INPUT
5.7A
FLOC TANK MIXER
2 HP
3.4 FLA

MCP–M4
SET FOR 20A
12 AWG MIN.
LINE REACTOR
VFD–M4
7.5 HP RATED
MAXIMUM INPUT
15.4A
SCREW PRESS
7.5 HP
11 FLA

MCP–M5
SET FOR 16A
12 AWG MIN.
LINE REACTOR
VFD–M5
5 HP RATED
MAXIMUM INPUT
13.8A
CONVEYOR
5 HP
7.6 FLA

F02
30A
10 AWG MIN.

TRANSFORMER
480V / 120V
60Hz,1ø, 7500 VA
H1 H3 H2 H4
X1 X4
6 AWG MIN.
PDB
L
N
120VAC, 62.5 AMPS
TO DWG 31.00

FIELD

REV	DESCRIPTION/INIT	DATE
0.0	ENGINEERING/RJC	5/21/25
1.0	SUBMITTAL/MTN	06/03/25

LISTING
UL508A
S/N:

Technical Systems Inc.
2303 196TH ST. S.W.
LYNNWOOD, WA. 98036
(425) 775–5696

CUSTOMER
FKC CO., LTD.

EN / PM / CHK
BC/BC/AP

DRAWN
RJC

CITY OF SAN LUIS, AZ

FKC SAN LUIS, AZ – WEST WWTP
SCREW PRESS CONTROL PANEL (CP–1)

480VAC POWER DISTRIBUTION DIAGRAM

DATE CREATED 4/22/25
REV. 1.0
JOB NO. P25–026
DWG. NO. CP1–30.00

DRAFT

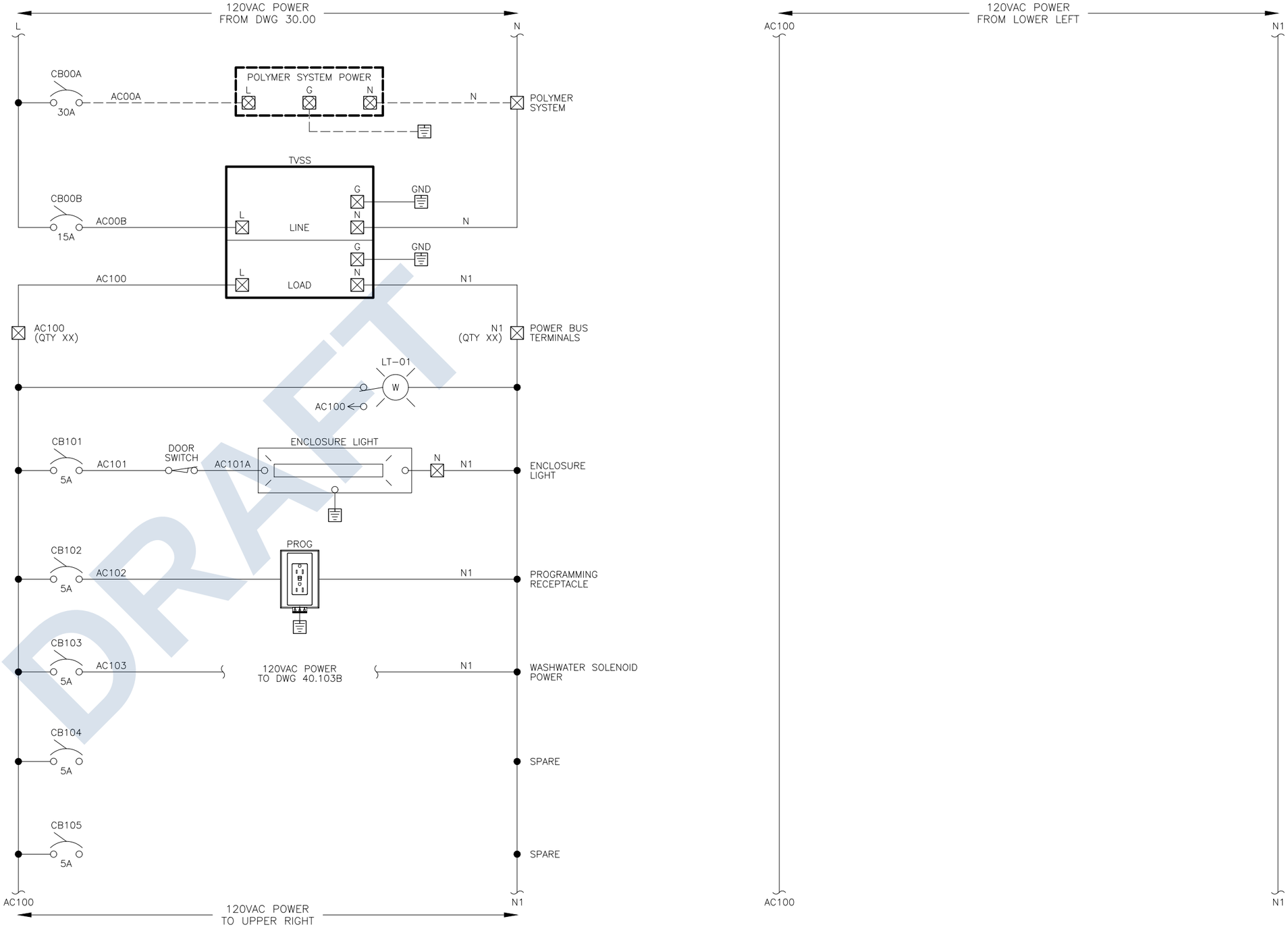

DRAFT

REV	DESCRIPTION/INIT	DATE
0.0	ENGINEERING/RJC	5/21/25
1.0	SUBMITTAL/MTN	06/03/25

LISTING

UL508A

S/N:

Technical Systems Inc.
2303 196TH ST. S.W.
LYNNWOOD, WA. 98036
(425) 775-5696

CUSTOMER

FKC CO., LTD.

EN / PM / CHK
BC/BC/AP

DRAWN
RJC

CITY OF SAN LUIS, AZ

FKC SAN LUIS, AZ – WEST WWTP
SCREW PRESS CONTROL PANEL (CP-1)

120VAC POWER DISTRIBUTION DIAGRAM

DATE CREATED 4/22/25 | REV. 1.0

JOB NO. P25-026

DWG. NO. CP1-31.00

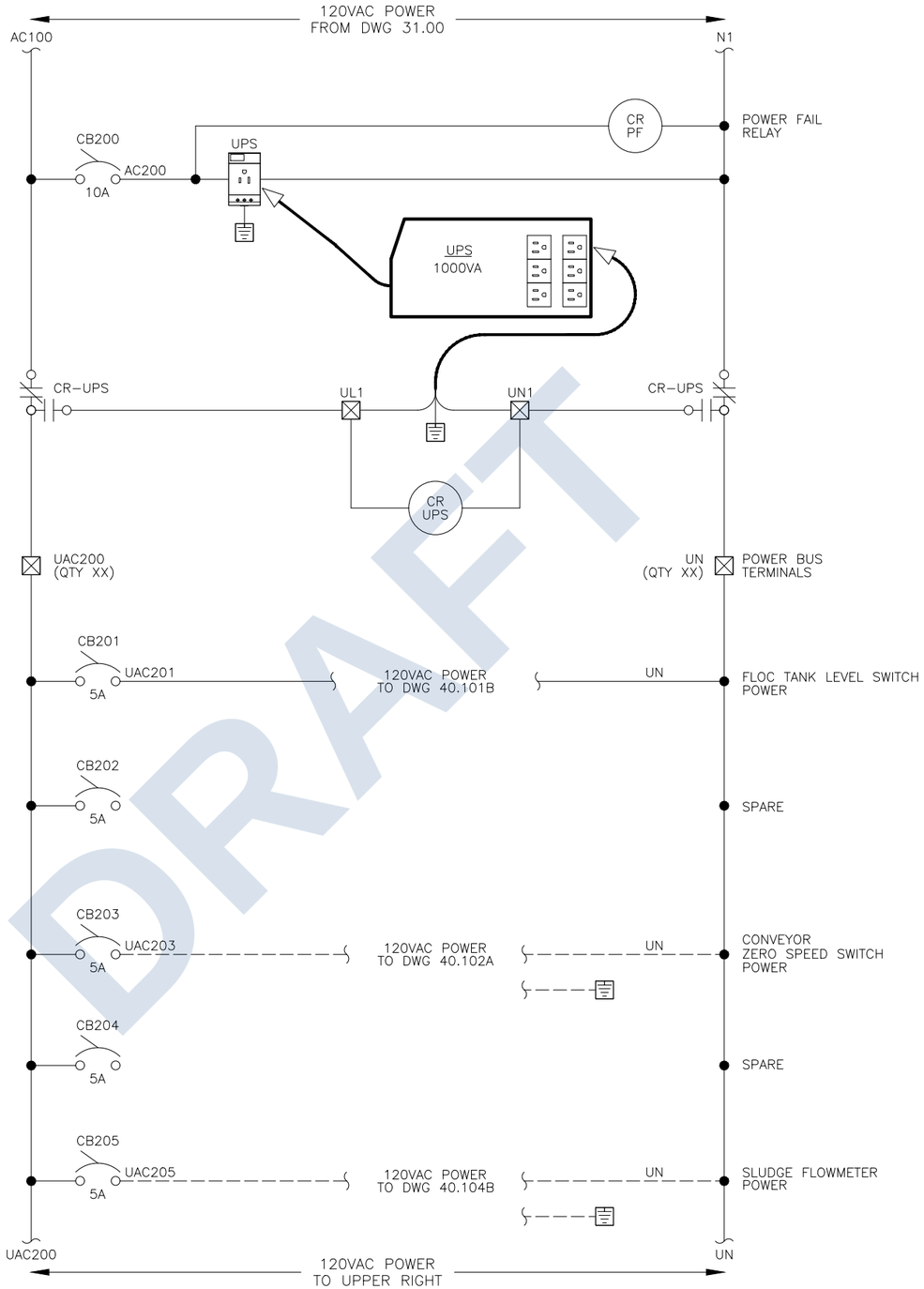

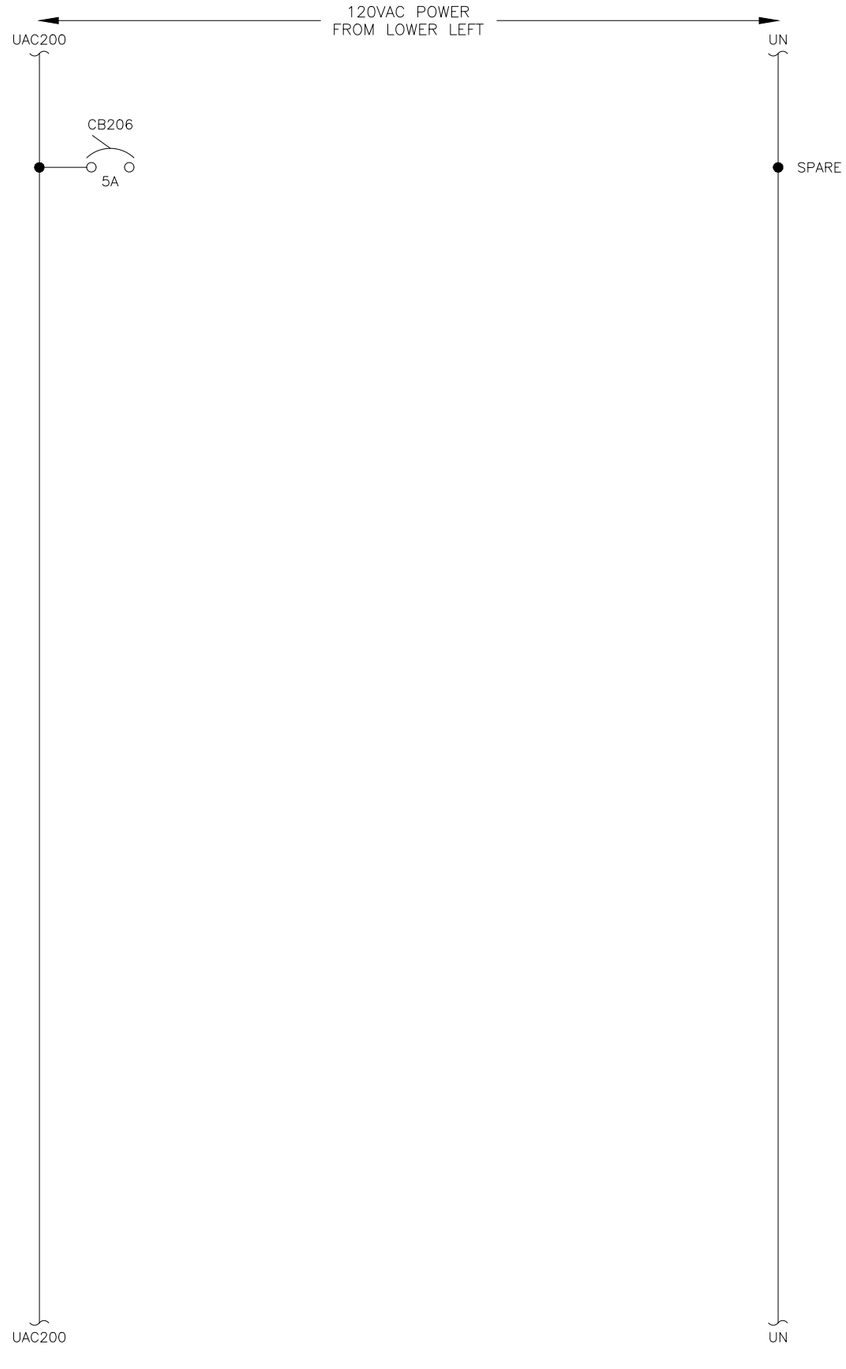

DRAFT

REV	DESCRIPTION/INIT	DATE
0.0	ENGINEERING/RJC	5/21/25
1.0	SUBMITTAL/MTN	06/03/25

LISTING

UL508A

S/N:

Technical Systems Inc.
2303 196TH ST. S.W.
LYNNWOOD, WA. 98036
(425) 775-5696

CUSTOMER
FKC CO., LTD.

EN / PM / CHK
BC/BC/AP

DRAWN
RJC

CITY OF SAN LUIS, AZ

FKC SAN LUIS, AZ – WEST WWTP
SCREW PRESS CONTROL PANEL (CP-1)

120VAC UPS POWER DISTRIBUTION DIAGRAM

DATE CREATED 4/22/25
REV. 1.0
JOB NO. P25-026
DWG. NO. CP1-31.50

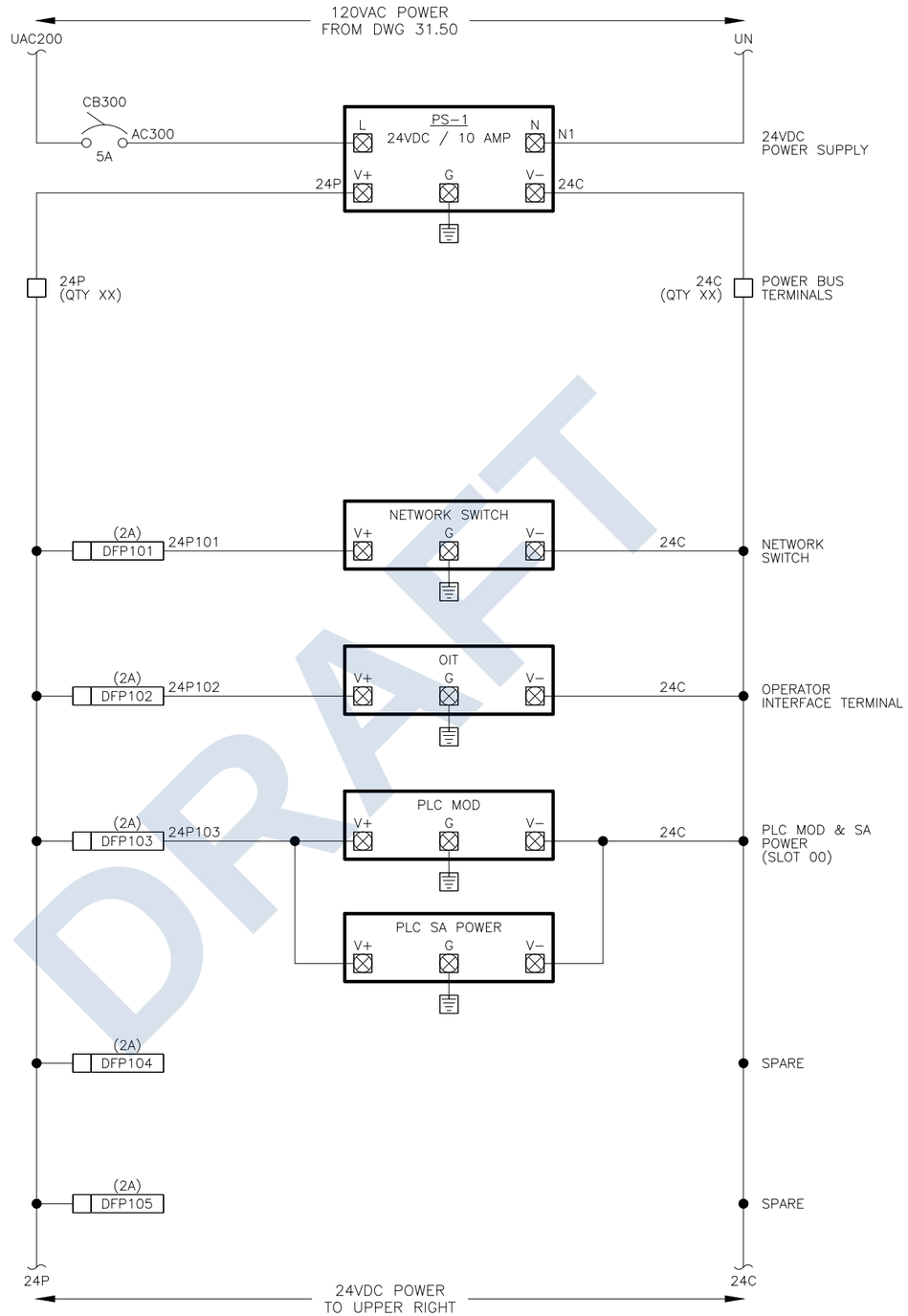



DRAFT

REV	DESCRIPTION/INIT	DATE
0.0	ENGINEERING/RJC	5/21/25
1.0	SUBMITTAL/MTN	06/03/25

LISTING
UL508A
S/N:

Technical Systems Inc.
2303 196TH ST. S.W.
LYNNWOOD, WA. 98036
(425) 775-5696

CUSTOMER
FKC CO., LTD.

EN / PM / CHK
BC/BC/AP

DRAWN
RJC

CITY OF SAN LUIS, AZ

FKC SAN LUIS, AZ – WEST WWTP
SCREW PRESS CONTROL PANEL (CP-1)

24VDC POWER DISTRIBUTION DIAGRAM

DATE CREATED 4/22/25
REV. 1.0
JOB NO. P25-026
DWG. NO. CP1-32.00

DRAFT

FIELD	CP–1

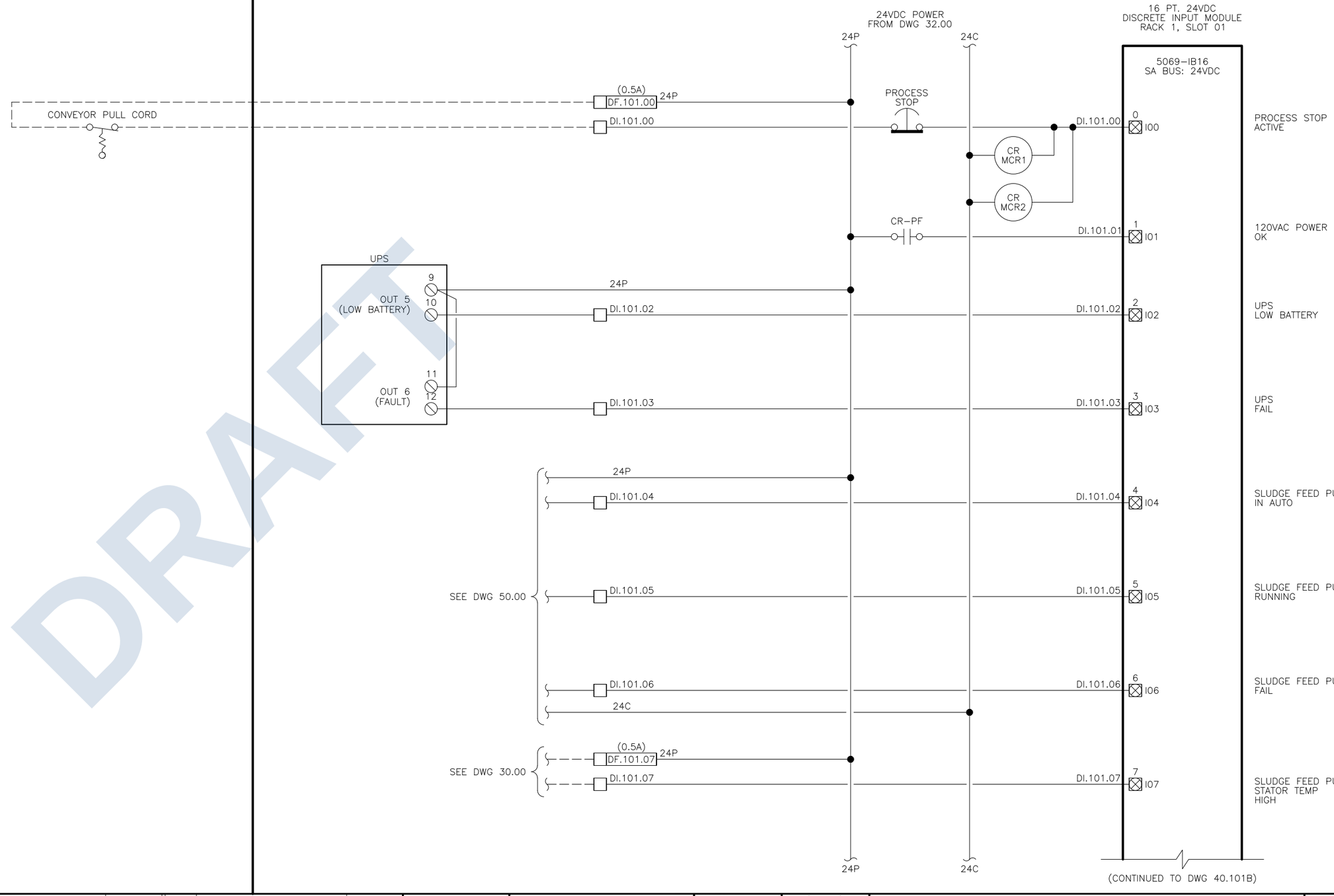

REV	DESCRIPTION/INIT	DATE
0.0	ENGINEERING/RJC	5/21/25
1.0	SUBMITTAL/MTN	06/03/25

LISTING
UL508A
S/N:

Technical Systems Inc.
2303 196TH ST. S.W.
LYNNWOOD, WA. 98036
(425) 775–5696

CUSTOMER
FKC CO., LTD.

EN / PM / CHK
BC/BC/AP

DRAWN
RJC

CITY OF SAN LUIS, AZ

FKC SAN LUIS, AZ – WEST WWTP
SCREW PRESS CONTROL PANEL (CP–1)
DISCRETE INPUT MODULE
RACK 1, SLOT 01 – WIRING DIAGRAM

DATE CREATED 4/22/25
REV. 1.0
JOB NO. P25–026
DWG. NO. CP1–40.101A

FIELD	CP–1

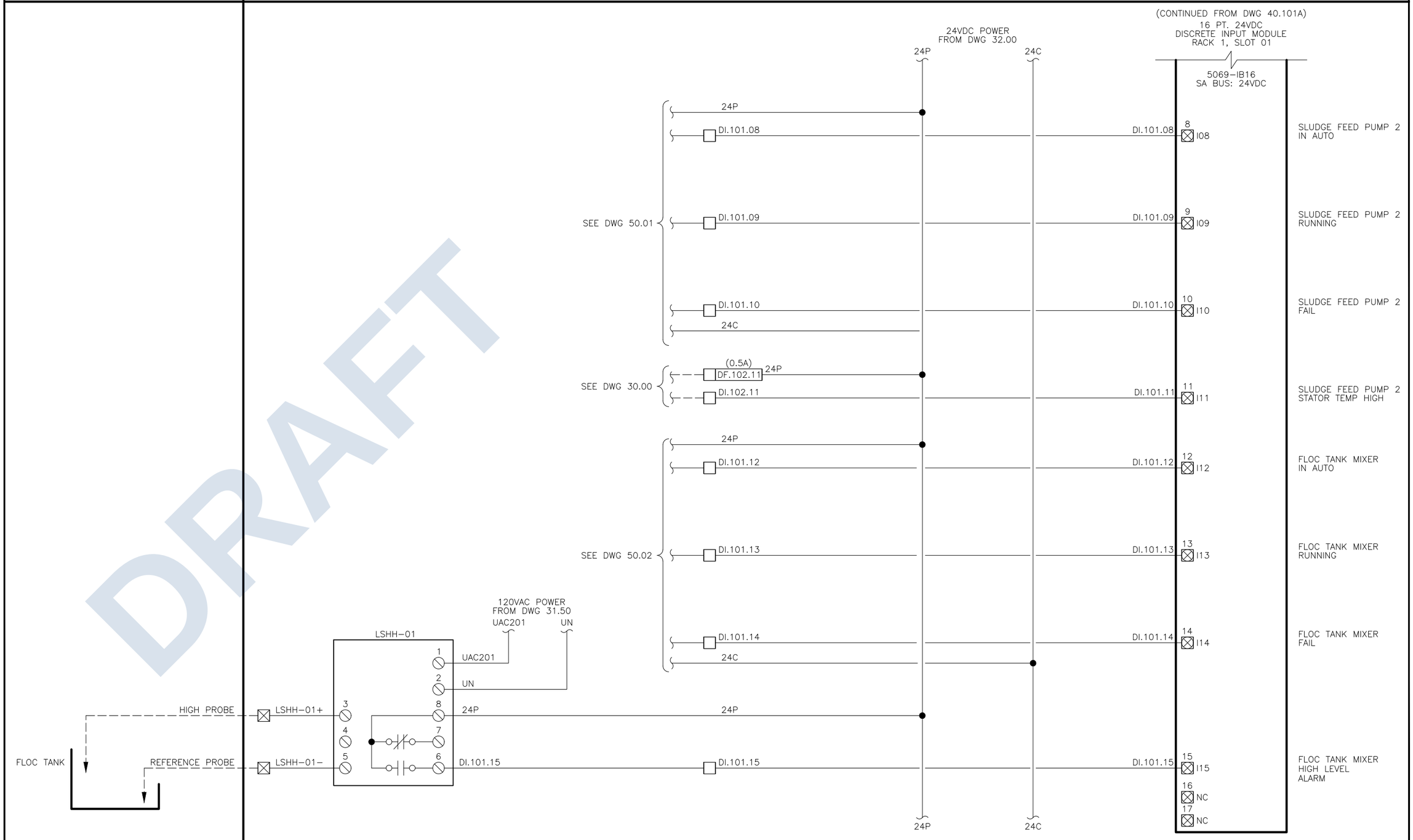

DRAFT

REV	DESCRIPTION/INIT	DATE
0.0	ENGINEERING/RJC	5/21/25
1.0	SUBMITTAL/MTN	06/03/25

LISTING
UL508A
S/N:

Technical Systems Inc.
2303 196TH ST. S.W.
LYNNWOOD, WA. 98036
(425) 775–5696

CUSTOMER
FKC CO., LTD.

EN / PM / CHK
BC/BC/AP

DRAWN
RJC

CITY OF SAN LUIS, AZ

FKC SAN LUIS, AZ – WEST WWTP
SCREW PRESS CONTROL PANEL (CP–1)
DISCRETE INPUT MODULE
RACK 1, SLOT 01 – WIRING DIAGRAM

DATE CREATED 4/22/25
REV. 1.0
JOB NO. P25–026
DWG. NO. CP1–40.101B

FIELD	CP–1

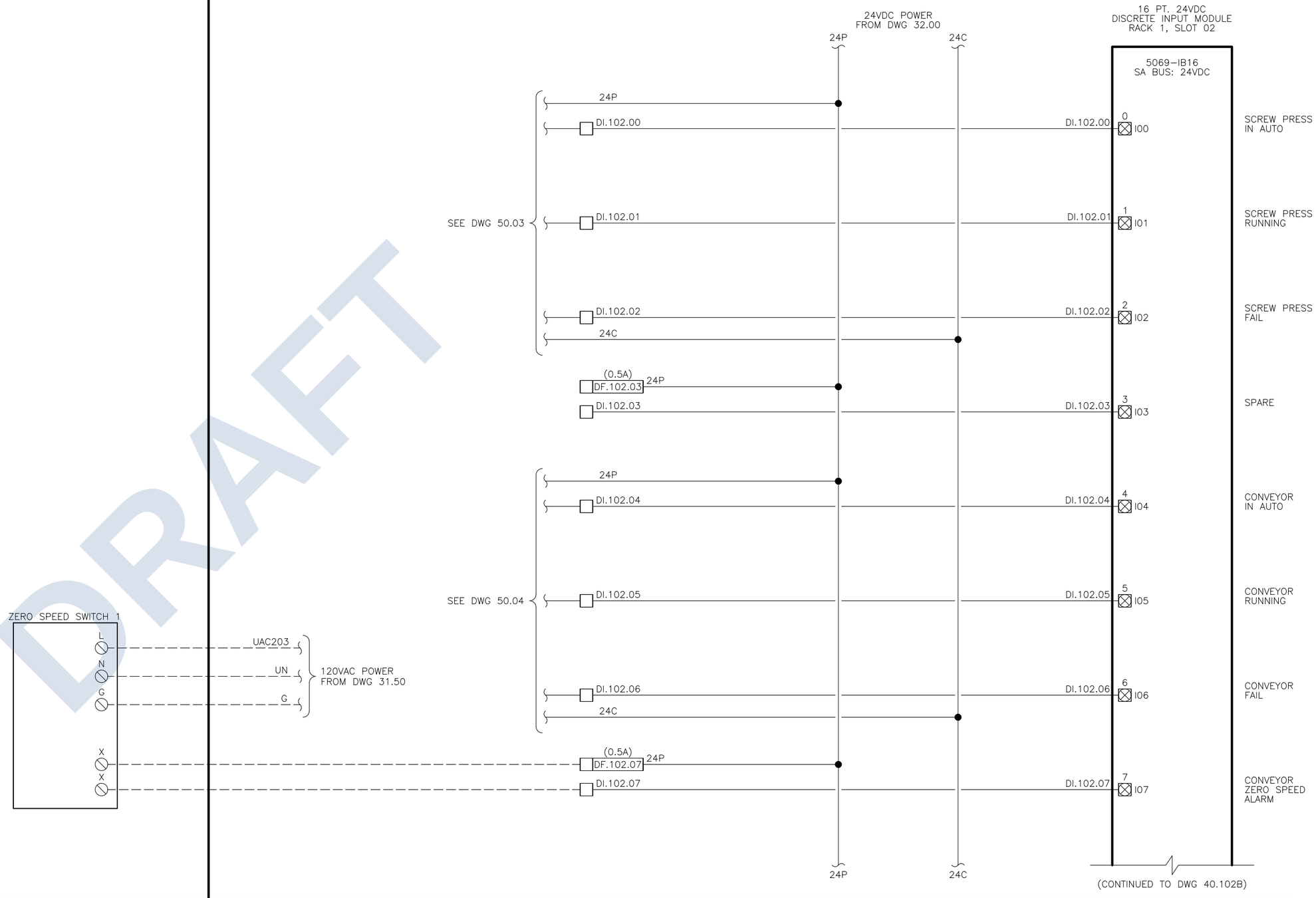

DRAFT

REV	DESCRIPTION/INIT	DATE
0.0	ENGINEERING/RJC	5/21/25
1.0	SUBMITTAL/MTN	06/03/25

LISTING

UL508A

S/N:

Technical Systems Inc.
2303 196TH ST. S.W.
LYNNWOOD, WA. 98036
(425) 775–5696

CUSTOMER

FKC CO., LTD.

EN / PM / CHK
BC/BC/AP

DRAWN
RJC

CITY OF SAN LUIS, AZ

FKC SAN LUIS, AZ – WEST WWTP
SCREW PRESS CONTROL PANEL (CP–1)
DISCRETE INPUT MODULE
RACK 1, SLOT 02 – WIRING DIAGRAM

DATE CREATED 4/22/25
REV. 1.0
JOB NO. P25–026
DWG. NO. CP1–40.102A

FIELD | CP–1

(CONTINUED FROM DWG 40.102A)

16 PT. 24VDC
DISCRETE INPUT MODULE
RACK 1, SLOT 02

5069–IB16
SA BUS: 24VDC

24VDC POWER
FROM DWG 32.00

24P

24C

POLYMER SYSTEM

CR.101.08A
CR.101.08B
CR.101.09A
CR.101.09B
CR.101.10A
CR.101.10B

SEE DWG PSCP–40.101D

(0.5A) DF.102.08 24P
DI.102.08 → DI.102.08 8 I08 — POLYMER SYSTEM IN AUTO

DI.102.09 → DI.102.09 9 I09 — POLYMER SYSTEM RUNNING

DI.102.10 → DI.102.10 10 I10 — POLYMER SYSTEM FAIL

(0.5A) DF.102.11 24P
DI.102.11 → DI.102.11 11 I11 — SPARE

DI.102.12 → DI.102.12 12 I12 — SPARE

DI.102.13 → DI.102.13 13 I13 — SPARE

(0.5A) DF.102.14 24P
DI.102.14 → DI.102.14 14 I14 — SPARE

DI.102.15 → DI.102.15 15 I15 — SPARE

16 NC
17 NC

24P

24C

DRAFT

REV	DESCRIPTION/INIT	DATE
0.0	ENGINEERING/RJC	5/21/25
1.0	SUBMITTAL/MTN	06/03/25

LISTING: UL508A
S/N:

Technical Systems Inc.
2303 196TH ST. S.W.
LYNNWOOD, WA. 98036
(425) 775–5696

CUSTOMER: FKC CO., LTD.

EN / PM / CHK: BC/BC/AP

DRAWN: RJC

CITY OF SAN LUIS, AZ

FKC SAN LUIS, AZ – WEST WWTP
SCREW PRESS CONTROL PANEL (CP–1)
DISCRETE INPUT MODULE
RACK 1, SLOT 02 – WIRING DIAGRAM

DATE CREATED: 4/22/25
REV.: 1.0
JOB NO.: P25–026
DWG. NO.: CP1–40.102B

FIELD	CP–1

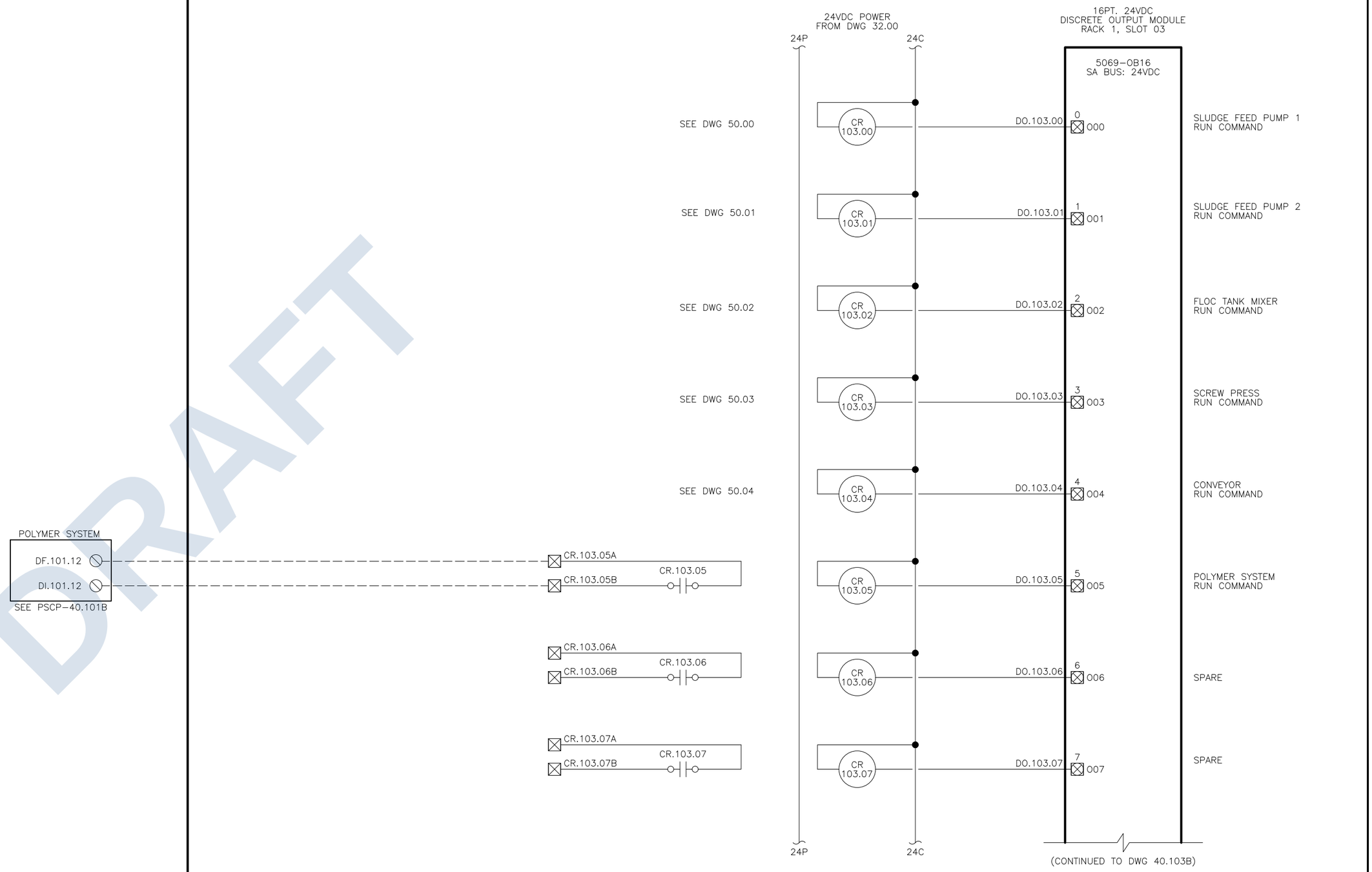

DRAFT

REV	DESCRIPTION/INIT	DATE
0.0	ENGINEERING/RJC	5/21/25
1.0	SUBMITTAL/MTN	06/03/25

LISTING

UL508A

S/N:

Technical Systems Inc.
2303 196TH ST. S.W.
LYNNWOOD, WA. 98036
(425) 775–5696

CUSTOMER

FKC CO., LTD.

EN / PM / CHK
BC/BC/AP

DRAWN
RJC

CITY OF SAN LUIS, AZ

FKC SAN LUIS, AZ – WEST WWTP
SCREW PRESS CONTROL PANEL (CP–1)
DISCRETE OUTPUT MODULE
RACK 1, SLOT 03 – WIRING DIAGRAM

DATE CREATED 4/22/25
REV. 1.0
JOB NO. P25–026
DWG. NO. CP1–40.103A

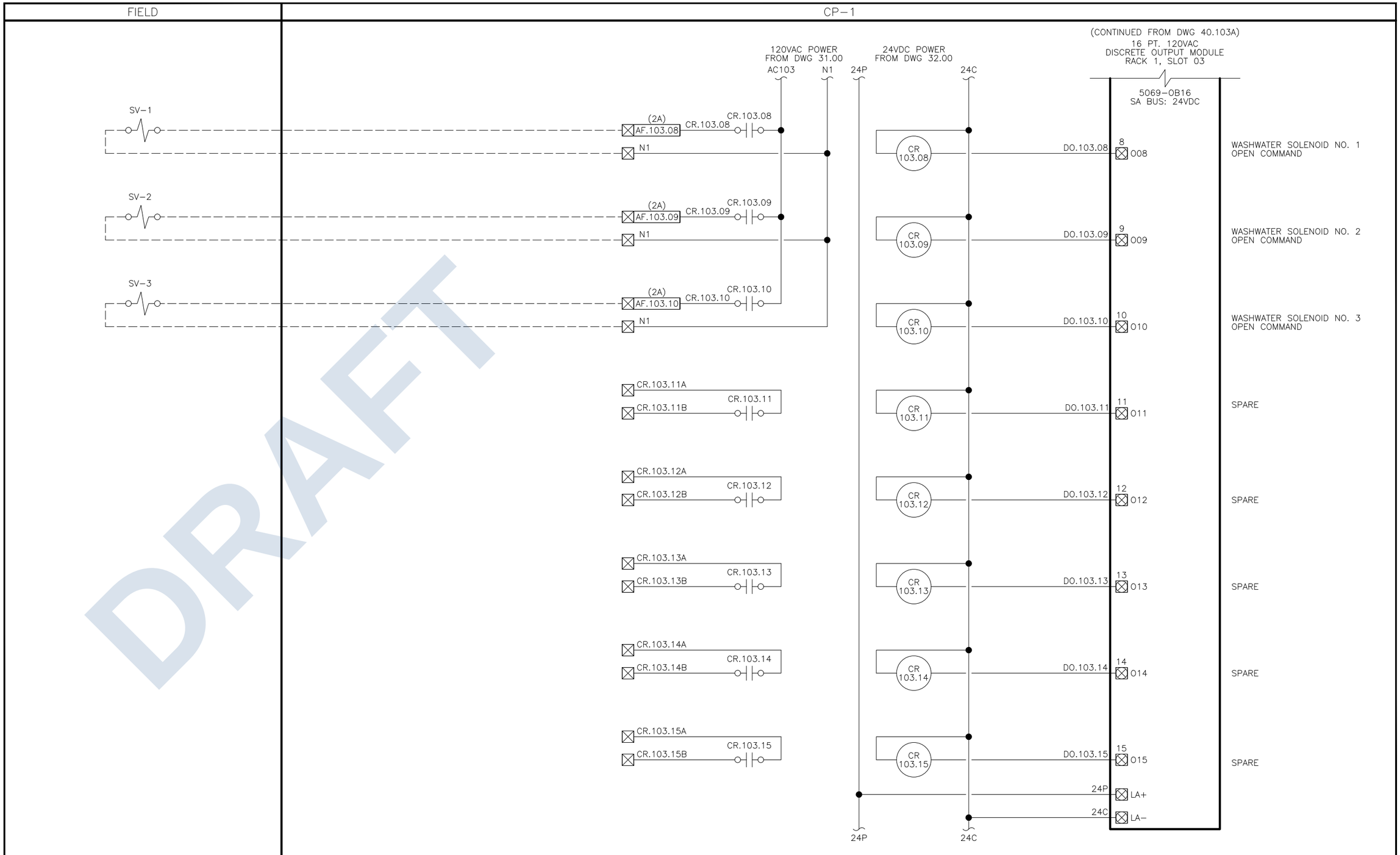

REV	DESCRIPTION/INIT	DATE
0.0	ENGINEERING/RJC	5/21/25
1.0	SUBMITTAL/MTN	06/03/25

LISTING: UL508A
S/N:

Technical Systems Inc.
2303 196TH ST. S.W.
LYNNWOOD, WA. 98036
(425) 775-5696

CUSTOMER: FKC CO., LTD.

EN / PM / CHK: BC/BC/AP
DRAWN: RJC

CITY OF SAN LUIS, AZ

FKC SAN LUIS, AZ – WEST WWTP
SCREW PRESS CONTROL PANEL (CP-1)
DISCRETE OUTPUT MODULE
RACK 1, SLOT 03 – WIRING DIAGRAM

DATE CREATED: 4/22/25
REV.: 1.0
JOB NO.: P25-026
DWG. NO.: CP1-40.103B

FIELD	CP−1

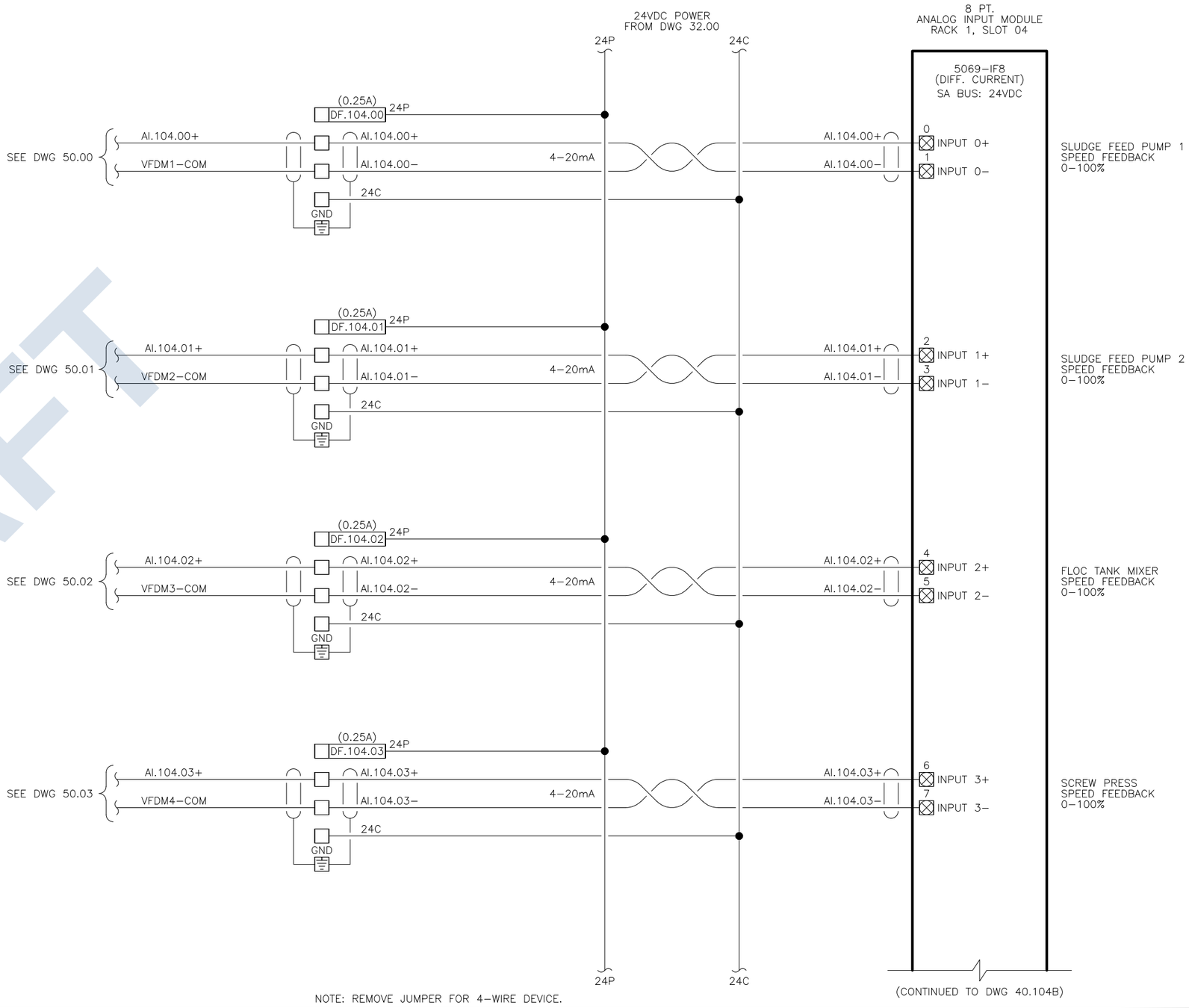

NOTE: REMOVE JUMPER FOR 4−WIRE DEVICE.

DRAFT

REV	DESCRIPTION/INIT	DATE
0.0	ENGINEERING/RJC	5/21/25
1.0	SUBMITTAL/MTN	06/03/25

LISTING: UL508A
S/N:

Technical Systems Inc.
2303 196TH ST. S.W.
LYNNWOOD, WA. 98036
(425) 775−5696

CUSTOMER: FKC CO., LTD.
EN / PM / CHK: BC/BC/AP
DRAWN: RJC

CITY OF SAN LUIS, AZ

FKC SAN LUIS, AZ − WEST WWTP
SCREW PRESS CONTROL PANEL (CP−1)
ANALOG INPUT MODULE
RACK 1, SLOT 04 − WIRING DIAGRAM

DATE CREATED: 4/22/25
REV.: 1.0
JOB NO.: P25−026
DWG. NO.: CP1−40.104A

FIELD | CP-1

(CONTINUED FROM DWG 40.104A)

8 PT.
ANALOG INPUT MODULE
RACK 1, SLOT 04

5069-IF8
(DIFF. CURRENT)
SA BUS: 24VDC

24VDC POWER
FROM DWG 32.00

24P | 24C

SEE DWG 50.04

(0.25A) DF.104.04 24P

AI.104.04+ → AI.104.04+ → 4-20mA → AI.104.04+ → 8 INPUT 4+
VFDM5-COM → AI.104.04- → AI.104.04- → 9 INPUT 4-
24C
GND

CONVEYOR
SPEED FEEDBACK
0-100%

POLYMER SYSTEM
DF.102.A00
AO.102.00
SEE DWG PSCP-40.102B

(0.25A) DF.104.05 24P

4-20mA → AI.104.05+ → 4-20mA → AI.104.05+ → 10 INPUT 5+
AI.104.05- → AI.104.05- → 11 INPUT 5-
24C
GND

POLYMER SYSTEM
SPEED FEEDBACK
0-100%

UAC205
UN
GND
120VAC POWER
FROM DWG 31.50

L N

FIT01 (+ / -)

(0.25A) DF.104.06 24P

4-20mA → AI.104.06+ → 4-20mA → AI.104.06+ → 12 INPUT 6+
AI.104.06- → AI.104.06- → 13 INPUT 6-
24C
GND

SLUDGE FLOW
FLOW
0-XX GPM

LIT 01 (+ / -)

(0.25A) DF.104.07 24P

4-20mA → AI.104.07+ → 4-20mA → AI.104.07+ → 14 INPUT 7+
AI.104.07- → AI.104.07- → 15 INPUT 7-
24C
GND

HEADBOX
LEVEL
0-XX IN

16 SHIELD
17 SHIELD

24P | 24C

NOTE: REMOVE JUMPER FOR 4-WIRE DEVICE.

DRAFT

REV	DESCRIPTION/INIT	DATE
0.0	ENGINEERING/RJC	5/21/25
1.0	SUBMITTAL/MTN	06/03/25

LISTING
UL508A
S/N:

Technical Systems Inc.
2303 196TH ST. S.W.
LYNNWOOD, WA. 98036
(425) 775-5696

CUSTOMER: FKC CO., LTD.
EN / PM / CHK: BC/BC/AP
DRAWN: RJC

CITY OF SAN LUIS, AZ

FKC SAN LUIS, AZ – WEST WWTP
SCREW PRESS CONTROL PANEL (CP-1)
ANALOG INPUT MODULE
RACK 1, SLOT 04 – WIRING DIAGRAM

DATE CREATED: 4/22/25 | REV.: 1.0
JOB NO.: P25-026
DWG. NO.: CP1-40.104B

FIELD	CP–1

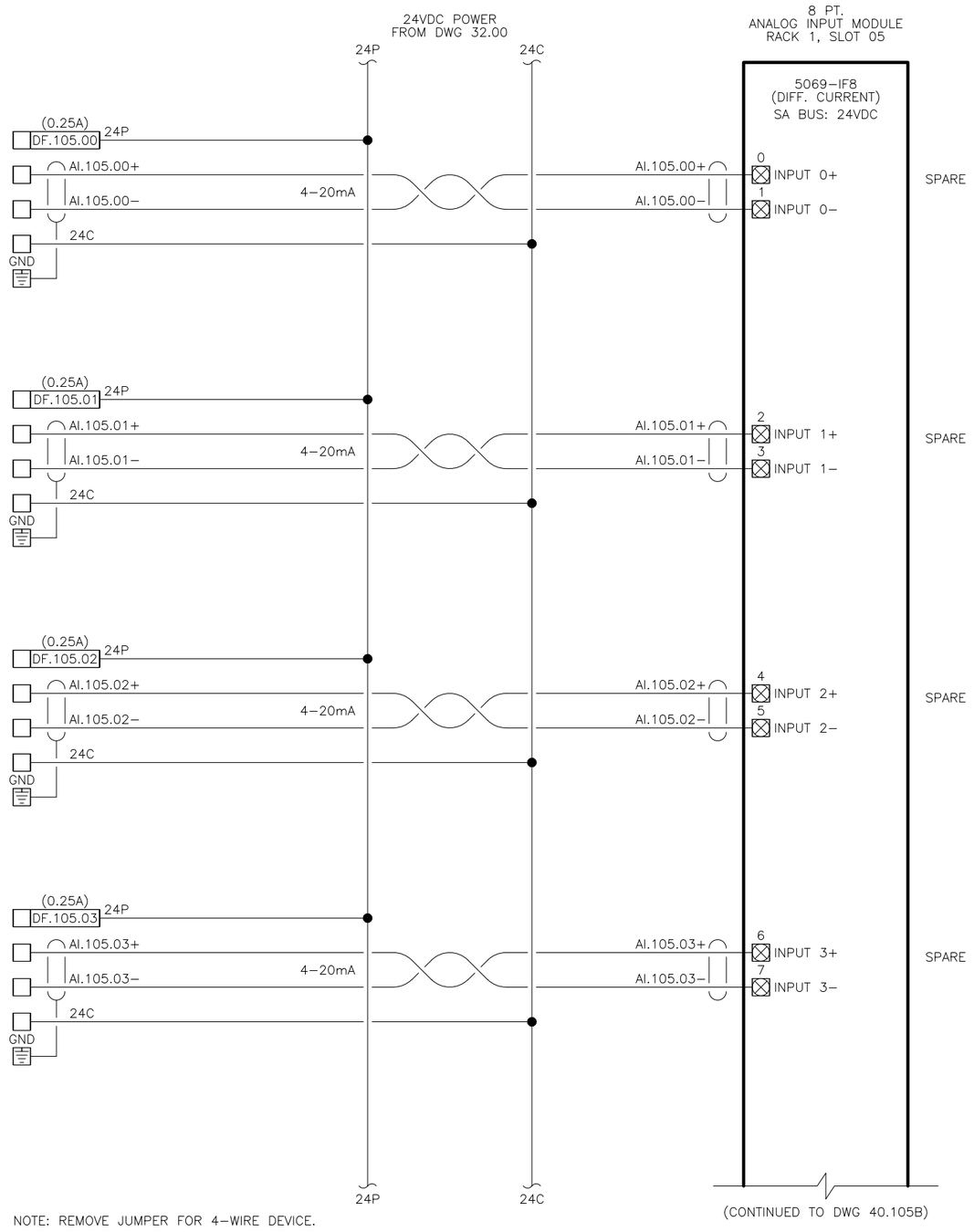

NOTE: REMOVE JUMPER FOR 4–WIRE DEVICE.

REV	DESCRIPTION/INIT	DATE
0.0	ENGINEERING/RJC	5/21/25
1.0	SUBMITTAL/MTN	06/03/25

LISTING
UL508A
S/N:

Technical Systems Inc.
2303 196TH ST. S.W.
LYNNWOOD, WA. 98036
(425) 775–5696

CUSTOMER
FKC CO., LTD.

EN / PM / CHK
BC/BC/AP

DRAWN
RJC

CITY OF SAN LUIS, AZ

FKC SAN LUIS, AZ – WEST WWTP
SCREW PRESS CONTROL PANEL (CP–1)
ANALOG INPUT MODULE
RACK 1, SLOT 05 – WIRING DIAGRAM

DATE CREATED 4/22/25
REV. 1.0
JOB NO. P25–026
DWG. NO. CP1–40.105A

DRAFT

FIELD

CP–1

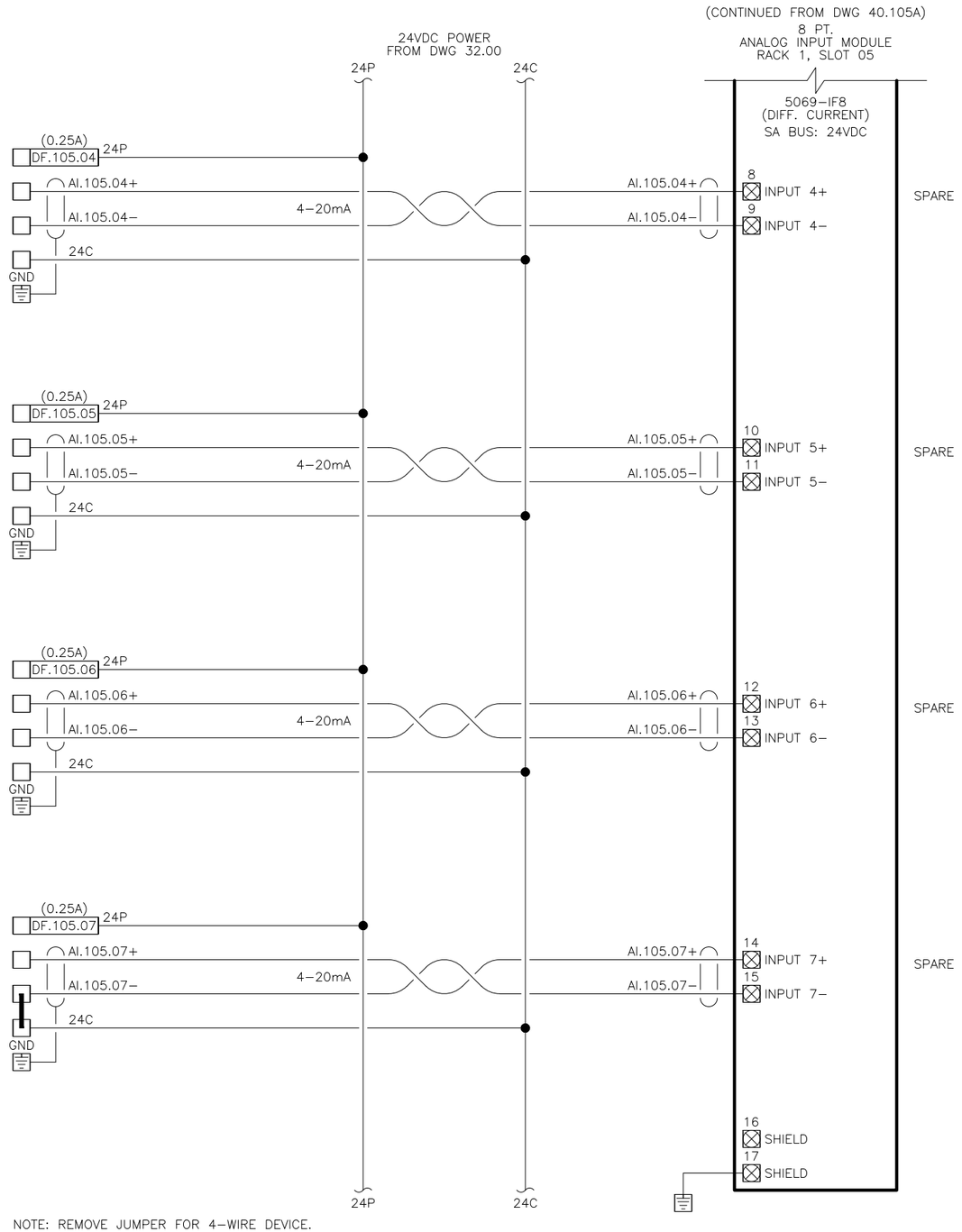

NOTE: REMOVE JUMPER FOR 4–WIRE DEVICE.

REV	DESCRIPTION/INIT	DATE
0.0	ENGINEERING/RJC	5/21/25
1.0	SUBMITTAL/MTN	06/03/25

LISTING

UL508A

S/N:

Technical Systems Inc.
2303 196TH ST. S.W.
LYNNWOOD, WA. 98036
(425) 775–5696

CUSTOMER: FKC CO., LTD.

EN / PM / CHK: BC/BC/AP

DRAWN: RJC

CITY OF SAN LUIS, AZ

FKC SAN LUIS, AZ – WEST WWTP
SCREW PRESS CONTROL PANEL (CP–1)
ANALOG INPUT MODULE
RACK 1, SLOT 05 – WIRING DIAGRAM

DATE CREATED: 4/22/25

REV.: 1.0

JOB NO.: P25–026

DWG. NO.: CP1–40.105B

DRAFT

FIELD	CP−1

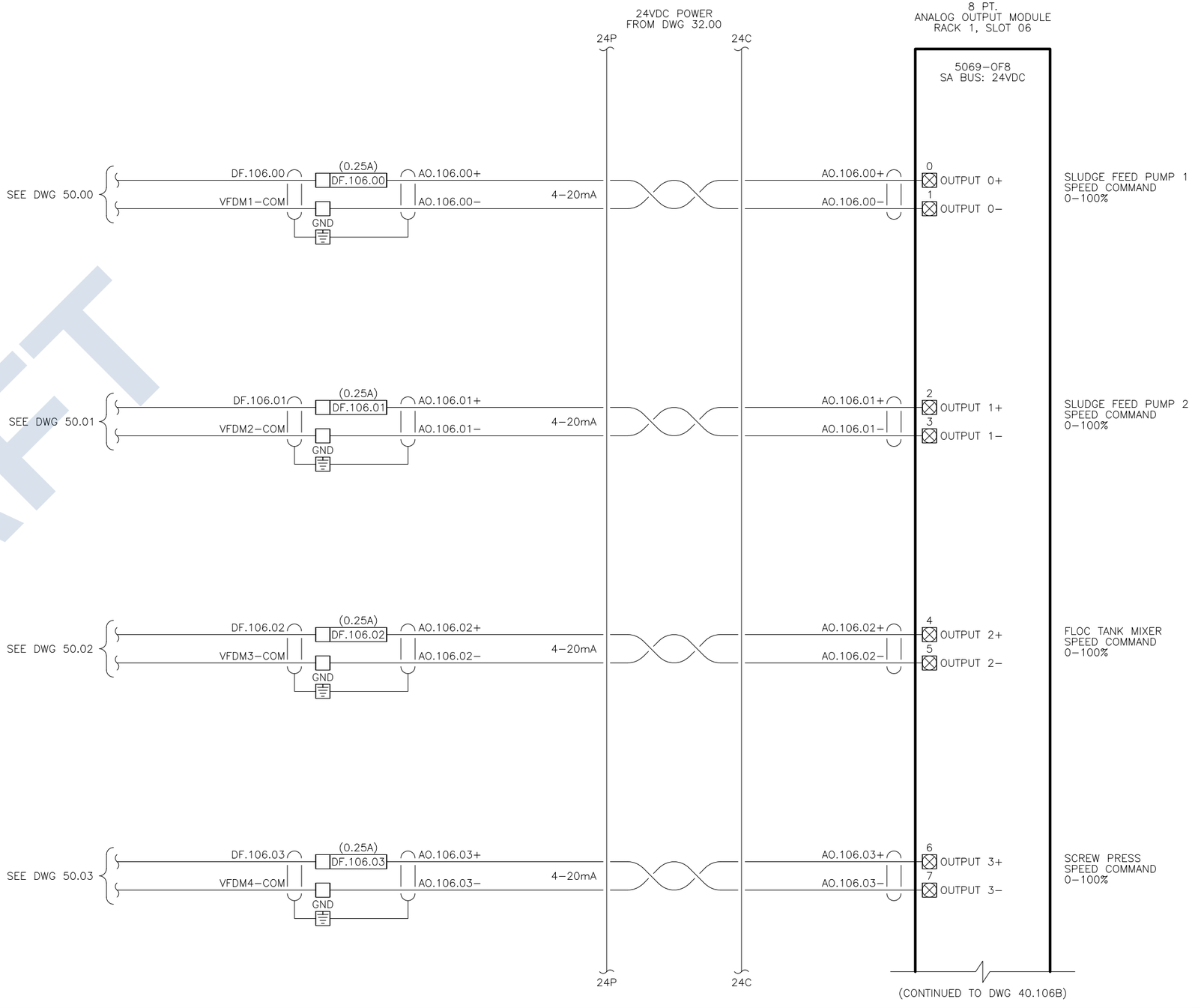

DRAFT

REV	DESCRIPTION/INIT	DATE
0.0	ENGINEERING/RJC	5/21/25
1.0	SUBMITTAL/MTN	06/03/25

LISTING
UL508A
S/N:

Technical Systems Inc.
2303 196TH ST. S.W.
LYNNWOOD, WA. 98036
(425) 775−5696

CUSTOMER
FKC CO., LTD.

EN / PM / CHK
BC/BC/AP

DRAWN
RJC

CITY OF SAN LUIS, AZ

FKC SAN LUIS, AZ − WEST WWTP
SCREW PRESS CONTROL PANEL (CP−1)
ANALOG OUTPUT MODULE
RACK 1, SLOT 06 − WIRING DIAGRAM

DATE CREATED 4/22/25
REV. 1.0
JOB NO. P25−026
DWG. NO. CP1−40.106A

FIELD | CP−1

(CONTINUED FROM DWG 40.106A)

8 PT.
ANALOG OUTPUT MODULE
RACK 1, SLOT 06

5069−OF8
SA BUS: 24VDC

24VDC POWER
FROM DWG 32.00

24P

24C

SEE DWG 50.04

DF.106.04

(0.25A)
DF.106.04

VFDM5−COM

GND

AO.106.04+

AO.106.04−

4−20mA

AO.106.04+

AO.106.04−

8
OUTPUT 4+

9
OUTPUT 4−

CONVEYOR
SPEED COMMAND
0−100%

POLYMER SYSTEM

AI.104.00+

AI.104.00−

SEE DWG PSCP−40.104

(0.25A)
DF.106.05

GND

AO.106.05+

AO.106.05−

4−20mA

AO.106.05+

AO.106.05−

10
OUTPUT 5+

11
OUTPUT 5−

POLYMER SYSTEM
SPEED COMMAND
0−100%

(0.25A)
DF.106.06

GND

AO.106.06+

AO.106.06−

4−20mA

AO.106.06+

AO.106.06−

12
OUTPUT 6+

13
OUTPUT 6−

SPARE

(0.25A)
DF.106.07

GND

AO.106.07+

AO.106.07−

4−20mA

AO.106.07+

AO.106.07−

14
OUTPUT 7+

15
OUTPUT 7−

16
SHIELD

17
SHIELD

SPARE

24P

24C

DRAFT

REV	DESCRIPTION/INIT	DATE
0.0	ENGINEERING/RJC	5/21/25
1.0	SUBMITTAL/MTN	06/03/25

LISTING
UL508A
S/N:

Technical Systems Inc.
2303 196TH ST. S.W.
LYNNWOOD, WA. 98036
(425) 775−5696

CUSTOMER
FKC CO., LTD.

EN / PM / CHK
BC/BC/AP

DRAWN
RJC

CITY OF SAN LUIS, AZ

FKC SAN LUIS, AZ − WEST WWTP
SCREW PRESS CONTROL PANEL (CP−1)
ANALOG OUTPUT MODULE
RACK 1, SLOT 06 − WIRING DIAGRAM

DATE CREATED 4/22/25
REV. 1.0
JOB NO. P25−026
DWG. NO. CP1−40.106B

CP–1

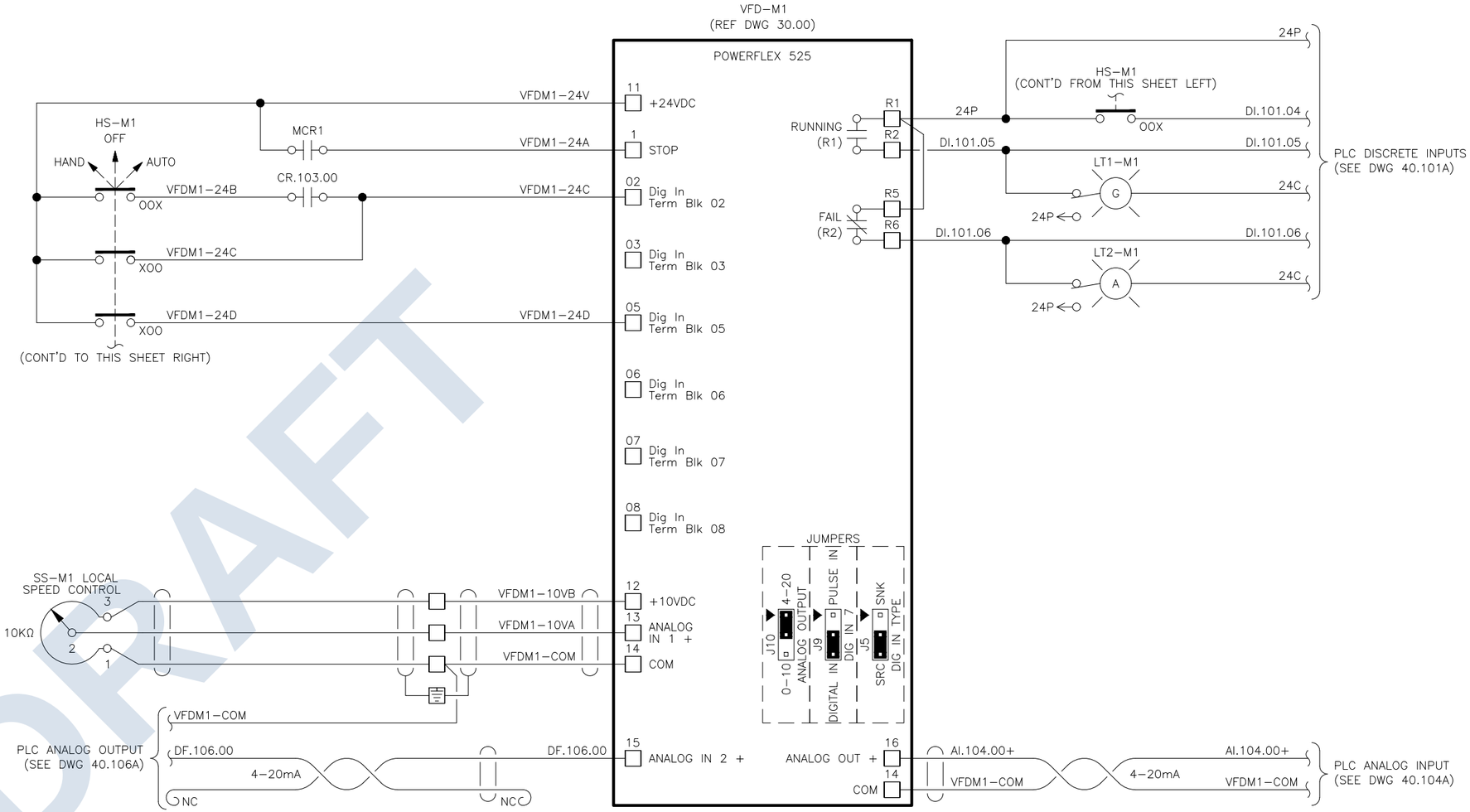

DRAFT

REV	DESCRIPTION/INIT	DATE
0.0	ENGINEERING/RJC	5/21/25
1.0	SUBMITTAL/MTN	06/03/25

LISTING
UL508A
S/N:

Technical Systems Inc.
2303 196TH ST. S.W.
LYNNWOOD, WA. 98036
(425) 775–5696

CUSTOMER
FKC CO., LTD.

EN / PM / CHK
BC/BC/AP

DRAWN
RJC

CITY OF SAN LUIS, AZ

FKC SAN LUIS, AZ – WEST WWTP
SCREW PRESS CONTROL PANEL (CP–1)
SLUDGE FEED PUMP 1
VFD CONTROL WIRING DIAGRAM

DATE CREATED 4/22/25
REV. 1.0
JOB NO. P25–026
DWG. NO. CP1–50.00

CP-1

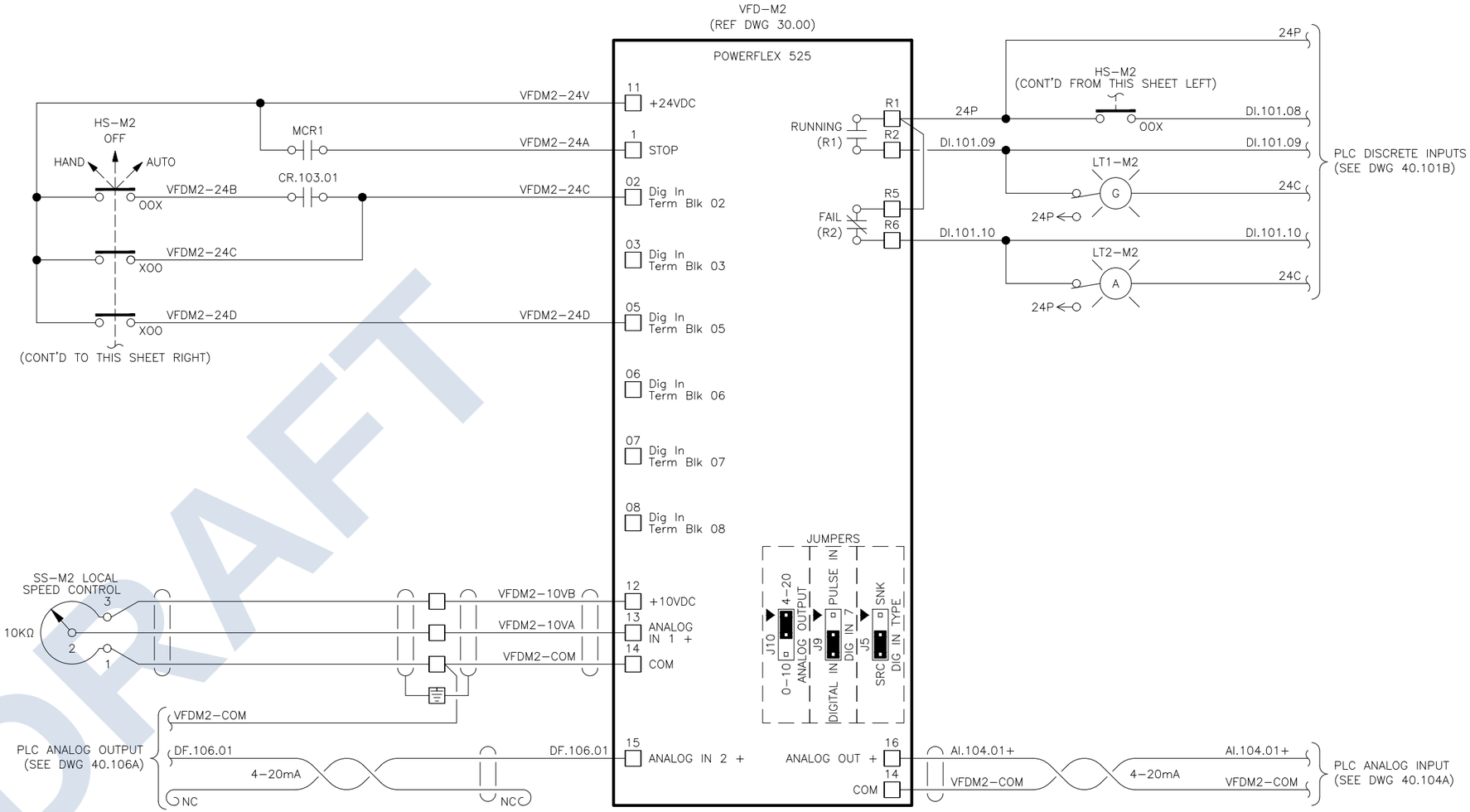

DRAFT

REV	DESCRIPTION/INIT	DATE
0.0	ENGINEERING/RJC	5/21/25
1.0	SUBMITTAL/MTN	06/03/25

LISTING
UL508A
S/N:

Technical Systems Inc.
2303 196TH ST. S.W.
LYNNWOOD, WA. 98036
(425) 775-5696

CUSTOMER
FKC CO., LTD.

EN / PM / CHK
BC/BC/AP
DRAWN
RJC

CITY OF SAN LUIS, AZ

FKC SAN LUIS, AZ – WEST WWTP
SCREW PRESS CONTROL PANEL (CP-1)
SLUDGE FEED PUMP 2
VFD CONTROL WIRING DIAGRAM

DATE CREATED 4/22/25
REV. 1.0
JOB NO. P25-026
DWG. NO. CP1-50.01

CP-1

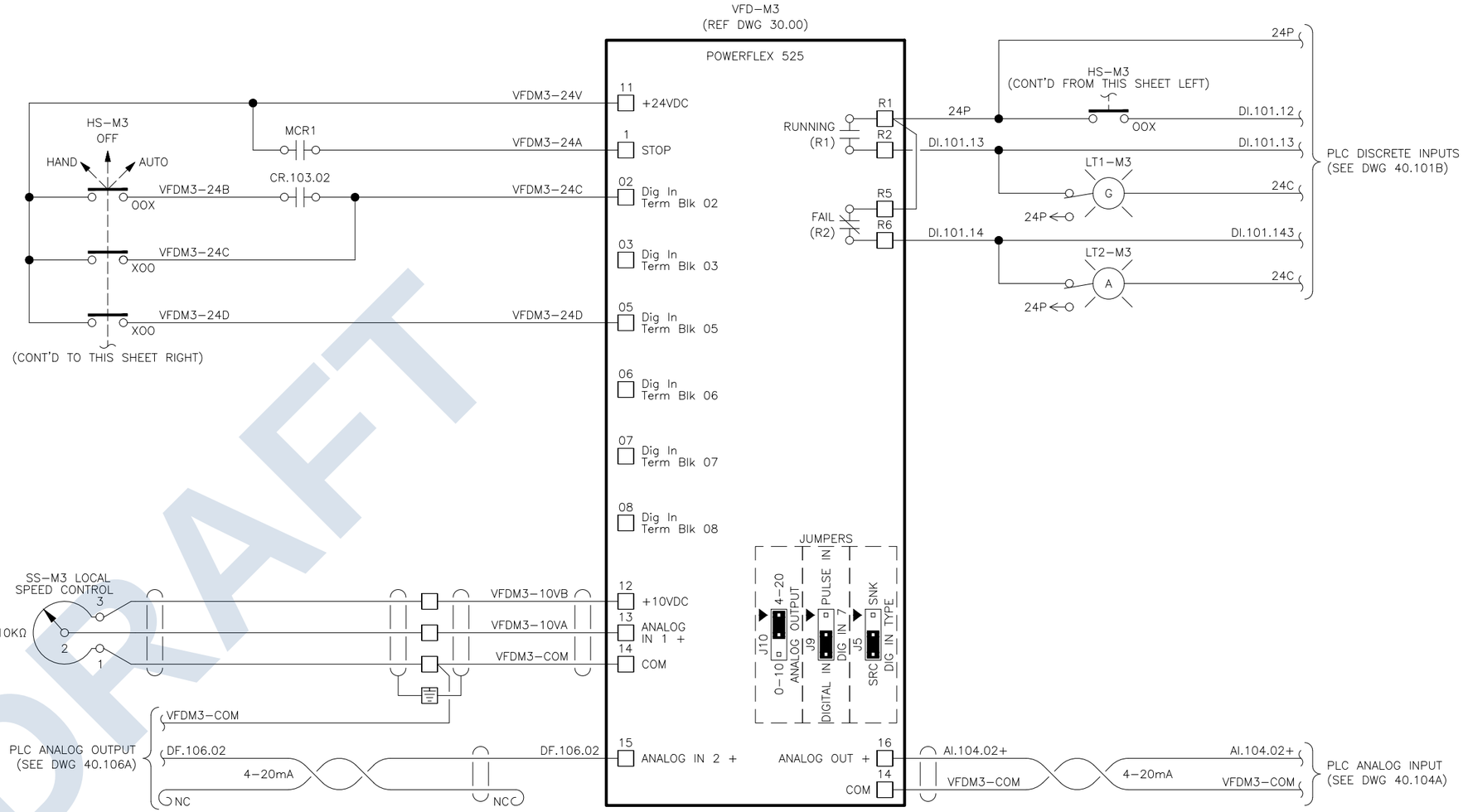

DRAFT

REV	DESCRIPTION/INIT	DATE
0.0	ENGINEERING/RJC	5/21/25
1.0	SUBMITTAL/MTN	06/03/25

LISTING
UL508A
S/N:

Technical Systems Inc.
2303 196TH ST. S.W.
LYNNWOOD, WA. 98036
(425) 775-5696

CUSTOMER
FKC CO., LTD.

EN / PM / CHK
BC/BC/AP
DRAWN
RJC

CITY OF SAN LUIS, AZ

FKC SAN LUIS, AZ – WEST WWTP
SCREW PRESS CONTROL PANEL (CP-1)
FLOC TANK MIXER
VFD CONTROL WIRING DIAGRAM

DATE CREATED 4/22/25
REV. 1.0
JOB NO. P25-026
DWG. NO. CP1-50.02

CP–1

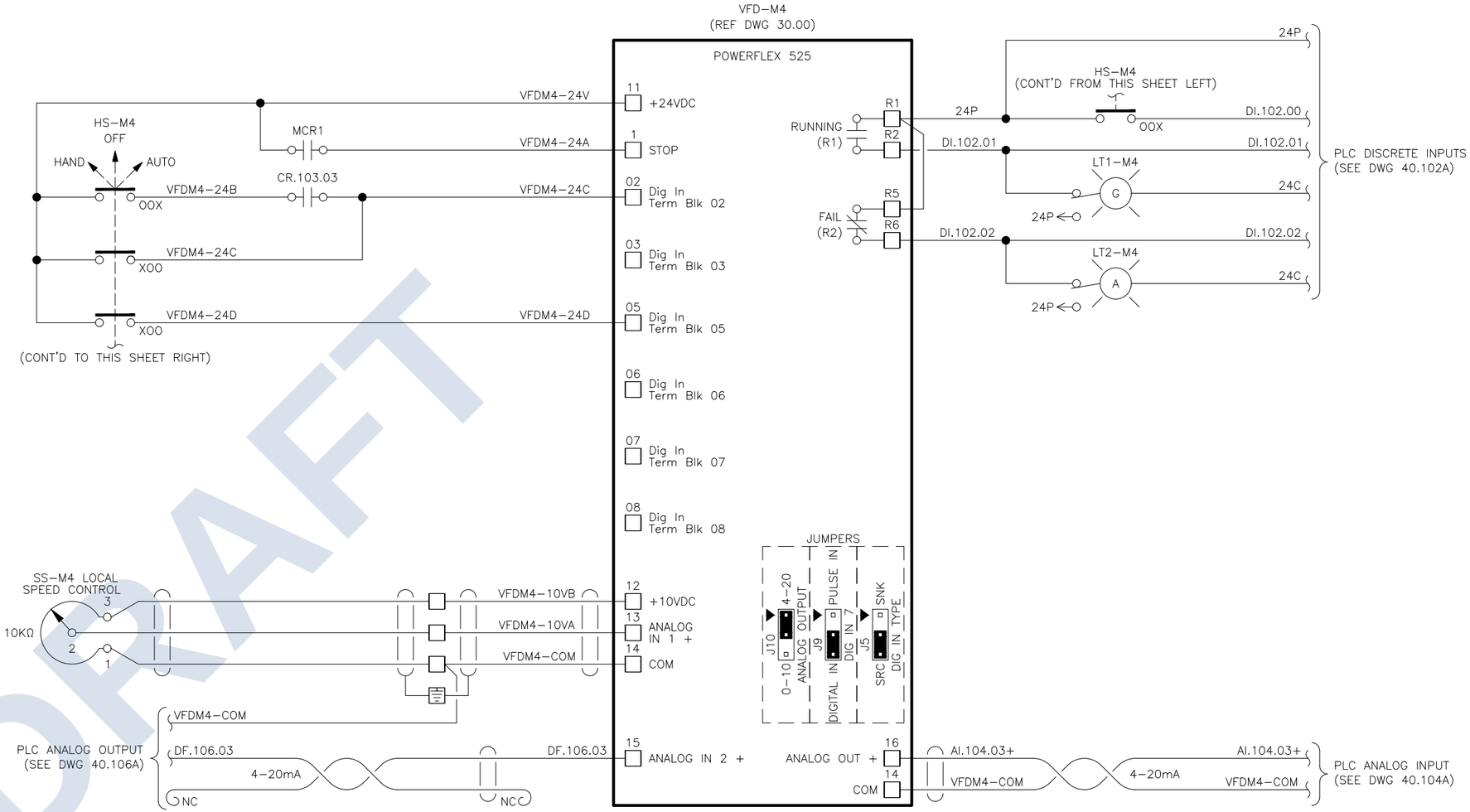

DRAFT

REV	DESCRIPTION/INIT	DATE
0.0	ENGINEERING/RJC	5/21/25
1.0	SUBMITTAL/MTN	06/03/25

LISTING
UL508A
S/N:

Technical Systems Inc.
2303 196TH ST. S.W.
LYNNWOOD, WA. 98036
(425) 775–5696

CUSTOMER
FKC CO., LTD.

EN / PM / CHK
BC/BC/AP

DRAWN
RJC

CITY OF SAN LUIS, AZ

FKC SAN LUIS, AZ – WEST WWTP
SCREW PRESS CONTROL PANEL (CP–1)
SCREW PRESS
VFD CONTROL WIRING DIAGRAM

DATE CREATED 4/22/25
REV. 1.0
JOB NO. P25–026
DWG. NO. CP1–50.03

CP-1

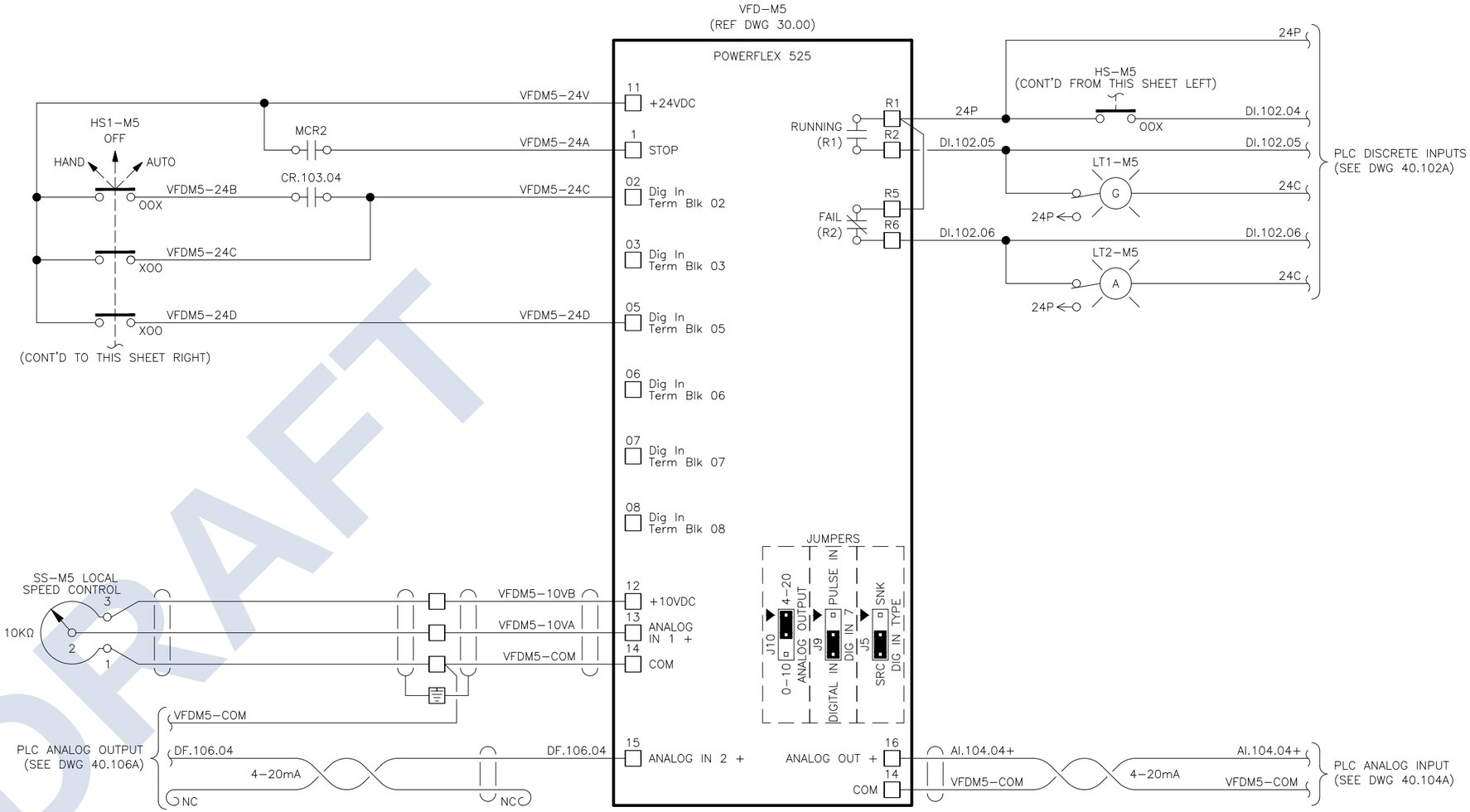

DRAFT

REV	DESCRIPTION/INIT	DATE
0.0	ENGINEERING/RJC	5/21/25
1.0	SUBMITTAL/MTN	06/03/25

LISTING
UL508A
S/N:

Technical Systems Inc.
2303 196TH ST. S.W.
LYNNWOOD, WA. 98036
(425) 775-5696

CUSTOMER
FKC CO., LTD.

EN / PM / CHK
BC/BC/AP
DRAWN
RJC

CITY OF SAN LUIS, AZ

FKC SAN LUIS, AZ – WEST WWTP
SCREW PRESS CONTROL PANEL (CP-1)
CONVEYOR
VFD CONTROL WIRING DIAGRAM

DATE CREATED 4/22/25
REV. 1.0
JOB NO. P25-026
DWG. NO. CP1-50.04

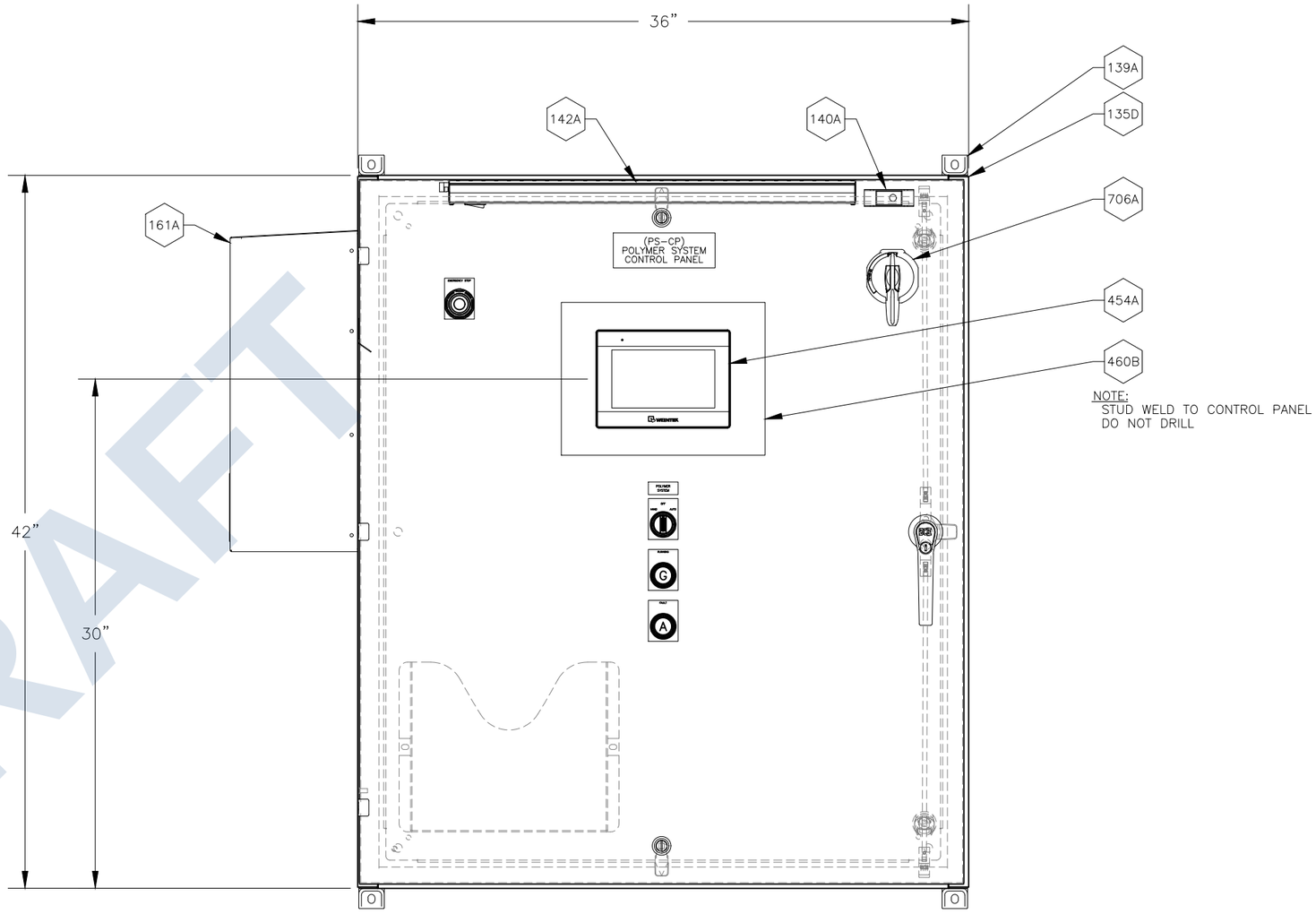

NOTE:
STUD WELD TO CONTROL PANEL
DO NOT DRILL

PANEL POWER SOURCE

PANEL: xx
CIRCUIT: xx

VOLTAGE: 120 VAC HERTZ: 60 PHASE: 1

FULL LOAD AMPS: 27.1A
SHORT CIRCUIT RATING: 10 KAIC
LARGEST MOTOR FLA: 2.2A

CONDUIT ENTRY
BOTTOM

NEMA RATING
4X

MATERIAL
304 STAINLESS STEEL

BUILD TYPE (FOR INTERNAL USE)
STANDARD

DEPTH OF PANEL = 12"

XXX BOM ITEM NUMBER

DRAFT

REV	DESCRIPTION/INIT	DATE
0.0	ENGINEERING/RJC	5/21/25
1.0	SUBMITTAL/MTN	06/03/25

LISTING
UL508A
S/N:

Technical Systems Inc.
2303 196TH ST. S.W.
LYNNWOOD, WA. 98036
(425) 775-5696

CUSTOMER
FKC CO., LTD.

EN / PM / CHK
BC/BC/AP

DRAWN
RJC

CITY OF SAN LUIS, AZ

FKC SAN LUIS, AZ – WEST WWTP
POLYMER SYSTEM CONTROL PANEL (PS-CP)

LAYOUT – PANEL – FRONT ELEVATION

DATE CREATED 4/22/25
REV. 1.0
JOB NO. P25-026
DWG. NO. PSCP-10.00

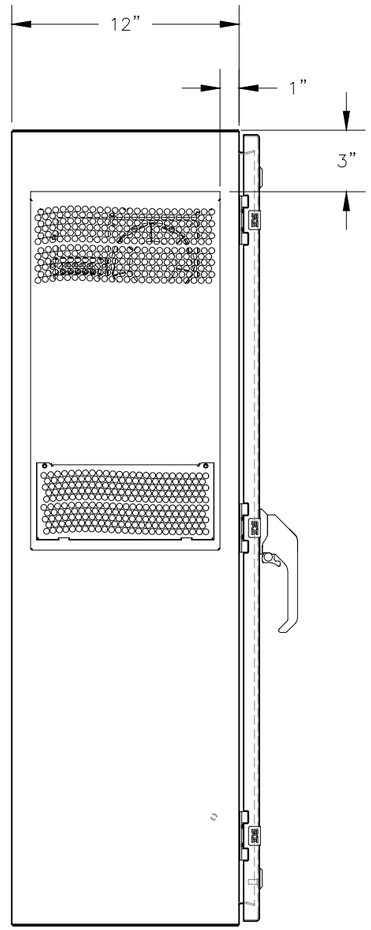

LEFT SIDE ELEVATION

DRAFT

XXX BOM ITEM NUMBER

REV	DESCRIPTION/INIT	DATE
0.0	ENGINEERING/RJC	5/21/25
1.0	SUBMITTAL/MTN	06/03/25

LISTING

UL508A

S/N:

TSI **Technical Systems Inc.**
2303 196TH ST. S.W.
LYNNWOOD, WA. 98036
(425) 775-5696

CUSTOMER

FKC CO., LTD.

EN / PM / CHK
BC/BC/AP

DRAWN
RJC

CITY OF SAN LUIS, AZ

FKC SAN LUIS, AZ – WEST WWTP
POLYMER SYSTEM CONTROL PANEL (PS-CP)

LAYOUT – PANEL – SIDE ELEVATION

DATE CREATED 4/22/25 | REV. 1.0

JOB NO. P25-026

DWG. NO. PSCP-10.02

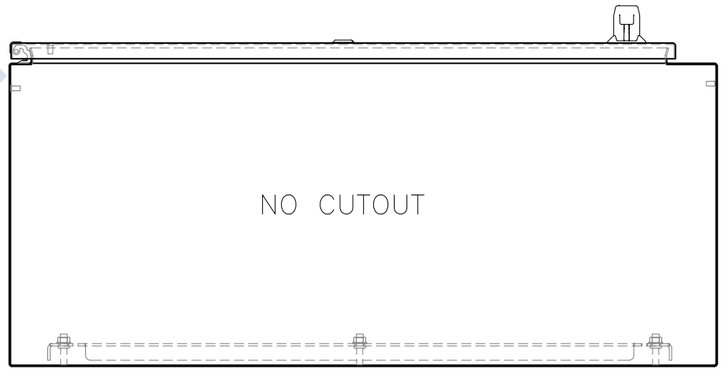

DRAFT

XXX BOM ITEM NUMBER

REV	DESCRIPTION/INIT	DATE
0.0	ENGINEERING/RJC	5/21/25
1.0	SUBMITTAL/MTN	06/03/25

LISTING

UL508A

S/N:

TSI **Technical Systems Inc.**
2303 196TH ST. S.W.
LYNNWOOD, WA. 98036
(425) 775-5696

CUSTOMER
FKC CO., LTD.

EN / PM / CHK
BC/BC/AP

DRAWN
RJC

CITY OF SAN LUIS, AZ

FKC SAN LUIS, AZ – WEST WWTP
POLYMER SYSTEM CONTROL PANEL (PS-CP)

LAYOUT – PANEL – BOTTOM VIEW

DATE CREATED 4/22/25 | REV. 1.0
JOB NO. P25-026
DWG. NO. PSCP-10.03

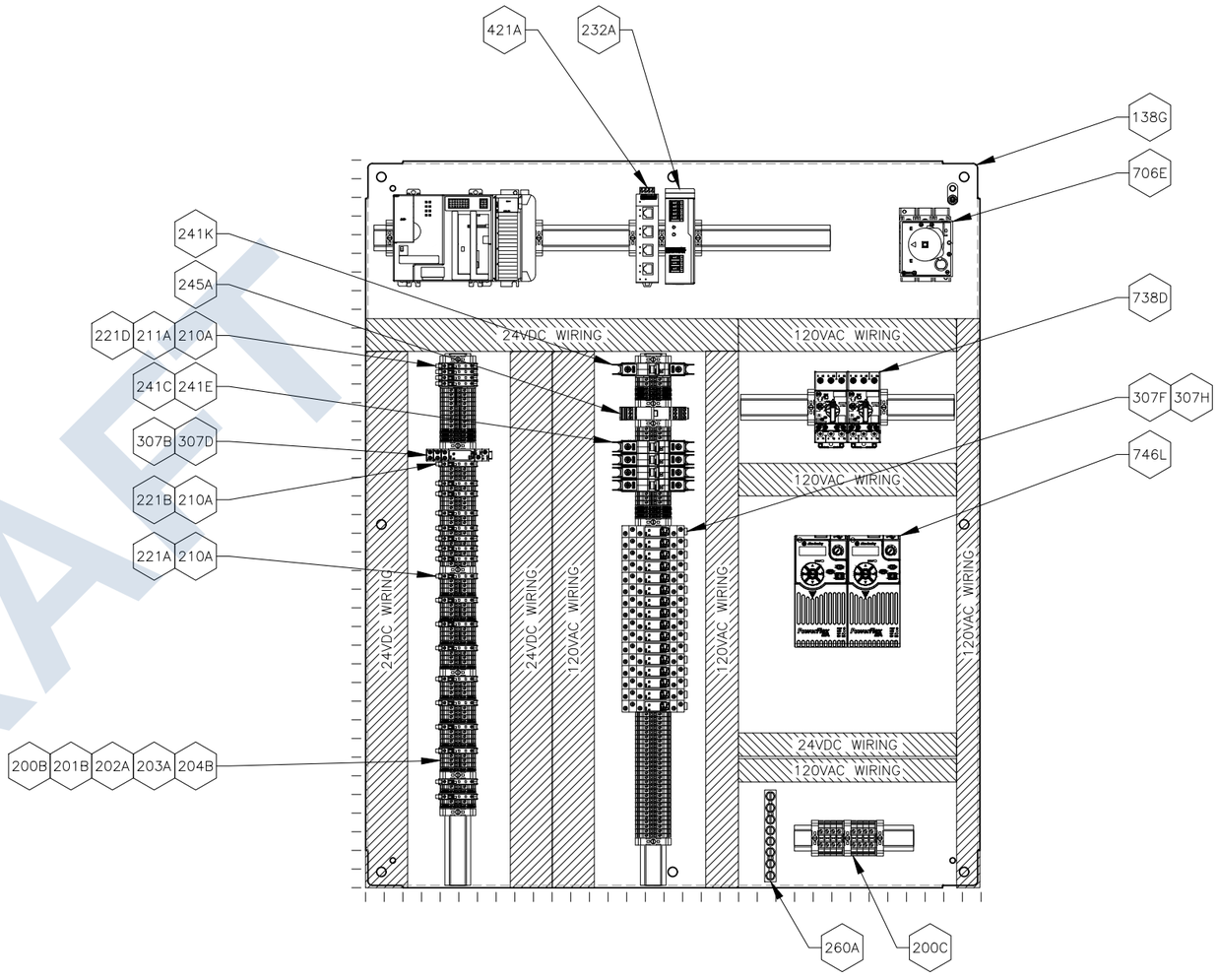

BACKPAN

XXX BOM ITEM NUMBER

REV	DESCRIPTION/INIT	DATE
0.0	ENGINEERING/RJC	5/21/25
1.0	SUBMITTAL/MTN	06/03/25

LISTING: UL508A
S/N:

Technical Systems Inc.
2303 196TH ST. S.W.
LYNNWOOD, WA. 98036
(425) 775-5696

CUSTOMER: FKC CO., LTD.

EN / PM / CHK: BC/BC/AP
DRAWN: RJC

CITY OF SAN LUIS, AZ

FKC SAN LUIS, AZ – WEST WWTP
POLYMER SYSTEM CONTROL PANEL (PS-CP)

LAYOUT – PANEL – BACKPAN ELEVATION

DATE CREATED: 4/22/25
REV.: 1.0
JOB NO.: P25-026
DWG. NO.: PSCP-10.05

DRAFT

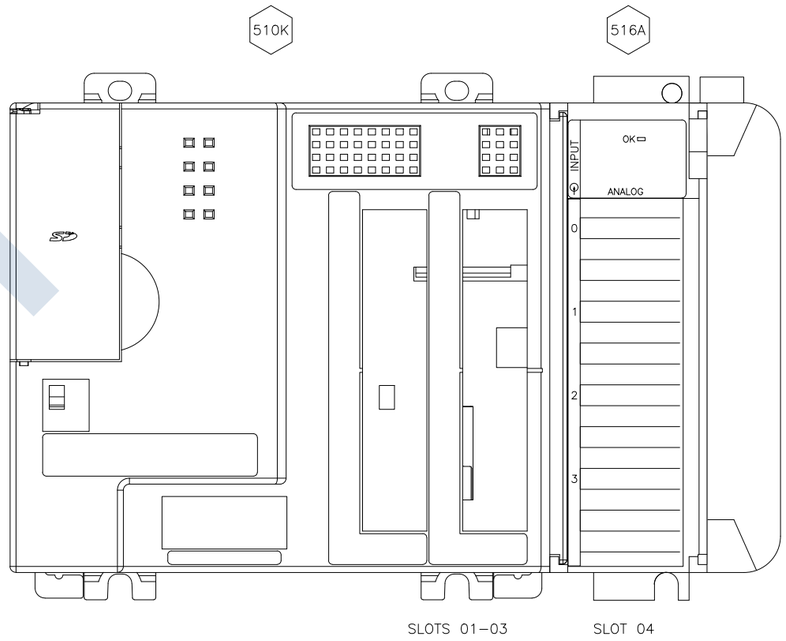

RACK 1

DRAFT

XXX BOM ITEM NUMBER

REV	DESCRIPTION/INIT	DATE
0.0	ENGINEERING/RJC	5/21/25
1.0	SUBMITTAL/MTN	06/03/25

LISTING

UL508A

S/N:

Technical Systems Inc.
2303 196TH ST. S.W.
LYNNWOOD, WA. 98036
(425) 775–5696

CUSTOMER

FKC CO., LTD.

CITY OF SAN LUIS, AZ

EN / PM / CHK
BC/BC/AP

DRAWN
RJC

FKC SAN LUIS, AZ – WEST WWTP
POLYMER SYSTEM CONTROL PANEL (PS–CP)

LAYOUT – PANEL – PLC RACK 1

DATE CREATED 4/22/25 | REV. 1.0

JOB NO. P25–026

DWG. NO. PSCP–10.07

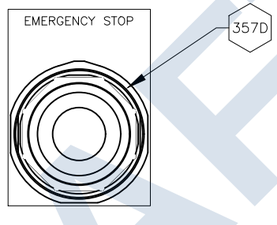

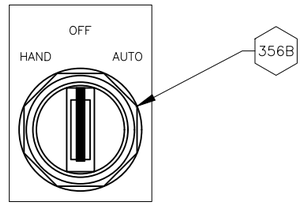

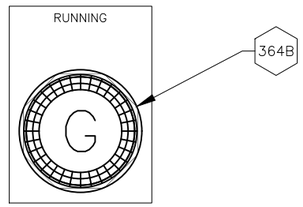

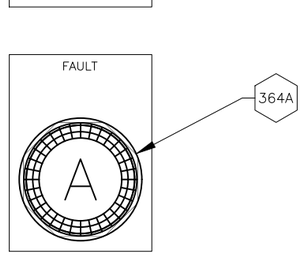

DRAFT

XXX BOM ITEM NUMBER

REV	DESCRIPTION/INIT	DATE
0.0	ENGINEERING/RJC	5/21/25
1.0	SUBMITTAL/MTN	06/03/25

LISTING
UL508A
S/N:

TSI **Technical Systems Inc.**
2303 196TH ST. S.W.
LYNNWOOD, WA. 98036
(425) 775-5696

CUSTOMER
FKC CO., LTD.

EN / PM / CHK
BC/BC/AP

DRAWN
RJC

CITY OF SAN LUIS, AZ

FKC SAN LUIS, AZ – WEST WWTP
POLYMER SYSTEM CONTROL PANEL (PS-CP)

LAYOUT – PANEL – CONTROLS DETAILS

DATE CREATED 4/22/25
REV. 1.0
JOB NO. P25-026
DWG. NO. PSCP-10.10

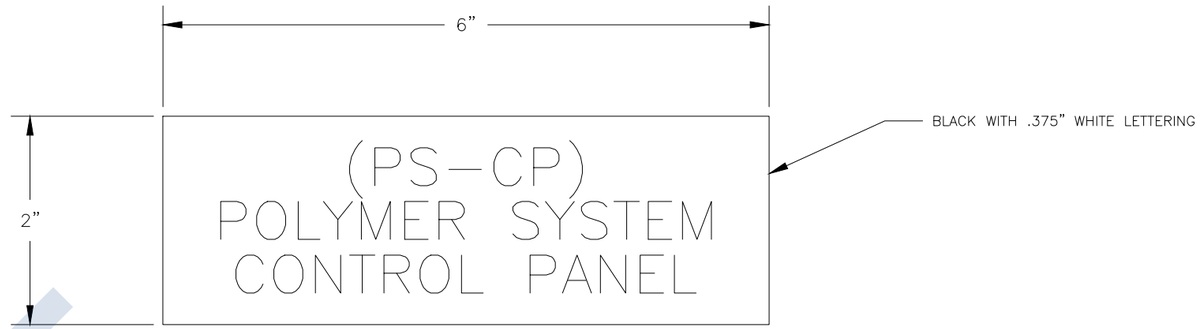

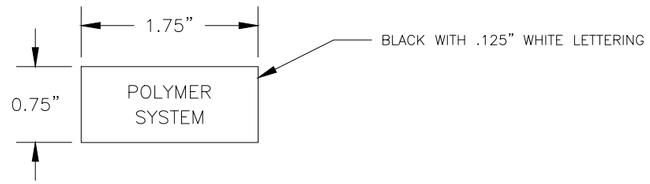

DRAFT

REV	DESCRIPTION/INIT	DATE
0.0	ENGINEERING/RJC	5/21/25
1.0	SUBMITTAL/MTN	06/03/25

LISTING

UL508A

S/N:

Technical Systems Inc.
2303 196TH ST. S.W.
LYNNWOOD, WA. 98036
(425) 775-5696

CUSTOMER

FKC CO., LTD.

EN / PM / CHK
BC/BC/AP

DRAWN
RJC

CITY OF SAN LUIS, AZ

FKC SAN LUIS, AZ – WEST WWTP
POLYMER SYSTEM CONTROL PANEL (PS-CP)

LAYOUT – PANEL – NAMEPLATE DETAILS

DATE CREATED 4/22/25
REV. 1.0
JOB NO. P25-026
DWG. NO. PSCP-10.20

DRAFT

PS-CP

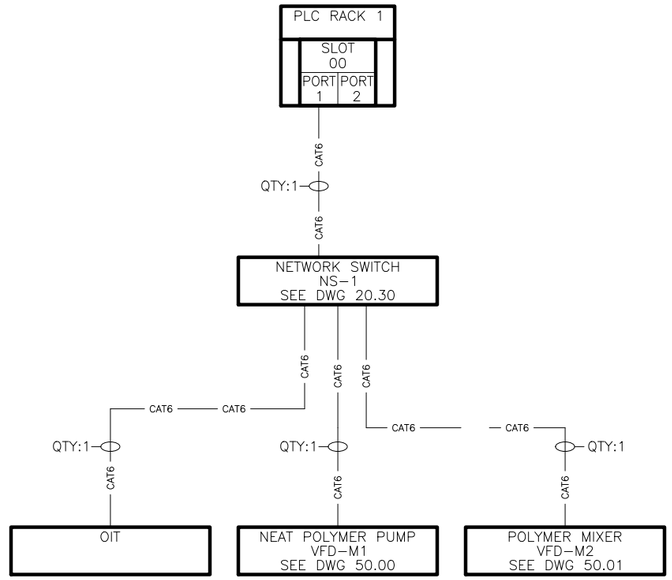

REV	DESCRIPTION/INIT	DATE
0.0	ENGINEERING/RJC	5/21/25
1.0	SUBMITTAL/MTN	06/03/25

LISTING: UL508A
S/N:

Technical Systems Inc.
2303 196TH ST. S.W.
LYNNWOOD, WA. 98036
(425) 775-5696

CUSTOMER: FKC CO., LTD.

EN / PM / CHK: BC/BC/AP

DRAWN: RJC

CITY OF SAN LUIS, AZ

FKC SAN LUIS, AZ – WEST WWTP
POLYMER SYSTEM CONTROL PANEL (PS-CP)

COMM – NETWORK OVERVIEW BLOCK DIAGRAM

DATE CREATED: 4/22/25
REV.: 1.0
JOB NO.: P25-026
DWG. NO.: PSCP-20.00

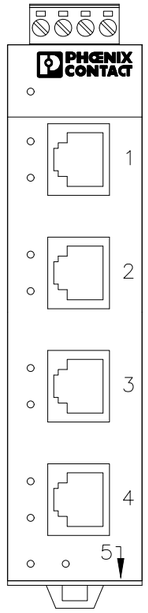

NETWORK SWITCH
NS–1

				DESTINATION DEVICE	
PORT#	CABLE TYPE	NETWORK DESCRIPTION	CABLE LABEL	DESCRIPTION	PORT #
1	CAT6				
2	CAT6		OIT	OPERATOR INTERFACE TERMINAL	1
3	CAT6		PLC	PLC	1
4	CAT6		M1	NEAT POLYMER PUMP VFD	1
5	CAT6		M2	POLYMER MIXER VFD	1

DRAFT

REV	DESCRIPTION/INIT	DATE
0.0	ENGINEERING/RJC	5/21/25
1.0	SUBMITTAL/MTN	06/03/25

LISTING
UL508A
S/N:

TSI Technical Systems Inc.
2303 196TH ST. S.W.
LYNNWOOD, WA. 98036
(425) 775–5696

CUSTOMER
FKC CO., LTD.

EN / PM / CHK
BC/BC/AP

DRAWN
RJC

CITY OF SAN LUIS, AZ

FKC SAN LUIS, AZ – WEST WWTP
POLYMER SYSTEM CONTROL PANEL (PS–CP)
NETWORK SWITCH (NS–1)
PORT SCHEDULE

DATE CREATED 4/22/25
REV. 1.0
JOB NO. P25–026
DWG. NO. PSCP–20.30

PS–CP

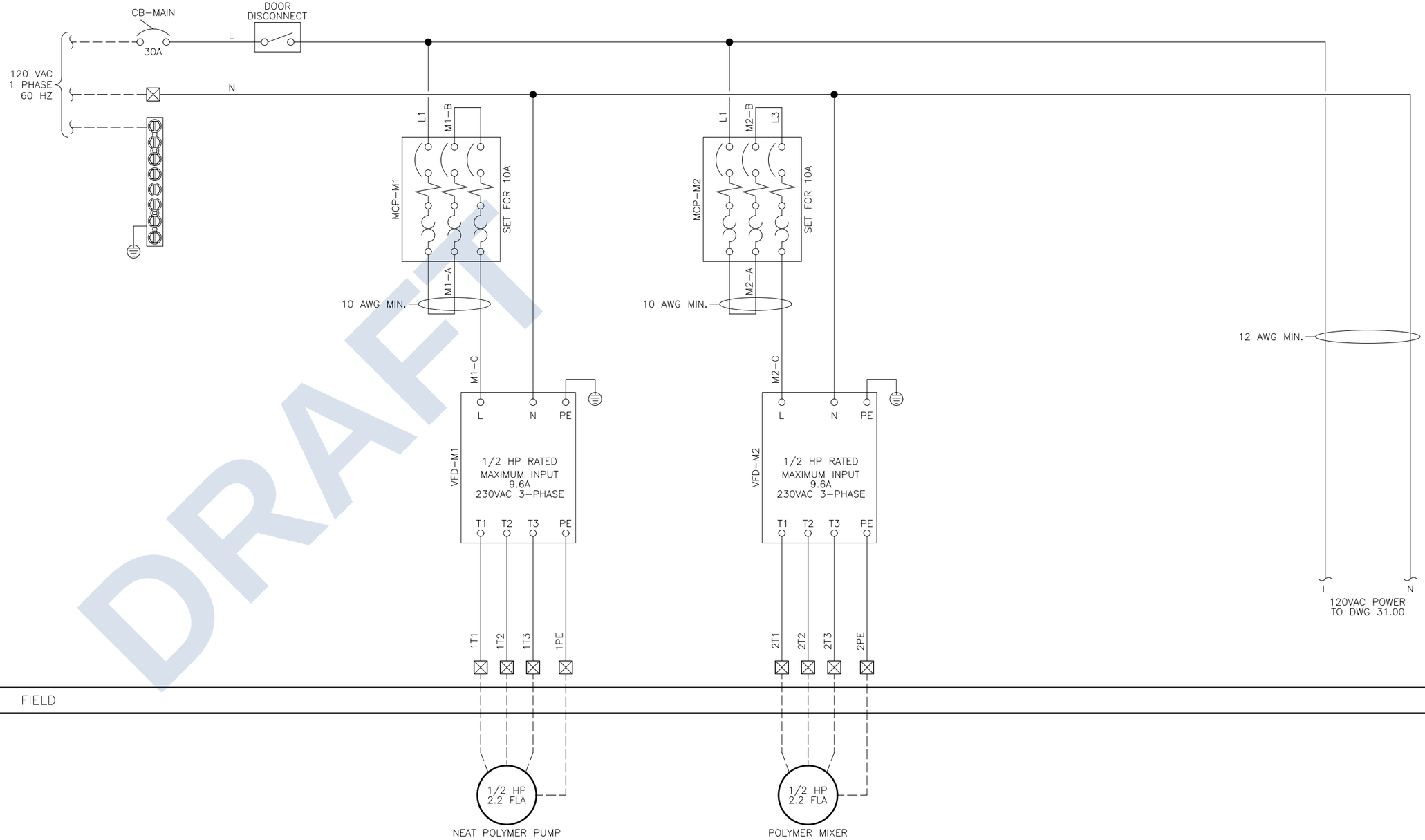

FIELD

REV	DESCRIPTION/INIT	DATE
0.0	ENGINEERING/RJC	5/21/25
1.0	SUBMITTAL/MTN	06/03/25

LISTING

UL508A

S/N:

Technical Systems Inc.
2303 196TH ST. S.W.
LYNNWOOD, WA. 98036
(425) 775–5696

CUSTOMER

FKC CO., LTD.

EN / PM / CHK
BC/BC/AP

DRAWN
RJC

CITY OF SAN LUIS, AZ

FKC SAN LUIS, AZ – WEST WWTP
POLYMER SYSTEM CONTROL PANEL (PS–CP)

120VAC POWER DISTRIBUTION DIAGRAM

DATE CREATED 4/22/25
REV. 1.0
JOB NO. P25–026
DWG. NO. PSCP–30.00

DRAFT

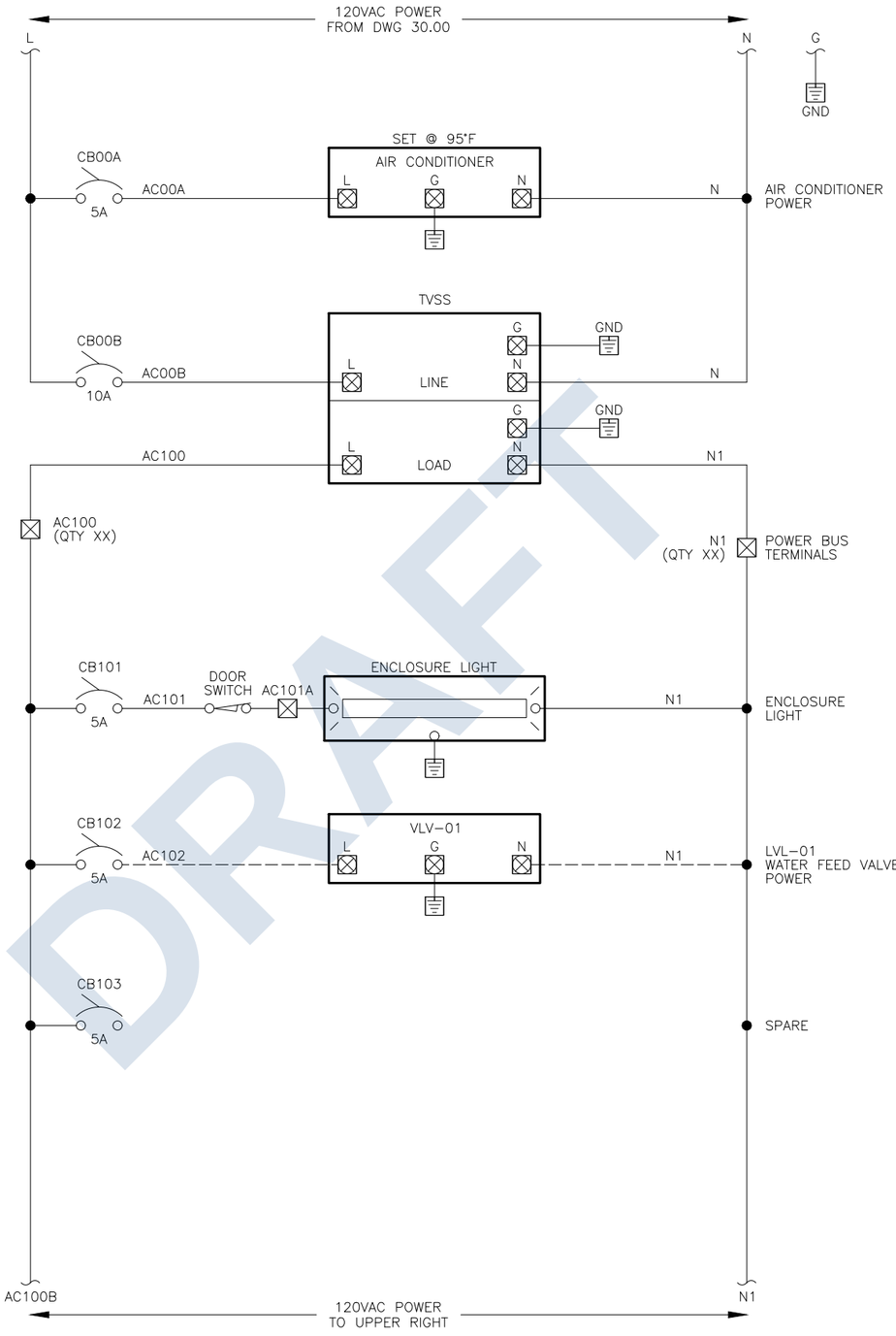

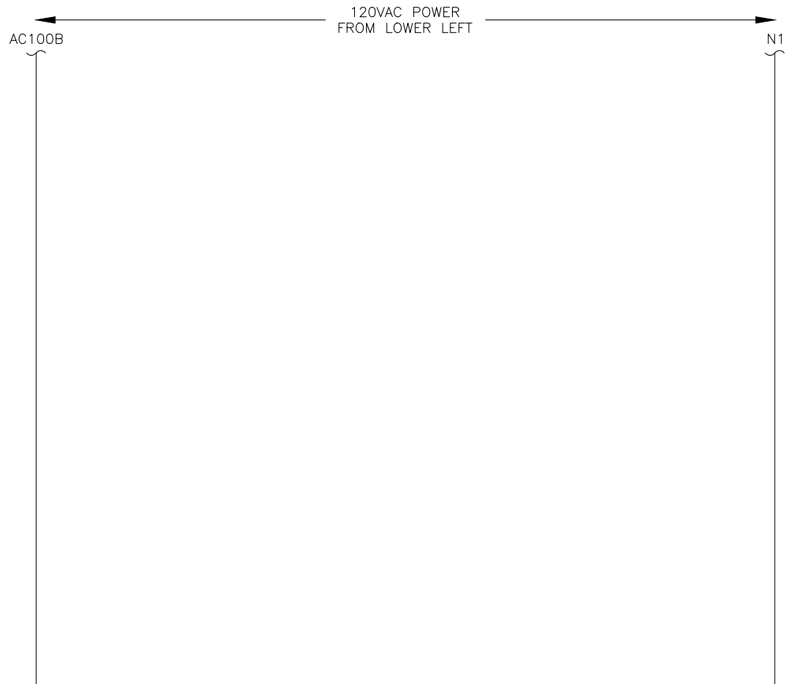

DRAFT

REV	DESCRIPTION/INIT	DATE
0.0	ENGINEERING/RJC	5/21/25
1.0	SUBMITTAL/MTN	06/03/25

LISTING

UL508A

S/N:

Technical Systems Inc.
2303 196TH ST. S.W.
LYNNWOOD, WA. 98036
(425) 775-5696

CUSTOMER

FKC CO., LTD.

EN / PM / CHK
BC/BC/AP

DRAWN
RJC

CITY OF SAN LUIS, AZ

FKC SAN LUIS, AZ – WEST WWTP
POLYMER SYSTEM CONTROL PANEL (PS-CP)

120VAC POWER DISTRIBUTION DIAGRAM

DATE CREATED 4/22/25 | REV. 1.0

JOB NO. P25-026

DWG. NO. PSCP-31.00

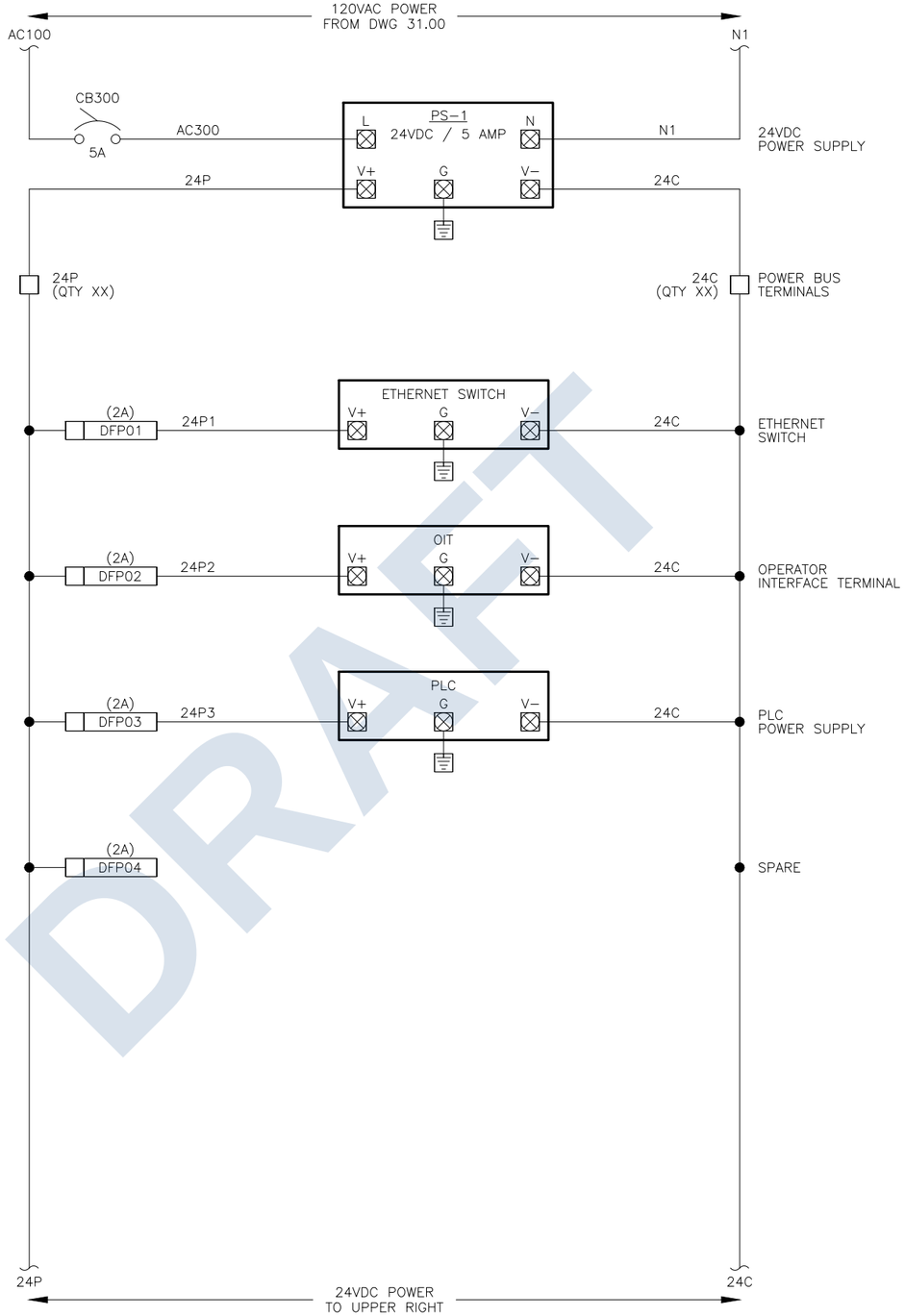

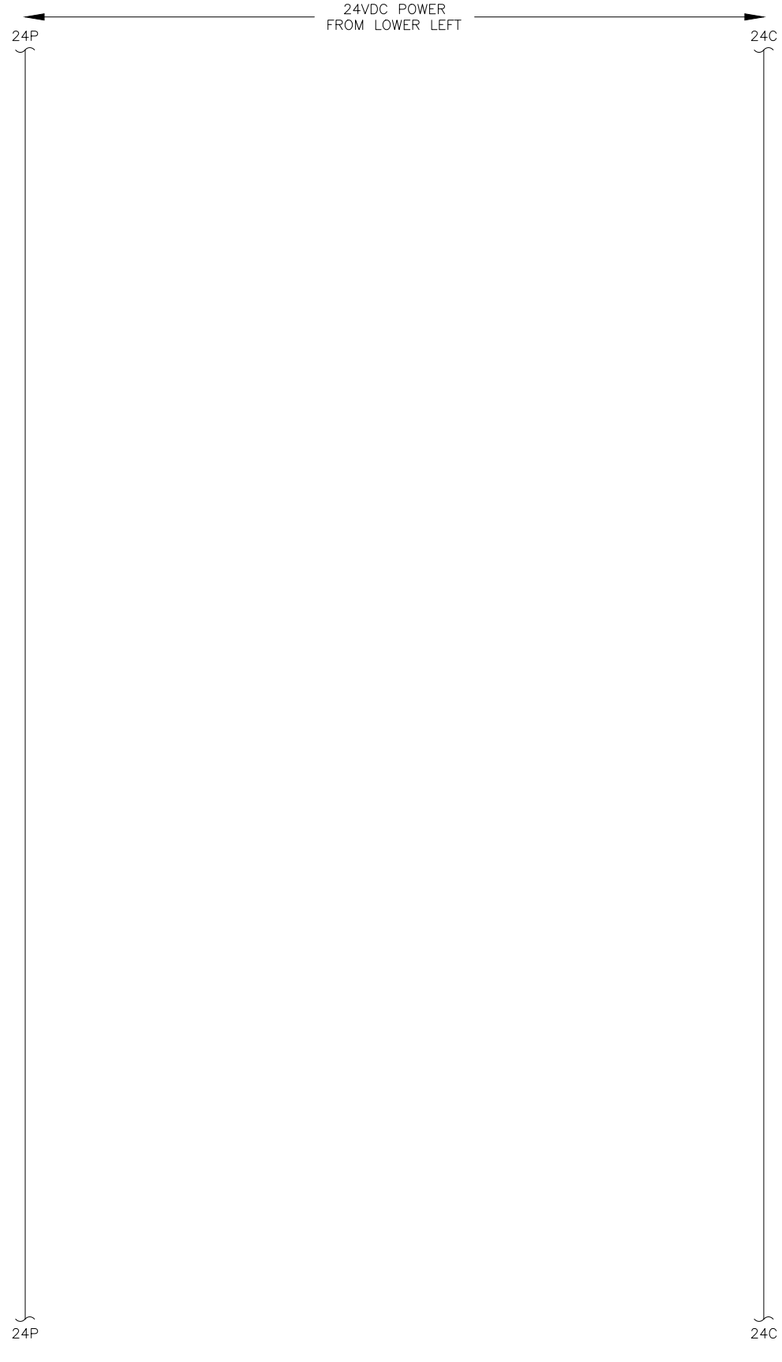

DRAFT

REV	DESCRIPTION/INIT	DATE
0.0	ENGINEERING/RJC	5/21/25
1.0	SUBMITTAL/MTN	06/03/25

LISTING

UL508A

S/N:

Technical Systems Inc.
2303 196TH ST. S.W.
LYNNWOOD, WA. 98036
(425) 775-5696

CUSTOMER

FKC CO., LTD.

EN / PM / CHK
BC/BC/AP

DRAWN
RJC

CITY OF SAN LUIS, AZ

FKC SAN LUIS, AZ – WEST WWTP
POLYMER SYSTEM CONTROL PANEL (PS-CP)

24VDC POWER DISTRIBUTION DIAGRAM

DATE CREATED 4/22/25
REV. 1.0
JOB NO. P25-026
DWG. NO. PSCP-32.00

FIELD	PS–CP

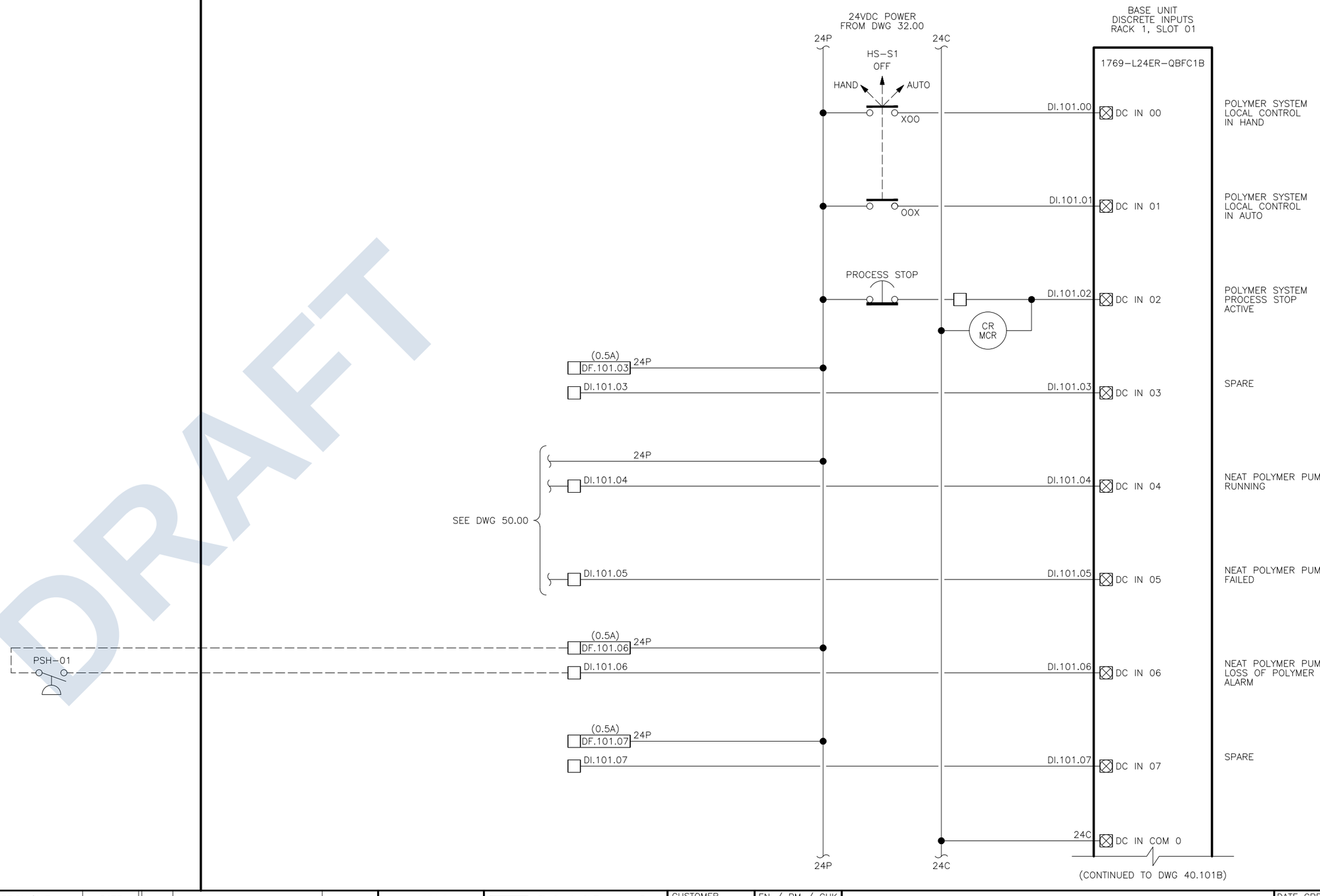

DRAFT

REV	DESCRIPTION/INIT	DATE
0.0	ENGINEERING/RJC	5/21/25
1.0	SUBMITTAL/MTN	06/03/25

LISTING

UL508A

S/N:

Technical Systems Inc.
2303 196TH ST. S.W.
LYNNWOOD, WA. 98036
(425) 775–5696

CUSTOMER

FKC CO., LTD.

EN / PM / CHK
BC/BC/AP

DRAWN
RJC

CITY OF SAN LUIS, AZ

FKC SAN LUIS, AZ – WEST WWTP
POLYMER SYSTEM CONTROL PANEL (PS–CP)
PLC BASE UNIT, DISCRETE INPUTS
RACK 1, SLOT 01 – WIRING DIAGRAM

DATE CREATED 4/22/25 | REV. 1.0

JOB NO. P25–026

DWG. NO. PSCP–40.101A

FIELD | PS-CP

(CONTINUED FROM DWG 40.101A)

BASE UNIT
DISCRETE INPUTS
RACK 1, SLOT 01

1769-L24ER-QBFC1B

24VDC POWER
FROM DWG 32.00

24P | 24C

SEE DWG 50.01

24P

DI.101.08 — DI.101.08 — DC IN 08 — POLYMER MIXER RUNNING

DI.101.09 — DI.101.09 — DC IN 09 — POLYMER MIXER FAILED

(0.5A) DF.101.10 — 24P

DI.101.10 — DI.101.10 — DC IN 10 — SPARE

DI.101.11 — DI.101.11 — DC IN 11 — SPARE

CP1
SCREW PRESS CONTROL PANEL

CR.103.05A — (0.5A) DF.101.12 — 24P

CR.103.05B — DI.101.12 — DI.101.12 — DC IN 12 — POLYMER SYSTEM REMOTE RUN COMMAND

SEE DWG CP1-40.103A

(0.5A) DF.101.13 — 24P

DI.101.13 — DI.101.13 — DC IN 13 — SPARE

VLV-01

XX — (0.5A) DF.101.14 — 24P

XX — DI.101.14 — DI.101.14 — DC IN 14 — WATER FEED VALVE CLOSED

(0.5A) DF.101.15 — 24P

DI.101.15 — DI.101.15 — DC IN 15 — SPARE

24C — DC IN COM 1

24P | 24C

(CONTINUED TO DWG 40.101C)

DRAFT

REV	DESCRIPTION/INIT	DATE
0.0	ENGINEERING/RJC	5/21/25
1.0	SUBMITTAL/MTN	06/03/25

LISTING: UL508A
S/N:

Technical Systems Inc.
2303 196TH ST. S.W.
LYNNWOOD, WA. 98036
(425) 775-5696

CUSTOMER: FKC CO., LTD.

EN / PM / CHK: BC/BC/AP

DRAWN: RJC

CITY OF SAN LUIS, AZ

FKC SAN LUIS, AZ – WEST WWTP
POLYMER SYSTEM CONTROL PANEL (PS-CP)
PLC BASE UNIT, DISCRETE INPUTS
RACK 1, SLOT 01 – WIRING DIAGRAM

DATE CREATED: 4/22/25
REV.: 1.0
JOB NO.: P25-026
DWG. NO.: PSCP-40.101B

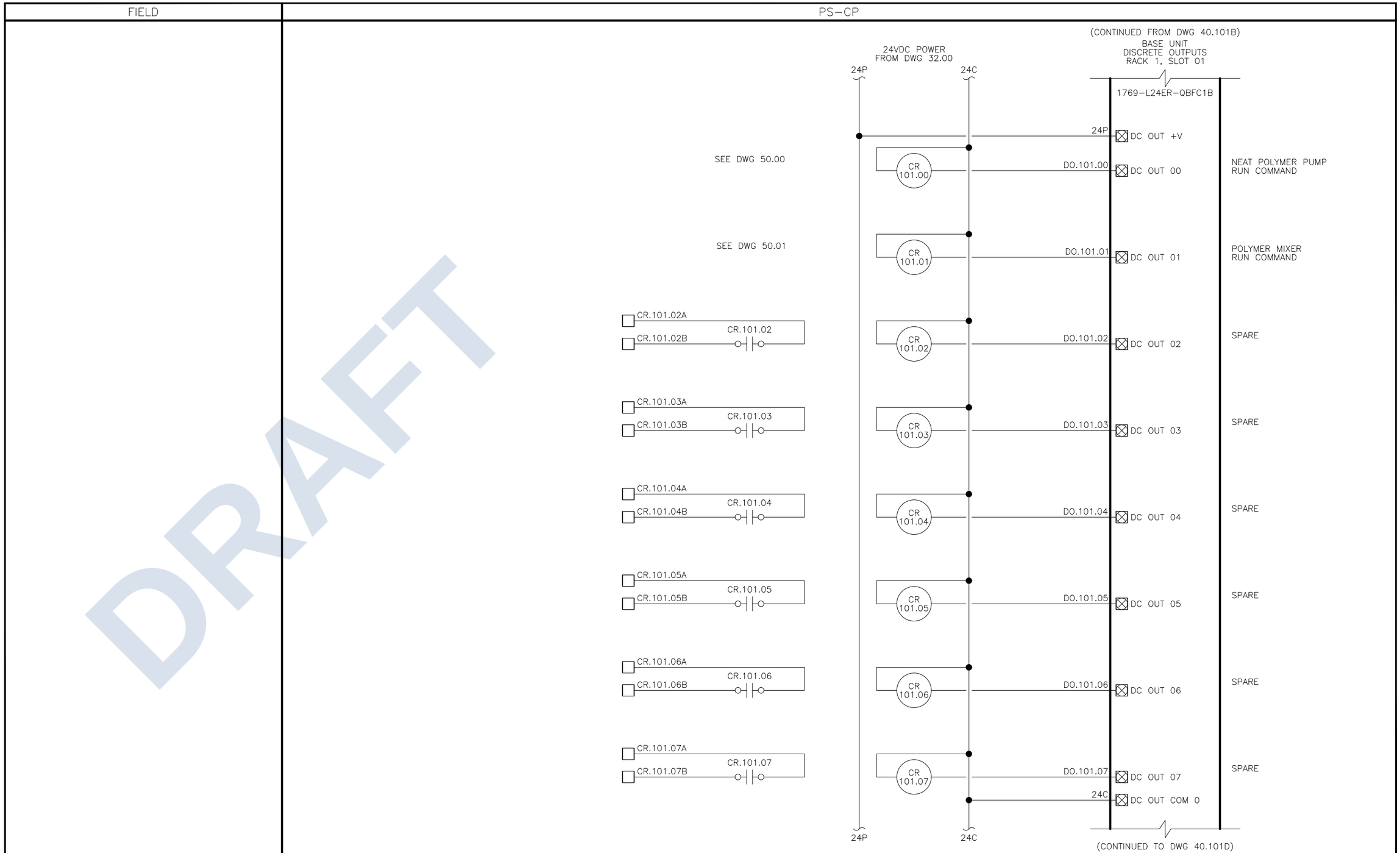

REV	DESCRIPTION/INIT	DATE
0.0	ENGINEERING/RJC	5/21/25
1.0	SUBMITTAL/MTN	06/03/25

LISTING
UL508A
S/N:

Technical Systems Inc.
2303 196TH ST. S.W.
LYNNWOOD, WA. 98036
(425) 775-5696

CUSTOMER
FKC CO., LTD.

EN / PM / CHK
BC/BC/AP
DRAWN
RJC

CITY OF SAN LUIS, AZ

FKC SAN LUIS, AZ – WEST WWTP
POLYMER SYSTEM CONTROL PANEL (PS-CP)
PLC BASE UNIT, DISCRETE OUTPUTS
RACK 1, SLOT 01 – WIRING DIAGRAM

DATE CREATED 4/22/25
REV. 1.0
JOB NO. P25-026
DWG. NO. PSCP-40.101C

FIELD | PS-CP

(CONTINUED FROM DWG 40.101C)

CP1
SCREW PRESS CONTROL PANEL

DF.102.08
DI.102.08
DI.102.09
DI.102.10

SEE DWG CP1-40.102B

24VDC POWER
FROM DWG 32.00

24P
24C

BASE UNIT
DISCRETE OUTPUTS
RACK 1, SLOT 01

1769-L24ER-QBFC1B

CR.101.08A / CR.101.08B	CR.101.08	CR 101.08	DO.101.08	DCOUT 08 — POLYMER SYSTEM IN AUTO
CR.101.09A / CR.101.09B	CR.101.09	CR 101.09	DO.101.09	DCOUT 09 — POLYMER SYSTEM RUNNING (LT1-S1, G, 24P)
CR.101.10A / CR.101.10B	CR.101.10	CR 101.10	DO.101.10	DCOUT 10 — POLYMER SYSTEM FAULT (LT2-S2, A, 24P)
CR.101.11A / CR.101.11B	CR.101.11	CR 101.11	DO.101.11	DCOUT 11 — SPARE
CR.101.12A / CR.101.12B	CR.101.12	CR 101.12	DO.101.12	DCOUT 12 — SPARE
CR.101.13A / CR.101.13B	CR.101.13	CR 101.13	DO.101.13	DCOUT 13 — SPARE
CR.101.14A / CR.101.14B	CR.101.14	CR 101.14	DO.101.14	DCOUT 14 — SPARE
CR.101.15A / CR.101.15B	CR.101.15	CR 101.15	DO.101.15	DCOUT 15 — SPARE
			24C	DCOUT COM 1

24P
24C

(CONTINUED TO DWG 40.102A)

DRAFT

REV	DESCRIPTION/INIT	DATE
0.0	ENGINEERING/RJC	5/21/25
1.0	SUBMITTAL/MTN	06/03/25

LISTING
UL508A
S/N:

Technical Systems Inc.
2303 196TH ST. S.W.
LYNNWOOD, WA. 98036
(425) 775-5696

CUSTOMER
FKC CO., LTD.

EN / PM / CHK
BC/BC/AP

DRAWN
RJC

CITY OF SAN LUIS, AZ

FKC SAN LUIS, AZ – WEST WWTP
POLYMER SYSTEM CONTROL PANEL (PS-CP)
PLC BASE UNIT, DISCRETE OUTPUTS
RACK 1, SLOT 01 – WIRING DIAGRAM

DATE CREATED 4/22/25
REV. 1.0
JOB NO. P25-026
DWG. NO. PSCP-40.101D

FIELD | PS-CP

(CONTINUED FROM DWG 40.101D)

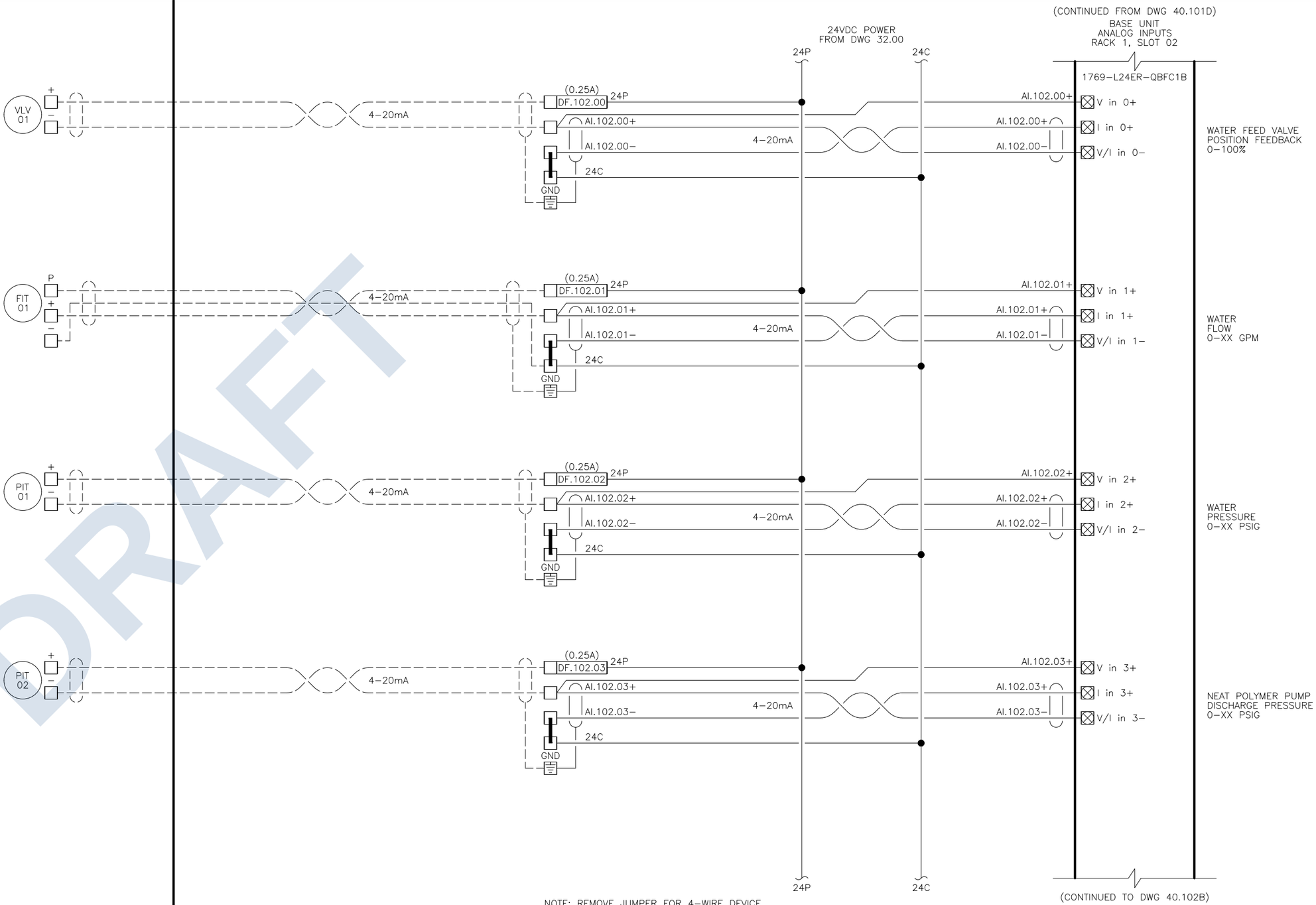

NOTE: REMOVE JUMPER FOR 4-WIRE DEVICE.

(CONTINUED TO DWG 40.102B)

DRAFT

REV	DESCRIPTION/INIT	DATE
0.0	ENGINEERING/RJC	5/21/25
1.0	SUBMITTAL/MTN	06/03/25

LISTING: UL508A
S/N:

Technical Systems Inc.
2303 196TH ST. S.W.
LYNNWOOD, WA. 98036
(425) 775-5696

CUSTOMER: FKC CO., LTD.
EN / PM / CHK: BC/BC/AP
DRAWN: RJC

CITY OF SAN LUIS, AZ

FKC SAN LUIS, AZ – WEST WWTP
POLYMER SYSTEM CONTROL PANEL (PS-CP)
PLC BASE UNIT, ANALOG INPUTS
RACK 1, SLOT 02 – WIRING DIAGRAM

DATE CREATED: 4/22/25
REV.: 1.0
JOB NO.: P25-026
DWG. NO.: PSCP-40.102A

FIELD | PS–CP

(CONTINUED FROM DWG 40.102A)

BASE UNIT
ANALOG OUTPUTS
RACK 1, SLOT 02

1769–L24ER–QBFC1B

CP1
SCREW PRESS CONTROL PANEL

AI.104.05+
AI.104.05–

SEE DWG CP1–40.104B

4–20mA

(0.25A)
DF.102.AO0

GND

DF.102.AO0
AO.102.00

4–20mA

DF.102.AO0
AO.102.00

V OUT0+
I OUT0+
COM

POLYMER SYSTEM
SPEED FEEDBACK
0–100%

VLV–01

XX
XX

4–20mA

(0.25A)
DF.102.AO1

GND

DF.102.AO1
AO.102.01

4–20mA

DF.102.AO1
AO.102.01

V OUT1+
I OUT1+
COM

WATER FEED VALVE
POSITION COMMAND
0–100%

(CONTINUED TO DWG 40.103A)

DRAFT

REV	DESCRIPTION/INIT	DATE
0.0	ENGINEERING/RJC	5/21/25
1.0	SUBMITTAL/MTN	06/03/25

LISTING
UL508A
S/N:

Technical Systems Inc.
2303 196TH ST. S.W.
LYNNWOOD, WA. 98036
(425) 775–5696

CUSTOMER
FKC CO., LTD.

EN / PM / CHK
BC/BC/AP

DRAWN
RJC

CITY OF SAN LUIS, AZ

FKC SAN LUIS, AZ – WEST WWTP
POLYMER SYSTEM CONTROL PANEL (PS–CP)
PLC BASE UNIT, ANALOG OUTPUTS
RACK 1, SLOT 02 – WIRING DIAGRAM

DATE CREATED 4/22/25
REV. 1.0
JOB NO. P25–026
DWG. NO. PSCP–40.102B

FIELD	PS–CP

(CONTINUED FROM DWG 40.102B)

BASE UNIT
HSC INPUTS
RACK 1, SLOT 03

1769–L24ER–QBFC1B

- A0+
- A0–
- B0+
- B0–
- Z0+
- Z0–

SPARE

- A1+
- A1–
- B1+
- B1–
- Z1+
- Z1–

SPARE

(CONTINUED TO DWG 40.103B)

DRAFT

REV	DESCRIPTION/INIT	DATE
0.0	ENGINEERING/RJC	5/21/25
1.0	SUBMITTAL/MTN	06/03/25

LISTING
UL508A
S/N:

Technical Systems Inc.
2303 196TH ST. S.W.
LYNNWOOD, WA. 98036
(425) 775–5696

CUSTOMER
FKC CO., LTD.

EN / PM / CHK
BC/BC/AP

DRAWN
RJC

CITY OF SAN LUIS, AZ

FKC SAN LUIS, AZ – WEST WWTP
POLYMER SYSTEM CONTROL PANEL (PS–CP)
PLC BASE UNIT, HSC INPUTS
RACK 1, SLOT 03 – WIRING DIAGRAM

DATE CREATED 4/22/25
REV. 1.0
JOB NO. P25–026
DWG. NO. PSCP–40.103A

FIELD	PS–CP

(CONTINUED FROM DWG 40.103A)

BASE UNIT
HSE OUTPUTS
RACK 1, SLOT 03

1769–L24ER–QBFC1B

☒ HSC OUT 0	SPARE
☒ HSC OUT 0	SPARE
☒ COM	
☒ HSC OUT 2	SPARE
☒ HSC OUT 3	SPARE
☒ COM	

DRAFT

REV	DESCRIPTION/INIT	DATE
0.0	ENGINEERING/RJC	5/21/25
1.0	SUBMITTAL/MTN	06/03/25

LISTING
UL508A
S/N:

TSI **Technical Systems Inc.**
2303 196TH ST. S.W.
LYNNWOOD, WA. 98036
(425) 775–5696

CUSTOMER
FKC CO., LTD.

EN / PM / CHK
BC/BC/AP

DRAWN
RJC

CITY OF SAN LUIS, AZ

FKC SAN LUIS, AZ – WEST WWTP
POLYMER SYSTEM CONTROL PANEL (PS–CP)
PLC BASE UNIT, HSC OUTPUTS
RACK 1, SLOT 03 – WIRING DIAGRAM

DATE CREATED 4/22/25
REV. 1.0
JOB NO. P25–026
DWG. NO. PSCP–40.103B

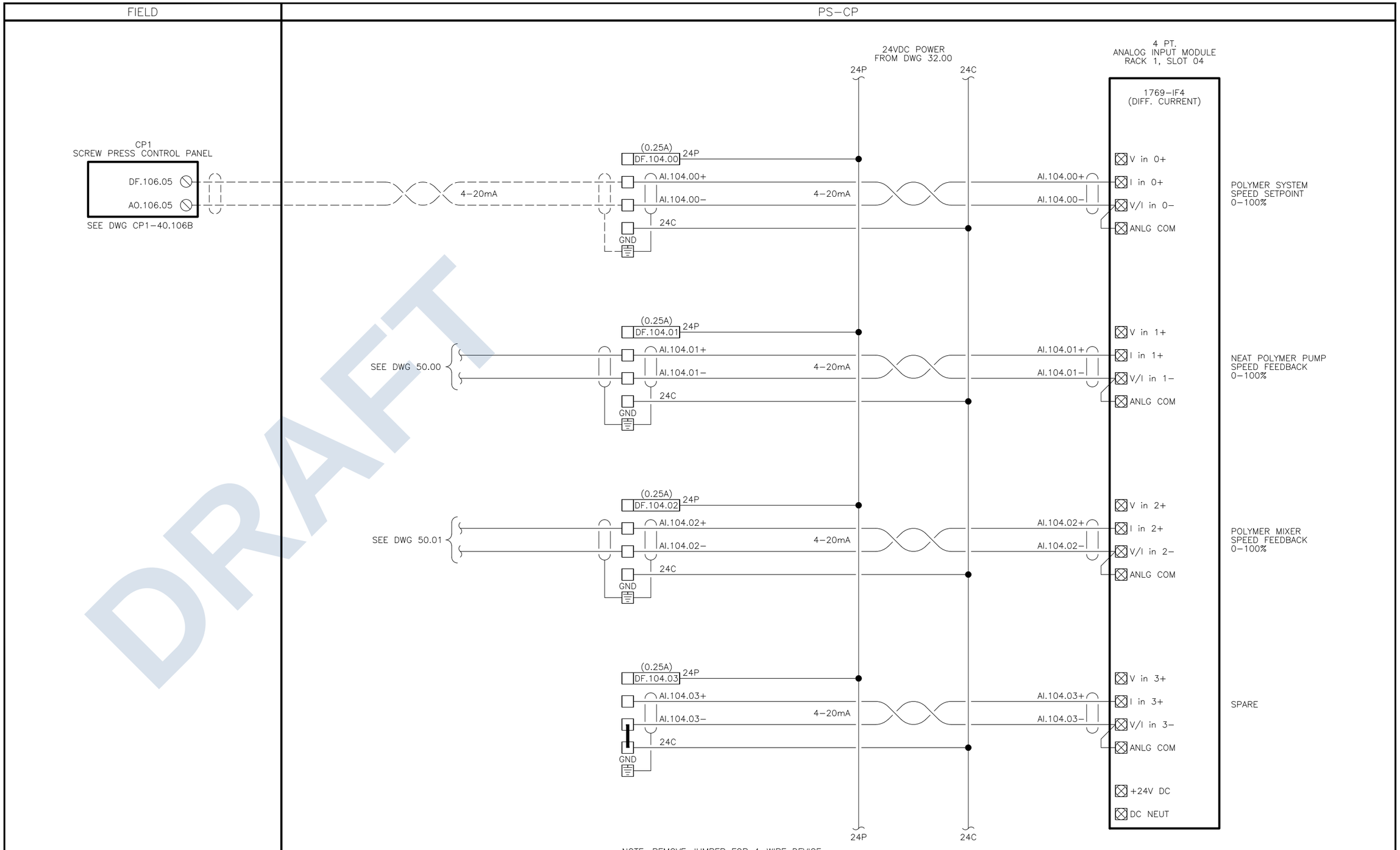

DRAFT

REV	DESCRIPTION/INIT	DATE
0.0	ENGINEERING/RJC	5/21/25
1.0	SUBMITTAL/MTN	06/03/25

LISTING: UL508A
S/N:

Technical Systems Inc.
2303 196TH ST. S.W.
LYNNWOOD, WA. 98036
(425) 775-5696

CUSTOMER: FKC CO., LTD.
EN / PM / CHK: BC/BC/AP
DRAWN: RJC

CITY OF SAN LUIS, AZ

FKC SAN LUIS, AZ - WEST WWTP
POLYMER SYSTEM CONTROL PANEL (PS-CP)
ANALOG INPUT MODULE
RACK 1, SLOT 04 - WIRING DIAGRAM

DATE CREATED: 4/22/25
REV.: 1.0
JOB NO.: P25-026
DWG. NO.: PSCP-40.104

PS-CP

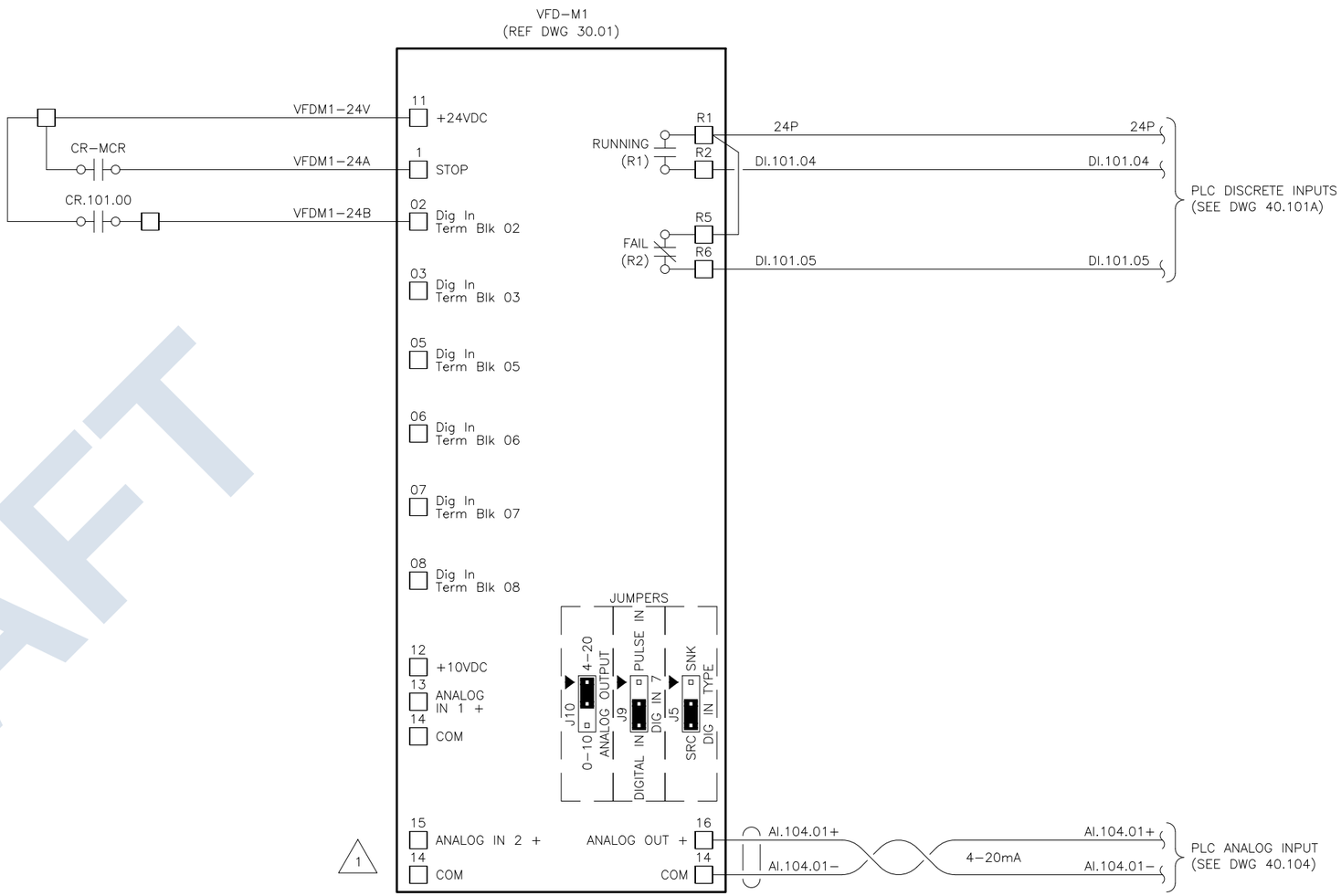

DRAFT

NOTES:
1.SPEED FEEDBACK MONITORED VIA ETHERNET/IP CONNECTION

REV	DESCRIPTION/INIT	DATE
0.0	ENGINEERING/RJC	5/21/25
1.0	SUBMITTAL/MTN	06/03/25

LISTING
UL508A
S/N:

Technical Systems Inc.
2303 196TH ST. S.W.
LYNNWOOD, WA. 98036
(425) 775-5696

CUSTOMER
FKC CO., LTD.

EN / PM / CHK
BC/BC/AP

DRAWN
RJC

CITY OF SAN LUIS, AZ

FKC SAN LUIS, AZ – WEST WWTP
POLYMER SYSTEM CONTROL PANEL (PS-CP)

NEAT POLYMER PUMP VFD CONTROL WIRING DIAGRAM

DATE CREATED 4/22/25
REV. 1.0
JOB NO. P25-026
DWG. NO. PSCP-50.00

PS-CP

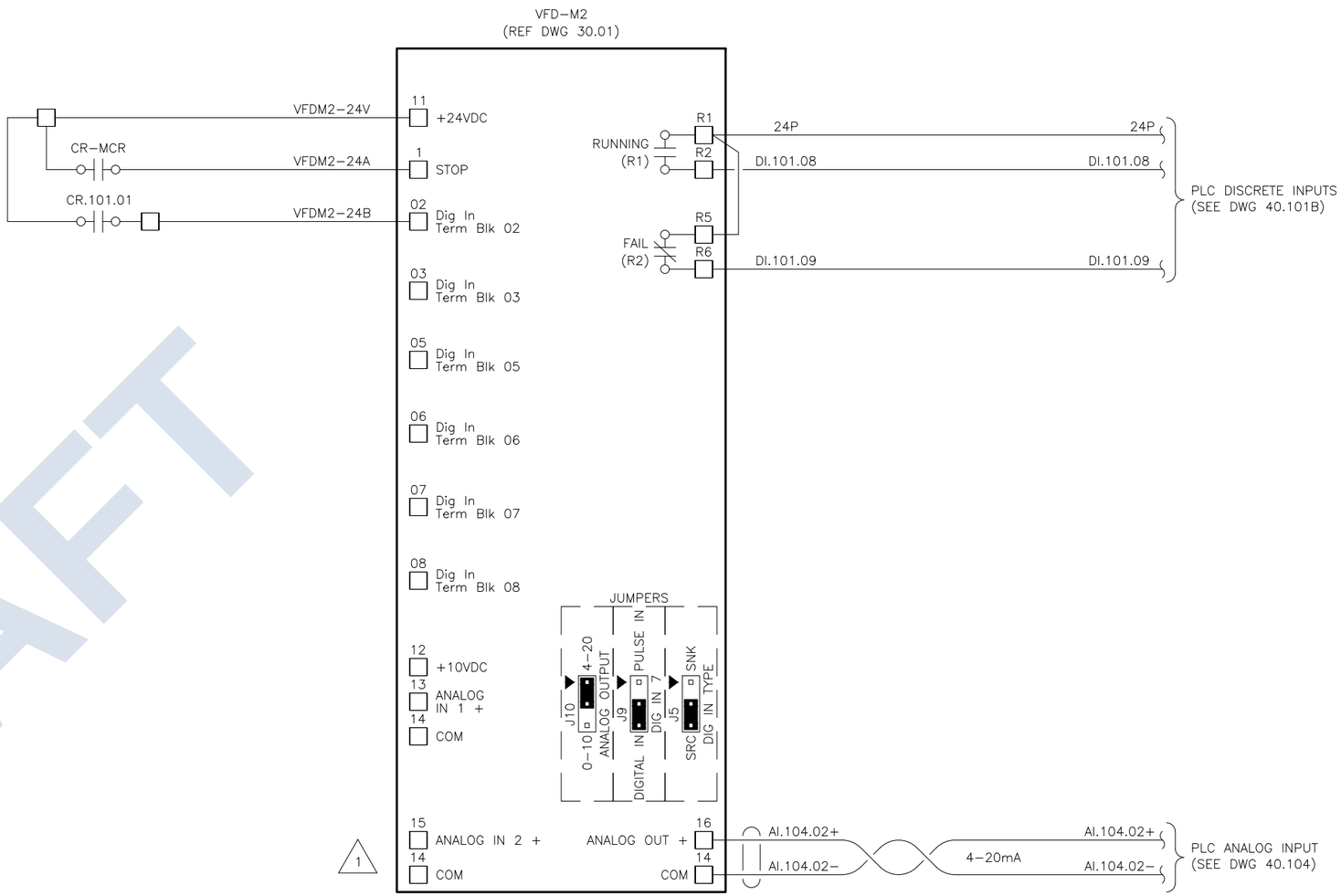

DRAFT

NOTES:
1.SPEED FEEDBACK MONITORED VIA ETHERNET/IP CONNECTION

REV	DESCRIPTION/INIT	DATE
0.0	ENGINEERING/RJC	5/21/25
1.0	SUBMITTAL/MTN	06/03/25

LISTING
UL508A
S/N:

Technical Systems Inc.
2303 196TH ST. S.W.
LYNNWOOD, WA. 98036
(425) 775-5696

CUSTOMER
FKC CO., LTD.

EN / PM / CHK
BC/BC/AP

DRAWN
RJC

CITY OF SAN LUIS, AZ

FKC SAN LUIS, AZ – WEST WWTP
POLYMER SYSTEM CONTROL PANEL (PS-CP)

POLYMER MIXER VFD CONTROL WIRING DIAGRAM

DATE CREATED 4/22/25
REV. 1.0
JOB NO. P25-026
DWG. NO. PSCP-50.01

SHOP DRAWING REVIEW

Project: **San Luis East WWTP Improvements**

Submittal No. **#46 73 63.23_001 – FKC Dewatering System**

Date Received: **04/30/2025**

Job #: **B777**

Comments:

No Exceptions Taken..... ☐
Submit Specific Item ..... ☒
Accepted with Corrections Noted..... ☒
Revise and Resubmit..... ☐
Rejected ..... ☐

Note:
Review is only for general conformance with the design concept of the project and general compliance with the information included in the Contract Documents. Any action shown is subjected to the requirements of the drawings and the specifications. Contractor is responsible for correlating and confirming dimensions at the job site, choice of fabrication processes and techniques of construction: coordination of his work with that of other trades; and performing the work in a safe satisfactory manner.

DATE: 5/23/25 BY: NT/DDO

Contractor to Note:

Contractor to provide 1.5" non-shrink grout under all equipment per FKC recommendations.

Contractor to provide anchor bolts for screw press and equipment as indicated/required by FKC.

Submittal Comments:

General:

1. Submit Specific Item:
    - FKC to provide P&IDs and Flow Diagrams as part of Control Panel submittal or as separate submittal.
    - FKC to provide sealed and signed seismic, structural, and anchoring calculations by a Registered Professional Engineer in the State of Arizona.

General Bill of Materials (Page 6 of 335)

2. Accepted with Corrections noted:

DRAFT

- Fastening hardware in wetted location to be 316 SS per Construction/Fabrication Materials section of Exhibit C provided within submittal package.

Screw Press (Page 14 of 335)

3. Accepted with Correction Noted:
    - Please provide maximum expected discharge flowrate (in gpm) through filtrate flange.

Flocculation Tank (Page 29 of 335)

4. Accepted with Corrections noted:
    - Access ladder to flocculation tank is not included in Aluminum Structure BOM nor Flocculation Tank BOM, FKC to confirm access ladder is included in their scope of supply.
    - FKC to note that the model number of the motor listed as Item #201 on the BOM does not match the Model number provided on sheet 34 of 335. (Y154SDSR47A-P versus Y154SDSR42A-P) Please verify model number and adjust to match on any subsequent submittals or O&M Manuals provided.
    - FKC to note that the SEW Eurodrive Gearmotor and Gear Reducer is marked as Item #102 on page 37 of 335 and marked as Item #202 per BOM. Please verify and adjust in any future submittals or O&M Manuals provided.
    - FKC to verify that the flocculation tank inlet flange is 4” and the polymer injection ring is 6”. Confirm that contractor is responsible for providing 6” x 4” reducer between the polymer injection ring and flocculation tank inlet flange or revise and resubmit with 6” inlet flange.

Polymer Injection Ring (Page 32 of 335)

5. Accepted with Corrections:
    - “Manifold to be mounted vertically as shown or horizontal”, please provide mounting information/details/requirements. Confirm maximum distance between manifold and injection ring.
    - Please provide unique numbering throughout Bill of Materials. Items #401-407 are included in both Polymer Injection Ring BOM and Polymer System BOM.

Conveyor Equipment Submittal (Page 46 of 335)

6. Accepted with Corrections:
    - FKC to note that model #s of gear reducer and motor (BOM Items #309 and #310) do not match model #s provided on Page 53 & 62 of submittal. Please verify and adjust in any future submittals or O&M Manuals provided.

DRAFT

- Compact limit switches shown on Page 75 of 335 are marked as Item #314, 414, 513, and 606. These items appear to be missing from the BOM or incorrectly marked, please verify.

- No drain line is marked on the conveyor detail sheet (Page 48 of 335), please confirm if a drain line is provided. If a drain line is provided, please provide location and connection type/size.

Polymer System Equipment Submittal (Page 78 of 335)

7. Accepted with Corrections:
    - Please verify if "Thickener 1 Control Panel" shown on the Wiring Diagrams is the FKC Dewatering Control Panel for the provided screw press.

    - Please verify which equipment will require field wiring by the contractor. E.G. Will the contractor be responsible for the field wiring between the polymer pump and VFD as shown on page 300 of 335?

    - FKC to note that the Polymer Mixer motor is marked as 1/2 HP on the Power Distribution Diagram (Page 300 of 335) and marked as 1/3 HP within the BOM, please verify.

    - Please confirm that the control panel is suitable for installation in a partially shaded outdoor area with a high ambient temperature. It appears that an Air Conditioning unit is shown on Polymer System Detail Sheet 81 of 335, please confirm and add to BOM if it does exist.

    - FKC to provide 316 SS mixing blades as mentioned in: A. Proposed Equipment FKC Polymer Systems section of submittal.

Aluminum Structure Equipment Submittal (Page 314 of 335)

8. No Exceptions Taken.

Sludge Pump Equipment Submittal (Page 321 of 335)

9. Accepted with Corrections:
    - FKC to confirm inlet and outlet of sludge pumps are 6" Class 150 flanges as stated on Page 323.

    - FKC to confirm if sludge flow meter is included in their Scope of Supply.

Control Panel Preliminary Submittal (Page 329 of 335)

10. Submit Specific Item:

DRAFT

- Control Panel Submittal under different cover. Please include all electrical equipment included within the provided BOM that does not include manufacturer cutsheets. (E.G. Item #208)

Performance Guarantee (Page 333 of 335)

11. No Exceptions Taken.

Warranty Certificate (Page 335 of 335)

12. No Exceptions Taken.

DRAFT

SCREW PRESS

Submittals for
Project 524 – San Luis West WWTP
San Luis, Arizona

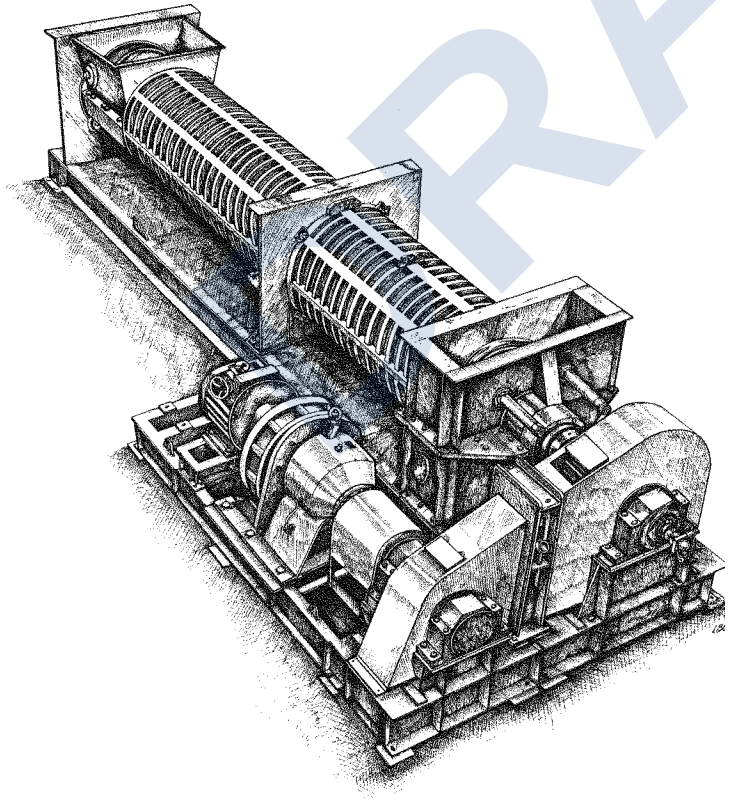

Bill of Materials

Equipment Drawings

Equipment Submittal
- **Screw Press**
- **Flocculation Tank**
- **Conveyor**
- **Polymer System**
- **Aluminum Structure**
- **Sludge Feed Pumps**
- **Control Panel**

Technical Submittal
- **Process Guarantee**
- **Warranty**

DRAFT

FKC Biosolids Dewatering

Facility: San Luis, Arizona

Screw Press Dewatering Skid
Equipment Submittals

DRAFT

Owner:
City of San Luis, Arizona

Manufacturer's Representative:
IES Southwest
Contact: Ryan Spielman
Phone: (602) 363-5355

Prepared By:
FKC Co., Ltd.
2708 W. 18th Street
Port Angeles, WA 98363
Phone: (360) 452-9472
Fax: (360) 452-6880
Project Engineer: Wesley Bond

Table of Contents

FKC Dewatering System

Bill of Materials

Equipment Drawings

Equipment Submittals

- Screw Press
  - Bill of Materials
  - Drawings
  - Data Sheets
- Flocculation Tank
  - Bill of Materials
  - Drawings
  - Data Sheets
- Conveyor
  - Bill of Materials
  - Drawings
  - Data Sheets
- Polymer System
  - Bill of Materials
  - Drawings
  - Data Sheets
- Aluminum Structure
  - Bill of Materials
  - Drawings
  - Data Sheets
- Sludge Pump
  - Data Sheet
  - Drawings
  - Pump Curve
- Control Panel
  - Bill of Materials
  - Drawings
  - Data Sheets

DRAFT

Technical Submittals

Performance Guarantee

Warranty Certificate

DRAFT

FKC Bill of Materials

DRAFT

FKC CO., LTD.

2708 West 18th Street
Port Angeles, WA 98363

(360) 452-9472
FAX (360) 452-6880

San Luis West WWTP, AZ
Bill of Materials

Item #	Screw Press - BHX 1250 x 6500L	Manufacturer	Part Number	Qty	Material of Construction
101	Motor	Toshiba	0054SDSR44A-P	1	Painted CS
102	Drive	Sumitomo Cyclo	CHVJ-6265DA-7569	1	Painted CS
--	Screw	FKC	Screw 1250 x 6500	1	304SS
--	Drums	FKC	Drum 1250 x 1000	6	304SS
--	Covers	FKC	Covers	12	304SS
--	Head Box	FKC	Head Box	1	304SS
--	Inlet Bearing Housing	FKC	NA	1	Painted CS
--	Outlet Discharge Box	FKC	NA	1	304SS Wetted Parts Painted CS - Non Wetted Parts
--	Cone	FKC	NA	1	304SS
--	Base	FKC	NA	1	Galvanized CS
--	Showers Headers	FKC	NA	3	304SS
--	Bolts, Nuts, Washers in Wetted Area	FKC	NA	--	304SS
--	Head Box Level Transmitter			1	See Submittal
--	Shower Nozzles	FKC	NA	122	316 SS
104	Solenoid Valve 1 1/2"	ASCO	8221G011	7	Brass

FASTENING HARDWARD WETTED LOCATIONS 316 SS

Item #	Flocculation Tank 540	Manufacturer	Part Number	Qty	Material of Construction
201	Motor	Toshiba	Y154SDSR47A-P	1	Painted CS
202	Gear Box	SEW Eurodrive	SAF67AMS145	1	Painted CS
203	Tank Body	FKC	--	1	304LSS
204	Agitator Shaft	FKC	--	1	304LSS
205	Agitator Base	FKC	--	1	304LSS
206	Covers	FKC	--	1	304LSS
207	Flexible Pipe Coupler	Fernco	1056-88	1	Rubber
208	Capacitance Level Switch			1	See CP Submittal

Item #	12" Conveyor	Manufacturer	Part Number	Qty	Material of Construction
301	Inlet Hopper	FKC	--	1	12 ga. 304L SS
302	End Plate	FKC	--	2	3/8 304L SS
303	Trough (8' Max)	FKC	--	3	10 ga. 304L SS
304	Trough Flange	FKC	--	6	1/4 304L SS
305	Wear Liner (4' Max)	FKC	--	8	1/2 UHMW
306	Trough Cover (5' Max)	FKC	--	6	10 ga. 304L SS
307	12" Outlet	FKC	--	1	12 ga. 304L SS
308	Screw	Falcon Ind.	--	1	12" Shaftless Screw Flight 1" x 3" 8620
309	Gear Reducer	SEW	FAS77AMS184	1	CS-Painted
310	Motor	Toshiba	0054SDSR44A-P	1	CS-Painted
311	E-Stop Pull Cords	OMRON	ER6020	2	NEMA 6 AL
312	Zero Speed Switch	Siemens	WM100	1	AL
313	Washout Detector	Warrick	3E1B	1	

Item #	6" Polymer Injection Ring	Manufacturer	Part Number	Quanty (Per	Material of Construction
401	6" Injection Ring	FKC	NA	1	PVC
402	Polymer Manifold	FKC	NA	1	PVC
403	3/4" Reinforced Clear Tubing	USA Sealing	ZUSA-HT-29	25'	Polyester Reinforced PVC
404	1" Check Valve	Zoro	4VMU2	1	316 SS
405	3/4" NPT x 3/4" Barb 90° Adapter	Banjo	HB075-90	8	Polypropylene
406	2" Pipe Routing Clamp	Behringer	SBX72375-SP	2	Polypropylene/316 SS
407	Worm-Drive Hose Clamp SAE 10	Zoro Select	6710170	8	316 SS

Item #	FKC - Polymer System M-1200-5-P-120-P	Manufacturer	Part Number	Qty	Material of Construction
401	Mixing Chamber	FKC	NA	1	PVC
402	Buna-N O-Ring Dash 448	McMaster	9452K223	2	Buna-N
403	Mixing Motor 230VAC 1/3 HP 1800 RPM 56C	Leeson	11254.00	1	CS
404	Mixing Blade	FKC	NA	1	304L SS
405	Mechanical Seal	McMaster	9281K620	1	304L / Viton
406	Injection Vavle	Circle Valve	532T1-2M	1	316
407	1" Flow Meter	IFM	SM8601	1	Stainless Steel
408	Rotometer .5-5 GPM	Harrington	Blue White F-55500LA	1	Polysulfone
409	1" Actuated Floating Ball Valve	Bray	140100-11000SSKR-NA 70E031-113G0536/K	1	316
410	Pressure Regulator	McMaster	45805K68	1	Bronze
411	Inline Mixer	Harrington	Koflo 1-40C-4-6-2	1	PVC
412	1" PSS Isolator Ring W/Pressure Guage/Switch	Onyx/IFM	1" NPT PSS/PG2794	1	316/Buna-N
413	Pressure Relief Valve	McMaster	8088K140	1	Bronze
414	Calibration Column 6.34 GPH	Harrington	Koflo 500ML-SC	1	PVC
415	Polymer Pump 230VAC 1/2 HP	Seepex	MD 003-12	1	CS
416	Gauge Isolator/Pressure Guage 0-160 PSI	Harrington	TG-25T160SB-PVC	2	PVC
417	Pipe and Fittings Sch 80			As Req.	PVC
418	Frame	FKC	NA	1	304L SS
419	Polymer Flow Monitor	IFM	SI5006	1	
420	Screw-In Adapter for part SI5006	IFM	E40107	1	
421	Cordset for part SI5006	IFM	E18027	1	
422	Control Panel	TSI	NA	1	--
423	1/2" PSS Isolator Ring W/Pressure Guage/Switch	Onyx/IFM	1/2" NPT PSS/PG2794	1	PVC

316 ss called ou submittal

Item #	Aluminum Structure	Manufacturer	Part Number	Qty	Material of Construction
501	Handrail	FKC	Ø 1.5 x .12 Round Tube	--	6061-T6
502	Frame	FKC	C5 x .150 2 1/4 Flange	--	6061-T6
503	Stairs	Perf-O Grip	P220125	11	Aluminum

Item #	Sludge Feed Pumps	Manufacturer	Part Number	Qty	Material of Construction
601	Seepex	Seepex	BN 70-6L	2	See Bill of Materilas

Item #	Local Control Panel	Manufacturer	Part Number	Qty	Material of Construction
701	Local Control Panel	TSI	Custom	1	See Bill of Materilas

COMPACT LIMIT SWITCHES MARKED BUT MISSING FROM BOM

CONFIRM IF SLUDGE FLOW METER PROVIDED BY FKC

DRAFT

Equipment Drawings

DRAFT

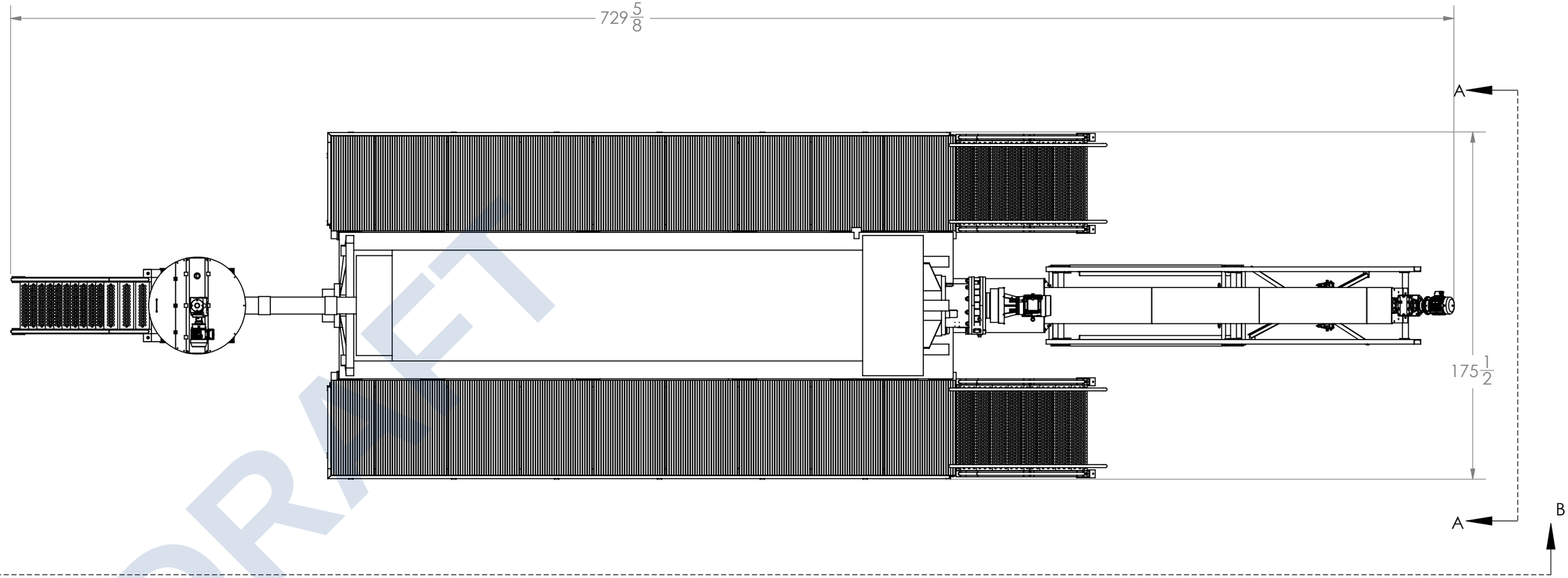

DRAFT

Note:
- FKC recommends 1-1/2" of non shrink grout under all equipment.

Job No. 524	Customer San Luis West WWTP San Luis, AZ		Wt. Lbs.
Drawing No. L524-900	Title BHX-1250x6500L Layout Details		Quantity 1
			Date 4/8/25
FKC CO. LTD 2708 W 18th St. Port Angeles, WA 98363 (360) 452-9472 Fax (360) 452-6880			Drawn By MB

No.	Alteration	Date	Sign
3			
2			
1			
0	Issued for Approval	4/8/25	MB

PROPRIETARY AND CONFIDENTIAL
THE INFORMATION CONTAINED IN THIS DRAWING IS THE SOLE PROPERTY OF FKC CO LTD. ANY REPRODUCTION IN PART OR AS A WHOLE WITHOUT THE WRITTEN PERMISSION OF FKC CO LTD IS PROHIBITED.

Revision

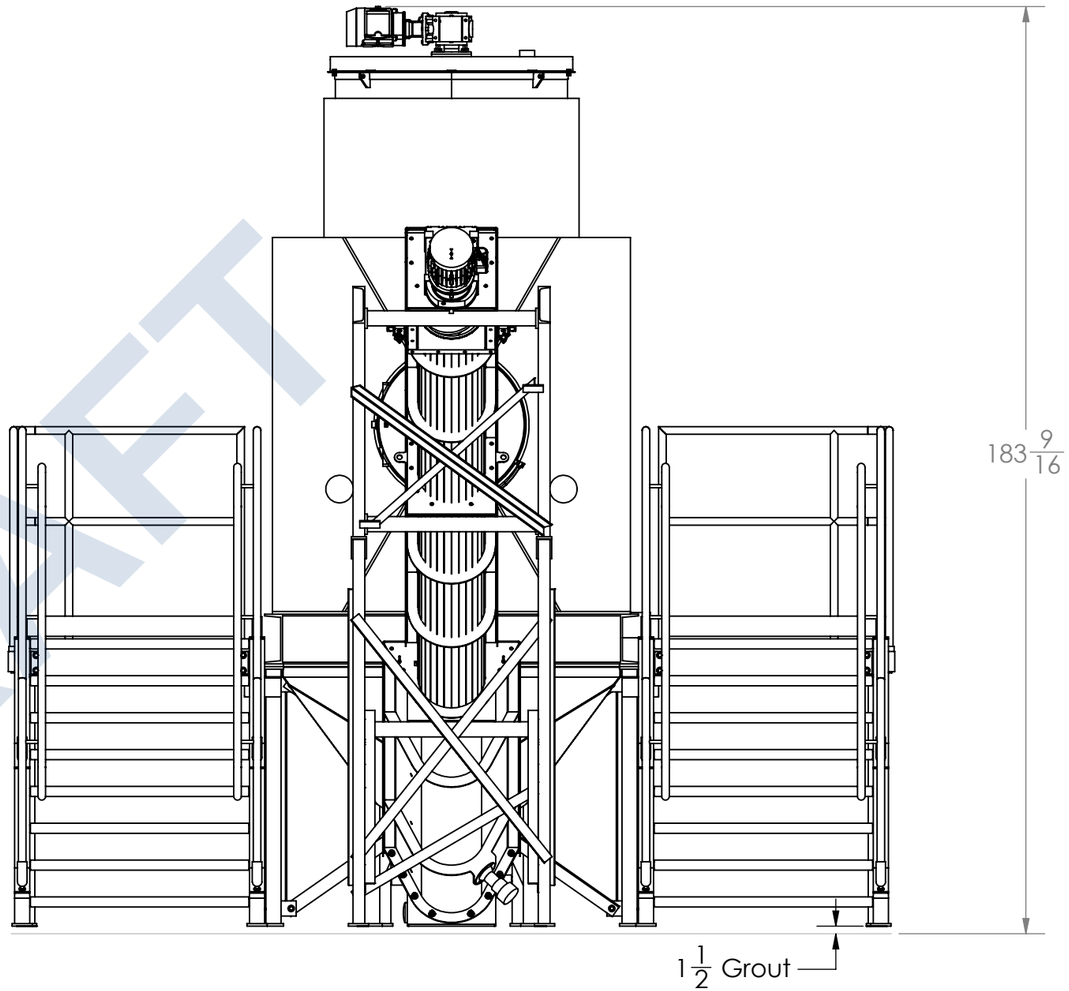

SECTION A-A

DRAFT

PROPRIETARY AND CONFIDENTIAL
THE INFORMATION CONTAINED IN THIS DRAWING IS THE SOLE PROPERTY OF FKC CO LTD. ANY REPRODUCTION IN PART OR AS A WHOLE WITHOUT THE WRITTEN PERMISSION OF FKC CO LTD IS PROHIBITED.

No.	Alteration	Date	Sign
3			
2			
1			
0	Issued for Approval	4/8/25	MB

Job No. 524	Customer San Luis West WWTP San Luis, AZ	Wt. Lbs.
Drawing No. L524-901	Title BHX-1250x6500L Section A-A	Quantity 1
		Date 4/8/25
FKC	FKC CO. LTD 2708 W 18th St. Port Angeles, WA 98363 (360) 452-9472 Fax (360) 452-6880	Drawn By MB
	Revision	SHEET 2 OF 4

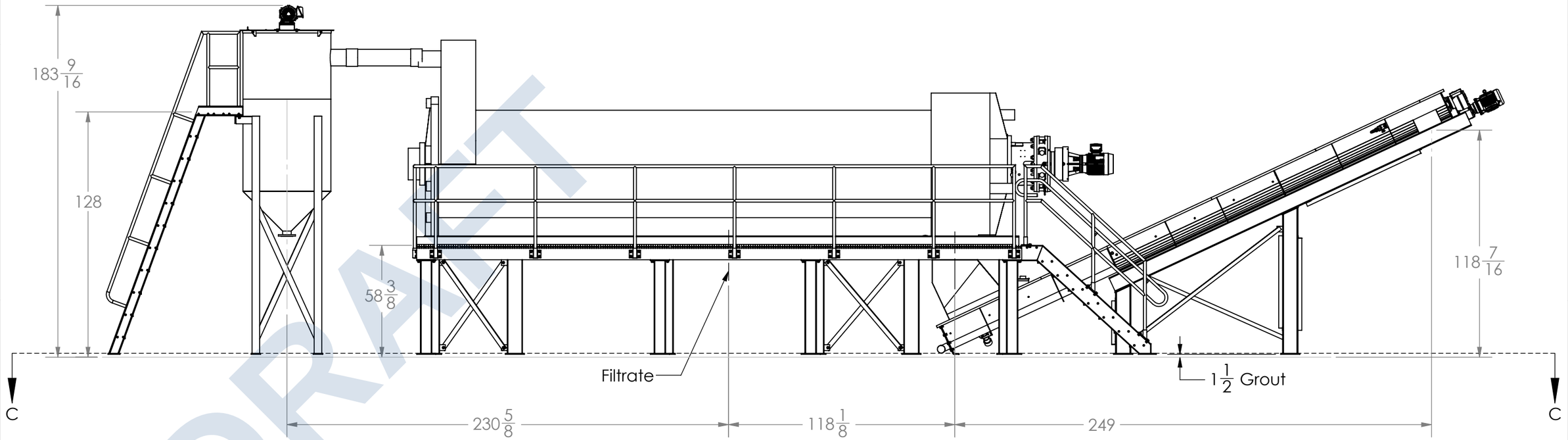

SECTION B-B

DRAFT

PROPRIETARY AND CONFIDENTIAL
THE INFORMATION CONTAINED IN THIS DRAWING IS THE SOLE PROPERTY OF FKC CO LTD. ANY REPRODUCTION IN PART OR AS A WHOLE WITHOUT THE WRITTEN PERMISSION OF FKC CO LTD IS PROHIBITED.

No.	Alteration	Date	Sign
3			
2			
1			
0	Issued for Approval	3/24/25	MB

Job No. 524	Customer San Luis West WWTP San Luis, AZ	Wt. Lbs.
Drawing No. L524-902	Title BHX-1250x6500L Section B-B Layout	Quantity 1
		Date 4/8/25
FKC	FKC CO. LTD 2708 W 18th St. Port Angeles, WA 98363 (360) 452-9472 Fax (360) 452-6880	Drawn By MB
	Revision	SHEET 3 OF 4

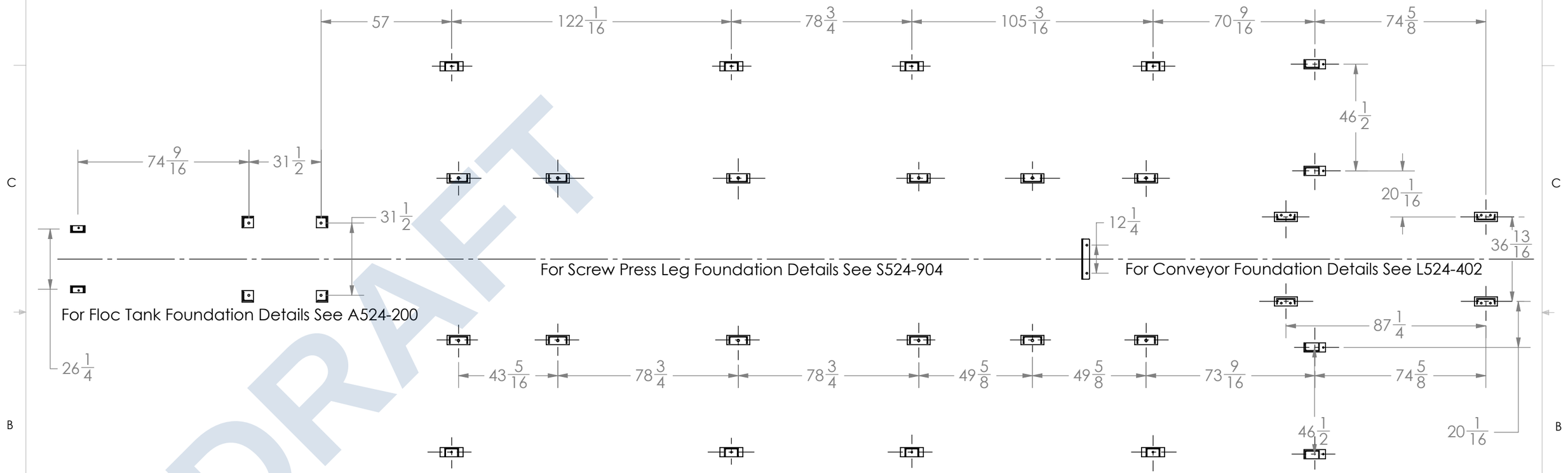

For Screw Press Leg Foundation Details See S524-904

For Conveyor Foundation Details See L524-402

For Floc Tank Foundation Details See A524-200

SECTION C-C
SCALE 1 : 42

DRAFT

PROPRIETARY AND CONFIDENTIAL
THE INFORMATION CONTAINED IN THIS DRAWING IS THE SOLE PROPERTY OF FKC CO LTD. ANY REPRODUCTION IN PART OR AS A WHOLE WITHOUT THE WRITTEN PERMISSION OF FKC CO LTD IS PROHIBITED.

No.	Alteration	Date	Sign
3			
2			
1			
0	Issued for Approval	8/5/24	MB

Job No. 524	Customer San Luis West WWTP San Luis, AZ	Wt. Lbs.
Drawing No. S524-903	Title BHX-1250x6500L Section C-C Foundation Details	Quantity 1
		Date 4/8/25
FKC	FKC CO. LTD 2708 W 18th St. Port Angeles, WA 98363 (360) 452-9472 Fax (360) 452-6880	Drawn By MB
	Revision	SHEET 4 OF 4

Equipment Submittals

DRAFT

Screw Press

DRAFT

FKC CO., LTD.

2708 West 18th Street
Port Angeles, WA 98363

(360) 452-9472
FAX (360) 452-6880

San Luis West WWTP, AZ
Bill of Materials

Item #	Screw Press - BHX 1250 x 6500L	Manufacturer	Part Number	Qty	Material of Construction
101	Motor	Toshiba	0054SDSR44A-P	1	Painted CS
102	Drive	Sumitomo Cyclo	CHVJ-6265DA-7569	1	Painted CS
--	Screw	FKC	Screw 1250 x 6500	1	304SS
--	Drums	FKC	Drum 1250 x 1000	6	304SS
--	Covers	FKC	Covers	12	304SS
--	Head Box	FKC	Head Box	1	304SS
--	Inlet Bearing Housing	FKC	NA	1	Painted CS
--	Outlet Discharge Box	FKC	NA	1	304SS Wetted Parts Painted CS - Non Wetted Parts
--	Cone	FKC	NA	1	304SS
--	Base	FKC	NA	1	Galvanized CS
--	Showers Headers	FKC	NA	3	304SS
--	Bolts, Nuts, Washers in Wetted Area	FKC	NA	--	304SS
--	Head Box Level Transmitter			1	See Submittal
--	Shower Nozzles	FKC	NA	122	316 SS
104	Solenoid Valve 1 1/2"	ASCO	8221G011	7	Brass

DRAFT

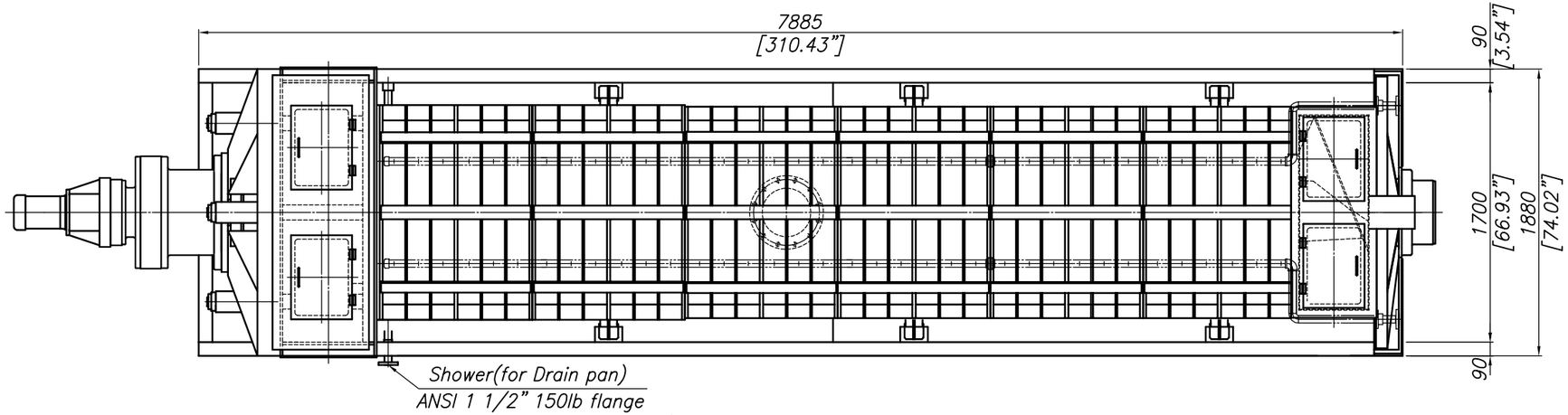

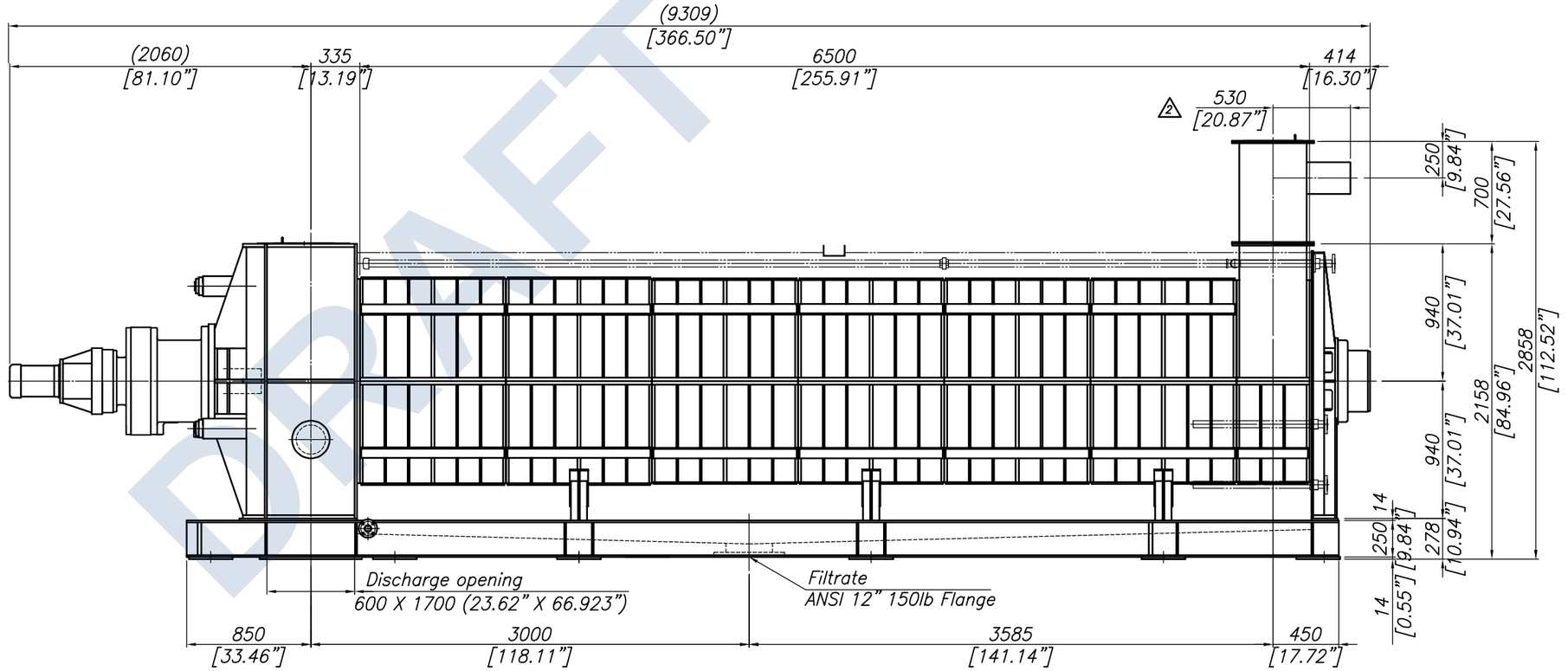

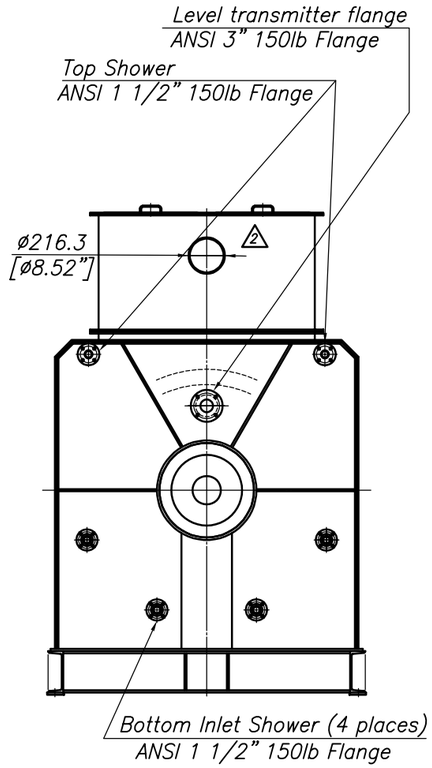

Cyclo reducer, CHVJ-6265DA-7569
Motor 5 HP, 1800rpm (184TC)

Screw rev.
0~1800 X 1/7569 = ~0.238 rpm

Total weight = 13,300 kg (29,321 lbs)
Operating weight = 16,500 kg (36,376 lbs)

Rev.	Date	Description	Drawn by	Rev. by	Appd. by
2	4/9 '25	Inlet	RTB		
1	4/9 '25	Approval	S.ENDO	Y.ITO	H.ABE

Purchaser	FKC CO., LTD.	Quantity	1
End user	San Luis, AZ	Scale	1/25
Job name	BHX-1250X6500L Screw press		
Dwg. name	Assembly		
Job No.	M-3604		
Dwg. No.	S3604-1001	Ref. job No.	

FUKOKU KOGYO CO., LTD.

DRAFT

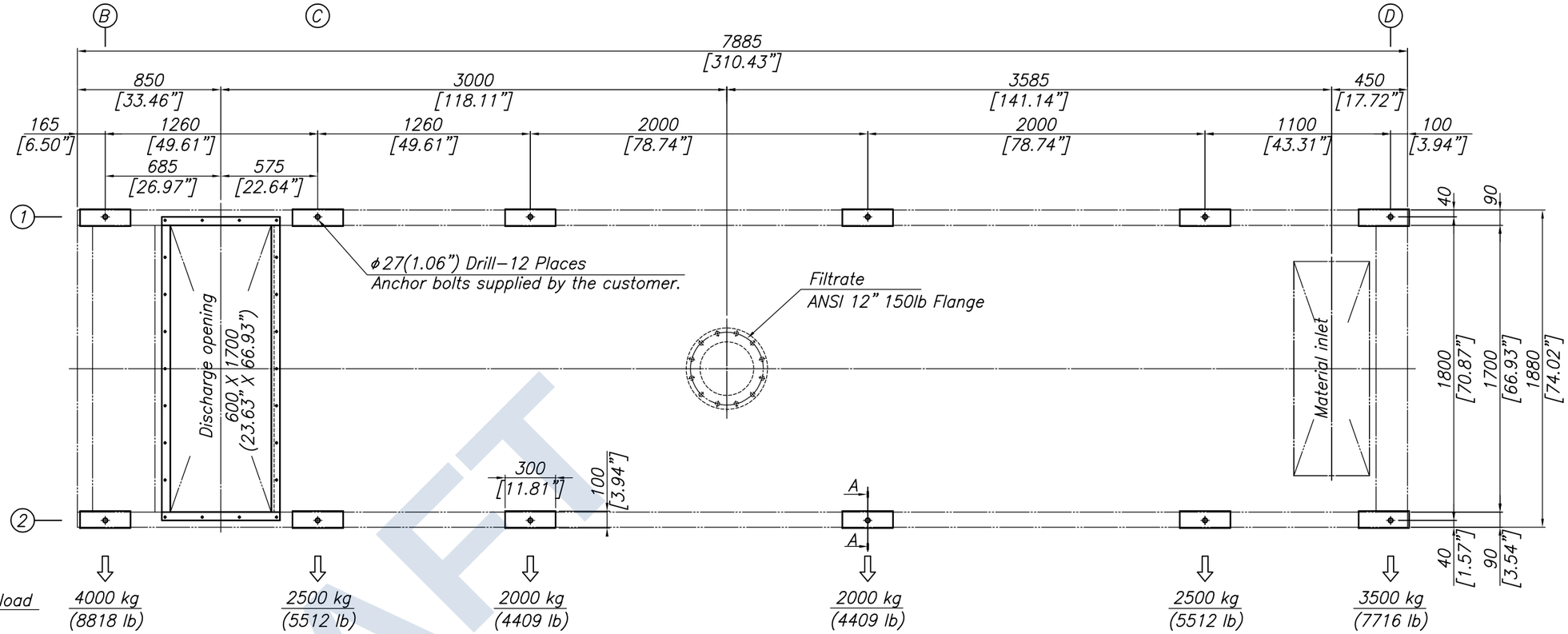

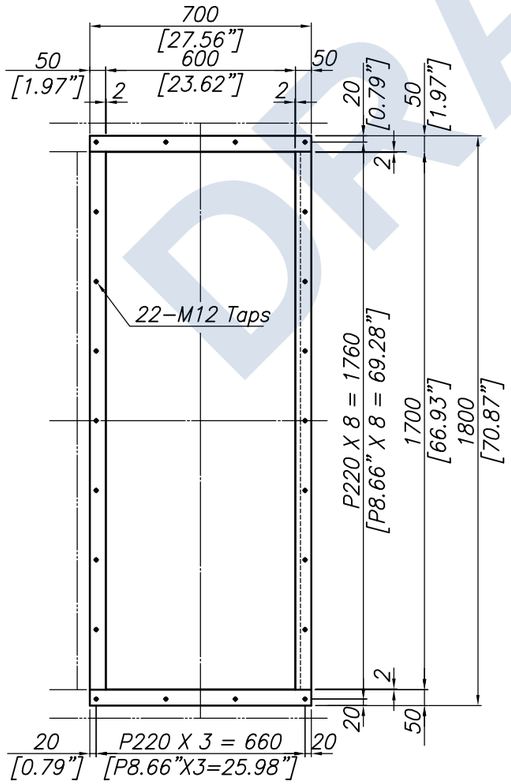

Flange of Discharge opening

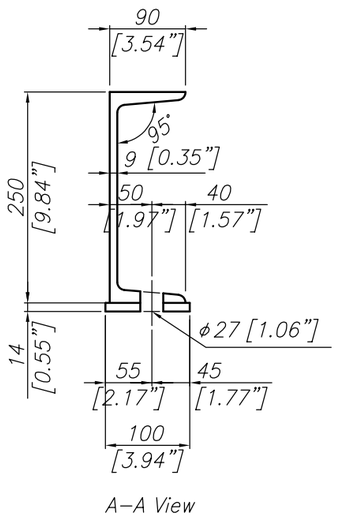

A−A View

Total weight = 13,300 kg (29,322 lbs)

Operating weight = 16,500 kg (36,376 lbs)

Dynamic load

	B	C	D
1	198 Kg (437 lbs) ↓	235 Kg (518 lbs) ↓	−433 Kg (−955 lbs) ↑
2	−198 Kg (−437 lbs) ↑	−235 Kg (−518 lbs) ↑	433 Kg (955 lbs) ↓

Note: Loads shown above are worst case dynamic loads during plugged condition.

Rev.	Date	Description	Drawn by	Rev. by	Appd. by
0	4/9 '25	Approval	S.ENDO	Y.ITO	H.ABE

Purchaser	FKC CO., LTD.	Quantity	
End user	San Luis, AZ	1	
Job name	BHX−1250X6500L Screw press	Scale	1/20
Dwg. name	Foundation		
Job No.	M−3604		
Dwg. No.	S3604−1002	Ref. job No.	

FUKOKU KOGYO CO., LTD.

DRAFT

Item # 101

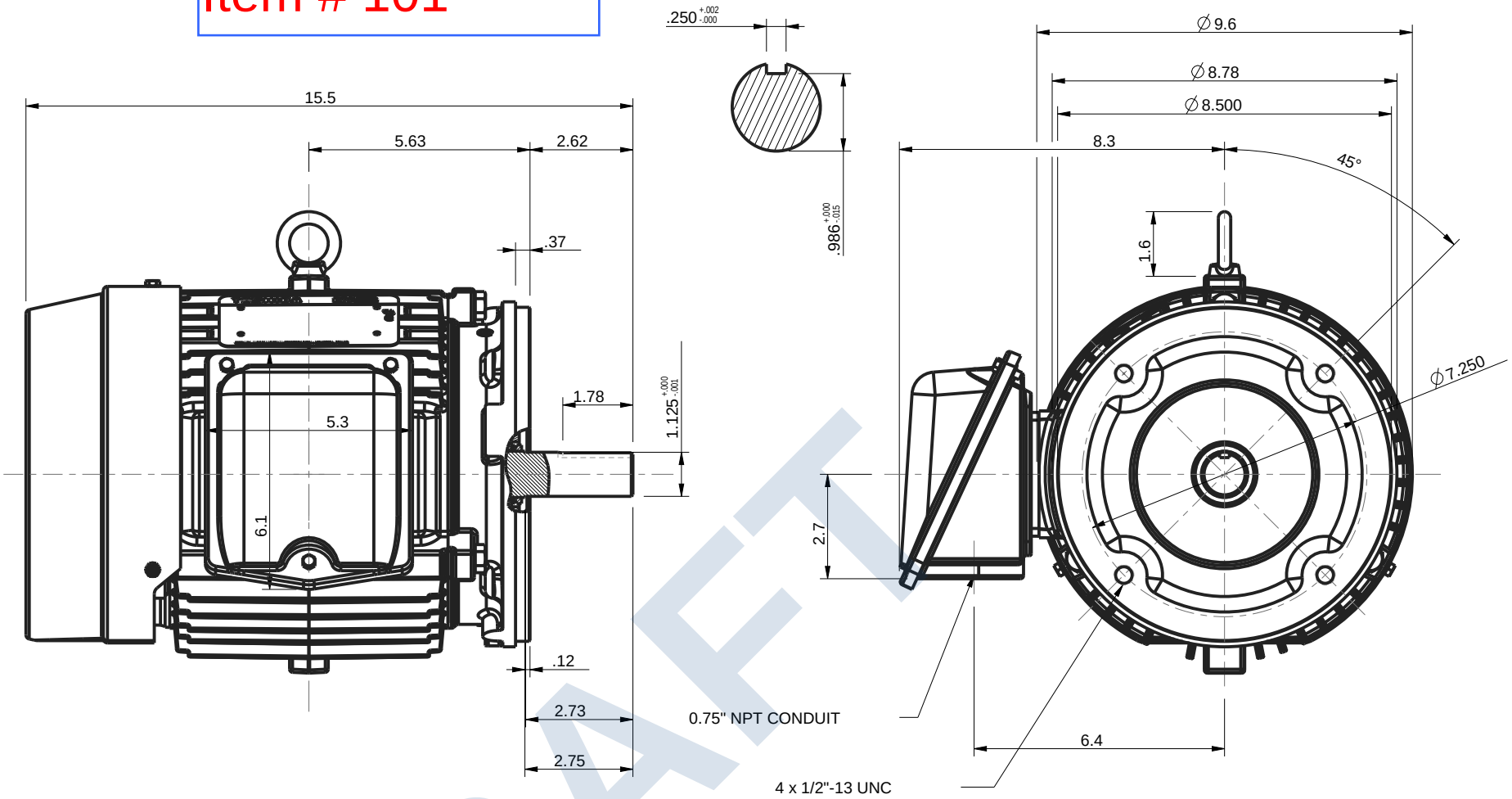

DRAFT

UNITS: INCHES	NOTES:
ROTATION FROM NDE	1. MAIN CONDUIT BOX MAY BE ROTATED IN 90° INCREMENTS
X CCW ☐ CW	2. STANDARD PRODUCT USES BI-DIRECTIONAL FAN. OPPOSITE ROTATION AVAILABLE ONLY BY CONNECTION CHANGE.
	3. KEY DIMENSIONS EQUAL 0.250"x 0.250"x 1.75" (MOTOR SUPPLIED WITH KEY)

TOSHIBA RESERVES THE RIGHT TO MAKE CHANGES OF TECHNICAL IMPROVEMENT AND THE DATA MAY CHANGE WITHOUT NOTICE ☐ PRELIMINARY

DO NOT USE FOR CONSTRUCTION, INSTALLATION, OR APPLICATION PURPOSES UNLESS THE DRAWING IS MARKED AS CERTIFIED ☒ CERTIFIED

TOSHIBA
www.toshiba.com/tic
TOSHIBA INTERNATIONAL CORPORATION

SEVERE DUTY EQP Cool SD

TOTALLY ENCLOSED FAN COOLED
ROUND BODY C-FACED
3 PHASE INDUCTION MOTOR
182TC-184TC F1 ASSEMBLY

DRAWING #: MDSLV205-02
REV. DATE: 06/21/18 REV. #: 2 PER.: M. O'DOWD
REV. DESCRIP.:

Issued Date	12/18/2019	Transmit #	
Issued By	dschoeck	Issued Rev	

TOSHIBA Item # 101

TYPICAL MOTOR PERFORMANCE DATA

Model: 0054SDSR44A-P

HP	kW	Pole	FL RPM	Frame	Voltage	Hz	Phase	FL Amps
5	3.7	4	1750	184TC	230/460	60	3	13.0/6.5

Enclosure	IP	Ins. Class	S.F.	Duty	NEMA Nom. Eff.	NEMA Design	kVA Code	Ambient (°C)
TEFC	55	F	1.15	CONT	89.5	B	J	40 C

Load	HP	kW	Amperes	Efficiency (%)	Power Factor (%)
Full Load	5	3.7	6.5	89.7	81.2
¾ Load	3.75	2.8	5.0	89.3	77.6
½ Load	2.50	1.9	4.0	87.6	69.1
¼ Load	1.25	0.9	2.8	81.7	51.1
No Load			2.7		5.9
Locked Rotor			46		52.8

Torque				Rotor wk² Inertia
Full Load (lb-ft)	Locked Rotor (% FLT)	Pull Up (% FLT)	Break Down (% FLT)	(lb-ft²)
15	255	240	370	0.50

Safe Stall Time(s)		Sound Pressure dB(A) @ 1M	Bearings*		Approx. Motor Weight
Cold	Hot		DE	NDE	(lbs)
35	15	-	6306ZZC3	6306ZZC3	115

*Bearings are the only recommended spare part(s).

Motor Options:
Product Family:EQP Global SD
Mounting:C-Face Round,Shaft:T Shaft

Customer	
Customer PO	
Sales Order	
Project #	

Tag:

All characteristics are average expected values.

DRAFT

Issued Date	12/18/2019	Transmit #	
Issued By	dschoeck	Issued Rev	

TOSHIBA

SPEED TORQUE/CURRENT CURVE

Model: 0054SDSR44A-P

HP	kW	Pole	FL RPM	Frame	Voltage	Hz	Phase	FL Amps
5	3.7	4	1750	184TC	230/460	60	3	13.0/6.5

Enclosure	IP	Ins. Class	S.F.	Duty	NEMA Nom. Eff.	NEMA Design	kVA Code	Ambient (°C)
TEFC	55	F	1.15	CONT	89.5	B	J	40 C

Locked Rotor Amps	Rotor wk² Inertia (lb-ft²)	Torque			
		Full Load (lb-ft)	Locked Rotor (%)	Pull Up (%)	Break Down (%)
46	0.50	15	255	240	370

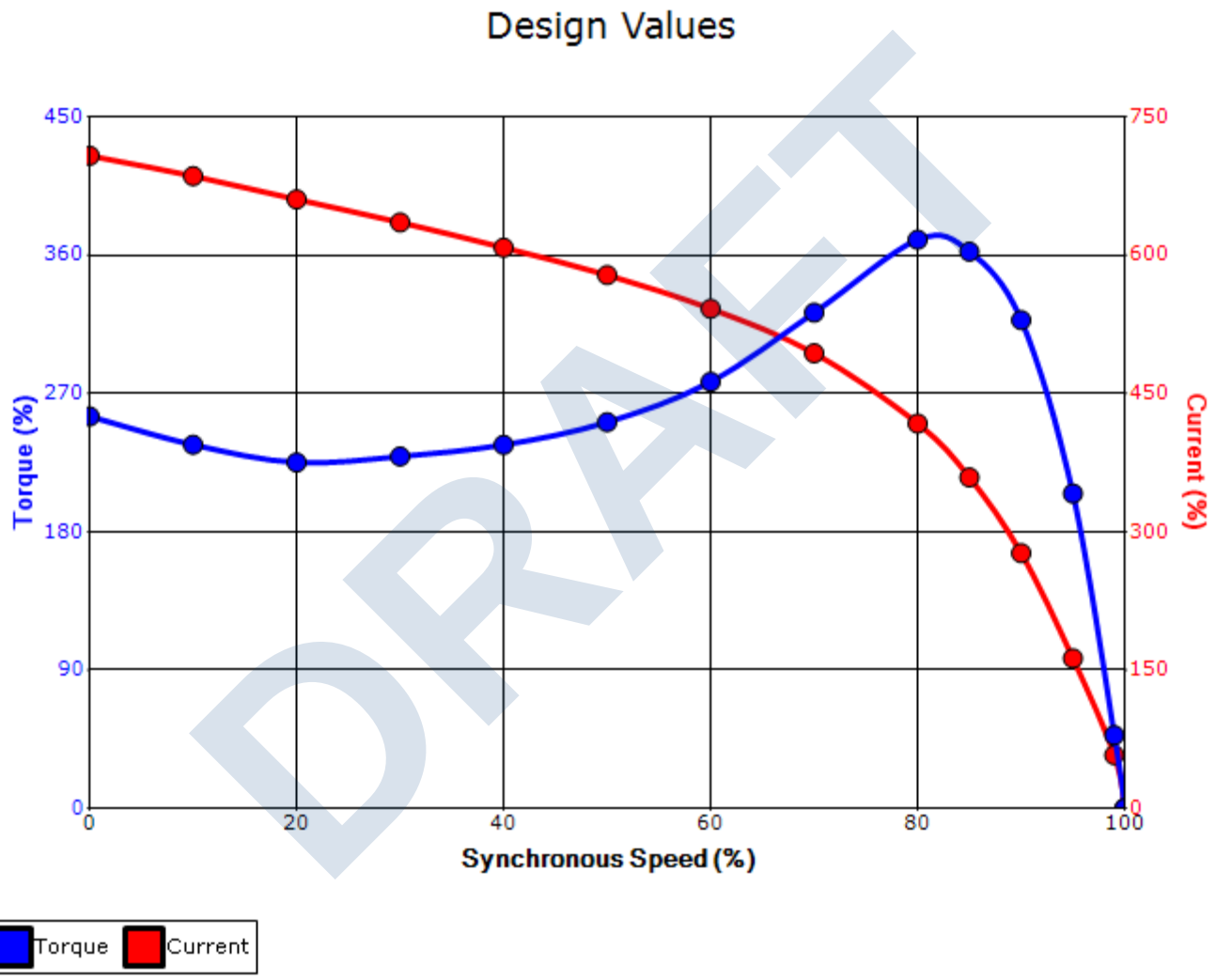

DRAFT

Customer		wk² Load Inertia (lb-ft²)	-
Customer PO		Load Type	-
Sales Order		Voltage (%)	100
Project #		Accel. Time	-

Tag:

All characteristics are average expected values.

TOSHIBA INTERNATIONAL CORPORATION · HOUSTON, TEXAS U.S.A.

Engineering	zxie	Doc. Written By	D. Suarez	Doc.# / Rev	MPCF-1121/1
Engr. Date	7/19/2019	Doc. Approved By	M. Campbell	Doc. Issued	9/20/2019

Motor Connection Diagrams
9 Leads

Across-the-Line Starting / Running Connections

Low Voltage Wye

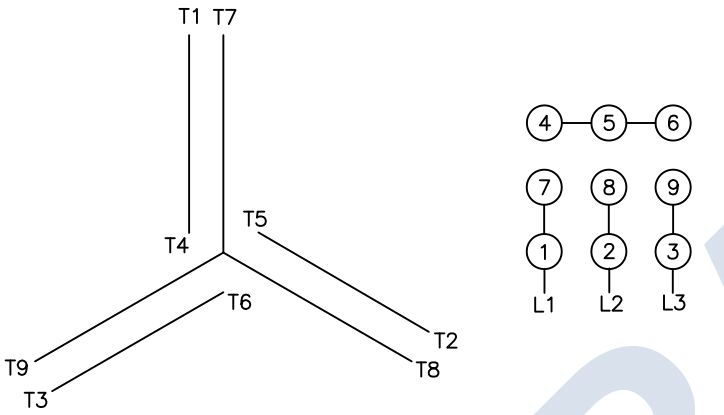

High Voltage Wye

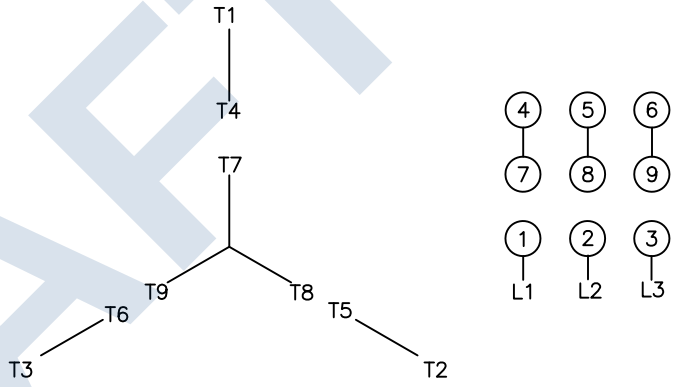

Switch L1 and L2 to reverse rotation

DRAFT

Item # 102

Sumitomo Drive Technologies

Always on the Move

Cyclo® 6000

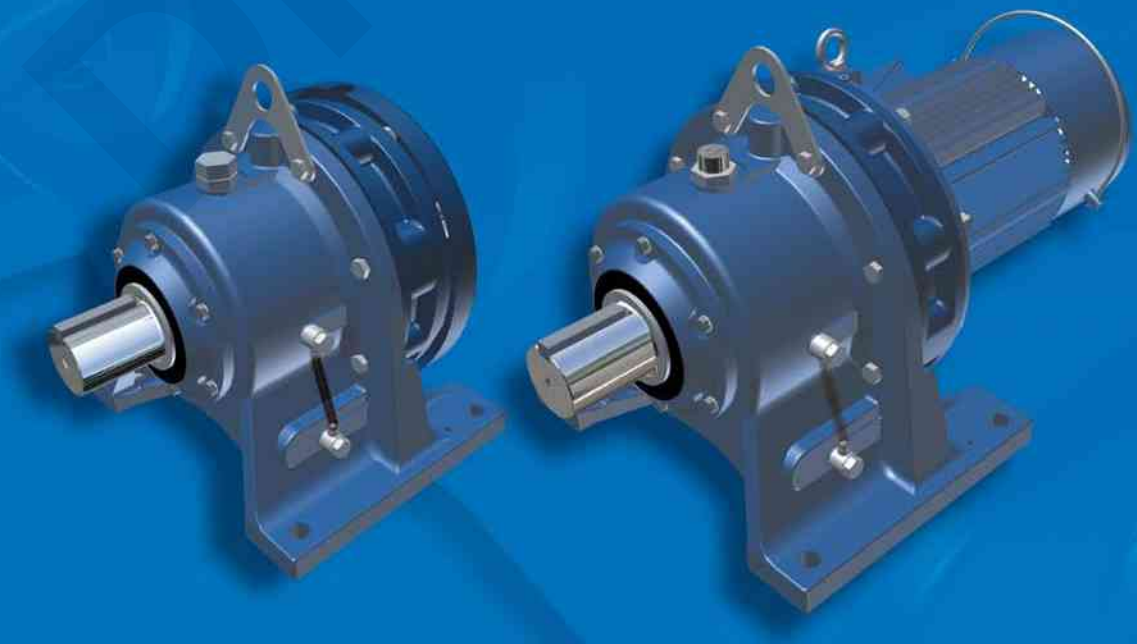

► Highly Reliable, Torque Dense Cycloidal Speed Reducers and Gearmotors

Cyclo® 6000

Highly Reliable, Torque Dense, Cycloidal Speed Reducers and Gearmotors

- **Wide variety of inputs available,** including C-Face, Free-Shaft, Gearmotor and Brakemotor

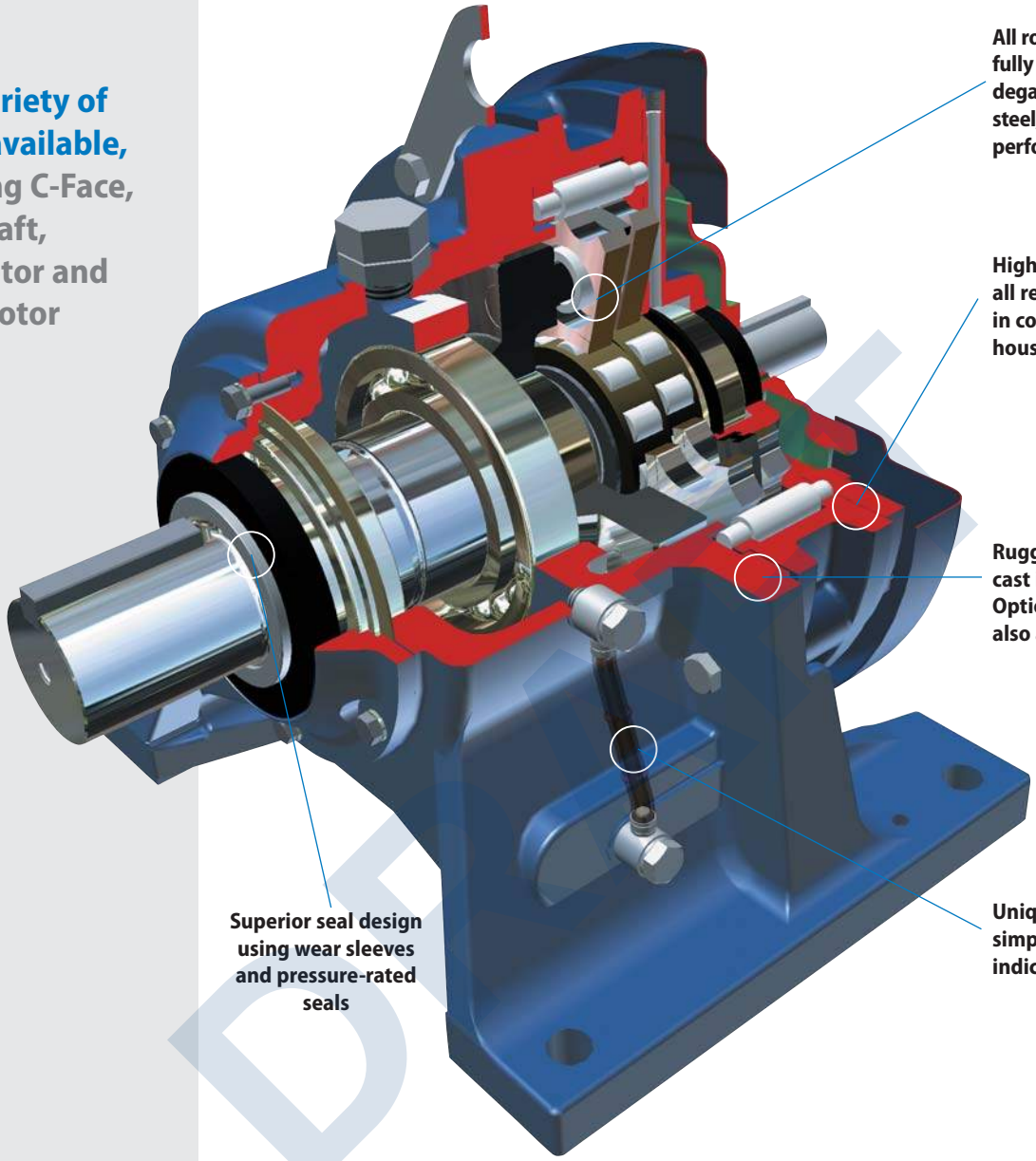

All rotating components are fully hardened, vacuum degassed bearing grade steel, for consistent, reliable performance

High power density, all reduction contained in compact ring gear housing

Rugged, shock-resistant cast iron housing. Optional ductile iron also available

Superior seal design using wear sleeves and pressure-rated seals

Unique oil sight gauge for simple, visible lubrication indication



Unmatched Reliability, Exceptional Performance

- Cyclo® speed reducers and gearmotors are **designed to withstand shock loads exceeding 500%** of their ratings



Product Description

Sumitomo Cyclo® speed reducers and gearmotors are the **premier in-line drives**. The revolutionary Cyclo® design provides **quiet, efficient and reliable performance** exceeding that of involute tooth gear designs. The key to Cyclo®'s matchless performance and reliability is that 67% of the reduction components are in contact at all times, compared to geared designs that use only limited tooth contact. Unlike geared designs, the Cyclo®'s reduction components operate in compression rather than shear, which results in **exceptionally rugged and shock resistant performance.** The Cyclo® technology coupled with innovative product options and accessories offer the most extensive range of application solutions available.

Features & Benefits

- **Cycloidal speed reduction technology**
  - ~ Quiet, efficient and reliable operation with high torque density and compact size
- **Modular design**
  - ~ Interchangeable cast iron housings in foot, flanged or face mount configurations
- **Universal mounting arrangements**
  - ~ Available free-shaft, quill hollow shaft, C-face, shovel base, and top-mount inputs
- **Internal components manufactured from hardened, vacuum-degassed, bearing grade steel**
  - ~ Minimal vibration, low noise, low backlash and extended operational life
- **The best product warranty**
  - ~ The 24 month warranty backs up the superb Cyclo® product reputation

Specifications

Sizes:	23 sizes (5lbs to 5000lbs)
Torque Rating:	55 to 603,000 lb in
HP Rating:	.10 to 235 HP
Ratio Range:	3:1 to 119:1 (single) 121:1 to 7569:1 (double) 8041:1 to 658,503:1 (triple)
Mounting:	Foot, Flange, Face Mount
Motor Standards:	NEMA, IEC, JIS, UL, CSA, CE

Sumitomo's Cyclo® is a highly reliable, torque dense, cycloidal speed reducer and gearmotor



Reducer

- Simple, Compact Design
- Rugged Forged Output Shaft
- Universal Mounting
- C-Face, Shovel Base & Top Mount Options

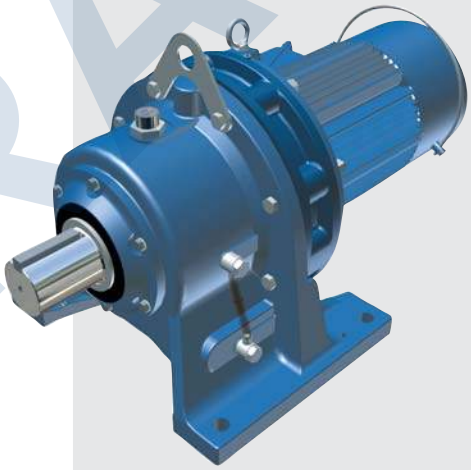

Gearmotor

- Rugged forged output shaft
- Direct acting brake option
- Unmatched durability





Applications

- Conveyors
- Food Machinery
- Mixers
- Automotive Plants
- Recycling Machines
- Poultry Plants
- Sawmills and Wood Mills
- Wastewater Treatment
- Steel Mills
- Construction Equipment
- Paper Mills
- Processing Plants

DRAFT

Cyclo® 6000

Highly Reliable, Torque Dense, Cycloidal Speed Reducers and Gearmotors

Product Range

Standard Motor and Reducer Combinations





Single Reduction Ratios 3 – 119

Combinations with 1750 RPM input speed

Ratio	3	5	6	8	11	13	15	17	21	25	29	35	43	51	59	71	87	119
Output Speed RPM (60 Hz)	583	350	292	219	159	135	117	103	83.3	70.0	60.3	50.0	40.7	34.3	29.7	24.6	20.1	14.7
Motor HP 1/8			●	●	●	●	●	●	●	●	●	●	●	●	●	●	●	●
1/4			●	●	●	●	●	●	●	●	●	●	●	●	●	●	●	●
1/3			●	●	●	●	●	●	●	●	●	●	●	●	●	●	●	●
1/2			●	●	●	●	●	●	●	●	●	●	●	●	●	●	●	
3/4			●	●	●	●	●	●	●	●	●	●	●	●	●	●	●	
1			●	●	●	●	●	●	●	●	●	●	●	●	●	●	●	
1.5	●	●	●	●	●	●	●	●	●	●	●	●	●	●	●	●	●	
2	●	●	●	●	●	●	●	●	●	●	●	●	●	●	●	●	●	
3	●	●	●	●	●	●	●	●	●	●	●	●	●	●	●	●	●	
5	●	●	●	●	●	●	●	●	●	●	●	●	●	●	●	●	●	
7.5	●	●	●	●	●	●	●	●	●	●	●	●	●	●	●	●	●	
10	●	●	●	●	●	●	●	●	●	●	●	●	●	●	●	●	●	
15	●	●	●	●	●	●	●	●	●	●	●	●	●	●	●	●	●	
20	●	●	●	●	●	●	●	●	●	●	●	●	●	●	●	●	●	
25	●	●	●	●	●	●	●	●	●	●	●	●	●	●	●	●	●	
30	●	●	●	●	●	●	●	●	●	●	●	●	●	●	●			
40	●	●	●	●	●	●	●	●	●	●	●	●	●	●				
50					●	●	●	●	●	●	●	●	●	●				
60					●	●	●	●	●	●	●							
75					●		●		●		●		●					
100					●		●		●		●							

● Ratios 11 – 87

Combinations with 1165 RPM input speed

Ratio	11	15	21	29	43	59	87
Output Speed RPM (60 Hz)	106	77.7	55.5	40.2	27.1	19.7	13.4
Motor HP 20						●	●
25					●	●	●
30					●	●	●
40			●	●	●	●	●
50		●	●	●	●	●	●
60		●	●	●	●	●	●
75	●	●	●	●	●	●	
100	●	●	●	●	●	●	
125	●	●	●	●	●		
150	●	●	●	●	●		
175	●	●	●	●			

Double Reduction Ratios 104 – 7569

Combinations with 1750 RPM input speed

Ratio	104	121	143	165	195	231	273	319	377	473	559	649	731	841	1003	1247	1479	1849	2065	2537	3045	3481	4437	5133	6177	7569
Output Speed RPM (60 Hz)	16.8	14.5	12.2	10.6	8.97	7.58	6.41	5.49	4.64	3.70	3.13	2.70	2.39	2.08	1.74	1.40	1.18	.0946	0.847	0.690	0.575	0.503	0.394	0.341	0.283	0.231
Motor HP 1/8	●	●	●	●	●	●	●	●	●	●	●	●	●	●	●	●	●	●	●	●	●	●	●	●	●	●
1/4	●	●	●	●	●	●	●	●	●	●	●	●	●	●	●	●	●	●	●	●	●	●	●	●	●	●
1/3	●	●	●	●	●	●	●	●	●	●	●	●	●	●	●	●	●	●	●	●	●					
1/2	●	●	●	●	●	●	●	●	●	●	●	●	●	●	●	●	●	●	●	●	●	●	●	●	●	●
3/4	●	●	●	●	●	●	●	●	●	●	●	●	●	●	●	●	●	●								
1	●	●	●	●	●	●	●	●	●	●	●	●	●	●	●	●	●		●	●	●	●	●	●	●	●
1.5	●	●	●	●	●	●	●	●	●	●	●	●	●	●	●	●	●	●								
2	●	●	●	●	●	●	●	●	●	●	●	●	●	●	●	●	●	●	●	●	●	●	●	●	●	●
3	●	●	●	●	●	●	●	●	●	●	●	●	●	●	●	●	●	●	●	●	●	●	●	●	●	●
5	●	●	●	●	●	●	●	●	●	●	●	●	●	●	●	●	●	●	●	●	●	●	●	●	●	●
7.5	●	●	●	●	●	●	●	●	●	●	●	●	●	●	●	●	●	●	●	●	●	●	●	●	●	●
10	●	●	●	●	●	●	●	●	●	●	●	●	●	●	●	●	●	●	●							
15	●	●	●	●	●	●	●	●	●	●	●	●	●	●	●	●	●									
20	●	●		●	●	●	●	●	●	●	●	●	●	●	●											
25		●		●	●	●	●	●	●	●	●	●	●	●												
30		●		●	●	●	●	●	●	●	●	●														
40		●		●	●	●	●	●	●	●																
50		●		●	●	●		●	●																	
60		●		●	●			●																		
OUTPUT TORQUE lb•in min.	212	212	212	212		212			212			400	212		400	212	1325	212	400		1325				4500	
OUTPUT TORQUE lb•in max.	65,000	280,000	67,000	390,000		410,000			600,000																	

DRAFT

Headquarters & Manufacturing

4200 Holland Boulevard
Chesapeake, VA 23323
Tel: 757-485-3355
Fax: 757-487-3075
E-mail: marketing@suminet.com

North & South America

USA: 757-485-3355
Canada: Toronto 905-469-1050
Mexico: Monterrey 011-52-81-8144-5130
Brazil: Sao Paulo 011-55-11-5585-3600
Chile: Santiago 011-562-786-6963
Argentina: Buenos Aires 011-54-11-4765-5332
For worldwide location details: **www.sumitomodrive.com**

World Headquarters - Japan

Sumitomo Heavy Industries, Ltd.
Power Transmission & Controls Group
5-9-11, KITA-Shinagawa, Shinagawa-Ku
Tokyo 141-8686 Japan
Tel: 011-813-5488-8363 • Fax: 011-813-5488-8365

Item # 104

ASCO® RedHat

Pilot Operated
Slow Closing Solenoid Valves
Brass Body • 3/8" to 2 1/2" NPT

2/2 SERIES 8221

2-WAY

Features

- Pilot operated, normally open or normally closed
- Snubber slows disc closing speed to protect system against water hammer damage more effectively than other techniques
- Pressure spike due to water hammer is reduced to a point eliminating the need for suppressors or other controls in most water systems
- Fluid Controls Institute Inc. evaluations have classified these valves:

Pipe Sizes	FCI-82-1 Class
3/8", 1/2", 3/4"	CC
1", 1 1/4", 1 1/2", 2", 2 1/2"	BB

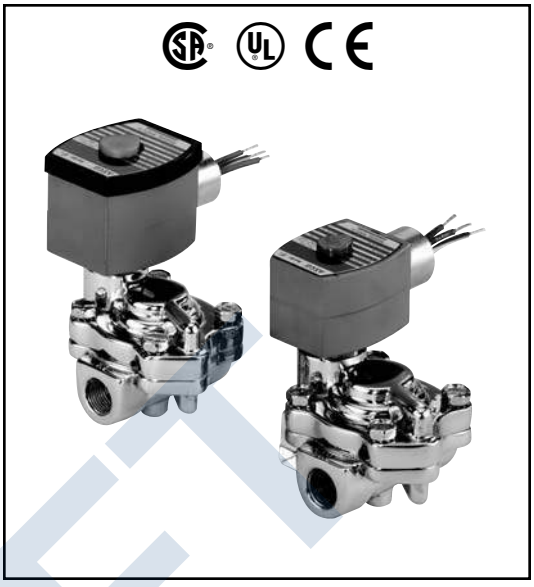

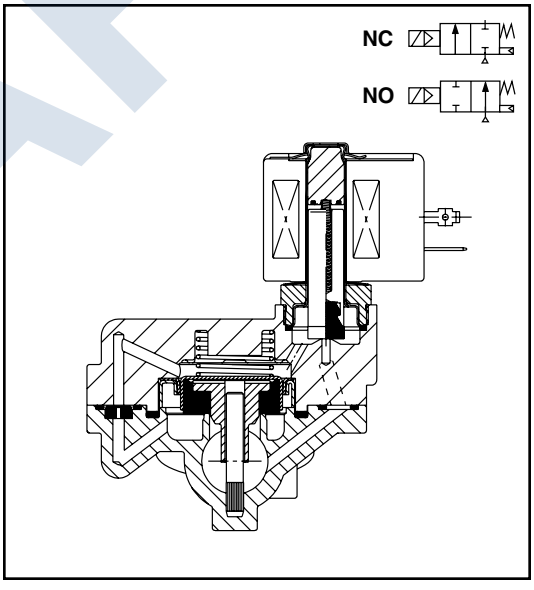

Construction

Valve Parts in Contact with Fluids	
Body	Brass
Disc	NBR
Seals	PTFE & NBR
Core Tube	305 Stainless Steel
Core and Plugnut	430F Stainless Steel
Springs	302 Stainless Steel
Piston	Stainless Steel or Brass
Shading Coil	Copper

Electrical

Standard Coil and Class of Insulation	Watt Rating and Power Consumption				Spare Coil Part No.			
		AC			General Purpose		Explosionproof	
	DC Watts	Watts	VA Holding	VA Inrush	AC	DC	AC	DC
F	11.6	6.1	16	30	238210	238710	238214	238714
F	16.8	16.1	35	95	272610	97617	272614	97617
F	22.6	-	-	-	-	238710	-	238714

Standard Voltages: 24, 120, 240, 480 volts AC, 60 Hz (or 110, 220 volts AC, 50 Hz). 6, 12, 24, 120, 240 volts DC. Must be specified when ordering.
Other voltages are available when required.

Solenoid Enclosures

Standard: RedHat II - Watertight, Types 1, 2, 3, 3S, 4, and 4X; RedHat - Type I.

Optional: RedHat II - Explosionproof and Watertight, Types 3, 3S, 4, 4X, 6, 6P, 7, and 9; RedHat - Explosionproof and Raintight, Types 3, 7, and 9. (To order, add prefix "EF" to catalog number.)

See Optional Features Section for other available options.

Nominal Ambient Temp. Ranges:

RedHat II/
RedHat AC: 32˚F to 125˚F (0˚C to 52˚C)
RedHat II DC: 32˚F to 104˚F (0˚C to 40˚C)
RedHat DC: 32˚F to 77˚F (0˚C to 25˚C)
(104˚F/40˚C occasionally)

Refer to Engineering Section for details.

Approvals:

CSA certified. UL listed, General Purpose Valves.
RedHat II meets applicable CE directives.

Refer to Engineering Section for details.

DRAFT

Specifications (English units)

Pipe Size (ins.)	Orifice Size (ins.)	Cv Flow Factor	Operating Pressure Differential (psi)			Max. Fluid Temp. ˚F		Brass Body	Const. Ref.	Watt Rating/ Class of Coil Insulation ③	
			Min. ①	Max. AC Water ②	Max. DC Water ②	AC	DC	Catalog Number		AC	DC
NORMALLY CLOSED (Closed when de-energized)											
3/8	9/16	3	5	150	125	180	150	8221G001	1	6.1/F	11.6/F
1/2	9/16	3.5	5	150	125	180	150	8221G003	1	6.1/F	11.6/F
3/4	3/4	5.5	5	150	125	180	150	8221G005	2	6.1/F	11.6/F
1	1	11.5	5	150	125	180	150	8221G007	5	6.1/F	11.6/F
1 1/4	1 1/8	13	5	150	125	180	150	8221G009	6	6.1/F	11.6/F
1 1/2	1 1/4	24	5	150	125	180	150	8221G011	7	6.1/F	11.6/F
2	1 3/4	36	5	150	125	180	150	8221G013	11	6.1/F	22.6/F
2 1/2	1 3/4	38	5	150	125	180	150	8221G015	12	6.1/F	22.6/F
NORMALLY OPEN (Open when de-energized)											
3/8	9/16	3	5	-	125	-	150	8221 021	15	-	16.8/F
3/8	9/16	3	5	150	-	180	-	8221G021	3	16.1/F	-
1/2	9/16	3.5	5	-	125	-	150	8221 023	15	-	16.8/F
1/2	9/16	3.5	5	150	-	180	-	8221G023	3	16.1/F	-
3/4	3/4	5.5	5	-	125	-	150	8221 025	16	-	16.8/F
3/4	3/4	5.5	5	150	-	180	-	8221G025	4	16.1/F	-
1	1	11.5	5	-	125	-	150	8221 027	17	-	16.8/F
1	1	11.5	5	150	-	180	-	8221G027	8	16.1/F	-
1 1/4	1 1/8	13	5	-	125	-	150	8221 029	18	-	16.8/F
1 1/4	1 1/8	13	5	150	-	180	-	8221G029	9	16.1/F	-
1 1/2	1 1/4	24	5	-	125	-	150	8221 031	19	-	16.8/F
1 1/2	1 1/4	24	5	150	-	180	-	8221G031	10	16.1/F	-
2	1 3/4	36	5	-	125	-	150	8221 033	20	-	16.8/F
2	1 3/4	36	5	150	-	180	-	8221G033	13	16.1/F	-
2 1/2	1 3/4	38	5	-	125	-	150	8221 035	21	-	16.8/F
2 1/2	1 3/4	38	5	150	-	180	-	8221G035	14	16.1/F	

① Valves require a 5 psi Minimum Pressure Differential to open. Once open, they remain open with 3 psi differential pressure.
② Refer to Steam/Hot Water Valve Series for Hot Water constructions.
③ On 50 hertz service, the watt rating for the 6.1/F solenoid is 8.1 watts.

DRAFT

Dimensions: inches (mm)

Const. Ref.		H	K	L	P	W
1	ins.	4.34	2.69	2.72	3.59	3.41
	mm	110	68	69	91	87
2	ins.	4.53	2.85	2.78	3.75	3.41
	mm	115	72	71	95	87
3	ins.	5.22	3.14	2.72	4.47	3.69
	mm	133	80	69	114	94
4	ins.	5.41	3.30	2.78	4.62	3.69
	mm	137	84	71	117	94
5	ins.	5.62	3.15	3.75	4.03	3.16
	mm	143	80	95	102	80
6	ins.	5.56	3.15	3.66	4.03	3.56
	mm	141	80	93	102	90
7	ins.	6.12	3.30	4.38	4.19	4.12
	mm	156	84	111	106	105
8	ins.	6.53	3.59	3.75	4.91	3.16
	mm	166	91	95	125	80
9	ins.	6.47	3.59	3.56	4.91	3.56
	mm	164	91	93	125	90
10	ins.	7.03	3.74	4.38	5.06	4.12
	mm	179	95	111	129	105
11	ins.	7.38	3.71	5.06	4.59	4.72
	mm	188	94	129	117	120
12	ins.	7.38	3.71	5.50	4.59	5.19
	mm	188	94	140	117	132
13	ins.	8.22	4.15	5.06	5.47	4.72
	mm	209	105	129	139	120
14	ins.	8.22	4.15	5.50	5.47	5.19
	mm	209	105	140	139	132
15	ins.	5.22	-	2.72	4.47	3.69
	mm	133	-	69	114	94
16	ins.	5.41	-	2.78	4.62	3.69
	mm	137	-	71	117	94
17	ins.	6.53	-	3.75	4.91	3.16
	mm	166	-	95	125	80
18	ins.	6.47	-	3.66	4.91	3.56
	mm	164	-	93	125	90
19	ins.	7.03	-	4.38	5.06	4.12
	mm	179	-	111	129	105
20	ins.	8.22	-	5.06	5.47	4.72
	mm	209	-	129	139	120
21	ins.	8.22	-	5.50	5.47	5.19
	mm	209	-	140	139	132

IMPORTANT: Valves may be mounted in any position.

Const. Ref. 1, 2

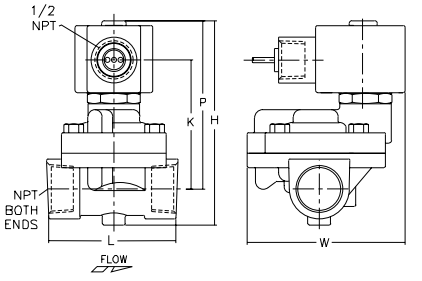

Const. Ref. 3, 4

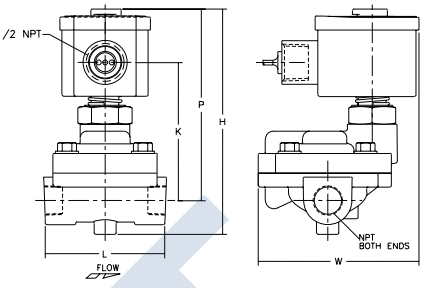

Const. Ref. 5, 6

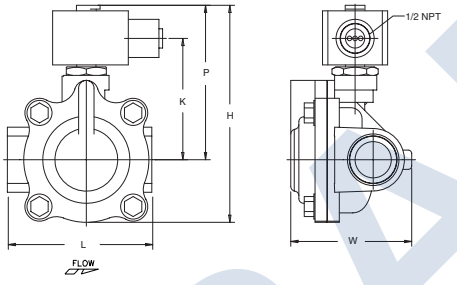

Const. Re. 7, 11, 12

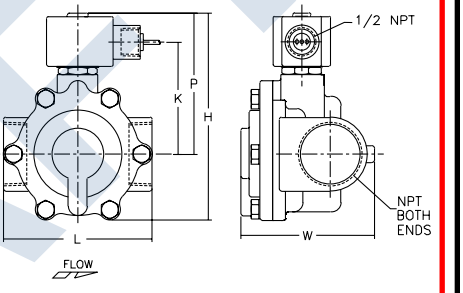

Const. Ref. 8, 9, 10, 13, 14

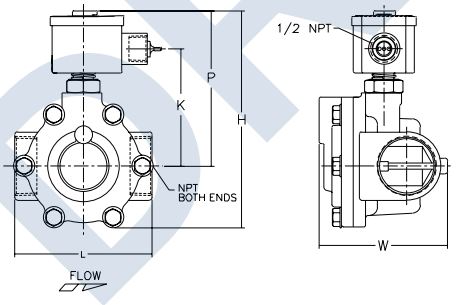

Const. Ref. 15, 16

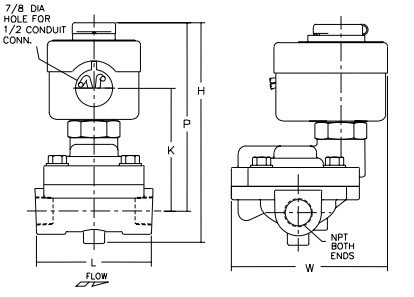

Const. Ref. 17 - 21

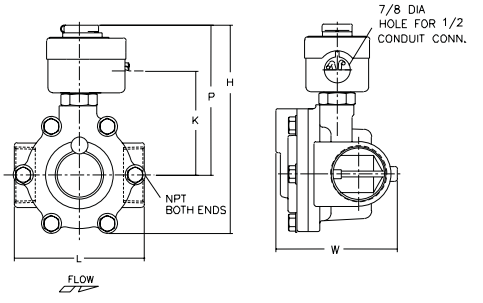

DRAFT

Flocculation Tank

DRAFT

FKC CO., LTD.

2708 West 18th Street
Port Angeles, WA 98363

(360) 452-9472
FAX (360) 452-6880

San Luis West WWTP, AZ
Bill of Materials

Y154SDSR42A-P

Item #	Flocculation Tank 540	Manufacturer	Part Number	Qty	Material of Construction
201	Motor	Toshiba	Y154SDSR47A-P	1	Painted CS
202	Gear Box	SEW Eurodrive	SAF67AMS145	1	Painted CS
203	Tank Body	FKC	--	1	304LSS
204	Agitator Shaft	FKC	--	1	304LSS
205	Agitator Base	FKC	--	1	304LSS
206	Covers	FKC	--	1	304LSS
207	Flexible Pipe Coupler	Fernco	1056-88	1	Rubber
208	Capacitance Level Switch			1	See CP Submittal

Item #	6" Polymer Injection Ring	Manufacturer	Part Number	Quanty (Per Machine)	Material of Construction
401	6" Injection Ring	FKC	NA	1	PVC
402	Polymer Manifold	FKC	NA	1	PVC
403	3/4" Reinforced Clear Tubing	USA Sealing	ZUSA-HT-29	25'	Polyester Reinforced PVC
404	1" Check Valve	Zoro	4VMU2	1	316 SS
405	3/4" NPT x 3/4" Barb 90° Adapter	Banjo	HB075-90	8	Polypropylene
406	2" Pipe Routing Clamp	Behringer	SBX72375-SP	2	Polypropylene/316 SS
407	Worm-Drive Hose Clamp SAE 10	Zoro Select	6710170	8	316 SS

DRAFT

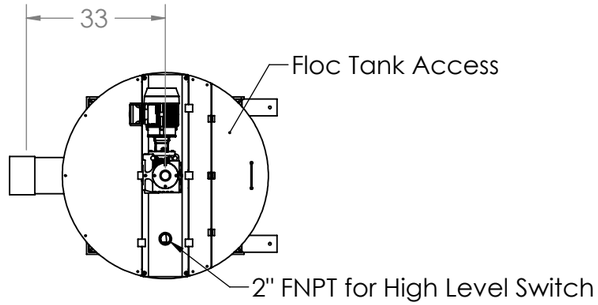

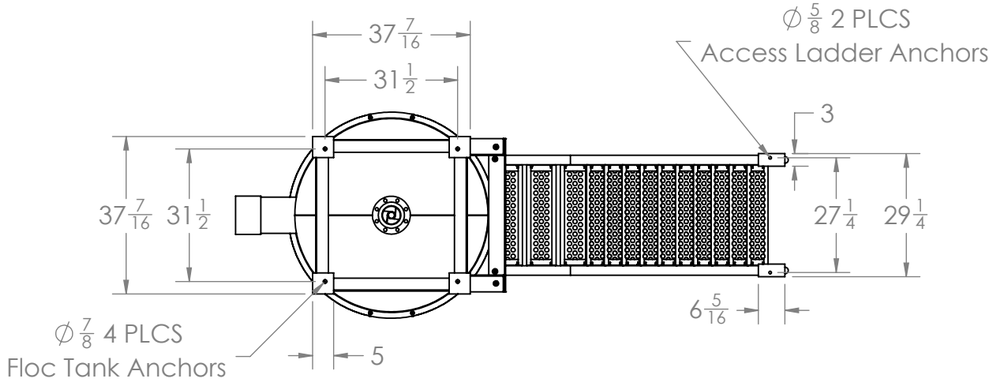

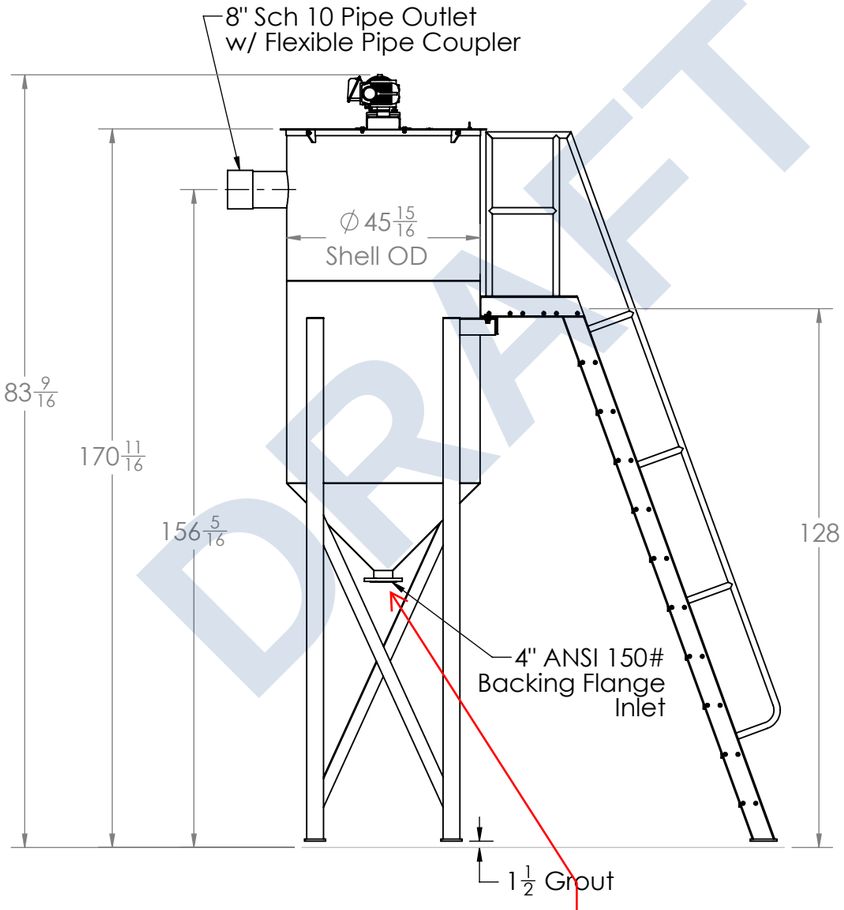

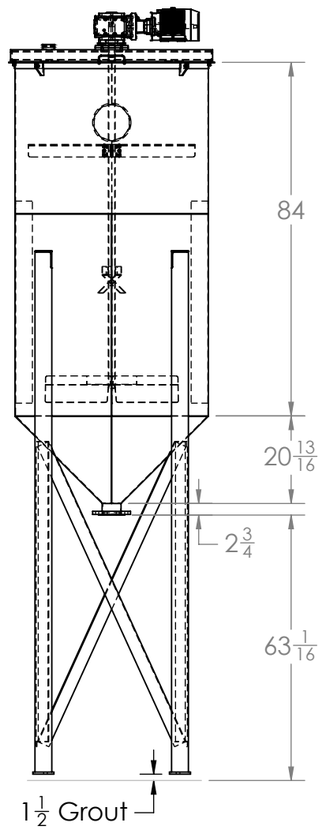

Notes:
1. Material of Construction Tank: 304L S.S.
2. Material of Construction Access Ladder 6061 AL
3. Equipment Weight: 1350 Lbs.
4. Operating Weight: 6000 Lbs.
5. Agitator Drive: SEW SAF67AMS145 46.4:1 Ratio
6. 1.5 Hp 1750 RPM Motor 145TC Frame.
7. Agitator Speed 3.8~38.0 RPM
8. Speed is adjusted via VFD.
9. FKC recommends the polymer inlet to be within 10' of Floc Tank.
10. FKC recommends piping a drain into the Floc Tank feed piping.
11. FKC recommends 1-1/2" grout under all equipment foot pads.

DRAFT

PROPRIETARY AND CONFIDENTIAL
THE INFORMATION CONTAINED IN THIS DRAWING IS THE SOLE PROPERTY OF FKC CO LTD. ANY REPRODUCTION IN PART OR AS A WHOLE WITHOUT THE WRITTEN PERMISSION OF FKC CO LTD IS PROHIBITED.

No.	Alteration	Date	Sign
3			
2			
1			
0	Issued for Approval	4/8/25	MB

Job No. FT-524	Customer San Luis West WWTP San Luis, AZ	Wt. Lbs.
Drawing No. A524-200	Title 540 Floc Tank Assembly Details	Quantity 1
		Date 4/8/25
FKC	FKC CO. LTD 2708 W 18th St. Port Angeles, WA 98363 (360) 452-9472 Fax (360) 452-6880	Drawn By MB
	Revision	SHEET 1 OF 2

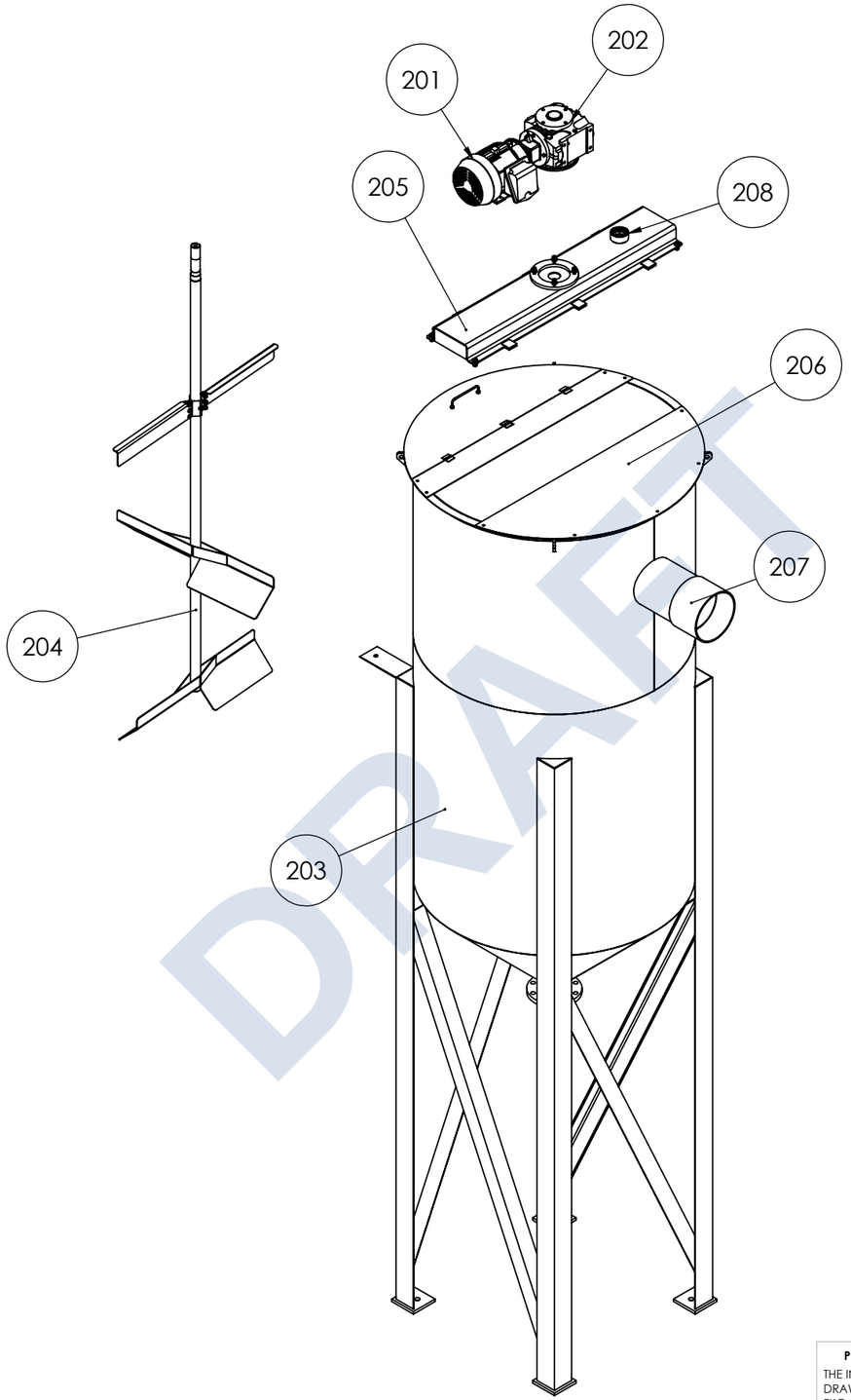

DRAFT

PROPRIETARY AND CONFIDENTIAL
THE INFORMATION CONTAINED IN THIS DRAWING IS THE SOLE PROPERTY OF FKC CO LTD. ANY REPRODUCTION IN PART OR AS A WHOLE WITHOUT THE WRITTEN PERMISSION OF FKC CO LTD IS PROHIBITED.

No.	Alteration	Date	Sign
3			
2			
1			
0	Issued for Approval	4/8/25	MB

Job No. FT-524	Customer San Luis West WWTP San Luis, AZ	Wt. Lbs.
Drawing No. G524-201	Title 540 Floc Tank Parts List	Quantity 2
		Date 4/8/25
FKC CO. LTD 2708 W 18th St. Port Angeles, WA 98363 (360) 452-9472 Fax (360) 452-6880		Drawn By MB
	Revision	SHEET 2 OF 2

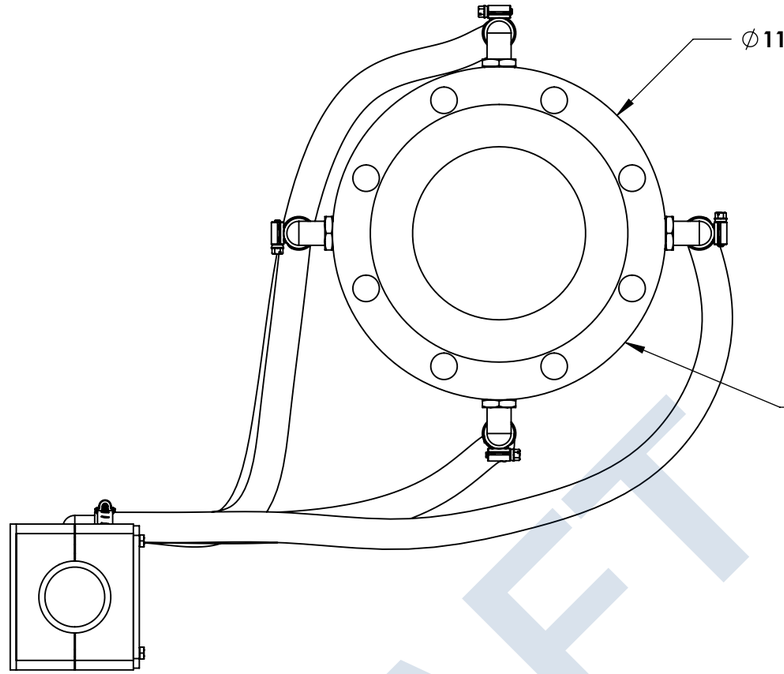

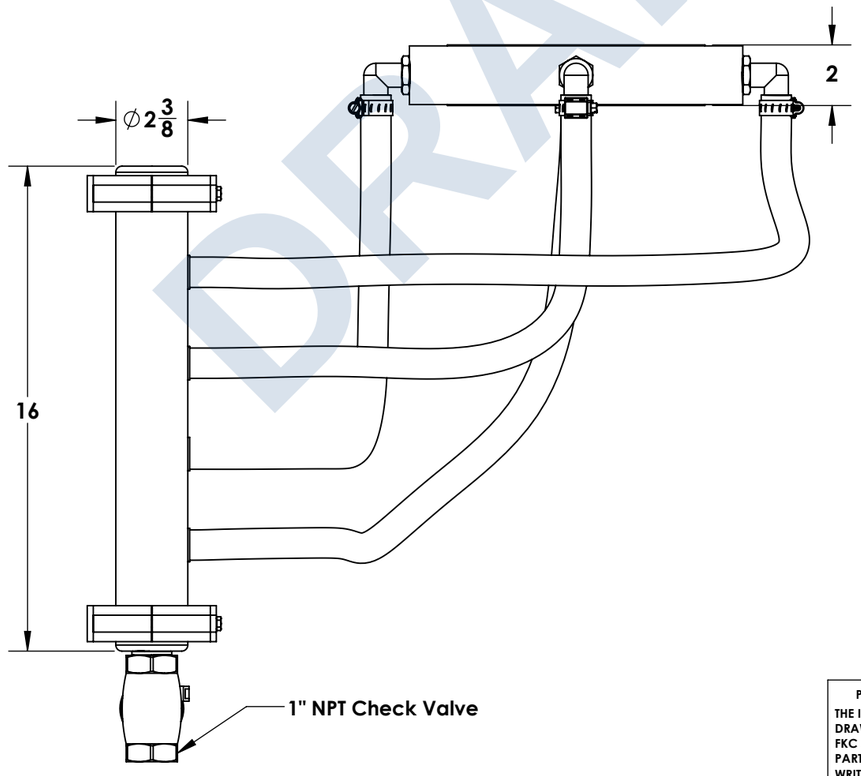

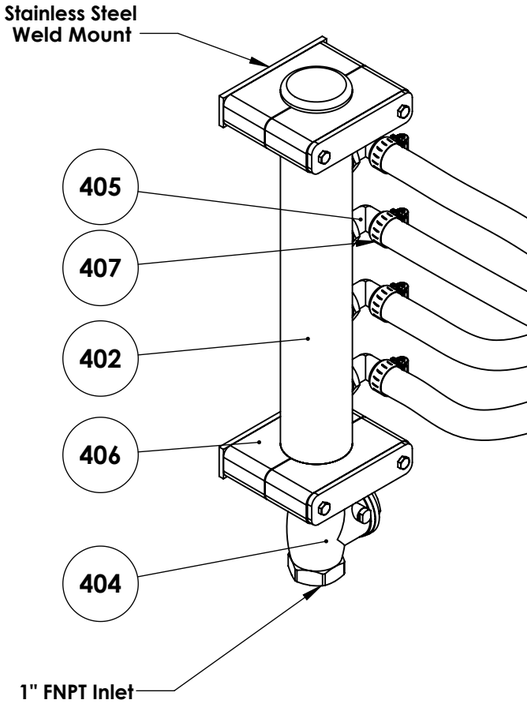

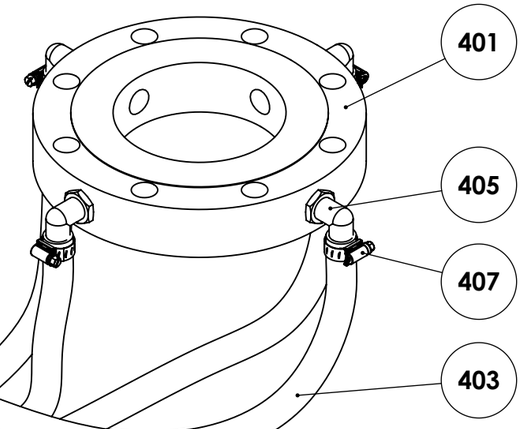

- Material of Construction: PVC
- Manifold to be mounted vertically as shown or horizontal

Job No.	Customer	Wt. Lbs.
PIR-524	San Luis West WWTP San Luis, AZ	
Drawing No.	Title	Quantity
A524-400	6" Polymer Injection Ring Assembly Details	1
		Date
		4/28/25
FKC CO. LTD 2708 W 18th St. Port Angeles, WA 98363 (360) 452-9472 Fax (360) 452-6880		Drawn By
		RTB

No.	Alteration	Date	Sign
3			
2			
1			
0	Issued for Approval	4/28/25	RTB

Revision		SHEET 1 OF 1

PROPRIETARY AND CONFIDENTIAL
THE INFORMATION CONTAINED IN THIS DRAWING IS THE SOLE PROPERTY OF FKC CO LTD. ANY REPRODUCTION IN PART OR AS A WHOLE WITHOUT THE WRITTEN PERMISSION OF FKC CO LTD IS PROHIBITED.

DRAFT

Item # 201

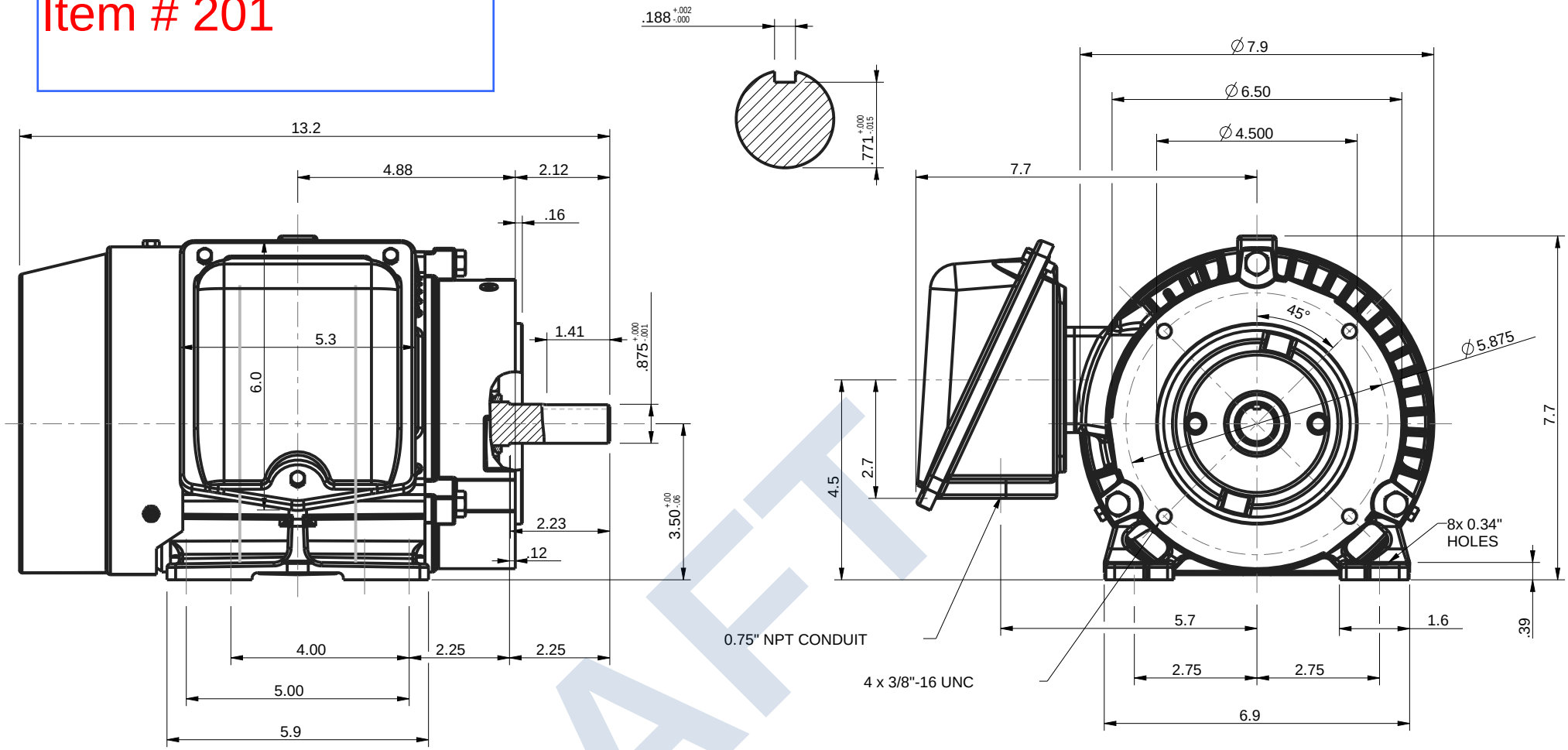

DRAFT

UNITS: INCHES	NOTES:
ROTATION FROM NDE	1. MAIN CONDUIT BOX MAY BE ROTATED IN 90° INCREMENTS
X CCW ☐ CW	2. STANDARD PRODUCT USES BI-DIRECTIONAL FAN. OPPOSITE ROTATION AVAILABLE ONLY BY CONNECTION CHANGE.
	3. KEY DIMENSIONS EQUAL 0.188"x 0.188"x 1.38" (MOTOR SUPPLIED WITH KEY)

TOSHIBA RESERVES THE RIGHT TO MAKE CHANGES OF TECHNICAL IMPROVEMENT AND THE DATA MAY CHANGE WITHOUT NOTICE ☐ PRELIMINARY

DO NOT USE FOR CONSTRUCTION, INSTALLATION, OR APPLICATION PURPOSES UNLESS THE DRAWING IS MARKED AS CERTIFIED ☒ CERTIFIED

TOSHIBA
www.toshiba.com/tic
TOSHIBA INTERNATIONAL CORPORATION

SEVERE DUTY EQP Good SD

TOTALLY ENCLOSED FAN COOLED
FOOTED C-FACED
3 PHASE INDUCTION MOTOR
143TC-145TC F1 ASSEMBLY

DRAWING #: MDSLV003-01
REV. DATE: 06/20/18 REV. #: 5 PER.: M. O'DOWD
REV. DESCRIP.:

TOSHIBA
Leading Innovation

Item # 201

Issued Date	7/19/2021	Transmit #	
Issued By	dschoeck	Issued Rev	

TYPICAL MOTOR PERFORMANCE DATA

Model: Y154SDSR42A-P

HP	kW	Pole	FL RPM	Frame	Voltage	Hz	Phase	FL Amps
1.50	1.1	4	1755	145TC	230/460	60	3	4.5/2.2

Enclosure	IP	Ins. Class	S.F.	Duty	NEMA Nom. Eff.	NEMA Design	kVA Code	Ambient (°C)
TEFC	55	F	1.15	CONT	86.5	B		40 C

Load	HP	kW	Amperes	Efficiency (%)	Power Factor (%)
Full Load	1.50	1.1	2.2	85.8	73.1
¾ Load	1.12	0.8	1.9	84.7	65.3
½ Load	0.75	0.6	1.6	81.0	52.7
¼ Load	0.37	0.3	1.5	69.1	33.8
No Load			1.3		8.2
Locked Rotor			17.1		54.3

Torque				Rotor wk² Inertia
Full Load (lb-ft)	Locked Rotor (% FLT)	Pull Up (% FLT)	Break Down (% FLT)	(lb-ft²)
4.49	260	325	365	0.12

Safe Stall Time(s)		Sound Pressure dB(A) @ 1M	Bearings*		Approx. Motor Weight
Cold	Hot		DE	NDE	(lbs)
35	15	-	6305ZZC3	6305ZZC3	64

*Bearings are the only recommended spare part(s).

Motor Options:
Product Family:EQP Global SD CFace Footed
Mounting:C-Face Footed,Shaft:T Shaft

Customer	
Customer PO	
Sales Order	
Project #	

Tag:

All characteristics are average expected values.

DRAFT

Issued Date	7/19/2021	Transmit #	
Issued By	dschoeck	Issued Rev	

TOSHIBA
Leading Innovation >>>

SPEED TORQUE/CURRENT CURVE

Model: Y154SDSR42A-P

HP	kW	Pole	FL RPM	Frame	Voltage	Hz	Phase	FL Amps
1.50	1.1	4	1755	145TC	230/460	60	3	4.5/2.2
Enclosure	**IP**	**Ins. Class**	**S.F.**	**Duty**	**NEMA Nom. Eff.**	**NEMA Design**	**kVA Code**	**Ambient (°C)**
TEFC	55	F	1.15	CONT	86.5	B		40 C

Locked Rotor Amps	Rotor wk² Inertia (lb-ft²)	Torque			
		Full Load (lb-ft)	Locked Rotor (%)	Pull Up (%)	Break Down (%)
17.1	0.12	4.49	260	325	365

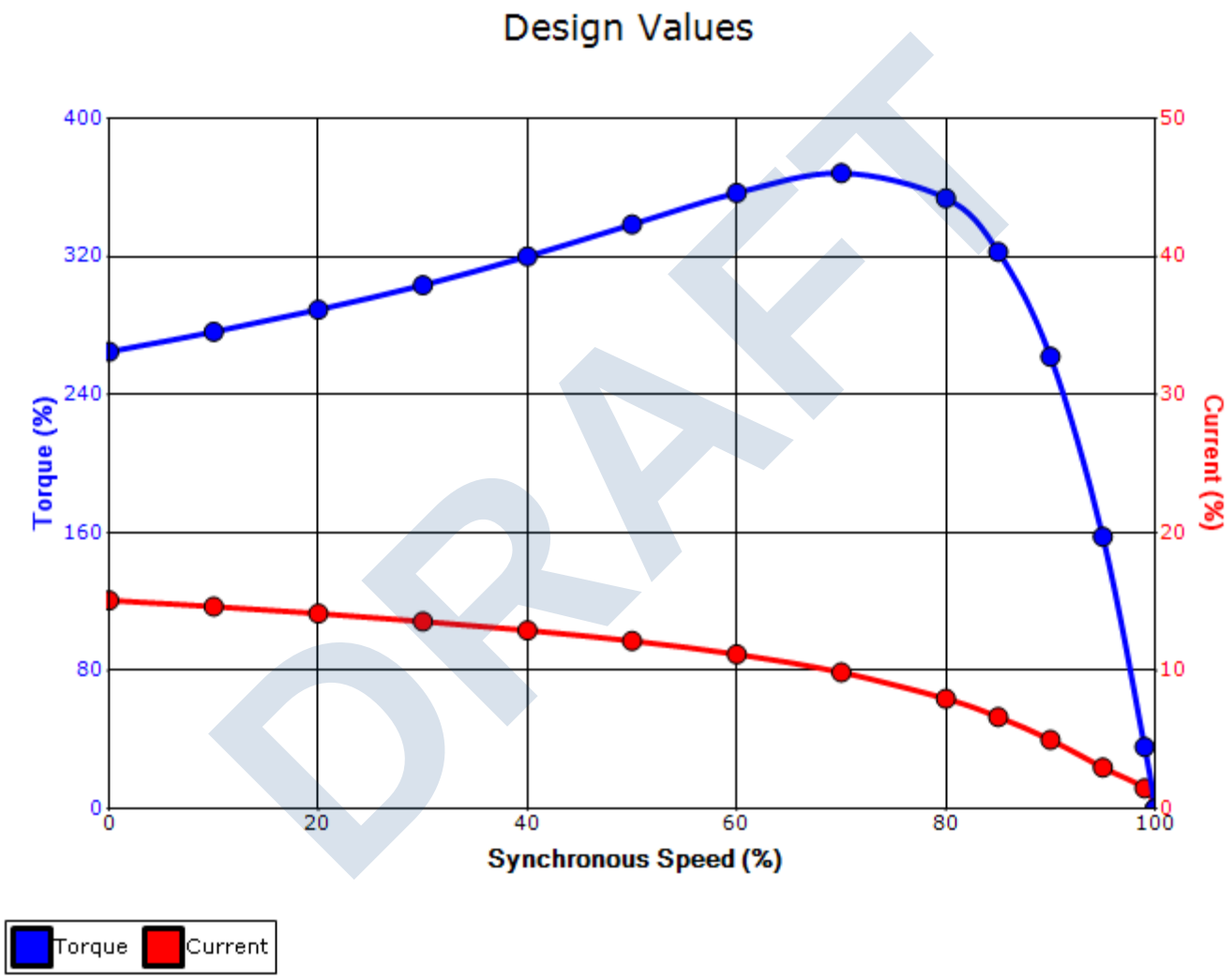

DRAFT

Customer		**wk² Load Inertia (lb-ft²)**	-
Customer PO		**Load Type**	-
Sales Order		**Voltage (%)**	100
Project #		**Accel. Time**	-

Tag:

All characteristics are average expected values.

TOSHIBA INTERNATIONAL CORPORATION · HOUSTON, TEXAS U.S.A.

Engineering	aguerrettaz	Doc. Written By	D. Suarez	Doc.# / Rev	MPCF-1121 / 0
Engr. Date	4/28/2021	Doc. Approved By	M. Campbell	Doc. Issued	6/8/2011

Motor Connection Diagrams
9 Leads

Across-the-Line Starting / Running Connections

Low Voltage Wye

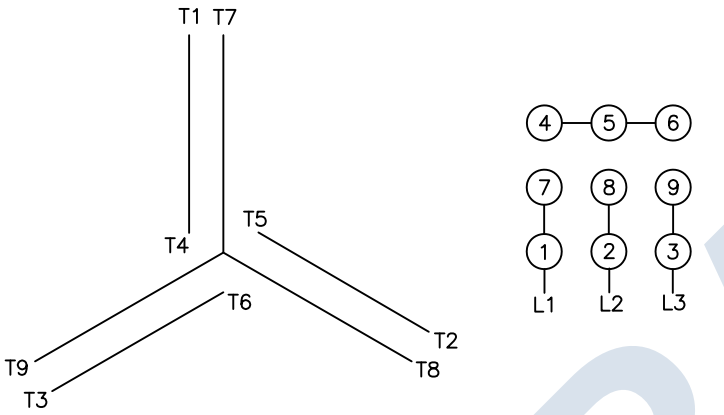

High Voltage Wye

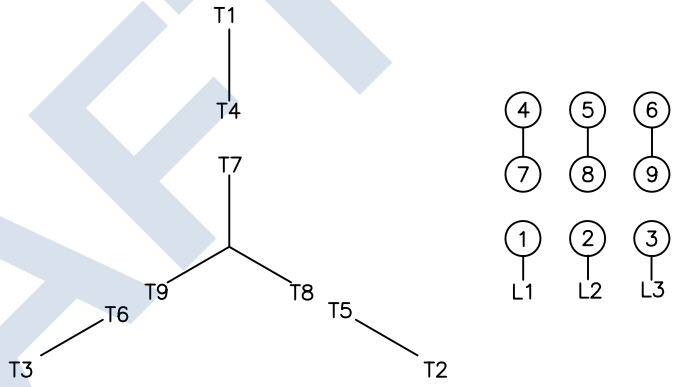

Switch L1 and L2 to reverse rotation

DRAFT

Item # 102

Gearmotors and Gear Reducers

OPERATING INSTRUCTIONS

01 805 52 US

GENERAL
These operating instructions are intended to help you install and operate the drive. For trouble free service, proper installation and operation are essential. Additionally, these instructions contain important recommendations on maintenance.

Before shipment, every SEW-Eurodrive gear unit is tested, checked and properly packed. However, please inspect the drive immediately upon arrival for shortage or transit damage. Note the damage or shortage on the freight bill of lading and file a claim with the carrier. Also, notify SEW-Eurodrive of the shortage or damage.

LUBRICANTS
All gearmotors and gear reducers are supplied with the correct grade and quantity of lubricating oil for the specified mounting position. Exceptions include reducers shipped without input assemblies. The recommended lubricants are found on page 2.

LONG TERM STORAGE
If the drive is not installed immediately, it should be stored in a dry, protected area. If the drive is to be stored for an extended period of time and was not ordered from SEW for long term storage, contact your nearest SEW assembly plant for information on Long Term Storage.

Drives which are used for standby service should be stored as a sealed gearcase.

INSTALLATION OF COMPONENTS ON DRIVE SHAFTS
Do not hammer on the shafts. Hammering can cause brinelling of the reducer's bearings shortening the bearing life. We recommend heating the components to approximately 175°F (when possible) and sliding them on the shaft. This will reduce possible damage to the reducer's bearings.

For both standard and metric SEW shaft tolerances, refer to the SEW Catalog.

Shaft couplings should be properly aligned to prevent vibration, coupling wear, and premature failure of the shaft bearings.

To prevent the output shaft and bearings from being subjected to excessive loads, the maximum overhung load, as shown in SEW-Eurodrive catalogs, should not be exceeded. Please consult our engineering department if the load may exceed the recommended figure given or where there are combined radial and axial loads. In such cases, the exact operating conditions must be stated including speed, direction of rotation, position, magnitude and direction of the external radial and axial loads being applied.

SHAFT MOUNTED REDUCERS
SEW-Eurodrive supplies the recommended hollowshaft mounting paste with every hollowshaft reducer. The mounting paste is to be applied on the keyed output shaft. The mounting paste is to aid in the prevention of rusting and fretting corrosion between the reducer hollowshaft and the shaft of the driven machine. The mounting paste will aid in shaft removal when necessary.

Warning! Always ensure exposed, rotating parts are properly covered to ensure safety.

For additional information on shaft mounted reducers, drive shaft configuration and tolerances, refer to the SEW-Eurodrive Catalog.

INSTALLATION AND OPERATION
The drive installation site should be selected to ensure:

- Ambient temperatures below 40°C (104°F).
- Unimpeded flow of air to the motor and variable speed units.
- Accessibility to the drain, level and breather plugs.
- Adequate space for the removal of brakemotor fanguard for brake adjustment and maintenance.

The drive unit should be mounted on a flat, vibration damping, and torsionally rigid structure. Careful alignment is critical. Mounting to an uneven surface will cause housing distortion. The flatness tolerance of the supporting surface should not exceed:

- For gear units size 80 and smaller — 0.004 inch.
- For gear units above size 80 — 0.008 inch.

For transportation, the units are supplied with the breather plug already mounted. After the unit is installed, the black rubber seal located on the breather MUST BE REMOVED (Fig. 1). In addition, the oil level should be checked. Remove the plated (non-painted) oil level plug. The oil level is correct when the surface of the oil is level with the lowest point of that tapped hole, the exception is S37. Units W10, W20 and W30 are sealed in any position.

Fig. 1

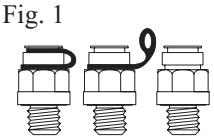

After installation, the actual mounting position should be confirmed against the mounting postion shown on the gear reducer nameplate. Adequate lubrication is only guaranteed if the unit is mounted in the specific nameplated mounting position.

Refer to the SEW Catalog if a specific mounting position diagram is needed.

MAINTENANCE
Warning! Always ensure equipment is secure and electrical power is off before removing or performing maintenance on the drive assembly. Oil levels and oil quality should be checked at regular intervals, determined by usage and the environment. Grease and oil should be changed per the recommendations on page 2. Check coupling alignment, chain or belt tension, and mounting bolt torque periodically. Keep the drive relatively free of dust and dirt.

DRAFT

SEW EURODRIVE

SOUTHEAST MANUFACTURING & ASSEMBLY CENTER
1295 Old Spartanburg Hwy, Lyman, SC 29365
(864) 439-7537 Fax: (864) 439-7830

SOUTHWEST ASSEMBLY CENTER
3950 Platinum Way, Dallas, TX 75237
(214) 330-4824 Fax: (214) 330-4724

MIDWEST ASSEMBLY CENTER
2001 West Main Street, Troy, OH 45373
(937) 335-0036 Fax: (937) 332-0038

EAST COAST ASSEMBLY CENTER
200 High Hill Road, Bridgeport, NJ 08014
(856) 467-2277 Fax: (856) 330-4724

WEST COAST ASSEMBLY CENTER
30599 San Antonio Road, Hayward, CA 94544
(510) 487-3560 Fax: (510) 487-6381

ISO 9002

LUBRICANTS

	6) °C	DIN (ISO)	ISO,NLGI	Mobil®	Shell	Klüber	Aral	BP	Tribol	Texaco	Optimol	Fuchs
R…	Standard -10 … +40	CLP(CC)	VG 220	Mobilgear 630	Shell Omala 220	Klüberoil GEM 1-220	Aral Degol BG 220	BP Energol GR-XP 220	Tribol 1100/220	Meropa 220	Optigear BM 220	Renolin CLP 220
	-25 … +80	CLP PG	VG 220	Mobil Glygolyle 30	Shell Tivela WB	Klübersynth GH 6-220	Aral Degol GS 220	BP Enersyn SG-XP 220	Tribol 800/220	Synlube CLP 220	Optiflex A 220	
K…(HK…)	4) -40 … +80	CLP HC	VG 220	Mobil SHC 630	Shell Omala 220 HD	Klübersynth EG 4-220	Aral Degol PAS 220		Tribol 1510/220	Pinnacle EP 220	Optigear Synthetic A 220	Renolin Unisyn CLP 220
	4) -40 … +40		VG 150	Mobil SHC 629		Klübersynth EG 4-150				Pinnacle EP 150		
	-20 … +25	CLP (CC)	VG 150 VG 100	Mobilgear 627	Shell Omala 100	Klüberoil GEM 1-150	Aral Degol BG 100	BP Energol GR-XP 100	Tribol 1100/100	Meropa 150	Optigear BM 100	Renolin CLP 150
F…	-30 … +10	HLP (HM)	VG 68-46 VG 32	Mobil D.T.E. 13M	Shell Tellus T 32	Klüberoil GEM 1-68	Aral Degol BG 46		Tribol 1100/68	Rando EP Ashless 46	Optigear 32	Renolin B 46 HVI
	4) -40 … +10	CLP HC	VG 32	Mobil SHC 624		Klüber-Summit HySyn FG-32				Cetus PA 0 46		
	4) -40 … -20	HLP (HM)	VG 22 VG 15	Mobil D.T.E. 11M	Shell Tellus T 15	Isoflex MT 30 ROT		BP Energol HLP-HM 10		Rando HDZ 15		
S…(HS…)	Standard 0 … +40	CLP (CC)	VG 680	Mobilgear 636	Shell Omala 680	Klüberoil GEM 1-680	Aral Degol BG 680	BP Energol GR-XP 680	Tribol 1100/680	Meropa 680	Optigear BM 680	Renolin CLP 680
	-20 … +60	CLP PG	VG 680 1)	Mobil Glygoyle HE 680		Klübersynth GH 6-680		BP Enersyn SG-XP 680	Tribol 800/680	Synlube CLP 680		
	4) -30 … +80	CLP HC	VG 460	Mobil SHC 634	Shell Omala 460 HD	Klübersynth EG 4-460				Pinnacle EP 460		
	4) -40 … +10		VG 150	Mobil SHC 629		Klübersynth EG 4-150				Pinnacle EP 150		
	-20 … +10	CLP (CC)	VG 150 VG 100	Mobilgear 627	Shell Omala 100	Klüberoil GEM 1-150	Aral Degol BG 100	BP Energol GR-XP 100	Tribol 1100/100	Meropa 100	Optigear BM 100	Renolin CLP 150
	-25 … +20	CLP PG	VG 220 1)	Mobil Glygoyle 30		Klübersynth GH 6-220			Tribol 800/220	Synlube CLP 220	Optiflex A 220	
	4) -40 … 0	CLP HC	VG 32	Mobil SHC 624		Klüber-Summit HySyn FG-32				Cetus PA 0 46		
R…,K…(HK…), F…,S…(HS…)	4) -30 … +40	HCE	VG 460		Shell Cassida Fluid GL 460	Klüberoil 4UH1-460	Aral Eural Gear 460				Optileb GT 460	
	-20 … +40	E	VG 460			Klüberbio CA2-460	Aral Degol BAB 460				Optisynt BS 460	
	Standard -20 … +40	CLP PG	VG 460			Klübersynth UH1 6-460						
W…(HW…)	Standard -20 … +40	SEW PG	VG 460 2)			Klüber SEW HT -460-5						
	4) -40 … +10	API GL5	SAE 75W90 (~VG 100)	Mobilube SHC 75 W90-LS								
	-20 … +40	CLP PG	VG 460 3)			Klübersynth UH1 6-460						
R32 R302	-25 … +60	DIN 51 818 5)	00	Glygoyle Grease 00	Shell Tivela GL 00	Klübersynth GE 46-1200				Multifak 6833 EP 00		
	Standard -15 … +40		000 - 0	Mobilux EP 004	Shell Alvania GL 00		Aralub MFL 00	BP Energrease LS-EP 00		Multifak EP 000	Longtime PD 00	Renolin SF 7 - 041

01 805 792 US

CLP	=	Mineral oil	**1)**	Helical-worm gear units with PG oil: Please contact SEW-EURODRIVE
CLP PG	=	Polyglycol (W gear units, conforms to USDA-H1	**2)**	Special lubricant for Spiroplan® gear units only
CLP HC	=	Synthetic hydrocarbons	**3)**	Recommendation: Select SEW $f_B \geq 1.2$
E	=	Ester oil (water pollution danger category WGK 1)	**4)**	Pay attention to critical starting behavior at low temperatures!
HCE	=	Synthetic hydrocarbons + ester oil (USDA - H1 certification)	**5)**	Low-viscosity grease
HLP	=	Hydraulic oil	**6)**	Ambient temperature
	=	Synthetic lubricant (= synthetic anti-friction bearing grease)		Lubricant for the food industry (food grade oil)
	=	Mineral lubricant (= mineral-based anti-friction bearing grease)		Biodegradable oil (lubricant for use in agriculture, forestry and water resources)

Oil levels and oil quality should be checked at frequent intervals, depending on usage. Oil changes are required at intervals of 10,000 operating hours or every two years, whichever comes first. If a synthetic oil lubricant is used, then this period can be extended to 20,000 operating hours or every four years, whichever comes first. In applications where hostile operating conditions exist, such as high humidity, corrosive environment, or large temperature changes, the lubricant should be changed at more frequent intervals.

The gear units W10, W20 and W30 are supplied with a synthetic oil which is good for the life of the reducer, independent of the mounting position.

Grease packed bearings should be cleaned and regreased every 10,000 hours or 20,000 hours for synthetic grease. Input (high speed) bearings should not be overgreased. They should be filled with grease not to exceed 1/3 of the bearing's free volume. For output bearings and bearings with replaceable grease shields, fill to 2/3 of their free volume.

ATTENTION

When the recommended lubricant is not avilable, it is permissible to use a lubricant having equivalent characteristics but we do not recommend that lubricants of different brands be mixed. Under no circumstances should synthetic lubricants be mixed with one another or with one having a mineral base.

DRAFT

LUBRICANTS

The approximate lubricant in US gallons and liters per mounting position is as follows:

Gear Unit	Mounting Position											
	M1		M2		M3 [1]		M4		M5		M6	
	Gallons	Liters	Gallons	Liters	Gallons	Liters	Gallons	Liters	Gallons	Liters	Gallons	Liters
S37	0.065	0.25	0.11	0.40	0.13	0.50	0.15	0.55	0.11	0.40	0.11	0.40
S47	0.090	0.35	0.21	0.80	0.18 (0.24)	0.70 (0.90)	0.26	1.00	0.21	0.80	0.21	0.80
S57	0.13	0.50	0.32	1.20	0.26 (0.32)	1.00 (1.20)	0.38	1.45	0.34	1.30	0.34	1.30
S67	0.26	1.00	0.53	2.00	0.58 (0.82)	2.20 (3.10)	0.82	3.10	0.69	2.60	0.69	2.60
S77	0.50	1.90	1.10	4.20	0.98 (1.45)	3.70 (5.4)	1.55	5.9	1.15	4.40	1.15	4.40
S87	0.87	3.30	2.15	8.1	1.80 (2.75)	6.9 (10.4)	3.00	11.3	2.20	8.4	2.20	8.4
S97	1.80	6.8	3.95	15.0	3.55 (4.75)	13.4 (18.0)	5.8	21.8	4.50	17.0	4.50	17.0
SF37	0.065	0.25	0.11	0.40	0.13	0.50	0.15	0.55	0.11	0.40	0.11	0.40
SF47	0.11	0.40	0.24	0.90	0.24 (0.28)	0.90 (1.05)	0.28	1.05	0.26	1.00	0.26	1.00
SF57	0.13	0.50	0.32	1.20	0.26 (0.40)	1.00 (1.50)	0.41	1.55	0.37	1.40	0.37	1.40
SF67	0.26	1.00	0.58	2.20	0.61 (0.79)	2.30 (3.00)	0.84	3.20	0.71	2.70	0.71	2.70
SF77	0.50	1.90	1.10	4.10	1.05 (1.55)	3.90 (5.8)	1.70	6.5	1.30	4.90	1.30	4.90
SF87	1.00	3.80	2.10	8.0	1.85 (2.65)	7.1 (10.1)	3.15	12.0	2.40	9.1	2.40	9.1
SF97	1.95	7.4	3.95	15.0	3.65 (4.95)	13.8 (18.8)	6.0	22.6	4.75	18.0	4.75	18.0
SA/SH37 SAF/SHF37 SAZ/SHZ37 ST37	0.065	0.25	0.11	0.40	0.13	0.50	0.13	0.50	0.11	0.40	0.11	0.40
SA/SH47 SAF/SHF47 SAZ/SHZ47 ST47	0.11	0.40	0.21	0.80	0.18 (0.24)	0.70 (0.90)	0.26	1.00	0.21	0.80	0.21	0.80
SA/SH57 SAF/SHF57 SAZ/SHZ57 ST57	0.13	0.50	0.29	1.10	0.26 (0.40)	1.00 (1.50)	0.40	1.50	0.32	1.20	0.32	1.20
SA/SH67 SAF/SHF67 SAZ/SHZ67 ST67	0.26	1.00	0.53	2.00	0.48 (0.69)	1.80 (2.60)	0.77	2.90	0.66	2.50	0.66	2.50
SA/SH77 SAF/SHF77 SAZ/SHZ77 ST77	0.48	1.80	1.05	3.90	0.95 (1.30)	3.60 (5.0)	1.55	5.8	1.20	4.50	1.20	4.50
SA/SH87 SAF/SHF87 SAZ/SHZ87 ST87	1.00	3.80	1.95	7.4	1.60 (2.30)	6.0 (8.7)	2.85	10.8	2.10	8.0	2.10	8.0
SA/SH97 SAF/SHF97 SAZ/SHZ97 ST97	1.85	7.0	3.70	14.0	3.00 (4.20)	11.4 (16.0)	5.4	20.5	4.15	15.7	4.15	15.7

[1] Standard level (increased oil level) - The larger gear unit of a multi-stage unit must be filled with the larger oil volume.

The approximate lubricant in US gallons and liters for ALL mounting positions for the W-Series is as follows

Gear Unit	Gallons	Liters
W/WF/WA/WAF10	0.042	0.116
W/WF/WA/WAF20	0.065	0.24
W/WF/WA/WAF30	0.11	0.40

Note: The Spiroplan® series gear units are mounting position indepedent of oil filling.

For additional information on S-Series mounting positions, refer to the SEW Catalog.

DRAFT

SEW EURODRIVE

Parts List

Helical gear unit
R27

01 251 06 98

SEW EURODRIVE

EN Page 1 / 2
EG 10.01.2007

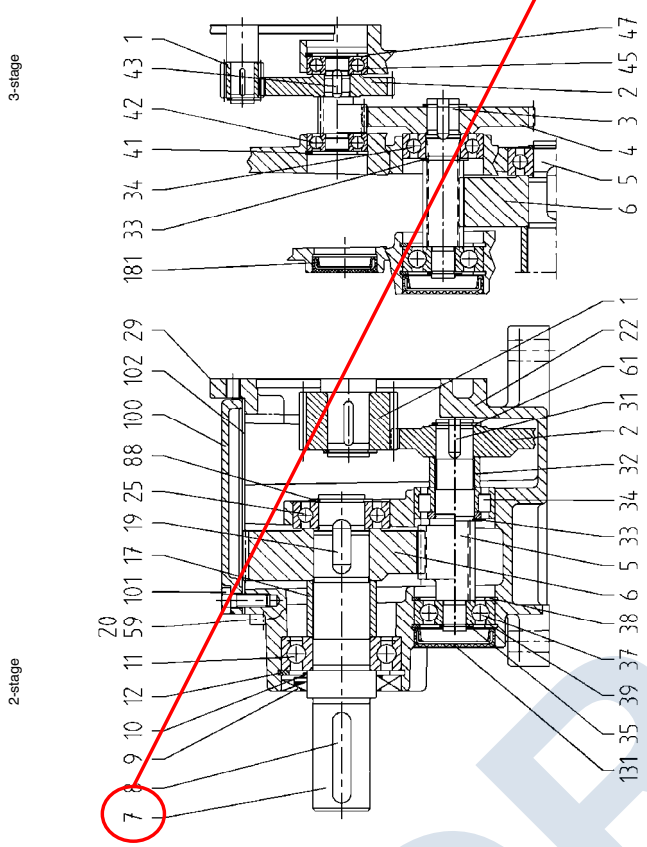

When ordering spare parts always quote nameplate data with serial number and designation with part number!
Mount-on gear units have motors, variable speed gear units or special input shaft assemblies mounted on the drive end. For parts see appropriate parts list.

Copyright reserved! All rights reserved according to DIN ISO 16016.

SEW-EURODRIVE GmbH & Co KG Postfach 3023. D-76642 Bruchsal Tel. (07251) 75-0. Fax (07251) 75-1970. http://www.sew.de

Item Number

The *item number* identifies each part of an SEW product. The item number ties the cross-sectional drawing to the description nomenclature. For example: Item # 7 of any reducer parts list is an output shaft. There may be several options (inch, metric, stainless steel, etc.) for a particular item number. The item number and description remain consistant throughout all SEW parts lists.

Description

The *description* identifies the part. For example: Item #9 is an oil seal.

Additional Specifications

The *additional specifications* provide further information on the part. For example: IOP units require stainless steel components. There are two possible breather valves (Item #20) for an R27. The additional specification determines the proper breather valve selection.

SEW Standard Label

The *SEW standard label* provides part size and design standard. For example: Item #41, a 26 x 1.2 circlip, meets the DIN472 standard.

Part Number

SEW assigns a number to each part. This number is not an industry standard. SEW requires this *part number* for inventory control. For example: Item #59 has a unique part number of 0011426X.

Quantity

Sometimes, a unit requires multiple parts during assembly. For example: Item #101 on an R27 requires a *quantity* of 8 hex head screws.

Parts List

Helical gear unit
R27

01 251 06 98

SEW EURODRIVE

EN Page 2 / 2
EG 10.01.2007

No.	Description	Additional specifications	SEW standard label	Part No.	Qty.
1	Pinion			*	1
2	Wheel			*	1
3	Pinion shaft			*	1
4	Wheel			*	1
5	Pinion shaft			*	1
6	Wheel			*	1
7	Output shaft		Ø 25x50 mm	06414230	1
7	Output shaft	stainless; ASEPTICplus	Ø 25.50 mm	00452505	1
7	Output Shaft (inch)		Ø 1,000x1,97 in.	06414249	1
8	Key		DIN6885 A8x7x40-C45K	00100226	1
8	Key	stainless; ASEPTICplus	DIN6885 A8x7x40-Niro	13228188	1
8	Key (inch)		W4190 1/4x1/4x1-5/16 IN.	08069212	1
9	Oil seal		W4560 BA-SF30x52x6/4,5-NBR	00138525	1
9	Oil seal	optional oil seal in Vitonoptional oil seal in FKM (Viton); ATEX model according to category II2G, II2D, II3G, II3D; ASEPTICplus	W4561 BA-SF30x52x6/4,5-FKM	00177431	1
10	Oil seal	Double sealing; ATEX model according to category II2G, II2D, II3G, II3D; ASEPTICplus	W4562 B1-SF30x47x4,6/6,6-FKM	00177385	1
11	Deep groove ball bearing		DIN625 6205-Z-J	00104957	1
12	Circlip		DIN472 52x2	00103195	1
17	Spacer tube		Ø25xØ30x25,5 mm	06414273	1
19	Key		DIN6885 B8x7x16-55HRC	00100536	1
20	Breather valve		W4087 M10x1-MS	00130303	1
20	Breather valve	stainless; ASEPTICplus	W4087 M10x1-NIRO	00136239	1
22	Gear Housing			06414141	1
25	Deep groove ball bearing		DIN625 6004-J	00110620	1
29	Gasket			06414796	1
31	Key		DIN6885 B5x5x12-55HRC	00100501	1
32	Spacer tube		Ø17xØ22x13,5 mm	0641429X	1
33	Circlip	2-stage; For i 10.13 to 28.37	DIN471 17x1	00102695	1
33	Circlip	3-stage	DIN471 15x1	00102679	1
34	Cylindrical roller bearing	2-stage	F55359601.01 NUPT INA	13241273	1
34	Deep groove ball bearing	3-stage	DIN625 6202-J	0010485X	1
35	Circlip		DIN471 10x1	00102636	1
37	Deep groove ball bearing		DIN625 6300-J	0010504X	1
38	Circlip		DIN472 35x1,5	00103144	1
39	Circlip		DIN472 35x1,5	00103144	1
41	Circlip		DIN472 26x1,2	00130087	1
42	Deep groove ball bearing		DIN625 6000-J	00104744	1
43	Key		DIN6885 B4x4x8-55HRC	00134899	1
45	Deep groove ball bearing		DIN625 6000-J	00104744	1
47	Circlip		DIN472 26x1,2	00130087	1
59	Screw plug		W4085 M16x1 ST AGL	0011426X	1
61	Circlip	2-stage	DIN471 16x1	00102687	1
61	Circlip	3-stage	DIN471 14x1	00102660	1
88	Circlip		DIN471 20x1,2	00102717	1
100	Gearcase cover			06414303	1
101	Hex head screw		ISO4017 M6x16-8.8	00101656	8
102	Gasket			06414338	1
131	Closing cap		W4300 35x8	00111643	1
181	Closing cap		W4300 28x7	00106887	1

* Gearing parts have embossed part numbers. These must always be quoted!
When ordering spare parts always quote nameplate data with serial number and designation with part number!
Mount-on gear units have motors, variable speed gear units or special input shaft assemblies mounted on the drive end. For parts see appropriate parts list.

Copyright reserved! All rights reserved according to DIN ISO 16016.

SEW-EURODRIVE GmbH & Co KG Postfach 3023. D-76642 Bruchsal Tel. (07251) 75-0. Fax (07251) 75-1970. http://www.sew.de

DRAFT

Parts List

Helical-worm gear units
SA67A [1], SH67A [2]

28 256 596

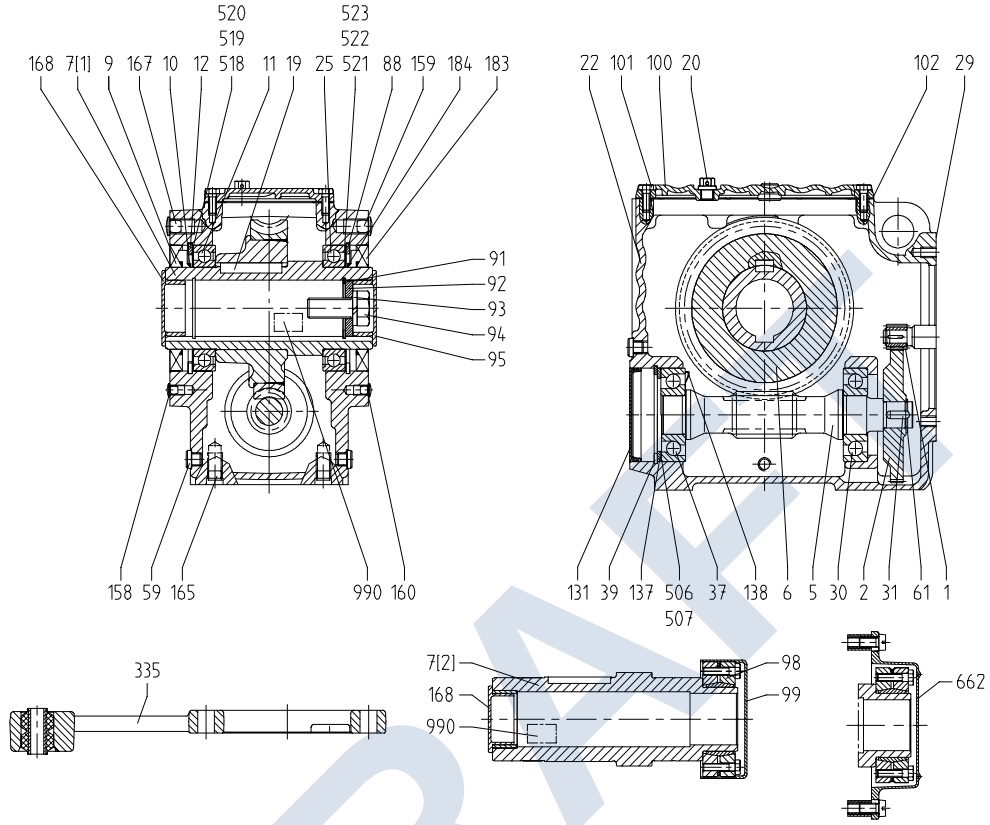

No.	Description	DIN standard label	Part No.	Qty
1	Pinion		*	1
2	Gear wheel		*	1
5	Worm		*	1
6	Worm wheel		*	1
7	Hollow. Shaft Key [1] d)	∅ 40 mm	0 644 055 X	1
7	Hollow. Shaft Key [1] e)	∅ 45 mm	0 644 031 2	1
7	*IN.Hol.Shaft Key [1] f)*	*∅ 1.500 in.*	*0 644 100 9*	*1*
7	Holl.Shaft Shr.Disc [2]	∅ 40 mm	0 644 215 3	1
7	Holl.Shaft Shr.Disc [2]	∅ 40/42 mm	0 042 829 9	1
9	Oil Seal	BA-SF 65x100x12/8-NBR	0 017 776 8	1
10	Oil Seal a)	B1-SF65x94x10/14,5-FPM	0 017 421 1	1
11	Deep Groove Ball Brg	DIN625 6013-Z	0 010 544 9	1
12	Circlip/Snap r.	DIN472 100x3	0 010 327 6	1
19	Key	DIN6885 A 12x8x50-C45K	0 010 033 1	1
20	Vent Valve	M10x1-MS	0 013 030 3	1
22	Gear Housing		0 644 021 5	1
25	Deep Groove Ball Brg	DIN625 6013-Z	0 010 544 9	1
29	Sealing Compound		0 910 255 8	X)

No.	Description	DIN standard label	Part No.	Qty
30	Angul.Cont. BallBrg.	DIN628 7306B	0 010 564 3	1
31	Key	DIN6885 B 6x6x12-55HRC	0 013 483 X	1
37	Angul.Cont. BallBrg.	DIN628 7306B	0 010 564 3	1
39	Circlip/Snap r.	DIN472 72x2,5	0 010 322 5	1
59	Screw Plug	M10x1	0 011 426 X	6
61	Circlip/Snap r.	DIN471 20x1,2	0 010 271 7	1
88	Circlip/Snap r.	DIN472 100x3	0 010 327 6	1
91	Circlip/Snap r. d)	DIN472 40x1,75	0 010 316 0	1
91	Circlip/Snap r. e)	DIN472 45x1,75	0 013 009 5	1
91	*Circlip/Snap r. f)*	*DIN472 38x1,5*	*0 806 932 8*	*1*
92	Disc d)	17x39,5x6	0 103 973 3	1
92	Disc e)	17x44,5x6	0 103 428 6	1
92	*Disk (inch) f)*	*11/16x1.48x3/16 in.*	*0 806 942 5*	*1*
93	Lock Washer d) e)	DIN128 A 16	0 010 995 9	1
93	*Lock Washer f)*	*DIN128 A 16*	*0 010 995 9*	*1*
94	Hexagon Head Screw d) e)	ISO4017 M 16x40-8.8	0 010 127 3	1
94	*Inch hex.hd.screw f)*	*ISO4017 5/ 8-11x1-3/4 in.*	*0 806 957 3*	*1*

Parts with dimensions given in Imperial System units are written in italics and highlighted in grey.

* Gearing parts have embossed part numbers which must always be quoted.
X) As required
a) Double sealing
c) Only for mounting position M2
d) Hollow shaft with keyway ∅ 40 mm
e) Hollow shaft with keyway ∅ 45 mm
f) Hollow shaft with keyway ∅ 1.500 in.

When ordering spare parts always quote nameplate data with serial number and designation with part number!
Mount-on gear units have motors, variable speed gear units or special input shaft assemblies mounted at the drive end. For parts see appropriate parts list.

05/2000 Copyright reserved! All rights reserved acc. to DIN 34.

Parts List

Helical-worm gear units
SA67A [1], SH67A [2]

28 256 596

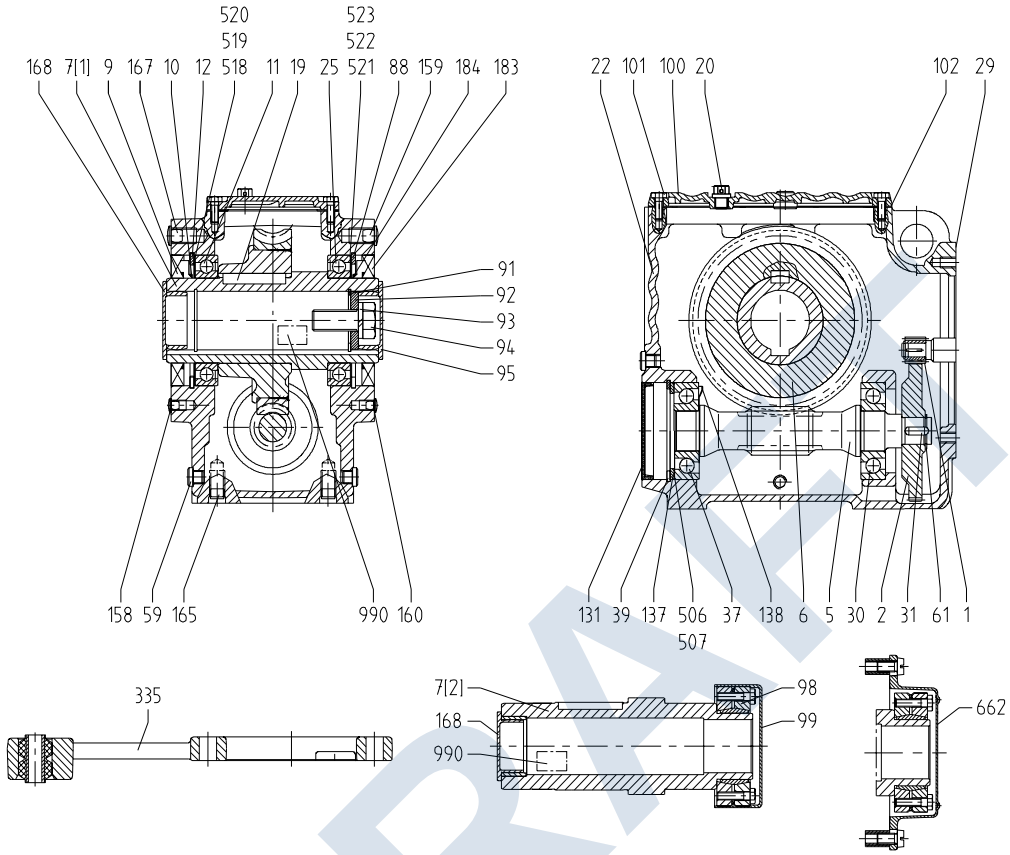

No.	Description	DIN standard label	Part No.	Qty
95	Protection Cap d)	40,6	0 114 093 0	1
95	Protection Cap e)	45,5	0 114 659 9	1
95	*Protection Cap f)*	*38,8*	*0 114 664 5*	*1*
98	Shrink Disc	50x90	0 643 475 4	1
99	Hood Cover		0 114 094 9	1
100	Gear Cover Plate		0 643 210 7	1
101	Hexagon Head Screw	ISO4017 M 6x16-8.8	0 010 105 2	8
102	Gasket		0 643 505 X	1
131	Closing Cap	72x9	0 010 692 5	1
137	Spacer	DIN988 S 56x72x3	0 010 356 X	1
138	Nilos Ring c)	7306 AVH	0 013 683 2	1
158	Closing Plug	7,1	0 013 604 2	2
159	Plug	10,5	0 011 372 7	4
160	Closing Plug	7,1	0 013 604 2	2
165	Plug	10,5	0 011 372 7	4
167	Plug	10,5	0 011 372 7	4
168	Protection Cap [1] d)	40,6	0 114 093 0	1

No.	Description	DIN standard label	Part No.	Qty
168	Protection Cap [1] e)	45,5	0 114 659 9	1
168	*Protection Cap [1] f)*	*38,8*	*0 114 664 5*	*1*
168	Protection Cap [2]	40,6	0 114 093 0	1
183	Oil Seal	BA-SF 65x100x12/8-NBR	0 017 776 8	1
184	Oil Seal a)	B1-SF65x94x10/14,5-FPM	0 017 421 1	1
335	Torque Arm Cpl.		0 644 243 9	1
506	Shim	DIN988 56x72x0,1	0 010 377 2	X)
507	Shim	DIN988 56x72x0,3	0 010 401 9	X)
518	Shim	DIN988 80x100x0,1	0 010 381 0	X)
519	Shim	DIN988 80x100x0,3	0 010 405 1	X)
520	Shim	DIN988 80x100x0,5	0 010 427 2	X)
521	Shim	DIN988 80x100x0,1	0 010 381 0	X)
522	Shim	DIN988 80x100x0,3	0 010 405 1	X)
523	Shim	DIN988 80x100x0,5	0 010 427 2	X)
662	Fixed cover compl.		0 643 515 7	1
990	Contactcorros.Inhib.		0 910 503 4	1

Parts with dimensions given in Imperial System units are written in italics and highlighted in grey.

* Gearing parts have embossed part numbers which must always be quoted.
X) As required
a) Double sealing
c) Only for mounting position M2
d) Hollow shaft with keyway ∅ 40 mm
e) Hollow shaft with keyway ∅ 45 mm
f) Hollow shaft with keyway ∅ 1.500 in.

When ordering spare parts always quote nameplate data with serial number and designation with part number!
Mount-on gear units have motors, variable speed gear units or special input shaft assemblies mounted at the drive end. For parts see appropriate parts list.

05/2000 Copyright reserved! All rights reserved acc. to DIN 34.

DRAFT

Parts List

23 268 06 00

Adapter
AM143, AM145
Backstop for mounting NEMA motors version with dog clutch

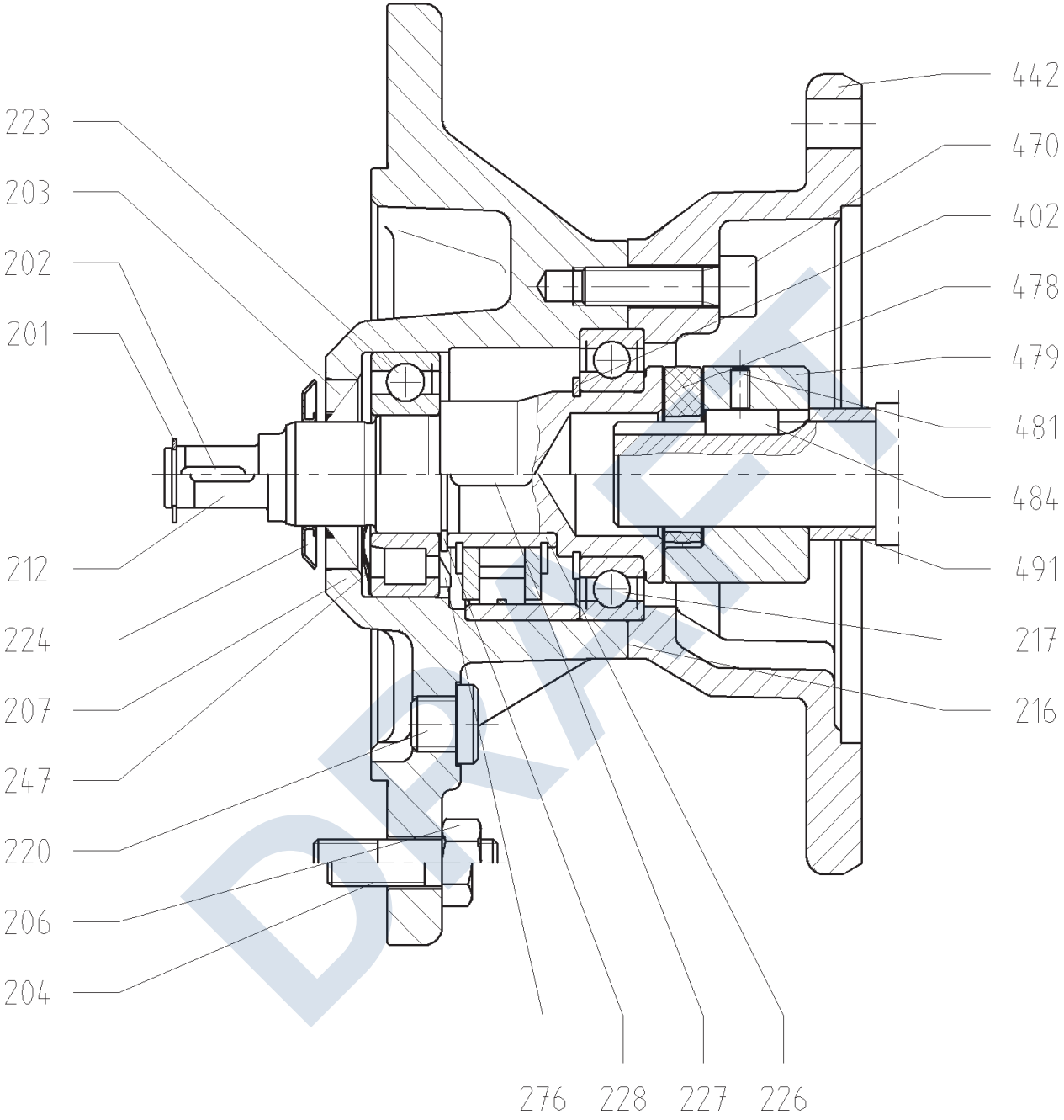

DRAFT

When ordering spare parts always quote nameplate data with serial number and designation with part number!

Copyright reserved! All rights reserved according to DIN ISO 16016.

Parts List

23 268 06 00

Adapter
AM143, AM145
Backstop for mounting NEMA motors version with dog clutch

No.	Description	Additional specifications	SEW standard label	Part No.	Qty.
201	Snap ring	pinion shaft end Ø12	W4173 SW11x1-FS	00115207	1
201	Retaining ring	pinion shaft end Ø14	DIN471 14x1-FS	00102660	1
202	Key	pinion shaft end Ø12	DIN6885-1 A3x3x14 +C	00100692	1
202	Key	pinion shaft end Ø14	DIN6885-1 A3x3x14 +C	00100692	1
203	Oil seal		DIN A22x40x7-NBR	00120790	1
203	Oil seal	optional oil seal in FKM; ATEX model according to category II2GD	W A22x40x7-FKM	00175404	1
204	Hex head screw	for flange Ø200	ISO4017 M10x25-8.8-A2F	00101168	4
204	Hex head screw	for flange Ø250	ISO4017 M12x30-8.8-A2F	00101222	4
204	Stud	for flange Ø120	DIN939 M6x18-8.8-A2F	00134074	4
204	Stud	for flange Ø160	DIN939 M8x25-8.8-A2F	13303481	4
204	Stud	mounting to R27;F27;W37	W4061 M6x18-8.8-A2F	00132918	4
204	Stud	mounting to W47	DIN835 M8x25-8.8-A2F	13229397	4
206	Hexagon nut	for flange Ø120	ISO4032 M6-8-St-A2F	00101982	4
206	Hexagon nut	for flange Ø160	ISO4032 M8-8-St-A2F	00101990	4
207	Flange		Ø120mm	0165036X	1
207	Flange		Ø160mm	01650386	1
207	Flange		Ø200mm	01650408	1
207	Flange		Ø250mm	01650424	1
207	Flange	Backstop	Ø120mm	01651935	1
207	Flange	Backstop	Ø160mm	01651943	1
207	Flange	Backstop	Ø200mm	01651951	1
207	Flange	Backstop	Ø250mm	0165196X	1
212	Adapter Shaft	AM143 pinion shaft end Ø12		01657100	1
212	Adapter Shaft	AM145 pinion shaft end Ø14		01657119	1
212	Adapter Shaft	AM143 Backstop; pinion shaft end Ø12		01657356	1
212	Adapter Shaft	AM145 Backstop; pinion shaft end Ø14		01657364	1
216	Sealing compound			09102558	X)
217	Deep groove ball bearing		6007-2Z-K01	00104825	1
217	Deep groove ball bearing	ATEX model according to category II2GD	6007-2Z-K24	13224026	1
220	Screw plug	for flange Ø120-Ø160	W4085 B-M10x1-St-ADC3K-	0011426X	1
220	Breather valve	for flange Ø120-Ø160	W4087 M10x1-CuZn-HEI	00130303	1
220	Screw plug	for flange Ø200-Ø250	W4085 B-M12x1,5-St-	00114308	1
220	Breather valve	for flange Ø200-Ø250	W4087 M12x1,5-CuZn-HEI	00130311	1
223	Deep groove ball bearing		6205-Z	00104957	1
223	Cylindrical roller bearing	Backstop	NJ205E	00170909	1
224	Oil flinger		W4291 22-A2F	00116734	1
226	Backstop		W4943 RS7-55-25,1	01653687	1
227	Key	Backstop	DIN6885-1 A5x5x18 +C	00100064	1
228	Retaining ring	Backstop	DIN471 25x1,2-FS	00102741	1
247	Equalizing ring	Backstop	W4253 44x51x0,4	00115835	1
276	Shield ring	Backstop	W4585 6205-ZAV-OV	0010714X	1
402	Retaining ring		DIN471 35x1,5-FS	00102806	1
442	Adapter flange			01651862	1
470	Machine screw		ISO4762 M8x30-8.8-A2F	0012303X	4
478	Cam Ring			01657305	1
479	Coupling half A	Ø0,875"		01657453	1
481	Setscrew		ISO4027 M4x6-45H	00104574	1
484	Key (inch)		W4190 B3/16x3/16x9/16 +C	0806993X	1
491	Spacer tube			01655469	1

X) if required
When ordering spare parts always quote nameplate data with serial number and designation with part number!

Copyright reserved! All rights reserved according to DIN ISO 16016.

Fernco Inc.
Davison, MI • PH: 810-653-9626 • FAX: 810-653-8714 • www.Fernco.com

Item # 207

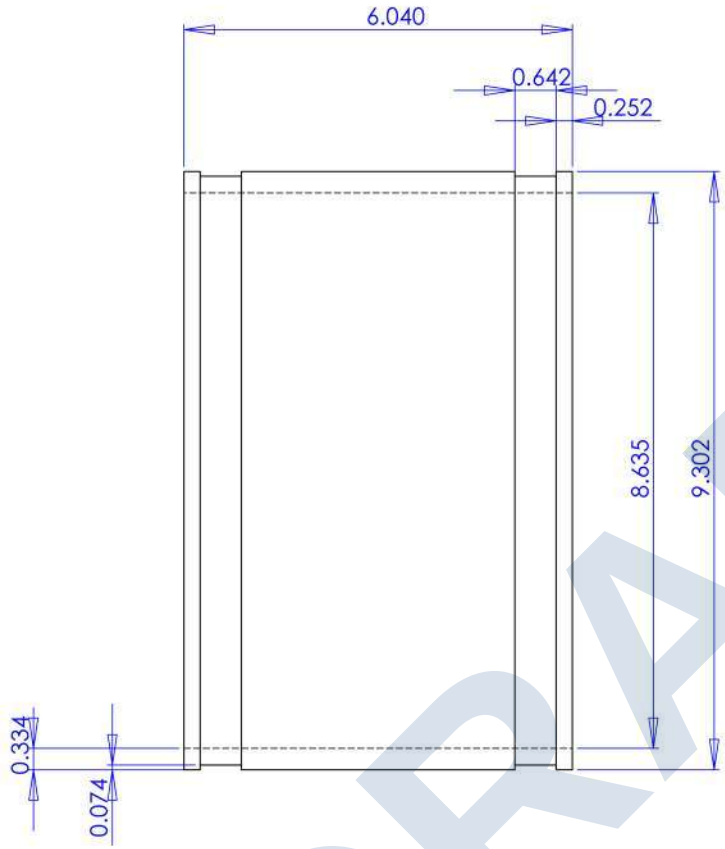



DRAFT

*This Part requires two clamps, part number 152-300.
See additional drawing for information on these clamps.

NOTES:
- SOME HIDDEN LINES NOT SHOWN
-BREAK ALL SHARP CORNERS
-REPORT ALL CHANGES TO ENGINEERING

PROPRIETARY AND CONFIDENTIAL
THE INFORMATION CONTAINED IN THIS DRAWING IS THE SOLE PROPERTY OF FERNCO, INC. ANY REPRODUCTION IN PART OR AS A WHOLE WITHOUT THE WRITTEN PERMISSION OF FERNCO, INC. IS PROHIBITED.

Part Weight	3.02 lbs.
Min/Max Temp.	-30/140 Degrees F
Pressure Tested	4.3 PSI
Material	Flexible PVC
Installation Torque	60" Lbs.
Conforms to ASTM	D5926, C1173
Box Quantity	10
Clamps used	300 Series

TOLERANCES:
.X= Fractional ±
.XX= ±.02
.XXX= ±.030
ANG.= ±0.5°
UNLESS OTHERWISE SPECIFIED

DESCRIPTION:
Coupling 8" Plastic x 8" Plastic

1056-88

UNITS: INCHES
SIZE: A
DESIGNER: D. Brady
SCALE: not to scale
3RD ANGLE PROJECTION
DO NOT SCALE DRAWING
CHECKER:
DATE: 1/31/2007
SHEET 1 OF 1

Conveyor

DRAFT

FKC CO., LTD.

2708 West 18th Street
Port Angeles, WA 98363

(360) 452-9472
FAX (360) 452-6880

San Luis West WWTP, AZ
Bill of Materials

Item #	12" Conveyor	Manufacturer	Part Number	Qty	Material of Construction
301	Inlet Hopper	FKC	--	1	12 ga. 304L SS
302	End Plate	FKC	--	2	3/8 304L SS
303	Trough (8' Max)	FKC	--	3	10 ga. 304L SS
304	Trough Flange	FKC	--	6	1/4 304L SS
305	Wear Liner (4' Max)	FKC	--	8	1/2 UHMW
306	Trough Cover (5' Max)	FKC	--	6	10 ga. 304L SS
307	12" Outlet	FKC	--	1	12 ga. 304L SS
308	Screw	Falcon Ind.	--	1	12" Shaftless Screw Flight 1" x 3" 8620
309	Gear Reducer	SEW	FAS77AMS184	1	CS-Painted
310	Motor	Toshiba	0054SDSR44A-P	1	CS-Painted
311	E-Stop Pull Cords	OMRON	ER6020	2	NEMA 6 AL
312	Zero Speed Switch	Siemens	WM100	1	AL
313	Washout Detector	Warrick	3E1B	1	

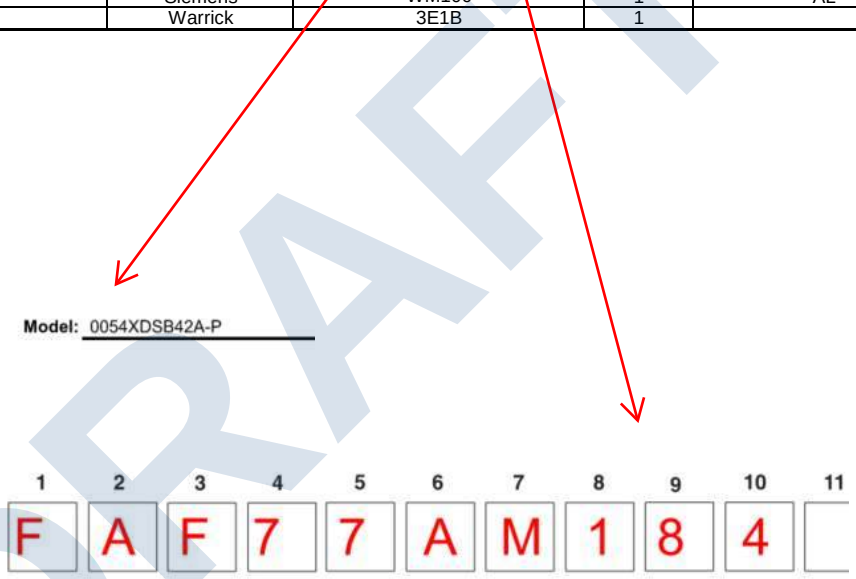

DRAFT

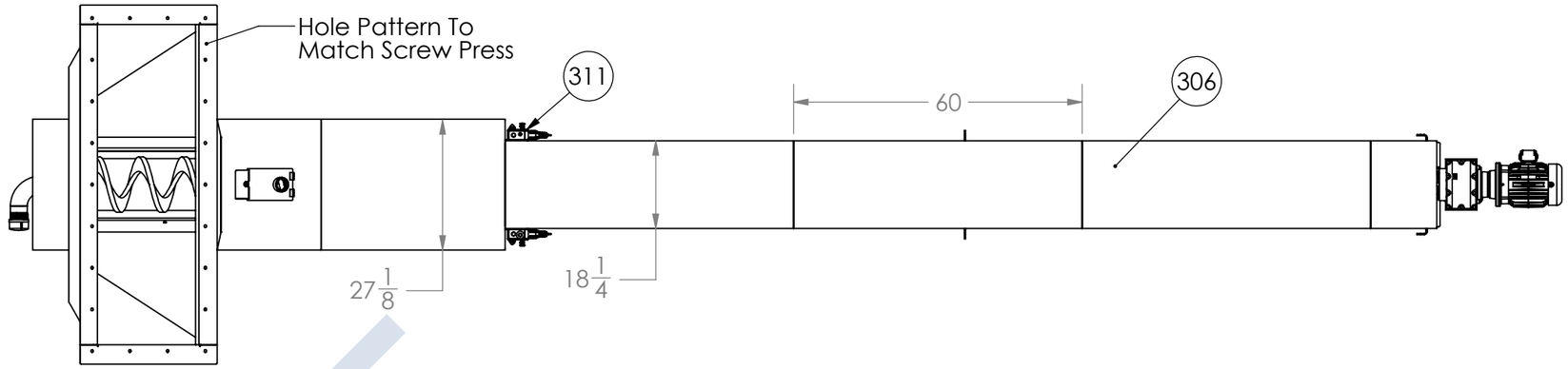

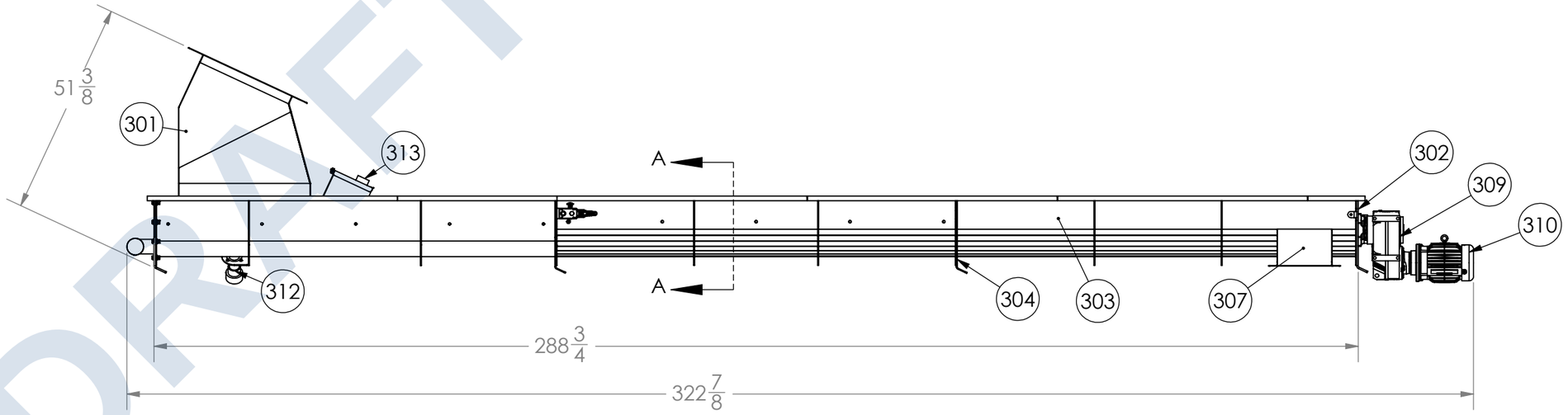

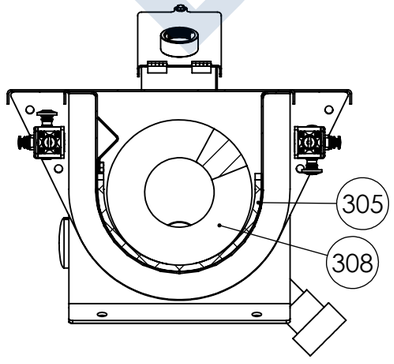

SECTION A-A
SCALE 1 : 12

Note:
- Material of Construction 304 S.S.
- Equipment Weight: 3000 LBS
- Operating Weight: 4000 LBS
- Drive: SEW FAS77AMS184, Ratio: 66.46:1
- Motor: 5HP 1800 RPM 182TC
- Operating Speed: 26 RPM

DRAFT

PROPRIETARY AND CONFIDENTIAL
THE INFORMATION CONTAINED IN THIS DRAWING IS THE SOLE PROPERTY OF FKC CO LTD. ANY REPRODUCTION IN PART OR AS A WHOLE WITHOUT THE WRITTEN PERMISSION OF FKC CO LTD IS PROHIBITED.

No.	Alteration	Date	Sign
3			
2			
1			
0	Issued for Approval	4/7/25	MB

Job No. C-524	Customer San Luis West WWTP San Luis, AZ	Wt. Lbs.
Drawing No. A524-400	Title 12" Shaftless Screw Conveyor Conveyor 1 Assembly Details	Quantity 1
		Date 4/7/25
FKC CO. LTD 2708 W 18th St. Port Angeles, WA 98363 (360) 452-9472 Fax (360) 452-6880		Drawn By MB
	Revision	SHEET 1 OF 4

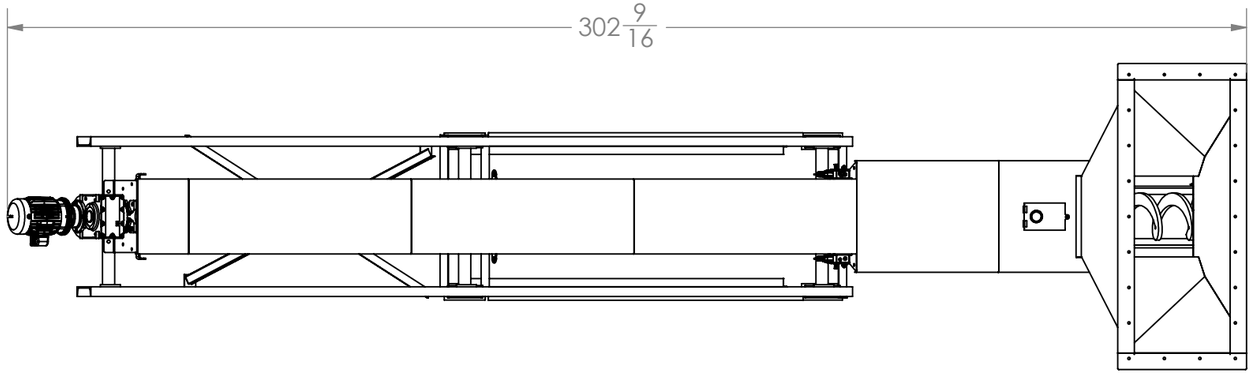

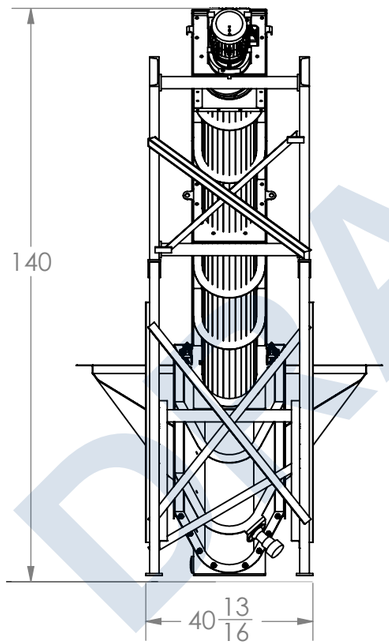

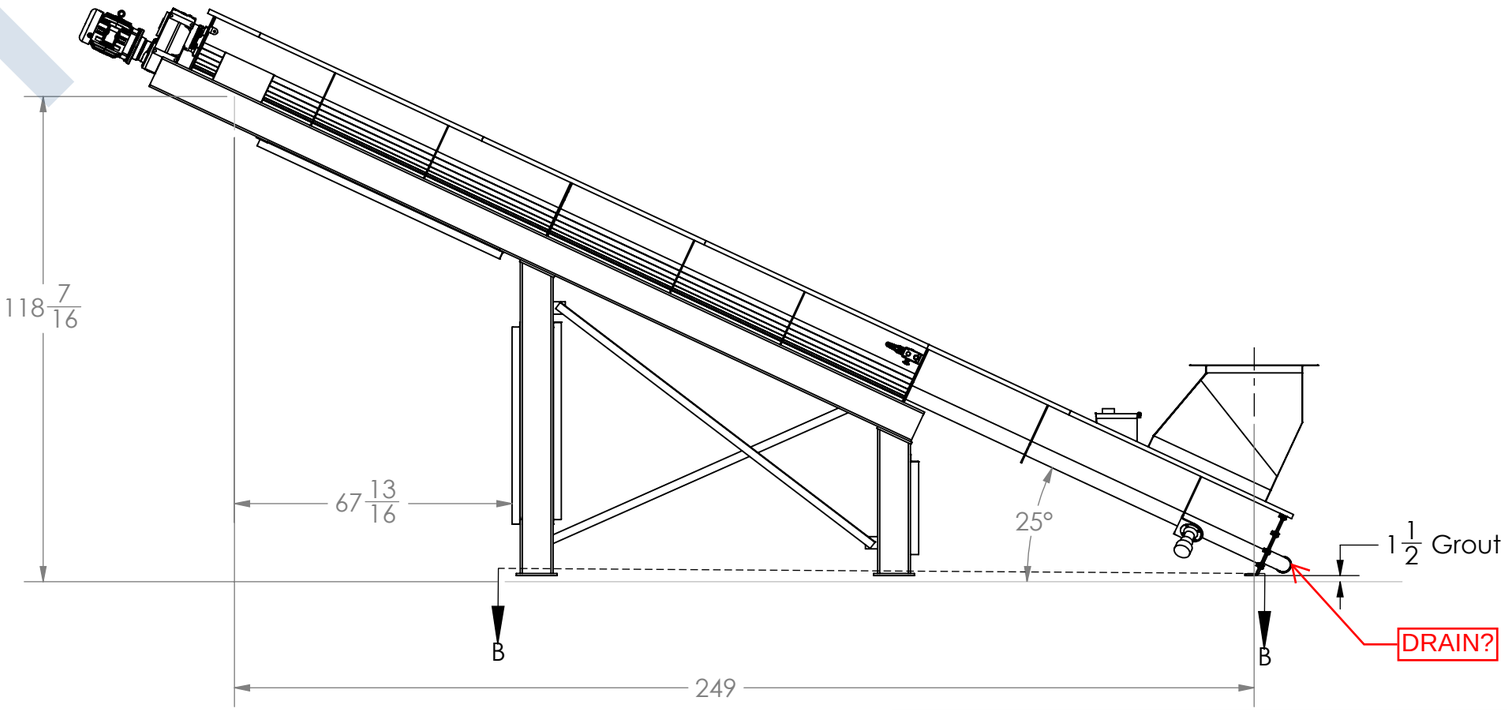

DRAFT

PROPRIETARY AND CONFIDENTIAL
THE INFORMATION CONTAINED IN THIS DRAWING IS THE SOLE PROPERTY OF FKC CO LTD. ANY REPRODUCTION IN PART OR AS A WHOLE WITHOUT THE WRITTEN PERMISSION OF FKC CO LTD IS PROHIBITED.

No.	Alteration	Date	Sign
3			
2			
1			
0	Issued for Approval	4/7/25	MB

Job No. C-524	Customer San Luis West WWTP San Luis, AZ	Wt. Lbs.
Drawing No. L524-401	Title 12" Shaftless Screw Conveyor Layout Details	Quantity 1
		Date 4/7/25
FKC CO. LTD 2708 W 18th St. Port Angeles, WA 98363 (360) 452-9472 Fax (360) 452-6880		Drawn By MB
	Revision	SHEET 2 OF 4

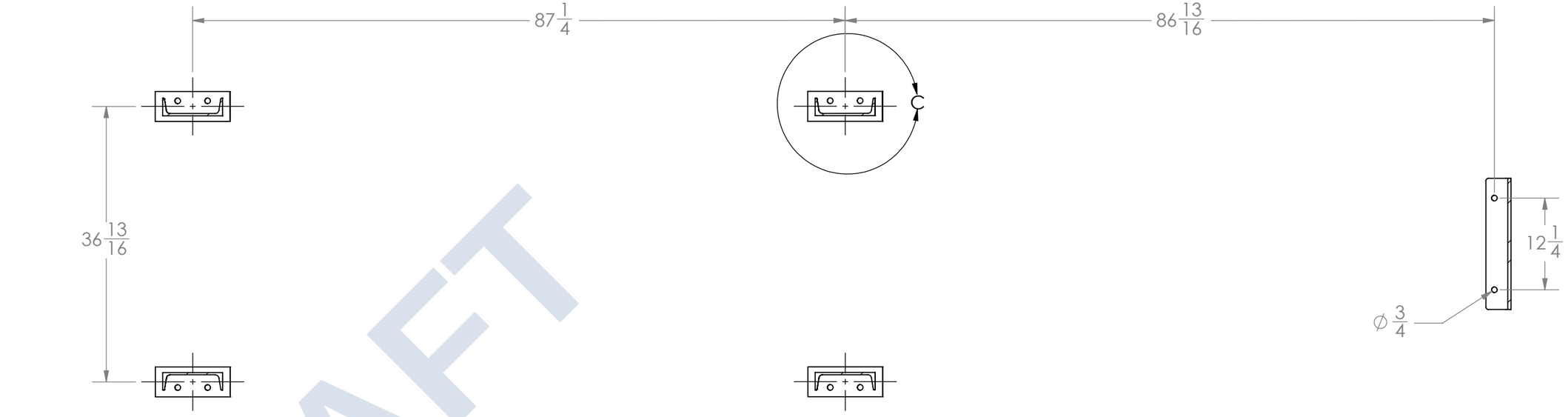

SECTION B-B
SCALE 1 : 15

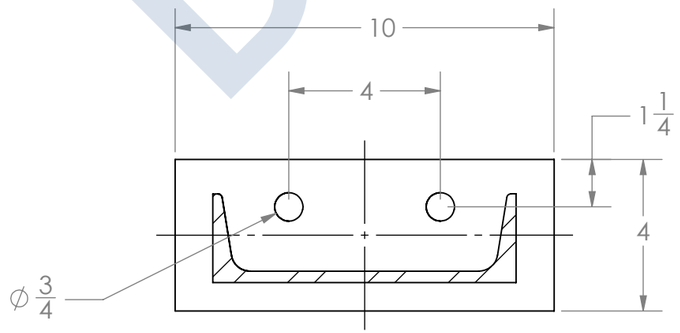

DETAIL C
SCALE 1 : 4

DRAFT

PROPRIETARY AND CONFIDENTIAL
THE INFORMATION CONTAINED IN THIS DRAWING IS THE SOLE PROPERTY OF FKC CO LTD. ANY REPRODUCTION IN PART OR AS A WHOLE WITHOUT THE WRITTEN PERMISSION OF FKC CO LTD IS PROHIBITED.

No.	Alteration	Date	Sign
3			
2			
1			
0	Issued for Approval	4/8/25	MB

Job No. C-524	Customer San Luis West WWTP San Luis, AZ	Wt. Lbs.
Drawing No. L524-402	Title 12" Shaftless Screw Conveyor Foundation Details	Quantity 1
		Date 4/7/25
FKC	FKC CO. LTD 2708 W 18th St. Port Angeles, WA 98363 (360) 452-9472 Fax (360) 452-6880	Drawn By MB
	Revision	SHEET 3 OF 4

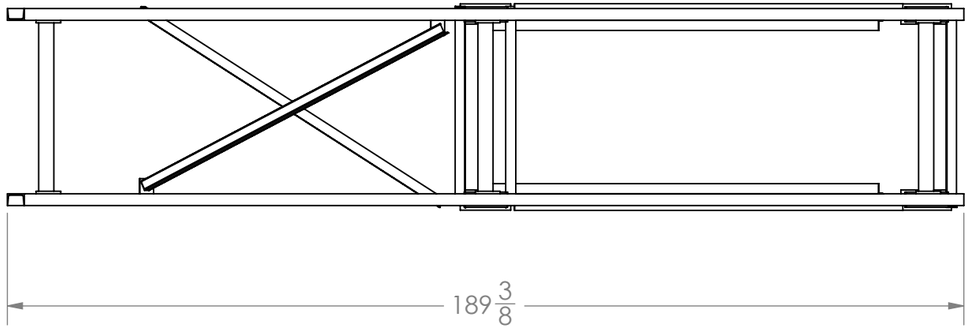

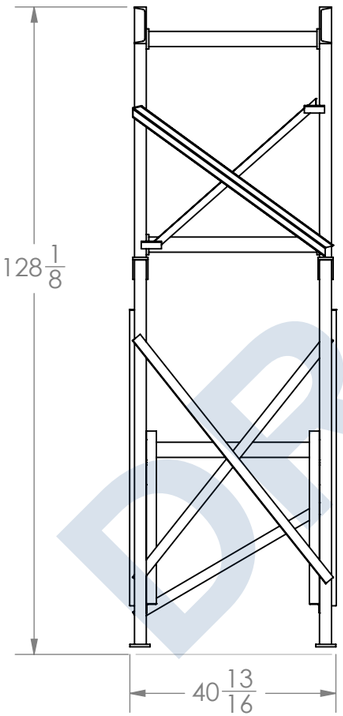

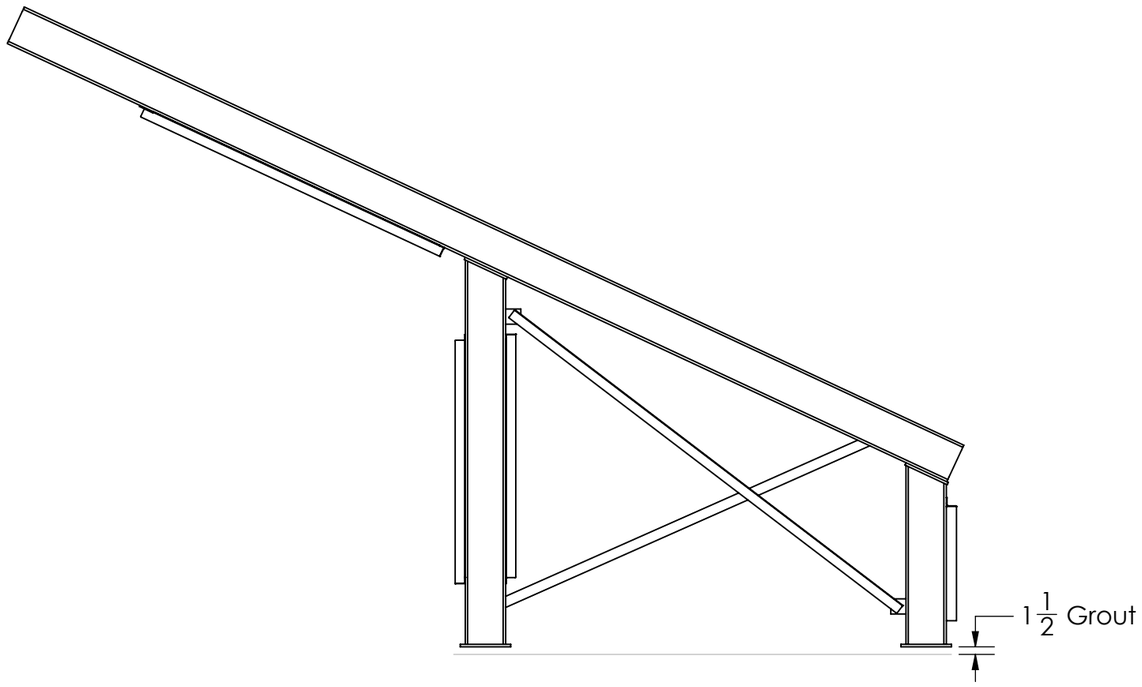

DRAFT

Note:
- Equipment Weight: 1100 LBS
- Material Of Construction: Galvanized Steel

PROPRIETARY AND CONFIDENTIAL
THE INFORMATION CONTAINED IN THIS DRAWING IS THE SOLE PROPERTY OF FKC CO LTD. ANY REPRODUCTION IN PART OR AS A WHOLE WITHOUT THE WRITTEN PERMISSION OF FKC CO LTD IS PROHIBITED.

No.	Alteration	Date	Sign
3			
2			
1			
0	Issued for Approval	4/8/25	MB

Job No. C-524	Customer San Luis West WWTP San Luis, AZ	Wt. Lbs.
Drawing No. L524-403	Title 12" Shaftless Screw Conveyor Support Structure Assembly Details	Quantity 1
		Date 4/7/25
FKC CO. LTD 2708 W 18th St. Port Angeles, WA 98363 (360) 452-9472 Fax (360) 452-6880		Drawn By MB
	Revision	SHEET 4 OF 4

Item # 310

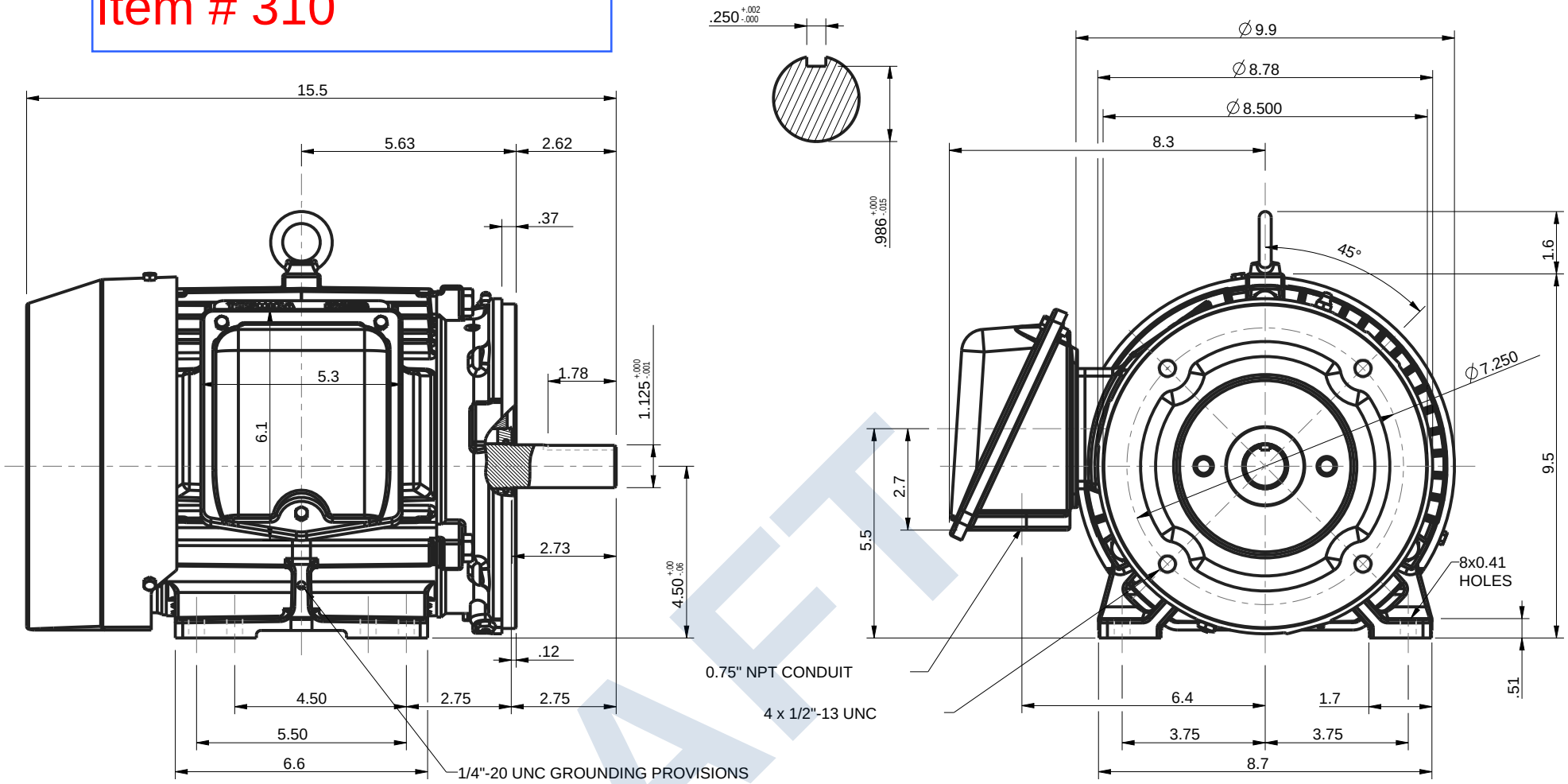

DRAFT

UNITS: INCHES	NOTES:
ROTATION FROM NDE	1. MAIN CONDUIT BOX MAY BE ROTATED IN 90° INCREMENTS
X CCW CW	2. STANDARD PRODUCT USES BI-DIRECTIONAL FAN. OPPOSITE ROTATION AVAILABLE ONLY BY CONNECTION CHANGE.
	3. KEY DIMENSIONS EQUAL 0.250"x 0.250"x 1.75" (MOTOR SUPPLIED WITH KEY)

TOSHIBA RESERVES THE RIGHT TO MAKE CHANGES OF TECHNICAL IMPROVEMENT AND THE DATA MAY CHANGE WITHOUT NOTICE — ☐ PRELIMINARY

DO NOT USE FOR CONSTRUCTION, INSTALLATION, OR APPLICATION PURPOSES UNLESS THE DRAWING IS MARKED AS CERTIFIED — ☒ CERTIFIED

TOSHIBA
www.toshiba.com/tic
TOSHIBA INTERNATIONAL CORPORATION

PETRO-CHEMICAL DUTY EQP 841

TOTALLY ENCLOSED FAN COOLED
FOOTED C-FACED
3 PHASE INDUCTION MOTOR
182TC-184TC F1 ASSEMBLY

DRAWING #: MDSLV085-02
REV. DATE: 06/25/18 REV. #: 2 PER.: M. O'DOWD
REV. DESCRIP.:

Issued Date	9/24/2019	Transmit #	
Issued By	dschoeck	Issued Rev	

TOSHIBA

TYPICAL MOTOR PERFORMANCE DATA

Model: 0054XDSB42A-P

HP	kW	Pole	FL RPM	Frame	Voltage	Hz	Phase	FL Amps
5	3.7	4	1755	184TC	460	60	3	6.4
Enclosure	**IP**	**Ins. Class**	**S.F.**	**Duty**	**NEMA Nom. Eff.**	**NEMA Design**	**kVA Code**	**Ambient (°C)**
TEFC	56	F	1.15	CONT	89.5	B	J	40 C

Load	HP	kW	Amperes	Efficiency (%)	Power Factor (%)
Full Load	5	3.7	6.4	89.9	82.0
¾ Load	3.75	2.8	5.0	89.8	76.8
½ Load	2.50	1.9	4.0	88.0	65.8
¼ Load	1.25	0.9	2.8	81.7	51.1
No Load			2.7		5.9
Locked Rotor			46		54.7

Torque				Rotor wk² Inertia
Full Load (lb-ft)	**Locked Rotor (% FLT)**	**Pull Up (% FLT)**	**Break Down (% FLT)**	**(lb-ft²)**
15	255	240	370	0.50

Safe Stall Time(s)		Sound Pressure dB(A) @ 1M	Bearings*		Approx. Motor Weight
Cold	**Hot**		**DE**	**NDE**	**(lbs)**
35	15	-	6306C3	6306C3	126

*Bearings are the only recommended spare part(s).

Motor Options:
Product Family:EQP Global 841 CFace Footed
Mounting:C-Face Footed,Shaft:T Shaft

Customer	
Customer PO	
Sales Order	
Project #	

Tag:

All characteristics are average expected values.

DRAFT

Issued Date	9/24/2019	Transmit #	
Issued By	dschoeck	Issued Rev	

TOSHIBA

SPEED TORQUE/CURRENT CURVE

Model: 0054XDSB42A-P

HP	kW	Pole	FL RPM	Frame	Voltage	Hz	Phase	FL Amps
5	3.7	4	1755	184TC	460	60	3	6.4

Enclosure	IP	Ins. Class	S.F.	Duty	NEMA Nom. Eff.	NEMA Design	kVA Code	Ambient (°C)
TEFC	56	F	1.15	CONT	89.5	B	J	40 C

Locked Rotor Amps	Rotor wk² Inertia (lb-ft²)	Torque			
		Full Load (lb-ft)	Locked Rotor (%)	Pull Up (%)	Break Down (%)
46	0.50	15	255	240	370

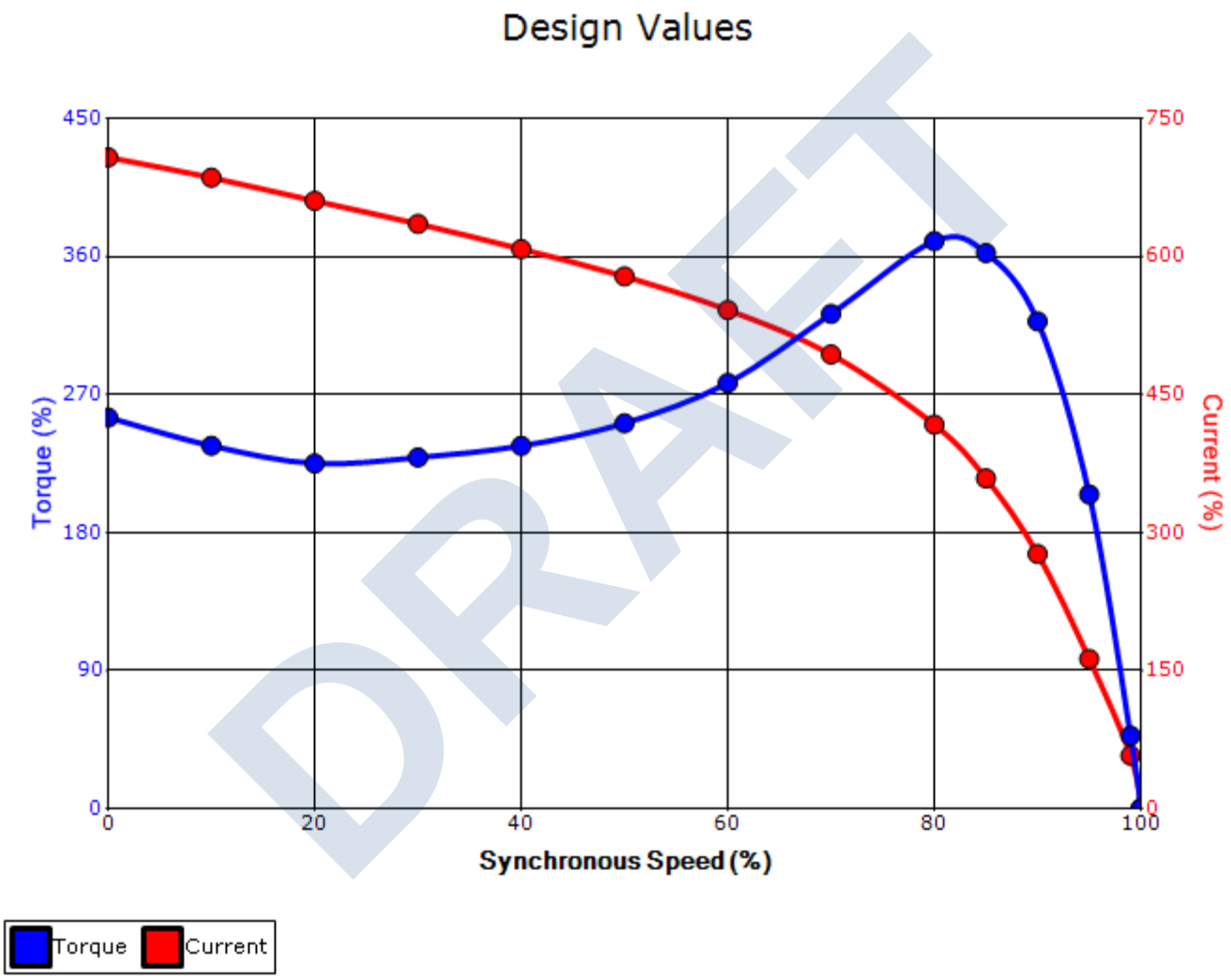

DRAFT

Customer		wk² Load Inertia (lb-ft²)	-
Customer PO		Load Type	-
Sales Order		Voltage (%)	100
Project #		Accel. Time	-

Tag:

All characteristics are average expected values.

TOSHIBA INTERNATIONAL CORPORATION · HOUSTON, TEXAS U.S.A.

Engineering	mcampbell	Doc. Written By	D. Suarez	Doc.# / Rev	MPCF-1121/1
Engr. Date	4/9/2018	Doc. Approved By	M. Campbell	Doc. Issued	9/20/2019

Motor Connection Diagram
3 Leads - Wye Connection

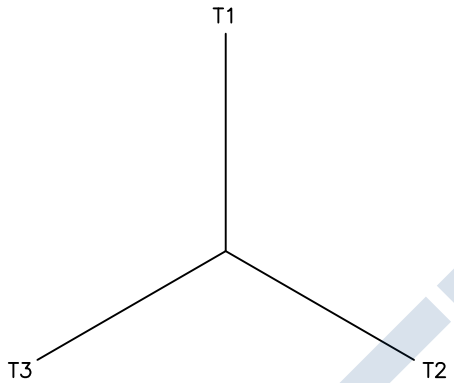

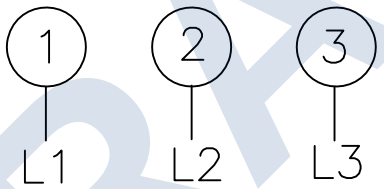

Switch L1 and L2 to reverse rotation

Each lead may consist of more than one cable.
If multiple cables represent a single lead, each one
of them will be labeled with the appropriate lead number.

DRAFT

Gear Box Information

DRAFT

PRODUCTFOCUS

SEW EURODRIVE

F-Series (theSnuggler®)
Parallel Helical Gearmotors

SEW-EURODRIVE's F-Series parallel helical gearmotor is the ideal drive for tight spaces. This compact drive, with its multiple mounting configurations and shaft designs, is a rugged alternative to right-angle gearmotors.

Product Range

- Power ratings from 0.05 to 336 HP
- Ratios from 3.77 to 29,211
- Output torques to 159,300 lb-in

Reducer

- Efficiency = 97% (2-stage) or 95.5% (3-stage)
- Gears manufactured from certified steel, heat treated to a case hardness of 58-62 Rockwell C for infinite fatigue strength
- Finished ground or shaved gear teeth to assure minimum noise, minimum heat, and maximum mechanical efficiency (approximately 1.5% loss/stage)
- Anti-friction bearings for optimum load capacity and long life
- Captured keys on input and output shafts
- F37-F157 gear housing contains high strength cast iron, SAE Class 30 or equivalent (GG20)
- F27 housing contains high strength pressure-cast aluminum
- O-ring on flange to prevent oil leakage when mounted on a surface that is not totally flat
- High cross-section modulus design, rugged monobloc design for maximum rigidity
- Center tapped holes on output shafts to aid the installation of shaft components
- Exclusive interlocking 2-piece seal design consisting of a patented bi-helix FKM inner seal and a double-lip Nitrile (Buna N) outer seal – provides three sealing surfaces against contaminants
- Metric or Inch dimension output shafts
- Removable inspection cover
- Shock capacity meets or exceeds AGMA 6009-A00



Motor

- Inverter duty
- Connection terminals
- Low rotor inertia for high cycling and tight control
- EISA (IE3) "Premium" available
- 50Hz, 60Hz, or 50/60Hz global motor
- CE for shipment into Europe

Mounting

- Built-in torque arm for shaft mounting
- B14 or B5 flange with centering tenon
- Tapped rail holes for foot mounting
- Can be ordered for any mounting orientation

Optional Features

- C-Face or IEC motor adapter
- TorqLOC® taper hollow shaft
- Heavy duty taper roller bearings (FA67-FA127)
- FKM seals instead of NBR
- Corrosion and/or long term storage protection
- High cycling fail-safe brake
- Forced cooling fan for low frequency operation
- Thermostat or thermistor protection
- Plug connectors for quick motor replacement
- Two-speed motor
- Motor encoder - built-in or externally mounted
- CSA hazardous location and ATEX rated motors

DRAFT

PRODUCTFOCUS

Screw Conveyor Drive
Compact, Flexible, and Removable

NEW for 2020! SEW's enhanced screw conveyor drive takes superior performance to the next level. It's four individual sealing areas provide unprecedented protection against contaminants and abrasives. Plus, its taper bearings provide maximum thrust load capacity required for screw conveyors.

During re-greasing, the expulsion port provides a channel for grease to the V-ring and oil seal as well as a path for excess grease to purge freely. This unique design prevents high pressure that can destroy seals. In addition, SEW's shaft removal tool makes it easy to separate the shaft and flange independently from the gear unit, eliminating the need for trough access or screw removal.

Various motor inputs, two gear unit styles, and numerous ratios provide maximum flexibility and eliminate the need for belts and sheaves. The SEW compact screw conveyor drive is truly the ultimate solution for bulk material handling.

Standard Features

- Four (4) separate sealing components:
  - Labyrinth seal on output shaft formed by V-ring and flange
  - Double-lip seal in flange
  - Nilos steel disc seal (LSTO) for extra protection against abrasive dusts, including grain, flour, coal, and salt
  - Double-lip seal on gear unit output shaft
- Grease nipple with expulsion port to prevent seal damage
- Inspection port to determine seal condition
- Heavy-duty taper bearings for maximum thrust load capacity
- CEMA 2 or 3-hole shaft (optional stainless steel)
- Shaft removal kit for trouble-free disassembly of solid shaft, even in extreme environments
- Removable gear unit - driveshaft and flange remain on trough

Mounting Styles

- Integral SEW motor
- Adapter for IEC motor or NEMA C-Face motor
- Platform mounting for use with footed motor
- Helical-parallel (FAF) or Helical-bevel right angle (KAF)



Helical-parallel style (FAF) with SEW C-face motor and jaw/spider coupling



SEW shaft removal tool provides easy disassembly; gear unit can be removed independent of shaft and flange

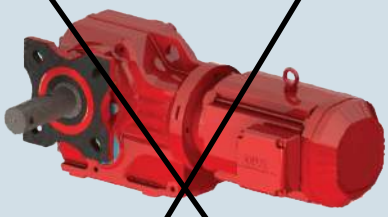

Helical-bevel right angle style (KAF) with integral motor

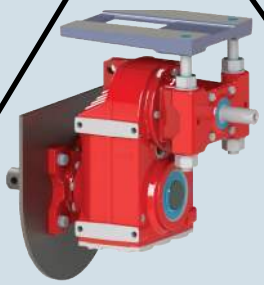

Platform style - provides base for footed motor

DRAFT

PRODUCTFOCUS

SEW EURODRIVE

Exploded View

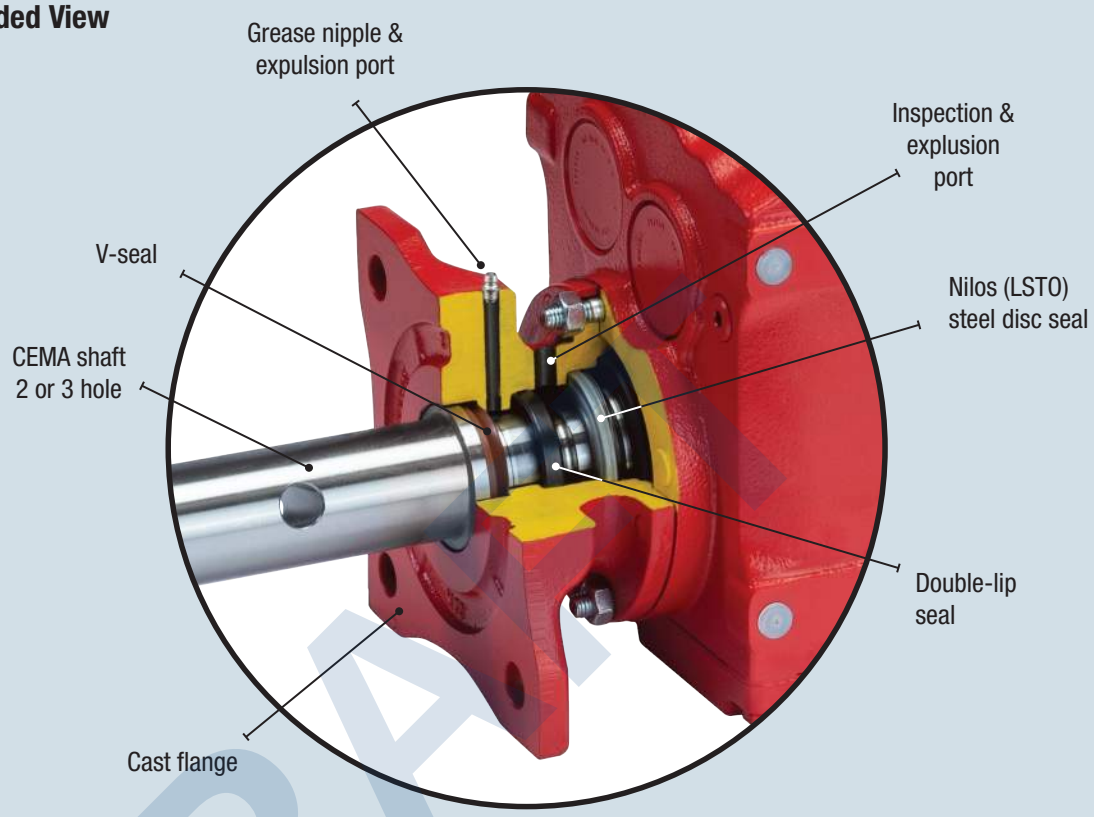

Shaft Diameters & Maximum Axial Load Ratings

	Max. Axial Load Rating (lbs)*		CEMA Drive Shaft (2-Hole or 3-Hole)				
Size	FAF	KAF	1-1/2"	2"	2-7/16"	3"	3-7/16"
37	2360	2360	√	-	-	-	-
47	2500	3370	√	√	-	-	-
57	3780	3550	√	√	√	-	-
67	4160	3750	√	√	√	√	-
77	6740	4500	-	√	√	√	-
87	9620	6740	-	-	√	√	√
97	12810	8990	-	-	-	√	√

*Axial rating may vary, depending on ratio and input power.

About SEW-EURODRIVE...

Our product is motion. Our focus is solutions. As a worldwide supplier of innovative gearing, motor, and electronic drive technology, we have been solving problems in large and small applications within virtually every industry since 1931.

Locally in the US, we have 5 assembly centers where we provide final assembly, custom modifications, and assistance with project planning, startup, and training. All products are backed by our industry-leading 24/7 support program.

U.S. Operations:

Midwest Region
SEW-Eurodrive, Inc.
2001 West Main Street
Troy, OH 45373
Telephone: (937) 335-0036
Fax: (937) 332-0038
cstroy@seweurodrive.com

Northeast Region
SEW-Eurodrive, Inc.
2107 High Hill Road
Bridgeport, NJ 08014
Telephone: (856) 467-2277
Fax: (856) 845-3179
csbridgeport@seweurodrive.com

Southeast Region
SEW-Eurodrive, Inc.
1295 Old Spartanburg Hwy.
Lyman, SC 29365
Telephone: (864) 439-7537
Fax: (864) 439-7830
cslyman@seweurodrive.com

Southwest Region
SEW-Eurodrive, Inc.
202 W. Danieldale Rd.
Desoto, TX 75115
Telephone: (214) 330-4824
Fax: (214) 330-4724
csdallas@seweurodrive.com

Western Region
SEW-Eurodrive, Inc.
30599 San Antonio Street
Hayward, CA 94544
Telephone: (510) 487-3560
Fax: (510) 487-6433
cshayward@seweurodrive.com

www.seweurodrive.com

DRAFT

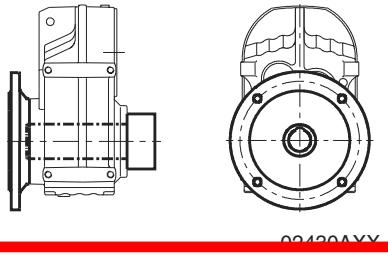

02430AXX

FHF..
Parallel shaft helical gear unit in B5 flange-mounted version with hollow shaft and shrink disk

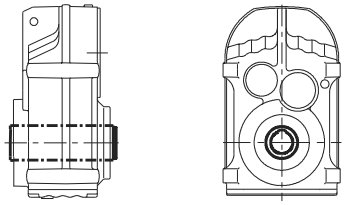

02431AXX

FA..
Parallel shaft helical gear unit with hollow shaft

FV..
Parallel shaft helical gear unit with hollow shaft and splined hollow shaft to DIN 5480

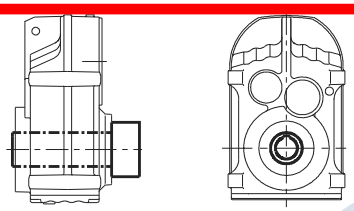

02434AXX

FH..
Parallel shaft helical gear unit with keyless hollow shaft and shrink disk

FT..
Parallel shaft helical gear unit for keyless hollow shaft mounting with the use of interchangeable tapered bushings

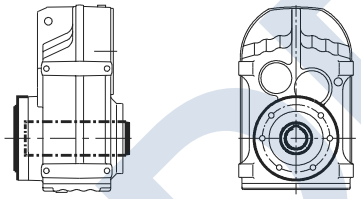

02435AXX

FAZ..
Parallel shaft helical gear unit in B14 flange-mounted version with hollow shaft

FVZ..
Parallel shaft helical gear unit in B14 flange-mounted version with hollow shaft and splined hollow shaft to DIN 5480

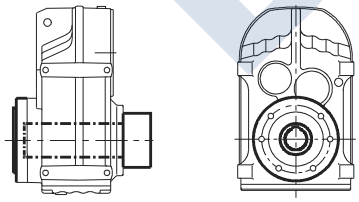

02436AXX

FHZ..
Parallel shaft helical gear unit in B14 flange-mounted version with hollow shaft and shrink disk

DRAFT

Components on the input side

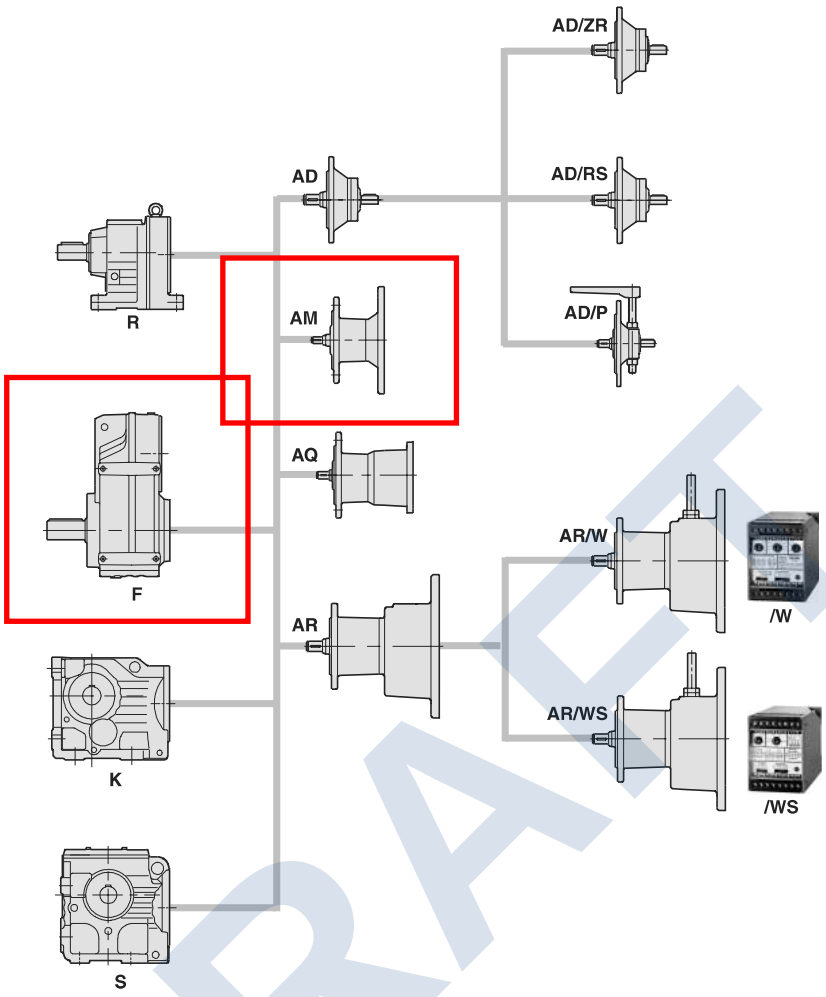

Overview of components on the input side

AD	Input Shaft Assembly	**AR**	Adapter with torque limiting coupling
AD/ZR	Input shaft assembly with centering shoulder	**AR/W**	Adapter with torque limiting coupling and speed monitoring
AD/RS	Input shaft assembly with backstop	**AR/WS**[1)]	Adapter with torque limiting coupling and slip monitor
AD/P	Input shaft assembly with motor mounting platform	**/W**	Speed monitor
AM	Adapter for mounting IEC/NEMA motors	**/WS**	Slip monitor
AQ	Adapter for mounting servomotors		

[1)] **Only in conjunction with VARIGEAR® variable speed gear unit**

DRAFT

3.3. Nomenclature

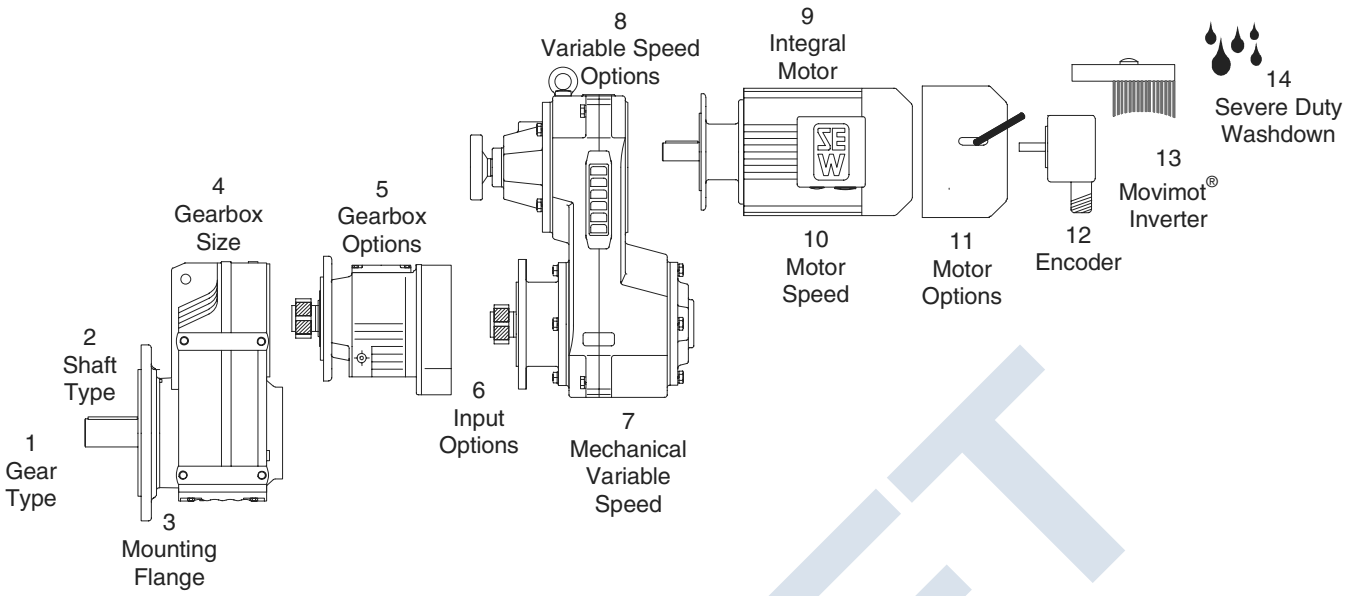

1	2	3	4	5	6	7	8	9	10	11	12	13	14
F	A	F	7	7	A	M	1	8	4				

1 - Type	
~~R~~	~~Helical~~
F	theSnuggler®
~~K~~	~~Bevel~~
S	Worm
W	Spiroplan® (Hypoid)

2 - Shaft	
~~Solid~~	
A	Hollow
~~H~~	~~Shrink Disc~~
V	Spline
T	*Torq*LOC™ - Hollow with Tapered Bushing

3 - Flange	
F	B5 Flange
~~FF~~	~~B5 Flange Both Sides~~
Z	B14 Flange
M	Agitator Extension

4 - Size	
~~R~~	~~07 - 167~~
F	27 - 157
~~K~~	~~37 - 187~~
S	37 - 97
W	10 - 30

5 - Gear Options	
R__	Added Gear Reducer
B	Rail Holes (F Box)
B	Feet (KA Box)
F	Feet + Flange (R Box)
T	Torque Arm
G	Torque Arm Bushing (F Box)

6 - Input Options			
A	No Input	AR	Torque Limit Coupling
AD	Input Shaft	AR__W	Torque Coupling + Speed Monitor
AD__P	Input Shaft + Platform	AR__WS	Torque Coupling + Slip Monitor
AD__RS	Input Shaft + Backstop	AT	Centrifugal Coupling
AD__ZR	Input Shaft + Shoulder	AT__RS	Centrifugal Coupling + Backstop
~~AD__ZS~~	~~Input Shaft + Scoop~~	AT__BM(G)	Centrifugal Coupling + Brake
AM	NEMA/IEC C-Face		
~~AM_RS~~	~~NEMA/IEC C-Face + Backstop~~		
AQ	Servo Input		

7 - Mechanical Variable Speed	
D_ _	Varimot® Disc Drive
VU_ _	Varigear® Belt Drive U-Flow
VZ_ _	Varigear® Belt Drive Z-Flow

DRAFT

FA77						AM56			AM143			AM145		
Ratio *i*	Output Speed n_a	Input Power P_{emax}	Output Torque T_{amax}	Stages		Input Power P_e	Output Torque T_a	Output OHL F_{Ra}	Input Power P_e	Output Torque T_a	Output OHL F_{Ra}	Input Power P_e	Output Torque T_a	Output OHL F_{Ra}
	rpm	HP	lb-in	Pri.	Sec.	HP	lb-in	lb	HP	lb-in	lb	HP	lb-in	lb
281.71	6.20	1.46	13300	3	-	0.75	6730	4300	-	-	-	-	-	-
262.93	6.70	1.46	13300	3	-	0.75	6280	4320	-	-	-	-	-	-
225.79	7.80	1.73	13300	3	-	0.75	5400	4390	1	7430	4250	-	-	-
198.31	8.80	2.00	13300	3	-	0.75	4730	4410	1	6500	4320	2	13300	3530
188.40	9.30	2.13	13300	3	-	0.75	4510	4430	1	6200	4340	2	12700	3620
166.47	11	2.39	13300	3	-	0.75	3980	4460	1	5440	4390	2	11200	3850
142.27	12	2.66	13300	3	-	0.75	3410	4480	1	4650	4410	2	9650	4030
130.42	13	2.93	13300	3	-	0.75	3140	4480	1	4290	4430	2	8850	4120
114.45	15	3.33	13300	3	-	0.75	2740	4500	1	3760	4460	2	7790	4230
108.46	16	3.59	13300	3	-	0.75	2610	4500	1	3540	4480	2	7350	4250
94.93	18	4.12	13300	3	-	0.75	2260	4500	1	3100	4480	2	6420	4320
85.52	20	4.52	13300	3	-	-	-	-	1	2790	4500	2	5800	4370
75.02	23	5.19	13300	3	-	-	-	-	1	2430	4500	2	5040	4410
72.50	24	5.32	13300	3	-	0.75	1730	4500	1	2390	4500	2	4910	4410
66.46	26	5.72	13300	3	-	0.75	1590	4500	1	2170	4500	2	4510	4430
58.32	30	6.52	13300	3	-	0.75	1400	4500	1	1900	4500	2	3940	4460
55.27	32	6.92	13300	3	-	0.75	1330	4500	1	1810	4500	2	3760	4460
48.37	36	7.85	13300	3	-	0.75	1160	4500	1	1580	4500	2	3270	4480
43.58	40	8.78	13300	3	-	-	-	-	1	1430	4500	2	2960	4480
38.23	46	9.98	13300	3	-	-	-	-	1	1240	4500	2	2570	4500
36.58	48	7.58	9820	2	-	0.75	890	4500	1	1210	4500	2	2520	4500
33.74	52	11.31	13300	3	-	-	-	-	-	-	-	2	2260	4500
31.51	56	11.04	12200	2	-	0.75	760	4500	1	1040	4500	2	2170	4500
29.91	59	12.77	13300	3	-	-	-	-	-	-	-	2	1990	4500
28.75	61	12.50	12700	2	-	0.75	700	4500	1	960	4500	2	1990	4500
25.54	69	14.50	12800	3	-	-	-	-	-	-	-	2	1680	4500
25.50	69	14.76	13300	2	-	0.75	620	4500	1	850	4500	2	1750	4500
21.43	82	17.56	13300	2	-	0.75	520	4500	1	710	4500	2	1470	4500
19.70	89	19.02	13300	2	-	-	-	-	1	655	4500	2	1350	4500
17.49	100	21.41	13300	2	-	-	-	-	1	575	4500	2	1190	4500
15.64	112	24.07	13300	2	-	-	-	-	-	-	-	2	1060	4500
14.06	124	26.60	13300	2	-	-	-	-	-	-	-	2	950	4390
12.20	143	30.59	13300	2	-	-	-	-	-	-	-	2	810	4230
9.30	188	29.26	9560	2	-	-	-	-	1	310	3920	2	635	3890
8.26	212	33.25	9560	2	-	-	-	-	1	275	3780	2	565	3760
7.39	237	37.24	9560	2	-	-	-	-	-	-	-	2	505	3650
6.64	264	41.23	9560	2	-	-	-	-	-	-	-	2	450	3530
5.76	304	46.55	9560	2	-	-	-	-	-	-	-	2	390	3380

FA77						AM182			AM184			AM213			AM215		
Ratio *i*	Output Speed n_a	Input Power P_{emax}	Output Torque T_{amax}	Stages		Input Power P_e	Output Torque T_a	Output OHL F_{Ra}	Input Power P_e	Output Torque T_a	Output OHL F_{Ra}	Input Power P_e	Output Torque T_a	Output OHL F_{Ra}	Input Power P_e	Output Torque T_a	Output OHL F_{Ra}
	rpm	HP	lb-in	Pri.	Sec.	HP	lb-in	lb	HP	lb-in	lb	HP	lb-in	lb	HP	lb-in	lb
166.47	11	2.39	13300	3	-	2.39	13300	3530	-	-	-	-	-	-	-	-	-
142.27	12	2.66	13300	3	-	2.66	13300	3530	2.66	13300	3530	-	-	-	-	-	-
130.42	13	2.93	13300	3	-	3	13100	3580	2.93	13300	3530	-	-	-	-	-	-
114.45	15	3.33	13300	3	-	3	11500	3800	3.33	13300	3530	3.33	13300	3530	3.33	13300	3530
108.46	16	3.59	13300	3	-	3	10900	3890	3.59	13300	3530	3.59	13300	3530	3.59	13300	3530
94.93	18	4.12	13300	3	-	3	9560	4050	4.12	13300	3530	4.12	13300	3530	4.12	13300	3530
85.52	20	4.52	13300	3	-	3	8580	4140	4.52	13300	3530	4.52	13300	3530	4.52	13300	3530
75.02	23	5.19	13300	3	-	3	7520	4230	5	12700	3620	5.19	13300	3530	5.19	13300	3530
72.50	24	5.32	13300	3	-	3	7260	4250	5	12300	3690	-	-	-	-	-	-
66.46	26	5.72	13300	3	-	3	6680	4300	5	11300	3830	-	-	-	-	-	-
58.32	30	6.52	13300	3	-	3	5840	4370	5	9910	4010	6.52	13300	3530	6.52	13300	3530
[illegible]	[illegible]	[illegible]	[illegible]	[illegible]	[illegible]	[illegible]	[illegible]	[illegible]	[illegible]	[illegible]	[illegible]	6.92	13300	3530	6.92	13300	3530
48.37	36	7.85	13300	3	-	3	4870	4410	5	8230	4190	7.50	12500	3670	7.85	13300	3530
[illegible]	[illegible]	[illegible]	[illegible]	[illegible]	[illegible]	[illegible]	[illegible]	[illegible]	[illegible]	[illegible]	[illegible]	7.50	11200	3850	8.78	13300	3530
38.23	46	9.98	13300	3	-	3	3810	4460	5	6500	4320	7.50	9910	4010	10	13300	3530
36.58	48	7.58	9820	2	-	3	3720	4460	-	-	-	-	-	-	-	-	-
33.74	52	11.31	13300	3	-	3	3360	4480	5	5710	4370	7.50	8670	4140	10	11700	3780
31.51	56	11.04	12200	2	-	3	3190	4480	5	5440	4390	-	-	-	-	-	-
29.91	59	12.77	13300	3	-	3	2960	4480	5	5040	4410	7.50	7700	4230	10	10400	3960
28.75	61	12.50	12700	2	-	3	2920	4480	5	4960	4410	-	-	-	-	-	-
25.54	69	14.50	12800	3	-	3	2520	4500	5	4290	4430	7.50	6550	4320	10	8850	4120
25.50	69	14.76	13300	2	-	3	2610	4500	5	4380	4430	7.50	6680	4300	10	8940	4120
21.43	82	17.56	13300	2	-	3	2170	4500	5	3670	4460	7.50	5620	4370	10	7520	4230
19.70	89	19.02	13300	2	-	3	1990	4500	5	3410	4480	7.50	5180	4390	10	6900	4280
17.49	100	21.41	13300	2	-	3	1770	4500	5	3010	4480	7.50	4560	4370	10	6150	4210
15.64	112	24.07	13300	2	-	3	1580	4480	5	2700	4390	7.50	4070	4250	10	5490	4120
14.06	124	26.60	13300	2	-	3	1420	4340	5	2390	4250	7.50	3670	4140	10	4910	4030
12.20	143	30.59	13300	2	-	3	1220	4190	5	2080	4100	7.50	3190	4010	10	4250	3890
10.93	160	34.58	13300	2	-	3	1090	4050	5	1860	3980	7.50	2830	3890	10	3810	3800
9.30	188	29.26	9560	2	-	3	950	3850	5	1600	3760	7.50	2430	3670	10	3270	3580
8.26	212	33.25	9560	2	-	3	840	3710	5	1420	3650	7.50	2170	3560	10	2920	3470

Please consult your SEW-Eurodrive Assembly Center for additional speed (RPM) selections and dimension pages not listed.

DRAFT

AM182-365

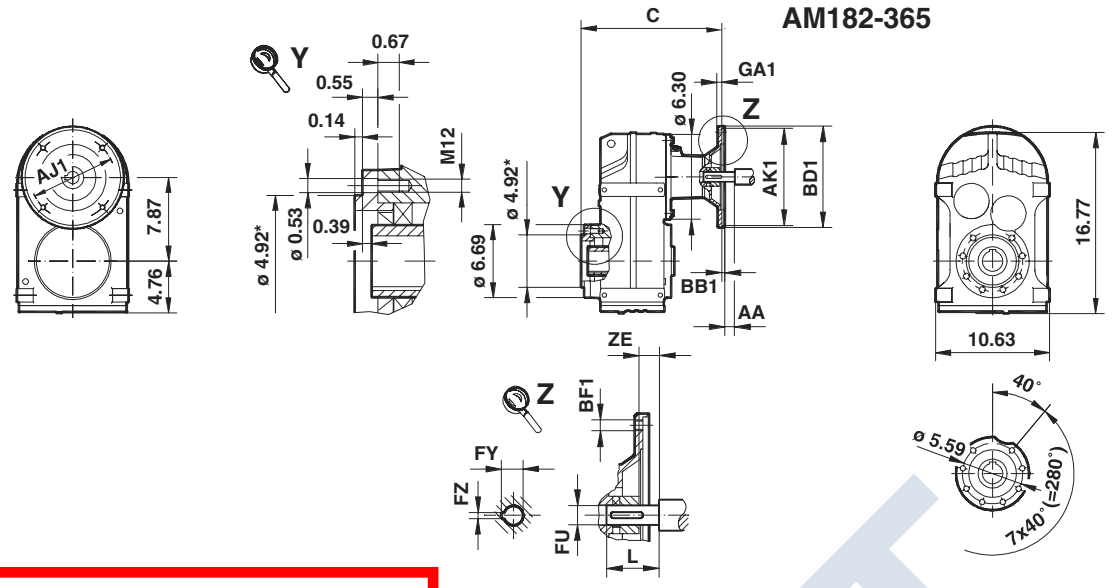

FAF77

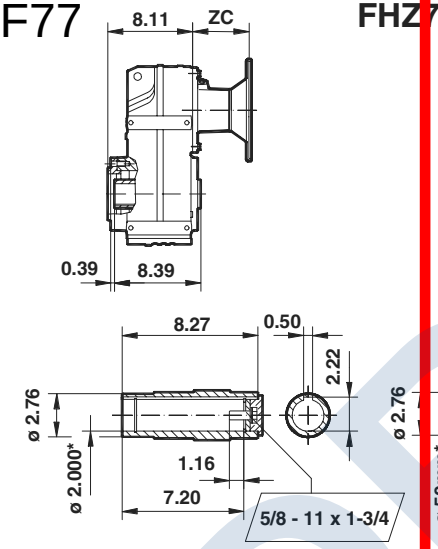

FHZ77..

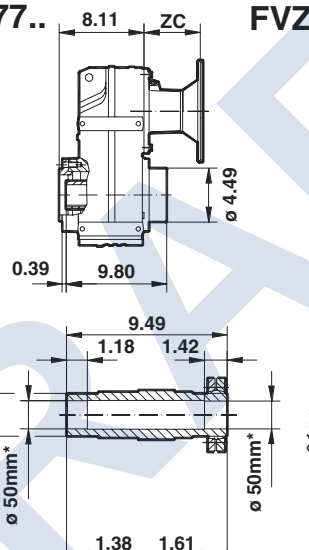

FVZ77..

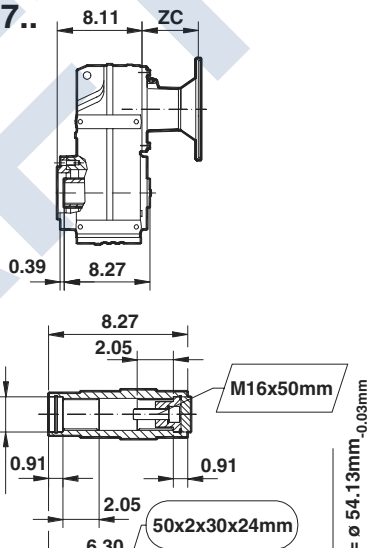

		AK1	GA1	AJ1	BB1	BD1	C	AA	BF1	ZC	ZE	FU	L	FY	FZ
FAF77 FHZ77 FVZ77	AM184	8.50	0.39	7.250	0.20	8.98	13.60	0.12	0.59	5.49	0.65	1.125	2.72	1.24	0.250

DRAFT

*Refer to page 101 for tolerance information
Dimensions subject to change without notice
Refer to page 94 for Alternate Shafts
See page 99 for Compound Reducer Information

Pull Cord Informaiton

DRAFT

ER6022

For full product information, visit www.sti.com. Use the SpeedSPEC Code for quick access to the specific web age.

Rope Pull Emergency Stop Switch

- Rope spans up to 80 m (262 ft.) means fewer number of switches required per application
- Tension indicator makes system setup and rope tension maintenance easy
- Contact arrangements of 2 N/C + 1 N/O, 3 N/C + 1 N/O or 2 N/C + 2 N/O
- IP67 (NEMA 6) enclosure enables the ER6022 switch to withstand water washdown cleaning
- Reset button—the blue reset button must be pushed in order to return to "machine run" condition following switch actuation by a pulled or slacked rope
- Indicator beacon—the optional dual indicator beacon, available in 24 VDC or 120 VAC, can be wired to flash red to indicate a tripped switch or glow a constant green to indicate a properly reset switch
- E-stop button—the ER6022 has two mounting positions where the optional E-stop button may be installed; the E-stop button may be added or replaced in the field
- Rubber bellows contain UV inhibitor making the switches suitable for outdoor applications



Conforms to IEC947-5-1, IEC947-5-5, EN418, UL508, BS5304
UL and C-UL listed, TUV certified

Specifications

Electrical	All Models
Contact Configurations:	2 N/C + 1 N/O, 3 N/C + 1 N/O, 2 N/C + 2 N/O
Safety Contacts:	2 N/C, 3 N/C
Switching Ability	AC: 240 V–3 A, 120 V–6 A, Inductive, DC: 24 V–2.5 A, Inductive
Auxiliary Contacts:	1 N/O, 2 N/O
Max Switching Current/Volt/Amp:	240 V/720 VA
Minimum Current:	5 V 5 mA DC
Electrical Life:	1 x 10^6 minimum
Mechanical	
LED Indicator Beacon:	24 VDC, 120 VAC
Mechanical	1 million minimum
Mounting:	Any position
Mounting Hardware:	4 x M5 screws
Max Rope Span:	80 m (262 ft.)
Operation Force:	< 125 N (28 lb.)
Tensioning Force to Run Position:	130 N (23 lb.) typical
Case Material:	Die-cast aluminum alloy
Eye Nut Material:	Stainless Steel
Stainless Accessory Items:	304 Stainless Steel
Wiring Entry:	3 x M20 or 3 x 0.5 in. NPT
Weight:	880 g (31 oz.)
Color:	Yellow
Mechanical Life:	1 x 10^6 minimum
Environmental	
Protection:	IP67 (NEMA 6)
Operating Temperature:	-25 to 80°C (-13 to 176°F)
Cleaning:	Water washdown
Compliance	
Standards:	IEC947-5-1, IEC947-5-5, EN418, UL508, BS5304
Approvals/Listings:	CE marked for all applicable directives, UL and C-UL, TUV

Specifications are subject to change without notice.

Note: The safety contacts of the STI switches are described as normally closed (N/C)—i.e., with the rope properly tensioned and the machine able to be started.

DRAFT

Operation



Blue Reset Knob
A blue reset button is provided to easily return the unit back to its machine-run position after actuation.



Emergency Push Button
The emergency push button may be installed or repositioned in the field. The ER6022 has two possible mounting positions for the emergency stop button.

Installation Hardware Available

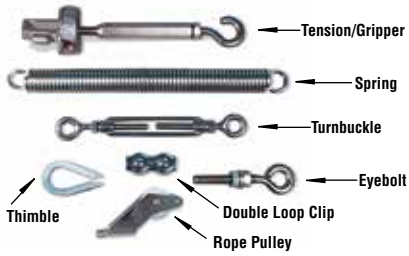

Installation Hardware
Individual hardware items may be purchased for specific installation requirements.



RK Rope Tension Kit
The RK Rope Tension Kit comes with all of the required hardware for most installations. A spring is required as shown in the installation example below.
For up to 50 m rope span, one rope end is terminated with a thimble, permanent clamp, and quick link attached.
For over 50 m rope span, 2 Tension/Gripper assemblies are supplied (no quick link.)

Contact Arrangements

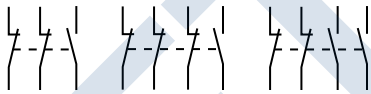

	0 mm / 0 in	3.5 / 0.14		14.5 / 0.57	17.0 / 0.67
2NC + 1NO Versions	Rope Slack		Tension Range		Rope Pulled
11/12					
21/22					
33/34					

3NC + 1NO Versions	Rope Slack	Tension Range	Rope Pulled
11/12			
21/22			
33/34			
43/44			

2NC + 2NO Versions	Rope Slack	Tension Range	Rope Pulled
11/12			
21/22			
33/34			
43/44			

□ Contact Open ■ Contact Closed

Mounting Specification

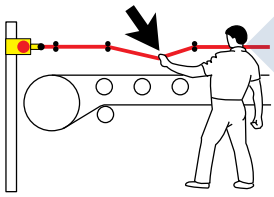

For a guide to installing, see “Proper Installation of Rope or Wire Pull Emergency Stop Devices” in the Expert Area Section of this catalog on page A-78.

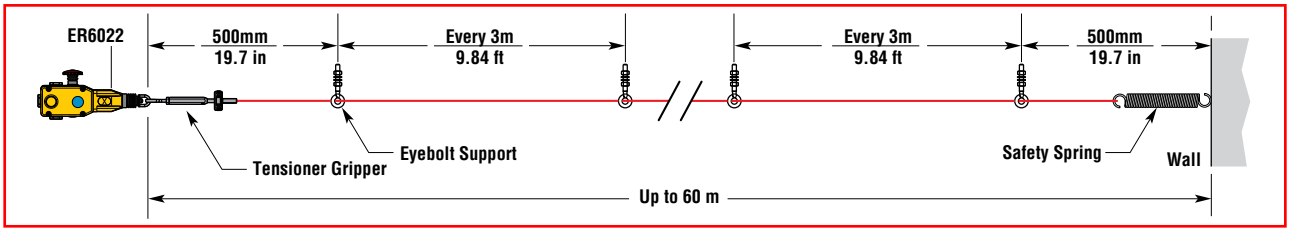

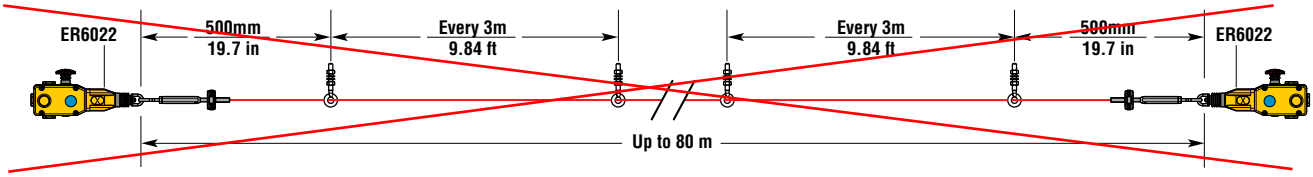

DRAFT

Dimensions (mm/in.)

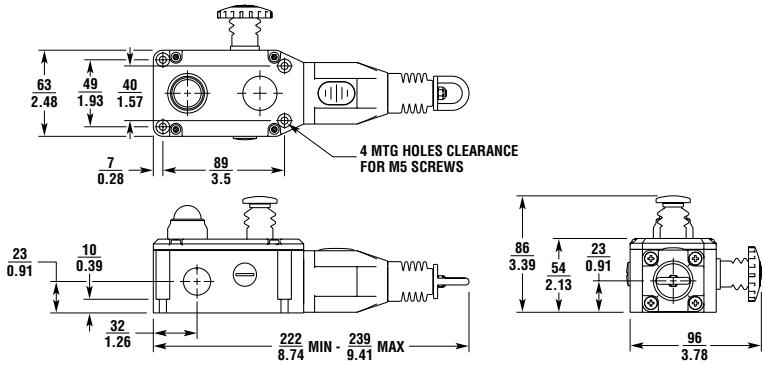

Applications

Typical applications are on conveyor systems and across rotating machinery, and around hazardous areas.

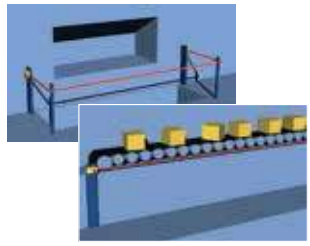

Ordering

Model	E-stop	Indicator Beacon	Contacts	Wiring Entry	Part No.
ER Switches with 3 pole contact blocks					
ER6022-021M	Not included	Not included	2 N/C + 1 N/O	3 x M20	44506-5010
ER6022-021N	Not included	Not included	2 N/C + 1 N/O	3 x 1/2 in. NPT	44506-5020
ER6022-021ME	Included	Not included	2 N/C + 1 N/O	3 x M20	44506-5210
ER6022-021NE	Included	Not included	2 N/C + 1 N/O	3 x 1/2 in. NPT	44506-5220
ER6022-021MEL	Included	Included	2 N/C + 1 N/O	3 x M20	44506-5410
ER6022-021NEL	Included	Included	2 N/C + 1 N/O	3 x 1/2 in. NPT	44506-5420
ER6022-021NELAC	Included	Included, 120 VAC	2 N/C + 1 N/O	1/2" NPT	44506-5423
ER Switches with 4 pole contact blocks					
ER6022-031M	Not included	Not included	3 N/C + 1 N/O	M20	44506-5050
ER6022-031N	Not included	Not included	3 N/C + 1 N/O	1/2 in. NPT	44506-5060
ER6022-022M	Not included	Not included	2 N/C + 2 N/O	M20	44506-5070
ER6022-022N	Not included	Not included	2 N/C + 2 N/O	1/2 in. NPT	44506-5080
ER6022-031ML	Not included	Included, 24 VDC	3 N/C + 1 N/O	M20	44506-5150
ER6022-031NL	Not included	Included, 24 VDC	3 N/C + 1 N/O	1/2 in. NPT	44506-5160
ER6022-022ML	Not included	Included, 24 VDC	2 N/C + 2 N/O	M20	44506-5170
ER6022-022NL	Not included	Included, 24 VDC	2 N/C + 2 N/O	1/2 in. NPT	44506-5180
ER6022-031ME	Included	Not included	3 N/C + 1 N/O	M20	44506-5250
ER6022-031NE	Included	Not included	3 N/C + 1 N/O	1/2 in. NPT	44506-5260
ER6022-022ME	Included	Not included	2 N/C + 2 N/O	M20	44506-5270
ER6022-022NE	Included	Not included	2 N/C + 2 N/O	1/2 in. NPT	44506-5280
ER6022-031MEL	Included	Included, 24 VDC	3 N/C + 1 N/O	M20	44506-5450
ER6022-031NEL	Included	Included, 24 VDC	3 N/C + 1 N/O	1/2 in. NPT	44506-5460
ER6022-022MEL	Included	Included, 24 VDC	2 N/C + 2 N/O	M20	44506-5470
ER6022-022NEL	Included	Included, 24 VDC	2 N/C + 2 N/O	1/2 in. NPT	44506-5480
ER6022-031NELAC	Included	Included, 120 VAC	3 N/C + 1 N/O	1/2 in. NPT	44506-5463
ER6022-022NELAC	Included	Included, 120 VAC	2 N/C + 2 N/O	1/2 in. NPT	44506-5483

Accessories					Part No.
Stainless Steel Rope Kits	**Quick Link**	**Eye-bolts**	**Tension/ Gripper Assembly**	**Allen Wrench**	
RK5, 5 m Kit	Yes	3	1	1	44506-2705
RK10, 10 m Kit	Yes	5	1	1	44506-2710
RK15, 15 m Kit	Yes	7	1	1	44506-2715
RK20, 20 m Kit	Yes	9	1	1	44506-2720
RK30, 30 m Kit	Yes	12	1	1	44506-2730
RK50, 50 m Kit	Yes	20	1	1	44506-2750
RK80, 80 m Kit	No	30	2	2	44506-2780
RK100, 100 m Kit	No	37	2	2	44506-2711
RK126, 126 m Kit	No	45	2	2	44505-2726
Rope Only					
R5M, 5 m Rope Only					44506-3705
R10M, 10 m Rope Only					44506-3710
R20M, 20 m Rope Only					44506-3720
R30M, 30 m Rope Only					44506-3730
R50M, 50 m Rope Only					44506-3750
R80M, 80 m Rope Only					44506-3780
R100M, 100 m Rope Only					44506-3711
R126M, 126 m Rope Only					44506-3726

Accessories	Part No.
SM06-SL500, Replacement Lid 24 VDC	44506-5700
SM06-SL510, Replacement Lid/LED 24 VDC	44506-5710
SM06-SL510AC, Replacement Lid/LED 120 VAC (consult factory for complete switch with 120 VAC beacon)	44506-5711
SM06-TK00, Tensioner Kit (Turnbuckle, 8 Rope Grips & 4 Thimbles)	44506-0700
SM06-TG00, Tensioner Gripper, Stainless Steel	44506-4700
SM06-EB10, Eye Bolt, Stainless Steel, 8 per pack	44506-4710
SM06-EB20, Eye Bolt, Galvanized	44506-0720
SM06-DL20, Double Loop Clip, Stainless Steel, 4 per pack	44506-4720
SM06-DL21, Double Loop Clip, Galvanized, 4 per pack	44506-4721
SM06-THSS, Thimble, Stainless Steel, 4 per pack	44506-4770
SM06-THGV, Thimble, Galvanized, 4 per pack	44506-4771
SM06-QLSS, Quick Link, Stainless Steel	44506-4772
SM06-TB30, Turnbuckle, Stainless Steel	44506-4730
SM06-TB31, Turnbuckle, Galvanized	44506-4731
SM06-SP30, Spring, Galvanized	44506-0730
SM06-SP50, Spring, Stainless Steel	44506-4750
SM06-RPSS, Rope Pulley, Stainless Steel	44506-4780
SM06-ES60, E-Stop Mechanism	44506-4760
SM06-LF40, Replacement LED Indicator Beacon, 24 VDC	44506-4740
SM06-LF41, Replacement LED Indicator Beacon, 120 VAC	44506-4741

DRAFT

Safety Precautions

Operating instructions

Installation must be in accordance with the following steps and stated specifications and should be carried out by suitably competent personnel. Adherence to the recommended maintenance instructions forms part of the warranty.

⚠ WARNING Do not defeat, tamper, remove or bypass this unit. Severe injury to personnel could result.

Optional 24 VDC Indicator Beacon

When +24VDC is applied to the **red** wire, the beacon will illuminate red and flash.
When +24 VDC is applied to the **green** wire, the beacon will illuminate green.

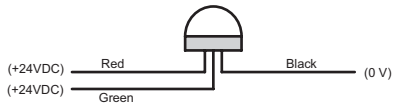

Optional 120 VAC Indicator Beacon

When +120VAC is applied to the **red** wire, the beacon will illuminate red and flash.
When +120 VAC is applied to the **green** wire, the beacon will illuminate green.

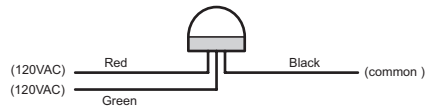

Tension Indicator

Indicator shown with steel rope properly adjusted.

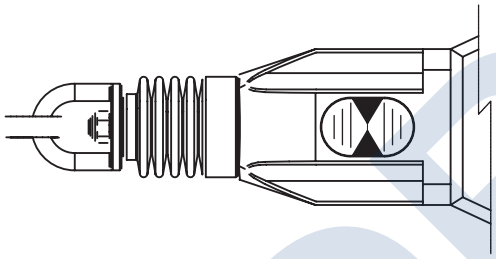

⚠ WARNING

1. Installation of all Safety Rope Switch systems must be in accordance with a risk assessment for the individual application. Installation must only be carried out by competent personnel and in accordance with these instructions.
2. Rope support eyebolts must be fitted at 2.5 m. min. to 3 m. max. intervals along all rope lengths between switches. The rope must be supported no more than 500 mm from the switch eyebolt or Safety Spring (if used). It is important that this first 500 mm is not used as part of the active protection coverage.
3. M5 mounting bolts must be used to fix the switches. Tightening torque for mounting bolts to ensure reliable fixing is 4 Nm. Tightening torque for the lid screws, conduit entry plugs and cable glands must be 1.5 Nm to ensure IP seal. Only use correct sizing glands for conduit entry and cable outside diameter.
4. Tensioning of rope is achieved by use of tensioner / gripper assemblies. Upon installation, tension to mid-position as indicated by the red arrows in the viewing window of each switch. Check operation for all switches and the control circuits by puling the rope at various locations along the active protection area and resetting each switch by depressing the Blue Reset button. Ensure each time that the switches latch off and require manual resetting by depressing the Blue Reset button. Increase the system tension further, if required, depending upon the checks along the active length of coverage. If fitted with a Mushroom type E-Stop button (Red) then test and reset each switch to ensure function of control circuits. Typical operational conditions for successful operation of system is less than 75 N. pulling force and less than 150 mm deflection of rope between eyebolt supports. If the optional LED is fitted but is not used, ensure that the conductors remain coiled and tied to the tie hole in the LED flange.
5. Every week: Check correct operation of system at locations along all coverage length. Check for nominal tension setting, re-tension rope if necessary. Every 6 months: Isolate power and remove cover. Check screw terminal tightness and check for signs of moisture ingress. Never attempt to repair any switch.

DRAFT

Terms and Conditions of Sale

1. Offer; Acceptance. These terms and conditions (these "Terms") are deemed part of all quotes, agreements, purchase orders, acknowledgments, price lists, catalogs, manuals, brochures and other documents, whether electronic or in writing, relating to the sale of products or services (collectively, the "Products") by Omron Electronics LLC and its subsidiary companies ("Omron"). Omron objects to any terms or conditions proposed in Buyer's purchase order or other documents which are inconsistent with, or in addition to, these Terms.
2. Prices; Payment Terms. All prices stated are current, subject to change without notice by Omron. Omron reserves the right to increase or decrease prices on any unshipped portions of outstanding orders. Payments for Products are due net 30 days unless otherwise stated in the invoice.
3. Discounts. Cash discounts, if any, will apply only on the net amount of invoices sent to Buyer after deducting transportation charges, taxes and duties, and will be allowed only if (i) the invoice is paid according to Omron's payment terms and (ii) Buyer has no past due amounts.
4. Interest. Omron, at its option, may charge Buyer 1-1/2% interest per month or the maximum legal rate, whichever is less, on any balance not paid within the stated terms.
5. Orders. Omron will accept no order less than $200 net billing.
6. Governmental Approvals. Buyer shall be responsible for, and shall bear all costs involved in, obtaining any government approvals required for the importation or sale of the Products.
7. Taxes. All taxes, duties and other governmental charges (other than general real property and income taxes), including any interest or penalties thereon, imposed directly or indirectly on Omron or required to be collected directly or indirectly by Omron for the manufacture, production, sale, delivery, importation, consumption or use of the Products sold hereunder (including customs duties and sales, excise, use, turnover and license taxes) shall be charged to and remitted by Buyer to Omron.
8. Financial. If the financial position of Buyer at any time becomes unsatisfactory to Omron, Omron reserves the right to stop shipments or require satisfactory security or payment in advance. If Buyer fails to make payment or otherwise comply with these Terms or any related agreement, Omron may (without liability and in addition to other remedies) cancel any unshipped portion of Products sold hereunder and stop any Products in transit until Buyer pays all amounts, including amounts payable hereunder, whether or not then due, which are owing to it by Buyer. Buyer shall in any event remain liable for all unpaid accounts.
9. Cancellation; Etc. Orders are not subject to rescheduling or cancellation unless Buyer indemnifies Omron against all related costs or expenses.
10. Force Majeure. Omron shall not be liable for any delay or failure in delivery resulting from causes beyond its control, including earthquakes, fires, floods, strikes or other labor disputes, shortage of labor or materials, accidents to machinery, acts of sabotage, riots, delay in or lack of transportation or the requirements of any government authority.
11. Shipping; Delivery. Unless otherwise expressly agreed in writing by Omron:
    a. Shipments shall be by a carrier selected by Omron; Omron will not drop ship except in "break down" situations.
    b. Such carrier shall act as the agent of Buyer and delivery to such carrier shall constitute delivery to Buyer;
    c. All sales and shipments of Products shall be FOB shipping point (unless otherwise stated in writing by Omron), at which point title and risk of loss shall pass from Omron to Buyer; provided that Omron shall retain a security interest in the Products until the full purchase price is paid;
    d. Delivery and shipping dates are estimates only; and
    e. Omron will package Products as it deems proper for protection against normal handling and extra charges apply to special conditions.
12. Claims. Any claim by Buyer against Omron for shortage or damage to the Products occurring before delivery to the carrier must be presented in writing to Omron within 30 days of receipt of shipment and include the original transportation bill signed by the carrier noting that the carrier received the Products from Omron in the condition claimed.
13. Warranties. (a) Exclusive Warranty. Omron's exclusive warranty is that the Products will be free from defects in materials and workmanship for a period of twelve months from the date of sale by Omron (or such other period expressed in writing by Omron). Omron disclaims all other warranties, express or implied. (b) Limitations. OMRON MAKES NO WARRANTY OR REPRESENTATION, EXPRESS OR IMPLIED, ABOUT NON-INFRINGEMENT, MERCHANTABILITY OR FITNESS FOR A PARTICULAR PURPOSE OF THE PRODUCTS. BUYER ACKNOWLEDGES THAT IT ALONE HAS DETERMINED THAT THE PRODUCTS WILL SUITABLY MEET THE REQUIREMENTS OF THEIR INTENDED USE. Omron further disclaims all warranties and responsibility of any type for claims or expenses based on infringement by the Products or otherwise of any intellectual property right. (c) Buyer Remedy. Omron's sole obligation hereunder shall be, at Omron's election, to (i) replace (in the form originally shipped with Buyer responsible for labor charges for removal or replacement thereof) the non-complying Product, (ii) repair the non-complying Product, or (iii) repay or credit Buyer an amount equal to the purchase price of the non-complying Product; provided that in no event shall Omron be responsible for warranty, repair, indemnity or any other claims or expenses regarding the Products unless Omron's analysis confirms that the Products were properly handled, stored, installed and maintained and not subject to contamination, abuse, misuse or inappropriate modification. Return of any Products by Buyer must be approved in writing by Omron before shipment. Omron Companies shall not be liable for the suitability or unsuitability or the results from the use of Products in combination with any electrical or electronic components, circuits, system assemblies or any other materials or substances or environments. Any advice, recommendations or information given orally or in writing, are not to be construed as an amendment or addition to the above warranty. See http://www.omron247.com or contact your Omron representative for published information.
14. Limitation on Liability; Etc. OMRON COMPANIES SHALL NOT BE LIABLE FOR SPECIAL, INDIRECT, INCIDENTAL, OR CONSEQUENTIAL DAMAGES, LOSS OF PROFITS OR PRODUCTION OR COMMERCIAL LOSS IN ANY WAY CONNECTED WITH THE PRODUCTS, WHETHER SUCH CLAIM IS BASED IN CONTRACT, WARRANTY, NEGLIGENCE OR STRICT LIABILITY. Further, in no event shall liability of Omron Companies exceed the individual price of the Product on which liability is asserted.
15. Indemnities. Buyer shall indemnify and hold harmless Omron Companies and their employees from and against all liabilities, losses, claims, costs and expenses (including attorney's fees and expenses) related to any claim, investigation, litigation or proceeding (whether or not Omron is a party) which arises or is alleged to arise from Buyer's acts or omissions under these Terms or in any way with respect to the Products. Without limiting the foregoing, Buyer (at its own expense) shall indemnify and hold harmless Omron and defend or settle any action brought against such Companies to the extent based on a claim that any Product made to Buyer specifications infringed intellectual property rights of another party.
16. Property; Confidentiality. Any intellectual property in the Products is the exclusive property of Omron Companies and Buyer shall not attempt to duplicate it in any way without the written permission of Omron. Notwithstanding any charges to Buyer for engineering or tooling, all engineering and tooling shall remain the exclusive property of Omron. All information and materials supplied by Omron to Buyer relating to the Products are confidential and proprietary, and Buyer shall limit distribution thereof to its trusted employees and strictly prevent disclosure to any third party.
17. Export Controls. Buyer shall comply with all applicable laws, regulations and licenses regarding (i) export of products or information; (iii) sale of products to "forbidden" or other proscribed persons; and (ii) disclosure to non-citizens of regulated technology or information.
18. Miscellaneous. (a) Waiver. No failure or delay by Omron in exercising any right and no course of dealing between Buyer and Omron shall operate as a waiver of rights by Omron. (b) Assignment. Buyer may not assign its rights hereunder without Omron's written consent. (c) Law. These Terms are governed by the law of the jurisdiction of the home office of the Omron company from which Buyer is purchasing the Products (without regard to conflict of law principles). (d) Amendment. These Terms constitute the entire agreement between Buyer and Omron relating to the Products, and no provision may be changed or waived unless in writing signed by the parties. (e) Severability. If any provision hereof is rendered ineffective or invalid, such provision shall not invalidate any other provision. (f) Setoff. Buyer shall have no right to set off any amounts against the amount owing in respect of this invoice. (g) Definitions. As used herein, "including" means "including without limitation"; and "Omron Companies" (or similar words) mean Omron Corporation and any direct or indirect subsidiary or affiliate thereof.

Certain Precautions on Specifications and Use

1. Suitability of Use. Omron Companies shall not be responsible for conformity with any standards, codes or regulations which apply to the combination of the Product in the Buyer's application or use of the Product. At Buyer's request, Omron will provide applicable third party certification documents identifying ratings and limitations of use which apply to the Product. This information by itself is not sufficient for a complete determination of the suitability of the Product in combination with the end product, machine, system, or other application or use. Buyer shall be solely responsible for determining appropriateness of the particular Product with respect to Buyer's application, product or system. Buyer shall take application responsibility in all cases but the following is a non-exhaustive list of applications for which particular attention must be given:
   (i) Outdoor use, uses involving potential chemical contamination or electrical interference, or conditions or uses not described in this document.
   (ii) Use in consumer products or any use in significant quantities.
   (iii) Energy control systems, combustion systems, railroad systems, aviation systems, medical equipment, amusement machines, vehicles, safety equipment, and installations subject to separate industry or government regulations.
   (iv) Systems, machines and equipment that could present a risk to life or property. Please know and observe all prohibitions of use applicable to this Product.
   NEVER USE THE PRODUCT FOR AN APPLICATION INVOLVING SERIOUS RISK TO LIFE OR PROPERTY OR IN LARGE QUANTITIES WITHOUT ENSURING THAT THE SYSTEM AS A WHOLE HAS BEEN DESIGNED TO ADDRESS THE RISKS, AND THAT THE OMRON'S PRODUCT IS PROPERLY RATED AND INSTALLED FOR THE INTENDED USE WITHIN THE OVERALL EQUIPMENT OR SYSTEM.
2. Programmable Products. Omron Companies shall not be responsible for the user's programming of a programmable Product, or any consequence thereof.
3. Performance Data. Data presented in Omron Company websites, catalogs and other materials is provided as a guide for the user in determining suitability and does not constitute a warranty. It may represent the result of Omron's test conditions, and the user must correlate it to actual application requirements. Actual performance is subject to the Omron's Warranty and Limitations of Liability.
4. Change in Specifications. Product specifications and accessories may be changed at any time based on improvements and other reasons. It is our practice to change part numbers when published ratings or features are changed, or when significant construction changes are made. However, some specifications of the Product may be changed without any notice. When in doubt, special part numbers may be assigned to fix or establish key specifications for your application. Please consult with your Omron's representative at any time to confirm actual specifications of purchased Product.
5. Errors and Omissions. Information presented by Omron Companies has been checked and is believed to be accurate; however, no responsibility is assumed for clerical, typographical or proofreading errors or omissions.

OMRON
AUTOMATION & SAFETY

DRAFT

OMRON AUTOMATION AND SAFETY • THE AMERICAS HEADQUARTERS • Chicago, IL USA • 847.843.7900 • 800.556.6766 • www.omron247.com

OMRON CANADA, INC. • HEAD OFFICE
Toronto, ON, Canada • 416.286.6465 • 866.986.6766 • www.omron247.com

OMRON ELECTRONICS DE MEXICO • HEAD OFFICE
México DF • 52.55.59.01.43.00 • 01-800-226-6766 • mela@omron.com

OMRON ELECTRONICS DE MEXICO • SALES OFFICE
Apodaca, N.L. • 52.81.11.56.99.20 • 01-800-226-6766 • mela@omron.com

OMRON ELETRÔNICA DO BRASIL LTDA • HEAD OFFICE
São Paulo, SP, Brasil • 55.11.2101.6300 • www.omron.com.br

OMRON ARGENTINA • SALES OFFICE
Cono Sur • 54.11.4783.5300

OMRON CHILE • SALES OFFICE
Santiago • 56.9.9917.3920

OTHER OMRON LATIN AMERICA SALES
54.11.4783.5300

OMRON EUROPE B.V. • Wegalaan 67-69, NL-2132 JD, Hoofddorp, The Netherlands. • +31 (0) 23 568 13 00 • www.industrial.omron.eu

Authorized Distributor:

Automation Control Systems
• Machine Automation Controllers (MAC) • Programmable Controllers (PLC)
• Operator interfaces (HMI) • Distributed I/O • Software

Drives & Motion Controls
• Servo & AC Drives • Motion Controllers & Encoders

Temperature & Process Controllers
• Single and Multi-loop Controllers

Sensors & Vision
• Proximity Sensors • Photoelectric Sensors • Fiber-Optic Sensors
• Amplified Photomicrosensors • Measurement Sensors
• Ultrasonic Sensors • Vision Sensors

Industrial Components
• RFID/Code Readers • Relays • Pushbuttons & Indicators
• Limit and Basic Switches • Timers • Counters • Metering Devices
• Power Supplies

Safety
• Laser Scanners • Safety Mats • Edges and Bumpers • Programmable Safety Controllers • Light Curtains • Safety Relays • Safety Interlock Switches

C57I-E-01 03/15 Note: Specifications are subject to change. © 2015 Omron Electronics LLC Printed in U.S.A.

Printed on recycled paper.

Motion Detector

DRAFT

Item # 312





Cost-effective equipment protection

SITRANS WM100 motion sensor



DRAFT

Accurate monitoring in harsh conditions
SITRANS WM100 is a heavy-duty zero-speed alarm switch. This non-contacting unit provides cost-effective equipment protection even in the harshest conditions. It is suitable for heavy industries such as mining, aggregates or cement. The WM100 monitors the absence of motion on moving or rotating equipment. Key applications include tail pulleys, driven pulleys, motor shaft sensing, screw conveyor flights, and bucket elevators.

Design
Lightweight yet rugged, SITRANS WM100 is compact and easy to install. With its rugged cast aluminum housing, it is suitable for outdoor installation.

Mode of operation
Process protection devices act as early warning systems to avoid costly process interruptions and equipment breakdowns. Located outside of the process, Sitrans WM100 accurately detects operating conditions without wear on the sensor. Sitrans WM100 can be mounted up to 100 mm (4") from the ferrous target. The robust motion sensor provides the contacts to shutdown machinery whenever zero speed is detected. On belt, drag, and screw conveyors, or on bucket elevators, fans and pumps, the zero speed alarm option can warn instantly of equipment malfunctions. It alarms to minimize spillage, prevent extensive damage or even fire caused by belt slippage at the head pulley and warn against conveyor malfunction.

Siemens probes work on the principle of Faraday's Law of Electromagnetic Induction. When a ferromagnetic object enters the probe's permanent magnetic field, it distorts the flux, causing its coil windings to generate a voltage. This voltage is proportional to the strength of the magnet and the number of wire turns in the coil (constant in the probes) and the speed at which the ferrous target passes through the flux. The generated voltage is also inversely proportional to the square of the distance between the target and the probe.







SITRANS WM100

Non-contacting motion sensors detect changes in motion and speed of conveying, reciprocating and rotating machinery. The sensors are located outside of the process, accurately detecting conditions without wear on the sensor. Motion sensors can warn of equipment malfunction and shut down machinery in case of slowdown or failure. They are rugged and perform even in harsh conditions. On belt, drag, and screw conveyors, or on bucket elevators, fans, and pumps, the speed alarm option can warn instantly of equipment problems.

- Up to 100 mm (4") gap between SITRANS WM100 and targets
- Non-contacting design eliminates the need for lubricating, cleaning, and part replacement
- Visual indication of target triggered pulse
- Rugged, low maintenance suitable for tough environments
- 1 SPDT Form C relay contact
- Provides cost-effective protection

	SITRANS WM100
Mode of operation	
Measuring principle	Disruption of a magnetic field by ferrous target
Typical applications	Monitors absence or presence of motion in harsh conditions
Output	
Contact	1 SPDT Form C dry relay contact, rated 5A at 250 V AC, fail-safe operation
Time delay	Start up: 10 to 14 seconds (5 to 7 seconds with 12 ppm jumper installed)
Zero Speed (selected via a common jumper)	• 5 seconds ±1 (minimum speed 10 to 15 ppm) or • 10 seconds ±2 (minimum speed 5 to 7.5 ppm)
Rated operating conditions	
Operating temperature	• -40 to 60 °C (-40 to 140 °F)
Design	
Probe body	Aluminum
Process mounting	2" NPSL
Connection box	Aluminum, ¾" NPT conduit entrance, 5 screw terminals plus grounding terminal for electrical connection, max. 12 AWG (3.30 mm^2) wire size
Gasketing	Neoprene
Display	Red LED for verification of pulses
Enclosure rating	Type NEMA 4X, 6, IP67
Dynamic range	
	• Minimum 6 or 12 pulses per minute • Maximum 3000 pulses per minute
Shipping weight	
	2 kg (4 lbs)
Power supply	
	• 115 V AC/50 to 60 Hz, 7 VA • 230 V AC/50 to 60 Hz, 7 VA • ±10 % of rated voltages
Certificates and approvals	
	• $CSA_{US/C}$, CE, C-TICK

DRAFT

Siemens AG
Industry Sector
Sensors and Communication
76181 KARLSRUHE
GERMANY

www.siemens.com/weighing

Subject to change without prior notice
Available as pdf only
Order No. 7ML1996-5LJ03
© Siemens AG 2010

The information provided contains merely general descriptions or characteristics of performance which in case of actual use do not always apply as described or which may change as a result of further development of the products. An obligation to provide the respective characteristics shall only exist if expressly agreed in the terms of the contract.

All product designations may be trademarks or product names of Siemens AG or supplier companies whose use by third parties for their own purposes violate the rights of the owners.

Compact Limit Switches Item # 314, 414, 513, 606

AEM2G Series (Metal Plunger Actuator)

- Die-cast metal housings
- 3m cable/5-pin M12 quick-disconnect (center and right)
- 1 N.O. and 1 N.C. contact on all units
- Compact size with standard 25mm hole spacing
- Wide offering of head actuators
- Epoxy resin-filled for IP67 rating
- Both snap-action (Z11) and slow-make/slow-break (X11) contacts available
- N.C. contacts are positive-opening operated unless otherwise noted.

AEM2G Series Compact Limit Switches Selection Chart

Part Number	Price	Drawing Link	Actuator Type	Max. Actuation Speed (m/s)	Min. Actuation Force (N) Torque (N•m)	Min. Positive Opening Force (N) Torque (N•m)	Contact Configuration	Connection Type	Photo
AEM2G11Z11-3	$27.50	PDF	Metal plunger	0.5	15	30	Diagram 1	Cable Out (bottom)	A
AEM2G11X11-3	$27.50	PDF					Diagram 2		
AEM2G1101Z11-3R	$25.50	PDF					Diagram 1	Cable Out (right)	
AEM2G1101Z11M	$24.50	PDF						5-pin M12 quick-disconnect (bottom)	
AEM2G1101Z11MR	$24.50	PDF						5-pin M12 quick-disconnect (right)	
AEM2G16Z11-3	$32.00	PDF	Metal plunger with dust cap	0.5	15	30	Diagram 1	Cable Out (bottom)	B
AEM2G16X11-3	$32.00	PDF					Diagram 2		
AEM2G1601Z11-3R	$27.50	PDF					Diagram 1	Cable Out (right)	
AEM2G1601Z11M	$25.50	PDF						5-pin M12 quick-disconnect (bottom)	
AEM2G1601Z11MR	$25.50	PDF						5-Pin M12 quick-disconnect (right)	
AEM2G18Z11-3	$38.00	PDF	Metal plunger with bevel cut	0.5	15	30	Diagram 1	Cable Out (bottom)	C
AEM2G1801Z11-3R	$38.00	PDF						Cable Out (right)	
AEM2G1801Z11M	$33.50	PDF						5-pin M12 quick-disconnect (bottom)	
AEM2G1801Z11MR	$33.50	PDF						5-pin M12 quick-disconnect (right)	
AEM2G21Z11-3	$30.00	PDF	Metal plunger with fixing nuts	0.5	15	30	Diagram 1	Cable Out (bottom)	D
AEM2G21X11-3	$30.00	PDF					Diagram 2		
AEM2G2101Z11-3R	$26.50	PDF					Diagram 1	Cable Out (right)	
AEM2G2101Z11M	$24.50	PDF						5-pin M12 quick-disconnect (bottom)	
AEM2G2101Z11MR	$24.50	PDF						5-pin M12 quick-disconnect (right)	

DRAFT

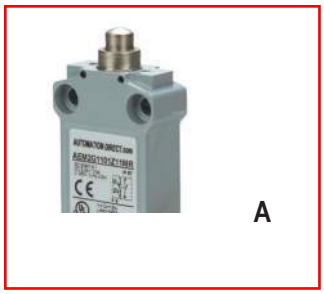

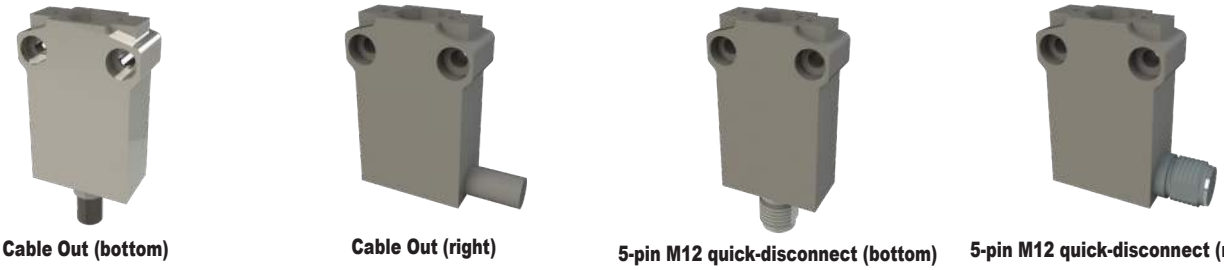

Cable Out (bottom) | Cable Out (right) | 5-pin M12 quick-disconnect (bottom) | 5-pin M12 quick-disconnect (right)

Compact Limit Switches

Compact Limit Switches Specifications		
Environmental		
Degree of Protection		IP67 according to IEC 60529
Temperature Range		Storage: -40 to 70°C (-40 to 158°F). Operating: -25 to 70°C [-13 to 158°F]
Mechanical Ratings		
Mechanical Life		10 million operations. Models G16, G92, G93: 5 million operations.
Enclosure Material		ZAMAK (zinc alloy)
Contact Blocks Rating		
Positive Opening		Yes, except G61, G92, G93
Electrical Ratings	***AC15***	Make: 100A @ 24VAC; 60A @ 120VAC; 30A @ 240VAC Break: 10A @ 24VAC; 6A @ 120VAC; 3A @ 240VAC
	DC13	2.8 A @ 24VDC; 0.55 A @ 125VDC; 0.27 A@250VDC
Maximum Switching Frequency		Contact blocks: all one cycle per second
Repeat Accuracy		0.05 mm on the operating points at 1 million operations
Short-Circuit Protection		10A @ <500V
Contact Resistance		25mΩ
Recommended Minimum Operating Speed		With slow-action contacts: 500mm per minute
Rated Insulation Voltage		B300, R300 according to UL508; 400V (degree of pollution: 3) according to IEC 60947-1
Connection Type		Cable: 3m PVC cable, 5 x 0.75mm^2 (18 AWG). Overall cable diameter: 8.20 mm (0.32 in.) Connector: 5-pin M12 quick-disconnect
Wiring Terminal Markings		According to CENELEC EN50013
Electrical Protection		Class I according to IEC60536-1
Contact Blocks Performance		
Operation Frequency		3600 ops/h
Electrical Durability (according to IEC 947-5-1)		Utilization categories AC-15 and DC-13; load factor of 0.5.
Torque		All: 0.5 N•m [0.8 Nm max]
Approvals		UL file E191072, CE

***To obtain the most current agency approval information, see the Agency Approval Checklist section on the specific part number's web page.**

DRAFT

Compact Limit Switches
Contacts Configuration

Limit switch types

Snap-action contact: A contact element in which the contact motion is independent of the speed of the actuator. This feature ensures reliable electrical performance even in applications involving very slow moving actuators.

Slow-make/slow-break contacts: A contact element in which the contact motion is dependent on the actuator speed.

5-Pin M12 connector

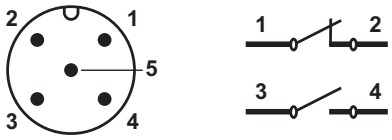

Contacts Configuration

Diagram 1
Z11 Snap-action contacts

1 N.O. and 1 N.C.

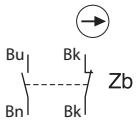

Diagram 2
X11 Slow-make/slow-break contacts

1 N.O. and 1 N.C.

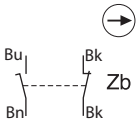

Bar Charts

Z11

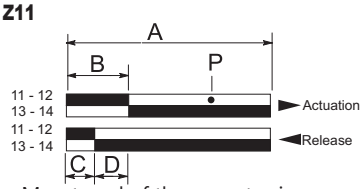

A = Max. travel of the operator in mm or degrees

B =Tripping travel of both contacts on actuation

C = Tripping travel of both contacts on release

D = Differential travel (between actuation and release)

P = Point from which positive opening is assured during actuation

X11

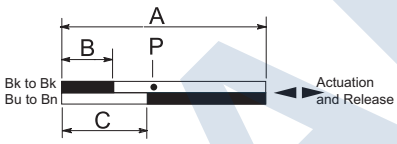

A = Max. travel of the operator in mm or degrees

B = Tripping travel of the N.C. contact

C = Tripping travel of the N.O. contact

P = Point from which positive opening is assured during actuation

Note: Green/yellow wire is physical earth ground.

= Contact open

= Contact closed

Bar Chart Examples (cam angle is 30 degrees)

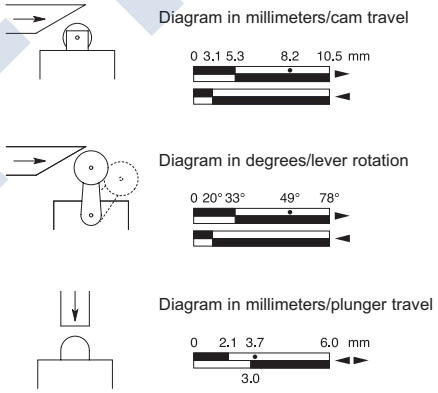

Note: Values represent travel of cam in direction of arrow.

Part Series	*Contact Configuration*	*Displacement Values mm [in] or degrees*			
		A	*B*	*C*	*P*
AEM2G11, AEM2G16, AEM2G18, AEM2G21	Z11	5.0 [0.20]	2.2 [0.09]	1.4 [0.06]	4.3 [0.17]
AEM2G11, AEM2G16, AEM2G21	X11	5.0 [0.20]	1.9 [0.07]	3.2 [0.13]	3.4 [0.13]
AEM2G12, AEM2G13, AEM2G14, AEM2G15, AEM2G17, AEM2G18, AEM2G22, AEM2G23, AEM2G24, AEM2G25	Z11	8.7 [0.34]	3.8 [0.15]	2.4 [0.09]	7.5 [0.30]
AEM2G12, AEM2G13, AEM2G14, AEM2G15, AEM2G22, AEM2G23, AEM2G24, AEM2G25	X11	8.7 [0.34]	3.3 [0.13]	5.7 [0.22]	5.9 [0.23]
AEM2G41, AEM2G42, AEM2G43, AEM2G45, AEM2G51, AEM2G71, AEM2G72, AEM2G73, AEM2G74, AEM2G75	Z11	74°	32°	21°	65°
AEM2G41, AEM2G42, AEM2G43, AEM2G45, AEM2G51, AEM2G71, AEM2G72, AEM2G73, AEM2G74, AEM2G75	X11	74°	28°	48°	50°
AEM2G61	Z11	74°	32°	21°	Not positive-opening
AEM2G61	X11	74°	28°	48°	
AEM2G92	Z11		20°	10°	
AEM2G93	Z11		20°	10°	

DRAFT

Polymer System

DRAFT

FKC CO., LTD.

2708 West 18th Street
Port Angeles, WA 98363

(360) 452-9472
FAX (360) 452-6880

San Luis West WWTP, AZ
Bill of Materials

Item #	FKC - Polymer System M-1200-5-P-120-P	Manufacturer	Part Number	Qty	Material of Construction
401	Mixing Chamber	FKC	NA	1	PVC
402	Buna-N O-Ring Dash 448	McMaster	9452K223	2	Buna-N
403	Mixing Motor 230VAC 1/3 HP 1800 RPM 56C	Leeson	11254.00	1	CS
404	Mixing Blade	FKC	NA	1	304L SS
405	Mechanical Seal	McMaster	9281K620	1	304L / Viton
406	Injection Vavle	Circle Valve	532T1-2M	1	316
407	1" Flow Meter	IFM	SM8601	1	Stainless Steel
408	Rotometer .5-5 GPM	Harrington	Blue White F-55500LA	1	Polysulfone
409	1" Actuated Floating Ball Valve	Bray	140100-11000SSKR-NA 70E031-113G0536/K	1	316
410	Pressure Regulator	McMaster	45805K68	1	Bronze
411	Inline Mixer	Harrington	Koflo 1-40C-4-6-2	1	PVC
412	1" PSS Isolator Ring W/Pressure Guage/Switch	Onyx/IFM	1" NPT PSS/PG2794	1	316/Buna-N
413	Pressure Relief Valve	McMaster	8088K140	1	Bronze
414	Calibration Column 6.34 GPH	Harrington	Koflo 500ML-SC	1	PVC
415	Polymer Pump 230VAC 1/2 HP	Seepex	MD 003-12	1	CS
416	Gauge Isolator/Pressure Guage 0-160 PSI	Harrington	TG-25T160SB-PVC	2	PVC
417	Pipe and Fittings Sch 80			As Req.	PVC
418	Frame	FKC	NA	1	304L SS
419	Polymer Flow Monitor	IFM	SI5006	1	
420	Screw-In Adapter for part SI5006	IFM	E40107	1	
421	Cordset for part SI5006	IFM	E18027	1	
422	Control Panel	TSI	NA	1	--
423	1/2" PSS Isolator Ring W/Pressure Guage/Switch	Onyx/IFM	1/2" NPT PSS/PG2794	1	PVC

DRAFT

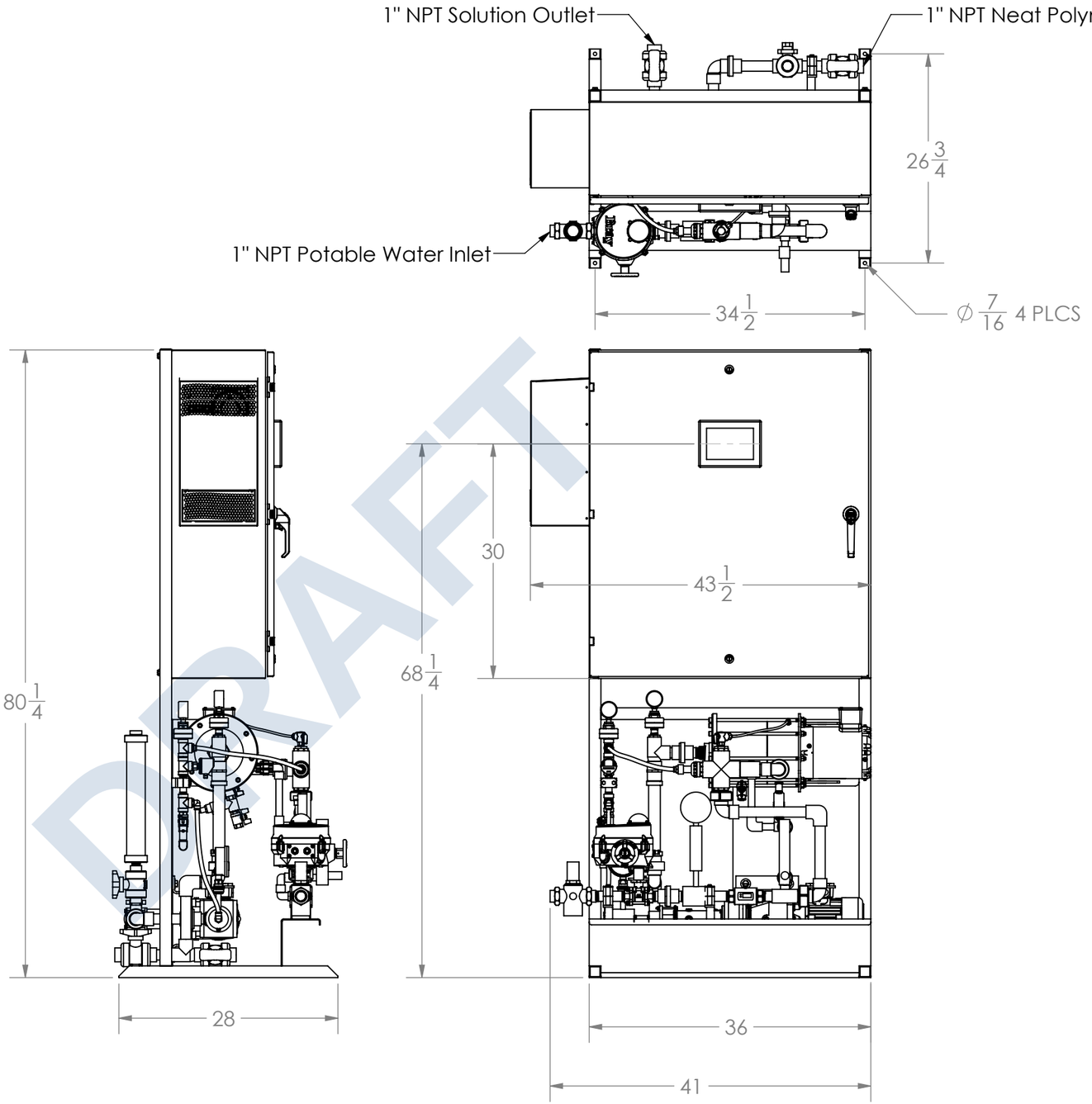

Note:
- Equipment Weight 350 lbs.
- Polymer System 120 VAC
- Mixer Motor 1/3 HP 230 VAC
- Pump Motor 1/2 HP 230 VAC

DRAFT

PROPRIETARY AND CONFIDENTIAL
THE INFORMATION CONTAINED IN THIS DRAWING IS THE SOLE PROPERTY OF FKC CO LTD. ANY REPRODUCTION IN PART OR AS A WHOLE WITHOUT THE WRITTEN PERMISSION OF FKC CO LTD IS PROHIBITED.

No.	Alteration	Date	Sign
2			
1			
0	Issued for Approval	4/9/25	MB

Job No. PS-524	Customer San Luis West WWTP San Luis, AZ	Wt. Lbs.
Drawing No. A524-400	Title Polymer Makedown System M-1200-5-P-120-P Assembly Details	Quantity 1
		Date 4/9/25
	FKC CO. LTD 2708 W 18th St. Port Angeles, WA 98363 (360) 452-9472 Fax (360) 452-6880	Drawn By MB
	Revision	SHEET 1 OF 2

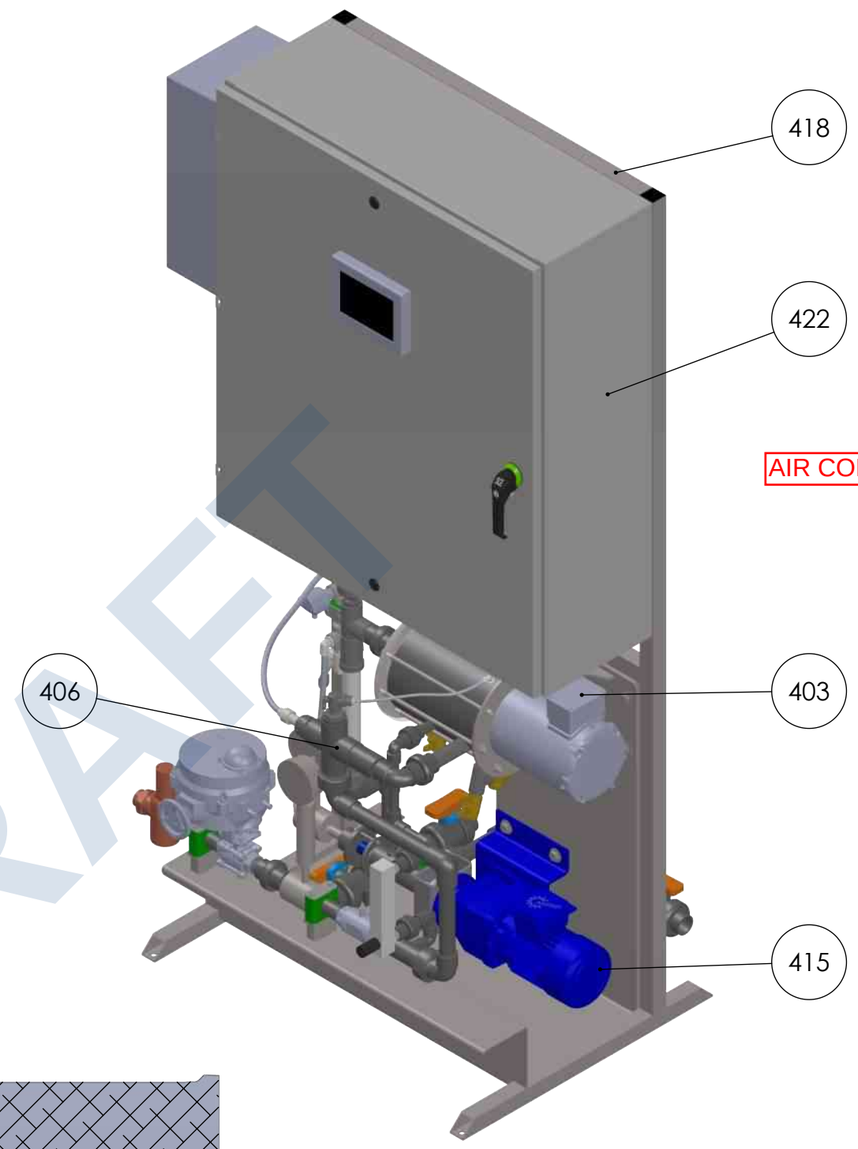

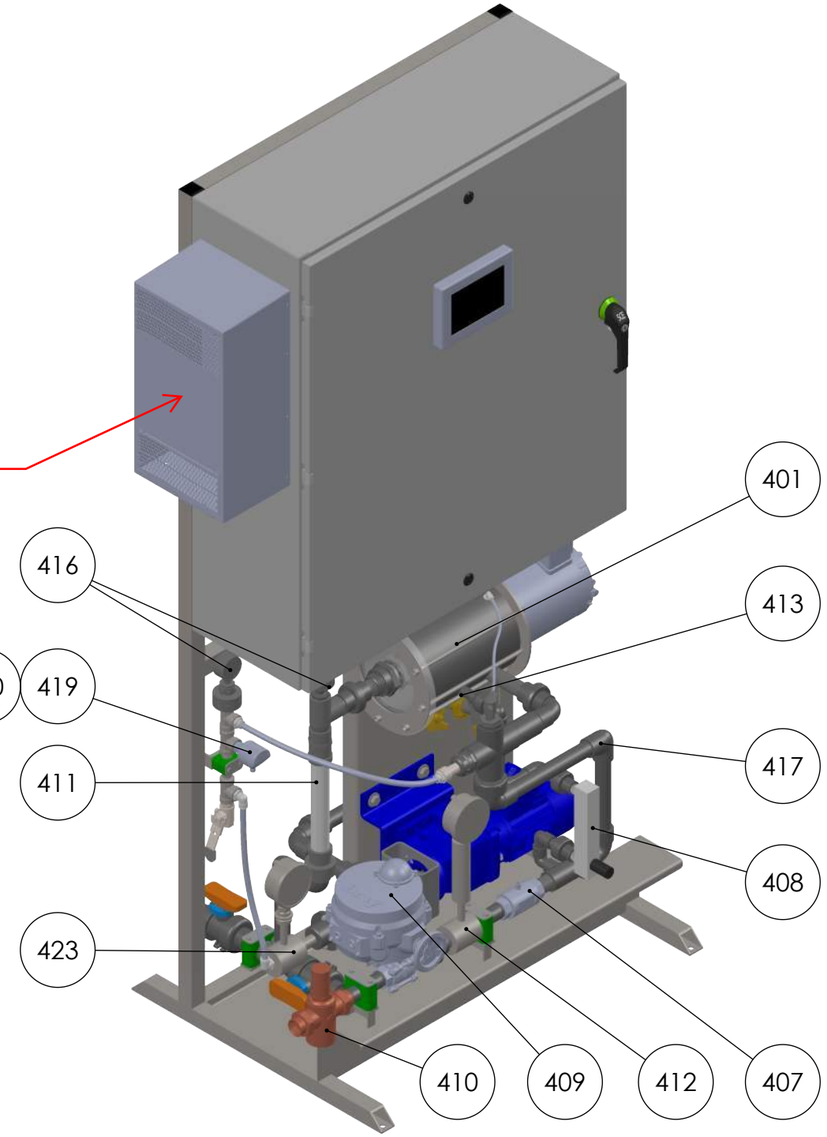

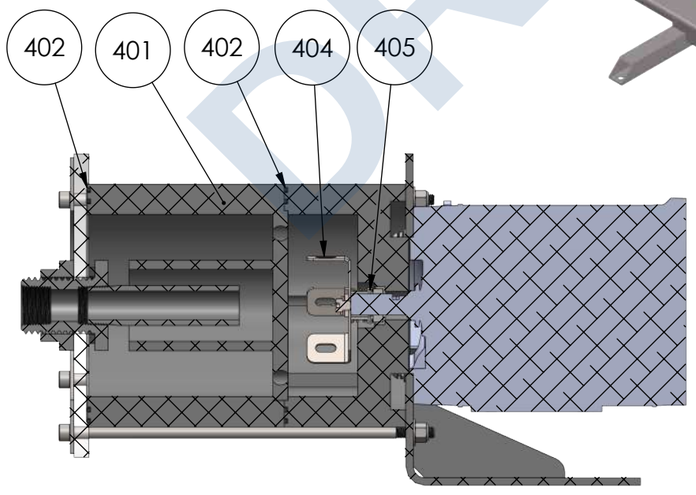

SECTION A-A
SCALE 1 : 5

DRAFT

PROPRIETARY AND CONFIDENTIAL
THE INFORMATION CONTAINED IN THIS DRAWING IS THE SOLE PROPERTY OF FKC CO LTD. ANY REPRODUCTION IN PART OR AS A WHOLE WITHOUT THE WRITTEN PERMISSION OF FKC CO LTD IS PROHIBITED.

No.	Alteration	Date	Sign
2			
1			
0	Issued for Approval	4/9/25	MB

Job No. PS-524	Customer San Luis West WWTP San Luis, AZ	Wt. Lbs.
Drawing No. G524-401	Title Polymer Makedown System M-1200-5-P-120-P Parts List	Quantity 1
		Date 4/9/25
	FKC CO. LTD 2708 W 18th St. Port Angeles, WA 98363 (360) 452-9472 Fax (360) 452-6880	Drawn By MB
	Revision	SHEET 2 OF 2

McMASTER-CARR®

Item # 402

Oil-Resistant Buna-N O-Ring

1/4 Fractional Width, Dash Number 448

$9.30 per pack of 2
9452K223

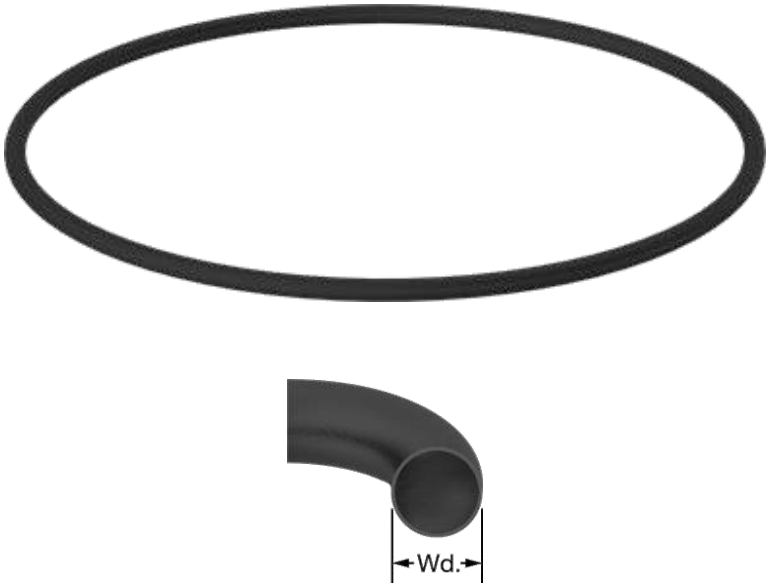

Material	Buna-N Rubber
Cross Section Shape	Round
Dash Number	448
Fractional	
Width	1/4
ID	9 1/2
OD	10
Actual	
Width	0.275"
ID	9.475"
OD	10.025"
Hardness	Durometer 70A (Medium)
For Use With	Acetic Acid Ammonia Ammonium Hydroxide Animal Oils Bases Boric Acid Butyl Alcohol Calcium Hydroxide Citric Acid Ethanol Ethylene Glycol Glycerin Grease Hydraulic Oils Isopropyl Alcohol Methanol Mineral Oils Motor Oil Petroleum Fluids Phosphoric Acid Potassium Hydroxide Sodium Bicarbonate Vegetable Oils Water
Specifications Met	ASTM D2000, SAE AS568, SAE J200
Temperature Range	-40° to 250° F
Color	Black
RoHS	RoHS 3 (2015/863/EU) Compliant
REACH	REACH (EC 1907/2006)

DRAFT

	(07/08/2021, 219 SVHC) Compliant
DFARS	Specialty Metals COTS-Exempt
Country of Origin	Vietnam
Schedule B	401693.0000
ECCN	EAR99

Made of Buna-N, these O-rings resist grease, hydraulic oil, and motor oil—plus mild chemicals and water. However, Buna-N is not for use with brake fluid. These O-rings are commonly used to create multidirectional seals between two parts in power transmission assemblies, hydraulic cylinders, and pneumatic cylinders. With a round profile, they resist compression and tearing to keep their shape over time, so they're reusable. All have shelf life, cure date, and a traceable lot number printed on the bag. Many meet ASTM D2000 and SAE J200, international standards for rubber products.

Inch O-rings have a dash number and are sized to the SAE standard AS568.

DRAFT

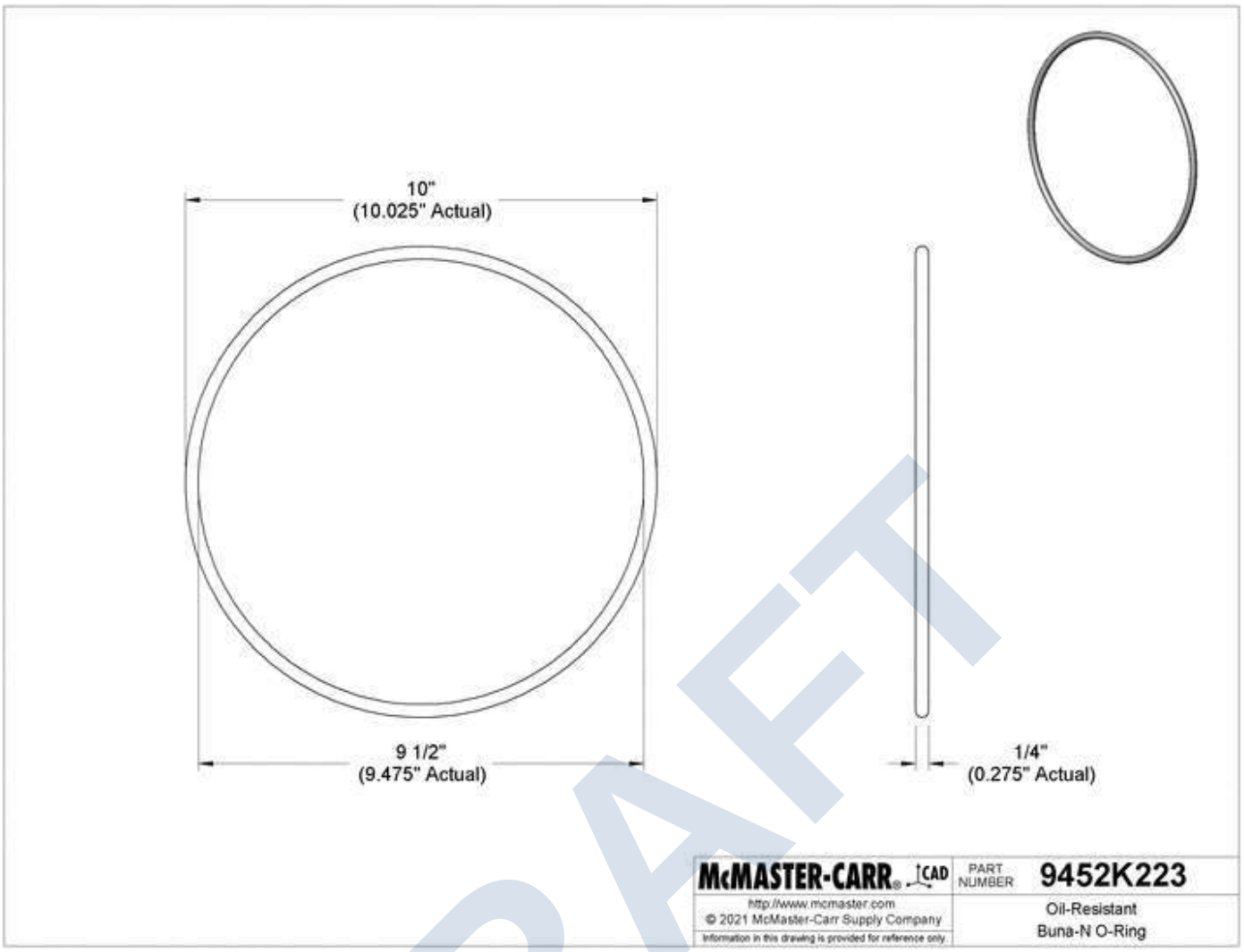

DRAFT

The information in this 3-D model is provided for reference only.

GRAINGER

Item # 403



CAD



LEESON Washdown Motor: 3-Phase, 1/3 HP, 1,725 Nameplate RPM, 208-230/460V AC, 56C, 112547.00

Item **60PV26** Mfr. Model **112547.00**

Product Image Feedback | Compare

Product Details

Catalog Page **N/A**

Brand	**LEESON**
Manufacturer Part Number	**112547.00**
Motor Application	**Washdown**
Phase	**Three**
Motor Design	**3-Phase**
HP	**1/3**
Nameplate RPM	**1,725**
No. of Speeds	**1**
Voltage	**208-230/460V AC**
Full Load Amps	**1.70-1.50/0.85 A**
Frame	**56C**
Usable @ 208V	**Yes**
Usable @ 200V	**No**
Hz	**60**
Motor Service Factor	**1.2**
Motor Thermal Protection	**Manual**
Ins. Class	**F**
Max. Ambient Temp.	**104 °F**
Duty Cycle	**Continuous**
NEMA Design	**B**
Removable Base	**No**

Web Price
$905.71 / each

Qty 1

Add to Cart

Ship | Pickup

Backordered, expected to arrive by end of Aug, 2024.

Ship to **98362** | Change

Shipping Weight **20.5 lbs**

Ship Availability Terms

Add to List

Documents

Dimensional Drawing

DRAFT

Chat with an Agent

Motor Shaft Rotation **CW/CCW**

Motor Enclosure Design **Totally Enclosed Fan-Cooled**

Motor Mounting Type **Face/Base**

Motor Mounting Position **Horizontal**

Motor Frame Material **Rolled Steel**

Finish **Unfinished**

Shaft Dia. **5/8 in**

Shaft Length **1-7/8 in**

Shaft Material **Stainless Steel**

Motor Shaft Design **Keyed**

Conduit Box Location **Exterior**

Motor Bearings **Ball**

Bearing Protection **Shaft Shields**

Overall Length **10-3/8 in**

Length Less Shaft **8-7/16 in**

Body Dia. **7.3 in**

Weight **25 lb**

Bolt Circle Dia. **5-7/8 in**

Drain Plugs **(1) Drain Plugs In Conduit Box, (1) Drain Plugs In Each End Bell**

Nominal Efficiency **68 %**

Standards **CE; CSA Certified; UL Recognized; USDA**

Manufacturers Warranty Length **1 yr**

Product Type **Washdown Motor**

UNSPSC **26101612**

Country of Origin **USA (subject to change)**

Product Description

Stainless steel washdown AC motors have exterior components of 300 series stainless steel to provide maximum corrosion resistance in severe-duty and washdown environments. The motors' exterior is completely paint- and coating-free and sealed against moisture and condensation to protect internal components.

Product Details Feedback

DRAFT

McMASTER-CARR®

Item # 405

Mechanical Pump Shaft Seal with Extended Spring

Mechanical Pump Shaft Seal, Trade No. 200V & 516V



For Motion Type	Rotary, Oscillating
For Sealing	Shafts
For Shaft Diameter	5/8"
Trade Number	200V, 516V
Manufacturer/ Brand Equivalent	John Crane Type 6 Pac-Seal Type 16 Sealol Type 60L
Seal	
ID	0.625"
OD	1.185"
Width	0.718"
Seat	
ID	0.625"
OD	1.250"
Width	0.406"
Material	
Case	304 Stainless Steel
Spring	304 Stainless Steel
Diaphragm	Viton® Fluoroelastomer Rubber
Washer	Phenolic Plastic
Seat	Ceramic
Gasket	Viton® Fluoroelastomer Rubber
Maximum Speed	
For Rotary Motion	3,600 rpm
For Oscillating Motion	83.3 feet/sec.
Maximum Pressure	150 psi
Temperature Range	0° to 400° F
Diaphragm Hardness	Durometer 70A (Hard)
For Use With	Animal Oils Butyl Alcohol Ethylene Glycol Glycerin Grease Hydraulic Oils Isopropyl Alcohol Methanol Mineral Oils Motor Oils Oils Petroleum Fluids Phosphoric Acid Sodium Bicarbonate Transmission Fluids Vegetable Oils
System of Measurement	Inch

DRAFT

RoHS	Not Compliant

Commonly used in well, sump, and displacement pumps, these seals have a two-piece spring-loaded design that keeps the sealing surfaces in contact as the material wears. Seals come furnished as two pieces—the seal and the seat. The seal is comprised of the case, spring, diaphragm, and washer, which come locked together as one piece. The seat is comprised of the seat and the gasket.

Viton® fluoroelastomer diaphragms and gaskets resist a wider range of chemicals than Buna-N.

Note: Maximum performance values cannot be achieved simultaneously; for example, speed is affected by pressure, temperature, and other operating conditions.

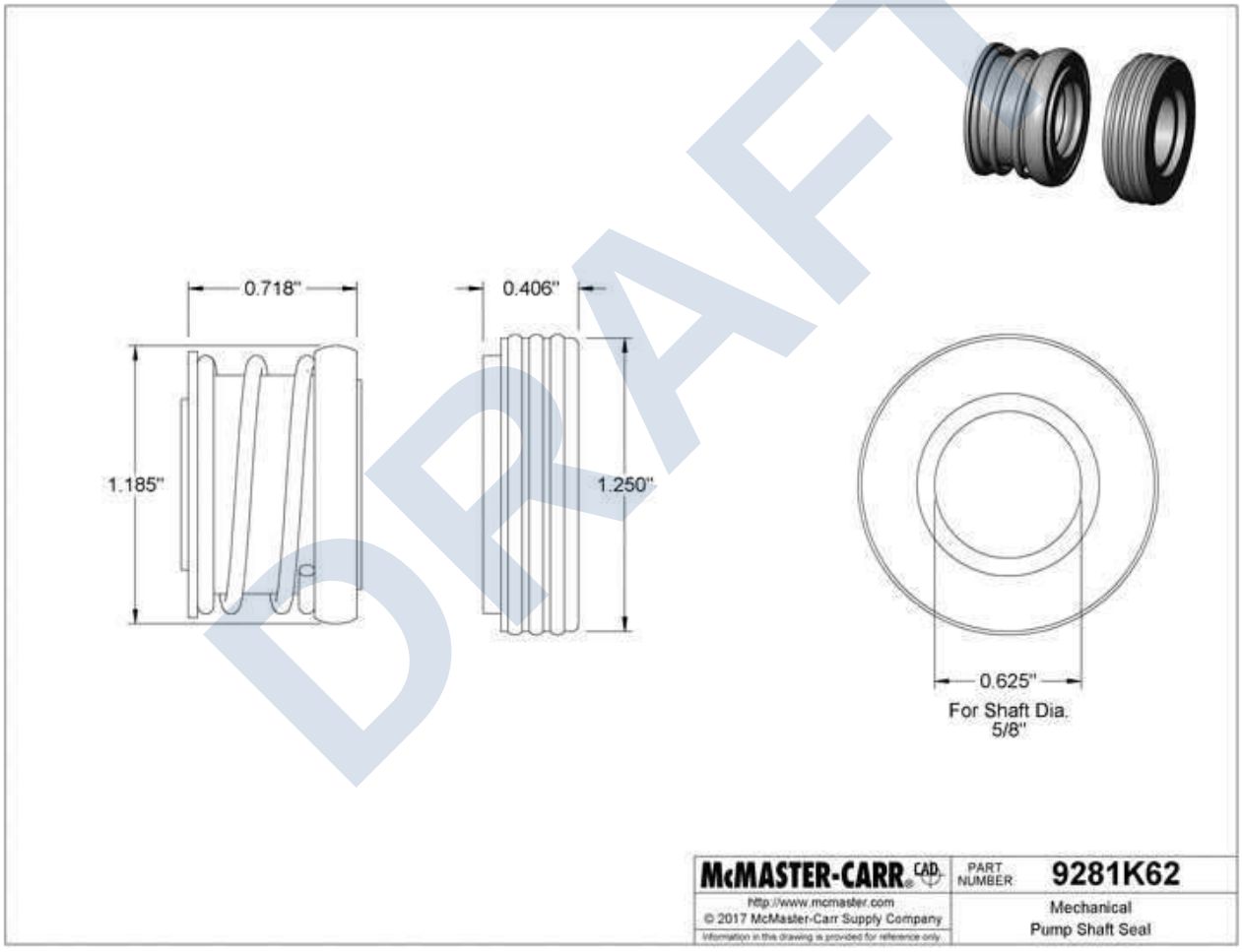

DRAFT

The information in this 3-D model is provided for reference only.

Circle Valve Technologies Inc.
1533 Gehman Road
Harleysville, PA 19438

Toll Free:800-645-6733
Phone: 267-933-6300
Fax: 267-933-6305
Email: sales@circlevalve.com

Item # 406

Item # D532T1-2M, Popoff Valves

List Price −

QUOTE

Features

- Popoff or inline valves
- Adjustable crack pressure
- Zero leakage
- Optional factory preset
- Accurate set pressure
- Wide range of cracking pressure
- Tamper-proof adjustment
- 100% seat leakage tested
- PED certifications and CE marking available for most models

Note: Proper filtration is recommended to prevent damage to sealing surface.

'D' Variation: Prefixed part number is supplied with a cap which diverts high pressure blasts from personnel and instruments, and serves as a rain and dust shield.



DRAFT

Specifications | Leakage | Applications | Safety

Specifications −

Series	500
Variation	Popoff with deflector cap
Body Material	316 Stainless Steel

Seal Material[1]	Viton®
Valve Size	1/4 in
End Connection	Pipe Thread Male
Operating Pressure	0.5 to 150 psig 0 to 10 bar
Cracking Pressure	0.5 to 150 psig
Cracking Pressure Tolerance	±5%
Operating Temperature	-20 to 400 ºF
Proof Pressure	400 psig
Rated Burst Pressure	500 psig
Dim. L	1.38 in
Dim. L1	1.20 in
Hex	5/8 in
Dia. D (max.)	0.90 in
Weight	.05 lbs
Optional Body Material	303 stainless steel 316 Stainless Steel Aluminum Brass
Optional End Connections	M - Male NPT S - British Taper Pipe (Male) X - British Taper Pipe (Female)

Leakage −

Leakage, Ascending Pressure
Standard seals: 0 to 95% of cracking pressure
Silicon & EPR: 0 to 80% of cracking pressure
Teflon®:
Cracking pressures up to 2.4 psi: 4cc/min at 0 to 50% of cracking pressure Cracking pressures 2.5 psi and higher: 1cc/min at 0 to reseat pressure, 10cc/min from reseat to 90% of cracking pressures

Leakage at Reseat Pressure
All elastomeric seals: Zero
Teflon®: 1cc/min for cracking pressures 2.5 psi and higher

DRAFT

Applications

- System overpressure protection
- Storage tanks
- Freon® recovery systems
- Medical equipment
- Refrigeration & heating equipment
- Measuring & dispensing pumps
- Communications equipment
- Process control instruments
- R&D pilot plants
- Vacuum pump safety

Safety

For Your Safety
It is solely the responsibility of the system designer and user to select products suitable for their specific application requirements and to ensure proper installation, operation, and maintenance of these products. Material compatibility, product ratings and application details should be considered in the selection. Improper selection or use of products described herein can cause personal injury or property damage.

[1] 520 Series: -100° F to +400° F (-73°C to +204°C) Teflon® o-ring
K520 Series: -320° F to +165° F (-196°C to +74°C) Polished Teflon® o-ring, cryogenic testing and serialization
580 Series: Polished Teflon® o-ring

DRAFT

SM8601

Item # 407

Magnetic-inductive flow meter

SMN11GGXFRKG/US-100

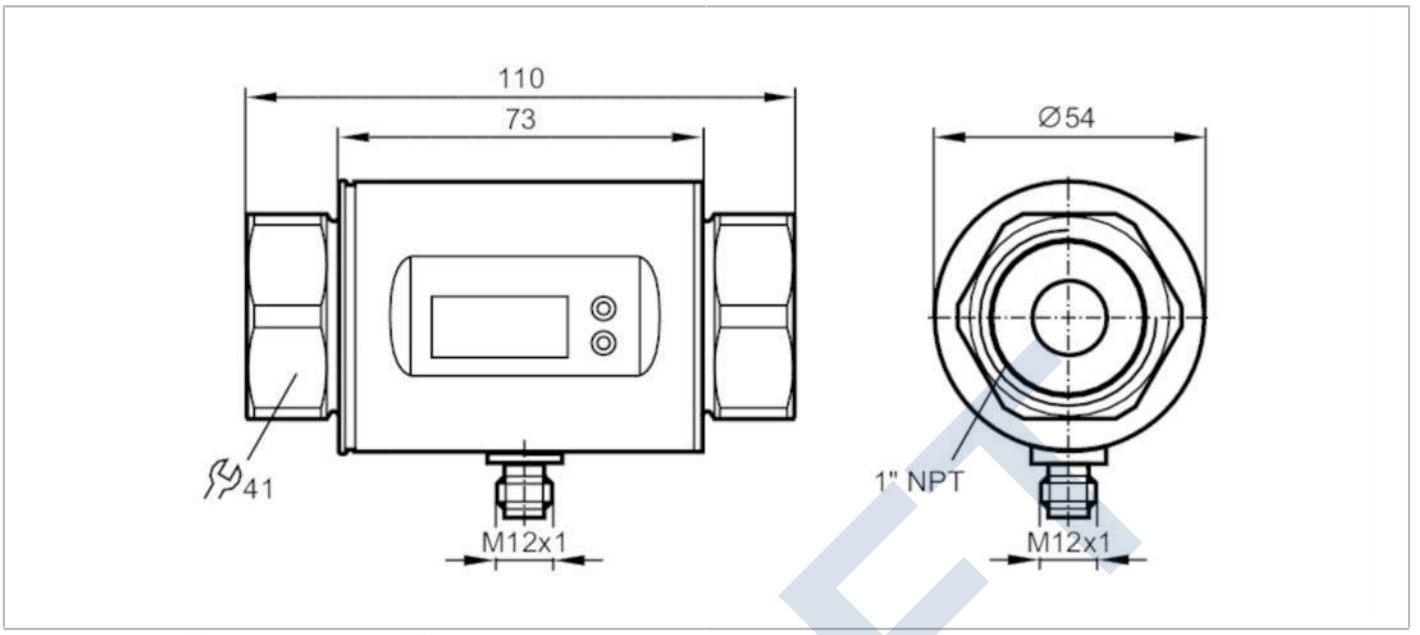

CE CRN cULus LISTED DNV DNV.COM/AF EC 1935/2004 IO-Link UKCA

Product characteristics			
Number of inputs and outputs		Number of digital outputs: 2; Number of analogue outputs: 1	
Measuring range		6...1584 gph	0.1...26.4 gpm
Process connection		threaded connection 1" NPT DN25	
Application			
Special feature		Gold-plated contacts	
Application		totaliser function; for industrial applications	
Media		conductive liquids; water; hydrous media	
Note on media		conductivity: ≥ 20 µS/cm	
		viscosity: < 70 mm²/s (40 °C)	
Medium temperature	[°F]	14...158	
Pressure rating	[bar]	16	
Pressure rating	[psi]	232	
MAWP (for applications according to CRN)	[bar]	11.2	
Electrical data			
Operating voltage	[V]	18...30 DC; (to SELV/PELV)	
Current consumption	[mA]	95; (24 V)	
Protection class		III	
Reverse polarity protection		yes	
Power-on delay time	[s]	5	
Inputs / outputs			
Number of inputs and outputs		Number of digital outputs: 2; Number of analogue outputs: 1	
Inputs			
Inputs		counter reset	

DRAFT

SM8601

Magnetic-inductive flow meter

SMN11GGXFRKG/US-100

Outputs			
Total number of outputs		2	
Output signal		switching signal; analogue signal; pulse signal; IO-Link; (configurable)	
Electrical design		PNP/NPN	
Number of digital outputs		2	
Output function		normally open / normally closed; (parameterisable)	
Max. voltage drop switching output DC	[V]	2	
Permanent current rating of switching output DC	[mA]	200	
Number of analogue outputs		1	
Analogue current output	[mA]	4...20; (scalable)	
Max. load	[Ω]	500	
Analogue voltage output	[V]	0...10; (scalable)	
Min. load resistance	[Ω]	2000	
Pulse output		flow rate meter	
Short-circuit protection		yes	
Type of short-circuit protection		pulsed	
Overload protection		yes	
Measuring/setting range			
Measuring range		6...1584 gph	0.1...26.4 gpm
Display range		-1902...1902 gph	-31.7...31.7 gpm
Resolution		2 gph	0.05 gpm
Set point SP		14...1586 gph	0.25...26.4 gpm
Reset point rP		6...1578 gph	0.1...26.25 gpm
Analogue start point ASP		0...1272 gph	0...21.2 gpm
Analogue end point AEP		312...1586 gph	5.2...26.4 gpm
In steps of		2 gph	0.05 gpm
Volumetric flow quantity monitoring			
Pulse value		0.01...100 000 000 gal	
Pulse length	[s]	0,0025...2	
Temperature monitoring			
Measuring range	[°F]	-4...176	
Resolution	[°F]	0.5	
Set point SP	[°F]	-2.5...176	
Reset point rP	[°F]	-3.5...175	
Analogue start point	[°F]	-4...140.5	
Analogue end point	[°F]	31.5...176	
In steps of	[°F]	0.5	
Accuracy / deviations			
Flow monitoring			
Accuracy (in the measuring range)		± (0,8 % MW + 0,5 % MEW)	
Repeatability		± 0,2% MEW	

DRAFT

SM8601

Magnetic-inductive flow meter

SMN11GGXFRKG/US-100

Temperature monitoring		
Accuracy	[K]	± 2,5 (Q > 0,26 gpm)
Response times		
Flow monitoring		
Response time	[s]	0.15; (dAP = 0, T19)
Delay time programmable dS, dr	[s]	0...50
Damping process value dAP	[s]	0...5
Temperature monitoring		
Dynamic response T05 / T09	[s]	T09 = 20 (Q > 0,26 gpm)
Software / programming		
Parameter setting options		Flow monitoring; quantity meter; Preset counter; Temperature monitoring; hysteresis / window; normally open / normally closed; switching logic; current/ voltage/pulse output; start-up delay; display can be deactivated; Display unit
Interfaces		
Communication interface		IO-Link
Transmission type		COM2 (38,4 kBaud)
IO-Link revision		1.1
SDCI standard		IEC 61131-9
Profiles		Smart Sensor: Process Data Variable; Device Identification, Device Diagnosis
SIO mode		yes
Required master port type		A
Process data analogue		3
Process data binary		2
Min. process cycle time	[ms]	5
Supported DeviceIDs		**Type of operation** / **DeviceID**: default / 576
Operating conditions		
Ambient temperature	[°F]	14...140
Storage temperature	[°F]	-13...176
Protection		IP 67
Tests / approvals		
EMC		DIN EN 60947-5-9
Shock resistance		DIN EN 60068-2-27 / 20 g (11 ms)
Vibration resistance		DIN EN 60068-2-6 / 5 g (10...2000 Hz)
MTTF	[years]	145
Pressure Equipment Directive		Sound engineering practice; can be used for group 2 fluids; group 1 fluids on request
Mechanical data		
Weight	[g]	698.5
Materials		stainless steel (316L/1.4404); PBT-GF20; PC; FKM; TPE
Materials (wetted parts)		stainless steel (316L/1.4404); PEEK; FKM
Process connection		threaded connection 1" NPT DN25

DRAFT

SM8601

Magnetic-inductive flow meter

SMN11GGXFRKG/US-100

Displays / operating elements		
Display	Display unit	6 x LED, green (gpm, gph, gal, °F, 10^3, 1000 x 10^3)
	switching status	2 x LED, yellow
	measured values	alphanumeric display, 4-digit
	programming	alphanumeric display, 4-digit

Remarks	
Remarks	MW = measured value
	MEW = Final value of the measuring range
Pack quantity	1 pcs.

Electrical connection

Connector: 1 x M12; coding: A; Contacts: gold-plated

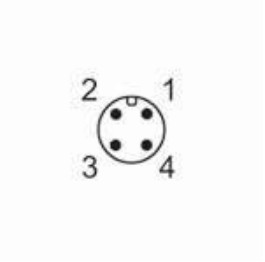

Connection

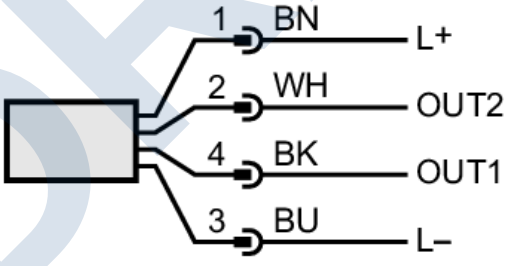

colours to DIN EN 60947-5-2

OUT1: switching output volumetric flow quantity monitoring
Pulse output quantity meter
signal output Preset counter
IO-Link

OUT2: switching output volumetric flow quantity monitoring
switching output Temperature monitoring
analogue output volumetric flow quantity monitoring
analogue output Temperature monitoring
input counter reset

Core colours :

BK = black
BN = brown
BU = blue
WH = white

DRAFT

SM8601

Magnetic-inductive flow meter

SMN11GGXFRKG/US-100

Diagrams and graphs

Pressure loss

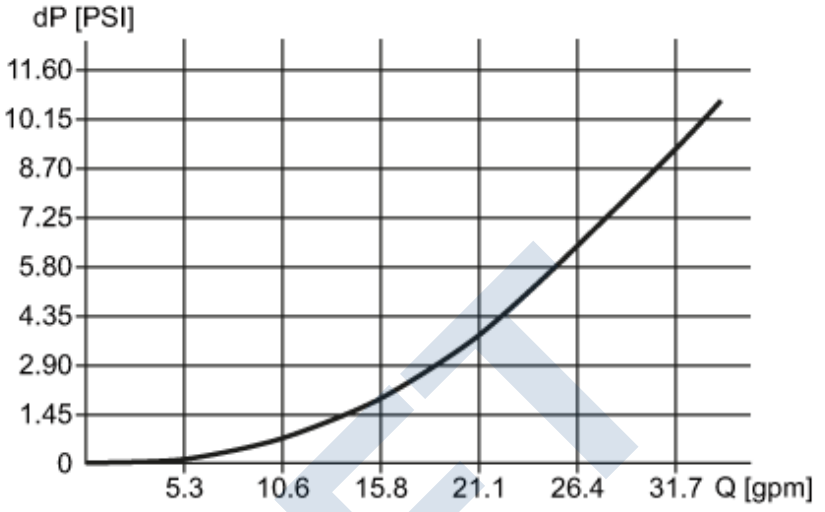

dP Pressure loss

Q volumetric flow quantity

DRAFT

Blue-White®

Industries, Ltd.

Item # 408

Variable Area Flow Meters

Engineering and Technical Data

F-550

Panel Mount

Needle Valve Adjustment

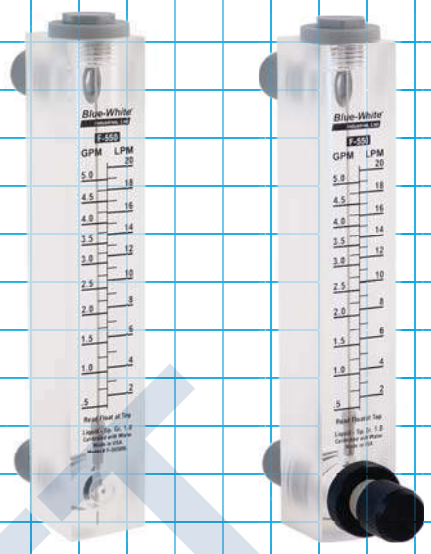

Features:

- **Durable, highly polished, one piece meter body.**
- **Bulkhead nuts attach directly to inside panel.**
- **Direct reading permanent scale.**
- **White back reflector for easy reading.**
- **Optional flow control needle-type adjustment valve.**
- **316 stainless, PTFE or Hastelloy floats and float guides.**
- **Acceptable in direct sunlight applications.**

Materials of Construction:

Meter Body:.....Cast Acrylic Sheet
Adapters/valve:.....Polypropylene
O-ring seals:.....Viton ® (optional EP)
Bulkhead Nuts (non wet):.....Polypropylene
Float:.....316SS, Hastelloy or PTFE (per model)
Guide Rod:
Standard Series.....316 Stainless Steel
K- Series.....Hastelloy C-276

Specifications:

Max. working pressure:.....250 PSI (17.2 bar) @ 70℉ (21 ℃)
Max. fluid temperature:.....200 ℉ (93 ℃) @ 0 PSI
Full scale accuracy:.....+/- 5%
Calibration fluid:.....Water, specific gravity 1.0
Scale length:.....4" (100mm) approx.
Environment:.....Acceptable for direct sunlight exposure.
Approximate shipping wt: ...2 lb. (.91 kg)

Maximum Temperature vs. Pressure

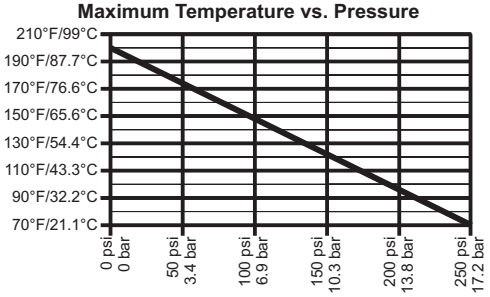

Dimensions:

NON-ADJUSTABLE models

Model #	A	B	C	D	E	Mount Hole
F-55250L (1/4")	7-1/4"	2-1/2"	1-1/16"	5-5/8"	1-1/4"	9/16"
F-55375L (3/8")	8-3/8"	2-3/4"	1-11/32"	6-1/2"	1-1/2"	11/16"
F-55376L (3/8")	8-3/8"	2-3/4"	1-11/32"	6-1/2"	1-1/2"	11/16"
F-55500L (1/2")	8-3/8"	2-3/4"	1-11/32"	6-1/2"	1-1/2"	7/8"
F-55750L (3/4")	9"	3-3/4"	1-1/2"	6-1/2"	1-3/4"	1-1/16"
F-55005L (1")	10-5/8"	4"	1-3/4"	8"	2"	1-21/64"
F-55010L (1")	10-5/8"	4"	1-3/4"	8"	2"	1-21/64"
F-55015L (1")	10-5/8"	4"	1-3/4"	8"	2"	1-21/64"
F-55200L (1")	10-5/8"	4"	1-3/4"	8"	2"	1-21/64"

Models with ADJUSTABLE VALVE

Model #	A	B	C	D	E	F	Mount Hole
F-55250LA (1/4")	7-1/4"	3-7/16"	1"	5-5/8"	2-7/16"	1-11/32"	9/16"
F-55375LA (3/8")	8-3/8"	4-1/2"	1-11/32"	6-1/2"	3-1/4"	1-3/4"	11/16"
F-55376LA (3/8")	8-3/8"	4-1/2"	1-11/32"	6-1/2"	3-1/4"	1-3/4"	11/16"
F-55500LA (1/2")	8-3/8"	4-1/2"	1-11/32"	6-1/2"	3-1/4"	1-3/4"	7/8"
F-55750LA (3/4")	9"	5-1/2"	1-1/2"	6-1/2"	3-1/4"	15/16"	1-1/16"
F-55010LA (1")	10-5/8"	5-1/4"	1-3/4"	8"	3-1/2"	17/16"	1-21/64"
F-55015LA (1")	10-5/8"	5-1/4"	1-3/4"	8"	3-1/2"	17/16"	1-21/64"
F-55200LA (1")	10-5/8"	5-1/4"	1-3/4"	8"	3-1/2"	17/16"	1-21/64"

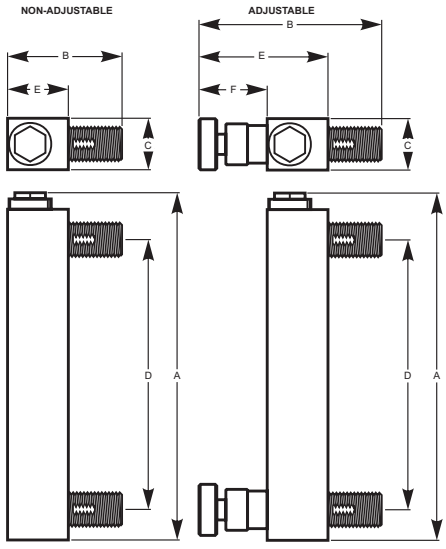

DRAFT

Blue-White® Industries, Ltd.

Variable Area Flow Meters

Installation Requirements:

1. Misalignment will damage the meter!

Flowmeter must be installed in an exact vertical plane to ensure accuracy. Be certain of proper plumbing alignments. Misalignment may cause the o-ring seals to leak.

2. Pipe dope and glue will damage the meter!

Use only PTFE® tape on the threaded adapters. The meter body and plastic fittings cannot tolerate PVC Glue and/or pipe dope. Even fumes can cause severe damage. If you are installing your flowmeter to a glued pipe configuration, install the flowmeter *after* all glued fittings are dried and lines are purged of all fumes. **Never** hold the meter body with pliers or like tools. Union nuts should be hand tightened only. **DO NOT OVER-TIGHTEN!**

3. Vibration and heavy loads will damage the meter!

Wall, panel, floor and ceiling mounts and supports must be carefully aligned with the meter body and sturdy enough to support the plumbing and prevent vibration. Never allow the flowmeter or flowmeter adapter fittings to support the weight of related piping.

4. Solenoid valves will damage the meter!

Avoid a system that will impose a sudden burst of flow to the meter. Such a burst will cause the float to impact the float stop with destructive force. Solenoid valves, or other quick opening valves cannot be used unless meter is protected against sudden bursts of flow.

5. High pressures and temperatures will damage the meter!

The maximum acceptable temperature and pressure is interdependent. The maximum acceptable working pressure is dependant on the actual fluid temperature. The maximum acceptable fluid temperature is dependant on the actual working pressure. (see Temperature Vs. Pressure chart).

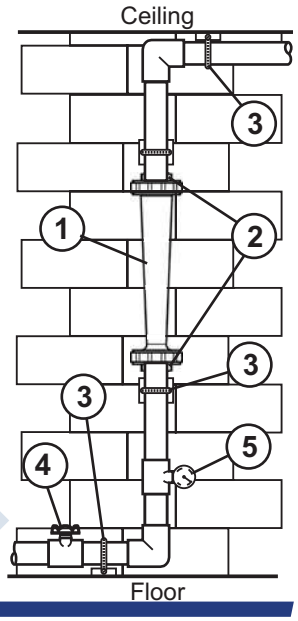

Flow Range and Model Options:

Standard Series - *Equipped with 316 SS guide rod*

Models for Liquid

Pipe M/NPT	Dual Scale Range GPM	LPM	Float Material	NON-ADJUSTABLE MODEL NUMBER	WITH ADJUSTABLE VALVE MODEL NUMBER
1/4"	.025 to .250	0.1 to 1.0	316 SS	F-55250L	F-55250LA
3/8"	0.1 to 1.0	0.4 to 4.0	316 SS	F-55375L	F-55375LA
3/8"	0.2 to 2.0	0.75 to 7.5	316 SS	F-55376L	F-55376LA
1/2"	0.5 to 5.0	2.0 to 20.0	316 SS	F-55500L	F-55500LA
3/4"	1.0 to 10.0	4.0 to 40.0	316 SS	F-55750L	F-55750LA
1"	1.0 to 5.0	3.0 to 18.0	PTFE	F-55005L	not available
1"	1.0 to 10.0	4.0 to 40.0	316 SS	F-55010L	F-55010LA
1"	1.0 to 15.0	5.0 to 60.0	316 SS	F-55015L	F-55015LA
1"	2.0 to 20.0	7.5 to 75.0	316 SS	F-55200L	F-55200LA

K-Series - *Equipped with Hastelloy guide rod*

K-Series models are specially equipped for highly corrosive applications.

Models for Liquid

Float Material	NON-ADJUSTABLE MODEL NUMBER	WITH ADJUSTABLE VALVE MODEL NUMBER
Hastelloy	F-55250LK	F-55250LKA
Hastelloy	F-55375LK	F-55375LKA
Hastelloy	F-55376LK	F-55376LKA
Hastelloy	F-55500LK	F-55500LKA
Hastelloy	F-55750LK	F-55750LKA
PTFE	F-55005LK	not available
Hastelloy	F-55010LK	F-55010LKA
Hastelloy	F-55015LK	F-55015LKA
Hastelloy	F-55200LK	F-55200LKA

Standard Series - *Equipped with 316 SS guide rod*

Models for Air

Pipe M/NPT	Single Scale Range SCFM	Float Material	NON-ADJUSTABLE MODEL NUMBER	WITH ADJUSTABLE VALVE MODEL NUMBER
1/4"	.1 to 1.2	316 SS	F-55250G	F-55250GA
3/8"	0.5 to 4.5	316 SS	F-55375G	F-55375GA
3/8"	1.0 to 7.0	316 SS	F-55376G	F-55376GA
1/2"	2.0 to 20.0	316 SS	F-55500G	F-55500GA
3/4"	4.0 to 45.0	316 SS	F-55750G	F-55750GA

Correction factor formulas for AIR models

PRESSURE CORRECTION

$$\sqrt{\frac{14.7 + \text{Working PSIG}}{14.7}}$$

TEMPERATURE CORRECTION

$$\sqrt{\frac{520}{460 + \text{Working Temp F}}}$$

Notes:
1) Liquid models calibrated with water, Sp.Gr. 1.0. Custom Sp.Gr. calibrations available. Contact the factory.
2) Air models calibrated at standard Conditions (70F @ 14.7 PSIa). Temperature and pressure correction may be required. Contact the factory for custom calibrations.
3) Gallons shown are U.S. Gallons.

Blue-White Industries, Ltd.
5300 Business Drive, Huntington Beach, CA 92649
Tel: 714-893-8529 **Fax:** 714-894-9492
www.blue-white.com **Email:** sales@blue-white.com

All trademarks are the property of their respective owners.

Technical data sheet #85000-113 rev.08162011

DRAFT

Item # 409

Flow-Tek®
Subsidiary of BRAY INTERNATIONAL, Inc.

Advanced V-Control Ball Valves, 1/4"-12"

Pneumatic, Electro-Pneumatic & Electric Controls



Threaded, Socket Weld, Butt Weld &
Flanged End Valves

V-Control Ball Valves with Pneumatic, Electro-Pneumatic and Electric Actuation

A BUBBLE TIGHT SHUT OFF VALVE AND PRECISION CONTROL VALVE COMBINED IN ONE

Standard round ported ball valves have been used, and continue to be used, for many control applications such as services involving moderate pressure drops. Now, with the development of Flow-Tek's characterized V-balls, a full range of control applications is available with superior flow control. These 1/4 turn control ball valves are more compact, lighter weight and much less expensive than comparably sized globe valves and segmented control valves offered by other companies. Flow-Tek control valves offer fast response times to control signals due to advanced digital control of actuation and the inherent strengths of ball valves. These valves exceed Class VI offering bubble tight shut off with zero leakage. Other features include superior rangeabiltiy and repeatability, high flow capacity, the ability to function with fluids containing solids and fibers, ease of maintenance and exceptional interface with PLCs and computer command signals. Flow-Tek high quality pneumatic and electric control actuators are very durable and efficient.

Increased Linear Response

Due to the in-line design inherent with characterized control ball valves, line media flows linearly through the piping system. The direct pattern provides increased media control and rapid response times to controller commands.

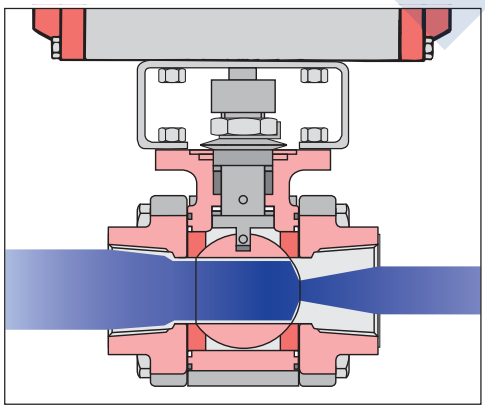

Media Flow entering valve from the left. Installing the V downstream is preferred.

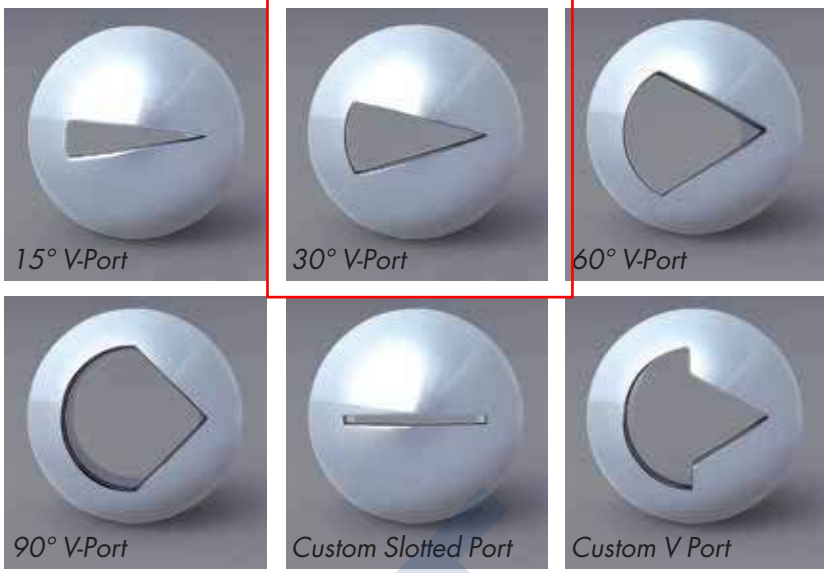

Exceptional Characterized Control

Flow-Tek's characterized balls provide predictable and accurate control of downstream flow rates. These precision cut balls match the control performance of globe valves while offering the economy, features and reduced size and weight of ball valves. Flow-Tek offers a wide range of V-Port and Slotted Port characterized balls. The standard characterized balls and an example of a custom ball are shown above. The 90° and 60° balls, like standard round hole balls, offer an equal percentage inherent flow characteristic. A slotted ball and a V-Port ball with a small angle opening, such as a 15° ball, furnish a linear inherent flow characteristic. Medium angle V-Port valves such as a 30° ball furnish a modified equal percentage inherent flow characteristic. Custom ports are also available to meet special control requirements. Designed with flexibility in process conditions in mind, the C_V and control characteristics are easily changed by simply changing the ball.

High Rangeability

The characterized ball delivers controllable flow characteristics from the nearly closed to the fully open position of the valve. Though port type and valve size affects the rangeability, Flow-Tek characterized balls have a minimum rangeability of 200 to 1 and can exceed 800 to 1. Flow rates are highly repeatable within the normal 20% – 80% range of travel.

High Flow Capacity

Flow-Tek's control ball valves have been designed to offer maximum flow characteristics that are substantially higher than comparably sized globe valves. The inherent flow pattern of ball valves increases flow rates and in many applications valves smaller than pipeline size can be used. The self-cleaning action of the ball against the seat makes the ball valve acceptable for slurry and high fiber media services.

High Pressure Drops

Engineered to withstand high pressure drops while providing leak free operation, the V-Control Series delivers the precision control required by today's process industries. The ΔP limit for liquids is up to 500 psi and steam is up to 300psi. Please consult the factroy or your distributor for information on control valve sizing and pressure drop limitations.

Bidirectional Bubble Tight Shut Off

V-Control Series ball valves offer bidirectional bubble tight Class VI shut off in compliance with FCI 70-2 standards.

DRAFT

Ball Design

All Flow-Tek valves offer a precision machined, mirror finished, solid stainless steel ball. As with standard Flow-Tek round hole balls, the critical edges of the V-Port and slotted balls have blended curvatures to reduce seat wear and provide a high cycle life. Flow-Tek control valves have the cut in the ball instead of the seat — offering advantages of improved flexibility, durability and serviceability.

Flexibility: selection from the various standard balls and seats based on the application. Converting from a standard valve to a V-Port control valve is simply a matter of replacing the ball, all other valve parts remain the same. **Durability:** the pressure drop in a control valve is taken over the edges of the control element. Focusing the actual pressure drop at the edges of a V in the ball instead of in a soft seat material provides for a more durable product. **Serviceability:** when seat replacement is necessary, the center section of a Flow-Tek 3-piece valve can easily swing out for servicing. Competitors' valves, with the cut in the seat, require special end caps with a recess to accommodate the special seats. These end caps cannot swing out, requiring the valve to be completely removed from the line for servicing. Flow-Tek valves utilize standard end caps and seats for enhanced serviceability.

Characterized Control

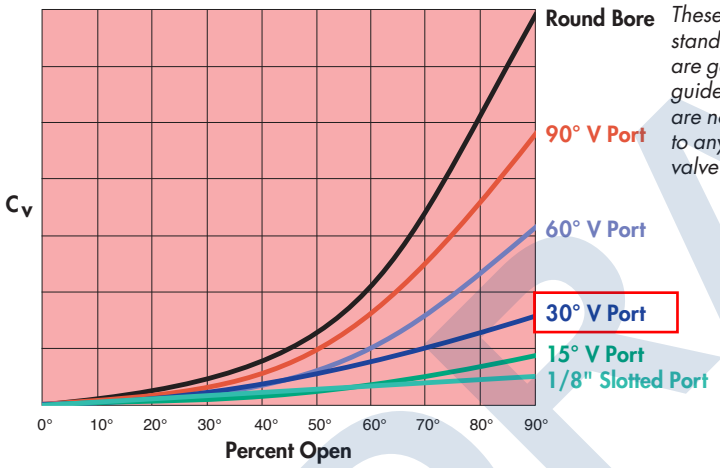

These curves of standard ports are general guidelines and are not specific to any particular valve size.

Hysteresis

Flow-Tek control valve packages are inherently designed to eliminate any measurable amount of hysteresis. This is a very important feature in throttling control. Flow-Tek valves were designed with a tight connection between ball and stem, and the large stem diameter increases the connection surface. Both ball and stem connections are precision machined to tight tolerances limiting hysteresis. The Flow-Tek design does not require hand matching of balls and stems to insure a tight connection. Standard valves can be converted to V-Port control valves in the field. Heavy duty brackets and couplers connect valves to actuators. Pneumatic actuator pistons have standard guide bearings to minimize side movement within the actuator body. All connections are manufactured to tight tolerances throughout the control valve package.

Stem Seals & Seats

Leak-free protection is achieved by Flow-Tek's stem packing design, live-loaded self-adjusting stem seals and superior seat construction. In combination with the long lasting service capabilities of Flow-Tek actuators, V-Control Series ball valves have a much higher cycle life than most control valves. With a low coefficient of friction and high resistance to erosion and corrosion, Flow-Tek valves are built to last.

Seat Selection

A wide range of seat materials are offered to meet most applications. Seats include RPTFE, TFM 1600, Stainless Steel/PTFE (50/50), UHMWPE, PEEK and Tek-Fil® seats offering high temperature and high pressure capabilities. Metal and other seats are available, please consult the factory.

Applications

Temperature Control With shut off meeting Class VI requirements, these valves are ideal for steam/temperature control.

Flow Control The high flow capacity and predictable rangeability and repeatability of the V-Control Series valves make this the ideal choice for flow control services.

Steam Control The V-Control Series provides tight shutoff and utilizes Flow-Tek's live loaded Smart Stem design to eliminate typical problems of downstream leakage and stem leakage associated with globe style steam control valves.

Level Control & PH Service A combination of Flow-Tek control actuation and standard round hole balls are the ideal package for these applications.

Media Containment Units Extended stem sealing units are designed to prevent costly downtime and provide double stem sealing. A button-head check valve for injection of a sealing agent can be added.



DRAFT

Digitally Controlled Ball Valves

For Precision Pneumatic Control Of Flow

The Flow-Tek Automator Pneumatic Control Actuator is equipped with advanced electro-pneumatic or pneumatic positioners for precise valve positioning. In combination with Flow-Tek's V-control balls, the Automator offers superior flow control. Series 6A electro-pneumatic positioners feature advanced communication and enhanced diagnostics. The Automator Series pneumatic actuators are rack and pinion, opposed-piston actuators designed with innovative, high performance features in a compact, rugged and reliable modular product line.

Automator Series Pneumatic Control Actuators offer many design features including:

- Double Acting and Spring Return units.
- Manual override.
- Highly visible valve status display.
- Externally adjustable bidirectional travel stops.
- Valve mounting to ISO 5211 standards without external piping. NAMUR standard mounting of accessories.
- Spring return units with spring cartridge system offers safety, simplicity and reduced space requirements. Spring return units have the same dimension as the double acting.
- Supply air pressure to 140 psi (10 bar).
- Size 48 actuators have 1/8" NPT pneumatic air connections. Larger sizes have 1/4" NPT connections.
- Permanently lubricated piston guides, rings and output shaft bearings.
- Interchangeable modular positioner units and accessories.
- Low hysteresis through tight tolerance ball, stem and shaft connections.



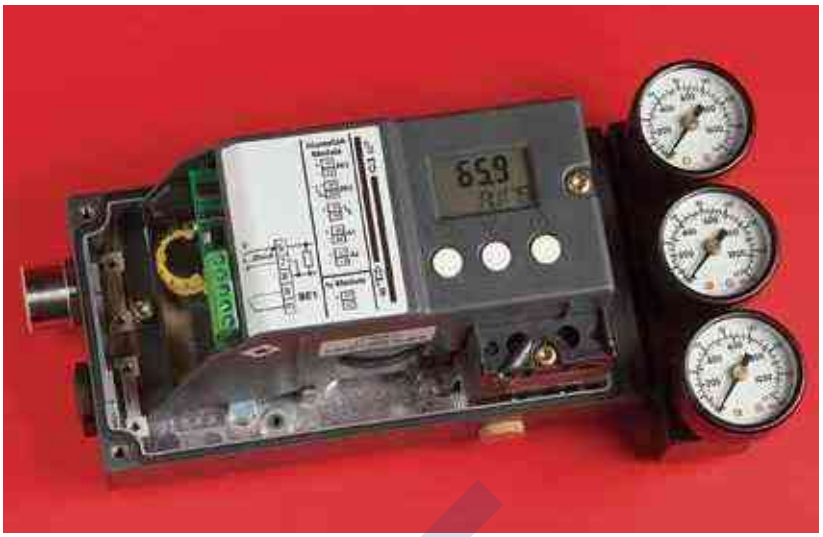

Intelligent Electro-Pneumatic Positioners

Flow-Tek's Series 6A Electro-Pneumatic Positioners are microprocessor controlled, delivering all the benefits of digital electronics to a pneumatic actuator. The microprocessor constantly compares the command signal to the actual valve position and makes precise, on-line adjustments until the two measurements match within the user-selectable deadband. These positioners can accept an analog 4-20 mA, HART, Foundation Fieldbus or PROFIBUS PA input command signal. Utilizing proven technolgy, Series 6A electro-pneumatic positioners feature rugged reliability, high quality components and outstanding performance.

Minimal Air Consumption Series 6A positioners offer the lowest air consumption on the market today, <0.00035 scfm at 80 psi. Air supply within the unit is controlled by Piezo valve technology, resulting in reduced air consumption during operation and zero bleed during steady state. The energy savings alone can pay for the cost of the unit within a year. In addition, the power conservation and decreased noise are beneficial to the environment. Maximum supply air pressure is 102 psi (7 bar).

Diagnostics Flow-Tek's intelligent positioners feature corrective and preventative maintenance self-diagnostic checks. Corrective maintenance dignositics aid in finding the cause of a problem. Preventative maintenance dignositics checks reduce operating costs by identifying potential problems as they occur. Diagnostic results are indicated both via a PC connection and the local LCD. All diagnostics run constantly. The data may be continually monitored and recorded via a PC.

Enclosures Flow-Tek waterproof positioners meet NEMA 4, 4x and IP66 specifications. The waterproof enclosure is constructed of a durable, lightweight polymer, providing excellent chemical and corrosion resistance.

Waterproof/Explosion Proof enclosures meet NEMA 4, 4x, 7 & 9 specifications. These enclosures are constructed of die cast aluminum with an epoxy coating for chemical and corrosion protection.

A waterproof stainless steel enclosure is available upon request.

Position Indicator In addition to an LCD display, valve position is clearly shown over a distance by a yellow indicator. Made of ABS plastic material, the pointer is located between Flow-Tek pneumatic actuators and the Series 6A housing.

Accessories An externally mounted Gauge Manifold is offered with up to 3 gauges to measure air supply and the actuator input and output pressures. Volume Boosters increase air volume output and decrease response time. Filters & Regulators condition the incoming air supply.

DRAFT



LCD Display & Keypad

Flow-Tek's Series 6A LCD Display provides visual confirmation of valve position, operating status and keypad entries. With the housing cover on, the Display clearly shows actual valve position in precise one degree increments. The positioner operating mode (automatic or manual) and alarm messages are also shown.

With the housing cover removed, the keypad push buttons are accessible to perform a variety of functions, including automatic calibration, confirmation of the setpoint and progress to the setpoint, potentiometer alignment, diagnostic checks, and error messages. Additional parameters are available, please consult the factory for more information. The LCD Display shows the information entered in the keypad.

Auto Calibration

Series 6A calibration push buttons are accessible under the housing cover. Calibration is easily performed by entering only three parameters into keypad push buttons. The LCD Display provides visual confirmation of parameter values. The calibration process automatically determines the position of the travel limit stops, then measures and records the parameters for both the open and close positions. The settings are stored in nonvolatile memory to prevent loss in the event of power failure. After performing the calibration procedure, which normally takes less than 5 minutes, the Series 6A is ready for operation.

Adaptive Control

Unique to the industry, the Series 6A delivers on-line adaptive control. During the calibration process, the positioner characterizes the profile of the valve load and automatically adjusts the output air volume to an appropriate value. During operation, the unit continually optimizes control behaviors and travel times in response to changes in line media pressure. The benefits are product efficiency, reduced maintenance, increased service life and lower operational costs. This unique on-line adaptation continually optimizes field performance and sets the Series 6A apart from any competitor.

Bus Intelligence

Flow-Tek offers Series 6A Intelligent Electro-Pneumatic Positioners with serial bus network flexibility. HART, Foundation Fieldbus and Profibus PA protocols are available. Flow-Tek's bus intelligent positioners offer all Series 6A features plus increased network communication and remote access to positioner parameters and diagnostics.

Bus networks greatly reduce plant engineering and installation costs and allow for future flexibility. Adding units is easily done by just connecting the appropriate bus cable. Series 6A bus intelligent positioners can be configured from Windows based HMI and a bus modem. These units may provide a variety of detailed information on the history and operating state of the actuators, such as number of cycles, ambient temperature limits, and any air leakage. They also log every alarm message.

Optional Boards

Retransmission Module indicates valve position to the control room.

Programmable Electronic Switches can be set to activate at various travel position. 2 semiconductor switch outputs and 1 alarm output, plus 1 digital input are included.

Limit Switches provide cam activated indication of travel limits – mechanical switches or intrisically safe inductive proximitiy switches are offered.

All optional boards can be easily installed in the field.



Explosion Proof Positioners

Designed for hazardous and severe applications, Flow-Tek's Series 6A explosion proof positioners offer all the features of the waterproof units in a flameproof enclosure. Non-intrinsically safe boards may be placed inside. These rugged, heavy duty units meet EExd IIC T4/T5/T6 specifications. The Automatic Calibration keypad in the explosion proof units are externally mounted and easily accessible. The units can be controlled locally, even during operation, without removing the housing cover. The LCD display is viewed from behind an explosion proof window.

Pneumatic Positioners

Flow-Tek's Pneumatic Positioner automatically positions the output shaft to precise valve angles between 0° and 90°. The standard input signal is 3-15 psi. It can function as double acting or spring return and is adaptable for applications where reversible or split range is required.

DRAFT

Digitally Controlled Ball Valves

For Precision Electric Control Of Flow

The Flow-Tek Series 70 Electric Actuator is equipped with a digital Servo for precise valve positioning. In combination with Flow-Tek's V-control balls, the Series 70 offers superior flow control. Two digital versions are offered – an analog input unit and *Bus*Smart units with serial bus protocols. The Servo consists of a circuit board and a feedback potentiometer assembly, which both fit entirely within the standard Series 70 actuator housing. The circuit board has a screw-type terminal for ease of customer field wiring. Other terminals for internal connections to the actuator components are wired at the factory. The feedback potentiometer is driven by a gearset connected to the output drive.

Flow-Tek's unique digitally controlled Electric Actuators have many design advantages over present industry standards including:

- Simple and unique manual override handwheel system
- Lowest profile and lightest weight actuator on the market
- Simple finger or screw driver adjustment of travel limit cams without interference from other components
- Highly visible valve status display
- Externally adjustable travel stops
- Optional Torque Limiting Switching System: Switches independently respond to predetermined loads in both the open and closed directions by sensing the movement of the worm gear shaft, then interrupt the electrical power to the motor. The switches can operate at any point of actuator travel.
- Optional anticondensation Heater
- Optional Local Control Box.

The die-cast aluminum cover and base are waterproof (NEMA 4,4X, IP 65) and high-quality polyester powder coated for exceptional corrosion, wear, impact and ultra-violet resistance.
An Explosion Proof unit with the same features as the waterproof unit is available in some sizes. This unit is designed to meet NEMA 4,4X,7,9.

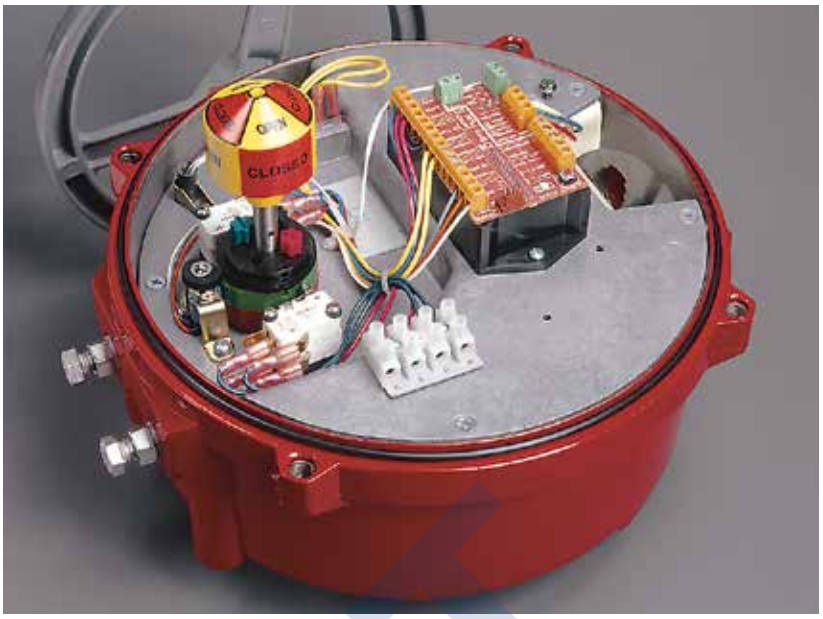

Digitally Controlled Analog Electric Actuators

The Series 70 with Servo Plus II delivers all the benefits of digital electronics to an actuator that responds to analog signals. The unit positions the valve in response to an analog command signal and produces an analog output signal of actual valve position. A microprocessor constantly compares the command signal to the actual valve position and makes precise adjustments until the two measurements match within the user-selectable deadband.

Features

The Servo Plus II features self-diagnostic checks which run constantly. The self-diagnostic results are visually indicated by locally flashing LEDs or graphically on a PC through the Configuration Tool Software. Self-diagnostics reduce operating and maintenance costs by identifying problems as they occur. Self-diagnostics include status indication operation, control signal & feedback pot calibrations, reverse acting & split range warnings, calibration in progress, handwheel engagement, command signal failure, feedback pot failure, travel limit switch failure, open & closed torque limit reached, feedback pot wired in reverse, and calibration invalid.

The Servo Plus II can be used with either 110 or 220 VAC actuators without changing jumpers or switches. User adjustable parameters include tailored bidirectional motor speed control & range, deadband, fail position upon loss of command signal, and run through protection by instant reverse delay.

Autocalibration

The Servo Plus II electric actuator offers ***one touch*** calibration. Complicated potentiometer and switch settings are eliminated. A signal generator is not required since the microprocessor already understands a 4-20 mA command signal. With the touch of a button, the auto calibration routine moves the actuator to the open and closed positions until the travel limit switches are reached. The settings are then stored in non-volatile memory to survive power outages. If limit switches are adjusted later, the autocalibration can be simply repeated.

Configuration Tool (OPTIONAL)

An optional Servo Plus Access Cable connects the Servo Plus II module to a personal computer running the Configuration Tool software. The program visually presents in highlighted text actuator operational conditions and parameter settings, and allows the user to easily make configuration adjustments.

DRAFT


Typical installation of Series 70 DeviceNet Actuator

BusSmart Electric Actuators

The Flow-Tek *Bus*Smart DeviceNet Servo is microprocessor controlled and serial bus connected using firmware specifically designed to complement the capabilities of the Automator Series 70 Electric Actuator. The microprocessor continually responds to commands from the process controller or PLC, supplying information such as valve position, limit switch positions, and other parameters through a single network address, or MAC ID. The *Bus*Smart Servo is fully ODVA (Open DeviceNet Vendor Association) compliant and can be configured, monitored and controlled over a single DeviceNet cable.

Features

The *Bus*Smart Servo has the following features: **LED Indicators** – Power, Network/Module Status, Motor Running Open, Motor Running Closed and Calibration Status; **Network Adjustable Parameters** – Command Signal, Speed Control, Instant Reverse Delay, Service Notes, Reset, Restore Default Settings and Remote Autocalibration; **Network Viewable Parameters** – Actual Position, Motor Temperature, Motor Current and Serial Number.

Operation

The *Bus*Smart Servo is easy to install and configure, similar to connecting a printer to a personal computer. Network communication wiring is accomplished through a single DeviceNet standard five-pin connector cable, and power to drive the actuator motor is brought to a terminal strip inside the actuator. Installation costs are greatly reduced. Configuration of features is made with Electronic Data Sheets (EDS) files and commercially available software. Calibration is a simple automatic process accomplished without complicated potentiometer and switch settings, and may be made with or without connection to the network. All configuration settings are stored in non-volatile memory and will survive power outages.

Electronic Data Sheet (EDS)

Flow-Tek's EDS simplifies installation, commissioning and monitoring. Configuration of features is made with EDS files and commercially available software that uses the EDS to present a clear graphic user interface for remote viewing and control. Similar to a spreadsheet, the EDS describes the various supported features of the *Bus*Smart Servo.

DeviceNet

An economical internationally recognized fieldbus network, DeviceNet is used to connect devices such as sensors and actuators while providing access to the intelligence present in those devices. Polled messages exchange data many times per second. Each scanner card in a PLC allows up to 64 devices to communicate with each other over a single cable. PLCs may use multiple scanners to connect as many devices as required.

DeviceNet Advantages

The DeviceNet fieldbus network greatly increases plant operation flexibility, efficiency and maintenance, and reduces installation and engineering costs.

Flexibility A wide variety of devices, such as control valves, sensors, motor controllers, pump controls, scanners, etc., can be installed along the DeviceNet trunk line by means of tap connectors. Devices can be removed or replaced while the network is operational. Additional devices can be added by simply connecting them to the existing bus line.

Efficiency The two way communication capacity of the network allows devices to provide information back to the controller, as well as respond to commands. Precise actuator position control and modification of parameters, such as valve travel limits and actuator speeds, can be easily performed. The entire plant can be controlled and monitored from a remote location.

Maintenance Diagnostic information such as motor temperature and current can be easily accessed from both local and remote locations over the network. Therefore, maintenance schedules can be planned and modified based on live information.

Installation Traditionally, plant controllers require one to two wires per function, per device. These wires must be physically run and identified throughout the plant. The labor, material, engineering and record keeping for any control system is time consuming and expensive. The DeviceNet fieldbus network eliminates these costs, delivering tremendous overall savings and enhanced performance.

DRAFT

Ball Valves

Valve Type	Porting	Body Materials	Sizes (ins)	Pressure Rating ASME	Pressure Drop Limit†	Seat Materials	End Connections
3-Piece: Triad	Full Port & Standard Port	Stainless Steel & Carbon Steel	Full Port: 1/4 to 4 Std. Port: 3/4 to 2 1/2	Class 600	Liquids: 500 psi Steam: 300 psi	RPTFE, TFM, Tek-Fil® PEEK, Metal	Threaded (NPT) Socket Weld Butt Weld
3-Piece: 7000/8000	Full Port	Stainless Steel & Carbon Steel	1/4 to 12	1/4 to 6": Class 150 1/4 to 4": Class 300	Liquids: 80 psi Steam: 50 psi Liquids: 225 psi Steam: 150 psi	RPTFE, Tek-Fil®	Threaded (NPT) Socket Weld Butt Weld Quick Clamp Raised Face Flanges
Flanged: F15/F30 & RF15/RF30	Full Port & Standard Port	Stainless Steel & Carbon Steel	Full Port: 1/2 to 12 Std. Port: 1 - 12	Class 150 Class 300	Liquids: 80/225* Steam: 50/150 psi*	RPTFE, TFM, Tek-Fil® PEEK, Metal	Raised Face Flanges

†Consult Flow-Tek factory or your distributor for infomation on control valve sizing and pressure drop limitations.
* Limited to ASME pressure rating for Class 150 valves.

3-Piece Valves



Triad Series Valves

Triad Series ball valves are designed for heavy duty, high pressure applications and feature a redundant body seal.

7000/8000 Series Valves

7000/8000 Series ball valves are available in a wide range of end connections and seat materials.

Flanged Valves



F15/F30/RF15/RF30 Series Valves

Flow-Tek Flanged ball valves are ideal for industrial applications. Larger F15/F30 valves feature ball suport.

For more detailed information please refer to valve brochures in the Product Manual.

Stem Assemblies

Flow-Tek features heavy duty, high quality stem designs with double "D" connections to ball and operator mounting. This connection simplifies mounting and indicates direction of flow. Stems are mated with the ball to ensure positive contact. All Flow-Tek stems are internal entry and blowout proof for maximum safety.

Smart Stem Valve Sizes 1/4" through 2-1/2"

Flow-Tek's control valves feature strong, large diameter stems with live-loaded, self-adjusting sealing utilizing belleville washers that automatically adjust to compensate for changes in temperature and wear. Manual adjustments that can cause damage to the seal are not required. The assembly is secured by a saddle-type lock washer that prevents stem nuts from unthreading in high cycle automation applications.

Stem Design: Valve Sizes 3" through 12"

The stem is guided by the valve body and the gland, ensuring smooth operation even in high torque service. The independent packing gland can be easily adjusted without removing mounting hardware or actuator. The user-friendly packing gland and gland sleeve are V-slotted to more equally distribute the load in the event one side is over tightened. All stems are polished to reduce torque. For severe applications, optional belleville washers can be added for a self-adjusting live load, providing a continuous compression seal.

Fire Safe Valves

Flow-Tek 3-Piece and Flanged valves are available as non-fire safe and Fire Safe to API 607 4th Edition standards. Flow-Tek's standard fire safe design features metal to metal ball to body contact during and after a fire, graphite stem packing, thrust bearings of stainless steel/PTFE, and graphite body seals. **Anti-Static Protection:** All Flow-Tek stems feature anti-static grounding devices as standard. These devices ensure electrical continuity between valve ball, stem and body, thus eliminating the possibility of static electric charges creating sparks within the valve.

Actuator Mounting

All V-Control Series ball valves feature Flow-Tek's Secure Mount actuator top plate mounting. The mounting is designed in accordance with ISO 5211 standards.

DRAFT

Flow-Tek®
Subsidiary of BRAY INTERNATIONAL, Inc.
8323 N. Eldridge Pkwy. #100 Houston, Texas 77041
832.912.2300 Fax: 832.912.2301
www.flow-tek.com

All statements, technical information, and recommendations in this bulletin are for general use only. Consult Flow-Tek representatives or factory for the specific requirements and material selection for your intended application. The right to change or modify product design or product without prior notice is reserved.

Flow-Tek® is a registered trademark of Bray International, Inc.
© 2018 Bray International F-2600_EN_VC_02_2018

McMASTER-CARR®

Item # 410

Quick-Set Pressure-Regulating Valve for Water

1 NPT Female Inlet x Outlet

In stock
$120.95 Each
45805K68



Valve Function	Pressure Regulation
Activation	Pressure Driven
For Use With	Water
Shape	Straight
Inlet	
Pipe Size	1
Location	Side
Connection Type	Pipe
Pipe Connection Type	Threaded
Thread Type	NPT
Gender	Female
Maximum Pressure	250 psi
Outlet	
Pipe Size	1
Location	Side
Connection Type	Pipe
Pipe Connection Type	Threaded
Thread Type	NPT
Gender	Female
Pressure Range	25 to 90 psi
Pressure Adjustment Method	Dial
Gauge Port	
Number of Ports	2
Pipe Size	1/4
Location	Side
Connection	NPT Female
Accuracy	±4%
Pressure Range Adjustment	10 psi

DRAFT

Increment	
Temperature Range	33° to 140° F
Material	
Body	Bronze
Seal	EPDM
Diaphragm	Buna-N
End-to-End Length	6 1/16"
Flow Coefficient (Cv)	30
Features	Internal Strainer, Union Fittings
Specifications Met	CSA Certified
Valve Type	Pressure Regulator

Change outlet pressure without using a gauge—turn the dial to adjust the outlet pressure in 10 psi increments. All valves automatically reduce a high, variable inlet pressure to a lower, stable outlet pressure. They have two gauge ports and an internal strainer to trap debris. Union fittings on both ends of these valves disassemble for easy valve installation and removal. Body is bronze for durability and a long service life.

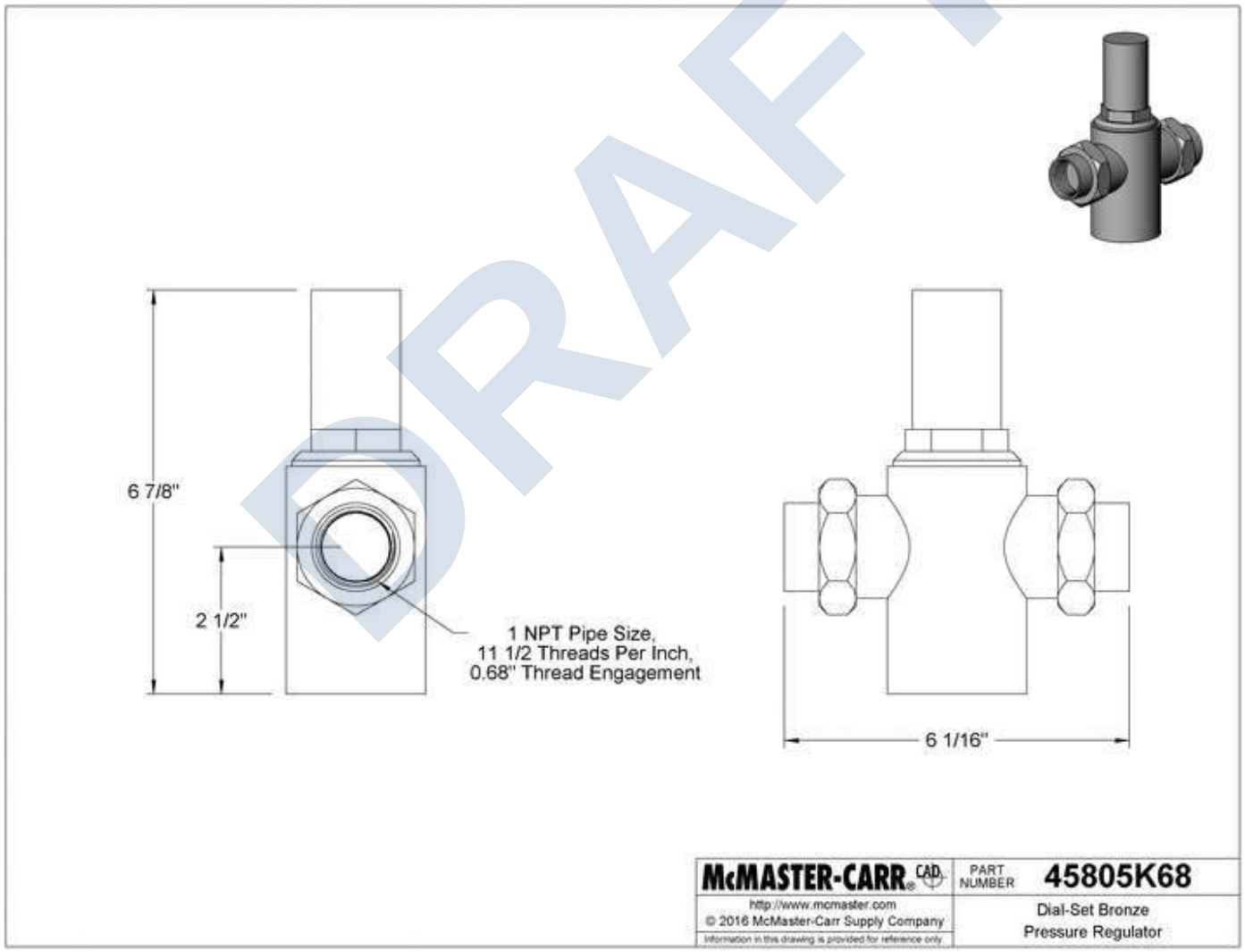

The information in this 3-D model is provided for reference only.

McMASTER-CARR®

Item # 411

PVC Inline Pipe Mixer

with 6 Blades, 1 NPT Male

In stock
$128.26 Each
35385K24



Pipe Size	1
Thread Type	NPT
Pipe Connection Type	Threaded
Gender	Male
Connection Type	Pipe
Length	11"
Number of Blades	6
Reynolds Number	1,000 and Above
Blade Material	PVC Plastic
Body	
Material	PVC Plastic
Opacity	Clear
Fitting Material	PVC Plastic
For Use With	Chlorine, Water
Mount Type	Thread In

Use for pH control and chlorination. These mixers are more chemical resistant than nylon mixers. Also known as static mixers, they install in your pipeline and mix liquid as it passes over fixed spiral blades. They have no moving parts and require no external power source.

Number of Blades—Follow these steps to determine your Reynolds number, which indicates if you need a mixer with 6 or 12 blades.

1. Multiply flow rate (gpm) by 3,157

2. Multiply specific gravity by total of Step 1

3. Multiply viscosity (cp) by pipe ID (inches)

4. Divide total of Step 2 by total of Step 3

DRAFT

,
,,

ONYX VALVE
835 Industrial Hwy, Cinnaminson, NJ 08077
phone: 856-829-2888 | Fax: 856-829-3080 | onyxvalve.com

PSS

Item # 412

The Onyx Isolator Ring provides a simple, method to measure pressure of slurries and corrosive fluids. The PSS series is compatible with threaded pipe connections.

Onyx ultra-deep vacuum filling insures the highest accuracy in the industry. The patented "Module Seal" - standard on all Onyx Isolator Rings - allows instruments to be or replaced or calibrated with minimum down time.



Materials of Construction

Center Section:	Carbon Steel	316 Stainless Steel	
End Plates: 316 Stainless Steel	Acetal Titanium	Kynar Carpenter-20	UHMW-PE
Elastomer: (Available with optional Teflon coatings)	Nitrile (Buna-N) EPDM (Nordel) Neoprene Viton Hypalon	-30°F →220°F -40°F →300°F -20°F →220°F -15°F →375°F -10°F →250°F	
Fill Fluid:	Silicone Fluid Food Grade Silicone	-40°F →400°F -20°F →400°F	
Module Seal Stinger Fitting:	Brass	316 Stainless Steel	
Pipe Fittings:	Carbon Steel	316 Stainless Steel	
Pressure Range:	Vacuum to 200 psi	The Onyx Isolator ring has been tested by an independent lab to 250 psi.	

Benefits:

- Low-Cost
- Superior accuracy compared to diaphragm seals
- Instruments can be replaced without removing the isolator ring from the pipe
- Immune to errors caused by ambient temperature fluctuations
- Integral snubber eliminates gauge fluctuations at no additional cost
- Silicone oil fill fluid is safe, non-toxic, non-corrosive, and stable from -40°F to +400°F

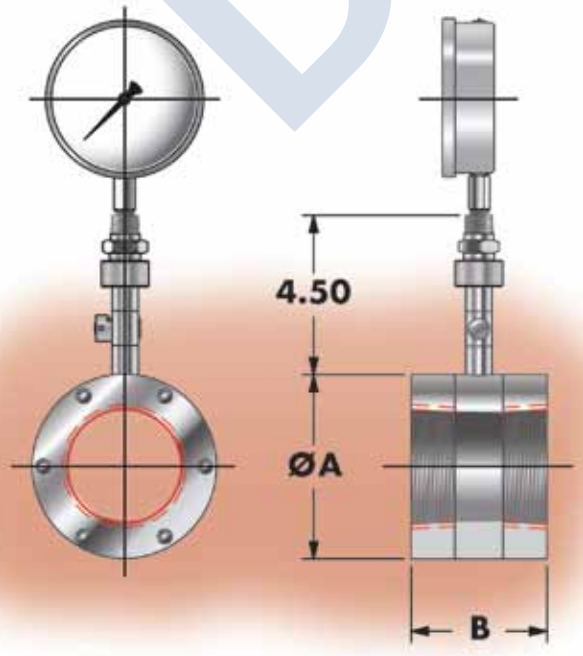

Size	ØA	B
1/2	2.50	2.87
3/4	2.50	2.87
1	2.50	3.37
1 ½	3.25	3.37
2	4.00	3.37
3	5.25	3.87
4	6.75	4.12

DRAFT

PG2794

Flush pressure sensor with analogue display

PG-010-REA01-MFRKG/US/ /P

Item # 412
Pressure Sensor

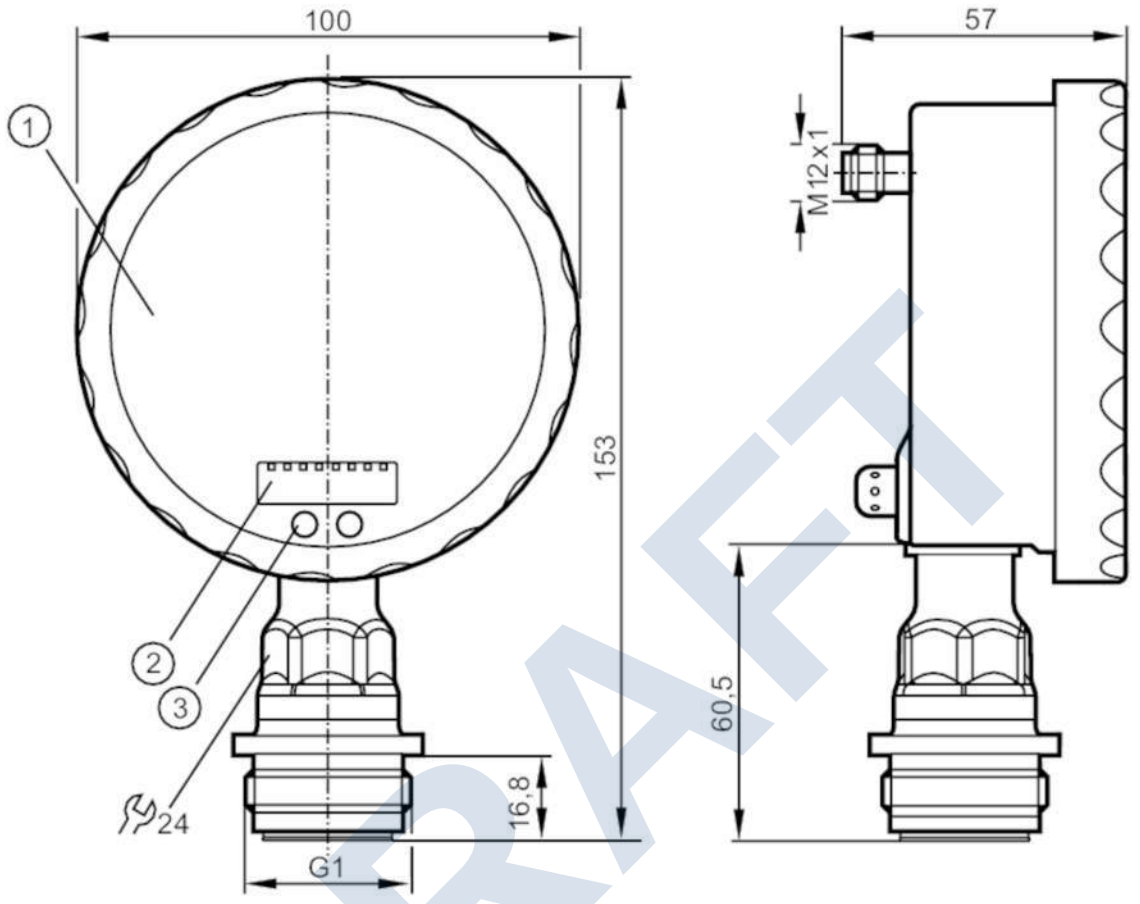

1 analogue display
2 alphanumeric display 4-digit
3 sensor field (programming button)

DRAFT

Product characteristics			
Number of inputs and outputs		Number of digital outputs: 1; Number of analogue outputs: 1	
Measuring range		-1...10 bar	-14.5...145 psi
Process connection		threaded connection G 1 external thread Aseptoflex Vario	
Application			
Special feature		Gold-plated contacts	
Application		flush mountable for the food and beverage industry	
Media		viscous media and liquids with suspended particles; liquids and gases	
Medium temperature	[°C]	-25...125; (145 max. 1h)	
Min. bursting pressure		150 bar	2175 psi
Pressure rating		50 bar	725 psi
Type of pressure		relative pressure; vacuum	
No dead space		yes	
MAWP (for applications according to CRN)	[bar]	50	

PG2794

Flush pressure sensor with analogue display

PG-010-REA01-MFRKG/US/ /P

Electrical data			
Operating voltage	[V]	18...32 DC	
Current consumption	[mA]	< 70; (24 V)	
Min. insulation resistance	[MΩ]	100; (500 V DC)	
Protection class		III	
Reverse polarity protection		yes	
Power-on delay time	[s]	6	
Integrated watchdog		yes	
Inputs / outputs			
Number of inputs and outputs		Number of digital outputs: 1; Number of analogue outputs: 1	
Outputs			
Total number of outputs		2	
Output signal		switching signal; analogue signal; (configurable)	
Electrical design		PNP/NPN	
Number of digital outputs		1	
Output function		normally open / normally closed; (parameterisable)	
Max. voltage drop switching output DC	[V]	2	
Permanent current rating of switching output DC	[mA]	250	
Switching frequency DC	[Hz]	50	
Number of analogue outputs		1	
Analogue current output	[mA]	4...20, invertible; (scalable)	
Max. load	[Ω]	(Ub - 10 V) / 20 mA	
Short-circuit protection		yes	
Type of short-circuit protection		pulsed	
Overload protection		yes	
Measuring/setting range			
Measuring range		-1...10 bar	-14.5...145 psi
Set point SP		-0.98...16 bar	-14.2...232 psi
Reset point rP		-1...15.98 bar	-14.5...231.8 psi
Analogue start point		-1...13.5 bar	-14.5...195.7 psi
Analogue end point	[bar]	1.5...16	
In steps of		0.01 bar	0.1 psi
Accuracy / deviations			
Switch point accuracy	[% of the span]	< ± 0,2; (Turn down 1:1)	
Repeatability	[% of the span]	< ± 0,1; (with temperature fluctuations < 10 K; Turn down 1:1)	
Characteristics deviation	[% of the span]	< ± 0,2; (Turn down 1:1 , linearity, incl. hysteresis and repeatability , limit value setting to DIN EN IEC 62828-1)	
Linearity deviation	[% of the span]	< ± 0,15; (Turn down 1:1)	
Hysteresis deviation	[% of the span]	< ± 0,15; (Turn down 1:1)	
Long-term stability		< ± 0,1; (Turn down 1:1; per year)	

DRAFT

PG2794

Flush pressure sensor with analogue display

PG-010-REA01-MFRKG/US/ /P

[% of the span]			
Temperature coefficient zero point [% of the span / 10 K]	< ± 0,05; (0...70 °C)		
Temperature coefficient span [% of the span / 10 K]	< ± 0,15; (0...70 °C)		
Response times			
Response time [ms]	< 10		
Damping process value dAP [s]	0.01...30		
Damping for the analogue output dAA [s]	0.01...30		
Step response time analogue output [ms]	25		
Operating conditions			
Ambient temperature [°C]	-25...80		
Storage temperature [°C]	-40...100		
Protection	IP 67; IP 69K		
Tests / approvals			
EMC	EN 61000-4-2 ESD	4 kV CD / 8 kV AD	
	EN 61000-4-3 HF radiated	10 V/m	
	EN 61000-4-4 Burst	2 kV	
	EN 61000-4-5 Surge	0,5/1 kV	
	EN 61000-4-6 HF conducted	10 V	
Shock resistance	DIN IEC 68-2-27	50 g (11 ms)	
Vibration resistance	DIN IEC 68-2-6	20 g (10...2000 Hz)	
MTTF [years]	100		
Note on approval	factory certificate available as download at www.factory-certificate.ifm		
Mechanical data			
Weight [g]	520.1		
Materials	stainless steel (316L/1.4404); PA; FKM; PTFE; viewing glass: laminated safety glass 4 mm		
Materials (wetted parts)	ceramics (99.9 % Al2O3); stainless steel (316L/1.4435); surface characteristics: Ra < 0,4 / Rz 4; PTFE		
Min. pressure cycles	100 million		
Process connection	threaded connection G 1 external thread Aseptoflex Vario		
Displays / operating elements			
Display	Display unit	2 x LED, green	
	switching status	LED, yellow	
	switch points	LED ring, red	
	function display	alphanumeric display, red 4-digit	
	measured values	analogue display, 0...350° rotatable, pointer not visible when unit disconnected	
	measured values	alphanumeric display, red 4-digit	
With scale	yes		
Extended display range (max.)	16 bar	232 psi	

DRAFT

PG2794

Flush pressure sensor with analogue display

PG-010-REA01-MFRKG/US/ /P

Remarks	
Remarks	characteristics deviation in the extended display range: 1.5 % of the span
	switch point accuracy in the extended display range: 1.5 % of the span
Pack quantity	1 pcs.

Electrical connection

Connector: 1 x M12; coding: A; Contacts: gold-plated

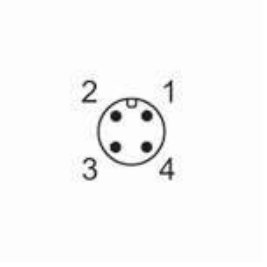

Connection



OUT1	switching output
OUT2	analogue output

DRAFT

McMASTER-CARR®

Precision-Adjustment Pressure-Relief Valve

for Water, 1/2 NPT, 25 to 175 PSI Set Pressure Range

In stock
$36.68 Each
8088K14

Item # 413



Valve Function	Pressure Relief
For Use With	Water
Activation	Pressure Driven
Inlet	
Pipe Size	1/2
Connection Type	Pipe
Pipe Connection Type	Threaded
Connection	NPT Male
Location	Bottom
Relief Port	
Pipe Size	1/2
Connection Type	Pipe
Pipe Connection Type	Threaded
Connection	NPT Female
Location	Side
Set Pressure	
Range	25 to 175 psi
Accuracy	±3%
Configuration	Adjustable
Adjustment Increment	25 psi
Adjustment Method	External Adjustment Screw
Temperature Range	33° to 200° F
Shape	Elbow
Overall Height	4 1/8"
Material	
Body	Bronze
Seal	Silicone
Valve Type	Relief
Flow Coefficient (Cv)	Not Rated
ASME Code Section	Not Rated

Change set pressure without guesswork—the adjustment screw is marked in 25 psi increments for making pressure adjustments without a gauge. These valves are commonly used with thermal-expansion protection systems and low-capacity pumps. They begin opening at the set pressure and fully open at about 10% over the set pressure. Valves begin closing as pressure drops and fully close when the system pressure is restored below the set pressure. Body is bronze for durability and a long service life.

DRAFT

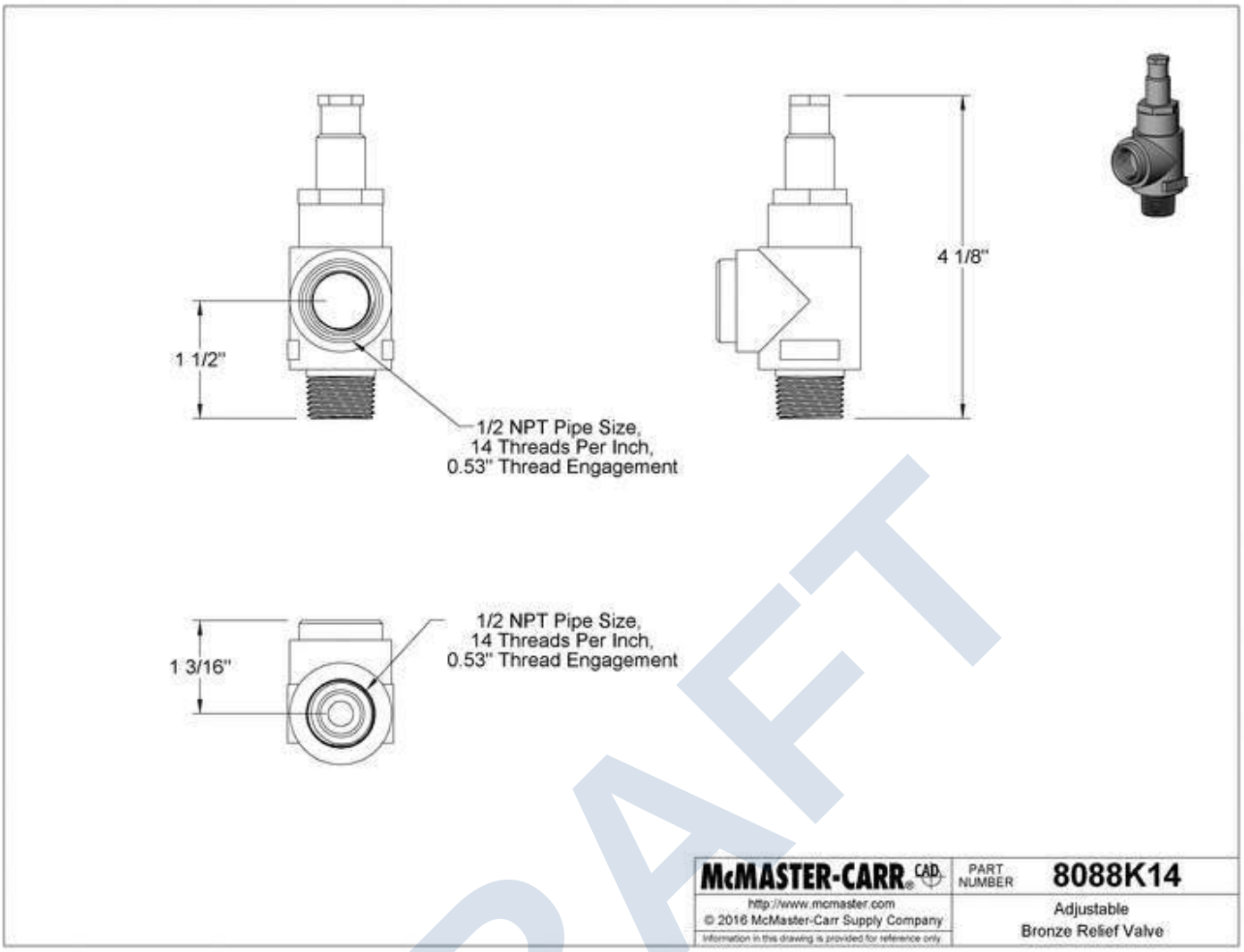

DRAFT

The information in this 3-D model is provided for reference only.

Description of models:

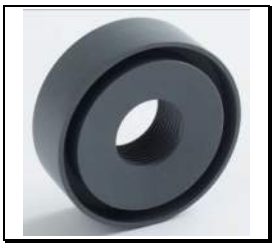

Sealed:
Top is glued to cylinder and contains a vent or overflow connection. (FNPT). Used in applications where there is a positive suction head and a permanent installation is desired.



Loose Cap: (Avail. up to 20,000 mL)
Top is loose and does not have a connection in the top. Dust cover only. Used in applications where there is no positive suction head and the cylinder must be filled from the top.



EZ-Clean: (Avail. 100 – 7000 mL only)
Top is sealed with an O-ring and has a vent connection, but removable for easy cleaning. Used in applications where frequent cleaning is required such as polymer, alum, ferric chloride or chlorine.

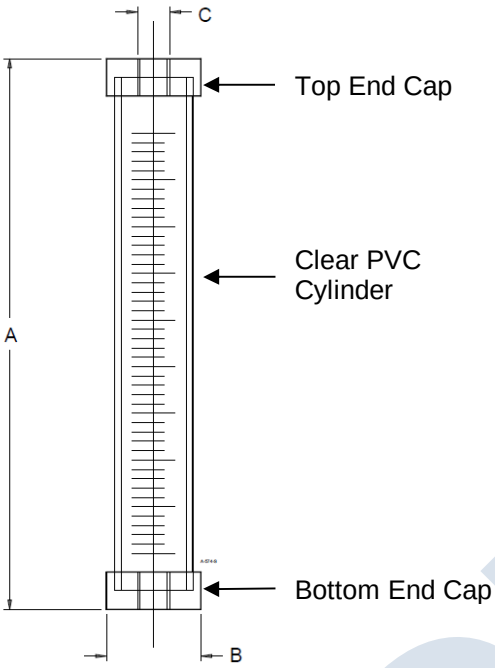

Capacity (mL) ◊	Max Flow ▲ (USgph)	(lph)	Scale (mL)	Scale ▲ (gph)	A (in)	B (in)	C (in)
100	3.17	12	1	.1	11	1.5	1/2
200	6.34	24	1	.1	19	1.5	1/2
300	9.51	36	5	.2	13	2.2	1/2
500	15.85	60	5	.2	13	2.5	3/4
1,000	31.70	120	5	.2	22	2.5	3/4
2,000	63.40	240	10	1	20	3.7	1
3,000	95.10	360	10	1	17	4.9	1 1/2
4,000	126.8	480	10	1	37	3.7	1
5,000	158.5	600	10	1	28	4.9	1 1/2
7,000	221.9	840	10	1	38	4.9	1 1/2
10,000	317.0	1200	100	5	25	6.95	2
15,000	475.5	1800	100	5	36	6.95	2
20,000	634.0	2400	100	5	47	6.95	2
30,000	952.0	3600	200	10	65*	9.5*	4
40,000	1,268.0	4800	200	10	77.5*	9.5*	4

▲ Max Flow and gph scale are based on 30 second drawdown
◊ For 60 sec draw down, double capacity in mL or flow size

* Reference only

DRAFT

Codes for Ordering PVC Calibration Columns:

CC ☐☐☐☐ ☐ ☐ ☐
1 2 3 4

1 = Size

0100 – 100 mL
0200 – 200 mL
0300 – 300 mL
0500 – 500 mL
1000 – 1000 mL
2000 – 2000 mL
3000 – 3000 mL
4000 – 4000 mL
5000 – 5000 mL
7000 – 7000 mL
10000 – 10000 mL
15000 – 15000 mL
20000 – 20000 mL
30000 – 30000 mL
40000 – 40000 mL

2 = Top End Cap Style
(Top Cap Only)

S – Sealed
L – Loose (up to 20000mL)
EZ – EZ Clean (up to 7000mL)

3 = Connections

Blank – Threaded
S – Socket
F – Flanged
U – Union

4 = Oring Material
(Union & EZ end cap orings)

Blank – FKM (Viton®)
E - EPDM

Available O-ring Options:
PTFE Encapsulated or FFKM are available upon request

Griffco Valve Inc.
6010 N. Bailey Ave, Ste 1B
Amherst, NY 14226 USA
Phone: +1 716-835-0891
Fax: +1 716-835-0893
sales@griffcovalve.com
www.griffcovalve.com

Item # 414

PVC CALIBRATION COLUMNS



Griffco calibration cylinders are designed to enhance the performance of chemical feed systems by providing a verification of the flow rate of the chemical feed pump. Robust construction of clear PVC with an easy to read graduation in mL and gph. Available in three models: EZ-Clean, Vented, and Open Top; and in 15 sizes: 100 mL through 40,000 mL as detailed here.

Features:

- **High Reliability / Low Cost**
- **High Contrast Graduation Markings**
- **Clear Easy-View Tube**
- **Robust Schedule 40 Pipe Construction**
- **Direct GPH Readout**
- **Sealed Top with Overflow Connection**
- **Optional EZ-Clean Model**
- **Optional Open Top with Dust Cap**

Operation:

Griffco calibration cylinders are installed in the suction line to the chemical metering pump. Two isolating valves, (not supplied) must be installed in the suction line as per the drawing below. The top of the cylinder should be vented back to the storage tank or to drain.

Fill the cylinder to the top mark then close the valve from the chemical tank. Switch on the chemical feed pump and draw down the chemical in the cylinder for 30 seconds. Switch the pump off. The reading on the right side of the cylinder is a direct readout of USgph. Alternatively, observe the volume withdrawn on the mL scale. To convert to LPH or GPH use this formula:

LPH = 3.6 x [mL] ÷ Time (sec)
GPH = 0.951 x [mL] ÷ Time (sec)

Note: Max. cylinder pressure is 15 psi.

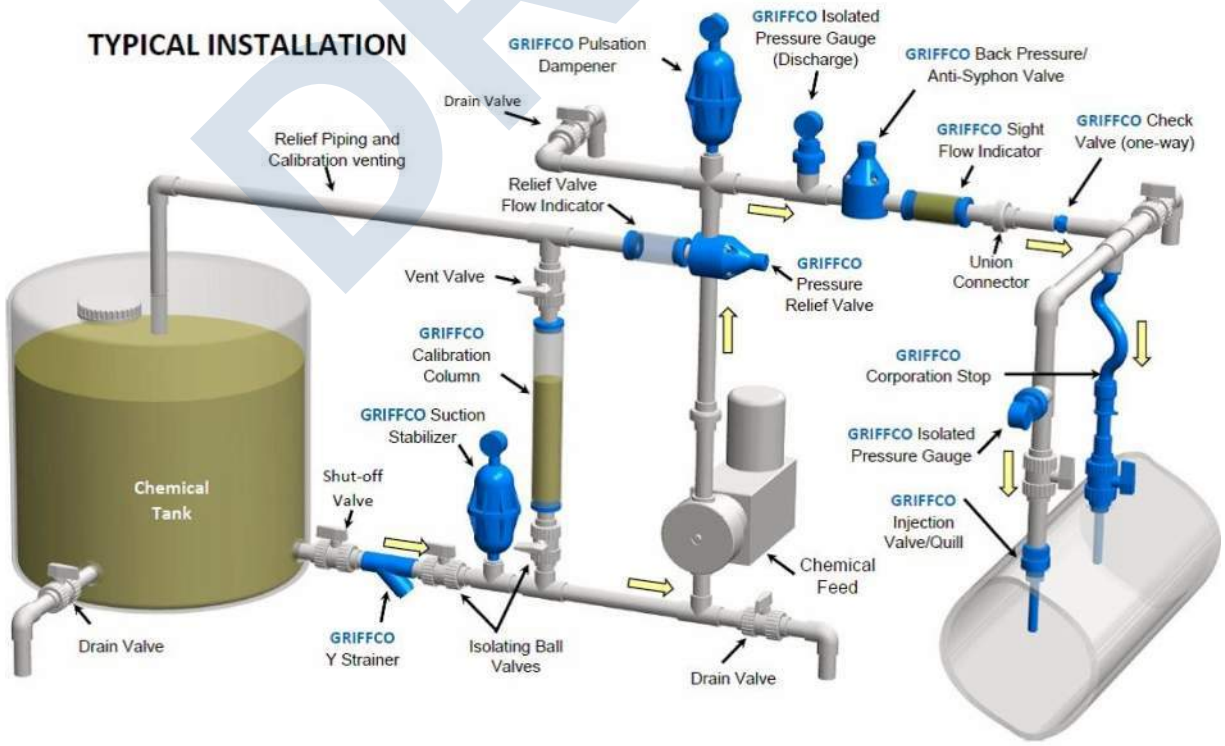

DRAFT

Item #415

SEEPEX.
ALL THINGS FLOW

1/24/2019

qty.: 1

Item 1

Progressive cavity pump

MD 003-12 / A6-J0-J0-H5-GA

Application data

Conveyed product	polymer solution
Flowability	well flowable
Viscosity	low viscosity (<500 cP/mPas)
Solids content	without
Size of solids	not applicable
Concentration	≤1%
Specific gravity	unknown, 1 kg/dm³ assumed
Product temperature	32°F - 113°F
pH value	5-9
Kind of operation	continuous
Operating hours	8h/day
Location	indoor, dry atmosphere
Altitude of installation	up to 1000 m assumed
Surrounding temperature	normal (32-113°F)

Performance data

	Capacity	**Pressure**	**Speed**
	5 USGPH	100 psi	242 rpm
Starting torque	2 lb.ft		
Req. operating power at pump shaft	0.02 HP		
Inlet pressure	flooded suction (up to 0,5bar)		
NPSHr	6.67 ft		

Tolerances according to SEEPEX standards.

Materials and executions

Installation	horizontal
Direction of rotation	counter clockwise (left)
Lantern - Design	with cover plates
Lantern - Material	1.0037 (st. 37-2)
Suction casing - Design	standard
Suction casing - Material	1.4408 / ASTM A351 grade CF8M
Pressure branch - Design	standard
Pressure branch - Material	1.4408 / ASTM A351 grade CF8M
Position of branch	position 1
Suction connection	1" NPT
Pressure connection	1/2" NPT
Joint - Design	pin joint with joint sleeve, grease filled
Joint - Material	standard
Joint - Universal joint sleeve: material	FPM
Coupling rod - Design	standard
Coupling rod - Material	1.6582 encapsulated
Rotor - Design	standard
Rotor - Material	1.4404 / AISI 316L
Stator - Design	standard
Stator - Material	FPM special

DRAFT

SEEPEX.
ALL THINGS FLOW

Shaft sealing	mechanical seal
Code	single acting mech. seal - GA
Shaft diameter	25 mm
Make	Burgmann
Rotating/stationary seal face	SiC SiC
Elastomers	FPM - Viton
Spring	1.4571 / AISI 316Ti
Metal parts	1.4571 / AISI 316Ti
Type	MG1-G60 Q1Q1 VGG
Casing - material	PPS (Ryton RTP 1379)
Casing - connection standard	without
Plug-in Shaft - Design	standard
Plug-in Shaft - Material	1.4404 / AISI 316L
Bolting - Design	stainless steel incl. locking screws
Painting - Number of colors	single-colored standard
Painting - Painted components	1 complete combination
Painting - Color	Standard Enamel (SEEPEX Blue)
Painting - Surface protection	w/o increased surface protection

Drive

Type	Gear motor at freq. inv. (Inverter is not included)
Make	Nord
Model	SK02XF-71L/4
Mounting position	M1
Ratio (i)	7.8
Speed	221 rpm

	Norm	**Min**	**Max**
Speed	221 rpm	242 rpm	242 rpm
Motor speed	1720 rpm	1890 rpm	1890 rpm
Frequency	60 Hz	66 Hz	66 Hz

Rated output	0.5 HP
Rated speed	1720 rpm
Starting	direct on frequency inverter
Efficiency class	standard efficiency
Terminal box position acc. to supplier	1
Cable entry position acc. to supplier	I
Voltage	3x230/460V
Frequency	60Hz
Enclosure	IP55
Thermal class	F

The frequency inverter has to follow a linear U/f characteristic curve (constant torque).
It's essential to have a minimum overload capability of 150% for at least 3 seconds. (see technical data sheet)

Packing

Type of packing	cardboard box (US)
Type of transport	truck / railway
Quantity of pumps per package	1 pump per package

DRAFT

Copyright: This drawing is our property and patented for us according to the law of copyright and associated rights !

not binding drawing for offer

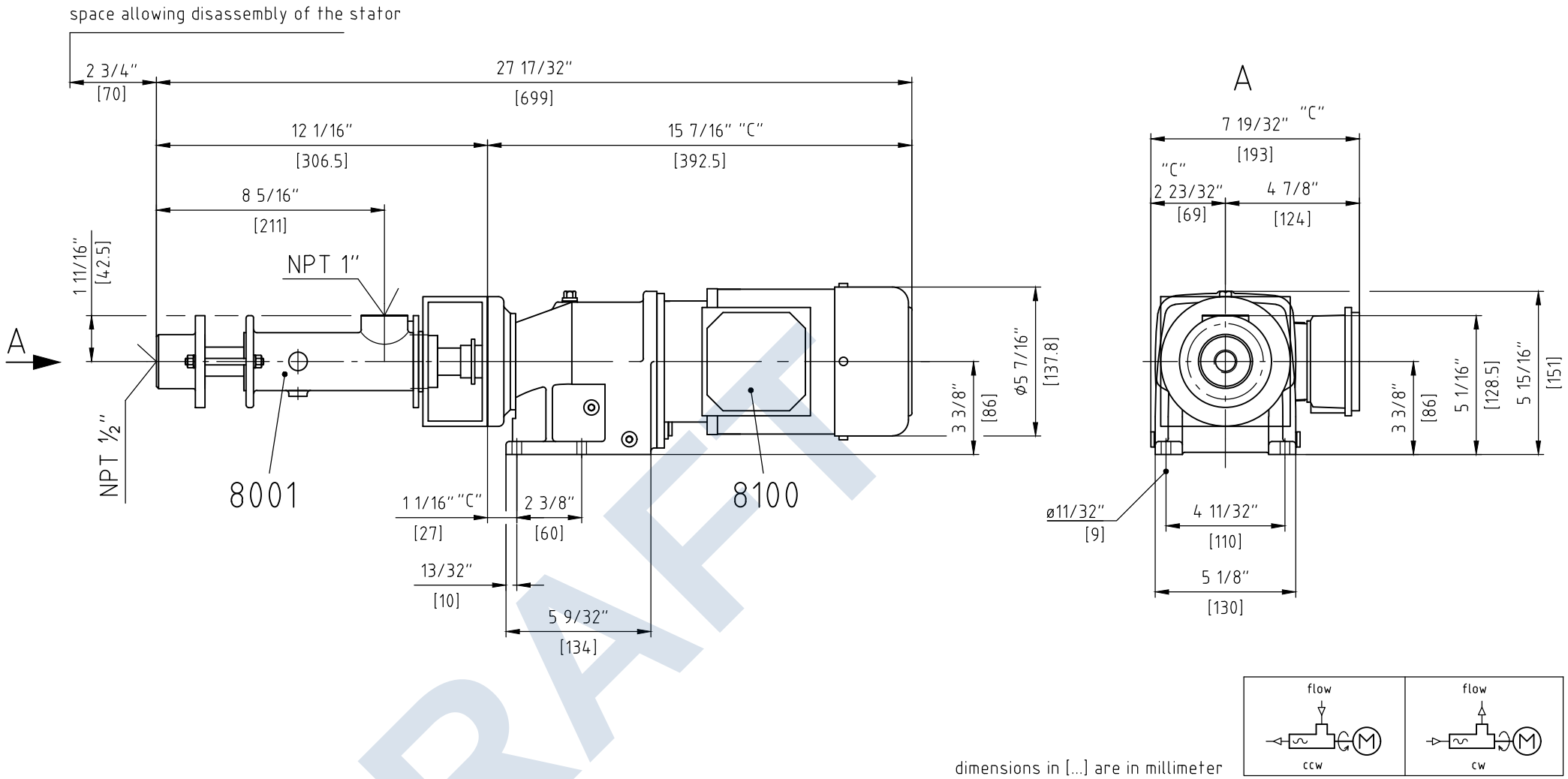

dimensions in [...] are in millimeter

Quant.	Denomination	Item	Material	Note	Weight / kg
1	drive: Nord SK02XF-71.	8100			14
1	pump: MD 003-12 / 0015-24 / 0005-24	8001			4

		Name	Day	Scale	Weight	Denomination
2008	Drawn	sbe	26.03.	1:5	18 kg	dimensional drawing
	Checked	tev	26.03.	EDP-No. 91308.dwg		Drawing-no. 103-C36/M030-C-249C4

SEEPEX.
ALL THINGS FLOW

General tolerances for dimensions without specified tolerances acc. to DIN ISO 2768-v

DRAFT

SEEPEX.
ALL THINGS FLOW

Characteristic Curves
Size
003–12 / RTE PVDF

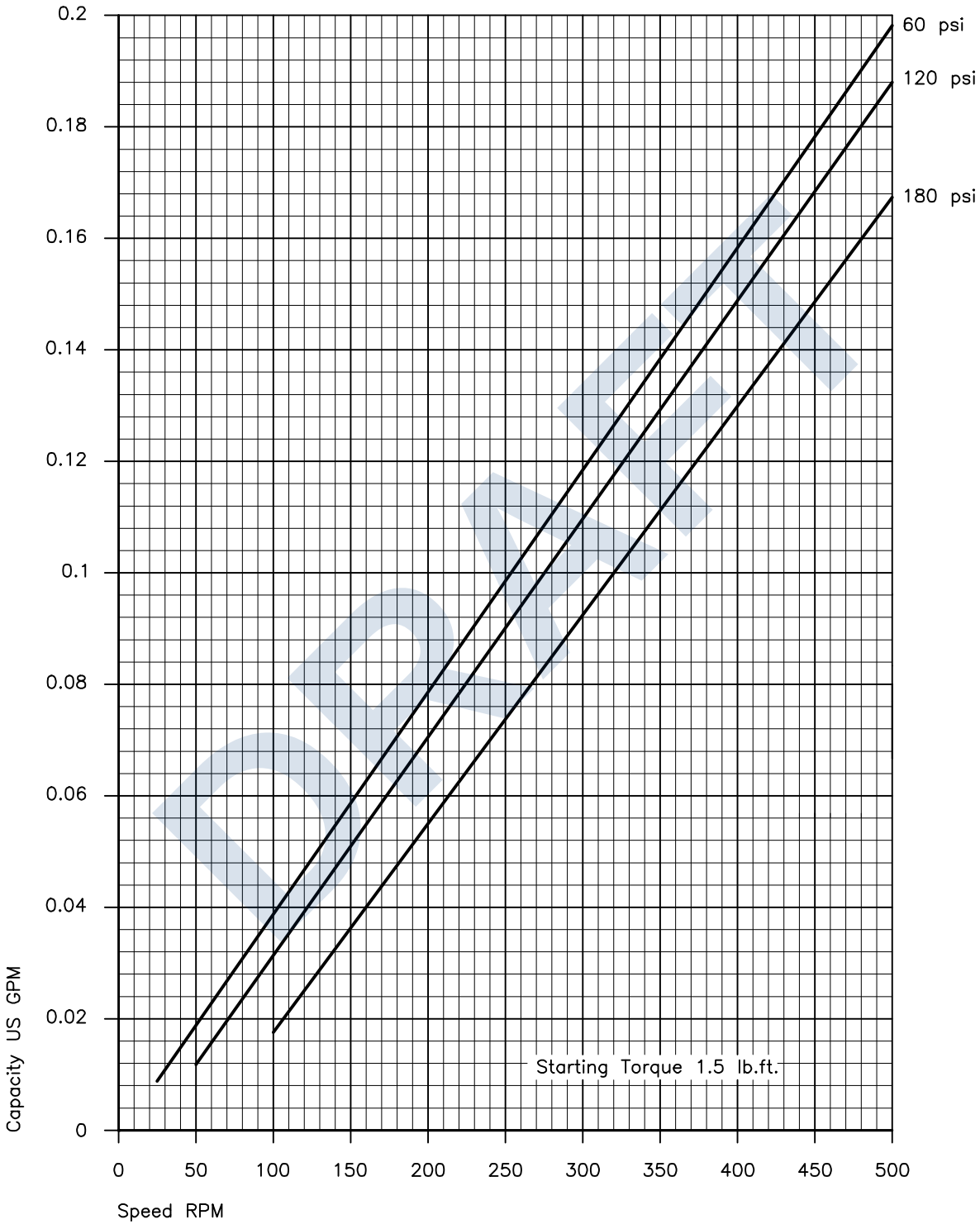

Values based upon HFC 46

CHA.003–12_12PC.s, A 02.01us

SI5006

Item #419

Flow monitor

SID10ADBFKOW/LS-100-IRF

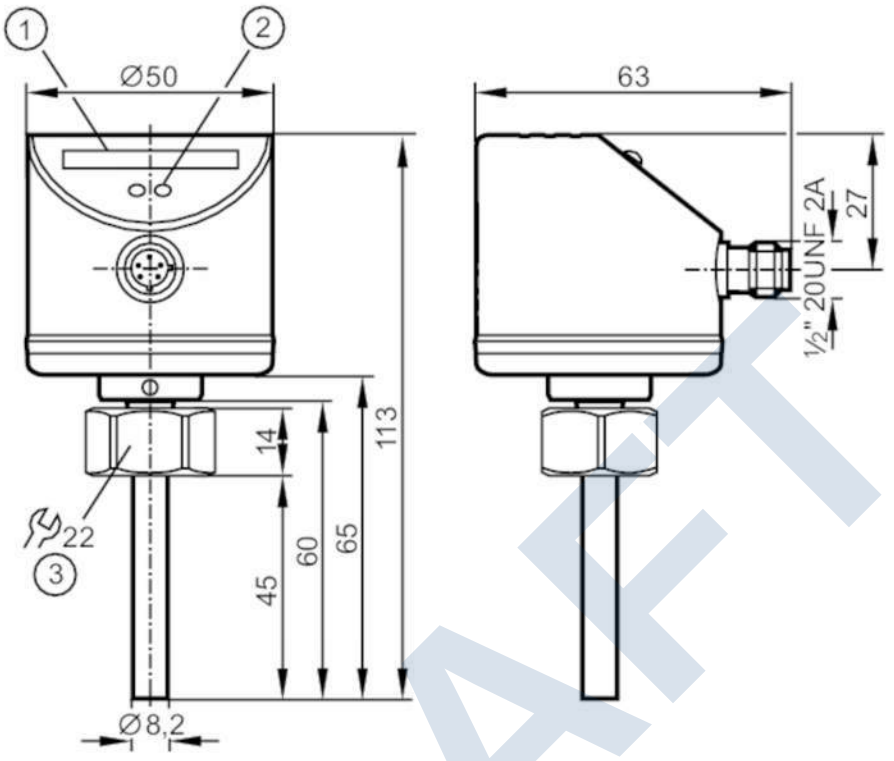

1 LED display
2 setting pushbutton
3 Tightening torque 25 Nm

Product characteristics		
Number of inputs and outputs		Number of digital outputs: 1
Process connection		M18 x 1,5 Internal thread
Application		
Media		Liquids; Gases
Medium temperature	[°C]	-25...80
Pressure rating	[bar]	300
MAWP (for applications according to CRN)	[bar]	208
Liquids		
Medium temperature	[°C]	-25...80
Gases		
Medium temperature	[°C]	-25...80

DRAFT

SI5006

Flow monitor

SID10ADBFKOW/LS-100-IRF

Electrical data		
Frequency AC	[Hz]	47...63
Operating voltage tolerance	[%]	-15...10
Operating voltage	[V]	90...240 AC
Max. power consumption	[VA]	3.5
Protection class		II
Reverse polarity protection		no
Power-on delay time	[s]	10
Inputs / outputs		
Number of inputs and outputs		Number of digital outputs: 1
Outputs		
Total number of outputs		1
Output signal		switching signal
Electrical design		Relay
Number of digital outputs		1
Output function		normally open / closed; (configurable)
Contact rating		3 A (250 V AC / 30 V DC); (number of switching cycles: 20 million mechanically; switching cycles at 3 A load: 100,000 electrical; type of switch-off: normally open)
Short-circuit proof		no
Overload protection		no
Measuring/setting range		
Probe length L	[mm]	45
Liquids		
Setting range	[cm/s]	3...300
Greatest sensitivity	[cm/s]	3...100
Gases		
Setting range	[cm/s]	200...3000
Greatest sensitivity	[cm/s]	200...800
Accuracy / deviations		
Repeatability	[% of Sr]	1...5
Note on repeatability		for water 5...100 cm/s; 25 °C Factory setting
Temperature drift	[cm/s x 1/K]	0.1; (for water 5...100 cm/s; 10...70 °C)
Max. temperature gradient of medium	[K/min]	300
Switch point accuracy	[cm/s]	± 2...± 10; (for water 5...100 cm/s; 25 °C; Factory setting)
Hysteresis	[cm/s]	2...5; (for water 5...100 cm/s; 25 °C; Factory setting)
Reaction times		
Response time	[s]	1...10
Liquids		
Response time	[s]	1...10
Gases		
Response time	[s]	1...10

DRAFT

SI5006

Flow monitor

SID10ADBFKOW/LS-100-IRF

Software / programming			
Adjustment of the switch point		pushbuttons	
Operating conditions			
Ambient temperature	[°C]	-25...80	
Storage temperature	[°C]	-25...100	
Protection		IP 67	
Tests / approvals			
EMC		DIN EN 61000-6-2	
		DIN EN 61000-6-3	
Shock resistance		DIN EN 60068-2-27	50 g (11 ms)
Vibration resistance		DIN EN 60068-2-6	18 g (55...2000 Hz)
MTTF	[years]	221	
Mechanical data			
Weight	[g]	262.5	
Dimensions	[mm]	M18 x 1.5	
Thread designation		M18 x 1.5	
Material		stainless steel (1.4404 / 316L); stainless steel (1.4301 / 304); PC; PBT-GF20; EPDM/X	
Materials (wetted parts)		stainless steel (1.4404 / 316L); O-ring: FKM 80 Shore A	
Process connection		M18 x 1,5 Internal thread	
Displays / operating elements			
Display		Function	10 x LED, three-color
Electrical connection			
Required protection		miniature fuse to IEC60127-2 sheet 1; ≤ 5 A; fast acting	
Remarks			
Remarks		Recommendation Check the safe functioning of the unit after a short circuit.	
Pack quantity		1 pcs.	

Electrical connection

Connector: 1 x 1/2"; coding: C

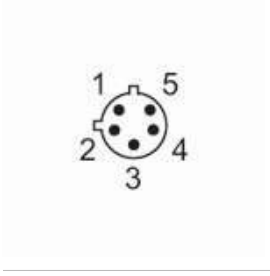

DRAFT

SI5006

Flow monitor

SID10ADBFKOW/LS-100-IRF

Connection

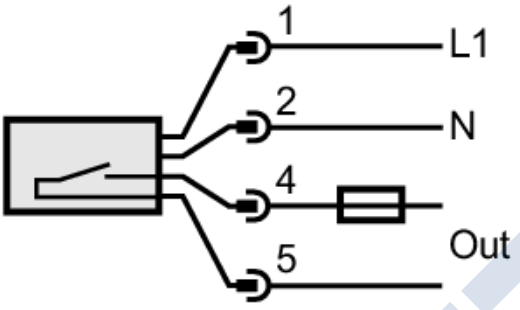

Note miniature fuse to IEC60127-2 sheet 1 ≤ 5 A fast acting

DRAFT

Electrical Product Description

DRAFT

Technical Systems Inc.

Corporate Office
2303 196th Street SW
Lynnwood, WA 98036
Tel 425.775.5696
TSIcontrols.com

Polymer System Control Panels Submittal

Specification Section 11240

DRAFT

Project Name:	FKC - San Luis, AZ
Customer:	FKC Company, LTD.
TSI Project No.:	8272
Project Manager:	Bryan Crutcher
Date:	April 2025
Prepared By:	Technical Systems, Inc. 2303 196th St SW Lynnwood, WA 98036 (425) 775-5696

SUBMITTAL COMMENTS

TSI Submittal No.	TSI Project No.
01	8272
Project Name	
Specification Section(s)	
11240	
Description	
Polymer System Control Panels	

No.	Submittal Comments

DRAFT

Technical Systems Inc **Customer - FKC Company, LTD.**

Control Panel BOM **FKC** **Job Number - 8272**

PartID	Qty	Manufacturer Part Number	Description	Manufacturer	Vendor
			(SCP-8301) Polymer System 1		
135D	1	SCE-42EL3612SS6LPPL	Wall Mount Flange Mount Disconnect Enclosure, 316SS, NEMA 3R/4/4X/12, Single Door 42.00" x 36.00" x 12.00"	Saginaw	Saginaw
138G	1	SCE-42P36	Enclosure Backpan, Painted Mild Steel, 39.00" x 33.00"	Saginaw	Saginaw
139A	1	SCE-ELMFK4	Enclosure Wall Mount Kit	Saginaw	Saginaw
140A	1	ALFSWD	Enclosure Switch, Door Activated	Hoffman	Graybar
142A	1	0595682	LED Lighting Package, Under Cabinet Style, 10-Watt LED, Hard-wired 120 VAC, 24.00" x 1.61" x 2.13"	Utilitech	Utilitech
200B	80	3044102	Terminal Block, UT4, Gray, 26-10 AWG, 600V, 32A	Phoenix Contact	Graybar
200C	8	3044131	Terminal Block, UT6, Gray, 24-8 AWG, 600V, 41A	Phoenix Contact	Graybar
201B	16	3044128	Terminal Block, Grounded, UT4-PE, Yellow-Green, 26-10 AWG	Phoenix Contact	Graybar
202A	4	3047028	Terminal Block End Barrier, UT2.5/10 Terminals	Phoenix Contact	Graybar
203A	20	0800886	Terminal Block End Clamp, 9.5mm Wide	Phoenix Contact	Graybar
204B	1	3030365	Terminal Block Plug-in Bridge, UT4, Red, 20 position (Trim as Required)	Phoenix Contact	Graybar
210A	22	1492-WFB424	Fuse Terminal Block, 5x20mm Fuse, Black, Red LED Indicator, 30-12 AWG, 15A @ 10-57VAC/VDC	Allen-Bradley	North Coast Electric
211A	1	1492-SJFB8-10	Fuse Terminal Block Side Jumper, 10 Position Insulated (Trim as Required)	Allen-Bradley	North Coast Electric
221A	10	S500-250-R	Fuse, 0.25 A, Glass Body, 5x20mm, Fast Acting, 250VAC/60VDC	Bussmann	Graybar
221B	8	S500-500-R	Fuse, 0.5 A, Glass Body, 5x20mm, Fast Acting, 250VAC/60VDC	Bussmann	Graybar
221D	4	S500-2-R	Fuse, 2 A, Glass Body, 5x20mm, Fast Acting, 250VAC/60VDC	Bussmann	Graybar
232A	1	2866310	Power Supply, TRIO Series, 24VDC (22.5-29.5VDC range setting), 5.0 A, 85-264VAC input	Phoenix Contact	Graybar
241C	4	1489-M1C050	Miniature Circuit Breaker, 1-Pole, 5A, Din Rail Mount, 277VAC/48VDC Max, Trip Curve C, 10kA, UL 489 Listed	Allen-Bradley	North Coast Electric
241E	1	1489-M1C100	Miniature Circuit Breaker, 1-Pole, 10A, Din Rail Mount, 277VAC/48VDC Max, Trip Curve C, 10kA, UL 489 Listed	Allen-Bradley	North Coast Electric
241K	1	1489-M1C300	Miniature Circuit Breaker, 1-Pole, 30A, Din Rail Mount, 277VAC/48VDC Max, Trip Curve C, 10kA, UL 489 Listed	Allen-Bradley	North Coast Electric
245A	1	2907918	Surge Arrester, Pluggable Type, 150VAC/DC, 26A (20A for UL Applications)	Phoenix Contact	Graybar
260A	1	UGB2/0-414-6	Ground Bus Bar, Tin Plated Copper, 5" x 5/8", 14 - 4 AWG, 6-port	Panduit	Graybar
307B	1	700-HK32Z24-4	Slim Line Control Relay, DPDT, 8A Contacts, 24 VDC Coil, Pilot Light	Allen-Bradley	North Coast Electric
307D	1	700-HN122	Slim Line Control Relay Base, Mini 8-Blade Base Socket, Screw Terminals	Allen-Bradley	North Coast Electric
307F	16	700-HK36Z24-4	Slim Line Control Relay, SPDT, 16A Contacts, 24 VDC Coil, Pilot Light	Allen-Bradley	North Coast Electric
307H	16	700-HN121	Slim Line Control Relay Base, Mini 5-Blade Base Socket, Screw Terminals	Allen-Bradley	North Coast Electric
356B	1	800H-JR2B	Selector Switch, 3-Position, Maintained, 30mm, NEMA-4X, 2 NO/2 NC Contact	Allen-Bradley	North Coast Electric
357D	1	800H-FRXT6D4	Push Button, Non-Illuminated Mushroom Head, 2-Position Push-Pull Twist Release, Red, 30mm, NEMA-4X, 1 NO/1 NC Contact	Allen-Bradley	North Coast Electric
364A	1	800H-QRBH2A	Pilot Light, Push-to-Test, LED, 12-130VAC/VDC, Amber, 30mm, NEMA-4X	Allen-Bradley	North Coast Electric
364B	1	800H-QRBH2G	Pilot Light, Push-to-Test, LED, 12-130VAC/VDC, Green, 30mm, NEMA-4X	Allen-Bradley	North Coast Electric
421A	1	2891152	Unmanaged Ethernet Switch, 5-port 10/100 Copper, 9-32VDC Supply	Phoenix Contact	Graybar
454A	1	cMT2078X	Smart HMI, 7", Resolution 800 x 600, Dark Grey Bezel, 1.5 GHz CPU, 4 GB Flash Memory, 1 GB DRAM, UL Listed, Ethernet, 24VDC	Maple Systems	Maple Systems
510K	1	1769-L24ER-QBFC1B	CompactLogix Controller, Dual Ethernet w/DLR capability, 750KB Memory, 16 DC Inputs, 16 DC Outputs, 4 Universal Analog Inputs, 2 Analog Outputs, 4 High Speed Counters, Up To 4 1769 I/O Expansion Modules, 8 EtherNet/IP And 120 TCP Connections, 24VDC, 1 USB	Allen-Bradley	North Coast Electric
516A	1	1769-IF4	Analog Input Module, 4 Channel, Voltage or Current	Allen-Bradley	North Coast Electric
706D	1	140G-G-RVM21B	Rotary Handle Assembly, Frame G Base, Black Handle, 21" Maximum Depth	Allen-Bradley	North Coast Electric
706E	1	194U-A60-1753	Non-Fused Disconnect Switch, 60A Max	Allen-Bradley	North Coast Electric
738D	2	140MT-C3E-C10	Motor Protection Circuit Breaker, 6.3 - 10.0 A, Standard Performance, Frame Size C	Allen-Bradley	North Coast Electric
746L	2	25B-V2P5N104	PowerFlex 525 AC Drive, with Embedded EtherNet/IP and Safety, 120 VAC, 1 Phase, 0.5 HP, 0.4 kW Normal Duty; 0.5 HP, 0.4 kW Heavy Duty, Frame A, IP20 NEMA / Open Type, No Filter	Allen Bradley	North Coast Electric

DRAFT

SAGINAW CONTROL & ENGINEERING
Your Enclosure Source®

STAINLESS STEEL ENVIROLINE® SERIES WALL-MOUNT ENCLOSURES WITH 3-POINT HARDWARE

Application

Designed to house electrical and electronic controls, instrumentation and components in indoor or outdoor locations. For outdoor applications a drip shield is recommended. For installation information, consult our Installation Manual at www.saginawcontrol.com.

Construction

- 0.075" stainless steel Type 304 & 316/316L.
- Seams continuously welded and ground smooth.
- Flange trough collar around all sides of door opening.
- Collar studs provided for mounting optional sub-panels.
- Mounting holes in back of the enclosure for wall mounting.
- Mounting hardware, sealing washers and hole plugs included.
- Stainless steel concealed hinges.
- Removable and interchangeable doors.
- Black zinc die cast keylocking/padlocking handles.
- 3-point latching mechanism.
- Black quarter turn latches as required.
- Removable print pocket.
- Pour in place oil and water resistant gasket
- Ground stud on door and body.

Finish

#4 brushed finish on all exterior surfaces. Optional sub-panels powder coated white.

IS6 Industry Standards

NEMA Type 3R, 4, 4X, 12 & Type 13
UL Listed Type 3R, 4, 4X & 12
CSA Type 3R, 4, 4X & 12
IEC 60529 IP66

***To maintain Type 3R listing, Drainage is required. Install equally rated drainage device or drill a 1/8 to 1/4 inch hole in the bottom center of the enclosure, approximately 1 inch from the right, and 1 inch from the left for drainage, use listed rain-tight or wet location hubs. Drip shield over the door is recommended for all outdoor applications.

304 STAINLESS STEEL

Enclosure Product Code S9					Sub-Panel (P3`)		
Catalog No.	Height (A)	Width (B)	Depth (C)	Industry Standard	Catalog No.	Panel Height (D)	Panel Width (E)
SCE-24EL2010SSLPPL	24.00	20.00	10.00	IS6	SCE-24P20	21.00	17.00
SCE-24EL2410SSLPPL	24.00	24.00	10.00	IS6	SCE-24P24	21.00	21.00
SCE-30EL2412SSLPPL	30.00	24.00	12.00	IS6	SCE-30P24	27.00	21.00
SCE-30EL3012SSLPPL	30.00	30.00	12.00	IS6	SCE-30P30	27.00	27.00
SCE-36EL2412SSLPPL	36.00	24.00	12.00	IS6	SCE-36P24	33.00	21.00
SCE-36EL3012SSLPPL	36.00	30.00	12.00	IS6	SCE-36P30	33.00	27.00
SCE-36EL3612SSLPPL	36.00	36.00	12.00	IS6	SCE-36P30	33.00	27.00
SCE-42EL3612SSLPPL	42.00	36.00	12.00	IS6	SCE-42P36	39.00	33.00
SCE-48EL3612SSLPPL	48.00	36.00	12.00	IS6	SCE-48P36	45.00	33.00
SCE-48EL3616SSLPPL	48.00	36.00	16.00	IS6	SCE-48P36	45.00	33.00
SCE-60EL3612SSLPPL	60.00	36.00	12.00	IS6	SCE-60P36	57.00	33.00
SCE-60EL3616SSLPPL	60.00	36.00	16.00	IS6	SCE-60P36	57.00	33.00
SCE-60EL3624SSLPPL	60.00	36.00	24.00	IS6	SCE-60P36	57.00	33.00
SCE-72EL3624SSLPPL	72.00	36.00	24.00	IS6	SCE-72P36	69.00	33.00

316 STAINLESS STEEL

Enclosure Product Code S9					Sub-Panel (P3`)		
Catalog No.	Height (A)	Width (B)	Depth (C)	Industry Standard	Catalog No.	Panel Height (D)	Panel Width (E)
SCE-24EL2010SS6LPPL	24.00	20.00	10.00	IS6	SCE-24P20	21.00	17.00
SCE-24EL2410SS6LPPL	24.00	24.00	10.00	IS6	SCE-24P24	21.00	21.00
SCE-30EL2412SS6LPPL	30.00	24.00	12.00	IS6	SCE-30P24	27.00	21.00
SCE-30EL3012SS6LPPL	30.00	30.00	12.00	IS6	SCE-30P30	27.00	27.00
SCE-36EL2412SS6LPPL	36.00	24.00	12.00	IS6	SCE-36P24	33.00	21.00
SCE-36EL3012SS6LPPL	36.00	30.00	12.00	IS6	SCE-36P30	33.00	27.00
SCE-42EL3612SS6LPPL	42.00	36.00	12.00	IS6	SCE-42P36	39.00	33.00
SCE-60EL3612SS6LPPL	60.00	36.00	12.00	IS6	SCE-60P36	57.00	33.00

DRAFT



www.saginawcontrol.com • 95 Midland Rd, Saginaw MI 48638 • Phone: 989-799-6871 Fax: 989-799-4524

SAGINAW CONTROL & ENGINEERING
Your Enclosure Source®

STAINLESS STEEL ENVIROLINE® SERIES WALL-MOUNT ENCLOSURES WITH 3-POINT HARDWARE

TECHNICAL DATA

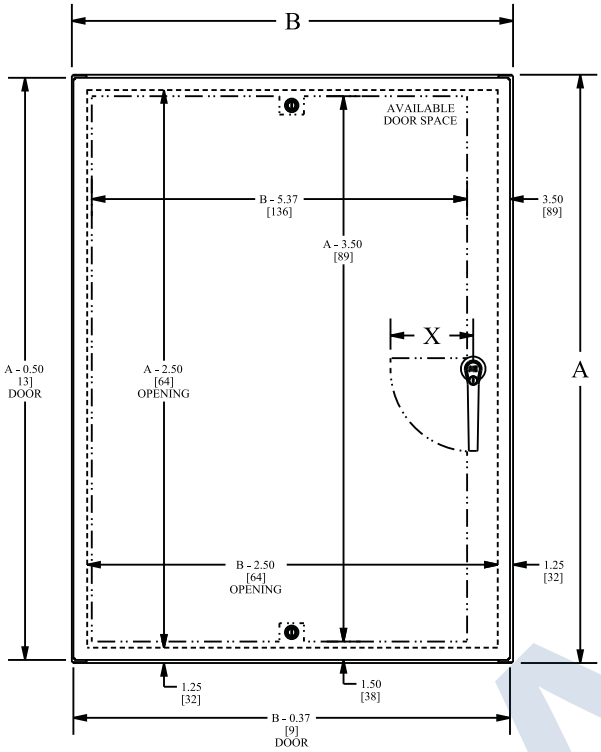

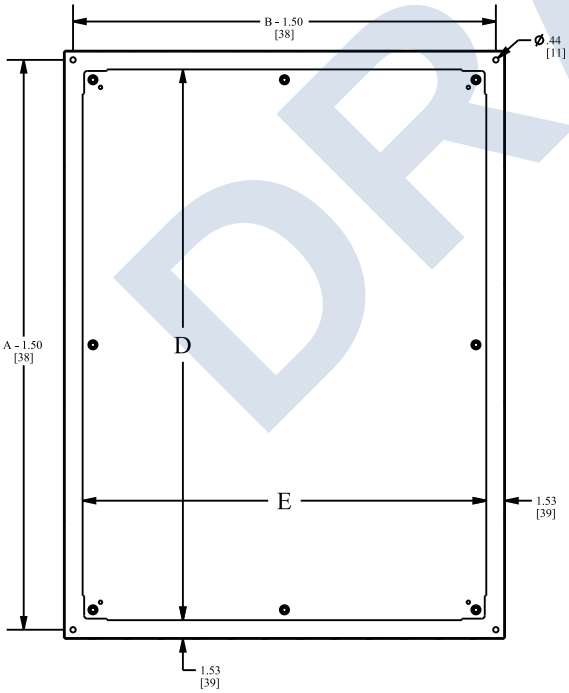

LATCH NOTES:

OMIT CENTER LATCH TOP AND BOTTOM OF DOOR WHEN DOOR WIDTH IS < 30.00 [762]

HANDLE NOTES:

WHEN ENCLOSURE HEIGHT <= 42.00 [1067] "X" = 5.50 [140]

WHEN ENCLOSURE HEIGHT > 42.00 [1067] "X" = 6.75 [172]

DRAFT

SAGINAW CONTROL & ENGINEERING
Your Enclosure Source®

MOUNTING OPTIONS

MOUNTING FOOT KIT

Made for use with all SCE Enviroline® Series enclosures and two-door wall-mount enclosures. Chemical and Corrosion resistant Polyamide material for use in type 3, 3R, 4, 4X and 12 enclosures.

Catalog No.	Fasteners	Qty Per Kit	NEMA Rating	Product Code
SCE-ELMFK4	Stainless Steel	4	4 & 12	P2
SCE-ELMFK6	Stainless Steel	6	4 & 12	P2
Bulk Parts				
SCE-ELMFK4-25	Stainless Steel	25 sets of 4	4 & 12	V1





Catalog No.	Fasteners	Qty Per Kit	NEMA Rating	Product Code
SCE-ELMFK4SS6-OS	Stainless Steel Type 316	4	4, 4X & 12	P2

S.S. MOUNTING FOOT KIT

Made for use with all SCE Enviroline® Series enclosures and two-door wall-mount enclosures. Made of heavy gauge stainless steel type 316/316L with stainless steel stud. Available in kits of four.

TYPE 3R MOUNTING FOOT KIT

Designed for use on large wall-mount type 3R enclosures. Four mounting feet per kit, made of heavy gauge carbon steel and powder coated ANSI-61 gray. Hardware is included to fasten mounting foot kit to the enclosure. .

Provided with UL Recognized sealing washer to maintain Environmental Rating of the enclosure.

Catalog No.	Height (A)	Width (B)	Depth (C)	Product Code
SCE-N3RMFK4	3.25	2.00	0.51	P2

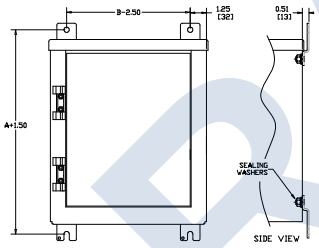

ENVIROLINE® JUNCTION ENCLOSURE (ELJ MOUNTING) FOOT KIT

Made for use with all SCE Enviroline® Series junction enclosures. Chemical and Corrosion resistant Polyamide material rated for type 3, 3R, 4, 4X and 12 with stainless steel fasteners. Four mounting feet per kit. Hardware is included to fasten mounting foot kit to the enclosure.

Catalog No.	Height (A)	Width (B)	Qty Per Kit	Product Code
SCE-ELJMFK	2.13	1.25	4	P2



S.S. ENVIROLINE® JUNCTION ENCLOSURE (ELJ MOUNTING) FOOT KIT

Made for use with all SCE Enviroline® Series junction enclosures. Four mounting feet per kit, made from type 304 stainless steel. Hardware is included to fasten the mounting foot kit to the enclosure.

Catalog No.	Height (A)	Width (B)	Qty Per Kit	Product Code
SCE-ELJMFKSS-OS	2.13	1.25	4	P2





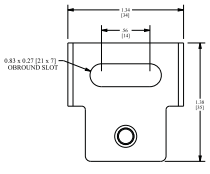

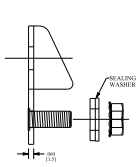

DRAFT

REMOTE DOOR SWITCHES



- The remote door switch can activate a light or other electrical component when the enclosure door is opened
- Mounts on enclosure frame and includes mounting hardware
- Mounting plate is 14 gauge steel with a plated finish
- Can be hard-wired to the PANELITE LED or Fluorescent light or connected via the PANELITE Door Switch Cable

BULLETIN: A80LT, P20

Catalog Number	Description
ALFSWD	Door switch assembly (order connection cable separately)
PLFSWD	Door switch assembly for PROLINE and PROLINE G2 (order connection cable separately)

TOUCH-SAFE UL LIGHT SWITCH



APPLICATION

The Touch-Safe light switch is designed to be used with Hoffman light kits (AC and DC). It provides a UL listed touch-safe switch that can be used on many enclosure types and includes hardware for most applications. The light switch maintains enclosure overall rating up to UL 508A Type 4X or 12.

FEATURES

- UL listed for a touch-safe wire connection
- Easily mounted to various enclosure types; common bracket and hardware included for many enclosure types (NEMA, CONCEPT/FUSION G7, PROLINE, Free-Stand Type 12)
- Cable PG compression hub
- Wide operating temperature range: -49°F to +158°F (-45°C to 70°C)
- Rugged die-cast anodized zinc construction
- Connection 3 cage clamps for solid and stranded wire AWG 20-14 (0.5-2.5mm²)
- Protection class I (grounded)

BULLETIN: A80LT

Catalog Number	Max. Cable Dia.	Max. Voltage
LDSWITCH	.375 in.	250 AC / 48 DC

MOUNTING BRACKET KIT FOR LIGHT PACKAGE



Kit simplifies mounting light package in Hoffman PROLINE disconnect enclosures. Includes brackets, all mounting hardware and complete instructions.

BULLETIN: A80LT

Catalog Number	Description
PDLFBRKT	Mounting Bracket Kit

LED PUCK LIGHT



The LED Puck Light is ideal for remote and darkened applications. This versatile light provides mounting flexibility; it can be magnetically attached to flat steel surfaces or can be hung with a swivel hook. This small form factor, light-weight LED light provides superior lighting performance with minimal power consumption. It can be used as a three-LED flashlight or as a 24-LED work light with operating temperature of 40 F to 120 F (4 C to 48 C). An on/off switch is incorporated in the light and three AAA batteries are included.

BULLETIN: A80LT

Catalog Number	AxBxC in./mm	Product Weight
LEDPUCK	2.25 x 3.75 x 1.38 57 x 95 x 35	0.22 lbs.

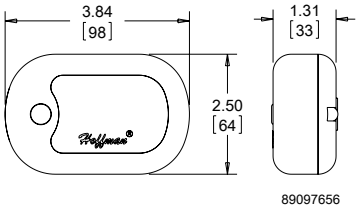

DRAFT

ITEM #0595682, 0595683, 0595684, 0595685

STRIP LIGHT

MODEL #MXL2005-LED1X10K840
MXL2005-LED1X20K840
MXL2005-LED2X10K840
MXL2005-LED2X20K840

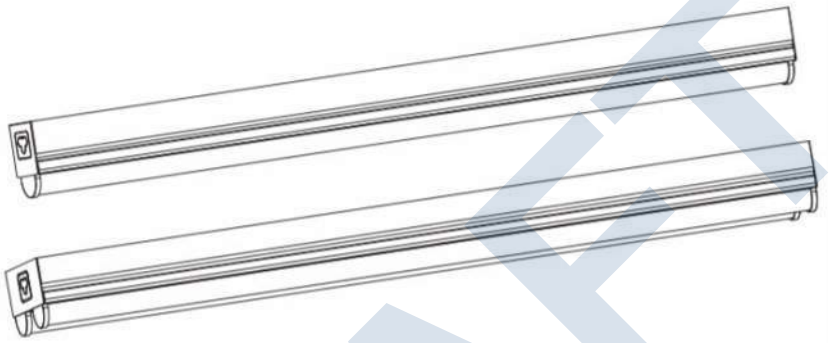

DRAFT

Description

Strip (Common: 2-ft; Actual: 2-ft)

- Energy saving LED uses 41% less electricity than a comparable 1-light T8 fluorescent light fixture
- LED lasts longer - rated to last 35,000 hours
- Produces 900 lumens of brightness using only 10 watts
- 10 watt integrated LED therefore no light bulbs will need to be replaced
- Easy to link up to thirty 24-inch, 1-light LED strip lights
- Gives off bright white light that is perfect for detailed tasks (4,000k CCT)
- UL rated for damp locations
- 3 year limited warranty
- White metal housing

Specifications

Type	Strip
Number of Bulbs Required (Count)	0
Bulb Length (Inches)	24
Ballast Grade	Residential/Commercial
ENERGY STAR Qualified	Yes
Maximum Fixture Wattage	10
Actual Fixture Length (Inches)	24
Actual Fixture Width (Inches)	1.61
Actual Fixture Height (Inches)	2.13
Common Fixture Length	2-ft
Weight (lbs.)	1.7
Lens Included	Yes
Lens Type	Frosted acrylic

Color/Finish Family	White
Motion Activated	No
Hardwired or Plug-In	Hardwired
Title 24 Compliant	No
UL Safety Listing	Yes
CSA Safety Listing	No
ETL Safety Listing	No
Bulbs Included	Yes
Light Bulb Base Type	LED
Recommended Light Bulb Shape	LED

Collection Name	N/A
Bulb Type	LED

SAFETY INFORMATION

NOTICE

- This equipment has been tested and found to comply with the limits for a Class B digital device, pursuant to part 15 of the FCC Rules. These limits are designed to provide reasonable protection against harmful interference in a residential installation. This equipment generates, uses and can radiate radio frequency energy and, if not installed and used in accordance with the instructions, may cause harmful interference to radio or television reception, which can be determined by turning the equipment off and on. The user is encouraged to try to correct the interference by one or more of the following measures:
  - Reorient or relocate the receiving antenna.
  - Increase the separation between the equipment and the receiver.
  - Connect the equipment into an outlet on a circuit different from that to which the receiver is connected.
  - Consult the dealer or an experienced radio/TV technician for help.

- This Class B digital apparatus complies with Canadian ICES-003.

ITEM #	MODEL #	MAXIMUM NUMBER OF LINKED FIXTURES
Item # 595682	MXL2005-LED1X10K840	Connect up to 30 fixtures.
Item # 595683	MXL2005-LED1X20K840	Connect up to 15 fixtures.
Item # 595684	MXL2005-LED2X10K840	Connect up to 15 fixtures.
Item # 595685	MXL2005-LED2X20K840	Connect up to 7 fixtures.

DRAFT

c UL us LISTED

UT 4 - Feed-through terminal block

3044102

https://www.phoenixcontact.com/us/products/3044102

Please be informed that the data shown in this PDF document is generated from our online catalog. Please find the complete data in the user documentation. Our general terms of use for downloads are valid.



Feed-through terminal block, nom. voltage: 1000 V, nominal current: 32 A, number of connections: 2, connection method: Screw connection, Rated cross section: 4 mm^2, cross section: 0.14 mm^2 - 6 mm^2, mounting type: NS 35/7,5, NS 35/15, color: gray

Your advantages

- The large wiring space enables the connection of solid and stranded conductors without ferrules, even above the nominal cross section
- As well as saving space, the compact design enables user-friendly wiring in a small amount of space
- Optimum screwdriver guidance through closed screw shafts
- The cable entry funnel enables the use of conductors with ferrules and plastic collars within the nominal cross section
- Tested for railway applications

DRAFT

UT 4 - Feed-through terminal block

3044102

https://www.phoenixcontact.com/us/products/3044102

Technical data

Product properties

Product type	Feed-through terminal block
Product family	UT
Area of application	Railway industry
	Machine building
	Plant engineering
	Process industry
Number of connections	2
Number of rows	1
Potentials	1

Insulation characteristics

Overvoltage category	III
Degree of pollution	3

Electrical properties

Rated surge voltage	8 kV
Maximum power dissipation for nominal condition	1.02 W

Connection data

Number of connections per level	2
Nominal cross section	4 mm²
Screw thread	M3
Tightening torque	0.6 ... 0.8 Nm
Stripping length	9 mm
Internal cylindrical gage	A4
Connection in acc. with standard	IEC 60947-7-1
Conductor cross section rigid	0.14 mm² ... 6 mm²
Cross section AWG	26 ... 10 (converted acc. to IEC)
Conductor cross section flexible	0.14 mm² ... 6 mm²
Conductor cross section, flexible [AWG]	26 ... 10 (converted acc. to IEC)
Conductor cross-section flexible (ferrule without plastic sleeve)	0.25 mm² ... 4 mm²
Flexible conductor cross section (ferrule with plastic sleeve)	0.25 mm² ... 4 mm²
2 conductors with same cross section, solid	0.14 mm² ... 1.5 mm²
2 conductors with same cross section, flexible	0.14 mm² ... 1.5 mm²
2 conductors with same cross section, flexible, with ferrule without plastic sleeve	0.25 mm² ... 1.5 mm²
2 conductors with the same cross section, flexible, with TWIN ferrule with plastic sleeve	0.5 mm² ... 2.5 mm²
Nominal current	32 A (with 4 mm² conductor cross section)
Maximum load current	41 A (with 6 mm² conductor cross section)
Nominal voltage	1000 V

DRAFT

UT 4 - Feed-through terminal block

3044102

https://www.phoenixcontact.com/us/products/3044102

Note	Note: Product releases, connection cross sections and notes on connecting aluminum cables can be found in the download area.
Nominal cross section	4 mm²

Ex data

Rated data (ATEX/IECEx)

Identification	Ex II 2 GD Ex eb IIC Gb
Operating temperature range	-60 °C ... 110 °C
Ex-certified accessories	3047028 D-UT 2,5/10
	3047167 ATP-UT
	1205053 SZS 0,6X3,5
	3022276 CLIPFIX 35-5
	3022218 CLIPFIX 35
List of bridges	Plug-in bridge / FBS 2-6 / 3030336
	Plug-in bridge / FBS 3-6 / 3030242
	Plug-in bridge / FBS 4-6 / 3030255
	Plug-in bridge / FBS 5-6 / 3030349
	Plug-in bridge / FBS 10-6 / 3030271
	Plug-in bridge / FBS 20-6 / 3030365
	Plug-in bridge / FBS 50-6 / 3032224
Bridge data	27 A / 4 mm²
Ex temperature increase	40 K (33.3 A / 4 mm²)
Rated voltage	690 V
for bridging with bridge	690 V
- At bridging between non-adjacent terminal blocks	352 V
- At bridging between non-adjacent terminal blocks via PE terminal block	275 V
- At cut-to-length bridging with cover	220 V
- At cut-to-length bridging with partition plate	275 V
Rated insulation voltage	630 V
output	(Permanent)

Ex level General

Rated current	30 A
Maximum load current	38 A
Contact resistance	0.26 mΩ

Ex connection data General

Torque range	0.6 Nm ... 0.8 Nm
Nominal cross section	4 mm²
Rated cross section AWG	12
Connection capacity rigid	0.14 mm² ... 6 mm²
Connection capacity AWG	26 ... 10
Connection capacity flexible	0.14 mm² ... 4 mm²
Connection capacity AWG	26 ... 12

DRAFT

UT 4 - Feed-through terminal block

3044102

https://www.phoenixcontact.com/us/products/3044102

2 conductors with same cross section, solid	0.14 mm² ... 1.5 mm²
2 conductors with the same cross-section AWG rigid	26 ... 16
2 conductors with same cross section, stranded	0.14 mm² ... 1.5 mm²
2 conductors with the same cross-section AWG flexible	26 ... 16

Dimensions

Width	6.2 mm
End cover width	2.2 mm
Height	47.7 mm
Depth	46.9 mm
Depth on NS 35/7,5	47.5 mm
Depth on NS 35/15	55 mm

Material specifications

Color	gray
Flammability rating according to UL 94	V0
Insulating material group	I
Insulating material	PA
Static insulating material application in cold	-60 °C
Relative insulation material temperature index (Elec., UL 746 B)	130 °C
Fire protection for rail vehicles (DIN EN 45545-2) R22	HL 1 - HL 3
Fire protection for rail vehicles (DIN EN 45545-2) R23	HL 1 - HL 3
Fire protection for rail vehicles (DIN EN 45545-2) R24	HL 1 - HL 3
Fire protection for rail vehicles (DIN EN 45545-2) R26	HL 1 - HL 3
Surface flammability NFPA 130 (ASTM E 162)	passed
Specific optical density of smoke NFPA 130 (ASTM E 662)	passed
Smoke gas toxicity NFPA 130 (SMP 800C)	passed

Electrical tests

Surge voltage test

Test voltage setpoint	9.8 kV
Result	Test passed

Temperature-rise test

Requirement temperature-rise test	Increase in temperature ≤ 45 K
Result	Test passed
Short-time withstand current 4 mm²	0.48 kA
Short-time withstand current 6 mm²	0.72 kA
Result	Test passed

Power-frequency withstand voltage

Test voltage setpoint	2.2 kV
Result	Test passed

Mechanical properties

DRAFT

UT 4 - Feed-through terminal block

3044102

https://www.phoenixcontact.com/us/products/3044102

Mechanical data

Open side panel	Yes

Mechanical tests

Mechanical strength

Result	Test passed

Attachment on the carrier

DIN rail/fixing support	NS 35
Test force setpoint	1 N
Result	Test passed

Test for conductor damage and slackening

Rotation speed	10 rpm
Revolutions	135
Conductor cross section/weight	0.14 mm² / 0.2 kg
	4 mm² / 0.9 kg
	6 mm² / 1.4 kg
Result	Test passed

Environmental and real-life conditions

Needle-flame test

Time of exposure	30 s
Result	Test passed

Oscillation/broadband noise

Specification	DIN EN 50155 (VDE 0115-200):2008-03
Spectrum	Service life test category 1, class B, body mounted
Frequency	f_1 = 5 Hz to f_2 = 150 Hz
ASD level	1.857 (m/s²)²/Hz
Acceleration	0.8g
Test duration per axis	5 h
Test directions	X-, Y- and Z-axis
Result	Test passed

Shocks

Specification	DIN EN 50155 (VDE 0115-200):2008-03
Pulse shape	Half-sine
Acceleration	5g
Shock duration	30 ms
Number of shocks per direction	3
Test directions	X-, Y- and Z-axis (pos. and neg.)
Result	Test passed

Ambient conditions

DRAFT

UT 4 - Feed-through terminal block

3044102

https://www.phoenixcontact.com/us/products/3044102

Ambient temperature (operation)	-60 °C ... 110 °C (Operating temperature range incl. self-heating; for max. short-term operating temperature, see RTI Elec.)
Ambient temperature (storage/transport)	-25 °C ... 60 °C (for a short time, no longer than 24 h, -60°C to +70°C)
Ambient temperature (assembly)	-5 °C ... 70 °C
Ambient temperature (actuation)	-5 °C ... 70 °C
Permissible humidity (operation)	20 % ... 90 %
Permissible humidity (storage/transport)	30 % ... 70 %

Standards and regulations

Connection in acc. with standard	IEC 60947-7-1

Mounting

Mounting type	NS 35/7,5
	NS 35/15

Phoenix Contact 2024 © - all rights reserved
https://www.phoenixcontact.com

Phoenix Contact USA
586 Fulling Mill Road
Middletown, PA 17057, United States
(+717) 944-1300
info@phoenixcon.com

DRAFT

UT 6 - Feed-through terminal block

3044131

https://www.phoenixcontact.com/us/products/3044131

Please be informed that the data shown in this PDF document is generated from our online catalog. Please find the complete data in the user documentation. Our general terms of use for downloads are valid.



Feed-through terminal block, nom. voltage: 1000 V, nominal current: 41 A, number of connections: 2, connection method: Screw connection, Rated cross section: 6 mm^2, cross section: 0.2 mm^2 - 10 mm^2, mounting type: NS 35/7,5, NS 35/15, color: gray

Your advantages

- The large wiring space enables the connection of solid and stranded conductors without ferrules, even above the nominal cross section
- As well as saving space, the compact design enables user-friendly wiring in a small amount of space
- Optimum screwdriver guidance through closed screw shafts
- The cable entry funnel enables the use of conductors with ferrules and plastic collars within the nominal cross section
- Tested for railway applications

DRAFT

UT 6 - Feed-through terminal block

3044131

https://www.phoenixcontact.com/us/products/3044131

Technical data

Product properties

Product type	Feed-through terminal block
Product family	UT
Area of application	Railway industry
	Machine building
	Plant engineering
	Process industry
Number of connections	2
Number of rows	1
Potentials	1

Insulation characteristics

Overvoltage category	III
Degree of pollution	3

Electrical properties

Rated surge voltage	8 kV
Maximum power dissipation for nominal condition	1.31 W

Connection data

Number of connections per level	2
Nominal cross section	6 mm²
Rated cross section AWG	8

Level 1 above 1 below 1

Screw thread	M4
Tightening torque	1.5 ... 1.8 Nm
Stripping length	10 mm
Internal cylindrical gage	A5
Connection in acc. with standard	IEC 60947-7-1
Conductor cross section rigid	0.2 mm² ... 10 mm²
Cross section AWG	24 ... 8 (converted acc. to IEC)
Conductor cross section flexible	0.2 mm² ... 10 mm²
Conductor cross section, flexible [AWG]	24 ... 8 (converted acc. to IEC)
Conductor cross-section flexible (ferrule without plastic sleeve)	0.25 mm² ... 6 mm²
Flexible conductor cross section (ferrule with plastic sleeve)	0.25 mm² ... 6 mm²
2 conductors with same cross section, solid	0.2 mm² ... 2.5 mm²
2 conductors with same cross section, flexible	0.2 mm² ... 2.5 mm²
2 conductors with same cross section, flexible, with ferrule without plastic sleeve	0.25 mm² ... 1.5 mm²
2 conductors with the same cross section, flexible, with TWIN ferrule with plastic sleeve	0.5 mm² ... 4 mm²
Nominal current	41 A

DRAFT

UT 6 - Feed-through terminal block

3044131

https://www.phoenixcontact.com/us/products/3044131

Maximum load current	57 A (with 10 mm² conductor cross section)
Nominal voltage	1000 V
Note	Note: Product releases, connection cross sections and notes on connecting aluminum cables can be found in the download area.
Nominal cross section	6 mm²

Ex data

Rated data (ATEX/IECEx)

Identification	Ⓔx II 2 GD Ex eb IIC Gb
Operating temperature range	-60 °C ... 110 °C
Ex-certified accessories	3047028 D-UT 2,5/10
	3047167 ATP-UT
	1205066 SZS 1,0X4,0 VDE
	3022276 CLIPFIX 35-5
	3022218 CLIPFIX 35
List of bridges	Plug-in bridge / FBS 2-8 / 3030284
	Plug-in bridge / FBS 3-8 / 3030297
	Plug-in bridge / FBS 4-8 / 3030307
	Plug-in bridge / FBS 5-8 / 3030310
	Plug-in bridge / FBS 10-8 / 3030323
Bridge data	39 A / 6 mm²
Ex temperature increase	40 K (44.9 A / 6 mm²)
Rated voltage	690 V
for bridging with bridge	690 V
- At bridging between non-adjacent terminal blocks	275 V
- At bridging between non-adjacent terminal blocks via PE terminal block	176 V
- At cut-to-length bridging with cover	220 V
- At cut-to-length bridging with partition plate	275 V
Rated insulation voltage	630 V
output	(Permanent)

Ex level General

Rated current	40 A
Maximum load current	50 A
Contact resistance	0.2 mΩ

Ex connection data General

Torque range	1.5 Nm ... 1.8 Nm
Nominal cross section	6 mm²
Rated cross section AWG	10
Connection capacity rigid	0.2 mm² ... 10 mm²
Connection capacity AWG	24 ... 8
Connection capacity flexible	0.2 mm² ... 6 mm²
Connection capacity AWG	24 ... 10

DRAFT

UT 6 - Feed-through terminal block

3044131

https://www.phoenixcontact.com/us/products/3044131

2 conductors with same cross section, solid	0.2 mm² ... 2.5 mm²
2 conductors with the same cross-section AWG rigid	24 ... 14
2 conductors with same cross section, stranded	0.2 mm² ... 2.5 mm²
2 conductors with the same cross-section AWG flexible	24 ... 14

Dimensions

Width	8.2 mm
End cover width	2.2 mm
Height	47.7 mm
Depth	46.9 mm
Depth on NS 35/7,5	47.5 mm
Depth on NS 35/15	55 mm

Material specifications

Color	gray
Flammability rating according to UL 94	V0
Insulating material group	I
Insulating material	PA
Static insulating material application in cold	-60 °C
Temperature index of insulation material (DIN EN 60216-1 (VDE 0304-21))	125 °C
Relative insulation material temperature index (Elec., UL 746 B)	130 °C
Fire protection for rail vehicles (DIN EN 45545-2) R22	HL 1 - HL 3
Fire protection for rail vehicles (DIN EN 45545-2) R23	HL 1 - HL 3
Fire protection for rail vehicles (DIN EN 45545-2) R24	HL 1 - HL 3
Fire protection for rail vehicles (DIN EN 45545-2) R26	HL 1 - HL 3
Calorimetric heat release NFPA 130 (ASTM E 1354)	27,5 MJ/kg
Surface flammability NFPA 130 (ASTM E 162)	passed
Specific optical density of smoke NFPA 130 (ASTM E 662)	passed
Smoke gas toxicity NFPA 130 (SMP 800C)	passed

Electrical tests

Surge voltage test

Test voltage setpoint	9.8 kV
Result	Test passed

Temperature-rise test

Requirement temperature-rise test	Increase in temperature ≤ 45 K
Result	Test passed
Short-time withstand current 6 mm²	0.72 kA
Short-time withstand current 10 mm²	1.2 kA
Result	Test passed

Power-frequency withstand voltage

Test voltage setpoint	2.2 kV

DRAFT

UT 6 - Feed-through terminal block

3044131

https://www.phoenixcontact.com/us/products/3044131

Result	Test passed

Mechanical properties

Mechanical data

Open side panel	Yes

Mechanical tests

Mechanical strength

Result	Test passed

Attachment on the carrier

DIN rail/fixing support	NS 35
Test force setpoint	5 N
Result	Test passed

Test for conductor damage and slackening

Rotation speed	10 rpm
Revolutions	135
Conductor cross section/weight	0.2 mm² / 0.2 kg
	6 mm² / 1.4 kg
	10 mm² / 2 kg
Result	Test passed

Environmental and real-life conditions

Needle-flame test

Time of exposure	30 s
Result	Test passed

Oscillation/broadband noise

Specification	DIN EN 50155 (VDE 0115-200):2008-03
Spectrum	Service life test category 1, class B, body mounted
Frequency	f_1 = 5 Hz to f_2 = 150 Hz
ASD level	1.857 $(m/s^2)^2/Hz$
Acceleration	0.8g
Test duration per axis	5 h
Test directions	X-, Y- and Z-axis
Result	Test passed

Shocks

Specification	DIN EN 50155 (VDE 0115-200):2008-03
Pulse shape	Half-sine
Acceleration	5g
Shock duration	30 ms
Number of shocks per direction	3
Test directions	X-, Y- and Z-axis (pos. and neg.)

DRAFT

UT 6 - Feed-through terminal block

3044131

https://www.phoenixcontact.com/us/products/3044131

Result	Test passed

Ambient conditions

Ambient temperature (operation)	-60 °C ... 110 °C (Operating temperature range incl. self-heating; for max. short-term operating temperature, see RTI Elec.)
Ambient temperature (storage/transport)	-25 °C ... 60 °C (for a short time, no longer than 24 h, -60°C to +70°C)
Ambient temperature (assembly)	-5 °C ... 70 °C
Ambient temperature (actuation)	-5 °C ... 70 °C
Permissible humidity (operation)	20 % ... 90 %
Permissible humidity (storage/transport)	30 % ... 70 %

Standards and regulations

Connection in acc. with standard	IEC 60947-7-1

Mounting

Mounting type	NS 35/7,5
	NS 35/15

Phoenix Contact 2024 © - all rights reserved
https://www.phoenixcontact.com

Phoenix Contact USA
586 Fulling Mill Road
Middletown, PA 17057, United States
(+717) 944-1300
info@phoenixcon.com

DRAFT

UT 4-PE - Ground terminal

3044128

https://www.phoenixcontact.com/us/products/3044128

Please be informed that the data shown in this PDF document is generated from our online catalog. Please find the complete data in the user documentation. Our general terms of use for downloads are valid.



Ground terminal, number of connections: 2, connection method: Screw connection, cross section: 0.14 mm^2 - 6 mm^2, mounting type: NS 35/7,5, NS 35/15, color: green-yellow

Your advantages

- Tested for railway applications

DRAFT

UT 4-PE - Ground terminal

3044128

https://www.phoenixcontact.com/us/products/3044128

Technical data

Product properties

Product type	Ground terminal block
Area of application	Railway industry
	Machine building
	Plant engineering
	Process industry
Number of connections	2
Number of rows	1

Insulation characteristics

Overvoltage category	III
Degree of pollution	3

Electrical properties

Rated surge voltage	8 kV
Maximum power dissipation for nominal condition	1.02 W

Connection data

Grounding foot	Yes
Number of connections per level	2
Nominal cross section	4 mm²

Level 1 above 1 below 1

Screw thread	M3
Note	Please observe the current carrying capacity of the DIN rails.
Tightening torque	0.6 ... 0.8 Nm
Stripping length	9 mm
Internal cylindrical gage	A4
Connection in acc. with standard	IEC 60947-7-2
Conductor cross section rigid	0.14 mm² ... 6 mm²
Cross section AWG	26 ... 10 (converted acc. to IEC)
Conductor cross section flexible	0.14 mm² ... 6 mm²
Conductor cross section, flexible [AWG]	26 ... 10 (converted acc. to IEC)
Conductor cross-section flexible (ferrule without plastic sleeve)	0.25 mm² ... 4 mm²
Flexible conductor cross section (ferrule with plastic sleeve)	0.25 mm² ... 4 mm²
Note	Note: Product releases, connection cross sections and notes on connecting aluminum cables can be found in the download area.

Ex data

Rated data (ATEX/IECEx)

Identification	Ⓔx II 2 GD Ex eb IIC Gb
Operating temperature range	-60 °C ... 110 °C

DRAFT

UT 4-PE - Ground terminal

3044128

https://www.phoenixcontact.com/us/products/3044128

Ex-certified accessories	3047028 D-UT 2,5/10
	1205053 SZS 0,6X3,5
	3022276 CLIPFIX 35-5
	3022218 CLIPFIX 35
output	(Permanent)

Ex connection data General

Torque range	0.6 Nm ... 0.8 Nm
Nominal cross section	4 mm²
Rated cross section AWG	12
Connection capacity rigid	0.14 mm² ... 6 mm²
Connection capacity AWG	26 ... 10
Connection capacity flexible	0.14 mm² ... 4 mm²
Connection capacity AWG	26 ... 12

Dimensions

Width	6.2 mm
End cover width	2.2 mm
Height	47.7 mm
Depth	46.9 mm
Depth on NS 35/7,5	47.5 mm
Depth on NS 35/15	55 mm

Material specifications

Color	green-yellow
Flammability rating according to UL 94	V0
Insulating material group	I
Insulating material	PA
Static insulating material application in cold	-60 °C
Temperature index of insulation material (DIN EN 60216-1 (VDE 0304-21))	125 °C
Relative insulation material temperature index (Elec., UL 746 B)	130 °C
Fire protection for rail vehicles (DIN EN 45545-2) R22	HL 1 - HL 3
Fire protection for rail vehicles (DIN EN 45545-2) R23	HL 1 - HL 3
Fire protection for rail vehicles (DIN EN 45545-2) R24	HL 1 - HL 3
Fire protection for rail vehicles (DIN EN 45545-2) R26	HL 1 - HL 3
Calorimetric heat release NFPA 130 (ASTM E 1354)	27,5 MJ/kg
Surface flammability NFPA 130 (ASTM E 162)	passed
Specific optical density of smoke NFPA 130 (ASTM E 662)	passed
Smoke gas toxicity NFPA 130 (SMP 800C)	passed

Mechanical properties

Mechanical data

Open side panel	Yes

DRAFT

UT 4-PE - Ground terminal

3044128

https://www.phoenixcontact.com/us/products/3044128

Environmental and real-life conditions

Ambient conditions

Ambient temperature (operation)	-60 °C ... 110 °C (Operating temperature range incl. self-heating; for max. short-term operating temperature, see RTI Elec.)
Ambient temperature (storage/transport)	-25 °C ... 60 °C (for a short time, no longer than 24 h, -60°C to +70°C)
Ambient temperature (assembly)	-5 °C ... 70 °C
Ambient temperature (actuation)	-5 °C ... 70 °C
Permissible humidity (operation)	20 % ... 90 %
Permissible humidity (storage/transport)	30 % ... 70 %

Standards and regulations

Connection in acc. with standard	IEC 60947-7-2

Mounting

Mounting type	NS 35/7,5
	NS 35/15

Phoenix Contact 2024 © - all rights reserved
https://www.phoenixcontact.com

Phoenix Contact USA
586 Fulling Mill Road
Middletown, PA 17057, United States
(+717) 944-1300
info@phoenixcon.com

DRAFT

D-UT 2,5/10 - End cover

3047028

https://www.phoenixcontact.com/us/products/3047028

Please be informed that the data shown in this PDF document is generated from our online catalog. Please find the complete data in the user documentation. Our general terms of use for downloads are valid.



End cover, depth: 39.8 mm, width: 2.2 mm, height: 47 mm, color: gray

DRAFT

D-UT 2,5/10 - End cover

3047028

https://www.phoenixcontact.com/us/products/3047028

Technical data

Product properties

Product type	End cover

Environmental and real-life conditions

Ambient conditions

Ambient temperature (operation)	-60 °C ... 105 °C (max. short-term operating temperature RTI Elec.)
Ambient temperature (storage/transport)	-25 °C ... 60 °C (for a short time, not exceeding 24 h, -60 °C to +70 °C)
Ambient temperature (assembly)	-5 °C ... 70 °C
Ambient temperature (actuation)	-5 °C ... 70 °C
Permissible humidity (storage/transport)	30 % ... 70 %

Material specifications

Color	gray
Material	PA
Flammability rating according to UL 94	V0
Static insulating material application in cold	-60 °C
Temperature index of insulation material (DIN EN 60216-1 (VDE 0304-21))	125 °C
Relative insulation material temperature index (Elec., UL 746 B)	130 °C
Fire protection for rail vehicles (DIN EN 45545-2) R22	HL 1 - HL 3
Fire protection for rail vehicles (DIN EN 45545-2) R23	HL 1 - HL 3
Fire protection for rail vehicles (DIN EN 45545-2) R24	HL 1 - HL 3
Fire protection for rail vehicles (DIN EN 45545-2) R26	HL 1 - HL 3
Calorimetric heat release NFPA 130 (ASTM E 1354)	27,5 MJ/kg
Surface flammability NFPA 130 (ASTM E 162)	passed
Specific optical density of smoke NFPA 130 (ASTM E 662)	passed
Smoke gas toxicity NFPA 130 (SMP 800C)	passed

Dimensions

Width	2.2 mm
Height	47 mm
Depth	39.8 mm

DRAFT

D-UT 2,5/10 - End cover

3047028

https://www.phoenixcontact.com/us/products/3047028

Phoenix Contact 2024 © - all rights reserved
https://www.phoenixcontact.com

Phoenix Contact USA
586 Fulling Mill Road
Middletown, PA 17057, United States
(+717) 944-1300
info@phoenixcon.com

DRAFT

E/NS 35 N - End bracket

0800886

https://www.phoenixcontact.com/us/products/0800886

Please be informed that the data shown in this PDF document is generated from our online catalog. Please find the complete data in the user documentation. Our general terms of use for downloads are valid.



End clamp, width: 9.5 mm, color: gray

Your advantages

- Large-surface marking

DRAFT

E/NS 35 N - End bracket

0800886

https://www.phoenixcontact.com/us/products/0800886

Technical data

Product properties

Product type	End bracket

Connection data

Screw thread	M3
Tightening torque	0.5 ... 0.8 Nm

Dimensions

Dimensional drawing	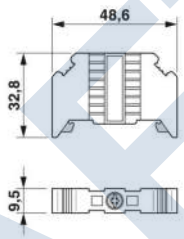
Width	9.5 mm
Height	48.6 mm
Depth	32.8 mm
Depth on NS 35/7,5	34.3 mm
Length	48.6 mm

Material specifications

Color	gray
Material	PA
Flammability rating according to UL 94	V0
Static insulating material application in cold	-60 °C
Temperature index of insulation material (DIN EN 60216-1 (VDE 0304-21))	125 °C
Relative insulation material temperature index (Elec., UL 746 B)	130 °C

Environmental and real-life conditions

Ambient conditions

Ambient temperature (operation)	-60 °C ... 105 °C (max. short-term operating temperature RTI Elec.)
Ambient temperature (storage/transport)	-25 °C ... 60 °C (for a short time, not exceeding 24 h, -60 °C to +70 °C)
Ambient temperature (assembly)	-5 °C ... 70 °C
Ambient temperature (actuation)	-5 °C ... 70 °C
Permissible humidity (storage/transport)	30 % ... 70 %

Mounting

DRAFT

E/NS 35 N - End bracket

0800886

https://www.phoenixcontact.com/us/products/0800886

Mounting type	NS 35/7,5
	NS 35/15

Phoenix Contact 2024 © - all rights reserved
https://www.phoenixcontact.com

Phoenix Contact USA
586 Fulling Mill Road
Middletown, PA 17057, United States
(+717) 944-1300
info@phoenixcon.com

DRAFT

FBS 20-6 - Plug-in bridge

3030365

https://www.phoenixcontact.com/us/products/3030365

Please be informed that the data shown in this PDF document is generated from our online catalog. Please find the complete data in the user documentation. Our general terms of use for downloads are valid.



Plug-in bridge, pitch: 6.2 mm, number of positions: 20, color: red

Your advantages

- The 2- to 50-pos. jumpers can bridge up to 50 terminal blocks in the two bridge shafts of the CLIPLINE complete system in one step

DRAFT

FBS 20-6 - Plug-in bridge

3030365

https://www.phoenixcontact.com/us/products/3030365

Technical data

Product properties

Product type	Jumper
Number of positions	20
Pitch	6.2 mm

Electrical properties

Maximum load current	32 A (The current values for the jumpers can deviate when used in different modular terminal blocks. The precise values can be found in the accessories data for the respective modular terminal blocks.)

Connection data

Maximum load current	32 A (The current values for the jumpers can deviate when used in different modular terminal blocks. The precise values can be found in the accessories data for the respective modular terminal blocks.)

Dimensions

Width	122.3 mm
Height	23 mm
Depth	23 mm
Pitch	6.2 mm

Material specifications

Color	red
Material	Copper
Flammability rating according to UL 94	V0
Insulating material	PA

Mounting

Mounting type	Plug-in mounting

DRAFT

Phoenix Contact 2024 © - all rights reserved
https://www.phoenixcontact.com

Phoenix Contact USA
586 Fulling Mill Road
Middletown, PA 17057, United States
(+717) 944-1300
info@phoenixcon.com

Bulletin 1492

IEC Terminal Blocks

Fuse Blocks

	1492-WFB4			1492-WFB424			1492-WFB4250		
Dimensions are not intended to be used for manufacturing purposes. **Note:** Height dimension is measured from top of rail to top of terminal block.	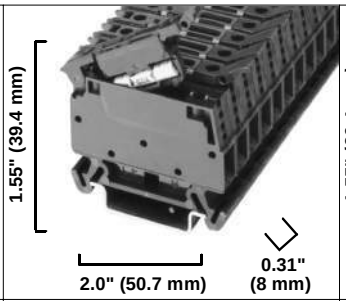			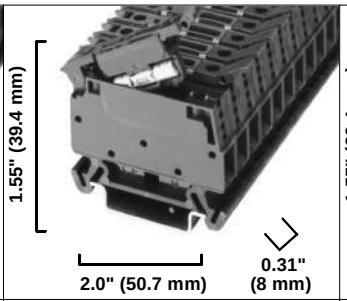			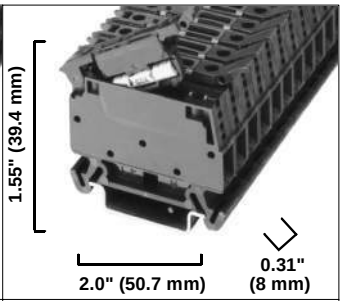		
Specifications	*Single-circuit fuse block.*			*Single-circuit fuse block with LED blown fuse indicator.*			*Single-circuit fuse block with neon blown fuse indicator.*		
Approvals	cULus	CSA	IEC	cULus	CSA	IEC	cULus	CSA	IEC
Voltage Rating	300V AC/DC	300V AC/DC	500V AC/DC	300V AC/DC	300V AC/DC	500V AC/DC	300V AC/DC	300V AC/DC	500V AC/DC
Maximum Current	15 A	15 A	15 A ❶	15 A	15 A	15 A ❶	15 A	15 A	15 A ❶
Wire Range (Rated Cross Section)	#22… #12 AWG	#22… #12 AWG	0.5… 4 mm^2	#22… #12 AWG	#22… #12 AWG	0.5… 4 mm^2	#22… #12 AWG	#22… #12 AWG	0.5… 4 mm^2
Indicator Type	Non-Indicating			LED			Neon		
Leakage Current	—			2mA @ 24V			1mA @ 264V		
Working Voltage	Per Fuse Rating			10-57V AC/DC			85-264V AC		
Fuse Size (Not Supplied)	5 x 20 mm			5 x 20 mm			5 x 20 mm		
Wire Strip Length	0.31" (8 mm)			0.31" (8 mm)			0.31" (8 mm)		
Recommended Tightening Torque	5.0…5.6 lb-in. (0.6 Nm)			5.0…5.6 lb-in. (0.6 Nm)			5.0…5.6 lb-in. (0.6 Nm)		
Density	38 pcs./ft (125/m)			38 pcs./ft (125/m)			38 pcs./ft (125/m)		
Insulation Temperature Range	–40…+195°F (–40…+90°C)			–40…+195°F (–40…+90°C)			–40…+195°F (–40…+90°C)		
Terminal Blocks	**Cat. No.**		**Pcs./ Pkg.**	**Cat. No.**		**Pcs./ Pkg.**	**Cat. No.**		**Pcs./ Pkg.**
Terminal Block	1492-WFB4		50	1492-WFB424		50	1492-WFB4250		50
Accessories (page 12-172)	**Cat. No.**		**Pcs./ Pkg.**	**Cat. No.**		**Pcs./ Pkg.**	**Cat. No.**		**Pcs./ Pkg.**
Mounting Rails: 1 m Symmetrical DIN (Steel)	199-DR1		5	199-DR1		5	199-DR1		5
1 m Symmetrical DIN (Aluminum)	1492-DR5		5	1492-DR5		5	1492-DR5		5
1 m Hi-Rise Sym. DIN (Aluminum)	1492-DR6		2	1492-DR6		2	1492-DR6		2
1 m Angled Hi-Rise Sym. DIN (Steel)	1492-DR7		2	1492-DR7		2	1492-DR7		2
End Barrier	Not Required		—	Not Required		—	Not Required		—
End Anchors: DIN Rail — Normal Duty	1492-EA35		50	1492-EA35		50	1492-EA35		50
DIN Rail — Heavy Duty	1492-EAH35		10	1492-EAH35		10	1492-EAH35		10
Jumpers: Side Jumper — 10-pole Insulated	1492-SJFB8-10		10	1492-SJFB8-10		10	1492-SJFB8-10		10
Other Accessories: Partition Plate	1492-PPSL3		50	1492-PPSL3		50	1492-PPSL3		50
Group Marking Carrier	1492-GM35		10	1492-GM35		10	1492-GM35		10
Marking Systems: Snap-in Marker Card — For Base Block	1492-SM8X12		5	1492-SM8X12		5	1492-SM8X12		5
For Handle	1492-SM6X9		5	1492-SM6X9		5	1492-SM6X9		5
Individual Marker Tabs (single char.)	1492-MP ❷		10	1492-MP ❷		10	1492-MP ❷		10

❶ IEC standards for 5 x 20 mm fuses do not include ratings above 6.3 A.
❷ Cat. no. is not complete. See page 12-173.

DRAFT

COOPER Bussmann

5 x 20mm, Fast-Acting, Glass Tube Fuses

S500 Series

Description

- Fast-acting, low breaking capacity
- Optional axial leads available
- 5 x 20mm physical size
- Glass tube with silver-plated (32-125mA) and nickel-plated (160mA-10A) endcaps
- Designed to IEC 60127-2 (160mA-10A)

Electrical Characteristics							
In	1.5 In min	2.1 In max	2.75 In min	2.75 In max	4 In min	4 In max	10 In max
32mA-125mA	60min	30min	–	–	–	–	–
160mA-6.3A	60min	30min	50ms	2sec	10ms	300ms	20ms
8A-10A	30min	30min	50ms	2sec	10ms	400ms	40ms

Agency Information

- cURus: File E19180, Guide JDYX2, JDYX8
- SEMKO Approval: File 913796
- VDE Approval: File 40014109
- BSI Approval: File KM55676
- IMQ Approval: File CA03.00097
- CCC Approval: File 2005010207155694
- PSE Approval File: JET1641-31003-1013, JET1641-31003-1014, JET1641-31003-1015, JET1641-31003-1016

Dimensions - mm

Drawing Not to Scale

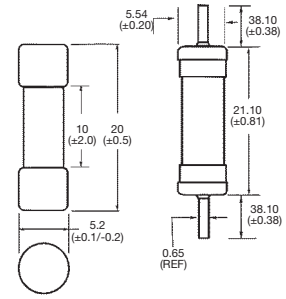



- Ratings above 6.3A have a 0.8mm diameter lead
- With TR2 packaging code, lead wire length is 19.05mm

Ordering

Specify product code

- Insert packaging code prefix before part number. E.g., BK/S500-32-R

Specify option code if desired

- For axial leads, insert “V” between catalog series and amp rating. E.g., S500-V-100-R

DRAFT

Specifications													
Part Number	Voltage Rating Vac	Interrupting Rating at Rated Voltage (50Hz) Vac (amps)	Typical DC Cold Resistance (Ω)*	Typical Melting I^2t AC†	Max Voltage Drop (mV)‡	Agency Information						
						cURus	CCC	BSI	VDE	PSE	SEMKO	IMQ
S500-32-R	250	35	40	0.000047	3200							
S500-40-R	250	35	25	0.00011	2500							
S500-50-R	250	35	17	0.0002	2400							
S500-63-R	250	35	12.5	0.00057	2000							
S500-80-R	250	35	5	0.0012	1200							
S500-100-R	250	35	3.8	0.003	1100							
S500-125-R	250	35	2.8	0.005	1000							
S500-160-R	250	35	9.1	0.008	2000	X	X	X	X		X	X
S500-200-R	250	35	6.8	0.016	1700	X	X	X	X		X	X
S500-250-R	250	35	4.3	0.28	1400	X	X	X	X		X	X
S500-315-R	250	35	3.1	0.58	1300	X	X	X	X		X	X
S500-400-R	250	35	2	0.18	1100	X	X	X	X		X	X
S500-500-R	250	35	0.26	0.18	220	X	X	X	X		X	X
S500-630-R	250	35	0.2	0.35	220	X	X	X	X		X	X
S500-800-R	250	35	0.14	0.67	190	X	X	X	X		X	X
S500-1-R	250	35	0.125	0.6	200	X	X	X	X	X	X	X
S500-1.25-R	250	35	0.096	0.84	200	X	X	X	X	X	X	X
S500-1.6-R	250	35	0.066	1.6	190	X	X	X	X	X	X	X
S500-2-R	250	35	0.043	4.2	150	X	X	X	X	X	X	X
S500-2.5-R	250	35	0.034	6.1	150	X	X	X	X	X	X	X
S500-3.15-R	250	35	0.025	13	130	X	X	X	X	X	X	X
S500-4-R	250	40	0.021	22	130	X	X	X	X	X	X	X
S500-5-R	250	50	0.014	42	120	X	X	X	X	X	X	X
S500-6.3-R	250	63	0.01	69	120	X	X	X	X	X	X	X
S500-8-R	250	80	0.01	NA	120	X		X	X	X	X	
S500-10-R	250	100	0.008	NA	120	X		X	X	X	X	

* DC Cold Resistance (Measured at <10% of rated current)
† Typical Melting I^2t (I^2t was measured at listed interrupting rating and rated voltage)
‡ Maximum Voltage Drop (Voltage drop was measured at 20°C ambient temperature at rated current)

Time-current Curve

Nominal Time/Current Characteristics

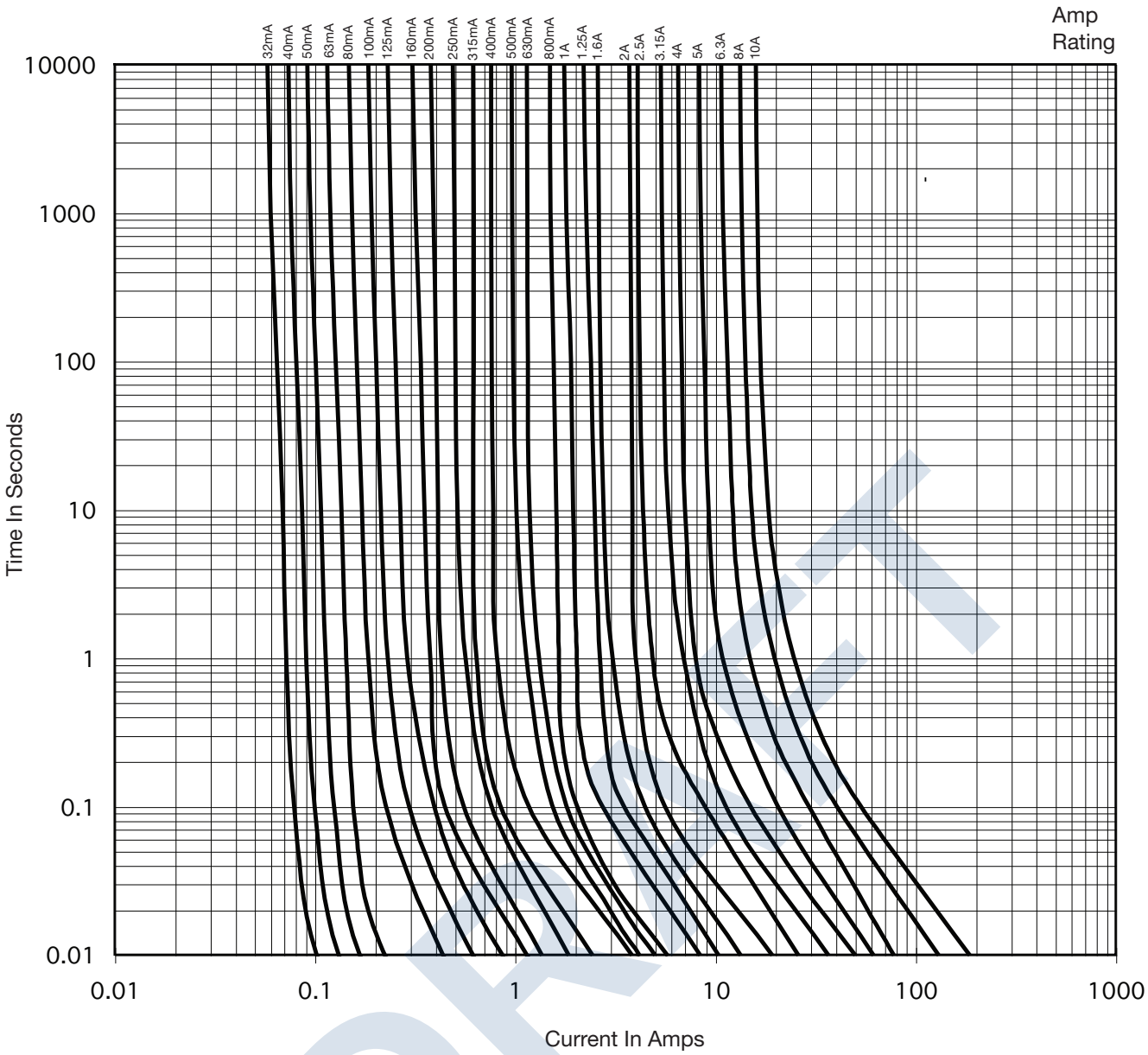

DRAFT

Packaging Code	
Packaging Prefix	**Description**
BK	100 fuses packed into a cardboard carton
BK1	1000 fuses packed into a poly bag
TR2	1500 fuses packed into tape on a reel (19.05mm lead wire length)

Option Code	
Option Code	**Description**
V	Axial leads - copper tinned wire with nickel plated brass endcaps

The only controlled copy of this Data Sheet is the electronic read-only version located on the Cooper Bussmann Network Drive. All other copies of this document are by definition uncontrolled. This bulletin is intended to clearly present comprehensive product data and provide technical information that will help the end user with design applications. Cooper Bussmann reserves the right, without notice, to change design or construction of any products and to discontinue or limit distribution of any products. Cooper Bussmann also reserves the right to change or update, without notice, any technical information contained in this bulletin. Once a product has been selected, it should be tested by the user in all possible applications.

'2013 Cooper Bussmann
www.cooperbussmann.com

TRIO-PS/1AC/24DC/ 5 - Power supply unit

2866310

https://www.phoenixcontact.com/us/products/2866310

Please be informed that the data shown in this PDF document is generated from our online catalog. Please find the complete data in the user documentation. Our general terms of use for downloads are valid.



Primary-switched TRIO POWER power supply for DIN rail mounting, input: 1-phase, output: 24 V DC/5 A

Product description

TRIO POWER power supplies with standard functionality
TRIO POWER is particularly suited to standard machine production, thanks to 1- and 3-phase versions up to 960 W. The wide-range input and the international approval package enable worldwide use.
The robust metal housing, the high electric strength, and the wide temperature range ensure a high level of power supply reliability.

Your advantages

- Use the third negative terminal block as a grounding terminal block and minimize installation costs
- Rugged design with metal housing and wide temperature range from -25 to +70°C
- Maximum operational reliability thanks to high MTBF (mean time between failures) of more than 500,000 hours and high dielectric strength of up to 300 V AC
- Compensation of voltage drops by means of output voltage that can be adjusted on the front

DRAFT

TRIO-PS/1AC/24DC/ 5 - Power supply unit

2866310

https://www.phoenixcontact.com/us/products/2866310

Technical data

Input data

AC operation

Nominal input voltage range	100 V AC ... 240 V AC
Input voltage range	85 V AC ... 264 V AC (Derating < 90 V AC: 2,5 %/V)
Derating	< 90 V AC (2.5 %/V)
Input voltage range AC	85 V AC ... 264 V AC (Derating < 90 V AC: 2,5 %/V)
Electric strength, max.	300 V AC
Voltage type of supply voltage	AC
Inrush current	< 15 A
Inrush current integral (I^2t)	1.1 A^2s
AC frequency range	45 Hz ... 65 Hz
Mains buffering time	> 20 ms (120 V AC)
	> 110 ms (230 V AC)
Current consumption	1.65 A (120 V AC)
	0.9 A (230 V AC)
Nominal power consumption	189 VA
Protective circuit	Transient surge protection; Varistor
Power factor (cos phi)	0.72
Typical response time	< 1 s
Input fuse	3.15 A (slow-blow, internal)
Permissible backup fuse	B6 B10 B16
Recommended breaker for input protection	6 A ... 16 A (Characteristics B, C, D, K)
Discharge current to PE	< 3.5 mA

Output data

Efficiency	89 % (for 230 V AC and nominal values)
Output characteristic	U/I
Nominal output voltage	24 V DC ±1 %
Setting range of the output voltage (U_{Set})	22.5 V DC ... 29.5 V DC (> 24 V DC, constant capacity restricted)
Nominal output current (I_N)	5 A (U_{OUT} = 24 V DC)
Derating	55 °C ... 70 °C (2.5 %/K)
Feedback voltage resistance	35 V DC
Protection against overvoltage at the output (OVP)	< 35 V DC
Max. capacitive load	unlimited
Active current limitation	approx. 10 A (for short-circuit)
Control deviation	< 1 % (change in load, static 10 % ... 90 %)
	< 2 % (change in load, dynamic 10 % ... 90 %)
	< 0.1 % (change in input voltage ±10 %)
Residual ripple	< 20 mV_{PP}
Output power	120 W
Peak switching voltages nominal load	< 30 mV_{PP}

DRAFT

TRIO-PS/1AC/24DC/ 5 - Power supply unit

2866310

https://www.phoenixcontact.com/us/products/2866310

Maximum no-load power dissipation	1.1 W
Power loss nominal load max.	18 W
Rise time	< 2 ms (U_{OUT} (10 % ... 90 %))
Connection in parallel	yes, for redundancy and increased capacity
Connection in series	yes

Connection data

Input

Connection method	Screw connection
Conductor cross section, rigid min.	0.2 mm²
Conductor cross section, rigid max.	2.5 mm²
Conductor cross section flexible min.	0.2 mm²
Conductor cross section flexible max.	2.5 mm²
Conductor cross section AWG min.	24
Conductor cross section AWG max.	14
Stripping length	9 mm
Screw thread	M2,5
Tightening torque, min	0.4 Nm
Tightening torque max	0.5 Nm

Output

Connection method	Screw connection
Conductor cross section, rigid min.	0.2 mm²
Conductor cross section, rigid max.	2.5 mm²
Conductor cross section flexible min.	0.2 mm²
Conductor cross section flexible max.	2.5 mm²
Conductor cross section AWG min.	24
Conductor cross section AWG max.	14
Stripping length	9 mm
Screw thread	M2,5
Tightening torque, min	0.4 Nm
Tightening torque max	0.5 Nm

Signaling

Types of signaling	LED
Operating voltage display	Green LED

Signal output

Status display	"DC OK" LED green
Note on status display	U_{OUT} > 21.5 V: LED lights up

Electrical properties

Insulation voltage input/output	4 kV AC (type test)
	2 kV AC (routine test)
Insulation voltage output / PE	500 V DC (type test)

DRAFT

TRIO-PS/1AC/24DC/ 5 - Power supply unit

2866310

https://www.phoenixcontact.com/us/products/2866310

Insulation voltage input / PE	2 kV AC (type test)
	2 kV AC (routine test)

Product properties

Product type	Power supply
Product family	TRIO POWER
MTBF (IEC 61709, SN 29500)	> 2031000 h

Insulation characteristics

Protection class	I (with PE connection)
Overvoltage category	III
Degree of pollution	2

Dimensions

Dimensional drawing	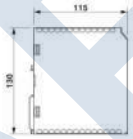
Width	40 mm
Height	130 mm
Depth	115 mm

Installation dimensions

Installation distance right/left	0 mm / 0 mm
Installation distance top/bottom	50 mm / 50 mm

Mounting

Mounting type	DIN rail mounting
Assembly instructions	alignable: horizontally 0 mm, vertically 50 mm
Mounting position	horizontal DIN rail NS 35, EN 60715
With protective coating	No

Material specifications

Housing material	Metal
Type of housing	Steel sheet, zinc-plated
Side element version	Aluminum

Environmental and real-life conditions

Ambient conditions

Degree of protection	IP20
Ambient temperature (operation)	-25 °C ... 70 °C (> 55° C derating : 2.5%/K)
Ambient temperature (storage/transport)	-40 °C ... 85 °C
Climatic class	3K3 (in acc. with EN 60721)
Max. permissible relative humidity (operation)	≤ 95 % (at 25 °C, non-condensing)

DRAFT

TRIO-PS/1AC/24DC/ 5 - Power supply unit

2866310

https://www.phoenixcontact.com/us/products/2866310

Shock	15g in all directions in acc. with IEC 60068-2-27
Vibration (operation)	< 15 Hz, amplitude ±2.5 mm (according to IEC 60068-2-6)
	15 Hz ... 150 Hz, 2.3g, 90 min.

Standards and regulations

Standard – Electronic equipment for use in electrical power installations and their assembly into electrical power installations	EN 50178/VDE 0160 (PELV)
Standard – Limitation of mains harmonic currents	EN 61000-3-2
Standard - Electrical safety	EN 60950-1/VDE 0805 (SELV)
Standard – Protection against shock currents, basic requirements for protective separation in electrical equipment	EN 50178
Standard – Safety extra-low voltage	EN 60950-1 (SELV)
	EN 60204 (PELV)
Standard - Safe isolation	DIN VDE 0100-410

Approvals

Shipbuilding approval	DNV GL (EMC A)
UL approvals	UL/C-UL listed UL 508
	UL/C-UL Recognized UL 60950-1

Conformity/Approvals

SIL in accordance with IEC 61508	0

EMC data

Low Voltage Directive	Conformance with Low Voltage Directive 2014/35/EC
EMC requirements for noise emission	EN 61000-6-3
	EN 61000-6-4
EMC requirements for noise immunity	EN 61000-6-1
	EN 61000-6-2
Electromagnetic compatibility	Conformance with EMC Directive 2014/30/EU

Electrostatic discharge

Standards/regulations	EN 61000-4-2

Electrostatic discharge

Contact discharge	8 kV (Test Level 4)
Discharge in air	8 kV (Test Level 3)
Comments	Criterion A

Electromagnetic HF field

Standards/regulations	EN 61000-4-3

Electromagnetic HF field

Frequency range	80 MHz ... 1 GHz
Test field strength	10 V/m
Frequency range	1 GHz ... 2 GHz
Test field strength	10 V/m

DRAFT

TRIO-PS/1AC/24DC/ 5 - Power supply unit

2866310

https://www.phoenixcontact.com/us/products/2866310

Frequency range	2 GHz ... 3 GHz
Test field strength	10 V/m
Comments	Criterion A

Fast transients (burst)

Standards/regulations	EN 61000-4-4

Fast transients (burst)

Input	4 kV (Test Level 4 - asymmetrical)
Output	4 kV (Test Level 4 - asymmetrical)
Signal	2 kV (Test Level 3 - asymmetrical)
Comments	Criterion A

Surge voltage load (surge)

Standards/regulations	EN 61000-4-5

Surge voltage load (surge)

Input	1 kV (Test Level 2 - symmetrical)
	2 kV (Test Level 3 - asymmetrical)
Output	0.5 kV (Test Level 1 - symmetrical)
	0.5 kV (Test Level 1 - asymmetrical)
Comments	Criterion B

Conducted interference

Standards/regulations	EN 61000-4-6

Conducted interference

Frequency range	10 kHz ... 15 kHz
	10 kHz ... 15 kHz
Comments	Criterion A
	Criterion A
Voltage	3 V (Test Level 2)
	3 V (Test Level 2)

Conducted interference

Frequency range	10 kHz ... 15 kHz
	10 kHz ... 15 kHz
Comments	Criterion A
	Criterion A
Voltage	3 V (Test Level 2)
	3 V (Test Level 2)

Voltage dips

Standards/regulations	EN 61000-4-11

Emitted interference

Standards/regulations	EN 61000-6-3

DRAFT

TRIO-PS/1AC/24DC/ 5 - Power supply unit

2866310

https://www.phoenixcontact.com/us/products/2866310

Radio interference voltage in acc. with EN 55011	EN 55011 (EN 55022) Class B, area of application: Industry and residential
Emitted radio interference in acc. with EN 55011	EN 55011 (EN 55022) Class B, area of application: Industry and residential

Phoenix Contact 2024 © - all rights reserved
https://www.phoenixcontact.com

Phoenix Contact USA
586 Fulling Mill Road
Middletown, PA 17057, United States
(+717) 944-1300
info@phoenixcon.com

DRAFT

Control Circuit & Load Protection

LOGIC

Miniature Circuit Breakers 1489

- UL/CSA Listed for branch circuit protection
- Current limiting
- Reversible line and load connections
- Attachments available for Lockout/Tagout
- Trip curves: C and D



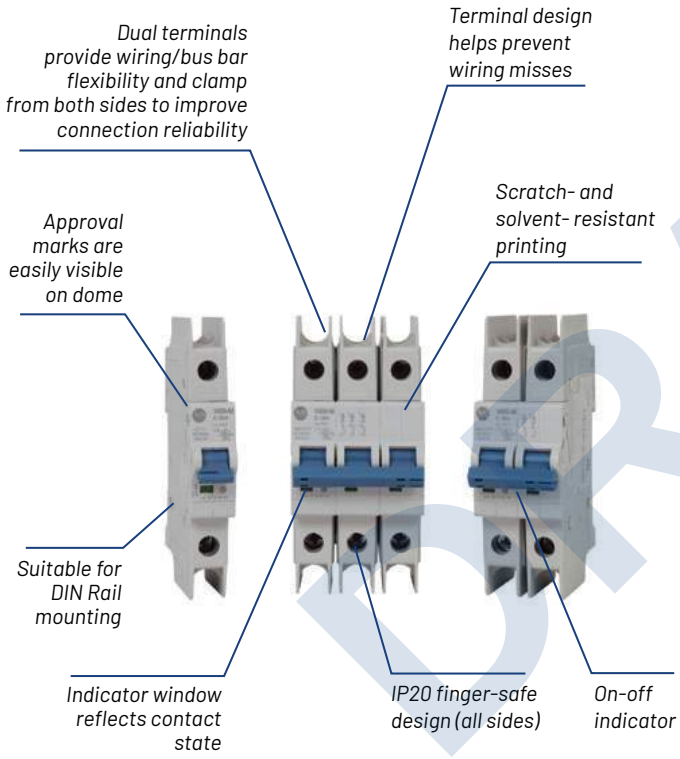

1489-M thermal-magnetic circuit breakers are approved for branch circuit protection in the United States and Canada, and are certified as Miniature circuit breakers for IEC applications.

These branch protectors are compatible with many accessories to meet diverse application needs, including UL 508 Listed bus bars for convenience in panel assembly, auxiliary contacts, signal contacts and shunt trips for versatility, and lockout attachments for safety during maintenance.



DRAFT

Product Selection

Miniature Circuit Breakers

Continuous Current Rating (I_n) [A]	Trip Curve C [1] – Inductive, 5...10 I_n		
	1-Pole	2-Pole	3-Pole
	Cat. No.	Cat. No.	Cat. No.
0.5	1489-M1C005	1489-M2C005	1489-M3C005
1	1489-M1C010	1489-M2C010	1489-M3C010
1.6	1489-M1C016	1489-M2C016	1489-M3C016
2	1489-M1C020	1489-M2C020	1489-M3C020
3	1489-M1C030	1489-M2C030	1489-M3C030
4	1489-M1C040	1489-M2C040	1489-M3C040
5	1489-M1C050	1489-M2C050	1489-M3C050
6	1489-M1C060	1489-M2C060	1489-M3C060
7	1489-M1C070	1489-M2C070	1489-M3C070
8	1489-M1C080	1489-M2C080	1489-M3C080
10	1489-M1C100	1489-M2C100	1489-M3C100
13	1489-M1C130	1489-M2C130	1489-M3C130
15	1489-M1C150	1489-M2C150	1489-M3C150
16	1489-M1C160	1489-M2C160	1489-M3C160
20	1489-M1C200	1489-M2C200	1489-M3C200
25	1489-M1C250	1489-M2C250	1489-M3C250
30	1489-M1C300	1489-M2C300	1489-M3C300
32	1489-M1C320	1489-M2C320	1489-M3C320
35	1489-M1C350	1489-M2C350	1489-M3C350

[1] The catalog number listed represents Trip Curve C: Inductive.
To order Trip Curve D (highly inductive), replace the **C** in the catalog number with **D**. Example: Catalog number 1489-M1**C**005 becomes Catalog number 1489-M1**D**005.

Specifications

Standards Compliance	UL 489, CSA C22.2 No. 235, EN 60947-2, GB 14048.2
Certifications	UL Listed, File No. E197878, CSA Certified, CE Marked, CCC Certified, VDE Certified, RoHS Compliant, EAC Certified
Rated Voltage	UL/CSA: Max. 480Y/277V AC IEC: Ue 230/400V AC
Interrupting Capacity	UL/CSA: 10 kA IEC: 15 kA

Accessories

Description	Contacts	Cat. No.
Shunt trip 110...415V AC/110...250V DC	–	1489-AMST1
Shunt trip 12...60V AC/DC	–	1489-AMST2
Signal contact	1 N.O./N.C. (1 C.O.)	1489-AMRS3
Auxiliary contact	1 N.O./N.C. (1 C.O.)	1489-AMRA3

Bus Bars

Description	No. of Pins	No. of Circuit Breakers	Cat. No. [2, 3, 4]
1-phase	6	6	1489-AMCL106
	12	12	1489-AMCL112
	18	18	1489-AMCL118
2-phase	6	3	1489-AMCL206
	12	6	1489-AMCL212
	18	9	1489-AMCL218
3-phase	6	2	1489-AMCL306
	12	4	1489-AMCL312
	18	6	1489-AMCL318

Bus Bar Accessories	
Description	**Cat. No.**
Terminal power feed, 35 mm²	1489-AMCLT35
Dedicated power feed, 50 mm²	1489-AMCLT50D
Protective shroud (for unused pins)	1489-AMCLPS

[2] Package quantity of 10
[3] cULus, UL 508, EN 60947-1, CE Marked
[4] Maximum of three bus bars allowed



Looking for More?
This catalog highlights only our most essential components; for a complete product selection, visit us at:
https://rok.auto/directory

DRAFT

PLT-SEC-T3-120-FM-UT - Type 3 surge protection device

2907918

https://www.phoenixcontact.com/us/products/2907918

Please be informed that the data shown in this PDF document is generated from our online catalog. Please find the complete data in the user documentation. Our general terms of use for downloads are valid.



Type 2/3 surge protection, consisting of protective plug and base element, with integrated status indicator and remote signaling for single-phase power supply networks. Nominal voltage: 120 V AC/DC

Your advantages

- Surge protection family for universal use with optimum energy coordination from the lightning current arrester to the device protection
- Easy to maintain due to consistently pluggable protection modules
- Excellent level of information provided by mechanical/visual status indicator and remote indication contact
- Your preferred connection technology can be selected as both screw connection and Push-in connection are available
- Optimal additional protection of the industrial power supply for a longer service life and increased availability of the system
- 5-year warranty on your QUINT 4 power supply when installed together with PLT-SEC, see document in the download area

DRAFT

PLT-SEC-T3-120-FM-UT - Type 3 surge protection device

2907918

https://www.phoenixcontact.com/us/products/2907918

Technical data

Product properties

Product type	Device protection
Product family	SEC Family
IEC power supply system	TN-S
	TT
Type	DIN rail module, two-section, divisible
Number of positions	2
Surge protection fault message	Optical, remote indicator contact

Insulation characteristics

Overvoltage category	III
Pollution degree	2
IEC test classification	II / III
	T2 / T3
EN type	T2 / T3
Number of ports	One

Electrical properties

Indicator/remote signaling

Connection name	Remote fault indicator contact
Switching function	Changeover contact
Operating voltage	250 V AC
	125 V DC (200 mA DC)
Operating current	0.5 A AC
	0.5 A DC (75 V DC)

Connection data

Connection method	Screw connection
Screw thread	M3
Tightening torque	0.5 Nm
Conductor cross section flexible	0.2 mm² ... 2.5 mm²
Conductor cross section rigid	0.2 mm² ... 4 mm²
Conductor cross section AWG	24 ... 12

Dimensions

Dimensional drawing	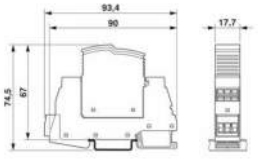

DRAFT

PLT-SEC-T3-120-FM-UT - Type 3 surge protection device

2907918

https://www.phoenixcontact.com/us/products/2907918

Height	93.4 mm
Depth	74.5 mm (incl. DIN rail 7.5 mm)
Horizontal pitch	1 Div.

Material specifications

Color (Male connector)	light grey (RAL 7035)
Color (Base element)	gray (RAL 7042)
Flammability rating according to UL 94	V-0
CTI value of material	600
Insulating material	PA 6.6-FR 20 % GF
	PA 6.6-FR
Housing material	PA 6.6-FR 20 % GF
	PA 6.6-FR

Protective circuit

Mode of protection	L-N
	L-PE
	N-PE
Direction of action	1L-N & N-PE
Nominal voltage U_N	120 V AC (TN-S)
	120 V AC (TT)
Nominal frequency f_N	50 Hz (60 Hz)
Maximum continuous voltage U_C	150 V AC
Rated load current I_L	26 A (at 30 °C)
Residual current I_{PE}	≤ 5 µA
Standby power consumption P_C	≤ 10.60 mVA (at U_{REF})
	≤ 13.50 mVA (at U_C)
Reference test voltage U_{REF}	132.00 V AC
Nominal discharge current I_n (8/20) µs	5 kA
Maximum discharge current I_{max} (8/20) µs	10 kA
Combination wave U_{OC}	6 kV
Voltage protection level U_p (L-N)	≤ 0.75 kV (at U_{OC})
	≤ 0.95 kV (at I_n)
Voltage protection level U_p (L-PE)	≤ 0.85 kV
Voltage protection level U_p (N-PE)	≤ 0.85 kV
TOV behavior at U_T (L-N)	240 V AC (5 s / withstand mode)
	240 V AC (120 min / withstand mode)
TOV behavior at U_T (L-PE)	240 V AC (5 s / withstand mode)
	240 V AC (120 min / withstand mode)
	1332 V AC (200 ms / safe failure mode)
TOV behavior at U_T (N-PE)	1200 V AC (200 ms / safe failure mode)
Response time t_A (L-N)	≤ 25 ns
Response time t_A (L-PE)	≤ 100 ns
Response time t_A (N-PE)	≤ 100 ns

DRAFT

PLT-SEC-T3-120-FM-UT - Type 3 surge protection device

2907918

https://www.phoenixcontact.com/us/products/2907918

Short-circuit current rating I_{SCCR}	10 kA AC
Max. backup fuse with branch wiring	32 A (gG / B / C)

Additional technical data

Short-circuit current rating I_{SCCR}	0.25 kA DC (Without additional backup fuse in the DC branch wiring)
	5 kA DC (for 20 A gG / B backup fuse)
Residual voltage U_{res} (L-N)	≤ 0.68 kV (at 2 kA)
	≤ 0.75 kV (at 3 kA)
	≤ 0.64 kV (at U_{OC} = 4 kV)
Residual voltage U_{res} (L-PE)	≤ 0.58 kV (at 2 kA)
	≤ 0.65 kV (at 3 kA)
	≤ 0.75 kV (at U_{OC} = 4 kV)
Residual voltage U_{res} (N-PE)	≤ 0.58 kV (at 2 kA)
	≤ 0.65 kV (at 3 kA)
	≤ 0.75 kV (at U_{OC} = 4 kV)
Maximum continuous voltage U_C	150 V DC
Mode of protection	(DC+) - (DC-)
	(DC+/DC-) - PE
IEC test classification (in accordance with IEC 61643-21)	D1
Impulse durability (wire-wire)	D1 - 500 A
Impulse durability (line-earth)	D1 - 500 A
Pulse discharge current I_{imp} (10/350) µs (line-line)	0.5 kA
Pulse discharge current I_{imp} (10/350) µs (line-earth)	0.5 kA

Environmental and real-life conditions

Ambient conditions

Degree of protection	IP20
Ambient temperature (operation)	-40 °C ... 80 °C
Ambient temperature (storage/transport)	-40 °C ... 80 °C
Altitude	≤ 2000 m (operating voltage remote contact ≤ 250 V)
	≤ 6000 m (operating voltage remote contact ≤ 150 V)
Permissible humidity (operation)	5 % ... 95 %
Shock (operation)	30g (Half-sine / 11 ms / 3x ±X, ±Y, ±Z)
Vibration (operation)	5g (5 ... 500 Hz / 2.5 h / X, Y, Z)

Approvals

UL specifications

Maximum continuous operating voltage MCOV	150 V AC
	150 V DC
Short-circuit current rating (SCCR)	10 kA AC
	5 kA DC
Voltage protection rating VPR (L-N)	700 V

DRAFT

PLT-SEC-T3-120-FM-UT - Type 3 surge protection device

2907918

https://www.phoenixcontact.com/us/products/2907918

Voltage protection rating VPR (N-G)	900 V
Voltage protection rating VPR (DC+) - (DC-)	700 V
Voltage protection rating VPR (DC+) - G	900 V
Voltage protection rating VPR (DC-) - G	900 V
Nominal discharge current I_n	5 kA
Mode of protection	L-N
	L-G
	N-G
	(DC+) - (DC-)
	(DC+) - G
	(DC-) - G
Nominal voltage	150 V DC
Rated load current I_L	20 A
Power distribution system	Single phase
	DC
Nominal frequency	50/60 Hz
SPD Type	2 (Open-Type SPD)

UL indicator/remote signaling

Operating voltage	250 V AC (0.5 A)
DC operating voltage	12 V DC (4 A)
	24 V DC (2 A)
	48 V DC (1 A)

UL connection data

Tightening torque	4.4 lb_f-in.
Conductor cross section AWG	16 ... 12

Standards and regulations

Standards/specifications	IEC 61643-11
Note	2011

EN 61643-11

Standards/specifications	EN 61643-11
Note	2012

Mounting

Mounting type	DIN rail: 35 mm

DRAFT

PLT-SEC-T3-120-FM-UT - Type 3 surge protection device

2907918

https://www.phoenixcontact.com/us/products/2907918

Phoenix Contact 2024 © - all rights reserved
https://www.phoenixcontact.com

Phoenix Contact USA
586 Fulling Mill Road
Middletown, PA 17057, United States
(+717) 944-1300
info@phoenixcon.com

DRAFT

StructuredGround™ Universal Ground Bar System

PANDUIT®

SPECIFICATION SHEET

specifications

Provide a field wiring terminal for the connection of an equipment grounding conductor in each control panel and enclosure. The terminal shall be UL 467 Listed or CSA 22.2 certified. The equipment grounding conductor shall have electrical continuity with the enclosure or sub-panel. The field wiring terminal may also provide multiple locations or ports for terminating equipment ground conductors from devices inside the panel or enclosure, functioning as the ground bar within the panel or enclosure. The ground bar shall provide a means to attach and to identify the main equipment grounding conductor.

PATENT PENDING



technical information

Performance level:	UL 467 Listed and CSA 22.2 Certified for grounding and bonding an equipment grounding conductor up to 2/0 AWG; meets UL 508A requirements
Main:	Provides a location for the main equipment grounding conductor using a compression or mechanical connector
Wire ports:	Accept bare stripped copper wire from #14 to #4 AWG Accept wire ferrules from #14 AWG to #6 AWG Top of ground bar accepts ring terminals, compression connectors or mechanical connectors with a ¼" stud hole size and maximum width of 0.55"
Materials:	Ground bars and bonding stand-offs precision machined from 110 electrolytic copper with a 99.9% copper content and then tin-plated for additional corrosion resistance
Packaging:	Each part is provided with all fasteners required for terminating wires and for each mounting option

key features and benefits

Flexible design	Works with all types of wire termination methods including stripped wire, ferrules, terminals, and compression or mechanical connectors; compatible with over 140 Panduit connectors
Multiple mounting options	In addition to surface mounting, two mounting stand-off options are available, one that bonds to the mounting surface and one that isolates from the mounting surface; both options provide additional finger wiring space in tight places
Unique geometry	The unique shape of the universal ground bar allows more surface contact between the wire connectors and the ground bar

applications

The StructuredGround™ Universal Ground Bar System (UGB) offers multiple termination methods and mounting options making it ideal for any control panel or enclosure application. The UGB enables the end user to choose the method in which to terminate conductors with connectors of their choice or simply cut and strip the wires. The UGB system will help reduce the types of ground bars that a panel shop or distributor needs to keep in stock to meet the various applications and customer requirements.

Universal Ground Bar System

6-port ground bar:	UGB2/0-414-6
12-port ground bar:	UGB2/0-414-12
18-port ground bar:	UGB2/0-414-18
Isolation standoffs:	UGB-IN-SO
Bonding standoffs:	UGB-B-SO

Recommended Connectors for Main Equipment Ground Conductor, Maximum 2/0 AWG

Copper Mechanical with Anti-Rotation

#14 – 2/0 AWG:	CLMAR2/0-14-Q

Two-Hole Copper Compression, 1/4" Stud Hole with 5/8" Spacing; #14 to 2/0 AWG

#14 – 10 AWG:	LCA10-14A-L
#8 AWG:	LCD8-14A-L
#6 AWG:	LCD6-14A-L
#4 AWG:	LCD4-14A-L
#2 AWG:	LCD2-14A-Q
#1 AWG:	LCD1-14A-E
1/0 AWG:	LCD1/0-14A-X
2/0 AWG:	LCD2/0-14A-X

One-Hole Copper Compression, 1/4" Stud Hole; #14 to 2/0 AWG

#14 – 10 AWG:	LCA10-14-L
#8 AWG:	LCAS8-14-L
#6 AWG:	LCAS6-14-L
#4 AWG:	LCAS4-14-L
#2 AWG:	LCAS2-14-Q
#1 AWG:	LCAS1-14-E
1/0 AWG:	LCAS1/0-14-X
2/0 AWG:	LCAS2/0-14-X

One and two-hole copper compression connectors available for both code and flex conductors, with narrow tongue and bent tongue configurations.

Recommended Connectors for Port Connections

Ring Terminals, ¼" Stud Hole, Maximum Width of 0.55"; #22 to #4 AWG

Ring terminals available with vinyl, nylon, KYNAR*, high-temp, or heavy duty insulation or non-insulated.

Compression Connectors, Maximum Width of 0.55"; up to #4 AWG Typical

Ferrules, Minimum Pin Depth of 12mm; #14 to #6 AWG

*KYNAR is a registered trademark of Atofina Chemicals, Inc.

DRAFT

ITEM 260A

StructuredGround™ Universal Ground Bar System

CLMAR2/0-14-Q: Tin-plated copper connector with anti-rotational feature.

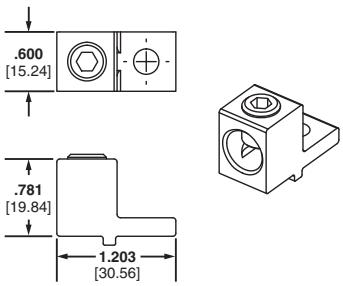

UGB2/0-414-18: 18-port UGB mounted directly to surface with the equipment grounding conductor terminated in an anti-rotational, copper mechanical connector.

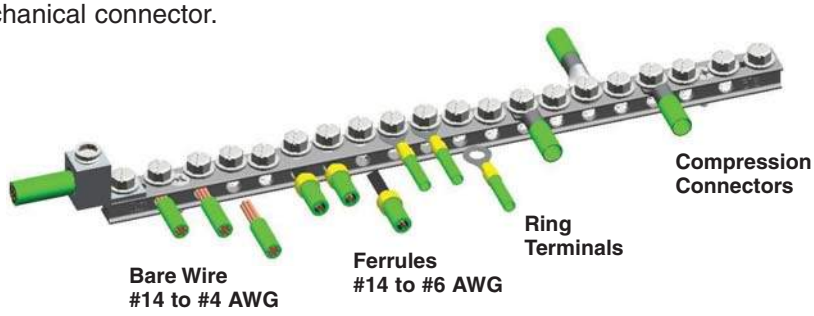

UGB-B-SO: Bonding stand-off.

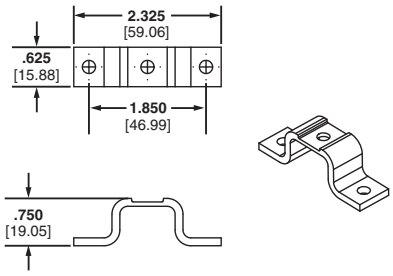

UGB2/0-414-12: 12-port UGB mounted on bonding stand-offs with the equipment grounding conductor terminated in a two-hole compression lug.



UGB-IN-SO: Isolation stand-off.

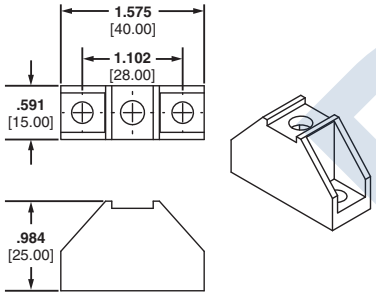

UGB2/0-414-6: 6-port UGB mounted on isolation stand-offs with the equipment grounding conductor terminated in an anti-rotational, copper mechanical connector.

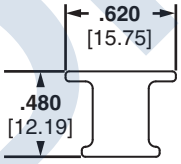



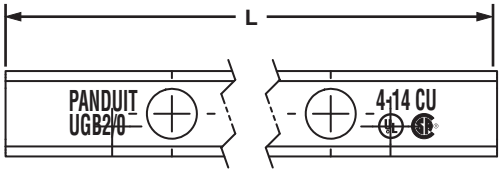

Part Number	"L" Dim.
UGB2/0-414-6	4.92" (125mm)
UGB2/0-414-12	8.28" (210mm)
UGB2/0-414-18	11.64" (295mm)

DRAFT

WORLDWIDE SUBSIDIARIES AND SALES OFFICES

PANDUIT CANADA
Markham, Ontario
cs-cdn@panduit.com
Phone: 800.777.3300

PANDUIT EUROPE LTD.
London, UK
cs-emea@panduit.com
Phone: 44.20.8601.7200

PANDUIT SINGAPORE PTE. LTD.
Republic of Singapore
cs-ap@panduit.com
Phone: 65.6305.7575

PANDUIT JAPAN
Tokyo, Japan
cs-japan@panduit.com
Phone: 81.3.6863.6000

PANDUIT LATIN AMERICA
Guadalajara, Mexico
cs-la@panduit.com
Phone: 52.33.3777.6000

PANDUIT AUSTRALIA PTY. LTD.
Victoria, Australia
cs-aus@panduit.com
Phone: 61.3.9794.9020

For a copy of Panduit product warranties, log on to www.panduit.com/warranty

For more information

Visit us at www.panduit.com

Contact Customer Service by email: cs@panduit.com or by phone: 800.777.3300 and reference GRSP08

©2011 Panduit Corp.
ALL RIGHTS RESERVED.
Printed in the U.S.A.

SA-GRSP08
5/2011

Relays & Timers

LOGIC

Slim Line Relays 700-HK

- 8 A (2-pole) or 16 A (1-pole) contact ratings
- DPDT or SPDT
- Blade-style
- ON/OFF flag indicator
- LED, push-to-test and manual override options
- Standard or gold-plated AgNi contacts
- Maximum duty version available
- Screw or push-in socket terminals

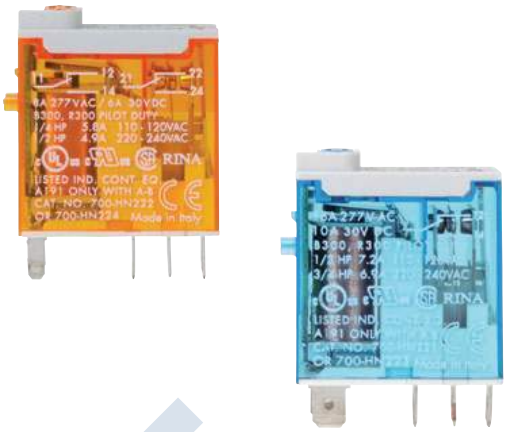

The 700-HK relays are designed for a variety of high-density isolation and interposing applications. Installation is easy and cost effective through the use of the 8-way jumper wiring system that requires only one wire connection to a coil, common or contact power distribution terminal. Optional gold contacts switch low-energy loads reliably as low as 5V, 10 mA, 50 mW.

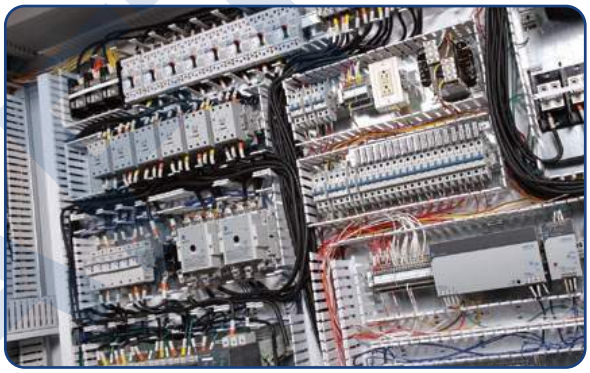

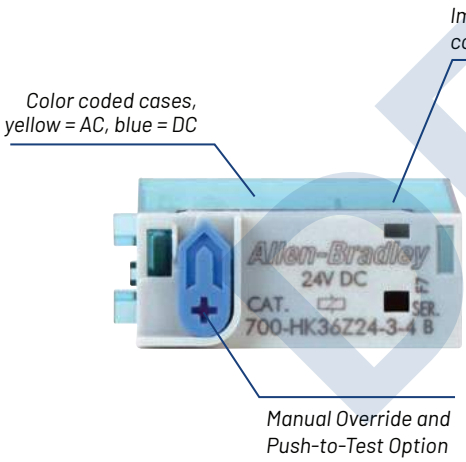

Ideal Applications

- Provides longer life for PLC, saving money and increasing efficiency
- Switching currents or voltages too high for PLC outputs to handle
- Interfacing two or more system voltages – for example, 24V to 120V
- Multiplies PLC outputs by using relays to turn two devices on and off simultaneously
- Provides isolation from solid-state output leakage current

DRAFT

Product Selection

Slim Line Relay

Description	Contact Rating	Coil Voltage	Pkg. Qty.	Cat. No. [1, 2, 3]
SPDT 1-pole 1 form C AgNi contacts	16 A	24V AC	1	700-HK36A24
		120V AC		700-HK36A1
		240V AC		700-HK36A2
		12V DC		700-HK36Z12
		24V DC		700-HK36Z24
		110V DC		700-HK36Z1
DPDT 2-pole 2 form C AgNi contacts	8 A	24V AC	1	700-HK32A24
		120V AC		700-HK32A1
		240V AC		700-HK32A2
		12V DC		700-HK32Z12
		24V DC		700-HK32Z24
		110V DC		700-HK32Z1

1 LED option: Add suffix **-4** to the selected 700-HK relay catalog number; for the 240V AC units, add -**4L**.

2 Push-to-test and LED option: Add suffix **-3-4** to the selected 700-HK relay catalog number; for 240V AC units, add suffix **-3-4L**.

3 For AgNi contact with gold plating: Replace **3** with **X** in catalog number For example, catalog number 700-HK**3**6A1 becomes catalog number 700-HK**X**6A1.

Accessories

Description		Pkg. Qty.	Cat. No.
Screw terminal socket – guarded terminal style, accepts forked lug conductors. [5]	1-pole, 5-blade, 10 A	10	700-HN121
	2-pole, 8-blade, 5 A		700-HN122
Push-in terminal socket [5]	1-pole, 5-blade	10	700-HN223
Screw terminal socket for use with or without timing/surge suppression module – guarded terminal style [4 5]	1-pole, 5-blade, 16 A	10	700-HN221
	2-pole, 8-blade, 8 A		700-HN222
Push-in terminal socket [5]	2-pole, 8-blade	10	700-HN224
8-way jumper (can be cut to length)	Red	1	700-HN180R
	Grey	1	700-HN180G
	Blue	1	700-HN180B



700-HN221



700-HN223



700-HN222



700-HN224

4 Suppressors and time modules easily plug into socket (catalog number 700-HN221). For use with 700-HK relays.

5 Socket includes retainer clip.

DRAFT

Sales Offices and Distributors

Our network of sales offices and distributors offers exceptional knowledge and service to help you design, implement and support your automation investment.

https://rok.auto/buy



For more information on our complete family of general-purpose relay products, please visit:
https://rok.auto/general-purpose-relays

Bulletin 800T/H

30.5 mm Push Buttons

Selector Switches

3-Position Selector Switch Devices, Non-Illuminated



Standard Knob Operator
Cat. No. 800T-J2A



Knob Lever Operator
Cat. No. 800T-J17A



Standard Knob Operator
Cat. No. 800H-JR2A

Contact Type	Operator Position			M = Maintained S = Spring Return	Type 4/13 Standard Knob Cat. No.	Type 4/13 Knob Lever Cat. No.	Type 4/4X/13 Standard Knob Cat. No.
				M M M	**800T-J2**	**800T-J17**	**800H-JR2**
No Contacts	—	—	—	S→M M	**800T-J4**	800T-J18	**800H-JR4**
				M M←S	**800T-J5**	800T-J19	**800H-JR5**
				S→M←S	**800T-J91**	**800T-J20**	**800H-JR91**
	O	O	X	M M M	**800T-J2A**	**800T-J17A**	**800H-JR2A**
	X	O	O	S→M M	**800T-J4A**	**800T-J18A**	**800H-JR4A**
				M M←S	**800T-J5A**	**800T-J19A**	**800H-JR5A**
1 N.O. - 1 N.C.				S→M←S	**800T-J91A**	**800T-J20A**	**800H-JR91A**

Note: X = Closed/O = Open

800 T ___ – J 2 ___ C
a b c d e f

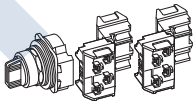

a

Protection Rating	
Code	Description
T	Metal, Type 4/13
H	Plastic, Type 4/4X/13

b

Finger-Safe Guards	
Code	Description
Blank	No guards
C	Guards on terminals

c

Knob Insert Colors		
800T Type 4/13 Code	Description	800H Type 4/4X/13 Code
J	White	JR
JX	Packet of colored inserts∗	JRX
Metal Wing Lever Colors❄		
Code	Color	Code
JA	Red	—
JG	Grey	—

d

Knob/Lever Type Operators	
Standard Knob	
Code	Operator Function
2	Maintained
4	Spring return from left
5	Spring return from right
91	Spring return from both
Knob Lever❄	
Code	Operator Function
17	Maintained
18	Spring return from left
19	Spring return from right
20	Spring return from both
Metal Wing Lever❄	
Code	Operator Function
11	Maintained
15	Spring return from left
16	Spring return from right
141	Spring return from both
Coin Slot❄	
Code	Operator Function
10	Spring return from both

e

Cam Option‡♣	
Code	Description
Blank	KB7 cam (std.)
KA1	KA1 cam
KA7	KA7 cam

e (cont'd)

Cam Option‡♣	
Code	Description
KC1	KC1 cam
KC7	KC7 cam
KD7	KD7 cam
KE7§	KE7 cam
KQ1	KQ1 cam
KQ7	KQ7 cam
KR1§	KR1 cam
KR7§	KR7 cam
KT1§	KT1 cam
KT7§	KT7 cam
KU7§	KU7 cam

f

Contact Blocks	
Code	Description
Blank	No contacts on operator
Standard	
A	1 N.O. - 1 N.C. 1-**800T-XA** on white side
B	2 N.O. - 2 N.C. 2-**800T-XA**s — 1 on white side/1 on black side
PenTUFF (Low Voltage)	
AV	1 N.O. - 1 N.C. 1-**800T-XAV** on white side
BV	2 N.O. - 2 N.C. 2-**800T-XAV**s — 1 on white side/1 on black side

f (cont'd)

Contact Blocks♣	
Code	Description
Blank	No contacts
Class 1, Div. 2/Zone 2	
Logic Reed	
AR	1 N.O. - 1 N.C. 1-**800T-XAR** on white side
BR	2 N.O. - 2 N.C. 2-**800T-XAR**s — 1 on white side/1 on black side
Sealed Switch	
AP	1 N.O. - 1 N.C. 1-**800T-XAP** on white side
BP	2 N.O. - 2 N.C. 2-**800T-XAP**s — 1 on white side/1 on black side
Stackable Sealed Switch	
AY	1 N.O. - 1 N.C. 1-**800T-XAY** on white side
BY	2 N.O. - 2 N.C. 2-**800T-XAY**s — 1 on white side/1 on black side

∗ One insert of each color (blue, green, orange, red, and yellow).
❄ Only available on Bul. 800T, Type 4/13 operators.
‡ If an overlapping cam is required, consult your local distributor.
§ Not available with wing levers.
♣ See Table 1 for cam selections and associated targets.

Table 1. Cam and Contact Block Functionality Table

Contact Block Suffix Code	Contact Block Side	Circuits	Cam Codes																																			
			KB7 (Std.)			KA1			KA7			KC1			KC7			KD7			KE7			KQ1			KQ7			KR1			KR7			KT1			KT7			KU7		
A_ B_ C_ H_	White	A	X	O	O	X	O	O	O	O	X	O	O	X	X	O	O	O	O	X	X	O	O	X	O	X	X	O	X	X	O	X	X	O	X	X	O	X	X	O	O
		B	O	O	X	O	X	O	O	X	O	O	X	O	O	X	O	O	O	X	O	O	X	X	O	O	X	O	O	X	O	O	X	O	X	O	O	O	O	X	O	X	O
	Black	A	X	O	O	X	O	O	O	O	X	O	O	X	X	O	O	X	O	O	O	O	X	O	O	X	X	O	O	O	O	X	X	O	O	O	O	X	X	O	O	O	O	X
		B	O	O	X	O	X	O	O	X	O	O	X	O	O	O	O	X	O	X	O	X	X	O	O	X	O	O	X	O	X	X	O	O	X	X	X	X	O	O	X	X	X	X	O
	White	A	X	O	O	X	O	O	O	O	X	O	O	X	X	O	O	X	O	O	O	O	X	O	O	X	X	O	O	X	O	X	X	O	O	X	O	X	X	O	O	O	O	X	O
		B	O	O	X	O	X	O	O	X	O	O	X	O	O	X	O	O	O	X	O	O	X	X	O	O	X	O	O	X	O	X	O	O	X	O	X	O	O	O	O	X	O	X	O
	Black	A	X	O	O	X	O	O	O	O	X	O	O	X	X	O	O	X	O	O	O	O	X	O	O	X	X	O	O	O	O	X	X	O	O	O	O	X	X	O	O	O	O	X	O
		B	O	O	X	O	X	O	O	X	O	O	X	O	O	O	O	X	O	X	O	X	X	O	O	X	O	O	X	O	X	X	O	O	X	X	X	X	O	O	X	X	X	X	O

Note: X = Closed/O = Open

www.ab.com/catalogs Preferred availability cat. nos. are **bold**.
Publication A117-CA001A-EN-P

Allen-Bradley

2-Position Red Push-Pull and Push-Pull/Twist Release Devices, Non-Illuminated

Note: A jumbo or large legend plate is recommended, if space allows.



2-Position Push-Pull
Cat. No. 800T-FX6D4



2-Position Metal Push-Pull
Cat. No. 800T-FXLE6D4S



2-Position Push-Pull / Twist
Cat. No. 800T-FXT6D4



2-Position Push-Pull / Twist
Cat. No. 800H-FRXT6D4

Contact Type	Operator Position: Out	Operator Position: In	Type 4/13: Push-Pull — 40 mm Cat. No.	Type 4/13: Push-Pull — 63 mm Metal Cat. No.	Type 4/13: Push-Pull/Twist Release Cat. No.	Type 4/4X/13: Push-Pull/Twist Release Cat. No.
N.C.L.B.∗	X	O	**800T-FX6D4**	**800T-FXLE6D4**	**800T-FXT6D4**	**800H-FRXT6D4**
N.O. - N.C.L.B.∗	O X	X O	**800T-FX6A1**	800T-FXLE6A1	**800T-FXT6A1**	**800H-FRXT6A1**
N.C.L.B. - N.C.L.B.∗	X X	O O	**800T-FX6A5**	800T-FXLE6A5	**800T-FXT6A5**	**800H-FRXT6A5**
S.M.C.B.∗❄	X	O	**800TC-FX6D4S**	800TC-FXLE6D4S	800TC-FXT6D4S	800HC-FRXT6D4S
N.O. - S.M.C.B.∗❄	O X	X O	800TC-FX6A1S	800TC-FXLE6A1S	800TC-FXT6A1S	800HC-FRXT6A1S
S.M.C.B. - S.M.C.B∗❄	X X	O O	**800TC-FX6A5S**	**800TC-FXLE6A5S**	**800TC-FXT6A5S**	**800HC-FRXT6A5S**

Note: X = Closed/O = Open **Note:** These caps are only available in plastic.

Note: Emergency stop push buttons are compliant with EN ISO 13850 and EN/IEC 60947-5-5 Standards when using N.C.L.B. contact blocks.

❄ The Self Monitoring Contact Block (S.M.C.B.) is composed of a N.C.L.B. contact wired in series with a N.O. monitoring contact. The N.O. monitoring contact automatically closes when the S.M.C.B. is properly installed onto the E-stop operator. If the S.M.C.B. is separated from the E-stop operator, the N.O. monitoring contact will automatically open.

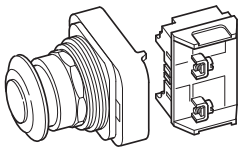

800 T ___ – FX 1 A1
a b c d e

a

Protection Rating	
Code	**Description**
T	Metal, Type 4/13
H	Plastic, Type 4/4X/13

b

Finger-Safe Guards	
Code	**Description**
Blank	No guards
C	Guards on terminals

c

Head Type‡		
800T Type 4/13 Code	**Description**	**800H Type 4/4X/13 Code**
FX	Mushroom head (push-pull)	—
FXC	90 mm anodized aluminum head (push-pull)	—
FXJ	Jumbo mushroom head (push-pull)	—
FXJE	Jumbo mushroom head (push-pull) with "E-Stop"	—
FXL	63 mm anodized aluminum head (push-pull)	—
FXLE	63 mm anodized aluminum head (push-pull) with "E-Stop"	—
FXT	Push-pull/twist-to-release	FRXT
FXJT	Jumbo head push-pull with twist-to-release	FRXJT

d

Color Cap	
Code	**Color**
Blank	No cap§
1	Green
2	Black
3	Orange
4	Grey
5	White
6	Red
7	Blue
9	Yellow

e

Contact Block(s)			
Code	**Operator Position: Out**	**Operator Position: In**	**Description**
Blank	—	—	No contacts on operator
Standard			
D1	O	X	1 N.O.
D2	X	O	1 N.C.
D4	X	O	1 N.C.L.B.
A	O X	X O	1 N.O. - 1 N.C.
A1	O X	X O	1 N.O. - 1 N.C.L.B.
A5	X X	O O	2 N.C.L.B.

e (cont'd)

Contact Block(s)			
Code	**Operator Position: Out**	**Operator Position: In**	**Description**
Blank	—	—	No contacts
Pen*TUFF* (Low Voltage)			
D1V	O	X	1 N.O.
D2V	X	O	1 N.C.
D4V	X	O	1 N.C.L.B.
AV	O X	X O	1 N.O. - 1 N.C.
Class 1, Div. 2/Zone 2 Logic Reed			
D1R	O	X	1 N.O.
D2R	X	O	1 N.C.
AR	O X	X O	1 N.O. - 1 N.C.
Sealed Switch			
D1P	O	X	1 N.O.
D2P	X	O	1 N.C.
AP	O X	X O	1 N.O. 1 N.C.
Stackable Sealed Switch			
D1Y	O	X	1 N.O.
D2Y	X	O	1 N.C.
AY	O X	X O	1 N.O. - 1 N.C.

Note: X = Closed/O = Open

∗ Normally closed late break contact. When button is pushed from the OUT to IN position, the mechanical detent action of the operator occurs before electrical contacts change state. When the button is pulled from the IN in the OUT position, the electrical contacts change state before the mechanical detent occurs.

‡ Devices with N.C.L.B. contacts meet EN ISO 13850 and IEC 60947-5-5 standards for emergency stop applications.

§ Not valid with head Type J or JT.

DRAFT

Bulletin 800T/H

30.5 mm Push Buttons

Push Button Operators

Momentary Contact Push Button Devices, Illuminated



Extended Head Without Guard
Cat. No. 800T-PB16R



Extended Head without Guard
Cat. No. 800H-PRB16R

Type	Lamp Type	Volts	Color	Type 4/13 Extended Head Without Guard∗ Cat. No.	Type 4/13 Extended Head With Guard∗ Cat. No.	Type 4/4X/13 Extended Head without Guard∗ Cat. No.	Type 4/4X/13 Extended Head with Guard∗ Cat. No.
Operator Only❄				**800T-SB00XX**	800T-SA00XX	800H-SRB00XX	800H-SRA00XX
Full Voltage	Incandescent	24V AC/DC	Red	**800T-QB24R**	**800T-QA24R**	**800H-QRB24R**	800H-QRA24R
			Green	**800T-QB24G**	**800T-QA24G**	**800H-QRB24G**	**800H-QRA24G**
			Amber	**800T-QB24A**	**800T-QA24A**	**800H-QRB24A**	800H-QRA24A
	No Lamp	0…250V AC/DC	No Lens	800T-QBN25	800T-QAN25	800H-QRBN25	800H-QRAN25
Universal	LED	12…130V AC/DC	Red	**800T-QBH2R**	**800T-QAH2R**	**800H-QRBH2R**	**800H-QRAH2R**
			Green	**800T-QBH2G**	**800T-QAH2G**	**800H-QRBH2G**	**800H-QRAH2G**
			Amber	**800T-QBH2A**	**800T-QAH2A**	**800H-QRBH2A**	**800H-QRAH2A**
Transformer	Incandescent	120V AC, 50/60 Hz	Red	**800T-PB16R**	**800T-PA16R**	**800H-PRB16R**	**800H-PRA16R**
			Green	**800T-PB16G**	**800T-PA16G**	**800H-PRB16G**	**800H-PRA16G**
			Amber	**800T-PB16A**	**800T-PA16A**	**800H-PRB16A**	**800H-PRA16A**
	LED		Red	**800T-PBH16R**	**800T-PAH16R**	**800H-PRBH16R**	800H-PRAH16R
			Green	**800T-PBH16G**	**800T-PAH16G**	**800H-PRBH16G**	**800H-PRAH16G**
			Amber	**800T-PBH16A**	**800T-PAH16A**	800H-PRBH16A	800H-PRAH16A
	No Lamp		No Lens	800T-PBN16	800T-PAN16	800H-PRBN16	800H-PRAN16

∗ Includes as standard one Cat. No. 800T-XA (1 N.O. - 1 N.C.) contact block.
❄ Operator only supplied without power module, lamp, lens cap, or contact blocks.

800 T ___ – P B H 16 R ___
a b c d e f g h

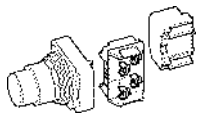

a

Protection Rating	
Code	Description
T	Metal, Type 4/13
H	Plastic, Type 4/4X/13

b

Finger-Safe Guards	
Code	Description
Blank	No guards
C	Guards on terminals

c

Power Module Type		
800T Type 4/13 Code	Description	800H Type 4/4X/13 Code
P	Transformer (or dual input)	PR
Q	Full voltage/ Universal	QR

d

Head Type	
Code	Description
A	Extended head with guard
B	Extended head without guard
M	Mushroom
MJ	Jumbo mushroom

e

Illumination Options	
Code	Description
Blank	Incandescent
H	LED
Dual Input	
D	Diode type‡
T	Transformer — relay type
TH	Transformer — relay type LED

f

Voltage	
Transformer	
Code	Description
16	120V AC, 50/60 Hz
26	240V AC, 50/60 Hz
46	480V AC, 50/60 Hz
56	600V AC, 50/60 Hz
Full Voltage — Incandescent	
12	12V AC/DC
24	24V AC/DC
48	48V AC/DC
10	120V AC/DC
20	240V AC/DC
Universal — LED	
2	12…130V AC/DC
Dual Input	
16	120V AC
24	24V AC/DC➢

g

Lens Color	
Code	Description
Blank	No lens with standard contacts 1 N.O. - 1 N.C.
X	No lens if ordering any contacts other than standard 1 N.O. - 1 N.C.
A	Amber
B	Blue
C	Clear
G	Green
R	Red
W	White

h

Contact Block(s)	
Code	Description
X	No contacts
Standard	
Blank	1 N.O. - 1 N.C.
D1	1 N.O.
Pen*TUFF* (Low Voltage)	
AV	1 N.O. - 1 N.C.
Class 1, Div. 2/Zone 2	
Logic Reed	
AR	1 N.O. - 1 N.C.
Sealed Switch	
AP	1 N.O. - 1 N.C.
Stackable Sealed Switch	
AY	1 N.O. - 1 N.C.

‡ Diode type dual input provides circuit isolation via opposing diodes. Not recommended for use with solid-state outputs.
➢ Dual input diode only.

DRAFT

FL SWITCH SFN 5TX - Industrial Ethernet Switch

2891152

https://www.phoenixcontact.com/us/products/2891152

Please be informed that the data shown in this PDF document is generated from our online catalog. Please find the complete data in the user documentation. Our general terms of use for downloads are valid.



Ethernet switch, 5 TP RJ45 ports, automatic detection of data transmission speed of 10 or 100 Mbps (RJ45), autocrossing function

Your advantages

- RJ45 ports support a transmission speed of 10/100 Mbps
- Fiber-optic ports support 100 Mbps
- QoS-prioritized (Quality of Service) messages
- Local diagnostic indicators with LEDs
- The switch also offers cable locking and port blocking

DRAFT

FL SWITCH SFN 5TX - Industrial Ethernet Switch

2891152

https://www.phoenixcontact.com/us/products/2891152

Technical data

Dimensions

Width	30 mm
Height	120 mm
Depth	70 mm

Material specifications

Housing material	Aluminum

Mounting

Mounting type	DIN rail mounting

Interfaces

Ethernet (RJ45)

Connection method	RJ45
Note on the connection method	Auto negotiation and autocrossing
Transmission speed	10/100 Mbps
Transmission physics	Ethernet in RJ45 twisted pair
No. of channels	5 (RJ45 ports)

Product properties

Product type	Switch
Product family	Unmanaged Switch SFN
Type	Block design
MTTF	192.9 Years (MIL-HDBK-217F standard, temperature 25°C, operating cycle 100%)

Insulation characteristics

Protection class	III (IEC 61140, EN 61140, VDE 0140-1)

Switch functions

Basic functions	Unmanaged switch / auto negotiation, complies with IEEE 802.3, store and forward switching mode
Status and diagnostic indicators	LEDs: U_S, link and activity per port
Additional functions	Autonegotiation

Security functions

Basic functions	Unmanaged switch / auto negotiation, complies with IEEE 802.3, store and forward switching mode

Electrical properties

Local diagnostics	US Supply voltage Green LED
	LNK/ACT Link status/data transmission Green LED
	100 Data transmission speed Yellow LED
Maximum power dissipation for nominal condition	2.16 W

DRAFT

FL SWITCH SFN 5TX - Industrial Ethernet Switch

2891152

https://www.phoenixcontact.com/us/products/2891152

Test section	500 V DC 1 min.
Transmission medium	Copper

Supply

Supply voltage (DC)	24 V DC
Supply voltage range	9 V DC ... 32 V DC
Power supply connection	Via COMBICON, max. conductor cross section 2.5 mm²
Residual ripple	3.6 V_{PP} (within the permitted voltage range)
Max. current consumption	205 mA (at 9 V DC)
Typical current consumption	90 mA (at U_S = 24 V DC)

Connection data

Connection technology

Connection name	Power supply
pluggable	yes

Power supply

Connection method	Screw connection
Conductor cross section, rigid	0.2 mm² ... 2.5 mm²
Conductor cross section, flexible	0.2 mm² ... 2.5 mm²
Conductor cross section AWG	24 ... 12
Stripping length	7 mm

Environmental and real-life conditions

Ambient conditions

Degree of protection	IP20
Ambient temperature (operation)	0 °C ... 60 °C
Ambient temperature (storage/transport)	-20 °C ... 70 °C
Permissible humidity (operation)	5 % ... 95 % (non-condensing)
Permissible humidity (storage/transport)	5 % ... 95 % (non-condensing)
Vibration (operation)	in acc. with IEC 60068-2-6: 5g, 150 Hz
Air pressure (operation)	86 kPa ... 5 kPa (up to 1500 m above sea level)
Air pressure (storage/transport)	66 kPa ... 108 kPa (up to 3500 m above sea level)
Resistance to gases that may endanger the functions, in acc. with DIN 40046-36, DIN 40046-37	Sulfur dioxide (SO_2) 10 ±0.3 cm^3/m^3, hydrogen sulfide (H_2S) 1 ±0.3 cm^3/m^3, at 25°C and 75% humidity and exposure of four days

Standards and regulations

Free from substances that could impair the application of coating	In acc. with VW specification

Approvals

Conformity/Approvals

Conformance	CE-compliant
UL, USA / Canada	Class I, Div. 2, Groups A, B, C, D, T4

DRAFT

FL SWITCH SFN 5TX - Industrial Ethernet Switch

2891152

https://www.phoenixcontact.com/us/products/2891152

EMC data

Conformance with EMC directives	IEC 61000-6-2 IEC 61000-4-2 (ESD) Criterion B
	IEC 61000-4-3 (immunity to radiated interference) Criterion A
	IEC 61000-4-4 (burst) Criterion B
	IEC 61000-4-5 (surge) Criterion B
	IEC 61000-4-6 (immunity to conducted interference) Criterion A
	IEC 61000-4-8 (immunity to magnetic fields) Criterion A
	EN 55022 (emitted interference) Criterion A
Noise immunity	EN 61000-6-2:2005
Electromagnetic compatibility	Conformance with EMC Directive 2004/108/EC
Noise emission	EN 61000-6-4

System properties

Functionality

Basic functions	Unmanaged switch / auto negotiation, complies with IEEE 802.3, store and forward switching mode

Signaling

Status display	LEDs: U_S, link and activity per port

Phoenix Contact 2024 © - all rights reserved
https://www.phoenixcontact.com

Phoenix Contact USA
586 Fulling Mill Road
Middletown, PA 17057, United States
(+717) 944-1300
info@phoenixcon.com

DRAFT

cMT2078X | Advanced HMI Series

7.0” Touchscreen HMI with IIoT Features



- High Speed Screen Update
- Dual Ethernet Ports
- Built-in Edge Gateway Function
- Enhanced Graphics & Security
- Email Alarm Notification and Recipe Functionality
- PDF Reader

System	**CPU**	Quad-Core 64-bit RISC, 1.5 GHz
	Memory (RAM)	1 GB
	Memory (Flash)	4 GB
	RTC	Built-in
I/O Ports	**Serial**	1 x DE9P COM1: RS-232, COM3: RS-232*
		1 x DE9S COM2: RS-485 2 or 4 wire, COM3: RS-485 2 wires
	LAN	2 x 10/100 Base-T RJ-45
	CANbus	N/A
	USB Host	1 x USB 2.0
	USB Client	N/A
	Audio	N/A
	Video	N/A
	Wi-Fi	N/A
	HDMI®	N/A
	SD Card Slot	N/A
Display	**Display Type**	7” TFT LCD
	Size (W x H)	6.02 x 3.39 inches [153 x 86 mm]
	Max. Resolution	800 x 480
	Max. Colors	16.7 M
	Luminance (cd/m²)	400
	View Angle (H°/V°)	160/140
	Contrast Ratio	800:1
	Backlight Lifetime (Hours)	30,000+
Touch Screen	**Type**	4-wire resistive touch
	Active Area Accuracy	Length (X) ±2%, width (Y) ±2%
Electrical	**Input Voltage**	24 ±20% VDC
	Input Current	820mA @ 24 VDC
	Input Power	19.7 W
	Power Isolation	Built-in
	Isolation Resistance	Exceed 50 MΩ at 500 VDC
Mechanical	**Enclosure**	Plastic, Black
	PCB Coating	Yes
	Dimensions (W x H x D)	7.89 x 5.76 x 1.38 inches [200.3 x 146.3 x 35 mm]
	Panel Cutout (W x H)	7.56 x 5.43 inches [192.0 x 138.0 mm]
	Net Weight	Approx. 1.32 lbs. [0.6 kg]
	Mounting	Panel mounting
Environmental	**Operating Temperature**	32° ~ 131°F [0° ~ 55°C]
	Storage Temperature	-4° ~ 140°F [-20° ~ 60°C]
	Relative Humidity	10% ~ 90% (non-condensing)
	Vibration Endurance	10 to 25 Hz (X, Y, Z direction, 2G, 30 minutes)
	Rating	UL Type 4X (indoor use only), NEMA 4, IP66 compliant front panel
	Certifications	cULus, CE, RoHS
Software	EBPro (v6.05.02 or later), EasyAccess 2.0 (optional), CODESYS (optional), IIoT Ready, MQTT, Sparkplug B, VNC, CMTViewer, Webview	
Notes	*Only Tx and Rx may be used for COM1 RS-232 while COM3 RS-232 is in use. MPI is not supported. Specifications subject to change without notice	

DRAFT

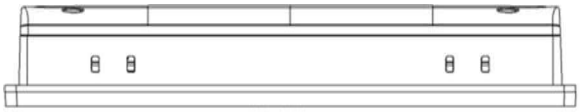

Top View

Dimensions are in inches [mm]

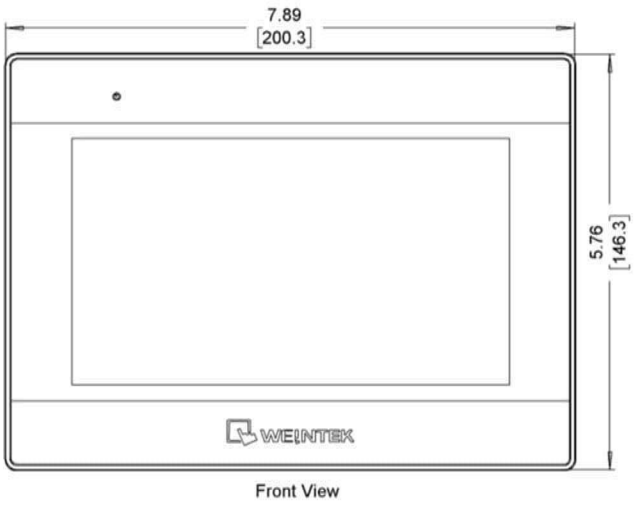

Front View

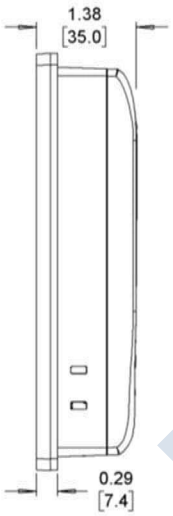

Side View

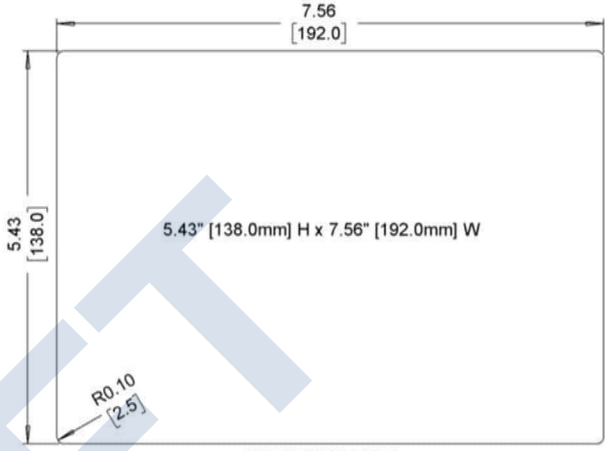

Cutout Dimensions

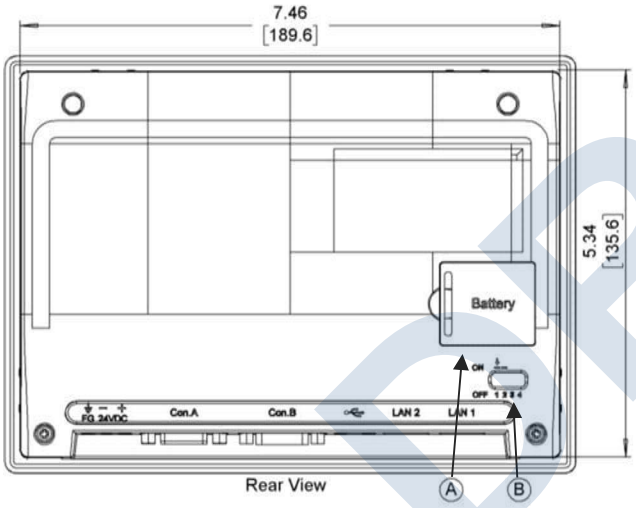

Rear View

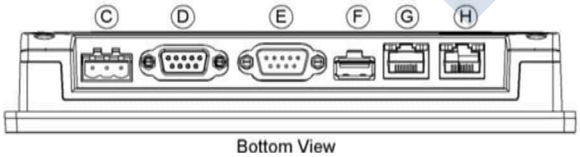

Bottom View

A Battery Compartment
B DIP Switches
C Power Connector
D COM Port DE9S
E COM Port DE9P
F USB 2.0 Host Port
G Ethernet Port
H Ethernet Port

DRAFT

Why Buy A Maple HMI

In addition to our powerful and affordable hardware, we'll also continue to support your company long after a sale. Wide product selection, large in-stock inventory, outstanding product warranty, free technical support and software, and in-house repairs with quick turnaround times, Maple Systems has your business covered.



Add Remote IO for PLC Functionality

Select Maple Advanced and High-Performance HMIs have a sleek hardware platform that runs both an HMI application created with our free HMI software and PLC logic programmed with CODESYS; each on its own dedicated processor. Unlike the typical multicore set up, where the operating system scheduler is responsible for allocating tasks to each processor, these HMIs have a hard separation between cores. One core is dedicated to the HMI application, the other to executing PLC logic of the CODESYS project. This ensures taxing graphics processing operations will not interfere with deterministic real time control tasks executing on the other processor.

After selecting your HMI, choose from a suite of easy to use powerful I/O modules to connect to your field equipment. We offer a complete set of I/O modules which can be combined with one of our communication couplers to create a remote I/O block.

Remote Access and the IIoT

Remote access is the ability to access an HMI or connected device, from another device, at any time, and from anywhere. With our free HMI software and supported hardware solutions, you have the freedom to access the HMI, and all its data and applications, from another device and control it as if you were standing in front of it. Our Advanced and High-Performance HMIs support cMT Viewer, WebView, Web Streaming, and EasyAccess 2.0 and are designed to make accessing your HMI and data fast and streamlined.

Let us serve as your guide, making it an easy process to join the next evolution of automated control. Our Advanced and High-Performance HMIs can act as an access point enabling operating equipment on the plant floor to connect to information technologies of the Industrial Internet of Things (IIoT). With our IIoT solutions, that are already included in the EBPro software, we can help you achieve better access to invaluable data and open a world of possibilities for your business. Read more about our IIoT solutions.

Build your SCADA

We offer all the components you need to create your own unique level of supervisory data acquisition and control, from the simplest stand-alone machine to sophisticated multi-device networked production line(s), all the way to enterprise-level operations and IIoT functionalities leveraging cloud connectivity.

Our products can help you standardize communications between devices, gluing different systems together for one source to your SCADA. No need to redesign your entire application. Keep the components that are already working for you, just add Maple Systems components to grow your abilities to supervise, control, and acquire data.

DRAFT

Incredible Functionality Out of the Box

- Easily and quickly create the project with functional objects including numeric object, lamp object, combo-button, alarms, and recipes
- Pick and place objects, pictures, and shapes
- Import/export recipes
- Create trend display, graphs, XY plots, and pie charts
- Add passwords and security levels
- Assign communication (PLC) drivers easily and more with our Free HMI software

Additionally our HMIs support remote access solutions with VNC, MQTT, and OPC UA. For additional features see our High-Performance HMI series.



User Friendly HMI Configuration Software

Because designing the layout of screens and user-interface (UI) of the HMI is typically where most of the development time is spent, we've made our Free HMI configuration software easy to use.

- Import tags feature
- Tools to diagnose and monitor PLC to HMI connection
- Debugging tools
- Pre-built libraries
- Off-line and on-line simulation

These are just a few of the ways our software makes creating your project easier. We also have controller information sheets, cable drawings, sample projects, Getting Started Guides, and videos/tutorials available in our support center 24/7.



Allen-Bradley ABB babcock
BALDOR Danfoss SIEMENS
MITSUBISHI Parker
TOSHIBA YASKAWA Koyo
Matsushita

Programmable Logic Controller (PLC) Connectivity

With over 300 PLC & Controller communication protocols, these HMIs will easily integrate with your preferred PLC brands, including:

Allen-Bradley
Siemens
Omron
Emerson
GE
Panasonic
Mitsubishi
...and many more

ITEM 454A

Panel Mount HMI Feature Overview

With few exceptions, all our Standard HMIs support (this covers all the HMI prefix models, ex: HMI5043L/LB, HMI5070L/LB):	With few exceptions, all our Advanced HMIs support (this covers all the cMT2xxx series):	With few exceptions, all our High Performance HMIs support (this covers all the cMT3xxx series HMIs):
Alarm & Event Messages	Alarm & Event Messages	Alarm & Event Messages
Animation - Flow Block	Animation - Flow Block	Animation - Flow Block
ASCII Characters	ASCII Characters	ASCII Characters
Bar Graphs	Bar Graphs	Bar Graphs
Combo Button	Combo Button	Combo Button
Data Logging and Sampling	Data Logging and Sampling	Data Logging and Sampling
Date / Time	Date / Time	Date / Time
Dynamic Drawing	Dynamic Drawing	Dynamic Drawing
Dynamic Scale	Dynamic Scale	Dynamic Scale
EasyAccess 2.0	EasyAccess 2.1	EasyAccess 2.0
EasyWatch	EasyWatch	EasyWatch
Enhanced Security Mode	Enhanced Security Mode	Enhanced Security Mode
Event Alarm Log	Event Alarm Log	Event Alarm Log
File Browser	File Browser	File Browser
Grid Display	Grid Display	Grid Display
Languages (Up to 24)	Languages (Up to 24)	Languages (Up to 24)
Libraries	Libraries	Libraries
Macros	Macros	Macros
Meters & Gauges	Meters & Gauges	Meters & Gauges
Modbus	Modbus	Modbus
Objects (Grouping, Layering, Aligning, Flip)	Objects (Grouping, Layering, Aligning, Flip)	Objects (Grouping, Layering, Aligning, Flip)
Off-line / On-line Simulation	Off-line / On-line Simulation	Off-line / On-line Simulation
OPC UA Client	OPC UA Client	OPC UA Client
Operation Log	Operation Log	Operation Log
Pass-Through Mode	Pass-Through Mode	Pass-Through Mode
Picture Object	Picture Object	Picture Object
Picture Viewer	Picture Viewer	Picture Viewer
Pie Chart	Pie Chart	Pie Chart
PLC Tag Embedded in Project	PLC Tag Embedded in Project	PLC Tag Embedded in Project
Project Password	Project Password	Project Password
Recipes	Recipes	Recipes
Remote Access	Remote Access	Remote Access
Scheduler	Scheduler	Scheduler
Security Levels (Enhanced)	Security Levels (Enhanced)	Security Levels (Enhanced)
System Setting Editor	System Setting Editor	System Setting Editor
Table	Table	Table
Text Object	Text Object	Text Object
Timer Object	Timer Object	Timer Object
Trend Display (Graphs)	Trend Display (Graphs)	Trend Display (Graphs)
User-Defined Start-Up Screen	User-Defined Start-Up Screen	User-Defined Start-Up Screen
Utility Manager	Utility Manager	Utility Manager
VNC Server	VNC Server	VNC Server
XY Plot	XY Plot	XY Plot
Email (1)	Email	Email
Macro Windows Open / Cycle / Close (1)	Macro Windows Open / Cycle / Close	Macro Windows Open / Cycle / Close
MQTT (1)	MQTT	MQTT
String Table (1)	String Table	String Table
Time Synchronization (1)	Time Synchronization	Time Synchronization
USB Tethering (1)	USB Tethering	USB Tethering
VNC Viewer (1)	VNC Viewer	VNC Viewer
	IP Camera	IP Camera
	USB Camera	USB Camera
	Animation (Objects, Word Lamp, GIFs, Moving Shape)	Animation (Objects, Word Lamp, GIFs, Moving Shape)
	BACnet	BACnet
	CANbus	CANbus
	cMT Diagnoser	cMT Diagnoser
	cMT Viewer Support	cMT Viewer Support
	CODESYS (2)	CODESYS (2)
	Media Player	Media Player
	MQTT - Advanced JSON	MQTT - Advanced JSON
	MQTT - AWS IoT, Sparkplug B, Azure IoT Hub, Google Cloud IoT Core	MQTT - AWS IoT, Sparkplug B, Azure IoT Hub, Google Cloud IoT Core
	PDF Reader	PDF Reader
	Web Streaming	Web Streaming
	WebView	WebView
		Barcode Scanner (Android Camera)
		Database Server
		File Transfer Protocol (FTP)
		OPC UA Server
		PLC Web Browser
		SQL Database Server Integration

This table is for illustration only and subject to change. Always check the software to see if a feature is supported in your specific hardware.

(1) Not supported in the B Series

(2) Not supported on the cMT2166X

DRAFT

Technical Data

Allen-Bradley

CompactLogix Controllers Specifications

CompactLogix 5370 Controller Catalog Numbers
1769-L16ER-BB1B, 1769-L18ER-BB1B, 1769-L18ERM-BB1B, 1769-L24ER-QB1B, 1769-L24ER-QBFC1B, 1769-L27ERM-QBFC1B,1769-L30ER, 1769-L30ER-NSE, 1769-L30ERM, 1769-L33ER, 1769-L33ERM, 1769-L36ERM

1769 Packaged Controller Catalog Numbers
1769-L23-QBFC1B, 1769-L23E-QB1B, 1769-L23E-QBFC1B

1769 Modular Controller Catalog Numbers
1769-L31, 1769-L32C, 1769-L35CR, 1769-L32E, 1769-L35E

1768 Controller Catalog Numbers
1768-L43, 1768-L43S, 1768-L45, 1768-L45S

Memory Card Catalog Numbers
1784-CF128, 1784-SD1, 1784-SD2



DRAFT

Topic	Page
CompactLogix 5370 Controllers	4
1769 Packaged CompactLogix Controllers with Embedded I/O	33
1769 Modular CompactLogix Controllers	44
1768 CompactLogix Controllers	48
Controller Memory Use	55
Controller Compatibility	56
Controller Connections	59
Determine Total Connection Use	61
CompactLogix Controller Accessories	62

ITEM 510K

Table 1 - Environmental Specifications - 1768 and 1769 CompactLogix Controllers and CompactLogix 5370 Controllers

Attribute	1769-L16ER-BB1B, 1769-L18ER-BB1B, 1769-L18ERM-BB1B	1769-L24ER-QB1B, 1769-L24ER-QBFC1B, 1769-L27ERM-QBFC1B	1769-L30ER, 1769-L30ER-NSE, 1769-L30ERM, 1769-L33ER, 1769-L33ERM, 1769-L36ERM	1769-L23-QBFC1B, 1769-L23E-QB1B, 1769-L23E-QBFC1B	1769-L31, 1769-L32C, 1769-L35CR, 1769-L32E, 1769-L35E	1768-L43, 1768-L43S, 1768-L45, 1768-L45S
Temperature, operating IEC 60068-2-1 (Test Ad, Operating Cold), IEC 60068-2-2 (Test Bd, Operating Dry Heat), IEC 60068-2-14 (Test Na, Operating Thermal Shock)	-20…60 °C (-4…140 °F)	0…60 °C (32…140 °F)				
Temperature, storage IEC 60068-2-1 (Test Ab, Unpackaged Nonoperating Cold), IEC 60068-2-2 (Test Bb, Unpackaged Nonoperating Dry Heat), IEC 60068-2-14 (Test Na, Unpackaged Nonoperating Thermal Shock)	-40…85 °C (-40…185 °F)					
Temperature, surrounding air, max	60 °C (140 °F)					
Relative humidity IEC 60068-2-30 (Test Db, Unpackaged Damp Heat)	5...95% noncondensing					
Vibration IEC 60068-2-6 (Test Fc, Operating)	2 g @ 10…500 Hz(1)		5 g @ 10…500 Hz	2 g @ 10…500 Hz	5 g @ 10…500 Hz	
Shock, operating IEC 60068-2-27 (Test Ea, Unpackaged Shock)	30 g(1)		20 g - DIN rail 30 g - Panel	30 g	20 g - DIN rail 30 g - Panel	30 g
Shock, nonoperating IEC 60068-2-27 (Test Ea, Unpackaged Shock)	50 g(1), (2)		30 g - DIN rail 40 g - Panel	50 g	30 g - DIN rail 40 g - Panel	50 g
Emissions CISPR 11	Group 1, Class A					
ESD immunity IEC 61000-4-2	6 kV contact discharges 8 kV air discharges			4 kV contact discharges 8 kV air discharges	1769-L31 4 kV contact discharges 8 kV air discharges 1769-L32C, 1769-L35CR, 1769-L32E, 1769-L35E 6 kV contact discharges 8 kV air discharges	6 kV contact discharges 8 kV air discharges

(1) If you are mounting a CompactLogix™ 5370 L1 controller on a EN 50 022 - 35 x 15 mm (1.38 x 0.59 in.) DIN rail, you must first adhere a bumper on the back of the controller. Failure to install the bumper before mounting the controller results in the system failing to meet this specification. For more information, see the CompactLogix 5370 Controllers User Manual, publication 1769-UM021.

(2) If you are mounting a CompactLogix 5370 L1 controller on a EN 50 022 - 35 x 15 mm (1.38 x 0.59 in.) DIN rail, the Shock, nonoperating specification = 30 g.

DRAFT

ITEM 510K

Table 1 - Environmental Specifications - 1768 and 1769 CompactLogix Controllers and CompactLogix 5370 Controllers

Attribute	1769-L16ER-BB1B, 1769-L18ER-BB1B, 1769-L18ERM-BB1B	1769-L24ER-QB1B, 1769-L24ER-QBFC1B, 1769-L27ERM-QBFC1B	1769-L30ER, 1769-L30ER-NSE, 1769-L30ERM, 1769-L33ER, 1769-L33ERM, 1769-L36ERM	1769-L23-QBFC1B, 1769-L23E-QB1B, 1769-L23E-QBFC1B	1769-L31, 1769-L32C, 1769-L35CR, 1769-L32E, 1769-L35E	1768-L43, 1768-L43S, 1768-L45, 1768-L45S
Radiated RF immunity IEC 61000-4-3	10V/m with 1 kHz sine-wave 80% AM from 80…2000 MHz 10V/m with 200 Hz 50% Pulse 100% AM @ 900 MHz 10V/m with 200 Hz 50% Pulse 100% AM @ 1890 MHz 10V/m with 1 kHz sine-wave 80% AM from 2000…2700 MHz			10V/m with 200 Hz 50% Pulse 100% AM at 900 MHz 10V/m with 200 Hz 50% Pulse 100% AM at 1890 MHz 10V/m with 1 kHz sine-wave 80% AM from 80…2000 MHz 10V/m with 1 kHz sine-wave 80% AM from 2000…2700 MHz	1769-L31, 1769-L32C, 1769-L35CR 10V/m with 1 kHz sine-wave 80% AM from 80…2000 MHz 10V/m with 200 Hz 50% Pulse 100% AM @ 900 MHz 10V/m with 200 Hz 50% Pulse 100% AM @ 1890 MHz 1769-L32E, 1769-L35E 10V/m with 1 kHz sine-wave 80% AM from 80…2000 MHz 10V/m with 200 Hz 50% Pulse 100% AM @ 900 MHz 10V/m with 200 Hz 50% Pulse 100% AM @ 1890 MHz 3V/m with 1 kHz sine-wave 80% AM from 2000…2700 MHz	10V/m with 1 kHz sine-wave 80% AM from 80…2000 MHz 10V/m with 200 Hz 50% Pulse 100% AM @ 900 MHz 10V/m with 200 Hz 50% Pulse 100% AM @ 1890 MHz 3V/m with 1 kHz sine-wave 80% AM from 2000…2700 MHz
EFT/B immunity IEC 61000-4-4	±3 kV at 5 kHz on power ports ±3 kV at 5 kHz on signal ports ±3 kV at 5 kHz on communication ports		±3 kV at 5 kHz on communication ports	±2 kV at 5 kHz on power ports ±2 kV at 5 kHz on signal ports ±2 kV at 5 kHz on communication ports	1769-L31, 1769-L32C, 1769-L35CR ±2 kV at 5 kHz on communication ports 1769-L32E, 1769-L35E ±3 kV at 5 kHz on power ports ±3 kV at 5 kHz on communication ports	±4 kV at 5 kHz on communication ports
Surge transient immunity IEC 61000-4-5	± 1 kV line-line (DM) and ± 2 kV line-earth (CM) on power ports ± 1 kV line-line (DM) and ± 2 kV line-earth (CM) on signal ports ±2 kV line-earth (CM) on communication ports	±1 kV line-line (DM) and ±2 kV line-earth (CM) on power ports ±1 kV line-line (DM) and ±2 kV line-earth (CM) on signal ports ±2 kV line-earth (CM) on shielded ports ±2 kV line-earth (CM) on communication ports	±2 kV line-earth (CM) on communication ports	±1 kV line-line (DM) and ±2 kV line-earth (CM) on power ports ±1 kV line-line (DM) and ±2 kV line-earth (CM) on signal ports ±2 kV line-earth (CM) on shielded ports ±2 kV line-earth (CM) on communication ports	1769-L31 Channel 0: ±2 kV line-earth (CM) on shielded ports Channel 1: ±1 kV line-earth (CM) on shielded ports 1769-L32C, 1769-L35CR, 1769-L32E, 1769-L35E ±2 kV line-earth (CM) on communication ports	±2 kV line-earth (CM) on communication ports
Conducted RF immunity IEC 61000-4-6	10Vrms with 1 kHz sine-wave 80% AM from 150 kHz…80 MHz					

(1) If you are mounting a CompactLogix 5370 L1 controller on a EN 50 022 - 35 x 15 mm (1.38 x 0.59 in.) DIN rail, you must first adhere a bumper on the back of the controller. Failure to install the bumper before mounting the controller results in the system failing to meet this specification. For more information, see the CompactLogix 5370 Controllers User Manual, publication 1769-UM021.

(2) If you are mounting a CompactLogix 5370 L1 controller on a EN 50 022 - 35 x 15 mm (1.38 x 0.59 in.) DIN rail, the Shock, nonoperating specification = 30 g.

DRAFT

ITEM 510K

CompactLogix 5370 Controllers

CompactLogix 5370 L1 Control System

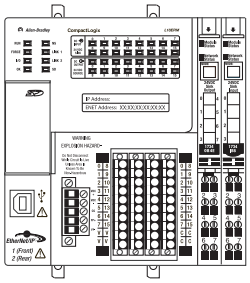

CompactLogix 5370 L2 Control System

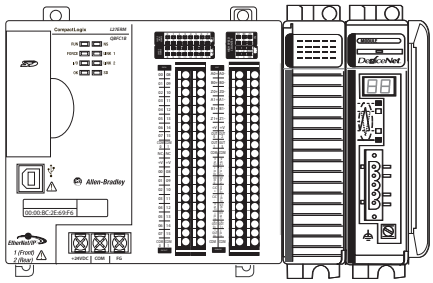

CompactLogix 5370 L3 Control System

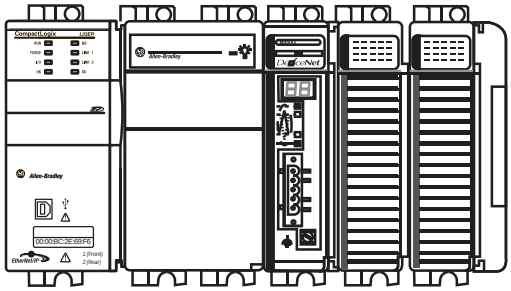

CompactLogix 5370 controllers provide scalable controller solutions capable of addressing a wide variety of applications. All CompactLogix 5370 controllers provide the following functionality:

- Two EtherNet/IP ports
- One USB port
- Support for local expansion modules
- Control of local and distributed I/O modules
- Use of 1784-SD1 or 1784-SD2 Secure Digital (SD) card for nonvolatile memory
- Internal energy storage solution eliminating the need for a battery

Some CompactLogix 5370 controllers provide the following functionality:

- Built-in power supply
- Some combination of embedded digital, analog and high-speed counter modules
- Support for Integrated Motion over an EtherNet/IP network
- Access to DeviceNet networks

Table 2 - Features - CompactLogix 5370 Controllers

Feature	1769-L16ER-BB1B, 1769-L18ER-BB1B, 1769-L18ERM-BB1B	1769-L24ER-QB1B, 1769-L24ER-QBFC1B, 1769-L27ERM-QBFC1B	1769-L30ER, 1769-L30ER-NSE, 1769-L30ERM, 1769-L33ER, 1769-L33ERM, 1769-L36ERM
Controller tasks: • Continuous • Periodic	• 32 tasks • 100 programs/task		
Built-in communication ports	• Two EtherNet/IP ports - CompactLogix 5370 controllers have two EtherNet/IP ports to connect to an EtherNet/IP network. The ports carry the same network traffic as part of the controller's embedded switch. However, the controller uses only one IP address. • One USB port (for temporary connection only)		
Communication options	EtherNet/IP	• EtherNet/IP • DeviceNet via 1769-SDN scanner module	
EtherNet/IP node, max	• 1769-L16ER-BB1B: Up to four nodes • 1769-L18ER-BB1B, 1769-L18ERM-BB1B: Up to 8 nodes	• 1769-L24ER-QB1B, 1769-L24ER-QBFC1B: Up to 8 nodes • 1769-L27ERM-QBFC1B: Up to 16 nodes	• 1769-L30ER, 1769-L30ER-NSE, 1769-L30ERM: Up to 16 nodes • 1769-L33ER, 1769-L33ERM: Up to 32 nodes • 1769-L36ERM: Up to 48 nodes
Controller connections	256		
Embedded I/O modules	• 16 DC digital inputs • 16 DC digital outputs	All controllers: • 16 DC digital inputs • 16 DC digital outputs 1769-L24ER-QBFC1B and 1769-L27ERM-QBFC1B only: • 4 high-speed counters • 4 high-speed counter outputs • 4 universal analog inputs • 2 analog output points	None

DRAFT

ITEM 510K

Table 2 - Features - CompactLogix 5370 Controllers

Feature	1769-L16ER-BB1B, 1769-L18ER-BB1B, 1769-L18ERM-BB1B	1769-L24ER-QB1B, 1769-L24ER-QBFC1B, 1769-L27ERM-QBFC1B	1769-L30ER, 1769-L30ER-NSE, 1769-L30ERM, 1769-L33ER, 1769-L33ERM, 1769-L36ERM
Sockets, max	32		
Integrated Motion over an EtherNet/IP network	1769-L18ERM-BB1B - 1 or 2 axes	1769-L27ERM-QBFC1B - As many as 4 axes	• 1769-L30ERM - As many as 4 axes • 1769-L33ERM - As many as 8 axes • 1769-L36ERM - As many as 16 axes
Programming languages	• Relay ladder • Structured text • Function block • SFC		

Table 3 - Technical Specifications - CompactLogix 5370 Controllers

Attribute	1769-L16ER-BB1B, 1769-L18ER-BB1B, 1769-L18ERM-BB1B	1769-L24ER-QB1B, 1769-L24ER-QBFC1B, 1769-L27ERM-QBFC1B	1769-L30ER, 1769-L30ER-NSE, 1769-L30ERM, 1769-L33ER, 1769-L33ERM, 1769-L36ERM
User memory	• 1769-L16ER: 384 KB • 1769-L18ER, 1769-L18ERM: 512 KB	• 1769-L24ER-QB1B, 1769-L24ER-QBFC1B: 750 KB • 1769-L27ERM-QBFC1B: 1 MB	• 1769-L30ER, 1769-L30ER-NSE, 1769-L30ERM: 1MB • 1769-L33ER, 1769-L33ERM: 2 MB • 1769-L36ERM: 3 MB
Optional nonvolatile memory	1784-SD1 card with 1 Gb of available memory (shipped with controller) 1784-SD2 card with 2 Gb of available memory (available for separate ordering)		
Number of local expansion modules, max[1]	• 1769-L16ER-BB1B: Six 1734 POINT I/O™ modules • 1769-L18ER-BB1B, 1769-L18ERM-BB1B: Eight 1734 POINT I/O modules	Four 1769 Compact I/O modules	• 1769-L30ER, 1769-L30ER-NSE, 1769-L30ERM: Eight 1769 Compact I/O™ modules • 1769-L33ER, 1769-L33ERM: Sixteen 1769 Compact I/O modules • 1769-L36ERM: Thirty 1769 Compact I/O modules
Number of I/O module banks, max	NA	1	3
Current draw @ 5V DC, controller power	1 A	• 1769-L24ER-QB1B: 1.54 A Value rated at the following ambient temperatures: 40 °C (104 °F), 55 °C (131 °F), 60 °C (140 °F). • 1769-L24ER-QBFC1B and 1769-L27ERM-QBFC1B: 1 A Value rated at the following ambient temperatures: 40 °C (104 °F), 55 °C (131 °F), 60 °C (140 °F).	500 mA
Current draw @ 24V DC, controller power	NA	• 1769-L24ER-QB1B: 0.95A Value rated at the following ambient temperatures: 40 °C (104 °F), 55 °C (131 °F), 60 °C (140 °F). • 1769-L24ER-QBFC1B and 1769-L27ERM-QBFC1B: 0.8 A Value rated at the following ambient temperatures: 40 °C (104 °F), 55 °C (131 °F), 60 °C (140 °F).	225 mA
Current draw @ 24V DC, field power, max	3 A - Combined total for all devices drawing current from field power connections Input: 5mA Output: 500mA	NA	NA
Power dissipation, max	12 W	• 1769-L24ER-QB1B: 12 W • 1769-L24ER-QBFC1B, L27ERM-QBFC1B: 21 W	4.5 W
Isolation voltage	50V (continuous), Basic Insulation Type Tested at 500V AC for 60 s, System to Field	30V (continuous), Basic Insulation Type, USB to system, Ethernet to system and Ethernet to Ethernet Type tested at 500V AC for 60 s	
Short circuit protection, field power	Internal fuse, Non-replaceable	NA	NA
Recommended external short circuit protection, field power	User-provided 4…6 A @ 52.5…68.25 $A2^t$ fuse	NA	NA

DRAFT

ITEM 510K

Table 3 - Technical Specifications - CompactLogix 5370 Controllers

Attribute	1769-L16ER-BB1B, 1769-L18ER-BB1B, 1769-L18ERM-BB1B	1769-L24ER-QB1B, 1769-L24ER-QBFC1B, 1769-L27ERM-QBFC1B	1769-L30ER, 1769-L30ER-NSE, 1769-L30ERM, 1769-L33ER, 1769-L33ERM, 1769-L36ERM
Weight, approx	0.66 kg (1.5 lb)	• 1769-L24ER-QB1B = 0.63 kg (1.39 lb) • 1769-L24ER-QBFC1B and 1769-L27ERM-QBFC1B = 0.9 kg (1.9 lb)	0.31 kg (0.68 lb)
Module width	100.00 mm (3.94 in.)	1769-L24ER-QB1B = 115.00 mm (4.53 in.) 1769-L24ER-QBFC1B and 1769-L27ERM-QBFC1B = 140 mm (5.51 in.)	55.00 mm (2.17 in.)
Module location	DIN rail mount	DIN rail or panel mount	
Panel-mounting screw torque	NA	1.1…1.8 N•m (10…16 lb•in) - use M4 or #8 screws	
Embedded power supply	24V DC input, non-isolated	24V DC Input, isolated	1769-PA2, 1769-PB2, 1769-PA4, 1769-PB4
Power supply distance rating	NA		• Controller and 1769-SDN: 4 • 1769 Compact I/O modules: 4…8, depending on module
Wire category(2)	1 - signal ports 1 - power ports 2 - communication ports		2 - communication ports
Wire type, Ethernet	RJ-45 connector according to IEC 60603-7, 2 or 4 pair Category 5e minimum cable according to TIA 568-B.1 or Category 5 cable according to ISO/IEC 24702		
Wire type, power terminals and embedded I/O connections	Copper		NA
Wire size, power terminals(3)	0.051…3.31 mm^2 (30…12 AWG) solid or stranded copper wire rated at 75 °C (167 °F), or greater, 1.2 mm (3/64 in.) insulation, max Each terminal accepts 1 or 2 wires	0.25…2.50 mm^2 (22...14 AWG) solid copper wire rated at 75 °C (167 °F), or greater 1.2 mm (3/64 in.) insulation, max Each terminal accepts only 1 wire	NA
Wire stripping length, power terminals(3)	10 mm (0.39 in)	8 mm (0.31 in)	NA
Screw torque, power terminals (3)	0.5…0.6 N•m (4.4…5.3 lb•in)	1.0…1.2 N•m (8.9…10.6 lb•in)	NA
Wire size, embedded I/O connections	0.205…1.31 mm^2 (24…16 AWG) solid or stranded copper wire rated at 75 °C (167 °F), or greater 1.2 mm (3/64 in.) insulation, max or 90 °C (194 °F) Each terminal accepts only 1 wire		NA
Wire stripping length, embedded I/O connections	10 mm (0.39 in)		NA
North American temperature code	T4A	T3C	T5
IEC temperature code	T4		T5
Enclosure type rating	None (open-style)		

(1) You can use up to the maximum number of local expansion modules with the CompactLogix 5370 L1 controllers listed as long as the total current drawn by the embedded I/O and local expansion modules does not exceed both the available POINTBus backplane current of 1 A and the field power current of 3 A. For more information on POINTBus backplane current and field power current considerations when installing local expansion modules, see page 9.

(2) Use this Conductor Category information for planning conductor routing. Refer to Industrial Automation Wiring and Grounding Guidelines, publication 1770-4.1 and the appropriate system-level installation manual.

(3) With respect to the CompactLogix 5370 L1 controllers, this specification applies to connecting wires to the power connector that is inserted in the controller. With respect to the CompactLogix 5370 L2 controllers, this specification applies to connecting wires to power terminals built into the controller.

DRAFT

ITEM 510K

Real-time Clock Accuracy

The following table lists the real-time clock accuracy specifications for the CompactLogix 5370 controllers.

Ambient Temperature	Accuracy
0° C (32° F)	-143…42 s/mo
25° C (77° F)	-78…91 s/mo
40° C (104° F)	-101…73 s/mo
60° C (140° F)	-204…-4.50 s/mo

Real-time Clock Hold-up Times

The following table lists the typical real-time clock hold-up specifications for the CompactLogix 5370 controllers.

IMPORTANT The values in the following table are typical and might vary with some CompactLogix 5370 control systems.

Ambient Temperature	Holdup Time, Typical
0 °C (32 °F)	40 days
25 °C (77 °F)	35 days
40 °C (104 °F)	28 days
60 °C (140 °F)	16 days

The I/O module support for CompactLogix 5370 controller systems varies by controller.

DRAFT

ITEM 510K

Table 7 - Embedded Power Supply

Attribute	1769-L16ER-BB1B, 1769-L18ER-BB1B, 1769-L18ERM-BB1B
Input voltage range	10…28.8V DC
Input voltage, nom	24V DC
Line requirement (VDC), min	50VA, Class 2/SELV
Available 5V DC POINTBus backplane current	1 A @ 5V DC
Inrush, max	15 A
Line loss ride through	10 ms…10 s
Output bus current capacity, max	0.1 …3 A @ 5V DC
Load current, min	300 mA
Short circuit protection	Internal fuse Not user replaceable
Overvoltage protection	Yes

I/O Module Support - CompactLogix 5370 L2 Controllers

The CompactLogix 5370 L2 controllers offer embedded I/O modules and the option of using 1769 Compact I/O modules as local expansion modules. The following table describes theembedded I/O modules and local expansion modules supported by CompactLogix 5370 L2 controllers.

Cat. No.	Embedded I/O Module Support						Local Expansion Modules Support
	Sinking/Sourcing 24V DC Digital Input Points	Sourcing 24V DC Digital Output Points	High-speed Counters	High-speed Counter Output Points	Universal Analog Input Points	Analog Output Points	1769 Compact I/O Modules
1769-L24ER-QB1B	16	16	-	-	-	-	As many as 4 modules
1769-L24ER-QBFC1B			4	4	4	2	
1769-L27ERM-QBFC1B							

IMPORTANT Remember the following when using the embedded I/O modules on CompactLogix 5370 L2 controllers:

- 1769-L24ER-QB1B controller - The digital input points and digital output points are located on a single embedded I/O module. Therefore, the 1769-L24ER-QB1B controller is considered to have one embedded I/O module.

- 1769-L24ER-QBFC1B and 1769-L27ERM-QBFC1B controllers - The digital input points and digital output points are located on a single embedded I/O module. The high-speed counter input output points, universal analog input points, and analog output points are located on another single embedded I/O module. Therefore, the 1769-L24ER-QBFC1B and 1769-L27ERM-QBFC1B controllers are considered to have two embedded I/O modules.

DRAFT

ITEM 510K

You configure an RPI rate for the embedded I/O modules to establish specific time intervals at which data is transmitted between the controller and the embedded I/O modules. The embedded I/O modules' available RPI range is 0.5…750.0 ms and can be changed by 0.5 ms increments. The default setting is 20 ms.

To use 1769 Compact I/O modules as local expansion modules, keep in mind the following:

- Local expansion modules must be installed in the same system as the CompactLogix 5370 L2 controller.
- Local expansion modules are installed to the right of the embedded I/O modules.
- You must install a 1769-ECR Compact I/O end cap on the right side of control system. The end cap can be installed on the right side of the embedded I/O modules or, if local expansion modules are used, on the right side of 1769 Compact I/O module.

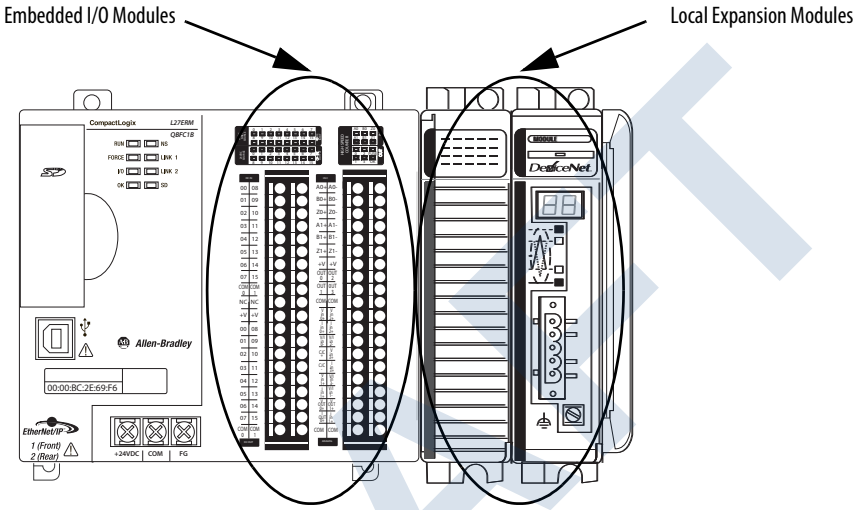

CompactLogix 5370 L2 Controllers' Local I/O Performance

The requested packet interval (RPI) defines the frequency at which the controller sends data to and receives data from I/O modules. In the programming software, you set an RPI rate for each I/O module in your system, including embedded I/O modules, local expansion modules, or distributed I/O modules over an EtherNet/IP network.

The CompactLogix 5370 L2 controllers always attempt to scan an I/O module at the configured RPI rate. The controller scans distributed I/O modules at the configured RPI rates.

With embedded I/O modules and local expansion modules, however, some specific system configuration parameters determine the actual rate at which the controller scans the modules. That is, the controller may be configured to scan an I/O module at one rate, but actually scan the module at a different rate.

For individual I/O modules, a Module RPI Overlap minor fault occurs if there is at least one I/O module that cannot be serviced within its RPI time.

DRAFT

ITEM 510K

The specific configuration parameters for a system determine the impact on actual RPI rates. These configuration factors can impact the effective scan frequency for any individual embedded or local expansion module:

- Rates at which embedded I/O modules' RPI values are set
- Number of embedded I/O modules used in the system
- Types of embedded I/O modules used in the system
- Rates at which 1769 Compact I/O modules' RPI values are set
- Number of 1769 Compact I/O modules in the system
- Types of 1769 Compact I/O modules in the system
- Application user task priorities

Table 8 describes RPI rate guidelines.

Table 8 - RPI Rate Guidelines

Type of Module	Guidelines
Digital and analog (any mix)	The following guidelines apply: • 1…2 modules can be scanned in 0.5 ms. • 3…4 modules can be scanned in 1 ms. • 5…6 modules can be scanned in 2 ms. • Some input modules have a fixed 8 ms filter, so selecting a faster RPI has no effect.
Specialty	The following conditions apply: • For every full-sized 1769-SDN module in the system, increase every other module's RPI by 2 ms. • For every 1769-HSC module in the system, increase every other module's RPI by 1 ms. • For every full-sized 1769-ASCII module system, increase every other module's RPI by 1 ms. • For every 1769-SM2 module in the system, increase every other module's RPI by 2 ms. For example, if the system includes four I/O modules configured with an RPI = 1 ms and you add a 1769-SDN module to the system, you should increase the RPI value for all four I/O modules by 2 ms. Therefore, when the 1769-SDN module is added to the system, the four I/O modules should use an RPI = 3 ms. If, in the same system, you add a second 1769-SDN module, the four I/O modules' RPI value should be increased to 5 ms.

IMPORTANT When considering the number of I/O modules, remember that they can be the embedded I/O modules on the controller or 1769 Compact I/O modules used as local expansion modules.

Therefore, the consideration for using modules can be any of the following system configurations:

- Embedded I/O modules only
- 1769 Compact I/O modules only
- Some combination of embedded I/O modules and 1769 Compact I/O modules

You can set individual 1769 Compact I/O modules' RPI rates higher than those listed in Table 8. The RPI shows how quickly modules can be scanned, not how quickly an application can use the data. The RPI is asynchronous to the program scan. Other factors, such as program execution duration, affect I/O throughput.

DRAFT

ITEM 510K

Table 9 - Embedded DC Input Specifications

Attribute	1769-L24ER-QB1B, 1769-L24ER-QBFC1B, 1769-L27ERM-QBFC1B
Inputs	16
Voltage category	24V DC sink/source
Operating voltage range	1769-L24ER-QB1B: 10…28.8V DC @ 40 °C (104 °F) 10…26.4V DC @ 60 °C (140 °F) 24V DC nom 1769-L24ER-QBFC1B, 1769-L27ERM-QBFC1B : 10…28.8V DC @ 40 °C (104 °F) 10…27.0V DC @ 55 °C (131 °F) 10…26.4V DC @ 60 °C (140 °F) 24V DC nom
Digital filter, off to on	0 s, 100 µs, 500 µs, 1 ms, 2 ms, 4 ms, 8 ms
Input delay, off to on	100 µs, min 8 ms, max
Digital filter, on to off	0 s, 100 µs, 500 µs, 1 ms, 2 ms, 4 ms, 8 ms
Input delay, on to off	100 µs, min 8 ms, max
Off-state voltage, max	5V DC
Off-state current, max	1.5 mA
On-state current, min	2 mA @ 24V DC per channel
On-state current, max	5 mA @ 24V DC per channel
Input impedance, max	5.2 kΩ @ 24V dc 6.1 kΩ @ 30V dc
Cyclic update time	0.5 ms…750 ms
Isolation voltage	75V (continuous), Reinforced Insulation Type Type tested at 1200V AC for 1 s and at 1700V DC for 1 s; group to system, group to group
IEC input compatibility	Type 3
Isolated groups	Group 1: inputs 0…7 Group 2: inputs 8…15 Isolated groups operate in either sink or source configurations

Table 10 - Embedded DC Output Specifications

Attribute	1769-L24ER-QB1B, 1769-L24ER-QBFC1B, 1769-L27ERM-QBFC1B
Outputs	16
Voltage category	24V DC source
Operating voltage range	20.4…26.4V DC 24V DC nom
Output delay, off to on	0.05 ms
Output delay, on to off	0.5 ms
Off-state leakage current, max	0.1 mA @ 26.4V DC
On-state current, max	0.5 mA @ 24V DC per channel
On-state voltage drop, max	1.0V DC @ 1.0 A

DRAFT

ITEM 510K

Table 10 - Embedded DC Output Specifications

Attribute	1769-L24ER-QB1B, 1769-L24ER-QBFC1B, 1769-L27ERM-QBFC1B
Current per point, max	1769-L24ER-QB1B: 0.83 A @ 40 °C (104 °F) 0.5 A @ 60 °C (140 °F) 1769-L24ER-QBFC1B, 1769-L27ERM-QBFC1B : 0.83 A @ 40 °C (104 °F) 0.58 A @ 55 °C (131 °F) 0.5 A @ 60 °C (140 °F)
Current per module, max	1769-L24ER-QB1B: 6.64 A @ 40 °C (104 °F) 4.0 A @ 60 °C (140 °F) 1769-L24ER-QBFC1B, 1769-L27ERM-QBFC1B : 6.64 A @ 40 °C (104 °F) 4.64 A @ 55 °C (131 °F) 4.0 A @ 60 °C (140 °F)
Surge current per point, max	2.0 A for 10 ms per point, repeatable every 2 s
Isolation voltage	75V (continuous), Reinforced Insulation Type Type tested at 1200V AC for 1 s and at 1700V DC for 1 s; group to system, group to group
Isolated groups	Group 1: inputs 0…7 Group 2: inputs 8…15

Embedded DC Output Temperature Derating

The area within the curves represents the safe operating range for the embedded DC outputs under various conditions of user supplied voltages and ambient temperatures.

Figure 1 - Embedded DC Outputs Maximum Amperes per Point versus Temperature

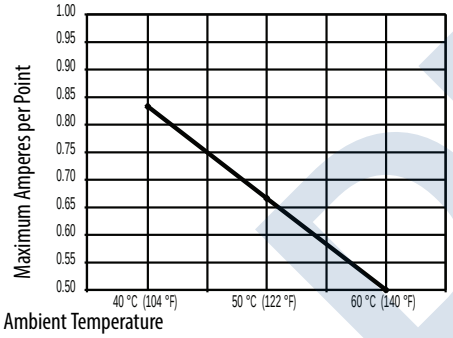

Figure 2 - Embedded DC Outputs Maximum Amperes per Module versus Temperature

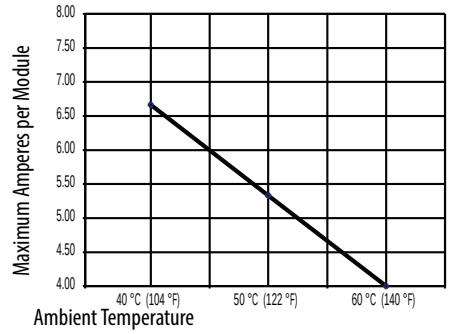

DRAFT

Table 13 - Embedded Analog Output Module Data(1)

Analog Output Module Range	Input Value	Example Data		Output Range State	Raw/Proportional Data		Engineering Unit		Scaled-for-PID		Percent Full Range	
		Controller Ordered	Embedded Analog Module Output		Decimal Range		Decimal Range		Decimal Range		Decimal Range	
					Controller Ordered	Embedded Analog Module Output	Controller Ordered	Embedded Analog Module Output	Controller Ordered	Embedded Analog Module Output	Controller Ordered	Embedded Analog Module Output
+/- 10V	Over 10.5V	+11.0V	+10.5V	Over	N/A	N/A	11000		17202		11000	
	+10.5V	+10.5V	+10.5V	Over	32767	32767	10500	10500	16793	16793	10500	10500
	±10V	+10.0V	+10.0V	Normal	31207	31207	10000	10000	16383	16383	10000	10000
		0.0V	0.0V	Normal	0	0	0	0	8192	8192	0	0
		-10.0V	-10.0V	Normal	-31207	-31207	-10000	-10000	0	0	-10000	-10000
	-10.5V	-10.5V	-10.5V	Under	-32767	-32767	-10500	-10500	-410	-410	-10500	-10500
	Under 10.5V	-11.0V	-10.5V	Under	N/A	N/A	-11000	-10500	-819	-410	-11000	-10500
0…5V	Over 5.25V	5.5V	+5.25V	Over	N/A	N/A	5500	5250	18021	17202	11000	10500
	5.25V	5.25V	+5.25V	Over	32767	32767	5250	5250	17202	17202	10500	10500
	0…5.0V	5.0V	+5.0V	Normal	31207	31207	5000	5000	16383	16383	10000	10000
		0.0V	0.0V	Normal	0	0	0	0	0	0	0	0
	-0.5V	-0.5V	-0.5V	Under	-3121	-3121	-500	-500	-1638	-1638	-1000	-1000
	Under -0.5V	-1.0V	-0.5V	Under	-6241	-3121	-500	-500	-3277	-1638	-2000	-1000
0…10V	Over 10.5V	11.0V	+10.5V	Over	N/A	N/A	11000	10500	18021	17202	11000	10500
	+10.5V	+10.5V	+10.5V	Over	32767	32767	10500	10500	17202	17202	10500	10500
	0…10.0V	+10.0V	+10.0V	Normal	31207	31207	10000	10000	16383	16383	10000	10000
		0.0V	0.0V	Normal	0	0	0	0	0	0	0	0
	-0.5V	-0.5V	-0.5V	Under	-1560	-1560	-500	-500	-819	-819	-500	-500
	Under -5.0V	-1.0V	-0.5V	Under	-3121	-1560	-1000	-500	-1638	-819	-1000	-500
4…20 mA	Over 21.0 mA	+22.0 mA	21mA	Over	N/A	N/A	22000	21000	18431	17407	11250	10625
	21.0 mA	+21.0 mA	21mA	Over	32767	32767	21000	21000	17407	17407	10625	10625
	4…20.0 mA	+20.0 mA	20mA	Normal	31207	31207	20000	20000	16383	16383	10000	10000
		+4.0 mA	+4.0 mA	Normal	6241	6241	4000	4000	0	0	0	0
	3.2 mA	+3.2 mA	+3.2 mA	Under	4993	4993	3200	3200	-819	-819	-500	-500
	Under 3.2	0.0 mA	+3.2 mA	Under	0	4993	0	3200	-4096	-819	-2500	-500
1…5V	Over 5.25V	+5.5V	+5.25V	Over	N/A	N/A	5500	5250	18431	17407	11250	10625
	+5.25V	+5.25V	+5.25V	Over	32767	32767	5250	5250	17407	17407	10625	10625
	1…5.0V	+5.0V	+5.0V	Normal	31207	31207	5000	5000	16383	16383	10000	10000
		+1.0V	+1.0V	Normal	6241	6241	1000	1000	0	0	0	0
	0.5V	+0.5V	+0.5V	Under	3121	3121	500	500	-2048	-2048	-1250	-1250
	Under 0.5V	0.0V	0.0V	Under	0	3121	0	500	-4096	-2048	-2500	-1250
0…20 mA	Over 21.0 mA	+22.0 mA	21mA	Over	N/A	N/A	22000	21000	18201	17202	11000	10500
	21.0 mA	21.0 mA	21mA	Over	32767	32767	21000	21000	17202	17202	10500	10500
	0…20.0 mA	20.0 mA	20mA	Normal	31207	31207	20000	20000	16383	16383	10000	10000
		0.0 mA	0.0 mA	Normal	0	0	0	0	0	0	0	0
	Under 0.0 mA	-1.0 mA	0.0 mA	Under	-1560	0	0	-1000	-819	0	-500	0

(1) If Clamping is enabled, the output value will be the clamped value defined in the configuration.

DRAFT

ITEM 510K

Embedded HSC Temperature Derating

Figure 3 - Maximum Input Voltage - 24V DC Operation

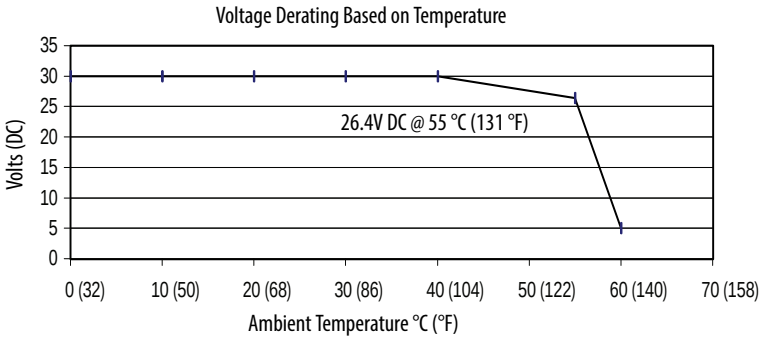

Temperature	Derated Voltage(1)
40 °C (104 °F)	30V DC
55 °C (131 °F)	26.4V DC
60 °C (140 °F)	5V DC

(1) Input voltage derating between 55 °C and 60 °C (131 °F and 140 °F) is achieved by using a dropping resistor.
For 24V DC input voltage, use a 2.4 kΩ, 1/2 W resistor.
For input voltages other than 24V DC, use a 1/2 W resistor with value: 125 x (V_{in} - 5V).

Figure 4 - Maximum Output Voltage - 24V DC Operation

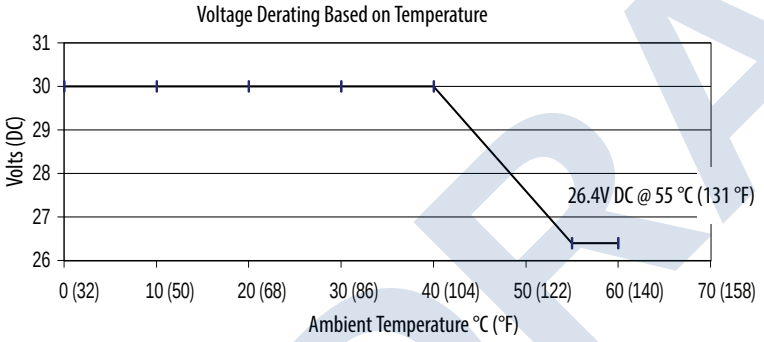

Temperature	Derated Voltage
40 °C (104 °F)	30V DC
55…60 °C (131...140 °F)	26.4V DC

DRAFT

ITEM 510K

Figure 5 - Maximum Output Current per Point - 5V DC Operation

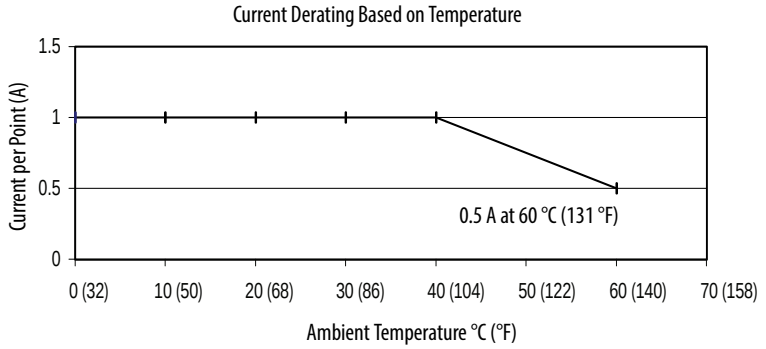

Temperature	Derated Current
0…40 °C (32…104 °F)	1 A
60 °C (140 °F)	0.5 A

Figure 6 - Maximum Output Current per Module - 5V DC Operation

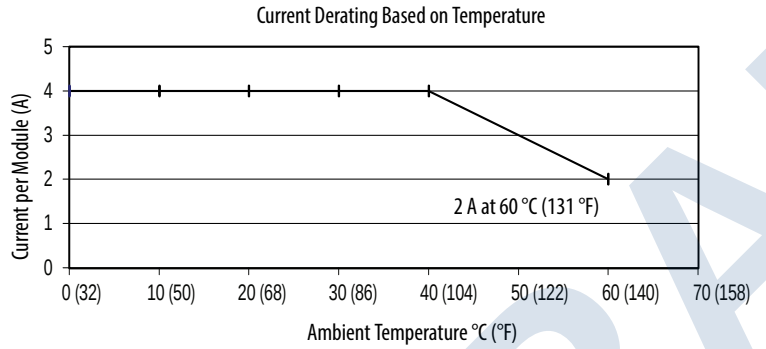

Temperature	Derated Current
0…40 °C (32…104 °F)	4 A
60 °C (140 °F)	2 A

Figure 7 - Maximum Output Current per Point - 24V DC Operation

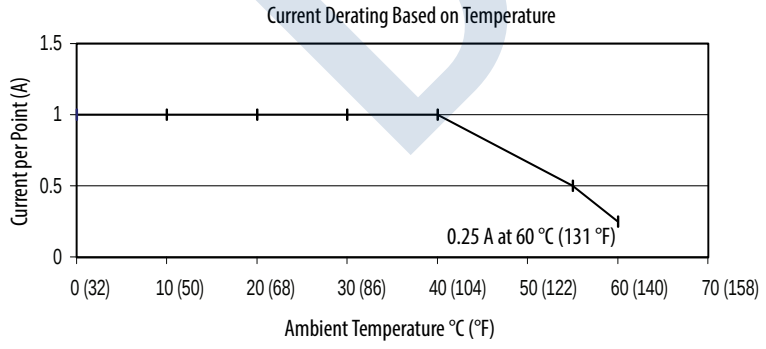

Temperature	Derated Current
0...40 °C (32...104 °F)	1 A
55 °C (131 °F)	0.5 A
60 °C (140 °F)	0.25 A

DRAFT

ITEM 510K

Figure 8 - Maximum Output Current per Module - 24V DC Operation

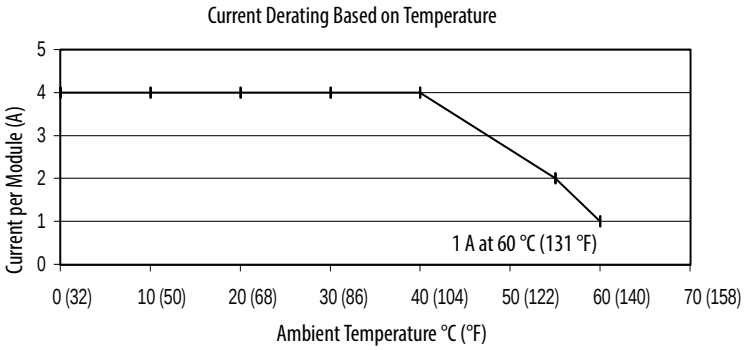

Temperature	Derated Current
40 °C (104 °F)	4 A
55 °C (131 °F)	2 A
60 °C (140 °F)	1 A

Table 16 - Embedded Power Supply

Attribute	1769-L24ER-QB1B, 1769-L24ER-QBFC1B, 1769-L27ERM-QBFC1B
Input voltage range	19.2…31.2V DC
Input voltage, nom	24V DC
Line requirement, max(1)	2.1 A @ 24V DC, Class 2/SELV
Available 5V DC bus current	• 1769-L24ER-QB1B: 1.54 A • 1769-L24ER-QBFC1B and 1769-L27ERM-QBFC1B: 1.0 A
Available 24V DC bus current	• 1769-L24ER-QB1B: 0.95 A • 1769-L24ER-QBFC1B and 1769-L27ERM-QBFC1B: 0.8 A
Inrush, max	< 30 A @ 19.2…31.2V DC
Line loss ride through	10 ms…10 s
Short circuit protection	Internal fuse Not user replaceable
Overvoltage protection	Yes
Isolation voltage	30V AC/30V DC (continuous), reinforced insulation type Type tested at 500V AC or 710V DC for 60 s; outputs to system backplane

(1) Value rated at the following ambient temperatures: 40 °C (104 °F), 55 °C (131 °F), 60 °C (140 °F).

DRAFT

ITEM 510K

The RPI is asynchronous to the program scan. Other factors, such as program execution duration, affect I/O throughput.

Table 18 - Certifications - CompactLogix 5370 Controllers

Certification[1]	1769-L16ER-BB1B, 1769-L18ER-BB1B, 1769-L18ERM-BB1B	1769-L24ER-QB1B, 1769-L24ER-QBFC1B, 1769-L27ERM-QBFC1B	1769-L30ER, 1769-L30ER-NSE, 1769-L30ERM, 1769-L33ER, 1769-L33ERM, 1769-L36ERM
c-UL-us	UL Listed Industrial Control Equipment, certified for US and Canada. See UL File E65584. UL Listed for Class I, Division 2 Group A,B,C,D Hazardous Locations, certified for U.S. and Canada. See UL File E194810.		
CE	European Union 2004/108/EC EMC Directive, compliant with: • EN 61326-1; Meas./Control/Lab., Industrial Requirements • EN 61000-6-2; Industrial Immunity • EN 61000-6-4; Industrial Emissions • EN 61131-2; Programmable Controllers (Clause 8, Zone A & B)		
C-Tick	Australian Radiocommunications Act, compliant with: • AS/NZS CISPR 11; Industrial Emissions		
Ex	European Union 94/9/EC ATEX Directive, compliant with: • EN 60079-15; Potentially Explosive Atmospheres, Protection "n" • EN 60079-0; General Requirements • II 3 G Ex nA IIC T4 X	European Union 94/9/EC ATEX Directive, compliant with: • EN 60079-15; Potentially Explosive Atmospheres, Protection "n" • EN 60079-0; General Requirements • II 3 G Ex nA IIC T4 Gc	European Union 94/9/EC ATEX Directive, compliant with: • EN 60079-15; Potentially Explosive Atmospheres, Protection "n" • EN 60079-0; General Requirements • II 3 G Ex nA IIC T5 X
EtherNet/IP	ODVA conformance tested to EtherNet/IP specifications.		
KC	Korean Registration of Broadcasting and Communications Equipment, compliant with: • Article 58-2 of Radio Waves Act, Clause 3		

(1) When marked. See the Product Certification link at http://www.ab.com for Declarations of Conformity, Certificates, and other certification details.

CompactLogix 5370 L1 Controllers Minimum Spacing Requirements

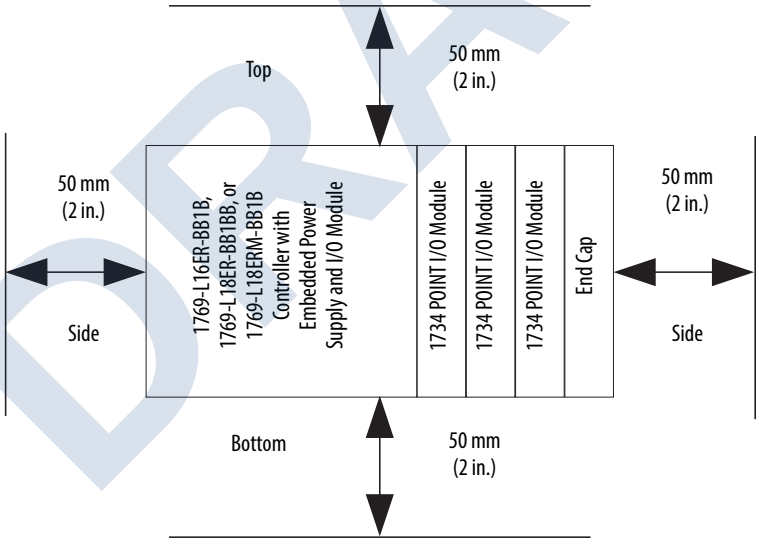

DRAFT

ITEM 510K

CompactLogix 5370 L2 Controllers Minimum Spacing Requirements

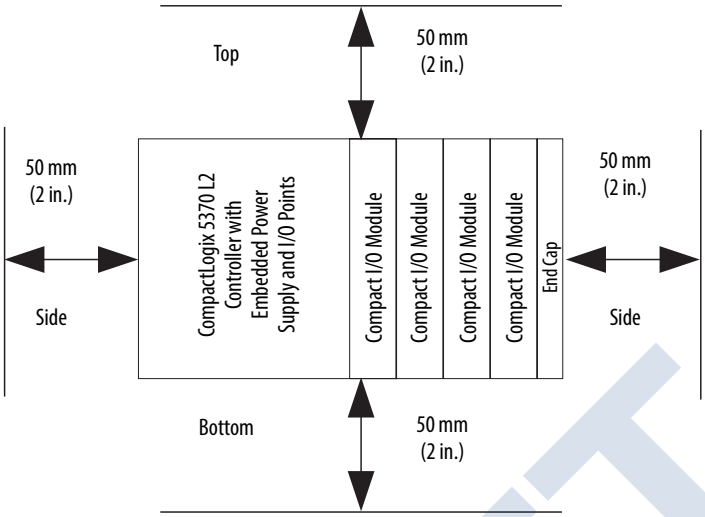

CompactLogix 5370 L3 Controllers Minimum Spacing Requirements

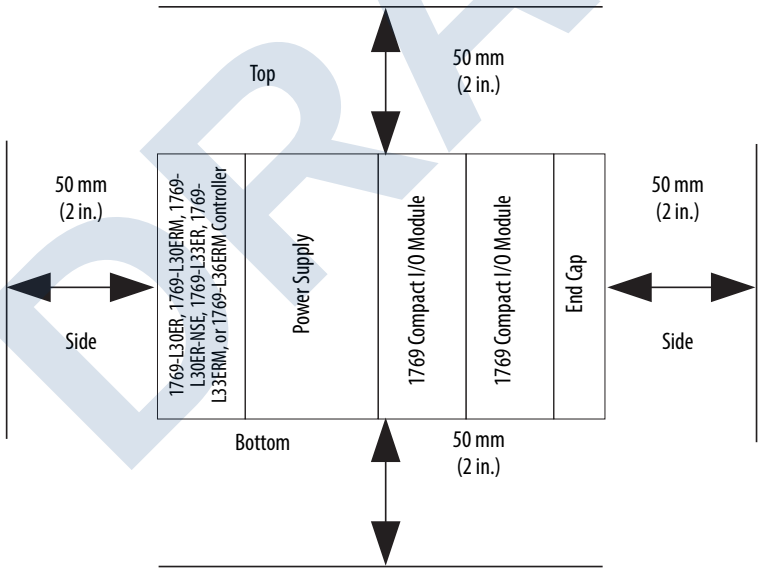

DRAFT

ITEM 510K

CompactLogix 5370 L2 Controllers Dimensions

1769-L24ER-QB1B

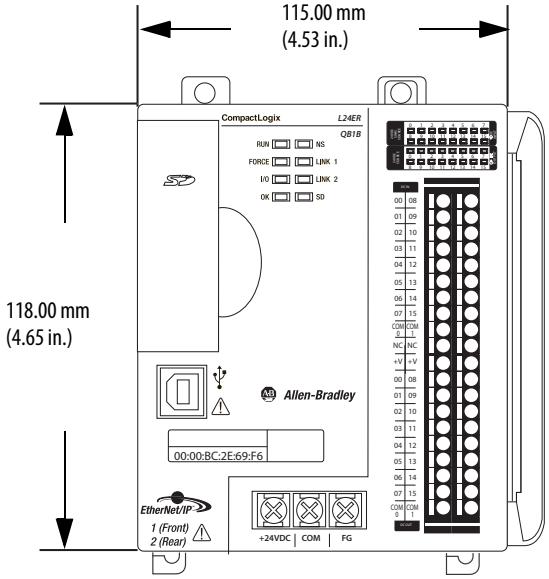

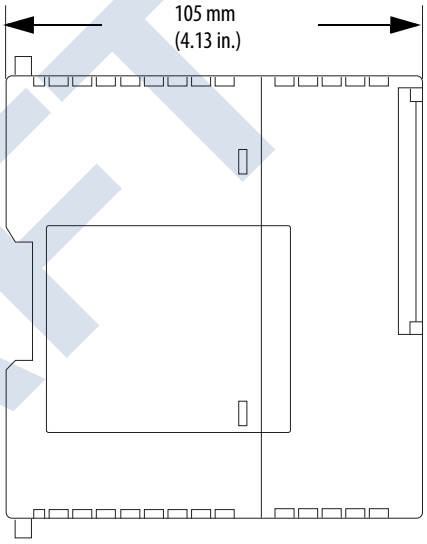

1769-L24ER-QBFC1B, 1769-L27ERM-QBFC1B
(Dimensions are the same on both controller catalog numbers.)

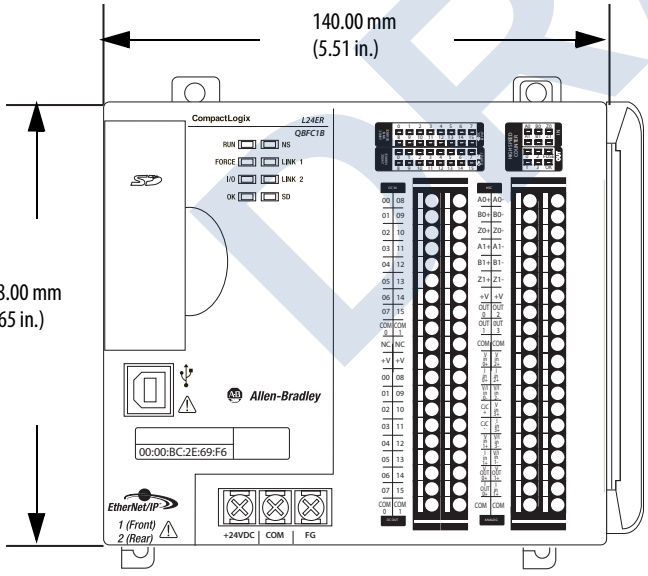

DRAFT

ITEM 510K

Controller Connections

A CompactLogix system uses the connection types to establish communication links between devices:

- Controller-to-local I/O modules or local communication modules
- Controller-to-remote I/O or remote communication modules
- Controller-to-remote I/O (rack-optimized) modules
- Produced and consumed tags
- Messages
- Controller access by the programming software
- Controller access by RSLinx® Classic software for HMI or other applications

You indirectly determine the number of connections the controller uses by configuring the controller to communicate with other devices in the system. The limit of connections may ultimately reside in the communication module you use for the connection. If a message path routes through a communication module, the connection related to the message also counts toward the connection limit of that communication module.

CompactLogix 5370 Controller Ethernet Node Limits and Connections

When designing a CompactLogix 5370 control system, you must consider the following:

- Maximum number of Ethernet nodes available for your controller's project
- Connections

The controller you select determines the number of Ethernet nodes available.

Cat. No.	Ethernet Nodes Supported
1769-L16ER-BB1B	4
1769-L18ER-BB1B	8
1769-L18ERM-BB1B	
1769-L24ER-QB1B	8
1769-L24ER-QBFC1B	
1769-L27ERM-QBFC1B	16
1769-L30ER	16
1769-L30ERM	
1769-L30ER-NSE	
1769-L33ER	32
1769-L33ERM	
1769-L36ERM	48

All CompactLogix 5370 controllers support 256 CIP connections and 120 TCP/IP connections.

DRAFT

Specifications

General Specifications

Specification	Value
Dimensions	118 mm (height) x 87 mm (depth) x 35 mm (width) height including mounting tabs is 138 mm 4.65 in. (height) x 3.43 in (depth) x 1.38 in (width) height including mounting tabs is 5.43 in.
Approximate Shipping Weight (with carton)	300g (0.65 lbs.)
Storage Temperature	-40°C to +85°C (-40°F to +185°F)
Operating Temperature	0°C to +60°C (32°F to +140°F)
Operating Humidity	5% to 95% non-condensing
Operating Altitude	2000 meters (6561 feet)
Vibration	Operating: 10 to 500 Hz, 5G, 0.030 in. peak-to-peak Relay Operation: 2G
Shock	Operating: 30G, 11 ms panel mounted (20G, 11 ms DIN rail mounted) Relay Operation: 7.5G panel mounted (5G DIN rail mounted) Non-Operating: 40G panel mounted (30G DIN rail mounted)
Agency Certification	• C-UL certified (under CSA C22.2 No. 142) • UL 508 listed • CE compliant for all applicable directives
Hazardous Environment Class	Class I, Division 2, Hazardous Location, Groups A, B, C, D (UL 1604, C-UL under CSA C22.2 No. 213)
Radiated and Conducted Emissions	EN50081-2 Class A
Electrical /EMC:	*The module has passed testing at the following levels:*
• ESD Immunity (IEC1000-4-2)	• 4 kV contact, 8 kV air, 4 kV indirect
• Radiated Immunity (IEC1000-4-3)	• 10 V/m , 80 to 1000 MHz, 80% amplitude modulation, +900 MHz keyed carrier
• Fast Transient Burst (IEC1000-4-4)	• 2 kV, 5kHz
• Surge Immunity (IEC1000-4-5)	• 1 kV galvanic gun
• Conducted Immunity (IEC1000-4-6)	• 10 V, 0.15 to 80MHz(1)

(1) Conducted Immunity frequency range may be 150 kHz to 30 MHz if the Radiated Immunity frequency range is 30 MHz to 1000 MHz.

Input Specifications

Specification	1769-IF4 (Series B or later)
Analog Normal Operating Ranges(1)	Voltage: ± 10V dc, 0 to 10V dc, 0 to 5V dc, 1 to 5V dc Current: 0 to 20 mA, 4 to 20 mA
Full Scale Analog Ranges(1)	Voltage: ± 10.5V dc, -0.5 to 10.5V dc, -0.5 to 5.25V dc, 0.5 to 5.25V dc Current: 0 to 21 mA, 3.2 to 21 mA
Number of Inputs	4 differential or single-ended
Bus Current Draw (max.)	120 mA at 5V dc 60 mA at 24V dc(6)
Heat Dissipation	2.52 Total Watts (The Watts per point, plus the minimum Watts, with all points energized.)
Converter Type	Delta Sigma
Response Speed per Channel	Input filter and configuration dependent. See your user's manual.
Resolution (max.)(2)	14 bits (unipolar) 14 bits plus sign (bipolar)
Rated Working Voltage(3)	30V ac/30V dc
Common Mode Voltage Range(4)	±10V dc maximum per channel
Common Mode Rejection	greater than 60 dB at 50 and 60 Hz with the 50 or 60 Hz filter selected, respectively.
Normal Mode Rejection Ratio	-50 dB at 50 and 60 Hz with the 50 or 60 Hz filter selected, respectively.
Input Impedance	Voltage Terminal: 220K Ω (typical) Current Terminal: 250 Ω
Overall Accuracy(5)	Voltage Terminal: ±0.2% full scale at 25°C Current Terminal: ±0.35% full scale at 25°C

(1) The over- or under-range flag will come on when the normal operating range (over/under) is exceeded. The module will continue to convert the analog input up to the maximum full scale range. The flag automatically resets when within the normal operating range.

(2) Resolution is dependent upon your filter selection. The maximum resolution is achieved with either the 50 or 60 Hz filter selected. For resolution with other filter selections, refer to the user manual, publication 1769-UM002A-EN-P.

(3) Rated working voltage is the maximum continuous voltage that can be applied at the input terminal, including the input signal and the value that floats above ground potential (for example, 10V dc input signal and 20V dc potential above ground).

(4) For proper operation, both the plus and minus input terminals must be within ±10V dc of analog common.

(5) Includes offset, gain, non-linearity and repeatability error terms.

(6) If the optional 24V dc Class 2 power supply is used, the 24V dc current draw from the bus is 0 mA.

DRAFT

Specification	1769-IF4 (Series B or later)
Accuracy Drift with Temperature	Voltage Terminal: ±0.003% per °C Current Terminal: ±0.0045% per °C
Optional 24V dc Class 2 Power Supply Voltage Range	20.4 V to 26.4 V dc(3)
Calibration	The module performs autocalibration on channel enable and on a configuration change between channels.
Non-linearity (in percent full scale)	±0.03%
Repeatability(1)	±0.03%
Module Error over Full Temperature Range (0 to +60°C [+32°F to +140°F])	Voltage: ±0.3% Current: ±0.5%
Input Channel Configuration	via configuration software screen or the user program (by writing a unique bit pattern into the module's configuration file). Refer to your controller's user manual to determine if user program configuration is supported.
Module OK LED	On: module has power, has passed internal diagnostics, and is communicating over the bus. Off: Any of the above is not true.
Channel Diagnostics	Over- or under-range by bit reporting
Maximum Overload at Input Terminals(2)	Voltage Terminal: ±30V dc continuous, 0.1 mA Current Terminal: ±32 mA continuous, ±7.6 V dc
System Power Supply Distance Rating	8 (The module may not be more than 8 modules away from the system power supply.)
Recommended Cable	Belden™ 8761 (shielded)
Input Group to Bus Isolation	500V ac or 710V dc for 1 minute (qualification test) 30V ac/30V dc working voltage (IEC Class 2 reinforced insulation)
Vendor I.D. Code	1
Product Type Code	10
Product Code	35

(1) Repeatability is the ability of the input module to register the same reading in successive measurements for the same input signal.

(2) Damage may occur to the input circuit if this value is exceeded.

(3) Failure to use a Class 2 power supply without regulation within these limits could result in improper module operation.

DRAFT

Variable Depth Rotary Operating Kits

Rotary, Variable Depth Operators

- Supplied with external handle, operating shaft, and MCCB mounted operating mechanism.
- Refer to page 56 to select as components.
- Frames G, H, I, and J use a Bul. 140U P-style handle.
- Frames K, M, and N use a Bul. 140U medium style handle.

	Frame Size	Handle Color	Shaft Length	Cat. No.
 *Representative Photo*	G, I	Black	12 in. (30.48 mm)	140G-G-RVM12B
		Red/Yellow		140G-G-RVM12R
		Black	21 in. (53.34 mm)	140G-G-RVM21B
		Red/yellow		140G-G-RVM21R
	H, J	Black	12 in. (30.48 mm)	140G-H-RVM12B
		Red/yellow		140G-H-RVM12R
		Black	21 in. (53.34 mm)	140G-H-RVM21B
		Red/yellow		140G-H-RVM21R
 *Representative Photo*	K	Black	12.6 in. (320 mm)	140G-K-RVM12B
		Red/yellow		140G-K-RVM12R
		Black	22.8 in. (580 mm)	140G-K-RVM21B
		Red/yellow		140G-K-RVM21R
	M	Black	12.6 in. (320 mm)	140G-M-RVM12B
		Red/yellow		140G-M-RVM12R
		Black	22.8 in. (580 mm)	140G-M-RVM21B
		Red/yellow		140G-M-RVM21R
	N	Black	12.6 in. (320 mm)	140G-N-RVM12B
		Red/yellow		140G-N-RVM12R
		Black	22.8 in. (580 mm)	140G-N-RVM21B
		Red/yellow		140G-N-RVM21R

Rotary, Variable Depth Operators with Internal NFPA 79 Operating Handle

- Supplied with external handle, NFPA handle with operating shaft, support bracket, and MCCB mounted operating mechanism.
- Refer to page 58 to select as components.
- Frames G, H, I, and J use a Bul. 140U P-style handle.
- Frames K, M, and N use a Bul. 140U medium style handle.

	Frame Size	Handle Color	Shaft Length	Cat. No.
 *Representative Photo*	G, I	Black	12 in. (30.48 mm)	140G-G-NVM12B
		Red/yellow		140G-G-NVM12R
		Black	21 in. (53.34 mm)	140G-G-NVM21B
		Red/yellow		140G-G-NVM21R
	H, J	Black	12 in. (30.48 mm)	140G-H-NVM12B
		Red/yellow		140G-H-NVM12R
		Black	21 in. (53.34 mm)	140G-H-NVM21B
		Red/yellow		140G-H-NVM21R
 *Representative Photo*	K	Black	12.6 in. (320 mm)	140G-K-NVM12B
		Red/yellow		140G-K-NVM12R
		Black	22.8 in. (580 mm)	140G-K-NVM21B
		Red/yellow		140G-K-NVM21R
	M	Black	12.6 in. (320 mm)	140G-M-NVM12B
		Red/yellow		140G-M-NVM12R
		Black	22.8 in. (580 mm)	140G-M-NVM21B
		Red/yellow		140G-M-NVM21R
	N	Black	12.6 in. (320 mm)	140G-N-NVM12B
		Red/yellow		140G-N-NVM12R
		Black	22.8 in. (580 mm)	140G-N-NVM21B
		Red/yellow		140G-N-NVM21R

DRAFT

ITEM 706E

SIDE 1

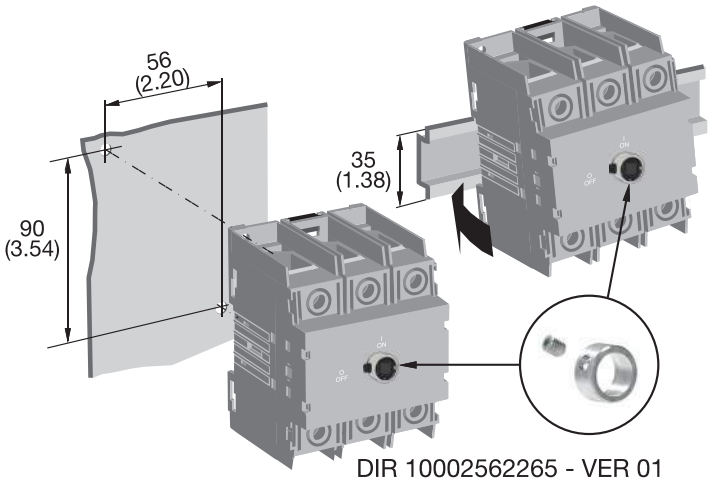

mm
(in)

DIR 10002562265 - VER 01
Publication 194U-IN001B-EN-E

SIDE 2

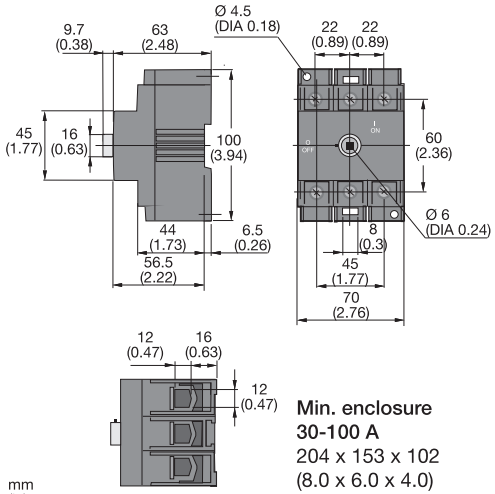

mm
(in)

Min. enclosure
30-100 A
204 x 153 x 102
(8.0 x 6.0 x 4.0)

SIDE 3

194U-A30-1753 194U-A60-1753	194U-A100-1753
2,5...25 mm² 14...4 AWG	10...70 mm² 8...1/0 AWG

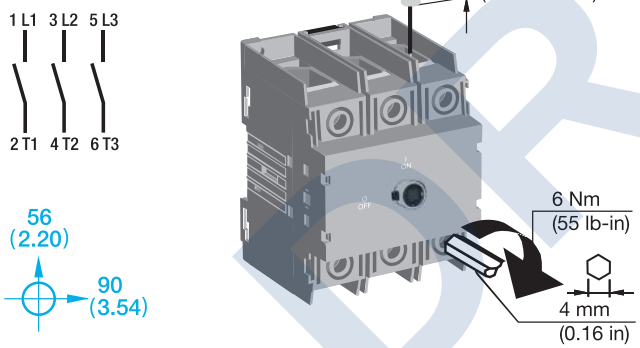

SIDE 4

WARNING: To prevent electrical shock, disconnect from power source before installing or servicing. Install in suitable enclosure. Keep free from contaminants.

WARNUNG: Vor Installations- oder Servicearbeiten Stromversorgung unterbrechen, um Unfälle zu vermeiden. Die Geräte müssen in einem passenden Gehäus und gegen Verschmutzung geschützt werden.

AVERTISSEMENT: Avant le montage et la mise en service, couper l'alimentation secteur afn d'éviter tout accident. Prévoir une mise en coffret ou armoire Protéger le produit contre les environnements agressifs.

AVVERTENZA: Per prevenire infortuni, togliere tensione prima dell'installazione o manutenzione. Installare in custodia indonea. Tenere lontano da contaminanti.

ADVERTENCIA: Desconectar la alimentación eléctrica antes de realizar el montaje y la puesta en servicio, con el objeto de evitar accidentes. Instalado en un apropiado. Proteger el producto de los ambientes agresivos.

ПРЕДУПРЕЖДЕНИЕ: Во избежание поражения электрическим током, отсоединить от источника питания перед установкой или обслуживанием. Устанавливать в соответствующем корпусе. Предохранять от загрязнений.

警告：为了防止触电，在安装或维修之前必须先切断电源。安装在合适的设备箱内，防止接触污染物。

DRAFT

Catalog Number Explanation

C- and D-Frame Devices

140MT	-	C	3	E	-	B63	-	KN	-	MT	-	XC	-	GK
a		b	c	d		e		f		g		h		i

a	
Bulletin Number	
Code	**Description**
140MT	140MT Motor Protective Switching Device (Thermal)

b	
Current Rating/ Frame Size	
Code	**Description**
C	32 A, Frame C
D	40 A, Frame D

c	
Interrupting Rating/ Breaking Capacity	
Code	**Description**
3	Normal break
9	High break

d	
Function	
Code	**Description**
E	Adjustable Thermal/Fixed Magnetic (14 x I_n) MPCB
N	Fixed Magnetic (14 x I_n) MCP
T	Adjustable Thermal/Fixed Magnetic (18...22 x I_n) MPCB
V	Fixed Magnetic (application at output of VFD multi-motor)

e	
Current Range	
Code	**Description**
A	0.10 (example: A16 = 0.16 A)
B	1.0 (example: B16 = 1.6 A)
C	10 (example: C16 = 16 A)

f	
Knob and Adapters	
Code	**Description**
KN	Black lockable knob
KY	Red/yellow lockable knob
KB	Blue lockable knob (C-Frame only)
TE	Normal break

g	
Mounting Type	
Code	**Description**
MT	Standard busbar mount, top

h	
Auxiliary Contacts(1)	
Bottom Front	
1st Code	**Description**
X	No contact
B	1 N.O.
C	1 N.O. + 1 N.C.
D	2 N.O.
R	1 N.C. + 1 N.O. (SC+OL)
S	1 N.O. + 1 N.O. (SC+OL)
M	1 N.O. + 1 N.C. (SC+OL)
N	1 N.O. (SC+OL) + 1 N.O. (SC)
Right Side	
2nd Code	**Description**
X	No contact
C	1 N.O. + 1 N.C.
D	2 N.C.
E	2 N.C.

i	
Undervoltage and Shunt Trips	
Code	**Description**
Undervoltage Trip Units	
GK	24V, 50 Hz
GD	110V, 50 Hz/120V, 60 Hz
GF	220...230V, 50 Hz
GA	240...260V, 60 Hz
GN	380...400V, 50 Hz
GB	480V, 60 Hz/415V, 50 Hz
Shunt Trip Units	
PK	24V, 50 Hz
PD	110V, 50 Hz / 120V 60 Hz
PF	220...230V, 50 Hz
PA	240...260V, 60 Hz
PT	240V, 50 Hz/277V, 60 Hz
PN	380...400V, 50 Hz
PB	480V, 60 Hz/415V, 50 Hz
PZJ	24V DC

(1) Choose up to two auxiliary contacts. Use the first character in the code to specify the front mounted auxiliary contact; use the second character to specify the right side-mounted auxiliary contact. Example: code -XC is for no front-mounted contact, and a side-mounted auxiliary contact with 1 N.O. and 1 N.C. contact.

F-Frame Devices

140M	-	F	8	E	-	C10
a		b	c	d		e

a	
Bulletin Number	
Code	**Description**
140M	140M Motor Protection Circuit Breaker)

b	
Current Rating/ Frame Size	
Code	**Description**
F	45 A, Frame F

c	
Interrupting Rating/ Breaking Capacity	
Code	**Description**
8	High break

d	
Function	
Code	**Description**
E	Adjustable Thermal/Fixed Magnetic (14 x I_n) MPCB
N	Fixed Magnetic (14 x I_n) MCP
T	Adjustable Thermal/Fixed Magnetic (18...22 x I_n) MPCB

e	
Current Range	
Code	**Description**
C	10 (example: C16 = 16 A)

DRAFT

Product Selection

Selection Using Current and Hp/kW Ratings

Table 27 - Motor Protective Switching Devices

Rated Operational Current (I_e) [A]	Motor Current Adjustment Range [A]	Nominal Magnetic Trip Current [A]	Max Short-circuit Current [kA]		Max. 3-phase Hp Ratings(1)				Max. kW, 3-Phase — AC-3(1)				Cat. No.
			400V (I_{cu})	480V (group motor)	200V	230V	460V	575V	230V	400/415V	500V	690V	
C-Frame, Adjustable Thermal/Fixed Magnetic (14 x I_n)													
0.16	0.10...0.16	2.2	100	65	—	—	—	—	—	0.02	0.06	0.06	140MT-C3E-A16
0.25	0.16...0.25	3.5	100	65	—	—	—	—	—	0.04	0.09	0.09	140MT-C3E-A25
0.4	0.25...0.40	5.6	100	65	—	—	—	—	0.06	0.09	0.12	0.18	140MT-C3E-A40
0.63	0.40...0.63	8.8	100	65	—	—	—	—	0.09	0.18	0.18	0.25	140MT-C3E-A63
1	0.63...1.0	14	100	65	—	—	0.5	0.5	0.18	0.25	0.37	0.55	140MT-C3E-B10
1.6	1.0...1.6	22	100	65	—	—	0.75	—	0.25	0.55	0.75	1.1	140MT-C3E-B16
2.5	1.6...2.5	35	100	65	0.5	0.5	1	1.5	0.37	0.75	1.1	1.8	140MT-C3E-B25
4	2.5...4.0	56	100	65	0.75	0.75	2	3	0.75	1.5	2.2	3	140MT-C3E-B40
6.3	4.0...6.3	88	100	65	1	1.5	3	5	1.5	2.2	3	4	140MT-C3E-B63
10	6.3...10	140	100	65	2	2	5	7.5	2.2	4	6.3	7.5	140MT-C3E-C10
16	10...16	224	65	30	3	5	10	10	4	7.5	10	13	140MT-C3E-C16
20	14.5...20	280	50	30	5	5	10	15	5.5	10	11	17	140MT-C3E-C20
25	18...25	350	15	30	5	7.5	15	20	5.5	11	15	22	140MT-C3E-C25
29	23...29	406	15	30	7.5	10	20	25	7.5	13	18.5	25	140MT-C3E-C29
32	26.5...32	448	15	30	7.5	10	20	30	7.5	15	20	25	140MT-C3E-C32
D-Frame, Adjustable Thermal/Fixed Magnetic (14 x I_n)													
0.63	0.40...0.63	8.8	100	65	—	—	—	—	0.09	0.18	0.18	0.25	140MT-D9E-A63
1	0.63...1.0	14	100	65	—	—	0.5	0.5	0.18	0.25	0.37	0.55	140MT-D9E-B10
1.6	1.0...1.6	22	100	65	—	—	0.75	—	0.25	0.55	0.75	1.1	140MT-D9E-B16
2.5	1.6...2.5	35	100	65	0.5	0.5	1	1.5	0.37	0.75	1.1	1.8	140MT-D9E-B25
4	2.5...4.0	56	100	65	0.75	0.75	2	3	0.75	1.5	2.2	3	140MT-D9E-B40
6.3	4.0...6.3	88	100	65	1	1.5	3	5	1.5	2.2	3	4	140MT-D9E-B63
10	6.3...10	140	100	65	2	2	5	7.5	2.2	4	6.3	7.5	140MT-D9E-C10
16	10...16	224	100	65	3	5	10	10	4	7.5	10	13	140MT-D9E-C16
20	14.5...20	280	100	65	5	5	10	15	5.5	10	11	17	140MT-D9E-C20
25	18...25	350	65	50	5	7.5	15	20	5.5	11	15	22	140MT-D9E-C25
29	23...29	406	50	50	7.5	10	20	25	7.5	13	18.5	25	140MT-D9E-C29
32	26.5...32	448	50	50	7.5	10	20	30	7.5	15	20	25	140MT-D9E-C32
36	30...36	432	50	30	10	10	25	30		18.5	20	25	140MT-D9E-C36(2)
40	34...40	480	50	30	10	10	30	30	11	20	24	30	140MT-D9E-C40(2)
D-Frame, Fixed Magnetic (application at output of VFD multi-motor)													
1.6	1.0...1.6	88	100	65	—	—	0.75	—	0.25	0.55	0.75	—	140MT-D9V-B16
2.5	1.6...2.5	88	100	65	0.5	0.5	1	—	0.37	0.75	1.1	—	140MT-D9V-B25
4	2.5...4.0	88	100	65	0.75	0.75	2	—	0.75	1.5	2.2	—	140MT-D9V-B40
6.3	4.0...6.3	88	100	65	1	1.5	3	—	1.5	2.2	3	—	140MT-D9V-B63
10	6.3...10	140	100	65	2	2	5	—	2.2	4	6.3	—	140MT-D9V-C10
16	10...16	224	100	65	3	5	10	—	4	7.5	10	—	140MT-D9V-C16
20	14.5...20	280	100	65	5	5	10	—	5.5	10	11	—	140MT-D9V-C20
25	18...25	350	65	50	5	7.5	15	—	5.5	11	15	—	140MT-D9V-C25
29	23...29	406	50	50	7.5	10	20	—	7.5	13	18.5	—	140MT-D9V-C29
32	26.5...32	448	50	50	7.5	10	20	—	7.5	15	20	—	140MT-D9V-C32
36	30...36	432	50	30	10	10	25	—	—	18.5	20	—	140MT-D9V-C36(2)
40	34...40	480	50	30	10	10	30	—	11	20	24	—	140MT-D9V-C40(2)

DRAFT

Specifications

Table 41 - General Data

Attribute			140MT-C	140MT-D	140M-F
Standards compliance		IEC	IEC/EN 60947-2, IEC/EN 60947-4-1		
		cULus	UL 60947-4-1, CSA C22.2, No. 60947-4-1		
Certifications		Regional	cULus Listed (File No. E54612, NLRV(7); E205542, NKJH(7); E518407		
			CCC, EAC, CE, IEC, CB Scheme		CCC, EAC, CE
Rated Insulation Voltage U_i	IEC	[V]	690		
	UL/CSA	[V]	600		
Rated Impulse Withstand Voltage U_{imp}	Pollution degree		3		
	Main circuits U_{imp}/Overvoltage Category		6 kV/III, 8 kV (Disconnect)		
	Auxiliary circuits U_{imp} /Overvoltage Category		6 kV/III		
Rated Frequency		[Hz]	45-65		
Utilization Category	IEC 60947-2 (Circuit breaker)		A		
	IEC 60947-4-1 (Motor starter)		AC-3		
Life Span	Mechanical	[operations]	100,000		30,000
	Electrical (I_e max.)	[operations]	100,000		30,000
Switching Frequency		[operations/hour]	max. 25		
Ambient Temperature	Storage	[°C (°F)]	-40...+85 (-40...185)		
	Operation	[°C (°F)]	-25...+70 (-13...158)		
Climatic resistance	Operating Humidity/Moisture heat (60068-2-3)		5...95% Non-condensing		
Site Altitude		[m]	to 2000 N.N. (6561 ft)		
Protection Class			IP2X from all directions		
Resistance to Shock, Transport (60068-2-27)		ON	15 G/11 ms		
		OFF	30 G/11 ms		
Resistance to Vibration, Operation (60068-2-6)			5 G		
Rated Thermal Current I_{th}	up to 40 °C (104 °F) ambient temperature	[A]	0.1...32	0.63...40	6.3...45
	up to 60 °C (140 °F) ambient temperature	[A]	0.1...32	0.63...40	6.3...45
Rated Supply Current I_e		[A]	0.1...32	0.63...40	6.3...45
Dependence on Temperature	40 °C (104 °F)	[A]	no reduction		
	50 °C (122 °F)	[A]	no reduction		
	60 °C (140 °F)	[A]	no reduction		
	70 °C (158 °F)	[A]	15% current reduction of the upper rated current I_e		
Overload Protection Characteristics			IEC 60947-4-1 Motor protection (except Cat. Nos. 140MT-D9N, 140M-F9N)		
Ambient Temperature Compensation		[°C (°F)]	-25...+60 (-13...+140)		
Phase-loss Protection			Differential release		
Trip class			10 (except Cat. Nos. 140MT-D9N, 140M-F8N) fixed setting		
Magnetic Release			fixed setting		
Release current (±20%)	for E, N Version	[A]	14 x I_e max.(1)		13 x I_e max
	for E, N Version C36, C40	[A]	12 x I_e max.(1)		–
	for T Version	[A]	18...22 x I_e max.(2)		
Total Power loss P_v	Circuit Breaker at rated load/ operating temp.	[W]	4...11	4...14	7...22
Main Disconnect Switch Application			Yes, with accessories		
Application Conditions	140MT-D...C36, -C40: Suitable for continuous operation at 90% current rating at 480V only if used in a minimum enclosure size of 250 x 175 x 150 mm (10 x 7 x 6 in).				
	For utilization outside North America, assemblies (of products) shall comply to the IEC 61439-1 requirements				
	140M and 140MT manual motor starters are intended for use in closed areas without hazardous operating conditions such as dust or explosive or corrosive gases. Enclosures of appropriate manner need to be in place to protect devices in such environments. See Table 42.				

(1) I_e max. = maximum values of setting ranges fixed magnetic setting for 140MT-D9V; see ratings.
(2) I_e max. = maximum values of setting ranges; see ratings.

DRAFT

Table 42 - Minimum Enclosure Size for 140MT-C and 140MT-D Devices

Rated Current [A]		Application Type			
		480V Group Installation and At-motor Disconnect	600V Group Installation and At-motor Disconnect	480Y/277V Self-protected (Type E) Combination Motor Controller	600Y/347V Self-protected (Type E) Combination Motor Controller
≤ 6.3	[mm]	166 x 68 x 125	166 x 68 x 125	166 x 68 x 125	166 x 68 x 125
	[in]	6.5 x 2.7 x 5	6.5 x 2.7 x 5	6.5 x 2.7 x 5	6.5 x 2.7 x 5
10...16	[mm]	166 x 68 x 125	166 x 68 x 125	200 x 68 x 125	250 x 68 x 125
	[in]	6.5 x 2.7 x 5	6.5 x 2.7 x 5	7.9 x 2.7 x 5	10 x 2.7 x 5
20...32	[mm]	166 x 68 x 125	250 x 68 x 125	200 x 68 x 125	–
	[in]	6.5 x 2.7 x 5	10 x 2.7 x 5	7.9 x 2.7 x 5	
36...40	[mm]	250 x 175 x 150	250 x 175 x 150	250 x 175 x 150	
	[in]	10 x 7 x 6	10 x 7 x 6	10 x 7 x 6	

Table 43 - MPCB Connecting Characteristics

Connection			No. of Conductors	140MT-C, 140MT-D ≤ 16 A	140MT-C, 140MT-D > 16 A	140M-F
Type of terminals						
				Screw Clamp up to 16 A, M4	Screw Clamp greater than 16 A, M4	
Connection Screw				Pozidriv No.2/Blade No.3	Pozidriv No.2/Blade No.3	Pozidriv No.2/Blade No.3
Wiring	Solid or stranded		1	1...6 mm^2	1.5...10 mm^2	2.5...25 mm^2
			2	1...2.5 mm^2 2.5...6 mm^2	1.5...4 mm^2 4...10 mm^2	2.5...25 mm^2
	Flexible with ferrule (end sleeve)		1	1...6 mm^2	1.5...10 mm^2	2.5...25 mm^2
			2	1...2.5 mm^2 2.5...4 mm^2	1.5...4 mm^2 4...10 mm^2	2.5...25 mm^2
	Finely stranded		1	1.5...6 mm^2	2.5...10 mm^2	16...25 mm^2
			2	1.5...4 mm^2 2.5...6 mm^2	2.5...6 mm^2 4...10 mm^2	16...25 mm^2
	Cross section per UL/CSA solid, stranded		1	No. 14...10 AWG	No. 14...8 AWG	No.14...8
			2	No. 14...10 AWG	No. 14...10 AWG No. 12...8 AWG	No.14...8
	Stripping length			10 mm (0.39 in.)	10 mm (0.39 in.)	10 mm (0.39 in.)
Tightening torques			[N•m]/[lb•in]	2...2.5/18...22	2...2.5/18...22	3...3.5/27...30

DRAFT

Combination Ratings

Bulletin 140MT Devices with Bulletin 100-K Miniature IEC Contactors

Table 44 - UL 60947 Application Ratings, MPSDs and MCPs with Bulletin 100-K Miniature IEC Contactors

Cat. No.	UL 60947-4-1 Manual Motor Controller						UL 60947-4-1 Type F		
	Max. Fuse or Circuit Breaker per NEC [A]	Minimum Contactor Size[1]	Group Motor Installation		Motor Disconnect		Combination Motor Controller		
			Max Short-circuit Current [kA]		Max Short-circuit Current [kA]		Minimum Contactor Size[1]	Max Short-circuit Current [kA]	
			480V	600V	480V	600V		480Y/277V[2]	600Y/347V[2]
C-Frame, Adjustable Thermal/Fixed Magnetic (14 x I_n)									
140MT-C3E-A16	450	100-K05	65	50	65	50	100-K05	65	50
140MT-C3E-A25	450	100-K05	65	50	65	50	100-K05	65	50
140MT-C3E-A40	450	100-K05	65	50	65	50	100-K05	65	50
140MT-C3E-A63	450	100-K05	65	50	65	50	100-K05	65	50
140MT-C3E-B10	450	100-K05	65	50	65	50	100-K05	65	50
140MT-C3E-B16	450	100-K05	65	50	65	50	100-K05	65	50
140MT-C3E-B25	450	100-K05	65	30	65	30	100-K05	65	30
140MT-C3E-B40	450	100-K05	65	30	65	30	100-K05	65	30
140MT-C3E-B63	450	100-K05	65	30	65	30	100-K05	65	–
140MT-C3E-C10	450	100-K09	65	30	65	30	100-K09	65	–
140MT-C3E-C16	450	100-K12	30	30	30	30	100-K12	30	–
D-Frame, Adjustable Thermal/Fixed Magnetic (14 x I_n)									
140MT-D9E-A63	450	100-K05	65	50	65	50	100-K05	65	50
140MT-D9E-B10	450	100-K05	65	50	65	50	100-K05	65	50
140MT-D9E-B16	450	100-K05	65	50	65	50	100-K05	65	50
140MT-D9E-B25	450	100-K05	65	30	65	30	100-K05	65	30
140MT-D9E-B40	450	100-K05	65	30	65	30	100-K05	65	30
140MT-D9E-B63	450	100-K05	65	30	65	30	100-K05	65	30
140MT-D9E-C10	450	100-K09	65	30	65	30	100-K09	65	30
140MT-D9E-C16	450	100-K12	65	30	65	30	100-K12	65	30

(1) Similar for other contactor configurations (100-K, 104-K)
(2) For full voltage (delta) ratings above 277V or 347V, follow the NEC or CEC rules for group motor applications.

DRAFT

Table 45 - IEC 60947-4-1, Type 1 Coordination Ratings, MPSDs with Bulletin 100-K IEC Contactors

Cat. No.	415V	
Standard Motor Protection	**Max Short-circuit Current [kA]**	**Min Contactor Size[1]**
C-Frame, Adjustable Thermal/Fixed Magnetic (14 x I_n)		
140MT-C3E-A16	65	100-K05
140MT-C3E-A25	65	100-K05
140MT-C3E-A40	65	100-K05
140MT-C3E-A63	65	100-K05
140MT-C3E-B10	65	100-K05
140MT-C3E-B16	65	100-K05
140MT-C3E-B25	65	100-K05
140MT-C3E-B40	65	100-K05
140MT-C3E-B63	65	100-K05
140MT-C3E-C10	65	100-K09
140MT-C3E-C16	30	100-K12
D-Frame, Adjustable Thermal/Fixed Magnetic (14 x I_n)		
140MT-D9E-A63	65	100-K05
140MT-D9E-B10	65	100-K05
140MT-D9E-B16	65	100-K05
140MT-D9E-B25	65	100-K05
140MT-D9E-B40	65	100-K05
140MT-D9E-B63	65	100-K05
140MT-D9E-C10	65	100-K09
140MT-D9E-C16	65	100-K12

(1) Similar for other contactor configurations (100-K, 104-K)

DRAFT

Bulletin 140MT/M Devices with Bulletin 100-C IEC Contactors

Table 46 - UL 60947 Application Ratings, MPSDs with Bulletin 100-C IEC Contactors

Cat. No.	UL 60947-4-1 Manual Motor Controller						UL 60947-4-1 Type F		
	Max. Fuse or Circuit Breaker per NEC [A]	Minimum Contactor Size[1]	Group Motor Installation		Motor Disconnect		Combination Motor Controller		
			Max Short-circuit Current [kA]		Max Short-circuit Current [kA]		Minimum Contactor Size[1]	Max Short-circuit Current [kA]	
			480V	600V	480V	600V		480Y/277V[2]	600Y/347V[2]
C-Frame, Adjustable Thermal/Fixed Magnetic (14 x I_n)									
140MT-C3E-A16	450	100-C09	65	50	65	50	100-C09	65	50
140MT-C3E-A25	450	100-C09	65	50	65	50	100-C09	65	50
140MT-C3E-A40	450	100-C09	65	50	65	50	100-C09	65	50
140MT-C3E-A63	450	100-C09	65	50	65	50	100-C09	65	50
140MT-C3E-B10	450	100-C09	65	50	65	50	100-C09	65	50
140MT-C3E-B16	450	100-C09	65	50	65	50	100-C09	65	50
140MT-C3E-B25	450	100-C09	65	30	65	30	100-C09	65	30
140MT-C3E-B40	450	100-C09	65	30	65	30	100-C09	65	30
140MT-C3E-B63	450	100-C09	65	30	65	30	100-C09	65	–
140MT-C3E-C10	450	100-C09	65	30	65	30	100-C09	65	–
140MT-C3E-C16	450	100-C12	30	30	30	30	100-C12	30	–
140MT-C3E-C20	450	100-C16	30	30	30	10	–	–	–
140MT-C3E-C25	450	100-C23	30	18	10	5	–	–	–
	450	100-C30	30	18	30	5	–	–	–
140MT-C3E-C29	450	100-C30	30	10	10	–	–	–	–
140MT-C3E-C32	450	100-C37	30	10	10	–	–	–	–
D-Frame, Adjustable Thermal/Fixed Magnetic (14 x I_n)									
140MT-D9E-A63	450	100-C09	65	50	65	50	100-C09	65	50
140MT-D9E-B10	450	100-C09	65	50	65	50	100-C09	65	50
140MT-D9E-B16	450	100-C09	65	50	65	50	100-C09	65	50
140MT-D9E-B25	450	100-C09	65	30	65	30	100-C09	65	30
140MT-D9E-B40	450	100-C09	65	30	65	30	100-C09	65	30
140MT-D9E-B63	450	100-C09	65	30	65	30	100-C09	65	30
140MT-D9E-C10	450	100-C09	65	30	65	30	100-C09	65	30
140MT-D9E-C16	450	100-C12	65	30	65	30	100-C12	65	30
140MT-D9E-C20	450	100-C23	65	30	65	30	100-C23	65	–
140MT-D9E-C25	450	100-C23	50	30	50	30	100-C23	50	–
140MT-D9E-C29	450	100-C30	50	30	50	30	100-C30	50	–
140MT-D9E-C32	450	100-C37	50	30	30	18	100-C37	30	–
140MT-D9E-C36	450	100-C37	30	30	30	18	100-C37	30	–
140MT-D9E-C40	450	100-C37	30	30	30	18	100-C37	30	–
F-Frame, Adjustable Thermal/Fixed Magnetic (13 x I_n)									
140M-F8E-C10	600	100-C30	65	30	65	30	100-C30	65	30
140M-F8E-C16	600	100-C30	65	30	65	30	100-C30	65	30
140M-F8E-C20	600	100-C30	65	30	65	30	100-C30	65	30
140M-F8E-C25	600	100-C30	65	30	65	30	100-C30	65	30
140M-F8E-C32	600	100-C30	65	30	65	30	100-C30	65	30
140M-F8E-C45	600	100-C37	65	18	65	18	100-C37	65	–

(1) Similar for other contactor configurations (100-C, 104-C, 100S-C, 104S-C)
(2) For full-voltage (delta) ratings above 277V or 347V, follow the NEC or CEC rules for group motor applications.

DRAFT

Table 47 - UL 60947 Application Ratings, MCPs with Bulletin 100-C IEC Contactors

Cat. No.	UL 60947-4-1 Manual Motor Controller					
	Max. Fuse or Circuit Breaker per NEC [A]	Minimum Contactor Size	Group Motor Installation		Motor Disconnect	
			Max Short-circuit Current [kA]		Max Short-circuit Current [kA]	
			480V	600V	480V	600V
D-Frame, Motor Circuit Protectors, Fixed Magnetic (14 x I_n)						
140MT-D9N-A16	450	100-C09	65	50	65	50
140MT-D9N-A25	450	100-C09	65	50	65	50
140MT-D9N-A40	450	100-C09	65	50	65	50
140MT-D9N-A63	450	100-C09	65	50	65	50
140MT-D9N-B10	450	100-C09	65	50	65	50
140MT-D9N-B16	450	100-C09	65	50	65	50
140MT-D9N-B25	450	100-C09	65	30	65	30
140MT-D9N-B40	450	100-C09	65	30	65	30
140MT-D9N-B63	450	100-C09	65	30	65	30
140MT-D9N-C10	450	100-C09	65	30	65	30
140MT-D9N-C16	450	100-C12	65	30	65	30
140MT-D9N-C20	450	100-C23	65	30	65	30
140MT-D9N-C25	450	100-C23	50	30	50	30
140MT-D9N-C29	450	100-C30	50	30	50	30
140MT-D9N-C32	450	100-C37	50	30	30	18
140MT-D9N-C36	450	100-C37	30	30	30	18
140MT-D9N-C40	450	100-C37	30	30	30	18
F-Frame, Motor Circuit Protectors, Fixed Magnetic (13 x I_n)						
140M-F8N-C25	600	100-C23	65	30	65	30
140M-F8N-C32	600	100-C30	65	30	65	30
140M-F8N-C45	600	100-C37	65	18	65	18

DRAFT

Table 48 - IEC 60947-4-1, Type 2 Coordination Ratings, MPSDs with Bulletin 100-C IEC Contactors

Cat. No.			400V		480V		600V	
Standard Motor Protection	High Inrush Motor Protection	Motor Circuit Protection	Max Short-circuit Current [kA]	Min Contactor Size(1)	Max Short-circuit Current [kA]	Min Contactor Size(1)	Max Short-circuit Current [kA]	Min Contactor Size(1)
C-Frame, Adjustable Thermal/Fixed Magnetic (14 x I_n)								
140MT-C3E-A16	–	–	100	100-C09	–	–	–	–
140MT-C3E-A25	–	–	100	100-C09	–	–	–	–
140MT-C3E-A40	–	–	100	100-C09	–	–	–	–
140MT-C3E-A63	–	–	100	100-C09	–	–	–	–
140MT-C3E-B10	–	–	100	100-C09	–	–	–	–
140MT-C3E-B16	–	–	100	100-C09	–	–	–	–
140MT-C3E-B25	–	–	65	100-C23	–	–	–	–
140MT-C3E-B40	–	–	65	100-C23	–	–	–	–
140MT-C3E-B63	–	–	65	100-C23	–	–	–	–
140MT-C3E-C10	–	–	65	100-C23	–	–	–	–
140MT-C3E-C16	–	–	50	100-C30	–	–	–	–
140MT-C3E-C20	–	–	50	100-C30	–	–	–	–
140MT-C3E-C25	–	–	15	100-C30	–	–	–	–
140MT-C3E-C29	–	–	15	100-C30	–	–	–	–
140MT-C3E-C32	–	–	15	100-C30	–	–	–	–
D-Frame, Adjustable Thermal/Fixed Magnetic (14 x I_n)								
140MT-D9E-A63	–	–	100	100-C09	–	–	–	–
140MT-D9E-B10	140MT-D9T-A63	140MT-D9N-B10	100	100-C09	–	–	–	–
140MT-D9E-B16	140MT-D9T-B10	140MT-D9N-B16	100	100-C09	–	–	–	–
140MT-D9E-B25	140MT-D9T-B16	140MT-D9N-B25	100	100-C09	–	–	–	–
140MT-D9E-B40	140MT-D9T-B25	140MT-D9N-B40	65	100-C09	–	–	–	–
140MT-D9E-B63	140MT-D9T-B40	140MT-D9N-B63	65	100-C09	–	–	–	–
140MT-D9E-C10	140MT-D9T-B63	140MT-D9N-C10	65	100-C09	–	–	–	–
140MT-D9E-C16	140MT-D9T-C10	140MT-D9N-C16	65	100-C23	–	–	–	–
140MT-D9E-C20	140MT-D9T-C16	140MT-D9N-C20	65	100-C23	–	–	–	–
140MT-D9E-C25	140MT-D9T-C20	140MT-D9N-C25	65	100-C23	–	–	–	–
140MT-D9E-C29	140MT-D9T-C25	140MT-D9N-C29	65	100-C30	–	–	–	–
140MT-D9E-C32	140MT-D9T-C29	140MT-D9N-C32	65	100-C30/C37	–	–	–	–
140MT-D9E-C36	140MT-D9T-C32	–	65	100-C30/C37	–	–	–	–
140MT-D9E-C40	140MT-D9T-C36	140MT-D9N-C40	65	100-C30/C37	–	–	–	–
F-Frame, Adjustable Thermal/Fixed Magnetic (13 x I_n)								
140M-F8E-C10	–	–	100	100-C09	65	100-C09	30	100-C30
140M-F8E-C16	–	–	100	100-C12	65	100-C12	30	100-C30
140M-F8E-C20	–	–	100	100-C23	65	100-C23	30	100-C30
140M-F8E-C25	–	140M-F8N-C25	100	100-C30	65	100-C30	30	100-C30
140M-F8E-C32	140M-F8T-C25	140M-F8N-C32	100	100-C30	65	100-C30	30	100-C30
140M-F8E-C45	140M-F8T-C32	140M-F8N-C45	100	100-C37	65	100-C37	10	100-C37

(1) Similar for other contactor configurations (100-C, 104-C, 100S-C, 104S-C)

DRAFT

Bulletin 140MT/M Devices with Bulletin 100-E IEC Contactors

Table 49 - UL 60947 Application Ratings, MPSDs with Bulletin 100-E IEC Contactors

Cat. No.	UL 60947-4-1 Manual Motor Controller						UL 60947-4-1 Type F		
			Group Motor Installation		Motor Disconnect		Combination Motor Controller		
	Max. Fuse or Circuit Breaker per NEC [A]	Minimum Contactor Size(1)	Max Short-circuit Current [kA]		Max Short-circuit Current [kA]		Minimum Contactor Size(1)	Max Short-circuit Current [kA]	
			480V	600V	480V	600V		480Y/277V(2)	600Y/347V(2)
C-Frame, Adjustable Thermal/Fixed Magnetic (14 x I_n)									
140MT-C3E-A16	450	100-E09	65	50	65	50	100-E09	65	50
140MT-C3E-A25	450	100-E09	65	50	65	50	100-E09	65	50
140MT-C3E-A40	450	100-E09	65	50	65	50	100-E09	65	50
140MT-C3E-A63	450	100-E09	65	50	65	50	100-E09	65	50
140MT-C3E-B10	450	100-E09	65	50	65	50	100-E09	65	50
140MT-C3E-B16	450	100-E09	65	50	65	50	100-E09	65	50
140MT-C3E-B25	450	100-E09	65	30	65	30	100-E09	65	30
140MT-C3E-B40	450	100-E09	65	30	65	30	100-E09	65	30
140MT-C3E-B63	450	100-E09	65	30	65	30	100-E09	65	–
140MT-C3E-C10	450	100-E09	65	30	65	30	100-E09	65	–
140MT-C3E-C16	450	100-E12	30	30	30	30	100-E12	30	–
140MT-C3E-C20	450	100-E16	30	30	30	10	–	–	–
140MT-C3E-C25	450	100-E26	30	18	10	5	–	–	–
	450	100-E30	30	18	30	5	–	–	–
140MT-C3E-C29	450	100-E30	30	10	10	–	–	–	–
140MT-C3E-C32	450	100-E38	30	10	10	–	–	–	–
D-Frame, Adjustable Thermal/Fixed Magnetic (14 x I_n)									
140MT-D9E-A63	450	100-E09	65	50	65	50	100-E09	65	50
140MT-D9E-B10	450	100-E09	65	50	65	50	100-E09	65	50
140MT-D9E-B16	450	100-E09	65	50	65	50	100-E09	65	50
140MT-D9E-B25	450	100-E09	65	30	65	30	100-E09	65	30
140MT-D9E-B40	450	100-E09	65	30	65	30	100-E09	65	30
140MT-D9E-B63	450	100-E09	65	30	65	30	100-E09	65	30
140MT-D9E-C10	450	100-E09	65	30	65	30	100-E09	65	30
140MT-D9E-C16	450	100-E12	65	30	65	30	100-E12	65	30
140MT-D9E-C20	450	100-E26	65	30	65	30	100-E26	65	–
140MT-D9E-C25	450	100-E26	50	30	50	30	100-E26	50	–
140MT-D9E-C29	450	100-E30	50	30	50	30	100-E30	50	–
140MT-D9E-C32	450	100-E38	50	30	30	18	100-E38	30	–
140MT-D9E-C36	450	100-E38	30	30	30	18	100-E38	30	–
140MT-D9E-C40	450	100-E38	30	30	30	18	100-E38	30	–
140MT-D9E-C40	450	100-E40	30	30	30	18	100-E40	30	–

(1) Similar for other contactor configurations (100-E, 104-E, 100S-E, 104S-E)
(2) For full-voltage (delta) ratings above 277V or 347V, follow the NEC or CEC rules for group motor applications.

DRAFT

Table 50 - IEC 60947-4-1, Type 2 Coordination Ratings, MPSDs with Bulletin 100-E IEC Contactors

Cat. No.		415V	
Standard Motor Protection	High Inrush Motor Protection	Max Short-circuit Current [kA]	Min Contactor Size[1]
C-Frame, Adjustable Thermal/Fixed Magnetic (14 x I_n)			
140MT-C3E-A16	–	100	100-E09
140MT-C3E-A25	–	100	100-E09
140MT-C3E-A40	–	100	100-E09
140MT-C3E-A63	–	100	100-E09
140MT-C3E-B10	–	100	100-E09
140MT-C3E-B16	–	100	100-E09
140MT-C3E-B25	–	65	100-E26
140MT-C3E-B40	–	65	100-E26
140MT-C3E-B63	–	65	100-E26
140MT-C3E-C10	–	65	100-E26
140MT-C3E-C16	–	50	100-E26
140MT-C3E-C20	–	50	100-E26
140MT-C3E-C25	–	15	100-E30
140MT-C3E-C29	–	15	100-E30
140MT-C3E-C32	–	15	100-E30
D-Frame, Adjustable Thermal/Fixed Magnetic (14 x I_n)			
140MT-D9E-A63	–	100	100-E09
140MT-D9E-B10	–	100	100-E09
140MT-D9E-B16	–	100	100-E09
140MT-D9E-B25	–	100	100-E09
140MT-D9E-B40	–	65	100-E26
140MT-D9E-B63	–	65	100-E26
140MT-D9E-C10	–	65	100-E26
140MT-D9E-C16	–	65	100-E26
140MT-D9E-C20	–	65	100-E26
140MT-D9E-C25	–	65	100-E26
140MT-D9E-C29	–	65	100-E26
140MT-D9E-C32	–	65	100-E30
140MT-D9E-C36	–	65	100-E30
140MT-D9E-C40	–	66	100-E30
140MT-D9E-C40	–	65	100-E40
–	140MT-D9T-A63	100	100-E09
–	140MT-D9T-B10	100	100-E09
–	140MT-D9T-B16	100	100-E09
–	140MT-D9T-B25	65	100-E26
–	140MT-D9T-B40	65	100-E26
–	140MT-D9T-B63	65	100-E26
–	140MT-D9T-C10	65	100-E26
–	140MT-D9T-C16	65	100-E26
–	140MT-D9T-C20	65	100-E26
–	140MT-D9T-C25	65	100-E26

(1) Similar for other contactor configurations (100-E, 104-E, 100S-E, 104S-E)

DRAFT

Accessory Specifications

Table 51 - Auxiliary Contact Specifications—For 140MT-C... and 140MT-D... Devices

Attribute				Front-mounted Auxiliary Contacts Cat. Nos. 140MT-C-AFA, -AFAR/ -AFAR10M10	Right Side-mounted Auxiliary Contacts Cat. No. 140MT-C-ASA
Rated Thermal Current I_{th}	at 40 °C (104 °F) ambient temperature		[A]	5	10
	at 60 °C (140 °F) ambient temperature		[A]	4	6
Back-up Fuses gG, gL			[A]	10	10
General Use current			[A]	5	10
Rated insulation voltage U_i	IEC		[V]	250	690
	UL/CSA		[V]	240	600
Contact rating code designation (UL/CSA)			AC	B300	A600
			DC	R300	Q600
Rated Supply Current I_e	AC-15	24V	[A]	4	6
		120V	[A]	3	5
		240V	[A]	1.5	3
		415V	[A]	–	2
		690V	[A]	–	1
	DC-13	24V	[A]	1.2	2
		125V	[A]	0.22	0.55
		250V	[A]	0.11	0.27
		400V	[A]	–	0.15
		500V	[A]	–	0.13
Type of Terminals					
Recommended screwdriver				Pozidriv No. 2/Blade No.3	Pozidriv No. 2/Blade No.3
Flexible with insulated ferrule 		1 or 2 conductors		0.5...1.5 mm^2/No. 18...14 AWG	0.5...2.5 mm^2/No. 18...14 AWG
Flexible 		1 or 2 conductors		0.5...1.5 mm^2/No. 18...14 AWG	0.75...2.5 mm^2/No. 18...14 AWG
Stranded per UL/CSA 		1 or 2 conductors		0.5...1.5 mm^2/No. 18...14 AWG	0.75...2.5 mm^2/No. 18...14 AWG
Solid 		1 or 2 conductors		0.5...1.5 mm^2/No. 18...14 AWG	0.5...2.5 mm^2/No. 18...14 AWG
Conductor steps				Max 2 conductor steps allowed	Max 2 conductor steps allowed
Tightening torque				1...1.2 N•m/8.9...10.6 lb•in	1...1.2 N•m/8.9...10.6 lb•in1...1.2

DRAFT

Table 52 - Auxiliary Contact Specifications—For 140M-F... Devices

Attribute				Front-mounted Auxiliary Contacts Cat. Nos. 140M-C-AFA..., 140M-C-AFAR...	Right Side-mounted Auxiliary Contacts Cat. Nos. 140M-C-ASA..., 140M-C-ASAR...
Rated Thermal Current I_{th}	at 40 °C (104 °F) ambient temperature		[A]	5	10
	at 60 °C (140 °F) ambient temperature		[A]	4	6
Back-up Fuses gG, gL			[A]	10	10
Contact rating code designation (UL/CSA)			AC	B300	B600
			DC	Q300	Q600
Rated Supply Current I_e	AC-15	24V	[A]	4	6
		120V	[A]	3	5
		240V	[A]	1.5	3
		415V	[A]	–	2
		690V	[A]	–	0.7
	DC-13	24V	[A]	2	2
		120V	[A]	0.5	0.5
		240V	[A]	0.25	0.25
		415V	[A]	–	0.15
Type of Terminals					
Recommended screwdriver				Pozidriv No. 2/Blade No.3	Pozidriv No. 2/Blade No.3
Flexible with insulated ferrule 		1 conductor		0.5...1.5 mm^2	0.5...2.5 mm^2
		2 conductors		0.75...1.5 mm^2	0.75...2.5 mm^2
Stranded per UL/CSA 		1 or 2 conductors		0.75...1.5 mm^2/No. 18...14 AWG	0.75...2.5 mm^2/No. 18...14 AWG
Solid 		1 or 2 conductors		0.75...1.5 mm^2/No. 18...14 AWG	0.75...2.5 mm^2/No. 18...14 AWG
Tightening torque				1.2...1.5 N•m/10.6...13 lb•in	1.2...1.5 N•m/10.6...13 lb•in

DRAFT

Table 53 - Undervoltage and Shunt Trip Specifications—For 140MT-C... and 140MT-D... Devices

Attribute				Undervoltage Trip for Left-side Mounting Cat. No. 140MT-C-UX	Shunt Trip for Left-side Mounting Cat. No. 140MT-C-SN
Actuating Voltage	Pick-up		[V]	0.85...1.1 x U_s	0.7...1.1 x U_s
	Drop-out		[V]	0.7...0.35 x U_s	0.7...1.1 x U_s
Rated AC Control Voltage	140MT-C-UXK	50 Hz	[V AC]	24	–
		60 Hz	[V AC]	28	–
	140MT-C-UXD	50 Hz	[V AC]	110	–
		60 Hz	[V AC]	120	–
	140MT-C-UXF	50 Hz	[V AC]	220...230	–
		60 Hz	[V AC]	–	–
	140MT-C-UXA	50 Hz	[V AC]	–	–
		60 Hz	[V AC]	240...260	–
	140MT-C-UXN	50 Hz	[V AC]	380...400	–
		60 Hz	[V AC]	440...460	–
	140MT-C-UXB	50 Hz	[V AC]	415	–
		60 Hz	[V AC]	480	–
	140MT-C-SNK	50 Hz	[V AC]	–	24
		60 Hz	[V AC]	–	24...28
	140MT-C-SND	50 Hz	[V AC]	–	110
		60 Hz	[V AC]	–	120
	140MT-C-SNF	50 Hz	[V AC]	–	220...230
		60 Hz	[V AC]	–	–
	140MT-C-SNA	50 Hz	[V AC]	–	–
		60 Hz	[V AC]	–	240...260
	140MT-C-SNT	50 Hz	[V AC]	–	240
		60 Hz	[V AC]	–	277
	140MT-C-SNN	50 Hz	[V AC]	–	380...400
		60 Hz	[V AC]	–	440...460
	140MT-C-SNB	50 Hz	[V AC]	–	415
		60 Hz	[V AC]	–	480
	On-time			Continuous duty	Continuous duty
	Coil consumption	Pick-up	[VA/W]	8.5/8	8.5/8
		Hold-in	[VA/W]	4/2	4/2
Rated DC Control Voltage	140MT-C-SNZJ		[V DC]	–	24
	On-time				Max 5 s
	Coil consumption	Pick-up	[W]		50
Type of Terminals					
Recommended screwdriver				Pozidriv No. 2/Blade No.3	Pozidriv No. 2/Blade No.3
Flexible with insulated ferrule		1 or 2 conductors		0.5...2.5 mm^2/ No. 18...14 AWG	0.5...2.5 mm^2/ No. 18...14 AWG
Flexible		1 or 2 conductors		0.75...2.5 mm^2/ No. 18...14 AWG	0.75...2.5 mm^2/ No. 18...14 AWG
Stranded per UL/CSA		1 or 2 conductors		0.75...2.5 mm^2/ No. 18...14 AWG	0.75...2.5 mm^2/ No. 18...14 AWG
Solid		1 or 2 conductors		0.5...2.5 mm^2/ No. 18...14 AWG	0.5...2.5 mm^2/ No. 18...14 AWG
Conductor steps				Max 2 conductor steps allowed	Max 2 conductor steps allowed
Tightening torque				1...1.2 N•m/8.9...10.6 lb•in	1...1.2 N•m/8.9...10.6 lb•in1...1.2

DRAFT

Table 54 - Undervoltage and Shunt Trip Specifications—For 140M-F... Devices

Attribute				Undervoltage Trip for Left-side Mounting Cat. No. 140M-C-UX..., -UC...	Shunt Trip for Left-side Mounting Cat. No. 140M-C-SN...
Actuating Voltage	Pick-up		[V]	0.85...1.1 x U_s	0.7...1.1 x U_s
	Drop-out		[V]	0.7...0.35 x U_s	0.7...1.1 x U_s
Rated AC Control Voltage	Min	50 Hz	[V AC]	21	21
		60 Hz	[V AC]	24	24
	Max	60 Hz	[V AC]	600	600
	On-time			Continuous duty	Continuous duty
	Coil consumption	Pick-up	[VA/W]	8.5/8	8.5/8
		Hold-in	[VA/W]	4/2	4/2
Type of Terminals					
Recommended screwdriver				Pozidriv No. 2/Blade No.3	Pozidriv No. 2/Blade No.3
Flexible with insulated ferrule 		1 conductor		0.5...2.5 mm^2	0.5...2.5 mm^2
		2 conductors		0.75...2.5 mm^2	0.75...2.5 mm^2
Stranded per UL/CSA 		1 or 2 conductors		0.75...2.5 mm^2/No. 18...14 AWG	0.75...2.5 mm^2/No. 18...14 AWG
Solid 		1 or 2 conductors		0.75...2.5 mm^2/No. 18...14 AWG	0.75...2.5 mm^2/No. 18...14 AWG
Tightening torque				1.2...1.5 N•m/10.6...13.3 lb•in	1.2...1.5 N•m/10.6...13.3 lb•in

Table 55 - Feeder Terminals

		Compact Busbar Feeder Terminal		Compact Busbar	
		140MT-C-WTEN	140M-F-WTE	140MT-C-W...(1)	140M-F-W...
Rated Thermal Current I_{th} at 60 °C (140 °F) ambient temperature	[A]	64	120	64	120
Flexible with insulated ferrule 	1 conductor	2.5...25 mm^2/No. 14...4 AWG	–	–	–
Stranded per UL/CSA 	1 conductor	2.5...25 mm^2/No. 14...4 AWG	4...50 mm^2/No. 12...1/0 MCM	–	–
Solid 	1 conductor	2.5...25 mm^2/No. 14...4 AWG	2.5...50 mm^2/No. 12...1/0 MCM	–	–
De-isolation (stripping) length	[mm (in)]	14 (0.55)		–	–
Tightening torque		3...3.5 N•m/27...31 lb•in	5...6 N•m/45...54 lb•in	–	–

(1) Rated thermal current is 57 A at 70 °C (158 °F) ambient temperature.

Table 56 - Feeder Blocks for Compact Busbars

		IEC 60947		UL 60947/CAN/CSA-C22.2 No. 60947			
		140MT-C-WBE 1, 3, 5	140MT-C-WBE 2, 4, 6	140MT-C-WBE L1, L2, L3	140MT-C-WBE T1, T2, T3	140M-F-WBE L1, L2, L3	140M-F-WBE T1, T2, T3
Rated Thermal Current I_{th} at 60 °C (140 °F) ambient temperature	[A]	64		64		IEC120/UL115	
Flexible with insulated ferrule 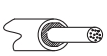	1 conductor	4...25 mm^2	for use with 140MT-C-W	No. 10...4 AWG	for use with 140MT-C-W	4...50 mm^2/ No. 10...4 AWG	for use with 140M-F-W
Flexible 	1 conductor	4...25 mm^2	for use with 140MT-C-W	No. 10...4 AWG	for use with 140MT-C-W	–	–
Stranded per UL/CSA 	1 conductor	4...25 mm^2	for use with 140MT-C-W	No. 10...4 AWG	for use with 140MT-C-W	4...25 mm^2/ No. 10...4 AWG	for use with 140M-F-W
Solid 	1 conductor	2.5...25 mm^2	for use with 140MT-C-W	No. 14...4 AWG	for use with 140MT-C-W	2.5...25 mm^2/ No. 14...4 AWG	for use with 140M-F-W
Tightening torque		3...3.5 N•m	2...2.5 N•m	27...31 lb•in	18...22 lb•in	5...6 N•m/45...54 lb•in	

DRAFT

Time-Current Characteristic

Figure 10 - Motor Protection Circuit Breakers Time-Current Characteristic

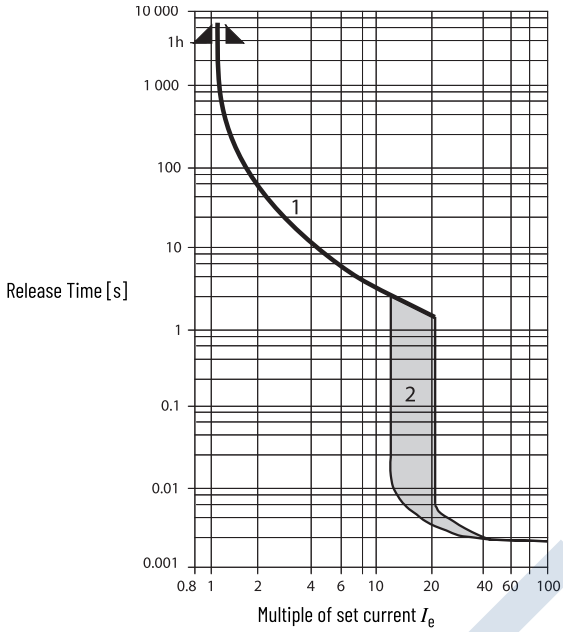

140MT-C, -D, 140M-F Motor Protection Circuit Breakers (for 140MT-D9V, see ratings)

Thermal Release Trip Current

The adjustable current-dependent delayed bimetal release protects motors against overload. The curve shows the mean operating current at an ambient temperature of 20 °C (68 °F) starting from the cold state. Careful testing and setting ensures effective motor protection even in the case of single phasing. The overload characteristic is also valid for transformer protection.

Magnetic Release Trip Current

The instantaneous magnetic trip has a fixed operating current setting. This corresponds to 13...14 times the maximum value of the setting range. (Transformer protection up to 20 x I_e max.) At a lower setting, it is correspondingly higher.

Current Setting I_eF

The overload trip corresponds to a thermal overload relay in a motor starter conforming to IEC 60947-4-1. If a different value is prescribed (for example, reduced I_e for cooling medium having a temperature higher than 40 °C (104 °F) or a place of installation higher than 2000 m (6561 ft) above sea level), the setting current is equal to the reduced rated current I_e of the motor.

DRAFT

Approximate Dimensions

Dimensions are in millimeters (inches) and are not intended for manufacturing purposes.

140MT-C, 140MT-D Devices and Accessories

Figure 11 - Mounting Position

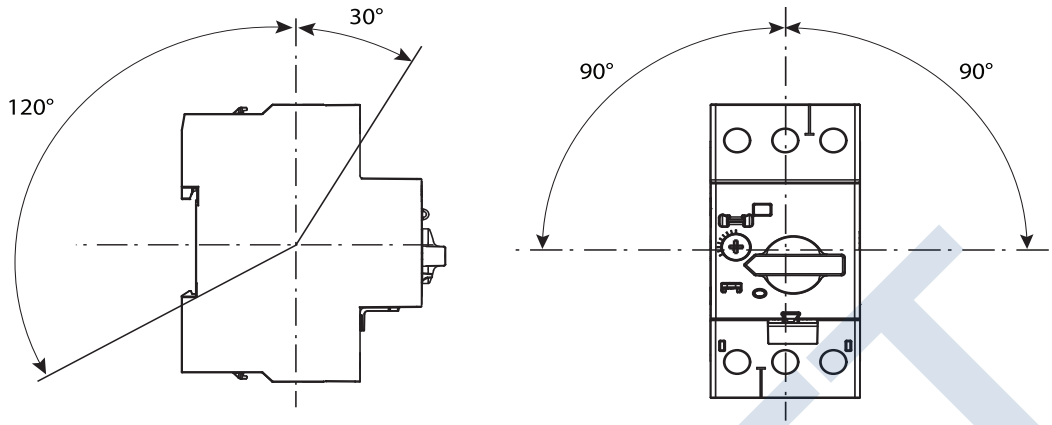

Figure 12 - Spacing Requirements

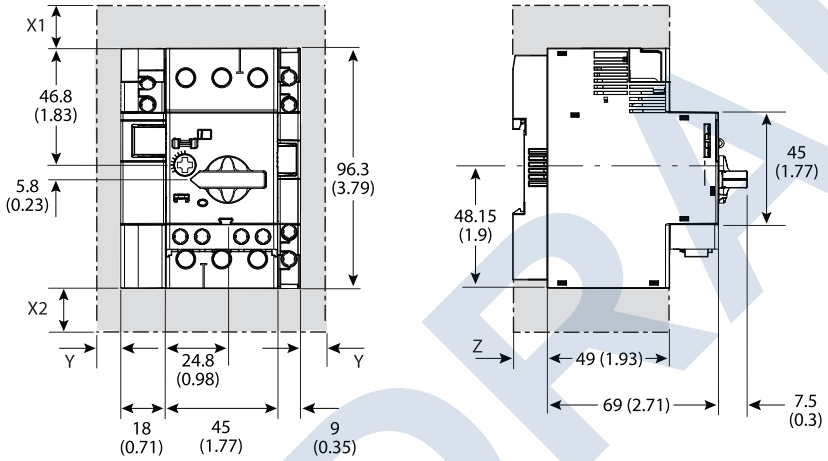

Frame Size	Voltage [V AC]	Minimum Distance to Grounded Parts or Walls [mm (in)]			Z
		X1	X2	Y	
C-Frame	400	30 (1-3/16)	30 (1-3/16)	9 (23/64)	7.5 (19/64)
	500	30 (1-3/16)	30 (1-3/16)	9 (23/64)	
	690	50 (1-31/32)	50 (1-31/32)	30 (1-3/16)	
D-Frame	400	30 (1-3/16)	30 (1-3/16)	9 (23/64)	13.5 (17/32)
	500	30 (1-3/16)	30 (1-3/16)	9 (23/64)	
	690	50 (1-31/32)	50 (1-31/32)	30 (1-3/16)	

DRAFT

Figure 13 - Motor Protection Circuit Breaker (C-Frame), Cat. No. 140MT-C3...

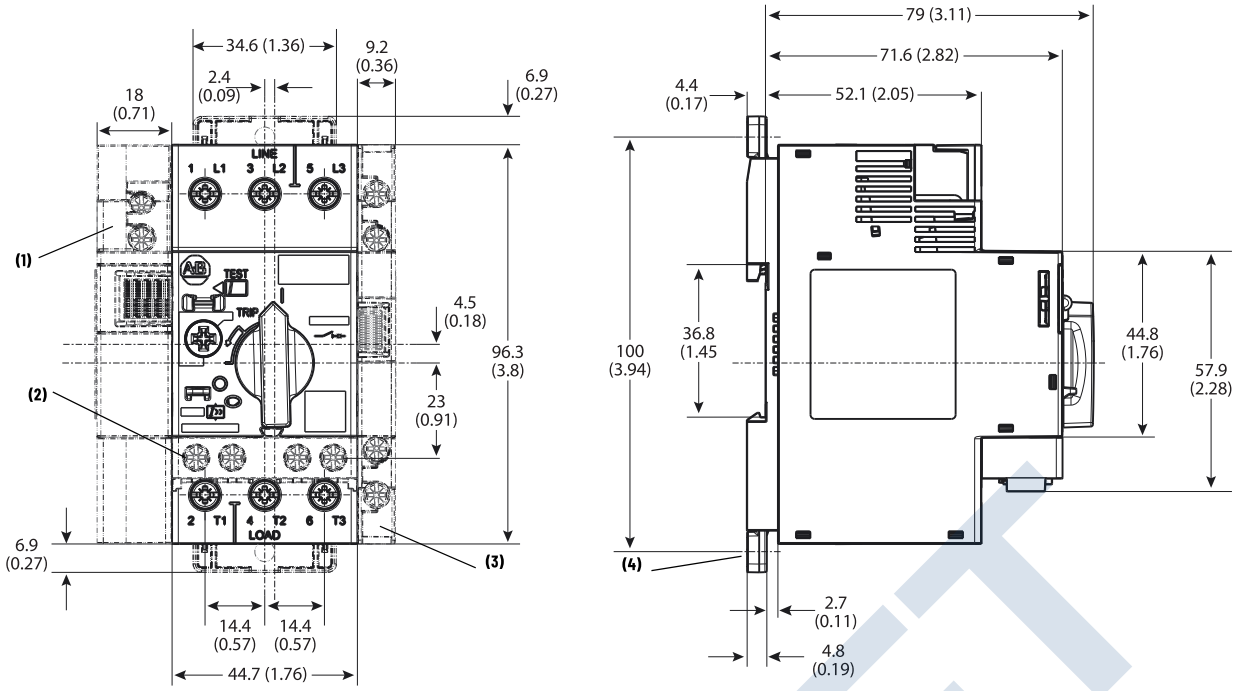

Note	Information
1	Undervoltage/shunt trip
2	Auxiliary contact (front mounted)

Note	Information
3	Auxiliary contact (side mounted)
4	Screw mounting adapter

Figure 14 - Motor Protection Circuit Breaker (D-Frame), Cat. No. 140MT-D9...

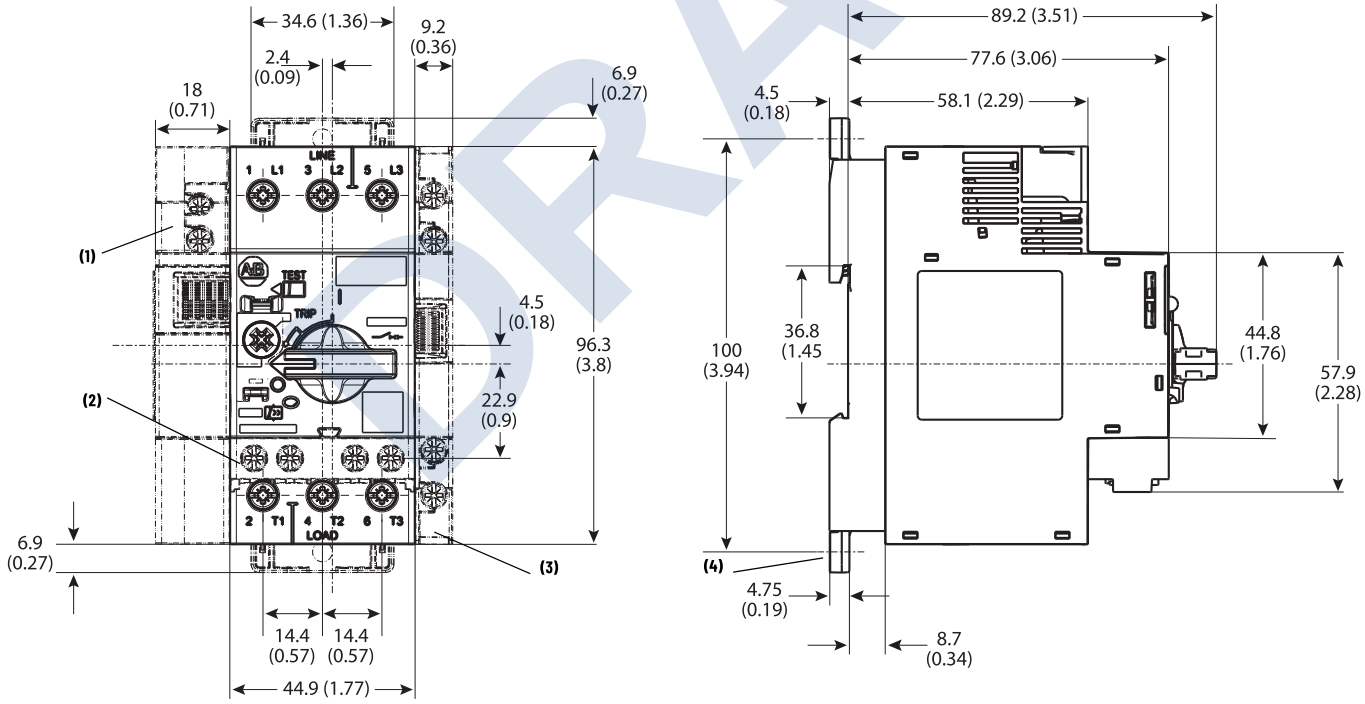

Note	Information
1	Undervoltage/shunt trip
2	Auxiliary contact (front mounted)

Note	Information
3	Auxiliary contact (side mounted)
4	Screw mounting adapter

DRAFT

Figure 15 - Feeder Terminal for Compact Busbar, Cat. No. 140MT-C-WTEN

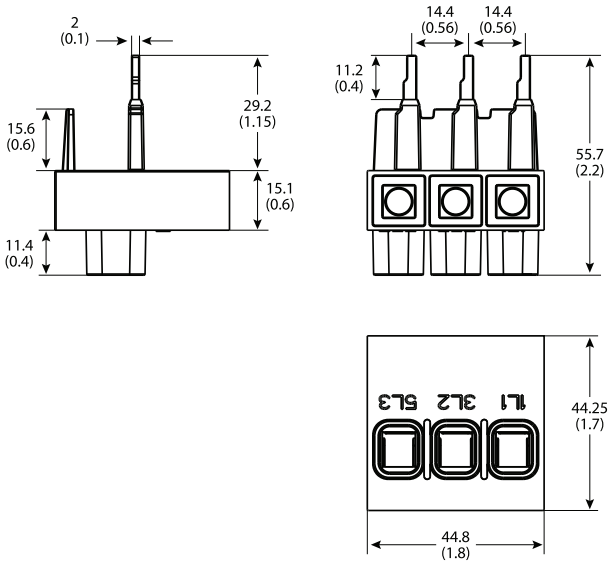

Figure 16 - Terminal Cover, Cat. No. 140MT-C-WSN

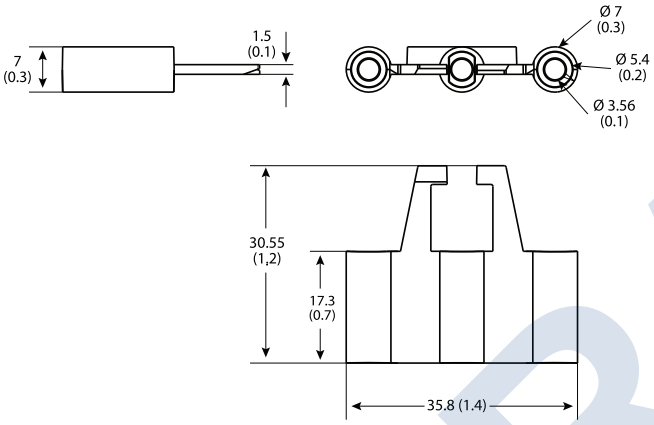

Figure 17 - 140MT-C and 140MT-D with Cat. No. 140MT-C-TE Type E Adapter

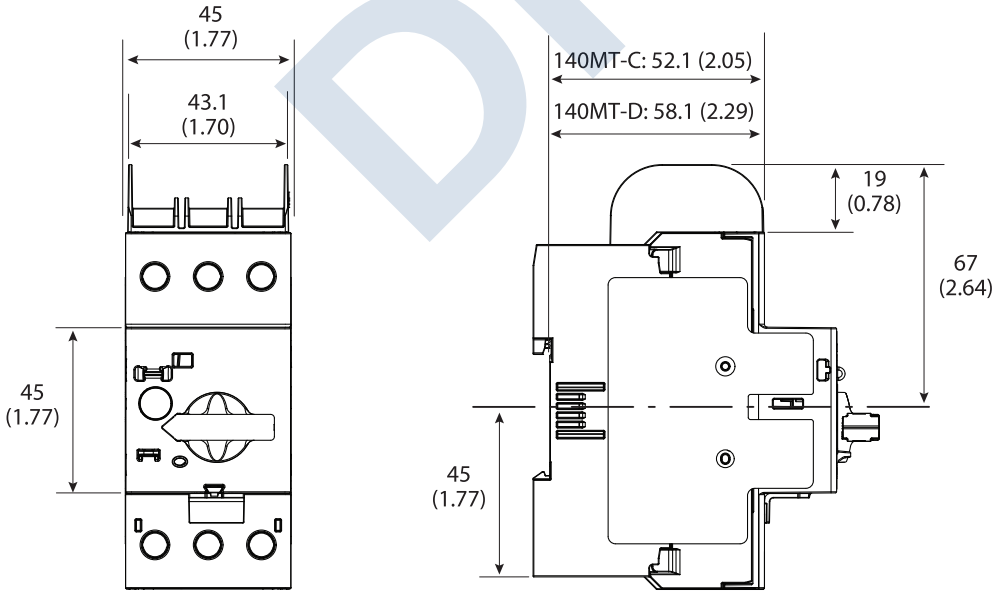

DRAFT

140M-F Devices and Accessories

Figure 18 - Mounting Position/Safety Clearance

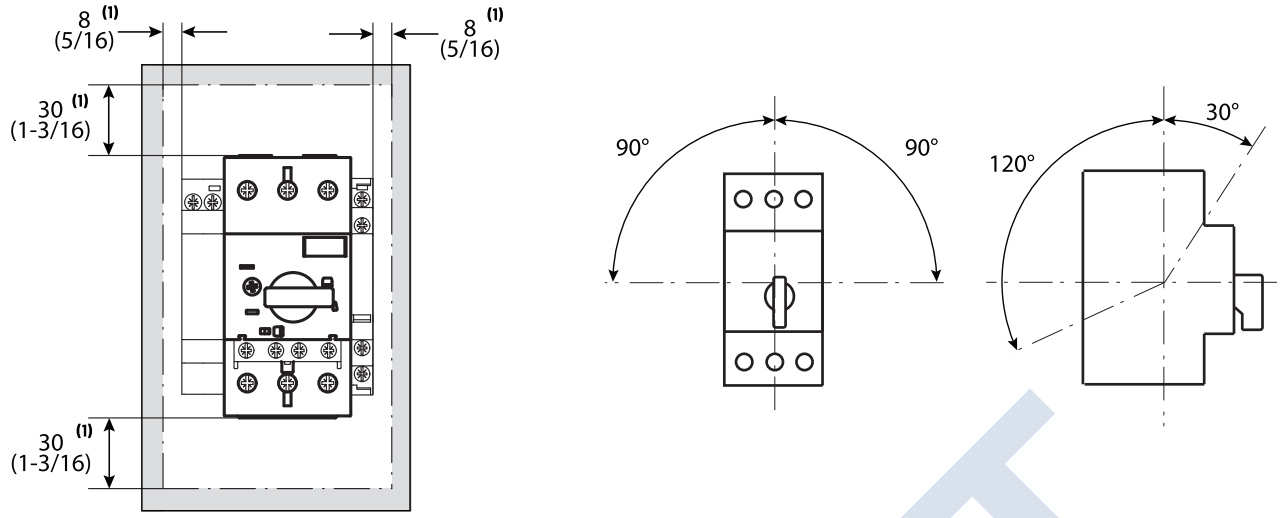

Note	Information
1	Minimum distance to grounded parts or walls

Figure 19 - Motor Protection Circuit Breaker (F-Frame), Cat. No. 140M-F8...

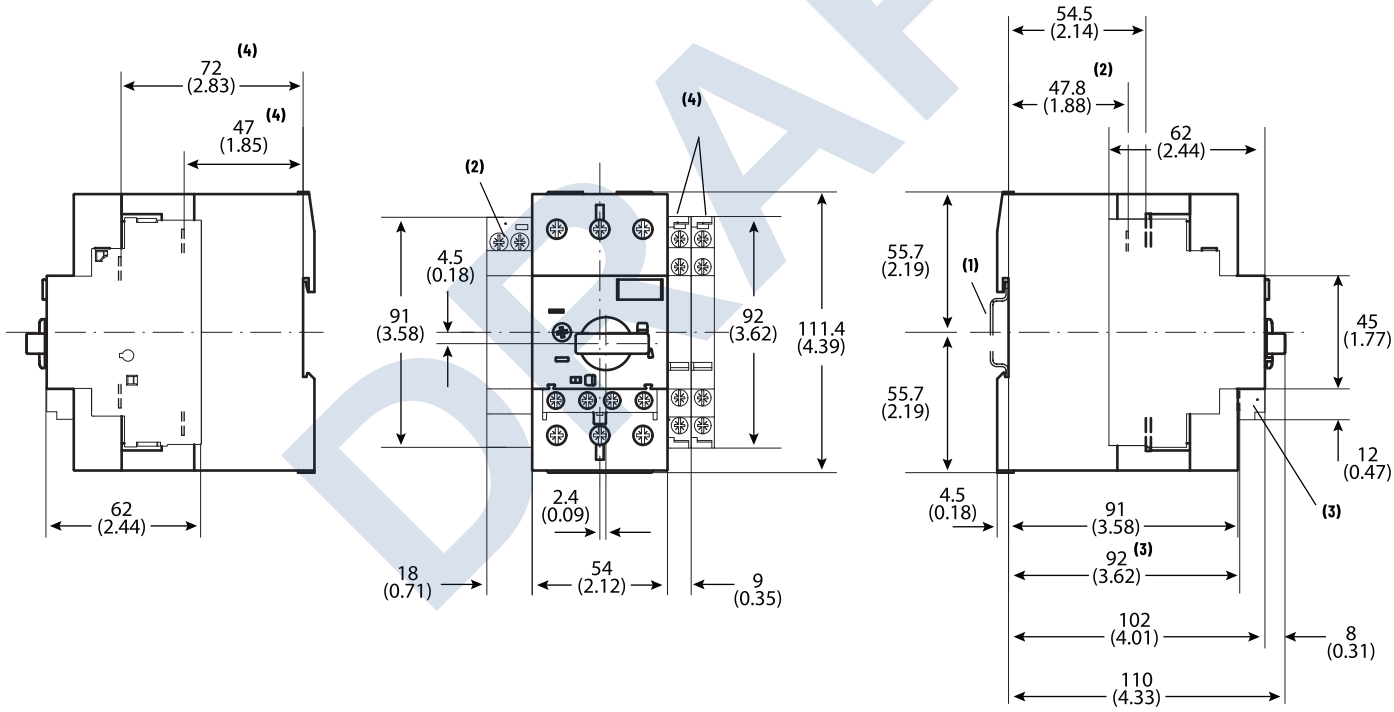

Note	Information
1	Mounting on 35 mm DIN Rail
2	Undervoltage/shunt trip
3	Auxiliary contact (front mounted)
4	Auxiliary contact (side mounted)

DRAFT

Figure 20 - Cat. No. 140M-F-TE Type E adapter on Cat. No. 140M-F8E...

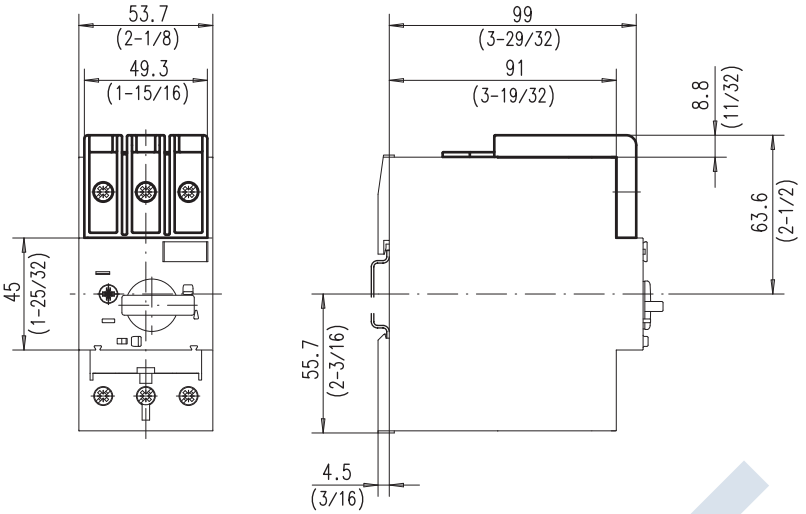

Figure 21 - Screw Adapter, Cat. No. 140M-C-N45

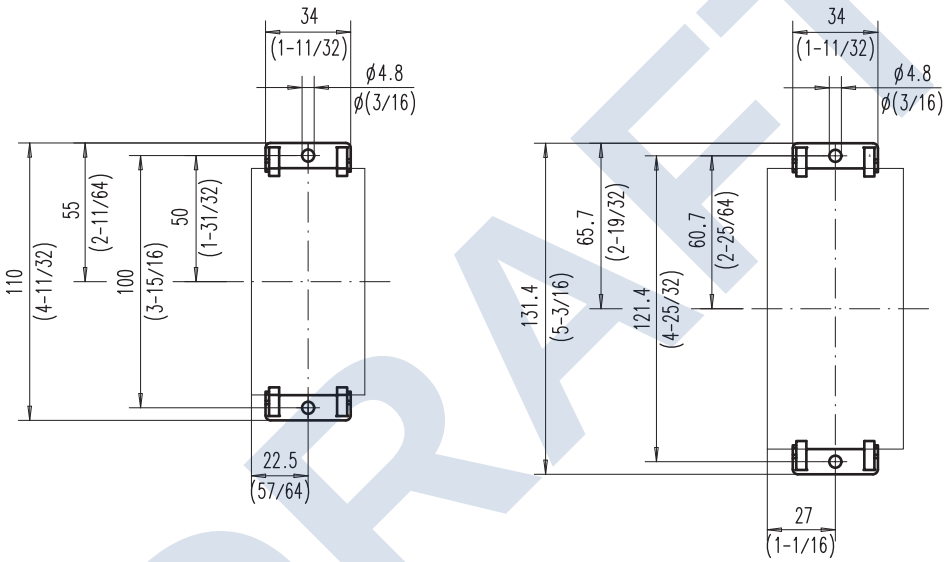

DRAFT

Technical Data

Allen-Bradley

PowerFlex 520-Series AC Drive Specifications

Original Instructions



DRAFT

Topic	Page
Product Overview	2
Catalog Number Explanation	8
Technical Specifications	9
Environmental Specifications	12
Certifications	13
Dimensions and Weights	14
Design Considerations	16
Fuses and Circuit Breaker Ratings	27
Accessories and Dimensions	32
Safe-Torque-Off Function	42
Additional Resources	47

Drive Features: **AppView**™, **CustomView**™, **QuickView**™, and **MainsFree**™ configuration and programming tools.

LISTEN. THINK. SOLVE.®

Product Overview

The PowerFlex® 520-Series AC drive delivers an innovative design that is remarkably versatile and can accommodate systems ranging from standalone machines to simple system integration. The PowerFlex 523 drive provides general purpose control for applications ranging up to 30 HP and 22 kW. The PowerFlex 525 drive provides maximum flexibility and performance ranging up to 30 HP and 22 kW.

By combining a variety of motor control options, communications, energy savings and standard safety features in a cost-effective drive, the PowerFlex 520-Series drive is suitable for a wide array of applications.

Maximize your system performance and productivity by taking advantage of the following key features offered in a PowerFlex 520-Series drive.

PowerFlex 520-Series AC Drives Feature

Modular Design

- Detachable control module and power module allow **simultaneous configuration and installation**.
- Each drive has **a standard control module** used across the entire power range.
- **MainsFree™ configuration** allows you to simply connect your control module to a PC with a standard USB cable and quickly upload, download, and flash the drive with new settings.
- **Support for accessory cards** without affecting footprint.
  (PowerFlex 523 drives support one, PowerFlex 525 drives support two)

Packaging and Mounting

- Installation can be quick and easy using the **DIN rail mounting** feature on A, B, and C frame drives. Panel mounting is also available, providing added flexibility.
- **Zero Stacking™** is allowed for ambient temperatures up to 45 °C, saving valuable panel space.
- **Integral filtering** is available on all 200V and 400V ratings, providing a cost-effective means of meeting EN61800-3 Category C2 and C3 EMC requirements. External filters provide compliance to EN61800-3 Category C1, C2, and C3 EMC requirements for all PowerFlex 520-Series ratings.
- An optional **IP 30, NEMA/UL Type 1 conduit box** is easily adapted to the standard IP 20 (NEMA Type Open) product, providing increased environmental ratings.

Optimized Performance

- **Removable MOV** to ground provides trouble-free operation when used on ungrounded distribution systems.
- A **relay pre-charge** limits inrush current.
- **Integral brake transistor**, available on all ratings, provides dynamic braking capability with simple low cost brake resistors.
- A jumper to switch between **24V DC sink or source control** for control wiring flexibility.
- **Dual Overload Rating** available for drives above 15 HP/11 kW. Normal duty: 110% overload for 60 seconds or 150% for 3 seconds. Heavy duty: 150% overload for 60 seconds or 180% overload (200% programmable) for 3 seconds provides robust overload protection.
- **Adjustable PWM frequency up to 16 kHz** ensures quiet operation.

DRAFT

PowerFlex 520-Series AC Drive Advanced Features

Control Performance

- **Variety of motor control options, including:**
  - Volts per hertz (V/Hz)
  - Sensorless Vector Control (SVC)
  - Closed loop velocity vector control (PowerFlex 525 drives only)
  - Permanent Magnet motor control (PowerFlex 525 drives only)
- **Variety of Positioning Control, including:**
  - PointStop™ stops motor load in a consistent position without encoder feedback
  - Closed loop feedback with an optional encoder card (PowerFlex 525 drives only)
  - Point-to-point positioning mode (PowerFlex 525 drives only)
- **Integral PID** functionality enhances application flexibility (PowerFlex 523 drives have one PID loop, PowerFlex 525 drives have two PID loops)

I/O Wiring

PowerFlex 523

- **One (1) Analog Input** (unipolar voltage or current) independently isolated from the rest of the drive I/O.
- **Five (5) Digital Inputs** (four programmable) provide application versatility.
- **One (1) Analog Output**(1) which is jumper selectable between either 0-10V or 0-20 mA. This scalable, 10-bit output is suitable for metering or as a speed reference to another device.
- **One (1) Relay Output** (form C) can be used to indicate various drive, motor or logic conditions.

(1) Analog output (terminal 15) is only available on PowerFlex 523 series B drive and requires firmware 3.001 and later to configure the analog output parameters.

PowerFlex 523 Series B Control I/O Wiring Block Diagram

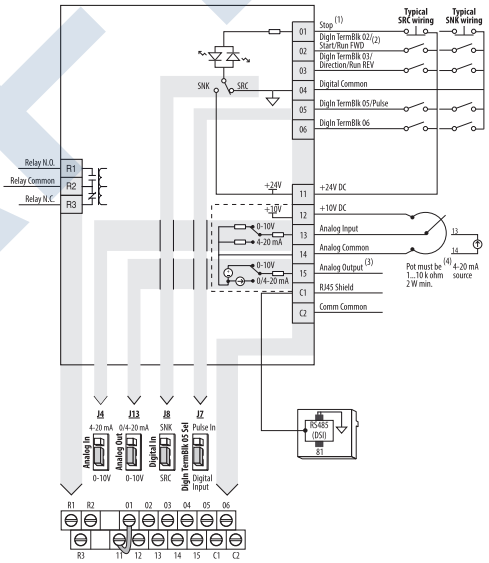

PowerFlex 525

- **Two (2) Analog Inputs** (one unipolar and one bipolar) are independently isolated from the rest of the drive I/O. These inputs can be toggled via a digital input.
- **Seven (7) Digital Inputs** (six programmable) provide application versatility.
- **One (1) Analog Output** which is jumper selectable between either 0-10V or 0-20 mA. This scalable, 10-bit output is suitable for metering or as a speed reference to another drive.
- **Two (2) Opto Outputs and two (2) Relay Outputs** (one form A and one form B) can be used to indicate various drive, motor or logic conditions.

PowerFlex 525 Control I/O Wiring Block Diagram

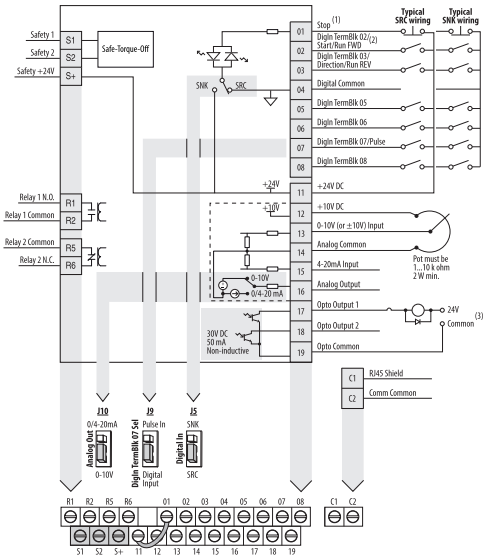

DRAFT

Communications

- **Embedded EtherNet/IP™ port** allows easy configuration, control, and collection of drive data over the network. (PowerFlex 525 drives only)
- **Dual port EtherNet/IP option card** supports Device Level Ring (DLR) topologies, providing **fault-tolerant connectivity** for optimum drive availability.
- **Integral RS485/DSI communications** enable the drives to be used in a multi-drop network configuration.
- Optional communication cards such as **DeviceNet™**, and **PROFIBUS DP™** can improve machine performance.
- **Online EDS file creation** with RSNetWorx™ providing ease of set-up on a network.

Optimized for Common DC Bus Installations

Enhanced Control of Internal Pre-charge

Common DC Bus offers additional inherent breaking capabilities by utilizing all the drives/loads on the bus for energy absorption offering higher efficiency and cost savings. The PowerFlex 520-Series drive has been optimized for use in **Common DC Bus** or **Shared DC Bus installation**s.

- Configurable pre-charge control using digital inputs.
- Direct DC Bus connection to power terminal blocks.

Improved Ride Through

Operation Down to 1/2 Line Voltage

The PowerFlex 520-Series drive allows for the selection of **1/2 DC Bus operation**, for use in critical applications where continued drive output is desired even in the event of brown out or low voltage conditions. The PowerFlex 520-Series drive also supports **enhanced inertia ride through** for additional low voltage mitigation.

- Selectable 1/2 line voltage operation.
- Increased power loss ride through.

DRAFT

Additional Features of PowerFlex 525 Drives

Closed Loop Feedback

Encoder/Pulse Train Input

The PowerFlex 525 drive allows for configurable closed loop control with an optional encoder card for either speed or position feedback for improved speed regulation, basic position control, or other pulse inputs for motor control.

- Improved speed regulation
- Basic position control

Basic Position Control

Local Position Control

- Position regulator with StepLogic™
  - 8 positions (local logic)

Outer Position Control Loop

- **Analog input bipolar mode** offers improved zero-cross performance.
- **Simple motion control** applications with more complex position profiles.
- **Speed reference** supplied to drive via Analog Input or multiple field bus network options.
- **Speed ratio** available for simple draw applications.

Feedback Details

Line Driver Type Incremental Encoder Option Card

- Quadrature (dual channel) or Single Channel
- 5V/12V DC supply, 10 mA min per channel
- Single Ended or Differential (A, B Channel)
- Duty Cycle of 50%, +10%
- Input Frequency up to 250 kHz

Pulse Train Input

- Configurable Input Voltage 5V/12V/24V DC autodetect
- Input Frequency up to 100 kHz

Encoder Wiring Examples

I/O	Connection Example	I/O	Connection Example
Encoder Power – Internal Drive Power Internal (drive) 12V DC, 250 mA	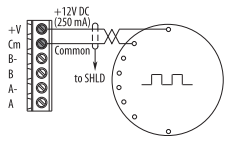	**Encoder Power – External Power Source**	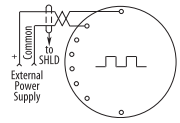
Encoder Signal – Single-Ended, Dual Channel	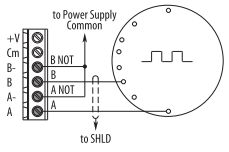	**Encoder Signal – Differential, Dual Channel**	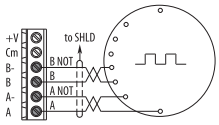

Safety Inside using Safe-Torque-Off Function

Safe Torque-Off is a standard safety feature of the PowerFlex 525 drive to help protect personnel and equipment. Safe Torque-off allows you to restart your application faster after a safety-related situation.

- Safe Torque-Off functionality **removes rotational power without powering down the drive**.
- Embedded safety **reduces wiring and saves on installation space**.
- Meets ISO 13849-1 standards and provides safety ratings up to and including **SIL 2/PLd**.

DRAFT

Communications and Software

Versatile Programming and Network Solutions

- PowerFlex 520-Series drives are compatible with any device that acts as a **RTU Master** and supports standard 03 and 06 RTU commands.
- A network can be configured using PowerFlex 520-Series drives for **high performance and flexible configuration** capabilities.
  - Embedded port for EtherNet/IP (PowerFlex 525 drives only)
  - EtherNet/IP dual-port option card
  - DeviceNet option card
  - PROFIBUS DP option card
- A **multi-drive solution** can be reached using a single PowerFlex 520-Series drive, with the ability for up to five (5) drives to reside on one (1) node.
- **Integral RS485** communications enable the drives to be used in a multi-drop network configuration. A serial converter module (SCM) provides connectivity to any controller with a DF1 port. The SCM can be eliminated if the controller acts as a RTU Master.

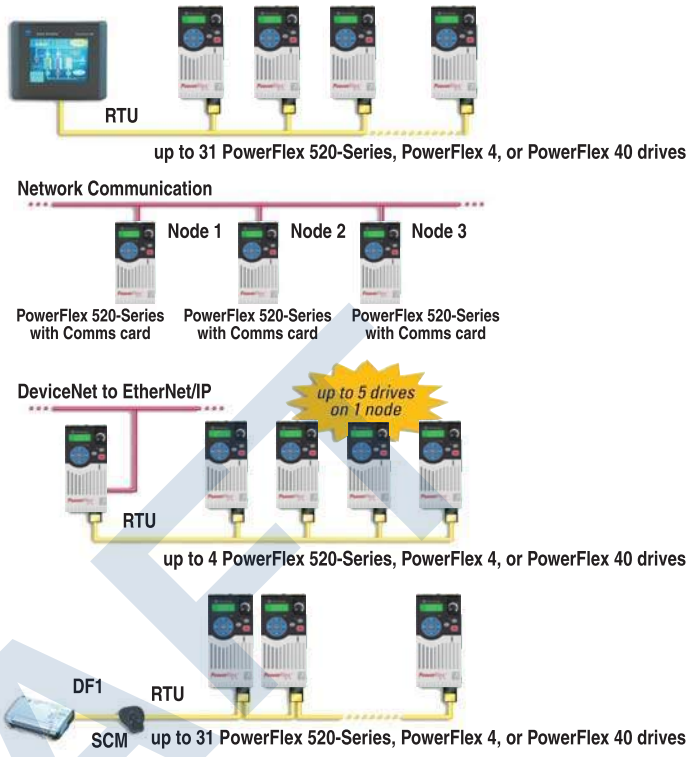

PC Programming Software

Connected Components Workbench™

- Supports plug-and-play connectivity through a standard USB connection.
- AppView™ tool provides parameter groups for several of the most common applications.
- Create and save custom parameter groups using the CustomView™ tool.
- Supports PowerFlex drives, Micro800™ controllers and PanelView™ component graphic terminals.

Studio 5000™ Logix Designer

- Add-on profiles (AOPs) for PowerFlex 520-seriers AC drives provide seamless integration into the Logix environment.
- Configuration files from Studio 5000 Logix Designer(1) can be transferred directly to the PowerFlex 520-Series drive over EtherNet/IP.
- Automatic Device Configuration (ADC) uploads configuration parameters to a replaced drive, minimizing the need for a manual reconfiguration.

(1) The Logix Designer application is the rebranding of RSLogix 5000 software. You can also use RSLogix 5000 version 17 or greater.

DRAFT

PowerFlex 523 Drive Family



Frame A | Frame B | Frame C | Frame D | Frame E

PowerFlex 525 Drive Family



Frame A | Frame B | Frame C | Frame D | Frame E

DRAFT

Catalog Number Explanation

1-3	4	5	6-8	9	10	11	12	13	14
25B	**–**	**B**	**2P3**	**N**	**1**	**1**	**4**	**–**	**–**
Drive	Dash	Voltage Rating	Rating	Enclosure	Reserved	Emission Class	Reserved	Dash	Dash

Code	Type
25A	PowerFlex 523
25B	PowerFlex 525

Code	Voltage	Phase
V	120V AC	1
A	240V AC	1
B	240V AC	3
D	480V AC	3
E	600V AC	3

Code	Enclosure
N	IP20 NEMA / Open

Code	Interface Module
1	Standard

Code	EMC Filter
0	No Filter
1	Filter

Code	Braking
4	Standard

Output Current @ 1 Phase, 100...120V Input

Code	Amps	Frame	ND		HD	
			HP	kW	HP	kW
1P6[1]	1.6	A	0.25	0.2	0.25	0.2
2P5	2.5	A	0.5	0.4	0.5	0.4
4P8	4.8	B	1.0	0.75	1.0	0.75
6P0	6.0	B	1.5	1.1	1.5	1.1

Output Current @ 1 Phase, 200...240V Input

Code	Amps	Frame	ND		HD	
			HP	kW	HP	kW
1P6[1]	1.6	A	0.25	0.2	0.25	0.2
2P5	2.5	A	0.5	0.4	0.5	0.4
4P8	4.8	A	1.0	0.75	1.0	0.75
8P0	8.0	B	2.0	1.5	2.0	1.5
011	11.0	B	3.0	2.2	3.0	2.2

Output Current @ 3Phase, 200...240V Input

Code	Amps	Frame	ND		HD	
			HP	kW	HP	kW
1P6[1]	1.6	A	0.25	0.2	0.25	0.2
2P5	2.5	A	0.5	0.4	0.5	0.4
5P0	5.0	A	1.0	0.75	1.0	0.75
8P0	8.0	A	2.0	1.5	2.0	1.5
011	11.0	A	3.0	2.2	3.0	2.2
017	17.5	B	5.0	4.0	5.0	4.0
024	24.0	C	7.5	5.5	7.5	5.5
032	32.2	D	10.0	7.5	10.0	7.5
048[2]	48.3	E	15.0	11.0	10.0	7.5
062[2]	62.1	E	20.0	15.0	15.0	11.0

Output Current @ 3 Phase, 380...480V Input

Code	Amps	Frame	ND		HD	
			HP	kW	HP	kW
1P4	1.4	A	0.5	0.4	0.5	0.4
2P3	2.3	A	1.0	0.75	1.0	0.75
4P0	4.0	A	2.0	1.5	2.0	1.5
6P0	6.0	A	3.0	2.2	3.0	2.2
010	10.5	B	5.0	4.0	5.0	4.0
013	13.0	C	7.5	5.5	7.5	5.5
017	17.0	C	10.0	7.5	10.0	7.5
024	24.0	D	15.0	11.0	15.0	11.0
030[2]	30.0	D	20.0	15.0	15.0	11.0
037[2]	37.0	E	25.0	18.5	20.0	15.0
043[2]	43.0	E	30.0	22.0	25.0	18.5

Output Current @ 3 Phase, 525...600V Input

Code	Amps	Frame	ND		HD	
			HP	kW	HP	kW
0P9	0.9	A	0.5	0.4	0.5	0.4
1P7	1.7	A	1.0	0.75	1.0	0.75
3P0	3.0	A	2.0	1.5	2.0	1.5
4P2	4.2	A	3.0	2.2	3.0	2.2
6P6	6.6	B	5.0	4.0	5.0	4.0
9P9	9.9	C	7.5	5.5	7.5	5.5
012	12.0	C	10.0	7.5	10.0	7.5
019	19.0	D	15.0	11.0	15.0	11.0
022[2]	22.0	D	20.0	15.0	15.0	11.0
027[2]	27.0	E	25.0	18.5	20.0	15.0
032[2]	32.0	E	30.0	22.0	25.0	18.5

(1) This rating is only available for PowerFlex 523 drives.

(2) Normal and Heavy Duty ratings are available for this drive.

DRAFT

Technical Specifications

Protection

Specifications	PowerFlex 523	PowerFlex 525
Bus Overvoltage Trip		
100...120V AC Input:	405V DC bus (equivalent to 150V AC incoming line)	
200...240V AC Input:	405V DC bus (equivalent to 290V AC incoming line)	
380...480V AC Input:	810V DC bus (equivalent to 575V AC incoming line)	
525...600V AC Input:	1005V DC bus (equivalent to 711V AC incoming line)	
Bus Undervoltage Trip		
100...120V AC Input:	190V DC bus (equivalent to 75V AC incoming line)	
200...240V AC Input:	190V DC bus (equivalent to 150V AC incoming line)	
380...480V AC Input:	390V DC bus (equivalent to 275V AC incoming line)	
525...600V AC Input		
P038 = 3 "600V":	487V DC bus (equivalent to 344V AC incoming line)	
P038 = 2 "480V":	390V DC bus (equivalent to 275V AC incoming line)	
Power Ride-Thru:	100 ms	
Logic Control Ride-Thru:	0.5 s minimum, 2 s typical	
Electronic Motor Overload Protection:	Provides class 10 motor overload protection according to NEC article 430 and motor over-temperature protection according to NEC article 430.126 (A) (2). UL 508C File 29572.	
Overcurrent:	200% hardware limit, 300% instantaneous fault	
Ground Fault Trip:	Phase-to-ground on drive output	
Short Circuit Trip:	Phase-to-phase on drive output	

Electrical

Specifications	PowerFlex 523	PowerFlex 525
Voltage Tolerance:	-15% / +10%	
Frequency Tolerance:	47...63 Hz	
Input Phases:	Three-phase input provides full rating. Single-phase input provides 35% rating on three-phase drives.	
Displacement Power Factor:	0.98 across entire speed range	
Maximum Short Circuit Rating:	100,000 Amps Symmetrical	
Actual Short Circuit Rating:	Determined by AIC Rating of installed fuse/circuit breaker	
Transistor Type:	Isolated Gate Bipolar Transistor (IGBT)	
Internal DC Bus Choke	Only for Frame E drive ratings	
200...240V AC Input:	11 kW (15 HP)	
380...480V AC Input:	15...18.5 kW (20...25 HP) – Heavy Duty	
525...600V AC Input:	15...18.5 kW (20...25 HP) – Heavy Duty	

Control

Specifications	PowerFlex 523	PowerFlex 525
Method	Sinusoidal PWM, Volts/Hertz, Sensorless Vector Control, Economizer SVC motor control, Closed Loop Velocity Vector Control, Surface Mount and Interior Permanent Magnet Motor (without encoder), Interior Permanent Magnet Motor (with encoder) (Closed Loop Velocity Vector Control and PM motor control are not applicable to PowerFlex 523 drives)	
Carrier Frequency	2...16 kHz, Drive rating based on 4 kHz	
Frequency Accuracy		
Digital Input:	Within ±0.05% of set output frequency	
Analog Input:	Within 0.5% of maximum output frequency, 10-Bit resolution	
Analog Output:	±2% of full scale, 10-Bit resolution	

DRAFT

ITEM 746L

Specifications	PowerFlex 523	PowerFlex 525
Performance		
V/Hz (Volts per Hertz):	±1% of base speed across a 60:1 speed range	
SVC (Sensorless Vector):	±0.5% of base speed across a 100:1 speed range	
SVC Economizer:	±0.5% of base speed across a 100:1 speed range	
	(Applicable to PowerFlex 525 drives only)	
VVC (Velocity Vector Control):	±0.5% of base speed across a 60:1 speed range	
PM Motor(1):	±0.5% of base speed, up to a 20:1 speed range	
Performance with Encoder	(Applicable to PowerFlex 525 drives only)	
SVC (Sensorless Vector):	±0.1% of base speed across a 100:1 speed range(2)	
SVC Economizer:	±0.1% of base speed across a 100:1 speed range(2)	
VVC (Velocity Vector Control):	±0.1% of base speed across a 1000:1 speed range(2)	
PM Motor (iPM motor, 10 HP rating and below)(1):	±0.1% of base speed, up to a 60:1 speed range	
Output Voltage Range:	0V to rated motor voltage	
Output Frequency Range:	0...500 Hz (programmable)	
Efficiency:	97.5% (typical)	
Stop Modes:	Multiple programmable stop modes including – Ramp, Coast, DC-Brake, and Ramp-to-Stop	
Accel/Decel:	Four independently programmable accel and decel times. Each time may be programmed from 0...600 s in 0.01 s increments.	
Intermittent Overload		
Normal Duty:	110% Overload capability for up to 60 s, 150% for up to 3 s Applies for power rating above 15 kW (20 HP) only. Based on 480V drive rating.	
Heavy Duty:	150% Overload capability for up to 60 s, 180% for up to 3 s (200% programmable)	

(1) For details on specific motor performance, see Knowledge Base article "PowerFlex 525 PM Motor Performance Testing Summary".

(2) For more information, see the PowerFlex 520-Series Adjustable Frequency AC Drive User Manual, publication 520-UM001.

Control Inputs

Specifications		PowerFlex 523	PowerFlex 525
Digital	Bandwidth:	10 Rad/s for open and closed loop	
	Quantity:	(1) Dedicated for stop (4) Programmable	(1) Dedicated for stop (6) Programmable
	Current:	6 mA	
	Type		
	Source Mode (SRC):	18...24V = ON, 0...6V = OFF	
	Sink Mode (SNK):	0...6V = ON, 18...24V = OFF	
	Pulse Train		
	Quantity:	(1) Shared with one of the programmable digital input terminals.	
	Input Signal:	Transistor contact (open collector)	
	Input Frequency:	0...100 kHz	
	Current Consumption:	7 mA @ 24V DC maximum	
Analog	Quantity:	(1) Isolated, 0-10V and 4-20 mA	(2) Isolated, -10-10V and 4-20 mA
	Specification		
	Resolution:	10-bit	
	0-10V DC Analog:	100k ohm input impedance	
	4-20 mA Analog:	250 ohm input impedance	
	External Pot:	1...10k ohm, 2 W minimum	

DRAFT

ITEM 746L

Control Outputs

Specifications		PowerFlex 523	PowerFlex 525
Relay	Quantity:	(1) Programmable Form C	(2) 1 Programmable Form A and 1 Programmable Form B
	Specification Resistive Rating: Inductive Rating:	 3.0 A @ 30V DC, 3.0 A @ 125V, 3.0 A @ 240V AC 0.5 A @ 30V DC, 0.5 A @ 125V, 0.5 A @ 240V AC	
Opto	Quantity:	–	(2) Programmable
	Specification:		30V DC, 50 mA Non-inductive
Analog	Quantity:	(1) Non-Isolated 0-10V or 4-20 mA[1]	
	Specification Resolution: 0-10V DC Analog: 4-20 mA Analog:	 10-bit 1 k ohm minimum 525 ohm maximum	

(1) Feature is not applicable to PowerFlex 523 series A drives.

Encoder

Specifications	PowerFlex 523	PowerFlex 525
Type:	–	Incremental, dual channel
Supply:		12V, 250 mA
Quadrature:		90°, ±27° @ 25 °C
Duty Cycle:		50%, +10%
Requirements:		Encoders must be line driver type, quadrature (dual channel) or pulse (single channel), 3.5...26V DC output, single-ended or differential and capable of supplying a minimum of 10 mA per channel. Allowable input is DC up to a maximum frequency of 250 kHz. The encoder I/O automatically scales to allow 5V, 12V and 24V DC nominal voltages.

DRAFT

Environmental Specifications

Specifications	PowerFlex 523	PowerFlex 525
Altitude	See Current Derating Curves on page 18 for derating guidelines.	
Without derating:	1000 m (3300 ft) max.	
With derating:	Up to 4000 m (13,200 ft) max., with the exception of 600V drives at 2000 m (6600 ft) max.	
Surrounding Air Temperature, max.	See Current Derating Curves on page 18 for derating guidelines.	
Without derating:	-20...50 °C (-4...122 °F)	
With derating:	-20...60 °C (-4...140 °F) or -20...70 °C (-4...158 °F) with optional Control Module Fan kit.	
Storage Temperature		
Frame A...D:	-40...85 °C (-40...185 °F)	
Frame E:	-40...70 °C (-40...158 °F)	
Atmosphere:	**IMPORTANT** Drive **must not** be installed in an area where the ambient atmosphere contains volatile or corrosive gas, vapors or dust. If the drive is not going to be installed for a period of time, it must be stored in an area where it will not be exposed to a corrosive atmosphere.	
Relative Humidity:	0...95% noncondensing	
Shock:	Complies with IEC 60068-2-27	
Vibration:	Complies with IEC 60068-2-6:1995	

Frame Size	Operating and Nonoperating		Nonoperating (Transportation)	
	Force (Shock/Vibration)	Mounting Type	Force (Shock/Vibration)	Mounting Type
A	15 g / 2 g	DIN rail or screw	30 g/ 2.5 g	Screw only
B	15 g / 2 g	DIN rail or screw	30 g/ 2.5 g	Screw only
C	15 g / 2 g	DIN rail or screw	30 g/ 2.5 g	Screw only
D	15 g / 2 g	Screw only	30 g/ 2.5 g	Screw only
E	15 g / 1.5 g	Screw only	30 g/ 2.5 g	Screw only

Conformal Coating:	Complies with: IEC 60721-3-3 to level 3C2 (chemical and gases only)
Surrounding Environment Pollution Degree	
Pollution Degree 1 & 2:	All enclosures acceptable.
Sound Pressure Level (A-weighted)	Measurements are taken 1 m from the drive.
Frame A & B:	Maximum 53 dBA
Frame C:	Maximum 57 dBA
Frame D:	Maximum 64 dBA
Frame E:	Maximum 68 dBA

DRAFT

ITEM 746L

Certifications

Certification	PowerFlex 523	PowerFlex 525
c-UL-us	Listed to UL508C and CAN/CSA-C22.2 No. 14-05.	
RCM	Australian Communications and Media Authority In conformity with the following: Radiocommunications Act: 1992 Radiocommunications Standard: 2008 Radiocommunications Labelling Notice: 2008 Standards applied: EN 61800-3	
CE	In conformity with the following European Directives: 2014/35/EU Low Voltage Directive (LVD) 2014/30/EU EMC Directive (EMC) 2014/34/EU ATEX Directive (ATEX) 2006/42/EC Machinery Directive (MD) Standards applied: EN 61800-3 EN 61800-5-1	
TUV	(Applicable to PowerFlex 525 drives only) TÜV Rheinland Standards applied: EN ISO 13849-1 EN 61800-5-2 EN 61508 PARTS 1-7 EN 62061 EN 60204-1 Certified to ISO 13849-1 SIL2/PLd with embedded Safe-Torque-Off function Meets Functional Safety (FS) when used with embedded Safe-Torque-Off function	
ATEX **II (2) G D** **TUV 12 ATEX 7199 X**	(Applicable to PowerFlex 525 drives only) Certified to ATEX directive 2014/34/EU Group II Category (2) GD Applications with ATEX Approved Motors	
KCC	Korean Registration of Broadcasting and Communications Equipment Compliant with the following standards: Article 58-2 of Radio Waves Act, Clause 3	
EAC	Standards applied: Low Voltage TP TC 004/2011 EMC TP TC 020/2011	
AC 156	Tested by Trentec to be compliant with AC156 Acceptance Criteria for Seismic Qualification Testing of Nonstructural Components and 2003 International Building Code for worst-case seismic level for USA excluding site class F	
SEMI F47	Electric Power Research Institute Certified compliant with the following standards: SEMI F47 IEC 61000-4-11 IEC 61000-4-34	
Lloyds Register	(Applicable to PowerFlex 525 drives only) Lloyd's Register Type Approval Certificate 12/10068(E1)	
RoHS	Compliant with the European "Restriction of Hazardous Substances" Directive	

The drive is also designed to meet the appropriate portions of the following specifications:

NFPA 70 - US National Electrical Code

NEMA ICS 7.1 - Safety standards for Construction and Guide for Selection, Installation and Operation of Adjustable Speed Drive Systems.

DRAFT

Dimensions and Weights

Frame/Rating Cross-Reference

Catalog Number Description

25B	-	V	2P5	N	1	0	4
Drive		Voltage Rating	Rating	Enclosure	HIM	Emission Class	Version

PowerFlex 520-Series Drive Ratings

PowerFlex 523	PowerFlex 525	Output Ratings					Input		
		Normal Duty		Heavy Duty		Output			
Catalog No.	Catalog No.	HP	kW	HP	kW	Current (A)	Voltage Range	Total Watts Loss	Frame Size
100...120V AC (-15%, +10%) – 1-Phase Input, 0...230V 3-Phase Output									
25A-V1P6N104	–	0.25	0.2	0.25	0.2	1.6	85...132	20.0	A
25A-V2P5N104	25B-V2P5N104	0.5	0.4	0.5	0.4	2.5	85...132	27.0	A
25A-V4P8N104	25B-V4P8N104	1.0	0.75	1.0	0.75	4.8	85...132	53.0	B
25A-V6P0N104	25B-V6P0N104	1.5	1.1	1.5	1.1	6.0	85...132	67.0	B
200...240V AC (-15%, +10%) – 1-Phase Input, 0...230V 3-Phase Output									
25A-A1P6N104	–	0.25	0.2	0.25	0.2	1.6	85...132	20.0	A
25A-A2P5N104	25B-A2P5N104	0.5	0.4	0.5	0.4	2.5	170...264	29.0	A
25A-A4P8N104	25B-A4P8N104	1.0	0.75	1.0	0.75	4.8	170...264	50.0	A
25A-A8P0N104	25B-A8P0N104	2.0	1.5	2.0	1.5	8.0	170...264	81.0	B
25A-A011N104	25B-A011N104	3.0	2.2	3.0	2.2	11.0	170...264	111.0	B
200...240V AC (-15%, +10%) – 1-Phase Input with EMC Filter, 0...230V 3-Phase Output									
25A-A1P6N114	–	0.25	0.2	0.25	0.2	1.6	85...132	20.0	A
25A-A2P5N114	25B-A2P5N114	0.5	0.4	0.5	0.4	2.5	170...264	29.0	A
25A-A4P8N114	25B-A4P8N114	1.0	0.75	1.0	0.75	4.8	170...264	53.0	A
25A-A8P0N114	25B-A8P0N114	2.0	1.5	2.0	1.5	8.0	170...264	84.0	B
25A-A011N114	25B-A011N114	3.0	2.2	3.0	2.2	11.0	170...264	116.0	B
200...240V AC (-15%, +10%) – 3-Phase Input, 0...230V 3-Phase Output									
25A-B1P6N104	–	0.25	0.2	0.25	0.2	1.6	85...132	20.0	A
25A-B2P5N104	25B-B2P5N104	0.5	0.4	0.5	0.4	2.5	170...264	29.0	A
25A-B5P0N104	25B-B5P0N104	1.0	0.75	1.0	0.75	5.0	170...264	50.0	A
25A-B8P0N104	25B-B8P0N104	2.0	1.5	2.0	1.5	8.0	170...264	79.0	A
25A-B011N104	25B-B011N104	3.0	2.2	3.0	2.2	11.0	170...264	107.0	A
25A-B017N104	25B-B017N104	5.0	4.0	5.0	4.0	17.5	170...264	148.0	B
25A-B024N104	25B-B024N104	7.5	5.5	7.5	5.5	24.0	170...264	259.0	C
25A-B032N104	25B-B032N104	10.0	7.5	10.0	7.5	32.2	170...264	323.0	D
25A-B048N104	25B-B048N104	15.0	11.0	10.0	7.5	48.3	170...264	584.0	E
25A-B062N104	25B-B062N104	20.0	15.0	15.0	11.0	62.1	170...264	708.0	E
380...480V AC (-15%, +10%) – 3-Phase Input, 0...460V 3-Phase Output[1]									
25A-D1P4N104	25B-D1P4N104	0.5	0.4	0.5	0.4	1.4	323...528	27.0	A
25A-D2P3N104	25B-D2P3N104	1.0	0.75	1.0	0.75	2.3	323...528	37.0	A
25A-D4P0N104	25B-D4P0N104	2.0	1.5	2.0	1.5	4.0	323...528	62.0	A
25A-D6P0N104	25B-D6P0N104	3.0	2.2	3.0	2.2	6.0	323...528	86.0	A
25A-D010N104	25B-D010N104	5.0	4.0	5.0	4.0	10.5	323...528	129.0	B
25A-D013N104	25B-D013N104	7.5	5.5	7.5	5.5	13.0	323...528	170.0	C
25A-D017N104	25B-D017N104	10.0	7.5	10.0	7.5	17.0	323...528	221.0	C
25A-D024N104	25B-D024N104	15.0	11.0	15.0	11.0	24.0	323...528	303.0	D
25A-D030N104	25B-D030N104	20.0	15.0	15.0	11.0	30.0	323...528	387.0	D

DRAFT

PowerFlex 523	PowerFlex 525	Output Ratings					Input		
		Normal Duty		Heavy Duty		Output			
Catalog No.	Catalog No.	HP	kW	HP	kW	Current (A)	Voltage Range	Total Watts Loss	Frame Size
380...480V AC (-15%, +10%) – 3-Phase Input with EMC Filter, 0...460V 3-Phase Output									
25A-D1P4N114	25B-D1P4N114	0.5	0.4	0.5	0.4	1.4	323...528	27.0	A
25A-D2P3N114	25B-D2P3N114	1.0	0.75	1.0	0.75	2.3	323...528	37.0	A
25A-D4P0N114	25B-D4P0N114	2.0	1.5	2.0	1.5	4.0	323...528	63.0	A
25A-D6P0N114	25B-D6P0N114	3.0	2.2	3.0	2.2	6.0	323...528	88.0	A
25A-D010N114	25B-D010N114	5.0	4.0	5.0	4.0	10.5	323...528	133.0	B
25A-D013N114	25B-D013N114	7.5	5.5	7.5	5.5	13.0	323...528	175.0	C
25A-D017N114	25B-D017N114	10.0	7.5	10.0	7.5	17.0	323...528	230.0	C
25A-D024N114	25B-D024N114	15.0	11.0	15.0	11.0	24.0	323...528	313.0	D
25A-D030N114	25B-D030N114	20.0	15.0	15.0	11.0	30.0	323...528	402.0	D
25A-D037N114	25B-D037N114	25.0	18.5	20.0	15.0	37.0	323...528	602.0	E
25A-D043N114	25B-D043N114	30.0	22.0	25.0	18.5	43.0	323...528	697.0	E
525...600V AC (-15%, +10%) – 3-Phase Input, 0...575V 3-Phase Output									
25A-E0P9N104	25B-E0P9N104	0.5	0.4	0.5	0.4	0.9	446...660	22.0	A
25A-E1P7N104	25B-E1P7N104	1.0	0.75	1.0	0.75	1.7	446...660	32.0	A
25A-E3P0N104	25B-E3P0N104	2.0	1.5	2.0	1.5	3.0	446...660	50.0	A
25A-E4P2N104	25B-E4P2N104	3.0	2.2	3.0	2.2	4.2	446...660	65.0	A
25A-E6P6N104	25B-E6P6N104	5.0	4.0	5.0	4.0	6.6	446...660	95.0	B
25A-E9P9N104	25B-E9P9N104	7.5	5.5	7.5	5.5	9.9	446...660	138.0	C
25A-E012N104	25B-E012N104	10.0	7.5	10.0	7.5	12.0	446...660	164.0	C
25A-E019N104	25B-E019N104	15.0	11.0	15.0	11.0	19.0	446...660	290.0	D
25A-E022N104	25B-E022N104	20.0	15.0	15.0	11.0	22.0	446...660	336.0	D
25A-E027N104	25B-E027N104	25.0	18.5	20.0	15.0	27.0	446...660	466.0	E
25A-E032N104	25B-E032N104	30.0	22.0	25.0	18.5	32.0	446...660	562.0	E

(1) A non-filtered drive is not available for 380...480V AC 25 HP (18.5 kW) and 30 HP (22.0 kW) ratings. Filtered drives are available, however you must verify that the application will support a filtered drive.

DRAFT

ITEM 746L

Drive Dimensions and Weight

Dimensions are in mm and (in.). Weights are in kg and (lb).

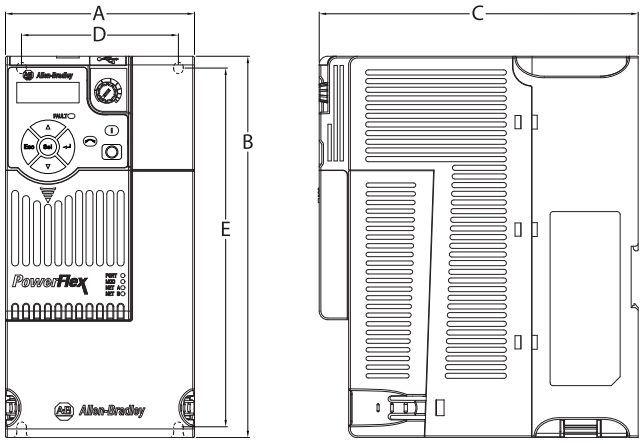

Frame Size	A	B	C	D	E	Weight
A	72.0 (2.83)	152.0 (5.98)	172.0 (6.77)	57.5 (2.26)	140.0 (5.51)	1.1 (2.4)
B	87.0 (3.43)	180.0 (7.09)	172.0 (6.77)	72.5 (2.85)	168.0 (6.61)	1.6 (3.5)
C	109.0 (4.29)	220.0 (8.66)	184.0 (7.24)	90.5 (3.56)	207.0 (8.15)	2.3 (5.0)
D	130.0 (5.12)	260.0 (10.24)	212.0 (8.35)	116.0 (4.57)	247.0 (9.72)	3.9 (8.6)
E	185.0 (7.28)	300.0 (11.81)	279.0 (10.98)	160.0 (6.30)	280.0 (11.02)	12.9 (28.4)

Design Considerations

Mounting Considerations

- Mount the drive upright on a flat, vertical and level surface.

Frame	Screw Size	Screw Torque
A	M5 (#10...24)	1.56...1.96 Nm (14...17 lb-in.)
B	M5 (#10...24)	1.56...1.96 Nm (14...17 lb-in.)
C	M5 (#10...24)	1.56...1.96 Nm (14...17 lb-in.)
D	M5 (#10...24)	2.45...2.94 Nm (22...26 lb-in.)
E	M8 (5/16 in.)	6.0...7.4 Nm (53...65 lb-in.)

- Protect the cooling fan by avoiding dust or metallic particles.
- Do not expose to a corrosive atmosphere.
- Protect from moisture and direct sunlight.

DRAFT

Minimum Mounting Clearances

See Dimensions and Weights on page 14 for mounting dimensions.

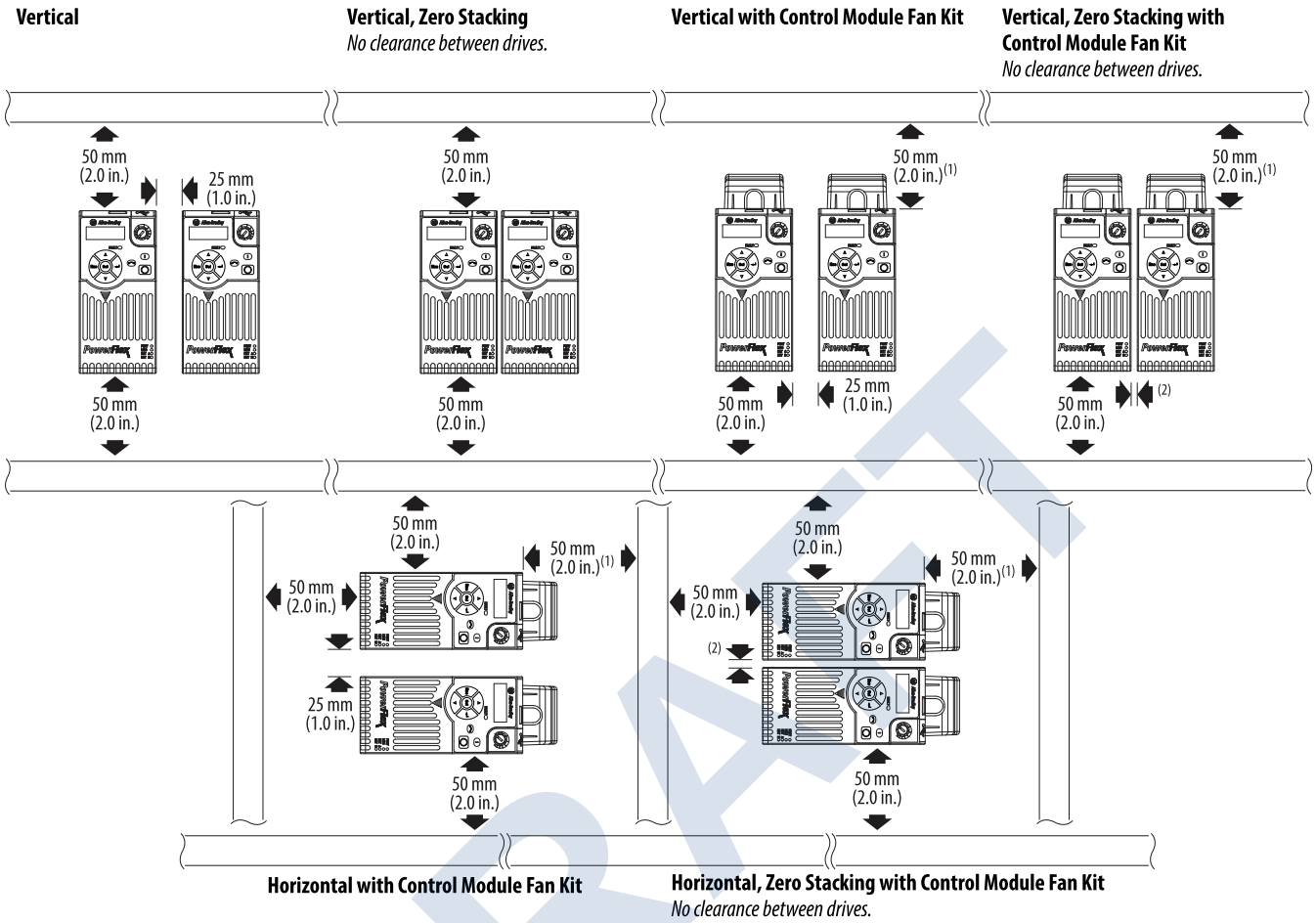

(1) For Frame E with Control Module Fan Kit only, clearance of 95 mm (3.7 in.) is required.
(2) For Frame E with Control Module Fan Kit only, clearance of 12 mm (0.5 in.) is required.

Ambient Operating Temperatures

See Accessories and Dimensions on page 32 for option kits.

Mounting	Enclosure Rating[1]	Ambient Temperature			
		Minimum	Maximum (No Derate)	Maximum (Derate)[2]	Maximum with Control Module Fan Kit (Derate)[3][5]
Vertical	IP 20/Open Type	-20 °C (-4 °F)	50 °C (122 °F)	60 °C (140 °F)	70 °C (158 °F)
	IP 30/NEMA 1/UL Type 1		45 °C (113 °F)	55 °C (131 °F)	–
Vertical, Zero Stacking	IP 20/Open Type		45 °C (113 °F)	55 °C (131 °F)	65 °C (149 °F)
	IP 30/NEMA 1/UL Type 1		40 °C (104 °F)	50 °C (122 °F)	–
Horizontal with Control Module Fan Kit[4][5]	IP 20/Open Type		50 °C (122 °F)	–	70 °C (158 °F)
Horizontal, Zero Stacking with Control Module Fan Kit[4][5]	IP 20/Open Type		45 °C (113 °F)	–	65 °C (149 °F)

(1) IP 30/NEMA 1/UL Type 1 rating requires installation of the PowerFlex 520-Series IP 30/NEMA 1/UL Type 1 option kit, catalog number 25-JBAx.
(2) For catalogs 25x-D1P4N104 and 25x-E0P9N104, the temperature listed under the Max. (Derate) column is reduced by 5 °C (9 °F) for all mounting methods.
(3) For catalogs 25x-D1P4N104 and 25x-E0P9N104, the temperature listed under the Max. with Control Module Fan Kit (Derate) column is reduced by 10 °C (18 °F) for vertical and vertical with zero stacking mounting methods only.
(4) Catalogs 25x-D1P4N104 and 25x-E0P9N104 cannot be mounted using either of the horizontal mounting methods.
(5) Requires installation of the PowerFlex 520-Series Control Module Fan Kit, catalog number 25-FANx-70C.

DRAFT

Current Derating Curves

Vertical Mounting

Single Drive

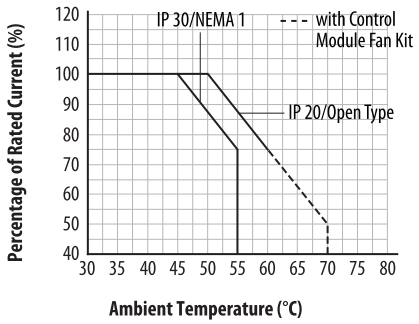

Zero Stacking

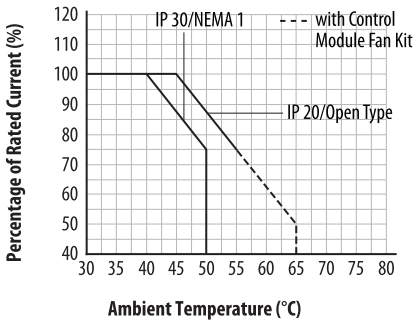

Horizontal Mounting/Floor

Single Drive

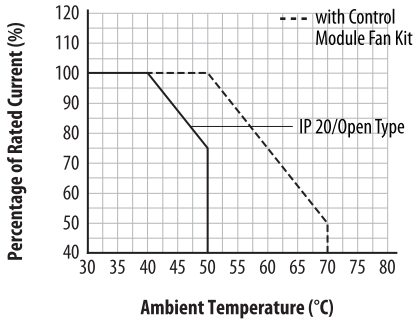

Zero Stacking

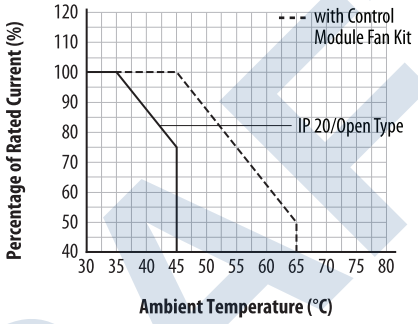

Derating Guidelines for High Altitude

The drive can be used without derating at a maximum altitude of 1000 m (3300 ft).
If the drive is used above 1000 m (3300 ft):

- Derate the maximum ambient temperature by 5 °C (9 °F) for every additional 1000 m (3300 ft), subject to limits listed in the Altitude Limit (Based on Voltage) table below.

  Or

- Derate the output current by 10% for every additional 1000 m (3300 ft), subject to limits listed in the Altitude Limit (Based on Voltage) table below.

Altitude Limit (Based on Voltage)

Drive Rating	Center Ground (Wye Neutral)	Corner Ground, Impedance Ground, or Ungrounded
100...120V 1-Phase	6000 m	6000 m
200...240V 1-Phase	2000 m	2000 m
200...240V 3-Phase	6000 m	2000 m
380...480V 3-Phase	4000 m	2000 m
525...600V 3-Phase	2000 m	2000 m

DRAFT

ITEM 746L

High Altitude

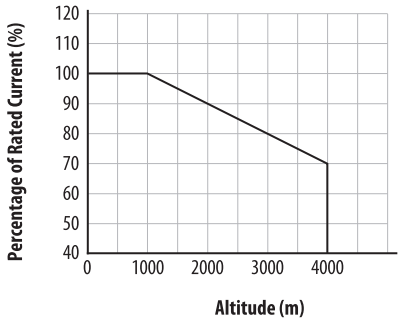

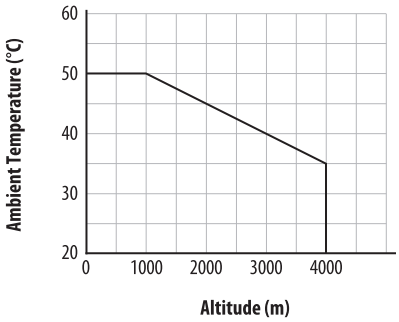

Debris Protection

Take precautions to prevent debris from falling through the vents of the drive housing during installation.

Storage

- Store within an ambient temperature range of -40...85 °C(1).
- Store within a relative humidity range of 0...95%, noncondensing.
- Do not expose to a corrosive atmosphere.

(1) The maximum ambient temperature for storing a Frame E drive is 70 °C.

AC Supply Source Considerations

Ungrounded Distribution Systems

ATTENTION: PowerFlex 520-Series drives contain protective MOVs that are referenced to ground. These devices must be disconnected if the drive is installed on an ungrounded or resistive grounded distribution system.

ATTENTION: Removing MOVs in drives with an embedded filter will also disconnect the filter capacitor from earth ground.

Disconnecting MOVs

To prevent drive damage, the MOVs connected to ground shall be disconnected if the drive is installed on an ungrounded distribution system (IT mains) where the line-to-ground voltages on any phase could exceed 125% of the nominal line-to-line voltage. To disconnect these devices, remove the jumper shown in the diagrams below.

1. Turn the screw counterclockwise to loosen.
2. Pull the jumper completely out of the drive chassis.
3. Tighten the screw to keep it in place.

DRAFT

ITEM 746L

Jumper Location (Typical)

Power Module

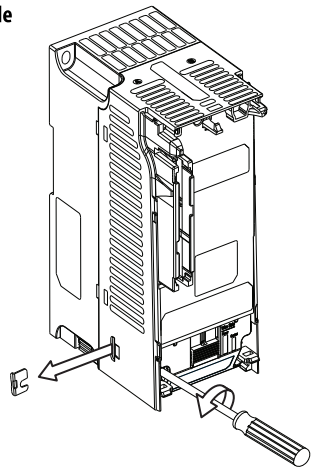

IMPORTANT Tighten screw after jumper removal.

Phase to Ground MOV Removal

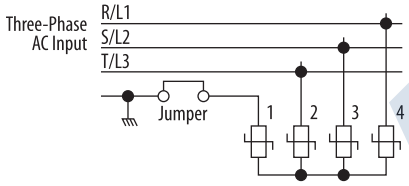

Input Power Conditioning

The drive is suitable for direct connection to input power within the rated voltage of the drive (see Input Power Conditions on page 20). Listed in the Input Power Conditions table below are certain input power conditions which may cause component damage or reduction in product life. If any of these conditions exist, install one of the devices listed under the heading Corrective Action on the line side of the drive.

IMPORTANT Only one device per branch circuit is required. It should be mounted closest to the branch and sized to handle the total current of the branch circuit.

Input Power Conditions

Input Power Condition	Corrective Action
Low Line Impedance (less than 1% line reactance)	• Install Line Reactor(2) • or Isolation Transformer
Greater than 120 kVA supply transformer	
Line has power factor correction capacitors	• Install Line Reactor(2) • or Isolation Transformer
Line has frequent power interruptions	
Line has intermittent noise spikes in excess of 6000V (lightning)	
Phase to ground voltage exceeds 125% of normal line to line voltage	• Remove MOV jumper to ground. • or Install Isolation Transformer with grounded secondary if necessary.
Ungrounded distribution system	
B-phase grounded distribution system	
240V open delta configuration (stinger leg)(1)	• Install Line Reactor(2)

DRAFT

(1) For drives applied on an open delta with a middle phase grounded neutral system, the phase opposite the phase that is tapped in the middle to the neutral or earth is referred to as the "stinger leg," "high leg," "red leg," etc. This leg should be identified throughout the system with red or orange tape on the wire at each connection point. The stinger leg should be connected to the center Phase B on the reactor. See Bulletin 1321-3R Series Line Reactors on page 37 for specific line reactor part numbers.

(2) See Accessories and Dimensions on page 32 for accessory ordering information.

General Grounding Requirements

The drive Safety Ground - (PE) must be connected to system ground. Ground impedance must conform to the requirements of national and local industrial safety regulations and/or electrical codes. The integrity of all ground connections should be periodically checked.

Typical Grounding

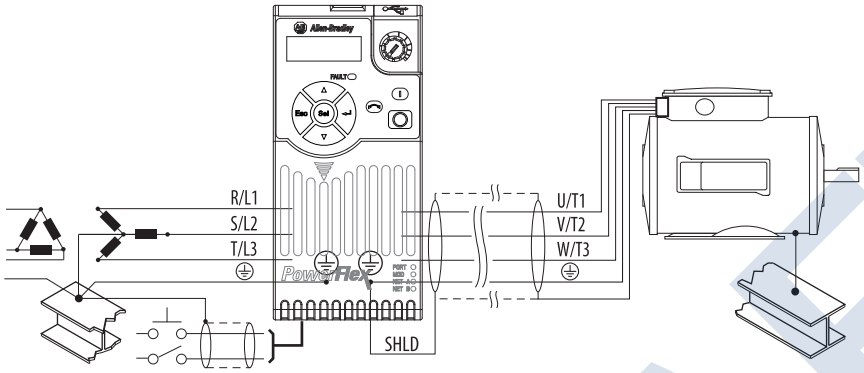

Ground Fault Monitoring

If a system ground fault monitor (RCD) is to be used, only Type B (adjustable) devices should be used to avoid nuisance tripping.

Safety Ground - ⏚ (PE)

This is the safety ground for the drive that is required by code. One of these points must be connected to adjacent building steel (girder, joist), a floor ground rod or bus bar. Grounding points must comply with national and local industrial safety regulations and/or electrical codes.

Motor Ground

The motor ground must be connected to one of the ground terminals on the drive.

Shield Termination - SHLD

Either of the safety ground terminals located on the power terminal block provides a grounding point for the motor cable shield. The **motor cable** shield connected to one of these terminals (drive end) should also be connected to the motor frame (motor end). Use a shield terminating or EMI clamp to connect the shield to the safety ground terminal. The earthing plate or conduit box option may be used with a cable clamp for a grounding point for the cable shield.

When shielded cable is used for **control and signal wiring**, the shield should be grounded at the source end only, not at the drive end.

DRAFT

ITEM 746L

RFI Filter Grounding

Using a drive with filter may result in relatively high ground leakage currents. Therefore, the **filter must only be used in installations with grounded AC supply systems and be permanently installed and solidly grounded** (bonded) to the building power distribution ground. Ensure that the incoming supply neutral is solidly connected (bonded) to the same building power distribution ground. Grounding must not rely on flexible cables and should not include any form of plug or socket that would permit inadvertent disconnection. Some local codes may require redundant ground connections. The integrity of all connections should be periodically checked.

Power Wiring

ATTENTION: National Codes and standards (NEC, VDE, BSI, etc.) and local codes outline provisions for safely installing electrical equipment. Installation must comply with specifications regarding wire types, conductor sizes, branch circuit protection and disconnect devices. Failure to do so may result in personal injury and/or equipment damage.

ATTENTION: To avoid a possible shock hazard caused by induced voltages, unused wires in the conduit must be grounded at both ends. For the same reason, if a drive sharing a conduit is being serviced or installed, all drives using this conduit should be disabled. This will help minimize the possible shock hazard from "cross coupled" power leads.

Motor Cable Types Acceptable for 100...600 Volt Installations

A variety of cable types are acceptable for drive installations. For many installations, unshielded cable is adequate, provided it can be separated from sensitive circuits. As an approximate guide, allow a spacing of 0.3 m (1 ft) for every 10 m (32.8 ft) of length. In all cases, long parallel runs must be avoided. Do not use cable with an insulation thickness less than 15 mils (0.4 mm/0.015 in.). Do not route more than three sets of motor leads in a single conduit to minimize "cross talk". If more than three drive/motor connections per conduit are required, shielded cable must be used.
UL installations above 50 °C ambient must use 600V, 90 °C wire.
UL installations in 50 °C ambient must use 600V, 75 °C or 90 °C wire.
UL installations in 40 °C ambient should use 600V, 75 °C or 90 °C wire.

Use copper wire only. Wire gauge requirements and recommendations are based on 75 °C. Do not reduce wire gauge when using higher temperature wire.

Unshielded

THHN, THWN or similar wire is acceptable for drive installation in dry environments provided adequate free air space and/or conduit fill rates limits are provided. Any wire chosen must have a minimum insulation thickness of 15 mils and should not have large variations in insulation concentricity.

ATTENTION: Do not use THHN or similarly coated wire in wet areas.

DRAFT

Shielded/Armored Cable

Shielded cable contains all of the general benefits of multi-conductor cable with the added benefit of a copper braided shield that can contain much of the noise generated by a typical AC Drive. Strong consideration for shielded cable should be given in installations with sensitive equipment such as weigh scales, capacitive proximity switches and other devices that may be affected by electrical noise in the distribution system. Applications with large numbers of drives in a similar location, imposed EMC regulations or a high degree of communications / networking are also good candidates for shielded cable.

Shielded cable may also help reduce shaft voltage and induced bearing currents for some applications. In addition, the increased impedance of shielded cable may help extend the distance that the motor can be located from the drive without the addition of motor protective devices such as terminator networks. Refer to Reflected Wave in "Wiring and Grounding Guide, (PWM) AC Drives," publication DRIVES-IN001.

Consideration should be given to all of the general specifications dictated by the environment of the installation, including temperature, flexibility, moisture characteristics and chemical resistance. In addition, a braided shield should be included and be specified by the cable manufacturer as having coverage of at least 75%. An additional foil shield can greatly improve noise containment.

A good example of recommended cable is Belden® 295xx (xx determines gauge). This cable has four (4) XLPE insulated conductors with a 100% coverage foil and an 85% coverage copper braided shield (with drain wire) surrounded by a PVC jacket.

Other types of shielded cable are available, but the selection of these types may limit the allowable cable length. Particularly, some of the newer cables twist 4 conductors of THHN wire and wrap them tightly with a foil shield. This construction can greatly increase the cable charging current required and reduce the overall drive performance. Unless specified in the individual distance tables as tested with the drive, these cables are not recommended and their performance against the lead length limits supplied is not known.

Recommended Shielded Wire

Location	Rating/Type	Description
Standard (Option 1)	600V, 90 °C (194 °F) XHHW2/RHW-2 Anixter B209500-B209507, Belden 29501-29507, or equivalent	• Four tinned copper conductors with XLPE insulation. • Copper braid/aluminum foil combination shield and tinned copper drain wire. • PVC jacket.
Standard (Option 2)	Tray rated 600V, 90 °C (194 °F) RHH/RHW-2 Anixter OLF-7xxxxx or equivalent	• Three tinned copper conductors with XLPE insulation. • 5 mil single helical copper tape (25% overlap min.) with three bare copper grounds in contact with shield. • PVC jacket.
Class I & II; Division I & II	Tray rated 600V, 90 °C (194 °F) RHH/RHW-2 Anixter 7V-7xxxx-3G or equivalent	• Three bare copper conductors with XLPE insulation and impervious corrugated continuously welded aluminum armor. • Black sunlight resistant PVC jacket overall. • Three copper grounds on #10 AWG and smaller.

Reflected Wave Protection

The drive should be installed as close to the motor as possible. Installations with long motor cables may require the addition of external devices to limit voltage reflections at the motor (reflected wave phenomena). Refer to Reflected Wave in "Wiring and Grounding Guide, (PWM) AC Drives," publication DRIVES-IN001.

The reflected wave data applies to all carrier frequencies 2...16 kHz.

For 240V ratings and lower, reflected wave effects do not need to be considered.

DRAFT

Output Disconnect

The drive is intended to be commanded by control input signals that will start and stop the motor. A device that routinely disconnects then reapplies output power to the motor for the purpose of starting and stopping the motor should not be used. If it is necessary to disconnect power to the motor with the drive outputting power, an auxiliary contact should be used to simultaneously disable drive (Aux Fault or Coast-to-Stop).

Power Terminal Block Wire Specifications

Frame	Maximum Wire Size(1)	Minimum Wire Size(1)	Torque
A	5.3 mm^2 (10 AWG)	0.8 mm^2 (18 AWG)	1.76...2.16 Nm (15.6...19.1 lb-in.)
B	8.4 mm^2 (8 AWG)	2.1 mm^2 (14 AWG)	1.76...2.16 Nm (15.6...19.1 lb-in.)
C	8.4 mm^2 (8 AWG)	2.1 mm^2 (14 AWG)	1.76...2.16 Nm (15.6...19.1 lb-in.)
D	13.3 mm^2 (6 AWG)	5.3 mm^2 (10 AWG)	1.76...2.16 Nm (15.6...19.1 lb-in.)
E	26.7 mm^2 (3 AWG)	8.4 mm^2 (8 AWG)	3.09...3.77 Nm (27.3...33.4 lb-in.)

(1) Maximum/minimum sizes that the terminal block will accept – these are not recommendations.

Common Bus/Precharge Notes

If drives are used with a disconnect switch to the common DC bus, then an auxiliary contact on the disconnect must be connected to a digital input of the drive.

I/O Wiring

Motor Start/Stop Precautions

ATTENTION: A contactor or other device that routinely disconnects and reapplies the AC line to the drive to start and stop the motor can cause drive hardware damage. The drive is designed to use control input signals that will start and stop the motor. If used, the input device must not exceed one operation per minute or drive damage can occur.

ATTENTION: The drive start/stop control circuitry includes solid-state components. If hazards due to accidental contact with moving machinery or unintentional flow of liquid, gas or solids exist, an additional hardwired stop circuit may be required to remove the AC line to the drive. When the AC line is removed, there will be a loss of any inherent regenerative braking effect that might be present - the motor will coast to a stop. An auxiliary braking method may be required. Alternatively, use the drive's safety input function.

Important points to remember about I/O wiring:

- Always use copper wire.
- Wire with an insulation rating of 600V or greater is recommended.
- Control and signal wires should be separated from power wires by at least 0.3 m (1 ft).

IMPORTANT I/O terminals labeled "Common" are not referenced to the safety ground (PE) terminal and are designed to greatly reduce common mode interference.

ATTENTION: Driving the 4-20 mA analog input from a voltage source could cause component damage. Verify proper configuration prior to applying input signals.

DRAFT

Signal and Control Wire Types

Recommendations are for 50 °C ambient temperature.
75 °C wire must be used for 60 °C ambient temperature.
90 °C wire must be used for 70 °C ambient temperature.

Recommended Signal Wire

Signal Type/Where Used	Belden Wire Type(s)*(or equivalent)*(1)	Description	Min. Insulation Rating
Analog I/O & PTC	8760/9460	0.750 mm^2 (18 AWG), twisted pair, 100% shield with drain(2)	300V, 60 °C (140 °F)
Remote Pot	8770	0.750 mm^2 (18 AWG), 3 conductor, shielded	
Encoder/Pulse I/O	9728/9730	0.196 mm^2 (24 AWG), individually shielded pairs	

(1) Stranded or solid wire.
(2) If the wires are short and contained within a cabinet which has no sensitive circuits, the use of shielded wire may not be necessary, but is always recommended.

Recommended Control Wire for Digital I/O

Type	Wire Type(s)	Description	Min. Insulation Rating
Unshielded	Per US NEC or applicable national or local code	–	300V, 60 °C (140 °F)
Shielded	Multi-conductor shielded cable such as Belden 8770 (or equivalent)	0.750 mm^2 (18 AWG), 3 conductor, shielded.	

Maximum Control Wire Recommendation

Do not exceed control wiring length of 30 m (100 ft). Control signal cable length is highly dependent on electrical environment and installation practices. To improve noise immunity, the I/O terminal block Common may be connected to ground terminal/protective earth. If using the RS485 (DSI) port, I/O Terminal C1 should also be connected to ground terminal/protective earth. Additionally, communication noise immunity can also be improved by connecting I/O Terminal C2 to ground terminal/protective earth.

Control I/O Terminal Block Wire Specifications

Frame	Maximum Wire Size(1)	Minimum Wire Size(1)	Torque
A...E	1.3 mm^2 (16 AWG)	0.13 mm^2 (26 AWG)	0.71...0.86 Nm (6.2...7.6 lb-in.)

(1) Maximum/minimum sizes that the terminal block will accept – these are not recommendations.

Machinery Directive (2006/42/EC)

- EN ISO 13849-1 – Safety of machinery – Safety related parts of control systems -Part 1: General principles for design.
- EN 62061 – Safety of machinery – Functional safety of safety-related electrical, electronic and programmable electronic control systems.
- EN 60204-1 – Safety of machinery – Electrical equipment of machines - Part 1: General requirements.
- EN 61800-5-2 – Adjustable speed electrical power drive systems - Part 5-2: Safety requirement – Functional.

DRAFT

ITEM 746L

Connections and Grounding

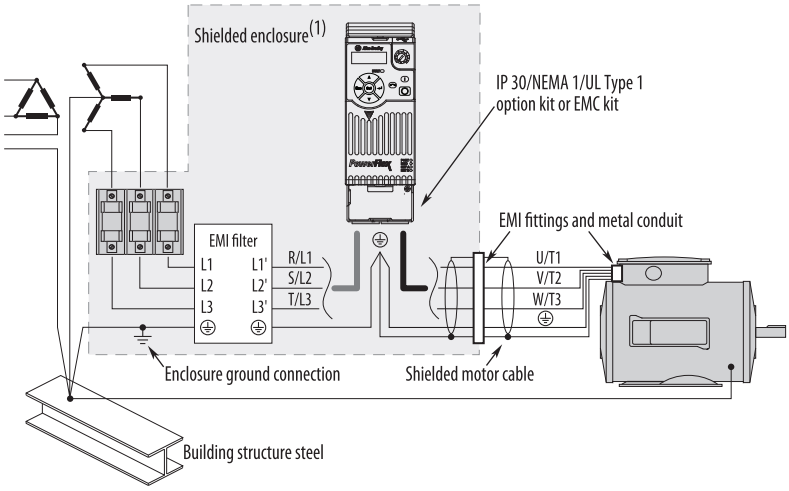

(1) Some installations require a shielded enclosure. Keep wire length as short as possible between the enclosure entry point and the EMI filter.

PowerFlex 520-Series RF Emission Compliance and Installation Requirements

	Standard/Limits		
Filter Type	**EN61800-3 Category C1 EN61000-6-3 CISPR11 Group 1 Class B**	**EN61800-3 Category C2 EN61000-6-4 CISPR11 Group 1 Class A (Input power ≤ 20 kVA)**	**EN61800-3 Category C3 (I ≤ 100 A) CISPR11 Group 1 Class A (Input power > 20 kVA)**
Internal	–	10 m (33 ft)	20 m (66 ft)
External(1)	30 m (16 ft)	100 m (328 ft)	100 m (328 ft)

(1) See Accessory Dimensions on page 39 for more information on optional external filters.

DRAFT

Fuses and Circuit Breaker Ratings

The PowerFlex 520-Series drive does not provide branch short circuit protection. This product should be installed with either input fuses or an input circuit breaker. National and local industrial safety regulations and/or electrical codes may determine additional requirements for these installations.

The tables on pages 28...31 provide drive ratings and recommended AC line input fuse and circuit breaker information. Both types of short circuit protection are acceptable for UL and IEC requirements. Sizes listed are the recommended sizes based on 40 °C (104 °F) and the U.S. N.E.C. Other country, state or local codes may require different ratings.

Fusing

The recommended fuse types are listed in the tables found on pages 28...31. If available current ratings do not match those listed in the tables provided, choose the next higher fuse rating.

- IEC – BS88 (British Standard) Parts 1 & 2(1), EN60269-1, Parts 1 & 2, type GG or equivalent should be used.
- UL – UL Class CC, T, RK1, or J should be used.

(1) Typical designations include, but may not be limited to the following;
Parts 1 & 2: AC, AD, BC, BD, CD, DD, ED, EFS, EF, FF, FG, GF, GG, GH.

Circuit Breakers

The "non-fuse" listings in the tables found on pages 28...31 include inverse time circuit breakers, instantaneous trip circuit breakers (motor circuit protectors) and 140M self-protected combination motor controllers. If one of these is chosen as the desired protection method, the following requirements apply:

- IEC – Both types of circuit breakers and 140M self-protected combination motor controllers are acceptable for IEC installations.
- UL – Only inverse time circuit breakers and the specified 140M selfprotected combination motor controllers are acceptable for UL installations.

Bulletin 140M (Self-Protected Combination Controller)/UL489 Circuit Breakers

When using Bulletin 140M or UL489 rated circuit breakers, the guidelines listed below must be followed in order to meet the NEC requirements for branch circuit protection.

- Bulletin 140M can be used in single motor applications.
- Bulletin 140M can be used up stream from the drive **without** the need for fuses.

DRAFT

Fuses and Circuit Breakers for PowerFlex 520-Series Drives

100...120V 1-Phase Input Protection Devices – Frames A...B

Catalog No.		Output Ratings					Input Ratings		Frame Size	Contactor Catalog No.	IEC Applications (Non-UL)				UL Applications			
PF 523	PF 525	ND		HD		Amps	kVA	Max Amps[1]			Fuses (Rating)		Circuit Breakers		Fuses (Max. Rating)	Circuit Breakers		Min. Enclosure Vol. (in.^{3})
		HP	kW	HP	kW						Min.	Max.	140U/140G	140M	Class / Catalog No.	140U/140G	140M[2][3][4]	
25A-V1P6N104	–	0.25	0.2	0.25	0.2	1.6	0.8	6.4	A	100-C09	10	16	140U-D6D2-B80	140M-C2E-B63	CLASS RK5, CC, J, or T / DLS-R-15	140U-D6D2-B80	140M-C2E-B63	–
25A-V2P5N104	25B-V2P5N104	0.5	0.4	0.5	0.4	2.5	1.3	9.6	A	100-C12	16	20	140U-D6D2-C12	140M-C2E-C10	CLASS RK5, CC, J, or T / DLS-R-20	140U-D6C2-C12	140M-C2E-C10	–
25A-V4P8N104	25B-V4P8N104	1.0	0.75	1.0	0.75	4.8	2.5	19.2	B	100-C23	25	40	140U-D6D2-C25	140M-D8E-C20	CLASS RK5, CC, J, or T / DLS-R-40	140U-D6D2-C25	140M-D8E-C20	–
25A-V6P0N104	25B-V6P0N104	1.5	1.1	1.5	1.1	6.0	3.2	24.0	B	100-C23	32	50	140U-D6D2-C30	140M-F8E-C25	CLASS RK5, CC, J, or T / DLS-R-50	140U-D6D2-C30	140M-F8E-C25	–

200...240V 1-Phase Input Protection Devices – Frames A...B

Catalog No.		Output Ratings					Input Ratings		Frame Size	Contactor Catalog No.	IEC Applications (Non-UL)				UL Applications			
PF 523	PF 525	ND		HD		Amps	kVA	Max Amps[1]			Fuses (Rating)		Circuit Breakers		Fuses (Max. Rating)	Circuit Breakers		Min. Enclosure Vol. (in.^{3})
		HP	kW	HP	kW						Min.	Max.	140U/140G	140M	Class / Catalog No.	140U/140G	140M[2][3][4]	
25A-A1P6N104	–	0.25	0.2	0.25	0.2	1.6	1.4	5.3	A	100-C09	6	10	140U-D6D2-C10	140M-C2E-B63	CLASS RK5, CC, J, or T / DLS-R-15	140U-D6D2-C10	140M-C2E-B63	–
25A-A1P6N114	–	0.25	0.2	0.25	0.2	1.6	1.4	5.3	A	100-C09	6	10	140U-D6D2-C10	140M-C2E-B63	CLASS RK5, CC, J, or T / DLS-R-15	140U-D6D2-C10	140M-C2E-B63	–
25A-A2P5N104	25B-A2P5N104	0.5	0.4	0.5	0.4	2.5	1.7	6.5	A	100-C09	10	16	140U-D6D2-C10	140M-C2E-C10	CLASS RK5, CC, J, or T / DLS-R-15	140U-D6D2-C10	140M-C2E-C10	–
25A-A2P5N114	25B-A2P5N114	0.5	0.4	0.5	0.4	2.5	1.7	6.5	A	100-C09	10	16	140U-D6D2-C10	140M-C2E-C10	CLASS RK5, CC, J, or T / DLS-R-15	140U-D6D2-C10	140M-C2E-C10	–
25A-A4P8N104	25B-A4P8N104	1.0	0.75	1.0	0.75	4.8	2.8	10.7	A	100-C12	16	25	140U-D6D2-C15	140M-C2E-C16	CLASS RK5, CC, J, or T / DLS-R-25	140U-D6D2-C15	140M-C2E-C16	–
25A-A4P8N114	25B-A4P8N114	1.0	0.75	1.0	0.75	4.8	2.8	10.7	A	100-C12	16	25	140U-D6D2-C15	140M-C2E-C16	CLASS RK5, CC, J, or T / DLS-R-25	140U-D6D2-C15	140M-C2E-C16	–
25A-A8P0N104	25B-A8P0N104	2.0	1.5	2.0	1.5	8.0	4.8	18.0	B	100-C23	25	40	140U-D6D2-C25	140M-F8E-C25	CLASS CC, J, or T / 40	140U-D6D2-C25	140M-F8E-C25	–
25A-A8P0N114	25B-A8P0N114	2.0	1.5	2.0	1.5	8.0	4.8	18.0	B	100-C23	25	40	140U-D6D2-C25	140M-F8E-C25	CLASS CC, J, or T / 40	140U-D6D2-C25	140M-F8E-C25	–
25A-A011N104	25B-A011N104	3.0	2.2	3.0	2.2	11.0	6.0	22.9	B	100-C37	32	50	140G-G6C3-C35	140M-F8E-C25	CLASS CC, J, or T / 50	–[5]	140M-F8E-C25	–
25A-A011N114	25B-A011N114	3.0	2.2	3.0	2.2	11.0	6.0	22.9	B	100-C37	32	50	140G-G6C3-C35	140M-F8E-C25	CLASS CC, J, or T / 50	–[5]	140M-F8E-C25	–

(1) When the drive is controlling motors with lower amp ratings, refer to the drive nameplate for drive intput current rating.
(2) The AIC ratings of the Bulletin 140M Motor Protector Circuit Breakers may vary. See Bulletin 140M Motor Protection Circuit Breakers Application Ratings.
(3) Bulletin 140M with adjustable current range should have the current trip set to the minimum range that the device will not trip.
(4) Manual Self-Protected (Type E) Combination Motor Controller, UL listed for 480Y/277 and 600Y/347 AC input. Not UL listed for use on 480V or 600V Delta/Delta, corner ground, or high-resistance ground systems.
(5) Circuit breaker selection is not available for this drive rating.

DRAFT

Fuses and Circuit Breakers for PowerFlex 520-Series Drives *(continued)*

200...240V 3-Phase Input Protection Devices – Frames A...E

Catalog No.[1]		Output Ratings					Input Ratings		Frame Size	Contactor Catalog No.	IEC Applications (Non-UL)				UL Applications			
PF 523	PF 525	ND		HD		Amps	kVA	Max Amps[2]			Fuses (Rating)		Circuit Breakers		Fuses (Max. Rating)	Circuit Breakers		Min. Enclosure Vol. (in.^{3})
		HP	kW	HP	kW						Min.	Max.	140U/140G	140M	Class / Catalog No.	140U/140G	140M[3][4][5]	
25A-B1P6N104	–	0.25	0.2	0.25	0.2	1.6	0.9	1.9	A	100-C09	3	6	140U-D6D3-B30	140M-C2E-B25	CLASS RK5, CC, J, or T / DLS-R-15	140U-D6D3-B30	140M-C2E-B25	–
25A-B2P5N104	25B-B2P5N104	0.5	0.4	0.5	0.4	2.5	1.2	2.7	A	100-C09	6	6	140U-D6D3-B40	140M-C2E-B40	CLASS RK5, CC, J, or T / DLS-R-6	140U-D6D3-B40	140M-C2E-B40	–
25A-B5P0N104	25B-B5P0N104	1.0	0.75	1.0	0.75	5.0	2.7	5.8	A	100-C09	10	16	140U-D6D3-B80	140M-C2E-B63	CLASS RK5, CC, J, or T / DLS-R-15	140U-D6D3-B80	140M-C2E-B63	–
25A-B8P0N104	25B-B8P0N104	2.0	1.5	2.0	1.5	8.0	4.3	9.5	A	100-C12	16	20	140U-D6D3-C10	140M-C2E-C10	CLASS RK5, CC, J, or T / DLS-R-20	140U-D6D3-C10	140M-C2E-C10	–
25A-B011N104	25B-B011N104	3.0	2.2	3.0	2.2	11.0	6.3	13.8	A	100-C23	20	32	140U-D6D3-C15	140M-C2E-C16	CLASS RK5, CC, J, or T / DLS-R-30	140U-D6D3-C15	140M-C2E-C16	–
25A-B017N104	25B-B017N104	5.0	4.0	5.0	4.0	17.5	9.6	21.1	B	100-C23	32	45	140U-D6D3-C25	140M-F8E-C25	CLASS CC, J, or T / 45	140U-D6D3-C25	140M-F8E-C25	–
25A-B024N104	25B-B024N104	7.5	5.5	7.5	5.5	24.0	12.2	26.6	C	100-C37	35	63	140G-G6C3-C35	140M-F8E-C32	CLASS CC, J, or T / 60	–[7]	140M-F8E-C32	–
25A-B032N104	25B-B032N104	10.0	7.5	10.0	7.5	32.2	15.9	34.8	D	100-C43	45	70	140G-G6C3-C60	140M-F8E-C45	CLASS RK5, CC, J, or T / DLS-R-70	–[7]	140M-F8E-C45	–
25A-B048N104	25B-B048N104	15.0	11.0	10.0	7.5	48.3	20.1	44.0	E	100-C60	63	90	140G-G6C3-C70	140M-F8E-C45	CLASS CC, J, or T / 90	–[7]	140M-F8E-C45	1416.0[6]
25A-B062N104	25B-B062N104	20.0	15.0	15.0	11.0	62.1	25.6	56.0	E	100-C72	70	125	140G-G6C3-C90	–[7]	CLASS CC, J, or T / 125	–[7]	–	–

(1) Normal and Heavy Duty ratings are available for this drive.

(2) When the drive is controlling motors with lower amp ratings, refer to the drive nameplate for drive intput current rating.

(3) The AIC ratings of the Bulletin 140M Motor Protector Circuit Breakers may vary. See Bulletin 140M Motor Protection Circuit Breakers Application Ratings.

(4) Bulletin 140M with adjustable current range should have the current trip set to the minimum range that the device will not trip.

(5) Manual Self-Protected (Type E) Combination Motor Controller, UL listed for 480Y/277 and 600Y/347 AC input. Not UL listed for use on 480V or 600V Delta/Delta, corner ground, or high-resistance ground systems.

(6) When using a Manual Self-Protected (Type E) Combination Motor Controller with this drive power rating, the drive must be installed in a ventilated or non-ventilated enclosure with the minimum volume specified in this column. Application specific thermal considerations may require a larger enclosure.

(7) Circuit breaker selection is not available for this drive rating.

DRAFT

Fuses and Circuit Breakers for PowerFlex 520-Series Drives *(continued)*

380...480V 3-Phase Input Protection Devices – Frames A...E

Catalog No.[1]		Output Ratings					Input Ratings		Frame Size	Contactor Catalog No.	IEC Applications (Non-UL)				UL Applications			
PF 523	PF 525	ND		HD		Amps	kVA	Max Amps[2]			Fuses (Rating)		Circuit Breakers		Fuses (Max. Rating)	Circuit Breakers		Min. Enclosure Vol. (in.^{3})
		HP	kW	HP	kW						Min.	Max.	140U/140G	140M	Class / Catalog No.	140U/140G	140M[3][4][5]	
25A-D1P4N104	25B-D1P4N104	0.5	0.4	0.5	0.4	1.4	1.7	1.9	A	100-C09	3	6	140U-D6D3-B30	140M-C2E-B25	CLASS RK5, CC, J, or T / DLS-R-6	–[7]	140M-C2E-B25	–
25A-D1P4N114	25B-D1P4N114	0.5	0.4	0.5	0.4	1.4	1.7	1.9	A	100-C09	3	6	140U-D6D3-B30	140M-C2E-B25	CLASS RK5, CC, J, or T / DLS-R-6	–[7]	140M-C2E-B25	–
25A-D2P3N104	25B-D2P3N104	1.0	0.75	1.0	0.75	2.3	2.9	3.2	A	100-C09	6	10	140U-D6D3-B60	140M-C2E-B40	CLASS RK5, CC, J, or T / DLS-R-10	–[7]	140M-C2E-B40	–
25A-D2P3N114	25B-D2P3N114	1.0	0.75	1.0	0.75	2.3	2.9	3.2	A	100-C09	6	10	140U-D6D3-B60	140M-C2E-B40	CLASS RK5, CC, J, or T / DLS-R-10	–[7]	140M-C2E-B40	–
25A-D4P0N104	25B-D4P0N104	2.0	1.5	2.0	1.5	4.0	5.2	5.7	A	100-C09	10	16	140U-D6D3-B60	140M-C2E-B63	CLASS RK5, CC, J, or T / DLS-R-15	–[7]	140M-C2E-B63	–
25A-D4P0N114	25B-D4P0N114	2.0	1.5	2.0	1.5	4.0	5.2	5.7	A	100-C09	10	16	140U-D6D3-B60	140M-C2E-B63	CLASS RK5, CC, J, or T / DLS-R-15	–[7]	140M-C2E-B63	–
25A-D6P0N104	25B-D6P0N104	3.0	2.2	3.0	2.2	6.0	6.9	7.5	A	100-C09	10	16	140U-D6D3-C10	140M-C2E-C10	CLASS RK5, CC, J, or T / DLS-R-15	–[7]	140M-C2E-C10	–
25A-D6P0N114	25B-D6P0N114	3.0	2.2	3.0	2.2	6.0	6.9	7.5	A	100-C09	10	16	140U-D6D3-C10	140M-C2E-C10	CLASS RK5, CC, J, or T / DLS-R-15	–[7]	140M-C2E-C10	–
25A-D010N104	25B-D010N104	5.0	4.0	5.0	4.0	10.5	12.6	13.8	B	100-C23	20	32	140U-D6D3-C15	140M-C2E-C16	CLASS RK5, CC, J, or T / DLS-R-30	–[7]	140M-C2E-C16	–
25A-D010N114	25B-D010N114	5.0	4.0	5.0	4.0	10.5	12.6	13.8	B	100-C23	20	32	140U-D6D3-C15	140M-C2E-C16	CLASS RK5, CC, J, or T / DLS-R-30	–[7]	140M-C2E-C16	–
25A-D013N104	25B-D013N104	7.5	5.5	7.5	5.5	13.0	14.1	15.4	C	100-C23	20	35	140U-D6D3-C25	140M-D8E-C20	CLASS CC, J, or T / 35	–[7]	140M-D8E-C20	–
25A-D013N114	25B-D013N114	7.5	5.5	7.5	5.5	13.0	14.1	15.4	C	100-C23	20	35	140U-D6D3-C25	140M-D8E-C20	CLASS CC, J, or T / 35	–[7]	140M-D8E-C20	–
25A-D017N104	25B-D017N104	10.0	7.5	10.0	7.5	17.0	16.8	18.4	C	100-C23	25	40	140U-D6D3-C25	140M-D8E-C20	CLASS CC, J, or T / 40	–[7]	140M-D8E-C20	–
25A-D017N114	25B-D017N114	10.0	7.5	10.0	7.5	17.0	16.8	18.4	C	100-C23	25	40	140U-D6D3-C25	140M-D8E-C20	CLASS CC, J, or T / 40	–[7]	140M-D8E-C20	–
25A-D024N104	25B-D024N104	15.0	11.0	15.0	11.0	24.0	24.1	26.4	D	100-C37	35	63	140G-G6C3-C40	140M-F8E-C32	CLASS CC, J, or T / 60	–[7]	140M-F8E-C32	656.7[6]
25A-D024N114	25B-D024N114	15.0	11.0	15.0	11.0	24.0	24.1	26.4	D	100-C37	35	63	140G-G6C3-C40	140M-F8E-C32	CLASS CC, J, or T / 60	–[7]	140M-F8E-C32	656.7[6]
25A-D030N104	25B-D030N104	20.0	15.0	15.0	11.0	30.0	30.2	33.0	D	100-C43	45	70	140G-G6C3-C50	140M-F8E-C45	CLASS CC, J, or T / 70	–[7]	140M-F8E-C45	656.7[6]
25A-D030N114	25B-D030N114	20.0	15.0	15.0	11.0	30.0	30.2	33.0	D	100-C43	45	70	140G-G6C3-C50	140M-F8E-C45	CLASS CC, J, or T / 70	–[7]	140M-F8E-C45	656.7[6]
25A-D037N114	25B-D037N114	25.0	18.5	20.0	15.0	37.0	30.8	33.7	E	100-C43	45	70	140G-G6C3-C50	140M-F8E-C45	CLASS CC, J, or T / 70	–[7]	140M-F8E-C45	–
25A-D043N114	25B-D043N114	30.0	22.0	25.0	18.5	43.0	35.6	38.9	E	100-C60	50	80	140G-G6C3-C60	140M-F8E-C45	CLASS CC, J, or T / 80	–[7]	140M-F8E-C45	–

(1) Normal and Heavy Duty ratings are available for this drive

(2) When the drive is controlling motors with lower amp ratings, refer to the drive nameplate for drive intput current rating.

(3) The AIC ratings of the Bulletin 140M Motor Protector Circuit Breakers may vary. See Bulletin 140M Motor Protection Circuit Breakers Application Ratings.

(4) Bulletin 140M with adjustable current range should have the current trip set to the minimum range that the device will not trip.

(5) Manual Self-Protected (Type E) Combination Motor Controller, UL listed for 480Y/277 and 600Y/347 AC input. Not UL listed for use on 480V or 600V Delta/Delta, corner ground, or high-resistance ground systems.

(6) When using a Manual Self-Protected (Type E) Combination Motor Controller with this drive power rating, the drive must be installed in a ventilated or non-ventilated enclosure with the minimum volume specified in this column. Application specific thermal considerations may require a larger enclosure.

(7) Circuit breaker selection is not available for this drive rating.

DRAFT

Fuses and Circuit Breakers for PowerFlex 520-Series Drives *(continued)*

525...600V 3-Phase Input Protection Devices – Frames A...E

Catalog No.[1]		Output Ratings					Input Ratings		Frame Size	Contactor Catalog No.	IEC Applications (Non-UL)				UL Applications			
PF 523	PF 525	ND		HD		Amps	kVA	Max Amps[2]			Fuses (Rating)		Circuit Breakers		Fuses (Max. Rating)	Circuit Breakers		Min. Enclosure Vol. (in.^{3})
		HP	kW	HP	kW						Min.	Max.	140U/140G	140M	Class / Catalog No.	140U/140G	140M[3][4][5]	
25A-E0P9N104	25B-E0P9N104	0.5	0.4	0.5	0.4	0.9	1.4	1.2	A	100-C09	3	6	140U-D6D3-B20	140M-C2E-B25	CLASS RK5, CC, J, or T / DLS-R-6	–[8]	140M-C2E-B25	–
25A-E1P7N104	25B-E1P7N104	1.0	0.75	1.0	0.75	1.7	2.6	2.3	A	100-C09	3	6	140U-D6D3-B30	140M-C2E-B25	CLASS RK5, CC, J, or T / DLS-R-6	–[8]	140M-C2E-B25	–
25A-E3P0N104	25B-E3P0N104	2.0	1.5	2.0	1.5	3.0	4.3	3.8	A	100-C09	6	10	140U-D6D3-B50	140M-C2E-B40	CLASS RK5, CC, J, or T / DLS-R-10	–[8]	140M-C2E-B40	–
25A-E4P2N104	25B-E4P2N104	3.0	2.2	3.0	2.2	4.2	6.1	5.3	A	100-C09	10	16	140U-D6D3-B80	140M-C2E-B63	CLASS RK5, CC, J, or T / DLS-R-15	–[8]	140M-D8E-B63	–
25A-E6P6N104	25B-E6P6N104	5.0	4.0	5.0	4.0	6.6	9.1	8.0	B	100-C09	10	20	140U-D6D3-C10	140M-C2E-C10	CLASS RK5, CC, J, or T / DLS-R-20	–[8]	140M-D8E-C10	–
25A-E9P9N104	25B-E9P9N104	7.5	5.5	7.5	5.5	9.9	12.8	11.2	C	100-C16	16	25	140U-D6D3-C15	140M-C2E-C16	CLASS RK5, CC, J, or T / DLS-R-25	–[8]	140M-D8E-C16[6]	–
25A-E012N104	25B-E012N104	10.0	7.5	10.0	7.5	12.0	15.4	13.5	C	100-C23	20	32	140U-D6D3-C20	140M-C2E-C16	CLASS RK5, CC, J, or T / DLS-R-30	–[8]	140M-D8E-C16	–
25A-E019N104	25B-E019N104	15.0	11.0	15.0	11.0	19.0	27.4	24.0	D	100-C30	32	50	140G-G6C3-C30	140M-F8E-C25	CLASS CC, J, or T / 50	–[8]	140M-F8E-C25	656.7[7]
25A-E022N104	25B-E022N104	20.0	15.0	15.0	11.0	22.0	31.2	27.3	D	100-C30	35	63	140G-G6C3-C35	140M-F8E-C32	CLASS CC, J, or T / 60	–[8]	140M-F8E-C32	656.7[7]
25A-E027N104	25B-E027N104	25.0	18.5	20.0	15.0	27.0	28.2	24.7	E	100-C30	35	50	140G-G6C3-C35	140M-F8E-C32	CLASS CC, J, or T / 50	–[8]	140M-F8E-C32	1416.0[7]
25A-E032N104	25B-E032N104	30.0	22.0	25.0	18.5	32.0	33.4	29.2	E	100-C37	40	63	140G-G6C3-C50	140M-F8E-C32	CLASS CC, J, or T / 60	–[8]	140M-F8E-C32	1416.0[7]

(1) Normal and Heavy Duty ratings are available for this drive

(2) When the drive is controlling motors with lower amp ratings, refer to the drive nameplate for drive intput current rating.

(3) The AIC ratings of the Bulletin 140M Motor Protector Circuit Breakers may vary. See Bulletin 140M Motor Protection Circuit Breakers Application Ratings.

(4) Bulletin 140M with adjustable current range should have the current trip set to the minimum range that the device will not trip.

(5) Manual Self-Protected (Type E) Combination Motor Controller, UL listed for 480Y/277 and 600Y/347 AC input. Not UL listed for use on 480V or 600V Delta/Delta, corner ground, or high-resistance ground systems.

(6) When used with the 140M circuit breaker, the 25A-E9P9104 must be installed in a ventilated or non-ventilated enclosure with the minimum size of 457.2 x 457.2 x 269.8 mm (18 x 18 x 10.62 in.).

(7) When using a Manual Self-Protected (Type E) Combination Motor Controller with this drive power rating, the drive must be installed in a ventilated or non-ventilated enclosure with the minimum volume specified in this column. Application specific thermal considerations may require a larger enclosure.

(8) Circuit breaker selection is not available for this drive rating.

DRAFT

Accessories and Dimensions

Dynamic Brake Resistors

Drive Ratings			Minimum Resistance	Resistance	
Input Voltage	HP	kW	Ω ± 10%	Ω ± 5%	Catalog No.(1)(2)
100...120V 50/60 Hz 1-Phase	0.25	0.2	56	91	AK-R2-091P500
	0.5	0.4	56	91	AK-R2-091P500
	1.0	0.75	56	91	AK-R2-091P500
	1.5	1.1	41	91	AK-R2-091P500
200...240V 50/60 Hz 1-Phase	0.25	0.2	56	91	AK-R2-091P500
	0.5	0.4	56	91	AK-R2-091P500
	1.0	0.75	56	91	AK-R2-091P500
	2.0	1.5	41	91	AK-R2-091P500
	3.0	2.2	32	47	AK-R2-047P500
200...240V 50/60 Hz 3-Phase	0.25	0.2	56	91	AK-R2-091P500
	0.5	0.4	56	91	AK-R2-091P500
	1.0	0.75	56	91	AK-R2-091P500
	2.0	1.5	41	91	AK-R2-091P500
	3.0	2.2	32	47	AK-R2-047P500
	5.0	4.0	18	47	AK-R2-047P500
	7.5	5.5	16	30	AK-R2-030P1K2
	10.0	7.5	14	30	AK-R2-030P1K2
	15.0	11.0	14	15	AK-R2-030P1K2(3)
	20.0	15.0	10	15	AK-R2-030P1K2(3)
380...480V 50/60 Hz 3-Phase	0.5	0.4	89	360	AK-R2-360P500
	1.0	0.75	89	360	AK-R2-360P500
	2.0	1.5	89	360	AK-R2-360P500
	3.0	2.2	89	120	AK-R2-120P1K2
	5.0	4.0	47	120	AK-R2-120P1K2
	7.5	5.5	47	120	AK-R2-120P1K2
	10.0	7.5	47	120	AK-R2-120P1K2
	15.0	11.0	43	60	AK-R2-120P1K2(3)
	20.0	15.0	43	60	AK-R2-120P1K2(3)
	25.0	18.5	27	40	AK-R2-120P1K2(4)
	30.0	22.0	27	40	AK-R2-120P1K2(4)
525...600V 50/60 Hz 3-Phase	0.5	0.4	112	360	AK-R2-360P500
	1.0	0.75	112	360	AK-R2-360P500
	2.0	1.5	112	360	AK-R2-360P500
	3.0	2.2	112	120	AK-R2-120P1K2
	5.0	4.0	86	120	AK-R2-120P1K2
	7.5	5.5	59	120	AK-R2-120P1K2
	10.0	7.5	59	120	AK-R2-120P1K2
	15.0	11.0	59	60	AK-R2-120P1K2(3)
	20.0	15.0	59	60	AK-R2-120P1K2(3)
	25.0	18.5	53	60	AK-R2-120P1K2(3)
	30.0	22.0	34	40	AK-R2-120P1K2(4)

(1) The resistors listed in this tables are rated for 5% duty cycle.

(2) Use of Rockwell Automation resistors is always recommended. The resistors listed have been carefully selected for optimizing performance in a variety of applications. Alternative resistors may be used, however, care must be taken when making a selection. See the PowerFlex Dynamic Braking Resistor Calculator, publication PFLEX-AT001.

(3) Requires two resistors wired in parallel.

(4) Requires three resistors wired in parallel.

DRAFT

ITEM 746L

EMC Line Filters

Short Circuit Current Rating = 100 kA					
Drive Ratings					
Input Voltage	**HP**	**kW**	**Current (A)**	**Frame Size**	**Catalog No.**
100...120V 50/60 Hz 1-Phase	0.25	0.2	1.6	A	25-RF011-AL
	0.5	0.4	2.5	A	25-RF011-AL
	1.0	0.75	4.8	B	25-RF023-BL
	1.5	1.1	6.0	B	25-RF023-BL
200...240V 50/60 Hz 1-Phase	0.25	0.2	1.6	A	25-RF011-AL
	0.5	0.4	2.5	A	25-RF011-AL
	1.0	0.75	4.8	A	25-RF011-AL
	2.0	1.5	8.0	B	25-RF023-BL
	3.0	2.2	11.0	B	25-RF023-BL
200...240V 50/60 Hz 3-Phase	0.25	0.2	1.6	A	25-RF014-AL
	0.5	0.4	2.5	A	25-RF014-AL
	1.0	0.75	5.0	A	25-RF014-AL
	2.0	1.5	8.0	A	25-RF014-AL
	3.0	2.2	11.0	A	25-RF014-AL
	5.0	4.0	17.5	B	25-RF021-BL
	7.5	5.5	24.0	C	25-RF027-CL
	10.0	7.5	32.2	D	25-RF035-DL
	15.0	11.0	48.3	E	25-RF056-EL
	20.0	15.0	62.1	E	25-RF056-EL
380...480V 50/60 Hz 3-Phase	0.5	0.4	1.4	A	25-RF7P5-AL
	1.0	0.75	2.3	A	25-RF7P5-AL
	2.0	1.5	4.0	A	25-RF7P5-AL
	3.0	2.2	6.0	A	25-RF7P5-AL
	5.0	4.0	10.5	B	25-RF014-BL
	7.5	5.5	13.0	C	25-RF018-CL
	10.0	7.5	17.0	C	25-RF018-CL
	15.0	11.0	24.0	D	25-RF033-DL
	20.0	15.0	30.0	D	25-RF033-DL
	25.0	18.5	37.0	E	25-RF039-EL
	30.0	22.0	43.0	E	25-RF039-EL(1)
525...600V 50/60 Hz 3-Phase	0.5	0.4	0.9	A	25-RF8P0-BL(2)
	1.0	0.75	1.7	A	25-RF8P0-BL(2)
	2.0	1.5	3.0	A	25-RF8P0-BL(2)
	3.0	2.2	4.2	A	25-RF8P0-BL(2)
	5.0	4.0	6.6	B	25-RF8P0-BL
	7.5	5.5	9.9	C	25-RF014-CL
	10.0	7.5	12.0	C	25-RF014-CL
	15.0	11.0	19.0	D	25-RF027-DL
	20.0	15.0	22.0	D	25-RF027-DL
	25.0	18.5	27.0	E	25-RF029-EL
	30.0	22.0	32.0	E	25-RF029-EL(1)

(1) EMC Line Filter size is based on the input current of the drive. See the tables on page 30 and page 31 for more information.

(2) This 600V drive rating needs to be matched with a frame B EMC Line Filter.

DRAFT

ITEM 746L

EMC Plates

Item	Description	Frame Size	Catalog No.
EMC Plate	Optional grounding plate for shielded cables.	A	25-EMC1-FA
		B	25-EMC1-FB
		C	25-EMC1-FC
		D	25-EMC1-FD
		E	25-EMC1-FE

Human Interface Modules (HIM) Option Kits and Accessories

Item	Description	Catalog No.
LCD Display, Remote Panel Mount	Digital speed control CopyCat capable IP 66 (NEMA Type 4X/12) indoor use only Includes 2.9 meter cable	22-HIM-C2S
LCD Display, Remote Handheld	Digital speed control Full numeric keyboard CopyCat capable IP 30 (NEMA Type 1) Includes 1.0 m cable Panel mount with optional Bezel Kit	22-HIM-A3
Bezel Kit	Panel mount for LCD Display, Remote Handheld unit, IP 30 (NEMA Type 1) Includes 2.0 m DSI cable	22-HIM-B1
DSI HIM Cable (DSI HIM to RJ45 cable)	1.0 m (3.3 ft)	22-HIM-H10
	2.9 m (9.51 ft)	22-HIM-H30

IP 30/NEMA 1/UL Type 1 Kit

Item	Description	Frame Size	Catalog No.
IP 30/NEMA 1/UL Type 1 Kit	Field installed kit. Converts drive to IP 30/NEMA 1/UL Type 1 enclosure. Includes conduit box with mounting screws and plastic top panel.	A	25-JBAA
		B	25-JBAB
		C	25-JBAC
		D	25-JBAD
		E	25-JBAE

Control Module Fan Kit

Item	Description	Frame Size	Catalog No.
Control Module Fan Kit	For use with drive in environments with ambient temperatures up to 70 °C or horizontal mounting.	A...D	25-FAN1-70C
		E	25-FAN2-70C

Incremental Encoder Input Option

Item	Description	Catalog No.
Incremental Encoder	Incremental encoder input option board.	25-ENC-1

WARNING: Only the 25-ENC-1 Encoder will work properly in the PowerFlex 525 drive. Installing an incorrect encoder card, such as the PowerFlex 527 25-ENC-2 will cause damage to the PowerFlex 525 drive.

DRAFT

Bulletin 160 to PowerFlex 520-Series Mounting Adapter Plate

Item	Description	B160 Frame Size	Catalog No.
Mounting Adapter Plate	For use with drive when replacing Bulletin 160 drives in existing installations to a PowerFlex 520-Series drive. Select the catalog number based on the frame size of your Bulletin 160 drive.	A	25-MAP-FA
		B	25-MAP-FB

Replacement Parts

PowerFlex 520-Series Power Module

Item	Description
PowerFlex 520-Series Power Module	Replacement power module for use with PowerFlex 520-Series drives. Includes: • Power Module • Power Module Front Cover • Power Terminal Guard • Heatsink Fan

Output Ratings					Input Voltage Range	Frame Size	Catalog No.
Normal Duty		Heavy Duty					
HP	kW	HP	kW	Output Current (A)			
100...120V AC (-15%, +10%) – 1-Phase Input, 0...230V 3-Phase Output							
0.25	0.2	0.25	0.2	1.6	85...132	A	25-PM1-V1P6
0.5	0.4	0.5	0.4	2.5	85...132	A	25-PM1-V2P5
1.0	0.75	1.0	0.75	4.8	85...132	B	25-PM1-V4P8
1.5	1.1	1.5	1.1	6.0	85...132	B	25-PM1-V6P0
200...240V AC (-15%, +10%) – 1-Phase Input, 0...230V 3-Phase Output							
0.25	0.2	0.25	0.2	1.6	170...264	A	25-PM1-A1P6
0.5	0.4	0.5	0.4	2.5	170...264	A	25-PM1-A2P5
1.0	0.75	1.0	0.75	4.8	170...264	A	25-PM1-A4P8
2.0	1.5	2.0	1.5	8.0	170...264	B	25-PM1-A8P0
3.0	2.2	3.0	2.2	11.0	170...264	B	25-PM1-A011
200...240V AC (-15%, +10%) – 1-Phase Input with EMC Filter, 0...230V 3-Phase Output							
0.25	0.2	0.25	0.2	1.6	170...264	A	25-PM2-A1P6
0.5	0.4	0.5	0.4	2.5	170...264	A	25-PM2-A2P5
1.0	0.75	1.0	0.75	4.8	170...264	A	25-PM2-A4P8
2.0	1.5	2.0	1.5	8.0	170...264	B	25-PM2-A8P0
3.0	2.2	3.0	2.2	11.0	170...264	B	25-PM2-A011
200...240V AC (-15%, +10%) – 3-Phase Input, 0...230V 3-Phase Output							
0.25	0.2	0.25	0.2	1.6	170...264	A	25-PM1-B1P6
0.5	0.4	0.5	0.4	2.5	170...264	A	25-PM1-B2P5
1.0	0.75	1.0	0.75	5.0	170...264	A	25-PM1-B5P0
2.0	1.5	2.0	1.5	8.0	170...264	A	25-PM1-B8P0
3.0	2.2	3.0	2.2	11.0	170...264	A	25-PM1-B011
5.0	4.0	5.0	4.0	17.5	170...264	B	25-PM1-B017
7.5	5.5	7.5	5.5	24.0	170...264	C	25-PM1-B024
10.0	7.5	10.0	7.5	32.2	170...264	D	25-PM1-B032
15.0	11.0	10.0	7.5	48.3	170...264	E	25-PM1-B048
20.0	15.0	15.0	11.0	62.1	170...264	E	25-PM1-B062
380...480V AC (-15%, +10%) – 3-Phase Input, 0...460V 3-Phase Output							
0.5	0.4	0.5	0.4	1.4	323...528	A	25-PM1-D1P4
1.0	0.75	1.0	0.75	2.3	323...528	A	25-PM1-D2P3

DRAFT

Output Ratings					Input Voltage Range	Frame Size	Catalog No.
Normal Duty		Heavy Duty					
HP	kW	HP	kW	Output Current (A)			
2.0	1.5	2.0	1.5	4.0	323...528	A	25-PM1-D4P0
3.0	2.2	3.0	2.2	6.0	323...528	A	25-PM1-D6P0
5.0	4.0	5.0	4.0	10.5	323...528	B	25-PM1-D010
7.5	5.5	7.5	5.5	13.0	323...528	C	25-PM1-D013
10.0	7.5	10.0	7.5	17.0	323...528	C	25-PM1-D017
15.0	11.0	15.0	11.0	24.0	323...528	D	25-PM1-D024
20.0	15.0	15.0	11.0	30.0	323...528	D	25-PM1-D030
380...480V AC (-15%, +10%) – 3-Phase Input with EMC Filter, 0...460V 3-Phase Output							
0.5	0.4	0.5	0.4	1.4	323...528	A	25-PM2-D1P4
1.0	0.75	1.0	0.75	2.3	323...528	A	25-PM2-D2P3
2.0	1.5	2.0	1.5	4.0	323...528	A	25-PM2-D4P0
3.0	2.2	3.0	2.2	6.0	323...528	A	25-PM2-D6P0
5.0	4.0	5.0	4.0	10.5	323...528	B	25-PM2-D010
7.5	5.5	7.5	5.5	13.0	323...528	C	25-PM2-D013
10.0	7.5	10.0	7.5	17.0	323...528	C	25-PM2-D017
15.0	11.0	15.0	11.0	24.0	323...528	D	25-PM2-D024
20.0	15.0	15.0	11.0	30.0	323...528	D	25-PM2-D030
25.0	18.5	20.0	15.0	37.0	323...528	E	25-PM2-D037
30.0	22.0	25.0	18.5	43.0	323...528	E	25-PM2-D043
525...600V AC (-15%, +10%) – 3-Phase Input, 0...575V 3-Phase Output							
0.5	0.4	0.5	0.4	0.9	446...660	A	25-PM1-E0P9
1.0	0.75	1.0	0.75	1.7	446...660	A	25-PM1-E1P7
2.0	1.5	2.0	1.5	3.0	446...660	A	25-PM1-E3P0
3.0	2.2	3.0	2.2	4.2	446...660	A	25-PM1-E4P2
5.0	4.0	5.0	4.0	6.6	446...660	B	25-PM1-E6P6
7.5	5.5	7.5	5.5	9.9	446...660	C	25-PM1-E9P9
10.0	7.5	10.0	7.5	12.0	446...660	C	25-PM1-E012
15.0	11.0	15.0	11.0	19.0	446...660	D	25-PM1-E019
20.0	15.0	15.0	11.0	22.0	446...660	D	25-PM1-E022
25.0	18.5	20.0	15.0	27.0	446...660	E	25-PM1-E027
30.0	22.0	25.0	18.5	32.0	446...660	E	25-PM1-E032

PowerFlex 520-Series Control Module

Item	Description	Frame Size	Catalog No.
PowerFlex 523 Control Module	Replacement control module for use with PowerFlex 520-Series drives. Includes: • Control Module • Control Module Front Cover	A...E	25A-CTM1
PowerFlex 525 Control Module			25B-CTM1

Other Parts

Item	Description	Frame Size	Catalog No.
PowerFlex 523 Control Module Front Cover	Replacement cover for the control module I/O terminals, EtherNet/IP and DSI ports.	A...E	25A-CTMFC1
PowerFlex 525 Control Module Front Cover			25B-CTMFC1
PowerFlex 520-Series Power Module Front Cover	Replacement cover for the PowerFlex 520-Series power module.	B	25-PMFC-FB
		C	25-PMFC-FC
		D	25-PMFC-FD
		E	25-PMFC-FE

DRAFT

Other Parts

Item	Description	Frame Size	Catalog No.
PowerFlex 520-Series Power Terminal Guard	Replacement finger guard for power terminals.	A	25-PTG1-FA
		B	25-PTG1-FB
		C	25-PTG1-FC
		D	25-PTG1-FD
		E	25-PTG1-FE
PowerFlex 520-Series Heatsink Fan Kit	Replacement fan for drive power module.	A	25-FAN1-FA
		B	25-FAN1-FB
		C	25-FAN1-FC
		D	25-FAN1-FD
		E	25-FAN1-FE

Communication Option Kits and Accessories

Item	Description	Catalog No.
Communication Adapters	Embedded communication options for use with the PowerFlex 520-Series drives: • DeviceNet • Dual Port EtherNet/IP • PROFIBUS DP-V1	25-COMM-D 25-COMM-E2P 25-COMM-P
Compact I/O Module	Three channel	1769-SM2
Universal Serial Bus™ (USB) Converter Module	Provides serial communication via DF1 protocol for use with Connected Components Workbench software. Includes: • 2m USB cable (1) • 20-HIM-H10 cable (1) • 22-HIM-H10 cable (1)	1203-USB
Serial Converter Module (RS485 to RS232)	Provides serial communication via DF1 protocol for use with Connected Components Workbench software. Includes: • DSI to RS232 serial converter (1) • 1203-SFC serial cable (1) • 22-RJ45CBL-C20 cable (1)	22-SCM-232
DSI Cable	2.0 m RJ45 to RJ45 cable, male to male connectors.	22-RJ45CBL-C20
Serial Cable	2.0 m serial cable with a locking low profile connector to connect to the serial converter and a 9-pin sub-miniature D female connector to connect to a computer.	1203-SFC
Splitter Cable	RJ45 one to two port splitter cable (Modbus only)	AK-U0-RJ45-SC1
Terminating Resistors	RJ45 120 Ohm resistors (2 pieces)	AK-U0-RJ45-TR1
Terminal Block	RJ45 Two position terminal block (5 pieces)	AK-U0-RJ45-TB2P
Connected Components Workbench Software (Download or DVD-ROM)	Windows-based software packages for programming and configuring Allen-Bradley drives and other Rockwell Automation products. Compatibility: Windows XP, Windows Vista and Windows 7	http://ab.rockwellautomation.com/programmable-controllers/connected-components-workbench-software

Bulletin 1321-3R Series Line Reactors

Output Ratings[1]				Input Line Reactor[3][4]		Output Line Reactor[3][4]	
Normal Duty		Heavy Duty		IP 00 (Open Style)	IP 11 (NEMA/UL Type 1)	IP 00 (Open Style)	IP 11 (NEMA/UL Type 1)
HP	kW	HP	kW	Catalog No.	Catalog No.	Catalog No.	Catalog No.
200...240V 50/60 Hz 1-Phase[2]							
0.25	0.2	0.25	0.2	1321-3R4-A	1321-3RA4-A	1321-3R2-D	1321-3RA2-D
0.5	0.4	0.5	0.4	1321-3R8-A	1321-3RA8-A	1321-3R2-D	1321-3RA2-D
1.0	0.75	1.0	0.75	1321-3R8-A	1321-3RA8-A	1321-3R4-A	1321-3RA4-A
2.0	1.5	2.0	1.5	1321-3R18-A	1321-3RA18-A	1321-3R8-A	1321-3RA8-A
3.0	2.2	3.0	2.2	1321-3R18-A	1321-3RA18-A	1321-3R12-A	1321-3RA12-A
200...240V 50/60 Hz 3-Phase							

DRAFT

Bulletin 1321-3R Series Line Reactors

Output Ratings[1]				Input Line Reactor[3][4]		Output Line Reactor[3][4]	
Normal Duty		Heavy Duty		IP 00 (Open Style)	IP 11 (NEMA/UL Type 1)	IP 00 (Open Style)	IP 11 (NEMA/UL Type 1)
HP	kW	HP	kW	Catalog No.	Catalog No.	Catalog No.	Catalog No.
0.25	0.2	0.25	0.2	1321-3R2-D	1321-3RA2-D	1321-3R2-D	1321-3RA2-D
0.5	0.4	0.5	0.4	1321-3R2-D	1321-3RA2-D	1321-3R2-D	1321-3RA2-D
1.0	0.75	1.0	0.75	1321-3R4-A	1321-3RA4-A	1321-3R4-A	1321-3RA4-A
2.0	1.5	2.0	1.5	1321-3R8-A	1321-3RA8-A	1321-3R8-A	1321-3RA8-A
3.0	2.2	3.0	2.2	1321-3R12-A	1321-3RA12-A	1321-3R12-A	1321-3RA12-A
5.0	4.0	5.0	4.0	1321-3R18-A	1321-3RA18-A	1321-3R18-A	1321-3RA18-A
7.5	5.5	7.5	5.5	1321-3R25-A	1321-3RA25-A	1321-3R25-A	1321-3RA25-A
10.0	7.5	10.0	7.5	1321-3R35-A	1321-3RA35-A	1321-3R35-A	1321-3RA35-A
15.0	11.0	10.0	7.5	1321-3R45-A	1321-3RA45-A	1321-3R45-A	1321-3RA45-A
20.0	15.0	15.0	11.0	1321-3R55-A (ND) 1321-3R45-A (HD)	1321-3RA55-A (ND) 1321-3RA45-A (HD)	1321-3R55-A (ND) 1321-3R45-A (HD)	1321-3RA55-A (ND) 1321-3RA45-A (HD)
380...480V 50/60 Hz 3-Phase							
0.5	0.4	0.5	0.4	1321-3R2-B	1321-3RA2-B	1321-3R2-B	1321-3RA2-B
1.0	0.75	1.0	0.75	1321-3R4-C	1321-3RA4-C	1321-3R4-C	1321-3RA4-C
2.0	1.5	2.0	1.5	1321-3R4-B	1321-3RA4-B	1321-3R4-B	1321-3RA4-B
3.0	2.2	3.0	2.2	1321-3R8-C	1321-3RA8-C	1321-3R8-C	1321-3RA8-C
5.0	4.0	5.0	4.0	1321-3R12-B	1321-3RA12-B	1321-3R12-B	1321-3RA12-B
7.5	5.5	7.5	5.5	1321-3R12-B	1321-3RA12-B	1321-3R12-B	1321-3RA12-B
10.0	7.5	10.0	7.5	1321-3R18-B	1321-3RA18-B	1321-3R18-B	1321-3RA18-B
15.0	11.0	15.0	11.0	1321-3R25-B	1321-3RA25-B	1321-3R25-B	1321-3RA25-B
20.0	15.0	15.0	11.0	1321-3R35-B (ND) 1321-3R25-B (HD)	1321-3RA35-B (ND) 1321-3RA25-B (HD)	1321-3R35-B (ND) 1321-3R25-B (HD)	1321-3RA35-B (ND) 1321-3RA25-B (HD)
25.0	18.5	20.0	15.0	1321-3R35-B	1321-3RA35-B	1321-3R35-B	1321-3RA35-B
30.0	22.0	25.0	18.5	1321-3R45-B (ND) 1321-3R35-B (HD)	1321-3RA45-B (ND) 1321-3RA35-B (HD)	1321-3R45-B (ND) 1321-3R35-B (HD)	1321-3RA45-B (ND) 1321-3RA35-B (HD)
525...600V 50/60 Hz 3-Phase							
0.5	0.4	0.5	0.4	1321-3R1-C	1321-3RA1-C	1321-3R1-C	1321-3RA1-C
1.0	0.75	1.0	0.75	1321-3R2-B	1321-3RA2-B	1321-3R2-B	1321-3RA2-B
2.0	1.5	2.0	1.5	1321-3R4-C	1321-3RA4-C	1321-3R4-C	1321-3RA4-C
3.0	2.2	3.0	2.2	1321-3R4-B	1321-3RA4-B	1321-3R4-B	1321-3RA4-B
5.0	4.0	5.0	4.0	1321-3R8-C	1321-3RA8-C	1321-3R8-C	1321-3RA8-C
7.5	5.5	7.5	5.5	1321-3R12-B	1321-3RA12-B	1321-3R12-B	1321-3RA12-B
10.0	7.5	10.0	7.5	1321-3R12-B	1321-3RA12-B	1321-3R12-B	1321-3RA12-B
15.0	11.0	15.0	11.0	1321-3R18-B	1321-3RA18-B	1321-3R18-B	1321-3RA18-B
20.0	15.0	15.0	11.0	1321-3R25-B (ND) 1321-3R18-B (HD)	1321-3RA25-B (ND) 1321-3RA18-B (HD)	1321-3R25-B (ND) 1321-3R18-B (HD)	1321-3RA25-B (ND) 1321-3RA18-B (HD)
25.0	18.5	20.0	15.0	1321-3R35-C (ND) 1321-3R25-C (HD)	1321-3RA35-C (ND) 1321-3RA25-C (HD)	1321-3R35-C (ND) 1321-3R25-C (HD)	1321-3RA35-C (ND) 1321-3RA25-C (HD)
30.0	22.0	25.0	18.5	1321-3R35-C (ND) 1321-3R25-B (HD)	1321-3RA35-C (ND) 1321-3RA25-B (HD)	1321-3R35-C (ND) 1321-3R25-B (HD)	1321-3RA35-C (ND) 1321-3RA25-B (HD)

(1) Normal Duty and Heavy Duty ratings for 15 HP (11 kW) and below are identical except for 200...240V 3-Phase 15 HP (11 kW) drive.

(2) Standard 3-phase reactors can be used for 1-phase applications by routing each of the two supply conductors through an outside coil and leaving the center open.

(3) Catalog numbers listed are for 3% impedance. 5% impedance reactor types are also available. See 1321 Power Conditioning Products Technical Data, publication 1321-TD001.

(4) Input line reactors were sized based on the NEC fundamental motor amps. Output line reactors were sized based on the VFD rated output currents.

DRAFT

Accessory Dimensions

IP 30/NEMA 1/UL Type 1 Kit – Dimensions are in mm and (in.).

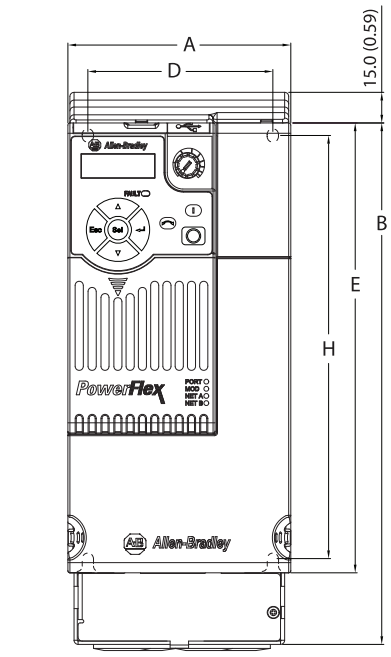

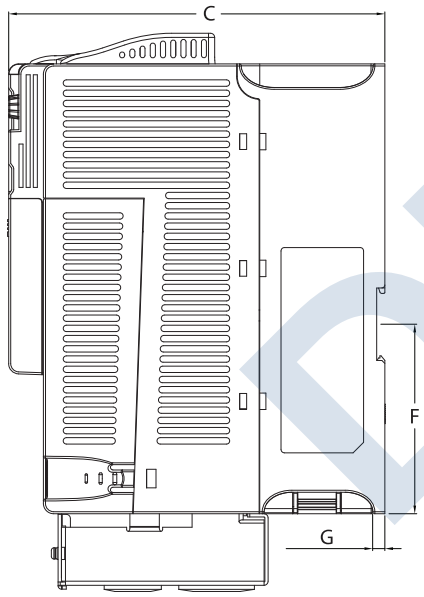

Frame A

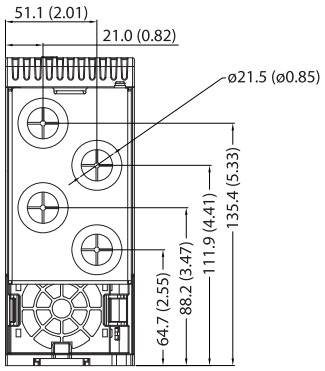

Frame B

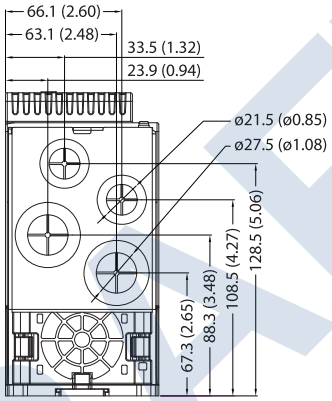

Frame C

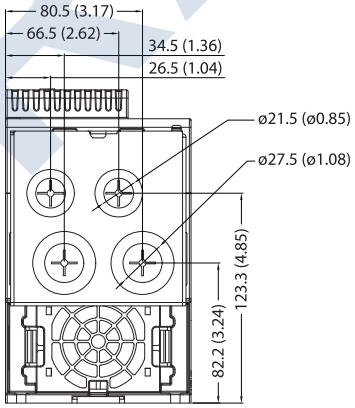

Frame D

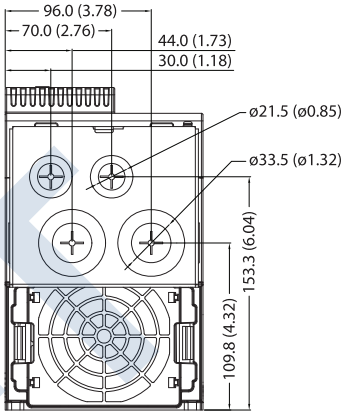

Frame E

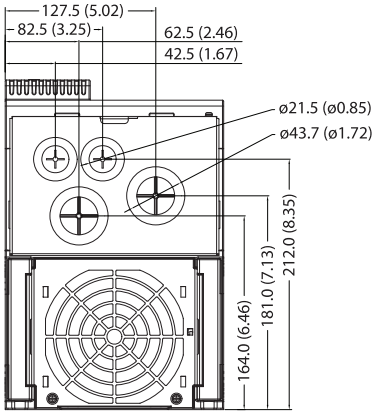

Frame Size	A	B	C	D	E	F	G	H
A	72.0 (2.83)	219.0 (8.62)	172.0 (6.77)	57.5 (2.26)	152.0 (5.98)	92.7 (3.65)	6.0 (0.24)	140.0 (5.51)
B	87.0 (3.43)	218.0 (8.58)	172.0 (6.77)	72.5 (2.85)	180.0 (7.09)	92.7 (3.65)	6.0 (0.24)	168.0 (6.61)
C	109.0 (4.29)	255.0 (10.04)	184.0 (7.24)	90.5 (3.56)	222.0 (8.66)	92.7 (3.65)	6.0 (0.24)	207.0 (8.15)
D	130.0 (5.12)	295.0 (11.61)	212.0 (8.35)	116.0 (4.57)	260.0 (10.24)	–	6.0 (0.24)	247.0 (9.74)
E	185.0 (7.28)	350.0 (13.78)	279.0 (10.98)	160.0 (6.30)	300.0 (11.81)	–	7.6 (0.30)	280.0 (11.02)

DRAFT

Control Module Fan Kit – Dimensions are in mm and (in.).

Frame A...D

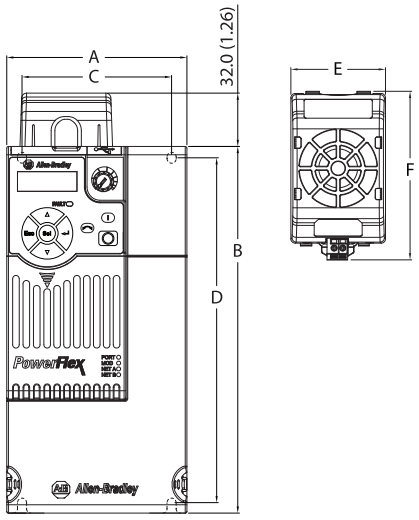

Frame E

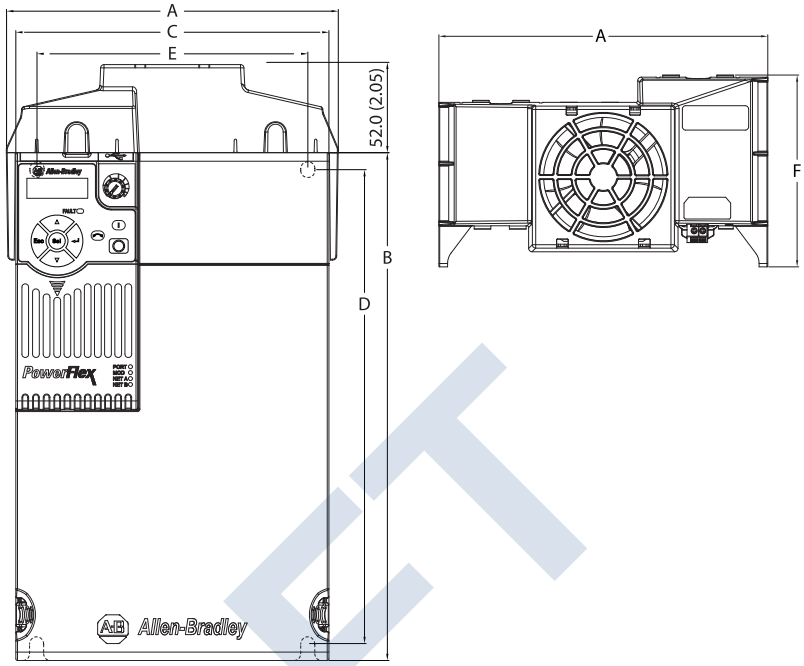

Frame Size	A	B	C	D	E	F
A	72.0 (2.83)	152.0 (5.98)	57.5 (2.26)	140.0 (5.51)	56.0 (2.20)	99.8 (3.93)
B	87.0 (3.43)	180.0 (7.09)	72.5 (2.85)	168.0 (6.61)	56.0 (2.20)	99.8 (3.93)
C	109.0 (4.29)	220.0 (8.66)	90.5 (3.56)	207.0 (8.15)	56.0 (2.20)	99.8 (3.93)
D	130.0 (5.12)	260.0 (10.24)	116.0 (4.57)	247.0 (9.72)	56.0 (2.20)	99.8 (3.93)
E	196.0 (7.72)	300.0 (11.81)	185.0 (7.28)	280.0 (11.02)	196.0 (7.72)	114.3 (4.50)

Specifications	25-FAN1-70C	25-FAN2-70C
Rated Voltage	24V DC	
Operation Voltage	14...27.6V DC	
Input Current	0.1 A	0.15 A
Speed (Reference)	7000 rpm	4500 ± 10% rpm
Maximum Air Flow (At zero static pressure)	0.575 m^3/min	1.574 m^3/min
Maximum Air Pressure (At zero air flow)	7.70 mmH_2O	9.598 mmH_2O
Acoustical Noise	40.5 dB-A	46.0 dB-A
Insulation Type	UL Class A	
Frame Size	Frame A...D	Frame E
Wire Size	0.32 mm^2 (22 AWG)	
Torque	0.29...0.39 Nm (2.6...3.47 lb-in.)	

DRAFT

EMC Line Filter – Dimensions are in mm and (in.).

Frame A...D

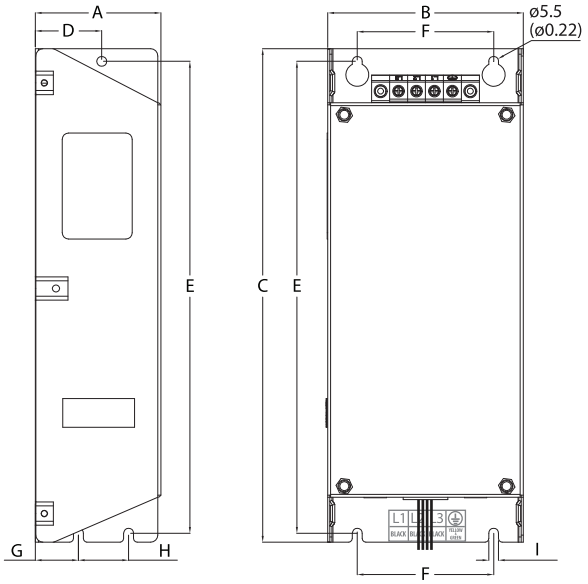

Frame E

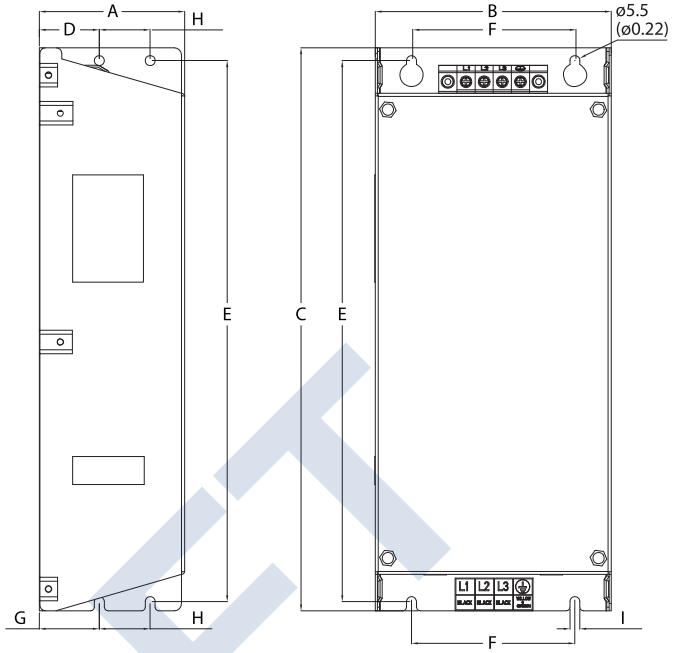

Frame Size	A	B	C	D	E	F	G	H	I
A	55.0 (2.17)	72.0 (2.83)	234.0 (9.21)	30.0 (1.18)	223.0 (8.78)	54.0 (2.13)	20.0 (0.79)	23.0 (0.91)	5.5 (0.22)
B	70.0 (2.76)	87.0 (3.43)	270.0 (10.63)	35.0 (1.38)	258.0 (10.16)	58.0 (2.28)	25.0 (0.98)	24.0 (0.94)	5.5 (0.22)
C	70.0 (2.76)	109.0 (4.29)	275.0 (10.83)	37.0 (1.46)	263.0 (10.35)	76.0 (2.99)	25.0 (0.98)	28.0 (1.10)	5.5 (0.22)
D	80.0 (3.15)	130.0 (5.12)	310.0 (12.20)	33.0 (1.30)	298.0 (11.73)	90.0 (3.54)	33.0 (1.30)	28.0 (1.10)	5.5 (0.22)
E	80.0 (3.15)	155.0 (6.10)	390.0 (15.35)	33.0 (1.30)	375.0 (14.76)	110.0 (4.33)	33.0 (1.30)	28.0 (1.10)	5.5 (0.22)

DRAFT

Safe-Torque-Off Function

The PowerFlex 525 Safe-Torque-Off function, when used with other safety components, helps provide protection according to EN ISO 13849 and EN62061 for safe-off and protection against restart. The PowerFlex 525 Safe-Torque-Off function is just one component in a safety control system. Components in the system must be chosen and applied appropriately to achieve the desired level of operator safeguarding.

PowerFlex 525 Safe-Torque-Off Overview

The PowerFlex 525 Safe-Torque-Off function:

- Provides the Safe-Torque-Off (STO) function defined in EN IEC 61800-5-2.
- Blocks gate-firing signals from reaching the Insulated Gate Bipolar Transistor (IGBT) output devices of the drive. This prevents the IGBTs from switching in the sequence necessary to generate torque in the motor.
- Can be used in combination with other safety devices to fulfill the requirements of a system "safe torque off" function which satisfies Category 3 / PL (d) according to EN ISO 13849-1 and SIL CL2 according to EN 62061, IEC 61508, and EN 61800-5-2.

IMPORTANT The function is suitable for performing mechanical work on the drive system or affected area of a machine only. It does not provide electrical safety.

EC Type Examination Certification

TÜV Rheinland has certified the PowerFlex 525 Safe-Torque-Off function compliant with the requirements for machines defined in Annex I of the EC Directive 2006/42/EC, and that it complies with the requirements of the relevant standards listed below:

- EN ISO 13849-1 Safety of machinery – Safety related parts of control systems – Part 1: General principles for design. (PowerFlex 525 STO achieves Category 3 / PL(d))
- EN 61800-5-2 Adjustable speed electrical power drive systems – Part 5-2 Safety requirements – Functional. (PowerFlex 525 STO achieves SIL CL 2)
- EN 62061 Safety of machinery – Functional safety of safety-related electrical, electronic and programmable electronic control systems.
- IEC 61508 Part 1-7 Functional safety of electrical/electronic/programmable electronic safety-related systems – Parts 1-7.

TÜV also certifies that the PowerFlex 525 STO may be used in applications up to Category 3/ PL(d) according to EN ISO 13849-1 and SIL 2 according to EN 62061 / EN 61800-5-2 / IEC 61508.

The TÜV Rheinland certificate may be found at http://www.rockwellautomation.com/products/certification/.

DRAFT

ITEM 746L

Safety Concept

The PowerFlex 525 Safe-Torque-Off function is suitable for use in safety applications up to and including Category 3 / PL(d) according to EN ISO 13849-1 and SIL 2 according to EN 62061 / EN 61800-5-2 / IEC 61508.

In addition, the PowerFlex 525 STO function may be used together with other components in a safety application to achieve an overall Category 3 / PL(e) according to EN ISO 13849-1 and SIL 3 according to EN 62061 and IEC 61508. This is illustrated in Example 3 on page 46.

Safety requirements are based on the standards current at the time of certification.

The PowerFlex 525 STO function is intended for use in safety-related applications where the de-energized state is considered to be the safe state. All of the examples shown here are based on achieving de-energization as the safe state for typical Machine Safety and Emergency Shutdown (ESD) systems.

PFD and PFH Data

PFD and PFH calculations are based on the equations from Part 6 of EN 61508.

This table provides data for a 20-year proof test interval and demonstrates the worst-case effect of various configuration changes on the data.

PFD and PFH for 20-year Proof Test Interval

Attribute	Value
PFD	6.62E-05 (MTTF = 3593 years)
PFH_D	8.13E-10
SFF	83%
DC	62.5%
CAT	3
HFT	1 (1oo2)
PTI	20 YEARS
Hardware Type	Type A

Safety Reaction Time

The safety reaction time from an input signal condition that triggers a safe stop, to the initiation of the configured Stop Type, is 100 ms (maximum).

DRAFT

Connection Examples

Example 1 – Safe-Torque-Off Connection with Coast-to-Stop Action, SIL 2/PL d

Stop Category 0 – Coast

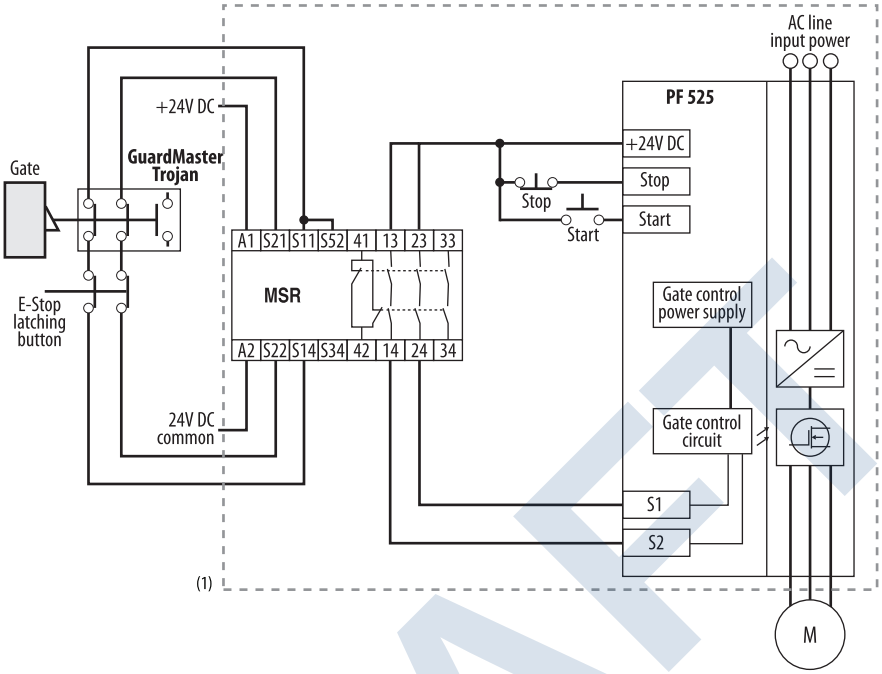

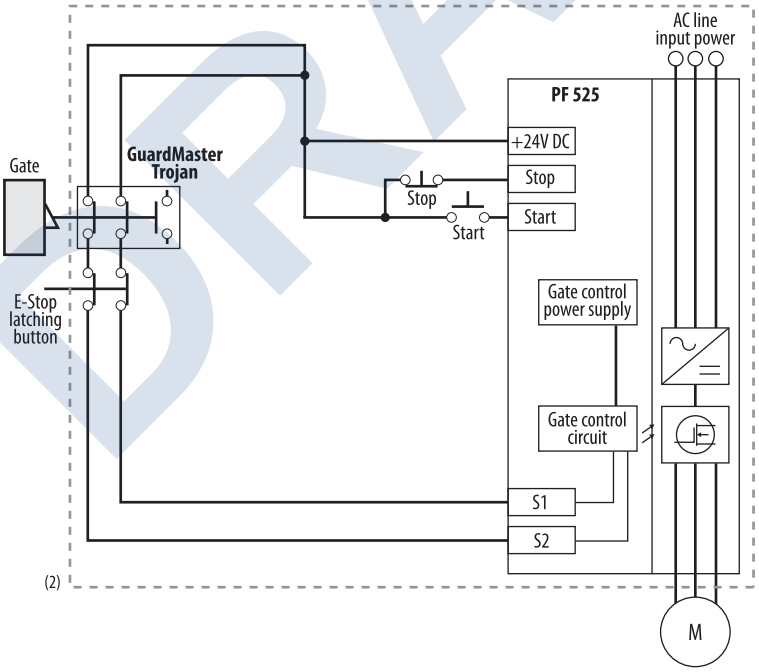

(1) Enclosure Recommended. Note: External wiring failure modes must be considered as described in EN ISO 13849-2. Enclosure or other measure to exclude these failure modes should be used.

(2) In some situations, a safety relay is not required if both the switch and PowerFlex 525 are installed in the same enclosure.

DRAFT

Stop Category 0 – Coast with Two PowerFlex 525 Drives

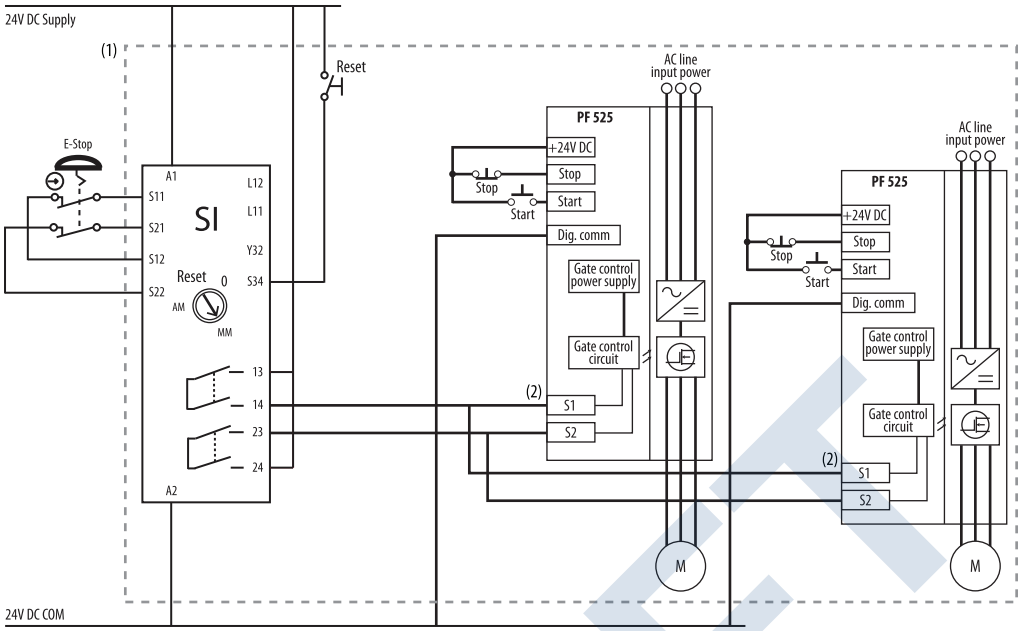

(1) Enclosure Recommended. Note: External wiring failure modes must be considered as described in EN ISO 13849-2. Enclosure or other measure to exclude these failure modes should be used.
(2) Each safety input draws 6 mA from the supply.

Example 2 – Safe-Torque-Off Connection with Controlled Stop Action, SIL 2/PL d

Stop Category 1– Controlled

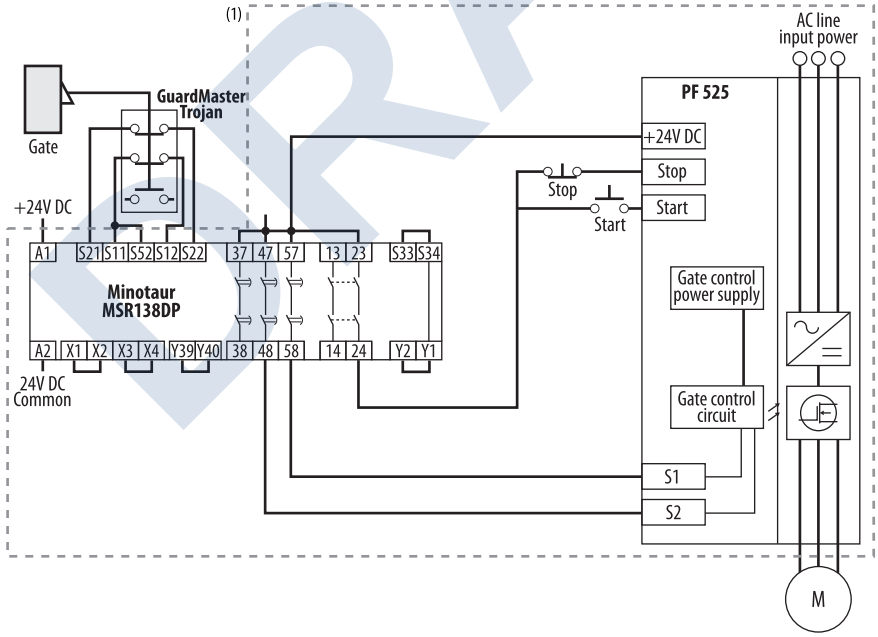

(1) Enclosure Recommended. Note: External wiring failure modes must be considered as described in EN ISO 13849-2. Enclosure or other measure to exclude these failure modes should be used.

DRAFT

Example 3 – Safe-Torque-Off Connection with Coast-to-Stop Action Using External +24V supply, SIL 3/PL e

Stop Category 0 – Coast

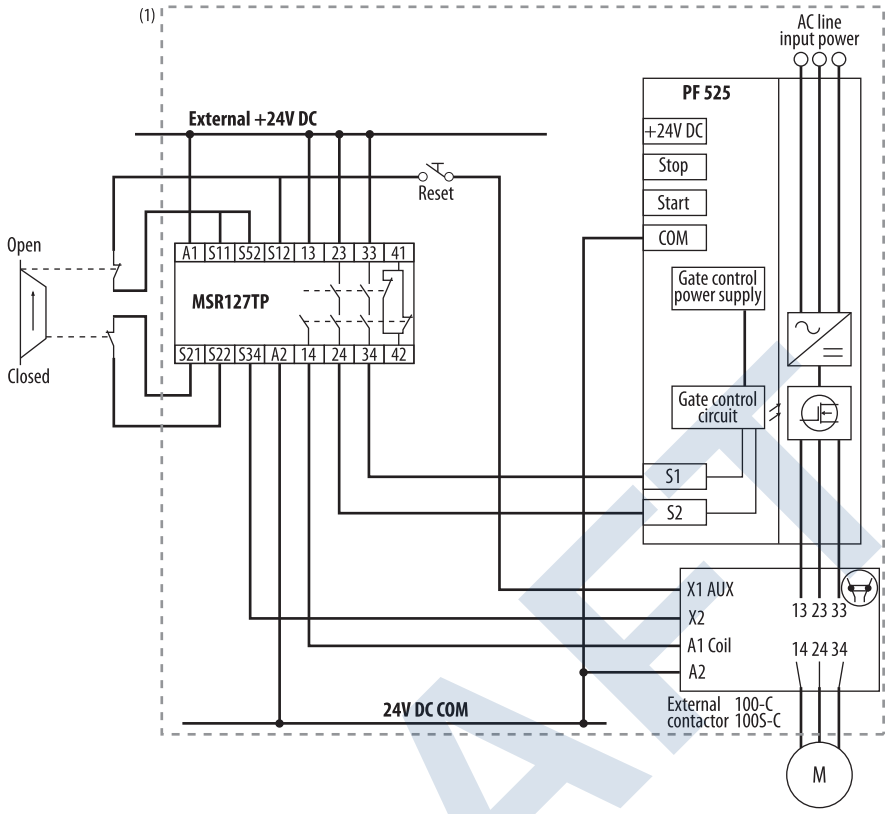

(1) Enclosure Recommended. Note: External wiring failure modes must be considered as described in EN ISO 13849-2. Enclosure or other measure to exclude these failure modes should be used.

DRAFT

ITEM 746L

Additional Resources

These documents contain additional information concerning related products from Rockwell Automation.

Title	Publication
PowerFlex 520-Series Adjustable Frequency AC Drive User Manual	520-UM001
PowerFlex 4-Class Human Interface Module (HIM) DSI Quick Reference	22HIM-QR001
PowerFlex 525 Embedded EtherNet/IP Adapter User Manual	520COM-UM001
PowerFlex 25-COMM-D DeviceNet Adapter User Manual	520COM-UM002
PowerFlex 25-COMM-E2P EtherNet/IP Adapter User Manual	520COM-UM003
PowerFlex 25-COMM-P PROFIBUS DP Adapter User Manual	520COM-UM004
Dynamic Braking Resistor Calculator	PFLEX-AT001
Wiring and Grounding Guidelines for PWM AC Drives	DRIVES-IN001
Preventive Maintenance of Industrial Control and Drive System Equipment	DRIVES-TD001
Safety Guidelines for the Application, Installation and Maintenance of Solid State Control	SGI-1.1

You can view or download publications at http://www.rockwellautomation.com/literature/. To order paper copies of technical documentation, contact your local Allen-Bradley distributor or Rockwell Automation sales representative.

DRAFT

Important Information

Solid-state equipment has operational characteristics differing from those of electromechanical equipment. Safety Guidelines for the Application, Installation and Maintenance of Solid State Controls (publication SGI-1.1 available from your local Rockwell Automation sales office or online at http://www.rockwellautomation.com/literature/) describes some important differences between solid-state equipment and hard-wired electromechanical devices. Because of this difference, and also because of the wide variety of uses for solid-state equipment, all persons responsible for applying this equipment must satisfy themselves that each intended application of this equipment is acceptable.

In no event will Rockwell Automation, Inc. be responsible or liable for indirect or consequential damages resulting from the use or application of this equipment.

The examples and diagrams in this publication are included solely for illustrative purposes. Because of the many variables and requirements associated with any particular installation, Rockwell Automation, Inc. cannot assume responsibility or liability for actual use based on the examples and diagrams.

No patent liability is assumed by Rockwell Automation, Inc. with respect to use of information, circuits, equipment, or software described in this manual.

Reproduction of the contents of this manual, in whole or in part, without written permission of Rockwell Automation, Inc., is prohibited.

Documentation Feedback

Your comments will help us serve your documentation needs better. If you have any suggestions on how to improve this document, complete this form, publication RA-DU002, available at http://www.rockwellautomation.com/literature/.

DRAFT

Allen-Bradley, Rockwell Software, Rockwell Automation, PowerFlex, Connected Components Workbench, Studio 5000, DriveTools SP, AppView, CustomView, QuickView, MainsFree Programming, and PointStop are trademarks of Rockwell Automation, Inc.

Trademarks not belonging to Rockwell Automation are property of their respective companies.

www.rockwellautomation.com

Power, Control and Information Solutions Headquarters

Americas: Rockwell Automation, 1201 South Second Street, Milwaukee, WI 53204-2496 USA, Tel: (1) 414.382.2000, Fax: (1) 414.382.4444
Europe/Middle East/Africa: Rockwell Automation NV, Pegasus Park, De Kleetlaan 12a, 1831 Diegem, Belgium, Tel: (32) 2 663 0600, Fax: (32) 2 663 0640
Asia Pacific: Rockwell Automation, Level 14, Core F, Cyberport 3, 100 Cyberport Road, Hong Kong, Tel: (852) 2887 4788, Fax: (852) 2508 1846

Publication 520-TD001E-EN-E - July 2016
Supersedes Publication 520-TD001D-EN-E – January 2014

Copyright © 2016 Rockwell Automation, Inc. All rights reserved.

DRAWING LIST

Standard Detail Drawings

0.01	Control Panel Wiring & Fabrication Specifications
0.02	Electrical & Instrument Symbols

Polymer System 1 Control Panel (SCP-8301)

SCP-8301-10.00	Layout - Panel - Front Elevation
SCP-8301-10.03	Layout - Panel - Top / Bottom View
SCP-8301-10.05	Layout - Panel - Backpan Elevation
SCP-8301-10.07	Layout - Panel - PLC Rack 1
SCP-8301-10.10	Layout - Panel - Controls Details
SCP-8301-10.20	Layout - Panel - Nameplate Details
SCP-8301-20.00	COMM - Network Overview Block Diagram
SCP-8301-20.30	Network Switch (NS-1), Port Schedule
SCP-8301-30.01	120VAC Power Distribution Diagram
SCP-8301-30.10	120VAC Power Distribution Diagram
SCP-8301-30.20	24VDC Power Distribution Diagram
SCP-8301-40.101A	PLC Base Unit, Discete Inputs Rack 1, Slot 01 - Wiring Diagram
SCP-8301-40.101B	PLC Base Unit, Discete Inputs Rack 1, Slot 01 - Wiring Diagram
SCP-8301-40.101C	PLC Base Unit, Discete Outputs Rack 1, Slot 01 - Wiring Diagram
SCP-8301-40.101D	PLC Base Unit, Discete Outputs Rack 1, Slot 01 - Wiring Diagram
SCP-8301-40.102A	PLC Base Unit, Analog Inputs Rack 1, Slot 02 - Wiring Diagram
SCP-8301-40.102B	PLC Base Unit, Analog Outputs Rack 1, Slot 02 - Wiring Diagram
SCP-8301-40.103A	PLC Base Unit, HSC Inputs Rack 1, Slot 03 - Wiring Diagram
SCP-8301-40.103B	PLC Base Unit, HSC Outputs Rack 1, Slot 03 - Wiring Diagram
SCP-8301-40.104	Analog Input Module Rack 1, Slot 04 - Wiring Diagram
SCP-8301-50.00	Neat Polymer Pump VFD Control Wiring Diagram
SCP-8301-50.01	Polymer Mixer VFD Control Wiring Diagram

DRAFT

CONTROL PANEL WIRING SPECIFICATIONS

APPLICATION	COLOR	SIZE / TYPE
480 VAC POWER	BLACK	STRANDED COPPER, MTW, 12 AWG (MINIMUM)
480 VAC GROUND	GREEN	STRANDED COPPER, MTW, 12 AWG (MINIMUM)
120 VAC POWER (UNSWITCHED)	BLACK	STRANDED COPPER, MTW, 16 AWG (MINIMUM)
120 VAC CONTROL	RED	STRANDED COPPER, MTW, 16 AWG (MINIMUM)
120 VAC NEUTRAL	WHITE	STRANDED COPPER, MTW, 16 AWG (MINIMUM)
120 VAC GROUND	GREEN	STRANDED COPPER, MTW, 16 AWG (MINIMUM)
5–24 VDC POWER	BLUE	STRANDED COPPER, MTW, 16 AWG (MINIMUM)
5–24 VDC COMMON	WHITE/BLUE	STRANDED COPPER, MTW, 16 AWG (MINIMUM)
FOREIGN (EXTERNAL) POWER	YELLOW	STRANDED COPPER, MTW, 14 AWG (MINIMUM)
FOREIGN (EXTERNAL) NEUTRAL	WHITE/YELLOW	STRANDED COPPER, MTW, 14 AWG (MINIMUM)
INTRINSICALLY SAFE	LIGHT BLUE	STRANDED COPPER, MTW, 16 AWG (MINIMUM)
SIGNAL (+) SIGNAL (–) SHIELD	WHITE BLACK BARE	2–CONDUCTOR TWISTED SHIELDED, 18 AWG
SIGNAL OR POWER SIGNAL (+) SIGNAL (–) SHIELD	RED WHITE BLACK BARE	3–CONDUCTOR (TRIAD) SHIELDED, 18 AWG
CAT6 CABLE	BLACK	300V CAT6
CAT6 CABLE	BLACK	600V CAT6 (MOTOR CONTROL PANEL)

WIRING SIZED PER UL 508A, TABLES 28.1 AND 38.1 FOR 75° COPPER.
WIRING SIZED LARGER THAN 12 AWG WILL BE LABELED & IDENTIFIED ON THE PANEL WIRING DIAGRAMS.
WIRING IS RATED FOR 600VAC.

DRAWING DESIGNATIONS

00.XX – STANDARDS & SYMBOLS
01.XX – INDEX & BILL OF MATERIALS
10.XX – PANEL LAYOUT DRAWINGS
20.XX – COMMUNICATION BLOCK DIAGRAMS
30.XX – POWER DISTRIBUTION WIRING DIAGRAMS
40.XX – ELECTRICAL DRAWINGS
45.XX – ELECTRICAL DRAWINGS
50.XX – MOTOR DRAWINGS
60.XX – LOOP DRAWINGS
70.XX – INTERCONNECT DRAWINGS
95.XX – INTRINSIC DRAWINGS

TERMINAL AND WIRING IDENTIFICATION

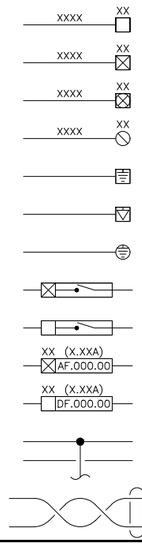

DC TERMINAL BLOCK WITHIN PANEL (WIRE & TERMINAL ARE SAME NUMBER IF POSSIBLE)
AC TERMINAL BLOCK WITHIN PANEL (WIRE & TERMINAL ARE SAME NUMBER IF POSSIBLE)
DEVICE CONNECTION WITHIN PANEL
FIELD DEVICE OR TERMINAL
GROUNDING TERMINAL BLOCK
ISOLATED GROUNDING TERMINAL BLOCK
GROUNDING BAR LUG
AC KNIFE DISCONNECT TERMINAL BLOCK
DC KNIFE DISCONNECT TERMINAL BLOCK
AC FUSED TERMINAL BLOCK
DC FUSED TERMINAL BLOCK
(AMPERAGE INDICATED)
CONNECTION (NODE)
NO CONNECTION (BREAK)
CONTINUATION
TWISTED SHIELDED PAIR WIRE

PANEL WIRING DIAGRAMS LINETYPE STANDARDS

INTERNAL CONTROL PANEL WIRING BY TSI
EXTERNAL FIELD WIRING BY OTHERS
SM — SINGLE MODE FIBER CABLE
MM — MULTIMODE FIBER CABLE
CAT6 — CAT–6 CABLE

TERMINAL MOUNTING AND RACEWAYS SYSTEMS

MANUFACTURER	PART NUMBER	DESCRIPTION
PANDUIT	F1X4LG6	WIRE DUCT, TYPE F NARROW SLOT, 1" W x 4.0" H x 6.0' L, PVC, LIGHT GRAY
PANDUIT	F1.5X4LG6	WIRE DUCT, TYPE F NARROW SLOT, 1.5" W x 4.0" H x 6.0' L, PVC, LIGHT GRAY
PANDUIT	F2X4LG6	WIRE DUCT, TYPE F NARROW SLOT, 2" W x 4.0" H x 6.0' L, PVC, LIGHT GRAY
PANDUIT	F3X4LG6	WIRE DUCT, TYPE F NARROW SLOT, 3" W x 4.0" H x 6.0' L, PVC, LIGHT GRAY
PANDUIT	F4X4LG6	WIRE DUCT, TYPE F NARROW SLOT, 4" W x 4.0" H x 6.0' L, PVC, LIGHT GRAY
PANDUIT	C1LG6	DUCT COVER, 1" W x 6' L, PVC, LIGHT GRAY
PANDUIT	C1.5LG6	DUCT COVER, 1.5" W x 6' L, PVC, LIGHT GRAY
PANDUIT	C2LG6	DUCT COVER, 2" W x 6' L, PVC, LIGHT GRAY
PANDUIT	C3LG6	DUCT COVER, 3" W x 6' L, PVC, LIGHT GRAY
PANDUIT	C4LG6	DUCT COVER, 4" W x 6' L, PVC, LIGHT GRAY
PHOENIX CONTACT	0801733	DIN RAIL, 6.56' x 1.38" x 0.3", STEEL, PERFORATED
PHOENIX CONTACT	5604188	RAISED DIN RAIL, 6.56' x 1.38" x 2.26", ALUMINUM, PERFORATED

CUSTOM NOTES:

REV	DESCRIPTION/INIT	DATE
1.0	SUBMITTAL/JW	05/28/24

LISTING: N/A

Technical Systems Inc.
2303 196TH ST. S.W.
LYNNWOOD, WA. 98036
(425) 775–5696

CUSTOMER: FKC CO., LTD.
EN / PM / CHK: BC/BC/AP
DRAWN: JW

CITY OF WASHOUGAL – BIOSOLIDS HANDLING FACILITIES

FKC WASHOUGAL, WA.

DRAWING STANDARDS
CONTROL PANEL WIRING AND FABRICATION SPECIFICATIONS

DATE CREATED: 05/28/2024
REV.: 0.0
JOB NO.: 8272
DWG. NO.: 00.01

DRAFT

DRAWING SYMBOLS

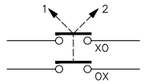

2 POSITION MAINTAINED SELECTOR SWITCH
CLOSED IN POSITION–1
CLOSED IN POSITION–2

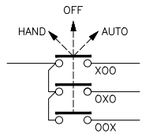

3 POSITION MAINTAINED SELECTOR SWITCH
CLOSED IN POSITION–1
CLOSED IN POSITION–2
CLOSED IN POSITION–3

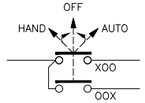

3 POSITION MOMENTARY SELECTOR SWITCH
CLOSED IN POSITION–1, SPRING RETURN TO CENTER
CLOSED IN POSITION–3, SPRING RETURN TO CENTER



CONTACT – NORMALLY OPEN



CONTACT – NORMALLY CLOSED



TIMED CONTACT –NORMALLY CLOSED ON DELAY



TIMED CONTACT –NORMALLY OPEN ON DELAY

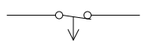

TIMED CONTACT –NORMALLY CLOSED OFF DELAY

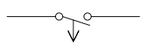

TIMED CONTACT –NORMALLY OPEN OFF DELAY

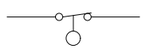

FLOAT SWITCH – NORMALLY CLOSED OPEN ON RISING LEVEL

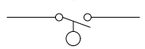

FLOAT SWITCH – NORMALLY OPEN CLOSE ON RISING LEVEL

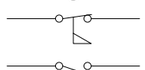

FLOW SWITCH – NORMALLY CLOSED OPEN ON INCREASING FLOW

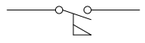

FLOW SWITCH – NORMALLY OPEN CLOSE ON INCREASING FLOW

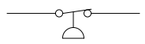

PRESSURE SWITCH – NORMALLY CLOSED OPEN ON RISING PRESSURE

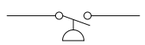

PRESSURE SWITCH – NORMALLY OPEN CLOSE ON RISING PRESSURE



TEMPERATURE SWITCH – NORMALLY CLOSED OPEN ON RISING TEMPERATURE

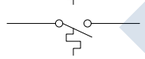

TEMPERATURE SWITCH – NORMALLY OPEN CLOSE ON RISING TEMPERATURE

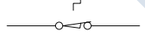

LIMIT SWITCH – NORMALLY CLOSED

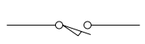

LIMIT SWITCH – NORMALLY OPEN



PUSHBUTTON – NORMALLY CLOSED



PUSHBUTTON – NORMALLY OPEN

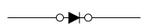

DIODE



RESISTOR



METAL OXIDE VARISTOR (MOV)

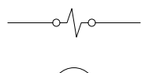

SOLENOID

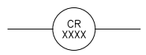

COIL – CONTROL RELAY

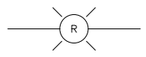

PILOT LIGHT A–AMBER R–RED B–BLUE W–WHITE G–GREEN Y–YELLOW



PILOT LIGHT – PUSH–TO–TEST

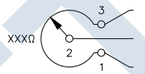

POTENTIOMETER



THERMOCOUPLE

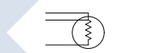

RTD (3–WIRE)



HORN (VIBRATION)

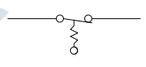

PULL CORD E–STOP



HEATER



BATTERY



ELAPSED TIME METER

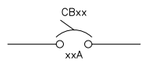

CIRCUIT BREAKER – SINGLE POLE

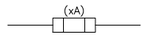

POWER FUSE

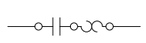

MAGNETIC STARTER W/ OVERLOAD

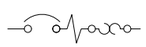

MOTOR CIRCUIT PROTECTOR

INSTRUMENT IDENTIFICATION ISA–S5 LETTER CODES TABLE

	FIRST LETTER(S)		SUCCEEDING LETTERS		
LETTER	MEASURED or PROCESS VARIABLE	MODIFIER	READOUT or PASSIVE FUNCTION	OUTPUT FUNCTION	MODIFIER
A	ANALYSIS		ALARM		
B	BURNER / COMBUSTION		USER'S CHOICE *	USER'S CHOICE *	USER'S CHOICE *
C	USER'S CHOICE *			CONTROL	
D	USER'S CHOICE *		DIFFERENTIAL		
E	VOLTAGE		SENSOR (PRIMARY ELEMENT)		
F	FLOW RATE	RATIO (FRACTION)			
G	USER'S CHOICE *		GLASS, VIEWING DEVICE		
H	HAND (MANUAL)				HIGH
I	CURRENT		INDICATION		
J	POWER	SCAN			
K	TIME, TIME SCHEDULE	TIME RATE OF CHANGE		CONTROL STATION	
L	LEVEL		LIGHT (PILOT)		LOW
M	USER'S CHOICE *	MOMENTARY			MIDDLE, INTERMEDIATE
N	USER'S CHOICE *	USER'S CHOICE *	USER'S CHOICE *	USER'S CHOICE *	USER'S CHOICE *
O	USER'S CHOICE *		ORIFICE, RESTRICTION		
P	PRESSURE / VACUUM		PRESSURE, VACUUM POINT (TEST CONNECTION)		
Q	QUANTITY	INTEGRATE			
R	RADIATION		RECORD or PRINT		
S	SPEED/FREQUENCY	SAFETY		SWITCH	
T	TEMPERATURE			TRANSMIT	
U	MULTIVARIABLE		MULTIFUNCTION *	MULTIFUNCTION *	MULTIFUNCTION *
V	VIBRATION/MECHANICAL ANALYSIS			VALVE, DAMPER, LOUVER	
W	WEIGHT / FORCE		WELL		
X	UNCLASSIFIED	X AXIS	UNCLASSIFIED *	UNCLASSIFIED *	UNCLASSIFIED *
Y	EVENT/STATE/PRESENCE	Y AXIS		RELAY, COMPUTE *	
Z	POSITION / DIMENSION	Z AXIS		DRIVE, ACTUATE	

* WHEN USED, EXPLANATION IS SHOWN ADJACENT TO INSTRUMENT SYMBOL. SEE ABBREVIATION AND LETTER SYMBOLS.

INSTRUMENT IDENTIFICATION

CORIOLIS FLOWMETER

RADAR LEVEL

ULTRASONIC LEVEL

MAGNETIC FLOWMETER

ROTAMETER

ULTRASONIC FLOWMETER

MASS AIR FLOWMETER

TURBINE FLOWMETER

VENTURI FLOWMETER

DRAFT

REV	DESCRIPTION/INIT	DATE
1.0	SUBMITTAL/JW	05/28/24

LISTING: N/A

TSI **Technical Systems Inc.**
2303 196TH ST. S.W.
LYNNWOOD, WA. 98036
(425) 775–5696

CUSTOMER: FKC CO., LTD.

EN / PM / CHK: BC/BC/AP

DRAWN: JW

CITY OF WASHOUGAL – BIOSOLIDS HANDLING FACILITIES

FKC WASHOUGAL, WA.

DRAWING STANDARDS
ELECTRICAL & INSTRUMENT SYMBOLS

DATE CREATED: 05/28/2024 | REV.: 0.0
JOB NO.: 8272
DWG. NO.: 00.02

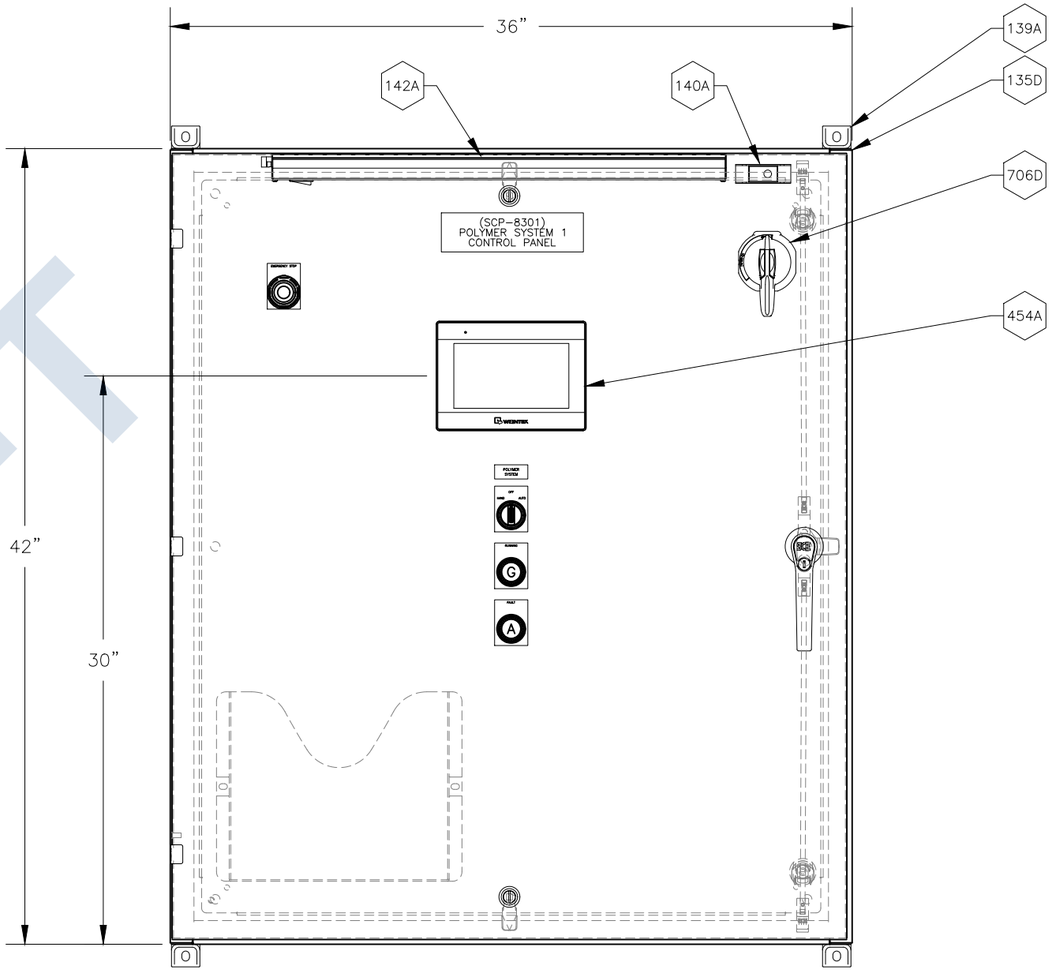

DRAFT

PANEL POWER SOURCE

PANEL: xx
CIRCUIT: xx

VOLTAGE: 120 VAC HERTZ: 60 PHASE: 1

FULL LOAD AMPS: 24.2A
SHORT CIRCUIT RATING: 10 KAIC
LARGEST MOTOR FLA: 2.2A

CONDUIT ENTRY
BOTTOM

NEMA RATING
4X

MATERIAL
316 STAINLESS STEEL

BUILD TYPE (FOR INTERNAL USE)
STANDARD

XXX BOM ITEM NUMBER

DEPTH OF PANEL = 12"

REV	DESCRIPTION/INIT	DATE
1.0	SUBMITTAL/JW	05/28/24

LISTING
UL508A
S/N:

TSI **Technical Systems Inc.**
2303 196TH ST. S.W.
LYNNWOOD, WA. 98036
(425) 775-5696

CUSTOMER
FKC CO., LTD.

EN / PM / CHK
BC/BC/AP

DRAWN
JW

CITY OF WASHOUGAL – BIOSOLIDS HANDLING FACILITIES

FKC WASHOUGAL, WA.
POLYMER SYSTEM 1 CONTROL PANEL (SCP-8301)

LAYOUT – PANEL – FRONT ELEVATION

DATE CREATED 05/28/2024 | REV. 1.0
JOB NO. 8272
DWG. NO. SCP-8301-10.00

DRAFT

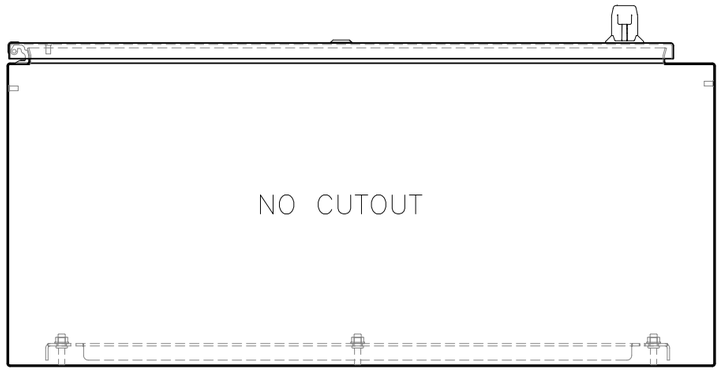

XXX BOM ITEM NUMBER

REV	DESCRIPTION/INIT	DATE
1.0	SUBMITTAL/JW	05/28/24

LISTING

UL508A

S/N:

Technical Systems Inc.
2303 196TH ST. S.W.
LYNNWOOD, WA. 98036
(425) 775-5696

CUSTOMER
FKC CO., LTD.

EN / PM / CHK
BC/BC/AP

DRAWN
JW

CITY OF WASHOUGAL – BIOSOLIDS HANDLING FACILITIES

FKC WASHOUGAL, WA.
POLYMER SYSTEM 1 CONTROL PANEL (SCP-8301)

LAYOUT – PANEL – TOP / BOTTOM VIEW

DATE CREATED 05/28/2024
REV. 1.0
JOB NO. 8272
DWG. NO. SCP-8301-10.03

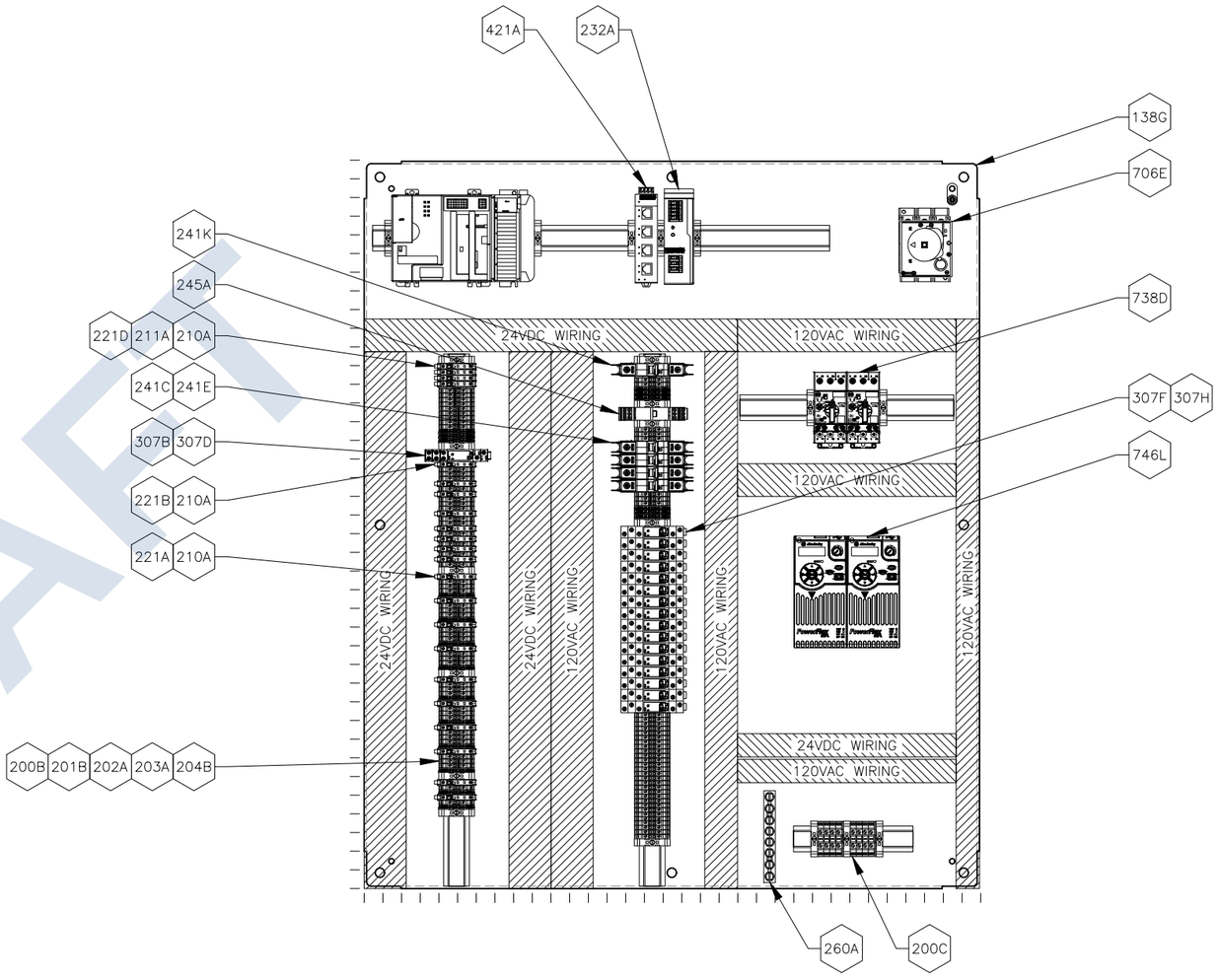

BACKPAN

XXX BOM ITEM NUMBER

REV	DESCRIPTION/INIT	DATE
1.0	SUBMITTAL/JW	05/28/24

LISTING

UL508A

S/N:

Technical Systems Inc.
2303 196TH ST. S.W.
LYNNWOOD, WA. 98036
(425) 775-5696

CUSTOMER
FKC CO., LTD.

EN / PM / CHK
BC/BC/AP

DRAWN
JW

CITY OF WASHOUGAL – BIOSOLIDS HANDLING FACILITIES

FKC WASHOUGAL, WA.
POLYMER SYSTEM 1 CONTROL PANEL (SCP-8301)

LAYOUT – PANEL – BACKPAN ELEVATION

DATE CREATED 05/28/2024 | REV. 1.0
JOB NO. 8272
DWG. NO. SCP-8301-10.05

DRAFT

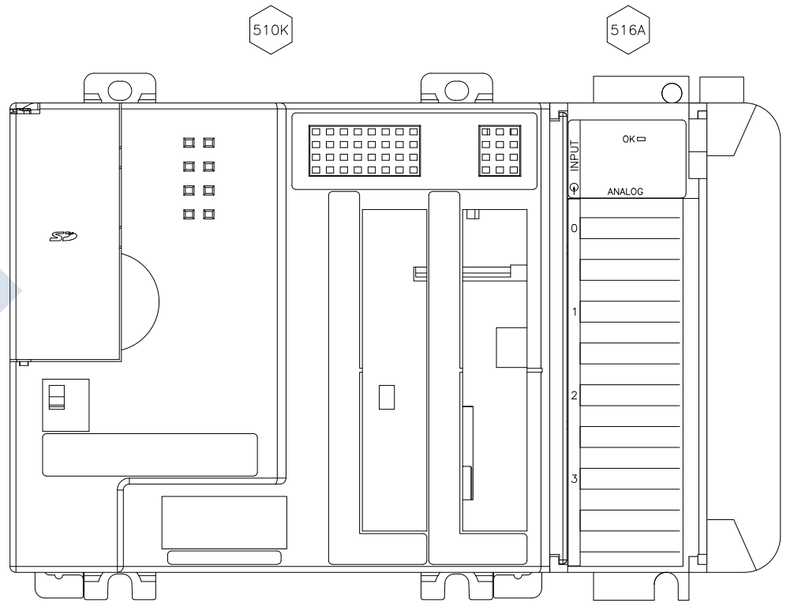

RACK 1

DRAFT

XXX BOM ITEM NUMBER

REV	DESCRIPTION/INIT	DATE
1.0	SUBMITTAL/JW	05/28/24

LISTING

UL508A

S/N:

TSI **Technical Systems Inc.**
2303 196TH ST. S.W.
LYNNWOOD, WA. 98036
(425) 775–5696

CUSTOMER
FKC CO., LTD.

EN / PM / CHK
BC/BC/AP

DRAWN
JW

CITY OF WASHOUGAL – BIOSOLIDS HANDLING FACILITIES

FKC WASHOUGAL, WA.
POLYMER SYSTEM 1 CONTROL PANEL (SCP–8301)

LAYOUT – PANEL – PLC RACK 1

DATE CREATED 05/28/2024 | REV. 1.0
JOB NO. 8272
DWG. NO. SCP–8301–10.07

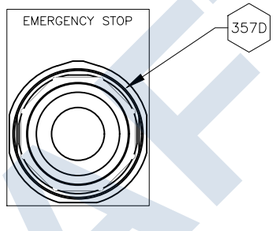

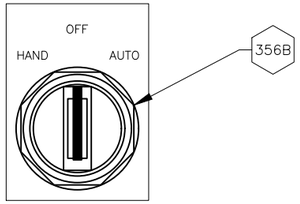

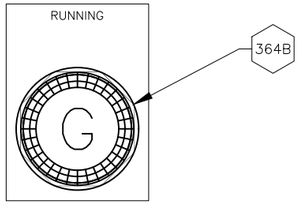

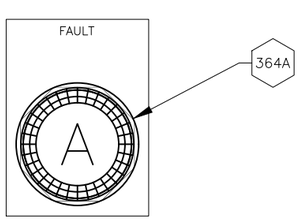

DRAFT

XXX BOM ITEM NUMBER

REV	DESCRIPTION/INIT	DATE
1.0	SUBMITTAL/JW	05/28/24

LISTING

UL508A

S/N:

Technical Systems Inc.
2303 196TH ST. S.W.
LYNNWOOD, WA. 98036
(425) 775-5696

CUSTOMER

FKC CO., LTD.

EN / PM / CHK
BC/BC/AP

DRAWN
JW

CITY OF WASHOUGAL – BIOSOLIDS HANDLING FACILITIES

FKC WASHOUGAL, WA.
POLYMER SYSTEM 1 CONTROL PANEL (SCP-8301)

LAYOUT – PANEL – CONTROLS DETAILS

DATE CREATED 05/28/2024 | REV. 1.0
JOB NO. 8272
DWG. NO. SCP-8301-10.10

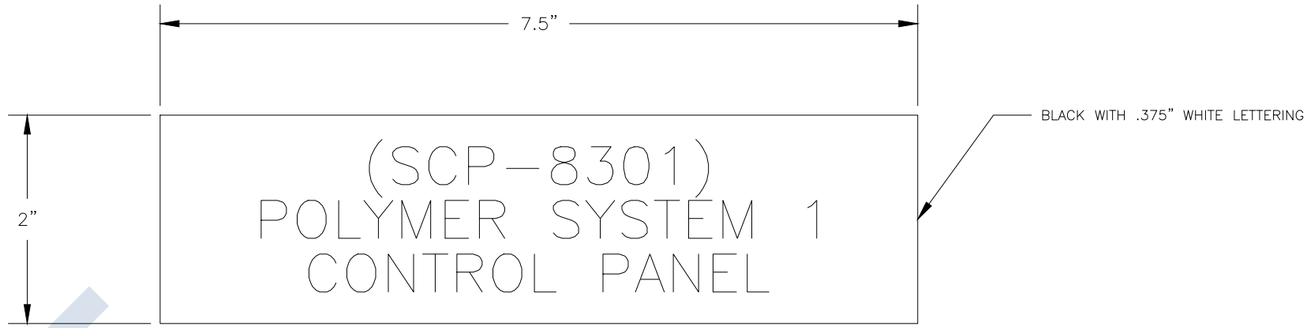

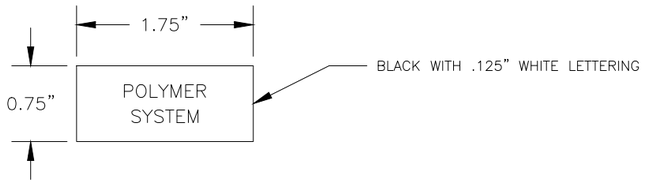

DRAFT

REV	DESCRIPTION/INIT	DATE
1.0	SUBMITTAL/JW	05/28/24

LISTING

UL508A

S/N:

Technical Systems Inc.
2303 196TH ST. S.W.
LYNNWOOD, WA. 98036
(425) 775–5696

CUSTOMER

FKC CO., LTD.

EN / PM / CHK
BC/BC/AP

DRAWN
JW

CITY OF WASHOUGAL – BIOSOLIDS HANDLING FACILITIES

FKC WASHOUGAL, WA.
POLYMER SYSTEM 1 CONTROL PANEL (SCP–8301)

LAYOUT – PANEL – NAMEPLATE DETAILS

DATE CREATED 05/28/2024
REV. 1.0
JOB NO. 8272
DWG. NO. SCP–8301–10.20

SCP–8301

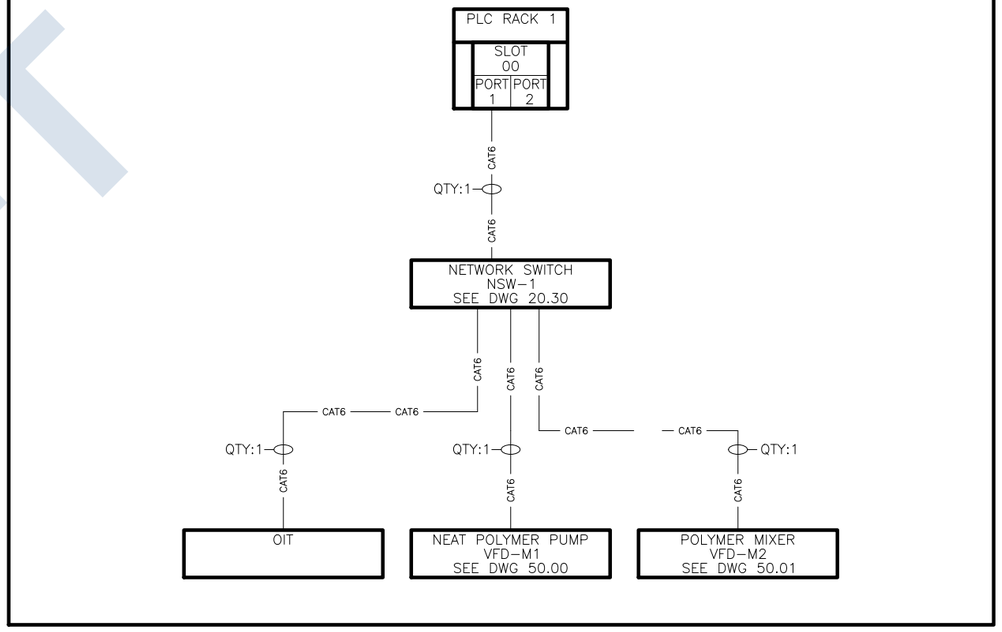

DRAFT

REV	DESCRIPTION/INIT	DATE
1.0	SUBMITTAL/JW	05/08/24

LISTING: N/A

Technical Systems Inc.
2303 196TH ST. S.W.
LYNNWOOD, WA. 98036
(425) 775–5696

CUSTOMER: FKC CO., LTD.

EN / PM / CHK: BC/BC/AP

DRAWN: JW

THREE RIVERS REGIONAL WW AUTHORITIES

FKC LONGVIEW, WA – THREE RIVERS
POLYMER SYSTEM 1 CONTROL PANEL (SCP–8301)

COMM – NETWORK OVERVIEW BLOCK DIAGRAM

DATE CREATED: 04/29/2024
REV.: 1.0
JOB NO.: 8268
DWG. NO.: SCP–8301–20.00

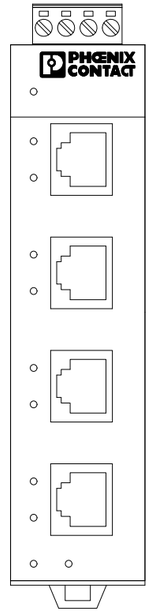

NETWORK SWITCH NS–1					
				DESTINATION DEVICE	
PORT#	CABLE TYPE	NETWORK DESCRIPTION	CABLE LABEL	DESCRIPTION	PORT #
1	CAT6				
2	CAT6		OIT	OPERATOR INTERFACE TERMINAL	1
3	CAT6		PLC	PLC	1
4	CAT6		M1	NEAT POLYMER PUMP VFD	1
5	CAT6		M2	POLYMER MIXER VFD	1

DRAFT

REV	DESCRIPTION/INIT	DATE
1.0	SUBMITTAL/JW	05/08/24

LISTING: N/A

Technical Systems Inc.
2303 196TH ST. S.W.
LYNNWOOD, WA. 98036
(425) 775–5696

CUSTOMER: FKC CO., LTD.

EN / PM / CHK: BC/BC/AP

DRAWN: JW

THREE RIVERS REGIONAL WW AUTHORITIES

FKC LONGVIEW, WA – THREE RIVERS
POLYMER SYSTEM 1 CONTROL PANEL (SCP–8301)
NETWORK SWITCH (NS–1)
PORT SCHEDULE

DATE CREATED: 04/29/2024
REV.: 1.0
JOB NO.: 8268
DWG. NO.: SCP–8301–20.30

SCP-8301

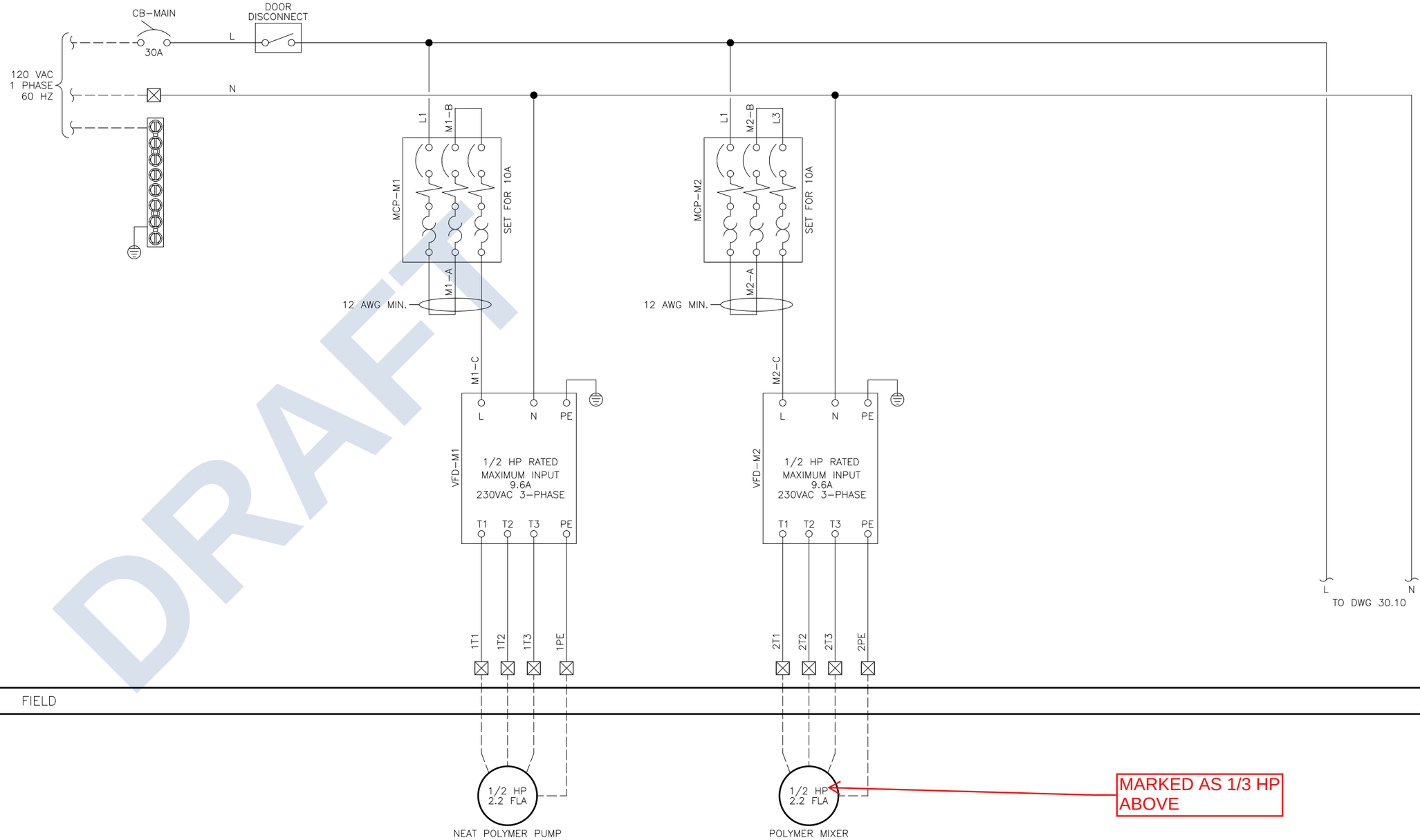

FIELD

REV	DESCRIPTION/INIT	DATE
1.0	SUBMITTAL/JW	05/28/24

LISTING

UL508A

S/N:

Technical Systems Inc.
2303 196TH ST. S.W.
LYNNWOOD, WA. 98036
(425) 775-5696

CUSTOMER

FKC CO., LTD.

EN / PM / CHK
BC/BC/AP

DRAWN
JW

CITY OF WASHOUGAL – BIOSOLIDS HANDLING FACILITIES

FKC WASHOUGAL, WA.
DEWATERING SYSTEM 1 CONTROL PANEL (T-LCP-2501)

120VAC POWER DISTRIBUTION DIAGRAM

DATE CREATED 05/28/2024 | REV. 1.0
JOB NO. 8272
DWG. NO. SCP-8301-30.01

DRAFT

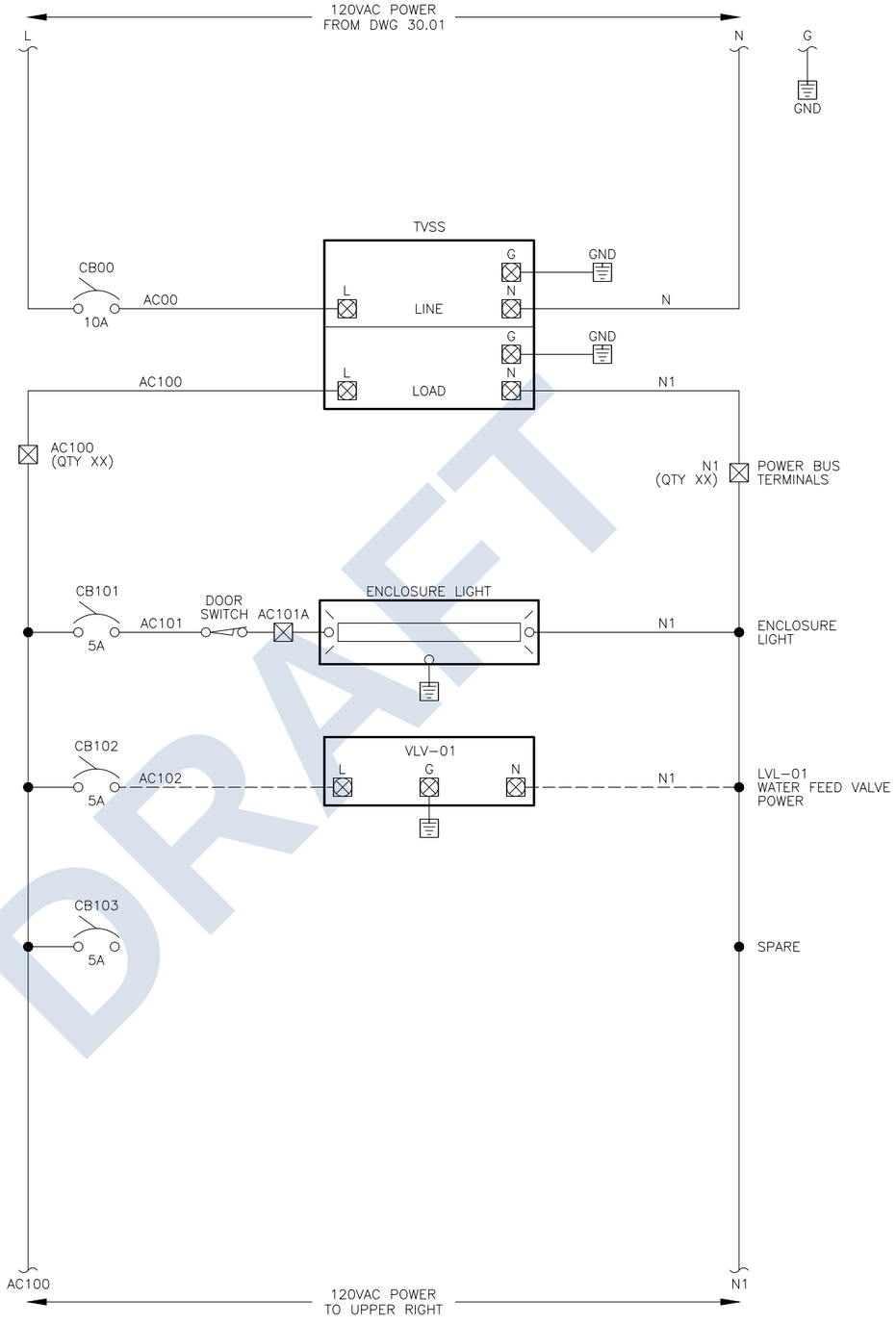

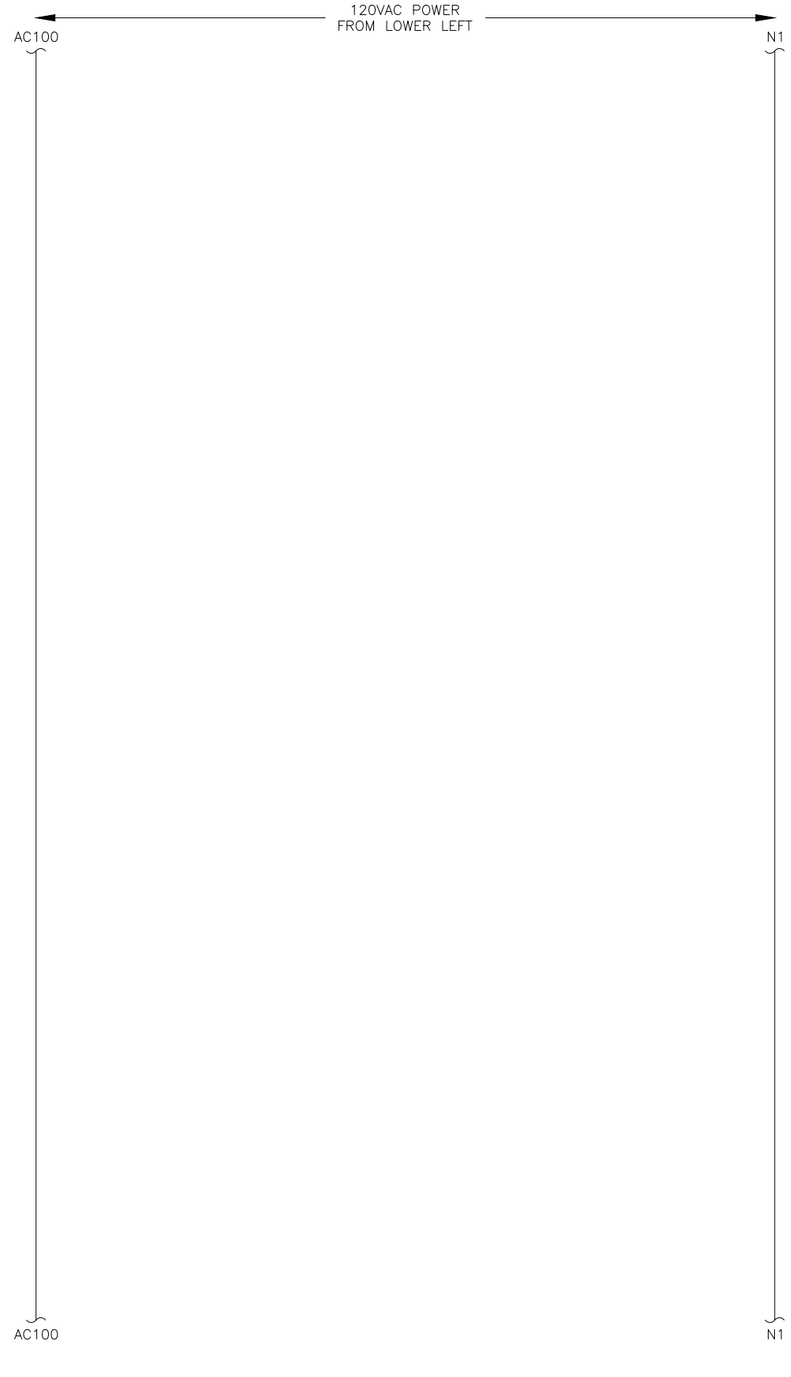

DRAFT

REV	DESCRIPTION/INIT	DATE
1.0	SUBMITTAL/JW	05/28/24

LISTING

UL508A

S/N:

Technical Systems Inc.
2303 196TH ST. S.W.
LYNNWOOD, WA. 98036
(425) 775-5696

CUSTOMER
FKC CO., LTD.

EN / PM / CHK
BC/BC/AP

DRAWN
JW

CITY OF WASHOUGAL – BIOSOLIDS HANDLING FACILITIES

FKC WASHOUGAL, WA.
POLYMER SYSTEM 1 CONTROL PANEL (SCP-8301)

120VAC POWER DISTRIBUTION DIAGRAM

DATE CREATED 05/28/2024
REV. 1.0
JOB NO. 8272
DWG. NO. SCP-8301-30.10

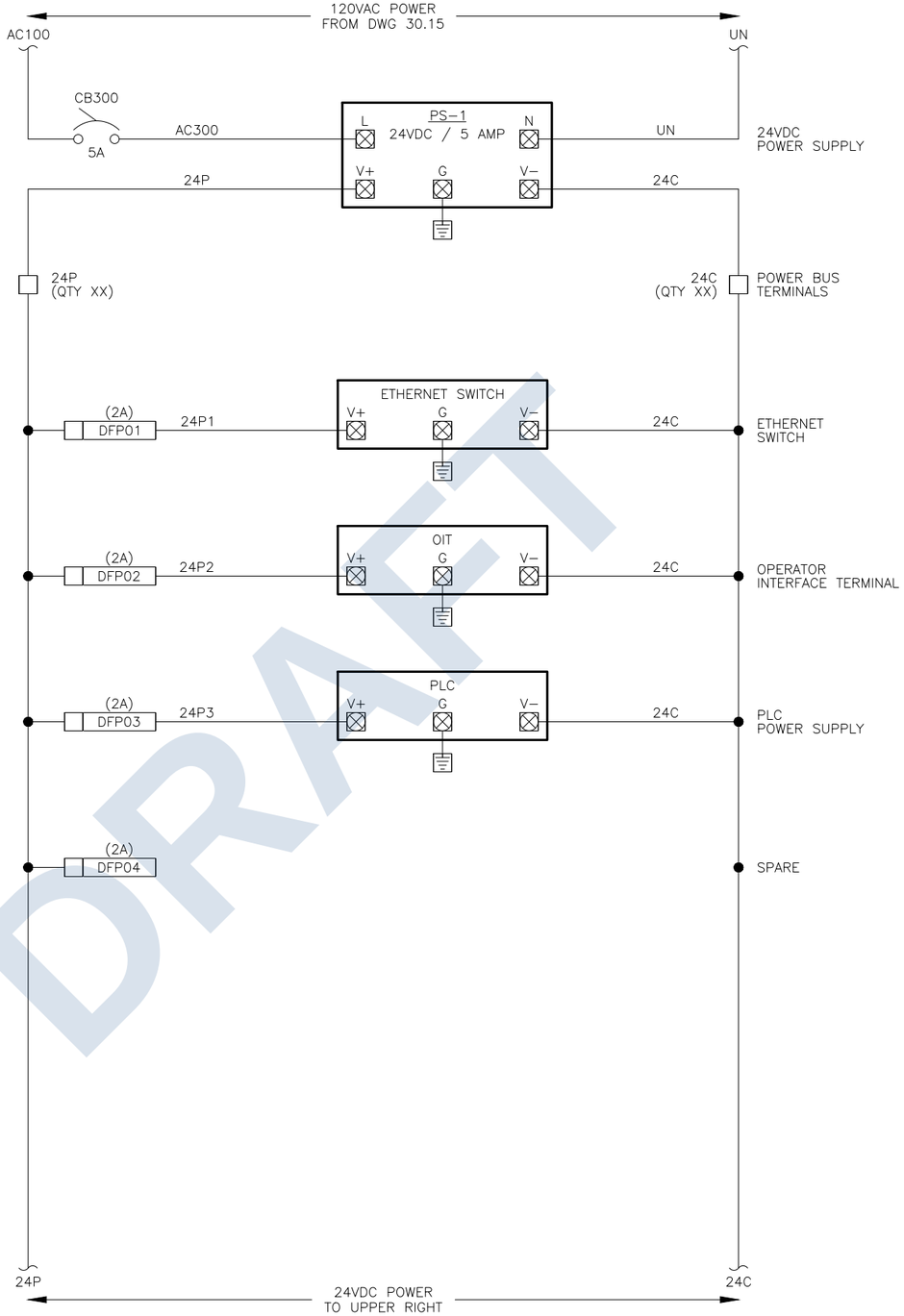

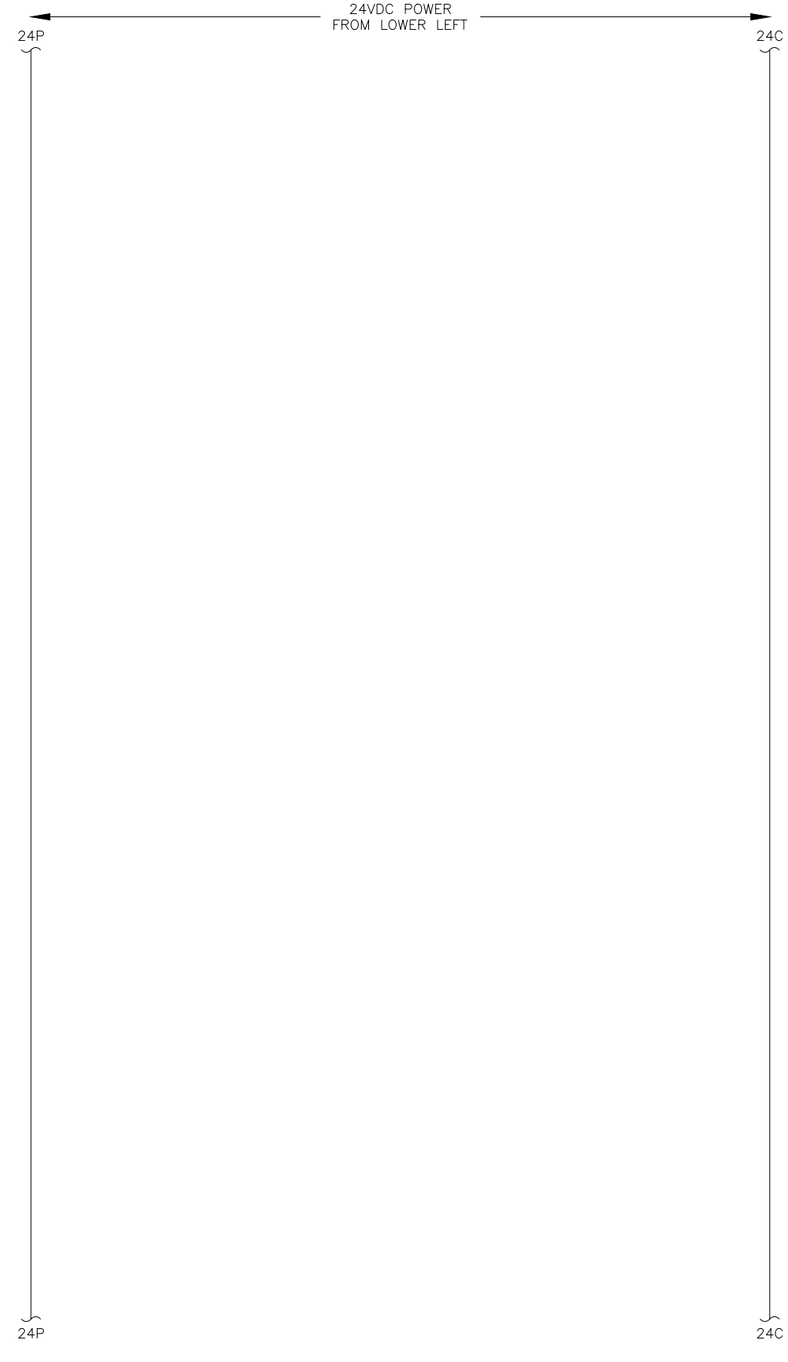

DRAFT

REV	DESCRIPTION/INIT	DATE
1.0	SUBMITTAL/JW	05/28/24

LISTING

UL508A

S/N:

Technical Systems Inc.
2303 196TH ST. S.W.
LYNNWOOD, WA. 98036
(425) 775-5696

CUSTOMER: FKC CO., LTD.

EN / PM / CHK: BC/BC/AP

DRAWN: JW

CITY OF WASHOUGAL – BIOSOLIDS HANDLING FACILITIES

FKC WASHOUGAL, WA.
POLYMER SYSTEM 1 CONTROL PANEL (SCP-8301)

24VDC POWER DISTRIBUTION DIAGRAM

DATE CREATED: 05/28/2024

REV.: 1.0

JOB NO.: 8272

DWG. NO.: SCP-8301-30.20

FIELD	SCP-8301

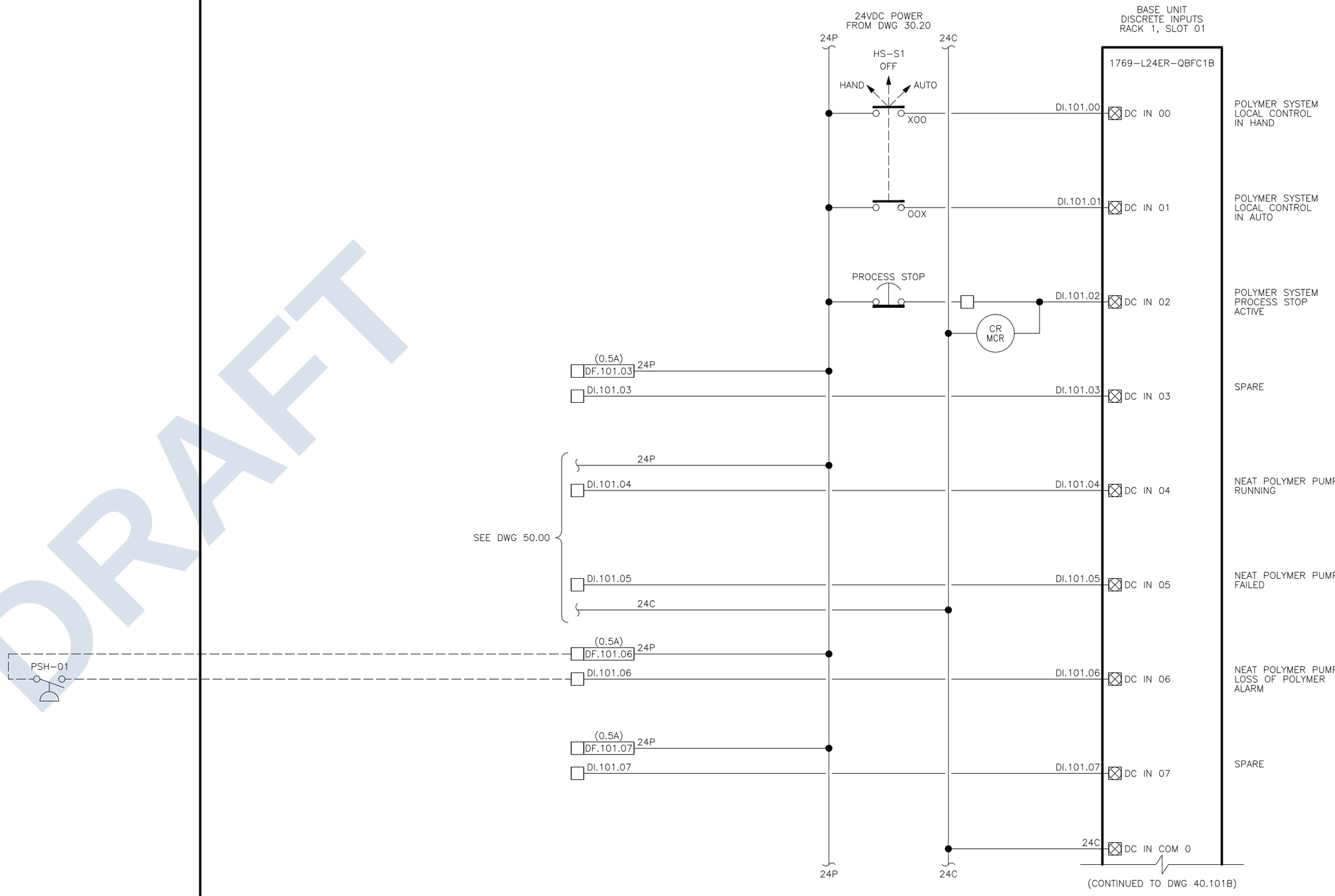

DRAFT

REV	DESCRIPTION/INIT	DATE
1.0	SUBMITTAL/JW	05/28/24

LISTING

UL508A

S/N:

Technical Systems Inc.
2303 196TH ST. S.W.
LYNNWOOD, WA. 98036
(425) 775-5696

CUSTOMER
FKC CO., LTD.

EN / PM / CHK
BC/BC/AP

DRAWN
JW

CITY OF WASHOUGAL – BIOSOLIDS HANDLING FACILITIES

FKC WASHOUGAL, WA.
POLYMER SYSTEM 1 CONTROL PANEL (SCP-8301)
PLC BASE UNIT, DISCRETE INPUTS
RACK 1, SLOT 01 – WIRING DIAGRAM

DATE CREATED 05/28/2024
REV. 1.0
JOB NO. 8272
DWG. NO. SCP-8301-40.101A

FIELD	SCP-8301

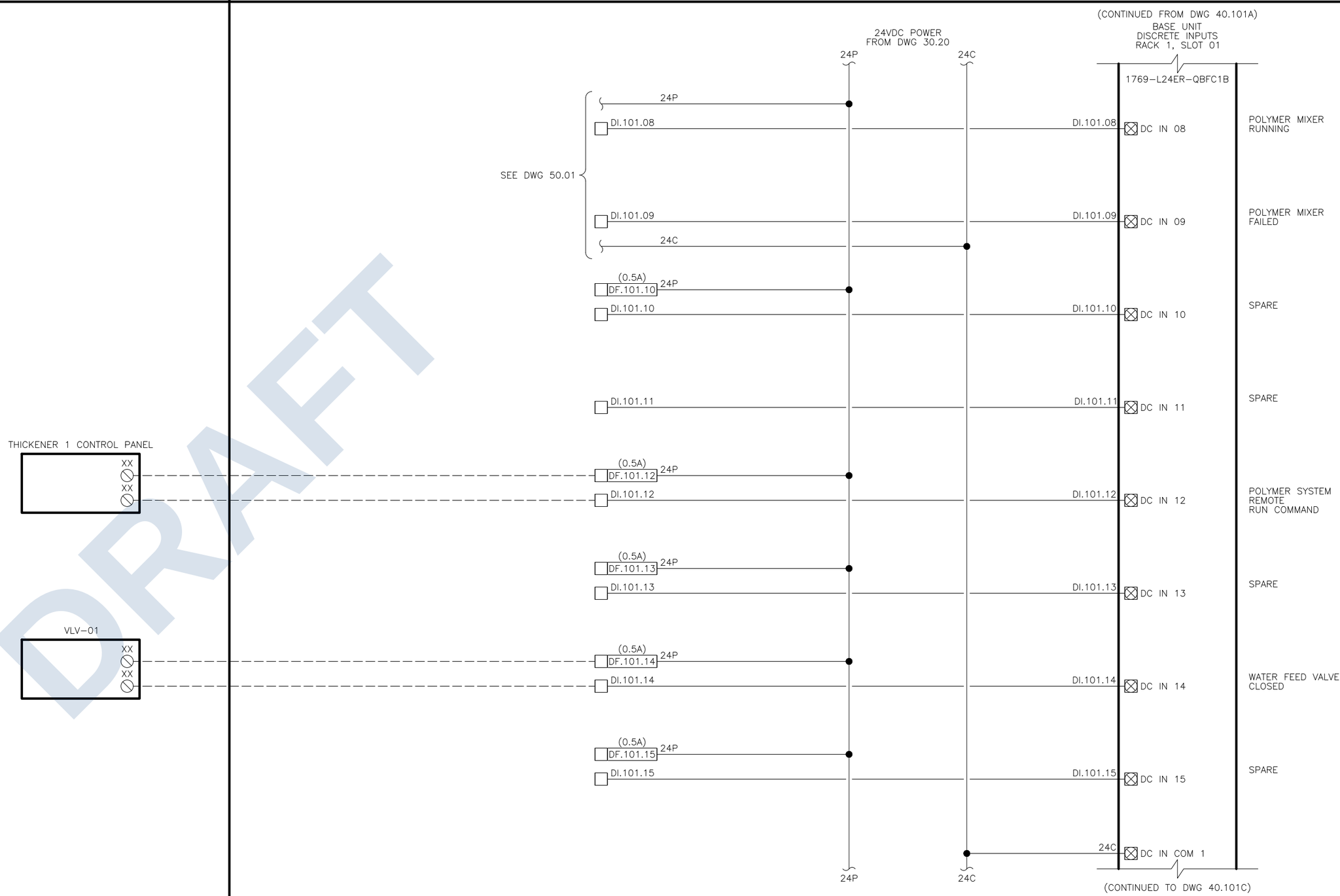

DRAFT

REV	DESCRIPTION/INIT	DATE
1.0	SUBMITTAL/JW	05/28/24

LISTING

UL508A

S/N:

Technical Systems Inc.
2303 196TH ST. S.W.
LYNNWOOD, WA. 98036
(425) 775-5696

CUSTOMER

FKC CO., LTD.

EN / PM / CHK
BC/BC/AP

DRAWN
JW

CITY OF WASHOUGAL – BIOSOLIDS HANDLING FACILITIES

FKC WASHOUGAL, WA.
POLYMER SYSTEM 1 CONTROL PANEL (SCP-8301)
PLC BASE UNIT, DISCRETE INPUTS
RACK 1, SLOT 01 – WIRING DIAGRAM

DATE CREATED 05/28/2024
REV. 1.0
JOB NO. 8272
DWG. NO. SCP-8301-40.101B

FIELD	SCP-8301

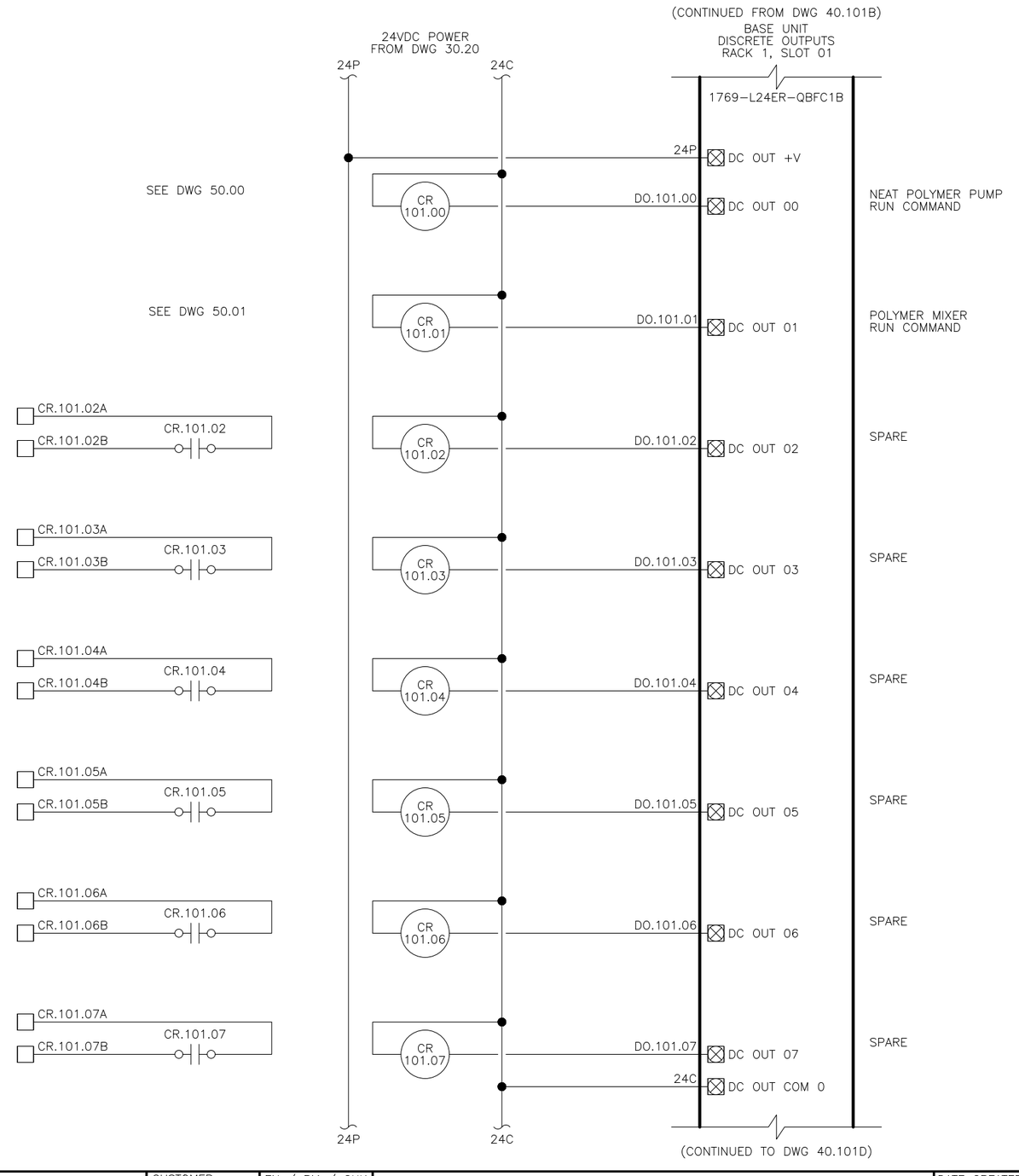

DRAFT

REV	DESCRIPTION/INIT	DATE
1.0	SUBMITTAL/JW	05/28/24

LISTING

UL508A

S/N:

TSI **Technical Systems Inc.**
2303 196TH ST. S.W.
LYNNWOOD, WA. 98036
(425) 775-5696

CUSTOMER
FKC CO., LTD.

EN / PM / CHK
BC/BC/AP

DRAWN
JW

CITY OF WASHOUGAL – BIOSOLIDS HANDLING FACILITIES

FKC WASHOUGAL, WA.
POLYMER SYSTEM 1 CONTROL PANEL (SCP-8301)
PLC BASE UNIT, DISCRETE OUTPUTS
RACK 1, SLOT 01 – WIRING DIAGRAM

DATE CREATED 05/28/2024 | REV. 1.0
JOB NO. 8272
DWG. NO. SCP-8301-40.101C

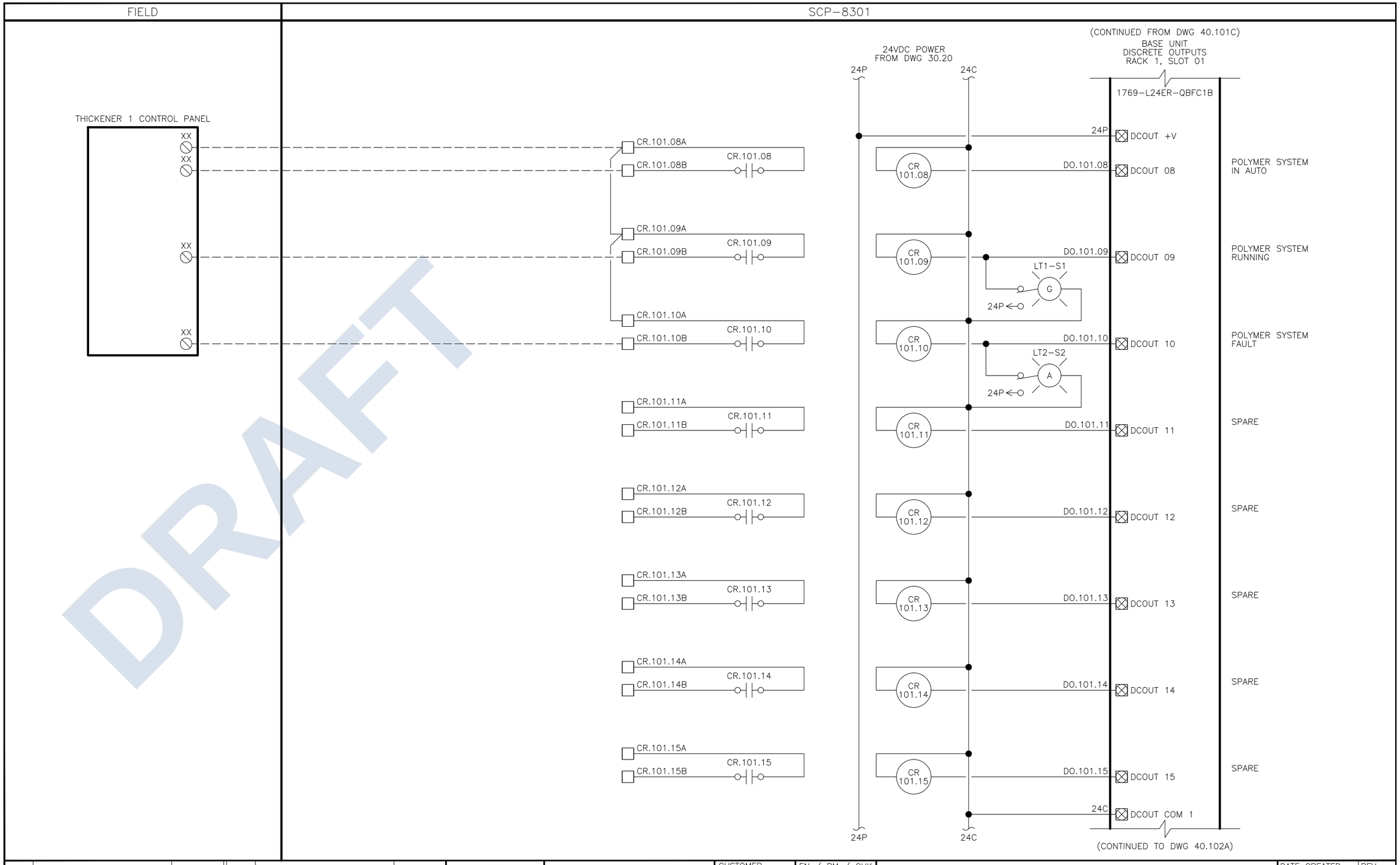

DRAFT

REV	DESCRIPTION/INIT	DATE
1.0	SUBMITTAL/JW	05/28/24

LISTING: UL508A
S/N:

Technical Systems Inc.
2303 196TH ST. S.W.
LYNNWOOD, WA. 98036
(425) 775-5696

CUSTOMER: FKC CO., LTD.

EN / PM / CHK: BC/BC/AP
DRAWN: JW

CITY OF WASHOUGAL – BIOSOLIDS HANDLING FACILITIES

FKC WASHOUGAL, WA.
POLYMER SYSTEM 1 CONTROL PANEL (SCP-8301)
PLC BASE UNIT, DISCRETE OUTPUTS
RACK 1, SLOT 01 – WIRING DIAGRAM

DATE CREATED: 05/28/2024
REV.: 1.0
JOB NO.: 8272
DWG. NO.: SCP-8301-40.101D

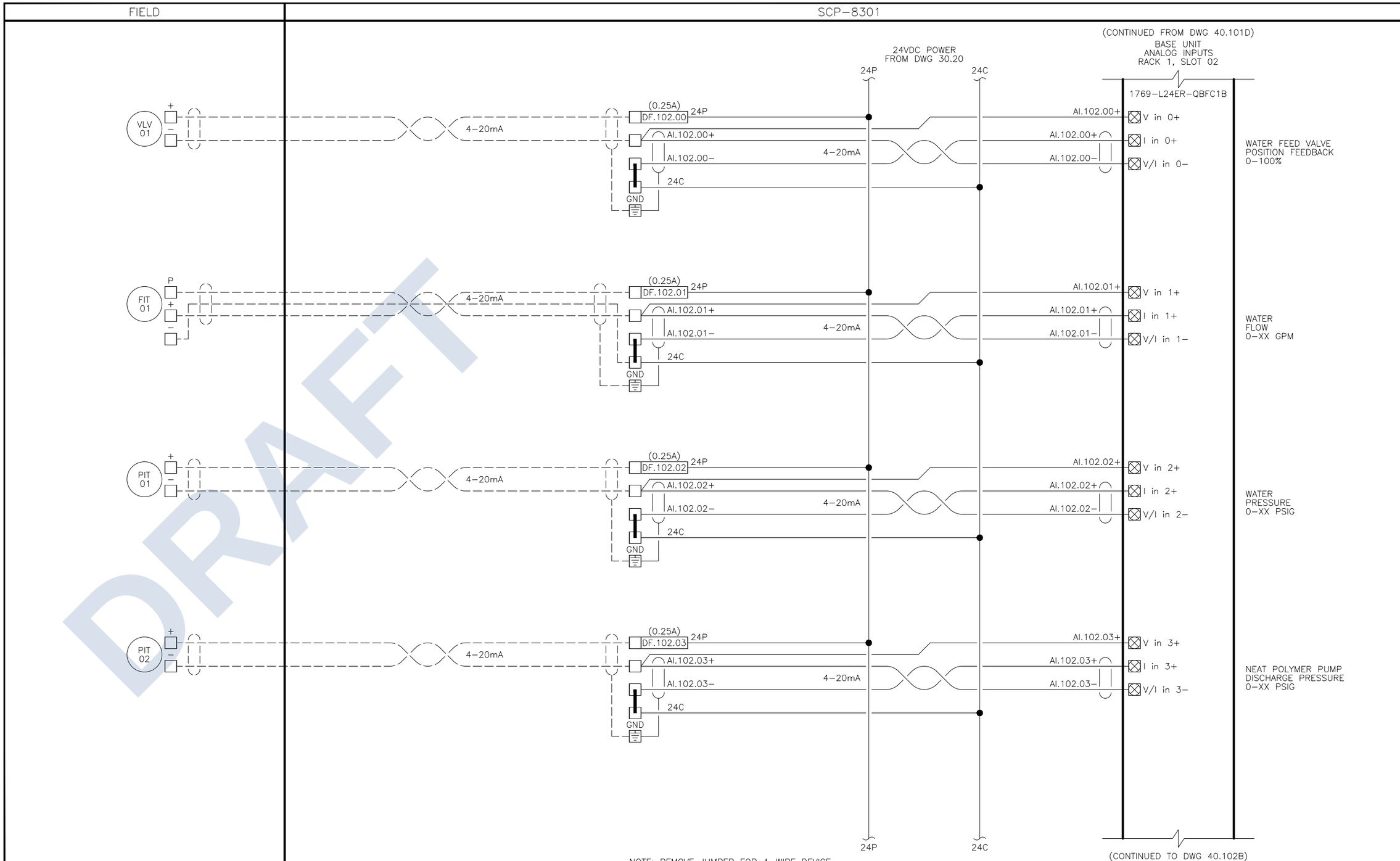

NOTE: REMOVE JUMPER FOR 4-WIRE DEVICE.

REV	DESCRIPTION/INIT	DATE
1.0	SUBMITTAL/JW	05/28/24

LISTING: UL508A
S/N:

Technical Systems Inc.
2303 196TH ST. S.W.
LYNNWOOD, WA. 98036
(425) 775-5696

CUSTOMER: FKC CO., LTD.
EN / PM / CHK: BC/BC/AP
DRAWN: JW

CITY OF WASHOUGAL – BIOSOLIDS HANDLING FACILITIES

FKC WASHOUGAL, WA.
POLYMER SYSTEM 1 CONTROL PANEL (SCP-8301)
PLC BASE UNIT, ANALOG INPUTS
RACK 1, SLOT 02 – WIRING DIAGRAM

DATE CREATED: 05/28/2024
REV.: 1.0
JOB NO.: 8272
DWG. NO.: SCP-8301-40.102A

DRAFT

FIELD	SCP-8301

(CONTINUED FROM DWG 40.102A)

BASE UNIT
ANALOG OUTPUTS
RACK 1, SLOT 02

1769-L24ER-QBFC1B

THICKENER 1 CONTROL PANEL

XX
XX

4-20mA

(0.25A)
DF.102.AO0
GND

DF.102.AO0
AO.102.00

4-20mA

DF.102.AO0
AO.102.00

V OUT0+
I OUT0+
COM

POLYMER SYSTEM
SPEED FEEDBACK
0-100%

LVL-01

XX
XX

4-20mA

(0.25A)
DF.102.AO1
GND

DF.102.AO1
AO.102.01

4-20mA

DF.102.AO1
AO.102.01

V OUT1+
I OUT1+
COM

WATER FEED VALVE
POSITION COMMAND
0-100%

(CONTINUED TO DWG 40.103A)

REV	DESCRIPTION/INIT	DATE
1.0	SUBMITTAL/JW	05/28/24

LISTING

UL508A

S/N:

Technical Systems Inc.
2303 196TH ST. S.W.
LYNNWOOD, WA. 98036
(425) 775-5696

CUSTOMER
FKC CO., LTD.

EN / PM / CHK
BC/BC/AP

DRAWN
JW

CITY OF WASHOUGAL - BIOSOLIDS HANDLING FACILITIES

FKC WASHOUGAL, WA.
POLYMER SYSTEM 1 CONTROL PANEL (SCP-8301)
PLC BASE UNIT, ANALOG OUTPUTS
RACK 1, SLOT 02 - WIRING DIAGRAM

DATE CREATED 05/28/2024
REV. 1.0
JOB NO. 8272
DWG. NO. SCP-8301-40.102B

FIELD	SCP-8301

(CONTINUED FROM DWG 40.102B)

BASE UNIT
HSC INPUTS
RACK 1, SLOT 03

1769-L24ER-QBFC1B

HSC A0+	SPARE
HSC A0-	
HSC A1+	SPARE
HSC A1-	
HSC A2+	SPARE
HSC A2-	
HSC A3+	SPARE
HSC A3-	
HSC A4+	SPARE
HSC A4-	

(CONTINUED TO DWG 40.103B)

DRAFT

REV	DESCRIPTION/INIT	DATE
1.0	SUBMITTAL/JW	05/28/24

LISTING
UL508A
S/N:

Technical Systems Inc.
2303 196TH ST. S.W.
LYNNWOOD, WA. 98036
(425) 775-5696

CUSTOMER
FKC CO., LTD.

EN / PM / CHK
BC/BC/AP

DRAWN
JW

CITY OF WASHOUGAL - BIOSOLIDS HANDLING FACILITIES

FKC WASHOUGAL, WA.
POLYMER SYSTEM 1 CONTROL PANEL (SCP-8301)
PLC BASE UNIT, HSC INPUTS
RACK 1, SLOT 03 - WIRING DIAGRAM

DATE CREATED 05/28/2024
REV. 1.0
JOB NO. 8272
DWG. NO. SCP-8301-40.103A

FIELD	SCP-8301

(CONTINUED FROM DWG 40.103A)

BASE UNIT
HSE OUTPUTS
RACK 1, SLOT 03

1769-L24ER-QBFC1B

☒ HSC OUT 0	SPARE
☒ COM	
☒ HSC OUT 1	SPARE
☒ HSC OUT 2	SPARE
☒ COM	
☒ HSC OUT 3	SPARE

DRAFT

REV	DESCRIPTION/INIT	DATE
1.0	SUBMITTAL/JW	05/28/24

LISTING

UL508A

S/N:

Technical Systems Inc.
2303 196TH ST. S.W.
LYNNWOOD, WA. 98036
(425) 775-5696

CUSTOMER: FKC CO., LTD.

EN / PM / CHK: BC/BC/AP

DRAWN: JW

CITY OF WASHOUGAL - BIOSOLIDS HANDLING FACILITIES

FKC WASHOUGAL, WA.
POLYMER SYSTEM 1 CONTROL PANEL (SCP-8301)
PLC BASE UNIT, HSC OUTPUTS
RACK 1, SLOT 03 - WIRING DIAGRAM

DATE CREATED: 05/28/2024 | REV.: 1.0

JOB NO.: 8272

DWG. NO.: SCP-8301-40.103B

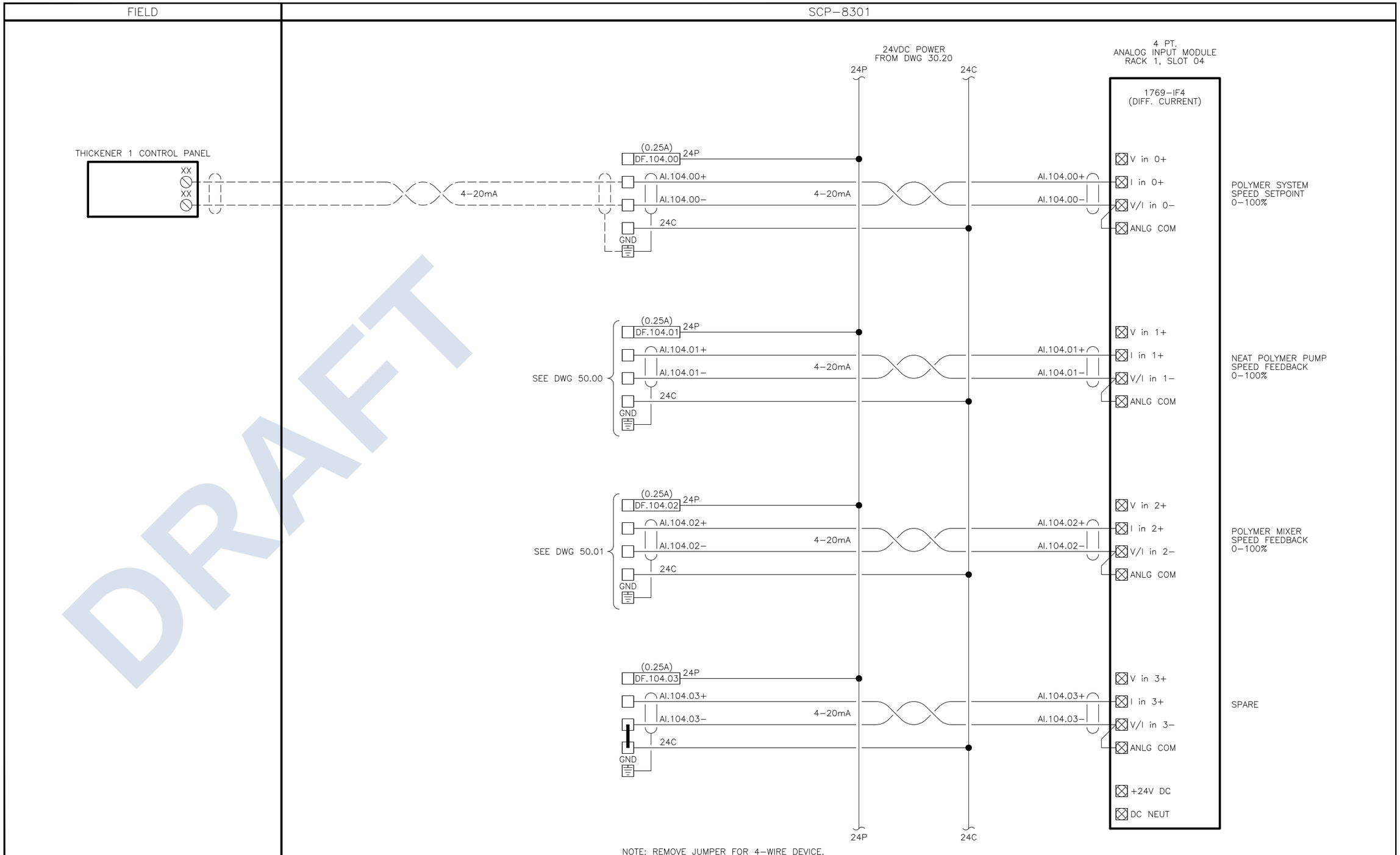

DRAFT

REV	DESCRIPTION/INIT	DATE
1.0	SUBMITTAL/JW	05/28/24

LISTING

UL508A

S/N:

Technical Systems Inc.
2303 196TH ST. S.W.
LYNNWOOD, WA. 98036
(425) 775-5696

CUSTOMER: FKC CO., LTD.

EN / PM / CHK: BC/BC/AP

DRAWN: JW

CITY OF WASHOUGAL - BIOSOLIDS HANDLING FACILITIES

FKC WASHOUGAL, WA.
POLYMER SYSTEM 1 CONTROL PANEL (SCP-8301)
ANALOG INPUT MODULE
RACK 1, SLOT 04 - WIRING DIAGRAM

DATE CREATED: 05/28/2024 | REV.: 1.0

JOB NO.: 8272

DWG. NO.: SCP-8301-40.104

SCP-8301

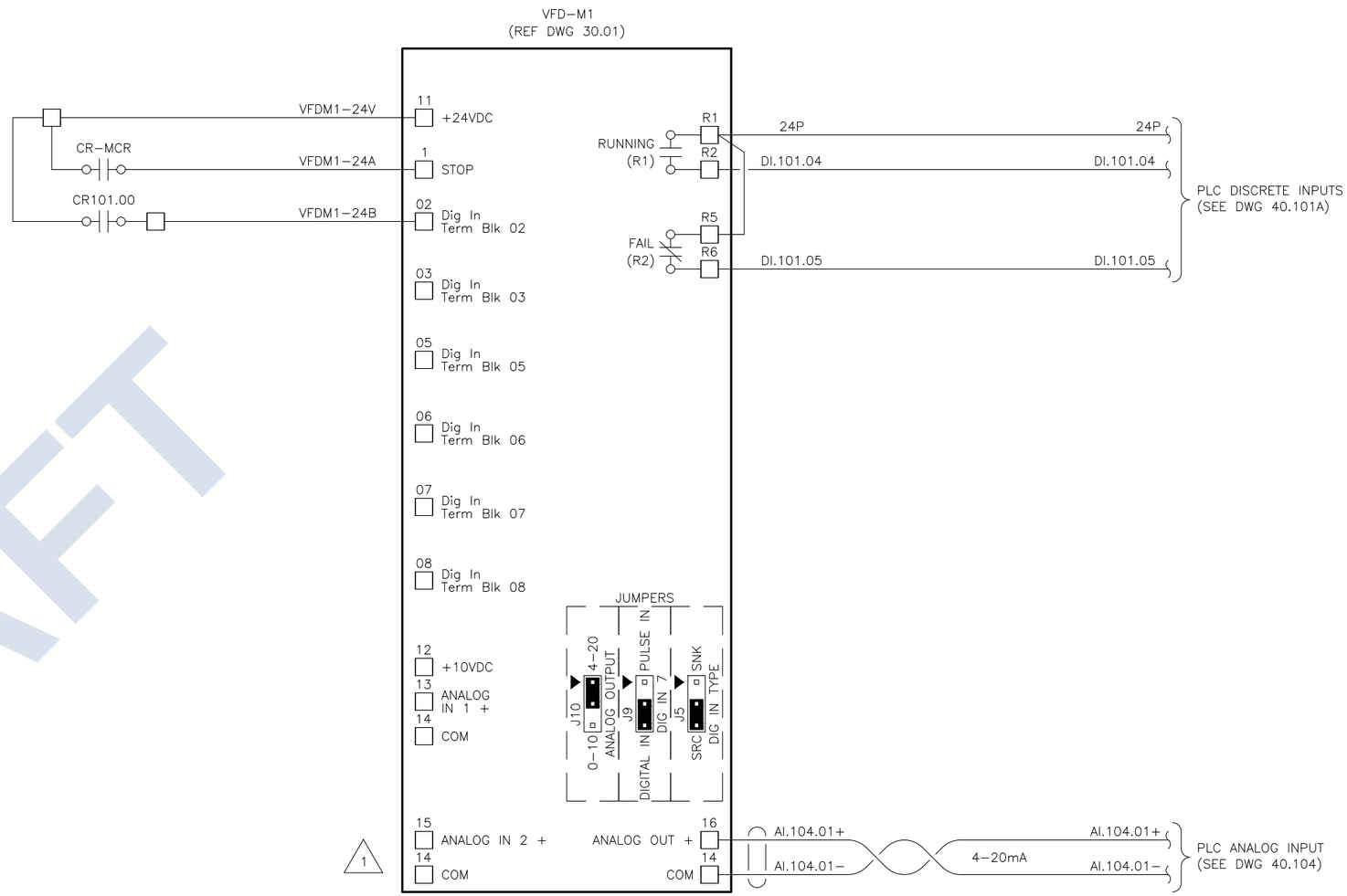

NOTES:
1.SPEED FEEDBACK MONITORED VIA ETHERNET/IP CONNECTION

REV	DESCRIPTION/INIT	DATE
1.0	SUBMITTAL/JW	05/28/24

LISTING
UL508A
S/N:

Technical Systems Inc.
2303 196TH ST. S.W.
LYNNWOOD, WA. 98036
(425) 775-5696

CUSTOMER
FKC CO., LTD.

EN / PM / CHK
BC/BC/AP

DRAWN
JW

CITY OF WASHOUGAL - BIOSOLIDS HANDLING FACILITIES

FKC WASHOUGAL, WA.
POLYMER SYSTEM 1 CONTROL PANEL (SCP-8301)
NEAT POLYMER PUMP VFD CONTROL WIRING DIAGRAM

DATE CREATED 05/28/2024
REV. 1.0
JOB NO. 8272
DWG. NO. SCP-8301-50.00

DRAFT

SCP-8301

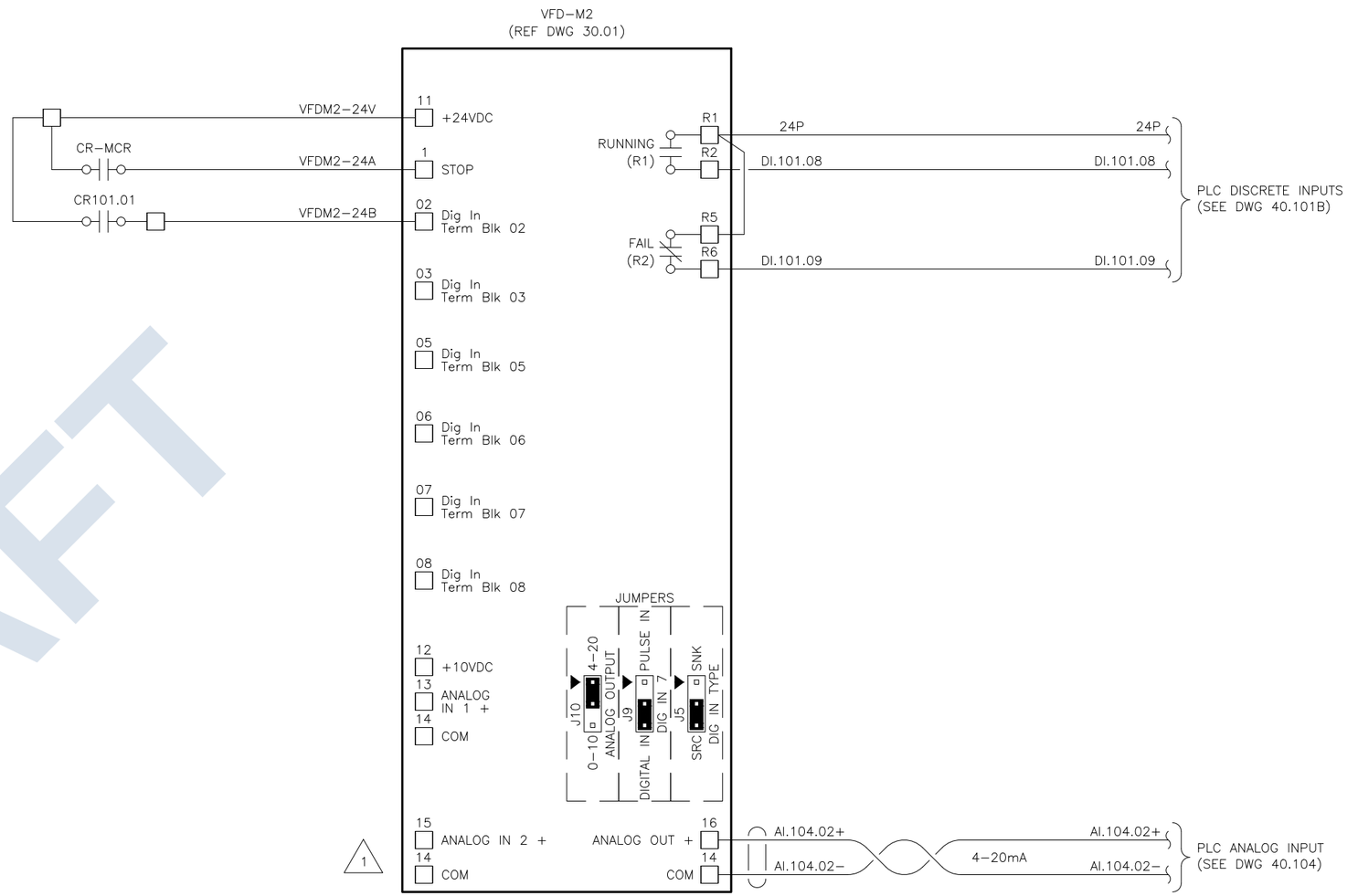

DRAFT

NOTES:
1.SPEED FEEDBACK MONITORED VIA ETHERNET/IP CONNECTION

REV	DESCRIPTION/INIT	DATE
1.0	SUBMITTAL/JW	05/28/24

LISTING
UL508A
S/N:

Technical Systems Inc.
2303 196TH ST. S.W.
LYNNWOOD, WA. 98036
(425) 775-5696

CUSTOMER
FKC CO., LTD.

EN / PM / CHK
BC/BC/AP

DRAWN
JW

CITY OF WASHOUGAL - BIOSOLIDS HANDLING FACILITIES

FKC WASHOUGAL, WA.
POLYMER SYSTEM 1 CONTROL PANEL (SCP-8301)

POLYMER MIXER VFD CONTROL WIRING DIAGRAM

DATE CREATED 05/28/2024
REV. 1.0
JOB NO. 8272
DWG. NO. SCP-8301-50.01

Aluminum Structure

DRAFT

FKC CO., LTD.

2708 West 18th Street
Port Angeles, WA 98363

(360) 452-9472
FAX (360) 452-6880

San Luis West WWTP, AZ
Bill of Materials

Item #	Aluminum Structure	Manufacturer	Part Number	Qty	Material of Construction
501	Handrail	FKC	Ø 1.5 x .12 Round Tube	--	6061-T6
502	Frame	FKC	C5 x .150 2 1/4 Flange	--	6061-T6
503	Stairs	Perf-O Grip	P220125	11	Aluminum

DRAFT

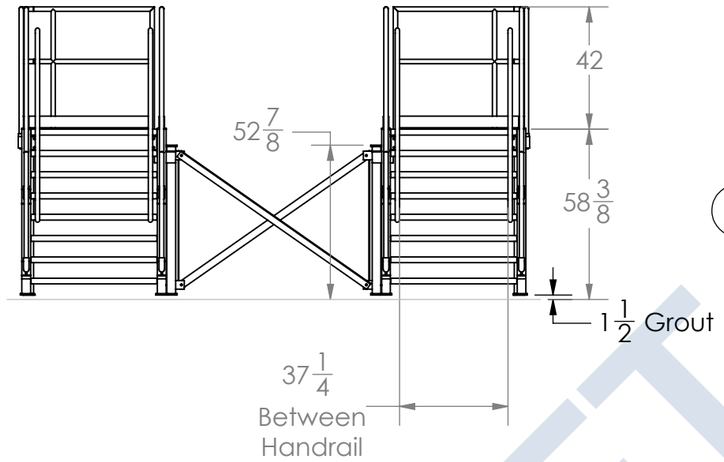

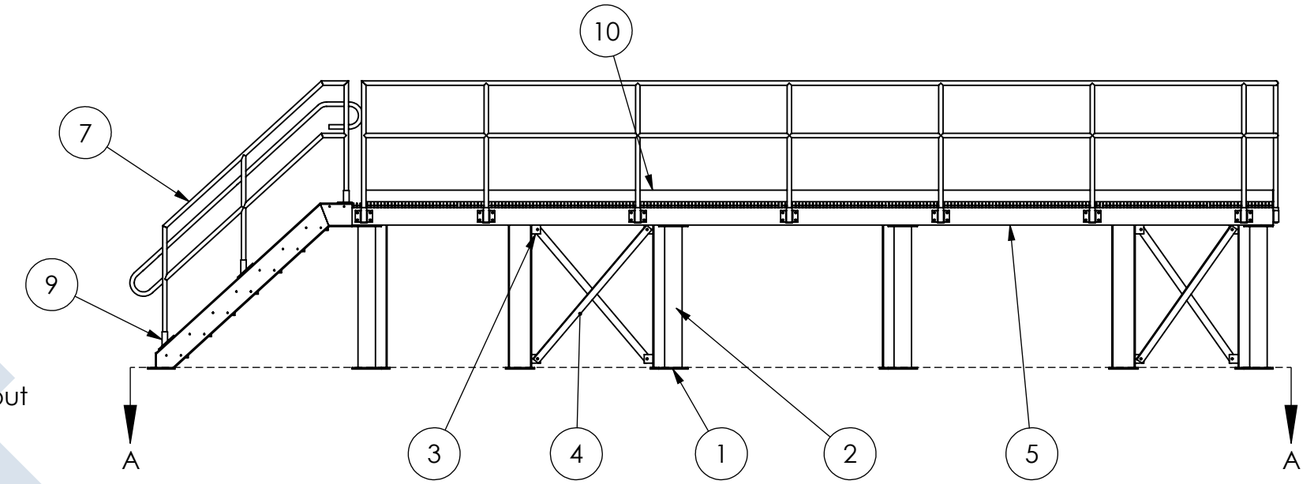

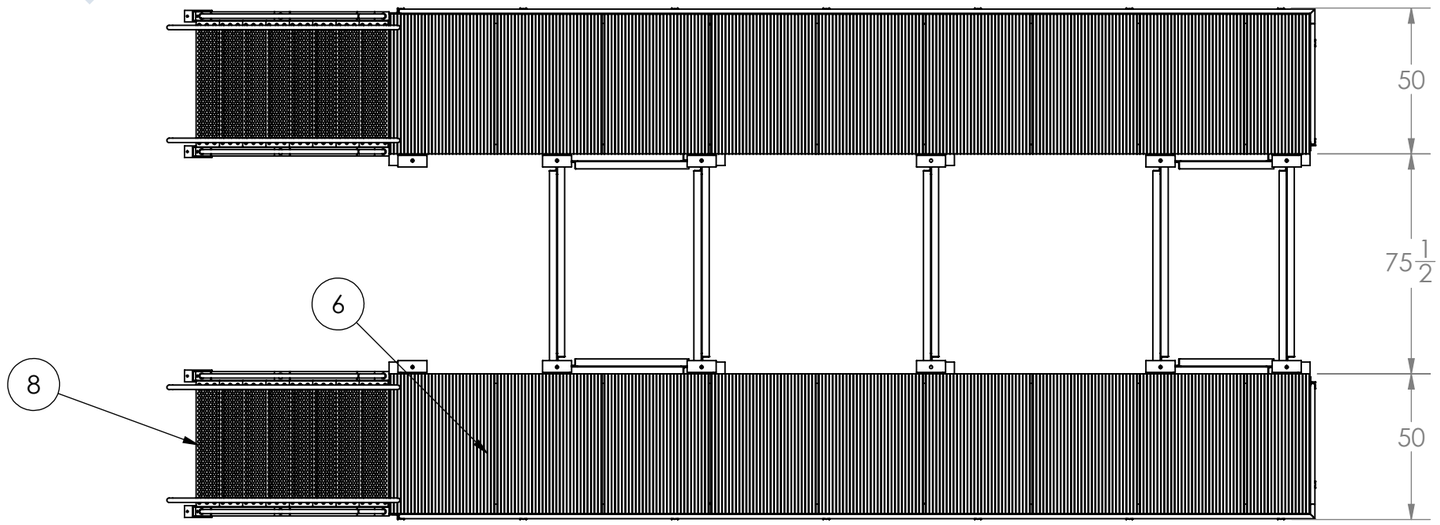

Item NO.	Description	Material
1	FB 1/2 x 4	6061-T6 (SS)
2	C 6 x .210	6061-T6 (SS)
3	FB 1/4 x 3	6061-T6 (SS)
4	L 2 1/2 X 2 1/2 X 1/4	6061-T6 (SS)
5	C 6 x .210	6061-T6 (SS)
6	1.5 x 36 Bar Grating	6061-T6 (SS)
7	Ø1.5 x .120 Tube	6061-T6 (SS)
8	5 Hole Perf-O Grip	6061-T6 (SS)
9	1 1/2 Sch 80 Pipe	6061-T6 (SS)
10	FB 1/4 x 4	6061-T6 (SS)

Note:
- Material of Construction: 6061-T6 AL
- Total Weight: 3,000 LBS
- FKC recommends 1-1/2" grout under all equipment foot pads.

PROPRIETARY AND CONFIDENTIAL
THE INFORMATION CONTAINED IN THIS DRAWING IS THE SOLE PROPERTY OF FKC CO LTD. ANY REPRODUCTION IN PART OR AS A WHOLE WITHOUT THE WRITTEN PERMISSION OF FKC CO LTD IS PROHIBITED.

No.	Alteration	Date	Sign
3			
2			
1			
0	Issued for Approval	4/8/25	MB

Job No. SP-524	Customer San Luis West WWTP San Luis, AZ	Wt. Lbs.
Drawing No. A524-903	Title Screw Press Legs & Access Platform Assembly Details	Quantity 1
		Date 4/8/25
FKC CO. LTD 2708 W 18th St. Port Angeles, WA 98363 (360) 452-9472 Fax (360) 452-6880		Drawn By MB
	Revision	SHEET 1 OF 3

DRAFT

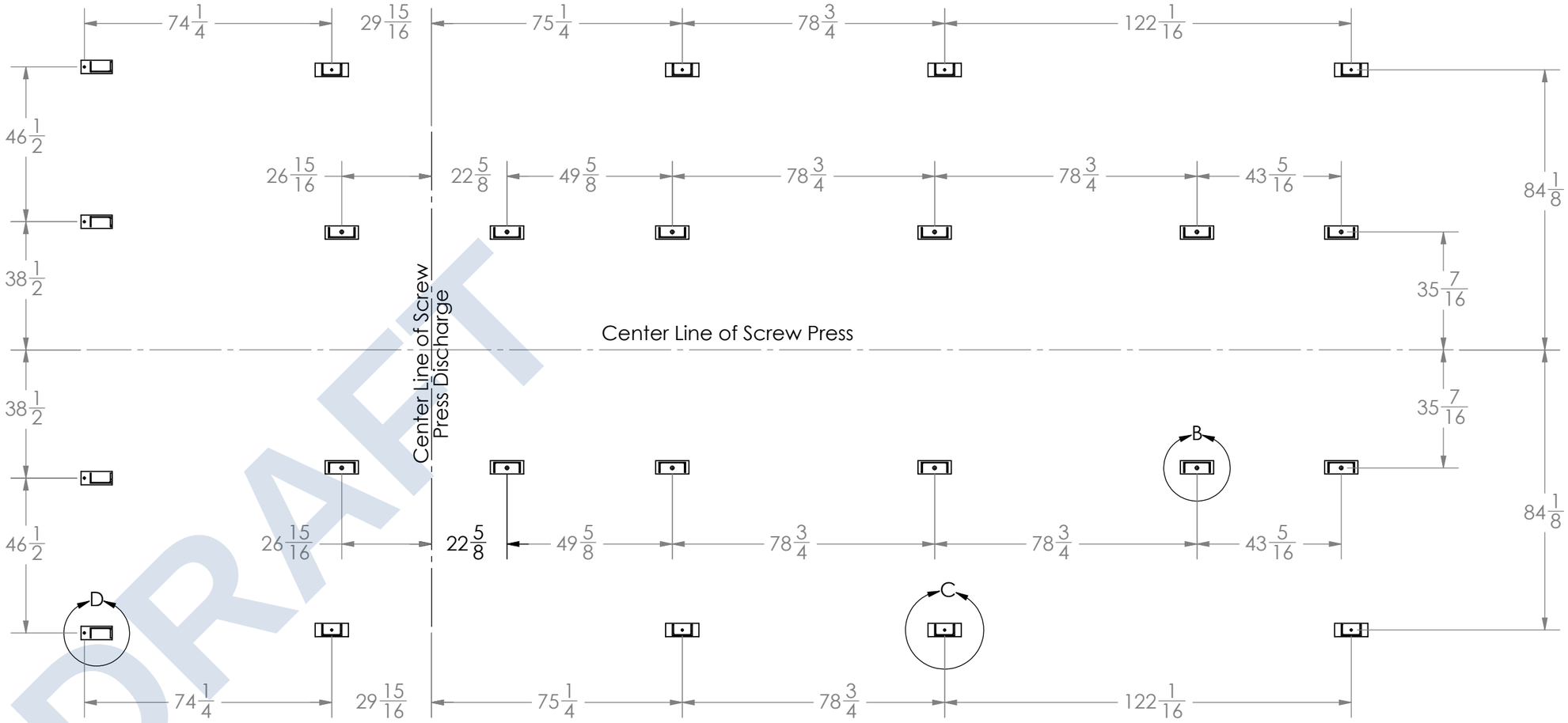

SECTION A-A

DRAFT

PROPRIETARY AND CONFIDENTIAL

THE INFORMATION CONTAINED IN THIS DRAWING IS THE SOLE PROPERTY OF FKC CO LTD. ANY REPRODUCTION IN PART OR AS A WHOLE WITHOUT THE WRITTEN PERMISSION OF FKC CO LTD IS PROHIBITED.

No.	Alteration	Date	Sign
3			
2			
1			
0	Issued for Approval	4/8/25	MB

Job No. SP-524	Customer San Luis West WWTP San Luis, AZ	Wt. Lbs.
Drawing No. S524-904	Title Screw Press Legs & Access Platform Foundation Details	Quantity 1
		Date 4/8/25
FKC	FKC CO. LTD 2708 W 18th St. Port Angeles, WA 98363 (360) 452-9472 Fax (360) 452-6880	Drawn By MB
	Revision	SHEET 2 OF 3

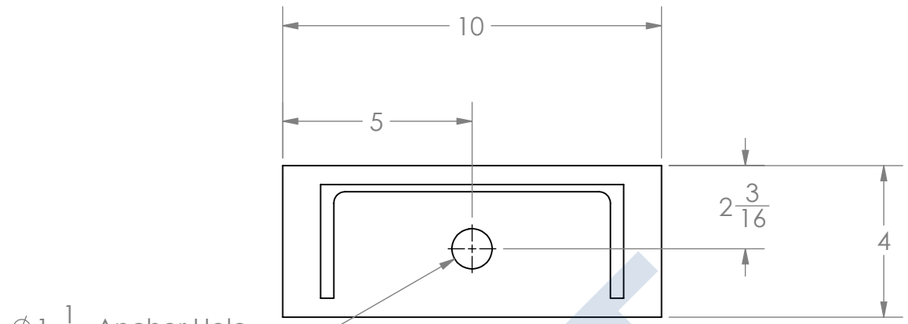

DETAIL B
Screw Press Support Leg
12 PLCS

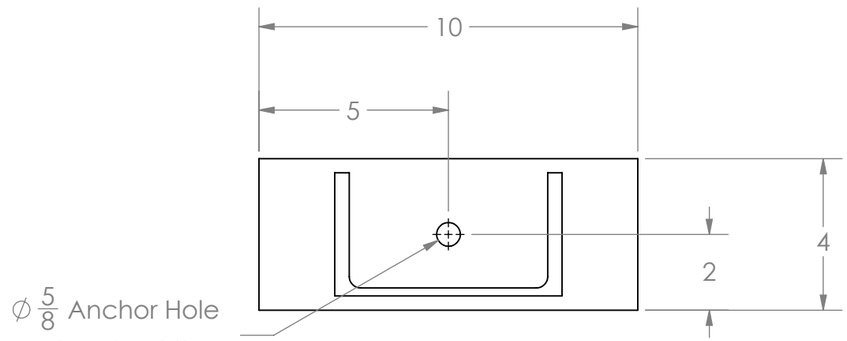

DETAIL C
Access Platform Support Leg
8 PLCS

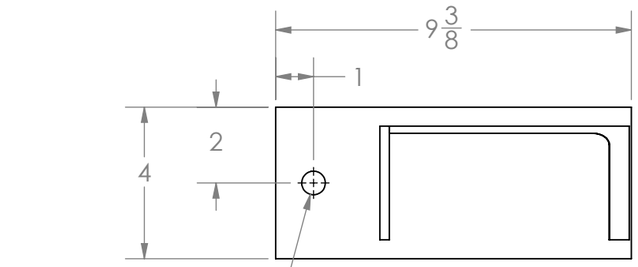

DETAIL D
Stair Support Pad
4 PLCS

FKC recommends 1-1/2" grout under all equipment foot pads.

DRAFT

PROPRIETARY AND CONFIDENTIAL
THE INFORMATION CONTAINED IN THIS DRAWING IS THE SOLE PROPERTY OF FKC CO LTD. ANY REPRODUCTION IN PART OR AS A WHOLE WITHOUT THE WRITTEN PERMISSION OF FKC CO LTD IS PROHIBITED.

No.	Alteration	Date	Sign
3			
2			
1			
0	Issued for Approval	4/8/25	MB

Job No. SP-524	Customer San Luis West WWTP San Luis, AZ	Wt. Lbs.
Drawing No. S524-905	Title Screw Press Legs & Access Platform Equipment Foot Pad Details	Quantity As Noted
		Date 4/8/25
FKC CO. LTD 2708 W 18th St. Port Angeles, WA 98363 (360) 452-9472 Fax (360) 452-6880		Drawn By MB
	Revision	SHEET 3 OF 3

Item # 800

Alcoa Engineered Products

ALLOY 6061

Understanding Extruded Aluminum Alloys

Alloy 6061 is one of the most widely used alloys in the 6000 Series. This standard structural alloy, one of the most versatile of the heat-treatable alloys, is popular for medium to high strength requirements and has good toughness characteristics. Applications range from transportation components to machinery and equipment applications to recreation products and consumer durables. Alcoa produces 6061 for use in standard and custom shapes, rod and bar products, and seamless and structural pipe and tube.

Alloy 6061 has excellent corrosion resistance to atmospheric conditions and good corrosion resistance to sea water. This alloy also offers good finishing characteristics and responds well to anodizing; however, where cosmetic appearance is critical, consider the use of alloy 6063. The most common anodizing methods include clear, clear and color dye, and hardcoat.

Alloy 6061 is easily welded and joined by various commercial methods. (Caution: direct contact by dissimilar metals can cause galvanic corrosion.) Since 6061 is a heat-treatable alloy, strength in its -T6 condition can be reduced in the weld region. Selection of an appropriate filler alloy will depend on the desired weld characteristics. Consult the Material Safety Data Sheet (MSDS) for proper safety and handling precautions when using alloy 6061.

For screw machine applications, alloy 6061 has adequate machinability characteristics in the heat-treated -T6/-T6511 condition. With -T6/-T6511 mechanical properties, chips from machining (particularly turning and drilling) are difficult to break. Chip breakers are recommended, and special machining techniques (i.e. peck drilling) can improve chip formation. To enhance the machinability of its ECON-O-ROD®, ACC-U-ROD®, ECON-O-PLATE® and ACC-U-PLATE® products, Alcoa has developed a unique chemistry for alloy 6061, which conforms to industry specifications.

For minor bending applications, special forming tempers -T6S2, -T6S15, -T6S9 or -T6S10 may be sufficient to facilitate bending (dependent upon bend radius and degree of bend). When more severe bends are required, a softer temper condition such as -T1, -T4 or even -0 may be necessary to prevent cracking.

Alcoa offers alloy 6061 in a variety of standard tempers, as well as special tempers developed for unique applications. These are summarized below:

6061 Temper Designations and Definitions

Alcoa produces 6061 alloy with a wide selection of standard and special tempers. In the annealed condition (-O temper), 6061 is extremely ductile and well suited for severe forming applications. When solution heat-treated and naturally aged (-T4 condition), 6061 has good formability for bending. After artificial aging (precipitation heat-treating), 6061-T4 is capable of developing -T6 properties.

Standard Tempers	Standard Temper Definitions*
F	As fabricated. There is no special control over thermal conditions and there are no mechanical property limits.
O	Annealed. Applies to products that are annealed to obtain the lowest strength temper.
T1	Cooled from an elevated temperature shaping process and naturally aged. (See Note B.)
T4, T4511	Solution heat-treated and naturally aged. (See Notes C & D.)
T51	Cooled from an elevated temperature shaping process and artificially aged. (See Note B.)
T6, T6511	Solution heat-treated and artificially aged. (See Notes C & D.)
Alcoa Special Tempers**	**Alcoa Special Temper Definitions**
T4S6	For 6061 extrusions requiring maximum formability in the unaged condition and subsequently aged to -T6. May not meet -T4 minimum mechanical properties, but will meet -T6 minimum when properly aged. Test reports state -T6 properties to demonstrate heat treat capabilities, but extrusions are supplied unaged. (See Note A.)
T6S2, T6S15	For 6061 extrusions requiring good formability; meets standard 6061-T6 minimum properties.
T6S9, T6S10	For 6061 extrusions requiring improved forming characteristics not obtainable with -T6S2 and -T6S15 tempers. Lower minimum properties of 35.0 ksi tensile & 30.0 ksi yield guaranteed to enhance formability. (See Note A.)
T6S4	Applies to 6061 extrusions requiring maximum hardness for strength and good machinability. Same minimum tensile and yield strengths as standard -T6, but with lower minimum elongation of 6%. (See Note A.)
T6H, T6511H	Alcoa's "H" temper is offered for special applications requiring improved machinability and higher minimum mechanical properties than standard -T6 or -T6511. Minimum properties of 42 ksi tensile, 38 ksi yield, and 10.0% elongation are guaranteed. "H" temper is available for rod, bar, and certain solid profiles with a principle thickness of .500" or greater. (See Notes C & D.)
T6G, T6511G	Alcoa's "G" temper is available for applications requiring a uniform grain structure to enhance anodized appearance for rod and bar sizes with a thickness of 2.00" or greater. A minimal peripheral grain band may still be present, but it is greatly reduced compared to standard -T6/-T6511. Minimum mechanical properties are same as "H" tempers. (See Notes C & D.)
T6X, T6511X	Alcoa's "X" temper is available for special applications requiring a uniform recrystallized grain structure in extrusions less than 2" thickness to enhance anodizing appearance. Other benefits include improved machinability, same mechanical properties as 6061-T6/T6511. (See Notes C & D.)
T5S26	For 6061 press-quenched and over-aged extrusions requiring improved stamping characteristics. Minimum mechanical properties are 26.0 ksi tensile, 16 ksi yield, 16% elongation. (See Note A.)

*For further details of definitions, see Aluminum Association's Aluminum Standards and Data manual and Tempers for Aluminum and Aluminum Alloy Products. **Note A:** The specified special temper will not conform to Military, Federal, ASTM, ASME and AMS specifications. **Note B:** Applies to products that are not cold worked after cooling from an elevated temperature shaping process, or in which the effect of cold work in flattening or straightening may not be recognized in mechanical properties. **Note C:** Applies to products that are not cold worked after solution heat-treatment, or in which the effect of cold work in flattening or straightening may not be recognized in mechanical properties. **Note D:** Temper -T4511 and -T6511 apply to products that are stress-relieved by stretching.

**Alcoa Special Temper designations are unregistered tempers for reference only and provided for customer use to identify unique processing, material, or end use application characteristics.

Alloy 6061 Chemical Analysis

Liquidus Temperature: 1206°F **Solidus Temperature:** 1080°F **Density:** 0.098 lb./in.^{3}

Percent Weight	Elements										
	Si	Fe	Cu	Mn	Mg	Cr	Zn	Ti	Others Each	Others Total	Aluminum
Minimum	.40	—	.15	—	.8	.04	—	—	—	—	
Maximum	.8	.7	.40	.15	1.2	.35	.25	.15	.05	.15	Remainder

Average Coefficient of Thermal Expansion (68° to 212°F) = 13.1 x 10^{-6} (inch per inch per °F)

Alloy 6061 Mechanical Property Limits for Rod, Bar, Tube, Pipe and Standard Shapes

Temper	Specified Section or Wall Thickness[2] (inches)	Tensile Strength (ksi)				Elongation[3]	Typical Brinell Hardness	Typical Ultimate Shearing Strength
		Ultimate		Yield (0.2% offset)		Percent Min. in 2 inch or 4D[5]	(500 kg load/ 10 mm ball)	(ksi)
		Min.	Max.	Min.	Max.			
Standard Tempers[1]								
O	All	—	22.0	—	16.0	16	30	12
T1	Up thru 0.625	26.0	—	14.0	—	16	—	—
T4, T4511[4]	All	26.0	—	16.0	—	16	65	24
T51	Up thru 0.625	35.0	—	30.0	—	8	—	—
T6, T6511[4]	Up thru 0.249	38.0	—	35.0	—	8	95	30
	0.250 and over	38.0	—	35.0	—	10	95	30
Alcoa Special Tempers*								
T6S2, T6S15	Up thru 0.249	38.0	—	35.0	—	8	95	30
	0.250 and over	38.0	—	35.0	—	10	95	30
T6S9, T6S10	Up thru 0.249	35.0	—	30.0	—	8	—	—
	0.250 and over	35.0	—	30.0	—	10	—	—
T6S4	All	38.0	—	35.0	—	6	95	—
T6H, T6511H	1.000 and over	42.0	—	38.0	—	10	95	30
T6G, T6511G	3.000 and over	42.0	—	38.0	—	10	95	30
T6X, T6511X	.250 thru 1.999	38.0	—	35.0	—	10	95	30
T5S26	All	26.0	—	16.0	—	16	65	24

① The mechanical property limits for standard tempers are listed in the "standards section" of the Aluminum Association's Aluminum Standards and Data manual. ② The thickness of the cross section from which the tension test specimen is taken determines the applicable mechanical properties. ③ For material of such dimensions that a standard test specimen cannot be taken, or for shapes thinner than 0.062", the test for elongation is not required. ④ For stress-relieved tempers, the characteristics and properties other than those specified may differ somewhat from the corresponding characteristics and properties of material in the basic temper. ⑥ D = Specimen diameter.

*Alcoa Special Temper designations are unregistered tempers for reference only and provided for customer use to identify unique processing, material, or end use application characteristics.

Comparative Characteristics of Related Alloys/Tempers[1]

Alloy	Temper	Formability (Low – High)	Machinability (D C B A)	General Corrosion Resistance (D C B A)	Weldability (Arc with Inert Gas) (D C B A)	Brazeability (D C B A)	Anodizing Response (D C B A)
6061	-O						N/A
6061	-T1, -T4, -T4S6, -T4511						
6061	-T6, -T6511, -T6S4						
6061	-T6H, -T6G, -T6511H, -T6511G						
6061	-T6S2, -T6S15						N/A
6061	-T6S9, -T6S10						N/A
6061	-T51						N/A
6061	-T5S26						N/A
6262	-T6, -T6511						
6063	-T6						
6063	-T5, -T52						

① Rating: A=Excellent B=Good C=Fair D=Poor For further details of explanation of ratings, see Aluminum Association's Aluminum Standards and Data manual.

Alcoa Distribution and Industrial Products

53 Pottsville Street
Cressona, PA 17929
Phone: 800-233-3165
FAX: 800-252-4646

© 12/02

Sludge Pump

DRAFT

Offer No.: 500315890/1
Your reference: City of San Luis, AZ
Date: 20 November 2024

SEEPEX.
An Ingersoll Rand Business

Item: 10
Product group N
Standard Pump

CONVEYING CAPACITY
240 USGPM

PRESSURE
18 psi

SPEED
246 rpm



* typical image, design may differ

SEEPEX pumps from the BN range are used across all industries for pumping fluids that are free flowing up to more viscous products with or without solids. It has compact design featuring many ease of maintenance features designed by SEEPEX

BN

YOUR ADVANTAGES
• Compact, space-saving design with directly flange-mounted drive (block design)

• Reduced capital cost, as it has fewer parts associated with the drive

• Easy to maintain with the use of the plug-in-shaft connection between the rotating unit and drive

• Flexibility, it can be mounted vertically or horizontally and run in either direction

Multiple flange connection positions are possible

DRAFT

Offer No. 500315890/1/
FKC Co.Ltd.

SEEPEX
An Ingersoll Rand Business

11/20/2024	**Item 10**
	pump to handle secondary waste activated
qty.: 2	**Progressive cavity pump**
	BN 70-6L / A1-C1-L8-F0-GA

Application data

Conveyed product	secondary waste activated
Flowability	flowable
Viscosity	low viscosity (< 500 cP/mPas)
Solids content	3.0% max.
Size of solids	not specified
Density	unknown, 1 kg/dm³ assumed
Product temperature	56°F - 86°F
Product temperature (norm.)	68°F
pH value	5-9
Kind of operation	continuous
Operating hours	8 h/day
Location	indoor, dry atmosphere
Altitude of installation	up to 1000 m assumed
Surrounding temperature	normal (32-104 °F)

Performance data

	Capacity	**Pressure**	**Speed**
	240 USGPM	18 psi	246 rpm
Starting torque	332 lb.ft		
Inlet pressure	flooded suction (up to 0,5bar)		

Tolerances according to SEEPEX standards.

Materials and executions

Installation	horizontal
Direction of rotation	counter clockwise (left)
Lantern - Design	with cover plates
Lantern - Material	EN-JL 1040 (gci-25)
Suction casing - Design	standard
Suction casing - Material	EN-JL 1040 (gci-25)
Pressure branch - Design	standard
Pressure branch - Material	EN-JL 1040 (gci-25)
Position of branch	position 1
Suction connection	NPS 6, drilled acc. to ASME B 16.5, Class 150, RF
Pressure connection	NPS 6, drilled acc. to ASME B 16.5, Class 150, RF
Joint - Design	pin joint with joint sleeve, grease filled
Joint - Material	standard, holding bands 1.4401
Joint - Universal joint sleeve: material	NBR - Perbunan
Coupling rod - Design	standard
Coupling rod - Material	1.4021 / AISI 420
Rotor - Design	standard
Rotor - Material	1.0503 (C45) / AISI 1045
Rotor - Coating	ductile chromium coating
Stator - Design	standard
Stator - Material	NBR - Perbunan
Shaft sealing	mechanical seal
Code	GA - single acting mechanical seal
Shaft diameter	80 mm
Rotating/stationary seal face	SiC SiC
Elastomers	FPM
Spring	1.4571 / AISI 316Ti
Metal parts	1.4571 / AISI 316Ti
Casing - material	1.4408 / ASTM A351 grade CF8M
Casing - connection standard	NPT

DRAFT

Plug-in Shaft - Design	standard
Plug-in Shaft - Material	1.4021 / AISI 420
Bolting - Design	standard
Painting - Number of colors	single-colored
Painting - Painted components	complete combination
Painting - Color	Primer Coat: Tnemec Hi-Build Epoxoline II series N69-1211/Red, 4 mil, DFT Finish Coat: Tnemec Hi-Build Epoxoline II series N69-04BR/ Desert Sands, 4 mil DFT
Painting - Surface protection	SSPC-SP1 Solvent Cleaning SSPC-SP3 Power Tool Cleaning SSPC-SP6 Commercial Blast on base plate only

Drive

Type	Gear & Motor at freq. inv. (Inverter is not included)
Mounting type	Flange design
Mounting orientation	M1
Ratio (i)	6.42

	Norm	**Min**	**Max**
Speed	275 rpm	246 rpm	246 rpm
Motor speed	1765 rpm	1580 rpm	1580 rpm
Frequency	60 Hz	53 Hz	53 Hz

Rated output	15 HP
Rated speed	1765 rpm
Starting	direct on frequency inverter
Efficiency class	premium efficiency
Terminal box position acc. to supplier	right
Cable entry position acc. to supplier	not specified

Voltage	3x 230/460 V
Frequency	60Hz
Enclosure	TEFC
Thermal class	F
Winding protection	Thermostats

The frequency inverter has to follow a linear U/f characteristic curve (constant torque).
It's essential to have a minimum overload capability of 150% for at least 60 seconds. (see technical data sheet)

Baseplate

Design	extended - with motor support
Material	steel, painted
GPU Type Code	B-ST-LS-EM

Packing

Type of packing	skid (US)
Type of transport	truck
Quantity of pumps per position	1 pump

DRAFT

Please send your purchase order to incomingorders@seepex.net

All drawings accompanying this offer is for REFERENCE ONLY, final drawings will be created upon receipt of order. If you need this drawing please request on PO.

In order to process your order, we will require either a copy of the quote this order is based on, or the quote number.

In order to process duplicate wet end orders, we will require the commission number of the pump being duplicated.

DRAFT

not binding drawing for offer

Copyright: This drawing is our property and patented for us according to the law of copyright and associated rights !

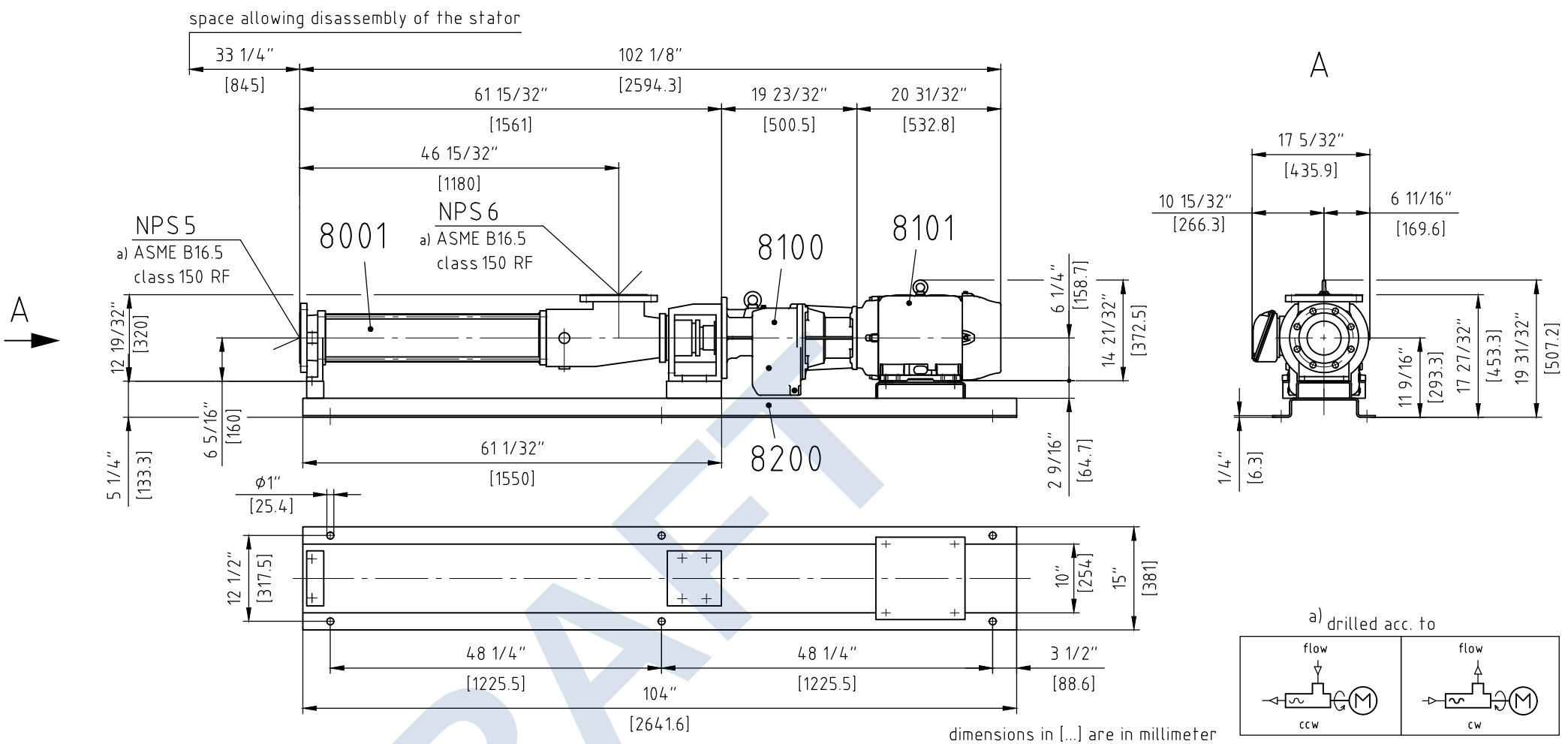

Quant.	Denomination	Item	Material	Note	Weight / kg
1	baseplate:	8200		Var.: 801-200/0350-C-815	70
1	motor: WEG 01518ET3E254TC-W22	8100			143
1	gear: Nord SK52F-250TC	8100			121
1	pump: BN 35-12 / 70-6L / 110-6LT / 55-12T	8001			160

SEEPEX.

	Name	Day	Scale	Weight	Denomination
2023					
Drawn	lsh	04.05	1:20	494 kg	dimensional drawing
Checked	gf	04.05.	EDP-No. 224155.dwg		Drawing-no. 262-C65/0350-C-758A4

General tolerances for dimensions without specified tolerances acc. to DIN ISO 2768-v

DRAFT

SEEPEX.
ALL THINGS FLOW

Characteristic Curves
Size
70–6L

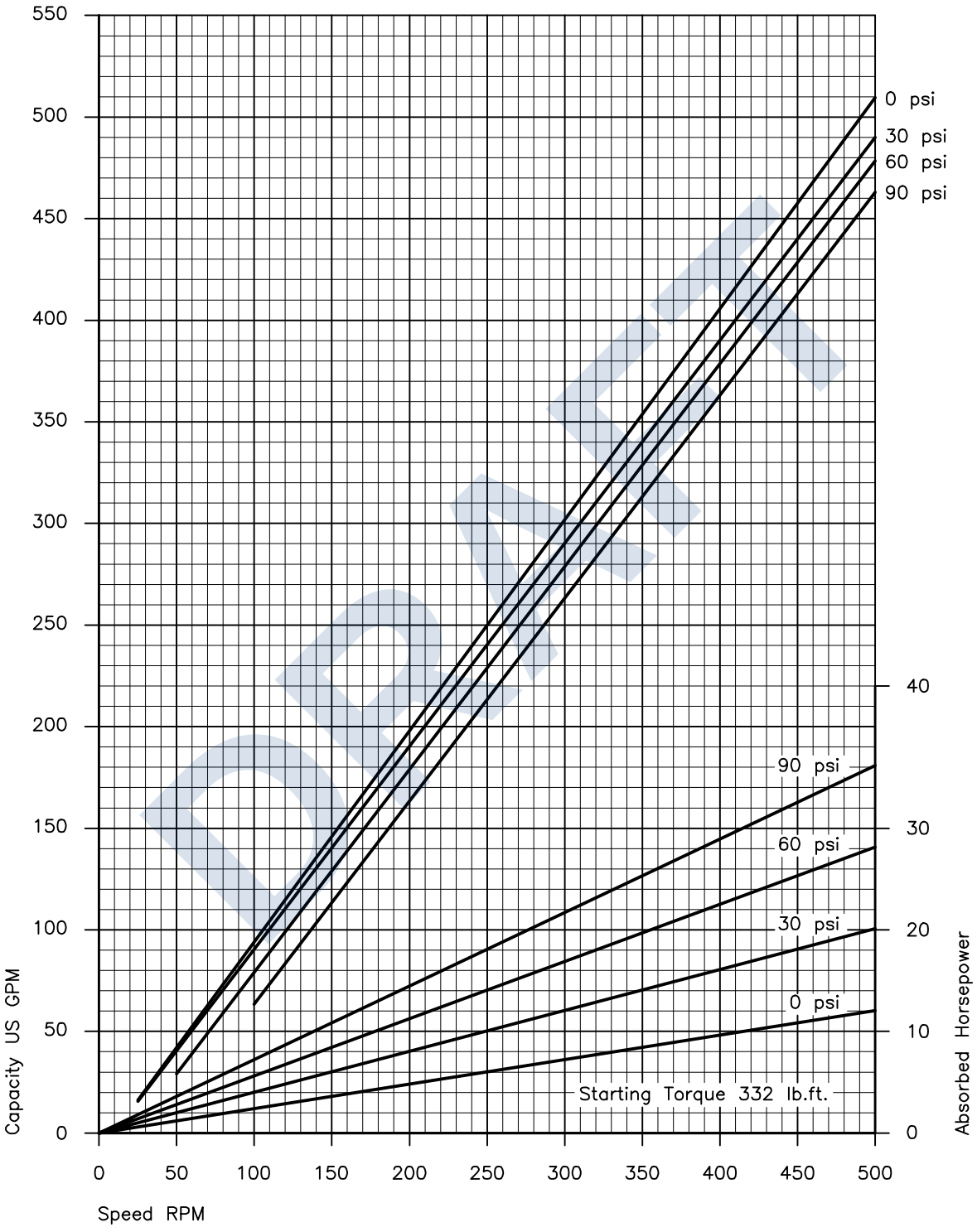

Values based upon water 68°F ; For notes on drive selection refer to PER

CHA.70–6L_6, D 05.09us

Control Panel

DRAFT

FKC CO., LTD.

2708 West 18th Street
Port Angeles, WA 98363

(360) 452-9472
FAX (360) 452-6880

Control Panel Submittal

Project: 524 – San Luis West WWTP
Project Engineer: Wesley Bond
Equipment Name: FKC Screw Press Dewatering System

The control panel for this project will be submitted under a separate cover. In an effort to get the Screw Press fabrication started (which is the long lead item), we need approval for the screw press before we could get the control panel submittal.

The panel will include the following:

Control Panel List

(Qty. 1) Screw Press Control Panel (60" x 49" x 18" NEMA 4X (316SS), Flange Mount Disconnect Enclosure) including:

-Allen Bradley 5069-L310ER Processor w/ Ethernet Connection Including:

- 32 Digital Inputs
- 16 Digital Outputs
- 8 Analog Inputs
- 8 Analog Outputs

-Maple Systems 9.7" OIT – w/ Sun Shield

-(Qty.1) Sludge Feed Pump VFD, 15 HP PowerFlex 525 w/ 3% Line Reactor & Ethernet Connection.

- HOA, running light, fail light & potentiometer.

-(Qty.1) Floc Tank Mixer VFD, 2 HP PowerFlex 525 w/ 3% Line Reactor & Ethernet Connection.

- HOA, running light, fail light & potentiometer.

-(Qty.1) Screw Press VFD, 7.5 HP PowerFlex 525 w/ 3% Line Reactor & Ethernet Connection.

- HOA, running light, fail light & potentiometer.

-(Qty.1) Conveyor VFD, 5 HP PowerFlex 525 w/ 3% Line Reactor & Ethernet Connection.

- HOA, running light, fail light & potentiometer.

-Process Stop, Power on Light on Panel Door

-UPS 1000VA

-Air Conditioner – 8000 BTU

-TVSS & 480/120 VAC Transformer - 120 VAC Power for 1 - Polymer System - Controls for 3 – Washwater Solenoids.

-Controls for 1 - Polymer System.

1.1 INSTRUMENTATION LIST

(Qty.1) Floc Tank Hi-Hi Level Switch (Warrick 316SS Probe w/ Electronics Module) (Qty.1) Headbox Level Transmitter (IFM 2" Sanitary Connection)

DRAFT

Technical Submittals

DRAFT

Technical Submittals

Performance Guarantee

Warranty Certificate

DRAFT

Performance Guarantee

DRAFT

FKC CO., LTD.

2708 West 18th Street
Port Angeles, WA 98363

(360) 452-9472
FAX (360) 452-6880

PERFORMANCE GUARANTEE

Project: 524 – San Luis West WWTP
Project Engineer: Wesley Bond
Equipment Name: FKC Screw Press Dewatering System

FKC's performance guarantee is as outlined in the bid document for the City of San Luis West WWTP. A summary of the guarantee is as follows in Tabel A.

Section A

Material to be dewatered:	Secondary Waste Activated (with minimal digestion)
Capacity:	11.928 BDST/Day (24-hours) or 994 Dry Lbs. / Hr.
Average Flowrate:	200 GPM @ 1.0%TS
Inlet Consistence:	0.75 – 1.2% or Higher
Outlet Consistency:	15% or Higher at 170 GPM or less Pass Paint Filter Test at 200 GPM
Maximum Polymer Dose:	30 Lbs. / Dry Ton (Active)
Capture Rate:	95% or Higher

In the event that performance is not met, FKC will provide all parts, engineering, and labor associated with the work necessary to bring the equipment into conformance with the performance guarantee.

DRAFT

Wes S 4/29/25

FKC Co., Ltd. Date
Wesley Bond
Project Manager

Warranty Certificate

DRAFT

FKC CO., LTD.

2708 West 18th Street
Port Angeles, WA 98363

(360) 452-9472
FAX (360) 452-6880

WARRANTY CERTIFICATION

Project: City of San Luis West WWTP, AZ
Project Engineer: Wesley Bond
Equipment Name: FKC Screw Press and associated equipment

Conditions of Warranty:

A. General Warranty – the General Warranty shall cover all components of the system for a period of 24 months after component acceptance. It will cover all parts, labor and coating for repair or replacement of equipment that fails during the warranty period at no cost to the Owner.

B. This warranty includes meeting the performance requirements as outlined in the Guarantee tab in this bid proposal.

C. FKC will expend this warranty an additional 12 months (36 months total) for an additional US$12,500.00



12/5/24

_____

FKC Co., Ltd.
Wesley Bond
Project Manager

Date

DRAFT

SHOP DRAWING REVIEW

Project: **San Luis West WWTP Improvements**

Submittal No. **#46 21 58_001 – Hydro-Dyne Headworks**

Date Received: **06/02/2025**

Job #: **B777**

Comments:

No Exceptions Taken..... ☐
Submit Specific Item ..... ☐
Accepted with Corrections Noted..... ☒
Revise and Resubmit..... ☐
Rejected ..... ☐

Note:
Review is only for general conformance with the design concept of the project and general compliance with the information included in the Contract Documents. Any action shown is subjected to the requirements of the drawings and the specifications. Contractor is responsible for correlating and confirming dimensions at the job site, choice of fabrication processes and techniques of construction: coordination of his work with that of other trades; and performing the work in a safe satisfactory manner.

DATE: 06/13/2025 BY: NT, GT

Submittal Comments:

General

1. It is noted in many locations throughout the submittal that HDE will not provide anchors and anchoring systems. It is understood that HDE will provide all necessary anchors and anchoring systems. To reduce duplicated markups, this will be the sole comment regarding the stated supply.
2. Similar to the anchors and anchoring systems, the submittal mentions that HDE will not provide grit pumps and accessories. It is understood that HDE will provide grit pumps and grit pump accessories. To reduce duplicated markups, this will be the sole comment regarding the stated supply.
3. It is understood that HDE is responsible for supplying a complete and operable system as stated in the Certificate of Conformance within the Purchase Agreement.

Submittal Table of Contents:

Scope of Work

DRAFT

1. Stop logs AND grit baffles are not included as individual line items within Scope of Supply but are provided by HDE.
2. Clarifications #18 and #19 are assumed to be redacted as HDE Scope of Supply has changed

Equipment Specifications

1. Please see PACE review comments in submittal.

Equipment Drawings

1. Please see PACE review comments in submittal.

Controls Drawings

1. Please provide installation spacing requirements for main control panels.
2. Control Panels and Level Controller panels will be located outside of the classified spaces. No exception with these being NEMA 4X rated.
3. Page 299 of 513: Ethernet switches should include provisions for fiber connectivity (SFP ports) and be managed type to allow for connectivity to the fiber ring (Spanning Tree Protocol). See Network Diagram on plan sheet I0.1. Note each control panel should have provisions for an internal fiber patch panel.
4. Please provide EchoMax level sensors with 100m factory cable length to allow the relocation of Level Controller panel outside of classified area.

Control Component Specifications

1. No submittal comments.

Installation Procedures

1. No submittal comments. Contractor to note.

Accessory Catalog Cuts

1. Verify inlet and outlet size of cyclone. Unit marked as D10LB has 4” inlet and 5” overflow marked on page 438. Page 439 states 4” inlet and 6” overflow.

Drive Motors & Gear Reducers

1. All motors to be provided with NDS+ severe duty protection option.

Equipment Warranty

1. No submittal comments.

Misc.

1. No submittal comments.

DRAFT

Contractor to Note:

1. Verify structure conditions for the headworks and grit removal equipment installation. See submittal and submittal notes for specific dimension requirements (e.g., tolerance for floor/invert at screens).
2. Reference submittal for HDE supplied items on spray wash system. Note also, required sizes of connection at each occurrence.
3. All electrical conduits, spray wash feeds, and equipment drain lines shall be installed to minimize obstructions on the maintenance/working surface of the structure.
4. Coordinate installation of field instruments and control stations to allow for proper access and maintenance. All field instruments and control panels shall be installed as indicated in the submittal, and per respective manufacturer's installation requirements.
5. Contractor to install all HDE supplied equipment per manufacturer and submittal requirements.
6. Contractor to provide and install ¼" NPT vacuum breaker on grit line per Equipment Drawing Sheet 6/11.

DRAFT

GREAT WHITE CENTER FLOW SCREEN & WHITETIP SHARK WASHING COMPACTOR SUBMITTAL PACKAGE

FOR: SAN LUIS, AZ
WEST WWTP
June 2nd, 2025

DRAFT

GREAT WHITE CENTER FLOW SCREEN MODEL #: CF26-30-144-6P4
WHITETIP SHARK WASHING COMPACTOR MODEL #: WCW8S-23-5P4
GREAT WHITE CENTER FLOW SCREEN MODEL #: CF26-49-176-2P4
WHITETIP SHARK WASHING COMPACTOR MODEL #: WCW6S -38-2P4
Grit Baffles Model #: GTK-144C-N
Grit Trap Model #: GTT60I102CW4C
Grit Trap Model #: GTT60I102CCW4C
Grit Compactor Model #: GC-12-98-4C

MANUFACTURED BY

HYDRO DYNE ENGINEERING
DESIGNED TO PROTECT. BUILT TO PERFORM.™

4750 118th Avenue North • Clearwater, Florida 33762
Phone: 813-818-0777 • Fax: 813-818-0770
Email: info@hydro-dyne.com

THIS PAGE IS INTENTIONALLY LEFT BLANK

DRAFT

GREAT WHITE CENTER FLOW SCREEN & WHITETIP SHARK WASHING COMPACTOR
SUBMITTAL PACKAGE
TABLE OF CONTENTS

HDE Project Job Number: 6002
HDE Project File Name: San Luis, AZ – West WWTP

SECTIONS ***PAGES***

1.0 Scope of Work…….…….…….....4

2.0 Equipment Specifications.…….…….....9

3.0 Hydraulic Capacity & Headloss Calculations…….…….…….....33

4.0 Equipment Drawing....……...…….....71
- *4.1 Installation Layout Drawings*
- *4.2 Recommended Plumbing*
- *4.3 Typical Assembly Breakouts & Parts List*

5.0 Controls Drawings...……...….96
- *5.1 Electrical Schematics*
- *5.2 Field Wiring Diagrams*
- *5.3 Device Settings*
- *5.4 Sequence of Operation*
- *5.5 Components Shipped Loose*
- *5.6 Panel Layout*
- *5.7 Panel Bill of Materials*

6.0 Control Components Specifications……..…….……..…...…….119

7.0 Installation Procedures...……...……..371
- *7.1 Screen Installation*
- *7.2 Compactor / Classifier / Trap Installation*

8.0 Accessory Catalog Cuts…….. ……....…….……..…395
- *8.1 Solenoid Valve and Ball Valves*
- *8.2 Sediment Filter*
- *8.3 Pressure Gauge*

9.0 Drive Motors ……..…….……...……458
- *9.1 Features, Technical Data & Performance Specifications*

10.0 Gear Reducers ……479
- *10.1 Features, Performance Specifications & Dimensions*

11.0 Equipment Warranty...……...……..507

12.0 Miscellaneous.……...……...…..508
- *12.1 ISO Certificate*
- *12.2 Products Overview*

DRAFT

HYDRO DYNE ENGINEERING
DESIGNED TO PROTECT. BUILT TO PERFORM.™
Tel: 813-818-0777 Fax: 813-818-0770

Represented Locally By:
JBI Water & Wastewater
Attn: Tarn Victor
Number-(949) 302-6622

December 9, 2024 (Updated May 30th, 2025)

Ref: San Luis, AZ - West WWTP
Specification: RFP
Addendum: 1,2

Hydro-Dyne Engineering Scope of Work 5753-7, 8, 9

Hydro-Dyne Engineering is pleased to offer this Scope of Work for the equipment detailed below in accordance to the specification(s) and addendum(s) stated above, and the attached Hydro-Dyne Engineering Terms and Conditions. Where clarifications to the specifications are necessary, they will be listed below.

Hydro-Dyne Specification Section	Description Center Flow Coarse/Fine Screen	Quantity
2.2	Center Flow Coarse Center Flow Fine	2 each 2 each
2.3	Weir (coarse and fine)	4
2.4	Sluice	2
2.5	Washing Compactor Coarse Washing Compactor Fine	2 2
2.6	Spare Parts	1 lot
2.7	Accessories ~~(not including concrete anchors)~~	1 lot
2.8	Controls	1 lot

Hydro-Dyne Specification Section	Description Grit System	Quantity
2.2	Vortex Grit Trap	2
2.4	Grit Classifier	2
2.5	Controls – (included with Screen Controls)	
2.7	Spare Parts	1 lot
2.8	Accessories ~~(not including concrete anchors)~~	1 lot

GRIT BAFFLE, STOP LOGS, GRIT PUMPS (AND ACCESSORIES), AND ANCHORS PROVIDED BY HDE

FREIGHT
F.O.B shipment point with freight costs included.

NOT INCLUDED
This scope of work is limited to the specification section(s) and addendum(s) referenced above. Any other documents are not included. Concrete work, installation, plumbing, wiring connections, valves, strainers, level sensor mounts, engineering certifications or seals, seismic/wind calculations and related PE stamps, and anything else not specifically detailed as included by the manufacturer in the

DRAFT

specification above will be construed as NOT INCLUDED, whether or not inclusion is specifically acknowledged.

This scope of work does not include supply of any type of bond unless specifically itemized in the table above.

COMPLIANCE WITH BIPARTISAN INFASTRUCTURE LAW (BIL Public Law 117-58)
and BUILD AMERICA, BUY AMERICA ACT (BABA)

Equipment supplied in this Scope of Work will comply with the Bipartisan Infrastructure Law's (BIL) Build America, Buy America (BABA) requirements for manufactured products. As defined in the Law, this means:
(i) the manufactured product was manufactured in the United States, and
(ii) the cost of the components of the manufactured product that are mined, produced, or manufactured in the United States is greater than 55 percent of the total cost of all components of the manufactured product.

VALIDITY

Price quoted is firm provided:

1. Purchaser agrees to timely review and approval of submittals. The Purchaser is permitted a maximum of thirty (30) calendar days for the review and return of initial submittals, and fourteen (14) calendar days for the review and return of any resubmittal. Purchaser is allowed no more than one (1) resubmittal. Any delays in the review and approval process or any resubmittals exceeding this limit may result in a price escalation, not to exceed 1.5% per calendar month of the total purchase price. Hydro-Dyne Engineering reserves the right to impose not only additional costs, but such delays may also affect the overall project timeline.
2. Purchaser agrees to accept shipment 26 weeks from date of receipt of approved drawings and authorization to proceed with manufacture. Shipments delayed by the purchaser or his agents will be escalated at a rate of 1-1/2% per calendar month, compounded, of the value of the unshipped portion.

PROJECT DELIVERY SCHEDULE

- Time required to generate an acceptable submittal for the Engineer's review – 6 weeks
- Time required to manufacture the equipment once the submittal has been approved by the Engineer and receipt of Notification to Proceed – 26 Weeks
- Time of delivery for O&M Manuals – Prelim - 8 weeks after approved submttals, Final – 16 weeks after submittal approval.
- Time of delivery of complete equipment systems –1 week after manufacture of equipment
- Schedule delay (for both shop drawing submittals preparation and equipment fabrication and delivery with O&M Manual) will result in liquidated damage of $500 per calendar day, starting two weeks after milestone due date, up to 50% of the contract value, only if Purchaser is assessed liquidated damages by the Owner as a result of Supplier's delay."

TAXES

Applicable sales or use taxes, fees, permits, and licenses are not included.

DRAFT

COMMISSIONING SERVICE & CUSTOMER TRAINING

- This service will not exceed three (3) trips and five (5) eight-hour working days.
- Each additional trip will be figured at $2,000 and each additional day onsite will be figured at $1,200. It is agreed and understood that all necessary utilities such as water, electric, air, etc. be connected and functional prior to the arrival of our servicemen.
- A complete job of checking, adjusting, etc. of the equipment and installation cannot be accomplished unless the plant is ready to operate at the time this service is to be performed.
- Our servicemen are non-union technicians and any extra cost for other assisting personnel as required by local union regulations is not included in this proposal.
- Advance notification of at least fifteen (15) working days prior to the date start-up service is required.

WARRANTY

The equipment and all appurtenances including, but not limited to: frame, supports, covers, and mechanisms manufactured by Hydro-Dyne Engineering are warranted for a period of 24 months against defects in materials and workmanship, starting upon beneficial use or 90 days after delivery, whichever occurs first. The Warranty covers repair or replacement of the defective components, but does not included labor to remove and install equipment or parts, or shipping and freight charges to and from the purchaser's job site. The Warranty shall also not apply to any parts, equipment, accessories or components that were either manufactured or were designed by any person or entity other than Hydro-Dyne Engineering itself. Hydro-Dyne will provide any pass-through warranty that is permitted to pass-through to Purchaser in connection with the portions of the Products that are not Warranted Parts.

PAYMENT TERMS

- 35% on approved submittal(s) – invoice for approved submittals to be submitted by 6/15/25
- 45% on delivery.
- 15% on start-up and training.
- 5% on delivery of final O&M Manual(s). Operation & Maintenance Manuals must be submitted and approved prior to shipping equipment to the jobsite.

- Past due balances will be subject to a service charge of 1-1/2% per month on the unpaid balance and services, including shipping and startup, will not be scheduled until account is current.

CLARIFICATIONS TO THE RFP

1. Hydro-Dyne's pricing is valid based on notification to proceed with manufacture by 6/9/25.
2. RFP 1.a.v - Hydro-Dyne is taking exception to the requirement to supply Volume in cubic yards of structural concrete required – Hydro-Dyne's design fits within a footprint of 27.0 ft x 63.2 ft, well within the 42 ft x 72 ft area identified in the RFP.
3. RFP 1.b. - There is no cost adder or schedule impact for providing a BABA compliant system.
4. RFP 1.e – Hydro-Dyne is willing to provide a Performance Bond in the amount of 100% through the end of warranty period. Hydro-Dyne is supplying a Letter of Bondability from our Surety in lieu of a letter in Hydro-Dyne letterhead.
5. RFP 1.e – Hydro-Dyne is taking exception to the requirement to provide a letter stating our willingness to provide a 100% performance guarantee for the duration of the warranty. Hydro-Dyne is excluding the Performance Guarantee from our offer. Hydro-Dyne will supply projected

DRAFT

headloss at 1MGD, 1.5MGD, 2.25MGD and 3MGD, and verify hydraulic performance during commissioning.

6. RFP 1.g. – Hydro-Dyne is taking exception to the escalation clause and is including an adder for cost escalation to extend bid validity an additional 12 months. Note bid validity is based on date Notice To Proceed is received.
7. Maintenance and Repair Contract – Hydro-Dyne is taking exception to the Full Maintenance and Repairs Contract provisions. Hydro-Dyne is including, as an adder, a 5-year service plan as part of our offer.
8. Guarantee - Hydro-Dyne is taking exception to the following "*Further, it shall state that required subsystems or appurtenances omitted will be provided by the vendor at no additional cost to the owner*."
9. Warranty – Hydro-Dyne is taking exception to the following *"The warranty shall include meeting the performance guarantee specified. Vendor shall bear 100% of any replacement costs or costs incurred due to upgrades required to meet the performance requirements during the lifetime of the warranty period and/or the duration of the Full Maintenance and Repair Contract."* Hydro-Dyne is providing our standard 2 year warranty.
   The equipment and all appurtenances including, but not limited to: frame, supports, covers, and mechanisms manufactured by Hydro-Dyne Engineering are warranted for a period of 24 months against defects in materials and workmanship, starting upon beneficial use or 90 days after delivery, whichever occurs first. The Warranty covers repair or replacement of the defective components, but does not included labor to remove and install equipment or parts, or shipping and freight charges to and from the purchaser's job site. The Warranty shall also not apply to any parts, equipment, accessories or components that were either manufactured or were designed by any person or entity other than Hydro-Dyne Engineering itself. Hydro-Dyne will provide any pass-through warranty that is permitted to pass-through to Purchaser in connection with the portions of the Products that are not Warranted Parts.
10. Equipment Performance, Layouts, and Specifications – Hydro-Dyne is taking exception to the following "*Performance data provided shall be guaranteed for the duration of the warranty period and/or Full Maintenance and Repair Contract*." (see#5)
11. Equipment/System Automation - Hydro-Dyne's system is designed for fully automatic operation with minimal operator attention. See Appendix "Typical Sequence Of Automatic Operation For Two Channel Integrated Headworks System", for detailed description of system's automatic operation.
12. Schedule Liquidated Damages - Hydro-Dyne can agree to liquidated damage provisions for late delivery as revised below: "Should Seller delay the Project, or any portion thereof, in any way, then Supplier's sole liability and Purchaser's sole remedy is assessment of liquidated damages of $500/day, starting 2 weeks after the contractual milestone date, up to 50% of the contract value, only if Purchaser is assessed liquidated damages by the Owner as a result of Supplier's delay."
13. RFP 1.2.D - Hydro-Dyne is quoting an upgraded enhanced washing compactor which exceeds the RFP requirement to produce dewatered screenings capable of passing the EPA Paint Filter Test as described in method 9095 of EPA Publication SW-486. Smaller opening (6mm and smaller) perforated plate screens may remove a high amount of organic solids which need to be thoroughly washed and returned to the channel by the washing compactor. The quoted washing compactor will meet the following specifications:
    - Weight reduction up to 80%
    - Screening volume reduction up to 85%
    - Organic removal up to 95%
    - Dewatered screenings dry solids content up to 40% (depending on material to be dewatered)

DRAFT

CLARIFICATIONS TO THE RFP (continued)

14. RFP 1.2.I - Details of electrical classification environments are not provided in the RFP. Hydro-Dyne is quoting C1D2 components (motors), Nema 4X (MCP and Hydro-ranger panels), Nema 4 (IP66) Sluice level Sensor with external probes, and C1D1 components (solenoids, LCS, ultra-sonic level sensors) and can supply C1D1 components for a cost adder, if the final design requires these to be placed in a C1D1 environment.
15. Exhibit C – Capital Cost Summary – Hydro-Dyne costing details are for information only as we are providing an integrated package. Pricing provided cannot be used to purchase selective line items.
16. Materials of Construction - Hydro-Dyne is supplying our standard paint coatings and is taking exception to the paint spec for gears, motors and bearings. We can provide an adder to supply spec compliant paint if requested. Hydro-Dyne will provide the following:

- All ferrous surfaces (except stainless steel) shall be coated with a pre-primer, primer, and an exterior top coating, or fusion bonded polyester coating suitable for humid/wet environments for superior corrosion protection.
- Motor(s) and gearbox(s) shall be surface prepared to withstand humid/wet environments for superior corrosion protection.

17. Hydro-Dyne proposal does not include engineering certifications or seals, seismic/wind calculations and related PE stamps. These can be provided for a cost adder upon request.
18. ~~Hydro-Dyne scope does not include supply of anchors or grit pumps and accessories.~~
19. Hydro-Dyne cannot re-use previously referenced seismic certification on grit pump anchorage, ~~grit pump supplied by others.~~
20. Hydro-Dyne proposal does include design to applicable ASCE-22 seismic standards and local San Luis codes, by re-using a previously certified more robust California design.

For additional information, please contact our local representative listed above or me personally.

Sincerely,
Randall Dow
Sales Director
Hydro-Dyne Engineering, Inc.

HDE TO PROVIDE ANCHORS, GRIT PUMPS & ACCESSORIES

DRAFT

GREAT WHITE CENTER FLOW SCREEN & WHITETIP SHARK WASHING COMPACTOR TECHNICAL SPECIFICATIONS

Part 1 GENERAL

1.1 SCOPE – Supply all labor, materials, equipment and incidentals required to install and place into operation the fine and coarse screening system as shown on the Drawings and as specified herein.

1.2 REFERENCE STANDARDS – The properties of all materials, design, fabrication and performance of the equipment to be furnished under this section shall be in accordance with the latest issue of applicable standard specifications. The governing authorities of these standards are listed below.

A. AISC, American Institute of Steel Construction
B. AISI American Iron and Steel Institute
C. ANSI, American National Standards Institute
D. ASCE, American Society of Civil Engineers
E. ASME, American Society of Mechanical Engineers
F. ASTM, American Society of Testing and Materials
G. AWS, American Welding Society
H. IBC, International Building Code
I. IEC, International Electric Code
J. IEEE, Institute of Electrical and Electronics Engineers
K. NEC, National Electrical Code
L. NEMA, National Electrical Manufacturers Association
M. Underwriters Laboratory (UL and cUL)

1.3 SUBMITTALS - Submittals shall be provided to the engineer that includes all the following information:

A. Certified shop drawings showing all important details of construction, dimensions and anchor bolt locations.
B. Descriptive product literature.
C. Schematic electrical wiring diagram and electrical controls information.
D. Complete motor and drive data.
E. The total weight of the equipment.
F. A complete bill of materials of all equipment.
G. A valid certificate of registration naming manufacturer, and supplier if equipment is relabeled, as ISO 9001:2015 certified.
H. A certificate from an industry recognized, independent testing facility verifying compliance with Screening Capture Ratio requirement.

1.4 QUALIFICATIONS

A. All the equipment specified under this Section shall be supplied by a single manufacturer whose Quality Management System is ISO 9001:2015 certified and applicable to the manufacture of water and wastewater treatment equipment.

DRAFT

B. If equipment is not manufactured by supplier, including welding and machining, the name and contact information of manufacturing facility must be supplied. If more than one manufacturer is used all companies and facilities must be provided.

C. If patents protecting equipment are not owned by supplier, then an affidavit must be supplied stating owner of design and expiration of licensing agreement.

D. All equipment specified under this Section shall comply with Bipartisan Infrastructure Law's (BIL Public Law 117-58) Build America, Buy America (BABA) requirements for manufactured products. As defined in the Law, this requires:
(i) the manufactured product was manufactured in the United States, and
(ii) the cost of the components of the manufactured product that are mined, produced, or manufactured in the United States is greater than 55 percent of the total cost of all components of the manufactured product.
Certifications attesting to compliance will be required prior to approval and shall be included with submittals and upon completion of manufacture.

1.5 DESIGN REQUIREMENTS

A. System Description

1. The fine screen will have a continuous stainless steel belt that automatically rotates within the internal guide system of the static frame.

2. The fine screen herein specified will be of the center flow type. The flow enters the inside of the continuous belt and exits through both sides and the bottom of the belt.

3. The screen shall have undergone performance testing by an industry recognized, independent testing facility. The results of this testing shall verify a Screening Capture Ratio of at least 84% (coarse screen)/ 93% (fine screen) for solids equal to or larger than the screen grid opening listed in System Performance below.

4. The screen will be installed into a widened chamber section of the channel as shown on the contract drawings to accommodate the flow pattern through the screen belt.

5. The solids will collect as a mat on the inside of the continuous belt. The belt will intermittently rotate and elevate the solids to the discharge point. Larger objects will be picked up by a series of hooks and/or trays placed at regular intervals.

6. The solids will be removed at the top of the screen by two spray bar headers positioned on the outside of the belt. The screenings will drop into an internal hopper and be fed to the screening handling system.

7. The continuous belt will be directly driven by drive sprockets that shall support and rotate the grid assembly.

8. The screen will be totally enclosed and have access covers that will be lightweight and easily removable for maintenance. Maintenance, inspection, access and lubrication points shall be no higher than 60 inches above grade level.

DRAFT

9. The Washing Compactor will be positioned next to the screening channels and will be fed by a sluice system.

10. The Washing Compactor will be adequately sized to handle all the screenings and wash water that will be generated by the screen at peak flow. The system will be required to wash the screenings to reduce the organic content and compact the remaining solids into a dry plug.

11. The Washing Compactor will generally comprise of a screw auger rotating within the washing and drainage trough, a wash water system, a compaction zone and an outlet chute arrangement.

12. All stainless steel (including frame, grid and drive components) mentioned below as stainless steel shall be T304 stainless steel. All hardware shall be T316 stainless steel.

B. System Performance – The fine screening system will be designed to meet the following design parameters:

COARSE SCREENS;

1. Number of screens	2
2. Peak flow per screen	7.5 MGD
3. Average flow to screen	3 MGD
4. Velocity through the grid	max 3.0 ft/s
5. Screen grid opening	6 mm
6. Head loss at peak flow	4.7 inches @ 50% blinding and 37 inches downstream water level
7. Structural design differential of frame/grid	48 inches minimum @ 100% blinding
8. Drive design differential (operating)	48 inches minimum
9. Screen grid supporting drive sprockets	2 minimum – all stainless steel
10. Channel width	18 inches
11. Channel Recess	36 inches
12. Channel height	66 inches
13. Number of Washing Compactors	2
14. Diameter of screw	8 inches
15. Minimum diameter of shaft	2.75 inches
16. Compactor discharge height above grade	48 inches
17. Screen wash water requirements	29 GPM @ 60 PSI each
18. Compactor wash water requirements	25 GPM @ 60 PSI each
19. Sluice wash water requirements	10-20 GPM @ 60 PSI intermittent

FINE SCREENS;

1. Number of screens	2
2. Peak flow per screen	7.5 MGD
3. Average flow to screen	3 MGD
4. Velocity through the grid	max 3.0 ft/s
5. Screen grid opening	2 mm

DRAFT

6. Head loss at peak flow	11.4 inches @ 65% blinding and 34 inches downstream water level
7. Structural design differential of frame/grid	48 inches minimum @ 100% blinding
8. Drive design differential (operating)	48 inches minimum
9. Screen grid supporting drive sprockets	3 minimum – all stainless steel
10. Channel width	18 inches
11. Channel Recess	36 inches
12. Channel height	102 inches
13. Number of Washing Compactors	2
14. Diameter of screw	6 inches
15. Minimum diameter of shaft	2.25 inches
16. Compactor discharge height above grade	48 inches
17. Screen wash water requirements	58 GPM @ 60 PSI each
18. Compactor wash water requirements	25 GPM @ 60 PSI each
19. Sluice wash water requirements	10-20 GPM @ 60 PSI intermittent

Part 2 PRODUCTS

2.1 MANUFACTURER

A. The equipment shall be the Center Flow Screen and Washing Compactor as provided by Hydro-Dyne Engineering, Inc., Clearwater, FL. Other than the named supplier, all manufacturers proposing equipment described herein, will provide a detailed submittal package, which will consist, at a minimum, of all information and details prescribed in section 1.3, 1.4 and Part 2 of this specification. All pre-qualification submittals will be submitted to the Engineer at least 15 days prior to the bid date.

B. If submitted equipment requires arrangement differing from that specified, prepare and submit for review complete structural, mechanical, and electrical drawings and equipment lists showing all necessary changes and embodying all special features of equipment proposed. Any changes are at no additional compensation and the Manufacturer will be responsible for all engineering costs of redesign by the Engineer, if necessary.

2.2 THE CENTER FLOW SCREEN

A. Perforated Plate - The Continuous Screening Belt

1. The Fine screenings belt will consist of panels manufactured from stainless steel plate that shall be punched with perforations of the specified opening. The stainless steel plate shall be reinforced with a stainless steel frame.

2. The Coarse screenings belt will consist of panels manufactured from 3/8” thick UHMWPE with perforations of the specified opening.

3. The perforated panels will be supported by 12 gauge stainless steel vertical mounted lifting hooks horizontally spaced a maximum of 3 inches apart preventing deflection. The lifting hooks shall support the screening grid and bear tension loads across the entire length and width of the screen belt. Grids that do not have stainless steel vertical

DRAFT

mounted lifting hooks horizontally spaced a maximum of 3 inches apart across the grid will not be acceptable.

4. The hooks on elements shall form horizontal lifting trays or shelves for removing large solids and rags every 8 inches around the entire screen grid.

5. The perforated panels will be connected by heavy duty stainless steel axles every 8 inches to form a continuous belt that will rotate within the frame's guide system. The axle design will allow the plates to pivot and create a seal between the perforated panels to prevent the passage of solids.

6. The axles will include Delrin spacers that will maintain the 3 inch space between the vertical support elements. Delrin spacers will also form a seal between each perforated panel with clearance not to exceed 0.5mm.

7. The axles will be extended to fix a UHMWPE guide link to the side of each perforated plate. These guides will interlock to create a continuous guide link system that will slide within the frame.

8. Guide links shall be precision machined from solid virgin UHMWPE. Injection molded links are not acceptable.

9. The heavy duty guide links will be minimum 2 inches thick to protect against undue wear from grit and will be specially machined to form a closure seal between the rotating belt and the static frame.

10. The seal shall be continuous from grade level through the water flow forming an uninterrupted closure between the traveling screen grid and the stationary frame. The seal shall be heavy gauge stainless steel, fixed to the screen frame and be adjustable so it will remain in contact with the rotating screen belt at all times.

11. Screen designs that have gaps and/ or tolerances greater than 0.5mm between the screens grid plates and between the sides of the grid and screen frame, including the chain, are not acceptable.

12. Screen's sealing materials are to consist of solid, non-flexible materials that will maintain the 0.5mm tolerance for the lifecycle of the screen.

13. Screen designs whose sealing materials will not last the lifecycle of the screen and require replacement by the owner/ operators, are not acceptable.

14. Guide systems that use rollers, stainless or hardened steel chains will not be acceptable.

15. Grid panel sealing systems that require the use of replaceable neoprene seals or stainless steel hinges will not be acceptable.

16. Grid to frame sealing systems that require the use of replaceable adjustable UHMWPE strips attached to the frame will not be acceptable.

DRAFT

B. The Frame

1. The continuous belt will rotate within a heavy duty stainless steel static support frame that shall be a rectangular box construction.

2. The guide link system will travel around a stainless steel guide wear track that is integral to the support frame. Top and bottom wear tracks shall be bolt in and field replaceable.

3. There shall be a removable inspection panel located directly beneath the drive allowing easy access to the grid drive sprockets, drive shaft and screenings collection hopper.

4. The design will ensure that the support frame meshes with the closure seal on each guide link to prevent passage of screening material and grit particles.

5. All components of the lower wear tracks shall be bolt in, field replaceable and manufactured from stainless steel.

6. The frame shall accommodate stainless steel protective covers designed to prevent leakage and contain spray wash. All maintenance and inspection access points shall have hinged and gasketed access covers. Screens with covers requiring neoprene, rubber or plastic seals are not acceptable.

7. To minimize odors and nuisance, the screen frame shall have flanged connections for odor control.

8. The screen manufacturer will supply stainless steel angled filler plates to connect from the upstream corners of the support frame to the channel walls.

9. The back-plate of the screen shall be furnished with a bypass gate that will allow manual removal for complete flow bypass.

C. The Offloading of Screenings

1. Two stainless steel spray wash headers will be located in the head space of the screen to offload the screenings from the continuous belt.

2. The spray bar will incorporate brass nozzles at 2 inch spaces that can easily be replaced or removed for cleaning.

3. The spray bars will be positioned behind the rotating belt and will backwash the solids into an internal hopper manufactured from stainless steel. The wash water will be used to continuously flush the screenings from the internal hopper into the extended sluice.

4. The addition of a rotating or static brush system to aid offloading will not be acceptable.

NO BYPASS GATE ON 2MM

REMOVABLE BYPASS ONLY ON 6MM

DRAFT

D. Screen Drive Mechanism

1. Each screen will have a maximum 0.75 hp (0.56KW, FLA 1.1), inverter duty electric motor suitable for a 460/3/60 supply and rated for a Class 1 Div. 2 environment. As a minimum, the motor will have an IP55 enclosure rating and will conform to NEMA MG-1 requirements. The motor will be located outside of the screen covers and above the top of the channel.

2. The gear reducer shall be directly coupled to a heavy duty shaft machined from solid stainless steel round bar.

3. The drive shaft shall be supported on both ends by grease filled roller bearings. Separate grease-filled self-contained cartridge seals shall be mounted on drive shaft between bearings and frame to eliminate spray wash from entering bearings or gear reducer.

4. The continuous belt will be supported and rotated around heavy duty stainless steel sprockets located on the drive shaft in the head space of the screen.

5. These sprockets will have removable bolted-on lugs that transmit torque directly from the gear reducer to notches on the underside of the UHMWPE guide links. The drive shall be sized so that a minimum of four lugs are engaging guidelinks at all times. Driving forces shall be transmitted to areas located behind the screen's grid to prevent solids from contacting drive surfaces.

6. Chain driven systems or screens with wheels submerged in the wastewater are not acceptable.

7. Drive systems that use an external track and pinion to drive or push the band against grid weight supporting wear tracks will not be acceptable. Drive shall lift, and be capable of bearing, the full weight of the grid.

2.3 WEIR

A. The manufacturer shall design and supply a stainless steel weir that will be installed by the contractor downstream of the screen.

B. The weir will be designed to maintain a downstream water depth that will increase screen performance during periods of high flow.

C. The weir will be anchored to the sides of the channel with no external horizontal supports across the channel to prevent the accumulation of solids.

2.4 THE SCREENINGS TRANSFER SLUICE

A. The manufacturer will design and supply a screenings launder sluice system that will collect screenings and wash water from the discharge hopper of the screen and transfer them into the washing compactors.

DETAILS TO BE PROVIDED IN O&M

DRAFT

1. Collected screenings will transfer through the sluice by means of gravity. Mechanically driven conveyors will not be acceptable.

2. The manufacturer shall supply a solenoid valve that will be plumbed in field into the back plate of the sluice. The contractor will connect to a local plant water supply, and the water supply will provide supplementary transport water.

3. The sluice will be manufactured from stainless steel. It shall comprise of U-shaped lengths of trough that will be flange connected to the desired overall length.

4. A change in direction will be achieved using long swept bends that will prevent blockages from occurring.

5. The sluice system will be designed with a splitter that diverts flow into 1 of 2 compactors. The splitter will be fitted with a manual removable gates to divert into any branch of the sluice

6. The sluice system will include the support leg structure manufactured from stainless steel as needed. The legs will be suitable for anchoring to a concrete floor.

7. Covers will be lightweight, no more than 6 feet long and bolted for easy removal by a single operator.

2.5 THE WASHING COMPACTOR WITH ENHANCED WASHING AND DEWATERING

A. The main body will be the washing trough that will receive screenings and wash water directly from the end of the screenings transfer sluice.

B. The washing trough will house the screw auger and provide a dedicated section to reduce organic content.

C. The stainless steel drainage section will be perforations with 2mm or 5mm openings and be adjustable to maintain auger alignment. This drainage section shall be removable and easily replaceable in the field with no special tools. The flights of the screw may be fitted with a stiff nylon brush that will maintain contact with the drainage section, preventing blockages. The replaceable brushes will be supplied in pre-coiled lengths with stainless steel removable clamps.

D. The underside of the washing trough will be a catch pan chute that will divert the water that passes through the drainage section, back to the influent flow with dual outlet plain end pipe connections. The unconnected pipe side will be capped with a rubber compression cap so that it can be removed and the drain piping can be cleaned if necessary. The catch pan will include a flushing connection point for washing and cleaning.

E. The catch pan will include a separate wash water supply to purge the area of accumulated solids. A single spray nozzle will direct water across the length of the pan toward the outlet. The frequency of cleansing cycles will be controlled through the main control panel.

DRAFT

F. The AR400 hardened steel screw auger will sit in the washing trough. Washing compactors with shaftless screws are not acceptable as a shaft is required to support the flight and provide necessary torque and compaction. Screw auger will be primer coated to inhibit corrosion. Screw augers not made out of AR-400 hardened steel will not be acceptable.

G. The auger will be a varied pitch screw aligned at the compaction end by AR400 hardened steel wear and anti-rotation bars designed to prevent the compacted screening from spinning within the compaction zone.

H. The screw will rotate allowing wash water and free organic/fecal material finer than trough openings to escape and return to the plant flow. The wash water will flush the separated organic material through the drainage section in solution or as small particles.

I. Washing of screenings shall be achieved through an enhanced washing module consisting of the following minimum requirements manufactured out of stainless steel:

1. Variable pitch flight for separate screening transport through the wash, dewatering and compaction zones.
2. Washing Module Zone
    a. Flanged connections and a stainless steel orifice plate or nozzle
    b. Hardened steel wear and anti-rotation bars
    c. Separately controlled high pressure washing to sheer and break-up organic and fecal material for return to the channel.
    d. Cleansing cycles moving the auger in forward and reverse direction are controlled through the main control panel and operator adjustable up to 9 cycles
3. Dewatering and Compaction Zone
    a. Stainless steel header feeding an external rinse shower
    b. Hardened steel wear and anti-rotation bars
    c. Full circumference perforations for dewatering and extrusion of organics and fecal material.
    d. Attached drainage catch pan with a separate wash water supply to purge the area of accumulated solids
    e. Removable covers for inspection access

J. Washing compactors that do not have a separate washing and rinse/dewatering zones will not be accepted.

K. The compacted screenings will be pushed through the compaction zone and pass through an elbow into an outlet chute. The outlet chute will provide for screening expansion and will elevate the dewatered screenings to discharge into a bagging system.

L. The outlet chute will terminate in a flange that will connect directly to a stainless steel discharge long radius elbow that will direct the compacted screenings downward into the screenings collection bag. The elbow will be designed to prevent bridging of solids and will be flanged for accessibility.

M. The outlet of the discharge elbow will be a stainless steel mounting assembly that will allow a 24” diameter circular screenings collection bag to slide into position.

DRAFT

N. The screenings collection bag will house one 230 feet long continuous bag that will be released under the weight of compacted screenings dropping from the outlet chute.

O. The plastic bag shall be capable of cutting and tying off into operator determined sizes to effectively capture odor and all remaining water in screenings.

P. Each Washing Compactor will have a maximum 3 hp(2.2KW, FLA 3.8), inverter duty electric motor suitable for a 460/3/60 supply and rated for a Class 1 Div. 2 environment. As a minimum, the motor will have an IP55 enclosure rating and will conform to NEMA MG-1 requirements.

2.6 SPARE PARTS - The manufacturer will supply the following spare parts, per screen supplied, with the equipment:

A. Ten (10) hook links and elements spacers
B. Two (2) grid axles
C. Two (2) guide links
D. Two (2) screen panels
E. One (1) center support link (fine screens only)
F. One (1) brush for each screw
G. Five (5) total screenings collection continuous bags

2.7 ACCESSORIES - The manufacturer will supply the following accessories, with the equipment:

A. Eight (8) 0.75" NEMA 7 brass body solenoid valve
B. Six (6) 1" NEMA 7 brass body solenoid valve
C. Two (2) 2" NEMA 7 brass body solenoid valve
D. Four (4) 2" wash water strainer
E. Eight (8) wash water pressure gauge
F. One (1) lot of PVC ball valves

SHEETS 10&11 SHOW
(8) 1" VALVES
(6) 3/4" VALVES
(2) 2" VALVES

HDE TO VERIFY & UPDATE SHEETS

ANCHORS BY HDE

2.8 ELECTRICAL CONTROLS AND ANCILLARY COMPONENTS

A. General Information - The manufacturer will supply two UL listed main control panels and fourteen local control stations that shall automatically control the equipment offered in this section.

B. The Main Control Panel – NEMA 4X stainless steel enclosure for outdoor installation – Each control panel shall consist of the following components for each screening system:

1 Enclosure, NEMA 4X, 304SS, 2-door, floor standing, 3-point latch with lighting fixture with door switch
1 Purge kit, exterior mount, leak compensation type
1 Main disconnect breaker with operating handle
1 480V surge suppressor
1 120V surge suppressor
1 Line filter

DRAFT

1 Control power transformer
1 ABB, ACS580 series VFD, 0.75HP, 480VAC/3Ph with fused protection (Coarse Screen)
1 Schneider, IEC starter, reversing type, 3HP, 480VAC/3Ph with circuit protection (Coarse Screen – WC)
1 ABB, ACS580 series VFD, 1.5HP, 480VAC/3Ph with fused protection (Fine Screen)
1 Schneider, IEC starter, reversing type, 1.5HP, 480VAC/3Ph with circuit protection (Fine Screen – WC)
1 Schneider, IEC starter, non-reversing type, 0.75HP, 480VAC/3Ph with circuit protection (Grit Trap)
1 Schneider, IEC starter, non-reversing type, 0.5HP, 480VAC/3Ph with circuit protection (Grit Classifier)
1 Schneider, IEC starter, non-reversing type, 5HP, 480VAC/3Ph with circuit protection (Grit Pump)
1 Allen Bradley, CompactLogix 5380L3 controller with standard I/O modules as required
1 Allen Bradley, PanelView Plus 7 series, 10'' HMI, standard model with window it
1 24VDC power supply
1 Unmanaged ethernet switch, 8-ports (10/100Mbps)
7 Hour meter
2 IS Barrier – Analog Signal (if required)
1 IS relay – 4 channels (for Float Switch)
1 Ethernet surge suppressor
1 APC, SMT1500C UPS, 120VAC with UPS maintenance bypass switch
1 Heater with thermostat
1 Vortex A/C enclosure cooler, hazardous location, 2500BTU
1 Ground bar
LOT of signal surge suppressors
LOT of timer relays
LOT of pilot lights as required
LOT of control relays, terminal blocks, fuse blocks, wire duct, supplementary circuit protection, UL label as required

VERIFY AND UPDATE TO 4,000 BTU AS PROVIDED ON PAGE 120

C. Ancillary Control Components -

PROVIDE FLOAT SWITCH DEPTH AND INSTALLATION LOCATION IN O&M

1. Float switch
2. Ultrasonic differential level system consisting of the following per screen:
   a. NEMA 4X enclosure with viewing window
   b. Milltronics Hydro-Ranger LT500 controller with real-time 4-20 mA output
   c. Two (2) NEMA 4X/7 transducers
3. Local Control Station – NEMA 7 - Each local station panel shall consist of the following components:
   a. NEMA 7 enclosure
   b. Hand/Off/Auto switch for each motor
   c. Forward/Off/Reverse switch for compactor motor
   d. Emergency stop
4. Sluice level limit switches (Nema 4, IP65)

Part 3 SURFACE PREPARATION AND PAINTING

DRAFT

A. The majority of stainless steel materials, flanges and piping shall be pickled by means of a four tank system that is in accordance with ASTMs A380. This process is for quality control, removal of heat affected discoloration, surface treatment for corrosive environments and to provide a uniform finish to stainless steel surfaces. Stainless steel components must be fully submerged in the tanks for complete coverage. Electro-chemical wanding is acceptable on weld finishes that cannot be submerged due to size. Sandblasting, pickling pastes and abrasive cleaners will not be accepted as forms of metal finishing. The drive and grid components do not require pickling.

   Tank 1 – Detergent bath for the removal of soils, greases, oils and dirt
   Tank 2 – Rinsing process to remove detergent and residual soils
   Tank 3 – Two part acid solution for the removal of tightly adhere oxide films
   Tank 4 – Final rinse process to remove all residual acid

   The four-tank pickling process must be conducted in-house at the manufacturer's own ISO 9001 certified manufacturing facility. Any screening equipment providers who are unable to perform this process in-house are not acceptable.

B. All ferrous surfaces (except stainless steel) shall be coated with a pre-primer, primer, and an exterior top coating, or fusion bonded polyester coating suitable for humid/wet environments for superior corrosion protection.

C. Motor(s) and gearbox(s) shall be surface prepared to withstand humid/wet environments for superior corrosion protection.

Part 4 EXECUTION

4.1 WARRANTY - The Manufacturer of the equipment supplied under this specification shall provide a warranty for a period of 2 years commencing on startup and /or acceptance by the Owner but no later than 90 days from the date of shipment by the Manufacturer. The Manufacturer shall guarantee that the equipment furnished is suitable for the purpose intended and free from defects in design, materials and workmanship. In the event that the equipment fails to perform as specified the Manufacturer shall, at his option, promptly repair, modify or replace the defective equipment.

4.2 FACTORY TESTING

A. The screening system and all components shall be factory assembled. Equipment is tested for a minimum of 4 hours prior to shipment. The equipment shall be shipped fully assembled and shall be capable of being set in place and field erected by the Contractor with minimal field assembly.

B. During the factory test period the screening system shall be adjusted as required assuring proper operation on completion of the field installation. The Manufacturer shall supply a certification of the completion of the factory testing of the assembled screening system and appurtenances and shall certify as to the equipment being in satisfactory operating condition at time of shipment. The Engineer and/or Owner may, at their own option and expense, witness the factory test.

DRAFT

4.3 DELIVERY AND STORAGE

A. The screening system shall be appropriately crated and delivered to protect against damage during shipment.

B. An authorized representative of the Contractor shall inspect the screens on delivery to the jobsite and shall report any damage or missing components to the Manufacturer and the Engineer within 72 hours of receipt of the shipment.

4.4 INSTALLATION - The installation of the equipment shall be as indicated on the drawings and in strict accordance with the Manufacturer's instructions and recommendations.

4.5 FIELD TESTS, ADJUSTMENTS AND COMMISSIONING

A. The equipment shall be shipped completely factory assembled. Contractor shall verify all access dimensions, channel dimensions, and any interior building dimensions to ensure equipment may be installed as factory assembled units.

B. After completion of the installation, the equipment shall be inspected and certified by an authorized representative of the Manufacturer as being in compliance with the Manufacturer's recommendations and requirements. At such time as the Manufacturer has deemed the installation to be acceptable, the Manufacturer's authorized service representative shall make any required adjustments and shall start the equipment to ensure proper operation.

C. The Manufacturer's authorized representative shall provide instruction to the plant personnel as to the operation and maintenance of the equipment including commissioning, shut down, on-line operations, lubrication and preventative maintenance.

D. Manufacturer shall state field service rates for a Service Engineer to Owner and Contractor. In the event that the field service time required by this section should not be sufficient to properly place the equipment into operation, and the requirement for additional time is beyond the manufacturer's responsibility, additional time shall be purchased by Contractor to correct deficiencies in installation, equipment, or material without additional cost to Owner.

E. The Contractor shall include in his bid, the cost of the above referenced authorized service representative for a minimum of three (3) trips totaling five (5) eight hour days onsite to complete the certifications and training described in this specification section.

End of Section

DRAFT

VORTEX GRIT REMOVAL AND HANDLING SYSTEM (PUMP)
TECHNICAL SPECIFICATIONS

Part 1 GENERAL

1.1 SCOPE – Supply all labor, materials, equipment and incidentals required to install and place into operation the grit system as shown on the Drawings and as specified herein.

1.2 REFERENCE STANDARDS – The properties of all materials, design, fabrication and performance of the equipment to be furnished under this section shall be in accordance with the latest issue of applicable standard specifications. The governing authorities of these standards are listed below.

A. AISC, American Institute of Steel Construction
B. AISI American Iron and Steel Institute
C. ANSI, American National Standards Institute
D. ASCE, American Society of Civil Engineers
E. ASME, American Society of Mechanical Engineers
F. ASTM, American Society of Testing and Materials
G. AWS, American Welding Society
H. IBC, International Building Code
I. IEC, International Electric Code
J. IEEE, Institute of Electrical and Electronics Engineers
K. NEC, National Electrical Code
L. NEMA, National Electrical Manufacturers Association
M. Underwriters Laboratory (UL and cUL)

1.3 SUBMITTALS – Submittals shall be provided to the engineer that includes all the following information:

A. Certified shop drawings showing all important details of construction, dimensions and anchor bolt locations.
B. Descriptive product literature.
C. Schematic electrical wiring diagram and electrical controls information.
D. Complete motor and drive data.
E. The total weight of the equipment.
F. A complete bill of materials of all equipment.
G. A valid certificate of registration naming manufacturer, and supplier if equipment is relabeled, as ISO 9001:2015 certified.

1.4 QUALIFICATIONS

A. All the equipment specified under this Section shall be supplied by a single manufacturer whose Quality Management System is ISO 9001:2015 certified and applicable to the manufacture of water and wastewater treatment equipment.

B. If equipment is not manufactured by supplier, including welding and machining, the name and contact information of manufacturing facility must be supplied. If more than one manufacturer is used all companies and facilities must be provided.

DRAFT

C. If patents protecting equipment are not owned by supplier then an affidavit must be supplied stating owner of design and expiration of licensing agreement.

D. All equipment specified under this Section shall comply Bipartisan Infrastructure Law's (BIL Public Law 117-58) Build America, Buy America (BABA) requirements for manufactured products. As defined in the Law, this requires:
(i) the manufactured product was manufactured in the United States, and
(ii) the cost of the components of the manufactured product that are mined, produced, or manufactured in the United States is greater than 55 percent of the total cost of all components of the manufactured product.
Certifications attesting to compliance will be required prior to approval and shall be included with submittals and upon completion of manufacture.

1.5 DESIGN REQUIREMENTS – VORTEX COLLECTOR

A. System Description

1. The Grit Trap will be a "vortex" style system designed to operate continuously.

2. The internal rotating mechanism will be installed into the circular concrete chamber as shown on the contract drawings. The chamber will consist of an upper separation chamber and a lower collection hopper.

3. The wastewater flow will enter the chamber tangentially, flow around the upper separation chamber and exit via an outlet channel running parallel to the inlet.

4. The grit solids will fall through the upper separation chamber to settle in the lower collection hopper. The transfer grit pump will regularly cycle and transport the grit particles to the de-watering Grit Classifier.

5. Consistent performance of the grit chamber throughout the flow ranges will be maintained by the motor driven impeller that continuously rotates within the upper separation chamber. The device will provide the ideal conditions to enhance grit settlement and maximize the ejection of light organic solids from the chamber.

6. The floor of the upper separation chamber must be sloped as shown on the contract drawings to prevent grit accumulation and allow the grit to fall be gravity into the collection hopper.

7. All stainless steel (including drive tube and impeller) mentioned below as stainless steel shall be T304 stainless steel. All hardware shall be T316 stainless steel.

B. System Performance

1. The Grit Trap will be designed to meet the following grit removal performance guarantee at all flows up to and including the peak flow. Grit is defined as silica sand; specific gravity = 2.65 g/cc:

a.	Grit greater than 50 mesh/297 micron	95%
b.	Grit greater than 60 mesh	90%
c.	Grit greater than 70 mesh/210 micron but not less than 50 mesh	85%

DRAFT

d. Grit greater than 100 mesh/149 micron but not less than 70 mesh 65%

2. The Grit Trap model will be selected to meet the following design parameters:

a.	Number of chambers required	1
b.	Peak flow per chamber	7.5 MGD
c.	Maximum allowable head loss at peak flow	1 inches
d.	Average flow	3 MGD
e.	Grit fluidizing water requirements	20gpm @ 40PSI

1.6 DESIGN REQUIREMENTS – GRIT PUMP (Shown as a reference only, Grit Pump ~~supplied by others)~~

BY HDE

A. System Description

1. The manufacturer shall supply a grit pump to transfer the grit and liquid from the collection hopper to the grit screw classifier system.

2. The grit pump shall be mounted as shown on the contract drawings.

3. The contractor shall supply the 4 inch pipe from the top of the suction pipe to the grit pump inlet and the grit pump outlet to the grit screw classifier.

4. System Performance – The grit pump will fully comply with the following criteria:

a.	Number of grit pumps	1
b.	Maximum pump capacity	250 GPM
c.	Minimum Motor HP rating	5 hp
d.	Inlet connection	4 inches
e.	Outlet connection	4 inches

1.7 DESIGN REQUIREMENTS – GRIT CLASSIFIER SYSTEM

A. System Description

1. The Grit Classifier system will be adequately sized to receive and process a mixture of grit and liquid regularly pumped at the maximum specified rate from the vortex grit chamber.

2. A cyclone mounted on top of the Grit Classifier will provide initial dewatering. The excess liquid will be immediately returned to the main flow.

3. The partially dewatered grit will be deposited into the main body of the Grit Classifier. The heavy grit will settle in the collection hopper while the excess liquid will overflow an internal weir and be returned to the main flow.

4. The grit will be elevated by a rotating screw to a discharge point above the internal water level. By this time the grit material will be free of any free-standing liquid.

5. All stainless steel (including Grit Classifier and grit cyclone) mentioned below as stainless steel shall be T304 stainless steel. All hardware shall be T316 stainless steel.

DRAFT

B. System Performance – The Grit Classifier system will fully comply with the following criteria:

1.	Number of cyclones	1
2.	Maximum capacity of cyclone:	250 GPM
3.	Inlet flanged spool piece connection	4 inches
4.	Overflow flanged spool piece connection	6 inches
5.	Apex	2 inches
6.	Maximum underflow to screw classifier	30 GPM Maximum
7.	Number of screw classifiers	1
8.	Maximum capacity of screw classifier	30 GPM
9.	Diameter of screw	12 inches
10.	Diameter of screw shaft	3 inches
11.	Minimum length of screw	8 feet
12.	Speed of screw	12 RPM
13.	Motor Size	1/2 HP

Part 2 PRODUCTS

2.1 MANUFACTURER

A. The equipment shall be the Grit Trap and the Grit Classifier as provided by Hydro-Dyne Engineering, Inc., Clearwater, FL. The grit pump shall be the Gorman Rupp T4A. Other than the named supplier, all manufacturers proposing equipment described herein, will provide a detailed submittal package, which will consist, at a minimum, of all information and details prescribed in section 2.2, including BABA compliance, of this specification. All pre-qualification submittals will be submitted to the Engineer at least 15 days prior to the bid date.

B. If submitted equipment requires arrangement differing from that specified, prepare and submit for review complete structural, mechanical, and electrical drawings and equipment lists showing all necessary changes and embodying all special features of equipment proposed. Any changes are at no additional compensation and the Manufacturer will be responsible for all engineering costs of redesign by the Engineer, if necessary.

2.2 THE VORTEX GRIT TRAP

A. General

1. The internal mechanism of the Grit Trap will consist of a gear motor, a drive head, a drive tube and a rotating impeller.

2. The grit chamber shall be a concrete structure provided by the contractor that must have inlet and outlet channels as shown on the drawings.

B. The Drive Head Assembly

1. The drive head will be a composite unit consisting of a heavy duty steel base and cover. The base section will support a nominal 20 inch turntable bearing that has a minimum

DRAFT

B-10 life of 20 years. The Contractor will be responsible for correctly mounting the drive head on the bridge.

2. The drive tube will be rotated at a nominal 15 RPM by a heavy duty spur tooth bull gear wheel securely bolted to the turntable bearing. This bull gear wheel will be driven by a steel drive pinion mounted on the output shaft of the helical gear motor. The pinion and the bull gear will have a service factor of 5.0 or greater at standard operating speeds.

3. The helical gear motor will be directly shaft mounted to the bull gear wheel. Each drive head will have a single 3/4 hp(0.56KW, FLA 1.1), continuous duty electric motor suitable for a 460/3/60 supply and rated for a Class 1 Div.2 environment. As a minimum, the motor will have an IP55 enclosure rating and will conform to NEMA MG-1 requirements.

4. The whole drive head assembly will be suitable for continuous operation.

C. The Rotating Mechanism

1. The drive tube will be 10 inch diameter pipe that will run down the center of the grit chamber. The drive tube will pass through an opening in bull gear wheel and terminate inside the drive head as an open pipe. This will allow passage for the suction pipe assembly detailed in 2.3 B1.

2. The impeller will be attached to the drive tube by means of a two piece collar. The impeller shall have four equally spaced blades fixed to a base plate. As the impeller rotates each blade will pass within 6 inches from the top of the collection hopper. The impeller blades will be set at 5 to 20 degrees to the vertical. The profile of the impeller blades will be designed to maximize grit capture and eject floating solids out of the chamber. The impeller will rotate at a nominal 15 RPM in the direction to the wastewater flow.

3. The rotating mechanism will be manufactured from stainless steel.

2.3 THE GRIT PUMP – TOP MOUNTED – Shown as reference only – ~~Grit Pump supplied by others~~ Ref. Gorman Rupp T4AS-B/F

A. General

1. The grit pump shall be supplied on a factory built fabricated steel base suitable for mounting as shown on the contract drawings.

B. The Internal Suction Pipe for Top Mounted Grit Pump

1. The grit pump suction arrangement will consist of a 4-inch diameter suction pipe and a parallel 1.5-inch fluidizing pipe that will run down the inside of the drive tube to within 4 inches off the bottom of the grit collection hopper floor. Both pipes will terminate immediately above the drive head. The manufacturer will supply a 1.0 inch solenoid valve and two manual PVC isolation valves that the Contractor will install at a convenient place in the fluidizing pipe above the drive head. The Contractor will bring and connect an air or water supply to the 1.5 inch pipe that will provide agitation of the grit before each pumping cycle.

DRAFT

2. The grit pump suction assembly will be manufactured from stainless steel.

3. The contractor will connect the fluidizing pipe to a water supply that will deliver a minimum pressure of 40 psig at the suction point. This will provide a blast of water that will agitate the grit prior to each pumping cycle.

4. The manufacturer will control the solenoid valve and hence the fluidizing cycle through the control panel

5. The Contractor will supply the pipe to the flanged connection of the center mounted 4 inch suction pipe that terminates above the drive head to the inlet of the grit pump.

6. The Contractor shall provide the 4 inch pipe from the outlet of the grit pump to the dewatering screw classifier.

7. The grit pump shall be designed to handle the passage of a 3-inch spherical solid.

C. Grit Pump Design ~~(Grit Pump and Grit Pump accessories supplied by others)~~

1. The foot supported pump casing will be designed to retain sufficient liquid for automatic re-priming between pumping cycles. It will allow a horizontal centerline suction and vertical discharge arrangement and incorporate a fill port with safety lock bar and Teflon gasket. A drain hole will be provided for connection to the drain kit. The kit shall contain 10' length of reinforced plastic hose with a female quick connect fitting at one end, and factory installed drain fittings in each pump. Fittings include a stainless steel pipe nipple, stainless steel bushing, stainless steel ball valve and aluminum male quick connect fitting.

2. A separate capped threaded port will be provided if a casing heater is required. If required thermostat control will be provided the main control panel.

3. The cover plate will be supplied with a removable wear liner. It will be sealed to the pump casing by two Buna-N O-rings. The cover plate also has a pressure relief valve to open at 75 PSI fitted with a handle pusher bolt capability.

4. The two vane impeller will be a semi open, non clog design that has integral pump-out vanes on the back shroud. The impeller will be threaded on to the pump shaft and secured with a lock screw.

5. The shaft bearings will be anti-friction ball or tapered roller type that will withstand loads associated with normal operation. A mechanical cartridge seal will seal the pump shaft against leakage. This seal will be double floating to prevent misalignment that might arise from vibration, deflection or general movement.

6. Separate oil filled cavities, vented to the atmosphere will be provided for the shaft seal and bearings. The cavities will be cooled by the pumped liquid. The bearing and seal cavities will have an oil level sight gauge and fill plug with vent. The oil will be prevented from leaking by a three lip seal arrangement.

D. Grit Pump Drive Motor (Mounted and tested with Grit Pump supplied by others)

DRAFT

1. The motor will 5 hp(3.7KW, FLA 6.5), minimum continuous duty electric motor suitable for a 460/3/60 supply and rated for a Class 1 Div.2, or Class 1 Div.1 environment. As a minimum, the motor will have an IP55 enclosure rating and will conform to NEMA MG-1 requirements.

2. The V-belt transmission will transfer the power from the motor to the pump. The V-belt will have two belts and safety factor of 1.5. The drive transmission will be supplied with removable guards with openings less than ½ an inch.

E. Grit Pump Construction

1. The materials of construction will be as follows:
   a. Casing – Gray Iron No. 30
   b. Suction flap – molded neoprene with steel reinforcement.
   c. Cover plate – Iron 30 with replaceable wear plate
   d. Impeller – Cast ADI (Austempered Ductile Iron) with minimum Brinell hardness of 400.
   e. Pump shaft – Alloy steel No. 4150
   f. Shaft sleeve – Alloy steel No. 4130
   g. Mechanical seal mating faces – Silicon Carbide
   h. Replaceable seal plate.

2.4 THE GRIT CLASSIFIER SYSTEM

A. The Grit Cyclone

1. The grit pump will pump the grit mixture directly to a flanged inlet connection situated on the side of the cyclone through a 4 inch delivery pipe, supplied by the contractor. The cyclone will be mounted on a support placed over the inlet hopper of the Grit Classifier.

2. The cyclone will be capable of receiving and processing pumped flow up to the maximum capacity per section 1.7.B.2. The excess water will be separated and returned to the main flow via a vortex finder and through a 6 inch flanged outlet connection situated on the top of the cyclone inlet head. The contractor will supply and install the return pipe with siphon break. The remaining concentrated grit mixture will be removed and directed via the cone and apex into Grit Classifiers inlet hopper. The apex will have a fixed neoprene rubber liner and include quick release toggle clamps.

3. The cyclone will be designed to remove at least 98% of grit entering the feed inlet that is larger than 100 micron and having a specific gravity of 2.65 or greater.

4. The cyclone will work on the constant centrifugal principle and have no moving parts. Pressure must be maintained above 5 psi.

5. The cyclone casing will be fabricated from carbon steel plate sections. All sections shall be constructed with replaceable neoprene rubber liners.

DRAFT

6. The inlet adapter will include a 1.25" pressure gauge connection and the manufacturer shall supply a pressure gauge assembly complete with protective diaphragm, 0-30 PSI dial.

7. Cyclones must be painted with one coat gray Primer – 2-3 mils nominal dry film thickness. Finish Coat will be one part enamel, color blue, 2-3 mils nominal dry film thickness.

B. The Grit Classifier

1. The partially de-watered grit mixture will fall by gravity from the underside of the cyclone into the main body of the Grit Classifier. The main body is comprised of an inlet hopper and a screw trough that will be manufactured from stainless steel plate.

2. The inlet hopper will have sloping side walls and a minimum pool area of $6ft^2$. The design will guarantee retention of 95% of 100-micron grit particles (silica sand with specific gravity of 2.65) at the maximum inflow without added internal baffle plates.

3. The grit particles will settle on the bottom of the inlet hopper. The excess liquid will spill over an internal weir within the inlet hopper and be returned to the sewage flow. The manufacturer will terminate with a flanged 4 inch pipe connection within 12 inches of the main body of the Grit Classifier.

4. The retained grit particles will be elevated from the inlet hopper by a rotating screw that runs the full length of the Grit Classifier. The full pitch screw will be installed at a nominal 16 degree angle to the horizontal.

5. The screw assembly will move the grit particles from the submerged inlet hopper to the "drying zone" section of the screw trough. The length of the "drying zone" must be no less than 2 feet to ensure adequate de-watering. The dry grit will discharge from an outlet at the end of the screw trough and be directed into the dumpster (supplied by others).

6. The screw assembly will be supported within the main body by a top and bottom bearing arrangement specially designed to avoid premature wear by abrasive grit particles. The bearing arrangement must support the entire length of the screw and maintain a 1/2 inch nominal clearance between the screw flights and the full length of the Grit Classifier main body. This will allow a permanent grit layer to accumulate and act as a natural wear liner protection.

7. The bottom bearing shall be mounted externally to the main body of the classifier. A 2" full port drain and flush valve will be mounted below the bottom drive shaft bearing on the main body of the classifier.

8. The bottom drive shaft bearing shall be mounted to the main body of the classifier and will consist of a (4) bolt flanged housing that is accessed externally to the hopper.

9. The entire Screw Classifier will be provided complete with the support legs suitable for mounting directly to the concrete floor.

DRAFT

10. The manufacturer shall provide lightweight minimum 16 gauge stainless steel covers that are easily removed for maintenance and totally enclose the Grit Classifier.

11. The motor shall be 1/2 hp(0.37KW, FLA 0.81), continuous duty electric motor suitable for a 460/3/60 supply and rated for a Class 1 Div.2 environment. As a minimum, the motor will have an IP55 enclosure rating and will conform to NEMA MG-1 requirements.

2.5 THE CONTROL PANEL

A. The manufacturer will supply two (2) UL listed main control panels and fourteen local control stations that shall automatically control the coarse and fine screen equipment and the grit system in this section. Details are included in the screening specification.

B. Sequence of operation and control:

1. The Grit Trap will run continuously.
2. The grit pump can be controlled manually but will normally operate automatically in timed on/off adjustable cycles as selected.
3. In automatic mode the grit pump cycle will be initiated by a 24 hour time clock.
4. The grit agitation cycle will start (0-5 minutes) and then stops.
5. The grit pump and screw classifier will then start immediately (0-10 minutes).
6. The signal is received to stop and the grit pump stops immediately.
7. The Screw Classifier initiates a run on cycle (0-5 minutes) and then stops.
8. End of cycle.

2.6 SURFACE PREPARATION AND PAINTING

A. The majority of stainless steel materials, flanges and piping shall be pickled by means of a four tank system that is in accordance with ASTMs A380. This process is for quality control, removal of heat affected discoloration, surface treatment for corrosive environments and to provide a uniform finish to the stainless steel surfaces. Stainless steel components must be fully submerged in the tanks for complete coverage. Electro-chemical wanding is acceptable on weld finishes that cannot be submerged due to size. Sandblasting, pickling pastes and abrasive cleaners will not be accepted as forms of metal finishing.

Tank 1 – Detergent bath for the removal of soils, greases, oils and dirt
Tank 2 – Rinsing process to remove detergent and residual soils
Tank 3 – Two part acid solution for the removal of tightly adhere oxide films
Tank 4 – Final rinse process to remove all residual acid

B. All ferrous surfaces (except stainless steel) shall be coated with a pre-primer, primer, and an exterior top coating, or fusion bonded polyester coating suitable for humid/wet environments for superior corrosion protection.

C. Motor(s) and gearbox(s) shall be surface prepared to withstand humid/wet environments for superior corrosion protection.

2.7 SPARE PARTS - The Grit Pump supplier (Grit pump and these spares by others) will supply the following spare parts:

DRAFT

A. One (1) rotating assembly O-Ring(s)
B. One (1) set of impeller clearance adjustment spacers
C. One (1) set of spare V-belts

2.8 ACCESSORIES – The manufacturer will supply the following accessories with the equipment:

A. Two (2) 1" explosion proof brass body solenoid valve (GT Fluidizing)
B. Four (4) 1" PVC manual isolation valve (GT Fluidizing)
C. Bagger system on Grit Classifier

Part 3 EXECUTIONS

3.1 WARRANTY – The Manufacturer of the equipment supplied under this specification shall provide a warranty for a period of twenty-four months commencing on acceptance and/or beneficial occupancy by the Owner but no later than 90 days from the date of shipment by the Manufacturer. The Manufacturer shall guarantee that the equipment furnished is suitable for the purpose intended and free from defects in design, materials and workmanship. In the event that the equipment fails to perform as specified the Manufacturer shall, at his option, promptly repair, modify or replace the defective equipment.

3.2 FACTORY TESTING

A. The grit removal system and all components shall be factory assembled and operationally tested prior to shipment. The equipment shall be shipped fully assembled and shall be capable of being set in place and field erected by the Contractor with minimal field assembly.

B. During the factory test period the grit removal system shall be adjusted as required assuring proper operation on completion of the field installation. The Manufacturer shall supply a certification of the completion of the factory testing of the assembled system and appurtenances and shall certify as to the equipment being in satisfactory operating condition at time of shipment. The Engineer and/or Owner may, at their own option and expense, witness the factory test.

3.3 DELIVERY AND STORAGE

A. The grit removal system shall be appropriately crated and delivered to protect against damage during shipment.

B. An authorized representative of the Contractor shall inspect the equipment on delivery to the jobsite and shall report any damage or missing components to the Manufacturer and the Engineer within 72 hours of receipt of the shipment.

3.4 INSTALLATION – The installation of the grit removal system shall be as indicated on the drawings and in strict accordance with the Manufacturer's instructions and recommendations.

3.5 FIELD TESTS, ADJUSTMENTS AND COMMISSIONING

DRAFT

A. The equipment shall be shipped completely factory assembled. Contractor shall verify all access dimensions, channel dimensions, and any interior building dimensions to ensure equipment may be installed as a factory assembled units.

B. After completion of the installation, the equipment shall be inspected and certified by an authorized representative of the Manufacturer as being in compliance with the Manufacturer's recommendations and requirements. At such time as the Manufacturer has deemed the installation to be acceptable, the Manufacturer's authorized service representative shall make any required adjustments and shall start the equipment to assure proper operation.

C. The Manufacturer's authorized representative shall provide instruction to the plant personnel as to the operation and maintenance of the equipment including commissioning, shut down, on-line operations, lubrication and preventative maintenance.

D. Manufacturer shall state field service rates for a Service Engineer to Owner and Contractor. In the event that the field service time required by this section should not be sufficient to properly place the equipment into operation, and the requirement for additional time is beyond the manufacturer's responsibility, additional time shall be purchased by Contractor to correct deficiencies in installation, equipment, or material without additional cost to Owner.

E. The Contractor shall include in his bid, the cost of the above referenced authorized service representative. See screen specification for trip and days supplied.

End of Section

DRAFT

Great White Center Flow Screen Equipment Sizing

HYDRO DYNE ENGINEERING
Tel: 813-818-0777 Fax: 813-818-0770

Project: San Luis, AZ - West WWTP
Date: 4/14/2025
Rep: JBI Water
By: STM **Checked:** JMB

Model # **CF** 26 – 30 – 144 – 6 – P

Channel Dimensions:		English Units	SI Units
C	Channel Width	18.00 in	457 mm
H	Channel Height	66.00 in	1676 mm
Rc	Recess Width,	36.00 in	914 mm
Rd	Channel Recess Depth	49.58 in	1259 mm
TC	Height from Grade to Top of Channel	0.00 in	0 mm

Equipment Dimensions:		English Units	SI Units
L	Length of Screen	119.77 in	3042 mm
W	Width of Screen	26.00 in	660 mm
Ds	Depth of Screen	29.58 in	751 mm
Y	Discharge Height from the Sluice	5.85 in	149 mm

Screen Grid Parameters:				
S	Grid Opening Spacing		6mm Perf UHMWPE	
Obs	Percent of Screen Obstructed	0 %	Hook Link	12 ga
OA_{eff}*	Effective Percent of Grid Opening	63.28 %	Straight Link	12 ga

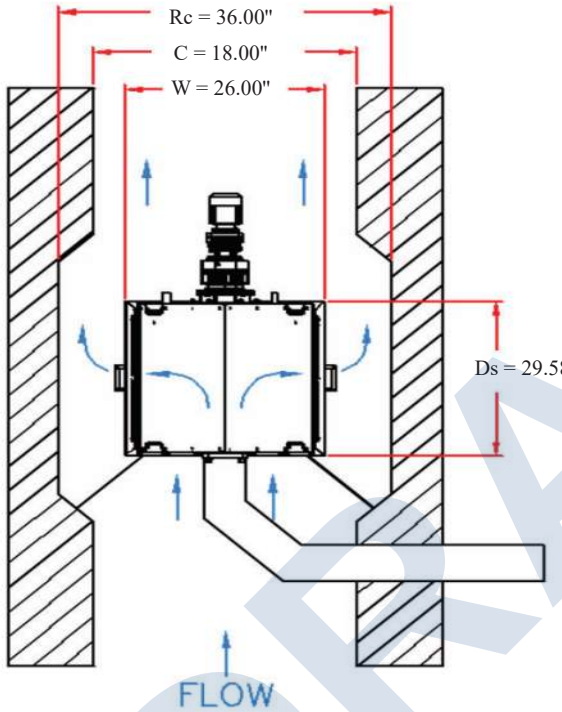

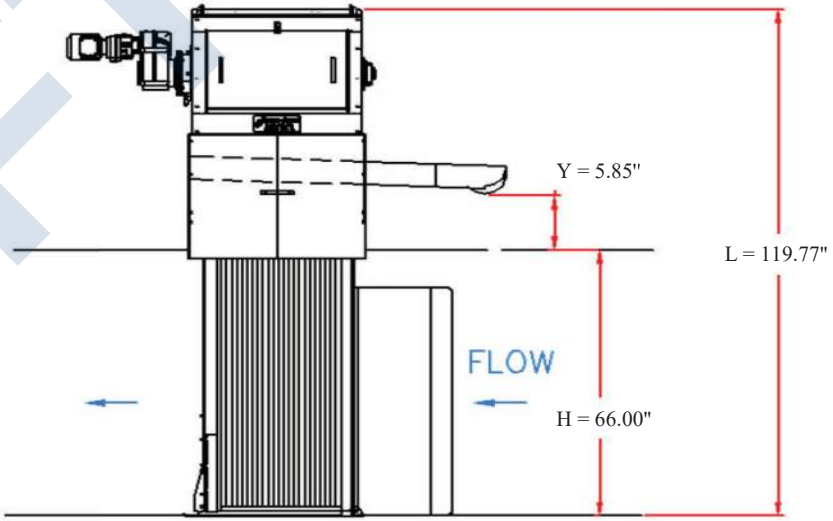

NOTE: Image is not to Scale. Orientation of Equipment Subject to Change Depending on Layout Requirements.
NOTE: * Effective Percent of Grid Opening = Percent of Grid Opening at 6mm Opening × (1 - Proposed 0% of Screen Obstructed).

*ALL RIGHTS RESERVED. THE INFORMATION TRANSMITTED HEREIN IS THE PROPERTY OF HYDRO-DYNE ENGINEERING INC. AND HAS BEEN PROVIDED FOR RESTRICTIVE USE. THIS DATA MUST BE HELD CONFIDENTIAL AND TRANSMISSION, DUPLICATION OR DISCLOSURE IS PROHIBITED UNLESS AUTHORIZED IN WRITING BY HYDRO-DYNE ENGINEERING INC.

DRAFT

Great White Center Flow Screen Hydraulic Performance

HYDRO DYNE ENGINEERING
Tel: 813-818-0777 Fax: 813-818-0770

Project: San Luis, AZ - West WWTP
Date: 4/14/2025
Rep: JBI Water
By: STM **Checked:** JMB

Model # **CF** 26 – 30 – 144 – 6 — P

Fixed D_1 Condition @ 0% Obs		English Units		SI Units	
Q	Flow Rate	7.50 MGD	5208 gpm	329 L/s	28391 m^3/d
D_1	Upstream Water Depth	48.00 in		1219 mm	
D_2	Downstream Water Depth	45.51 in		1156 mm	
ΔH	Total Headloss	2.49 in		63 mm	
F	Freeboard	18.00 in		457 mm	
V_1	Influent Channel Velocity	1.93 ft/s		0.59 m/s	
V_T	Throat Velocity of Screen	2.82 ft/s		0.86 m/s	
V_G	Velocity Through Grid	1.29 ft/s		0.39 m/s	
V_{Re}	Recess Zone Velocity	2.58 ft/s		0.79 m/s	
V_2	Effluent Channel Velocity	2.04 ft/s		0.62 m/s	

Fixed D_2 Condition @ 0% Obs		English Units		SI Units	
Q	Flow Rate	7.50 MGD	5208 gpm	329 L/s	28391 m^3/d
D_1	Upstream Water Depth	40.62 in		1032 mm	
D_2	Downstream Water Depth	37.00 in		940 mm	
ΔH	Total Headloss	3.62 in		92 mm	
F	Freeboard	25.38 in		645 mm	
V_1	Influent Channel Velocity	2.29 ft/s		0.70 m/s	
V_T	Throat Velocity of Screen	3.43 ft/s		1.05 m/s	
V_G	Velocity Through Grid	1.54 ft/s		0.47 m/s	
V_{Re}	Recess Zone Velocity	3.11 ft/s		0.95 m/s	
V_2	Effluent Channel Velocity	2.51 ft/s		0.77 m/s	

Screen Performance VS. Screen Blocking at Fixed D_1

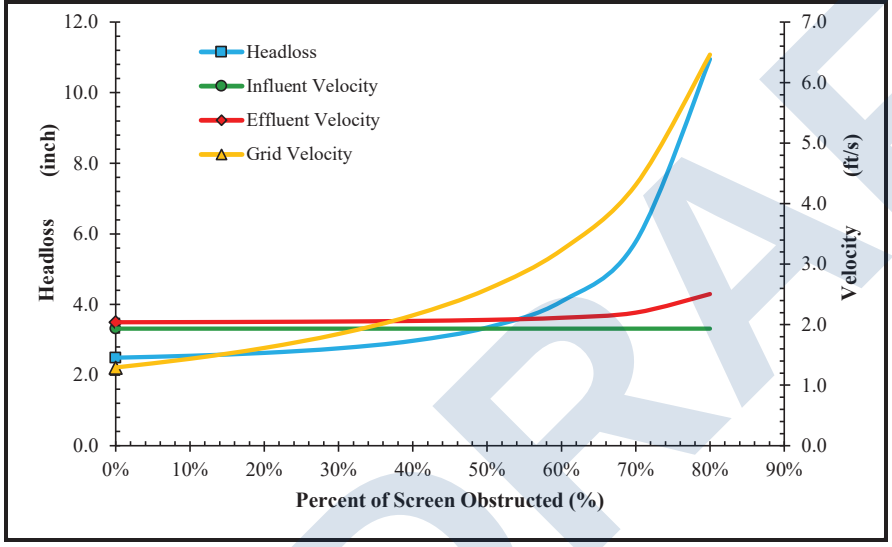

Screen Performance VS. Screen Blocking at Fixed D_2

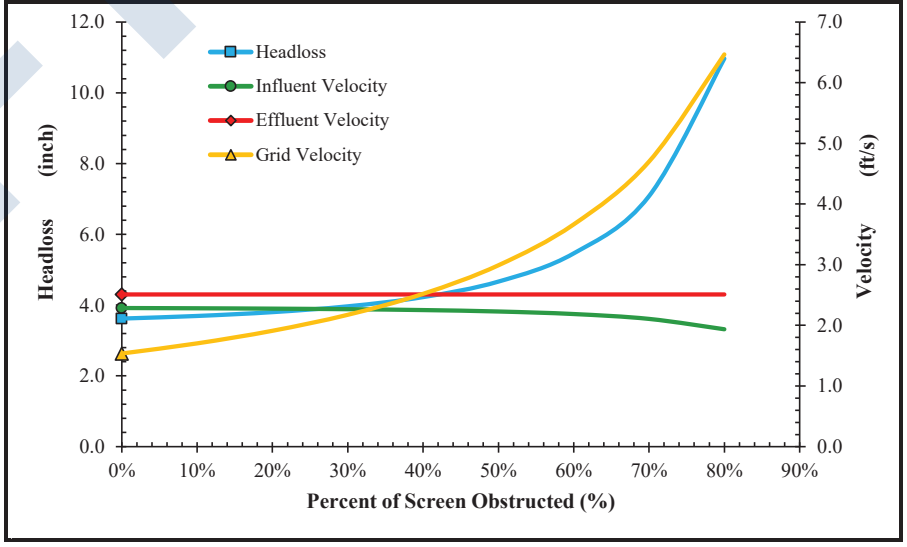

DRAFT

*ALL RIGHTS RESERVED. THE INFORMATION TRANSMITTED HEREIN IS THE PROPERTY OF HYDRO-DYNE ENGINEERING INC. AND HAS BEEN PROVIDED FOR RESTRICTIVE USE. THIS DATA MUST BE HELD CONFIDENTIAL AND TRANSMISSION, DUPLICATION OR DISCLOSURE IS PROHIBITED UNLESS AUTHORIZED IN WRITING BY HYDRO-DYNE ENGINEERING INC.

Great White Center Flow Screen Hydraulic Performance

HYDRO DYNE ENGINEERING
Tel: 813-818-0777 Fax: 813-818-0770

Project: San Luis, AZ - West WWTP
Date: 4/14/2025
Rep: JBI Water
By: STM **Checked:** JMB

Model # **CF** 26 – 30 – 144 – 6 — P

Fixed D_1 Condition @ 0% Obs		English Units		SI Units	
Q	Flow Rate	3.00 MGD	2083 gpm	131 L/s	11356 m^3/d
D_1	Upstream Water Depth	24.00 in		610 mm	
D_2	Downstream Water Depth	21.93 in		557 mm	
ΔH	Total Headloss	2.07 in		53 mm	
F	Freeboard	42.00 in		1067 mm	
V_1	Influent Channel Velocity	1.55 ft/s		0.47 m/s	
V_T	Throat Velocity of Screen	2.67 ft/s		0.81 m/s	
V_G	Velocity Through Grid	1.00 ft/s		0.30 m/s	
V_{Re}	Recess Zone Velocity	2.12 ft/s		0.65 m/s	
V_2	Effluent Channel Velocity	1.69 ft/s		0.52 m/s	

Fixed D_2 Condition @ 0% Obs		English Units		SI Units	
Q	Flow Rate	3.00 MGD	2083 gpm	131 L/s	11356 m^3/d
D_1	Upstream Water Depth	18.96 in		482 mm	
D_2	Downstream Water Depth	15.00 in		381 mm	
ΔH	Total Headloss	3.96 in		101 mm	
F	Freeboard	47.04 in		1195 mm	
V_1	Influent Channel Velocity	1.96 ft/s		0.60 m/s	
V_T	Throat Velocity of Screen	3.74 ft/s		1.14 m/s	
V_G	Velocity Through Grid	1.32 ft/s		0.40 m/s	
V_{Re}	Recess Zone Velocity	2.92 ft/s		0.89 m/s	
V_2	Effluent Channel Velocity	2.48 ft/s		0.76 m/s	

Screen Performance VS. Screen Blocking at Fixed D_1

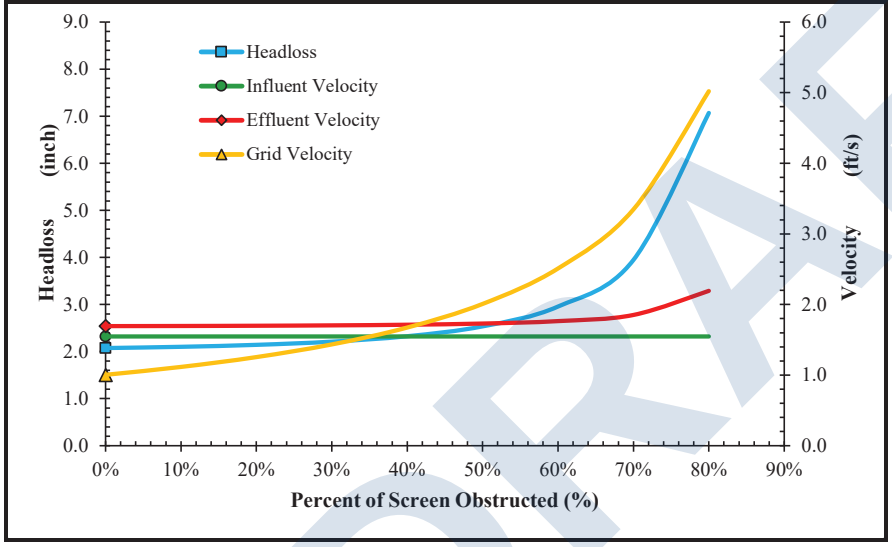

Screen Performance VS. Screen Blocking at Fixed D_2

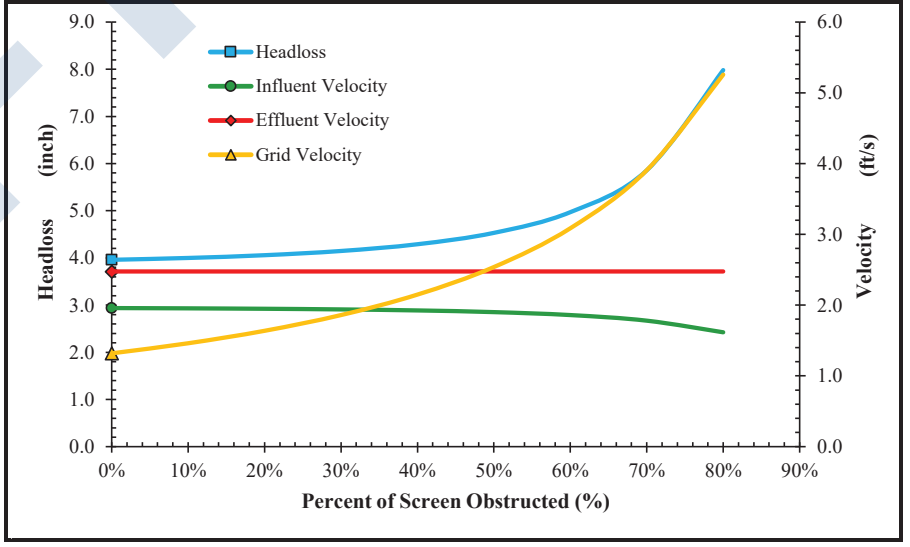

DRAFT

*ALL RIGHTS RESERVED. THE INFORMATION TRANSMITTED HEREIN IS THE PROPERTY OF HYDRO-DYNE ENGINEERING INC. AND HAS BEEN PROVIDED FOR RESTRICTIVE USE. THIS DATA MUST BE HELD CONFIDENTIAL AND TRANSMISSION, DUPLICATION OR DISCLOSURE IS PROHIBITED UNLESS AUTHORIZED IN WRITING BY HYDRO-DYNE ENGINEERING INC.

Great White Center Flow Screen Hydraulic Performance

HYDRO DYNE ENGINEERING

Tel: 813-818-0777 Fax: 813-818-0770

Project: San Luis, AZ - West WWTP
Date: 5/21/2025
Rep: JBI Water
By: STM **Checked:** JMB

Model # **CF** 26 – 30 – 144 – 6 — P

Fixed D_1 Condition @ 0% Obs		English Units		SI Units	
Q	Flow Rate	2.25 MGD	1562 gpm	99 L/s	8517 m^3/d
D_1	Upstream Water Depth	19.00 in		483 mm	
D_2	Downstream Water Depth	16.81 in		427 mm	
ΔH	Total Headloss	2.19 in		56 mm	
F	Freeboard	47.00 in		1194 mm	
V_1	Influent Channel Velocity	1.47 ft/s		0.45 m/s	
V_T	Throat Velocity of Screen	2.80 ft/s		0.85 m/s	
V_G	Velocity Through Grid	0.94 ft/s		0.29 m/s	
V_{Re}	Recess Zone Velocity	2.06 ft/s		0.63 m/s	
V_2	Effluent Channel Velocity	1.66 ft/s		0.51 m/s	

Fixed D_2 Condition @ 0% Obs		English Units		SI Units	
Q	Flow Rate	2.25 MGD	1562 gpm	99 L/s	8517 m^3/d
D_1	Upstream Water Depth	16.39 in		416 mm	
D_2	Downstream Water Depth	13.00 in		330 mm	
ΔH	Total Headloss	3.39 in		86 mm	
F	Freeboard	49.61 in		1260 mm	
V_1	Influent Channel Velocity	1.70 ft/s		0.52 m/s	
V_T	Throat Velocity of Screen	3.53 ft/s		1.08 m/s	
V_G	Velocity Through Grid	1.13 ft/s		0.34 m/s	
V_{Re}	Recess Zone Velocity	2.55 ft/s		0.78 m/s	
V_2	Effluent Channel Velocity	2.14 ft/s		0.65 m/s	

Screen Performance VS. Screen Blocking at Fixed D_1

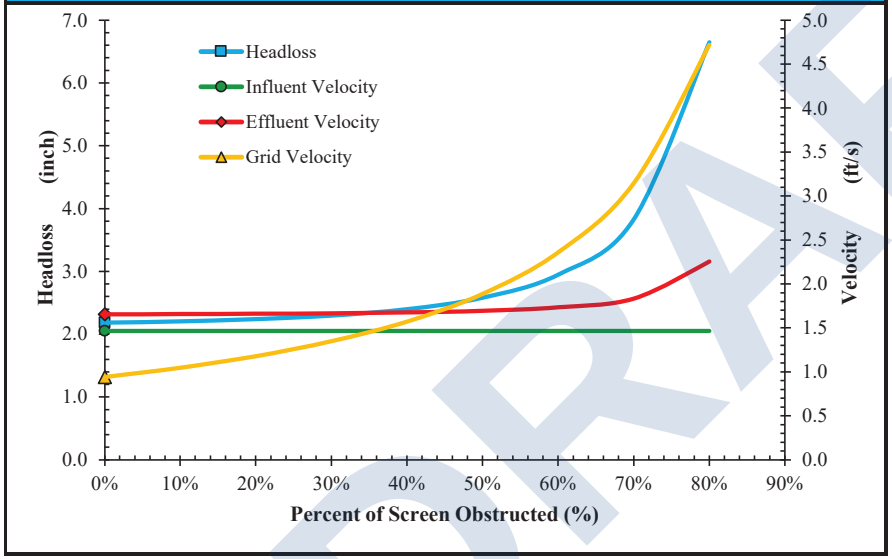

Screen Performance VS. Screen Blocking at Fixed D_2

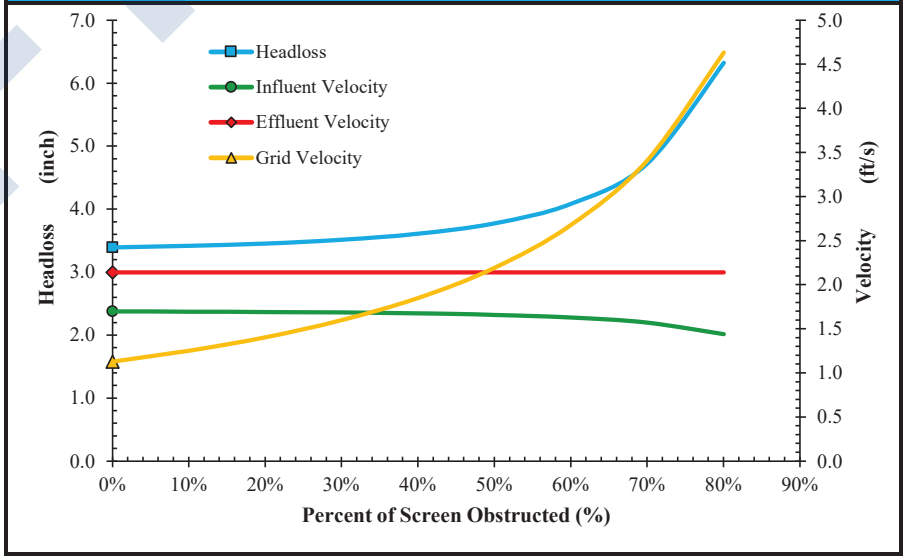

DRAFT

*ALL RIGHTS RESERVED. THE INFORMATION TRANSMITTED HEREIN IS THE PROPERTY OF HYDRO-DYNE ENGINEERING INC. AND HAS BEEN PROVIDED FOR RESTRICTIVE USE. THIS DATA MUST BE HELD CONFIDENTIAL AND TRANSMISSION, DUPLICATION OR DISCLOSURE IS PROHIBITED UNLESS AUTHORIZED IN WRITING BY HYDRO-DYNE ENGINEERING INC.

Great White Center Flow Screen Hydraulic Performance

HYDRO DYNE ENGINEERING

Tel: 813-818-0777 Fax: 813-818-0770

Project: San Luis, AZ - West WWTP
Date: 5/21/2025
Rep: JBI Water
By: STM **Checked:** JMB

Model # **CF** 26 – 30 – 144 – 6 — P

Fixed D_1 Condition @ 0% Obs		English Units		SI Units	
Q	Flow Rate	1.50 MGD	1042 gpm	66 L/s	5678 m^3/d
D_1	Upstream Water Depth	15.00 in		381 mm	
D_2	Downstream Water Depth	13.00 in		330 mm	
ΔH	Total Headloss	2.00 in		51 mm	
F	Freeboard	51.00 in		1295 mm	
V_1	Influent Channel Velocity	1.24 ft/s		0.38 m/s	
V_T	Throat Velocity of Screen	2.73 ft/s		0.83 m/s	
V_G	Velocity Through Grid	0.79 ft/s		0.24 m/s	
V_{Re}	Recess Zone Velocity	1.78 ft/s		0.54 m/s	
V_2	Effluent Channel Velocity	1.43 ft/s		0.44 m/s	

Fixed D_2 Condition @ 0% Obs		English Units		SI Units	
Q	Flow Rate	1.50 MGD	1042 gpm	66 L/s	5678 m^3/d
D_1	Upstream Water Depth	13.15 in		334 mm	
D_2	Downstream Water Depth	10.00 in		254 mm	
ΔH	Total Headloss	3.15 in		80 mm	
F	Freeboard	52.85 in		1342 mm	
V_1	Influent Channel Velocity	1.41 ft/s		0.43 m/s	
V_T	Throat Velocity of Screen	3.49 ft/s		1.06 m/s	
V_G	Velocity Through Grid	0.94 ft/s		0.29 m/s	
V_{Re}	Recess Zone Velocity	2.22 ft/s		0.68 m/s	
V_2	Effluent Channel Velocity	1.86 ft/s		0.57 m/s	

Screen Performance VS. Screen Blocking at Fixed D_1

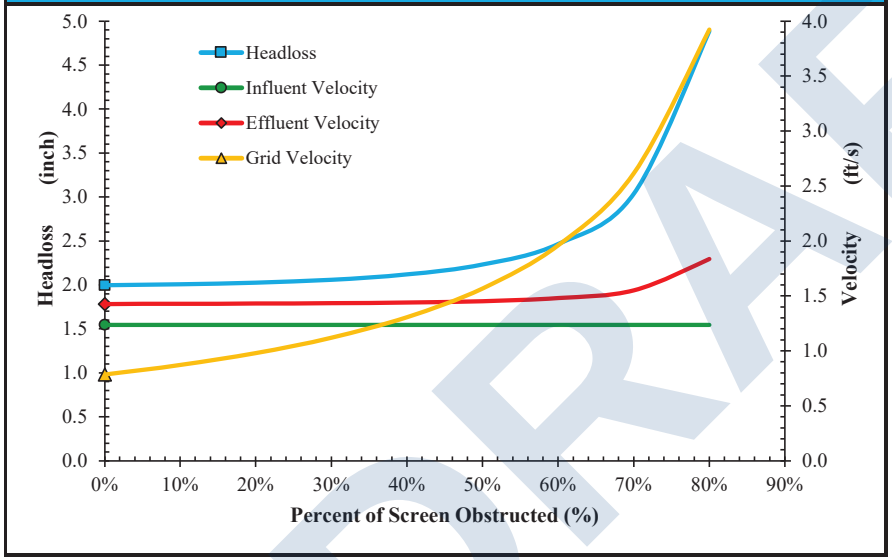

Screen Performance VS. Screen Blocking at Fixed D_2

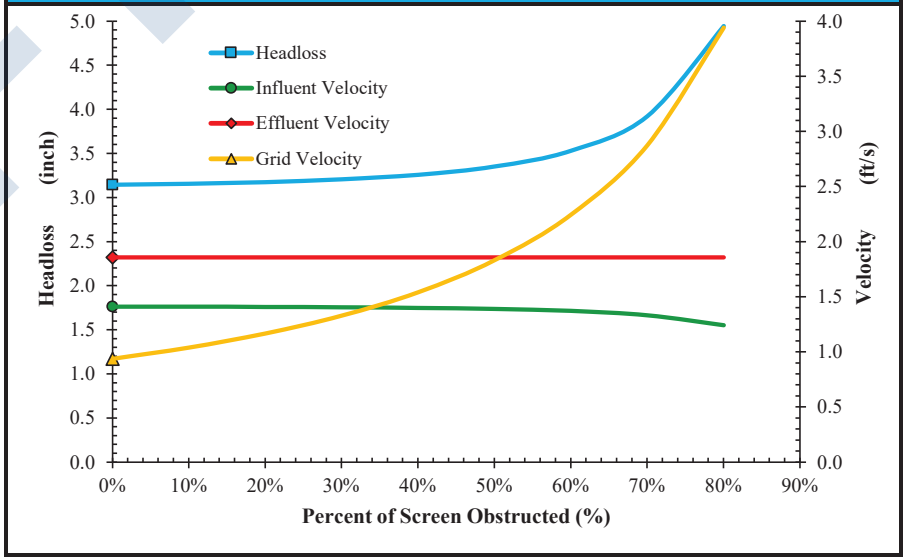

DRAFT

*ALL RIGHTS RESERVED. THE INFORMATION TRANSMITTED HEREIN IS THE PROPERTY OF HYDRO-DYNE ENGINEERING INC. AND HAS BEEN PROVIDED FOR RESTRICTIVE USE. THIS DATA MUST BE HELD CONFIDENTIAL AND TRANSMISSION, DUPLICATION OR DISCLOSURE IS PROHIBITED UNLESS AUTHORIZED IN WRITING BY HYDRO-DYNE ENGINEERING INC.

Great White Center Flow Screen Hydraulic Performance

HYDRO DYNE ENGINEERING

Tel: 813-818-0777 Fax: 813-818-0770

Project: San Luis, AZ - West WWTP
Date: 5/21/2025
Rep: JBI Water
By: STM **Checked:** JMB

Model # **CF** 26 – 30 – 144 – 6 — P

Fixed D_1 Condition @ 0% Obs		English Units		SI Units	
Q	Flow Rate	1.00 MGD	694 gpm	44 L/s	3785 m^3/d
D_1	Upstream Water Depth	12.00 in		305 mm	
D_2	Downstream Water Depth	10.01 in		254 mm	
ΔH	Total Headloss	1.99 in		51 mm	
F	Freeboard	54.00 in		1372 mm	
V_1	Influent Channel Velocity	1.03 ft/s		0.31 m/s	
V_T	Throat Velocity of Screen	2.80 ft/s		0.85 m/s	
V_G	Velocity Through Grid	0.65 ft/s		0.20 m/s	
V_{Re}	Recess Zone Velocity	1.54 ft/s		0.47 m/s	
V_2	Effluent Channel Velocity	1.24 ft/s		0.38 m/s	

Fixed D_2 Condition @ 0% Obs		English Units		SI Units	
Q	Flow Rate	1.00 MGD	694 gpm	44 L/s	3785 m^3/d
D_1	Upstream Water Depth	10.94 in		278 mm	
D_2	Downstream Water Depth	8.00 in		203 mm	
ΔH	Total Headloss	2.94 in		75 mm	
F	Freeboard	55.06 in		1399 mm	
V_1	Influent Channel Velocity	1.13 ft/s		0.34 m/s	
V_T	Throat Velocity of Screen	3.46 ft/s		1.05 m/s	
V_G	Velocity Through Grid	0.75 ft/s		0.23 m/s	
V_{Re}	Recess Zone Velocity	1.86 ft/s		0.57 m/s	
V_2	Effluent Channel Velocity	1.55 ft/s		0.47 m/s	

Screen Performance VS. Screen Blocking at Fixed D_1

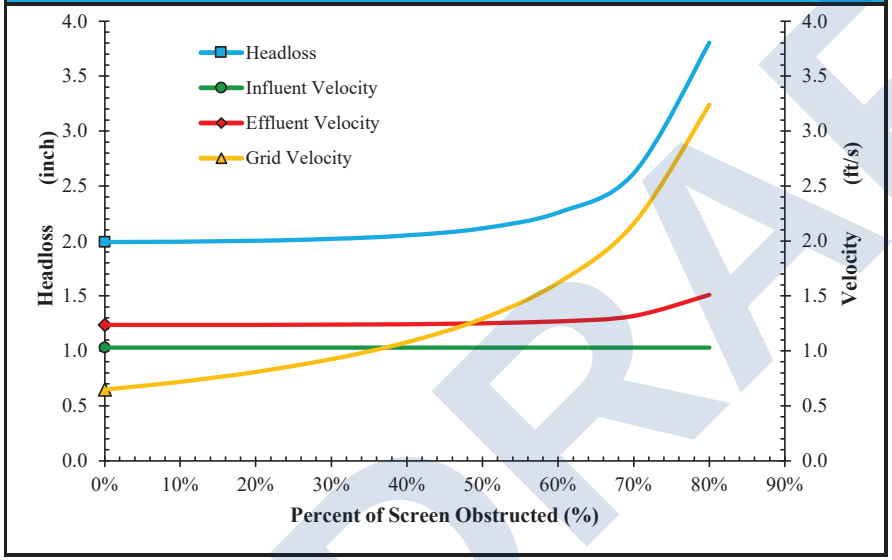

Screen Performance VS. Screen Blocking at Fixed D_2

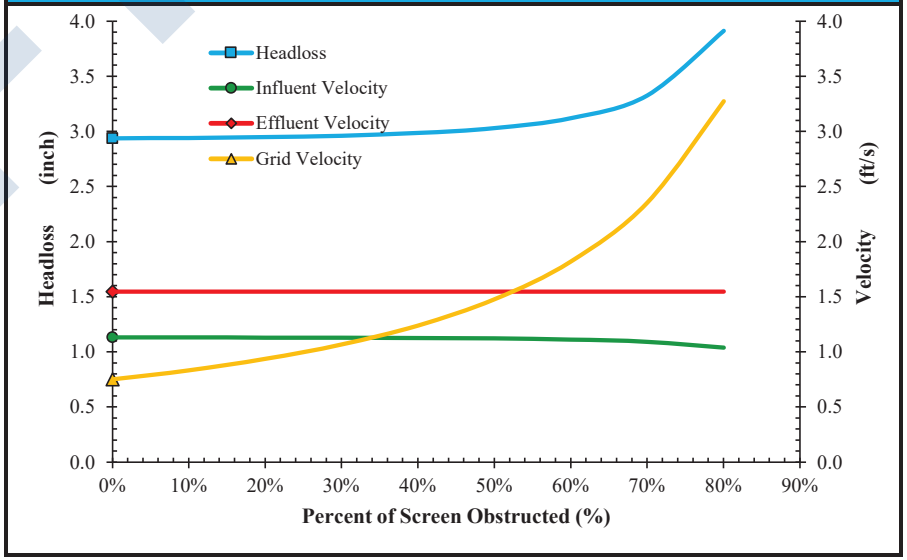

DRAFT

*ALL RIGHTS RESERVED. THE INFORMATION TRANSMITTED HEREIN IS THE PROPERTY OF HYDRO-DYNE ENGINEERING INC. AND HAS BEEN PROVIDED FOR RESTRICTIVE USE. THIS DATA MUST BE HELD CONFIDENTIAL AND TRANSMISSION, DUPLICATION OR DISCLOSURE IS PROHIBITED UNLESS AUTHORIZED IN WRITING BY HYDRO-DYNE ENGINEERING INC.

Great White Center Flow Screen Hydraulic Performance

HYDRO DYNE ENGINEERING
Tel: 813-818-0777 Fax: 813-818-0770

Project: San Luis, AZ - West WWTP
Date: 4/14/2025
Rep: JBI Water
By: STM **Checked:** JMB

Model # **CF** 26 – 30 – 144 – 6 — P

Fixed D_1 Condition @ 30% Obs		English Units		SI Units	
Q	Flow Rate	7.50 MGD	5208 gpm	329 L/s	28391 m^3/d
D_1	Upstream Water Depth	48.00 in		1219 mm	
D_2	Downstream Water Depth	45.24 in		1149 mm	
ΔH	Total Headloss	2.76 in		70 mm	
F	Freeboard	18.00 in		457 mm	
V_1	Influent Channel Velocity	1.93 ft/s		0.59 m/s	
V_T	Throat Velocity of Screen	2.82 ft/s		0.86 m/s	
V_G	Velocity Through Grid	1.85 ft/s		0.56 m/s	
V_{Re}	Recess Zone Velocity	2.59 ft/s		0.79 m/s	
V_2	Effluent Channel Velocity	2.05 ft/s		0.62 m/s	

Fixed D_2 Condition @ 30% Obs		English Units		SI Units	
Q	Flow Rate	7.50 MGD	5208 gpm	329 L/s	28391 m^3/d
D_1	Upstream Water Depth	40.97 in		1041 mm	
D_2	Downstream Water Depth	37.00 in		940 mm	
ΔH	Total Headloss	3.97 in		101 mm	
F	Freeboard	25.03 in		636 mm	
V_1	Influent Channel Velocity	2.27 ft/s		0.69 m/s	
V_T	Throat Velocity of Screen	3.40 ft/s		1.04 m/s	
V_G	Velocity Through Grid	2.17 ft/s		0.66 m/s	
V_{Re}	Recess Zone Velocity	3.11 ft/s		0.95 m/s	
V_2	Effluent Channel Velocity	2.51 ft/s		0.77 m/s	

Screen Performance VS. Screen Blocking at Fixed D_1

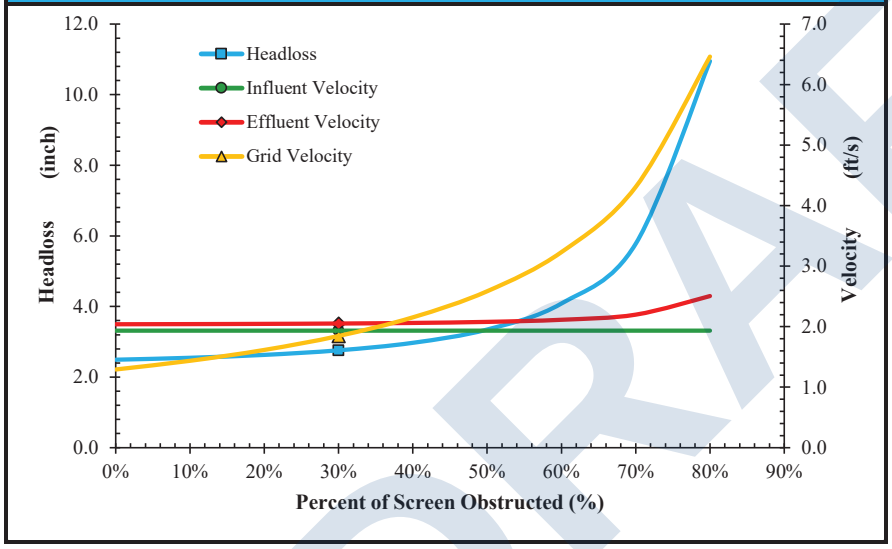

Screen Performance VS. Screen Blocking at Fixed D_2

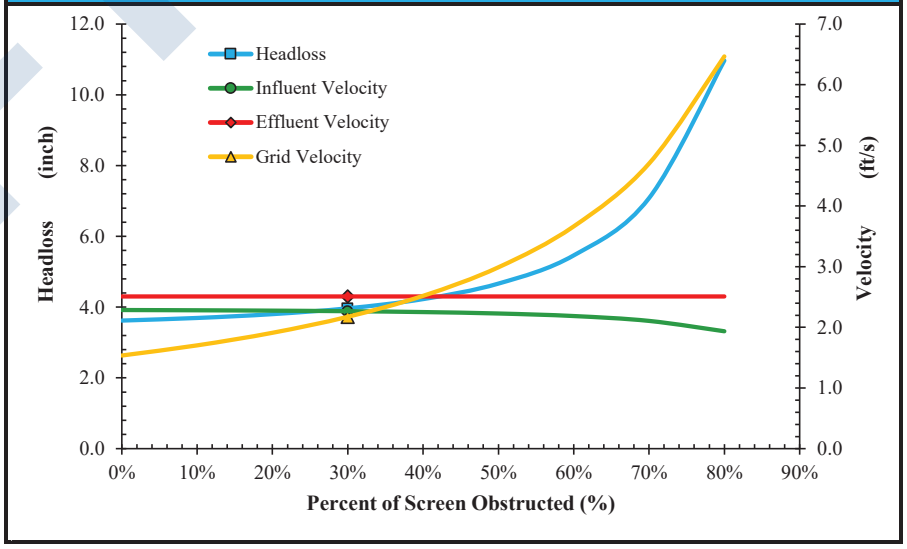

DRAFT

*ALL RIGHTS RESERVED. THE INFORMATION TRANSMITTED HEREIN IS THE PROPERTY OF HYDRO-DYNE ENGINEERING INC. AND HAS BEEN PROVIDED FOR RESTRICTIVE USE. THIS DATA MUST BE HELD CONFIDENTIAL AND TRANSMISSION, DUPLICATION OR DISCLOSURE IS PROHIBITED UNLESS AUTHORIZED IN WRITING BY HYDRO-DYNE ENGINEERING INC.

Great White Center Flow Screen Hydraulic Performance

HYDRO DYNE ENGINEERING
Tel: 813-818-0777 Fax: 813-818-0770

Project: San Luis, AZ - West WWTP
Date: 4/14/2025
Rep: JBI Water
By: STM **Checked:** JMB

Model # **CF** 26 – 30 – 144 – 6 — P

Fixed D_1 Condition @ 30% Obs		English Units		SI Units	
Q	Flow Rate	3.00 MGD	2083 gpm	131 L/s	11356 m^3/d
D_1	Upstream Water Depth	24.00 in		610 mm	
D_2	Downstream Water Depth	21.79 in		553 mm	
ΔH	Total Headloss	2.21 in		56 mm	
F	Freeboard	42.00 in		1067 mm	
V_1	Influent Channel Velocity	1.55 ft/s		0.47 m/s	
V_T	Throat Velocity of Screen	2.67 ft/s		0.81 m/s	
V_G	Velocity Through Grid	1.43 ft/s		0.44 m/s	
V_{Re}	Recess Zone Velocity	2.13 ft/s		0.65 m/s	
V_2	Effluent Channel Velocity	1.70 ft/s		0.52 m/s	

Fixed D_2 Condition @ 30% Obs		English Units		SI Units	
Q	Flow Rate	3.00 MGD	2083 gpm	131 L/s	11356 m^3/d
D_1	Upstream Water Depth	19.15 in		486 mm	
D_2	Downstream Water Depth	15.00 in		381 mm	
ΔH	Total Headloss	4.15 in		105 mm	
F	Freeboard	46.85 in		1190 mm	
V_1	Influent Channel Velocity	1.94 ft/s		0.59 m/s	
V_T	Throat Velocity of Screen	3.69 ft/s		1.12 m/s	
V_G	Velocity Through Grid	1.86 ft/s		0.57 m/s	
V_{Re}	Recess Zone Velocity	2.92 ft/s		0.89 m/s	
V_2	Effluent Channel Velocity	2.48 ft/s		0.76 m/s	

Screen Performance VS. Screen Blocking at Fixed D_1

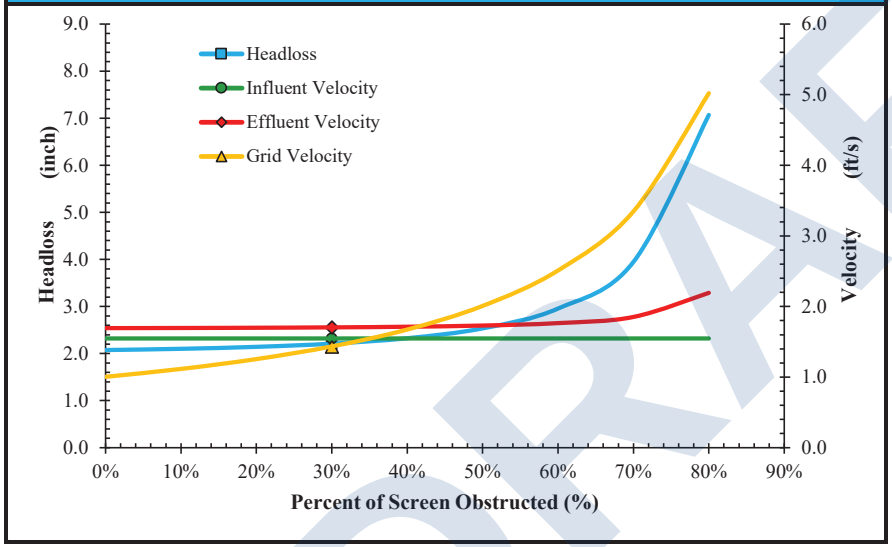

Screen Performance VS. Screen Blocking at Fixed D_2

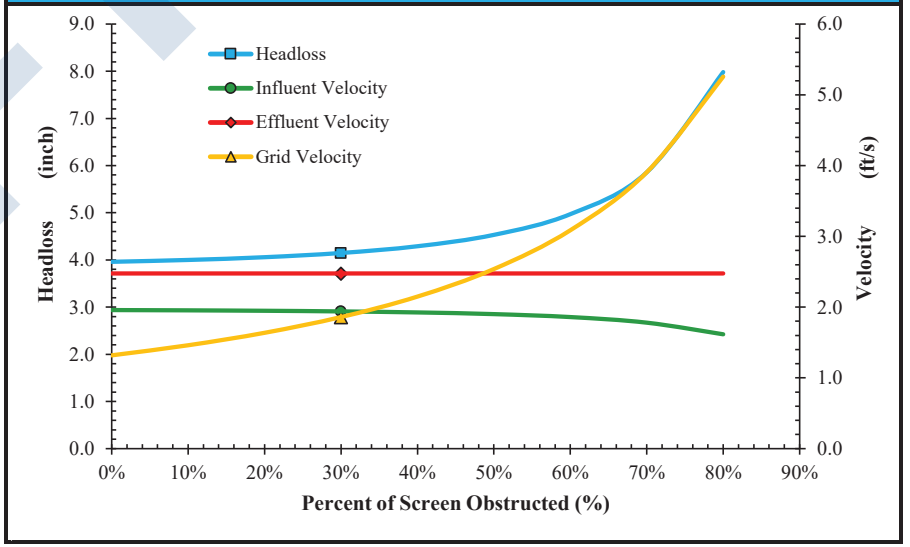

DRAFT

*ALL RIGHTS RESERVED. THE INFORMATION TRANSMITTED HEREIN IS THE PROPERTY OF HYDRO-DYNE ENGINEERING INC. AND HAS BEEN PROVIDED FOR RESTRICTIVE USE. THIS DATA MUST BE HELD CONFIDENTIAL AND TRANSMISSION, DUPLICATION OR DISCLOSURE IS PROHIBITED UNLESS AUTHORIZED IN WRITING BY HYDRO-DYNE ENGINEERING INC.

Great White Center Flow Screen Hydraulic Performance

HYDRO DYNE ENGINEERING

Tel: 813-818-0777 Fax: 813-818-0770

Project: San Luis, AZ - West WWTP
Date: 5/21/2025
Rep: JBI Water
By: STM **Checked:** JMB

Model # **CF** 26 – 30 – 144 – 6 — P

Fixed D_1 Condition @ 30% Obs		English Units		SI Units	
Q	Flow Rate	2.25 MGD	1562 gpm	99 L/s	8517 m^3/d
D_1	Upstream Water Depth	19.00 in		483 mm	
D_2	Downstream Water Depth	16.70 in		424 mm	
ΔH	Total Headloss	2.30 in		58 mm	
F	Freeboard	47.00 in		1194 mm	
V_1	Influent Channel Velocity	1.47 ft/s		0.45 m/s	
V_T	Throat Velocity of Screen	2.80 ft/s		0.85 m/s	
V_G	Velocity Through Grid	1.35 ft/s		0.41 m/s	
V_{Re}	Recess Zone Velocity	2.07 ft/s		0.63 m/s	
V_2	Effluent Channel Velocity	1.67 ft/s		0.51 m/s	

Fixed D_2 Condition @ 30% Obs		English Units		SI Units	
Q	Flow Rate	2.25 MGD	1562 gpm	99 L/s	8517 m^3/d
D_1	Upstream Water Depth	16.51 in		419 mm	
D_2	Downstream Water Depth	13.00 in		330 mm	
ΔH	Total Headloss	3.51 in		89 mm	
F	Freeboard	49.49 in		1257 mm	
V_1	Influent Channel Velocity	1.69 ft/s		0.52 m/s	
V_T	Throat Velocity of Screen	3.49 ft/s		1.06 m/s	
V_G	Velocity Through Grid	1.60 ft/s		0.49 m/s	
V_{Re}	Recess Zone Velocity	2.55 ft/s		0.78 m/s	
V_2	Effluent Channel Velocity	2.14 ft/s		0.65 m/s	

Screen Performance VS. Screen Blocking at Fixed D_1

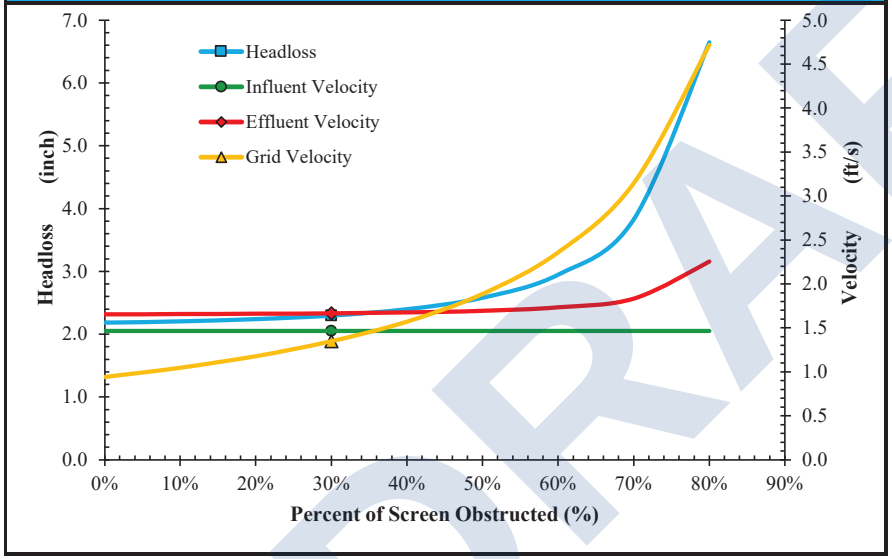

Screen Performance VS. Screen Blocking at Fixed D_2

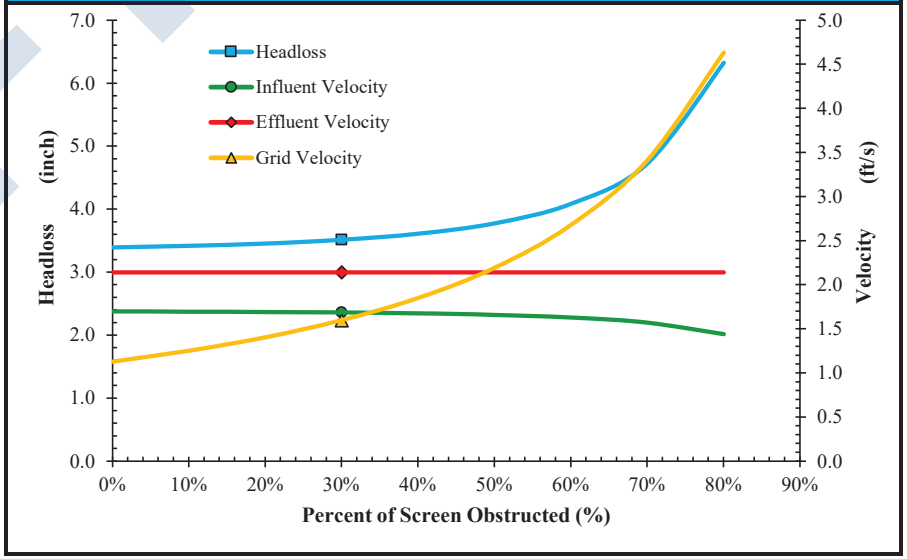

DRAFT

*ALL RIGHTS RESERVED. THE INFORMATION TRANSMITTED HEREIN IS THE PROPERTY OF HYDRO-DYNE ENGINEERING INC. AND HAS BEEN PROVIDED FOR RESTRICTIVE USE. THIS DATA MUST BE HELD CONFIDENTIAL AND TRANSMISSION, DUPLICATION OR DISCLOSURE IS PROHIBITED UNLESS AUTHORIZED IN WRITING BY HYDRO-DYNE ENGINEERING INC.

Great White Center Flow Screen Hydraulic Performance

HYDRO DYNE ENGINEERING

Tel: 813-818-0777 Fax: 813-818-0770

Project: San Luis, AZ - West WWTP
Date: 5/21/2025
Rep: JBI Water
By: STM **Checked:** JMB

Model # **CF** 26 – 30 – 144 – 6 — P

Fixed D_1 Condition @ 30% Obs		English Units		SI Units	
Q	Flow Rate	1.50 MGD	1042 gpm	66 L/s	5678 m^3/d
D_1	Upstream Water Depth	15.00 in		381 mm	
D_2	Downstream Water Depth	12.94 in		329 mm	
ΔH	Total Headloss	2.06 in		52 mm	
F	Freeboard	51.00 in		1295 mm	
V_1	Influent Channel Velocity	1.24 ft/s		0.38 m/s	
V_T	Throat Velocity of Screen	2.73 ft/s		0.83 m/s	
V_G	Velocity Through Grid	1.12 ft/s		0.34 m/s	
V_{Re}	Recess Zone Velocity	1.78 ft/s		0.54 m/s	
V_2	Effluent Channel Velocity	1.43 ft/s		0.44 m/s	

Fixed D_2 Condition @ 30% Obs		English Units		SI Units	
Q	Flow Rate	1.50 MGD	1042 gpm	66 L/s	5678 m^3/d
D_1	Upstream Water Depth	13.21 in		336 mm	
D_2	Downstream Water Depth	10.00 in		254 mm	
ΔH	Total Headloss	3.21 in		82 mm	
F	Freeboard	52.79 in		1341 mm	
V_1	Influent Channel Velocity	1.41 ft/s		0.43 m/s	
V_T	Throat Velocity of Screen	3.46 ft/s		1.05 m/s	
V_G	Velocity Through Grid	1.33 ft/s		0.41 m/s	
V_{Re}	Recess Zone Velocity	2.22 ft/s		0.68 m/s	
V_2	Effluent Channel Velocity	1.86 ft/s		0.57 m/s	

Screen Performance VS. Screen Blocking at Fixed D_1

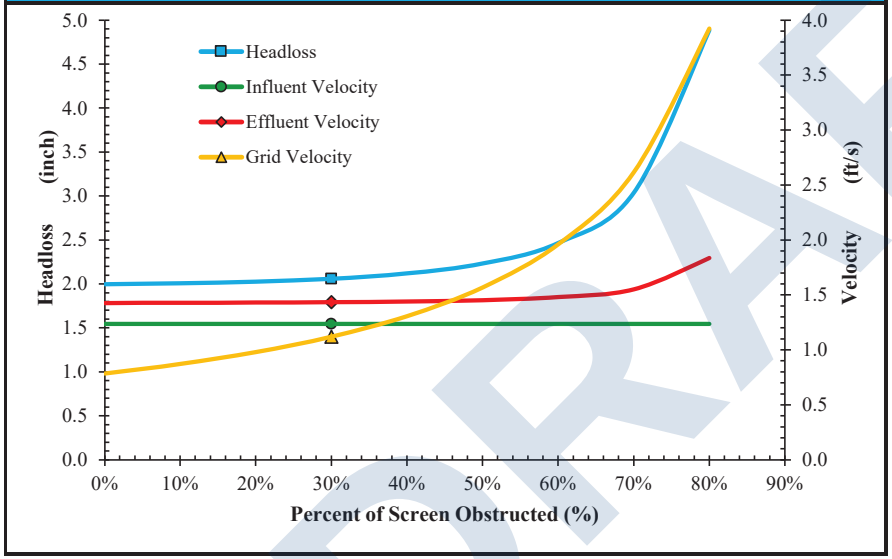

Screen Performance VS. Screen Blocking at Fixed D_2

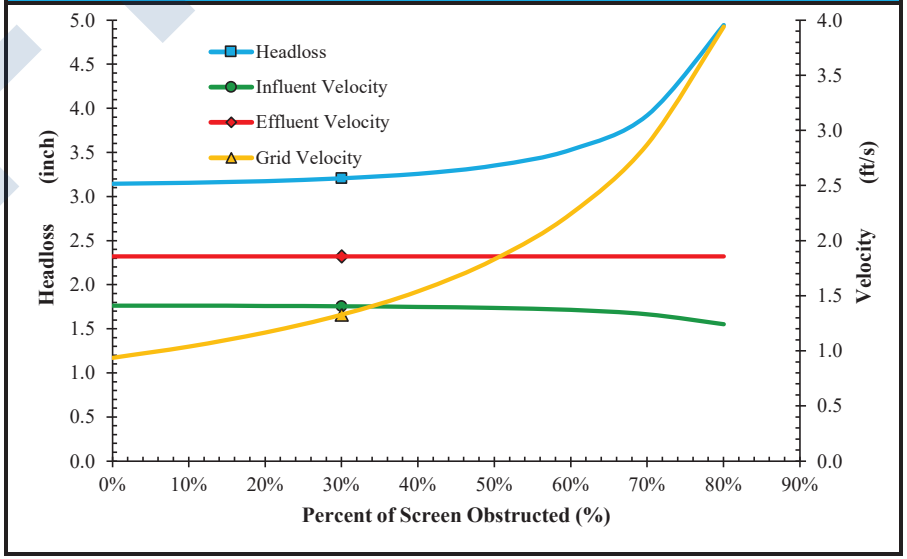

DRAFT

*ALL RIGHTS RESERVED. THE INFORMATION TRANSMITTED HEREIN IS THE PROPERTY OF HYDRO-DYNE ENGINEERING INC. AND HAS BEEN PROVIDED FOR RESTRICTIVE USE. THIS DATA MUST BE HELD CONFIDENTIAL AND TRANSMISSION, DUPLICATION OR DISCLOSURE IS PROHIBITED UNLESS AUTHORIZED IN WRITING BY HYDRO-DYNE ENGINEERING INC.

Great White Center Flow Screen Hydraulic Performance

HYDRO DYNE ENGINEERING

Tel: 813-818-0777 Fax: 813-818-0770

Project: San Luis, AZ - West WWTP
Date: 5/21/2025
Rep: JBI Water
By: STM **Checked:** JMB

Model # **CF** 26 – 30 – 144 – 6 — P

Fixed D_1 Condition @ 30% Obs		English Units		SI Units	
Q	Flow Rate	1.00 MGD	694 gpm	44 L/s	3785 m^3/d
D_1	Upstream Water Depth	12.00 in		305 mm	
D_2	Downstream Water Depth	9.98 in		253 mm	
ΔH	Total Headloss	2.02 in		51 mm	
F	Freeboard	54.00 in		1372 mm	
V_1	Influent Channel Velocity	1.03 ft/s		0.31 m/s	
V_T	Throat Velocity of Screen	2.80 ft/s		0.85 m/s	
V_G	Velocity Through Grid	0.93 ft/s		0.28 m/s	
V_{Re}	Recess Zone Velocity	1.54 ft/s		0.47 m/s	
V_2	Effluent Channel Velocity	1.24 ft/s		0.38 m/s	

Fixed D_2 Condition @ 30% Obs		English Units		SI Units	
Q	Flow Rate	1.00 MGD	694 gpm	44 L/s	3785 m^3/d
D_1	Upstream Water Depth	10.96 in		278 mm	
D_2	Downstream Water Depth	8.00 in		203 mm	
ΔH	Total Headloss	2.96 in		75 mm	
F	Freeboard	55.04 in		1398 mm	
V_1	Influent Channel Velocity	1.13 ft/s		0.34 m/s	
V_T	Throat Velocity of Screen	3.44 ft/s		1.05 m/s	
V_G	Velocity Through Grid	1.07 ft/s		0.33 m/s	
V_{Re}	Recess Zone Velocity	1.86 ft/s		0.57 m/s	
V_2	Effluent Channel Velocity	1.55 ft/s		0.47 m/s	

Screen Performance VS. Screen Blocking at Fixed D_1

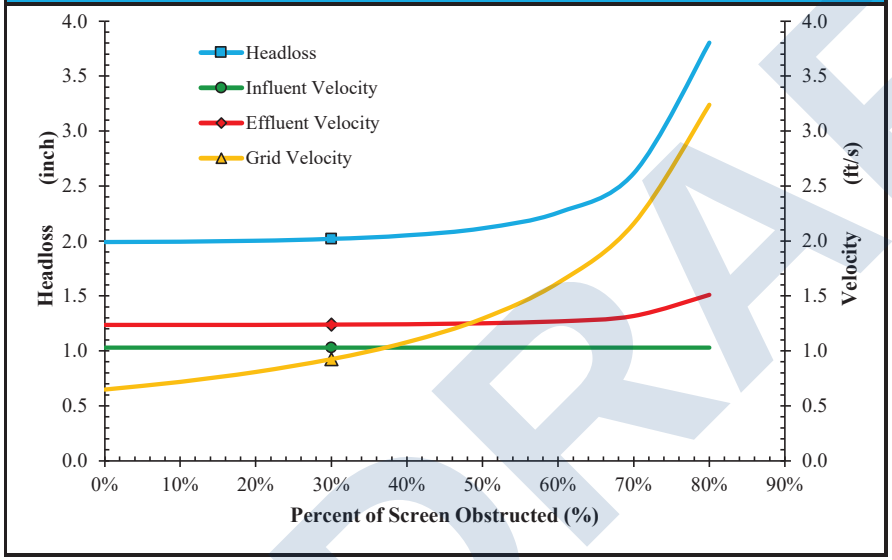

Screen Performance VS. Screen Blocking at Fixed D_2

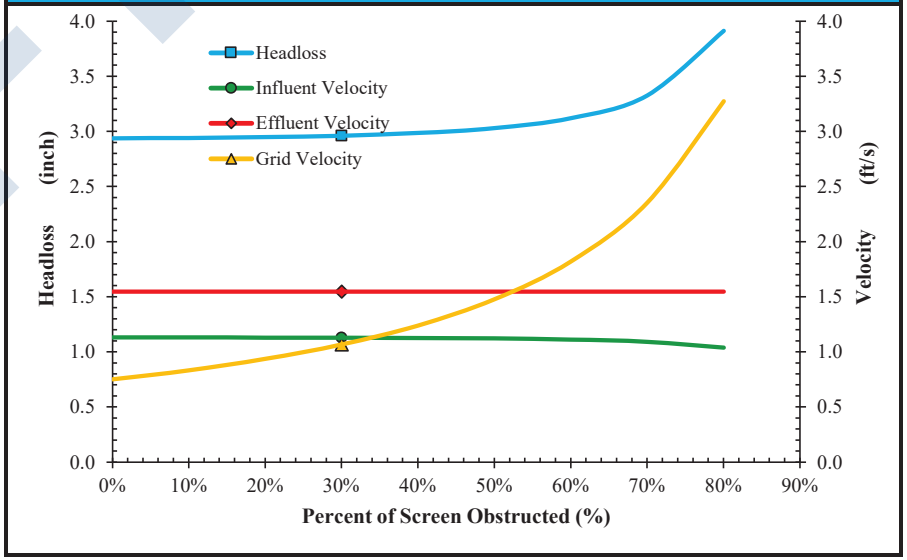

DRAFT

*ALL RIGHTS RESERVED. THE INFORMATION TRANSMITTED HEREIN IS THE PROPERTY OF HYDRO-DYNE ENGINEERING INC. AND HAS BEEN PROVIDED FOR RESTRICTIVE USE. THIS DATA MUST BE HELD CONFIDENTIAL AND TRANSMISSION, DUPLICATION OR DISCLOSURE IS PROHIBITED UNLESS AUTHORIZED IN WRITING BY HYDRO-DYNE ENGINEERING INC.

Great White Center Flow Screen Hydraulic Performance

HYDRO DYNE ENGINEERING
Tel: 813-818-0777 Fax: 813-818-0770

Project: San Luis, AZ - West WWTP
Date: 4/14/2025
Rep: JBI Water
By: STM **Checked:** JMB

Model # **CF** 26 – 30 – 144 – 6 — P

Fixed D_1 Condition @ 50% Obs		English Units		SI Units	
Q	Flow Rate	7.50 MGD	5208 gpm	329 L/s	28391 m^3/d
D_1	Upstream Water Depth	48.00 in		1219 mm	
D_2	Downstream Water Depth	44.65 in		1134 mm	
ΔH	Total Headloss	3.35 in		85 mm	
F	Freeboard	18.00 in		457 mm	
V_1	Influent Channel Velocity	1.93 ft/s		0.59 m/s	
V_T	Throat Velocity of Screen	2.82 ft/s		0.86 m/s	
V_G	Velocity Through Grid	2.58 ft/s		0.79 m/s	
V_{Re}	Recess Zone Velocity	2.63 ft/s		0.80 m/s	
V_2	Effluent Channel Velocity	2.08 ft/s		0.63 m/s	

Fixed D_2 Condition @ 50% Obs		English Units		SI Units	
Q	Flow Rate	7.50 MGD	5208 gpm	329 L/s	28391 m^3/d
D_1	Upstream Water Depth	41.66 in		1058 mm	
D_2	Downstream Water Depth	37.00 in		940 mm	
ΔH	Total Headloss	4.66 in		118 mm	
F	Freeboard	24.34 in		618 mm	
V_1	Influent Channel Velocity	2.23 ft/s		0.68 m/s	
V_T	Throat Velocity of Screen	3.33 ft/s		1.01 m/s	
V_G	Velocity Through Grid	2.99 ft/s		0.91 m/s	
V_{Re}	Recess Zone Velocity	3.11 ft/s		0.95 m/s	
V_2	Effluent Channel Velocity	2.51 ft/s		0.77 m/s	

Screen Performance VS. Screen Blocking at Fixed D_1

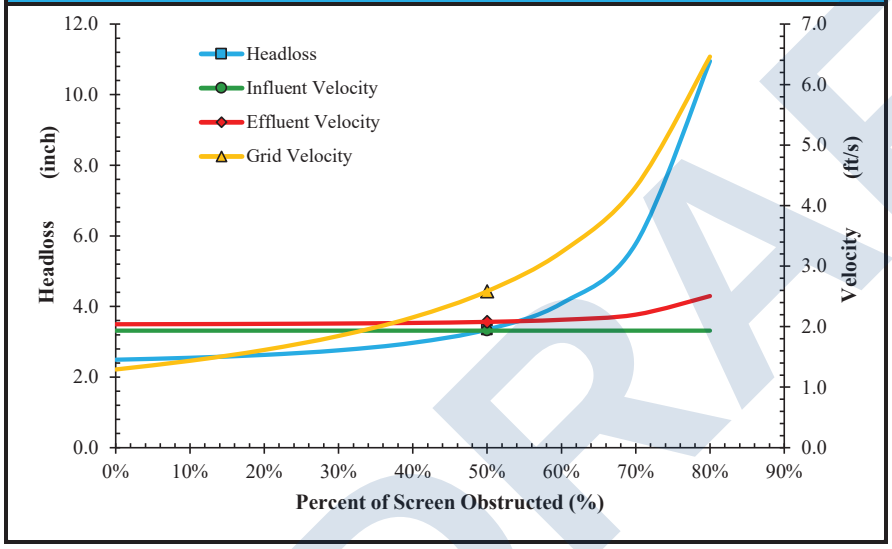

Screen Performance VS. Screen Blocking at Fixed D_2

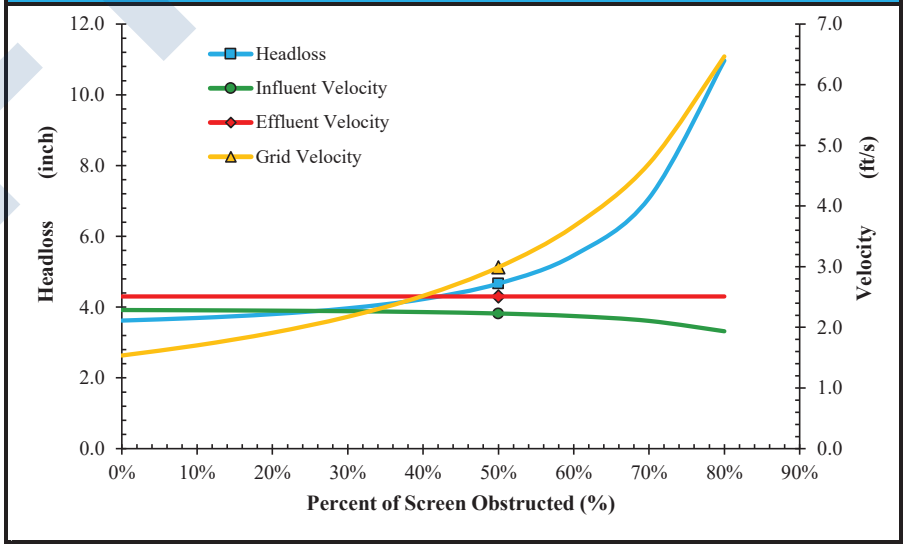

DRAFT

*ALL RIGHTS RESERVED. THE INFORMATION TRANSMITTED HEREIN IS THE PROPERTY OF HYDRO-DYNE ENGINEERING INC. AND HAS BEEN PROVIDED FOR RESTRICTIVE USE. THIS DATA MUST BE HELD CONFIDENTIAL AND TRANSMISSION, DUPLICATION OR DISCLOSURE IS PROHIBITED UNLESS AUTHORIZED IN WRITING BY HYDRO-DYNE ENGINEERING INC.

Great White Center Flow Screen Hydraulic Performance

HYDRO DYNE ENGINEERING
Tel: 813-818-0777 Fax: 813-818-0770

Project: San Luis, AZ - West WWTP
Date: 4/14/2025
Rep: JBI Water
By: STM **Checked:** JMB

Model # **CF** 26 – 30 – 144 – 6 — P

Fixed D_1 Condition @ 50% Obs		English Units		SI Units	
Q	Flow Rate	3.00 MGD	2083 gpm	131 L/s	11356 m^3/d
D_1	Upstream Water Depth	24.00 in		610 mm	
D_2	Downstream Water Depth	21.46 in		545 mm	
ΔH	Total Headloss	2.54 in		65 mm	
F	Freeboard	42.00 in		1067 mm	
V_1	Influent Channel Velocity	1.55 ft/s		0.47 m/s	
V_T	Throat Velocity of Screen	2.67 ft/s		0.81 m/s	
V_G	Velocity Through Grid	2.01 ft/s		0.61 m/s	
V_{Re}	Recess Zone Velocity	2.16 ft/s		0.66 m/s	
V_2	Effluent Channel Velocity	1.73 ft/s		0.53 m/s	

Fixed D_2 Condition @ 50% Obs		English Units		SI Units	
Q	Flow Rate	3.00 MGD	2083 gpm	131 L/s	11356 m^3/d
D_1	Upstream Water Depth	19.53 in		496 mm	
D_2	Downstream Water Depth	15.00 in		381 mm	
ΔH	Total Headloss	4.53 in		115 mm	
F	Freeboard	46.47 in		1180 mm	
V_1	Influent Channel Velocity	1.90 ft/s		0.58 m/s	
V_T	Throat Velocity of Screen	3.58 ft/s		1.09 m/s	
V_G	Velocity Through Grid	2.54 ft/s		0.77 m/s	
V_{Re}	Recess Zone Velocity	2.92 ft/s		0.89 m/s	
V_2	Effluent Channel Velocity	2.48 ft/s		0.76 m/s	

Screen Performance VS. Screen Blocking at Fixed D_1

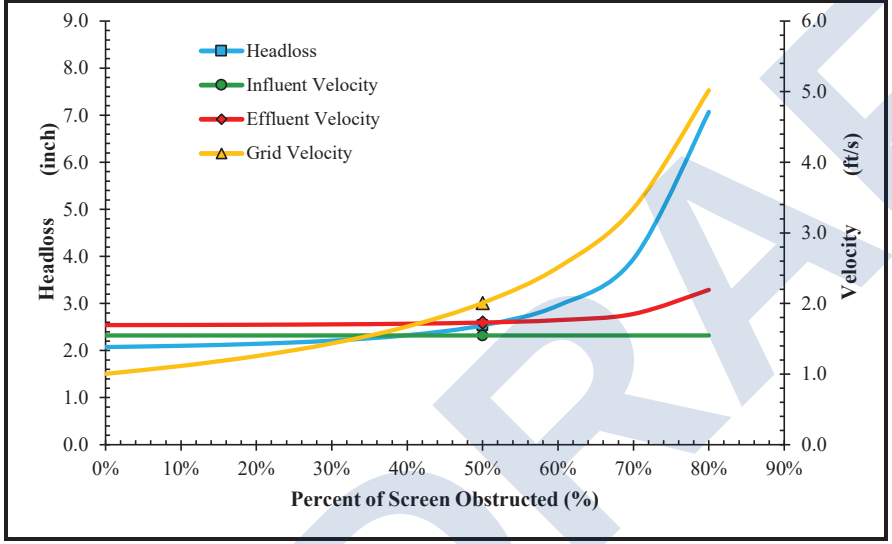

Screen Performance VS. Screen Blocking at Fixed D_2

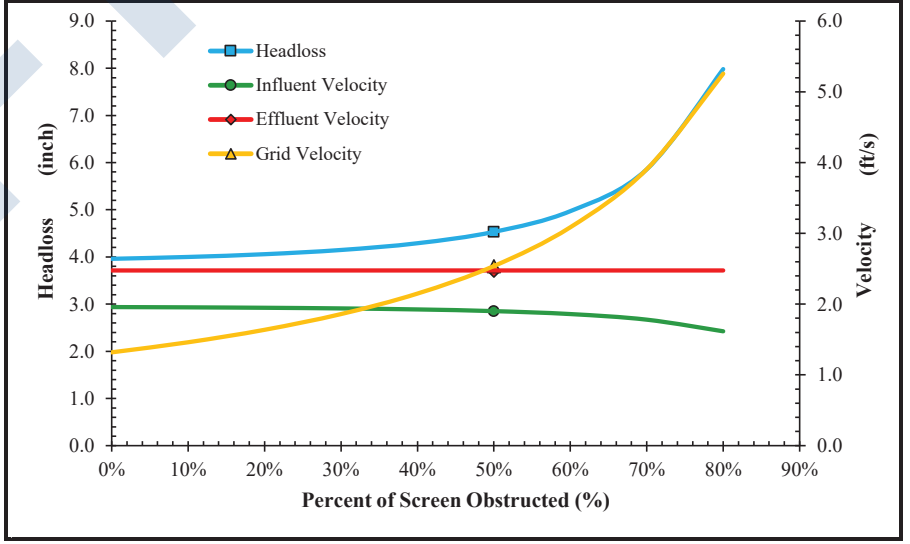

DRAFT

*ALL RIGHTS RESERVED. THE INFORMATION TRANSMITTED HEREIN IS THE PROPERTY OF HYDRO-DYNE ENGINEERING INC. AND HAS BEEN PROVIDED FOR RESTRICTIVE USE. THIS DATA MUST BE HELD CONFIDENTIAL AND TRANSMISSION, DUPLICATION OR DISCLOSURE IS PROHIBITED UNLESS AUTHORIZED IN WRITING BY HYDRO-DYNE ENGINEERING INC.

Great White Center Flow Screen Hydraulic Performance

HYDRO DYNE ENGINEERING

Tel: 813-818-0777 Fax: 813-818-0770

Project: San Luis, AZ - West WWTP
Date: 5/21/2025
Rep: JBI Water
By: STM **Checked:** JMB

Model # **CF** 26 – 30 – 144 – 6 — P

Fixed D_1 Condition @ 50% Obs		English Units		SI Units	
Q	Flow Rate	2.25 MGD	1562 gpm	99 L/s	8517 m^3/d
D_1	Upstream Water Depth	19.00 in		483 mm	
D_2	Downstream Water Depth	16.42 in		417 mm	
ΔH	Total Headloss	2.58 in		66 mm	
F	Freeboard	47.00 in		1194 mm	
V_1	Influent Channel Velocity	1.47 ft/s		0.45 m/s	
V_T	Throat Velocity of Screen	2.80 ft/s		0.85 m/s	
V_G	Velocity Through Grid	1.89 ft/s		0.58 m/s	
V_{Re}	Recess Zone Velocity	2.10 ft/s		0.64 m/s	
V_2	Effluent Channel Velocity	1.70 ft/s		0.52 m/s	

Fixed D_2 Condition @ 50% Obs		English Units		SI Units	
Q	Flow Rate	2.25 MGD	1562 gpm	99 L/s	8517 m^3/d
D_1	Upstream Water Depth	16.23 in		412 mm	
D_2	Downstream Water Depth	12.00 in		305 mm	
ΔH	Total Headloss	4.23 in		107 mm	
F	Freeboard	49.77 in		1264 mm	
V_1	Influent Channel Velocity	1.72 ft/s		0.52 m/s	
V_T	Throat Velocity of Screen	3.59 ft/s		1.09 m/s	
V_G	Velocity Through Grid	2.29 ft/s		0.70 m/s	
V_{Re}	Recess Zone Velocity	2.72 ft/s		0.83 m/s	
V_2	Effluent Channel Velocity	2.32 ft/s		0.71 m/s	

Screen Performance VS. Screen Blocking at Fixed D_1

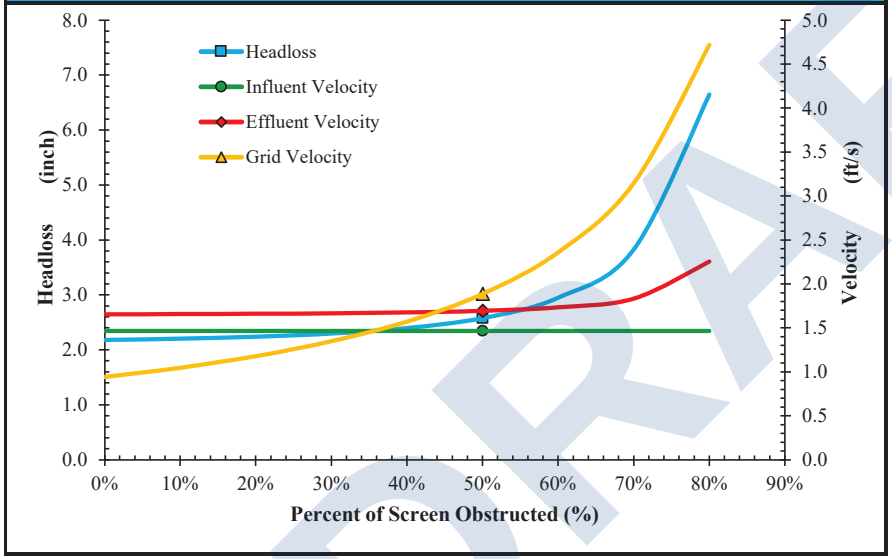

Screen Performance VS. Screen Blocking at Fixed D_2

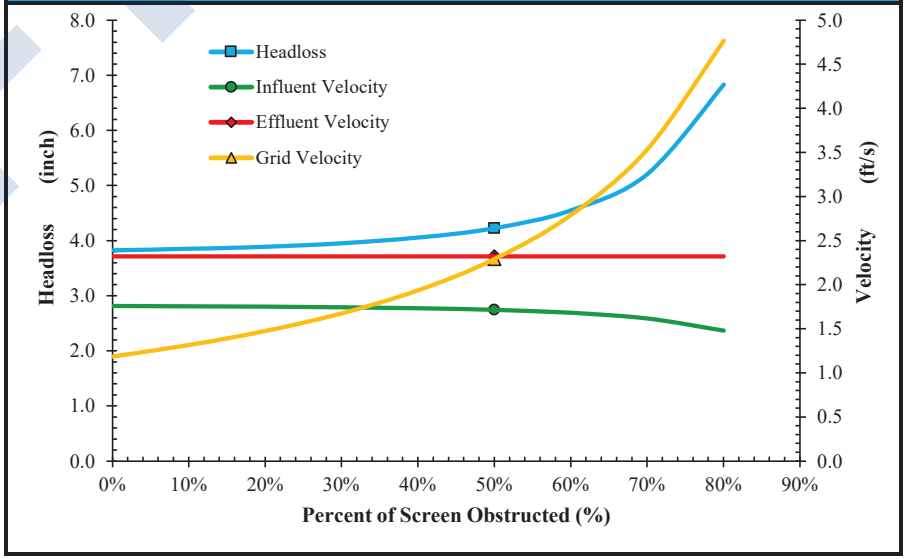

DRAFT

*ALL RIGHTS RESERVED. THE INFORMATION TRANSMITTED HEREIN IS THE PROPERTY OF HYDRO-DYNE ENGINEERING INC. AND HAS BEEN PROVIDED FOR RESTRICTIVE USE. THIS DATA MUST BE HELD CONFIDENTIAL AND TRANSMISSION, DUPLICATION OR DISCLOSURE IS PROHIBITED UNLESS AUTHORIZED IN WRITING BY HYDRO-DYNE ENGINEERING INC.

Great White Center Flow Screen Hydraulic Performance

HYDRO DYNE ENGINEERING

Tel: 813-818-0777 Fax: 813-818-0770

Project: San Luis, AZ - West WWTP
Date: 5/21/2025
Rep: JBI Water
By: STM **Checked:** JMB

Model # **CF** 26 – 30 – 144 – 6 — P

Fixed D_1 Condition @ 50% Obs		English Units		SI Units	
Q	Flow Rate	1.50 MGD	1042 gpm	66 L/s	5678 m^3/d
D_1	Upstream Water Depth	15.00 in		381 mm	
D_2	Downstream Water Depth	12.77 in		324 mm	
ΔH	Total Headloss	2.23 in		57 mm	
F	Freeboard	51.00 in		1295 mm	
V_1	Influent Channel Velocity	1.24 ft/s		0.38 m/s	
V_T	Throat Velocity of Screen	2.73 ft/s		0.83 m/s	
V_G	Velocity Through Grid	1.57 ft/s		0.48 m/s	
V_{Re}	Recess Zone Velocity	1.80 ft/s		0.55 m/s	
V_2	Effluent Channel Velocity	1.45 ft/s		0.44 m/s	

Fixed D_2 Condition @ 50% Obs		English Units		SI Units	
Q	Flow Rate	1.50 MGD	1042 gpm	66 L/s	5678 m^3/d
D_1	Upstream Water Depth	12.88 in		327 mm	
D_2	Downstream Water Depth	9.00 in		229 mm	
ΔH	Total Headloss	3.88 in		99 mm	
F	Freeboard	53.12 in		1349 mm	
V_1	Influent Channel Velocity	1.44 ft/s		0.44 m/s	
V_T	Throat Velocity of Screen	3.63 ft/s		1.11 m/s	
V_G	Velocity Through Grid	1.94 ft/s		0.59 m/s	
V_{Re}	Recess Zone Velocity	2.40 ft/s		0.73 m/s	
V_2	Effluent Channel Velocity	2.06 ft/s		0.63 m/s	

Screen Performance VS. Screen Blocking at Fixed D_1

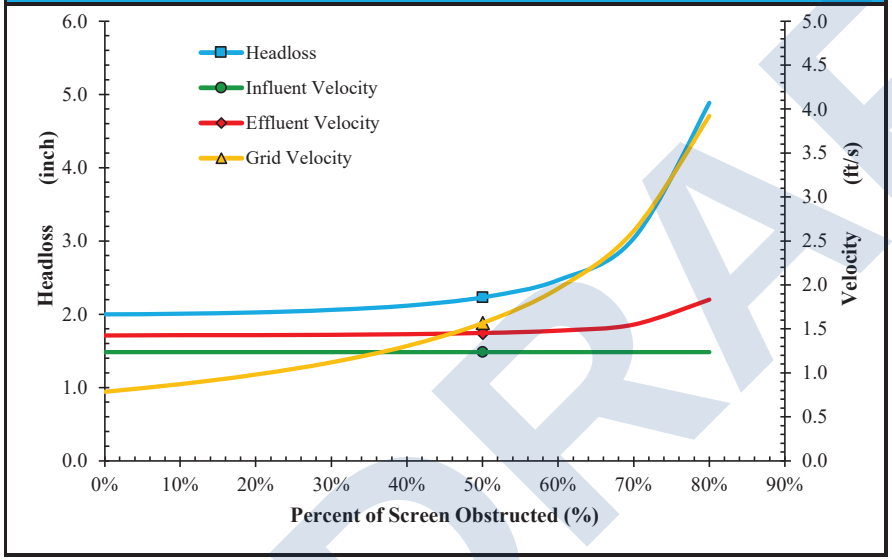

Screen Performance VS. Screen Blocking at Fixed D_2

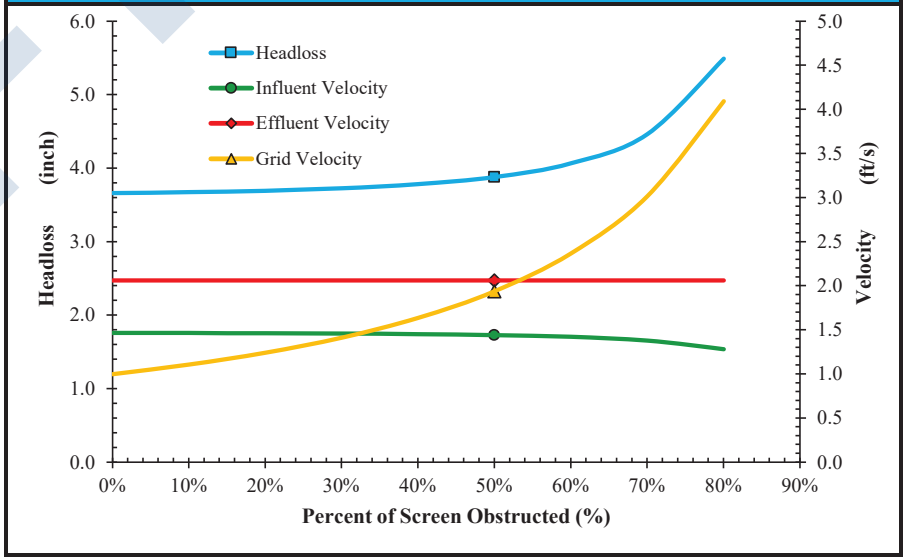

DRAFT

*ALL RIGHTS RESERVED. THE INFORMATION TRANSMITTED HEREIN IS THE PROPERTY OF HYDRO-DYNE ENGINEERING INC. AND HAS BEEN PROVIDED FOR RESTRICTIVE USE. THIS DATA MUST BE HELD CONFIDENTIAL AND TRANSMISSION, DUPLICATION OR DISCLOSURE IS PROHIBITED UNLESS AUTHORIZED IN WRITING BY HYDRO-DYNE ENGINEERING INC.

Great White Center Flow Screen Hydraulic Performance

HYDRO DYNE ENGINEERING

Tel: 813-818-0777 Fax: 813-818-0770

Project: San Luis, AZ - West WWTP
Date: 5/21/2025
Rep: JBI Water
By: STM **Checked:** JMB

Model # **CF** 26 – 30 – 144 – 6 — P

Fixed D_1 Condition @ 50% Obs		English Units		SI Units	
Q	Flow Rate	1.00 MGD	694 gpm	44 L/s	3785 m^3/d
D_1	Upstream Water Depth	12.00 in		305 mm	
D_2	Downstream Water Depth	9.88 in		251 mm	
ΔH	Total Headloss	2.12 in		54 mm	
F	Freeboard	54.00 in		1372 mm	
V_1	Influent Channel Velocity	1.03 ft/s		0.31 m/s	
V_T	Throat Velocity of Screen	2.80 ft/s		0.85 m/s	
V_G	Velocity Through Grid	1.30 ft/s		0.40 m/s	
V_{Re}	Recess Zone Velocity	1.56 ft/s		0.48 m/s	
V_2	Effluent Channel Velocity	1.25 ft/s		0.38 m/s	

Fixed D_2 Condition @ 50% Obs		English Units		SI Units	
Q	Flow Rate	1.00 MGD	694 gpm	44 L/s	3785 m^3/d
D_1	Upstream Water Depth	11.03 in		280 mm	
D_2	Downstream Water Depth	8.00 in		203 mm	
ΔH	Total Headloss	3.03 in		77 mm	
F	Freeboard	54.97 in		1396 mm	
V_1	Influent Channel Velocity	1.12 ft/s		0.34 m/s	
V_T	Throat Velocity of Screen	3.39 ft/s		1.03 m/s	
V_G	Velocity Through Grid	1.48 ft/s		0.45 m/s	
V_{Re}	Recess Zone Velocity	1.86 ft/s		0.57 m/s	
V_2	Effluent Channel Velocity	1.55 ft/s		0.47 m/s	

Screen Performance VS. Screen Blocking at Fixed D_1

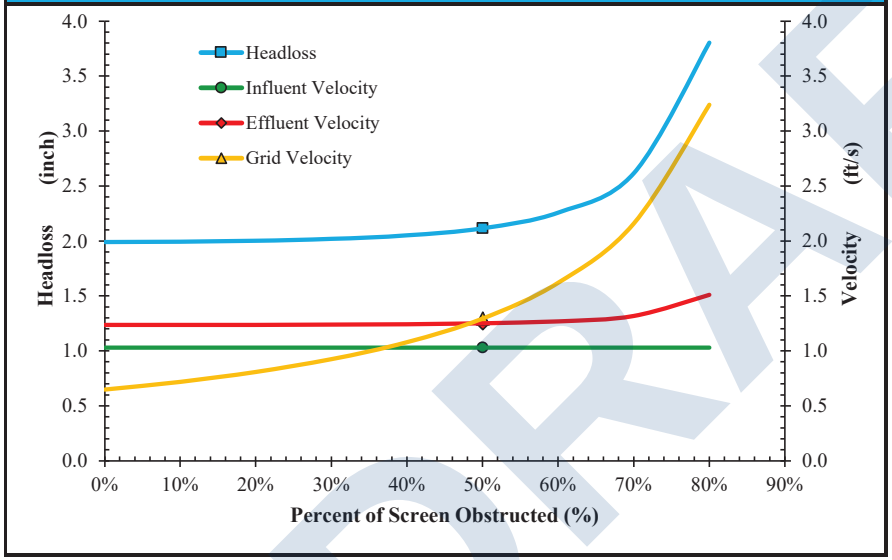

Screen Performance VS. Screen Blocking at Fixed D_2

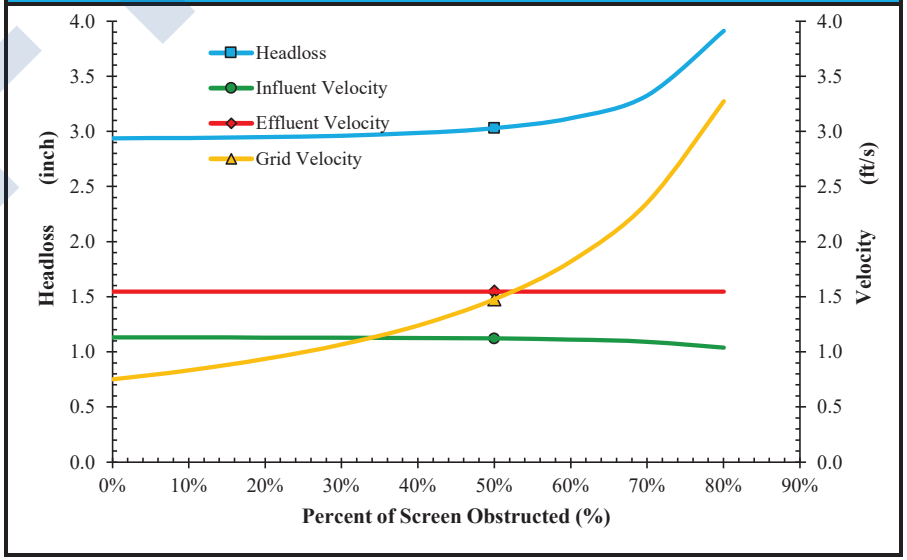

DRAFT

*ALL RIGHTS RESERVED. THE INFORMATION TRANSMITTED HEREIN IS THE PROPERTY OF HYDRO-DYNE ENGINEERING INC. AND HAS BEEN PROVIDED FOR RESTRICTIVE USE. THIS DATA MUST BE HELD CONFIDENTIAL AND TRANSMISSION, DUPLICATION OR DISCLOSURE IS PROHIBITED UNLESS AUTHORIZED IN WRITING BY HYDRO-DYNE ENGINEERING INC.

Great White Center Flow Screen Hydraulic Performance

HYDRO DYNE ENGINEERING
Tel: 813-818-0777 Fax: 813-818-0770

Project: San Luis, AZ - West WWTP
Date: 4/14/2025
Rep: JBI Water
By: STM **Checked:** JMB

Model # **CF** 26 – 30 – 144 – 6 — P

Fixed D_1 Condition @ 65% Obs		English Units		SI Units	
Q	Flow Rate	7.50 MGD	5208 gpm	329 L/s	28391 m^3/d
D_1	Upstream Water Depth	48.00 in		1219 mm	
D_2	Downstream Water Depth	43.26 in		1099 mm	
ΔH	Total Headloss	4.74 in		120 mm	
F	Freeboard	18.00 in		457 mm	
V_1	Influent Channel Velocity	1.93 ft/s		0.59 m/s	
V_T	Throat Velocity of Screen	2.82 ft/s		0.86 m/s	
V_G	Velocity Through Grid	3.69 ft/s		1.12 m/s	
V_{Re}	Recess Zone Velocity	2.70 ft/s		0.82 m/s	
V_2	Effluent Channel Velocity	2.15 ft/s		0.66 m/s	

Fixed D_2 Condition @ 65% Obs		English Units		SI Units	
Q	Flow Rate	7.50 MGD	5208 gpm	329 L/s	28391 m^3/d
D_1	Upstream Water Depth	43.12 in		1095 mm	
D_2	Downstream Water Depth	37.00 in		940 mm	
ΔH	Total Headloss	6.12 in		155 mm	
F	Freeboard	22.88 in		581 mm	
V_1	Influent Channel Velocity	2.15 ft/s		0.66 m/s	
V_T	Throat Velocity of Screen	3.20 ft/s		0.98 m/s	
V_G	Velocity Through Grid	4.12 ft/s		1.26 m/s	
V_{Re}	Recess Zone Velocity	3.11 ft/s		0.95 m/s	
V_2	Effluent Channel Velocity	2.51 ft/s		0.77 m/s	

Screen Performance VS. Screen Blocking at Fixed D_1

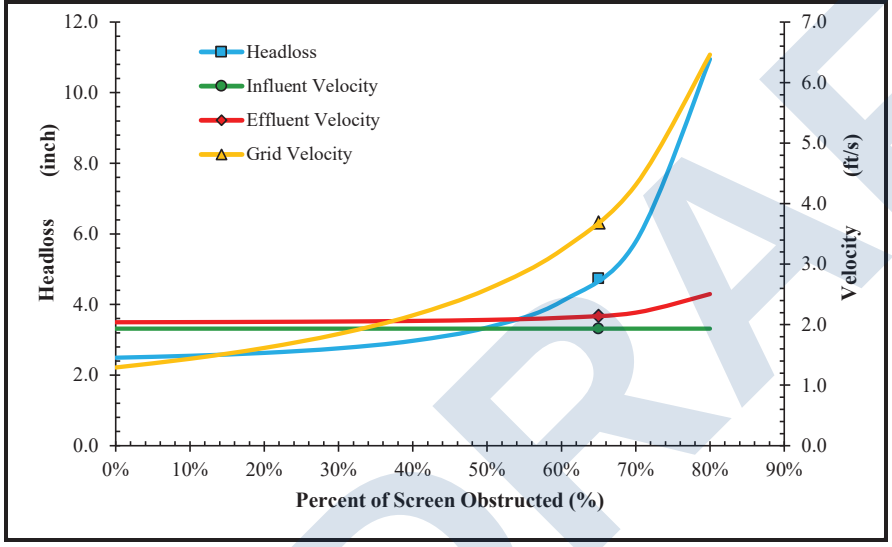

Screen Performance VS. Screen Blocking at Fixed D_2

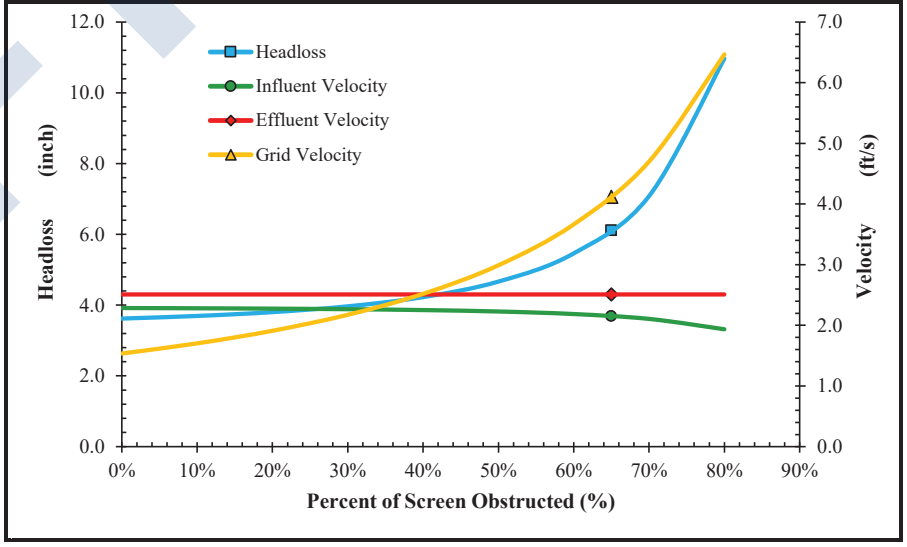

DRAFT

*ALL RIGHTS RESERVED. THE INFORMATION TRANSMITTED HEREIN IS THE PROPERTY OF HYDRO-DYNE ENGINEERING INC. AND HAS BEEN PROVIDED FOR RESTRICTIVE USE. THIS DATA MUST BE HELD CONFIDENTIAL AND TRANSMISSION, DUPLICATION OR DISCLOSURE IS PROHIBITED UNLESS AUTHORIZED IN WRITING BY HYDRO-DYNE ENGINEERING INC.

Great White Center Flow Screen Hydraulic Performance

HYDRO DYNE ENGINEERING
Tel: 813-818-0777 Fax: 813-818-0770

Project: San Luis, AZ - West WWTP
Date: 4/14/2025
Rep: JBI Water
By: STM **Checked:** JMB

Model # **CF** 26 – 30 – 144 – 6 — P

Fixed D_1 Condition @ 65% Obs		English Units		SI Units	
Q	Flow Rate	3.00 MGD	2083 gpm	131 L/s	11356 m^3/d
D_1	Upstream Water Depth	24.00 in		610 mm	
D_2	Downstream Water Depth	20.66 in		525 mm	
ΔH	Total Headloss	3.34 in		85 mm	
F	Freeboard	42.00 in		1067 mm	
V_1	Influent Channel Velocity	1.55 ft/s		0.47 m/s	
V_T	Throat Velocity of Screen	2.67 ft/s		0.81 m/s	
V_G	Velocity Through Grid	2.87 ft/s		0.87 m/s	
V_{Re}	Recess Zone Velocity	2.24 ft/s		0.68 m/s	
V_2	Effluent Channel Velocity	1.80 ft/s		0.55 m/s	

Fixed D_2 Condition @ 65% Obs		English Units		SI Units	
Q	Flow Rate	3.00 MGD	2083 gpm	131 L/s	11356 m^3/d
D_1	Upstream Water Depth	20.33 in		516 mm	
D_2	Downstream Water Depth	15.00 in		381 mm	
ΔH	Total Headloss	5.33 in		135 mm	
F	Freeboard	45.67 in		1160 mm	
V_1	Influent Channel Velocity	1.83 ft/s		0.56 m/s	
V_T	Throat Velocity of Screen	3.37 ft/s		1.03 m/s	
V_G	Velocity Through Grid	3.45 ft/s		1.05 m/s	
V_{Re}	Recess Zone Velocity	2.92 ft/s		0.89 m/s	
V_2	Effluent Channel Velocity	2.48 ft/s		0.76 m/s	

Screen Performance VS. Screen Blocking at Fixed D_1

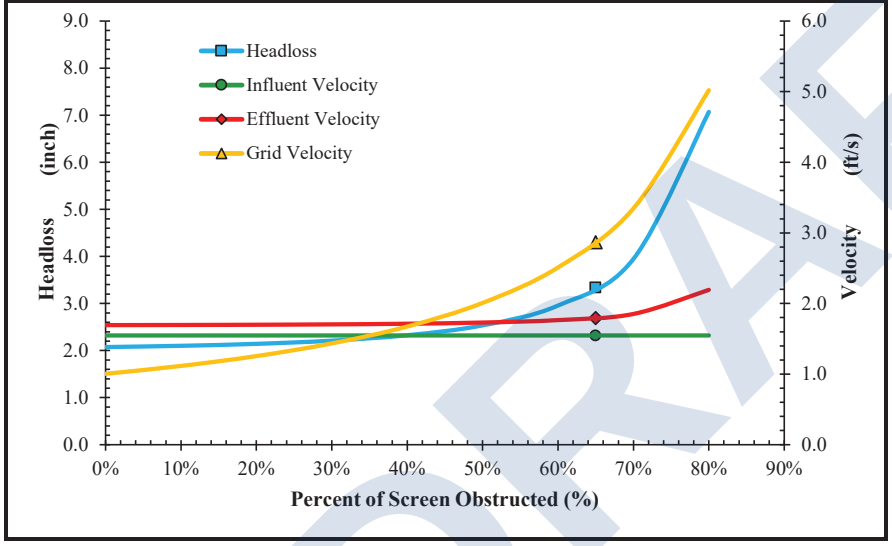

Screen Performance VS. Screen Blocking at Fixed D_2

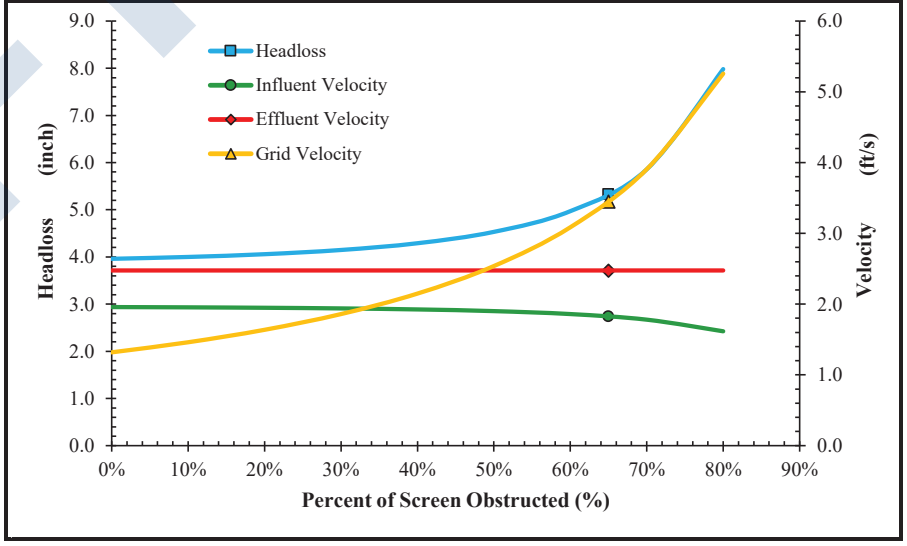

DRAFT

*ALL RIGHTS RESERVED. THE INFORMATION TRANSMITTED HEREIN IS THE PROPERTY OF HYDRO-DYNE ENGINEERING INC. AND HAS BEEN PROVIDED FOR RESTRICTIVE USE. THIS DATA MUST BE HELD CONFIDENTIAL AND TRANSMISSION, DUPLICATION OR DISCLOSURE IS PROHIBITED UNLESS AUTHORIZED IN WRITING BY HYDRO-DYNE ENGINEERING INC.

Great White Center Flow Screen Hydraulic Performance

HYDRO DYNE ENGINEERING

Tel: 813-818-0777 Fax: 813-818-0770

Project: San Luis, AZ - West WWTP
Date: 5/21/2025
Rep: JBI Water
By: STM **Checked:** JMB

Model # **CF** 26 – 30 – 144 – 6 — P

Fixed D_1 Condition @ 65% Obs		English Units		SI Units	
Q	Flow Rate	2.25 MGD	1562 gpm	99 L/s	8517 m^3/d
D_1	Upstream Water Depth	19.00 in		483 mm	
D_2	Downstream Water Depth	15.71 in		399 mm	
ΔH	Total Headloss	3.29 in		84 mm	
F	Freeboard	47.00 in		1194 mm	
V_1	Influent Channel Velocity	1.47 ft/s		0.45 m/s	
V_T	Throat Velocity of Screen	2.80 ft/s		0.85 m/s	
V_G	Velocity Through Grid	2.70 ft/s		0.82 m/s	
V_{Re}	Recess Zone Velocity	2.18 ft/s		0.66 m/s	
V_2	Effluent Channel Velocity	1.77 ft/s		0.54 m/s	

Fixed D_2 Condition @ 65% Obs		English Units		SI Units	
Q	Flow Rate	2.25 MGD	1562 gpm	99 L/s	8517 m^3/d
D_1	Upstream Water Depth	16.34 in		415 mm	
D_2	Downstream Water Depth	11.00 in		279 mm	
ΔH	Total Headloss	5.34 in		136 mm	
F	Freeboard	49.66 in		1261 mm	
V_1	Influent Channel Velocity	1.70 ft/s		0.52 m/s	
V_T	Throat Velocity of Screen	3.55 ft/s		1.08 m/s	
V_G	Velocity Through Grid	3.24 ft/s		0.99 m/s	
V_{Re}	Recess Zone Velocity	2.89 ft/s		0.88 m/s	
V_2	Effluent Channel Velocity	2.53 ft/s		0.77 m/s	

Screen Performance VS. Screen Blocking at Fixed D_1

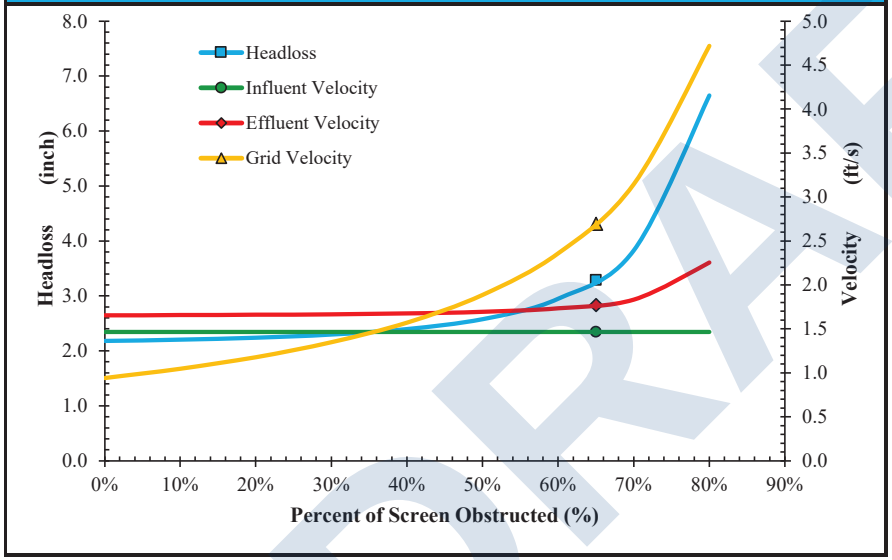

Screen Performance VS. Screen Blocking at Fixed D_2

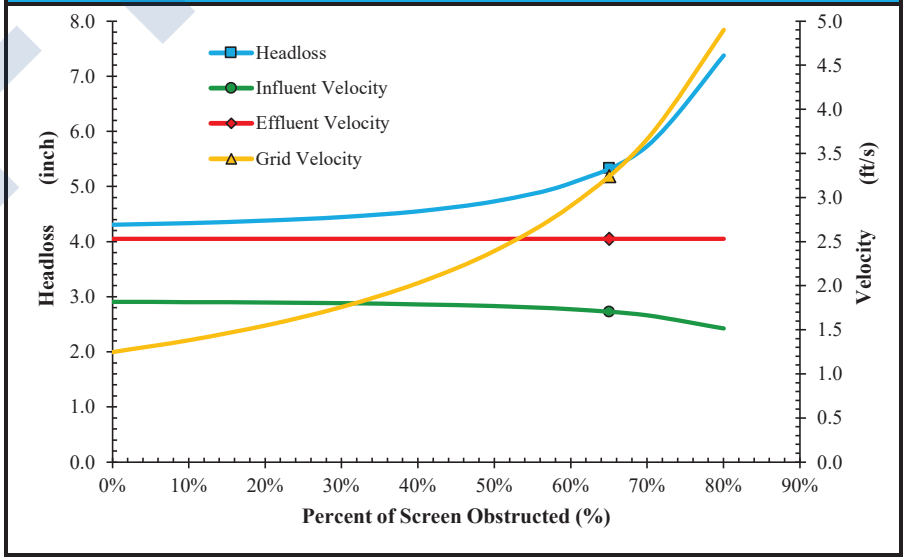

DRAFT

*ALL RIGHTS RESERVED. THE INFORMATION TRANSMITTED HEREIN IS THE PROPERTY OF HYDRO-DYNE ENGINEERING INC. AND HAS BEEN PROVIDED FOR RESTRICTIVE USE. THIS DATA MUST BE HELD CONFIDENTIAL AND TRANSMISSION, DUPLICATION OR DISCLOSURE IS PROHIBITED UNLESS AUTHORIZED IN WRITING BY HYDRO-DYNE ENGINEERING INC.

Great White Center Flow Screen Hydraulic Performance

HYDRO DYNE ENGINEERING

Tel: 813-818-0777 Fax: 813-818-0770

Project: San Luis, AZ - West WWTP
Date: 5/21/2025
Rep: JBI Water
By: STM **Checked:** JMB

Model # **CF** 26 – 30 – 144 – 6 — P

Fixed D_1 Condition @ 65% Obs		English Units		SI Units	
Q	Flow Rate	1.50 MGD	1042 gpm	66 L/s	5678 m^3/d
D_1	Upstream Water Depth	15.00 in		381 mm	
D_2	Downstream Water Depth	12.32 in		313 mm	
ΔH	Total Headloss	2.68 in		68 mm	
F	Freeboard	51.00 in		1295 mm	
V_1	Influent Channel Velocity	1.24 ft/s		0.38 m/s	
V_T	Throat Velocity of Screen	2.73 ft/s		0.83 m/s	
V_G	Velocity Through Grid	2.24 ft/s		0.68 m/s	
V_{Re}	Recess Zone Velocity	1.86 ft/s		0.57 m/s	
V_2	Effluent Channel Velocity	1.51 ft/s		0.46 m/s	

Fixed D_2 Condition @ 65% Obs		English Units		SI Units	
Q	Flow Rate	1.50 MGD	1042 gpm	66 L/s	5678 m^3/d
D_1	Upstream Water Depth	13.22 in		336 mm	
D_2	Downstream Water Depth	9.00 in		229 mm	
ΔH	Total Headloss	4.22 in		107 mm	
F	Freeboard	52.78 in		1341 mm	
V_1	Influent Channel Velocity	1.40 ft/s		0.43 m/s	
V_T	Throat Velocity of Screen	3.45 ft/s		1.05 m/s	
V_G	Velocity Through Grid	2.65 ft/s		0.81 m/s	
V_{Re}	Recess Zone Velocity	2.40 ft/s		0.73 m/s	
V_2	Effluent Channel Velocity	2.06 ft/s		0.63 m/s	

Screen Performance VS. Screen Blocking at Fixed D_1

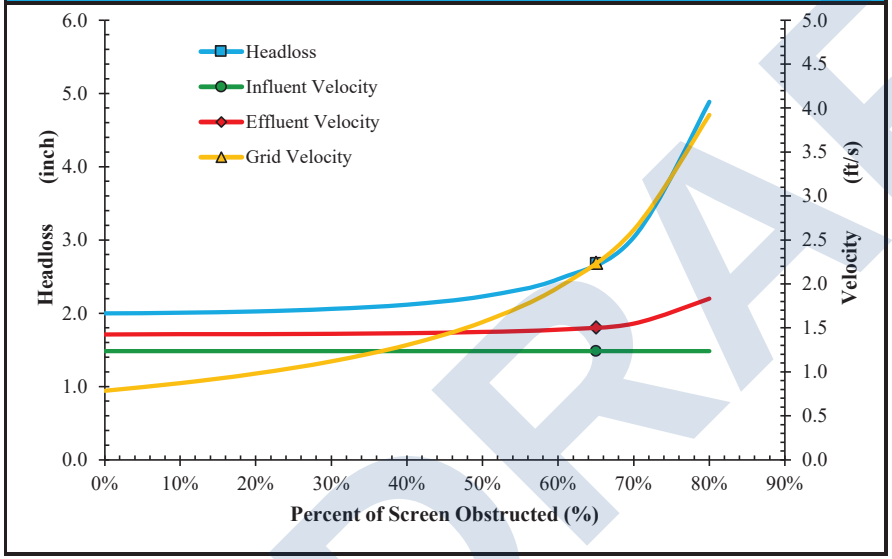

Screen Performance VS. Screen Blocking at Fixed D_2

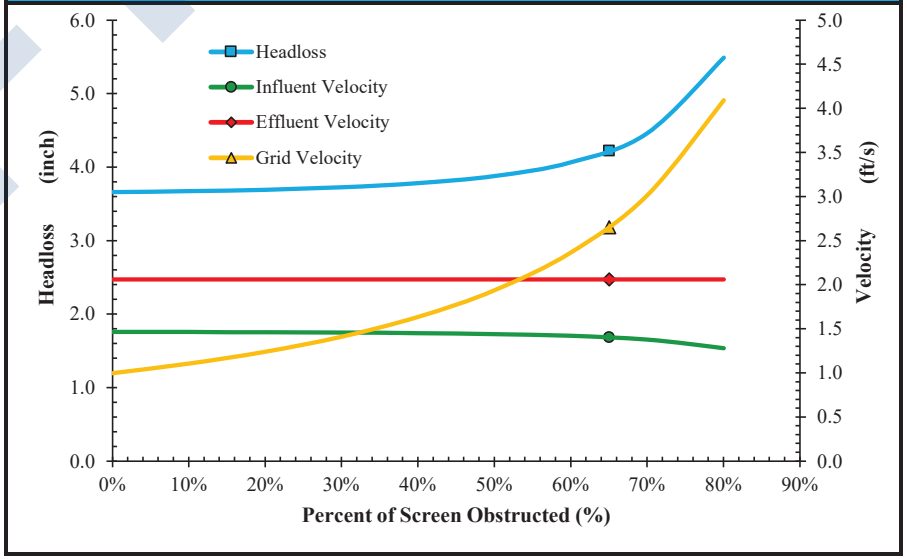

DRAFT

*ALL RIGHTS RESERVED. THE INFORMATION TRANSMITTED HEREIN IS THE PROPERTY OF HYDRO-DYNE ENGINEERING INC. AND HAS BEEN PROVIDED FOR RESTRICTIVE USE. THIS DATA MUST BE HELD CONFIDENTIAL AND TRANSMISSION, DUPLICATION OR DISCLOSURE IS PROHIBITED UNLESS AUTHORIZED IN WRITING BY HYDRO-DYNE ENGINEERING INC.

Great White Center Flow Screen Hydraulic Performance

HYDRO DYNE ENGINEERING

Tel: 813-818-0777 Fax: 813-818-0770

Project: San Luis, AZ - West WWTP
Date: 5/21/2025
Rep: JBI Water
By: STM **Checked:** JMB

Model # **CF** 26 – 30 – 144 – 6 — P

Fixed D_1 Condition @ 65% Obs		English Units		SI Units	
Q	Flow Rate	1.00 MGD	694 gpm	44 L/s	3785 m^3/d
D_1	Upstream Water Depth	12.00 in		305 mm	
D_2	Downstream Water Depth	9.60 in		244 mm	
ΔH	Total Headloss	2.40 in		61 mm	
F	Freeboard	54.00 in		1372 mm	
V_1	Influent Channel Velocity	1.03 ft/s		0.31 m/s	
V_T	Throat Velocity of Screen	2.80 ft/s		0.85 m/s	
V_G	Velocity Through Grid	1.85 ft/s		0.56 m/s	
V_{Re}	Recess Zone Velocity	1.60 ft/s		0.49 m/s	
V_2	Effluent Channel Velocity	1.29 ft/s		0.39 m/s	

Fixed D_2 Condition @ 65% Obs		English Units		SI Units	
Q	Flow Rate	1.00 MGD	694 gpm	44 L/s	3785 m^3/d
D_1	Upstream Water Depth	10.81 in		275 mm	
D_2	Downstream Water Depth	7.00 in		178 mm	
ΔH	Total Headloss	3.81 in		97 mm	
F	Freeboard	55.19 in		1402 mm	
V_1	Influent Channel Velocity	1.15 ft/s		0.35 m/s	
V_T	Throat Velocity of Screen	3.56 ft/s		1.09 m/s	
V_G	Velocity Through Grid	2.19 ft/s		0.67 m/s	
V_{Re}	Recess Zone Velocity	2.07 ft/s		0.63 m/s	
V_2	Effluent Channel Velocity	1.77 ft/s		0.54 m/s	

Screen Performance VS. Screen Blocking at Fixed D_1

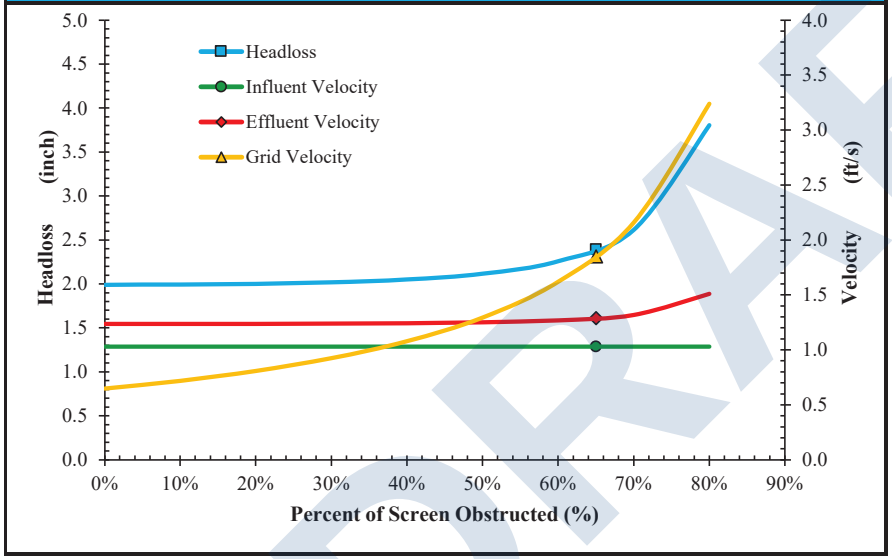

Screen Performance VS. Screen Blocking at Fixed D_2

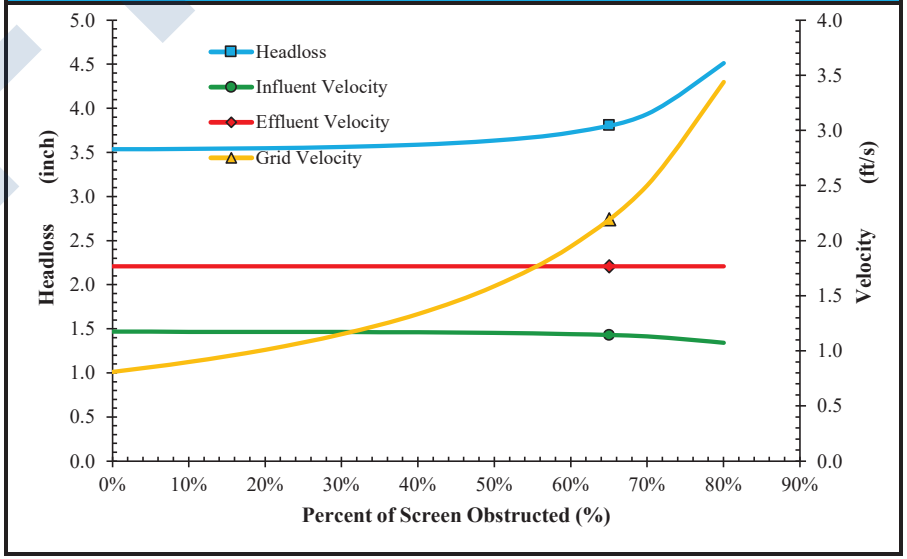

DRAFT

*ALL RIGHTS RESERVED. THE INFORMATION TRANSMITTED HEREIN IS THE PROPERTY OF HYDRO-DYNE ENGINEERING INC. AND HAS BEEN PROVIDED FOR RESTRICTIVE USE. THIS DATA MUST BE HELD CONFIDENTIAL AND TRANSMISSION, DUPLICATION OR DISCLOSURE IS PROHIBITED UNLESS AUTHORIZED IN WRITING BY HYDRO-DYNE ENGINEERING INC.

Great White Center Flow Screen Equipment Sizing

HYDRO DYNE ENGINEERING
Tel: 813-818-0777 Fax: 813-818-0770

Project: San Luis, AZ - West WWTP
Date: 4/14/2025
Rep: JBI Water
By: STM **Checked:** JMB

Model # **CF** 26 – 49 – 176 – 2 – P

Channel Dimensions:		English Units	SI Units
C	Channel Width	18.00 in	457 mm
H	Channel Height	102.00 in	2591 mm
Rc	Recess Width,	36.00 in	914 mm
Rd	Channel Recess Depth	69.47 in	1765 mm
TC	Height from Grade to Top of Channel	0.00 in	0 mm

Equipment Dimensions:		English Units	SI Units
L	Length of Screen	159.77 in	4058 mm
W	Width of Screen	26.00 in	660 mm
Ds	Depth of Screen	49.47 in	1257 mm
Y	Discharge Height from the Sluice	9.50 in	241 mm
Screen Grid Parameters:			
S	Grid Opening Spacing	Perf 2mm metal	
Obs	Percent of Screen Obstructed 0 %	Hook Link	12 ga
OA_{eff}*	Effective Percent of Grid Opening 50.00 %	Straight Link	12 ga

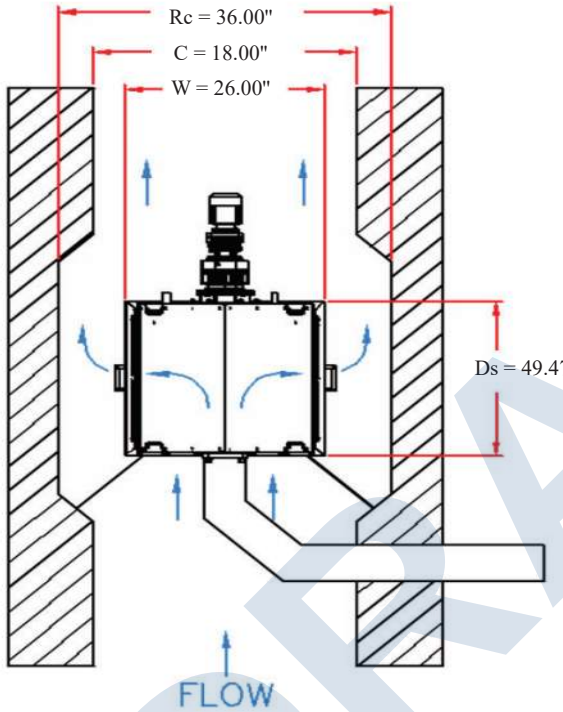

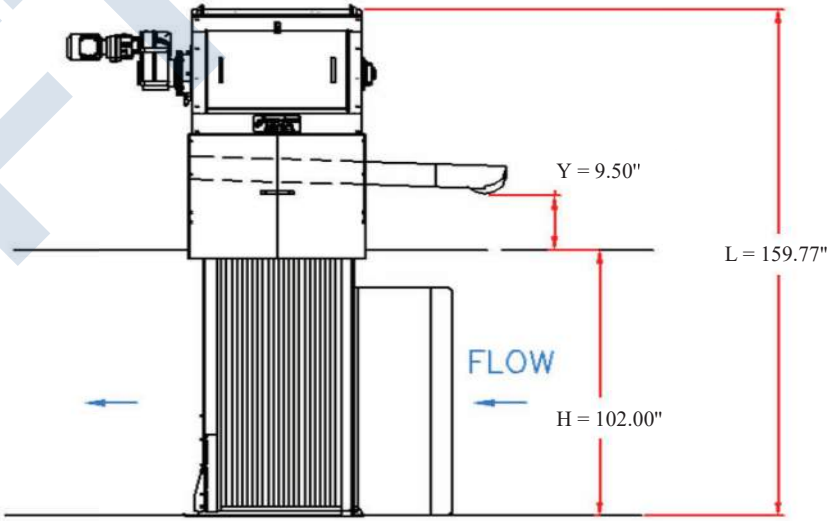

NOTE: Image is not to Scale. Orientation of Equipment Subject to Change Depending on Layout Requirements.
NOTE: * Effective Percent of Grid Opening = Percent of Grid Opening at 2mm Opening × (1 - Proposed 0% of Screen Obstructed).

*ALL RIGHTS RESERVED. THE INFORMATION TRANSMITTED HEREIN IS THE PROPERTY OF HYDRO-DYNE ENGINEERING INC. AND HAS BEEN PROVIDED FOR RESTRICTIVE USE. THIS DATA MUST BE HELD CONFIDENTIAL AND TRANSMISSION, DUPLICATION OR DISCLOSURE IS PROHIBITED UNLESS AUTHORIZED IN WRITING BY HYDRO-DYNE ENGINEERING INC.

DRAFT

Great White Center Flow Screen Hydraulic Performance

HYDRO DYNE ENGINEERING
Tel: 813-818-0777 Fax: 813-818-0770

Project: San Luis, AZ - West WWTP
Date: 4/14/2025
Rep: JBI Water
By: STM **Checked:** JMB

Model # **CF** 26 – 49 – 176 – 2 — P

Fixed D_1 Condition @ 0% Obs		English Units		SI Units	
Q	Flow Rate	7.50 MGD	5208 gpm	329 L/s	28391 m^3/d
D_1	Upstream Water Depth	52.00 in		1321 mm	
D_2	Downstream Water Depth	48.49 in		1232 mm	
ΔH	Total Headloss	3.51 in		89 mm	
F	Freeboard	50.00 in		1270 mm	
V_1	Influent Channel Velocity	1.79 ft/s		0.55 m/s	
V_T	Throat Velocity of Screen	2.57 ft/s		0.78 m/s	
V_G	Velocity Through Grid	0.91 ft/s		0.28 m/s	
V_{Re}	Recess Zone Velocity	2.43 ft/s		0.74 m/s	
V_2	Effluent Channel Velocity	1.91 ft/s		0.58 m/s	

Fixed D_2 Condition @ 0% Obs		English Units		SI Units	
Q	Flow Rate	7.50 MGD	5208 gpm	329 L/s	28391 m^3/d
D_1	Upstream Water Depth	39.87 in		1013 mm	
D_2	Downstream Water Depth	34.00 in		864 mm	
ΔH	Total Headloss	5.87 in		149 mm	
F	Freeboard	62.13 in		1578 mm	
V_1	Influent Channel Velocity	2.33 ft/s		0.71 m/s	
V_T	Throat Velocity of Screen	3.51 ft/s		1.07 m/s	
V_G	Velocity Through Grid	1.19 ft/s		0.36 m/s	
V_{Re}	Recess Zone Velocity	3.34 ft/s		1.02 m/s	
V_2	Effluent Channel Velocity	2.73 ft/s		0.83 m/s	

Screen Performance VS. Screen Blocking at Fixed D_1

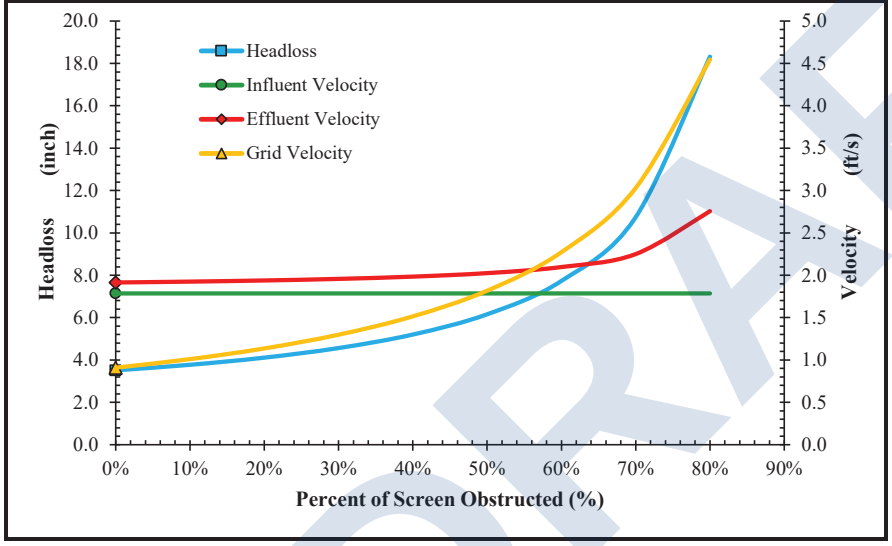

Screen Performance VS. Screen Blocking at Fixed D_2

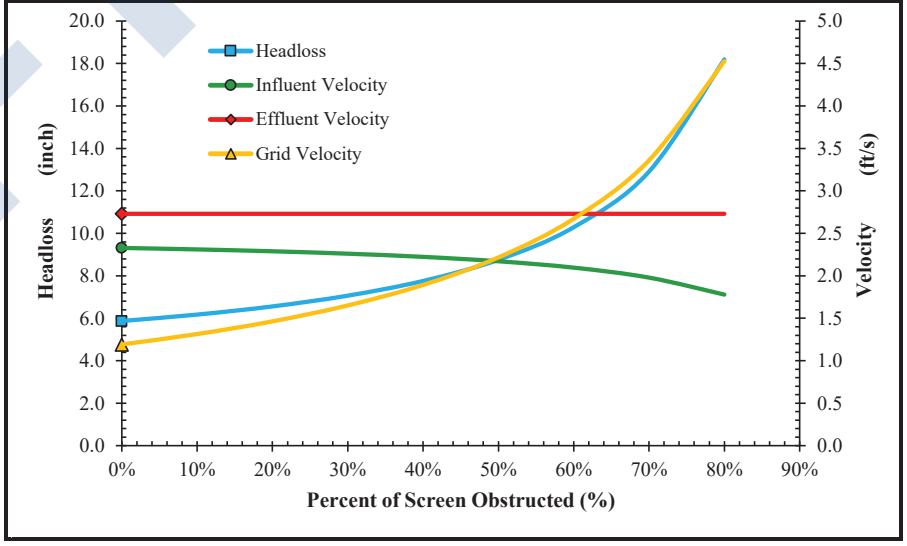

DRAFT

*ALL RIGHTS RESERVED. THE INFORMATION TRANSMITTED HEREIN IS THE PROPERTY OF HYDRO-DYNE ENGINEERING INC. AND HAS BEEN PROVIDED FOR RESTRICTIVE USE. THIS DATA MUST BE HELD CONFIDENTIAL AND TRANSMISSION, DUPLICATION OR DISCLOSURE IS PROHIBITED UNLESS AUTHORIZED IN WRITING BY HYDRO-DYNE ENGINEERING INC.

Great White Center Flow Screen Hydraulic Performance

HYDRO DYNE ENGINEERING
Tel: 813-818-0777 Fax: 813-818-0770

Project: San Luis, AZ - West WWTP
Date: 4/14/2025
Rep: JBI Water
By: STM **Checked:** JMB

Model # **CF** 26 – 49 – 176 – 2 — P

Fixed D_1 Condition @ 0% Obs		English Units		SI Units	
Q	Flow Rate	3.00 MGD	2083 gpm	131 L/s	11356 m^3/d
D_1	Upstream Water Depth	26.00 in		660 mm	
D_2	Downstream Water Depth	23.28 in		591 mm	
ΔH	Total Headloss	2.72 in		69 mm	
F	Freeboard	76.00 in		1930 mm	
V_1	Influent Channel Velocity	1.43 ft/s		0.44 m/s	
V_T	Throat Velocity of Screen	2.40 ft/s		0.73 m/s	
V_G	Velocity Through Grid	0.70 ft/s		0.21 m/s	
V_{Re}	Recess Zone Velocity	2.00 ft/s		0.61 m/s	
V_2	Effluent Channel Velocity	1.59 ft/s		0.48 m/s	

Fixed D_2 Condition @ 0% Obs		English Units		SI Units	
Q	Flow Rate	3.00 MGD	2083 gpm	131 L/s	11356 m^3/d
D_1	Upstream Water Depth	18.39 in		467 mm	
D_2	Downstream Water Depth	12.00 in		305 mm	
ΔH	Total Headloss	6.39 in		162 mm	
F	Freeboard	83.61 in		2124 mm	
V_1	Influent Channel Velocity	2.02 ft/s		0.62 m/s	
V_T	Throat Velocity of Screen	3.92 ft/s		1.19 m/s	
V_G	Velocity Through Grid	1.04 ft/s		0.32 m/s	
V_{Re}	Recess Zone Velocity	3.41 ft/s		1.04 m/s	
V_2	Effluent Channel Velocity	3.09 ft/s		0.94 m/s	

Screen Performance VS. Screen Blocking at Fixed D_1

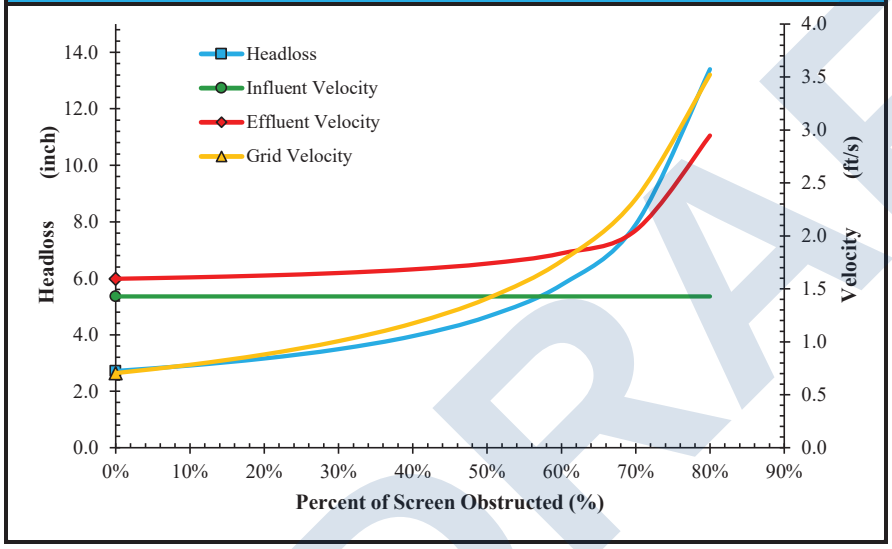

Screen Performance VS. Screen Blocking at Fixed D_2

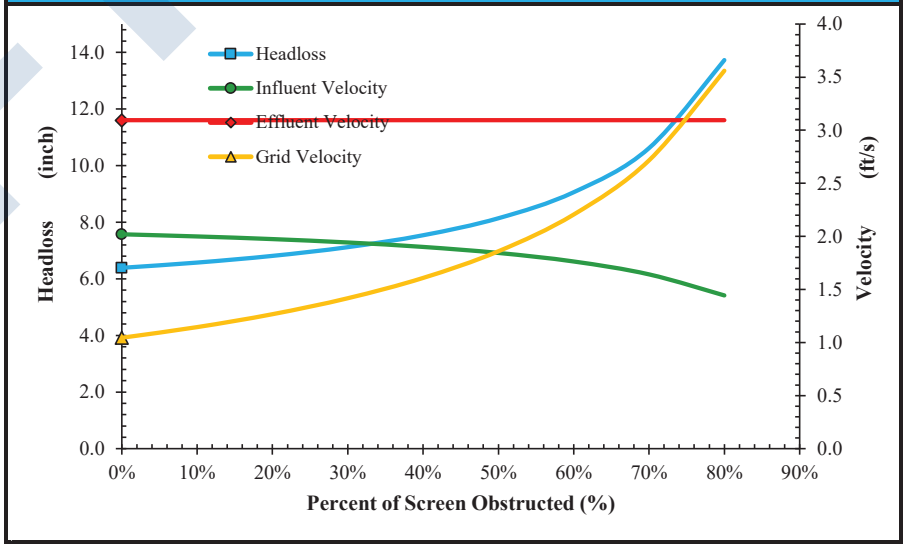

DRAFT

*ALL RIGHTS RESERVED. THE INFORMATION TRANSMITTED HEREIN IS THE PROPERTY OF HYDRO-DYNE ENGINEERING INC. AND HAS BEEN PROVIDED FOR RESTRICTIVE USE. THIS DATA MUST BE HELD CONFIDENTIAL AND TRANSMISSION, DUPLICATION OR DISCLOSURE IS PROHIBITED UNLESS AUTHORIZED IN WRITING BY HYDRO-DYNE ENGINEERING INC.

Great White Center Flow Screen Hydraulic Performance

HYDRO DYNE ENGINEERING

Tel: 813-818-0777 Fax: 813-818-0770

Project: San Luis, AZ - West WWTP
Date: 5/21/2025
Rep: JBI Water
By: STM **Checked:** JMB

Model # **CF** 26 – 49 – 176 – 2 — P

Fixed D_1 Condition @ 0% Obs		English Units		SI Units	
Q	Flow Rate	2.25 MGD	1562 gpm	99 L/s	8517 m^3/d
D_1	Upstream Water Depth	19.00 in		483 mm	
D_2	Downstream Water Depth	15.75 in		400 mm	
ΔH	Total Headloss	3.25 in		83 mm	
F	Freeboard	83.00 in		2108 mm	
V_1	Influent Channel Velocity	1.47 ft/s		0.45 m/s	
V_T	Throat Velocity of Screen	2.80 ft/s		0.85 m/s	
V_G	Velocity Through Grid	0.72 ft/s		0.22 m/s	
V_{Re}	Recess Zone Velocity	2.17 ft/s		0.66 m/s	
V_2	Effluent Channel Velocity	1.77 ft/s		0.54 m/s	

Fixed D_2 Condition @ 0% Obs		English Units		SI Units	
Q	Flow Rate	2.25 MGD	1562 gpm	99 L/s	8517 m^3/d
D_1	Upstream Water Depth	16.65 in		423 mm	
D_2	Downstream Water Depth	12.00 in		305 mm	
ΔH	Total Headloss	4.65 in		118 mm	
F	Freeboard	85.35 in		2168 mm	
V_1	Influent Channel Velocity	1.67 ft/s		0.51 m/s	
V_T	Throat Velocity of Screen	3.44 ft/s		1.05 m/s	
V_G	Velocity Through Grid	0.84 ft/s		0.26 m/s	
V_{Re}	Recess Zone Velocity	2.71 ft/s		0.83 m/s	
V_2	Effluent Channel Velocity	2.32 ft/s		0.71 m/s	

Screen Performance VS. Screen Blocking at Fixed D_1

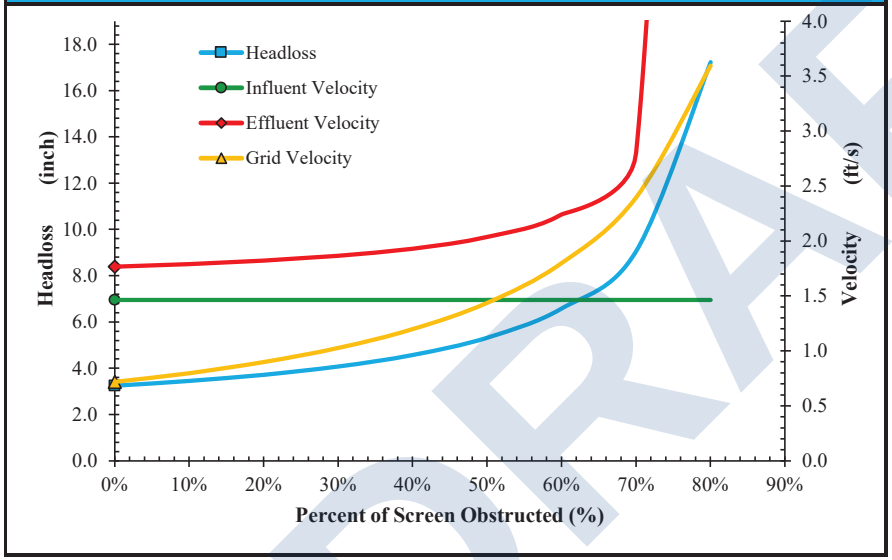

Screen Performance VS. Screen Blocking at Fixed D_2

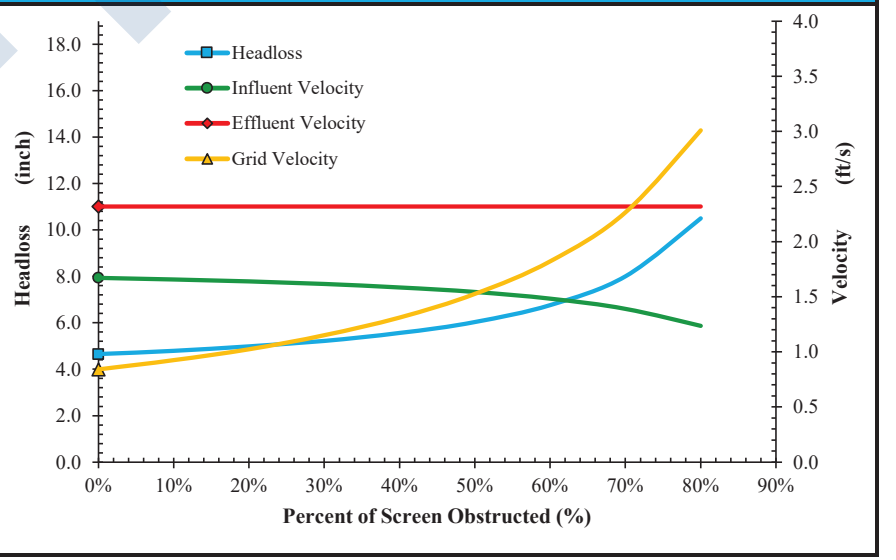

DRAFT

*ALL RIGHTS RESERVED. THE INFORMATION TRANSMITTED HEREIN IS THE PROPERTY OF HYDRO-DYNE ENGINEERING INC. AND HAS BEEN PROVIDED FOR RESTRICTIVE USE. THIS DATA MUST BE HELD CONFIDENTIAL AND TRANSMISSION, DUPLICATION OR DISCLOSURE IS PROHIBITED UNLESS AUTHORIZED IN WRITING BY HYDRO-DYNE ENGINEERING INC.

Great White Center Flow Screen Hydraulic Performance

HYDRO DYNE ENGINEERING

Tel: 813-818-0777 Fax: 813-818-0770

Project: San Luis, AZ - West WWTP
Date: 5/21/2025
Rep: JBI Water
By: STM **Checked:** JMB

Model # **CF** 26 – 49 – 176 – 2 — P

Fixed D_1 Condition @ 0% Obs		English Units		SI Units	
Q	Flow Rate	1.50 MGD	1042 gpm	66 L/s	5678 m^3/d
D_1	Upstream Water Depth	15.00 in		381 mm	
D_2	Downstream Water Depth	12.20 in		310 mm	
ΔH	Total Headloss	2.80 in		71 mm	
F	Freeboard	87.00 in		2210 mm	
V_1	Influent Channel Velocity	1.24 ft/s		0.38 m/s	
V_T	Throat Velocity of Screen	2.73 ft/s		0.83 m/s	
V_G	Velocity Through Grid	0.60 ft/s		0.18 m/s	
V_{Re}	Recess Zone Velocity	1.87 ft/s		0.57 m/s	
V_2	Effluent Channel Velocity	1.52 ft/s		0.46 m/s	

Fixed D_2 Condition @ 0% Obs		English Units		SI Units	
Q	Flow Rate	1.50 MGD	1042 gpm	66 L/s	5678 m^3/d
D_1	Upstream Water Depth	13.21 in		336 mm	
D_2	Downstream Water Depth	9.00 in		229 mm	
ΔH	Total Headloss	4.21 in		107 mm	
F	Freeboard	88.79 in		2255 mm	
V_1	Influent Channel Velocity	1.41 ft/s		0.43 m/s	
V_T	Throat Velocity of Screen	3.45 ft/s		1.05 m/s	
V_G	Velocity Through Grid	0.71 ft/s		0.22 m/s	
V_{Re}	Recess Zone Velocity	2.40 ft/s		0.73 m/s	
V_2	Effluent Channel Velocity	2.06 ft/s		0.63 m/s	

Screen Performance VS. Screen Blocking at Fixed D_1

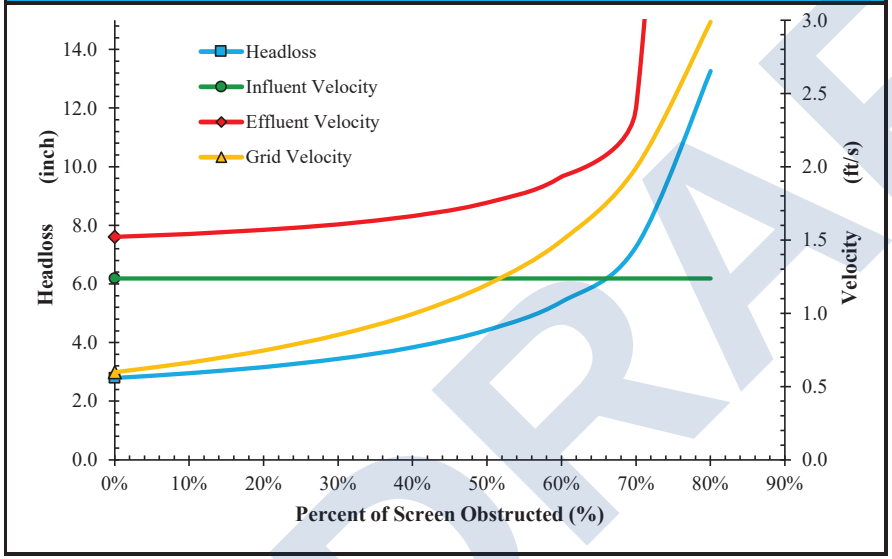

Screen Performance VS. Screen Blocking at Fixed D_2

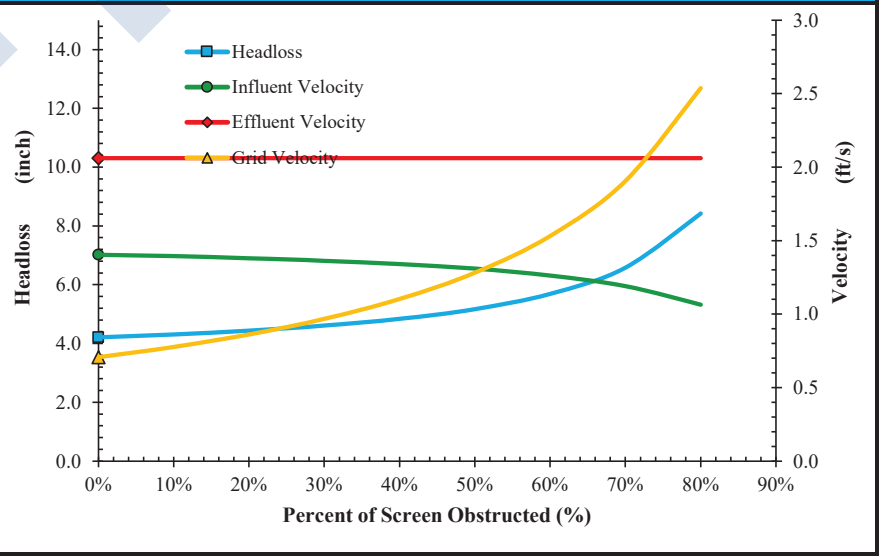

DRAFT

*ALL RIGHTS RESERVED. THE INFORMATION TRANSMITTED HEREIN IS THE PROPERTY OF HYDRO-DYNE ENGINEERING INC. AND HAS BEEN PROVIDED FOR RESTRICTIVE USE. THIS DATA MUST BE HELD CONFIDENTIAL AND TRANSMISSION, DUPLICATION OR DISCLOSURE IS PROHIBITED UNLESS AUTHORIZED IN WRITING BY HYDRO-DYNE ENGINEERING INC.

Great White Center Flow Screen Hydraulic Performance

HYDRO DYNE ENGINEERING

Tel: 813-818-0777 Fax: 813-818-0770

Project: San Luis, AZ - West WWTP
Date: 5/21/2025
Rep: JBI Water
By: STM **Checked:** JMB

Model # **CF** 26 – 49 – 176 – 2 — P

Fixed D_1 Condition @ 0% Obs		English Units		SI Units	
Q	Flow Rate	1.00 MGD	694 gpm	44 L/s	3785 m^3/d
D_1	Upstream Water Depth	12.00 in		305 mm	
D_2	Downstream Water Depth	9.44 in		240 mm	
ΔH	Total Headloss	2.56 in		65 mm	
F	Freeboard	90.00 in		2286 mm	
V_1	Influent Channel Velocity	1.03 ft/s		0.31 m/s	
V_T	Throat Velocity of Screen	2.80 ft/s		0.85 m/s	
V_G	Velocity Through Grid	0.49 ft/s		0.15 m/s	
V_{Re}	Recess Zone Velocity	1.62 ft/s		0.49 m/s	
V_2	Effluent Channel Velocity	1.31 ft/s		0.40 m/s	

Fixed D_2 Condition @ 0% Obs		English Units		SI Units	
Q	Flow Rate	1.00 MGD	694 gpm	44 L/s	3785 m^3/d
D_1	Upstream Water Depth	10.86 in		276 mm	
D_2	Downstream Water Depth	7.00 in		178 mm	
ΔH	Total Headloss	3.86 in		98 mm	
F	Freeboard	91.14 in		2315 mm	
V_1	Influent Channel Velocity	1.14 ft/s		0.35 m/s	
V_T	Throat Velocity of Screen	3.52 ft/s		1.07 m/s	
V_G	Velocity Through Grid	0.58 ft/s		0.18 m/s	
V_{Re}	Recess Zone Velocity	2.06 ft/s		0.63 m/s	
V_2	Effluent Channel Velocity	1.77 ft/s		0.54 m/s	

Screen Performance VS. Screen Blocking at Fixed D_1

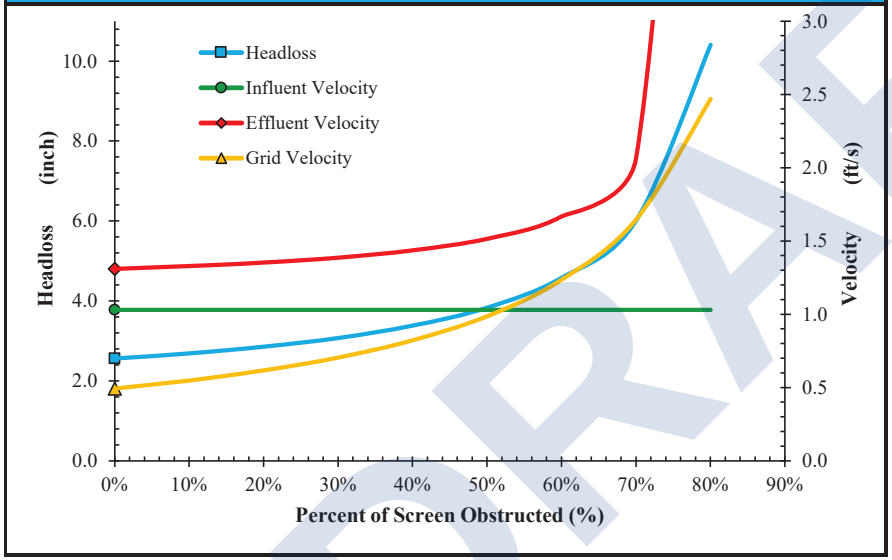

Screen Performance VS. Screen Blocking at Fixed D_2

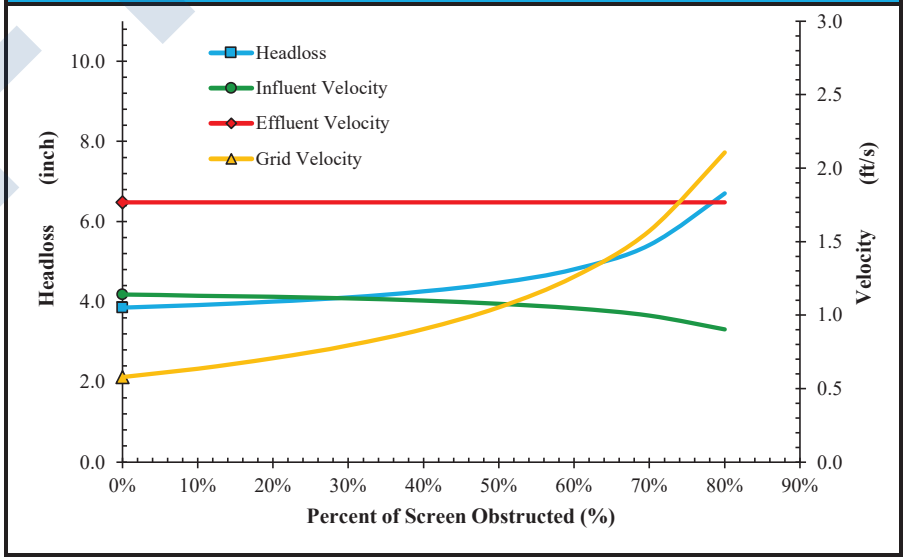

DRAFT

*ALL RIGHTS RESERVED. THE INFORMATION TRANSMITTED HEREIN IS THE PROPERTY OF HYDRO-DYNE ENGINEERING INC. AND HAS BEEN PROVIDED FOR RESTRICTIVE USE. THIS DATA MUST BE HELD CONFIDENTIAL AND TRANSMISSION, DUPLICATION OR DISCLOSURE IS PROHIBITED UNLESS AUTHORIZED IN WRITING BY HYDRO-DYNE ENGINEERING INC.

Great White Center Flow Screen Hydraulic Performance

HYDRO DYNE ENGINEERING
Tel: 813-818-0777 Fax: 813-818-0770

Project: San Luis, AZ - West WWTP
Date: 4/14/2025
Rep: JBI Water
By: STM **Checked:** JMB

Model # **CF** 26 – 49 – 176 – 2 — P

Fixed D_1 Condition @ 30% Obs		English Units		SI Units	
Q	Flow Rate	7.50 MGD	5208 gpm	329 L/s	28391 m^3/d
D_1	Upstream Water Depth	52.00 in		1321 mm	
D_2	Downstream Water Depth	47.44 in		1205 mm	
ΔH	Total Headloss	4.56 in		116 mm	
F	Freeboard	50.00 in		1270 mm	
V_1	Influent Channel Velocity	1.79 ft/s		0.55 m/s	
V_T	Throat Velocity of Screen	2.57 ft/s		0.78 m/s	
V_G	Velocity Through Grid	1.30 ft/s		0.40 m/s	
V_{Re}	Recess Zone Velocity	2.48 ft/s		0.76 m/s	
V_2	Effluent Channel Velocity	1.96 ft/s		0.60 m/s	

Fixed D_2 Condition @ 30% Obs		English Units		SI Units	
Q	Flow Rate	7.50 MGD	5208 gpm	329 L/s	28391 m^3/d
D_1	Upstream Water Depth	41.07 in		1043 mm	
D_2	Downstream Water Depth	34.00 in		864 mm	
ΔH	Total Headloss	7.07 in		180 mm	
F	Freeboard	60.93 in		1548 mm	
V_1	Influent Channel Velocity	2.26 ft/s		0.69 m/s	
V_T	Throat Velocity of Screen	3.39 ft/s		1.03 m/s	
V_G	Velocity Through Grid	1.65 ft/s		0.50 m/s	
V_{Re}	Recess Zone Velocity	3.34 ft/s		1.02 m/s	
V_2	Effluent Channel Velocity	2.73 ft/s		0.83 m/s	

Screen Performance VS. Screen Blocking at Fixed D_1

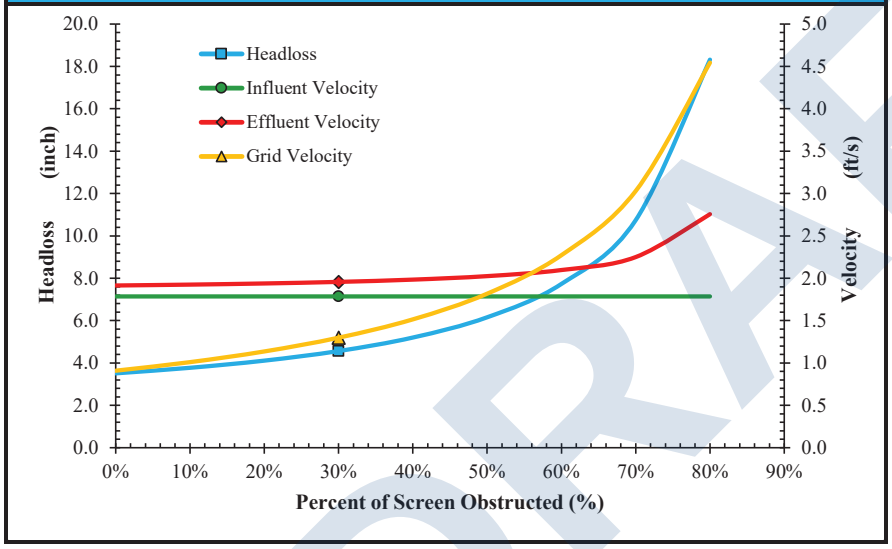

Screen Performance VS. Screen Blocking at Fixed D_2

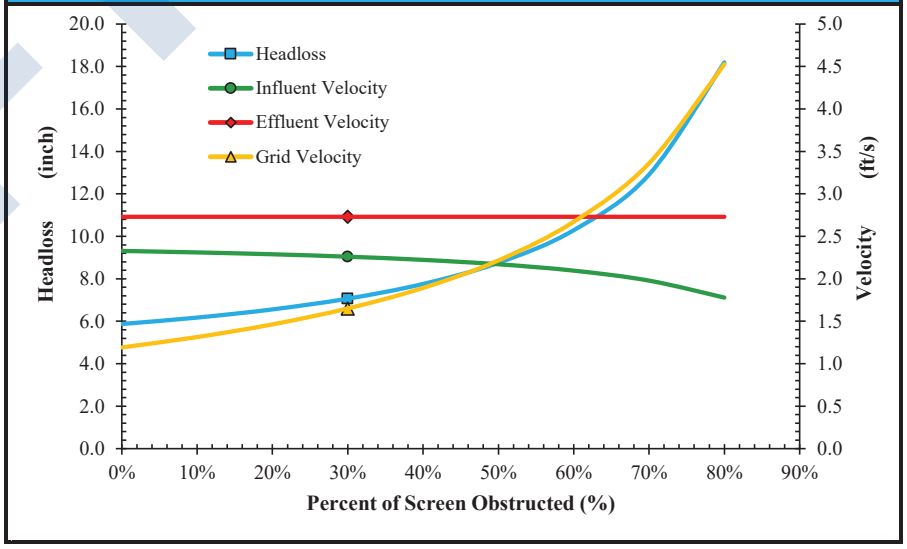

DRAFT

*ALL RIGHTS RESERVED. THE INFORMATION TRANSMITTED HEREIN IS THE PROPERTY OF HYDRO-DYNE ENGINEERING INC. AND HAS BEEN PROVIDED FOR RESTRICTIVE USE. THIS DATA MUST BE HELD CONFIDENTIAL AND TRANSMISSION, DUPLICATION OR DISCLOSURE IS PROHIBITED UNLESS AUTHORIZED IN WRITING BY HYDRO-DYNE ENGINEERING INC.

Great White Center Flow Screen Hydraulic Performance

HYDRO DYNE ENGINEERING
Tel: 813-818-0777 Fax: 813-818-0770

Project: San Luis, AZ - West WWTP
Date: 4/14/2025
Rep: JBI Water
By: STM **Checked:** JMB

Model # **CF** 26 – 49 – 176 – 2 — P

Fixed D_1 Condition @ 30% Obs		English Units		SI Units	
Q	Flow Rate	3.00 MGD	2083 gpm	131 L/s	11356 m^3/d
D_1	Upstream Water Depth	26.00 in		660 mm	
D_2	Downstream Water Depth	22.51 in		572 mm	
ΔH	Total Headloss	3.49 in		89 mm	
F	Freeboard	76.00 in		1930 mm	
V_1	Influent Channel Velocity	1.43 ft/s		0.44 m/s	
V_T	Throat Velocity of Screen	2.40 ft/s		0.73 m/s	
V_G	Velocity Through Grid	1.01 ft/s		0.31 m/s	
V_{Re}	Recess Zone Velocity	2.07 ft/s		0.63 m/s	
V_2	Effluent Channel Velocity	1.65 ft/s		0.50 m/s	

Fixed D_2 Condition @ 30% Obs		English Units		SI Units	
Q	Flow Rate	3.00 MGD	2083 gpm	131 L/s	11356 m^3/d
D_1	Upstream Water Depth	19.12 in		486 mm	
D_2	Downstream Water Depth	12.00 in		305 mm	
ΔH	Total Headloss	7.12 in		181 mm	
F	Freeboard	82.88 in		2105 mm	
V_1	Influent Channel Velocity	1.94 ft/s		0.59 m/s	
V_T	Throat Velocity of Screen	3.70 ft/s		1.13 m/s	
V_G	Velocity Through Grid	1.42 ft/s		0.43 m/s	
V_{Re}	Recess Zone Velocity	3.41 ft/s		1.04 m/s	
V_2	Effluent Channel Velocity	3.09 ft/s		0.94 m/s	

Screen Performance VS. Screen Blocking at Fixed D_1

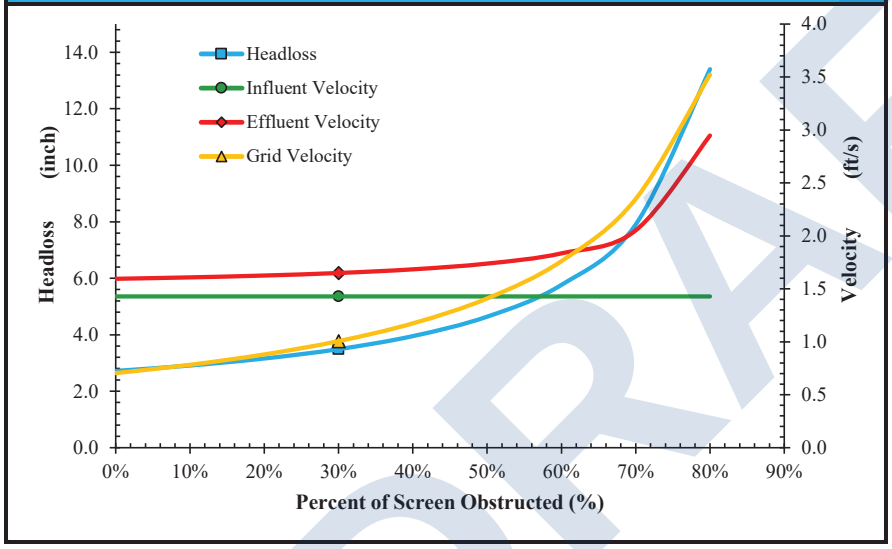

Screen Performance VS. Screen Blocking at Fixed D_2

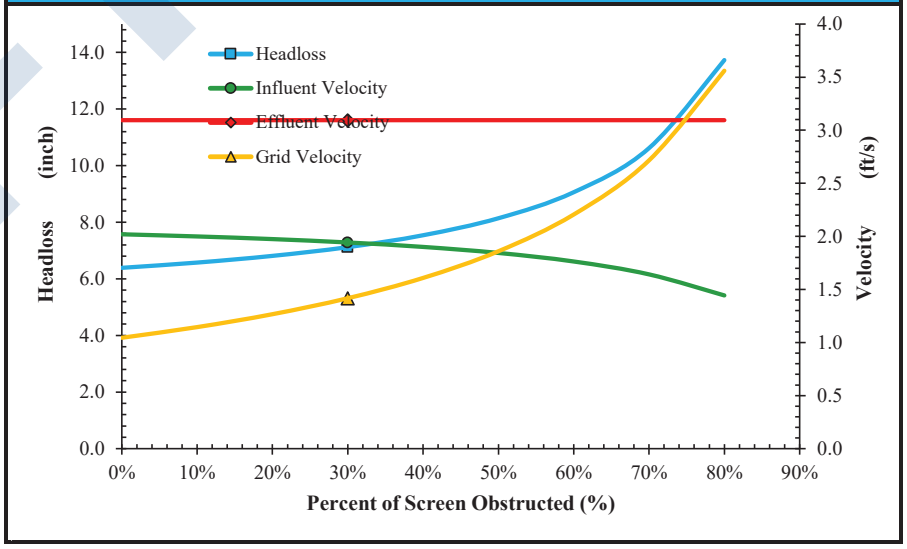

DRAFT

*ALL RIGHTS RESERVED. THE INFORMATION TRANSMITTED HEREIN IS THE PROPERTY OF HYDRO-DYNE ENGINEERING INC. AND HAS BEEN PROVIDED FOR RESTRICTIVE USE. THIS DATA MUST BE HELD CONFIDENTIAL AND TRANSMISSION, DUPLICATION OR DISCLOSURE IS PROHIBITED UNLESS AUTHORIZED IN WRITING BY HYDRO-DYNE ENGINEERING INC.

Great White Center Flow Screen Hydraulic Performance

HYDRO DYNE ENGINEERING

Tel: 813-818-0777 Fax: 813-818-0770

Project: San Luis, AZ - West WWTP
Date: 5/21/2025
Rep: JBI Water
By: STM **Checked:** JMB

Model # **CF** 26 – 49 – 176 – 2 — P

Fixed D_1 Condition @ 30% Obs		English Units		SI Units	
Q	Flow Rate	2.25 MGD	1562 gpm	99 L/s	8517 m^3/d
D_1	Upstream Water Depth	19.00 in		483 mm	
D_2	Downstream Water Depth	14.92 in		379 mm	
ΔH	Total Headloss	4.08 in		104 mm	
F	Freeboard	83.00 in		2108 mm	
V_1	Influent Channel Velocity	1.47 ft/s		0.45 m/s	
V_T	Throat Velocity of Screen	2.80 ft/s		0.85 m/s	
V_G	Velocity Through Grid	1.03 ft/s		0.31 m/s	
V_{Re}	Recess Zone Velocity	2.28 ft/s		0.69 m/s	
V_2	Effluent Channel Velocity	1.87 ft/s		0.57 m/s	

Fixed D_2 Condition @ 30% Obs		English Units		SI Units	
Q	Flow Rate	2.25 MGD	1562 gpm	99 L/s	8517 m^3/d
D_1	Upstream Water Depth	16.24 in		412 mm	
D_2	Downstream Water Depth	10.00 in		254 mm	
ΔH	Total Headloss	6.24 in		158 mm	
F	Freeboard	85.76 in		2178 mm	
V_1	Influent Channel Velocity	1.71 ft/s		0.52 m/s	
V_T	Throat Velocity of Screen	3.58 ft/s		1.09 m/s	
V_G	Velocity Through Grid	1.24 ft/s		0.38 m/s	
V_{Re}	Recess Zone Velocity	3.08 ft/s		0.94 m/s	
V_2	Effluent Channel Velocity	2.79 ft/s		0.85 m/s	

Screen Performance VS. Screen Blocking at Fixed D_1

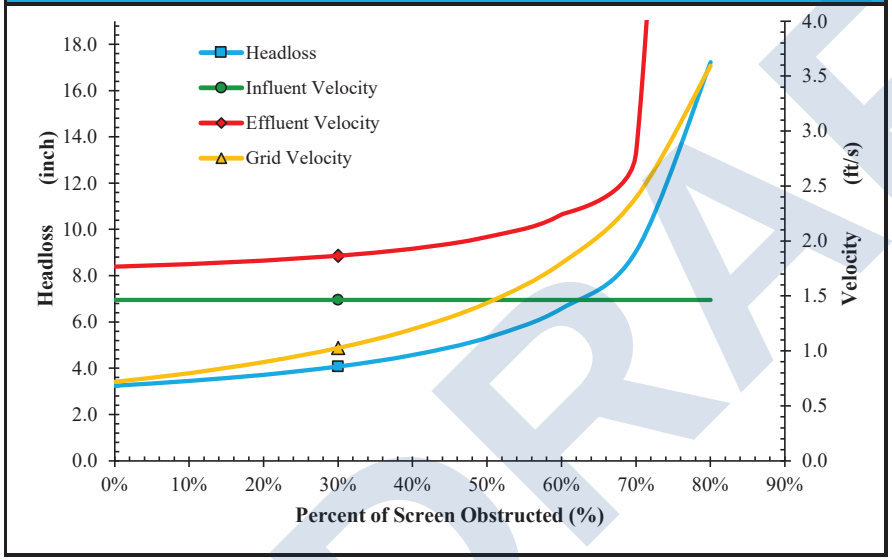

Screen Performance VS. Screen Blocking at Fixed D_2

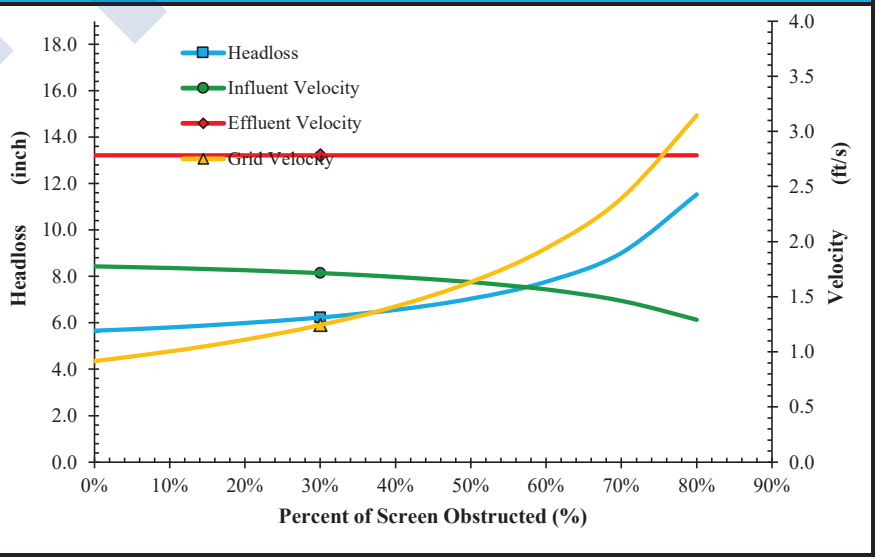

DRAFT

*ALL RIGHTS RESERVED. THE INFORMATION TRANSMITTED HEREIN IS THE PROPERTY OF HYDRO-DYNE ENGINEERING INC. AND HAS BEEN PROVIDED FOR RESTRICTIVE USE. THIS DATA MUST BE HELD CONFIDENTIAL AND TRANSMISSION, DUPLICATION OR DISCLOSURE IS PROHIBITED UNLESS AUTHORIZED IN WRITING BY HYDRO-DYNE ENGINEERING INC.

Great White Center Flow Screen Hydraulic Performance

HYDRO DYNE ENGINEERING

Tel: 813-818-0777 Fax: 813-818-0770

Project: San Luis, AZ - West WWTP
Date: 5/21/2025
Rep: JBI Water
By: STM **Checked:** JMB

Model # **CF** 26 – 49 – 176 – 2 — P

Fixed D_1 Condition @ 30% Obs		English Units		SI Units	
Q	Flow Rate	1.50 MGD	1042 gpm	66 L/s	5678 m^3/d
D_1	Upstream Water Depth	15.00 in		381 mm	
D_2	Downstream Water Depth	11.55 in		293 mm	
ΔH	Total Headloss	3.45 in		88 mm	
F	Freeboard	87.00 in		2210 mm	
V_1	Influent Channel Velocity	1.24 ft/s		0.38 m/s	
V_T	Throat Velocity of Screen	2.73 ft/s		0.83 m/s	
V_G	Velocity Through Grid	0.85 ft/s		0.26 m/s	
V_{Re}	Recess Zone Velocity	1.96 ft/s		0.60 m/s	
V_2	Effluent Channel Velocity	1.61 ft/s		0.49 m/s	

Fixed D_2 Condition @ 30% Obs		English Units		SI Units	
Q	Flow Rate	1.50 MGD	1042 gpm	66 L/s	5678 m^3/d
D_1	Upstream Water Depth	13.17 in		335 mm	
D_2	Downstream Water Depth	8.00 in		203 mm	
ΔH	Total Headloss	5.17 in		131 mm	
F	Freeboard	88.83 in		2256 mm	
V_1	Influent Channel Velocity	1.41 ft/s		0.43 m/s	
V_T	Throat Velocity of Screen	3.48 ft/s		1.06 m/s	
V_G	Velocity Through Grid	1.02 ft/s		0.31 m/s	
V_{Re}	Recess Zone Velocity	2.60 ft/s		0.79 m/s	
V_2	Effluent Channel Velocity	2.32 ft/s		0.71 m/s	

Screen Performance VS. Screen Blocking at Fixed D_1

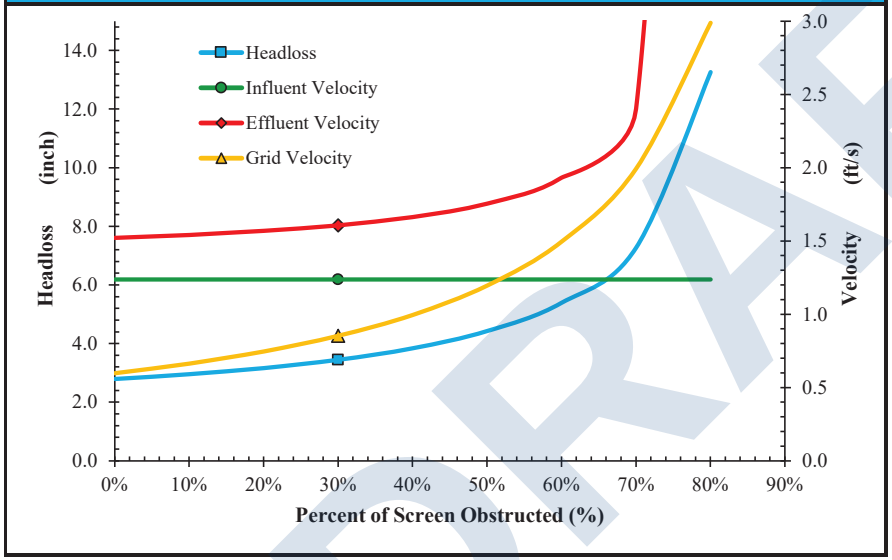

Screen Performance VS. Screen Blocking at Fixed D_2

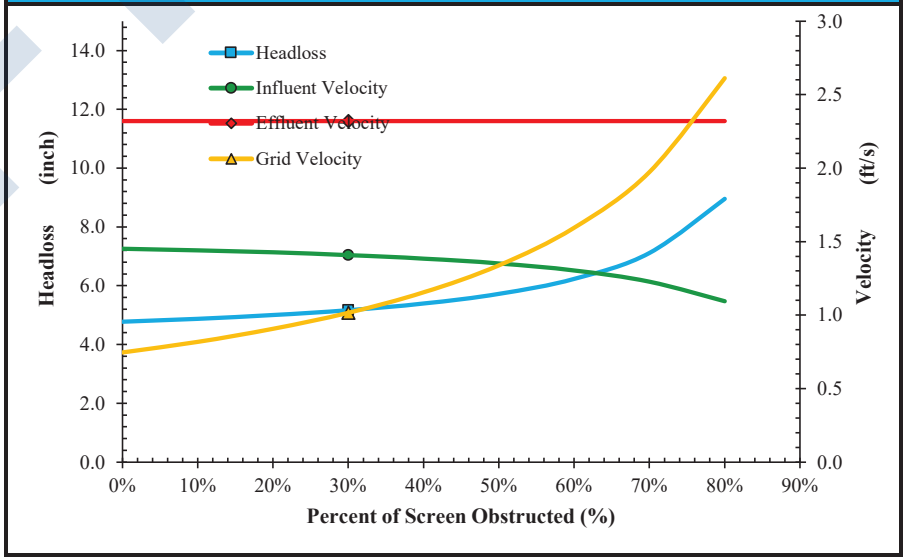

DRAFT

*ALL RIGHTS RESERVED. THE INFORMATION TRANSMITTED HEREIN IS THE PROPERTY OF HYDRO-DYNE ENGINEERING INC. AND HAS BEEN PROVIDED FOR RESTRICTIVE USE. THIS DATA MUST BE HELD CONFIDENTIAL AND TRANSMISSION, DUPLICATION OR DISCLOSURE IS PROHIBITED UNLESS AUTHORIZED IN WRITING BY HYDRO-DYNE ENGINEERING INC.

Great White Center Flow Screen Hydraulic Performance

HYDRO DYNE ENGINEERING

Tel: 813-818-0777 Fax: 813-818-0770

Project: San Luis, AZ - West WWTP
Date: 5/21/2025
Rep: JBI Water
By: STM **Checked:** JMB

Model # **CF** 26 – 49 – 176 – 2 — P

Fixed D_1 Condition @ 30% Obs		English Units		SI Units	
Q	Flow Rate	1.00 MGD	694 gpm	44 L/s	3785 m^3/d
D_1	Upstream Water Depth	12.00 in		305 mm	
D_2	Downstream Water Depth	8.92 in		227 mm	
ΔH	Total Headloss	3.08 in		78 mm	
F	Freeboard	90.00 in		2286 mm	
V_1	Influent Channel Velocity	1.03 ft/s		0.31 m/s	
V_T	Throat Velocity of Screen	2.80 ft/s		0.85 m/s	
V_G	Velocity Through Grid	0.71 ft/s		0.22 m/s	
V_{Re}	Recess Zone Velocity	1.70 ft/s		0.52 m/s	
V_2	Effluent Channel Velocity	1.39 ft/s		0.42 m/s	

Fixed D_1 Condition @ 30% Obs		English Units		SI Units	
Q	Flow Rate	1.00 MGD	694 gpm	44 L/s	3785 m^3/d
D_1	Upstream Water Depth	10.76 in		273 mm	
D_2	Downstream Water Depth	6.00 in		152 mm	
ΔH	Total Headloss	4.76 in		121 mm	
F	Freeboard	91.24 in		2317 mm	
V_1	Influent Channel Velocity	1.15 ft/s		0.35 m/s	
V_T	Throat Velocity of Screen	3.60 ft/s		1.10 m/s	
V_G	Velocity Through Grid	0.84 ft/s		0.26 m/s	
V_{Re}	Recess Zone Velocity	2.30 ft/s		0.70 m/s	
V_2	Effluent Channel Velocity	2.06 ft/s		0.63 m/s	

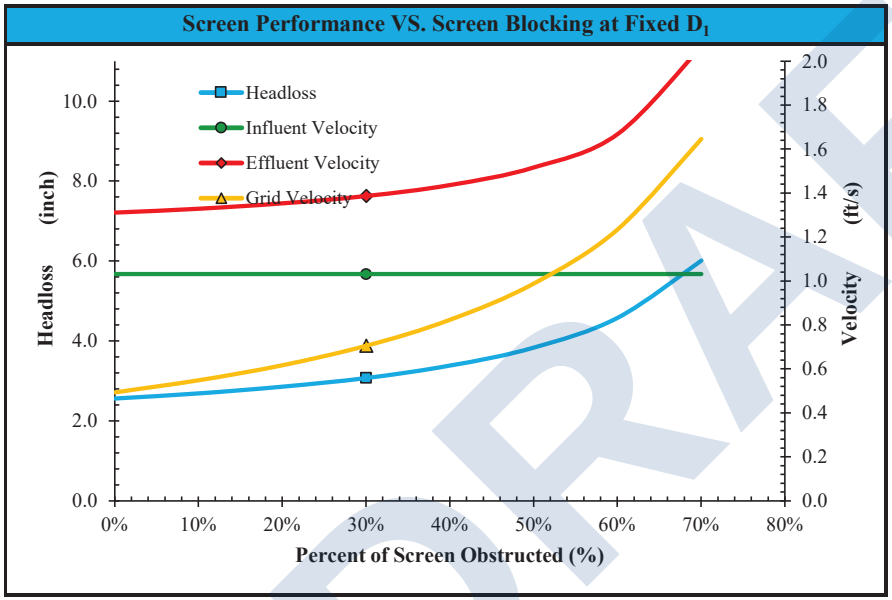

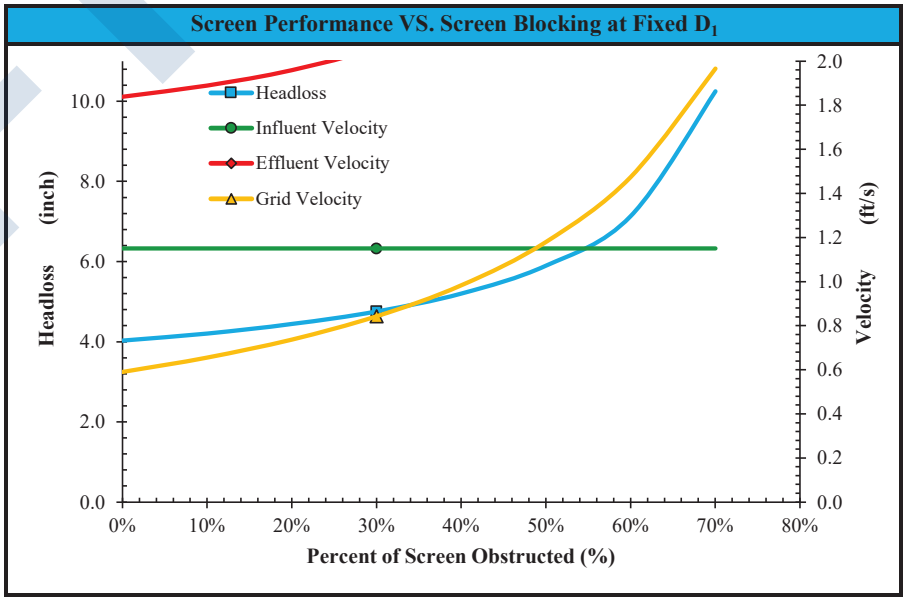

DRAFT

*ALL RIGHTS RESERVED. THE INFORMATION TRANSMITTED HEREIN IS THE PROPERTY OF HYDRO-DYNE ENGINEERING INC. AND HAS BEEN PROVIDED FOR RESTRICTIVE USE. THIS DATA MUST BE HELD CONFIDENTIAL AND TRANSMISSION, DUPLICATION OR DISCLOSURE IS PROHIBITED UNLESS AUTHORIZED IN WRITING BY HYDRO-DYNE ENGINEERING INC.

Great White Center Flow Screen Hydraulic Performance

HYDRO DYNE ENGINEERING
Tel: 813-818-0777 Fax: 813-818-0770

Project: San Luis, AZ - West WWTP
Date: 4/14/2025
Rep: JBI Water
By: STM **Checked:** JMB

Model # **CF** 26 – 49 – 176 – 2 — P

Fixed D_1 Condition @ 65% Obs		English Units		SI Units	
Q	Flow Rate	7.50 MGD	5208 gpm	329 L/s	28391 m^3/d
D_1	Upstream Water Depth	52.00 in		1321 mm	
D_2	Downstream Water Depth	43.04 in		1093 mm	
ΔH	Total Headloss	8.96 in		228 mm	
F	Freeboard	50.00 in		1270 mm	
V_1	Influent Channel Velocity	1.79 ft/s		0.55 m/s	
V_T	Throat Velocity of Screen	2.57 ft/s		0.78 m/s	
V_G	Velocity Through Grid	2.60 ft/s		0.79 m/s	
V_{Re}	Recess Zone Velocity	2.71 ft/s		0.83 m/s	
V_2	Effluent Channel Velocity	2.16 ft/s		0.66 m/s	

Fixed D_2 Condition @ 65% Obs		English Units		SI Units	
Q	Flow Rate	7.50 MGD	5208 gpm	329 L/s	28391 m^3/d
D_1	Upstream Water Depth	45.41 in		1153 mm	
D_2	Downstream Water Depth	34.00 in		864 mm	
ΔH	Total Headloss	11.41 in		290 mm	
F	Freeboard	56.59 in		1437 mm	
V_1	Influent Channel Velocity	2.04 ft/s		0.62 m/s	
V_T	Throat Velocity of Screen	3.01 ft/s		0.92 m/s	
V_G	Velocity Through Grid	2.98 ft/s		0.91 m/s	
V_{Re}	Recess Zone Velocity	3.34 ft/s		1.02 m/s	
V_2	Effluent Channel Velocity	2.73 ft/s		0.83 m/s	

Screen Performance VS. Screen Blocking at Fixed D_1

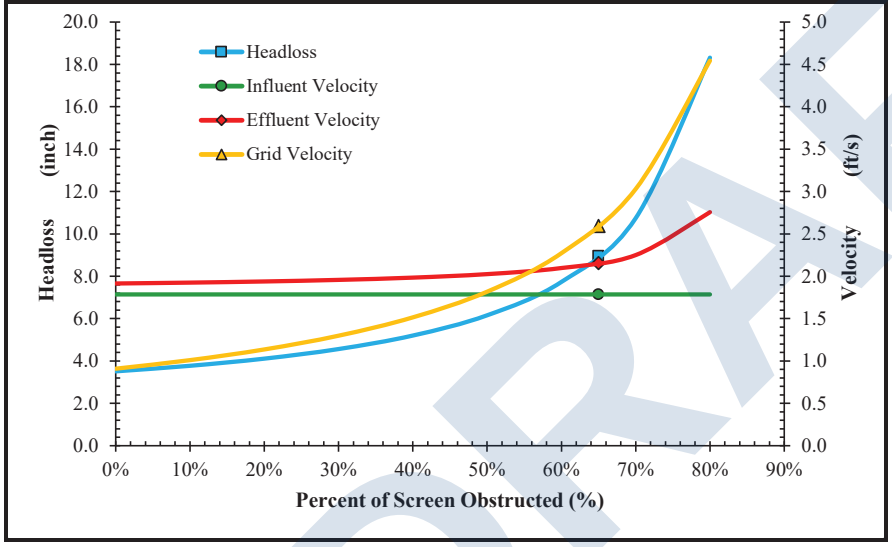

Screen Performance VS. Screen Blocking at Fixed D_2

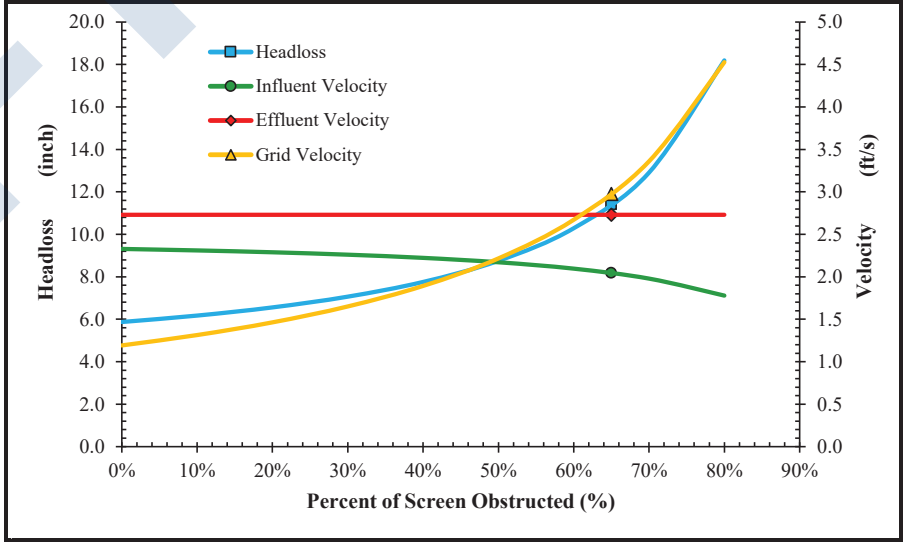

DRAFT

*ALL RIGHTS RESERVED. THE INFORMATION TRANSMITTED HEREIN IS THE PROPERTY OF HYDRO-DYNE ENGINEERING INC. AND HAS BEEN PROVIDED FOR RESTRICTIVE USE. THIS DATA MUST BE HELD CONFIDENTIAL AND TRANSMISSION, DUPLICATION OR DISCLOSURE IS PROHIBITED UNLESS AUTHORIZED IN WRITING BY HYDRO-DYNE ENGINEERING INC.

Great White Center Flow Screen Hydraulic Performance

HYDRO DYNE ENGINEERING
Tel: 813-818-0777 Fax: 813-818-0770

Project: San Luis, AZ - West WWTP
Date: 4/14/2025
Rep: JBI Water
By: STM **Checked:** JMB

Model # **CF** 26 – 49 – 176 – 2 — P

Fixed D_1 Condition @ 65% Obs		English Units		SI Units	
Q	Flow Rate	3.00 MGD	2083 gpm	131 L/s	11356 m^3/d
D_1	Upstream Water Depth	26.00 in		660 mm	
D_2	Downstream Water Depth	19.36 in		492 mm	
ΔH	Total Headloss	6.64 in		169 mm	
F	Freeboard	76.00 in		1930 mm	
V_1	Influent Channel Velocity	1.43 ft/s		0.44 m/s	
V_T	Throat Velocity of Screen	2.40 ft/s		0.73 m/s	
V_G	Velocity Through Grid	2.01 ft/s		0.61 m/s	
V_{Re}	Recess Zone Velocity	2.36 ft/s		0.72 m/s	
V_2	Effluent Channel Velocity	1.92 ft/s		0.59 m/s	

Fixed D_2 Condition @ 65% Obs		English Units		SI Units	
Q	Flow Rate	3.00 MGD	2083 gpm	131 L/s	11356 m^3/d
D_1	Upstream Water Depth	21.73 in		552 mm	
D_2	Downstream Water Depth	12.00 in		305 mm	
ΔH	Total Headloss	9.73 in		247 mm	
F	Freeboard	80.27 in		2039 mm	
V_1	Influent Channel Velocity	1.71 ft/s		0.52 m/s	
V_T	Throat Velocity of Screen	3.07 ft/s		0.94 m/s	
V_G	Velocity Through Grid	2.43 ft/s		0.74 m/s	
V_{Re}	Recess Zone Velocity	3.41 ft/s		1.04 m/s	
V_2	Effluent Channel Velocity	3.09 ft/s		0.94 m/s	

Screen Performance VS. Screen Blocking at Fixed D_1

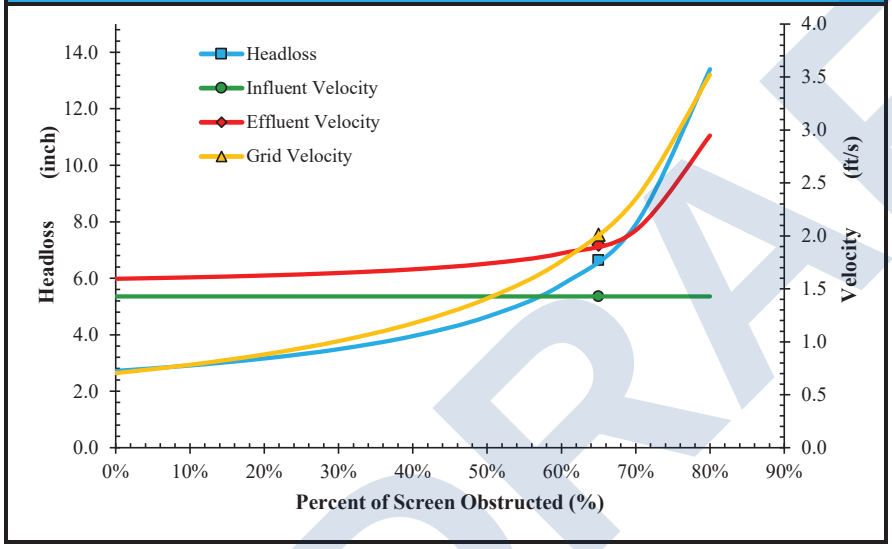

Screen Performance VS. Screen Blocking at Fixed D_2

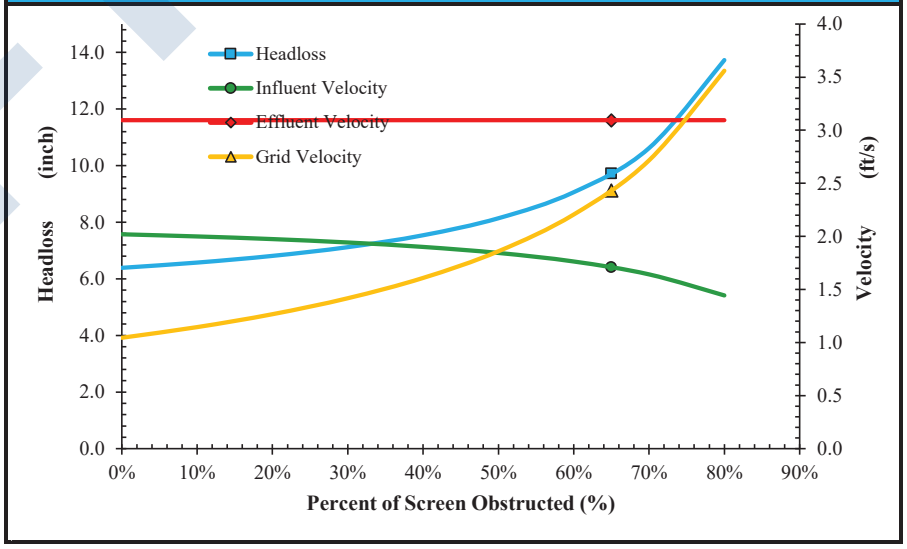

DRAFT

*ALL RIGHTS RESERVED. THE INFORMATION TRANSMITTED HEREIN IS THE PROPERTY OF HYDRO-DYNE ENGINEERING INC. AND HAS BEEN PROVIDED FOR RESTRICTIVE USE. THIS DATA MUST BE HELD CONFIDENTIAL AND TRANSMISSION, DUPLICATION OR DISCLOSURE IS PROHIBITED UNLESS AUTHORIZED IN WRITING BY HYDRO-DYNE ENGINEERING INC.

Great White Center Flow Screen Hydraulic Performance

HYDRO DYNE ENGINEERING

Tel: 813-818-0777 Fax: 813-818-0770

Project: San Luis, AZ - West WWTP
Date: 5/21/2025
Rep: JBI Water
By: STM **Checked:** JMB

Model # **CF** 26 – 49 – 176 – 2 — P

Fixed D_1 Condition @ 65% Obs		English Units		SI Units	
Q	Flow Rate	2.25 MGD	1562 gpm	99 L/s	8517 m^3/d
D_1	Upstream Water Depth	19.00 in		483 mm	
D_2	Downstream Water Depth	11.43 in		290 mm	
ΔH	Total Headloss	7.57 in		192 mm	
F	Freeboard	83.00 in		2108 mm	
V_1	Influent Channel Velocity	1.47 ft/s		0.45 m/s	
V_T	Throat Velocity of Screen	2.80 ft/s		0.85 m/s	
V_G	Velocity Through Grid	2.05 ft/s		0.62 m/s	
V_{Re}	Recess Zone Velocity	2.81 ft/s		0.86 m/s	
V_2	Effluent Channel Velocity	2.44 ft/s		0.74 m/s	

Fixed D_1 Condition @ 65% Obs		English Units		SI Units	
Q	Flow Rate	2.25 MGD	1562 gpm	99 L/s	8517 m^3/d
D_1	Upstream Water Depth	16.53 in		420 mm	
D_2	Downstream Water Depth	5.00 in		127 mm	
ΔH	Total Headloss	11.52 in		293 mm	
F	Freeboard	85.47 in		2171 mm	
V_1	Influent Channel Velocity	1.69 ft/s		0.52 m/s	
V_T	Throat Velocity of Screen	3.48 ft/s		1.06 m/s	
V_G	Velocity Through Grid	2.43 ft/s		0.74 m/s	
V_{Re}	Recess Zone Velocity	4.30 ft/s		1.31 m/s	
V_2	Effluent Channel Velocity	5.56 ft/s		1.69 m/s	

Screen Performance VS. Screen Blocking at Fixed D_1

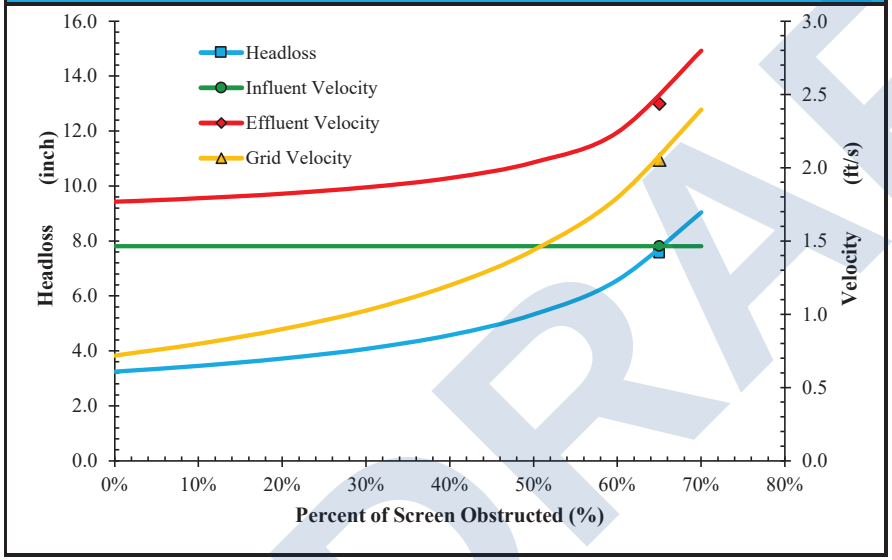

Screen Performance VS. Screen Blocking at Fixed D_1

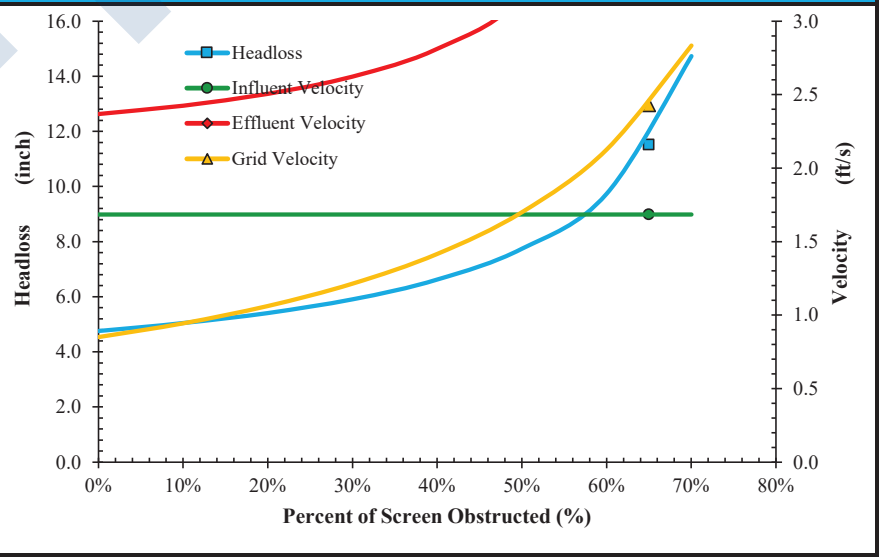

DRAFT

*ALL RIGHTS RESERVED. THE INFORMATION TRANSMITTED HEREIN IS THE PROPERTY OF HYDRO-DYNE ENGINEERING INC. AND HAS BEEN PROVIDED FOR RESTRICTIVE USE. THIS DATA MUST BE HELD CONFIDENTIAL AND TRANSMISSION, DUPLICATION OR DISCLOSURE IS PROHIBITED UNLESS AUTHORIZED IN WRITING BY HYDRO-DYNE ENGINEERING INC.

Great White Center Flow Screen Hydraulic Performance

HYDRO DYNE ENGINEERING

Tel: 813-818-0777 Fax: 813-818-0770

Project: San Luis, AZ - West WWTP
Date: 5/21/2025
Rep: JBI Water
By: STM **Checked:** JMB

Model # **CF** 26 – 49 – 176 – 2 — P

Fixed D_1 Condition @ 65% Obs		English Units		SI Units	
Q	Flow Rate	1.50 MGD	1042 gpm	66 L/s	5678 m^3/d
D_1	Upstream Water Depth	15.00 in		381 mm	
D_2	Downstream Water Depth	8.85 in		225 mm	
ΔH	Total Headloss	6.15 in		156 mm	
F	Freeboard	87.00 in		2210 mm	
V_1	Influent Channel Velocity	1.24 ft/s		0.38 m/s	
V_T	Throat Velocity of Screen	2.73 ft/s		0.83 m/s	
V_G	Velocity Through Grid	1.71 ft/s		0.52 m/s	
V_{Re}	Recess Zone Velocity	2.43 ft/s		0.74 m/s	
V_2	Effluent Channel Velocity	2.10 ft/s		0.64 m/s	

Fixed D_1 Condition @ 65% Obs		English Units		SI Units	
Q	Flow Rate	1.50 MGD	1042 gpm	66 L/s	5678 m^3/d
D_1	Upstream Water Depth	13.05 in		331 mm	
D_2	Downstream Water Depth	3.00 in		76 mm	
ΔH	Total Headloss	10.05 in		255 mm	
F	Freeboard	88.95 in		2259 mm	
V_1	Influent Channel Velocity	1.42 ft/s		0.43 m/s	
V_T	Throat Velocity of Screen	3.54 ft/s		1.08 m/s	
V_G	Velocity Through Grid	2.06 ft/s		0.63 m/s	
V_{Re}	Recess Zone Velocity	4.02 ft/s		1.23 m/s	
V_2	Effluent Channel Velocity	6.18 ft/s		1.88 m/s	

Screen Performance VS. Screen Blocking at Fixed D_1

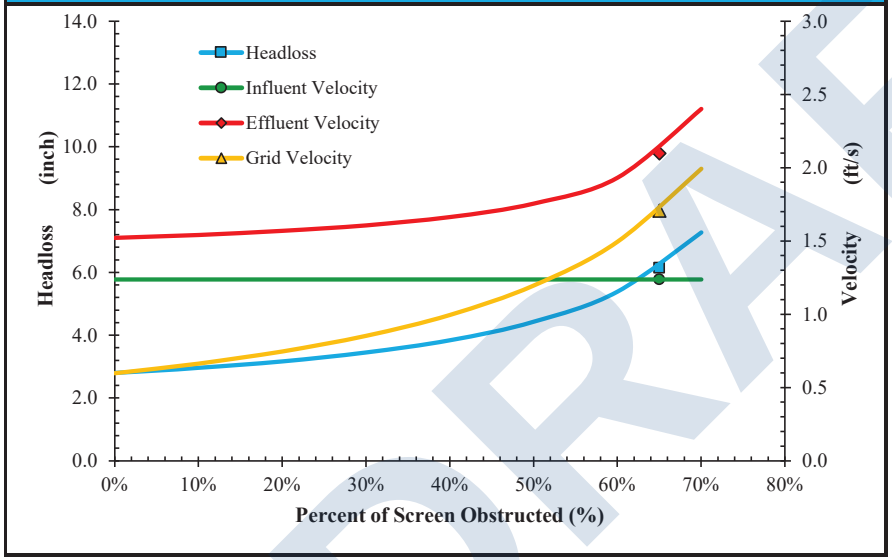

Screen Performance VS. Screen Blocking at Fixed D_1

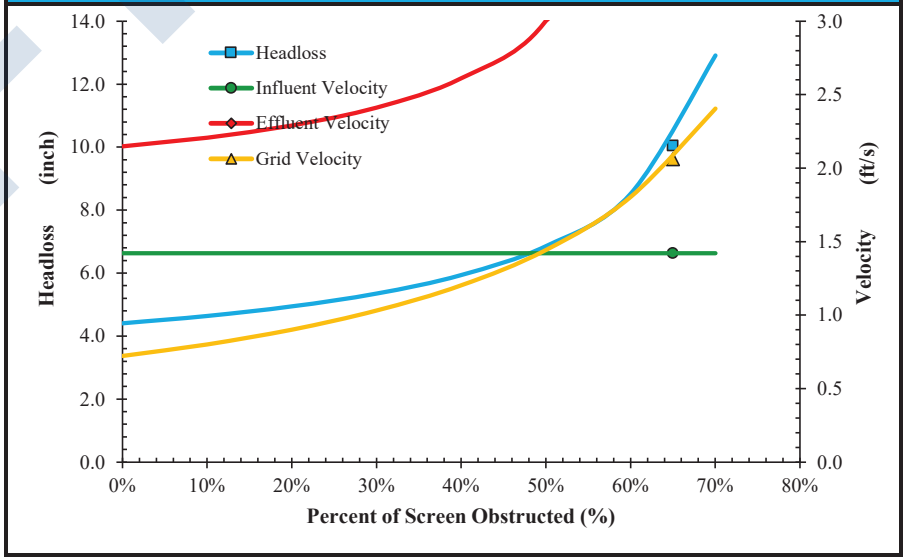

DRAFT

*ALL RIGHTS RESERVED. THE INFORMATION TRANSMITTED HEREIN IS THE PROPERTY OF HYDRO-DYNE ENGINEERING INC. AND HAS BEEN PROVIDED FOR RESTRICTIVE USE. THIS DATA MUST BE HELD CONFIDENTIAL AND TRANSMISSION, DUPLICATION OR DISCLOSURE IS PROHIBITED UNLESS AUTHORIZED IN WRITING BY HYDRO-DYNE ENGINEERING INC.

Great White Center Flow Screen Hydraulic Performance

HYDRO DYNE ENGINEERING

Tel: 813-818-0777 Fax: 813-818-0770

Project: San Luis, AZ - West WWTP
Date: 5/21/2025
Rep: JBI Water
By: STM **Checked:** JMB

Model # **CF** 26 – 49 – 176 – 2 — P

Fixed D_1 Condition @ 65% Obs		English Units		SI Units	
Q	Flow Rate	1.00 MGD	694 gpm	44 L/s	3785 m^3/d
D_1	Upstream Water Depth	12.00 in		305 mm	
D_2	Downstream Water Depth	6.84 in		174 mm	
ΔH	Total Headloss	5.16 in		131 mm	
F	Freeboard	90.00 in		2286 mm	
V_1	Influent Channel Velocity	1.03 ft/s		0.31 m/s	
V_T	Throat Velocity of Screen	2.80 ft/s		0.85 m/s	
V_G	Velocity Through Grid	1.41 ft/s		0.43 m/s	
V_{Re}	Recess Zone Velocity	2.10 ft/s		0.64 m/s	
V_2	Effluent Channel Velocity	1.81 ft/s		0.55 m/s	

Fixed D_1 Condition @ 65% Obs		English Units		SI Units	
Q	Flow Rate	1.00 MGD	694 gpm	44 L/s	3785 m^3/d
D_1	Upstream Water Depth	10.85 in		276 mm	
D_2	Downstream Water Depth	3.00 in		76 mm	
ΔH	Total Headloss	7.84 in		199 mm	
F	Freeboard	91.15 in		2315 mm	
V_1	Influent Channel Velocity	1.14 ft/s		0.35 m/s	
V_T	Throat Velocity of Screen	3.53 ft/s		1.08 m/s	
V_G	Velocity Through Grid	1.66 ft/s		0.51 m/s	
V_{Re}	Recess Zone Velocity	3.25 ft/s		0.99 m/s	
V_2	Effluent Channel Velocity	4.12 ft/s		1.26 m/s	

Screen Performance VS. Screen Blocking at Fixed D_1

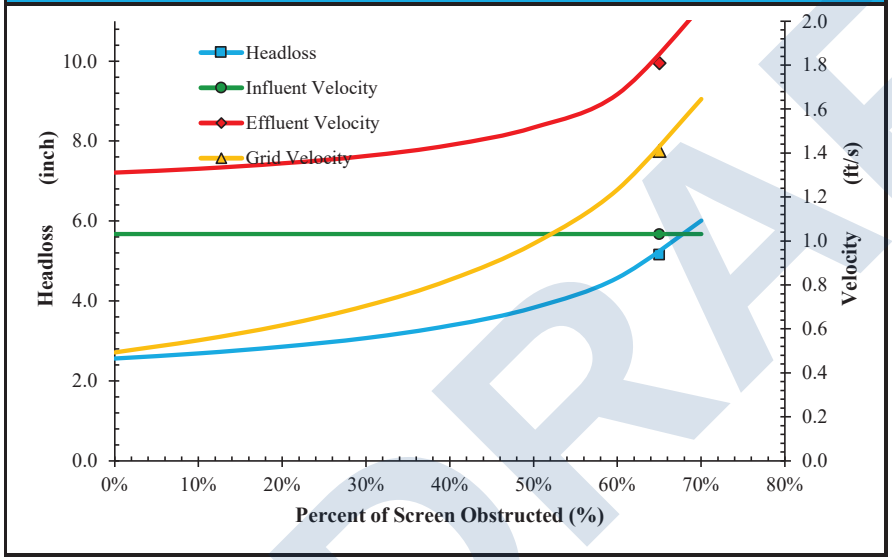

Screen Performance VS. Screen Blocking at Fixed D_1

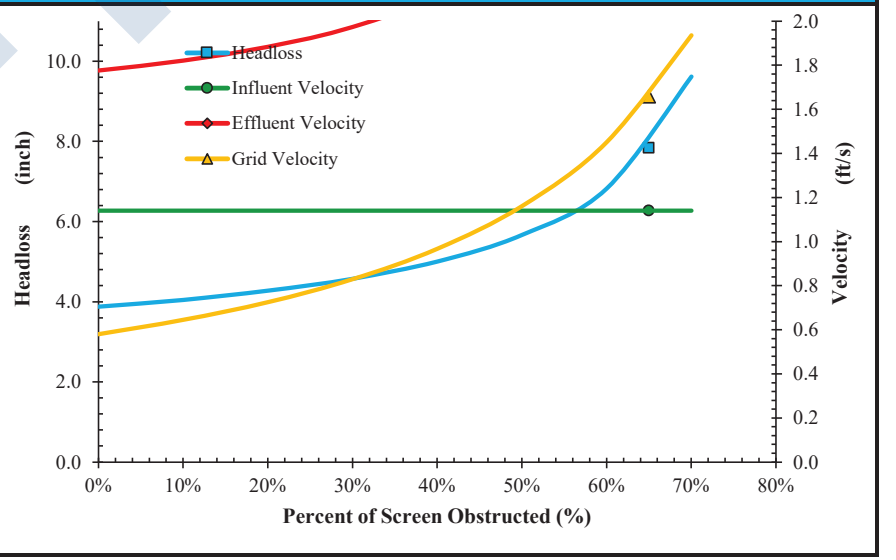

DRAFT

*ALL RIGHTS RESERVED. THE INFORMATION TRANSMITTED HEREIN IS THE PROPERTY OF HYDRO-DYNE ENGINEERING INC. AND HAS BEEN PROVIDED FOR RESTRICTIVE USE. THIS DATA MUST BE HELD CONFIDENTIAL AND TRANSMISSION, DUPLICATION OR DISCLOSURE IS PROHIBITED UNLESS AUTHORIZED IN WRITING BY HYDRO-DYNE ENGINEERING INC.

Sand Shark Grit Trap Equipment Sizing

HYDRO DYNE ENGINEERING
Tel: 813-818-0777 Fax: 813-818-0770

Project: San Luis, AZ - West WWTP
Date: 12/6/2024
Rep: JBI Water
By: STM **Checked:**

Model#	GTT60I102CC4C
	GTK-144CNU

Equipment Dimensions

A	B	C	D	E	F	G	H
144 inches	60	30	60	16	67	24	0
3658 mm	1524	762	1524	406	1702	610	0

Channel Dimensions

J	K	L
23	32	78
579	813	1981

Operating Conditions

				Peak	Average
Weir Height	0.5 feet	6.4 inches	Flow Rate	7.5 MGD	3 MGD
	0.16 m	164 mm		329 L/s	131 L/s
Specific Gravity	2.65		Upstream Channel Velocity	3.48 ft/s	1.92 ft/s
				1.14 m/s	0.63 m/s
			Required Capture	HDE Projected Capture	
Cut Size (X_{50})	50 mesh	297 microns	95%	95%	95%
Cut Size (X_{70})	70 mesh	210 microns	85%	95%	95%
Cut Size (X_{100})	100 mesh	149 microns	65%	95%	95%
Cut Size (X_{140})	140 mesh	105 microns			
Cut Size (X_{200})	200 mesh	75 microns			

NOTE: Water levels into grit trap as follows:

Peak water level	1.33 ft	16.00 in
Average water level	0.97 ft	11.63 in

Channel height	66.00 in
Freeboard at peak	50.00 in
Freeboard at avg	54.37 in

Equipment Layout

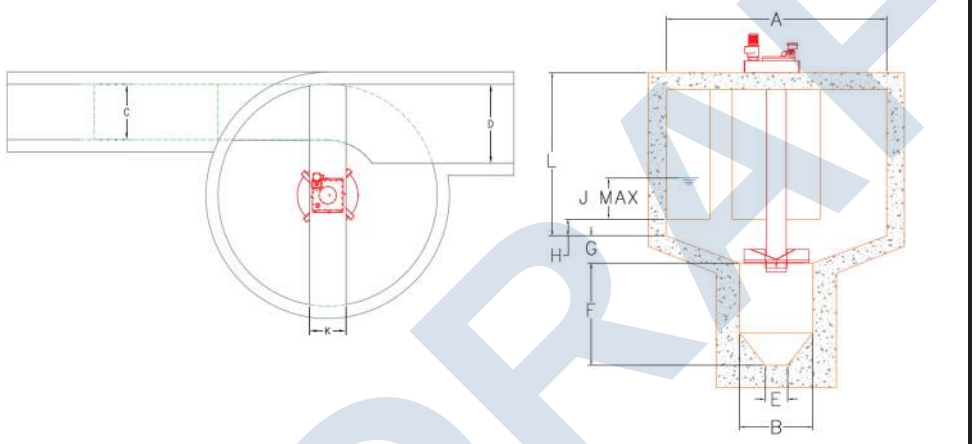

Grit Capture vs. Particle Size

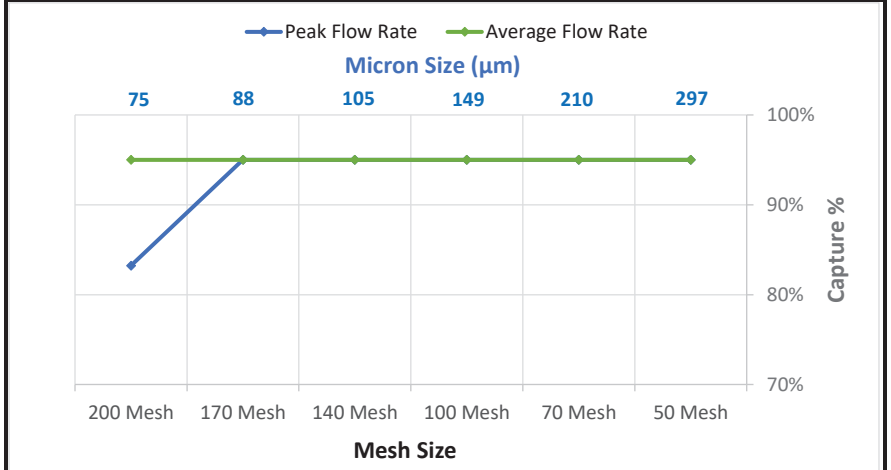

DRAFT

*ALL RIGHTS RESERVED. THE INFORMATION TRANSMITTED HEREIN IS THE PROPERTY OF HYDRO-DYNE ENGINEERING INC. AND HAS BEEN PROVIDED FOR RESTRICTIVE USE. THIS DATA MUST BE HELD CONFIDENTIAL AND TRANSMISSION, DUPLICATION OR DISCLOSURE IS PROHIBITED UNLESS AUTHORIZED IN WRITING BY HYDRO-DYNE ENGINEERING INC.

Equipment Drawings

DRAFT

Included:

Installation Layouts
Recommended Plumbing Layout
Typical Breakouts & Parts List

THIS DRAWING HAS BEEN REVIEWED AND ALL DIMENSIONS VERIFIED CORRECT FOR PLANT AND MACHINE LAYOUT REQUIREMENTS BY: _____ (INITIALS REQ'D)

PROJECT: SAN LUIS, AZ

NO DIMENSIONS PROVIDED THIS PAGE

REVISIONS:

S1. INITIAL SUBMITTAL RELEASE - 06/02/2025

EQUIPMENT MATERIAL = SS304
(ALL FASTENERS TO BE 316SS)

ESTIMATED DRY WEIGHTS (NOT TO BE USED FOR LIFTING/LOADING/RIGGING):

COARSE SCREEN: 2,400 LBS

COARSE COMPACTOR: 1,000 LBS

FINE SCREEN: 3,700 LBS

FINE COMPACTOR: 800 LBS

GRIT TRAP: 1,400 LBS

GRIT CLASSIFIER: 1,600 LBS

GRIT PUMP: 700 LBS

GENERAL PROJECT NOTES-

1. MACHINERY SHOWN HERE AND THEIR ANCHORAGES HAVE BEEN DESIGNED FOR SEISMIC FORCES EQUIVALENT TO A PREVIOUS MOUNTAIN HOUSE, CA. JOB WITH SAME STYLE AND APPROXIMATE SIZE MACHINERY.
   1. SITE CLASS - D.
   2. MAPPED MCER SPECTRAL RESPONSE ACCEL. SHORT PERIOD S_S (g) - 1.59.
   3. MAPPED MCER SPECTRAL RESPONSE ACCEL. 1 SEC. PERIOD S_1 (g) - 0.53.
   4. SITE COEFFICIENT F_A - 1.0.
   5. SITE COEFFICIENT F_V - 1.5.
   6. MCER SPECTRAL RESPONSE ACCEL. AT SHORT PERIODS S_{MS} (g) -1.59 (USED IN ANCHOR CALCULATIONS).
   7. MCER SPECTRAL RESPONSE ACCEL. AT 1 SEC.T PERIODS S_{M1} (g) -0.79.
   8. DESIGN SPECTRAL RESPONSE ACCEL. AT SHORT PERIODS S_{DS} (G) -1.06 (USED IN ANCHOR CALCULATIONS).
   9. DESIGN SPECTRAL RESPONSE ACCEL. AT 1 SEC. PERIOD S_{D1} (G) -0.53.
   10. MAPPED MCE PEAK GROUND ACCELERATION (g) - 0.59.
   11. SITE COEFFICIENT F_{PGA} - 1.0.
   12. MCEG PEAK ADJUSTED FOR SITE - 0.59.
   13. LONG TRANSITION PERIOD T_L - 8 SEC.
   14. OCCUPANCY RISK / CATEGORY - III (USED IN ANCHOR CALCULATIONS).
   15. SEISMIC DESIGN CATEGORY - D (USED IN ANCHOR CALCULATIONS).
   16. RESPONSE AND AMPLIFICATION FACTORS PER ASCE 7-10 (DESIGN GUIDE IN ANCHOR CALCULATIONS).
   17. COMPONENT IMPORTANCE FACTOR I_P - 1.5 (USED IN ANCHOR CALCULATIONS).
   18. JOB SPECIFICATION SECTION TO WHICH STRUCTURAL CALCULATIONS MEET - SECTION 01610 SEISMIC, SECTION 01615 WIND.

2. NO COMPACTOR TO BE LEFT OFF FOR MORE THAN 48 HOURS WITH A FULL SNORKEL TO REDUCE SLUG HARDENING.

DRAFT

DIMENSIONS IN (x) ARE FOR REFERENCE ONLY
UNITS = INCHES (UNLESS OTHERWISE SPECIFIED)

*ALL RIGHTS RESERVED. THE INFORMATION TRANSMITTED HEREIN IS THE PROPERTY OF HYDRO-DYNE ENGINEERING INC. AND HAS BEEN PROVIDED FOR RESTRICTIVE USE. THIS DATA MUST BE HELD CONFIDENTIAL AND TRANSMISSION, DUPLICATION OR DISCLOSURE IS PROHIBITED UNLESS AUTHORIZED IN WRITING BY HYDRO-DYNE ENGINEERING INC.

UNLESS NOTED	
TOLERANCE	
.X	± 0.125"
.XX	± 0.060" ∠ ± 1°
.XXX	± 0.030"
FRACTIONAL:	± 1/4"

HYDRO-DYNE ENGINEERING
www.hydro-dyne.com

SAN LUIS, AZ – SUBMITTAL LAYOUT

DRAWING #: CF26-30-144-6P4-WCW8S-CF26-49-176-2P4-WCW6S-GT60-102-GC12-98-2X-S1	SHT.: 1/11	REV.: S1	
DRAWN BY/DATE: J. GILLESPIE 5/13/2025	SCALE: NTS		
CHECKED BY/DATE: T. HUNT, PE 5/14/2025	SIZE: A		

DIMENSIONS HAVE BEEN VERIFIED & APPROVED BY: _____(INITIALS REQUIRED)

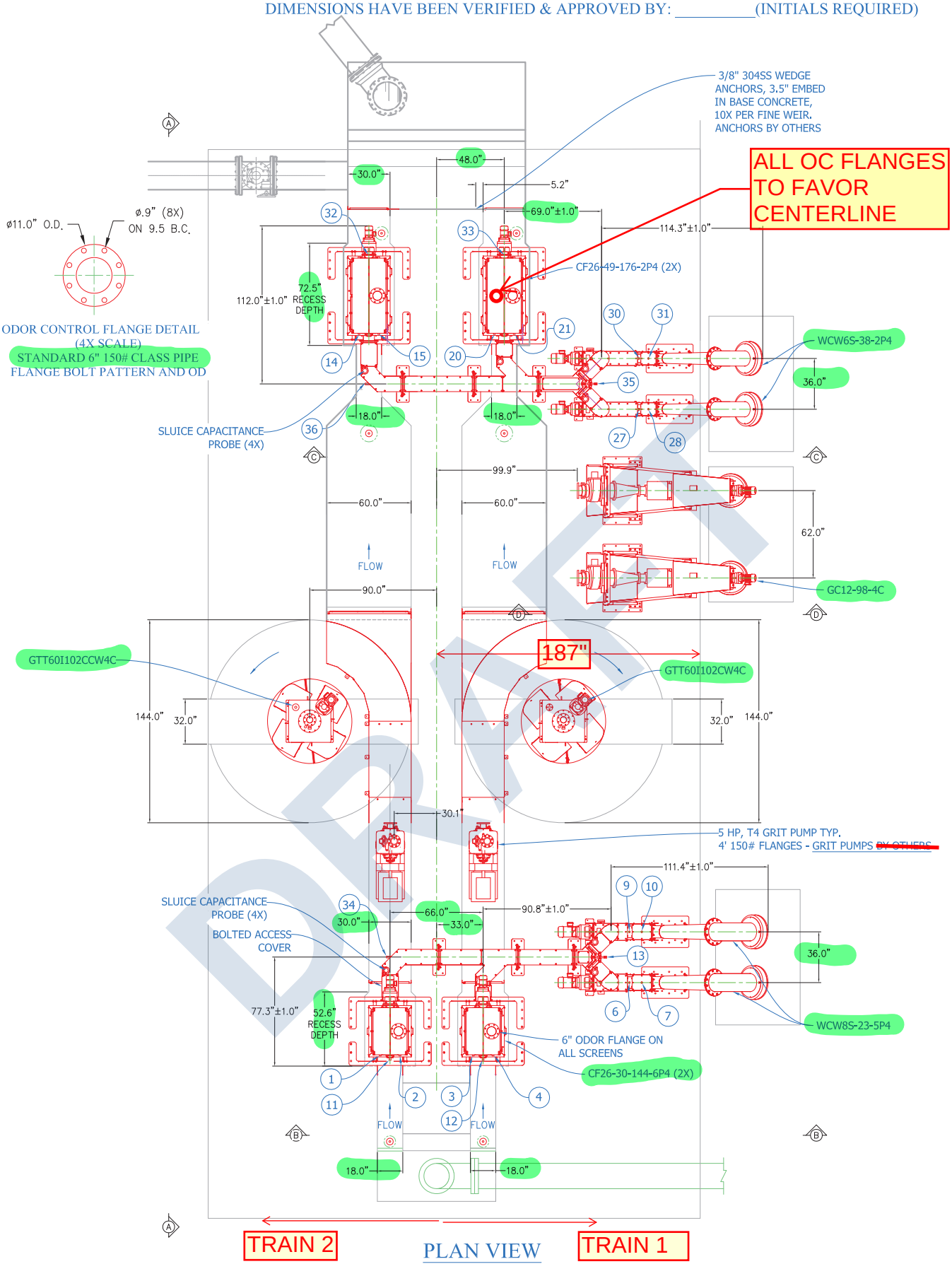

DRAFT

*ALL RIGHTS RESERVED. THE INFORMATION TRANSMITTED HEREIN IS THE PROPERTY OF HYDRO-DYNE ENGINEERING INC. AND HAS BEEN PROVIDED FOR RESTRICTIVE USE. THIS DATA MUST BE HELD CONFIDENTIAL AND TRANSMISSION, DUPLICATION OR DISCLOSURE IS PROHIBITED UNLESS AUTHORIZED IN WRITING BY HYDRO-DYNE ENGINEERING INC.

UNLESS NOTED		SAN LUIS, AZ – SUBMITTAL LAYOUT		
TOLERANCE .X ± 0.125" .XX ± 0.060" .XXX ± 0.030" FRACTIONAL: ± ¼" ∠ ± 1°	HYDRO-DYNE ENGINEERING www.hydro-dyne.com	DRAWING #: CF26-30-144-6P4-WCW8S-CF26-49-176-2P4-WCW6S-GT60-102-GC12-98-2X-S1	SHT.: 2/11	REV.: S1
		DRAWN BY/DATE: J. GILLESPIE 5/13/2025	SCALE: NTS	
		CHECKED BY/DATE: T. HUNT, PE 5/14/2025	SIZE: A	

PROVIDE COARSE AND FINE SCREEN WEIR INFO IN O&M
PROVIDE LEVEL FLOAT INSTALLATION AND DEPTH IN O&M

DIMENSIONS HAVE BEEN VERIFIED & APPROVED BY: _____(INITIALS REQUIRED)

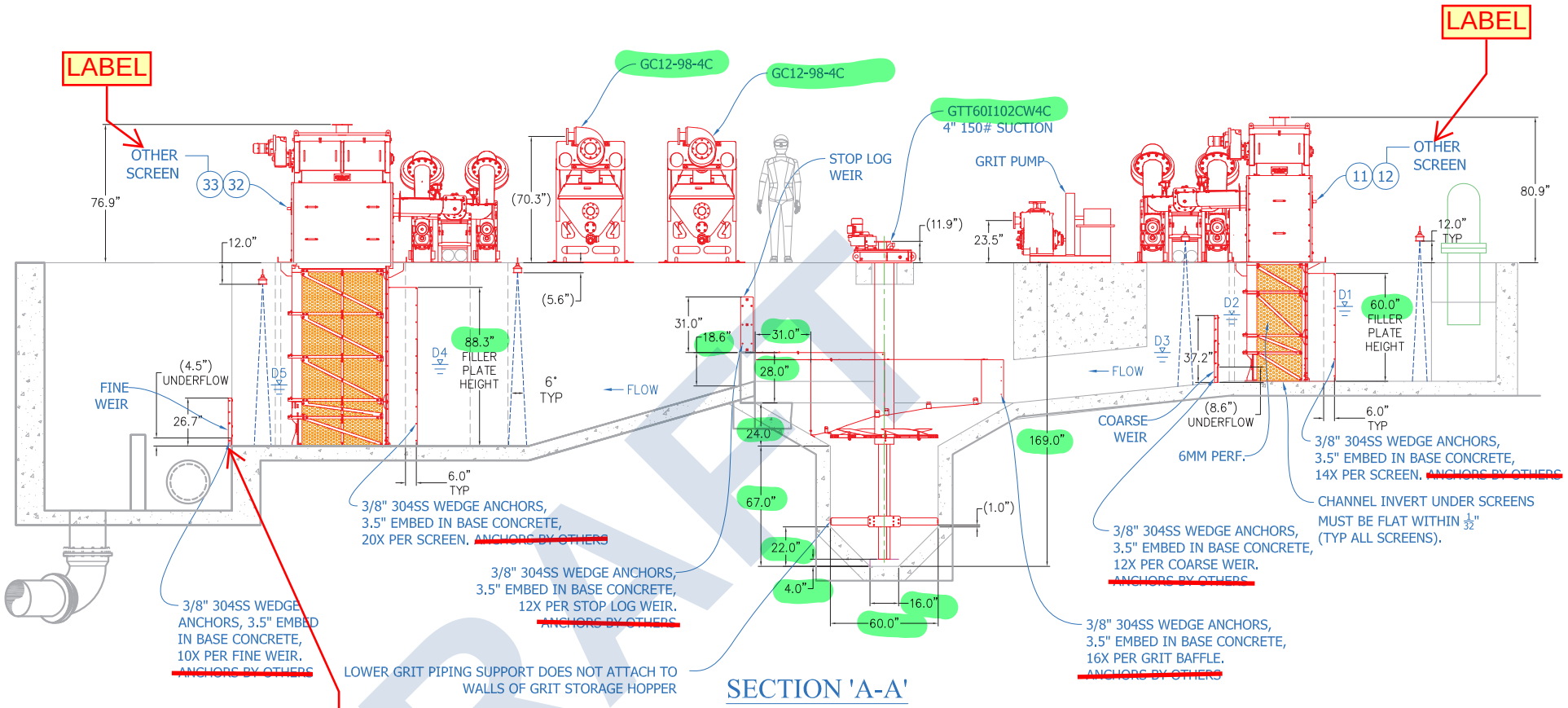

SECTION 'A-A'

DRAFT

*ALL RIGHTS RESERVED. THE INFORMATION TRANSMITTED HEREIN IS THE PROPERTY OF HYDRO-DYNE ENGINEERING INC. AND HAS BEEN PROVIDED FOR RESTRICTIVE USE. THIS DATA MUST BE HELD CONFIDENTIAL AND TRANSMISSION, DUPLICATION OR DISCLOSURE IS PROHIBITED UNLESS AUTHORIZED IN WRITING BY HYDRO-DYNE ENGINEERING INC.

UNLESS NOTED
TOLERANCE
.X ± 0.125"
.XX ± 0.060" ∠ ± 1°
.XXX ± 0.030"
FRACTIONAL: ± 1/4"

HYDRO-DYNE ENGINEERING
www.hydro-dyne.com

SAN LUIS, AZ – SUBMITTAL LAYOUT

DRAWING #: CF26-30-144-6P4-WCW8S-CF26-49-176-2P4-WCW6S-GT60-102-GC12-98-2X-S1	SHT.: 3/11	REV.: S1
DRAWN BY/DATE: J. GILLESPIE 5/13/2025	SCALE: NTS	
CHECKED BY/DATE: T. HUNT, PE 5/14/2025	SIZE: A	

DIMENSIONS HAVE BEEN VERIFIED & APPROVED BY: _____(INITIALS REQUIRED)

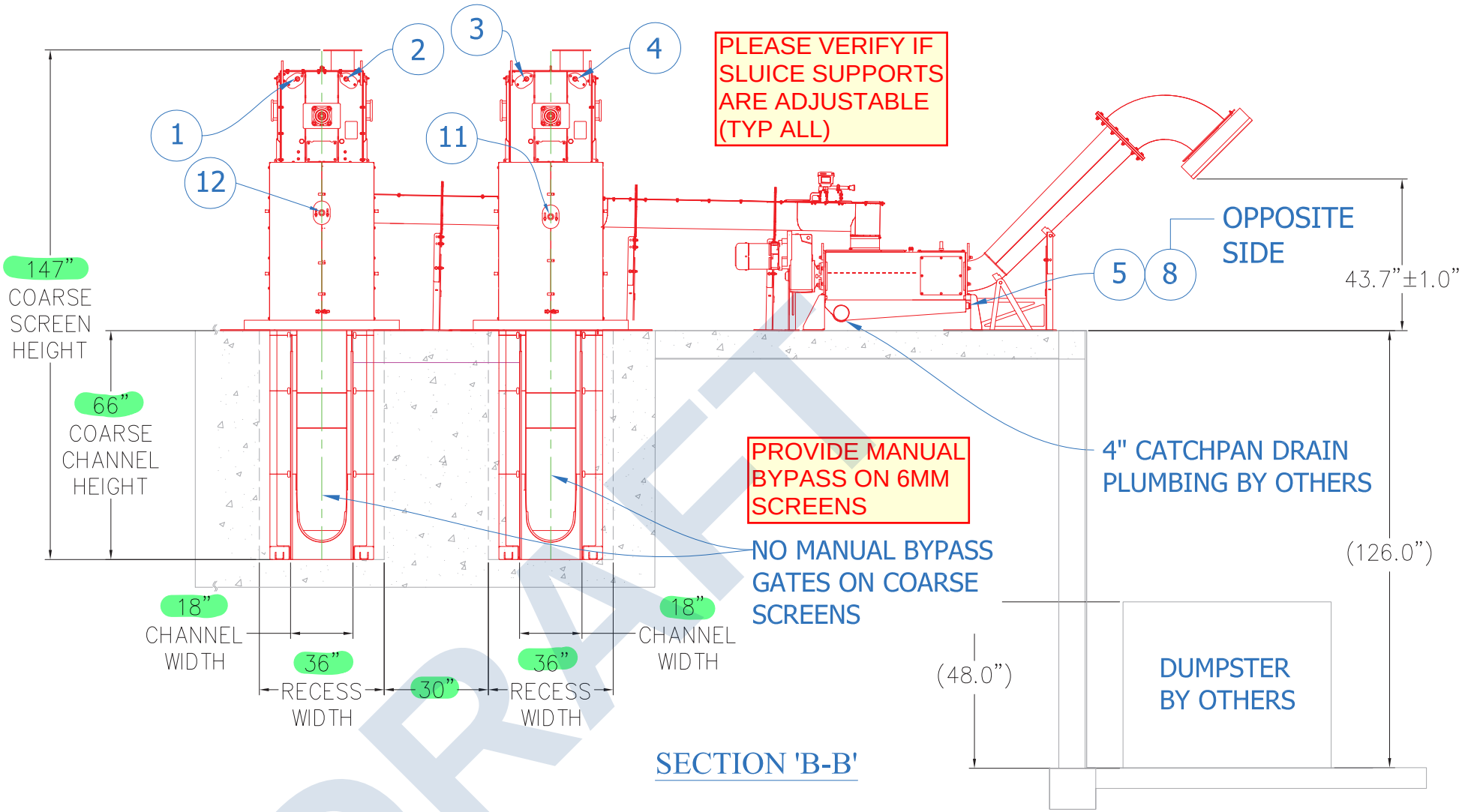

SECTION 'B-B'

DRAFT

*ALL RIGHTS RESERVED. THE INFORMATION TRANSMITTED HEREIN IS THE PROPERTY OF HYDRO-DYNE ENGINEERING INC. AND HAS BEEN PROVIDED FOR RESTRICTIVE USE. THIS DATA MUST BE HELD CONFIDENTIAL AND TRANSMISSION, DUPLICATION OR DISCLOSURE IS PROHIBITED UNLESS AUTHORIZED IN WRITING BY HYDRO-DYNE ENGINEERING INC.

UNLESS NOTED

TOLERANCE
.X ± 0.125"
.XX ± 0.060" ∠ ± 1°
.XXX ± 0.030"
FRACTIONAL: ± 1/4"

HYDRO DYNE ENGINEERING
www.hydro-dyne.com

SAN LUIS, AZ – SUBMITTAL LAYOUT

DRAWING #: CF26-30-144-6P4-WCW8S-CF26-49-176-2P4-WCW6S-GT60-102-GC12-98-2X-S1	SHT.: 4/11	REV.: S1
DRAWN BY/DATE: J. GILLESPIE 5/13/2025	SCALE: NTS	
CHECKED BY/DATE: T. HUNT, PE 5/14/2025	SIZE: A	

DIMENSIONS HAVE BEEN VERIFIED & APPROVED BY: _____(INITIALS REQUIRED)

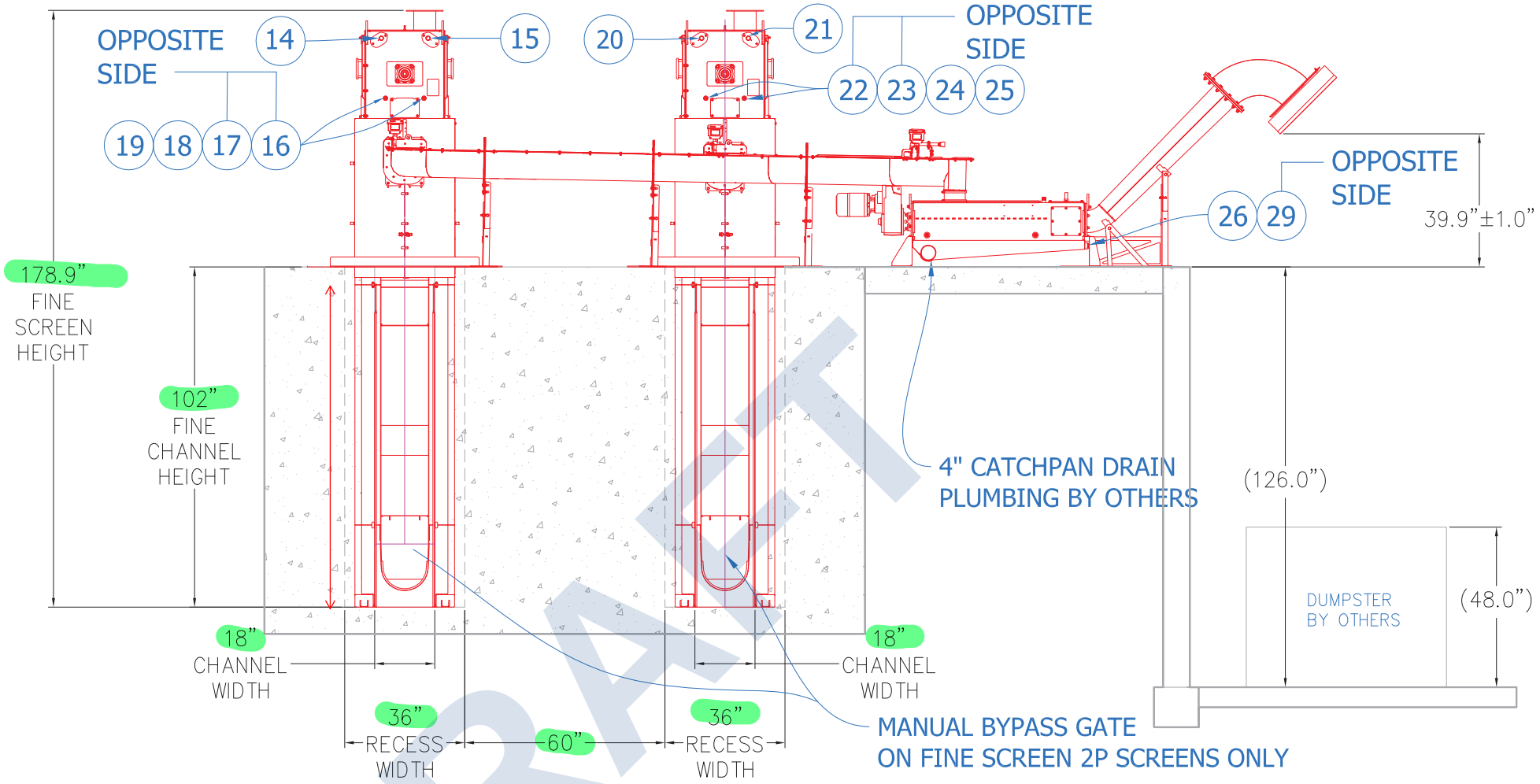

SECTION 'C-C'

NO MANUAL BYPASS ON 2MM SCREENS

DRAFT

*ALL RIGHTS RESERVED. THE INFORMATION TRANSMITTED HEREIN IS THE PROPERTY OF HYDRO-DYNE ENGINEERING INC. AND HAS BEEN PROVIDED FOR RESTRICTIVE USE. THIS DATA MUST BE HELD CONFIDENTIAL AND TRANSMISSION, DUPLICATION OR DISCLOSURE IS PROHIBITED UNLESS AUTHORIZED IN WRITING BY HYDRO-DYNE ENGINEERING INC.

UNLESS NOTED
TOLERANCE
.X ± 0.125"
.XX ± 0.060" ∠ ± 1°
.XXX ± 0.030"
FRACTIONAL: ± 1/4"

HYDRO-DYNE ENGINEERING
www.hydro-dyne.com

SAN LUIS, AZ – SUBMITTAL LAYOUT

DRAWING #: CF26-30-144-6P4-WCW8S-CF26-49-176-2P4-WCW6S-GT60-102-GC12-98-2X-S1	SHT.: 5/11	REV.: S1
DRAWN BY/DATE: J. GILLESPIE 5/13/2025	SCALE: NTS	
CHECKED BY/DATE: T. HUNT, PE 5/14/2025	SIZE: A	

DIMENSIONS HAVE BEEN VERIFIED & APPROVED BY: _____(INITIALS REQUIRED)

ALL DIMENSIONS SHOWN ON PAGE FOR REFERENCE ONLY

GRIT TRAP FLUIDIZING TYP.

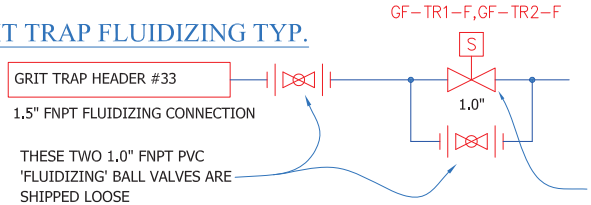

APPROXIMATE FLUIDIZING USAGE -
20 GPM INSTANTANEOUS (3-5 MINUTE CYCLE EVERY 20 MINUTES)
TOTAL USE AT 40 PSI
PLUS PIPING AND VALVE
LOSSES

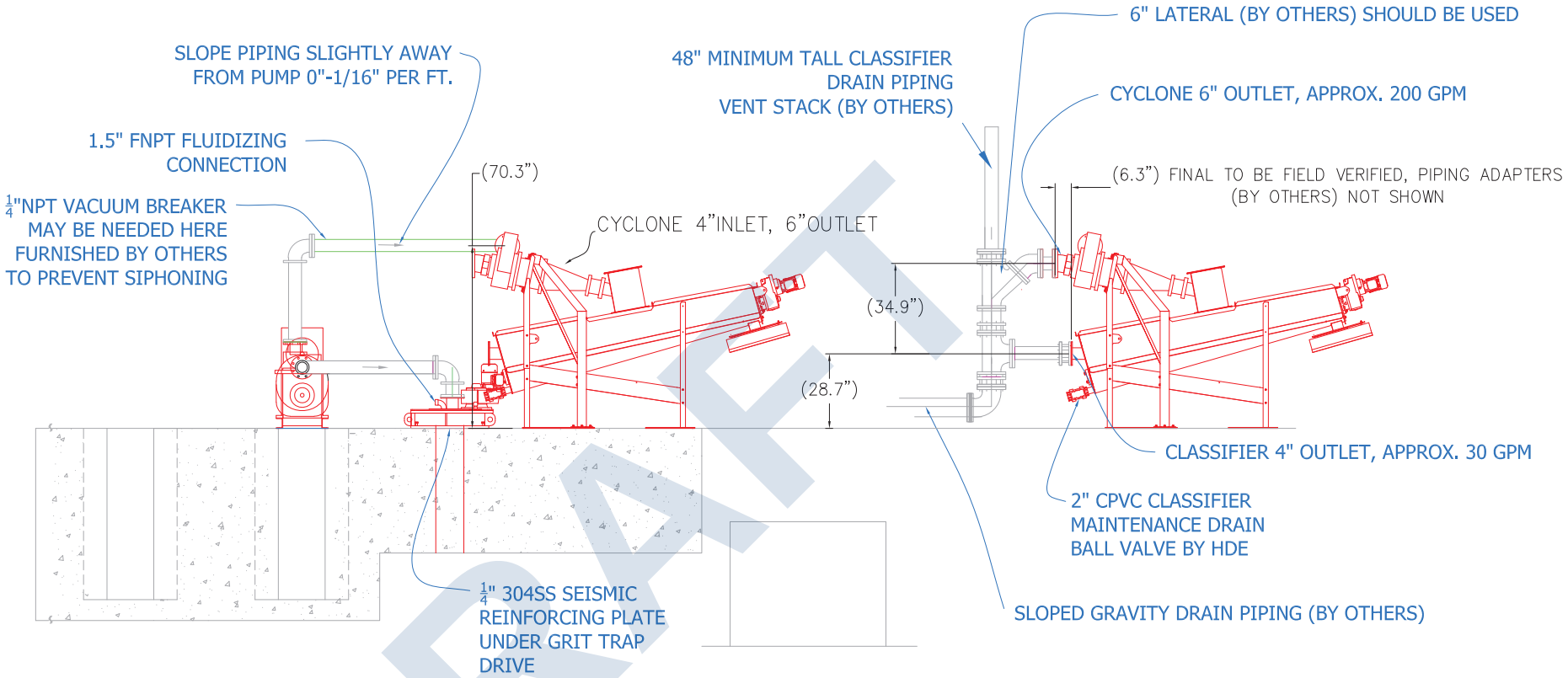

GRIT PIPING (BY OTHERS) REFERENCE NOTES

DRAFT

*ALL RIGHTS RESERVED. THE INFORMATION TRANSMITTED HEREIN IS THE PROPERTY OF HYDRO-DYNE ENGINEERING INC. AND HAS BEEN PROVIDED FOR RESTRICTIVE USE. THIS DATA MUST BE HELD CONFIDENTIAL AND TRANSMISSION, DUPLICATION OR DISCLOSURE IS PROHIBITED UNLESS AUTHORIZED IN WRITING BY HYDRO-DYNE ENGINEERING INC.

UNLESS NOTED	
TOLERANCE	
.X	± 0.125"
.XX	± 0.060" ∠ ± 1°
.XXX	± 0.030"
FRACTIONAL:	± 1/4"

HYDRO-DYNE ENGINEERING
www.hydro-dyne.com

SAN LUIS, AZ – SUBMITTAL LAYOUT

DRAWING #: CF26-30-144-6P4-WCW8S-CF26-49-176-2P4-WCW6S-GT60-102-GC12-98-2X-S1	SHT.: 6/11	REV.: S1
DRAWN BY/DATE: J. GILLESPIE 5/13/2025	SCALE: NTS	
CHECKED BY/DATE: T. HUNT, PE 5/14/2025	SIZE: A	

DIMENSIONS HAVE BEEN VERIFIED & APPROVED BY: _____(INITIALS REQUIRED)

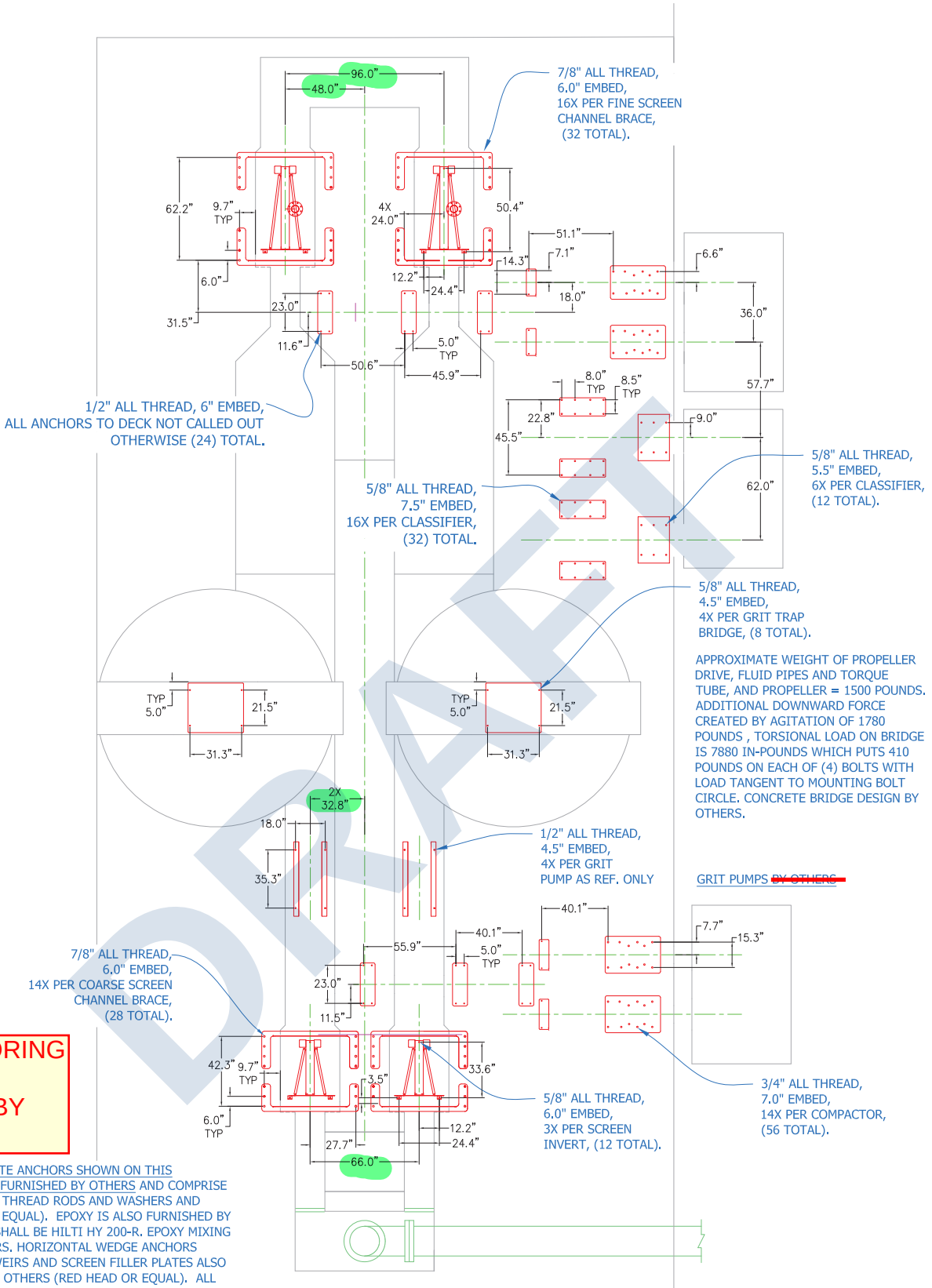

ALL ANCHORING SYSTEMS SUPPLIED BY HDE

NOTE: ALL CONCRETE ANCHORS SHOWN ON THIS DRAWING SET FURNISHED BY OTHERS AND COMPRISE OF 316SS ALL- THREAD RODS AND WASHERS AND NUTS (HAS OR EQUAL). EPOXY IS ALSO FURNISHED BY OTHERS AND SHALL BE HILTI HY 200-R. EPOXY MIXING GUN BY OTHERS. HORIZONTAL WEDGE ANCHORS (316SS) FOR WEIRS AND SCREEN FILLER PLATES ALSO FURNISHED BY OTHERS (RED HEAD OR EQUAL). ALL DIRECTIONS IN ANCHORING MUST BE FOLLOWED AND SPECIAL INSPECTION MAY BE REQUIRED (ESPECIALLY ON WEDGE ANCHOR'S PRE-SETS).

ANCHOR LAYOUT

DRAFT

*ALL RIGHTS RESERVED. THE INFORMATION TRANSMITTED HEREIN IS THE PROPERTY OF HYDRO-DYNE ENGINEERING INC. AND HAS BEEN PROVIDED FOR RESTRICTIVE USE. THIS DATA MUST BE HELD CONFIDENTIAL AND TRANSMISSION, DUPLICATION OR DISCLOSURE IS PROHIBITED UNLESS AUTHORIZED IN WRITING BY HYDRO-DYNE ENGINEERING INC.

UNLESS NOTED			
TOLERANCE	HYDRO-DYNE ENGINEERING	SAN LUIS, AZ – SUBMITTAL LAYOUT	
.X ± 0.125"	www.hydro-dyne.com	DRAWING #: CF26-30-144-6P4-WCW8S-CF26-49-176-2P4-WCW6S-GT60-102-GC12-98-2X-S1	SHT.: 7/11 REV.: S1
.XX ± 0.060"		DRAWN BY/DATE: J. GILLESPIE 5/13/2025	SCALE: NTS
.XXX ± 0.030"		CHECKED BY/DATE: T. HUNT, PE 5/14/2025	SIZE: A
FRACTIONAL: ± ¼"			
∠ ± 1°			

DIMENSIONS HAVE BEEN VERIFIED & APPROVED BY: _____(INITIALS REQUIRED)

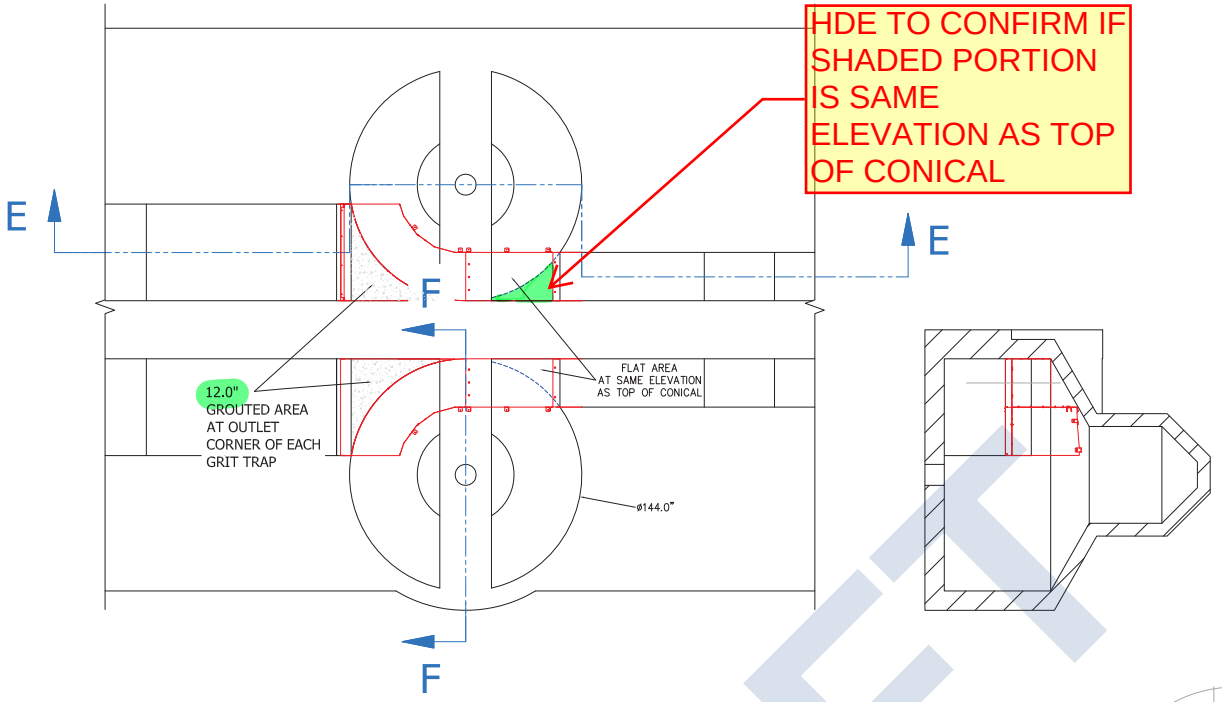

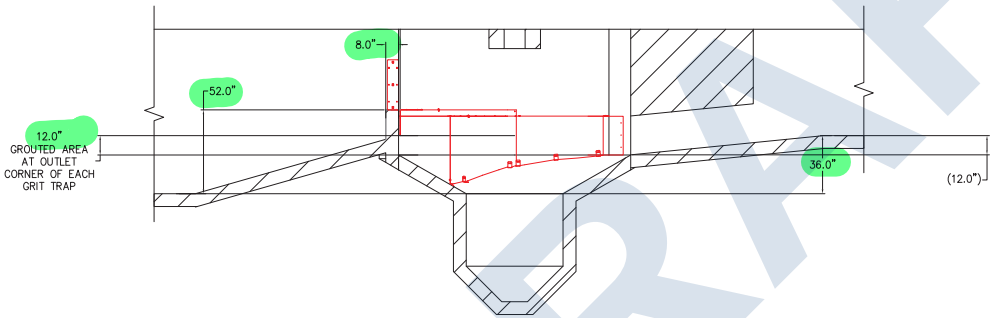

SECTION E-E

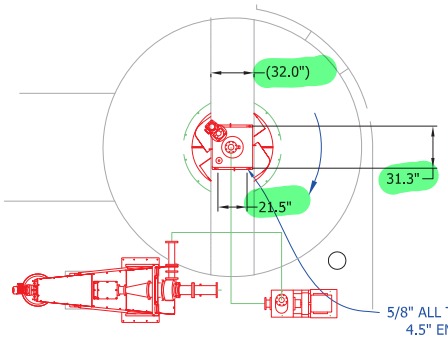

CLASSIFIER AND GRIT PUMP LOCATION IS SAMPLE ONLY, SEE SHEET 2/11

5/8" ALL THREAD, 4.5" EMBED, 4X PER GRIT TRAP BRIDGE.

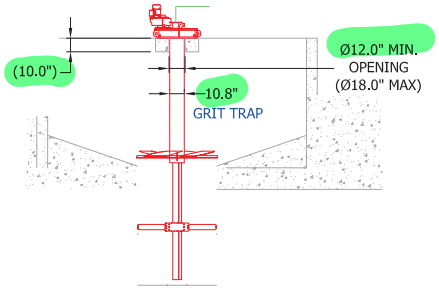

APPROXIMATE WEIGHT OF PROPELLER DRIVE, FLUID PIPES AND TORQUE TUBE, AND IMPELLER = 1500 POUNDS. ADDITIONAL DOWNWARD FORCE CREATED BY AGITATION OF 1780 POUNDS AT FULL RATED FLOW AND HIGHEST TRAP LEVEL, TORSIONAL LOAD ON BRIDGE IS 7880 IN-POUNDS WHICH PUTS 410 POUNDS ON EACH OF (4) BOLTS WITH LOAD TANGENT TO MOUNTING BOLT CIRCLE. CONCRETE BRIDGE DESIGN BY OTHERS.

DRAFT

*ALL RIGHTS RESERVED. THE INFORMATION TRANSMITTED HEREIN IS THE PROPERTY OF HYDRO-DYNE ENGINEERING INC. AND HAS BEEN PROVIDED FOR RESTRICTIVE USE. THIS DATA MUST BE HELD CONFIDENTIAL AND TRANSMISSION, DUPLICATION OR DISCLOSURE IS PROHIBITED UNLESS AUTHORIZED IN WRITING BY HYDRO-DYNE ENGINEERING INC.

UNLESS NOTED
TOLERANCE
.X ± 0.125"
.XX ± 0.060" ∠ ± 1°
.XXX ± 0.030"
FRACTIONAL: ± ¼"

HYDRO-DYNE® ENGINEERING
www.hydro-dyne.com

SAN LUIS, AZ – SUBMITTAL LAYOUT

DRAWING #: CF26-30-144-6P4-WCW8S-CF26-49-176-2P4-WCW6S-GT60-102-GC12-98-2X-S1	SHT.: 8/11	REV.: S1
DRAWN BY/DATE: J. GILLESPIE 5/13/2025	SCALE: NTS	
CHECKED BY/DATE: T. HUNT, PE 5/14/2025	SIZE: A	

DIMENSIONS HAVE BEEN VERIFIED & APPROVED BY: _____(INITIALS REQUIRED)

NO DIMENSIONS PROVIDED

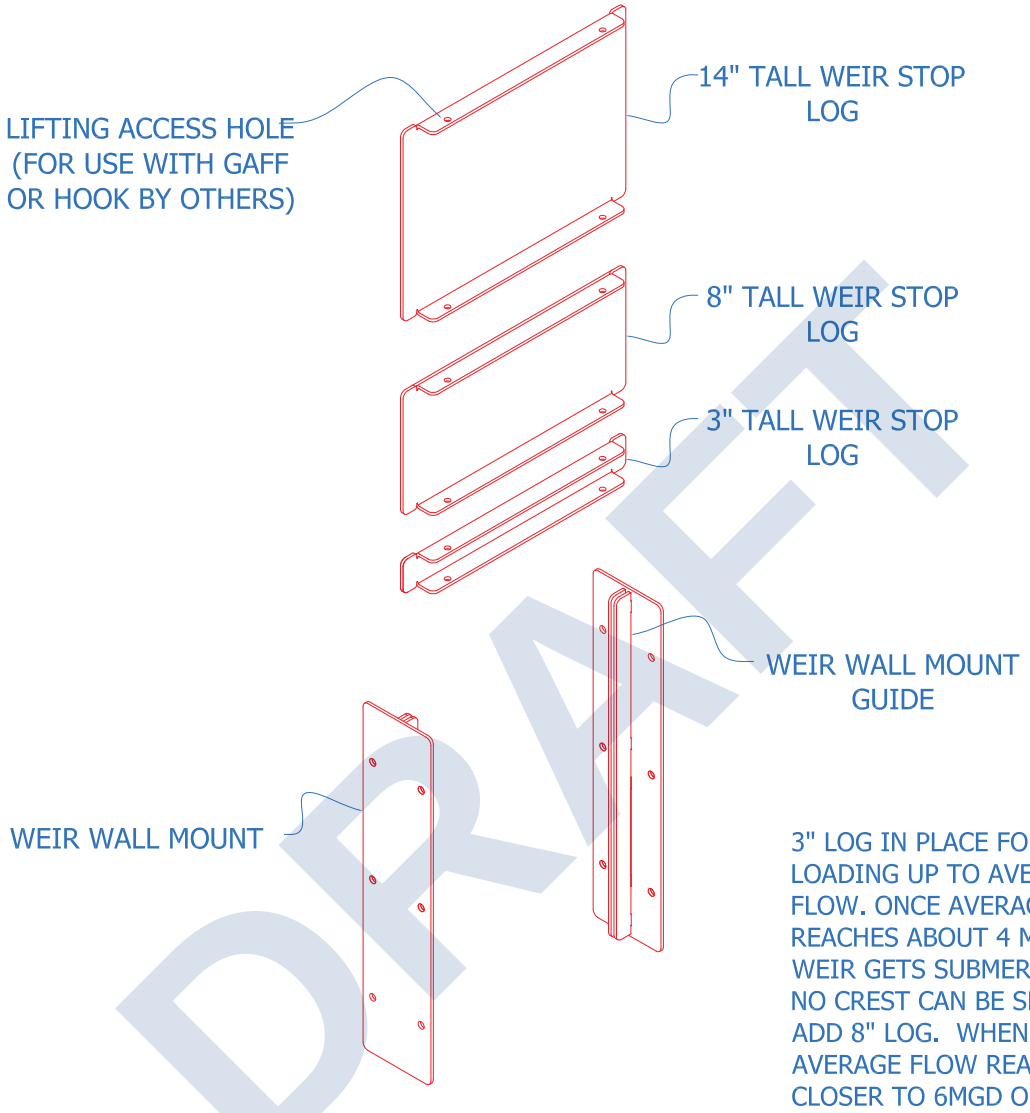

GRIT OUTLET WEIR DETAIL

(NOT TO SCALE)

3" LOG IN PLACE FOR LIGHT LOADING UP TO AVERAGE FLOW. ONCE AVERAGE FLOW REACHES ABOUT 4 MGD OR WEIR GETS SUBMERGED SO NO CREST CAN BE SEEN, ADD 8" LOG. WHEN AVERAGE FLOW REACHES CLOSER TO 6MGD OR WHEN WEIR IS SUBMERGED, ADD 14" LOG. THIS IS RECOMMENDED TO KEEP VELOCITY ABOVE 1.3 FPS IN COARSE SCREEN CHANNEL, AND PROVIDE FOR INSTANTANEOUS 2P LOADING ABOVE PREDICTED.

DRAFT

*ALL RIGHTS RESERVED. THE INFORMATION TRANSMITTED HEREIN IS THE PROPERTY OF HYDRO-DYNE ENGINEERING INC. AND HAS BEEN PROVIDED FOR RESTRICTIVE USE. THIS DATA MUST BE HELD CONFIDENTIAL AND TRANSMISSION, DUPLICATION OR DISCLOSURE IS PROHIBITED UNLESS AUTHORIZED IN WRITING BY HYDRO-DYNE ENGINEERING INC.

UNLESS NOTED			
TOLERANCE	HYDRO-DYNE ENGINEERING	SAN LUIS, AZ - SUBMITTAL LAYOUT	
.X ± .125"	www.hydro-dyne.com	FILE #: CF26-30-144-6P4-WCW8S-CF26-49-176-2P4-WCW6S-GT60-102-GC12-98-2X-S1	SHT.: 9/11 REV.: S1
.XX ± .060"		DRAWN BY/DATE: J. GILLESPIE - 05/13/2025	SCALE: NTS
.XXX ± .030"		CHECKED BY/DATE: T. HUNT - 05/13/2025	SIZE: A
FRACTIONAL ± 1/4"			
∠ ± 1°			

DIMENSIONS HAVE BEEN VERIFIED & APPROVED BY: _____(INITIALS REQUIRED)

NO DIMENSIONS PROVIDED

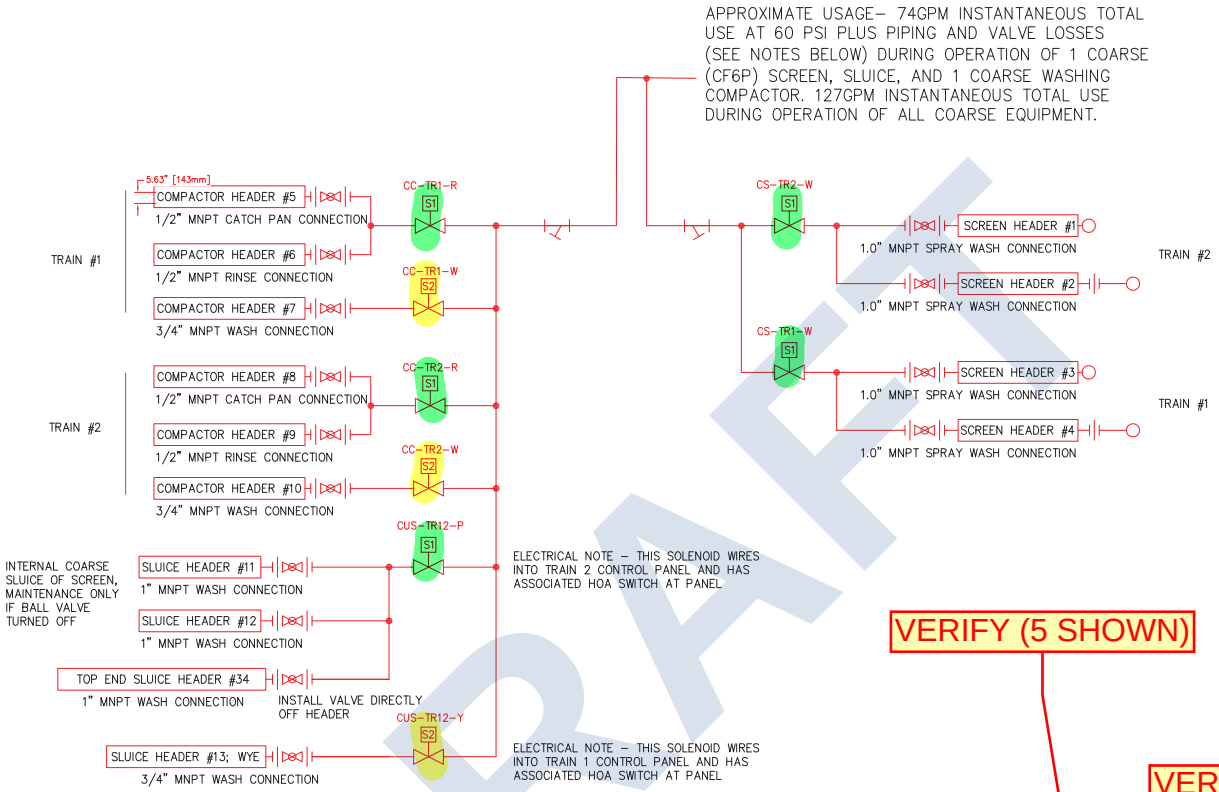

VERIFY (5 SHOWN)

VERIFY (3 SHOWN)

LEGEND

- SOLENOID VALVE 1.0" FNPT (BY HDE; QTY 4)
- SOLENOID VALVE 3/4" FNPT (BY HDE; QTY 4)
- SPEARS PVC UNION BALL VALVE FNPT (BY HDE)
- STRAINER 2.0" FNPT (BY HDE; QTY 2)
- PRESSURE GAUGE 1/4" MNPT (BY HDE; QTY 4)
- UNION FITTING (BY OTHERS)
- PIPING (BY OTHERS)
- TEE (BY OTHERS)

NOTES:

1) UNLESS OTHERWISE INDICATED ALL PLUMBING, COMPONENTS, AND FITTINGS ARE SUPPLIED BY OTHERS.

(2) UNION FITTING TO BE DIRECT CONNECTED AND IN–LINE WITH SPRAY HEADER TO PERMIT ROTATIONAL ADJUSTMENT OF SPRAY NOZZLES.

3) A PRESSURE OF 60 PSI MINIMUM IS REQUIRED FOR ALL SPRAY NOZZLE HEADERS AT THE POINT OF CONNECTION TO THE HEADER INLET (AFTER ALL PLUMBING FITTINGS, PIPING, AND COMPONENTS).

COARSE PLUMBING DIAGRAM

DRAFT

*ALL RIGHTS RESERVED. THE INFORMATION TRANSMITTED HEREIN IS THE PROPERTY OF HYDRO-DYNE ENGINEERING INC. AND HAS BEEN PROVIDED FOR RESTRICTIVE USE. THIS DATA MUST BE HELD CONFIDENTIAL AND TRANSMISSION, DUPLICATION OR DISCLOSURE IS PROHIBITED UNLESS AUTHORIZED IN WRITING BY HYDRO-DYNE ENGINEERING INC.

UNLESS NOTED			
TOLERANCE	HYDRO-DYNE ENGINEERING www.hydro-dyne.com	SAN LUIS, AZ – SUBMITTAL LAYOUT	
.X ± 0.125"		DRAWING #: CF26-30-144-6P4-WCW8S-CF26-49-176-2P4-WCW6S-GT60-102-GC12-98-2X-S1	SHT.: 10/11 REV.: S1
.XX ± 0.060"		DRAWN BY/DATE: J. GILLESPIE 5/13/2025	SCALE: NTS
.XXX ± 0.030"		CHECKED BY/DATE: T. HUNT, PE 5/14/2025	SIZE: A
FRACTIONAL: ± 1/4"			
∠ ± 1°			

DIMENSIONS HAVE BEEN VERIFIED & APPROVED BY: _____(INITIALS REQUIRED)

NO DIMENSIONS PROVIDED

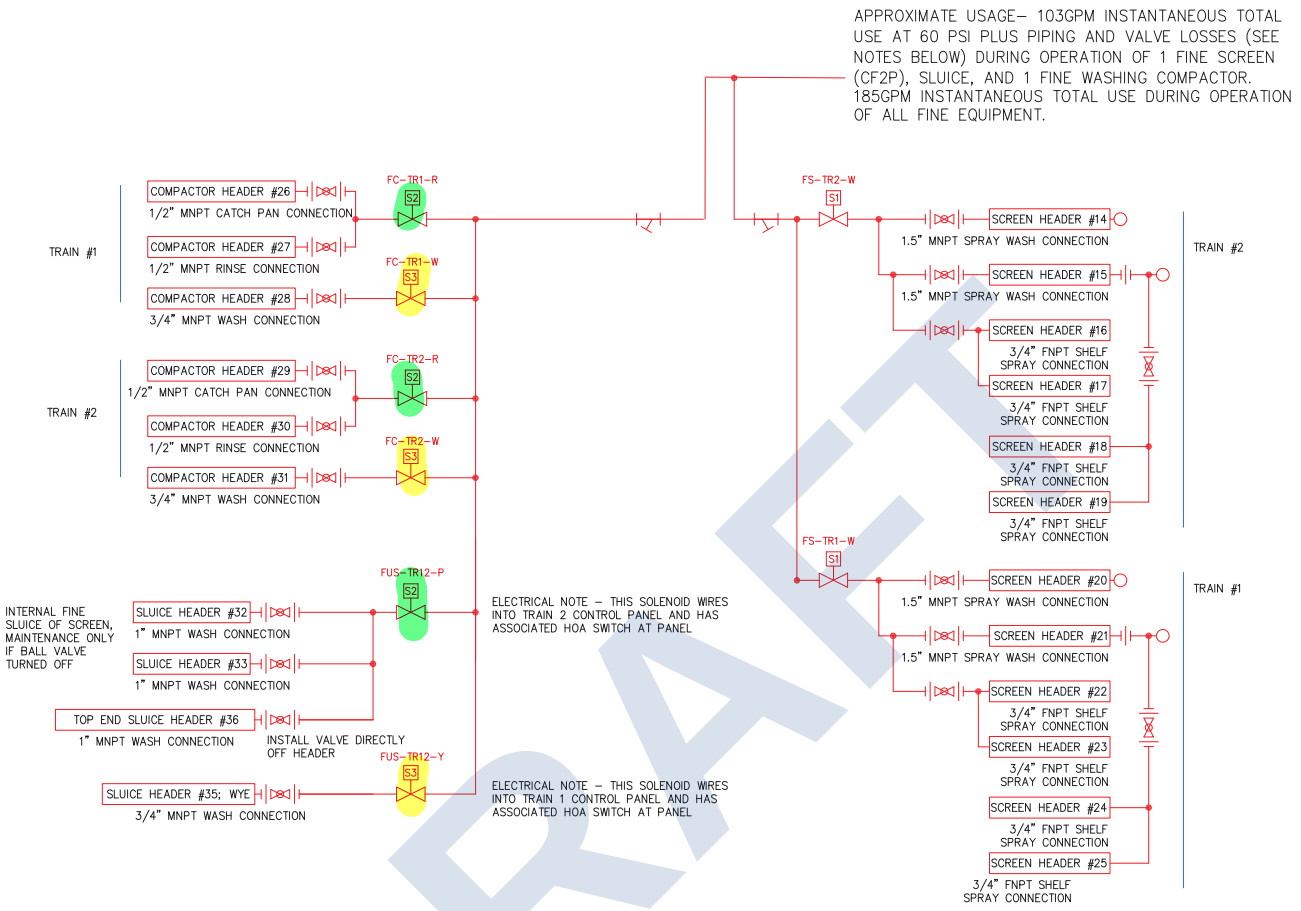

LEGEND

- S1 SOLENOID VALVE 2.0" FNPT (BY HDE; QTY 2)
- S2 SOLENOID VALVE 1.0" FNPT (BY HDE; QTY 2)
- S3 SOLENOID VALVE 3/4" FNPT (BY HDE; QTY 4)

VERIFY (3 SHOWN)

- SPEARS PVC UNION BALL VALVE FNPT (BY HDE)
- STRAINER 2.0" FNPT (BY HDE; QTY 2)
- PRESSURE GAUGE 1/4" MNPT (BY HDE; QTY 4)
- UNION FITTING (BY OTHERS)
- PIPING (BY OTHERS)

NOTES:

1) UNLESS OTHERWISE INDICATED ALL PLUMBING, COMPONENTS, AND FITTINGS ARE SUPPLIED BY OTHERS.

(2) UNION FITTING TO BE DIRECT CONNECTED AND IN–LINE WITH SPRAY HEADER TO PERMIT ROTATIONAL ADJUSTMENT OF SPRAY NOZZLES.

3) A PRESSURE OF 60 PSI MINIMUM IS REQUIRED FOR ALL SPRAY NOZZLE HEADERS AT THE POINT OF CONNECTION TO THE HEADER INLET (AFTER ALL PLUMBING FITTINGS, PIPING, AND COMPONENTS).

FINE PLUMBING DIAGRAM

DRAFT

*ALL RIGHTS RESERVED. THE INFORMATION TRANSMITTED HEREIN IS THE PROPERTY OF HYDRO-DYNE ENGINEERING INC. AND HAS BEEN PROVIDED FOR RESTRICTIVE USE. THIS DATA MUST BE HELD CONFIDENTIAL AND TRANSMISSION, DUPLICATION OR DISCLOSURE IS PROHIBITED UNLESS AUTHORIZED IN WRITING BY HYDRO-DYNE ENGINEERING INC.

UNLESS NOTED
TOLERANCE
.X ± 0.125"
.XX ± 0.060"
.XXX ± 0.030"
FRACTIONAL: ± 1/4"
∠ ± 1°

HYDRO-DYNE® ENGINEERING
www.hydro-dyne.com

SAN LUIS, AZ – SUBMITTAL LAYOUT

DRAWING #: CF26-30-144-6P4-WCW8S-CF26-49-176-2P4-WCW6S-GT60-102-GC12-98-2X-S1	SHT.: 11/11	REV.: S1
DRAWN BY/DATE: J. GILLESPIE 5/13/2025	SCALE: NTS	
CHECKED BY/DATE: T. HUNT, PE 5/14/2025	SIZE: A	

TYPICAL CONFIGURATION SHOWN INCLUDES OPTIONS THAT MAY NOT BE PROVIDED. REFERENCE LAYOUT/PLUMBING DRAWINGS AND CONTROLS DOCUMENTATION FOR PROJECT SPECIFIC FEATURES.

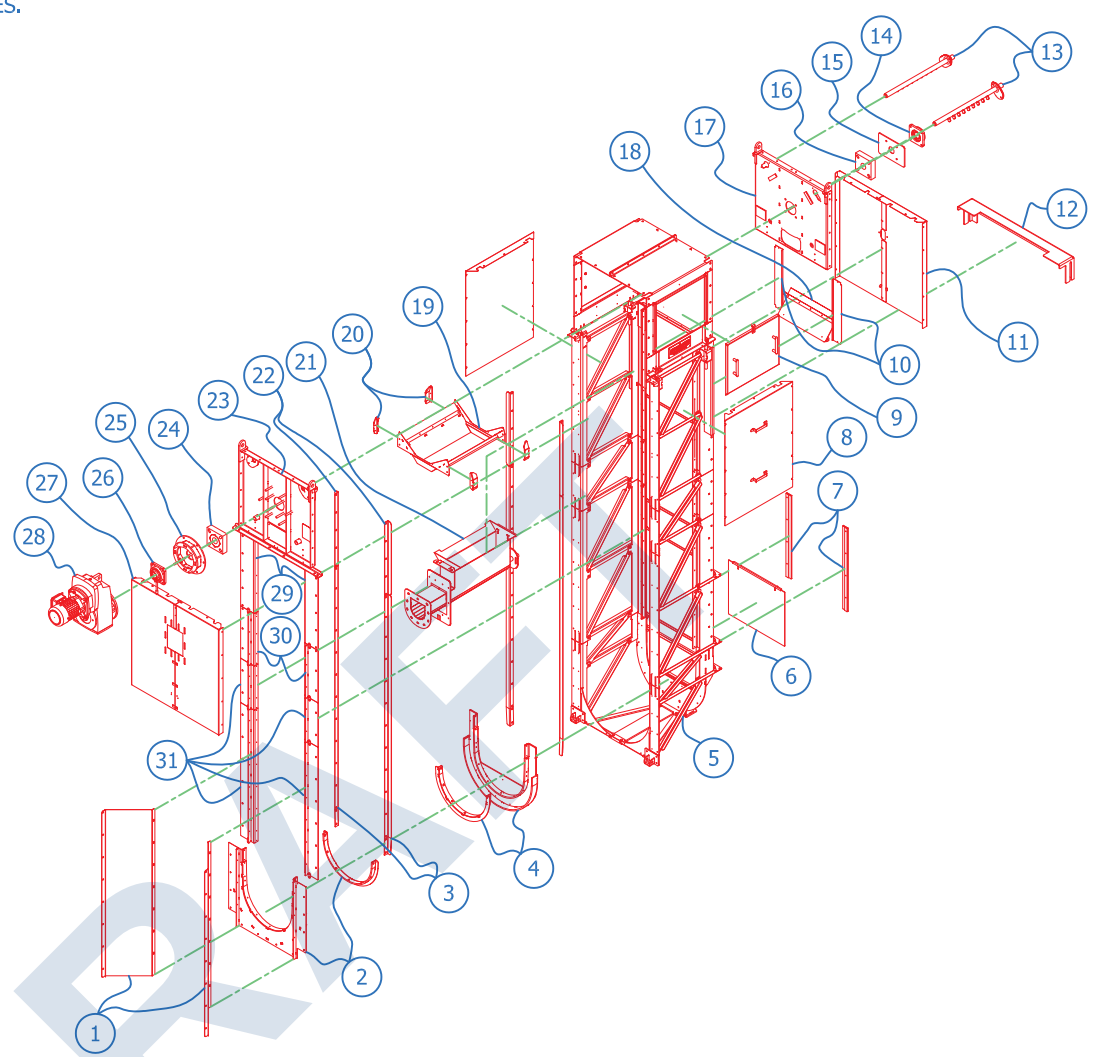

DRAFT

*ALL RIGHTS RESERVED. THE INFORMATION TRANSMITTED HEREIN IS THE PROPERTY OF HYDRO-DYNE ENGINEERING INC. AND HAS BEEN PROVIDED FOR RESTRICTIVE USE. THIS DATA MUST BE HELD CONFIDENTIAL AND TRANSMISSION, DUPLICATION OR DISCLOSURE IS PROHIBITED UNLESS AUTHORIZED IN WRITING BY HYDRO-DYNE ENGINEERING INC.

UNLESS NOTED		
TOLERANCE		
.X	± 0.125"	± 1°
.XX	± 0.060"	
.XXX	± 0.030"	
FRACTIONAL: ± ¼"		

HYDRO-DYNE® ENGINEERING
www.hydro-dyne.com

CENTER FLOW - TYPICAL BREAKOUT			
DRAWING #: CF23-62-2SPR-CENTER		SHT.: 1/3	REV.: B
DRAWN BY/DATE: A. COSTANTINI	8/19/2021	SCALE: NTS	
CHECKED BY/DATE: S. STURTEVANT	8/19/2021		SIZE: A

TYPICAL CONFIGURATION SHOWN INCLUDES OPTIONS THAT MAY NOT BE PROVIDED. REFERENCE LAYOUT/PLUMBING DRAWINGS AND CONTROLS DOCUMENTATION FOR PROJECT SPECIFIC FEATURES.

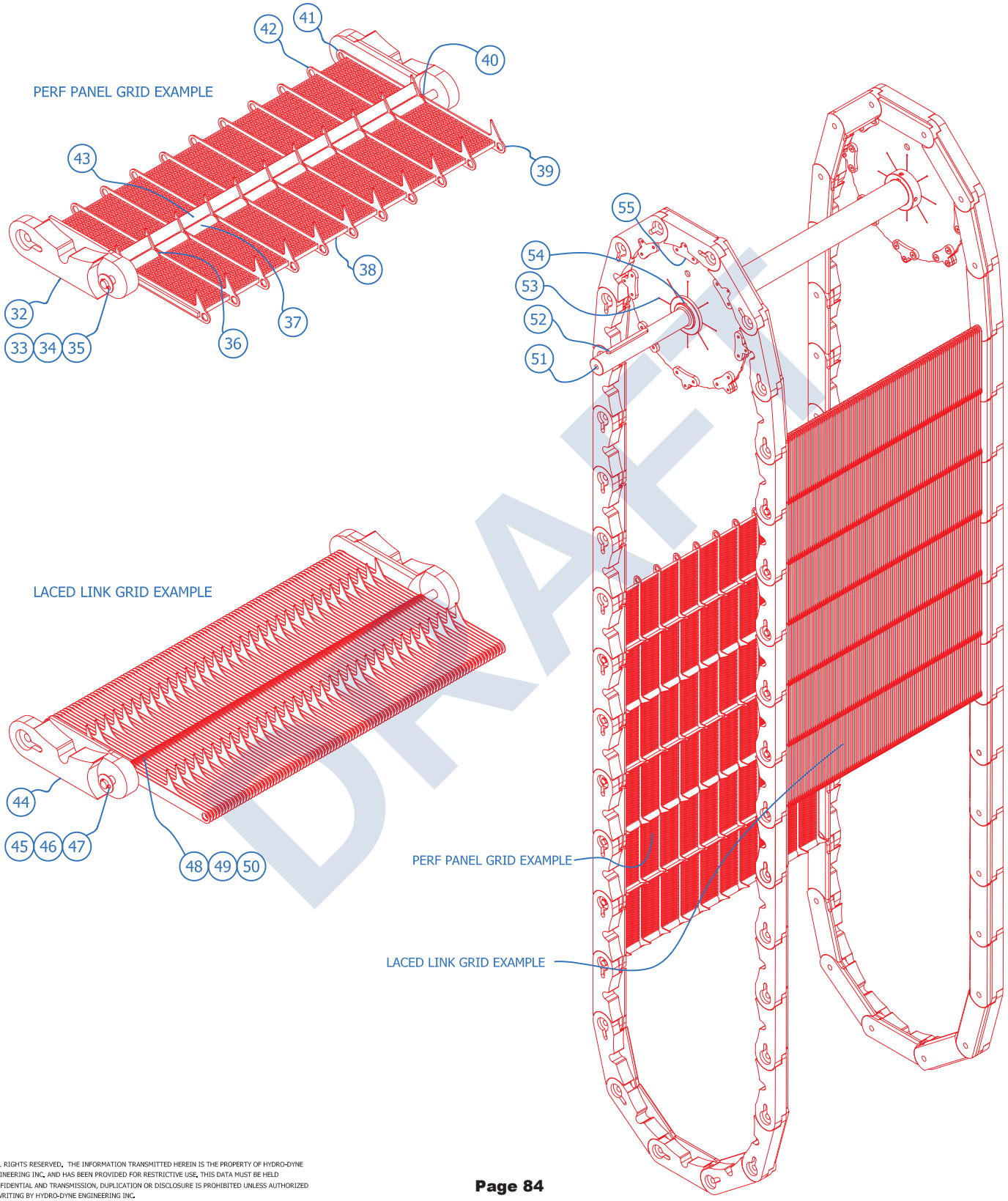

DRAFT

©ALL RIGHTS RESERVED. THE INFORMATION TRANSMITTED HEREIN IS THE PROPERTY OF HYDRO-DYNE ENGINEERING INC. AND HAS BEEN PROVIDED FOR RESTRICTIVE USE. THIS DATA MUST BE HELD CONFIDENTIAL AND TRANSMISSION, DUPLICATION OR DISCLOSURE IS PROHIBITED UNLESS AUTHORIZED IN WRITING BY HYDRO-DYNE ENGINEERING INC.

UNLESS NOTED			
TOLERANCE			
.X	± 0.125"		
.XX	± 0.060"		
.XXX	± 0.030"		
FRACTIONAL: ± 1/4"			
± 1°			

HYDRO DYNE® ENGINEERING
www.hydro-dyne.com

CENTER FLOW - TYPICAL BREAKOUT			
DRAWING #: CF23-62-2SPR-CENTER		SHT.: 2/3	REV.: B
DRAWN BY/DATE: A. COSTANTINI	8/19/2021	SCALE: NTS	
CHECKED BY/DATE: S. STURTEVANT	8/19/2021		SIZE: A

ITEM	PART DESCRIPTION
1	FILLER PLATE (RIGHT AND LEFT)
2	INFLUENT REMOVABLE TRACK AND LOWER SEAL
3	SEAL STRIP (RIGHT AND LEFT)
4	EFFLUENT REMOVABLE TRACK AND LOWER SEAL
5	FRAME ASSEMBLY
6	BYPASS GATE (OPTIONAL)
7	BYPASS GATE SLIDE RAIL (RIGHT AND LEFT) AND BYPASS GATE RAIL - OUTER (OPTIONAL, W/ GATE)
8	SIDE SKIRT (BOTH SIDES)
9	SIDE HEAD ACCESS PANEL (BOTH SIDES)
10	GUIDELINK ACCESS COVER
11	SKIRT - PLUMBING OR REDUCER (BASED ON DISCHARGE)
12	REAR CHANNEL BRACE
13	SPRAY BAR
14	BEARING (DRIVEN SIDE)
15	SEAL BLOCK SUPPORT PLATE
16	SHAFT SEAL (DRIVEN SIDE)
17	HEAD PANEL (DRIVEN SIDE)
18	DEFLECTOR PLATE
19	INTERNAL HOPPER W/SEAL AND SEAL CLAMP
20	REMOVABLE HEAD TRACK (RIGHT AND LEFT)
21	INTERNAL SLUICE (OPTIONAL)
22	GRID SEAL - UPPER
23	HEAD PANEL (DRIVE SIDE)
24	SHAFT SEAL (DRIVE SIDE)
25	DRIVE FLANGE
26	BEARING (DRIVE SIDE)
27	SKIRT - DISCHARGE
28	REDUCER AND MOTOR
29	TOP COVER (RIGHT AND LEFT)
30	COVER (RIGHT AND LEFT)
31	COVER
32	GUIDE LINK
33	COTTER PIN (BOTH ENDS)
34	FLAT WASHER (BOTH ENDS)
35	AXLE
36	GRID SPACER (ANTI-FRICTION, BETWEEN LINKS)
37	GRID SPACER
38	GRID PANEL
39	SLOTTED HOOK LINK
40	GRID SPACER (END, BOTH ENDS)
41	SLOTTED HOOK HALF SHELF LINK (BOTH ENDS, AXLES W/ SHELVES)
42	SLOTTED HOOK SHELF LINK (AXLES WITH SHELVES)
43	GRID TAIL SHELF
44	GUIDE LINK
45	COTTER PIN (BOTH ENDS)
46	FLAT WASHER (BOTH ENDS)
47	AXLE
48	GRID SPACER
49	STRAIGHT LINK
50	HOOK LINK
51	DRIVE SHAFT
52	DRIVE KEY
53	DRIVE SPROCKET
54	DRIVE SPROCKET KEY
55	SPROCKET LUG, SPROCKET LUG - MACHINED, SPROCKET LUG SPACER (AS NEEDED)

DRAFT

*ALL RIGHTS RESERVED. THE INFORMATION TRANSMITTED HEREIN IS THE PROPERTY OF HYDRO-DYNE ENGINEERING INC. AND HAS BEEN PROVIDED FOR RESTRICTIVE USE. THIS DATA MUST BE HELD CONFIDENTIAL AND TRANSMISSION, DUPLICATION OR DISCLOSURE IS PROHIBITED UNLESS AUTHORIZED IN WRITING BY HYDRO-DYNE ENGINEERING INC.

UNLESS NOTED
TOLERANCE
.X ± 0.125"
.XX ± 0.060"
.XXX ± 0.030"
FRACTIONAL: ± 1/4"
± 1°

HYDRO DYNE® ENGINEERING
www.hydro-dyne.com

CENTER FLOW - TYPICAL BREAKOUT

DRAWING #: CF23-62-2SPR-CENTER | SHT.: 3/3 | REV.: B

DRAWN BY/DATE: A. COSTANTINI 8/19/2021 | SCALE: NTS

CHECKED BY/DATE: S. STURTEVANT 8/19/2021 | SIZE: A

Typical Assembly Shown
Actual May Differ

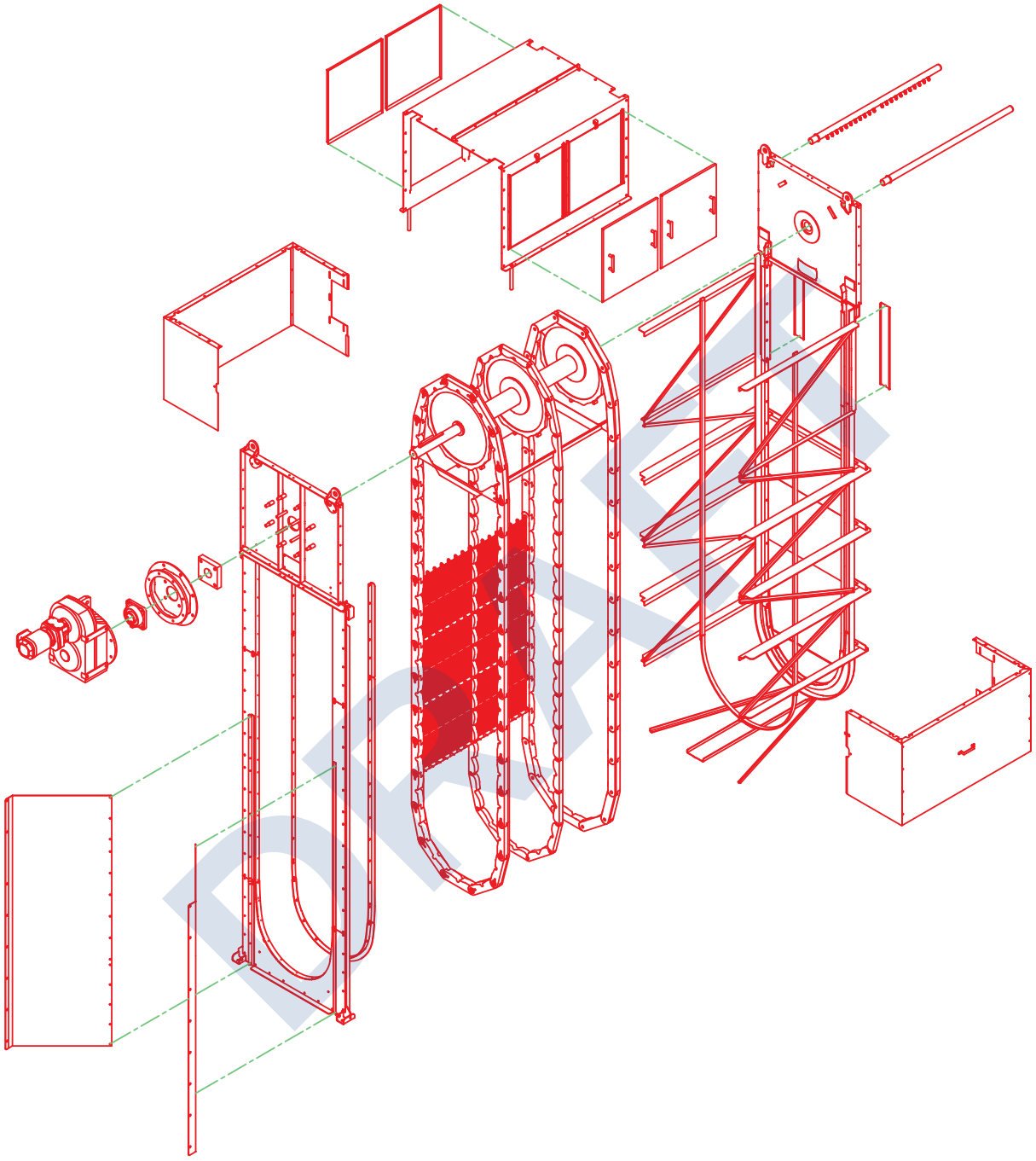

*ALL RIGHTS RESERVED. THE INFORMATION TRANSMITTED HEREIN IS THE PROPERTY OF HYDRO-DYNE ENGINEERING INC. AND HAS BEEN PROVIDED FOR RESTRICTIVE USE. THIS DATA MUST BE HELD CONFIDENTIAL AND TRANSMISSION, DUPLICATION OR DISCLOSURE IS PROHIBITED UNLESS AUTHORIZED IN WRITING BY HYDRO-DYNE ENGINEERING INC.

UNLESS NOTED			
TOLERANCE			
.X	± .030		
.XX	± .015		
.XXX	± .005		
.XXXX	± .0005		

HYDRO-DYNE® ENGINEERING
www.hydro-dyne.com

CENTER FLOW – TYPICAL BREAKOUT – COMPLETE ASSEMBLY

FILE #: CF23-56-3SPR-P	SHT.: 1/4	REV.: E
DRAWN BY/DATE: J. COONEY – 03/13/14	SCALE: NTS	
CHECKED BY/DATE: T. HUNT – 03/13/14	SIZE: A	

N:\Sales & Marketing\Made Easy\Drawings\CF\CF23-56-3SPROCKETS-PANEL\CF23-56-3SPR-P-RevE.dwg

Typical Assembly Shown
Actual May Differ

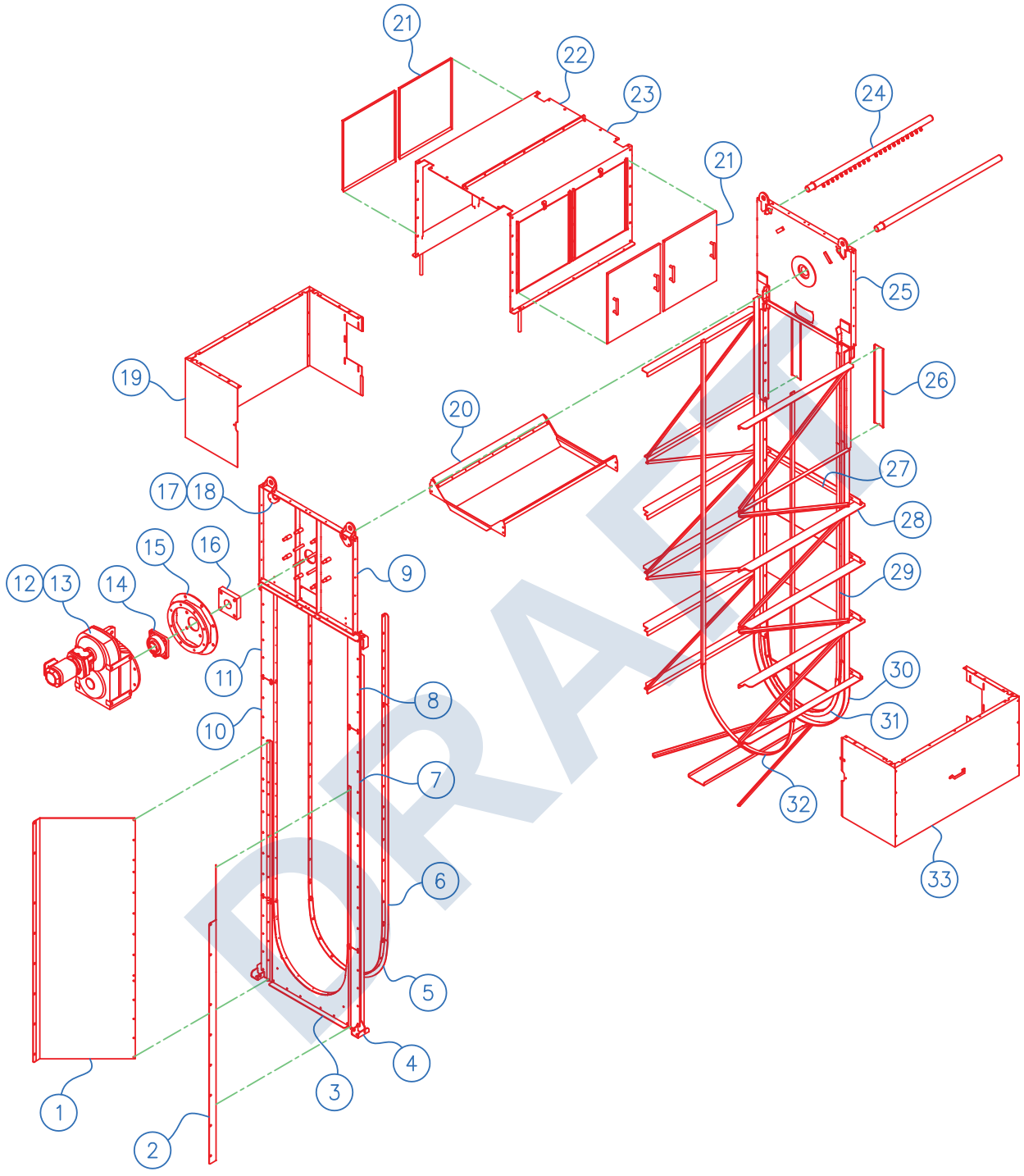

DRAFT

*ALL RIGHTS RESERVED. THE INFORMATION TRANSMITTED HEREIN IS THE PROPERTY OF HYDRO-DYNE ENGINEERING INC. AND HAS BEEN PROVIDED FOR RESTRICTIVE USE. THIS DATA MUST BE HELD CONFIDENTIAL AND TRANSMISSION, DUPLICATION OR DISCLOSURE IS PROHIBITED UNLESS AUTHORIZED IN WRITING BY HYDRO-DYNE ENGINEERING INC.

UNLESS NOTED			
TOLERANCE			
.X	± .030		
.XX	± .015		
.XXX	± .005		
.XXXX	± .0005		

HYDRO-DYNE® ENGINEERING
www.hydro-dyne.com

CENTER FLOW – TYPICAL BREAKOUT – STATIC ASSEMBLY

FILE #: CF23-56-3SPR-P	SHT.: 2/4	REV.: E
DRAWN BY/DATE: J. COONEY – 03/13/14	SCALE: NTS	
CHECKED BY/DATE: T. HUNT – 03/13/14	SIZE: A	

N:\Sales & Marketing\Made Easy\Drawings\CF\CF23-56-3SPROCKETS-PANEL\CF23-56-3SPR-P-RevE.dwg

Typical Assembly Shown
Actual May Differ

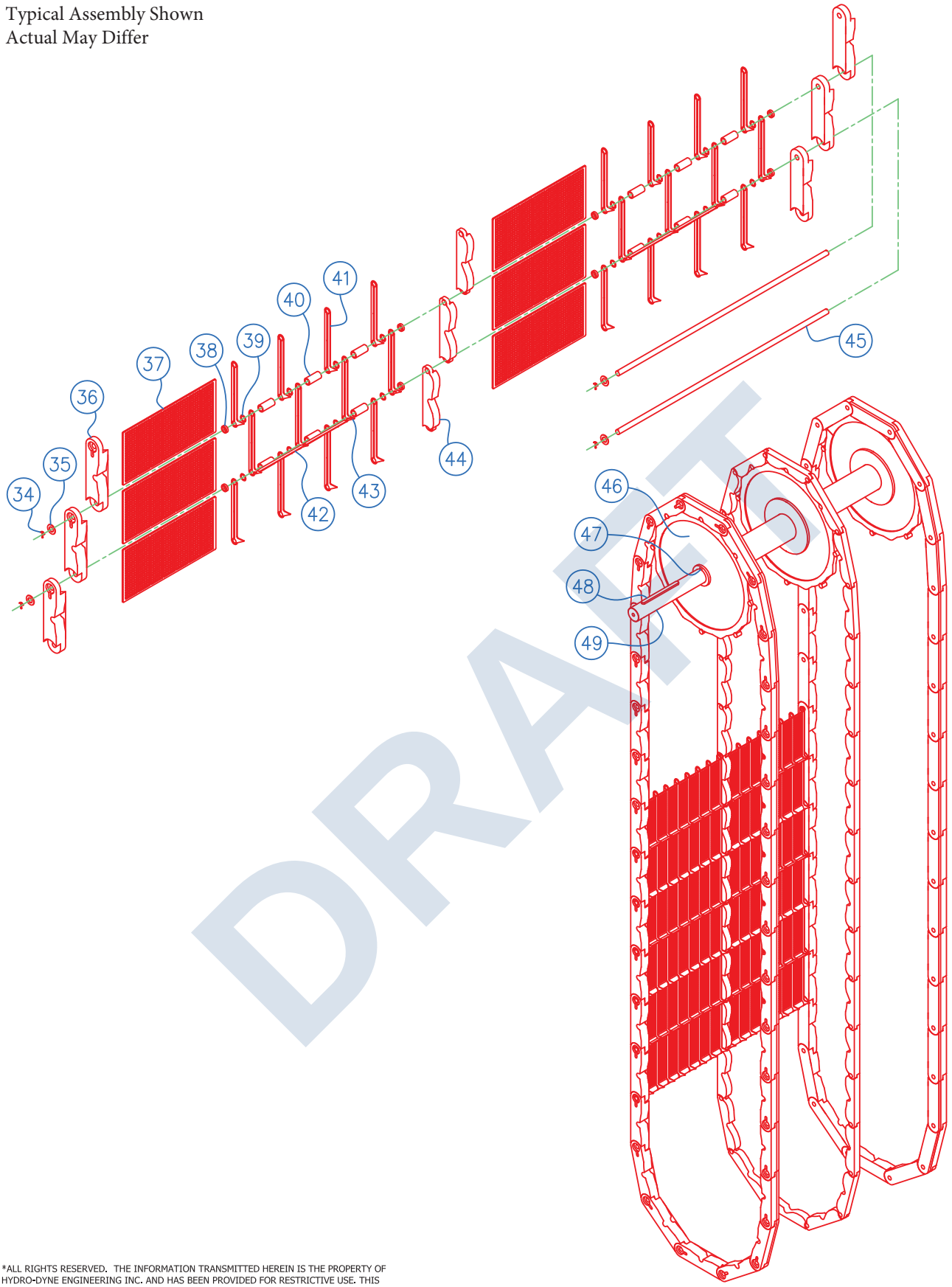

DRAFT

*ALL RIGHTS RESERVED. THE INFORMATION TRANSMITTED HEREIN IS THE PROPERTY OF HYDRO-DYNE ENGINEERING INC. AND HAS BEEN PROVIDED FOR RESTRICTIVE USE. THIS DATA MUST BE HELD CONFIDENTIAL AND TRANSMISSION, DUPLICATION OR DISCLOSURE IS PROHIBITED UNLESS AUTHORIZED IN WRITING BY HYDRO-DYNE ENGINEERING INC.

UNLESS NOTED		
TOLERANCE		
.X	±	.030
.XX	±	.015
.XXX	±	.005
.XXXX	±	.0005

HYDRO-DYNE® ENGINEERING
www.hydro-dyne.com

CENTER FLOW – TYPICAL BREAKOUT – DYNAMIC ASSEMBLY

FILE #: CF23-56-3SPR-P	SHT.: 3/4	REV.: E
DRAWN BY/DATE: J. COONEY – 03/13/14	SCALE: NTS	
CHECKED BY/DATE: T. HUNT – 03/13/14	SIZE: A	

N:\Sales & Marketing\Made Easy\Drawings\CF\CF23-56-3SPROCKETS-PANEL\CF23-56-3SPR-P-RevE.dwg

ITEM	PART NUMBER	QTY	DESCRIPTION
1	HF-N-A1-020-XXL	1	FILLER PLATE ASSEMBLY - LEFT
2	HF-N-A1-020-XXR	1	FILLER PLATE ASSEMBLY - RIGHT
3	HF38-N-A1-003	1	INFLUENT REMOVABLE TRACK ASSEMBLY
4	HF38-N-A1-001-XX	1	INFLUENT FRAME ASSEMBLY
5	HF38-N-A1-007	1	INFLUENT LOWER SEAL ASSEMBLY
6	HF38-Z-C0-003-XXR	2	LOWER SEAL - FRONT RIGHT/BACK LEFT
7	HF-N-A1-008-XXL	1	MID COVER ASSEMBLY - LEFT
8	HF-N-A1-007-L	1	TOP COVER ASSEMBLY - LEFT
9	HF38-H-A1-001-FD	1	HEAD PANEL ASSEMBLY - FRONT DRIVE
10	HF-N-A1-008-XXR	1	MID COVER ASSEMBLY - RIGHT
11	HF-N-A1-007-R	1	TOP COVER ASSEMBLY - RIGHT
12	XXXXXXXXXX	1	GEAR REDUCER
13	V-XX-XX	1	MOTOR
14	00D-DB-XX	2	4 BOLT FLANGE BEARING
15	HF-D-A1-003-XX	1	DRIVE FLANGE ASSEMBLY
16	V-AGD-XX	2	SHAFT SEAL
17	00-X-A1-025-XX	2	SPRAY BAR FLANGE ASSEMBLY
18	00-X-M0-025-XX	4	SPRAY BAR FLANGE GASKET
19	HF-C-A1-005-XXL	1	SKIRT COVER ASSEMBLY - LEFT
20	HF38-H-A1-014-XX	1	INTERNAL HOPPER ASSEMBLY
21	HF38-H-A1-012-XX	VARIES	SIDE HEAD ACCESS PANEL ASSEMBLY
22	HF38-H-A1-009-XXL	1	SIDE HEAD SECTION ASSEMBLY - LEFT
23	HF38-H-A1-009-XXR	1	SIDE HEAD SECTION ASSEMBLY - RIGHT
24	HF-X-A1-001-XX	2	SPRAY BAR ASSEMBLY
25	HF38-H-A1-001-RDN	1	HEAD PANEL ASSEMBLY - REAR DRIVEN
26	HF-E-C0-015	2	GUIDE LINK ACCESS COVER
27	HF38-E-A1-010-XX	1	OPTIONAL BYPASS GATE OR OVERFLOW WEIR
28	HF38-E-A1-005-XX	1	EFFLUENT FRAME ASSEMBLY
29	HF38-Z-C0-003-XXL	2	LOWER SEAL - FRONT LEFT/BACK RIGHT
30	HF38-E-A1-001	1	EFFLUENT REMOVABLE TRACK ASSEMBLY
31	HF38-E-A1-013	1	EFFLUENT LOWER SEAL ASSEMBLY
32	HF38-E-A1-015	1	LOWER CENTER TRACK ASSEMBLY
33	HF-C-A1-005-XXR	1	SKIRT COVER ASSEMBLY - RIGHT
34	00HW-01250-1000-CP	VARIES	COTTER PIN
35	00HW-06250-FW	VARIES	FLAT WASHER
36	00-G-M0-001-GL02	VARIES	GUIDE LINK - HF
37	00-G-XX-0XX-XX	VARIES	GRID PANEL
38	00G-SP-0645-1000-XX	VARIES	END GRID SPACER
39	00G-SP-0645-1000-007	VARIES	ANTI-FRICTION GRID SPACER
40	00G-SP-0645-1000-XX	VARIES	GRID SPACER
41	00-G-C0-015-LXX-12GA	VARIES	SLOTTED HOOK LINK
42	00-G-C0-018-XX	VARIES	GRID SHELF
43	00-G-C0-016-LXX-12GA	VARIES	SLOTTED HOOK SHELF LINK
44	00-G-M0-002-CG03	VARIES	CENTER GUIDE LINK - HF
45	00G-AX-0625-CP-XX	VARIES	AXLE
46	00-D-A2-005-XX	3	DRIVE SPROCKET ASSEMBLY
47	00-D-M0-002-XX	3	DRIVE SPROCKET ROUNDED KEY
48	00-D-M0-002-XX	1	DRIVE SHAFT ROUNDED KEY
49	HF-D-M0-001-XX	1	DRIVE SHAFT

Typical Assembly Shown
Actual May Differ

*ALL RIGHTS RESERVED. THE INFORMATION TRANSMITTED HEREIN IS THE PROPERTY OF HYDRO-DYNE ENGINEERING INC. AND HAS BEEN PROVIDED FOR RESTRICTIVE USE. THIS DATA MUST BE HELD CONFIDENTIAL AND TRANSMISSION, DUPLICATION OR DISCLOSURE IS PROHIBITED UNLESS AUTHORIZED IN WRITING BY HYDRO-DYNE ENGINEERING INC.

OBSOLETE

UNLESS NOTED			
TOLERANCE			
.X ± .030	HYDRO-DYNE ENGINEERING	CENTER FLOW 38 - TYPICAL PARTS LIST	
.XX ± .015	www.hydro-dyne.com	FILE #: CF23-56-3SPR-P	SHT.: 4/4 REV.: E
.XXX ± .005		DRAWN BY/DATE: J. COONEY - 05/15/15	SCALE: NTS
.XXXX ± .0005		CHECKED BY/DATE: T. HUNT - 05/15/15	SIZE: A

TYPICAL CONFIGURATION SHOWN INCLUDES OPTIONS THAT MAY NOT BE PROVIDED. REFERENCE LAYOUT/PLUMBING DRAWINGS AND CONTROLS DOCUMENTATION FOR PROJECT SPECIFIC FEATURES.

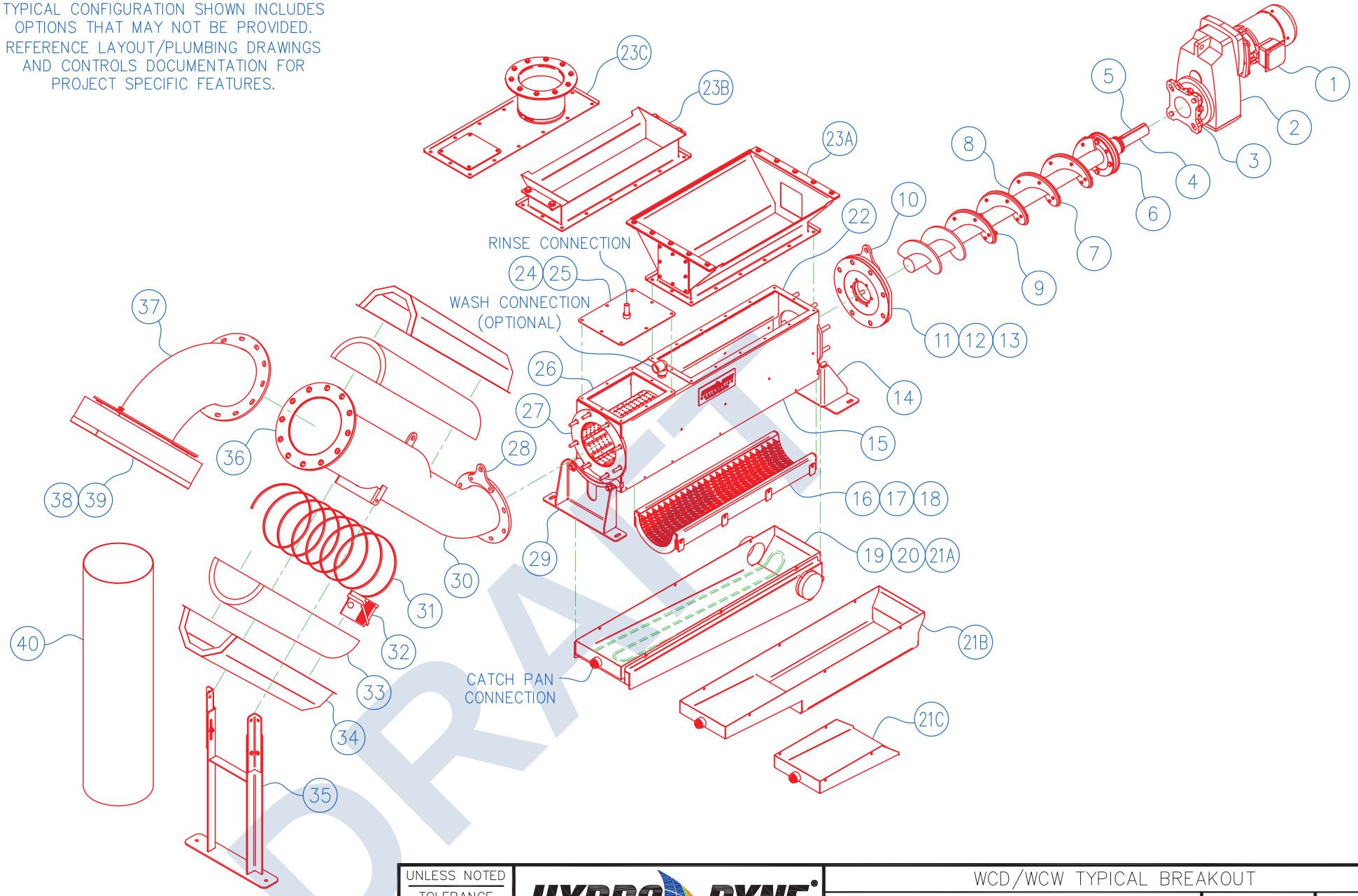

DRAFT

UNLESS NOTED	
TOLERANCE	
.X	± .125"
.XX	± .060"
.XXX	± .030"
FRACTIONAL	± 1/4"
∠	± 1°

HYDRO-DYNE ENGINEERING
www.hydro-dyne.com

WCD/WCW TYPICAL BREAKOUT		
FILE #: WCD-WCW-BREAKOUT-SUB	SHT.: 1/2	REV.: A
DRAWN BY/DATE: J. COONEY - 11/05/21	SCALE: NTS	
CHECKED BY/DATE: S. STURTEVANT - 11/05/21	SIZE: A	

*ALL RIGHTS RESERVED. THE INFORMATION TRANSMITTED HEREIN IS THE PROPERTY OF HYDRO-DYNE ENGINEERING INC. AND HAS BEEN PROVIDED FOR RESTRICTIVE USE. THIS DATA MUST BE HELD CONFIDENTIAL AND TRANSMISSION, DUPLICATION OR DISCLOSURE IS PROHIBITED UNLESS AUTHORIZED IN WRITING BY HYDRO-DYNE ENGINEERING INC.

ITEM	DESCRIPTION	QTY
1	MOTOR	1
2	GEAR REDUCER	1
3	SCP CLAMP	4
4	STUB SHAFT	1
5	DRIVE KEY	1
6	THRUST WASHER	VARIES
7	COIL BRUSH	1
8	FLIGHT WELDMENT	1
9	FLIGHT BRUSH CLIP	VARIES
10	LIFTING EYE – DRIVE SIDE	1
11	TROUGH BODY GASKET – DRIVE SIDE	1
12	TROUGH BODY PIVOT PLATE ASSEMBLY	1
13	DRIVE ADAPTER PLATE ASSEMBLY	1
14	MOUNTING FOOT – DRIVE SIDE (OPTIONAL)	1
15	TROUGH BODY WELDMENT	1
16	TROUGH WELDMENT	1
17	TROUGH MOUNT RAIL	2
18	TROUGH SIDE SHIM	VARIES
19	PIPE CAP (OPTIONAL)	1
20	CATCH PAN HEAT COVER (OPTIONAL)	VARIES
21A	CATCH PAN WELDMENT (OPTIONAL)	1
21B	CATCH PAN WELDMENT – VERTICAL (OPTIONAL)	1
21C	CATCH PAN WELDMENT – CF (OPTIONAL)	1
22	HOPPER GASKET	1
23A	HOPPER ASSEMBLY – STR (OPTIONAL)	1
23B	HOPPER ASSEMBLY – CF (OPTIONAL)	1
23C	HOPPER ASSEMBLY – SLUICE (OPTIONAL)	1
24	RINSE COVER WELDMENT	1
25	RINSE DIVERTER WELDMENT	1
26	RINSE COVER GASKET	1
27	TROUGH BODY GASKET – DISCHARGE SIDE	1
28	LIFTING EYE – DISCHARGE SIDE	1
29	MOUNTING FOOT – DISCHARGE SIDE (OPTIONAL)	1
30	DISCHARGE SNORKEL WELDMENT	VARIES
31	HEAT TRACE (OPTIONAL)	VARIES
32	HEAT TRACE CONNECTION BOX (OPTIONAL)	VARIES
33	SNORKEL HEAT COVER INSULATION (OPTIONAL)	VARIES
34	SNORKEL HEAT COVER (OPTIONAL)	VARIES
35	SUPPORT ASSEMBLY (OPTIONAL)	VARIES
36	DISCHARGE ELBOW GASKET (OPTIONAL)	VARIES
37	DISCHARGE ELBOW WELDMENT (OPTIONAL)	VARIES
38	BAGGER MOUNTING WELDMENT (OPTIONAL)	1
39	SCREENINGS COLLECTION BAG (OPTIONAL)	1
40	LAYFLAT HOSE (OPTIONAL)	1

DRAFT

*ALL RIGHTS RESERVED. THE INFORMATION TRANSMITTED HEREIN IS THE PROPERTY OF HYDRO-DYNE ENGINEERING INC. AND HAS BEEN PROVIDED FOR RESTRICTIVE USE. THIS DATA MUST BE HELD CONFIDENTIAL AND TRANSMISSION, DUPLICATION OR DISCLOSURE IS PROHIBITED UNLESS AUTHORIZED IN WRITING BY HYDRO-DYNE ENGINEERING INC.

UNLESS NOTED
TOLERANCE
.X ± .125"
.XX ± .060"
.XXX ± .030"
FRACTIONAL ± 1/4"
∠ ± 1°

HYDRO-DYNE ENGINEERING
www.hydro-dyne.com

WCD/WCW TYPICAL BREAKOUT

FILE #: WCD-WCW-BREAKOUT-SUB	SHT.: 2/2	REV.: A
DRAWN BY/DATE: J. COONEY – 11/05/21	SCALE: NTS	
CHECKED BY/DATE: S. STURTEVANT – 11/05/21	SIZE: A	

ITEM	PART NUMBER	QTY	DESCRIPTION
1	GT-T-A1-008-XX	1	TOP MOUNT SUCTION ASSEMBLY
2	GT-D-A2-001	1	DRIVE ASSEMBLY
3	GT-P-A1-013-XX	1	DRIVE PIPE ASSEMBLY
4	GT-P-A1-001-XX	2	PROPELLER ASSEMBLY
5	GT-P-A2-030-XX	1	LOWER TANK PLATE ASSEMBLY

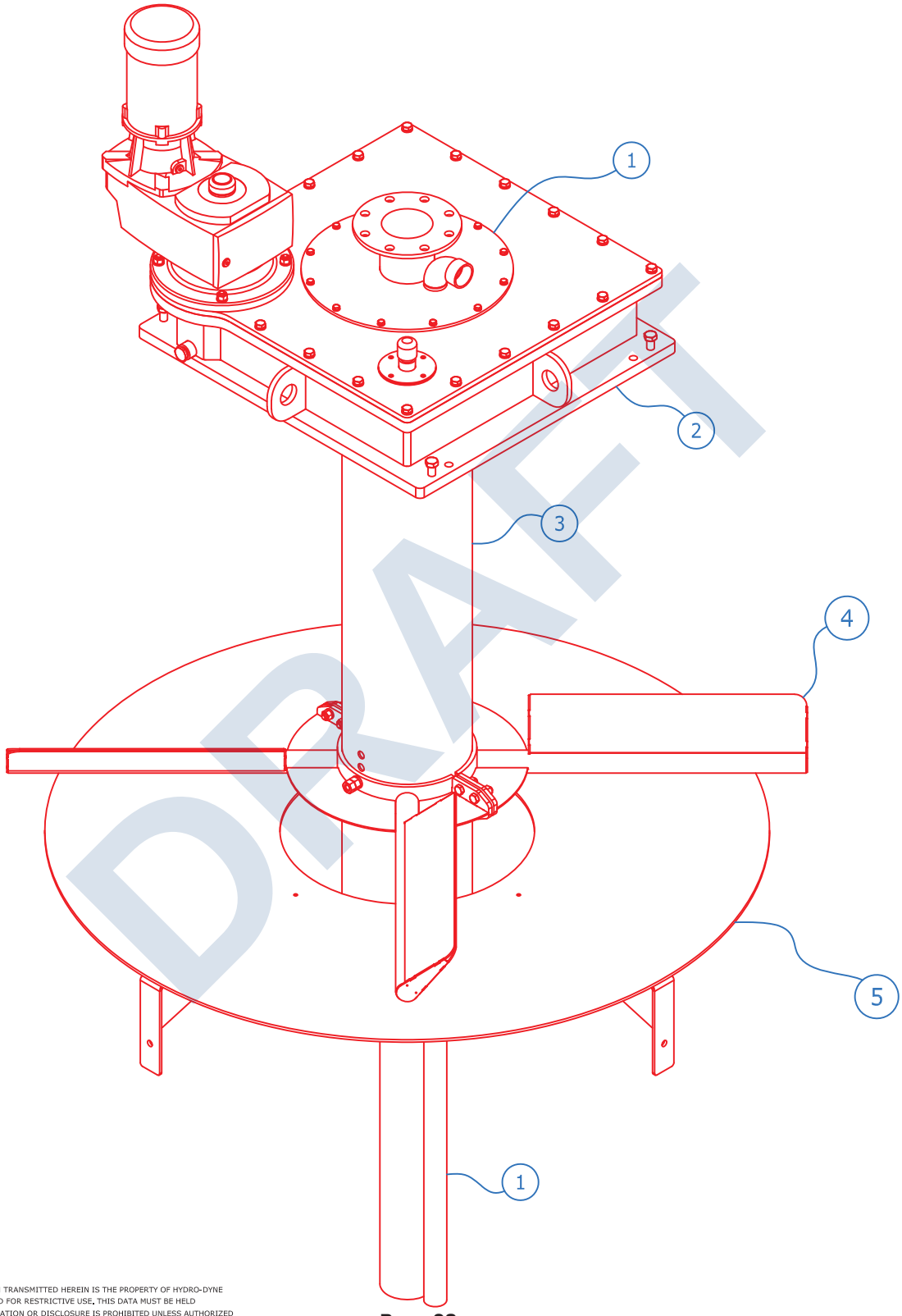

DRAFT

©ALL RIGHTS RESERVED. THE INFORMATION TRANSMITTED HEREIN IS THE PROPERTY OF HYDRO-DYNE ENGINEERING INC. AND HAS BEEN PROVIDED FOR RESTRICTIVE USE. THIS DATA MUST BE HELD CONFIDENTIAL AND TRANSMISSION, DUPLICATION OR DISCLOSURE IS PROHIBITED UNLESS AUTHORIZED IN WRITING BY HYDRO-DYNE ENGINEERING INC.

UNLESS NOTED

TOLERANCE
.X ± 0.125"
.XX ± 0.060"
.XXX ± 0.030"
FRACTIONAL: ± ¼"
± 1°

HYDRO DYNE® ENGINEERING
www.hydro-dyne.com

GRIT TRAP - TYPICAL ASSEMBLY - TOP MOUNT - PROPELLER

DRAWING #: GT-TOP-PROPELLER-FLUIDIZER | SHT.: 1/1 | REV.: -

DRAWN BY/DATE: C. DISPENZA 08/15/19 | SCALE: N.T.S.

CHECKED BY/DATE: J. BOGGESS 08/15/19 | SIZE: A

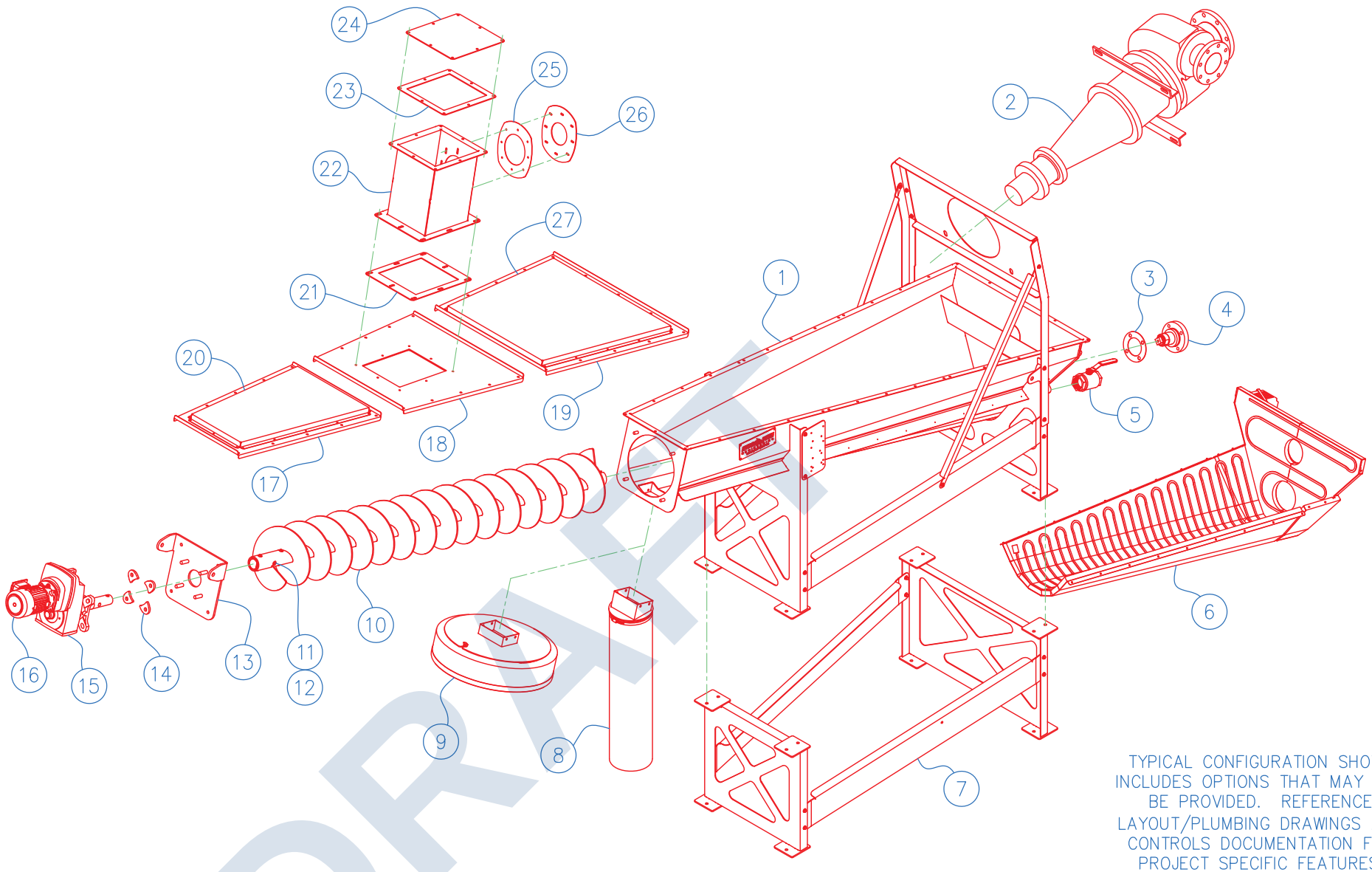

TYPICAL CONFIGURATION SHOWN INCLUDES OPTIONS THAT MAY NOT BE PROVIDED. REFERENCE LAYOUT/PLUMBING DRAWINGS AND CONTROLS DOCUMENTATION FOR PROJECT SPECIFIC FEATURES.

DRAFT

*ALL RIGHTS RESERVED. THE INFORMATION TRANSMITTED HEREIN IS THE PROPERTY OF HYDRO-DYNE ENGINEERING INC. AND HAS BEEN PROVIDED FOR RESTRICTIVE USE. THIS DATA MUST BE HELD CONFIDENTIAL AND TRANSMISSION, DUPLICATION OR DISCLOSURE IS PROHIBITED UNLESS AUTHORIZED IN WRITING BY HYDRO-DYNE ENGINEERING INC.

UNLESS NOTED	
TOLERANCE	
.X	± .125"
.XX	± .060"
.XXX	± .030"
FRACTIONAL	± 1/4"
∠	± 1°

HYDRO-DYNE ENGINEERING
www.hydro-dyne.com

GRIT CLASSIFIER – TYPICAL BREAKOUT – ASSEMBLY

FILE #: GC12-98C-BREAKOUT	SHT.: 1/2	REV.: A
DRAWN BY/DATE: J. COONEY – 05/19/2025	SCALE: N.T.S.	
CHECKED BY/DATE: S. STURTEVANT – 05/19/2025	SIZE: A	

ITEM	DESCRIPTION	QTY
1	TANK AND FRAME WELDMENT ASSEMBLY	1
2	KREBS CYCLONE	1
3	FLANGE GASKET	1
4	BEARING ASSEMBLY	1
5	BALL VALVE FULL PORT	1
6	TANK FREEZE ASSEMBLY (OPTIONAL)	1
7	LOWER LEG ASSEMBLY (OPTIONAL)	1
8	LAYFLAT ADAPTER ASSEMBLY (OPTIONAL)	1
9	BAGGER ADAPTER ASSEMBLY (OPTIONAL)	1
10	FLIGHT WELDMENT	1
11	FLIGHT PIN	3
12	FLIGHT PIN BOLT	6
13	REDUCER MOUNTING PLATE ASSEMBLY	1
14	SCP CLAMP	4
15	GEAR REDUCER	1
16	MOTOR	1
17	UPPER COVER	1
18	MID COVER WELDMENT	1
19	LOWER COVER	1
20	FREEZE COVER – UPPER (OPTIONAL)	1
21	CYCLONE HOPPER GASKET	1
22	CYCLONE HOPPER WELDMENT	1
23	CYCLONE HOPPER TOP GASKET	1
24	CYCLONE HOPPER TOP	1
25	CYCLONE HOPPER INLET GASKET SUPPORT	1
26	CYCLONE HOPPER INLET GASKET	1
27	FREEZE COVER – LOWER (OPTIONAL)	1

DRAFT

*ALL RIGHTS RESERVED. THE INFORMATION TRANSMITTED HEREIN IS THE PROPERTY OF HYDRO-DYNE ENGINEERING INC. AND HAS BEEN PROVIDED FOR RESTRICTIVE USE. THIS DATA MUST BE HELD CONFIDENTIAL AND TRANSMISSION, DUPLICATION OR DISCLOSURE IS PROHIBITED UNLESS AUTHORIZED IN WRITING BY HYDRO-DYNE ENGINEERING INC.

UNLESS NOTED
TOLERANCE
.X ± .125"
.XX ± .060"
.XXX ± .030"
FRACTIONAL ± 1/4"
∠ ± 1°

HYDRO-DYNE ENGINEERING
www.hydro-dyne.com

GRIT CLASSIFIER – TYPICAL BREAKOUT – ASSEMBLY

FILE #: GC12-98C-BREAKOUT	SHT.: 2/2	REV.: A
DRAWN BY/DATE: J. COONEY – 05/19/2025	SCALE: N.T.S.	
CHECKED BY/DATE: S. STURTEVANT – 05/19/2025	SIZE: A	

ITEM	PART NUMBER	QTY	DESCRIPTION
1	HW-02500-20-07500-HH-S	4	1/4-20 x 3/4" HH SCREW
2	HW-03125-18-06250-HH-S	18	5/16-18 x 5/8" HH SCREW
3	HW-03125-18-07500-HH-S	8	5/16-18 x 3/4" HH SCREW
4	HW-03125-18-10000-HH-S	2	5/16-18 x 1.0" HH Screw
5	HW-03125-18-HH-N	28	5/16-18 HH NUT
6	HW-03125-FW	56	5/16" FLAT WASHER - .75" OD 316 SS
7	HW-RIVET-125X313-375	12	1/8" x .313"-.375" RIVET - SS
8	SL12-P001-S6-05417-C2-6A	2	SLUICE COVER, SECTION 6
9	SL12 P001-S6-05417-C3-6A	2	SLUICE ACCESS COVER, SECTION 6
10	SL12-P001-S6-05417-G2-XA	2	GASKET, SLUICE ACCESS, SECTION 6
11	SL12-W001-S6-05417-6A	1	SLUICE WELDMENT, WYE SECTION 6
12	SL12-W002-SX-08-C1-6A	1	SLUICE ACCESS COVER WELDMENT
13	SL-A002-08-W-6A	1	SLUICE NOZZLE ASSEMBLY
14	SL-P005-08-6A	2	SLUICE GATE,
15	SL-P010-08-6A	1	GASKET CLAMP, SLUICE WYE,
16	SL-P011-08-XA	1	GASKET, SLUICE WYE,
17	SL-P019-08-A-6A	1	DOOR, SLUICE ACCESS, SECTION #
18	SL-P020-08-G-XA	1	GASKET, DOOR

REVISION(S) LISTED PERTAIN TO ALL SHEETS

REVISION HISTORY

REV	DESCRIPTION	DRAWN BY	APPROVED	DATE
-	INITIAL RELEASE	M. LAUE	MKELLY	06/25/2024

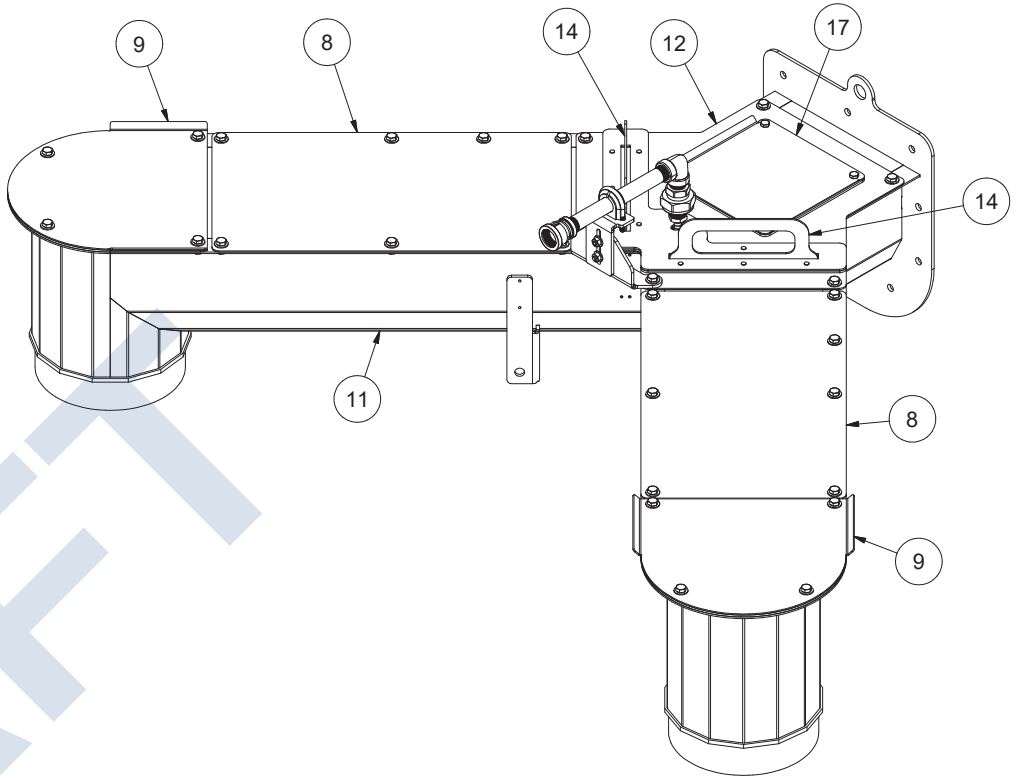

DISCLOSURE STATEMENT
ALL RIGHTS RESERVED. THE INFORMATION TRANSMITTED HEREIN IS THE PROPERTY OF HYDRO-DYNE ENGINEERING INC. AND HAS BEEN PROVIDED FOR RESTRICTIVE USE.
THIS DATA MUST BE HELD CONFIDENTIAL AND TRANSMISSION, DUPLICATION OR DISCLOSURE IS PROHIBITED UNLESS AUTHORIZED IN WRITING BY HYDRO-DYNE ENGINEERING INC.

MATL: N/A
FIN:

UNLESS OTHERWISE SPECIFIED
DIM ARE IN INCHES
1 PL. ± .06 2 PL. ± .02 3 PL. ± .005
TOL ON ANGLE ± 1°
INTERPRET DIM AND TOL PER
ASME Y14.5M-1994

THIRD ANGLE PROJECTION

		DATE
DRAWN BY	M. LAUE	5/22/2024
CHECKED BY	MKELLY	6/25/2024
DESIGNER	MLAUE	5/22/2024
ENG APP		
QA APP		
MFG APP	JALTEPETER	7/26/2024

HYDRO-DYNE ENGINEERING
4750 118th Avenue North
Clearwater, FL 33762
(813) 818-0777

DESC
SLUICE ASSEMBLY, WYE SECTION 12

SIZE B | PART NO SL12-A001-S6-05417-6A | REV -

SALES ORDER ID / JOB ID

SHEET 1 OF 1

DRAFT

Controls Electrical Drawings

DRAFT

Included:

Schematics
Field Wiring Diagrams
Device Settings
Sequence of Operation
Ancillary Components
Panel Layout
Panel Bill of Materials

Date 05/23/25

Subject: San Luis, AZ (Project #06002)

Electrical Only Submittal Notes & Exceptions

1. **Deviation**: Point 1.2.I specifies that all electrical systems are located in a classified area. The submitted design assumes the main control panel and Level Controller panel are located outside of the classified area. Instrumentation and the local control stations are supplied for installation in classified areas with necessary NEMA ratings or intrinsically safe barriers as required.

2. **Deviation**: Point 1.5.A.4 specifies a home position sensor on the screen. Hydro-Dyne's screen system does not have a home position, with the sensor therefore being omitted from this design.

3. **Deviation**: Point 1.5.B.1.b.iii specifies Heresite coated heating elements. Per comment 1 above, the main enclosure is assumed to not be within a classified area and a standard enclosure condensation heater has been provided.

4. **Clarification**: Point 1.5.B.1.f specifies physical Hand/Off/Auto controls for the screen and grit system components. HOA controls are provided through the local control station with HMI Hand/Auto controls available at the main control panel.

5. **Clarification**: Point 1.5.B.1.f specifies a programmable control relay with minimum of 5 cycle timers. Programmable control is handled through the PLC in this system.

6. **Clarification**: Point 1.5.B.1.f specifies Ethernet TCP/IP communication with SCADA. Per Hydro-Dyne's request, the proposed design includes connections for direct communication between the two main control panels. In order to provide dedicated SCADA communications, we have included a CompactLogix 5380 PLC in both control panels with options for Dual IP Ethernet ports for network isolation. Port 1 on the PLC is reserved for SCADA network addressing. Please advise on any requirements for SCADA communication (IP addresses, preferred method of sending/receiving tags, etc.).

DRAFT

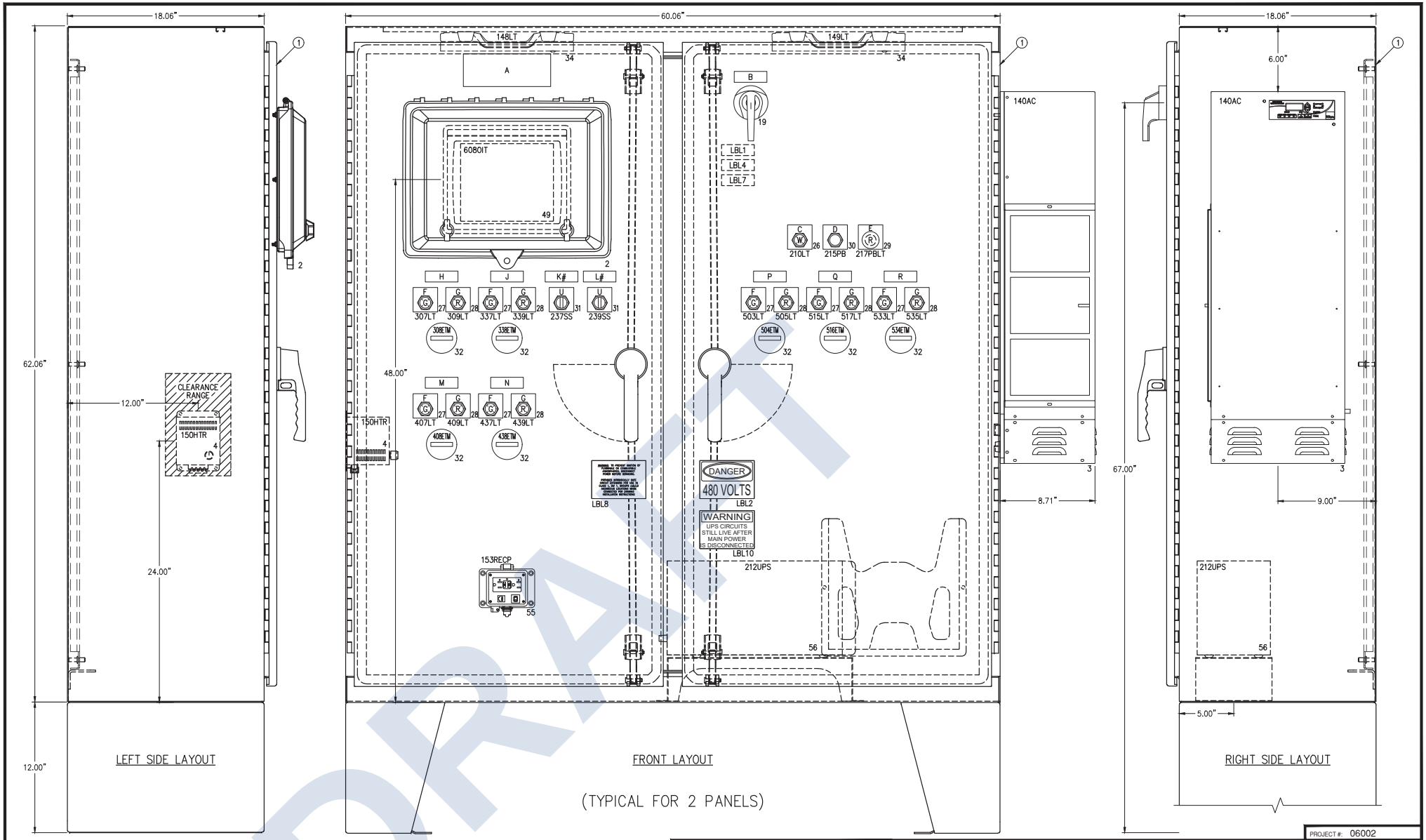

DRAFT

*ALL RIGHTS RESERVED. THE INFORMATION TRANSMITTED HEREIN IS THE PROPERTY OF HYDRO-DYNE ENGINEERING INC. AND HAS BEEN PROVIDED FOR RESTRICTIVE USE. THIS DATA MUST BE HELD CONFIDENTIAL AND TRANSMISSION, DUPLICATION OR DISCLOSURE IS PROHIBITED UNLESS AUTHORIZED IN WRITING BY HYDRO-DYNE ENGINEERING INC.

NOTE:
PANEL SHALL BEAR A UL698A LABEL FOR INDUSTRIAL CONTROL PANELS.

NO.	DATE	REVISION	BY
0	05/13/25	FOR SUBMITTAL	W. BARNETT

UNLESS NOTED
TOLERANCE
.X ± .030
.XX ± .015
.XXX ± .005
.XXXX ± .0005

HYDRO-DYNE ENGINEERING
www.hydro-dyne.com

SCREEN & GRIT CONTROL PANEL - SAN LUIS, AZ

PROJECT #: 06002			
DRAWING #: AF0297	SHT.: 1/21	REV.: 0	
DRAWN BY/DATE: W. BARNETT	05/13/25	SCALE: 1/4" = 1"	
CHECKED BY/DATE: E. CONN	05/13/25	SIZE:	

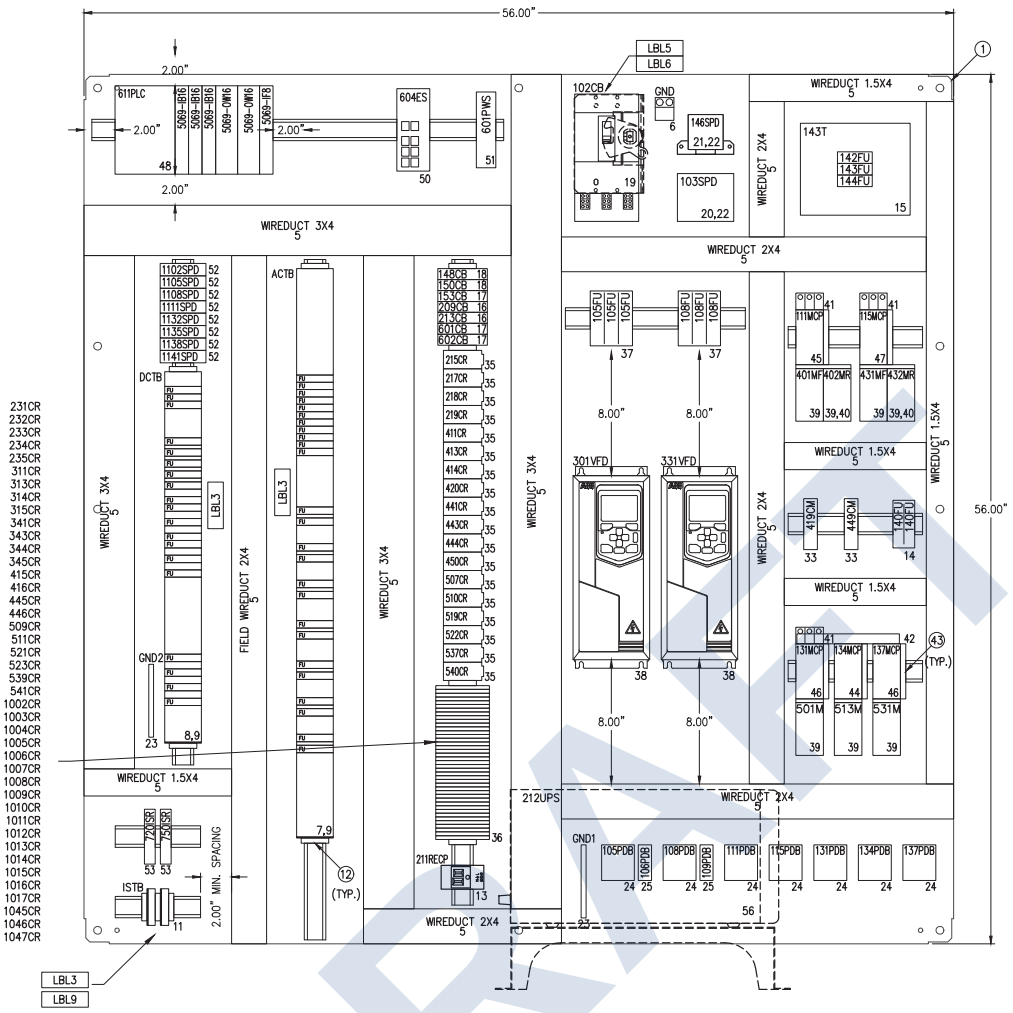

SUBPANEL LAYOUT

(TYPICAL FOR 2 PANELS)

LABEL SCHEDULE

LBL1 INFORMATION LABEL:
SERIAL NO. AF0297 CUSTOMER ID: 06002
LINE VOLTAGE 480 VAC, 3 PHASE, 3 WIRE, 60 Hz.
CONTROL VOLTAGE 120 VAC LARGEST MOTOR HP 5 TOTAL FLA 27
RCS CONTACT W. BARNETT
REF. DWG. NO. AF0297 TYPE 4X ENCLOSURE
SHORT CIRCUIT CURRENT: 18 kA RMS SYMMETRICAL, 480VAC V. MAXIMUM

LBL2 DANGER 480 VOLTS

LBL3 USE COPPER CONDUCTORS ONLY RECOMMENDED TORQUE: 8.9 IN. LB.

LBL4 TO MAINTAIN ENCLOSURE RATING, USE HUBS OR FITTINGS WITH THE SAME ENVIRONMENTAL RATING AS THE ENCLOSURE.
O-Z/GEDNEY CHM SERIES HUBS
APPLETON HUB SERIES HUBS
CROUSE HINDS ST SERIES HUBS

LBL5 480VAC

LBL6 USE COPPER CONDUCTORS ONLY RATED 60°C OR HIGHER

LBL7 U.L. 698A

LBL8 WARNING! TO PREVENT IGNITION OF FLAMMABLE OR COMBUSTIBLE ATMOSPHERES, DISCONNECT POWER BEFORE SERVICING.
PROVIDES INTRINSICALLY-SAFE CIRCUIT EXTENSION FOR USE IN CLASS 1, DIV 1, GROUPS A,B,C,D HAZARDOUS LOCATIONS WHEN CONNECTED PER DRAWING INSTALLATION INSTRUCTIONS.

LBL9 INTRINSICALLY-SAFE FIELD WIRING TERMINALS
WARNING – SUBSTITUTION OF COMPONENTS MAY IMPAIR INTRINSIC SAFETY.
FOR DIVISION 1 HAZARDOUS (CLASSIFIED) LOCATION INSTALL IN ACCORDANCE WITH ARTICLE 504 OF THE NATIONAL ELECTRIC CODE

LBL10 WARNING – UPS CIRCUITS STILL LIVE AFTER MAIN POWER IS DISCONNECTED

LBL11 TO MAINTAIN ENCLOSURE RATING, USE HUBS OR FITTINGS WITH THE SAME ENVIRONMENTAL RATING AS THE ENCLOSURE.
O-Z/GEDNEY CHMG SERIES GROUNDING STYLE HUBS
APPLETON HUBG SERIES GROUNDING STYLE HUBS
CROUSE HINDS STG SERIES GROUNDING STYLE HUBS
CAUTION! NONMETALLIC ENCLOSURE DOES NOT PROVIDE GROUNDING BETWEEN CONDUIT CONNECTIONS. USE GROUNDING BUSHINGS AND JUMPER WIRES.

FUSES				
	105FU, 108FU	JLLS015	15A	600VAC
	142FU, 143FU	KLDR07.5	7.5A	600VAC
	140FU	KLDR005	5A	600VAC
	144FU	FLM015	15A	250V
	237FU, 239FU, 241FU, 242FU, 243FU, 244FU, 245FU, 246FU, 247FU, 248FU, 250FU, 311FU, 313FU, 341FU, 343FU, 411FU, 413FU, 441FU, 443FU, 507FU, 509FU, 519FU, 521FU, 537FU, 539FU	MDL-2-R	2A	250V
	604FU, 608FU, 611FU	AGC-3-R	3A	250V
	702FU, 732FU, 801FU	AGC-2-R	2A	250V
	631FU, 634FU, 637FU, 640FU, 646FU	AGC-1-R	1A	250V
	704FU, 707FU, 734FU, 737FU, 1132FU, 1135FU, 1138FU, 1141FU	AGC-1/4-R	1/4A	250V

NOTE: FUSE LABELS TO BE LOCATED NEAR EACH RESPECTIVE FUSEHOLDER.

WIRING COLOR CODE:
BLACK – POWER
RED – 120 VAC HOT
WHITE – 120 VAC NEUTRAL
GREEN – GROUND
BLUE – 24 VDC
WHITE/BLUE – 24 VDC COMMON
ORANGE – DRY CONTACTS
YELLOW – JUMPERS

SHOP NOTES:
HEAT SHRINK WIRE LABELS
MTW TINNED COPPER CONTROL WIRE
THHN POWER WIRE

*ALL RIGHTS RESERVED. THE INFORMATION TRANSMITTED HEREIN IS THE PROPERTY OF HYDRO-DYNE ENGINEERING INC. AND HAS BEEN PROVIDED FOR RESTRICTIVE USE. THIS DATA MUST BE HELD CONFIDENTIAL AND TRANSMISSION, DUPLICATION OR DISCLOSURE IS PROHIBITED UNLESS AUTHORIZED IN WRITING BY HYDRO-DYNE ENGINEERING INC.

NOTE:
PANEL SHALL BEAR A UL698A LABEL FOR INDUSTRIAL CONTROL PANELS.

NO.	DATE	DESCRIPTION	BY
0	05/13/25	FOR SUBMITTAL	W. BARNETT
		REVISION	

UNLESS NOTED TOLERANCE
.X ± .030
.XX ± .015
.XXX ± .005
.XXXX ± .0005

HYDRO-DYNE ENGINEERING
www.hydro-dyne.com

PROJECT #: 06002
SCREEN & GRIT CONTROL PANEL - SAN LUIS, AZ
DRAWING #: AF0297 SHT.: 2/21 REV.: 0
DRAWN BY/DATE: W. BARNETT 05/13/25 SCALE: 1/4" = 1"
CHECKED BY/DATE: E. CONN 05/13/25 SIZE:

DRAFT

COARSE SCREEN # LEVEL CONTROL PANEL

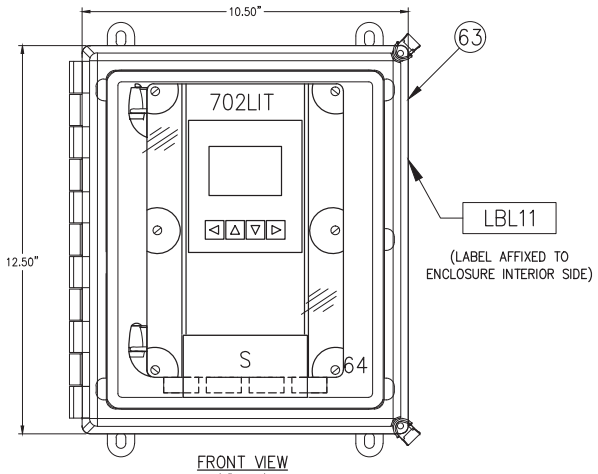

FRONT VIEW
(6" DEEP)

FINE SCREEN # LEVEL CONTROL PANEL

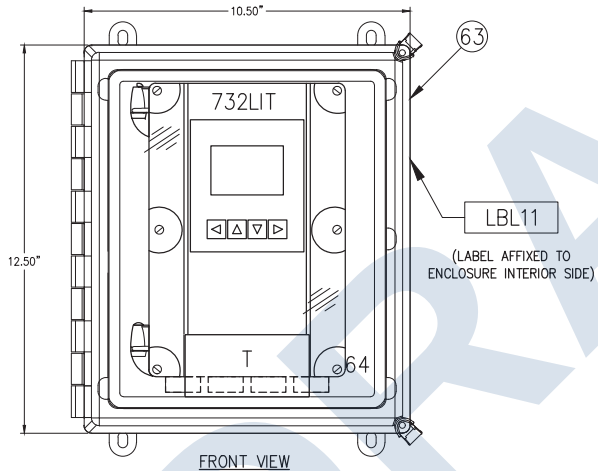

FRONT VIEW
(6" DEEP)

CONTROL PANEL ENGRAVING SCHEDULE (TYPICAL FOR 2)

ID NO.	QTY	TYPE	SIZE	PLATE COLOR	LETTER COLOR	FIRST LINE \ SECOND LINE, ETC
A	1	NP	3" x 8"	WHITE	BLACK	(HYDRO-DYNE LOGO) \ SCREEN & GRIT \ CONTROL PANEL #
B	1	NP	1" x 3"	YELLOW	BLACK	MAIN DISCONNECT \ 480VAC, 3PH, 60HZ
C	1	LP	2.25" SQ.	WHITE	BLACK	CONTROL \ POWER ON
D	1	LP	2.25" SQ.	WHITE	BLACK	RESET
E	1	LP	2.25" SQ.	YELLOW	BLACK	EMERGENCY STOP
F	7	LP	2.25" SQ.	WHITE	BLACK	RUNNING
G	7	LP	2.25" SQ.	WHITE	BLACK	FAULT
H	1	NP	1" x 3"	WHITE	BLACK	COARSE SCREEN #
J	1	NP	1" x 3"	WHITE	BLACK	FINE SCREEN #
K1	1	NP	1" x 3"	WHITE	BLACK	FINE SCREEN \ TOP-END SLUICE \ PURGE VALVE
K2	1	NP	1" x 3"	WHITE	BLACK	COARSE SCREEN \ TOP-END SLUICE \ PURGE VALVE
L1	1	NP	1" x 3"	WHITE	BLACK	FINE SCREEN \ Y-SLUICE \ PURGE VALVE
L2	1	NP	1" x 3"	WHITE	BLACK	FINE SCREEN \ Y-SLUICE \ PURGE VALVE
M	1	NP	1" x 3"	WHITE	BLACK	COARSE COMPACTOR #
N	1	NP	1" x 3"	WHITE	BLACK	FINE COMPACTOR #
P	1	NP	1" x 3"	WHITE	BLACK	GRIT CLASSIFIER #
Q	1	NP	1" x 3"	WHITE	BLACK	GRIT PUMP #
R	1	NP	1" x 3"	WHITE	BLACK	GRIT TRAP #
S	1	NP	1" x 4"	WHITE	BLACK	(HYDRO-DYNE LOGO) \ COARSE SCREEN # \ LEVEL CONTROL PANEL
T	1	NP	1" x 4"	WHITE	BLACK	(HYDRO-DYNE LOGO) \ FINE SCREEN # \ LEVEL CONTROL PANEL
U	1	LP	2.25" SQ.	WHITE	BLACK	OPEN CLOSE AUTO

NOTES:
NAMEPLATES S & T ARE MOUNTED WITH ADHESIVE. ALL OTHER NAMEPLATES ARE MOUNTED WITH S.S. SCREWS
"#" DENOTES "1" OR "2" BY PANEL
NAMEPLATE "K" DENOTES "FINE SCREEN TOP-END SLUICE PURGE VALVE" FOR PANEL 1 AND "COARSE SCREEN TOP-END SLUICE PURGE VALVE" FOR PANEL 2
NAMEPLATE "L" DENOTES "FINE SCREEN Y-SLUICE PURGE VALVE" FOR PANEL 1 AND "COARSE SCREEN Y-SLUICE PURGE VALVE" FOR PANEL 2

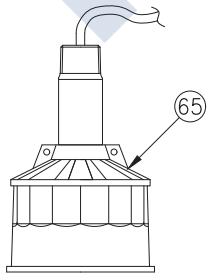

LEVEL TRANSDUCER
(TYPICAL FOR 4)

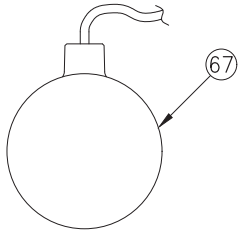

UPSTREAM FLOAT
(TYPICAL FOR 2)

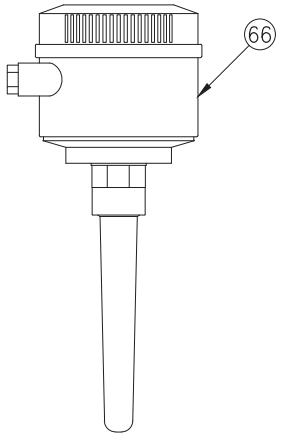

SLUICE LEVEL SENSOR
(TYPICAL FOR 4)

FIELD EQUIPMENT
(TYPICAL FOR 2 PANELS)

*ALL RIGHTS RESERVED. THE INFORMATION TRANSMITTED HEREIN IS THE PROPERTY OF HYDRO-DYNE ENGINEERING INC. AND HAS BEEN PROVIDED FOR RESTRICTIVE USE. THIS DATA MUST BE HELD CONFIDENTIAL AND TRANSMISSION, DUPLICATION OR DISCLOSURE IS PROHIBITED UNLESS AUTHORIZED IN WRITING BY HYDRO-DYNE ENGINEERING INC.

# DENOTES "1" FOR PANEL 1 AND "2" FOR PANEL 2

NO.	DATE	REVISION	BY
0	05/13/25	FOR SUBMITTAL	W. BARNETT

UNLESS NOTED
TOLERANCE
X ±.030
.XX ±.015
.XXX ±.005
.XXXX ±.0005

HYDRO-DYNE ENGINEERING
www.hydro-dyne.com

PROJECT #: 06002
SCREEN & GRIT CONTROL PANEL - SAN LUIS, AZ
DRAWING #: AF0297 SHT.: 3/21 REV.: 0
DRAWN BY/DATE: W. BARNETT 05/13/25 SCALE: 1/2" = 1"
CHECKED BY/DATE: E. CONN 05/13/25 SIZE:

DRAFT

LOCAL CONTROL STATION ENGRAVING SCHEDULE						
ID NO.	QTY	TYPE	SIZE	PLATE COLOR	LETTER COLOR	FIRST LINE \ SECOND LINE, ETC
AA	7	LP	2.00" SQ.	YELLOW	BLACK	EMERGENCY STOP
AB	1	LP	2.00" SQ.	WHITE	BLACK	COARSE SCREEN # \ HAND OFF AUTO
AC	1	LP	2.00" SQ.	WHITE	BLACK	FINE SCREEN # \ HAND OFF AUTO
AD	1	LP	2.00" SQ.	WHITE	BLACK	COARSE COMPACTOR # \ HAND OFF AUTO
AE	1	LP	2.00" SQ.	WHITE	BLACK	COARSE COMPACTOR # \ FWD OFF REV
AF	1	LP	2.00" SQ.	WHITE	BLACK	FINE COMPACTOR # \ HAND OFF AUTO
AG	1	LP	2.00" SQ.	WHITE	BLACK	FINE COMPACTOR # \ FWD OFF REV
AH	1	LP	2.00" SQ.	WHITE	BLACK	GRIT CLASSIFIER # \ HAND OFF AUTO
AJ	1	LP	2.00" SQ.	WHITE	BLACK	GRIT PUMP # \ HAND OFF AUTO
AK	1	LP	2.00" SQ.	WHITE	BLACK	GRIT TRAP \ HAND OFF AUTO

NOTE: "#" DENOTES 1 OR 2 BY PANEL

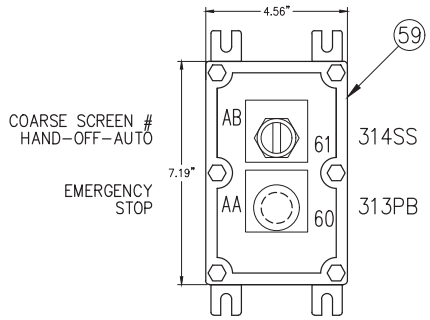

COARSE SCREEN #
LOCAL CONTROL STATION
(4.5" DEEP)

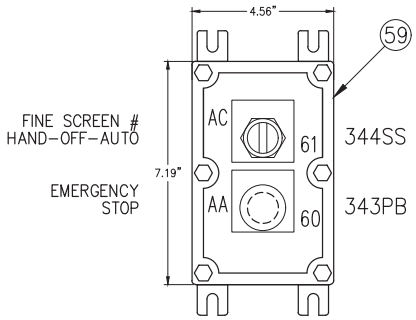

FINE SCREEN #
LOCAL CONTROL STATION
(4.5" DEEP)

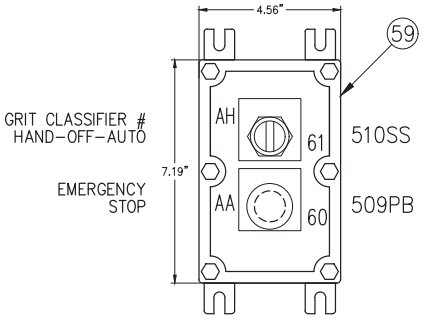

GRIT CLASSIFIER #
LOCAL CONTROL STATION
(4.5" DEEP)

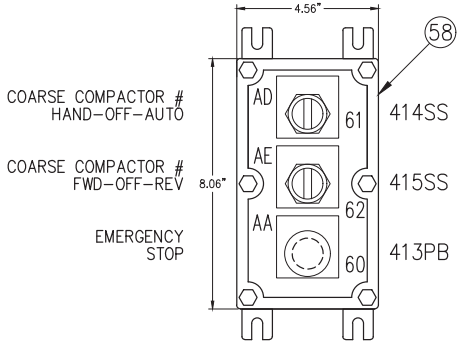

COARSE COMPACTOR #
LOCAL CONTROL STATION
(4.5" DEEP)

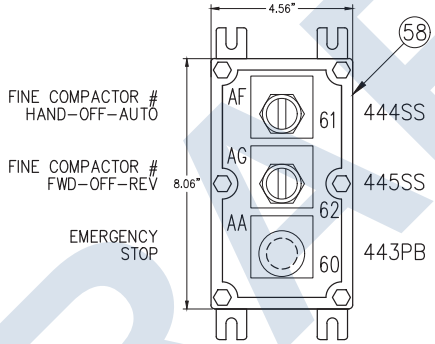

FINE COMPACTOR #
LOCAL CONTROL STATION
(4.5" DEEP)

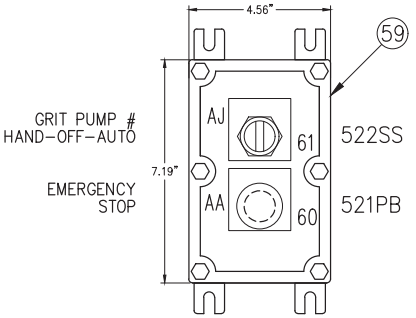

GRIT PUMP #
LOCAL CONTROL STATION
(4.5" DEEP)

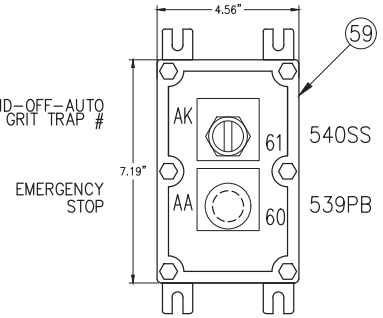

GRIT TRAP #
LOCAL CONTROL STATION
(4.5" DEEP)

LOCAL CONTROL STATIONS
(TYPICAL FOR 2 PANELS)

DRAFT

*ALL RIGHTS RESERVED. THE INFORMATION TRANSMITTED HEREIN IS THE PROPERTY OF HYDRO-DYNE ENGINEERING INC. AND HAS BEEN PROVIDED FOR RESTRICTIVE USE. THIS DATA MUST BE HELD CONFIDENTIAL AND TRANSMISSION, DUPLICATION OR DISCLOSURE IS PROHIBITED UNLESS AUTHORIZED IN WRITING BY HYDRO-DYNE ENGINEERING INC.

# DENOTES "1" FOR PANEL 1 AND "2" FOR PANEL 2

NO.	DATE	DESCRIPTION	BY
0	05/13/25	FOR SUBMITTAL	W. BARNETT
		REVISION	

UNLESS NOTED
TOLERANCE
.X ± .030
.XX ± .015
.XXX ± .005
.XXXX ± .0005

HYDRO-DYNE ENGINEERING
www.hydro-dyne.com

PROJECT #: 06002
SCREEN & GRIT CONTROL PANEL - SAN LUIS, AZ
DRAWING #: AF0297 | SHT.: 4/21 | REV.: 0
DRAWN BY/DATE: W. BARNETT 05/13/25 | SCALE: 1/2" = 1"
CHECKED BY/DATE: E. CONN 05/13/25 | SIZE:

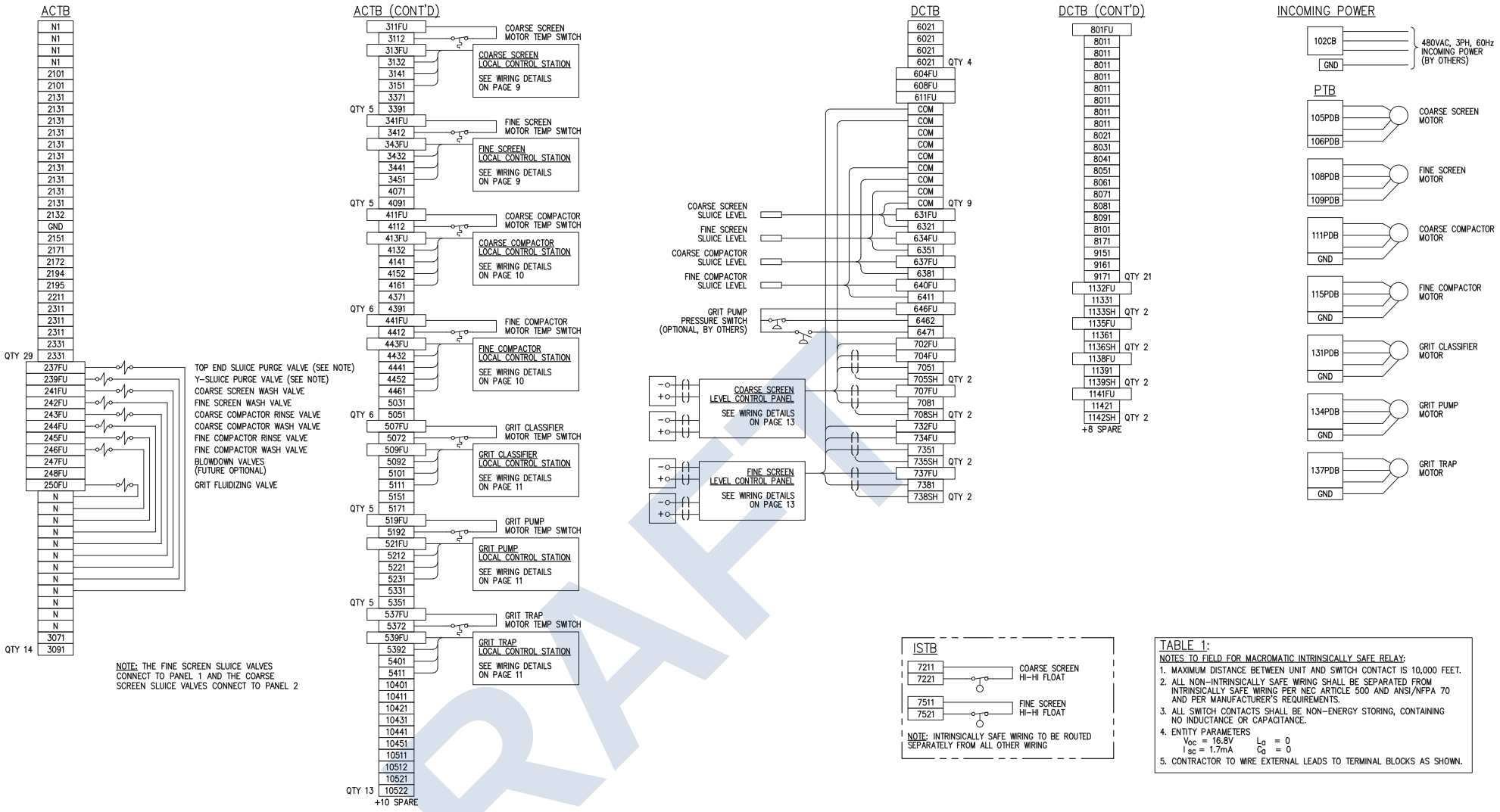

TABLE 1:

NOTES TO FIELD FOR MACROMATIC INTRINSICALLY SAFE RELAY:

1. MAXIMUM DISTANCE BETWEEN UNIT AND SWITCH CONTACT IS 10,000 FEET.
2. ALL NON-INTRINSICALLY SAFE WIRING SHALL BE SEPARATED FROM INTRINSICALLY SAFE WIRING PER NEC ARTICLE 500 AND ANSI/NFPA 70 AND PER MANUFACTURER'S REQUIREMENTS.
3. ALL SWITCH CONTACTS SHALL BE NON-ENERGY STORING, CONTAINING NO INDUCTANCE OR CAPACITANCE.
4. ENTITY PARAMETERS
   V_{OC} = 16.8V L_a = 0
   I_{SC} = 1.7mA C_a = 0
5. CONTRACTOR TO WIRE EXTERNAL LEADS TO TERMINAL BLOCKS AS SHOWN.

TERMINAL LAYOUT & FIELD WIRING
(TYPICAL FOR 2 PANELS)

DRAFT

*ALL RIGHTS RESERVED. THE INFORMATION TRANSMITTED HEREIN IS THE PROPERTY OF HYDRO-DYNE ENGINEERING INC. AND HAS BEEN PROVIDED FOR RESTRICTIVE USE. THIS DATA MUST BE HELD CONFIDENTIAL AND TRANSMISSION, DUPLICATION OR DISCLOSURE IS PROHIBITED UNLESS AUTHORIZED IN WRITING BY HYDRO-DYNE ENGINEERING INC.

# DENOTES "1" FOR PANEL 1 AND "2" FOR PANEL 2

NO.	DATE	DESCRIPTION	BY
0	05/13/25	FOR SUBMITTAL	W. BARNETT

REVISION

UNLESS NOTED TOLERANCE
X ±.030
.XX ±.015
.XXX ±.005
.XXXX ±.0005

HYDRO-DYNE ENGINEERING
www.hydro-dyne.com

PROJECT #: 06002

SCREEN & GRIT CONTROL PANEL - SAN LUIS, AZ

DRAWING #: AF0297 | SHT.: 5/21 | REV.: 0

DRAWN BY/DATE: W. BARNETT 05/13/25 | SCALE: N.T.S.

CHECKED BY/DATE: E. CONN 05/13/25 | SIZE:

BILL OF MATERIAL (TYPICAL FOR 2)

	ITEM	QTY	MFG	CATALOG	DESCRIPTION
	1	1	HOFFMAN	A62H6018SSLP3PT	ENCLOSURE, 62"H x 60"W x 18"D, NEMA 4X, FLOOR-MOUNT W/ 12" STANDS, 304SS
		1	HOFFMAN	A60P60	SUBPANEL, 56" x 56"
△		6	ZERUST	VC-2-2	VAPOR CORROSION INHIBITOR
	2	1	STAHLIN	HMICVR1611	HINGED HMI COVER & SUNSHIELD, 15.72"H x 19.10"W x 2.59"D, POLYCARBONATE
	3	1	ICEQUBE	IQ4000VS-480V-S304-N4X	AIR CONDITIONER, 4000 BTU/HR, 480 VAC, 304SS
	4	1	HOFFMAN	DAH1001A	ENCLOSURE HEATER WITH FAN, 100 WATTS, 120 VAC
	5	A/R	PANDUIT	TYPE F	WIRE DUCT
	6	1	PANDUIT	LAM2A2/0-14-Q	GROUND LUG
	7	25	WEIDMULLER	1014300000	FUSED TERMINAL BLOCK, WSI 6/2/LD, 60-150V AC/DC, 1/4" x 1-1/4", #20-8 AWG
		30	BUSSMANN	MDL-2-R	FUSE, 2 AMP, TIME-DELAY, 250V, 1/4" x 1-1/4" (5 SPARE)
	8	19	WEIDMULLER	1014100000	FUSED TERMINAL BLOCK, WSI 6/2/LD, 10-36V AC/DC, 1/4" x 1-1/4", #20-8 AWG
		8	BUSSMANN	AGC-3-R	FUSE, 3 AMP, FAST-ACTING, 250V, 1/4" x 1-1/4" (5 SPARE)
		8	BUSSMANN	AGC-2-R	FUSE, 2 AMP, FAST-ACTING, 250V, 1/4" x 1-1/4" (5 SPARE)
		10	BUSSMANN	AGC-1-R	FUSE, 1 AMP, FAST-ACTING, 250V, 1/4" x 1-1/4" (5 SPARE)
		13	BUSSMANN	AGC-1/4-R	FUSE, 1/4 AMP, FAST-ACTING, 250V, 1/4" x 1-1/4" (5 SPARE)
	9	169	WEIDMULLER	1020100000	TERMINAL BLOCK, WDU 4, BEIGE, 600V, 22-10 AWG
		2	WEIDMULLER	1050000000	TERMINAL BLOCK END PLATE, WAP 2.5-10, BEIGE
	10		(NOT USED)		
	11	4	WEIDMULLER	1020180000	TERMINAL BLOCK, WDU 4, BLUE, 600V, 22-10 AWG
		2	WEIDMULLER	1050080000	TERMINAL BLOCK END PLATE, WAP 2.5-10, BLUE
	12	11	WEIDMULLER	0383560000	END BRACKET, EW 35, BEIGE
	13	1	WEIDMULLER	9915480000	SIMPLEX RECEPTACLE, 15 AMP MAX, 120 VAC
	14	1	LITTELFUSE	LPSC002ID	FUSE HOLDER, CLASS CC, 2-POLE, 600V, 30 AMP MAX
		6	LITTELFUSE	KLDR005	FUSE, 5 AMP, TIME-DELAY, 600 VAC (4 SPARE)
	15	1	SQUARE D	9070TF1500D1	CONTROL POWER TRANSFORMER, 1500 VA, 240/480 - 120 VAC
		1	SQUARE D	9070FSC2	TRANSFORMER FINGER-SAFE COVERS
		1	SQUARE D	9070FP1	TRANSFORMER FUSE PULLERS
		6	LITTELFUSE	KLDR07.5	FUSE, 7.5 AMP, TIME-DELAY, 600 VAC (4 SPARE)
		3	LITTELFUSE	FLM015	FUSE, 15 AMP, TIME-DELAY, 250 VAC (2 SPARE)
	16	2	SQUARE D	M9F42110	MINIATURE CIRCUIT BREAKER, 1-POLE, 120 VAC, 10 AMP
	17	3	SQUARE D	M9F42105	MINIATURE CIRCUIT BREAKER, 1-POLE, 120 VAC, 5 AMP
	18	2	SQUARE D	M9F42102	MINIATURE CIRCUIT BREAKER, 1-POLE, 120 VAC, 2 AMP
	19	1	SQUARE D	HDL36040	CIRCUIT BREAKER, 3 POLE, 480 VAC, 40 AMP
		1	SQUARE D	S37449	LUG SHIELD
		1	SQUARE D	9421LJ7	OPERATING MECHANISM
		1	SQUARE D	9421LS13	DISCONNECT SHAFT
		1	SQUARE D	9421LC43	ROTARY BREAKER HANDLE, NEMA 4X, 3 INCH
		1	SQUARE D	PDC6HD6	DISTRIBUTION LUGS, (6) 6-14 AWG
	20	1	SQUARE D	SDSA4040D	SURGE PROTECTION DEVICE, 3-PHASE, 480 VAC DELTA
	21	1	SQUARE D	SDSA1175T	SURGE PROTECTION DEVICE, 1-PHASE, 120 VAC
	22	2	SQUARE D	QOSAMK	SURGE PROTECTION DEVICE MOUNTING BRACKET
	23	2	SQUARE D	PK12GTA	GROUND BAR
	24	7	SQUARE D	9080LBA361101	POWER DISTRIBUTION BLOCK, 3-POLE, (1) #14-2 AWG LINE, (1) #14-2 AWG LOAD
		7	SQUARE D	9080LB13	POWER DISTRIBUTION BLOCK COVER, 3-POLE
	25	2	SQUARE D	9080LBA161101	POWER DISTRIBUTION BLOCK, 1-POLE, (1) #14-2 AWG LINE, (1) #14-2 AWG LOAD
		2	SQUARE D	9080LB11	POWER DISTRIBUTION BLOCK COVER, 1-POLE
	26	1	SQUARE D	9001SKT38LWW31	PILOT LIGHT, WHITE, 120 VAC, PUSH-TO-TEST, 30mm, NEMA 4X
	27	7	SQUARE D	9001SKT38LGG31	PILOT LIGHT, GREEN, 120 VAC, PUSH-TO-TEST, 30mm, NEMA 4X
	28	7	SQUARE D	9001SKT38LRR31	PILOT LIGHT, RED, 120 VAC, PUSH-TO-TEST, 30mm, NEMA 4X
	29	1	SQUARE D	9001SKR9P1RH13	ILLUMINATED PUSHBUTTON, RED, PUSH-PULL MAINTAINED, MUSHROOM, 30mm, NEMA 4X, 1 NO - 1 NC
	30	1	SQUARE D	9001SKR1BH2	PUSHBUTTON, BLACK, MOMENTARY, FLUSH HEAD, 30mm, NEMA 4X, 1 NO - 1 NC
	31	2	SQUARE D	9001SKS43BH2	SELECTOR SWITCH, 3-POSITION MAINTAINED, 30mm, NEMA 4X, 1 NO - 1 NC
	32	7	ENM	T50B212	ELAPSED TIME METER, 120 VAC, NEMA 12/4X
	33	2	CARLO GAVAZZI	DIB01CM24100A	CURRENT MONITOR RELAY, 120 VAC, SPDT, 2-100 AMPS
	34	2	FINDER	7L.46.0.230.2100	ENCLOSURE LIGHT, LED WITH MOTION SENSOR, 120 VAC

△ DENOTES ITEM SHIPPED LOOSE

BILL OF MATERIAL (TYPICAL FOR 2)

	ITEM	QTY	MFG	CATALOG	DESCRIPTION
	35	18	IDEC	RU4S-C-A110	CONTROL RELAY, 4PDT W/ IND LIGHT, 120 VAC, 6 AMP CONTACTS
		18	IDEC	SY4S-05	CONTROL RELAY SOCKET
	36	42	IDEC	RV8H-L-AD110	SLIM CONTROL RELAY, SPDT W/ IND LIGHT, 120 VAC, 6 AMP CONTACTS
	37	2	LITTELFUSE	LFT600303	FUSE HOLDER, CLASS T, 3-POLE, 600V, 30 AMP
		6	LITTELFUSE	LFT60030FBC	FUSE BLOCK COVER
		12	LITTELFUSE	JLLS015	FUSE, 15 AMP, TIME-DELAY, CLASS T (6 SPARE)
	38	2	ABB	ACS580-01-02A1-4+X1571	VARIABLE FREQUENCY DRIVE, 3/4 HP, 480 VAC
		2	ABB	FEIP-21-KIT	VFD ETHERNET/IP MODULE
	39	7	ABB	AF26-30-00-13	MOTOR CONTACTOR, NEMA SIZE 1, 3-POLE, 15 HP MAX, 120 VAC COIL
		14	ABB	CA4-10	AUXILIARY CONTACT, FRONT MOUNT, NORMALLY OPEN
		5	ABB	BEA26-4	CONTACTOR CLOSE COUPLING ADAPTER
	40	2	ABB	VEM4	MOTOR CONTACTOR MECHANICAL & ELECTRICAL INTERLOCK KIT
		2	ABB	BER38-4	CONTACTOR REVERSING BUS BAR
	41	3	ABB	S1-M3-25	MOTOR CIRCUIT PROTECTOR FEEDER TERMINAL
	42	1	ABB	PS1-3-2-65	MOTOR CIRCUIT PROTECTOR BUS BAR, 3 GANG
	43	5	ABB	HK1-11	AUXILIARY CONTACT, RIGHT SIDE MOUNT, 1 N.O. - 1 N.C.
	44	1	ABB	MS132-10	MOTOR CIRCUIT PROTECTOR, 3 POLE, 480 VAC, 6.3 - 10 AMPS OVERLOAD
	45	1	ABB	MS132-6.3	MOTOR CIRCUIT PROTECTOR, 3 POLE, 480 VAC, 4.0 - 6.3 AMPS OVERLOAD
	46	2	ABB	MS132-1.6	MOTOR CIRCUIT PROTECTOR, 3 POLE, 480 VAC, 1.0 - 1.6 AMPS OVERLOAD
	47	1	ABB	MS132-4.0	MOTOR CIRCUIT PROTECTOR, 3 POLE, 480 VAC, 2.5 - 4.0 AMPS OVERLOAD
	48	1	ALLEN-BRADLEY	5069-L306ER	COMPACTLOGIX 5380 PLC PROCESSOR
		4	ALLEN-BRADLEY	5069-IB16	COMPACTLOGIX DISCRETE INPUT MODULE, 16-POINT, 24 VDC (1 SPARE)
		3	ALLEN-BRADLEY	5069-OW16	COMPACTLOGIX RELAY OUTPUT MODULE, 16-POINT, 120 VAC / 24 VDC (1 SPARE)
		2	ALLEN-BRADLEY	5069-IF8	COMPACTLOGIX ANALOG INPUT MODULE, 4-CHANNEL, 4-20 mA (1 SPARE)
		1	ALLEN-BRADLEY	5069-RTB64-SCREW	REMOVABLE TERMINAL BLOCK, 4 PIN & 6 PIN
		6	ALLEN-BRADLEY	5069-RTB18-SCREW	REMOVABLE TERMINAL BLOCK, 18 PIN
	49	1	ALLEN-BRADLEY	2711P-T10C21D8S	PANELVIEW PLUS 7 OPERATOR INTERFACE TERMINAL, 10" TOUCH SCREEN, 24 VDC
	50	1	ALLEN-BRADLEY	1783-US8T	UNMANAGED ETHERNET SWITCH, 8-PORT, 24 VDC
	51	1	PULS	CP5.241	POWER SUPPLY, 24 VDC, 120 WATTS
	52	8	EDCO	DRS-036	ANALOG SURGE SUPPRESSOR, 4-20mA
	53	2	MACROMATIC	ISEUR1	INTRINSICALLY SAFE RELAY, 120VAC/24VDC, 1 CHANNEL
	54		(NOT USED)		
	55	1	GRACEPORT	P-R2-K2RF0	DUPLEX RECEPTACLE, GFCI, WITH ETHERNET PORT, NEMA 4X
△	56	1	APC	SMT1500C	UNINTERRUPTIBLE POWER SUPPLY, 1500 VA, 120 VAC
		1	APC	AP9613	UPS RELAY OUTPUT MODULE
		1	RCS	CUSTOM	UPS STAND
	57		(NOT USED)		
△	58	2	AKRON	CXI 373-X3-N4-N5	NEMA 7 ENCLOSURE, NEMA 4X GASKET, SS HARDWARE, 3 OPERATORS
△	59	5	AKRON	CXI 363-X2-N4-N5	NEMA 7 ENCLOSURE, NEMA 4X GASKET, SS HARDWARE, 2 OPERATORS
	60	7	AKRON	XPPPS-2RE	EMERGENCY STOP PUSHBUTTON, PUSH-PULL MAINTAINED, 1 NO/NC, NEMA 7
	61	7	AKRON	XP3-SSC	SELECTOR SWITCH, 3-POSITION, MAINTAINED, 1 NO/NC, NEMA 7
	62	2	AKRON	XP3-LSC	SELECTOR SWITCH, 3-POSITION, SPRING RETURN RIGHT FROM CENTER, 1 NO/NC, NEMA 7
	63	2	HOFFMAN	A12106CHQRFGW	ENCLOSURE, 12"H x 10"W x 6"D, NEMA 4X, GRAY, FIBERGLASS, WINDOWED, WALL MOUNT
		2	HOFFMAN	A12P10	SUBPANEL, 10.75" x 8.88"
	64	2	SIEMENS	7ML6003-1BB10-1AA2	HYDRORANGER LT500 ULTRASONIC LEVEL CONTROLLER, DUAL POINT, 24 VDC
△	65	4	SIEMENS	7ML1171-1DA10	XPS-15F ULTRASONIC TRANSDUCER, 30 METER CABLE
△	66	4	SIEMENS	7ML5630-0AB00-0GA0	CLS-200 CAPACITIVE POINT LEVEL SWITCH, 12-250 VAC/VDC, EXPLOSION PROOF, 250mm I.S. PROBE
△	67	2	ANCHOR SCIENTIFIC	S100NC-SSTNM	FLOAT SWITCH, NORMALLY CLOSED, SUSPENDED MOUNT WITH WEIGHT, 100 FOOT CABLE

△ DENOTES ITEM SHIPPED LOOSE

*ALL RIGHTS RESERVED. THE INFORMATION TRANSMITTED HEREIN IS THE PROPERTY OF HYDRO-DYNE ENGINEERING INC. AND HAS BEEN PROVIDED FOR RESTRICTIVE USE. THIS DATA MUST BE HELD CONFIDENTIAL AND TRANSMISSION, DUPLICATION OR DISCLOSURE IS PROHIBITED UNLESS AUTHORIZED IN WRITING BY HYDRO-DYNE ENGINEERING INC.

NO.	DATE	DESCRIPTION	BY
0	05/13/25	FOR SUBMITTAL	W. BARNETT
		REVISION	

UNLESS NOTED TOLERANCE
.X ± .030
.XX ± .015
.XXX ± .005
.XXXX ± .0005

HYDRO-DYNE ENGINEERING
www.hydro-dyne.com

PROJECT #: 06002

SCREEN & GRIT CONTROL PANEL - SAN LUIS, AZ

DRAWING #: AF0297 | SHT.: 6/21 | REV.: 0

DRAWN BY/DATE: W. BARNETT 05/13/25 | SCALE: N.T.S.

CHECKED BY/DATE: E. CONN 05/13/25 | SIZE:

DRAFT

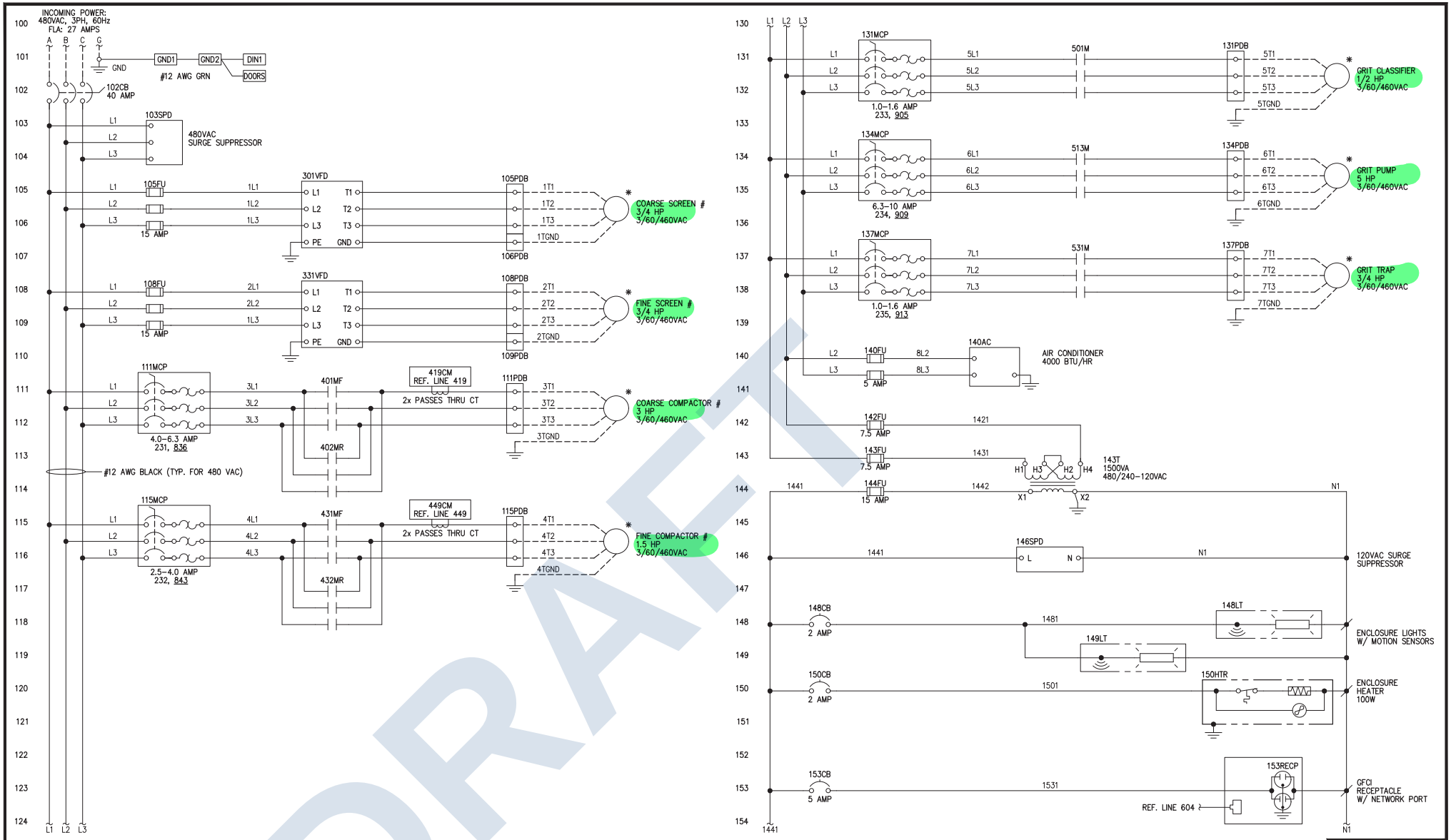

LEGEND:
- ⌀ DENOTES A TERMINAL BLOCK POINT
- ✱ DENOTES ITEM REMOTE FROM CONTROL PANEL
- - - DENOTES WIRING EXTERNAL TO CONTROL PANEL
- # DENOTES "1" FOR PANEL 1 AND "2" FOR PANEL 2

*ALL RIGHTS RESERVED. THE INFORMATION TRANSMITTED HEREIN IS THE PROPERTY OF HYDRO-DYNE ENGINEERING INC. AND HAS BEEN PROVIDED FOR RESTRICTIVE USE. THIS DATA MUST BE HELD CONFIDENTIAL AND TRANSMISSION, DUPLICATION OR DISCLOSURE IS PROHIBITED UNLESS AUTHORIZED IN WRITING BY HYDRO-DYNE ENGINEERING INC.

NO.	DATE	REVISION	BY
0	05/13/25	FOR SUBMITTAL	W. BARNETT

UNLESS NOTED
TOLERANCE
X ±.030
.XX ±.015
.XXX ±.005
.XXXX ±.0005

HYDRO-DYNE ENGINEERING
www.hydro-dyne.com

PROJECT #: 06002

SCREEN & GRIT CONTROL PANEL - SAN LUIS, AZ

DRAWING #: AF0297	SHT.: 7/21	REV.: 0	
DRAWN BY/DATE: W. BARNETT	05/13/25	SCALE: N.T.S.	
CHECKED BY/DATE: E. CONN	05/13/25	SIZE:	

DRAFT

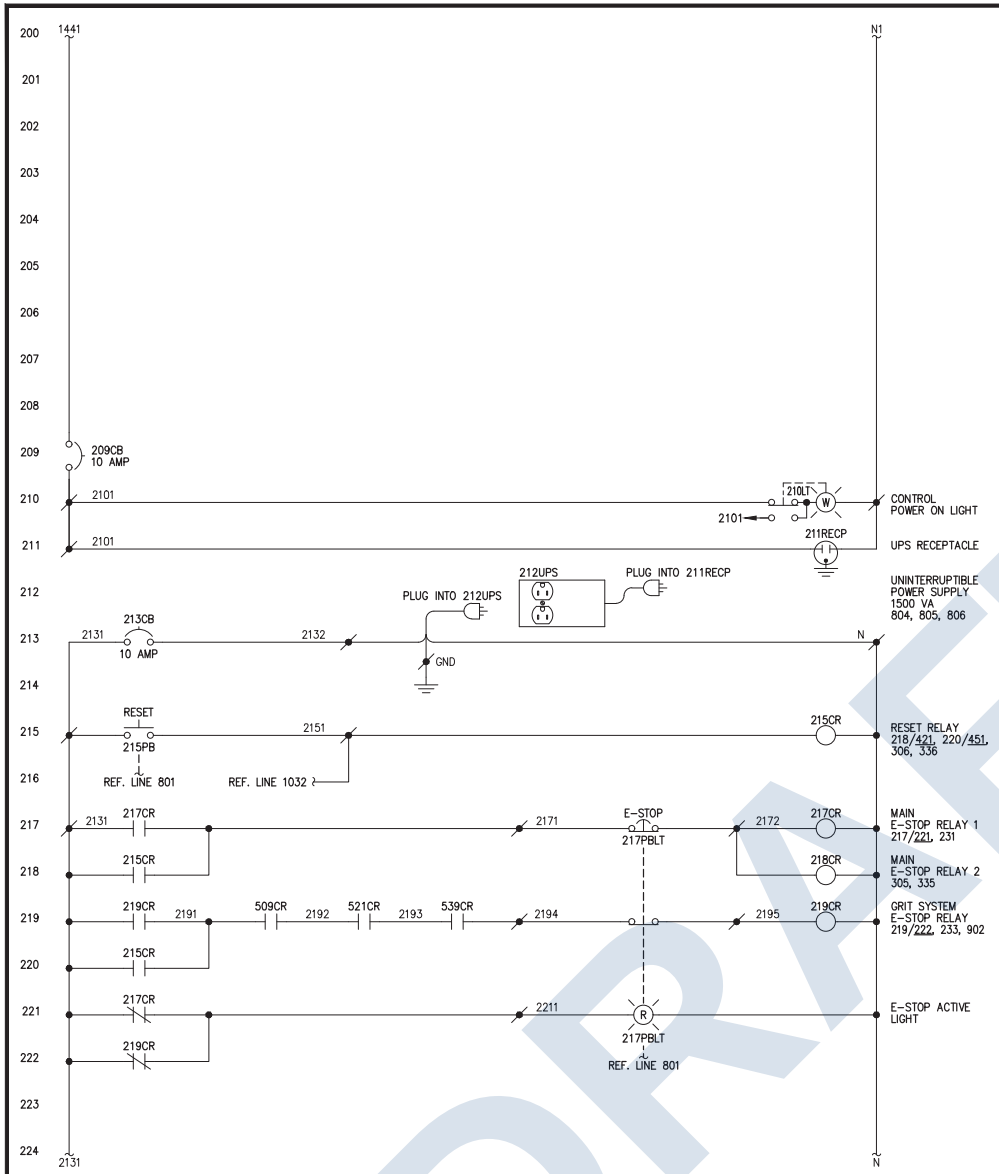

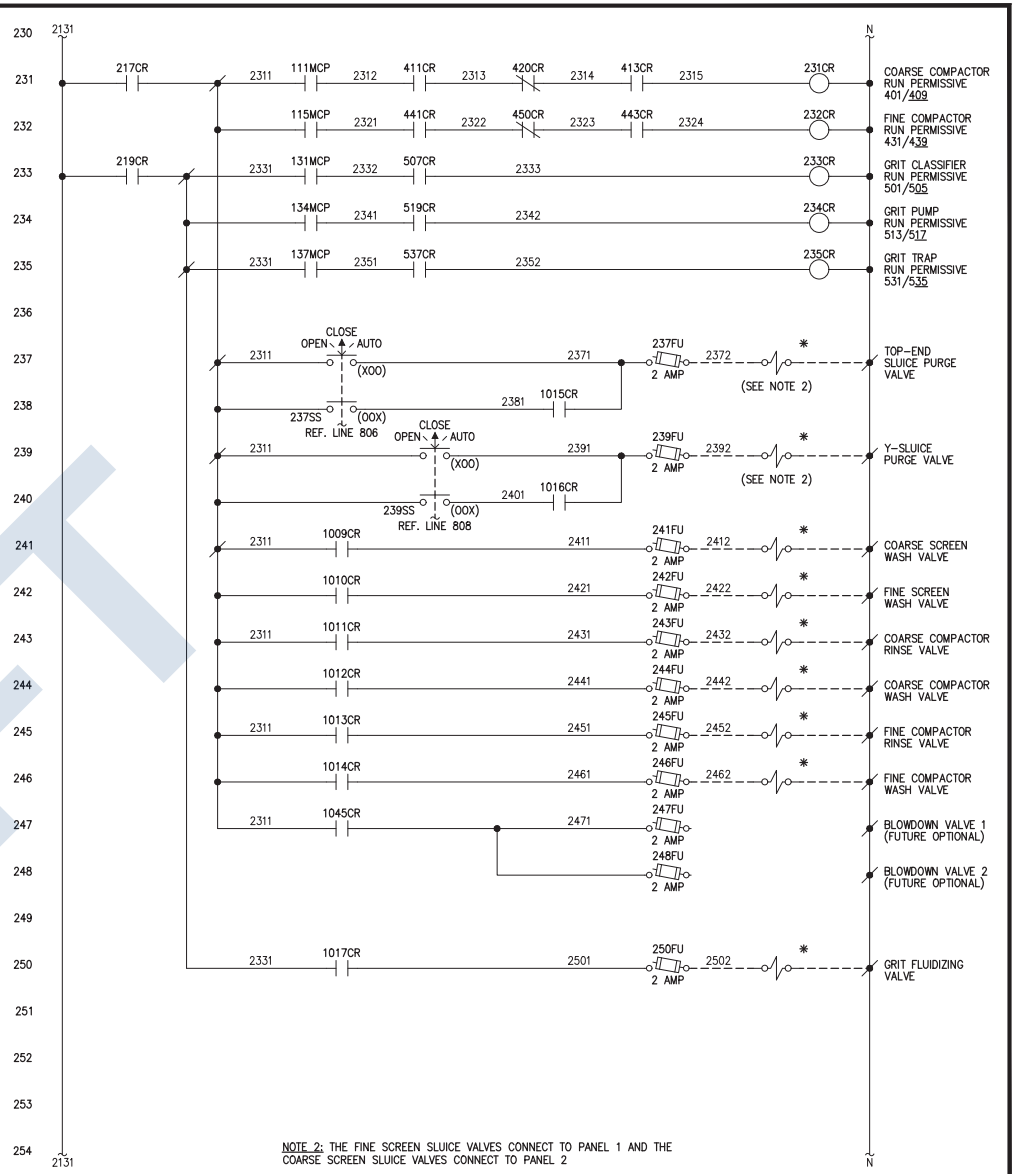

NOTE 1: #16 AWG YELLOW WIRE JUMPERS INSTALLED AT FIELD SIDE TERMINALS. REMOVE WHEN TEMPERATURE SWITCHES ARE INSTALLED.

LEGEND:
- DENOTES A TERMINAL BLOCK POINT
- * DENOTES ITEM REMOTE FROM CONTROL PANEL
- DENOTES WIRING EXTERNAL TO CONTROL PANEL
- # DENOTES "1" FOR PANEL 1 AND "2" FOR PANEL 2

NOTE 2: THE FINE SCREEN SLUICE VALVES CONNECT TO PANEL 1 AND THE COARSE SCREEN SLUICE VALVES CONNECT TO PANEL 2

*ALL RIGHTS RESERVED. THE INFORMATION TRANSMITTED HEREIN IS THE PROPERTY OF HYDRO-DYNE ENGINEERING INC. AND HAS BEEN PROVIDED FOR RESTRICTIVE USE. THIS DATA MUST BE HELD CONFIDENTIAL AND TRANSMISSION, DUPLICATION OR DISCLOSURE IS PROHIBITED UNLESS AUTHORIZED IN WRITING BY HYDRO-DYNE ENGINEERING INC.

NO.	DATE	DESCRIPTION	BY
0	05/13/25	FOR SUBMITTAL	W. BARNETT

REVISION

UNLESS NOTED TOLERANCE
.X ± .030
.XX ± .015
.XXX ± .005
.XXXX ± .0005

HYDRO-DYNE ENGINEERING
www.hydro-dyne.com

PROJECT #: 06002

SCREEN & GRIT CONTROL PANEL - SAN LUIS, AZ

DRAWING #: AF0297 | SHT.: 8/21 | REV.: 0

DRAWN BY/DATE: W. BARNETT 05/13/25 | SCALE: N.T.S.

CHECKED BY/DATE: E. CONN 05/13/25 | SIZE:

DRAFT

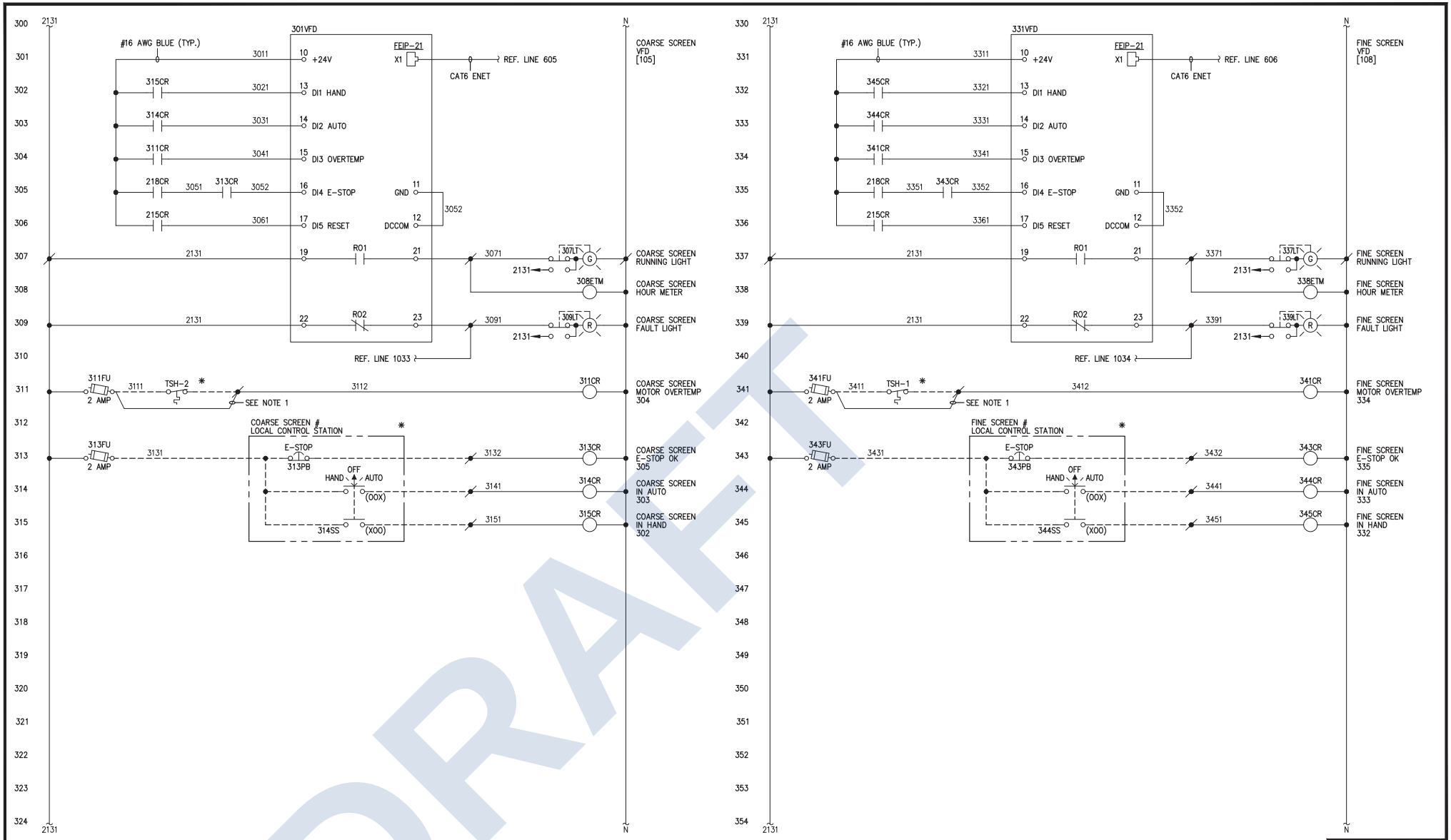

NOTE 1: #16 AWG YELLOW WIRE JUMPERS INSTALLED AT FIELD SIDE TERMINALS. REMOVE WHEN TEMPERATURE SWITCHES ARE INSTALLED.

LEGEND:
- DENOTES A TERMINAL BLOCK POINT
- * DENOTES ITEM REMOTE FROM CONTROL PANEL
- - - DENOTES WIRING EXTERNAL TO CONTROL PANEL
- # DENOTES "1" FOR PANEL 1 AND "2" FOR PANEL 2

*ALL RIGHTS RESERVED. THE INFORMATION TRANSMITTED HEREIN IS THE PROPERTY OF HYDRO-DYNE ENGINEERING INC. AND HAS BEEN PROVIDED FOR RESTRICTIVE USE. THIS DATA MUST BE HELD CONFIDENTIAL AND TRANSMISSION, DUPLICATION OR DISCLOSURE IS PROHIBITED UNLESS AUTHORIZED IN WRITING BY HYDRO-DYNE ENGINEERING INC.

NO.	DATE	DESCRIPTION	BY
0	05/13/25	FOR SUBMITTAL	W. BARNETT

REVISION

UNLESS NOTED TOLERANCE
X ± .030
.XX ± .015
.XXX ± .005
.XXXX ± .0005

HYDRO-DYNE ENGINEERING
www.hydro-dyne.com

PROJECT #: 06002

SCREEN & GRIT CONTROL PANEL - SAN LUIS, AZ

DRAWING #: AF0297 | SHT.: 9/21 | REV.: 0

DRAWN BY/DATE: W. BARNETT 05/13/25 | SCALE: N.T.S.

CHECKED BY/DATE: E. CONN 05/13/25 | SIZE:

DRAFT

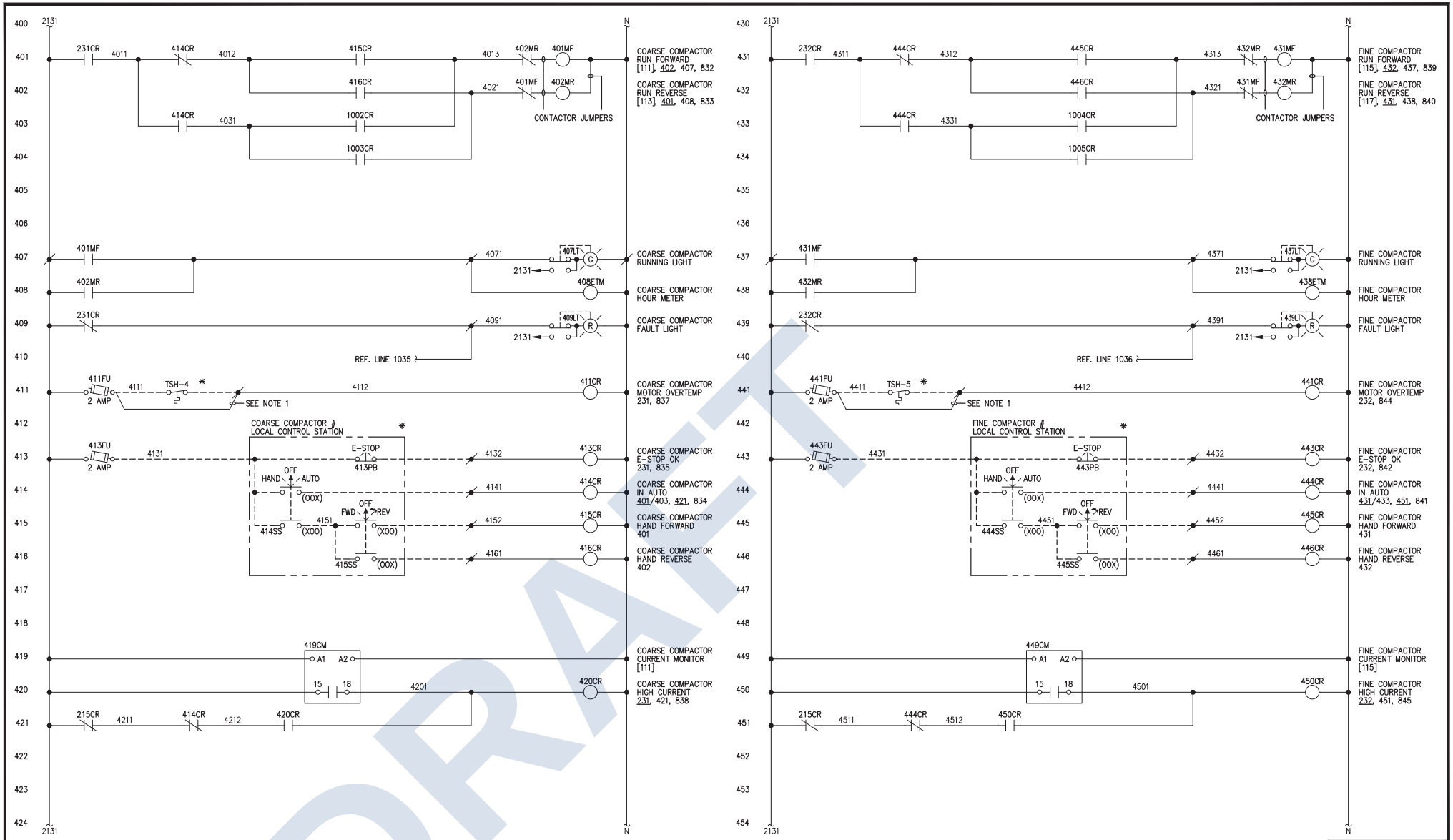

NOTE 1: #16 AWG YELLOW WIRE JUMPERS INSTALLED AT FIELD SIDE TERMINALS. REMOVE WHEN TEMPERATURE SWITCHES ARE INSTALLED.

LEGEND:
- ⁄ DENOTES A TERMINAL BLOCK POINT
- ✳ DENOTES ITEM REMOTE FROM CONTROL PANEL
- - - DENOTES WIRING EXTERNAL TO CONTROL PANEL
- # DENOTES "1" FOR PANEL 1 AND "2" FOR PANEL 2

*ALL RIGHTS RESERVED. THE INFORMATION TRANSMITTED HEREIN IS THE PROPERTY OF HYDRO-DYNE ENGINEERING INC. AND HAS BEEN PROVIDED FOR RESTRICTIVE USE. THIS DATA MUST BE HELD CONFIDENTIAL AND TRANSMISSION, DUPLICATION OR DISCLOSURE IS PROHIBITED UNLESS AUTHORIZED IN WRITING BY HYDRO-DYNE ENGINEERING INC.

NO.	DATE	DESCRIPTION	BY
0	05/13/25	FOR SUBMITTAL	W. BARNETT

REVISION

UNLESS NOTED TOLERANCE
X ± .030
.XX ± .015
.XXX ± .005
.XXXX ± .0005

HYDRO-DYNE ENGINEERING
www.hydro-dyne.com

PROJECT #: 06002

SCREEN & GRIT CONTROL PANEL - SAN LUIS, AZ

DRAWING #: AF0297 | SHT.: 10/21 | REV.: 0

DRAWN BY/DATE: W. BARNETT 05/13/25 | SCALE: N.T.S.

CHECKED BY/DATE: E. CONN 05/13/25 | SIZE:

DRAFT

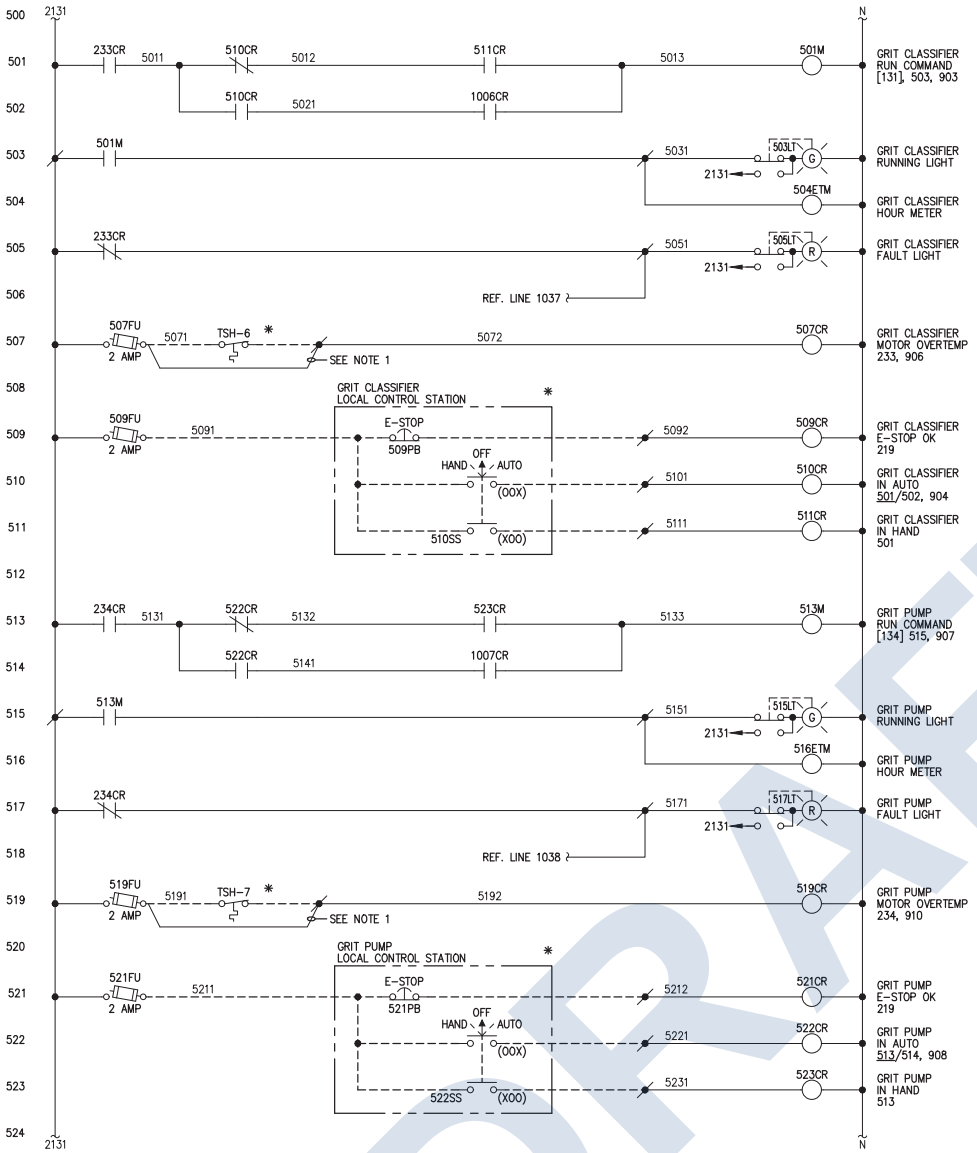

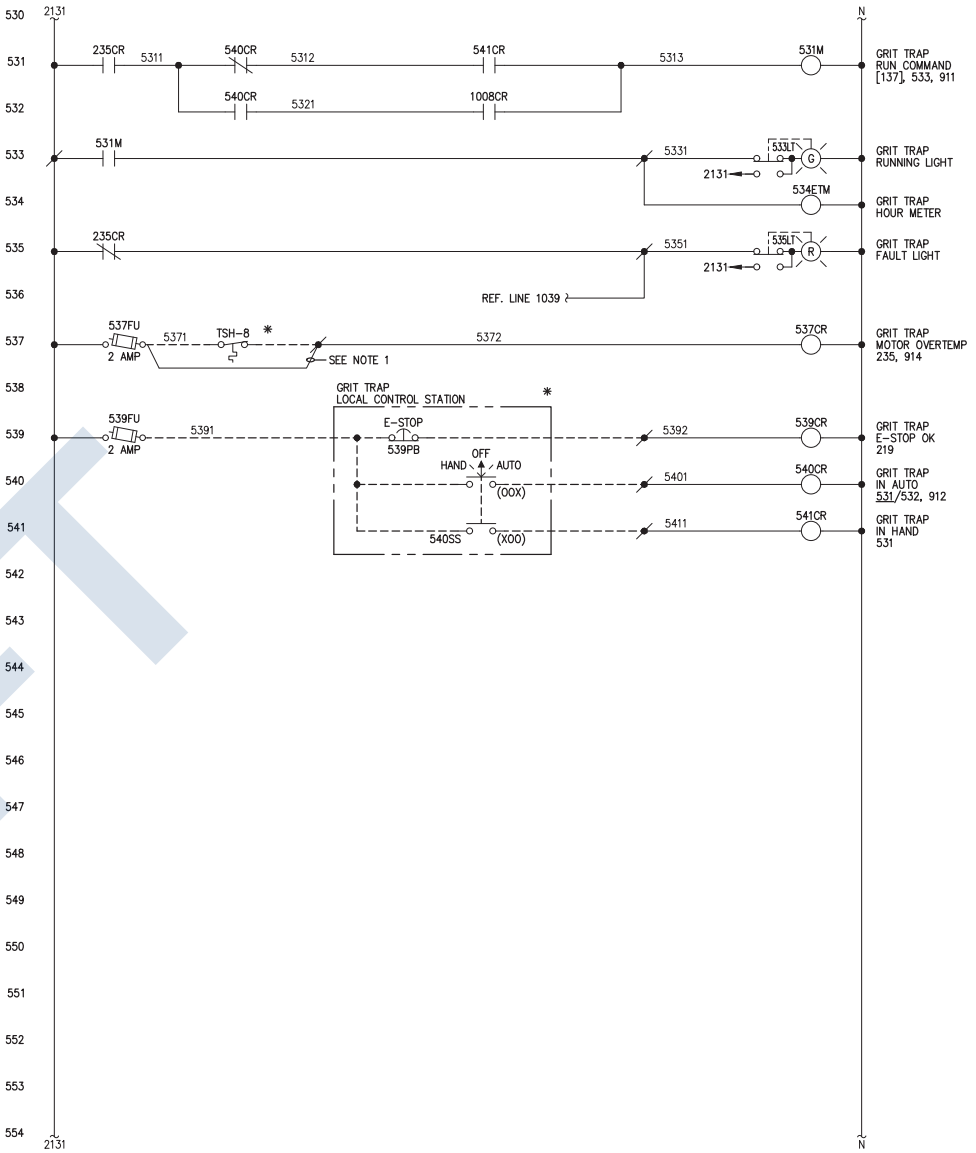

NOTE 1: #16 AWG YELLOW WIRE JUMPERS INSTALLED AT FIELD SIDE TERMINALS. REMOVE WHEN TEMPERATURE SWITCHES ARE INSTALLED.

LEGEND:
- DENOTES A TERMINAL BLOCK POINT
- * DENOTES ITEM REMOTE FROM CONTROL PANEL
- --- DENOTES WIRING EXTERNAL TO CONTROL PANEL
- # DENOTES "1" FOR PANEL 1 AND "2" FOR PANEL 2

*ALL RIGHTS RESERVED. THE INFORMATION TRANSMITTED HEREIN IS THE PROPERTY OF HYDRO-DYNE ENGINEERING INC. AND HAS BEEN PROVIDED FOR RESTRICTIVE USE. THIS DATA MUST BE HELD CONFIDENTIAL AND TRANSMISSION, DUPLICATION OR DISCLOSURE IS PROHIBITED UNLESS AUTHORIZED IN WRITING BY HYDRO-DYNE ENGINEERING INC.

NO.	DATE	DESCRIPTION	BY
0	05/13/25	FOR SUBMITTAL	W. BARNETT

REVISION

UNLESS NOTED
TOLERANCE
.X ± .030
.XX ± .015
.XXX ± .005
.XXXX ± .0005

HYDRO-DYNE ENGINEERING
www.hydro-dyne.com

PROJECT #: 06002

SCREEN & GRIT CONTROL PANEL - SAN LUIS, AZ

DRAWING #: AF0297 | SHT.: 11/21 | REV.: 0
DRAWN BY/DATE: W. BARNETT 05/13/25 | SCALE: N.T.S.
CHECKED BY/DATE: E. CONN 05/13/25 | SIZE:

DRAFT

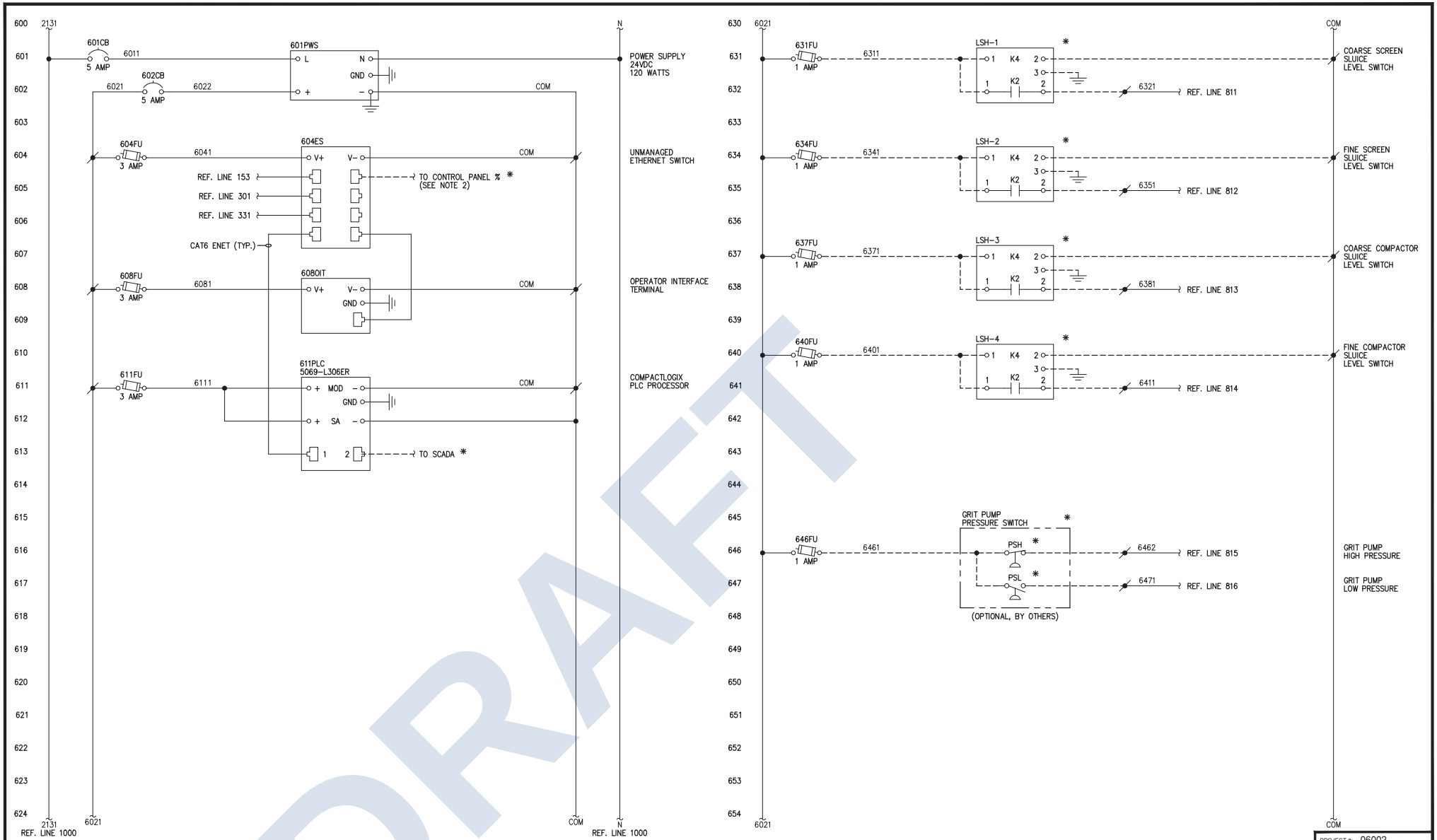

NOTE 2: "%" DENOTES "2" FOR PANEL 1 AND "1" FOR PANEL 2

LEGEND:
- DENOTES A TERMINAL BLOCK POINT
- * DENOTES ITEM REMOTE FROM CONTROL PANEL
- - - DENOTES WIRING EXTERNAL TO CONTROL PANEL
- # DENOTES "1" FOR PANEL 1 AND "2" FOR PANEL 2

*ALL RIGHTS RESERVED. THE INFORMATION TRANSMITTED HEREIN IS THE PROPERTY OF HYDRO−DYNE ENGINEERING INC. AND HAS BEEN PROVIDED FOR RESTRICTIVE USE. THIS DATA MUST BE HELD CONFIDENTIAL AND TRANSMISSION, DUPLICATION OR DISCLOSURE IS PROHIBITED UNLESS AUTHORIZED IN WRITING BY HYDRO−DYNE ENGINEERING INC.

NO.	DATE	DESCRIPTION	BY
0	05/13/25	FOR SUBMITTAL	W. BARNETT

REVISION

UNLESS NOTED
TOLERANCE
.X ± .030
.XX ± .015
.XXX ± .005
.XXXX ± .0005

HYDRO DYNE ENGINEERING
www.hydro-dyne.com

SCREEN & GRIT CONTROL PANEL - SAN LUIS, AZ

PROJECT #: 06002
DRAWING #: AF0297
SHT.: 12/21
REV.: 0
DRAWN BY/DATE: W. BARNETT 05/13/25
SCALE: N.T.S.
CHECKED BY/DATE: E. CONN 05/13/25
SIZE:

DRAFT

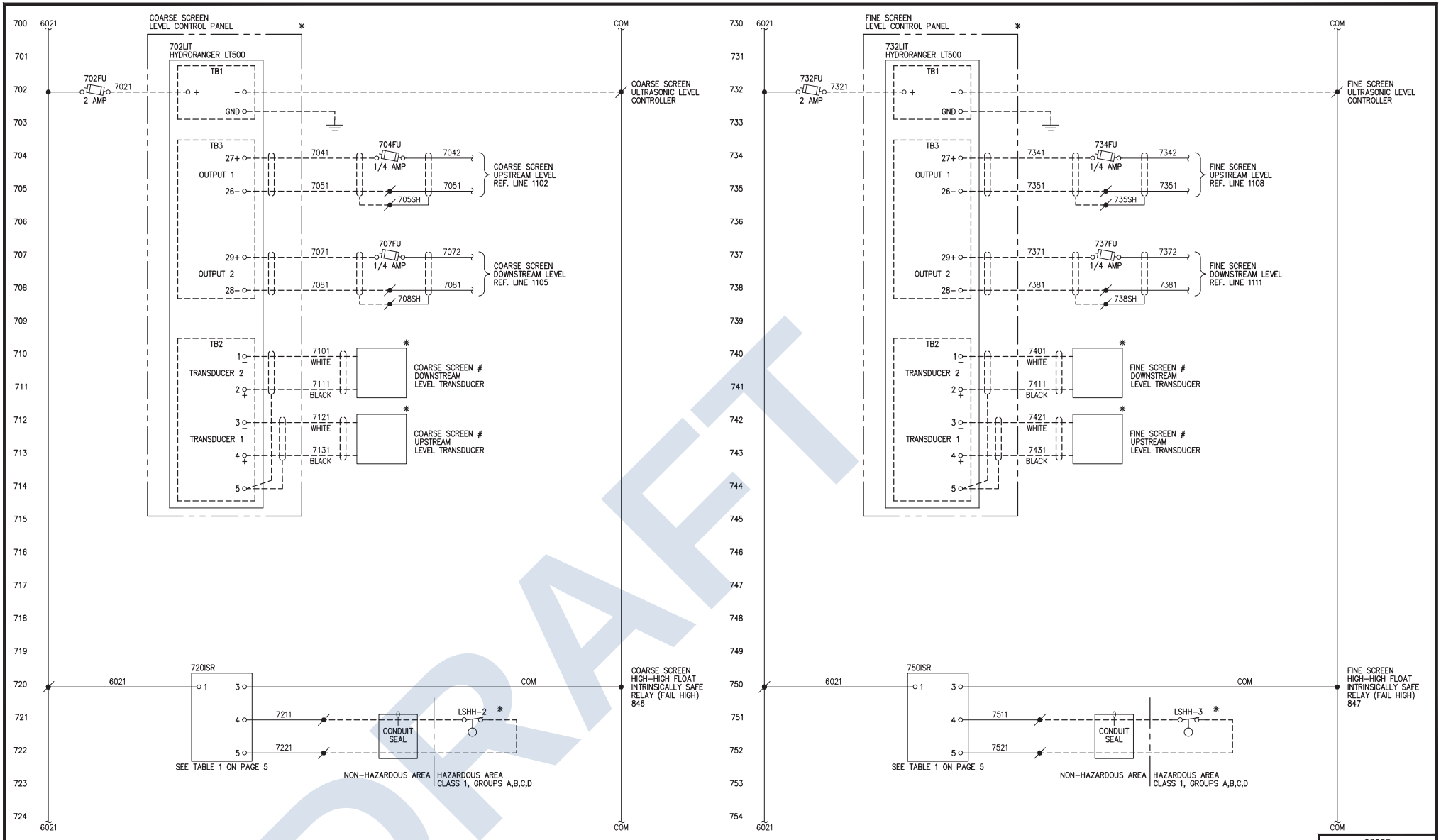

DRAFT

LEGEND:
- ⁄ DENOTES A TERMINAL BLOCK POINT
- * DENOTES ITEM REMOTE FROM CONTROL PANEL
- - - DENOTES WIRING EXTERNAL TO CONTROL PANEL
- # DENOTES "1" FOR PANEL 1 AND "2" FOR PANEL 2

*ALL RIGHTS RESERVED. THE INFORMATION TRANSMITTED HEREIN IS THE PROPERTY OF HYDRO-DYNE ENGINEERING INC. AND HAS BEEN PROVIDED FOR RESTRICTIVE USE. THIS DATA MUST BE HELD CONFIDENTIAL AND TRANSMISSION, DUPLICATION OR DISCLOSURE IS PROHIBITED UNLESS AUTHORIZED IN WRITING BY HYDRO-DYNE ENGINEERING INC.

NO.	DATE	DESCRIPTION	BY
0	05/13/25	FOR SUBMITTAL	W. BARNETT

REVISION

UNLESS NOTED TOLERANCE
X ± .030
.XX ± .015
.XXX ± .005
.XXXX ± .0005

HYDRO-DYNE ENGINEERING
www.hydro-dyne.com

PROJECT #: 06002

SCREEN & GRIT CONTROL PANEL - SAN LUIS, AZ

DRAWING #: AF0297 | SHT.: 13/21 | REV.: 0

DRAWN BY/DATE: W. BARNETT 05/13/25 | SCALE: N.T.S.

CHECKED BY/DATE: E. CONN 05/13/25 | SIZE:

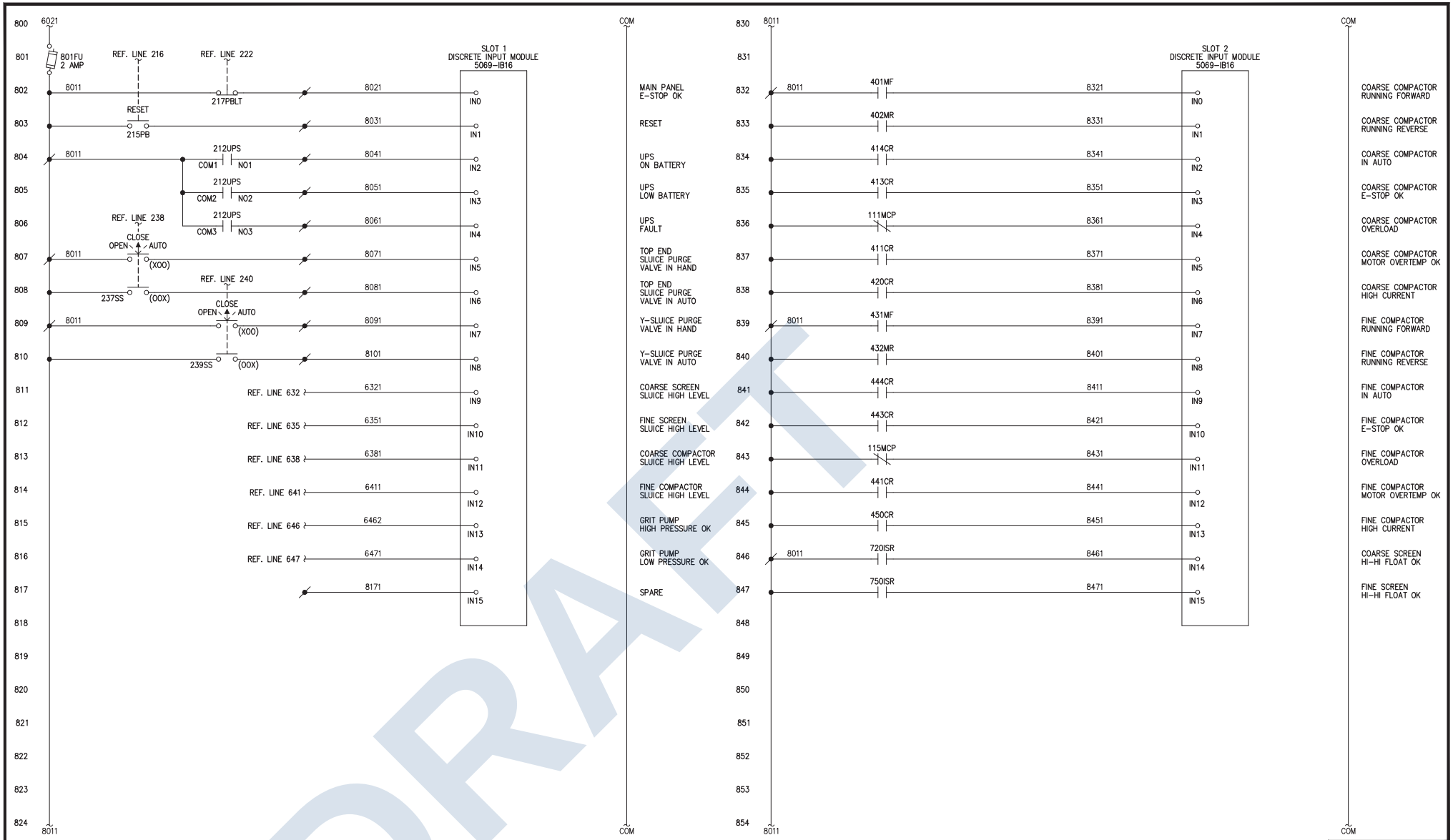

LEGEND:

- DENOTES A TERMINAL BLOCK POINT
- * DENOTES ITEM REMOTE FROM CONTROL PANEL
- - - DENOTES WIRING EXTERNAL TO CONTROL PANEL
- # DENOTES "1" FOR PANEL 1 AND "2" FOR PANEL 2

*ALL RIGHTS RESERVED. THE INFORMATION TRANSMITTED HEREIN IS THE PROPERTY OF HYDRO-DYNE ENGINEERING INC. AND HAS BEEN PROVIDED FOR RESTRICTIVE USE. THIS DATA MUST BE HELD CONFIDENTIAL AND TRANSMISSION, DUPLICATION OR DISCLOSURE IS PROHIBITED UNLESS AUTHORIZED IN WRITING BY HYDRO-DYNE ENGINEERING INC.

NO.	DATE	DESCRIPTION	BY
0	05/13/25	FOR SUBMITTAL	W. BARNETT

REVISION

UNLESS NOTED
TOLERANCE
.X ± .030
.XX ± .015
.XXX ± .005
.XXXX ± .0005

HYDRO DYNE ENGINEERING
www.hydro-dyne.com

PROJECT #: 06002

SCREEN & GRIT CONTROL PANEL - SAN LUIS, AZ

DRAWING #: AF0297 | SHT.: 14/21 | REV.: 0

DRAWN BY/DATE: W. BARNETT 05/13/25 | SCALE: N.T.S.

CHECKED BY/DATE: E. CONN 05/13/25 | SIZE:

DRAFT

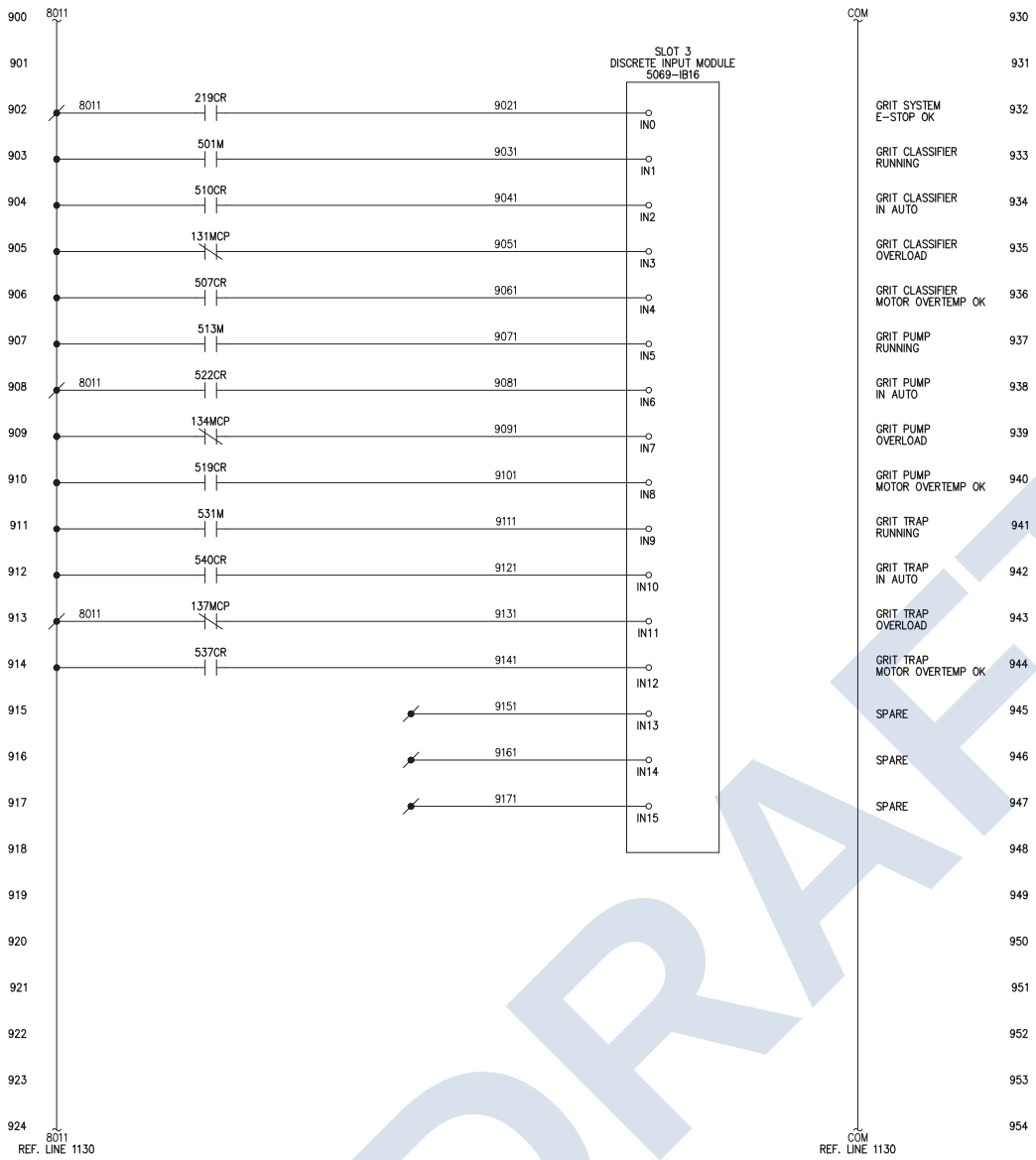

LEGEND:

- DENOTES A TERMINAL BLOCK POINT
- * DENOTES ITEM REMOTE FROM CONTROL PANEL
- - - - DENOTES WIRING EXTERNAL TO CONTROL PANEL
- # DENOTES "1" FOR PANEL 1 AND "2" FOR PANEL 2

*ALL RIGHTS RESERVED. THE INFORMATION TRANSMITTED HEREIN IS THE PROPERTY OF HYDRO-DYNE ENGINEERING INC. AND HAS BEEN PROVIDED FOR RESTRICTIVE USE. THIS DATA MUST BE HELD CONFIDENTIAL AND TRANSMISSION, DUPLICATION OR DISCLOSURE IS PROHIBITED UNLESS AUTHORIZED IN WRITING BY HYDRO-DYNE ENGINEERING INC.

NO.	DATE	DESCRIPTION	BY
0	05/13/25	FOR SUBMITTAL	W. BARNETT

REVISION

UNLESS NOTED
TOLERANCE
.X ± .030
.XX ± .015
.XXX ± .005
.XXXX ± .0005

HYDRO DYNE ENGINEERING
www.hydro-dyne.com

PROJECT #: 06002

SCREEN & GRIT CONTROL PANEL - SAN LUIS, AZ

DRAWING #: AF0297 | SHT.: 15/21 | REV.: 0

DRAWN BY/DATE: W. BARNETT 05/13/25 | SCALE: N.T.S.

CHECKED BY/DATE: E. CONN 05/13/25 | SIZE:

DRAFT

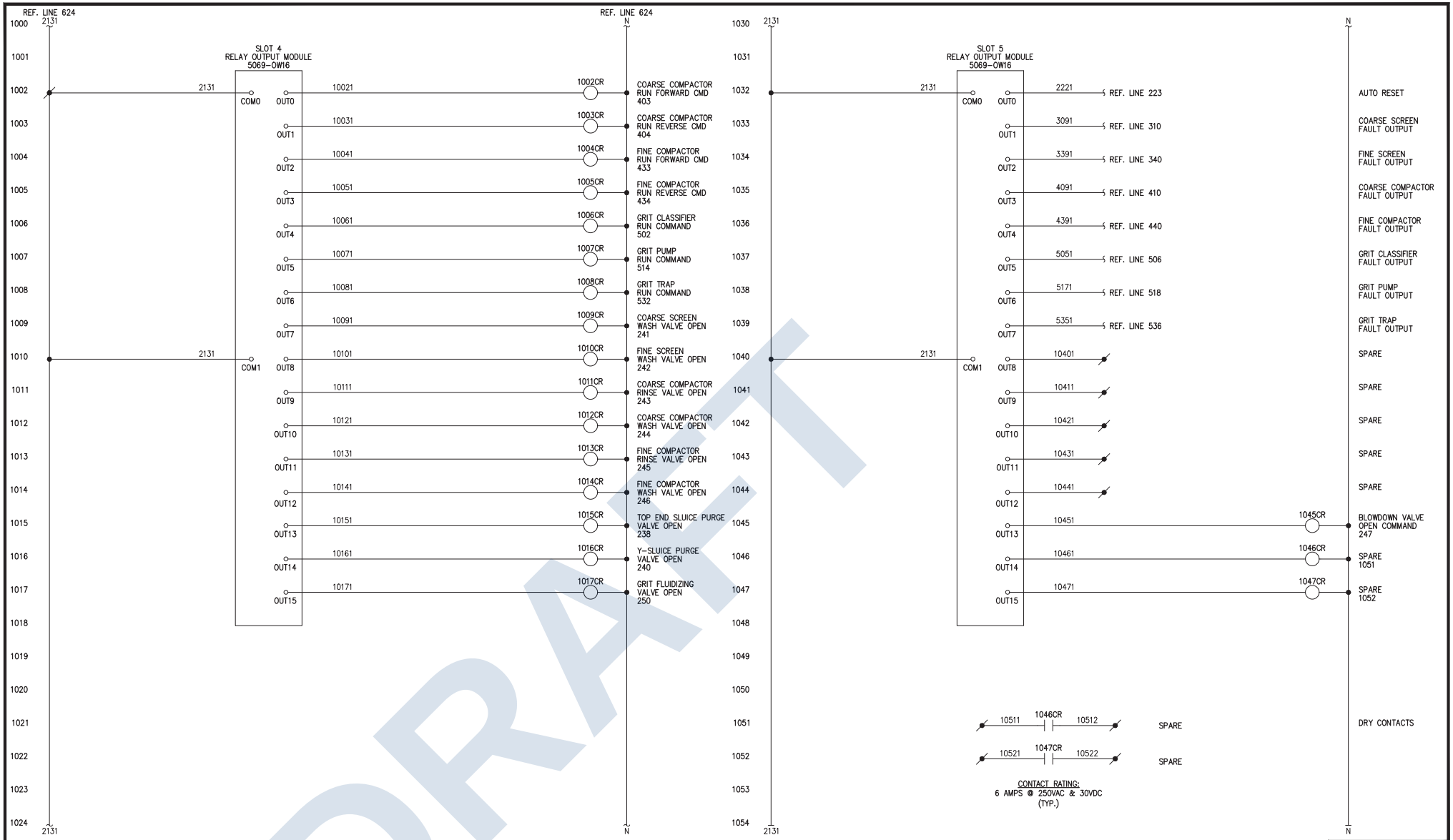

LEGEND:

- DENOTES A TERMINAL BLOCK POINT
- ✱ DENOTES ITEM REMOTE FROM CONTROL PANEL
- - - - DENOTES WIRING EXTERNAL TO CONTROL PANEL
- # DENOTES "1" FOR PANEL 1 AND "2" FOR PANEL 2

NO.	DATE	DESCRIPTION	BY
0	05/13/25	FOR SUBMITTAL	W. BARNETT

REVISION

UNLESS NOTED
TOLERANCE
.X ± .030
.XX ± .015
.XXX ± .005
.XXXX ± .0005

HYDRO-DYNE ENGINEERING
www.hydro-dyne.com

PROJECT #: 06002

SCREEN & GRIT CONTROL PANEL - SAN LUIS, AZ

DRAWING #: AF0297 | SHT.: 16/21 | REV.: 0

DRAWN BY/DATE: W. BARNETT 05/13/25 | SCALE: N.T.S.

CHECKED BY/DATE: E. CONN 05/13/25 | SIZE:

*ALL RIGHTS RESERVED. THE INFORMATION TRANSMITTED HEREIN IS THE PROPERTY OF HYDRO-DYNE ENGINEERING INC. AND HAS BEEN PROVIDED FOR RESTRICTIVE USE. THIS DATA MUST BE HELD CONFIDENTIAL AND TRANSMISSION, DUPLICATION OR DISCLOSURE IS PROHIBITED UNLESS AUTHORIZED IN WRITING BY HYDRO-DYNE ENGINEERING INC.

DRAFT

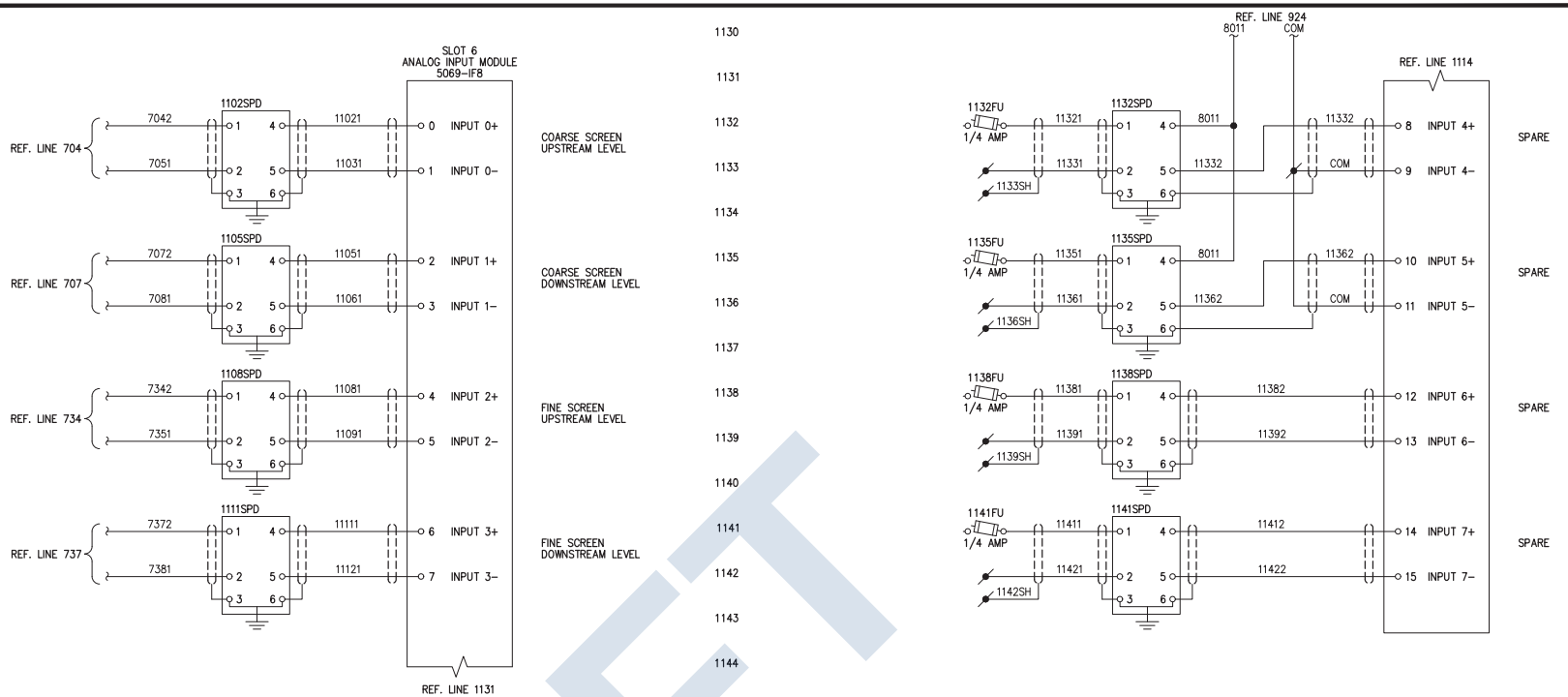

LEGEND:

- DENOTES A TERMINAL BLOCK POINT
- ✳ DENOTES ITEM REMOTE FROM CONTROL PANEL
- - - DENOTES WIRING EXTERNAL TO CONTROL PANEL
- # DENOTES "1" FOR PANEL 1 AND "2" FOR PANEL 2

*ALL RIGHTS RESERVED. THE INFORMATION TRANSMITTED HEREIN IS THE PROPERTY OF HYDRO-DYNE ENGINEERING INC. AND HAS BEEN PROVIDED FOR RESTRICTIVE USE. THIS DATA MUST BE HELD CONFIDENTIAL AND TRANSMISSION, DUPLICATION OR DISCLOSURE IS PROHIBITED UNLESS AUTHORIZED IN WRITING BY HYDRO-DYNE ENGINEERING INC.

NO.	DATE	DESCRIPTION	BY
0	05/13/25	FOR SUBMITTAL	W. BARNETT

REVISION

UNLESS NOTED
TOLERANCE
.X ± .030
.XX ± .015
.XXX ± .005
.XXXX ± .0005

HYDRO-DYNE ENGINEERING
www.hydro-dyne.com

PROJECT #: 06002

SCREEN & GRIT CONTROL PANEL - SAN LUIS, AZ

DRAWING #: AF0297 | SHT.: 17/21 | REV.: 0

DRAWN BY/DATE: W. BARNETT 05/13/25 | SCALE: N.T.S.

CHECKED BY/DATE: E. CONN 05/13/25 | SIZE:

DRAFT

DEVICE SETTINGS

301VFD – ABB ACS580 COARSE SCREEN VFD

GROUP	PARAMETER	DESCRIPTION	FACTORY SETTING	FIELD SETTING
MOTOR DATA	99.06	MOTOR NOMINAL CURRENT	1.6 A	
	99.07	MOTOR NOMINAL VOLTAGE	460 V	
	99.08	MOTOR NOMINAL FREQUENCY	60 Hz	
	99.09	MOTOR NOMINAL SPEED	1760 RPM (2)	
	99.10	MOTOR NOMINAL POWER	0.75 HP	
STANDARD DI/DO	10.24	RO1 SOURCE	[7] RUNNING	
	10.27	RO2 SOURCE	[15] FAULT(–1)	
	10.30	RO3 SOURCE	[7] RUNNING	
COMM SETUP	51.01	FBA TYPE	[128] ETHERNET	
	51.02	PROTOCOL	[0] MB/TCP ABB C	
	51.03	COMM RATE	[0] AUTO	
	51.04	IP CONFIGURATION	[0] STATIC IP	
	51.05	IP ADDRESS 1	(5)	
	51.06	IP ADDRESS 2	(5)	
	51.07	IP ADDRESS 3	(5)	
	51.08	IP ADDRESS 4	(5)	
	51.09	SUBNET CIDR	24	
START/STOP/DIR	19.11	EXT1/EXT2 SELECTION	[5] DI2	
	20.01	EXT1 COMMANDS	[1] IN1 START	
	20.02	EXT1 START TRIGGER TYPE	[1] LEVEL	
	20.03	EXT1 IN1 SOURCE	[2] DI1	
	20.04	EXT1 IN2 SOURCE	[0] ALWAYS OFF	
	20.06	EXT2 COMMANDS	[12] FIELDBUS A	
	20.07	EXT2 START TRIGGER TYPE	[1] LEVEL	
	20.11	RUN ENABLE STOP MODE	[0] COAST	
	20.12	RUN ENABLE 1 SOURCE	[5] DI4	
	20.21	DIRECTION	[1] FORWARD	
FREQUENCY REFERENCE	28.11	EXT1 FREQUENCY REF 1	[4] FB A REF 1	
	28.13	EXT1 FREQUENCY REF FUNCTION	[0] REF1	
	28.22	CONSTANT FREQUENCY SELECT 1	[2] DI1	
	28.26	CONSTANT FREQUENCY 1	60.0 Hz (4)	
	28.72	FREQUENCY ACCELERATION TIME 1	5.000 s	
	28.73	FREQUENCY DECELERATION TIME 1	5.000 s	
	28.74	FREQUENCY ACCELERATION TIME 2	5.000 s	
	28.75	FREQUENCY DECELERATION TIME 2	5.000 s	
LIMITS	30.13	MINIMUM FREQUENCY	30.000 Hz	
	30.14	MAXIMUM FREQUENCY	60.000 Hz	
FAULT FUNCTIONS	31.01	EXTERNAL EVENT 1 SOURCE	[4] DI3	
	31.02	EXTERNAL EVENT 1 TYPE	[0] FAULT	
	31.11	FAULT RESET SELECTION	[6] DI5	
SUPERVISION	32.05	SUPERVISION 1 FUNCTION	[2] HIGH	
	32.06	SUPERVISION 1 ACTION	[3] FAULT IF RUNNING	
	32.07	SUPERVISION 1 SIGNAL	[4] CURRENT	
	32.08	SUPERVISION 1 FILTER TIME	2.0 s	
	32.10	SUPERVISION 1 HIGH	1.8 A (3)	

331VFD – ABB ACS580 FINE SCREEN VFD

GROUP	PARAMETER	DESCRIPTION	FACTORY SETTING	FIELD SETTING
MOTOR DATA	99.06	MOTOR NOMINAL CURRENT	1.6 A	
	99.07	MOTOR NOMINAL VOLTAGE	460 V	
	99.08	MOTOR NOMINAL FREQUENCY	60 Hz	
	99.09	MOTOR NOMINAL SPEED	1760 RPM (2)	
	99.10	MOTOR NOMINAL POWER	0.75 HP	
STANDARD DI/DO	10.24	RO1 SOURCE	[7] RUNNING	
	10.27	RO2 SOURCE	[15] FAULT(–1)	
	10.30	RO3 SOURCE	[7] RUNNING	
COMM SETUP	51.01	FBA TYPE	[128] ETHERNET	
	51.02	PROTOCOL	[0] MB/TCP ABB C	
	51.03	COMM RATE	[0] AUTO	
	51.04	IP CONFIGURATION	[0] STATIC IP	
	51.05	IP ADDRESS 1	(5)	
	51.06	IP ADDRESS 2	(5)	
	51.07	IP ADDRESS 3	(5)	
	51.08	IP ADDRESS 4	(5)	
	51.09	SUBNET CIDR	24	
START/STOP/DIR	19.11	EXT1/EXT2 SELECTION	[5] DI2	
	20.01	EXT1 COMMANDS	[1] IN1 START	
	20.02	EXT1 START TRIGGER TYPE	[1] LEVEL	
	20.03	EXT1 IN1 SOURCE	[2] DI1	
	20.04	EXT1 IN2 SOURCE	[0] ALWAYS OFF	
	20.06	EXT2 COMMANDS	[12] FIELDBUS A	
	20.07	EXT2 START TRIGGER TYPE	[1] LEVEL	
	20.11	RUN ENABLE STOP MODE	[0] COAST	
	20.12	RUN ENABLE 1 SOURCE	[5] DI4	
	20.21	DIRECTION	[1] FORWARD	
FREQUENCY REFERENCE	28.11	EXT1 FREQUENCY REF 1	[4] FB A REF 1	
	28.13	EXT1 FREQUENCY REF FUNCTION	[0] REF1	
	28.22	CONSTANT FREQUENCY SELECT 1	[2] DI1	
	28.26	CONSTANT FREQUENCY 1	60.0 Hz (4)	
	28.72	FREQUENCY ACCELERATION TIME 1	5.000 s	
	28.73	FREQUENCY DECELERATION TIME 1	5.000 s	
	28.74	FREQUENCY ACCELERATION TIME 2	5.000 s	
	28.75	FREQUENCY DECELERATION TIME 2	5.000 s	
LIMITS	30.13	MINIMUM FREQUENCY	30.000 Hz	
	30.14	MAXIMUM FREQUENCY	60.000 Hz	
FAULT FUNCTIONS	31.01	EXTERNAL EVENT 1 SOURCE	[4] DI3	
	31.02	EXTERNAL EVENT 1 TYPE	[0] FAULT	
	31.11	FAULT RESET SELECTION	[6] DI5	
SUPERVISION	32.05	SUPERVISION 1 FUNCTION	[2] HIGH	
	32.06	SUPERVISION 1 ACTION	[3] FAULT IF RUNNING	
	32.07	SUPERVISION 1 SIGNAL	[4] CURRENT	
	32.08	SUPERVISION 1 FILTER TIME	2.0 s	
	32.10	SUPERVISION 1 HIGH	1.8 A (3)	

NOTES:
1. THE ABOVE IS A PARTIAL LISTING OF SETPOINTS. REFER TO THE MANUAL FOR A COMPLETE PARAMETER LISTING.
2. VERIFY MOTOR NAMEPLATE DATA, ENTER PARAMETERS AS PRINTED ON MOTOR NAMEPLATE.
3. INDICATES A PARAMETER THAT MUST BE SET UP BY THE START–UP TECHNICIAN.
4. CONSTANT FREQUENCY 1 DEFINES THE SPEED THE SCREEN WILL OPERATE IN HAND MODE.
5. SEE NETWORK SETTINGS FOR VFD IP ADDRESSES.

140AC – AIR CONDITIONER

AC ON/OFF	80 °F

150HTR – ENCLOSURE HEATER

HEATER ON/OFF	40 °F

111MCP – COARSE COMPACTOR OVERLOAD

4.0 – 6.3 AMPS	4.8 AMPS

419CM – COARSE COMPACTOR CURRENT MONITOR

DIP SETTINGS	
1	ON
2	OFF
3	ON
4	OFF
5	OFF
6	ON

	FACTORY SETTING	FIELD SETTING
HYSTERESIS	MIN	
LEVEL	MIN	
DELAY	MIN	

NOTES:
1. THE CURRENT MONITOR DIAL SHALL BE SET TO MINIMUM FROM FACTORY.
2. FIELD CONFIGURATION SHALL BE PERFORMED BY THE STARTUP TECHNICIAN PER THE APPROPRIATE TECHNICAL DOCUMENTS.
3. THE CURRENT MONITOR VALUE WILL BE DOUBLE THE MEASURED AMPS DUE TO THE MULTIPLE WRAPS AROUND THE CURRENT TRANSFORMER.

115MCP – FINE COMPACTOR OVERLOAD

2.5 – 4.0 AMPS	3.0 AMPS

449CM – FINE COMPACTOR CURRENT MONITOR

DIP SETTINGS	
1	ON
2	OFF
3	ON
4	OFF
5	OFF
6	ON

	FACTORY SETTING	FIELD SETTING
HYSTERESIS	MIN	
LEVEL	MIN	
DELAY	MIN	

NOTES:
1. THE CURRENT MONITOR DIAL SHALL BE SET TO MINIMUM FROM FACTORY.
2. FIELD CONFIGURATION SHALL BE PERFORMED BY THE STARTUP TECHNICIAN PER THE APPROPRIATE TECHNICAL DOCUMENTS.
3. THE CURRENT MONITOR VALUE WILL BE DOUBLE THE MEASURED AMPS DUE TO THE MULTIPLE WRAPS AROUND THE CURRENT TRANSFORMER.

131MCP – GRIT CLASSIFIER OVERLOAD

1.0 – 1.6 AMPS	1.1 AMPS

134MCP – GRIT PUMP OVERLOAD

6.3 – 10 AMPS	7.6 AMPS

137MCP – GRIT TRAP OVERLOAD

1.0 – 1.6 AMPS	1.1 AMPS

DRAFT

*ALL RIGHTS RESERVED. THE INFORMATION TRANSMITTED HEREIN IS THE PROPERTY OF HYDRO–DYNE ENGINEERING INC. AND HAS BEEN PROVIDED FOR RESTRICTIVE USE. THIS DATA MUST BE HELD CONFIDENTIAL AND TRANSMISSION, DUPLICATION OR DISCLOSURE IS PROHIBITED UNLESS AUTHORIZED IN WRITING BY HYDRO–DYNE ENGINEERING INC.

NO.	DATE	DESCRIPTION	BY
0	05/13/25	FOR SUBMITTAL	W. BARNETT
		REVISION	

UNLESS NOTED
TOLERANCE
X ± .030
.XX ± .015
.XXX ± .005
.XXXX ± .0005

HYDRO-DYNE ENGINEERING
www.hydro-dyne.com

PROJECT #: 06002
SCREEN & GRIT CONTROL PANEL - SAN LUIS, AZ
DRAWING #: AF0297 | SHT.: 18/21 | REV.: 0
DRAWN BY/DATE: W. BARNETT 05/13/25 | SCALE: N.T.S.
CHECKED BY/DATE: E. CONN 05/13/25 | SIZE:

DEVICE SETTINGS (CONTINUED)

702LIT – COARSE SCREEN HYDRORANGER LT500 LEVEL CONTROLLER

PARAMETER	DESCRIPTION	DEFAULT SETTING	FIELD SETTING
POINT 1	APPLICATION	LEVEL	
	UNITS	IN	
	SENSOR	XPS-15	
	LOWER CALIBRATION POINT	60.0 IN *	
	UPPER CALIBRATION POINT	0.0 IN *	
	RESPONSE RATE	FAST	
	MATERIAL TYPE	LIQUID	
POINT 2	APPLICATION	LEVEL	
	UNITS	IN	
	SENSOR	XPS-15	
	LOWER CALIBRATION POINT	60.0 IN *	
	UPPER CALIBRATION POINT	0.0 IN *	
	RESPONSE RATE	FAST	
	MATERIAL TYPE	LIQUID	
CURRENT OUT 1 (2.4.2)	LOOP CURRENT SCALE (2.4.2.2)	4-20MA	
	PROCESS VALUE (2.4.2.4)	LEVEL (POINT 1)	
	UPPER RANGE VALUE (2.4.2.6)	60.0 IN *	
	LOWER RANGE VALUE (2.4.2.7)	0.0 IN *	
	FAIL SAFE BEHAVIOR (2.4.2.9)	UPPER RANGE	
CURRENT OUT 2 (2.4.3)	LOOP CURRENT SCALE (2.4.3.2)	4-20MA	
	PROCESS VALUE (2.4.3.4)	LEVEL (POINT 2)	
	UPPER RANGE VALUE (2.4.3.6)	60.0 IN *	
	LOWER RANGE VALUE (2.4.3.7)	0.0 IN *	
	FAIL SAFE BEHAVIOR (2.4.3.9)	LOWER RANGE	

732LIT – FINE SCREEN HYDRORANGER LT500 LEVEL CONTROLLER

PARAMETER	DESCRIPTION	DEFAULT SETTING	FIELD SETTING
POINT 1	APPLICATION	LEVEL	
	UNITS	IN	
	SENSOR	XPS-15	
	LOWER CALIBRATION POINT	60.0 IN *	
	UPPER CALIBRATION POINT	0.0 IN *	
	RESPONSE RATE	FAST	
	MATERIAL TYPE	LIQUID	
POINT 2	APPLICATION	LEVEL	
	UNITS	IN	
	SENSOR	XPS-15	
	LOWER CALIBRATION POINT	60.0 IN *	
	UPPER CALIBRATION POINT	0.0 IN *	
	RESPONSE RATE	FAST	
	MATERIAL TYPE	LIQUID	
CURRENT OUT 1 (2.4.2)	LOOP CURRENT SCALE (2.4.2.2)	4-20MA	
	PROCESS VALUE (2.4.2.4)	LEVEL (POINT 1)	
	UPPER RANGE VALUE (2.4.2.6)	60.0 IN *	
	LOWER RANGE VALUE (2.4.2.7)	0.0 IN *	
	FAIL SAFE BEHAVIOR (2.4.2.9)	UPPER RANGE	
CURRENT OUT 2 (2.4.3)	LOOP CURRENT SCALE (2.4.3.2)	4-20MA	
	PROCESS VALUE (2.4.3.4)	LEVEL (POINT 2)	
	UPPER RANGE VALUE (2.4.3.6)	60.0 IN *	
	LOWER RANGE VALUE (2.4.3.7)	0.0 IN *	
	FAIL SAFE BEHAVIOR (2.4.3.9)	LOWER RANGE	

NOTE:
* INDICATES A PARAMETER THAT MUST BE SERT UP BY THE START-UP TECHNICIAN

SYSTEM SETPOINTS

SETPOINT	FACTORY SETTING	FIELD SETTING
COARSE SCREEN LEVEL ON TIME	3 SECONDS	
COARSE SCREEN LEVEL OFF TIME	2 MINUTES	
COARSE SCREEN CYCLE ON TIME	3 MINUTES	
COARSE SCREEN CYCLE OFF TIME	60 MINUTES	
COARSE SCREEN HIGH DIFFERENTIAL LEVEL ON	10.0 INCHES	
COARSE SCREEN HIGH DIFFERENTIAL LEVEL OFF	8.0 INCHES	
COARSE SCREEN HIGH-HIGH DIFFERENTIAL LEVEL ON	18.0 INCHES	
COARSE SCREEN HIGH-HIGH DIFFERENTIAL LEVEL OFF	16.0 INCHES	
COARSE SCREEN HIGH-HIGH UPSTREAM LEVEL ON	28.0 INCHES	
COARSE SCREEN HIGH-HIGH UPSTREAM LEVEL OFF	24.0 INCHES	
COARSE SCREEN UPSTREAM LEVEL MINIMUM SCALE	0.0 INCHES *	
COARSE SCREEN UPSTREAM LEVEL MAXIMUM SCALE	60.0 INCHES *	
COARSE SCREEN UPSTREAM LEVEL TRIM	0.0 INCHES *	
COARSE SCREEN DOWNSTREAM LEVEL MINIMUM SCALE	0.0 INCHES *	
COARSE SCREEN DOWNSTREAM LEVEL MAXIMUM SCALE	60.0 INCHES *	
COARSE SCREEN DOWNSTREAM LEVEL TRIM	0.0 INCHES *	
COARSE SCREEN MAXIMUM SPEED LEVEL	14.0 INCHES	
COARSE SCREEN MINIMUM SPEED LEVEL	4.0 INCHES	
COARSE SCREEN FAIL TO START TIME	10 SECONDS	
FINE SCREEN LEVEL ON TIME	3 SECONDS	
FINE SCREEN LEVEL OFF TIME	2 MINUTES	
FINE SCREEN CYCLE ON TIME	3 MINUTES	
FINE SCREEN CYCLE OFF TIME	60 MINUTES	
FINE SCREEN HIGH DIFFERENTIAL LEVEL ON	10.0 INCHES	
FINE SCREEN HIGH DIFFERENTIAL LEVEL OFF	8.0 INCHES	
FINE SCREEN HIGH-HIGH DIFFERENTIAL LEVEL ON	18.0 INCHES	
FINE SCREEN HIGH-HIGH DIFFERENTIAL LEVEL OFF	16.0 INCHES	
FINE SCREEN HIGH-HIGH UPSTREAM LEVEL ON	28.0 INCHES	
FINE SCREEN HIGH-HIGH UPSTREAM LEVEL OFF	24.0 INCHES	
FINE SCREEN UPSTREAM LEVEL MINIMUM SCALE	0.0 INCHES *	
FINE SCREEN UPSTREAM LEVEL MAXIMUM SCALE	60.0 INCHES *	
FINE SCREEN UPSTREAM LEVEL TRIM	0.0 INCHES *	
FINE SCREEN DOWNSTREAM LEVEL MINIMUM SCALE	0.0 INCHES *	
FINE SCREEN DOWNSTREAM LEVEL MAXIMUM SCALE	60.0 INCHES *	
FINE SCREEN DOWNSTREAM LEVEL TRIM	0.0 INCHES *	
FINE SCREEN MAXIMUM SPEED LEVEL	14.0 INCHES	
FINE SCREEN MINIMUM SPEED LEVEL	4.0 INCHES	
FINE SCREEN FAIL TO START TIME	10 SECONDS	
SLUICE PURGE VALVE ACCUMULATION TIME	30 SECONDS	
SLUICE PURGE VALVE OPEN TIME	5 SECONDS	
BLOWDOWN VALVE ENABLE TOGGLE	DISABLED	
BLOWDOWN VALVE ACCUMULATION TIME	480 MINUTES	
BLOWDOWN VALVE OPEN TIME	10 SECONDS	

SETPOINT	FACTORY SETTING	FIELD SETTING
COARSE COMPACTOR REVERSE TIME	10 SECONDS	
COARSE COMPACTOR FORWARD TIME	15 SECONDS	
COARSE COMPACTOR DWELL TIME	5 SECONDS	
COARSE COMPACTOR EXTRUDE TIME	15 SECONDS	
COARSE COMPACTOR OFF DELAY TIME	10 SECONDS	
COARSE COMPACTOR HOPPER FILL WAIT TIME	10 SECONDS	
COARSE COMPACTOR PRE-WASH CHURN TIME	10 SECONDS	
COARSE COMPACTOR PRE-WASH ADVANCE TIME	15 SECONDS	
COARSE COMPACTOR PRE-WASH PRE-COMPRESS TIME	15 SECONDS	
COARSE COMPACTOR RINSE FLUSH TIME	5 SECONDS	
COARSE COMPACTOR WASH CYCLE COUNT	3 COUNTS	
COARSE COMPACTOR FORWARD ONLY ON DELAY	15 SECONDS	
COARSE COMPACTOR FORWARD ONLY OFF DELAY	20 SECONDS	
COARSE COMPACTOR JAM REVERSE TIME	10 SECONDS	
COARSE COMPACTOR JAM CLEAR TIME	3 MINUTES	
COARSE COMPACTOR JAM ATTEMPTS COUNTER	3 COUNTS	
COARSE COMPACTOR FAIL TO START TIME	10 SECONDS	
FINE COMPACTOR REVERSE TIME	10 SECONDS	
FINE COMPACTOR FORWARD TIME	15 SECONDS	
FINE COMPACTOR DWELL TIME	5 SECONDS	
FINE COMPACTOR EXTRUDE TIME	15 SECONDS	
FINE COMPACTOR OFF DELAY TIME	10 SECONDS	
FINE COMPACTOR HOPPER FILL WAIT TIME	10 SECONDS	
FINE COMPACTOR PRE-WASH CHURN TIME	10 SECONDS	
FINE COMPACTOR PRE-WASH ADVANCE TIME	15 SECONDS	
FINE COMPACTOR PRE-WASH PRE-COMPRESS TIME	15 SECONDS	
FINE COMPACTOR RINSE FLUSH TIME	5 SECONDS	
FINE COMPACTOR WASH CYCLE COUNT	3 COUNTS	
FINE COMPACTOR FORWARD ONLY ON DELAY	15 SECONDS	
FINE COMPACTOR FORWARD ONLY OFF DELAY	20 SECONDS	
FINE COMPACTOR JAM REVERSE TIME	10 SECONDS	
FINE COMPACTOR JAM CLEAR TIME	3 MINUTES	
FINE COMPACTOR JAM ATTEMPTS COUNTER	3 COUNTS	
FINE COMPACTOR FAIL TO START TIME	10 SECONDS	
GRIT SYSTEM CYCLE TIME	60 MINUTES	
GRIT FLUIDIZING VALVE ON TIME	60 SECONDS	
GRIT PUMP RUN TIME	15 MINUTES	
GRIT CLASSIFIER OFF DELAY TIME	120 SECONDS	
GRIT CLASSIFIER FAIL TO START TIME	10 SECONDS	
GRIT PUMP FAIL TO START TIME	10 SECONDS	
GRIT TRAP FAIL TO START TIME	10 SECONDS	
GRIT PUMP HIGH PRESSURE ALARM TIME	90 SECONDS	

DRAFT

*ALL RIGHTS RESERVED. THE INFORMATION TRANSMITTED HEREIN IS THE PROPERTY OF HYDRO-DYNE ENGINEERING INC. AND HAS BEEN PROVIDED FOR RESTRICTIVE USE. THIS DATA MUST BE HELD CONFIDENTIAL AND TRANSMISSION, DUPLICATION OR DISCLOSURE IS PROHIBITED UNLESS AUTHORIZED IN WRITING BY HYDRO-DYNE ENGINEERING INC.

NO.	DATE	REVISION	BY
0	05/13/25	FOR SUBMITTAL	W. BARNETT

UNLESS NOTED TOLERANCE
.X ± .030
.XX ± .015
.XXX ± .005
.XXXX ± .0005

HYDRO-DYNE ENGINEERING
www.hydro-dyne.com

PROJECT #: 06002
SCREEN & GRIT CONTROL PANEL - SAN LUIS, AZ
DRAWING #: AF0297 | SHT.: 19/21 | REV.: 0
DRAWN BY/DATE: W. BARNETT 05/13/25 | SCALE: N.T.S.
CHECKED BY/DATE: E. CONN 05/13/25 | SIZE:

SEQUENCE OF OPERATIONS

SYSTEM OPERATION:

EMERGENCY STOP:
IF THE EMERGENCY STOP PUSHBUTTON IS PRESSED AT THE MAIN CONTROL, ALL ASSOCIATED EQUIPMENT WITH THE CONTROL PANEL WILL STOP IMMEDIATELY. IF AN EMERGENCY STOP PUSHBUTTON IS PRESSED AT A SCREEN OR COMPACTOR LOCAL CONTROL STATION, ALL SCREEN SYSTEM EQUIPMENT WILL STOP IMMEDIATELY. IF AN EMERGENCY STOP PUSHBUTTON IS PRESSED AT A GRIT SYSTEM LOCAL CONTROL STATION, ALL GRIT SYSTEM EQUIPMENT WILL STOP IMMEDIATELY. TO RESET, ENSURE THE E-STOP IS NOT ACTIVE AND PRESS THE RESET PUSHBUTTON ON THE PANEL.

LOSS OF POWER:
IF THE POWER TO THE PANEL IS INTERRUPTED, THE EQUIPMENT MAY CYCLE IMMEDIATELY ONCE THE POWER IS RESTORED. PRESSING THE RESET PUSHBUTTON AFTER A POWER OUTAGE WILL NOT BE REQUIRED.

FAULTS:
WHEN A FAULT CONDITION IS DETECTED, THE FAULTED EQUIPMENT WILL STOP IMMEDIATELY. ONCE THE ALARM CONDITIONS ARE CLEARED, PRESSING THE RESET PUSHBUTTON WILL RESUME OPERATION.

SCREEN MODE OF OPERATION (TYPICAL FOR COARSE & FINE):

HAND: WHEN THE SCREEN HAND-OFF-AUTO SELECTOR IS IN THE HAND POSITION, THE SCREEN WILL RUN CONTINUOUSLY. THE SCREEN WILL RUN AT HIGH SPEED (60 HZ) UNLESS PROGRAMMED OTHERWISE IN THE FIELD. HAND CONTROL IS AVAILABLE EXTERNAL TO THE PLC.
AUTO: WHEN THE SCREEN HAND-OFF-AUTO SELECTOR IS IN THE AUTO POSITION, THE SCREEN WILL RUN BASED ON THE REPEAT CYCLE TIMER OR LEVEL CONTROL MODE OUTLINED BELOW.

SCREEN REPEAT CYCLE TIMER:
IF THE SCREEN HAS NOT RUN FOR THE TIME SET IN THE CYCLE OFF TIMER, THE SCREEN WILL BE CALLED TO RUN FOR THE TIME SET IN THE CYCLE ON TIMER. ANY CALL TO RUN THE SCREEN WILL RESET THE CYCLE OFF TIMER.

DIFFERENTIAL LEVEL CONTROL MODE:
IN DIFFERENTIAL LEVEL CONTROL MODE, THE SCREEN WILL BE CALLED TO RUN WHEN THE DIFFERENTIAL LEVEL REACHES THE HIGH DIFFERENTIAL LEVEL ON SETPOINT FOR LONGER THAN THE SCREEN ON DELAY TIME. THE SCREEN SPEED WILL VARY PROPORTIONAL TO THE DIFFERENTIAL LEVEL. THE SCREEN WILL CONTINUE TO RUN UNTIL THE LEVEL FALLS BELOW THE HIGH DIFFERENTIAL LEVEL OFF SETPOINT. THE SCREEN WILL THEN CONTINUE TO RUN FOR THE SCREEN OFF DELAY TIME.
A HIGH-HIGH LEVEL CONDITION IS TRIGGERED IF THE UPSTREAM LEVEL OR DIFFERENTIAL LEVEL RISE ABOVE THE RESPECTIVE HIGH-HIGH LEVEL ON SETPOINTS, OR IF THE UPSTREAM FLOAT SWITCH IS TRIGGERED. DURING A HIGH-HIGH LEVEL CONDITION, THE SCREEN SPEED WILL RUN AT HIGH SPEED (60 Hz BY DEFAULT). THE SCREEN WILL CONTINUE TO RUN UNTIL THE LEVEL FALLS BELOW THE HIGH-HIGH DIFFERENTIAL LEVEL AND HIGH-HIGH UPSTREAM LEVEL OFF SETPOINTS. THE SCREEN WILL THEN CONTINUE TO RUN FOR THE SCREEN OFF DELAY TIME.

FLOW-BASED LEVEL CONTROL MODE:
IN FLOW-BASED LEVEL CONTROL MODE, THE SCREEN WILL RUN BASED ON THE LEVEL SETPOINTS SET IN THE FLOW CONTROL MODE LOOK-UP TABLE. THE LOOK-UP TABLE CONTAINS UP TO (20) FLOW SETPOINT INDEXES. EACH INDEX HAS ADJUSTABLE SETPOINTS FOR THE LEVEL ABOVE AND BELOW THE SETPOINT, AND THE SPEED SCALING AT LOW AND HIGH LEVELS. THE SCREEN SPEED WILL MODULATE PROPORTIONAL TO THE SCALING SETPOINTS TO MAINTAIN THE DESIRED LEVEL. IF THE FLOW RISES ABOVE THE ACTIVE INDEX FLOW SETPOINT OR FALLS BELOW THE PREVIOUS INDEX FLOW SETPOINT, THE SYSTEM WILL SWITCH TO THE NEXT INDEX AND CONTINUE OPERATION BASED ON THE NEW INDEX SETPOINTS.

SCREEN FAULTS:
THE SCREEN WILL FAULT AND STOP IMMEDIATELY BASED ON THE FOLLOWING CONDITIONS:

1. MOTOR OVER TEMPERATURE
2. VFD FAULT / HIGH CURRENT
3. FAIL TO START
4. EMERGENCY STOP

IF NO COMPACTOR IS AVAILABLE TO RUN WHEN A SCREEN IS CALLED TO RUN, AN ALARM WILL BE DISPLAYED ON THE OIT.

SCREEN WASH VALVE MODE OF OPERATION (TYPICAL FOR COARSE & FINE):

THE SCREEN WASH VALVE WILL BE CALLED TO OPEN ANY TIME THE SCREEN IS RUNNING. HAND CONTROLS FOR THE VALVE ARE AVAILABLE THROUGH THE OIT.

SLUICE TOP-END PURGE VALVE MODE OF OPERATION:

THE SLUICE TOP-END PURGE VALVE WILL BE CALLED TO OPEN AFTER AN ADJUSTABLE ON DELAY TIME WHEN ANY SCREEN IS RUNNING, AND WILL REMAIN OPEN FOR AN ADJUSTABLE OFF DELAY TIME AFTER ALL SCREENS HAVE STOPPED. THE VALVE WILL ALSO OPEN WHEN HIGH SLUICE LEVEL IS DETECTED. HAND CONTROL FOR THE VALVE IS AVAILABLE EXTERNAL TO THE PLC ON THE PANEL DOOR.

SLUICE Y-PURGE VALVE MODE OF OPERATION:

THE SLUICE Y-PURGE VALVE WILL BE CALLED TO OPEN AFTER AN ADJUSTABLE ON DELAY TIME WHEN ANY SCREEN IS RUNNING, AND WILL REMAIN OPEN FOR AN ADJUSTABLE OFF DELAY TIME AFTER ALL SCREENS HAVE STOPPED. HAND CONTROL FOR THE VALVE IS AVAILABLE EXTERNAL TO THE PLC ON THE PANEL DOOR.

BLOWDOWN VALVE MODE OF OPERATION (TYPICAL FOR 2, FUTURE OPTIONAL):

WHEN INSTALLED, THE BLOWDOWN VALVES WILL BE CALLED TO OPEN AFTER ANY SCREEN OR COMPACTOR HAS RUN FOR AN ADJUSTABLE ACCUMULATION TIME, AND WILL REMAIN OPEN FOR AN ADJUSTABLE OPEN TIME. HAND CONTROL FOR THE VALVE IS AVAILABLE THROUGH THE OIT.

COMPACTOR MODE OF OPERATION (TYPICAL FOR COARSE & FINE):

HAND: WHEN THE COMPACTOR HAND-OFF-AUTO SELECTOR IS IN THE HAND POSITION, THE COMPACTOR WILL RUN FORWARD OR REVERSE BASED ON THE FWD-OFF-REV SWITCH AT THE LOCAL CONTROL STATION. THE REVERSE POSITION WILL SPRING RETURN TO OFF WHEN NOT HELD. HAND CONTROL IS AVAILABLE EXTERNAL TO THE PLC.
AUTO: WHEN THE COMPACTOR HAND-OFF-AUTO SELECTOR IS IN THE AUTO POSITION, THE COMPACTOR WILL FOLLOW THE AUTO WASH CYCLE DETAILED BELOW.

COMPACTOR AUTO WASH CYCLE:
HOPPER FILL WAIT:

THE COMPACTOR WILL INITIATE A HOPPER PRE-WASH ONCE A SCREEN HAS RUN FOR THE HOPPER FILL WAIT TIME. DURING THE HOPPER FILL WAIT, ALL SOLENOIDS ASSOCIATED WITH THE COMPACTOR WILL BE CLOSED.

HOPPER PRE-WASH:

WHEN THE HOPPER PRE-WASH IS INITIATED, THE COMPACTOR WILL RUN REVERSE FOR THE HOPPER PRE-WASH CHURN TIME. THE RINSE SOLENOID WILL BE CLOSED DURING THE HOPPER PRE-WASH CHURN TIME. THE COMPACTOR WASH SOLENOID WILL BE OPEN DURING THE HOPPER PRE-WASH CHURN TIME.

ONCE THE HOPPER PRE-WASH CHURN TIME IS COMPLETE, THE COMPACTOR WILL RUN FORWARD FOR THE HOPPER PRE-WASH ADVANCE TIME. THE RINSE SOLENOID WILL REMAIN CLOSED, AND THE COMPACTOR WASH SOLENOID WILL REMAIN OPEN DURING THE PRE-WASH ADVANCE TIME.

WHEN THE HOPPER PRE-WASH ADVANCE TIME IS COMPLETE, THE COMPACTOR WILL CONTINUE RUNNING FORWARD FOR THE HOPPER PRE-WASH PRE-COMPRESS TIME. BOTH SOLENOIDS WILL BE CLOSED DURING THE PRE-WASH PRE-COMPRESS TIME.

RINSE CYCLE:

ONCE THE COMPACTOR HAS FINISHED THE HOPPER PRE-WASH SEQUENCE, A RINSE CYCLE WILL BE INITIATED.

THE COMPACTOR WILL RUN REVERSE FOR THE RINSE CYCLE REVERSE TIME. IT WILL THEN DWELL FOR THE DWELL TIME. THE COMPACTOR WILL THEN RUN FORWARD FOR THE RINSE CYCLE FORWARD TIME, AND ONCE AGAIN DWELL FOR THE DWELL TIME. THIS SEQUENCE WILL REPEAT FOR THE NUMBER OF CYCLES SET IN THE COMPACTOR RINSE CYCLE COUNTER. DURING THE RINSE CYCLE, THE COMPACTOR WASH SOLENOID WILL BE CLOSED AND THE RINSE SOLENOID WILL BE OPEN.

ONCE THE COMPACTOR RINSE CYCLE COUNTER IS COMPLETE, THE COMPACTOR WILL RUN FORWARD FOR THE EXTRUDE TIME. DURING THE EXTRUDE TIME, BOTH COMPACTOR SOLENOID VALVES WILL BE CLOSED.

ONCE THE EXTRUDE TIME IS COMPLETE, THE COMPACTOR WILL STOP AND THE WASH SOLENOID WILL REMAIN CLOSED WHILE THE RINSE SOLENOID OPENS FOR THE RINSE FLUSH TIME. ONCE THE RINSE FLUSH TIME IS COMPLETE, THE COMPACTOR WASH CYCLE IS COMPLETE AND THE SYSTEM WILL WAIT FOR ANOTHER CALL TO RUN. IF A SCREEN IS RUNNING OR FAULTS DURING THE RINSE FLUSH TIME, THE RINSE SOLENOID WILL REMAIN OPEN FOR THE REMAINING FLUSH TIME AFTER THE SCREEN HAS STOPPED.

FORWARD ONLY MODE:

IF THE HIGH-HIGH LEVEL CONDITIONS ARE DETECTED IN THE SCREEN OR HIGH SLUICE LEVEL IS DETECTED, THE COMPACTOR WILL PAUSE THE REVERSING SEQUENCE AND RUN IN FORWARD ONLY MODE UNTIL THE LEVEL CONDITION IS CLEARED. ON-DELAY AND OFF-DELAY TIMERS FOR FORWARD ONLY MODE ARE ADJUSTABLE THROUGH THE OIT.

JAM REVERSAL SEQUENCE:

IF THE COMPACTOR DETECTS HIGH CURRENT WHEN RUNNING FORWARD IN AUTO MODE, IT WILL INITIATE A JAM REVERSAL SEQUENCE. IT WILL PAUSE, THEN RUN IN REVERSE FOR THE JAM REVERSE TIME. AFTER ANOTHER PAUSE IT WILL CONTINUE RUNNING FORWARD. THE NUMBER OF JAM ATTEMPTS IS COUNTED, AND IF THE NUMBER OF ATTEMPTS EXCEEDS THE SETPOINT WITHIN THE JAM CLEAR TIME, THE COMPACTOR WILL FAULT.

IF A JAM OCCURS WHEN RUNNING IN HAND OR WHEN RUNNING REVERSE, THE COMPACTOR WILL FAULT IMMEDIATELY AND WILL NOT ATTEMPT A JAM REVERSAL SEQUENCE. THE JAM REVERSAL SEQUENCE CAN BE DISABLED THROUGH THE OIT.

COMPACTOR FAULTS:
THE COMPACTOR WILL FAULT AND STOP IMMEDIATELY BASED ON THE FOLLOWING CONDITIONS:

1. MOTOR OVER TEMPERATURE
2. MOTOR CIRCUIT PROTECTOR OVERLOAD
3. HIGH CURRENT IN HAND MODE
4. JAM ATTEMPTS EXCEEDED
5. FAIL TO START
6. EMERGENCY STOP

COMPACTOR WASH VALVE MODE OF OPERATION (TYPICAL FOR COARSE & FINE):

THE COMPACTOR WASH VALVE WILL BE CALLED TO OPEN BASED ON THE COMPACTOR AUTOMATIC WASH CYCLE IN AUTO. THE VALVE WILL OPEN CONTINUOUSLY WHEN THE COMPACTOR IS RUNNING IN HAND. HAND CONTROLS FOR THE VALVE ARE AVAILABLE THROUGH THE OIT.

COMPACTOR RINSE VALVE MODE OF OPERATION (TYPICAL FOR COARSE & FINE):

THE COMPACTOR RINSE VALVE WILL BE CALLED TO OPEN BASED ON THE COMPACTOR AUTOMATIC WASH CYCLE. THE VALVE WILL OPEN CONTINUOUSLY WHEN THE COMPACTOR IS RUNNING IN HAND. HAND CONTROLS FOR THE VALVE ARE AVAILABLE THROUGH THE OIT.

DRAFT

*ALL RIGHTS RESERVED. THE INFORMATION TRANSMITTED HEREIN IS THE PROPERTY OF HYDRO-DYNE ENGINEERING INC. AND HAS BEEN PROVIDED FOR RESTRICTIVE USE. THIS DATA MUST BE HELD CONFIDENTIAL AND TRANSMISSION, DUPLICATION OR DISCLOSURE IS PROHIBITED UNLESS AUTHORIZED IN WRITING BY HYDRO-DYNE ENGINEERING INC.

NO.	DATE	REVISION	BY
0	05/13/25	FOR SUBMITTAL	W. BARNETT

UNLESS NOTED
TOLERANCE
X ± .030
.XX ± .015
.XXX ± .005
.XXXX ± .0005

HYDRO-DYNE ENGINEERING
www.hydro-dyne.com

PROJECT #: 06002
SCREEN & GRIT CONTROL PANEL - SAN LUIS, AZ
DRAWING #: AF0297 | SHT.: 20/21 | REV.: 0
DRAWN BY/DATE: W. BARNETT 05/13/25 | SCALE: N.T.S.
CHECKED BY/DATE: E. CONN 05/13/25 | SIZE:

SEQUENCE OF OPERATIONS (CONTINUED)

GRIT CLASSIFIER MODE OF OPERATION:

HAND: WHEN THE GRIT CLASSIFIER HAND-OFF-AUTO SELECTOR IS IN THE HAND POSITION, THE CLASSIFIER WILL RUN CONTINUOUSLY. HAND CONTROL IS AVAILABLE EXTERNAL TO THE PLC.
AUTO: WHEN THE GRIT CLASSIFIER HAND-OFF-AUTO SELECTOR IS IN THE AUTO POSITION, THE CLASSIFIER WILL RUN BASED ON THE GRIT SYSTEM CYCLE.

GRIT CLASSIFIER FAULTS:
THE GRIT CLASSIFIER WILL FAULT AND STOP IMMEDIATELY BASED ON THE FOLLOWING CONDITIONS:

1. MOTOR OVER TEMPERATURE
2. MOTOR CIRCUIT PROTECTOR OVERLOAD
3. FAIL TO START
4. EMERGENCY STOP

GRIT PUMP MODE OF OPERATION:

HAND: WHEN THE GRIT PUMP HAND-OFF-AUTO SELECTOR IS IN THE HAND POSITION, THE PUMP WILL RUN CONTINUOUSLY. HAND CONTROL IS AVAILABLE EXTERNAL TO THE PLC.
AUTO: WHEN THE PUMP HAND-OFF-AUTO SELECTOR IS IN THE AUTO POSITION, THE PUMP WILL RUN BASED ON THE GRIT SYSTEM CYCLE.

GRIT PUMP FAULTS:
THE GRIT PUMP WILL FAULT AND STOP IMMEDIATELY BASED ON THE FOLLOWING CONDITIONS:

1. MOTOR OVER TEMPERATURE
2. MOTOR CIRCUIT PROTECTOR OVERLOAD
3. FAIL TO START
4. HIGH DIFFERENTIAL PRESSURE
5. EMERGENCY STOP

GRIT TRAP MODE OF OPERATION:

HAND: WHEN THE GRIT TRAP HAND-OFF-AUTO SELECTOR IS IN THE HAND POSITION, THE TRAP WILL RUN CONTINUOUSLY. HAND CONTROL IS AVAILABLE EXTERNAL TO THE PLC.
AUTO: WHEN THE GRIT TRAP HAND-OFF-AUTO SELECTOR IS IN THE AUTO POSITION, THE TRAP WILL RUN CONTINUOUSLY.

GRIT TRAP FAULTS:
THE GRIT TRAP WILL FAULT AND STOP IMMEDIATELY BASED ON THE FOLLOWING CONDITIONS:

1. MOTOR OVER TEMPERATURE
2. MOTOR CIRCUIT PROTECTOR OVERLOAD
3. FAIL TO START
4. EMERGENCY STOP

GRIT FLUIDIZING VALVE MODE OF OPERATION:

THE GRIT FLUIDIZING VALVE WILL BE CALLED TO OPEN BASED ON THE GRIT SYSTEM CYCLE. HAND CONTROLS FOR THE VALVE ARE AVAILABLE THROUGH THE OIT.

GRIT SYSTEM CYCLE:

THE GRIT SYSTEM WILL BE CALLED TO RUN PERIODICALLY BASED ON THE GRIT SYSTEM CYCLE TIMER. WHEN THE CYCLE TIMER IS COMPLETE, THE GRIT FLUIDIZING VALVE WILL OPEN FOR AN ADJUSTABLE OPEN TIME. ONCE THE GRIT FLUIDIZING VALVE OPEN TIME IS COMPLETE, THE GRIT PUMP AND GRIT CLASSIFIER WILL BE CALLED TO RUN. THE GRIT PUMP WILL RUN FOR AN ADJUSTABLE ON TIME. ONCE THE GRIT PUMP ON TIME IS COMPLETED, THE PUMP WILL SHUT OFF AND THE CLASSIFIER WILL RUN FOR AN ADJUSTABLE OFF DELAY TIME. THE GRIT TRAP WILL RUN CONTINUOUSLY AS LONG AS THE SYSTEM IS ACTIVE.

NETWORK SETTINGS

ETHERNET/IP NETWORK SETTINGS	
610PLC1 – PANEL 1 COMPACTLOGIX PLC PROCESSOR PORT 2 (LOCAL)	192.168.1.10
6080IT1 – PANEL 1 PANELVIEW PLUS 7 OIT	192.168.1.11
301VFD1 – COARSE SCREEN 1 ABB ACS580 VFD	192.168.1.12
331VFD1 – FINE SCREEN 1 ABB ACS580 VFD	192.168.1.13
610PLC2 – PANEL 2 COMPACTLOGIX PLC PROCESSOR PORT 2 (LOCAL)	192.168.1.20
6080IT2 – PANEL 2 PANELVIEW PLUS 7 OIT	192.168.1.21
301VFD2 – COARSE SCREEN 2 VFD	192.168.1.22
331VFD2 – FINE SCREEN 2 VFD	192.168.1.23
LOCAL SUBNET MASK	255.255.255.0
LOCAL GATEWAY	
610PLC1 – PANEL 1 COMPACTLOGIX PLC PROCESSOR PORT 1 (SCADA)	*
610PLC2 – PANEL 2 COMPACTLOGIX PLC PROCESSOR PORT 1 (SCADA)	*
SCADA SUBNET MASK	*
SCADA GATEWAY	*

NOTE:
CONTROL EQUIPMENT WILL BE CONFIGURED WITH DEFAULT SETTINGS UNLESS SITE PREFERENCES (PROVIDED EQUIPMENT, IP ADDRESSES, AND PREFERRED METHOD OF SENDING /RECEIVING TAGS/ADDRESSES) ARE RECEIVED WITHIN 1-WEEK OF SUBMITTAL APPROVAL. FAILURE TO PROVIDE MAY RESULT IN FIELD MODIFICATION CHARGES AND/OR EQUIPMENT DELAYS.

DRAFT

*ALL RIGHTS RESERVED. THE INFORMATION TRANSMITTED HEREIN IS THE PROPERTY OF HYDRO-DYNE ENGINEERING INC. AND HAS BEEN PROVIDED FOR RESTRICTIVE USE. THIS DATA MUST BE HELD CONFIDENTIAL AND TRANSMISSION, DUPLICATION OR DISCLOSURE IS PROHIBITED UNLESS AUTHORIZED IN WRITING BY HYDRO-DYNE ENGINEERING INC.

NO.	DATE	REVISION	BY
0	05/13/25	FOR SUBMITTAL	W. BARNETT

UNLESS NOTED TOLERANCE
.X ± .030
.XX ± .015
.XXX ± .005
.XXXX ± .0005

HYDRO-DYNE ENGINEERING
www.hydro-dyne.com

PROJECT #: 06002
SCREEN & GRIT CONTROL PANEL - SAN LUIS, AZ
DRAWING #: AF0297 | SHT.: 21/21 | REV.: 0
DRAWN BY/DATE: W. BARNETT 05/13/25 | SCALE: N.T.S.
CHECKED BY/DATE: E. CONN 05/13/25 | SIZE:

Controls Components Specifications

DRAFT

REVERE

4,000 BTU/hr AIR CONDITIONER TO BE PROVIDED. SPECS TO BE UPDATED (PAGE 19)

Date 05/12/25

Subject: San Luis, AZ (Project #06002)

Control Panel Heat Calculations

The control panel in the supplied submittal package utilizes a 4000 BTU/hr air conditioner. The calculations below show the cooling required for maintaining the maximum operating temperature in the panel with a 5% tolerance with solar gain included.

Item	QTY.	Dissipated Power (WATTS)	Extended Dissipated Power (WATTS)
VFD	1	13.2	13.2
Transformer	1	80	80
UPS	1	51.3	51.3
PLC & I/O	1	27	27
OIT	1	20	20
DC Power Supply	1	45	45
Ethernet Switch	1	4.1	4.1
Control Relay	59	0.01	0.59
Pilot Lights	15	0.05	0.75
Total Dissipated Heat			791.3
Solar Gain (5 watt/ft^2)			244.2
% Tolerance	5		**566.1**
Maximum Operating Temperature (deg. F)	**104**		
Max Outside Temp.	120	**Deg. F**	
Max Inside Temp.	104	**Deg. F**	
Delta Temp.	16	**Deg. F**	
Surface Area Allowing Heat Dissipation	56.3	**FT^2**	
Surface Area NOT Allowing Heat Transfer	25.8	**FT^2**	
Exposed Surface Area	48.8	**FT^2**	
Height	62	**IN.**	
Width	60	**IN.**	
Depth	18	**IN.**	
Total Heat Transfer		**BTU/hr**	**3058.8**

DRAFT

Item 1ab

TWO-DOOR WITH 3-POINT LATCHES, TYPE 4X



INDUSTRY STANDARDS

UL 508A Listed; Type 3R, 4, 4X, 12; File No. E61997
cUL Listed per CSA C22.2 No 94; Type 3R, 4, 4X, 12; File No. E61997

NEMA Type 3, 3R, 4, 4X, 12, 13
IEC 60529, IP66
Meets NEMA Type 3RX requirements

APPLICATION

These two-door enclosures provide industry-leading protection for large components or complex mounting configurations in highly-corrosive environments. Three-point latching with the Hoffman POWERGLIDE padlocking handles and a foam-in-place gasket combine convenience with security. They are well-suited for use in petrochemical plants; pulp and paper processing; water treatment facilities; and food, pharmaceutical and packaging applications.

SPECIFICATIONS

- Manufactured from 12 gauge Type 304 or 316L stainless steel
- Backs are 10 or 12 gauge stainless steel with x-form stiffeners
- Seams continuously welded and ground smooth; no holes or knockouts
- Removable centerpost for easy panel installation
- Collar studs provided for mounting optional panels
- Panel supports included
- Heavy-duty lifting eyes are Type 316L stainless steel
- Heavy-duty 3-point latching mechanism operated by Type 316L stainless steel POWERGLIDE padlocking handles
- Body flange trough collar excludes liquids and contaminants
- Heavy-duty stainless steel continuous hinges support each door
- Bonding provision on doors; grounding studs on body
- Accessory mounting channel provided in enclosure top
- Data pocket is high-impact thermoplastic
- 12-in. (305-mm) removable floor stands are bolted to enclosure
- Seamless foam-in-place one-piece gasket provides oil-tight and dust-tight seal against contaminants
- External hardware manufactured of Type 316 stainless steel

FINISH

Enclosures are unpainted. Front, sides, top and back have smooth #4 brushed finish. Optional mild steel panels are painted white. Optional conductive panels are available.

ACCESSORIES

Industrial Corrosion Inhibitors
Electric Heater
Electrical Interlocks
PANELITE Enclosure Lights Overview
Panel Support Kit

MODIFICATION AND CUSTOMIZATION

Hoffman excels at modifying and customizing products to your specifications. Contact your local Hoffman sales office or distributor for complete information.

BULLETIN: A4S3

Standard Product

Catalog Number	AxBxC in.	AxBxC mm	Stainless Steel Type	Panel	Conductive Panel	Panel Size D x E (in.)	Panel Size D x E (mm)
A62H4812SSLP3PT	62.06 x 48.06 x 12.06	1576 x 1221 x 306	304	A60P48	A60P48G	56.00 x 44.00	1422 x 1118
A62H4812SS6LP3PT	62.06 x 48.06 x 12.06	1576 x 1221 x 306	316L	A60P48	A60P48G	56.00 x 44.00	1422 x 1118
A62H6012SSLP3PT	62.06 x 60.06 x 12.06	1576 x 1526 x 306	304	A60P60	A60P60G	56.00 x 56.00	1422 x 1422
A62H6012SS6LP3PT	62.06 x 60.06 x 12.06	1576 x 1526 x 306	316L	A60P60	A60P60G	56.00 x 56.00	1422 x 1422
A74H6012SSLP3PT	74.06 x 60.06 x 12.06	1881 x 1526 x 306	304	A72P60	A72P60G	68.00 x 56.00	1727 x 1422
A74H6012SS6LP3PT	74.06 x 60.06 x 12.06	1881 x 1526 x 306	316L	A72P60	A72P60G	68.00 x 56.00	1727 x 1422
A74H7212SSLP3PT	74.06 x 72.06 x 12.06	1881 x 1830 x 306	304	A72P72	A72P72G	68.00 x 68.00	1727 x 1727
A74H7212SS6LP3PT	74.06 x 72.06 x 12.06	1881 x 1830 x 306	316L	A72P72	A72P72G	68.00 x 68.00	1727 x 1727
A62H4818SSLP3PT	62.06 x 48.06 x 18.06	1576 x 1221 x 459	304	A60P48	A60P48G	56.00 x 44.00	1422 x 1118
[illegible]	62.06 x 48.06 x 18.06	1576 x 1221 x 459	316L	[illegible]	A60P48G	56.00 x 44.00	1422 x 1118
A62H6018SSLP3PT	62.06 x 60.06 x 18.06	1576 x 1526 x 459	304	A60P60	A60P60G	56.00 x 56.00	1422 x 1422
[illegible]	62.06 x 60.06 x 18.06	1576 x 1526 x 459	316L	[illegible]	A60P60G	56.00 x 56.00	1422 x 1422
A74H6018SSLP3PT	74.06 x 60.06 x 18.06	1881 x 1526 x 459	304	A72P60	A72P60G	68.00 x 56.00	1727 x 1422
A74H6018SS6LP3PT	74.06 x 60.06 x 18.06	1881 x 1526 x 459	316L	A72P60	A72P60G	68.00 x 56.00	1727 x 1422
A74H7218SSLP3PT	74.06 x 72.06 x 18.06	1881 x 1830 x 459	304	A72P72	A72P72G	68.00 x 68.00	1727 x 1727
A74H7218SS6LP3PT	74.06 x 72.06 x 18.06	1881 x 1830 x 459	316L	A72P72	A72P72G	68.00 x 68.00	1727 x 1727
A74H7224SSLP3PT	74.06 x 72.06 x 24.06	1881 x 1830 x 611	304	A72P72	A72P72G	68.00 x 68.00	1727 x 1727
A74H7224SS6LP3PT	74.06 x 72.06 x 24.06	1881 x 1830 x 611	316L	A72P72	A72P72G	68.00 x 68.00	1727 x 1727

Purchase panels separately.

DRAFT

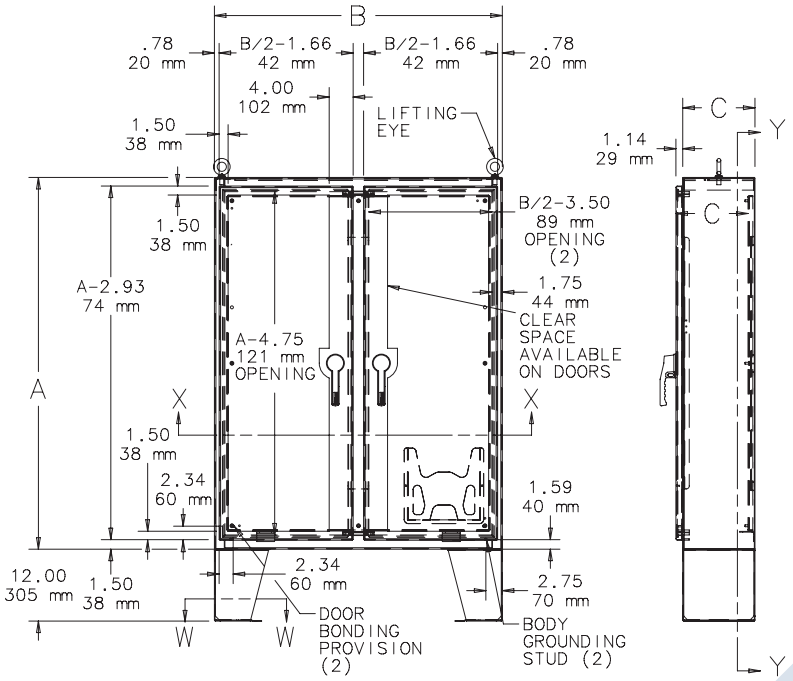

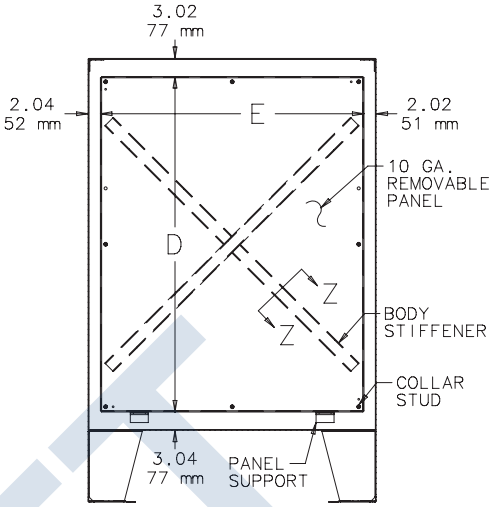

SECTION Y-Y

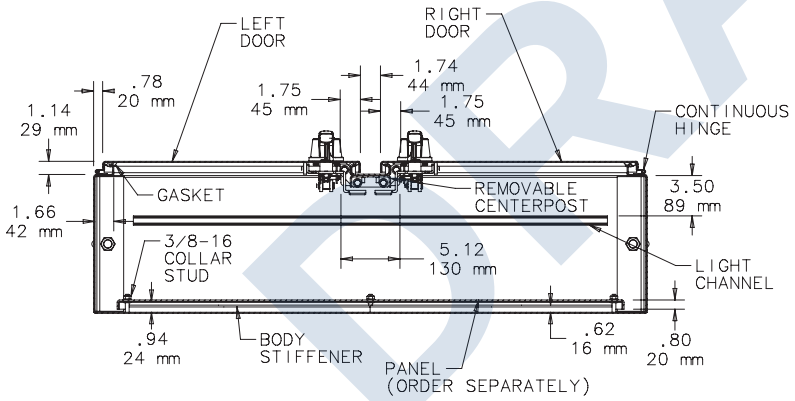

SECTION X-X

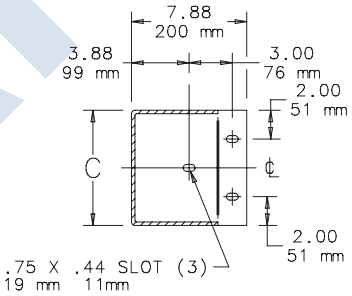

SECTION W-W

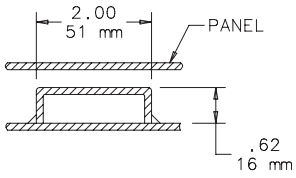

SECTION Z-Z

87784698

DRAFT



Zerust® Vapor Capsules

Zerust®/Excor® Vapor Capsules are portable capsules that contain patented Zerust® VCI technology. Use to protect metals in hard to reach areas of control panels, electrical cabinets and other enclosed spaces, even when they are in operation. Or use as a supplement to other Zerust® VCI packaging products for added protection.

Use Vapor Capsules to protect multiple metal types from corrosion in almost any enclosure or sealed packaging. Zerust® diffusers emit Vapor Corrosion Inhibitors (VCIs) that prevent oxidation of the metal surface that causes rust. They provide targeted corrosion protection in hard to reach spaces and additional protection to metals in Zerust® VCI packaging applications.

Zerust® capsules are quick and easy to install. Simply peel back the protective paper from the adhesive tape and install securely in desired location. Tightly seal the enclosure to trap protective vapor inside. Metals will be protected from rust and tarnish for up to one or two years depending on the capsule model and environment.

Benefits

Safe* and effective corrosion protection where traditional anti-corrosion methods can not be used.

Easy to install, economical to use.

Does not affect the circuit boards or sensitive components.

Suitable for new equipment and to protect the reliability of existing equipment.

Application Example

A Vapor Capsule protects an electronics enclosure from corrosion during operation. The capsule has been marked with the installation date so operators know when to replace it with a new capsule.



Application Type

Storage
Shipping
During Operation
May be used with Zerust® Packaging

*Safe for people. This product does not pose a health hazard to users due to its classification as an article according to UN GHS, US OSHA HazCom and CA WHMIS regulations. Check REACH SDS for classification in EU.

DRAFT

Zerust®





Specifications

Product Information	Zerust® Capsules are VCI (Vapor Corrosion Inhibitor) diffusers. The capsules are made from recycled PE materials.
Appearance	PE-plastic capsule and foam or protective foam containing active pellets.
Protection Volume	See table below
Protection Duration	See table below
Storage	Store in a cool, dry place and away from sunlight for up to 2 years from the date of shipment.
Protected Metal Types	Multimetal protection for steel, iron, zinc and galvanized steel, copper, brass, bronze, aluminum (and alloys), nickel, tin, solder.

Protection Capabilities*

Model	Product Dimensions** L x W x H	Protection Volume (Up to)	Protection Radius (Up to)	Protection Duration (Up to)
VC 1-1(s)	1 ¼" x 1" x ¾"	4 ft³ (0.12 m³)	1 ft (30 cm)	1 year
VC 1-1	2 ¼" x 1" x ¾"	4 ft³ (0.12 m³)	1 ft (30 cm)	1 year
VC 2-1	2 1/6" x 1 ¼" x 1"	35 ft³ (1 m³)	2 ft (60 cm)	1 year
VC 2-2	3" x 1¼" x 1"	35 ft³ (1 m³)	2 ft (60 cm)	2 years
VC 6-1	8" x 4" x 2"	900 ft³ (25 m³)	6 ft (200 cm)	1 year
VC 6-2	8" x 4" x 2"	900 ft³ (25 m³)	6 ft (200 cm)	2 years

* Protection ratings are based on the highest average tested protection properties and are not guaranteed. Results may vary according to usage environment and metal surface properties such as contaminants.
** Dimensions are +/- 10%

Availability

Zerust® Vapor Capsules are in stock for immediate delivery. Sold in cases.

Model	Units/Case
VC 1-1(s)	50
VC 1-1	50
VC 2-1	25
VC 2-2	10
VC 6-1	4
VC 6-2	4

Safety

- Safe for people. This product does not pose a health hazard to users due to its classification as an article according to UN GHS, US OSHA HazCom and CA WHMIS regulations. Check REACH SDS for classification in EU.
- Zerust® VCI chemistry is safe for sensitive electronics. No galvanic effects, residues or changes in the properties of metals. The protective molecules dissipate upon opening of package.

DECLARATION
This Data sheet and information it contains is considered to be accurate at the date of printing. No representation or warranty, expressed or implied is made as to the accuracy or completeness of the data and information contained in this publication. It is the User's obligation to evaluate and use products safely and within the scope advised in the data sheet and to comply with all applicable laws and regulations.
LIMITED WARRANTY
All statements, technical information and recommendations contained herein are based on validations and tests conducted by Northern Technologies International Corporation/Zerust® or its partners and are believed to be reliable, but the accuracy or completeness thereof is not guaranteed. We warrant our products will be free from defects when shipped to customer. Our obligation under this warranty shall be limited to replacement of product that proves to be defective. To obtain replacement product under this warranty, the customer must notify Northern Technologies International Corporation/Zerust® or its partners or agent of the claimed defect within 3 months after shipment of product to customer. Customer shall pay all freight charges for replacement products. We shall have no liability for any injury, loss or damage arising out of the use of or the inability to use the products. And any financial claims shall be limited to the value of the products sold.
Before using, user shall determine the suitability of the product for its intended use, and user assumes all risk and liability whatsoever in connection therewith. No representation or recommendation not contained herein shall have any force or effect unless in a written document signed by an officer of the company. The foregoing warranty is exclusive and in lieu of all other warranties, express, implied or statutory, including without limitation any implied warranty of merchantability or of fitness for a particular purpose. In no case shall Northern Technologies International Corporation/Zerust® be liable for incidental or consequential damages.
For full warranty and disclaimer information visit, www.zerust.com/warranty.

©2013-2021 Northern Technologies International Corporation (NTIC). All Rights Reserved. NTIC is the owner of the following trademarks: ActivPak®, Cor Tab®, EXCOR®, Flange Saver®, ICT®, Natur-VCI®, NTI®, Plastabs®, Z-CIS®, Zerion®, Zerust®, Z-PAK® and the Color "Yellow". ABRIGO®, UNICO®, and VALENO® are registered trademarks of EXCOR GmbH, a Joint Venture Partner of NTIC.

A product of:
Northern Technologies International Corp
4201 Woodland Road
Circle Pines, MN 55014
USA

Phone. +1 763.225.6600
Fax. +1 763.225.6645
sales@zerust.com
www.zerust.com

DRAFT

Item 2

SOLARSHIELD™ HMI COVER

STAHLIN®
A ROBROY Brand

The most innovative and durable non-metallic HMI cover for use with all enclosure material types — now available in patented opaque and clear configurations!

Choose from our expanded range of sizes — 10" x 8", 16" x 11", and 20" x 14" — to discover the ultimate HMI screen protection for your application!



SolarShield™ Opaque HMI Cover

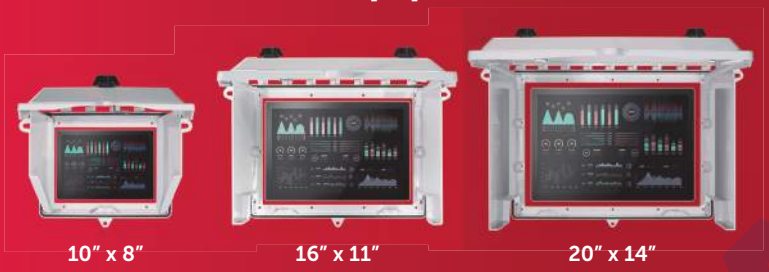

10" x 8" 16" x 11" 20" x 14"

SolarShield™ Clear HMI Cover



10" x 8" 16" x 11" 20" x 14"

1. **Superior Protection**
SolarShield HMI covers protect HMI screens and electrical equipment from corrosion and damage due to UV*, water, oils, dirt, and sand and greatly reduce equipment replacement cost.

2. **Simple and Functional**
Easy to use, hinged design includes supporting inner doors* for hands-free use and better visibility of the HMI screens in the sun.

3. **Strong and Durable**
Impact resistant polycarbonate construction provides long dependable life in harsh conditions.

MARKETS AND INDUSTRIES

- Ideal for Non-Hazardous Industrial and Commercial OEM market segments
- Oil and gas, equipment manufacturing, industrial machines, water/wastewater, marine, food and beverage

APPLICATIONS

- Extremely tough and durable, **patented** SolarShield HMI Covers are used in both outdoor and indoor applications.
- Opaque configuration provides superior protection of Human Machine Interface (HMI) screens from the sun. Both Opaque and Clear configurations provide protection from wind-blown dust, water, oils, chemicals, grease, and other environmental conditions.

**Opaque configuration only – select Opaque if UV protection is required. Clear configuration offers protection from environmental conditions and debris while allowing for continual visibility of the screen; no additional UV protection.*

***The 10" x 8" HMICVR1008 only is UL Recognized under file #E64358 and maintains the NEMA Type 4/4X rating on a Type 4/4X enclosure when a Type 4X HMI Device is installed.*

INNOVATIVE FEATURES

- Patented design with non-metallic, hinged inner doors* to shield screen from the sun and allow for hands-free use
- Clear Cover configuration has no inner doors, allowing for excellent visibility of the HMI screen while cover is closed
- Broad, expanded size selection features options for most standard size HMI screens with dimensions up to 20"W x 14"H
- UL Listed NEMA 4/4X**
- Universal covers can be used with either non-metallic or metallic enclosures
- Lightweight, high-impact rated, UV resistant polycarbonate material construction
- Stainless steel hardware kit included
- Padlock-able for increased security
- Simple and easy installation with the use of common tools
- Installation instructions and drill template provided
- Color: Pantone 428C

DRAFT

MATERIALS

- Cover, Base, and Inner Doors: Polycarbonate with UV inhibitors
- Gasket: Robotically applied foam-in-place seamless polyurethane
- Hardware: Stainless Steel
- Twist Latch: Polyamide

RATINGS AND LISTINGS

- per file #E540056*
- UL 508 A
- UL Listed NEMA Type 4/4X*
- Operating Temperature Rating: -40°F to +248°F (-40°C to +120°C)
- Outdoor UV Exposure (UL 746C) (f1) Rated — UL's best rating; resin has passed test for UV exposure and water immersion

**The 10" x 8" HMICVR1008 only is UL Recognized under file #E64358 and maintains the NEMA Type 4/4X rating on a Type 4/4X enclosure when a Type 4X HMI Device is installed.*

HOW TO USE: OPAQUE CONFIGURATION







HOW TO USE: CLEAR CONFIGURATION





DRAFT



ORDERING INFORMATION

SolarShield™ HMI Cover Catalog Info			
Catalog Number	Description	Overall H x W x D	Inside H x W x D (Screen Clearance)
HMICVR1008	Opaque HMI Cover	11.41 x 13.13 x 2.50	7.25 x 9.88 x 2.25
HMICVR1008C	Clear HMI Cover	11.41 x 13.13 x 2.50	7.25 x 9.88 x 2.25
HMICVR1611	Opaque HMI Cover	15.72 x 19.10 x 2.59	11.25 x 15.88 x 2.21
HMICVR1611C	Clear HMI Cover	15.72 x 19.10 x 2.59	11.25 x 15.88 x 2.21
HMICVR2014	Opaque HMI Cover	17.98 x 23.07 x 2.59	14.25 x 19.88 x 2.21
HMICVR2014C	Clear HMI Cover	17.98 x 23.07 x 2.59	14.25 x 19.88 x 2.21

SolarShield™ HMI Cover Compatibility					
	Smallest Compatible Enclosure Size				
HMI Cover	J Series	PolyStar®	PolySlim™	N Series	Diamond Shield
HMICVR1008	J1412	PC1412	PC141204	N2016	D1412
HMICVR1008C	J1412	PC1412	PC141204	N2016	D1412
HMICVR1611	J2020	PC2424	PC242406	Consult Factory	N/A
HMICVR1611C	J2020	PC2424	PC242406	Consult Factory	N/A
HMICVR2014	J2424	PC2424	PC242406	Consult Factory	N/A
HMICVR2014C	J2424	PC2424	PC242406	Consult Factory	N/A

DRAFT

FEATURES | OPTIONS | PART NUMBERS

Item 3

VS SERIES

STRUCTURE: IQ-V-F-N-AF-CTR-O-W

Item
IQ4000VS-480V-S304-N4X

EXAMPLE CONFIGURATION: IQ MODEL-120V-GY-N4-10FIL-R11-CP3-XO3, IH4, TEMP-1 YEAR

(IQ MODEL WITH 120 VOLT, GRAY FINISH, NEMA TYPE 4, 10-MICRON FILTER, STANDARD CONTROLLER FRONT/AMBIENT SIDE, CORROSION PROTECTION, ALARM OUTPUT, INTERNALLY MOUNTED 400 WATT HEATER, FULL SCALE ENCLOSURE CUTOUT DRAWING TEMPLATE, AND 1 YEAR STANDARD WARRANTY).

PART NUMBER KEY	
IQ	IQ MODEL
V	VOLTAGE
F	FINISH
N	NEMA TYPE
AF	AMBIENT FILTER
CTR	CONTROLLER
O	OPTIONS
W	WARRANTY

(V) VOLTAGES [1, 4, 5]	
120 V	60 HERTZ
220–230 V	50/60 HERTZ
400 V	50/60 HERTZ
480 V	50/60 HERTZ

(F) FINISH [1]	
GY	GRAY, POWDER COATED COLD ROLLED STEEL
BG	BEIGE, POWDER COATED COLD ROLLED STEEL
BK	BLACK, POWDER COATED COLD ROLLED STEEL
CM	CUSTOM COLOR, POWDER COATED COLD ROLLED STEEL
C304	CUSTOM COLOR, POWDER COATED 304 STAINLESS STEEL
S304	GRAINED FINISH, 304 STAINLESS STEEL
C316	CUSTOM COLOR, POWDER COATED 316L STAINLESS STEEL
S316	GRAINED FINISH, 316L STAINLESS STEEL

(N) NEMA TYPE	
N4	NEMA TYPE 3R/4/12; ONLY FOR UNITS WITH A UNIT CONSTRUCTION OF WELDED FRAME, POWDER COATED COLD ROLLED STEEL.
N4X	NEMA TYPE 3R/4X; ONLY FOR UNITS WITH UNIT CONSTRUCTION OF WELDED FRAME, 304 AND 316L STAINLESS STEEL.

UNIT CONSTRUCTION [2]	
	WELDED FRAME, POWDER COATED COLD ROLLED STEEL
	WELDED FRAME, 304 AND 316L STAINLESS STEEL

(AF) AMBIENT FILTER [1]	
10FIL	10-MICRON FILTER
4FIL	4-MICRON FILTER
DEFL	DUST EATER FILTER

(CTR) CONTROLLER [1]	
R11	STANDARD CONTROLLER FRONT/AMBIENT SIDE
XC	STANDARD CONTROLLER REMOTE MOUNTED (EXTERNAL TO UNIT)
XC4	qubeLINK® BLUETOOTH/ETHERNET/REDUNDANT CONTROLLER/REMOTE MOUNTED

(O) OPTIONS [4]	
CP3	HARSH ENVIRONMENT PROTECTION AGAINST GAS, SALT SPRAY, AND MOISTURE. HIGH FREQUENCY COATED COILS, ALL BRAZED JOINTS AND COPPER TUBING COATED.
XO3	ALARM OUTPUT THAT PROVIDES BOTH A NORMALLY OPEN (CLOSED ON ALARM) AND A NORMALLY CLOSED (OPEN ON ALARM) SET OF DRY CONTACTS. THIS SIGNAL IS PROVIDED FROM A RELAY THROUGH A 3-CONDUCTOR CABLE.
IHO	INTERNALLY MOUNTED HEATER THAT PROVIDES HEAT WHEN REQUIRED. THE CONTROLLER HAS BUILT IN DEAD BAND PROGRAM THAT PREVENTS HEATING AND COOLING FROM OPERATING SIMULTANEOUSLY.
HOOD	AMBIENT EXHAUST HOODS FOR AIR DIRECTION, SECURITY, AND/OR WASHDOWN ENVIRONMENT. AVAILABLE IN ALL FINISHES.
EHO	EXTERNAL HEAT OUTPUT TO POWER AND CONTROL. EXTERNAL HEATER.
LA	LOW AMBIENT PACKAGE FOR LOW AMBIENT ENVIRONMENTS.
TEMP	FULL SCALE ENCLOSURE CUTOUT DRAWING TEMPLATE.
DOOR	ENCLOSURE DOOR SWITCH INTERFACE FOR CONNECTING AC TO DOOR SWITCHES.
RS	EXTRA-LONG ENCLOSURE TEMPERATURE SENSOR WIRE FOR MOUNTING EXTERNAL TO THE UNIT.
PWRC	POWER CORD SUPPLIED INSTEAD OF STANDARD OPTION OF HARD WIRING TO TERMINAL BLOCK.

(W) WARRANTY	
1 YEAR	STANDARD WARRANTY

FOOTNOTES

1. Must choose one from category.
2. Unit construction is paired to finish and NEMA Type.
3. The internal heat will range from 400W to 1800W, dependent on models.
4. Model specific.
5. 400V is not UL Listed.

DRAFT

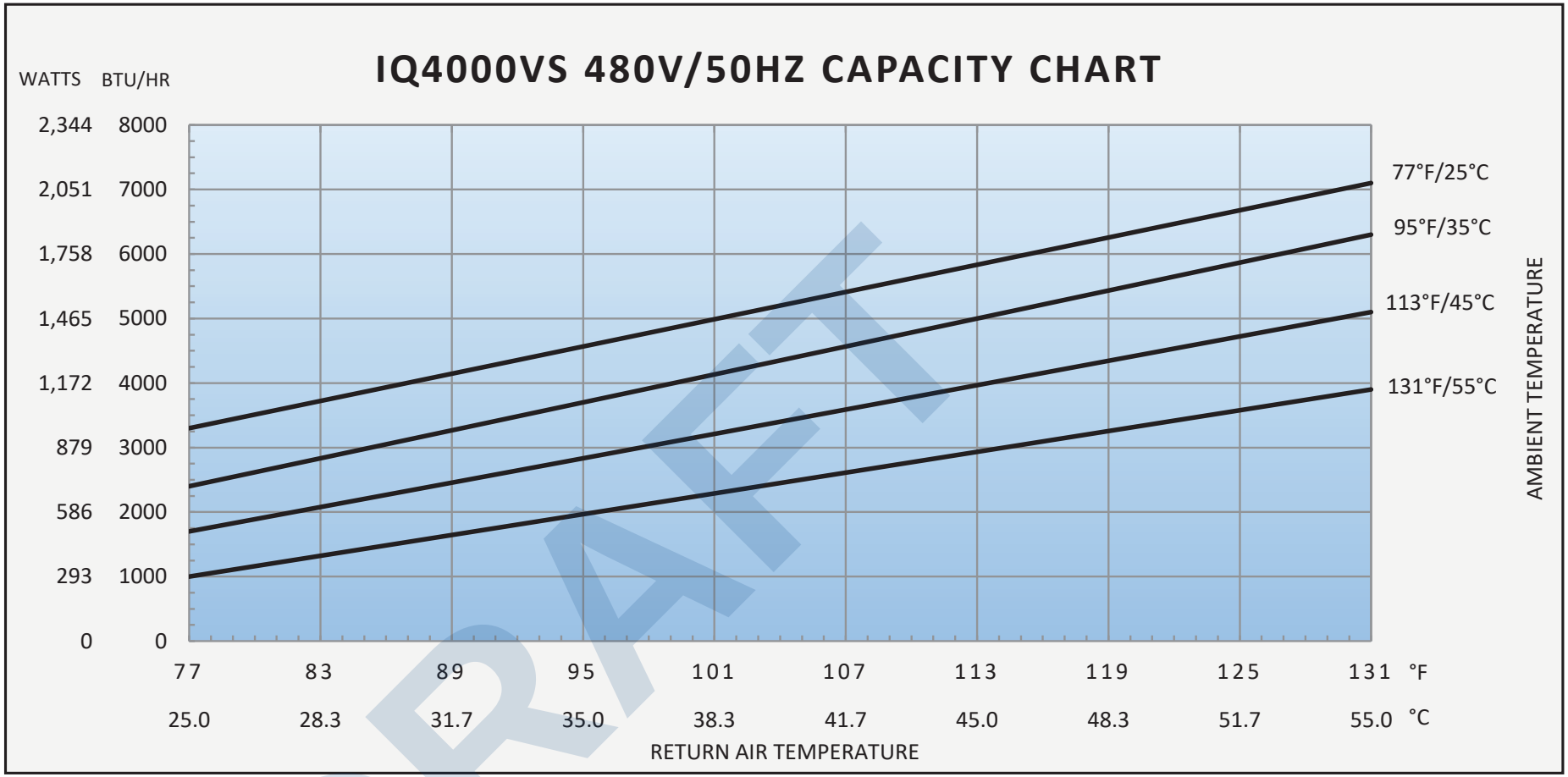
IQ4000VS 480V/50HZ CAPACITY CHART
WATTS
BTU/HR
2,344
2,051
1,758
1,465
1,172
879
586
293
0
8000
7000
6000
5000
4000
3000
2000
1000
0
77°F/25°C
95°F/35°C
113°F/45°C
131°F/55°C
AMBIENT TEMPERATURE
77
83
89
95
101
107
113
119
125
131
°F
25.0
28.3
31.7
35.0
38.3
41.7
45.0
48.3
51.7
55.0
°C
RETURN AIR TEMPERATURE

DRAFT

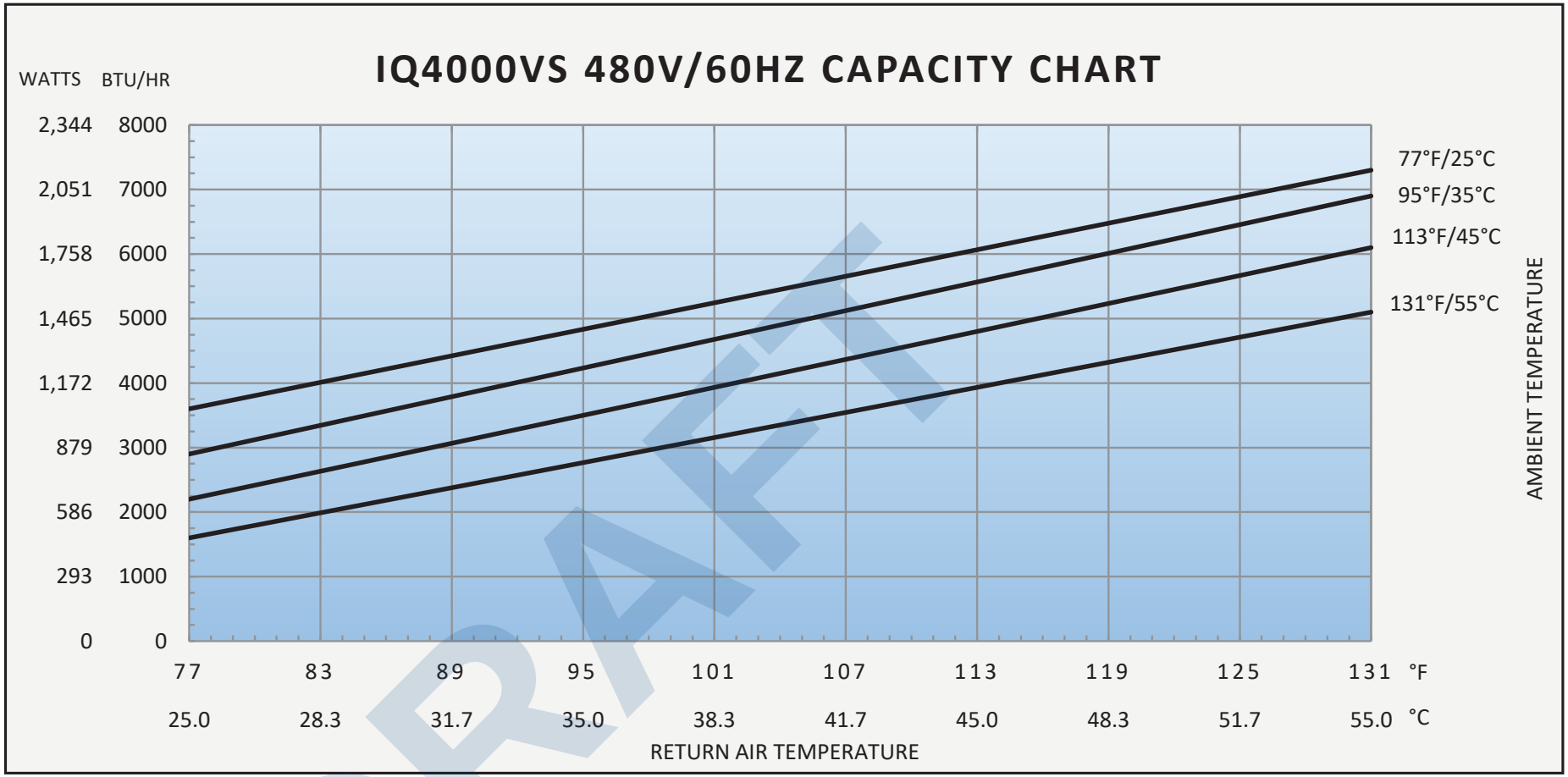
IQ4000VS 480V/60HZ CAPACITY CHART
WATTS
BTU/HR
2,344
2,051
1,758
1,465
1,172
879
586
293
0
8000
7000
6000
5000
4000
3000
2000
1000
0
77°F/25°C
95°F/35°C
113°F/45°C
131°F/55°C
AMBIENT TEMPERATURE
77
83
89
95
101
107
113
119
125
131
°F
25.0
28.3
31.7
35.0
38.3
41.7
45.0
48.3
51.7
55.0
°C
RETURN AIR TEMPERATURE

DRAFT

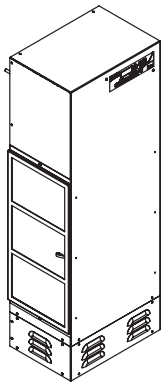

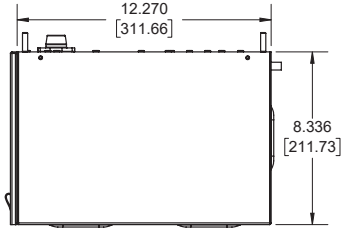

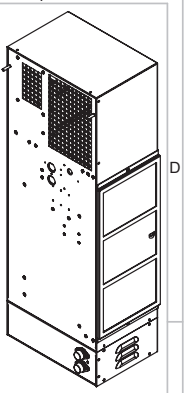

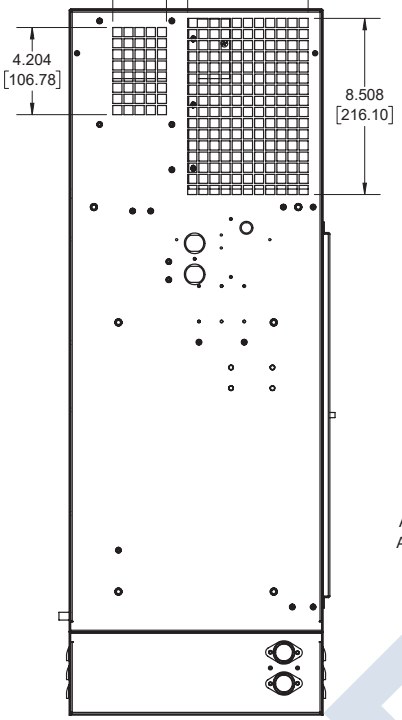

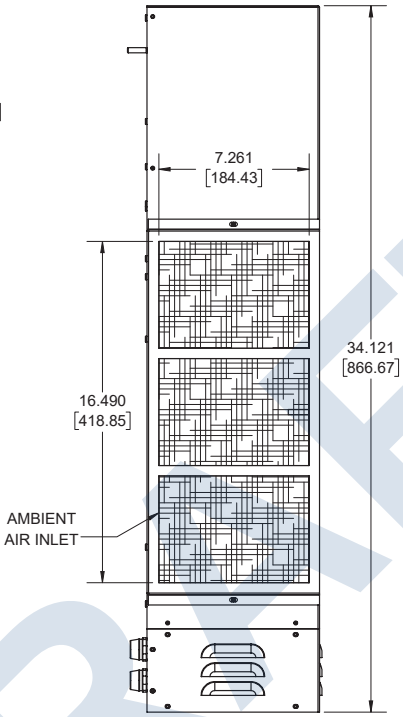

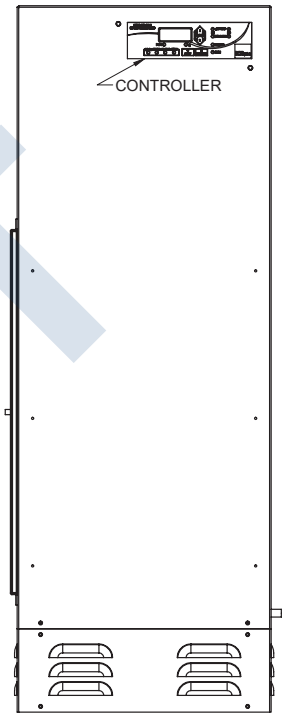

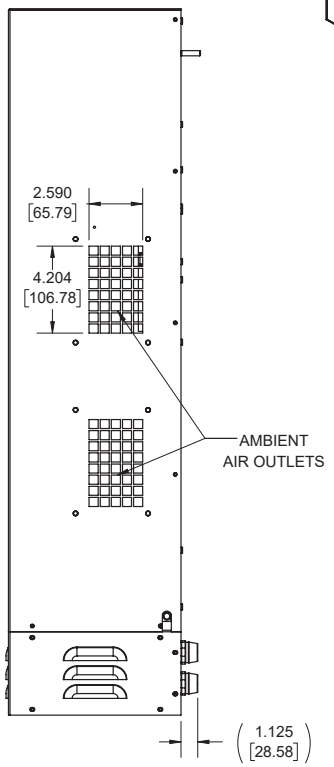

IQ4000VS
COOLING CAPACITY: 4000 BTUH (1173W) @131°F (55°C)
MAXIMUM AMPS: 2.2 (1056W) @480V 60HZ
MAXIMUM OPERATING TEMP: 131°F (55°C)
MINIMUM OPERATING TEMP: -40°F (-40°C)
DIMENSIONS: 34.12" (867MM) H X 12.27" (312MM) W X 8.34" (212MM) D
WEIGHT: 76 LBS (34.5KG)

DRAFT

REV	REVISION	CHG	DATE	APP	DATE	CN #
C	ADDED CFM, dBA, AND CLEARANCE INFO	RCC	3/29/2018			1351
B	ADDED WATTAGE INFO	RCC	1/4/2018			
A	INITIAL DRAFT	RCC	9/20/2016			

ITEM NUMBER: N/A
MATERIAL: N/A
EST WT: lbs
USED ON: IQ4000VS
DRAWN BY: RCC
DATE: 9/20/2016
SCALE: 1:6

UNLESS OTHERWISE SPECIFIED TOLERANCES
.X ± .060
.XX ± .030
.XXX ± .015
FRACTIONAL ± 1/16
ANGULAR ± 1/2°
SURFACE FINSH 63
DO NOT SCALE DRAWING DIMENSIONS ARE INCHES

ICE QUBE, INC.
THIS IS A PROPRIETARY DOCUMENT. DO NOT REPRODUCE OR DISCLOSE WITHOUT THE EXPRESS WRITTEN PERMISSION OF ICE QUBE, INC.
DESCRIPTION: IQ4000VS SPEC DRAWING, 480V
DRAWING NUMBER: IQ290424
REV: C
SHEET 1 of 2

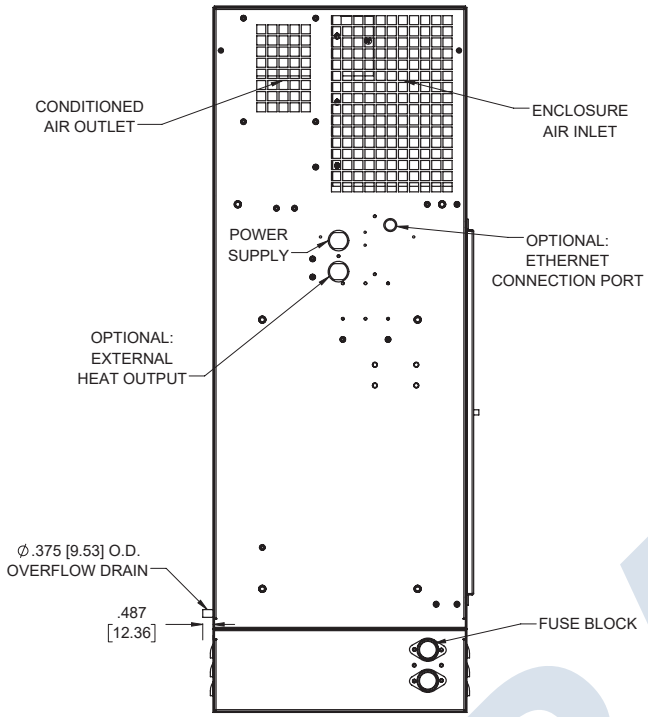

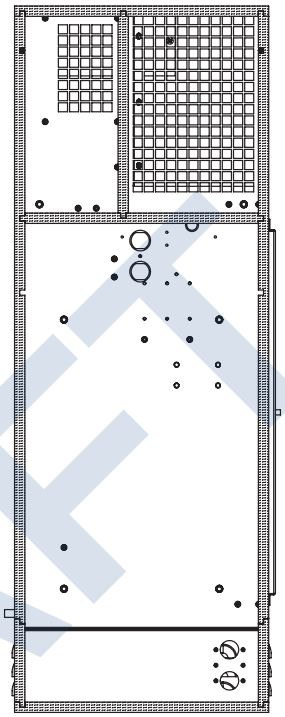

IMPORTANT
GASKET MUST BE
APPLIED AS SHOWN
FOR PROPER OPERATION
AND TO MAINTAIN
NEMA INTEGRITY.

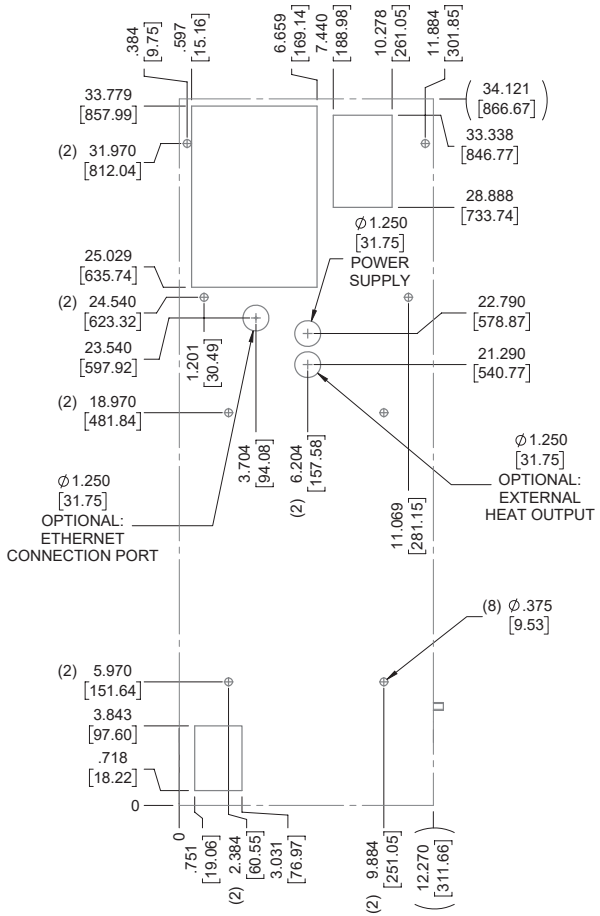

EVAP. OUTLET ≈ 158 CFM
COND. OUTLET ≈ 236 CFM
SOUND LEVEL @5FT FROM UNIT @ A HT. OF 3FT = 61 dBA
SOUND LEVEL @2FT FROM UNIT @ A HT. OF 5FT = 62 dBA
CONDENSER INLET MIN. CLEARANCE 2.80"

ITEM NUMBER: N/A	USED ON: IQ4000VS	UNLESS OTHERWISE SPECIFIED TOLERANCES: .X ±.060, .XX ±.030, .XXX ±.015, FRACTIONAL ±1/4, ANGULAR ±1/2°, SURFACE FINSH 63, DO NOT SCALE DRAWING DIMENSIONS ARE INCHES	ICE QUBE, INC. THIS IS A PROPRIETARY DOCUMENT. DO NOT REPRODUCE OR DISCLOSE WITHOUT THE EXPRESS WRITTEN PERMISSION OF ICE QUBE, INC.
MATERIAL: N/A			DESCRIPTION: IQ4000VS SPEC DRAWING, 480V
EST WT: lbs			DRAWING NUMBER: IQ290424 REV: C
DRAWN BY: RCC	DATE: 9/20/2016	SCALE: 1:6	SHEET 2 of 2

DRAFT

Item 4

ELECTRIC HEATERS



115/230 Volt
100/200 Watt



115/230 Volt
400/800 Watt



115/230 Volt
1300 Watt

INDUSTRY STANDARDS

UL 508A Component Recognized; File No. E61997

CSA Certified, CSA File No. LR42186
CE

APPLICATION

Protect mechanical, electrical and electronic equipment from low temperatures, condensation and corrosion with this thermostatically controlled, fan-driven heater that maintains a stable enclosure temperature.
Fan draws cool air from the bottom of the enclosure and passes this air across the thermostat and heating element before being released into enclosure cavity. Heated air is discharged through the top of the heater unit.

SPECIFICATIONS

- Aluminum housing
- Thermostat range adjustable from 0 F to 100 F (-18 C to 38 C)
- Four 10-32 x self-tapping screws are included with each heater
- Ball bearing fan
- Terminal strip with clamp connector that accepts both solid and stranded wire

FINISH

- Brushed aluminum

⚠ CAUTION

These electric heaters are not designed for use in dusty, dirty, corrosive, or hazardous locations. Portions of the heater can get hot. Adequate protection must be taken to protect people from potential burns, and to protect other components from this heat. Pentair Technical Products recommends this heater only be installed in a totally-enclosed metal enclosure.

DO NOT INSTALL HEATERS ON WOOD PANELS.
Heat sensitive components should not be placed near the heater discharge area since this air can be quite warm. The clearance range defines the space that must be kept free of these components for proper and safe operation of the heater.

DRAFT

Performance Data **100 and 200 Watt Heaters**

CATALOG NUMBERS	DAH1001A	DAH1002A	DAH2001A	DAH2002A
ELECTRICAL DATA				
Rated Voltage	**115**	**230**	**115**	**230**
Frequency (Hz)	50/60	50/60	50/60	50/60
Power Consumption (Watts)	100	100	200	200
Nominal Current (Amps)	0.98	0.49	1.89	0.95
HEATING PERFORMANCE				
Watts	**100**	**100**	**200**	**200**
UNIT CONSTRUCTION				
Weight (lb./kg)	1.6/0.73	1.6/0.73	1.6/0.73	1.6/0.73
X (in./mm)	4.00/102	4.00/102	4.00/102	4.00/102

Performance Data **400 and 800 Watt Heaters**

CATALOG NUMBERS	DAH4001B	DAH4002B	DAH8001B	DAH8002B
ELECTRICAL DATA				
Rated Voltage	**115**	**230**	**115**	**230**
Frequency (Hz)	50/60	50/60	50/60	50/60
Power Consumption (Watts)	400	400	800	800
Nominal Current (Amps)	3.72	1.86	7.37	3.69
HEATING PERFORMANCE				
Watts	**400**	**400**	**800**	**800**
UNIT CONSTRUCTION				
Weight (lb./kg)	2.2/1.00	2.2/1.00	2.2/1.00	2.2/1.00
X (in./mm)	6.00/152	6.00/152	8.00/203	8.00/203

Performance Data **1300 Watt Heaters**

CATALOG NUMBERS	DAH13001C	DAH13002C
ELECTRICAL DATA		
Rated Voltage	**115**	**230**
Frequency (Hz)	50/60	50/60
Power Consumption (Watts)	1300	1300
Nominal Current (Amps)	11.5	5.7
HEATING PERFORMANCE		
Watts	**1300**	**1300**
UNIT CONSTRUCTION		
Weight (lb./kg)	3.4/1.54	3.4/1.54
X (in./mm)	8.00/203	8.00/203

DRAFT

Dimensions and Clearance Range Drawing for DAH1001A, -2A and DAH2001A, -2A

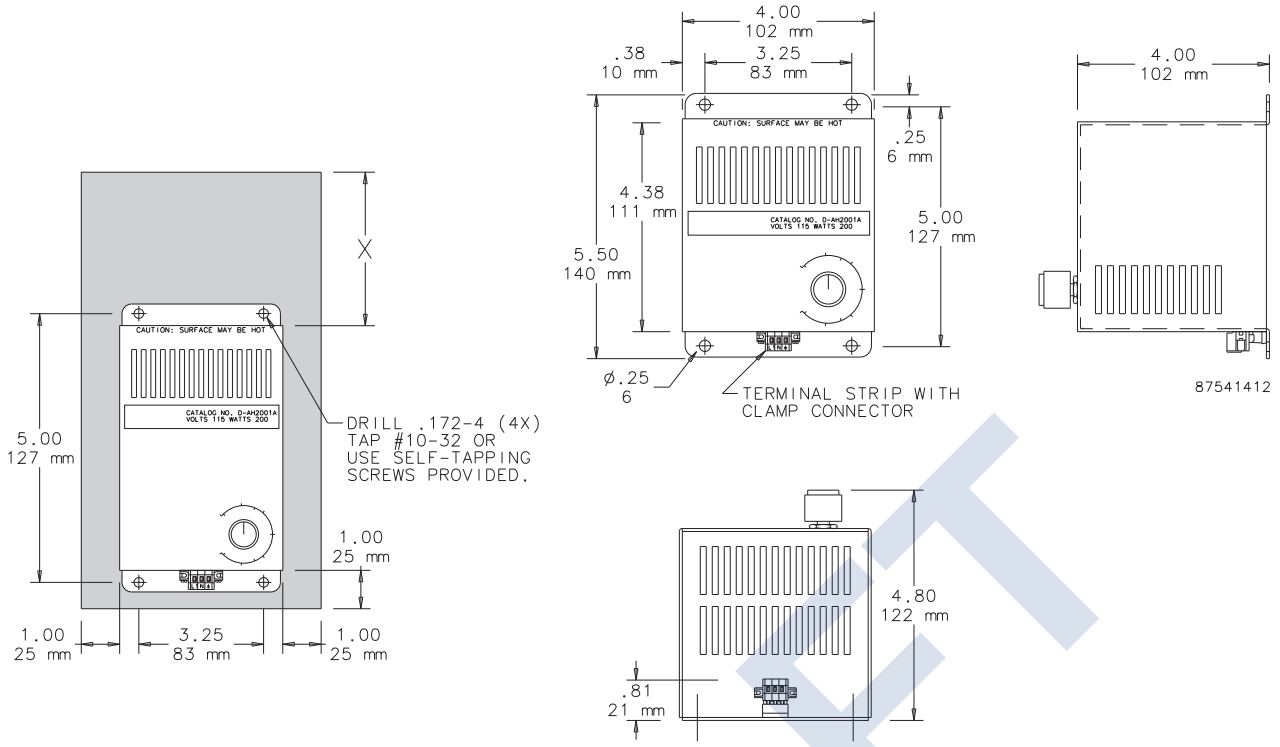

Dimensions and Clearance Range Drawing for DAH4001B, -2B and DAH8001B, -2B

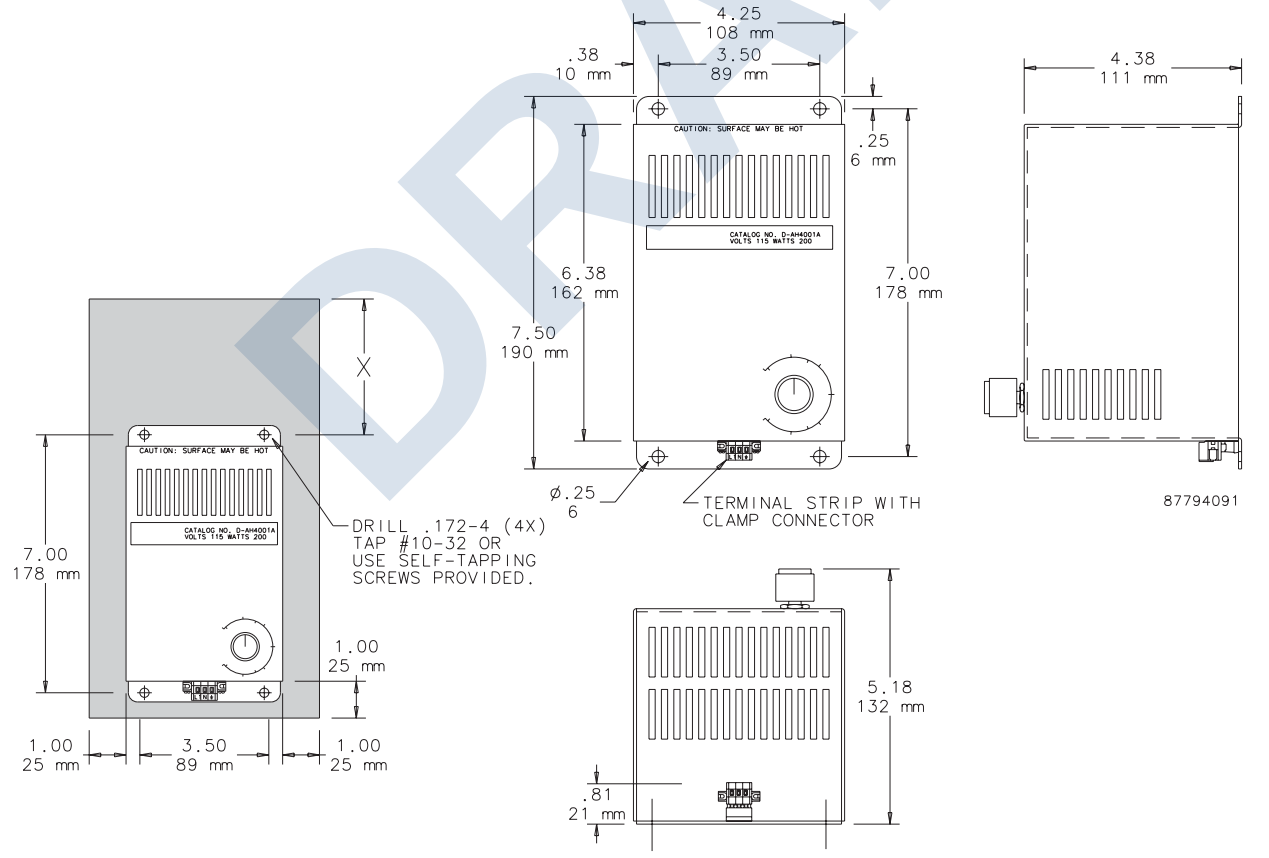

DRAFT

Dimensions and Clearance Range Drawing for DAH13001C and DAH13002C

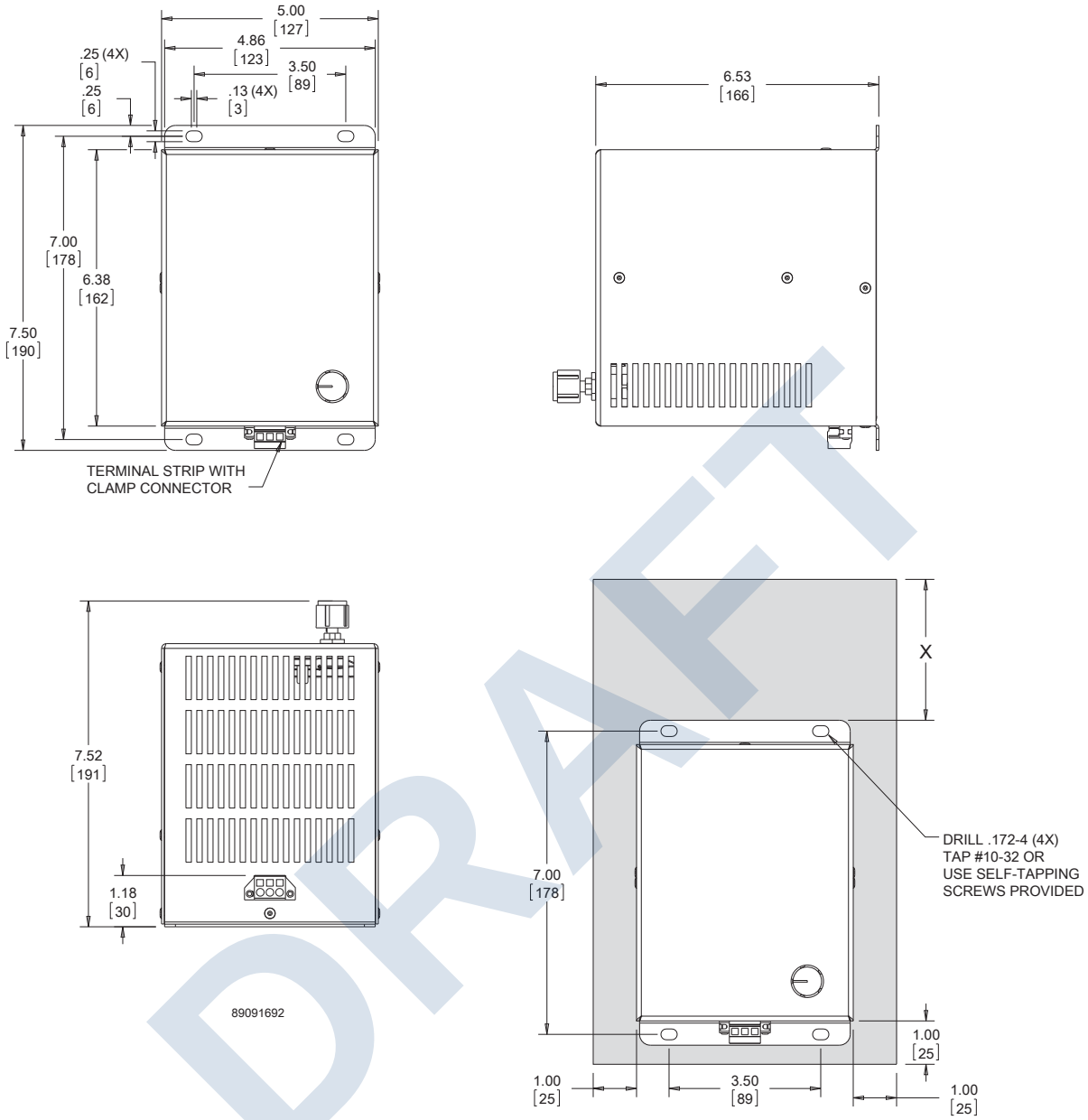

DRAFT

HAZARDOUS LOCATION HEATER



INDUSTRY STANDARDS

CE
Conformity Certificate LCIE (Laboratoire Central des Industries Electriques) LCIE 01 ATEX 6073
EEx d IIC T4/II 2 GD, IP6x T135°C
IEC 60529, IP65/I (grounded)

APPLICATION

Designed for use in hazardous locations where electronic components require protection from condensation and corrosion, sudden temperature drops and low temperatures.

FEATURES

- Maintenance-free
- High-performance heating cartridge (element)
- Large convection surface
- Extruded aluminum heat sink
- DIN clip for mounting
- Connection cable: Si HF-JZ 3 x AWG 18 x 3.3 ft. (0.75 mm² x 1 m)
- Operating voltage 110-120 VAC

FINISH

- Black anodized

Performance Data **Hazardous Location Heater**

CATALOG NUMBERS	
	HLHEAT100
DESIGN DATA	
Heating Power (Watts)	100
Surface Temperature T4 (°F/°C) *	275/135
UNIT CONSTRUCTION	
Unit Dimensions - H x W x D (in. / mm)	7.10/180 x 4.65/118 x 2.70/69

* Surface temperature when mounted vertically.

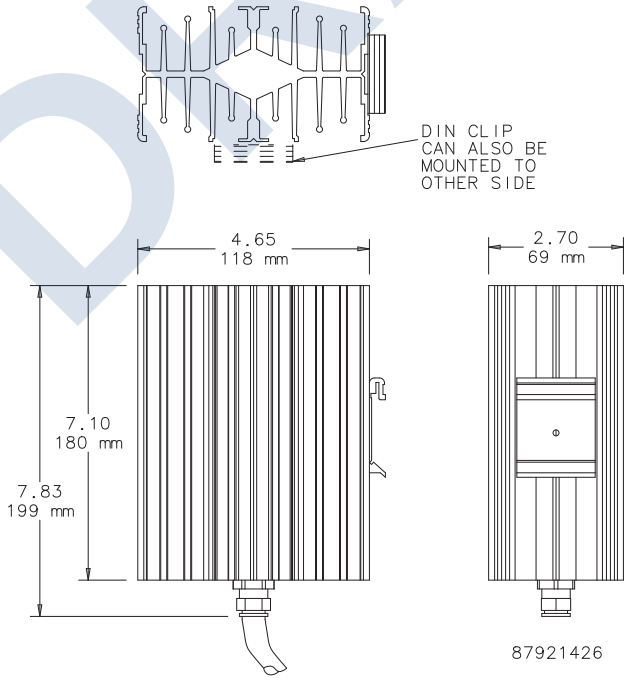

DRAFT

Panduct® Type F Narrow Slot Wiring Duct

- Narrow slot/finger design provides more slots to fit the spacing of high-density terminal blocks and other hardware
- Material: Lead-free PVC
- UL recognized continuous use temperature: 122°F (50°C)
- UL 94 flammability rating of V-0
- Conforms with NFPA 79-2007 section 13.3.1 requirement for flame retardant material
- Provided with mounting holes
- Base and cover length is 6 feet

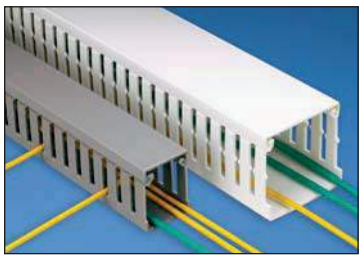

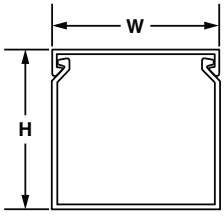

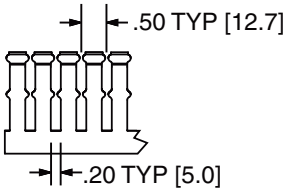

Multiple slot restrictors present with 2" and greater duct wall height.

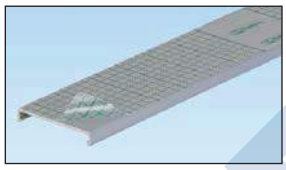

To order cover with protective film add "-F" to part number. 6" cover not available with film.

NEW!

Base Part Number	Duct Size (W x H)* In.	Duct Size (W x H)* mm	Slot Width In.	Slot Width mm	Cover Part Number	Std. Pkg. Qty.	Base Ctn. Qty.	Cover Ctn. Qty.
F.5X.5LG6	0.69 x 0.60	17.5 x 15.2	0.20	5.0	C.5LG6	6	120	120
F.5X1LG6	0.69 x 1.06	17.5 x 26.9	0.20	5.0	C.5LG6	6	120	120
F.75X.75LG6	0.93 x 0.82	23.6 x 20.9	0.20	5.0	C.75LG6	6	120	120
F.75X1.5LG6	0.93 x 1.57	23.6 x 39.9	0.20	5.0	C.75LG6	6	120	120
F1X1LG6	1.26 x 1.13	32.0 x 28.7	0.20	5.0	C1LG6	6	120	120
F1X1.5LG6	1.26 x 1.62	32.0 x 41.1	0.20	5.0	C1LG6	6	120	120
F1X2LG6	1.26 x 2.12	32.0 x 53.8	0.20	5.0	C1LG6	6	120	120
F1X3LG6	1.26 x 3.12	32.0 x 79.2	0.20	5.0	C1LG6	6	120	120
F1X4LG6	1.26 x 4.10	32.0 x 104.1	0.20	5.0	C1LG6	6	60	120
F1.5X1LG6	1.75 x 1.12	44.5 x 28.4	0.20	5.0	C1.5LG6	6	120	120
F1.5X1.5LG6	1.75 x 1.62	44.5 x 41.1	0.20	5.0	C1.5LG6	6	120	120
F1.5X2LG6	1.75 x 2.12	44.5 x 53.8	0.20	5.0	C1.5LG6	6	120	120
F1.5X3LG6	1.75 x 3.12	44.5 x 79.2	0.20	5.0	C1.5LG6	6	120	120
F1.5X4LG6	1.75 x 4.10	44.5 x 104.1	0.20	5.0	C1.5LG6	6	60	120
F2X1LG6	2.25 x 1.12	57.2 x 28.4	0.20	5.0	C2LG6	6	120	120
F2X1.5LG6	2.25 x 1.62	57.2 x 41.1	0.20	5.0	C2LG6	6	120	120
F2X2LG6	2.25 x 2.12	57.2 x 53.8	0.20	5.0	C2LG6	6	120	120
F2X3LG6	2.25 x 3.12	57.2 x 79.2	0.20	5.0	C2LG6	6	60	120
F2X4LG6	2.25 x 4.10	57.2 x 104.1	0.20	5.0	C2LG6	6	60	120
F2X5LG6	2.25 x 5.10	57.2 x 129.5	0.20	5.0	C2LG6	6	60	120
F2.5X3LG6	2.75 x 3.12	69.9 x 79.2	0.20	5.0	C2.5LG6	6	120	120
F3X1LG6	3.25 x 1.12	82.6 x 28.4	0.20	5.0	C3LG6	6	120	120
F3X2LG6	3.25 x 2.12	82.6 x 53.8	0.20	5.0	C3LG6	6	120	120
F3X3LG6	3.25 x 3.12	82.6 x 79.2	0.20	5.0	C3LG6	6	60	120
F3X4LG6	3.25 x 4.10	82.6 x 104.1	0.20	5.0	C3LG6	6	60	120
F3X5LG6	3.25 x 5.10	82.6 x 129.5	0.20	5.0	C3LG6	6	60	120
F4X2LG6	4.25 x 2.12	108.0 x 53.8	0.20	5.0	C4LG6	6	60	120
F4X3LG6	4.25 x 3.12	108.0 x 79.2	0.20	5.0	C4LG6	6	60	120
F4X4LG6	4.25 x 4.10	108.0 x 104.1	0.20	5.0	C4LG6	6	60	120
F4X5LG6	4.25 x 5.10	108.0 x 129.5	0.20	5.0	C4LG6	6	60	120
F6X4LG6	6.25 x 4.15	158.8 x 105.4	0.20	5.0	C6LG6	6	60	120

Part number shown for LG (Light Gray). For other color availability see color selection guide, page C1.48.
Base and cover sold separately.
*"H" dimension includes duct and cover.

DRAFT



Pan-Lug™ LAM2A2/0-14-Q Al Mech,2/0,Tin Plt,1 hole,1/4"Stud,PK25

LAM2A2/0-14-Q

The LAM2A2/0-14-Q Tin-Plated Aluminum Mechanical Lug, one-hole, two barrel, is made from extruded aluminum alloy to provide premium electrical and mechanical performance for wide wire range-taking capability that helps minimize inventory requirements. The plated steel or aluminum set screw provides a durable electrical contract between conductor and Lug. UL Listed and CSA Certified for use up to 600 V and UL temperature rated 90 Degrees Celsius.

Specifications

Product Type	Mechanical Lug
Sub Brand	Pan-Lug™
Application	Stranded Aluminum or Copper Code Conductor
Base Material	Aluminum
Maximum Aluminum Conductor Size (AWG)	2/0
Minimum Aluminum Conductor Size (AWG)	14
Maximum Copper Conductor Size (AWG STR)	2/0
Minimum Copper Conductor Size (AWG STR)	14
Stud Hole Size (In.)	1/4
Stud Hole Size (mm)	6.35
Number of Holes	1
Number of Ports	2
Tongue Type	Straight Tongue
Tongue Angle	Straight
Tongue Length (In.)	0.85
Tongue Length (mm)	21.6
Tongue Thickness (In.)	0.19
Tongue Thickness (mm)	4.8
Tongue Width (In.)	1.2
Tongue Width (mm)	30.6
Overall Length (In.)	1.47
Overall Length (mm)	37.3

DRAFT

Specifications (continued)

Overall Width (In.)	1.2
Overall Width (mm)	30.5
Overall Height (In.)	0.8
Overall Height (mm)	19.9
Barrel Type	Two Barrel
Barrel Length (In.)	0.63
Barrel Length (mm)	16
Insulation Material	Non-Insulated
Finish/Coating	Tin-Plated
Standards Met	cULus Listed for use up to 600V & Temperature Rated to 90°C
CSA Temperature Rating (°C)	90
UL Temperature Rating (°C)	90
Maximum Voltage (V)	600
Hex Size (In.)	3/16
Hex Size (mm)	4.8
Wire Strip Length (In.)	0.62
Wire Strip Length (mm)	15.7

Packaging Detail

UPC	61305687842
Std. Pkg. Qty.	25
Std. Pkg. Volume (cf)	0.0017
Std. Ctn. Qty.	500
Std. Ctn. Volume (cf)	0.0347

DRAFT

WSI 6/2/LD 60-150VDC/AC

Weidmüller Interface GmbH & Co. KG
Klingenbergstraße 26
D-32758 Detmold
Germany

www.weidmueller.com

Product image



In some applications it is useful to protect the feed through connection with a separate fuse. Fuse terminal blocks are made up of one terminal block bottom section with a fuse insertion carrier. The fuses vary from pivoting fuse levers and pluggable fuse holders to screwable closures and flat plug-in fuses.

DRAFT

General ordering data

Version	W-Series, Fuse terminal, Rated cross-section: 6 mm², Screw connection
Order No.	1014300000
Type	WSI 6/2/LD 60-150VDC/AC
GTIN (EAN)	4008190084424
Qty.	25 pc(s).

WSI 6/2/LD 60-150VDC/AC

Weidmüller Interface GmbH & Co. KG
Klingenbergstraße 26
D-32758 Detmold
Germany

www.weidmueller.com

Technical data

Dimensions and weights

Depth	78.5 mm	Depth (inches)	3.091 inch
Depth including DIN rail	79.5 mm	Height	60 mm
Height (inches)	2.362 inch	Width	11.9 mm
Width (inches)	0.469 inch	Net weight	25.44 g

Temperatures

Storage temperature	-25 °C...55 °C	Continuous operating temp., min.	-50 °C
Continuous operating temp., max.	120 °C		

Material data

Material	Wemid	Colour	dark beige
UL 94 flammability rating	V-0		

System specifications

Version	Screw connection, Fuse isolator, with LED, for screwable cross-connection, One end without connector	End cover plate required	Yes
Number of potentials	1	Number of levels	1
Number of clamping points per level	2	Number of potentials per tier	1
Levels cross-connected internally	No	PE connection	No
Rail	TS 35	N-function	No
PE function	No	PEN function	No

2 clampable conductors (H05V/H07V) with equal cross-section (rated connection)

Wire connection cross section, finely stranded with wire-end ferrules DIN 46228/1, 2 clampable wires, max.	2.5 mm²	Wire connection cross section, finely stranded with wire-end ferrules DIN 46228/1, 2 clampable wires, min.	0.5 mm²
Wire connection cross section, finely stranded, two clampable wires, min.	0.5 mm²	Wire cross-section, finely stranded, two clampable wires, max.	2.5 mm²

Additional technical data

Explosion-tested version	No	Number of similar terminals	1
Open sides	right	Type of mounting	Snap-on

CSA rating data

Certificate No. (CSA)	200039-1057876	Wire cross section max. (CSA)	6 AWG
Wire cross section min. (CSA)	20 AWG		

Conductors for clamping (additional connection)

Conductor cross-section, flexible plus plastic collar DIN 46228/1, further connection, max.	6 mm²

Conductors for clamping (rated connection)

Blade size	0.8 x 4.0 mm

DRAFT

WSI 6/2/LD 60-150VDC/AC

Weidmüller Interface GmbH & Co. KG
Klingenbergstraße 26
D-32758 Detmold
Germany

www.weidmueller.com

Technical data

Clampable conductor	Connection specification	Screw connection		
	Cross-section for conductor connection	Type	solid, H05(07) V-U	
		min.	0.5 mm²	
		max.	10 mm²	
		nominal	6 mm²	
	wire end ferrule	Stripping length	min.	12 mm
			max.	12 mm
			nominal	12 mm
		Tightening torque	min.	0.8 Nm
			max.	1.6 Nm
		Recommended wire-end ferrule		
	Connection specification	Screw connection		
	Cross-section for conductor connection	Type	stranded, H07V-R	
		min.	1.5 mm²	
		max.	10 mm²	
		nominal	6 mm²	
	wire end ferrule	Stripping length	min.	12 mm
			max.	12 mm
			nominal	12 mm
		Tightening torque	min.	0.8 Nm
			max.	1.6 Nm
		Recommended wire-end ferrule		
	Connection specification	Screw connection		
	Cross-section for conductor connection	Type	flexible, H05(07) V-K	
		min.	0.5 mm²	
		max.	10 mm²	
		nominal	6 mm²	
	wire end ferrule	Stripping length	min.	12 mm
			max.	12 mm
			nominal	12 mm
		Tightening torque	min.	0.8 Nm
			max.	1.6 Nm
		Recommended wire-end ferrule		

Clamping range, max.	10 mm²
Clamping range, min.	0.5 mm²
Clamping screw	M 3.5
Connection cross-section, stranded, max.	10 mm²
Connection cross-section, stranded, min.	1.5 mm²
Connection direction	on side
Gauge to IEC 60947-1	A5
Number of connections	2
Stripping length	12 mm
Tightening torque, max.	1.6 Nm
Tightening torque, min.	0.8 Nm
Torque level with DMS electric screwdriver	3
Type of connection	Screw connection
Wire connection cross section AWG, max.	AWG 8
Wire connection cross section AWG, min.	AWG 20
Wire connection cross section, finely stranded, max.	10 mm²
Wire connection cross section, finely stranded, min.	0.5 mm²

DRAFT

WSI 6/2/LD 60-150VDC/AC

Weidmüller Interface GmbH & Co. KG
Klingenbergstraße 26
D-32758 Detmold
Germany

www.weidmueller.com

Technical data

Wire connection cross-section, finely stranded with wire-end ferrules DIN 46228/1, max.	6 mm²
Wire connection cross-section, finely stranded with wire-end ferrules DIN 46228/1, min.	0.5 mm²
Wire connection cross-section, finely stranded with wire-end ferrules DIN 46228/4, max.	6 mm²
Wire connection cross-section, finely stranded with wire-end ferrules DIN 46228/4, min.	0.5 mm²
Wire connection cross-section, solid core, max.	10 mm²
Wire connection cross-section, solid core, min.	0.5 mm²

Display element

Operating voltage for display, max.	150 V	Operating voltage for display, min.	60 V
Type of voltage for indicator	AC/DC		

Fuse terminals

Cartridge fuse	G-Si. 1 x 1/4	Display	Red LED
Fuse holder (cartridge holder)	Pivoting	Operating voltage, max.	150 V
Type of voltage for indicator	AC/DC		

General

Rail	TS 35	Standards	IEC 60947-7-3
Wire connection cross section AWG, max.	AWG 8	Wire connection cross section AWG, min.	AWG 20

Rating data

Rated cross-section	6 mm²	Rated voltage	150 V
Rated voltage to adjoining terminal	500 V	Rated current	6.3 A
Current at maximum wires	6.3 A	Standards	IEC 60947-7-3
Volume resistance according to IEC 60947-7-x	0.78 mΩ	Rated impulse withstand voltage	6 kV
Power loss in accordance with IEC 60947-7-x	1.31 W	Pollution severity	3

UL rating data

Certificate No. (UR)	E60693	Conductor size Factory wiring max. (UR)	8 AWG
Conductor size Factory wiring min. (UR)	22 AWG	Conductor size Field wiring max. (UR)	8 AWG
Conductor size Field wiring min. (UR)	22 AWG		

Classifications

ETIM 6.0	EC000899	ETIM 7.0	EC000899
ETIM 8.0	EC000899	ECLASS 9.0	27-14-11-16
ECLASS 9.1	27-14-11-16	ECLASS 10.0	27-14-11-16
ECLASS 11.0	27-14-11-16	ECLASS 12.0	27-14-11-16

DRAFT

WSI 6/2/LD 60-150VDC/AC

Weidmüller Interface GmbH & Co. KG
Klingenbergstraße 26
D-32758 Detmold
Germany

www.weidmueller.com

Technical data

Important note

Product information	The voltage depends on the selected fuse element or the selected indicator light

Approvals

Approvals	
ROHS	Conform
UL File Number Search	UL Website
Certificate No. (UR)	E60693

Downloads

Approval/Certificate/Document of Conformity	CB Testreport CB Certificate EAC certificate DNVGL certificate Lloyds Register Certificate MARITREG Certificate CE Declaration of Conformity CE Declaration of Conformity all terminals UKCA declaration of conformity
Engineering Data	CAD data – STEP
Engineering Data	WSCAD, Zuken E3.S, EPLAN
User Documentation	Beipackzettel_SAKS_GL_LD.pdf StorageConditionsTerminalBlocks
Catalogues	Catalogues in PDF-format
Brochures	

DRAFT

WSI 6/2/LD 60-150VDC/AC

Weidmüller Interface GmbH & Co. KG
Klingenbergstraße 26
D-32758 Detmold
Germany

www.weidmueller.com

Drawings

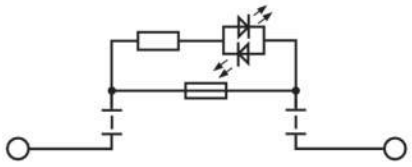

DRAFT

MDL

1/4" x 1 1/4" Time-delay glass tube fuses

RoHS

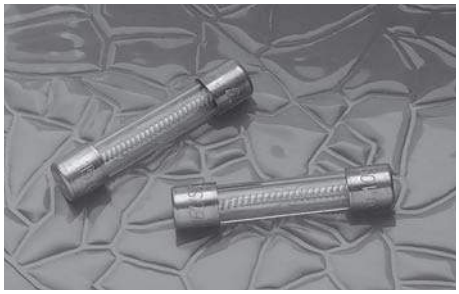

Product features

- Time-delay
- Optional axial leads available
- 1/4 x 1 1/4 (6.4 x 31.7mm) physical size
- Glass tube, nickel-plated brass endcap construction
- UL Listed product meets standard 248-14

Environmental data

- Shock: 1A thru 30A – MIL-STD-202, Method 207, (HI Shock)
- Vibration: 1/4A thru 30A – MIL-STD-202, Method 204, Test Condition C (Except 5g, 500HZ)

Agency information

- UL Listed Card: MDL 1/16 - 8A (Guide JDYX, File E19180)
- UL Recognized Card: MDL 9 - 30A (Guide JDYX2, File E19180)
- CSA Certification Card: MDL 1/16 - 8A (Class No. 1422-01)
- CSA Component Acceptance: MDL 9-30A (Class No. 1422-30)
- CE

Ordering

- Specify packaging code
- Insert packaging code prefix before part number. E.g., BK (or BK1)-MDL-5-R
- Specify option codes if desired
- For axial leads, insert "V" between catalog series and amp rating. E.g., BK-MDL-V-5-R
- For board washable, insert "B" between catalog series and amp rating. E.g., BK-MDL-B-5-R
- For axial leads and board washable, insert "B" then "V" between catalog series and amp rating. E.g., BK-MDL-BV-5-R

DRAFT

Part Number	Voltage Rating Vac	Specifications: AC Interrupting Rating* (amps)@ 250Vac	125Vac	32Vac	Typical DC Cold Resistance** (Ω)	Typical Melting I ²t† AC	Typical Voltage Drop‡
MDL-1/16-R	250	35	10000	-	45.6	0.0046	2.79
MDL-1/10-R	250	35	10000	-	15.68	0.0420	1.95
MDL-1/8-R	250	35	10000	-	12.238	0.0422	1.52
MDL-3/16-R	250	35	10000	-	4.81	0.116	1.05
MDL-2/10-R	250	35	10000	-	5.234	0.314	0.972
MDL-1/4-R	250	35	10000	-	3.208	0.447	0.965
MDL-3/10-R	250	35	10000	-	2.046	0.412	0.808
MDL-3/8-R	250	35	10000	-	1.567	0.982	1.46
MDL-1/2-R	250	35	10000	-	0.943	1.656	1.27
MDL-3/4-R	250	35	10000	-	0.397	4.343	1.01
MDL-1-R	250	35	10000	-	0.273	11.498	0.995
MDL-1-1/4-R	250	100	10000	-	0.205	86.2	0.722
MDL-1-1/2-R	250	100	10000	-	0.156	22.7	0.721
MDL-2-R	250	100	10000	-	0.116	62.3	0.644
MDL-2-1/4-R	250	100	10000	-	0.096	49.6	0.535
MDL-2-1/2-R	250	100	10000	-	0.081	63.1	0.410
MDL-3-R	250	100	10000	-	0.057	67.5	0.345
MDL-4-R	250	200	10000	-	0.038	19.3	0.187
MDL-5-R	250	200	10000	-	0.025	32.0	0.160
MDL-6-R	250	200	10000	-	0.022	37.4	0.155
MDL-6-1/4-R	250	200	10000	-	0.02	38.7	0.152
MDL-7-R	250	200	10000	-	0.018	42.7	0.140
MDL-8-R	250	200	10000	-	0.015	47.8	0.119
MDL-9-R	32	-	-	1000	0.012	51.5	0.124
MDL-10-R	32	-	-	1000	0.01	64.4	0.114
MDL-15-R	32	-	-	1000	0.005	354.0	0.130
MDL-20-R	32	-	-	1000	0.004	2914.0	0.530
MDL-25††	32	-	-	1000	0.01225	15221.0	0.30
MDL-30††	32	-	-	1000	0.0011	15581.0	0.40

* Interrupting Ratings (Interrupting ratings were measured at 70% - 80% power factor on AC)
** DC Cold Resistance (Measured at ≤10% of rated current)
† Typical Melting I ²t (A²Sec) (I ²t was measured at listed interrupting rating and rated voltage.)
‡ Typical Voltage Drop (Voltage drop was measured at 25°C±3°C ambient temperature at rated current)
†† MDL-25 & MDL-30 not available in RoHS compliant construction.

EATON
Powering Business Worldwide

Dimensions - mm (in)

Drawing Not to Scale

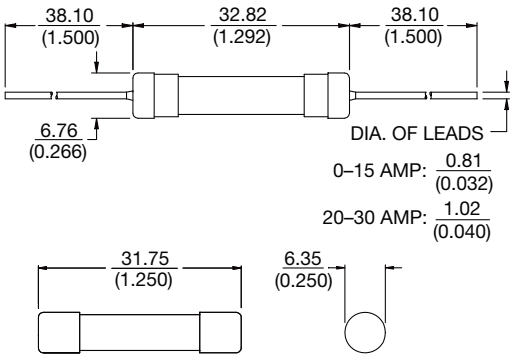

Time-Current Curve

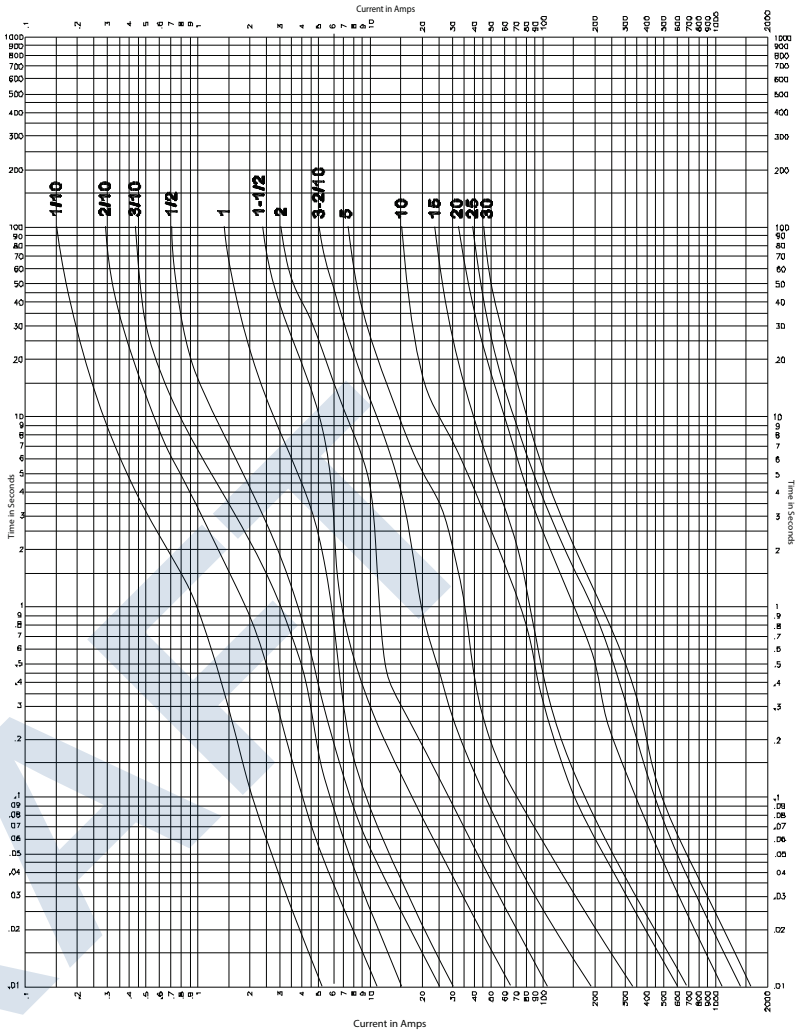

Packaging Code	
Packaging Code	Description
BK	100 fuses packed into a cardboard carton

	Option Code
Option Code	Description
B	Sealed to withstand aqueous cleaning (Board Washable)
V	Axial leads - copper tinned wire with nickel plated brass overcaps

Life Support Policy: Eaton does not authorize the use of any of its products for use in life support devices or systems without the express written approval of an officer of the Company. Life support systems are devices which support or sustain life, and whose failure to perform, when properly used in accordance with instructions for use provided in the labeling, can be reasonably expected to result in significant injury to the user.

Eaton reserves the right, without notice, to change design or construction of any products and to discontinue or limit distribution of any products. Eaton also reserves the right to change or update, without notice, any technical information contained in this bulletin.

Eaton
Electronics Division
1000 Eaton Boulevard
Cleveland, OH 44122
United States
www.eaton.com/electronics

© 2017 Eaton
All Rights Reserved
Printed in USA
Publication No. 2004 SB-BU08675
June 2017

Eaton is a registered trademark.

All other trademarks are property of their respective owners.

Powering Business Worldwide

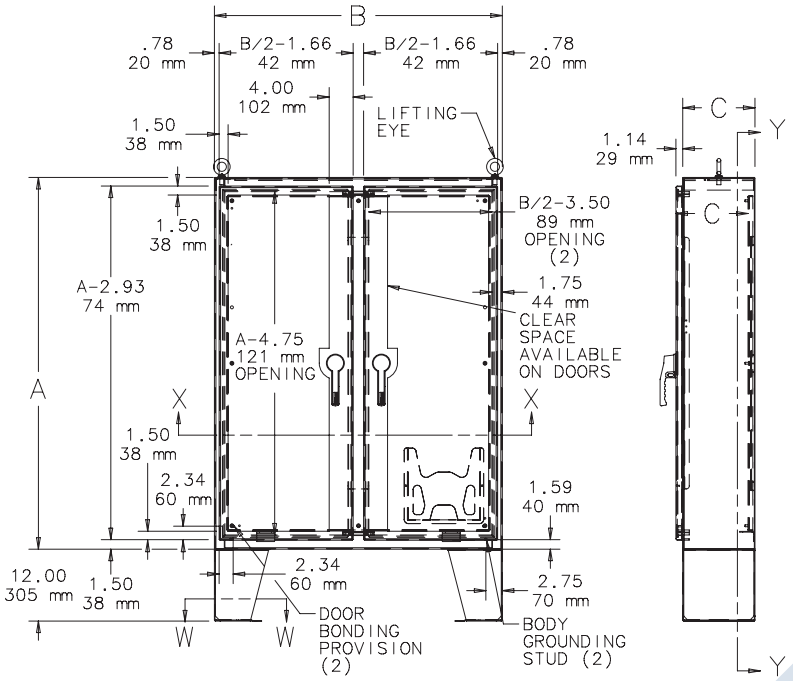

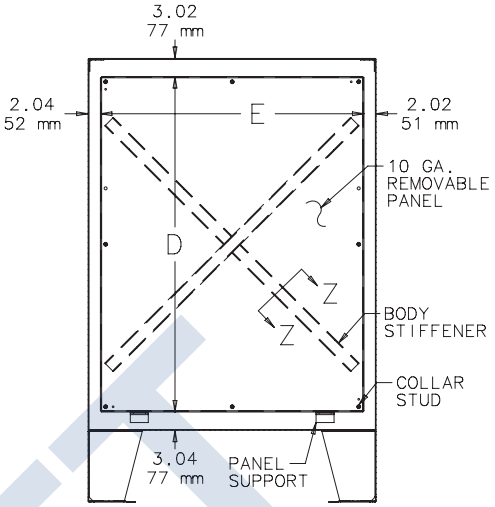

SECTION Y-Y

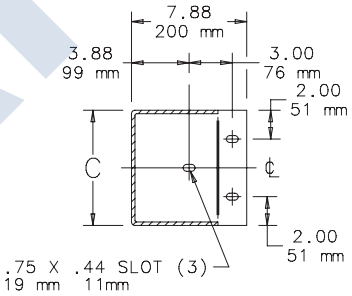

SECTION W-W

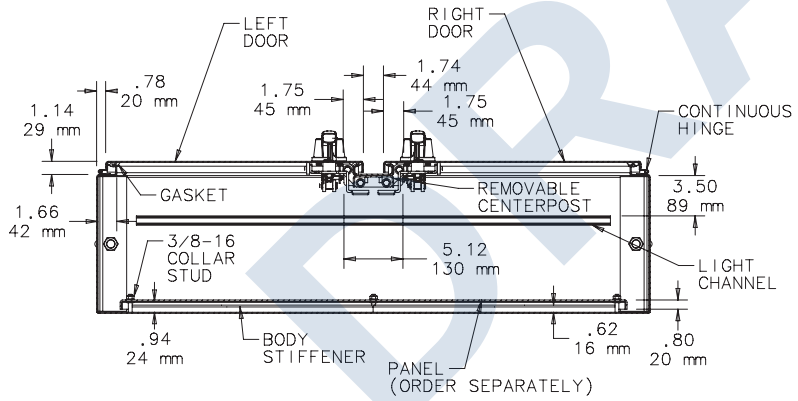

SECTION X-X

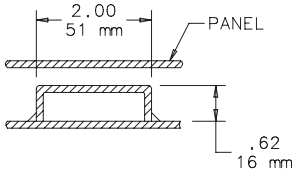

SECTION Z-Z

87784698

DRAFT

Data sheet

WSI 6/2/LD 10-36V DC/AC

Weidmüller Interface GmbH & Co. KG
Klingenbergstraße 26
D-32758 Detmold
Germany

www.weidmueller.com

Product image



In some applications it is useful to protect the feed through connection with a separate fuse. Fuse terminal blocks are made up of one terminal block bottom section with a fuse insertion carrier. The fuses vary from pivoting fuse levers and pluggable fuse holders to screwable closures and flat plug-in fuses.

DRAFT

General ordering data

Version	W-Series, Fuse terminal, Rated cross-section: 6 mm², Screw connection
Order No.	1014100000
Type	WSI 6/2/LD 10-36V DC/AC
GTIN (EAN)	4008190156954
Qty.	25 pc(s).

WSI 6/2/LD 10-36V DC/AC

Weidmüller Interface GmbH & Co. KG
Klingenbergstraße 26
D-32758 Detmold
Germany

www.weidmueller.com

Technical data

Dimensions and weights

Depth	78.5 mm	Depth (inches)	3.091 inch
Depth including DIN rail	79.5 mm	Height	60 mm
Height (inches)	2.362 inch	Width	11.9 mm
Width (inches)	0.469 inch	Net weight	25.48 g

Temperatures

Storage temperature	-25 °C...55 °C	Continuous operating temp., min.	-50 °C
Continuous operating temp., max.	120 °C		

Material data

Material	Wemid	Colour	dark beige
UL 94 flammability rating	V-0		

System specifications

Version	Screw connection, Fuse isolator, with LED, for screwable cross-connection, One end without connector	End cover plate required	Yes
Number of potentials	1	Number of levels	1
Number of clamping points per level	2	Number of potentials per tier	1
Levels cross-connected internally	No	PE connection	No
Rail	TS 35	N-function	No
PE function	No	PEN function	No

2 clampable conductors (H05V/H07V) with equal cross-section (rated connection)

Wire connection cross section, finely stranded with wire-end ferrules DIN 46228/1, 2 clampable wires, max.	2.5 mm²	Wire connection cross section, finely stranded with wire-end ferrules DIN 46228/1, 2 clampable wires, min.	0.5 mm²
Wire connection cross section, finely stranded, two clampable wires, min.	0.5 mm²	Wire cross-section, finely stranded, two clampable wires, max.	2.5 mm²

Additional technical data

Explosion-tested version	No	Number of similar terminals	1
Open sides	right	Type of mounting	Snap-on

CSA rating data

Certificate No. (CSA)	200039-1057876	Wire cross section max. (CSA)	6 AWG
Wire cross section min. (CSA)	20 AWG		

Conductors for clamping (additional connection)

Conductor cross-section, flexible plus plastic collar DIN 46228/1, further connection, max.	6 mm²

Conductors for clamping (rated connection)

Blade size	0.8 x 4.0 mm

DRAFT

WSI 6/2/LD 10-36V DC/AC

Weidmüller Interface GmbH & Co. KG
Klingenbergstraße 26
D-32758 Detmold
Germany

www.weidmueller.com

Technical data

Clampable conductor	Connection specification	Screw connection		
	Cross-section for conductor connection	Type	solid, H05(07) V-U	
		min.	0.5 mm²	
		max.	10 mm²	
		nominal	6 mm²	
	wire end ferrule	Stripping length	min.	12 mm
			max.	12 mm
			nominal	12 mm
		Tightening torque	min.	0.8 Nm
			max.	1.6 Nm
		Recommended wire-end ferrule		
	Connection specification	Screw connection		
	Cross-section for conductor connection	Type	stranded, H07V-R	
		min.	1.5 mm²	
		max.	10 mm²	
		nominal	6 mm²	
	wire end ferrule	Stripping length	min.	12 mm
			max.	12 mm
			nominal	12 mm
		Tightening torque	min.	0.8 Nm
			max.	1.6 Nm
		Recommended wire-end ferrule		
	Connection specification	Screw connection		
	Cross-section for conductor connection	Type	flexible, H05(07) V-K	
		min.	0.5 mm²	
		max.	10 mm²	
		nominal	6 mm²	
	wire end ferrule	Stripping length	min.	12 mm
			max.	12 mm
			nominal	12 mm
		Tightening torque	min.	0.8 Nm
			max.	1.6 Nm
		Recommended wire-end ferrule		

Clamping range, max.	10 mm²
Clamping range, min.	0.5 mm²
Clamping screw	M 3.5
Connection cross-section, stranded, max.	10 mm²
Connection cross-section, stranded, min.	1.5 mm²
Connection direction	on side
Gauge to IEC 60947-1	A5
Number of connections	2
Stripping length	12 mm
Tightening torque, max.	1.6 Nm
Tightening torque, min.	0.8 Nm
Torque level with DMS electric screwdriver	3
Type of connection	Screw connection
Wire connection cross section AWG, max.	AWG 8
Wire connection cross section AWG, min.	AWG 20
Wire connection cross section, finely stranded, max.	10 mm²
Wire connection cross section, finely stranded, min.	0.5 mm²

DRAFT

WSI 6/2/LD 10-36V DC/AC

Weidmüller Interface GmbH & Co. KG
Klingenbergstraße 26
D-32758 Detmold
Germany

www.weidmueller.com

Technical data

Wire connection cross-section, finely stranded with wire-end ferrules DIN 46228/1, max.	6 mm²
Wire connection cross-section, finely stranded with wire-end ferrules DIN 46228/1, min.	0.5 mm²
Wire connection cross-section, finely stranded with wire-end ferrules DIN 46228/4, max.	6 mm²
Wire connection cross-section, finely stranded with wire-end ferrules DIN 46228/4, min.	0.5 mm²
Wire connection cross-section, solid core, max.	10 mm²
Wire connection cross-section, solid core, min.	0.5 mm²

Display element

Operating voltage for display, max.	36 V	Operating voltage for display, min.	10 V
Type of voltage for indicator	AC/DC		

Fuse terminals

Cartridge fuse	G-Si. 1 x 1/4	Display	Red LED
Fuse holder (cartridge holder)	Pivoting	Operating voltage, max.	36 V
Type of voltage for indicator	AC/DC		

General

Rail	TS 35	Standards	IEC 60947-7-3
Wire connection cross section AWG, max.	AWG 8	Wire connection cross section AWG, min.	AWG 20

Rating data

Rated cross-section	6 mm²	Rated voltage	36 V
Rated voltage to adjoining terminal	500 V	Rated current	6.3 A
Current at maximum wires	6.3 A	Standards	IEC 60947-7-3
Volume resistance according to IEC 60947-7-x	0.78 mΩ	Rated impulse withstand voltage	6 kV
Power loss in accordance with IEC 60947-7-x	1.31 W	Pollution severity	3

UL rating data

Certificate No. (UR)	E60693	Conductor size Factory wiring max. (UR)	8 AWG
Conductor size Factory wiring min. (UR)	22 AWG	Conductor size Field wiring max. (UR)	8 AWG
Conductor size Field wiring min. (UR)	22 AWG		

Classifications

ETIM 6.0	EC000899	ETIM 7.0	EC000899
ETIM 8.0	EC000899	ECLASS 9.0	27-14-11-16
ECLASS 9.1	27-14-11-16	ECLASS 10.0	27-14-11-16
ECLASS 11.0	27-14-11-16	ECLASS 12.0	27-14-11-16

DRAFT

WSI 6/2/LD 10-36V DC/AC

Weidmüller Interface GmbH & Co. KG
Klingenbergstraße 26
D-32758 Detmold
Germany

www.weidmueller.com

Drawings

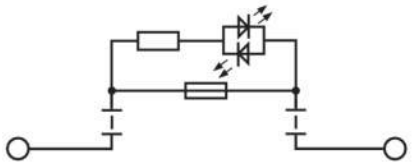

DRAFT

AGC

1/4" x 1-1/4" Fast-acting glass tube fuses

RoHS



Product features

- Fast-acting
- Optional axial leads available
- 1/4" x 1-1/4" (6.3 mm x 32 mm) physical size
- Glass tube, nickel-plated brass end cap construction
- UL Listed product meets standard 248-14

Applications

Primary circuit protection

- Power supplies
- Battery chargers
- Monitors
- Consumer electronics
- Test equipment

Agency information

- UL Listed card: File E19180, Guide JDYX (AGC 1/10 A - 10 A)
- UL Recognition card: File E19180, Guide JDYX2 (AGC 11 A - 40 A)
- CSA Component acceptance card (Class No. 1422-30)
- CSA Certification acceptance card (Class No. 1422–01)

Ordering code

The ordering code is the part number replacing the "/" with a "-" plus adding the packaging prefix and option code.

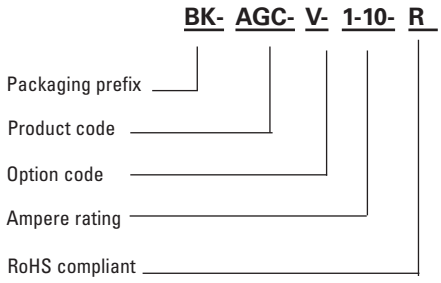

Packaging prefix

- Blank (5 ferrule/cartridge parts in a 5 inch tin, 4 axial lead parts in a 5 inch tin)
- BK- (100 parts packed into a cardboard carton with flaps folded)

Option code

- -B- (Board washable - Hermetically sealed to withstand aqueous cleaning)
- -V- (Axial leads - copper tinned wire with nickel-plated brass end caps)

DRAFT

Electrical characteristics

Amp Rating	% of Amp Rating	Opening Time
1/10 A – 40 A	100%	4 hours minimum
1/10 A – 40 A	135%	60 minutes maximum
1/10 A – 40 A	200%	120 seconds maximum

Product specifications

			AC Interrupting rating (A)					
Part Number	Current rating (A)	Voltage rating (Vac)	250 V	125 V	32 V	Typical DC cold resistance[1] (Ω)	Typical melting[2] I^2t (A^2s)	Typical voltage drop[3] (V)
AGC-1/10-R	0.1	250	35	10,000	1000	17.55	0.0010	15.168
AGC-1/8-R	0.125	250	35	10,000	1000	10.825	0.0020	10.854
AGC-3/16-R	0.1875	250	35	10,000	1000	6.050	0.0070	7.652
AGC-2/10-R	0.5	250	35	10,000	1000	4.800	0.0080	6.105
AGC-1/4-R	0.25	250	35	10,000	1000	1.550	0.0160	0.984
AGC-3/10-R	0.3	250	35	10,000	1000	1.084	0.0270	0.886
AGC-3/8-R	0.375	250	35	10,000	1000	0.703	0.0900	0.548
AGC-1/2-R	0.5	250	35	10,000	1000	0.483	0.3850	0.324
AGC-3/4-R	0.75	250	35	10,000	1000	0.272	1.7160	0.309
AGC-1-R	1.0	250	35	10,000	1000	0.167	3.2400	0.256
AGC-1-1/4-R	1.25	250	100	10,000	1000	0.122	5.0940	0.222
AGC-1-1/2-R	1.5	250	100	10,000	1000	0.077	9.0230	0.218
AGC-2-R	2.0	250	100	10,000	1000	0.063	17.520	0.199
AGC-2-1/4-R	2.25	250	100	10,000	1000	0.052	22.832	0.194
AGC-2-1/2-R	2.5	250	100	10,000	1000	0.045	28.688	0.193
AGC-3-R	3.0	250	100	10,000	1000	0.035	45.900	0.191
AGC-4-R	4.0	250	200	10,000	1000	0.024	86.560	0.179
AGC-5-R	5.0	250	200	10,000	1000	0.019	131.500	0.170
AGC-6-R	6.0	250	200	10,000	1000	0.015	144.360	0.165
AGC-7-R	7.0	250	200	10,000	1000	0.012	195.02	0.159
AGC-7-1/2-R	7.5	250	200	10,000	1000	0.012	216.00	0.155
AGC-8-R	8.0	250	200	10,000	1000	0.009	256.00	0.152
AGC-9-R	9.0	250	200	10,000	1000	0.009	395.28	0.148
AGC-10-R	10	250	200	10,000	1000	0.008	486.00	0.141
AGC-12-R	12	32	—	—	1000	0.006	696.96	0.138
AGC-14-R	14	32	—	—	1000	0.005	776.16	0.132
AGC-15-R	15	32	—	—	1000	0.005	807.75	0.128
AGC-20-R	20	32	—	—	1000	0.0034	2440.00	0.125
AGC-25-R	25	32	—	—	1000	0.0027	3875.00	0.120
AGC-30-R	30	32	—	—	1000	0.0024	4950.00	0.135
AGC-35-R	35	32	—	—	1000	0.0021	7350.00	0.130
AGC-40-R	40	32	—	—	1000	0.0016	11360.00	0.125

1. DC cold resistance measured at <10% of rated current
2. Typical melting I^2t measured at listed interrupting rating and rated voltage
3. Typical voltage drop measured at +25 °C and rated current

DRAFT

Dimensions–mm

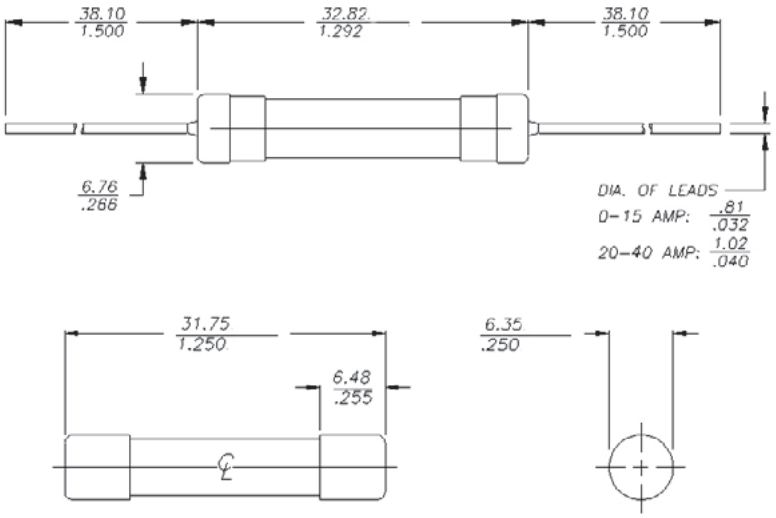

Temperature derating curve

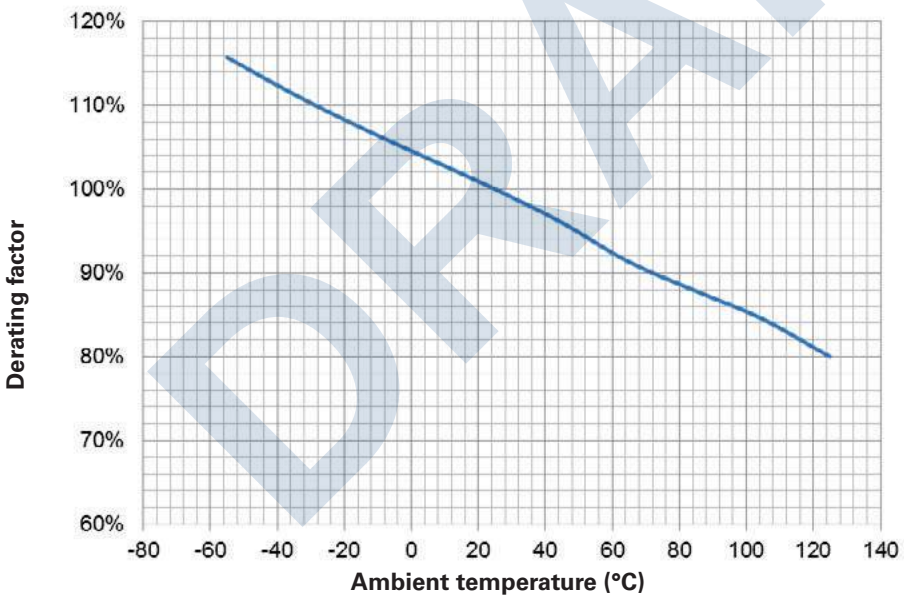

General specifications

Operating temperature: -55 °C to +125 °C (with derating)
Shock: 1/10 A to 3/4 A, MIL-STD-202, Method 213, Test Condition I 1 A to 30 A, MIL-STD-202, Method 207, (HI Shock)
Vibration: 1/10 A to 30 A MIL-STD-202, Method 204, Test Condition A (Except 5f, 500HZ)

DRAFT

Time current curve

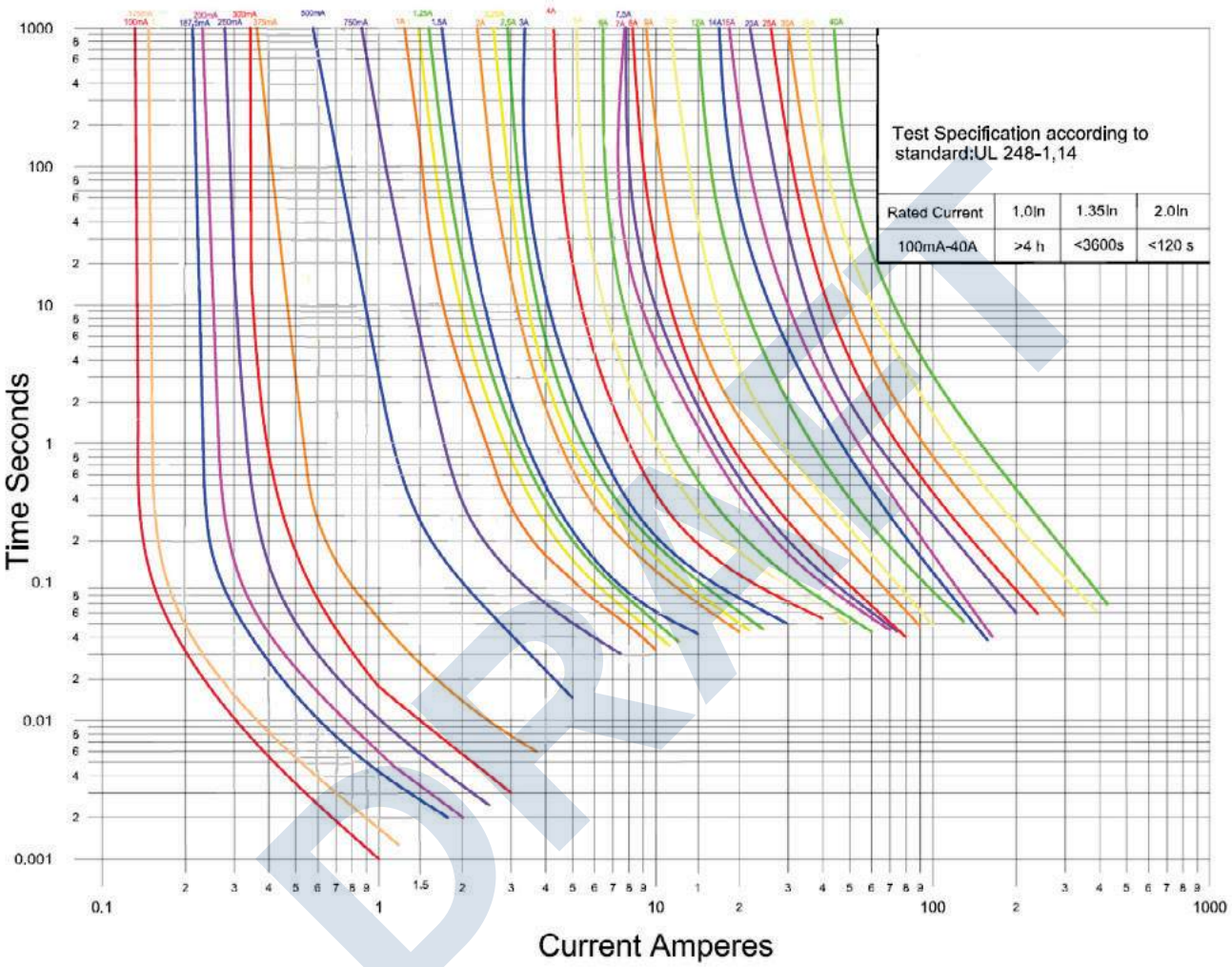

DRAFT

Wave solder profile (Axial lead only)

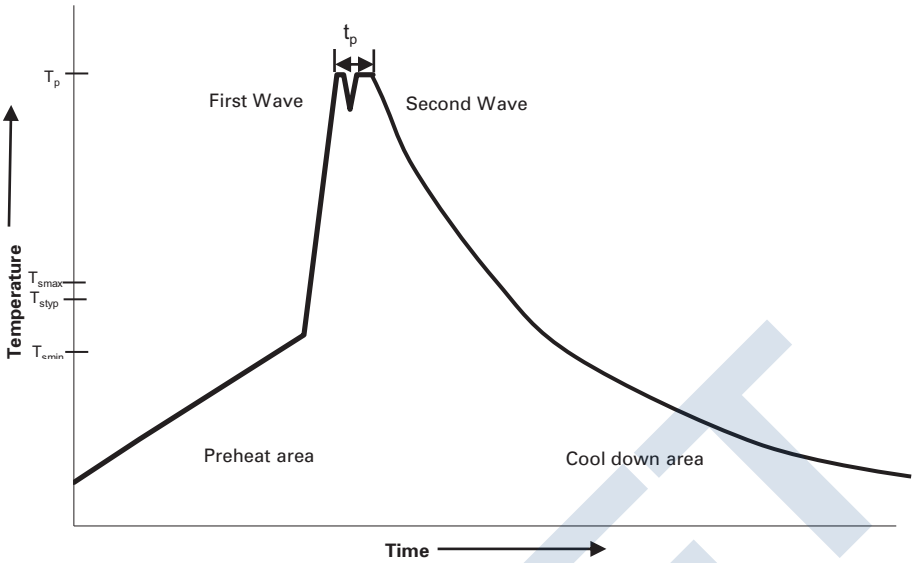

Reference EN 61760-1:2006

Profile feature		Standard SnPb solder	Lead (Pb) free solder
Preheat	• Temperature min. (T_{smin})	100 °C	100 °C
	• Temperature typ. (T_{styp})	120 °C	120 °C
	• Temperature max. (T_{smax})	130 °C	130 °C
	• Time (T_{smin} to T_{smax}) (t_s)	70 seconds	70 seconds
Δ preheat to max Temperature		150 °C max.	150 °C max.
Peak temperature (T_P)*		235 °C – 260 °C	250 °C – 260 °C
Time at peak temperature (t_p)		10 seconds max 5 seconds max each wave	10 seconds max 5 seconds max each wave
Ramp-down rate		~ 2 K/s min ~3.5 K/s typ ~5 K/s max	~ 2 K/s min ~3.5 K/s typ ~5 K/s max
Time 25 °C to 25 °C		4 minutes	4 minutes

Manual solder

+350 °C (4-5 seconds by soldering iron), generally manual/hand soldering is not recommended

Life Support Policy: Eaton does not authorize the use of any of its products for use in life support devices or systems without the express written approval of an officer of the Company. Life support systems are devices which support or sustain life, and whose failure to perform, when properly used in accordance with instructions for use provided in the labeling, can be reasonably expected to result in significant injury to the user.

Eaton reserves the right, without notice, to change design or construction of any products and to discontinue or limit distribution of any products. Eaton also reserves the right to change or update, without notice, any technical information contained in this bulletin.

Eaton
Electronics Division
1000 Eaton Boulevard
Cleveland, OH 44122
United States
Eaton.com/electronics

© 2020 Eaton
All Rights Reserved
Printed in USA
Publication No. 2543 BU-MC20075
April 2020

Eaton is a registered trademark.

All other trademarks are property of their respective owners.

Follow us on social media to get the latest product and support information.

Data sheet

WDU 4

Weidmüller Interface GmbH & Co. KG
Klingenbergstraße 26
D-32758 Detmold
Germany

www.weidmueller.com

Product image



To feed through power, signal, and data is the classical requirement in electrical engineering and panel building. The insulating material, the connection system and the design of the terminal blocks are the differentiating features. A feed-through terminal block is suitable for joining and/or connecting one or more conductors. They could have one or more connection levels that are on the same potential or insulated against one another.

DRAFT

General ordering data

Version	Feed-through terminal, Screw connection, 4 mm², 800 V, 32 A, dark beige
Order No.	1020100000
Type	WDU 4
GTIN (EAN)	4008190150617
Qty.	100 pc(s).

WDU 4

Weidmüller Interface GmbH & Co. KG
Klingenbergstraße 26
D-32758 Detmold
Germany

www.weidmueller.com

Technical data

Dimensions and weights

Depth	46.5 mm	Depth (inches)	1.831 inch
Depth including DIN rail	47 mm	Height	60 mm
Height (inches)	2.362 inch	Width	6.1 mm
Width (inches)	0.24 inch	Net weight	9.57 g

Temperatures

Storage temperature	-25 °C...55 °C	Operating temperature range	For operating temperature range see EC Design Test Certificate / IEC Ex-Certificate of Conformity
Continuous operating temp., min.	-60 °C	Continuous operating temp., max.	130 °C

Material data

Material	Wemid	Colour	dark beige
UL 94 flammability rating	V-0		

Rating data IECEx/ATEX

Certificate No. (ATEX)	DEMKO14ATEX1338U	Certificate No. (IECEX)	IECEXULD14.0005U
Max. voltage (ATEX)	690 V	Current (ATEX)	32 A
Wire cross section max. (ATEX)	4 mm²	Max. voltage (IECEX)	690 V
Current (IECEX)	32 A	Wire cross section max. (IECEX)	4 mm²
Operating temperature range	For operating temperature range see EC Design Test Certificate / IEC Ex-Certificate of Conformity	Marking EN 60079-7	Ex eb II C Gb
Ex 2014/34/EU label	II 2 G D		

System specifications

Version	Screw connection, for plug-in cross-connector, for screwable cross-connection, One end without connector	End cover plate required	Yes
Number of potentials	1	Number of levels	1
Number of clamping points per level	2	Number of potentials per tier	1
Levels cross-connected internally	No	PE connection	No
Rail	TS 35	N-function	No
PE function	No	PEN function	No

2 clampable conductors (H05V/H07V) with equal cross-section (rated connection)

Cross-section for connected wire, solid, two clampable wires, max.	2.5 mm²	Cross-section for connected wire, solid, two clampable wires, min.	0.5 mm²
Wire connection cross section, finely stranded with wire-end ferrules DIN 46228/1, 2 clampable wires, max.	1.5 mm²	Wire connection cross section, finely stranded with wire-end ferrules DIN 46228/1, 2 clampable wires, min.	0.5 mm²
Wire connection cross section, finely stranded, two clampable wires, min.	0.5 mm²	Wire cross-section, finely stranded, two clampable wires, max.	1.5 mm²

Additional technical data

Explosion-tested version	Yes	Number of similar terminals	1
Open sides	right	Type of mounting	Snap-on

DRAFT

WDU 4

Weidmüller Interface GmbH & Co. KG
Klingenbergstraße 26
D-32758 Detmold
Germany

www.weidmueller.com

Technical data

CSA rating data

Certificate No. (CSA)	200039-1057876	Current size B (CSA)	35 A
Current size C (CSA)	35 A	Voltage size C (CSA)	600 V
Wire cross section max. (CSA)	10 AWG	Wire cross section min. (CSA)	26 AWG

Conductors for clamping (rated connection)

Blade size	0.6 x 3.5 mm			
Clampable conductor	Connection specification	Screw connection		
	Cross-section for conductor connection	Type	solid, H05(07) V-U	
		min.	0.5 mm²	
		max.	6 mm²	
		nominal	4 mm²	
	wire end ferrule	Stripping length	min.	10 mm
			max.	10 mm
			nominal	10 mm
		Tightening torque	min.	0.5 Nm
			max.	1 Nm
		Recommended wire-end ferrule		
	Connection specification	Screw connection		
	Cross-section for conductor connection	Type	stranded, H07V-R	
		min.	1.5 mm²	
		max.	6 mm²	
		nominal	4 mm²	
	wire end ferrule	Stripping length	min.	10 mm
			max.	10 mm
			nominal	10 mm
		Tightening torque	min.	0.5 Nm
			max.	1 Nm
		Recommended wire-end ferrule		
	Connection specification	Screw connection		
	Cross-section for conductor connection	Type	flexible, H05(07) V-K	
		min.	0.5 mm²	
		max.	6 mm²	
		nominal	4 mm²	
	wire end ferrule	Stripping length	min.	10 mm
			max.	10 mm
			nominal	10 mm
		Tightening torque	min.	0.5 Nm
			max.	1 Nm
		Recommended wire-end ferrule		
Clamping range, max.	6 mm²			
Clamping range, min.	0.13 mm²			
Clamping screw	M 3			
Connection cross-section, stranded, max.	6 mm²			
Connection cross-section, stranded, min.	1.5 mm²			
Connection direction	on side			
Gauge to IEC 60947-1	A4			
Number of connections	2			
Stripping length	10 mm			
Tightening torque, max.	1 Nm			
Tightening torque, min.	0.5 Nm			

DRAFT

WDU 4

Weidmüller Interface GmbH & Co. KG
Klingenbergstraße 26
D-32758 Detmold
Germany

www.weidmueller.com

Technical data

Torque level with DMS electric screwdriver	2
Twin wire-end ferrules, max.	2.5 mm²
Twin wire-end ferrules, min.	0.5 mm²
Type of connection	Screw connection
Wire connection cross section AWG, max.	AWG 10
Wire connection cross section AWG, min.	AWG 26
Wire connection cross section, finely stranded, max.	6 mm²
Wire connection cross section, finely stranded, min.	0.5 mm²
Wire connection cross-section, finely stranded with wire-end ferrules DIN 46228/1, max.	4 mm²
Wire connection cross-section, finely stranded with wire-end ferrules DIN 46228/1, min.	0.5 mm²
Wire connection cross-section, finely stranded with wire-end ferrules DIN 46228/4, max.	4 mm²
Wire connection cross-section, finely stranded with wire-end ferrules DIN 46228/4, min.	0.5 mm²
Wire connection cross-section, solid core, max.	6 mm²
Wire connection cross-section, solid core, min.	0.5 mm²

General

Rail	TS 35	Standards	IEC 60947-7-1
Wire connection cross section AWG, max.	AWG 10	Wire connection cross section AWG, min.	AWG 26

Rating data

Rated cross-section	4 mm²	Rated voltage	800 V
Rated current	32 A	Current at maximum wires	41 A
Standards	IEC 60947-7-1	Volume resistance according to IEC 60947-7-x	1 mΩ
Rated impulse withstand voltage	8 kV	Power loss in accordance with IEC 60947-7-x	1.02 W
Pollution severity	3		

UL rating data

Certificate No. (UR)	E60693	Conductor size Factory wiring max. (UR)	10 AWG
Conductor size Factory wiring min. (UR)	26 AWG	Conductor size Field wiring max. (UR)	10 AWG
Conductor size Field wiring min. (UR)	22 AWG	Current size C (UR)	35 A
Voltage size C (UR)	600 V		

Classifications

ETIM 6.0	EC000897	ETIM 7.0	EC000897
ETIM 8.0	EC000897	ECLASS 9.0	27-14-11-20
ECLASS 9.1	27-14-11-20	ECLASS 10.0	27-14-11-20
ECLASS 11.0	27-14-11-20	ECLASS 12.0	27-14-11-20

DRAFT

WDU 4

Weidmüller Interface GmbH & Co. KG
Klingenbergstraße 26
D-32758 Detmold
Germany

www.weidmueller.com

Drawings



DRAFT

WAP 2.5-10

Weidmüller Interface GmbH & Co. KG
Klingenbergstraße 26
D-32758 Detmold
Germany

www.weidmueller.com

Product image



End plates are fitted to the open side of the last modular terminal before the end bracket. The use of an end plate ensures the function of the modular terminal and the specified rated voltage. It guarantees protection against contact with live parts and makes the final terminal finger-proof.

DRAFT

General ordering data

Version	W-Series, End plate
Order No.	1050000000
Type	WAP 2.5-10
GTIN (EAN)	4008190103149
Qty.	50 pc(s).

WAP 2.5-10

Weidmüller Interface GmbH & Co. KG
Klingenbergstraße 26
D-32758 Detmold
Germany

www.weidmueller.com

Technical data

Dimensions and weights

Depth	33.5 mm	Depth (inches)	1.319 inch
Height	56 mm	Height (inches)	2.205 inch
Width	1.5 mm	Width (inches)	0.059 inch
Net weight	2.6 g		

Temperatures

Storage temperature	-25 °C...55 °C	Continuous operating temp., min.	-60 °C
Continuous operating temp., max.	130 °C		

Material data

Material	Wemid	Colour	dark beige
UL 94 flammability rating	V-0		

System specifications

Version	End plate

Additional technical data

Installation advice	Direct mounting	Snap-on	No

General

Installation advice	Direct mounting

Classifications

ETIM 6.0	EC000886	ETIM 7.0	EC000886
ETIM 8.0	EC000886	ECLASS 9.1	27-14-11-33
ECLASS 10.0	27-14-11-33	ECLASS 11.0	27-14-11-33
ECLASS 12.0	27-14-11-33		

Approvals

ROHS	Conform

Downloads

Engineering Data	CAD data – STEP
Engineering Data	WSCAD, Zuken E3.S
Product Change Notification	TI_910_WDU_6_SL_combination_of_accessories_20170517_BL
User Documentation	StorageConditionsTerminalBlocks
Catalogues	Catalogues in PDF-format
Brochures	

DRAFT

Data sheet

WDU 4 BL

Weidmüller Interface GmbH & Co. KG
Klingenbergstraße 26
D-32758 Detmold
Germany

www.weidmueller.com

Product image

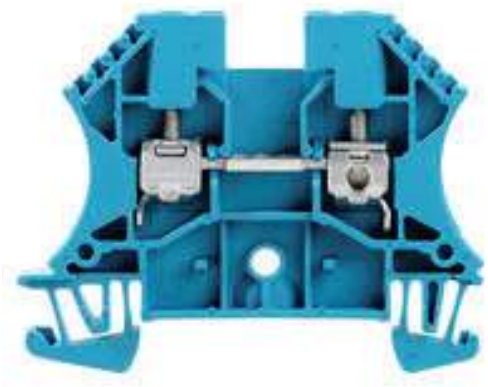

Klippon® Connect with clamping yoke Technology
The high reliability and variety of designs of the terminal blocks with clamping yoke connections make planning easer and optimises operational safety. Klippon® Connect provides a proven response to a range of different requirements.

DRAFT

General ordering data

Version	Feed-through terminal, Screw connection, 4 mm², 800 V, 32 A, blue
Order No.	1020180000
Type	WDU 4 BL
GTIN (EAN)	4008190185237
Qty.	100 pc(s).

WDU 4 BL

Weidmüller Interface GmbH & Co. KG
Klingenbergstraße 26
D-32758 Detmold
Germany

www.weidmueller.com

Technical data

Dimensions and weights

Depth	46.5 mm	Depth (inches)	1.831 inch
Depth including DIN rail	47 mm	Height	60 mm
Height (inches)	2.362 inch	Width	6.1 mm
Width (inches)	0.24 inch	Weight	10.4 g
Net weight	9.42 g		

Temperatures

Storage temperature	-25 °C...55 °C	Operating temperature range	For operating temperature range see EC Design Test Certificate / IEC Ex-Certificate of Conformity
Continuous operating temp., min.	-60 °C	Continuous operating temp., max.	130 °C

Material data

Material	Wemid	Colour	blue
UL 94 flammability rating	V-0		

Rating data IECEx/ATEX

Certificate No. (ATEX)	DEMKO14ATEX1338U	Certificate No. (IECEX)	IECEXULD14.0005U
Max. voltage (ATEX)	690 V	Current (ATEX)	32 A
Wire cross section max. (ATEX)	4 mm²	Max. voltage (IECEX)	690 V
Current (IECEX)	32 A	Wire cross section max. (IECEX)	4 mm²
Operating temperature range	For operating temperature range see EC Design Test Certificate / IEC Ex-Certificate of Conformity	Marking EN 60079-7	Ex eb II C Gb
Ex 2014/34/EU label	II 2 G D		

System specifications

Version	Screw connection, for plug-in cross-connector, for screwable cross-connection, One end without connector	End cover plate required	Yes
Number of potentials	1	Number of levels	1
Number of clamping points per level	2	Number of potentials per tier	1
Levels cross-connected internally	No	PE connection	No
Rail	TS 35	N-function	Yes
PE function	No	PEN function	No

2 clampable conductors (H05V/H07V) with equal cross-section (rated connection)

Wire connection cross section, finely stranded with wire-end ferrules DIN 46228/1, 2 clampable wires, max.	1.5 mm²	Wire connection cross section, finely stranded with wire-end ferrules DIN 46228/1, 2 clampable wires, min.	0.5 mm²
Wire connection cross section, finely stranded, two clampable wires, min.	0.5 mm²	Wire cross-section, finely stranded, two clampable wires, max.	1.5 mm²

Additional technical data

Explosion-tested version	Yes	Number of similar terminals	1
Open sides	right	Type of mounting	Snap-on

DRAFT

WDU 4 BL

Weidmüller Interface GmbH & Co. KG
Klingenbergstraße 26
D-32758 Detmold
Germany

www.weidmueller.com

Technical data

CSA rating data

Certificate No. (CSA)	200039-1057876	Current size B (CSA)	35 A
Current size C (CSA)	35 A	Voltage size C (CSA)	600 V
Wire cross section max. (CSA)	10 AWG	Wire cross section min. (CSA)	26 AWG

Conductors for clamping (rated connection)

Blade size	0.6 x 3.5 mm			
Clampable conductor	Connection specification	Screw connection		
	Cross-section for conductor connection	Type	solid, H05(07) V-U	
		min.	0.5 mm²	
		max.	6 mm²	
		nominal	4 mm²	
	wire end ferrule	Stripping length	min.	10 mm
			max.	10 mm
			nominal	10 mm
		Tightening torque	min.	0.5 Nm
			max.	1 Nm
		Recommended wire-end ferrule		
	Connection specification	Screw connection		
	Cross-section for conductor connection	Type	stranded, H07V-R	
		min.	1.5 mm²	
		max.	6 mm²	
		nominal	4 mm²	
	wire end ferrule	Stripping length	min.	10 mm
			max.	10 mm
			nominal	10 mm
		Tightening torque	min.	0.5 Nm
			max.	1 Nm
		Recommended wire-end ferrule		
	Connection specification	Screw connection		
	Cross-section for conductor connection	Type	flexible, H05(07) V-K	
		min.	0.5 Nm	
		max.	6 Nm	
		nominal	4 Nm	
	wire end ferrule	Stripping length	min.	10 mm
			max.	10 mm
			nominal	10 mm
		Tightening torque	min.	0.5 Nm
			max.	1 Nm
		Recommended wire-end ferrule		
Clamping range, max.	6 mm²			
Clamping range, min.	0.13 mm²			
Clamping screw	M 3			
Connection cross-section, stranded, max.	6 mm²			
Connection cross-section, stranded, min.	1.5 mm²			
Connection direction	on side			
Gauge to IEC 60947-1	A4			
Number of connections	2			
Stripping length	10 mm			
Tightening torque, max.	1 Nm			
Tightening torque, min.	0.5 Nm			

DRAFT

WDU 4 BL

Weidmüller Interface GmbH & Co. KG
Klingenbergstraße 26
D-32758 Detmold
Germany

www.weidmueller.com

Technical data

Torque level with DMS electric screwdriver	2
Twin wire-end ferrules, max.	2.5 mm²
Twin wire-end ferrules, min.	0.5 mm²
Type of connection	Screw connection
Wire connection cross section AWG, max.	AWG 10
Wire connection cross section AWG, min.	AWG 26
Wire connection cross section, finely stranded, max.	6 mm²
Wire connection cross section, finely stranded, min.	0.5 mm²
Wire connection cross-section, finely stranded with wire-end ferrules DIN 46228/1, max.	4 mm²
Wire connection cross-section, finely stranded with wire-end ferrules DIN 46228/1, min.	0.5 mm²
Wire connection cross-section, finely stranded with wire-end ferrules DIN 46228/4, max.	4 mm²
Wire connection cross-section, finely stranded with wire-end ferrules DIN 46228/4, min.	0.5 mm²
Wire connection cross-section, solid core, max.	6 mm²
Wire connection cross-section, solid core, min.	0.5 mm²

General

Rail	TS 35	Standards	IEC 60947-7-1
Wire connection cross section AWG, max.	AWG 10	Wire connection cross section AWG, min.	AWG 26

Rating data

Rated cross-section	4 mm²	Rated voltage	800 V
Rated current	32 A	Current at maximum wires	41 A
Standards	IEC 60947-7-1	Volume resistance according to IEC 60947-7-x	1 mΩ
Rated impulse withstand voltage	8 kV	Power loss in accordance with IEC 60947-7-x	1.02 W
Pollution severity	3		

UL rating data

Certificate No. (UR)	E60693	Conductor size Factory wiring max. (UR)	10 AWG
Conductor size Factory wiring min. (UR)	26 AWG	Conductor size Field wiring max. (UR)	10 AWG
Conductor size Field wiring min. (UR)	22 AWG	Current size C (UR)	35 A
Voltage size C (UR)	600 V		

Classifications

ETIM 6.0	EC000897	ETIM 7.0	EC000897
ETIM 8.0	EC000897	ECLASS 9.0	27-14-11-20
ECLASS 9.1	27-14-11-20	ECLASS 10.0	27-14-11-20
ECLASS 11.0	27-14-11-20		

DRAFT

WDU 4 BL

Weidmüller Interface GmbH & Co. KG
Klingenbergstraße 26
D-32758 Detmold
Germany

www.weidmueller.com

Technical data

Approvals

Approvals	
ROHS	Conform
UL File Number Search	E60693

Downloads

Approval/Certificate/Document of Conformity	Attestation of Conformity IECEx Certificate CB Testreport CB Certificate EAC certificate DNVGL certificate NEMKO certificate INMETRO certificate Lloyds Register Certificate MARITREG Certificate POLSKIREJ certificate EAC EX Certificate CCC Ex Certificate CE Declaration of Conformity ATEX Certificate CE Declaration of Conformity all terminals
Engineering Data	CAD data – STEP
Engineering Data	EPLAN, WSCAD, Zuken E3.S
User Documentation	NTI WDU/WPE 4 Usage of terminals in EXi atmospheres StorageConditionsTerminalBlocks
Catalogues	Catalogues in PDF-format
Brochures	

DRAFT

WDU 4 BL

Weidmüller Interface GmbH & Co. KG
Klingenbergstraße 26
D-32758 Detmold
Germany

www.weidmueller.com

Drawings



DRAFT

WAP 2.5-10 BL

Weidmüller Interface GmbH & Co. KG
Klingenbergstraße 26
D-32758 Detmold
Germany

www.weidmueller.com

Product image



End plates are fitted to the open side of the last modular terminal before the end bracket. The use of an end plate ensures the function of the modular terminal and the specified rated voltage. It guarantees protection against contact with live parts and makes the final terminal finger-proof.

DRAFT

General ordering data

Version	W-Series, End plate
Order No.	1050080000
Type	WAP 2.5-10 BL
GTIN (EAN)	4008190136611
Qty.	50 pc(s).

WAP 2.5-10 BL

Weidmüller Interface GmbH & Co. KG
Klingenbergstraße 26
D-32758 Detmold
Germany

www.weidmueller.com

Technical data

Dimensions and weights

Depth	33.5 mm	Depth (inches)	1.319 inch
Height	56 mm	Height (inches)	2.205 inch
Width	1.5 mm	Width (inches)	0.059 inch
Net weight	2.56 g		

Temperatures

Storage temperature	-25 °C...55 °C	Continuous operating temp., min.	-60 °C
Continuous operating temp., max.	130 °C		

Material data

Material	Wemid	Colour	blue
UL 94 flammability rating	V-0		

System specifications

Version	End plate

Additional technical data

Installation advice	Direct mounting	Snap-on	No

General

Installation advice	Direct mounting

Classifications

ETIM 6.0	EC000886	ETIM 7.0	EC000886
ETIM 8.0	EC000886	ECLASS 9.1	27-14-11-33
ECLASS 10.0	27-14-11-33	ECLASS 11.0	27-14-11-33
ECLASS 12.0	27-14-11-33		

Approvals

ROHS	Conform

Downloads

Engineering Data	CAD data – STEP
Engineering Data	EPLAN, WSCAD, Zuken E3.S
User Documentation	StorageConditionsTerminalBlocks
Catalogues	Catalogues in PDF-format
Brochures	

DRAFT

EW 35

Weidmüller Interface GmbH & Co. KG
Klingenbergstraße 26
D-32758 Detmold
Germany

www.weidmueller.com

Product image



Weidmüller's range of products includes end brackets that guarantee a permanent, reliable mounting on the terminal rail and prevent sliding. Versions with and without screws are available. The end brackets include marking options, also for group markers, and also a test plug holder.

DRAFT

General ordering data

Version	Accessories, End bracket
Order No.	0383560000
Type	EW 35
GTIN (EAN)	4008190181314
Qty.	50 pc(s).

EW 35

Weidmüller Interface GmbH & Co. KG
Klingenbergstraße 26
D-32758 Detmold
Germany

www.weidmueller.com

Technical data

Dimensions and weights

Depth	27 mm	Depth (inches)	1.063 inch
Height	46 mm	Height (inches)	1.811 inch
Width	8.5 mm	Width (inches)	0.335 inch
Net weight	5.32 g		

Temperatures

Continuous operating temp., min.	-50 °C	Continuous operating temp., max.	100 °C

Material data

Material	Wemid	Colour	beige
UL 94 flammability rating	V-2		

System specifications

Version	For the terminals	Rail	TS 35

Additional technical data

Installation advice	Direct mounting	Interlock	for screw fixing
Type of mounting	when screwed in		

Conductors for clamping (rated connection)

Tightening torque, max.	0.6 Nm	Tightening torque, min.	0.5 Nm

Dimensions

TS 35 offset	22.5 mm

General

Installation advice	Direct mounting	Rail	TS 35

Classifications

ETIM 6.0	EC001041	ETIM 7.0	EC001041
ETIM 8.0	EC001041	ETIM 9.0	EC001041
ECLASS 9.0	27-14-11-35	ECLASS 9.1	27-14-11-35
ECLASS 10.0	27-14-11-35	ECLASS 11.0	27-14-11-35
ECLASS 12.0	27-14-11-35	ECLASS 13.0	27250302

Approvals

ROHS	Conform

Downloads

Engineering Data	CAD data – 12723_EW_35_DXF.dxf CAD data – STEP
User Documentation	StorageConditionsTerminalBlocks
Catalogues	Catalogues in PDF-format
Brochures	

DRAFT

Weidmüller

Datasheet

AC Outlet

DIN-Rail Mountable Receptacles

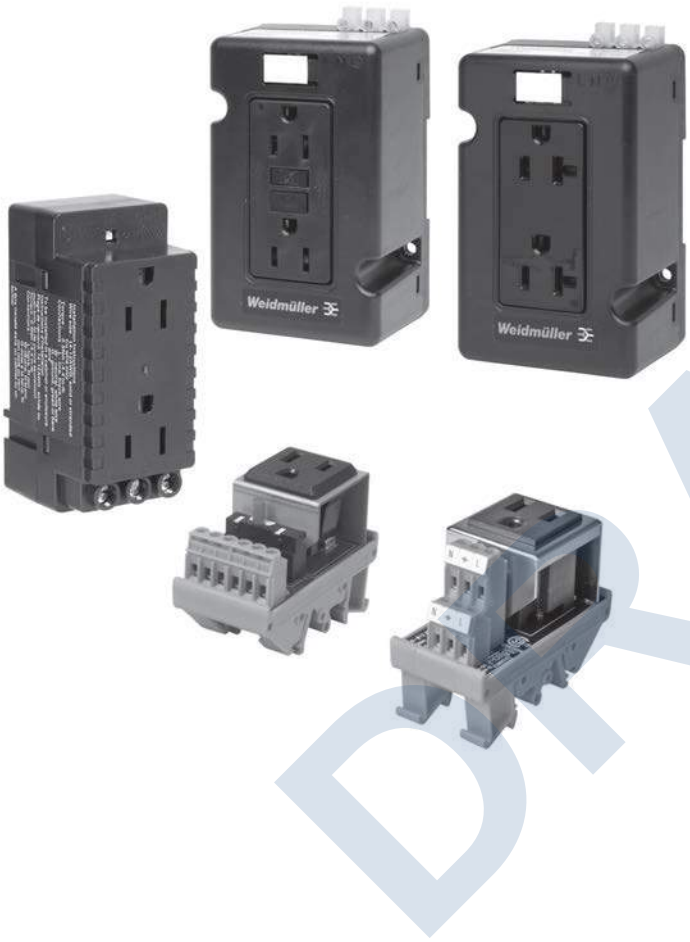

DIN-rail receptacles, 5A, 15A and 20A power outlets, provide a convenient power source for portable computers or test devices for in-the-panel troubleshooting. They mount on standard 35mm DIN-rail. The terminations accept slotted or Phillips screwdrivers. The mounting foot includes a latching lock - slide it open, mount the module on the DIN-rail and slide the lock closed.

- Easily snaps onto 35mm DIN-rail
- Panel mountable, model dependent
- 5A, 15A or 20A versions
- Easy to wire
- Available with ground fault current interrupt (GFCI) or standard outlets
- Optional power-on indication with GFCI*
- NEMA rated enclosure with UL94 VO flammability rating
- UL508A, cULus, and cURus and CSA* approved
- Latching mounting foot makes installation and removal from DIN-rail easy

*Applies to part number 6720005430

DRAFT

Weidmuller, Canada
10 Spy Court
Markham, Ontario L3R 5H6
Telephone: (800) 268-4080
Facsimile: (877) 300-5635
Email: info1@weidmuller.ca
Website: www.weidmuller.ca

Weidmuller, Mexico
Blvd. Hermanos Serdán 698,
Col. San Rafael Oriente
Puebla, Puebla, Mexico
C.P. 72029
Telephone: 01 222 2686267
Facsimile: 01 222 2686219
Email: clientes@weidmuller.com.mx
Website: www.weidmuller.com.mx

Weidmuller, United States
821 Southlake Blvd.
Richmond, Virginia 23236
Telephone: (800) 849-9343
Facsimile: (804) 379-2593
Email: info@weidmuller.com
Website: www.weidmuller.com

Simplex

	5 Amp Simplex w/ Circuit Breaker	15 Amp Simplex w/o Circuit Breaker
		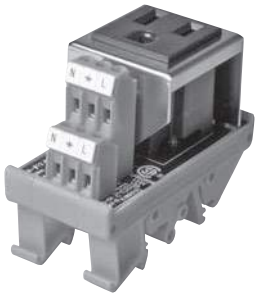

Technical data

Voltage	120 VAC	120 VAC
Current	5A max.	15A max.
Wire Size (AWG)	26 - 12 AWG (0.14 - 4.0mm²)	26 - 12 AWG (0.14 - 4.0mm²)
Stripping Length mm/in.	6mm	6mm
Terminal Torque	0.5-0.6 Nm	0.5-0.6 Nm
Mounting	TS32 or TS35 DIN-Rail	TS32 or TS35 DIN-Rail
Width	35mm/1.38 in.	35mm/1.38 in.
Length	70mm/2.76 in.	70mm/2.76 in.
Height	58.5mm/2.30 in.	58.5mm/2.30 in.
Approvals/Certifications	**Description**	**Description**
	LR-229352, E252394	LR-229352, E252394

Ordering data

Type	Part No.
Single outlet with circuit breaker (supplemental protector with manual reset via push button)	**9915480001**

Type	Part No.
Single outlet without circuit breaker	**9915480000**

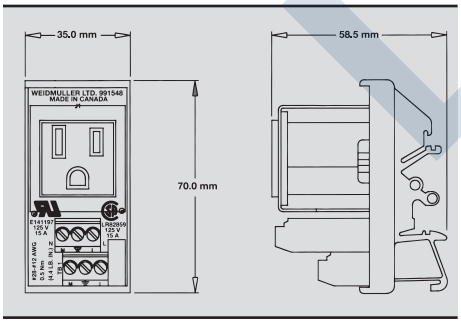

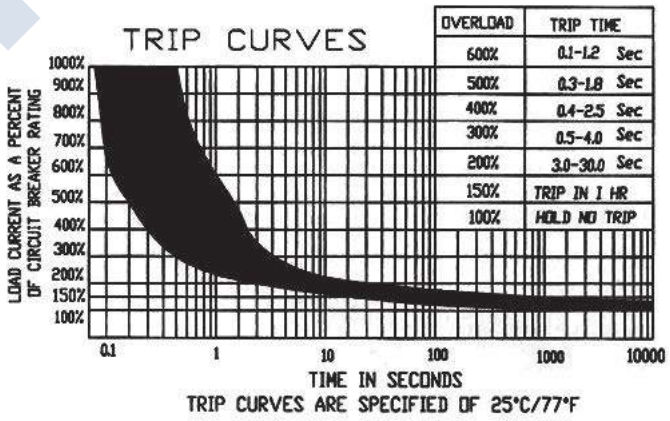

DRAFT

Dead Front Fuse Holders

LPSC Series POWR-SAFE Fuse Holders

600 V



Description

The POWR-SAFE LPSC series dead front fuse holders feature touch-safe protection for personnel when installing and removing fuses. These fuse holders are intended to house Class CC fuses. They are available in 1-, 2-, 3-, and 4-pole configurations and are offered in indicating and non-indicating options. The LPSC series is DIN rail mountable and easily installed and removed with no additional fuse pullers or tools. They are UL Listed for branch circuit protection. The indicating fuse holders show blown fuse indication above 80 V.

Features & Benefits

FEATURES	BENEFITS
Meets dead front requirements	Maximum safety for personnel
35 mm DIN rail mountable	Easy installation in various settings
Compact design	Ultimate flexibility, space-saving
Easy removal	No fuse pullers or additional tools required
Ventilated design	Cooler operation

Applications

- For use with Class CC fuses

DRAFT

©2022 Littelfuse, Inc.
Specifications are subject to change without notice.

Specifications

Voltage Rating	600 V ac/dc
Ampere Rating	30 A
Interrupting Rating	200 kA (Class CC)
Terminal Type	Pressure Plate
Suggested Torque	17.7 in–lbs
Wire Range	#8–#14 CU
Housing	Thermoplastic
Fuse Clip	Silver plated copper
Zinc Plated Steel	Zinc plated steel
Terminal Screws	Nickel plated steel
Operating Temperature	-50 °C to +125 °C
Flammability Rating	UL 94 V-0
Environmental	RoHS Compliant, Lead (Pb) Free

WIRE TYPE	
75 °C CU Only	8–14 Stranded UL Class B and Class C wire
	10–14 Solid wire

Certification & Compliance

UL	UL Listed (LPSC File: E14721)
CSA	CSA Certified (LPSC File: LR7316)
CE	EU Declaration of Conformity (LPSC_201113)
RoHS	RoHS Directive 2011/65/EU

Accessories

Class CC fuses
Multi-Pole Assembly Kit

Ordering Information

INDICATING		NON-INDICATING		FUSE TYPE	POLES
CATALOG NUMBER	ORDERING NUMBER	CATALOG NUMBER	ORDERING NUMBER		
LPSC001ID	LPSC0001ZXID	LPSC001	LPSC0001Z	Class CC	1
LPSC002ID	LPSC0002ZXID	LPSC002	LPSC0002Z	Class CC	2
LPSC003ID	LPSC0003ZXID	LPSC003	LPSC0003Z	Class CC	3
LPSC004ID	LPSC0004ZXID	LPSC004	LPSC0004Z	Class CC	4

Multi-Pole Assembly Kit Ordering No. CYHP0001Z-KIT
(Kit contains 20 connector pincers & 10 handle pins)

DRAFT

©2022 Littelfuse, Inc.
Specifications are subject to change without notice.

Dimensions Inches (mm)

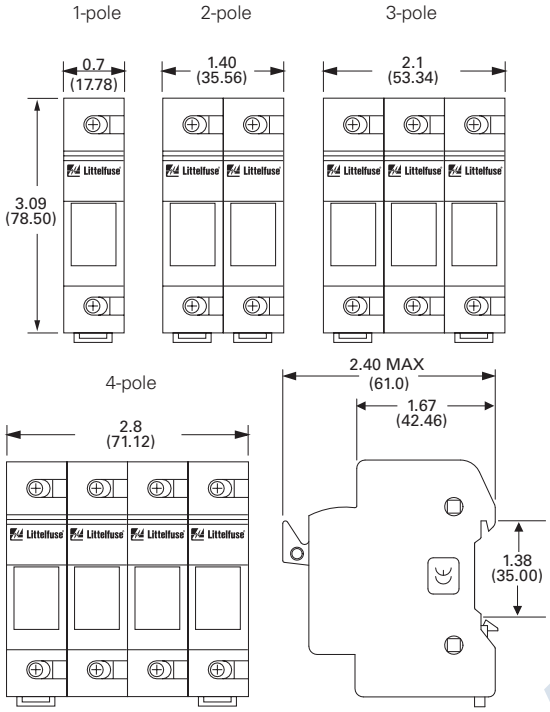

DRAFT

Disclaimer Notice – Information furnished is believed to be accurate and reliable. However, users should independently evaluate the suitability of and test each product selected for their own applications. Littelfuse products are not designed for, and may not be used in, all applications. Read complete Disclaimer Notice at **www.littelfuse.com/product-disclaimer.**

©2022 Littelfuse, Inc.
Specifications are subject to change without notice.

Class CC Fuses
KLDR Series

600 V ac • 300 V dc • Time-Delay • 1/10–30 A



Description

KLDR Series time-delay fuses are designed to protect control transformers, solenoids, and similar inductive components with high-magnetizing currents during the first half-cycle. These small-sized fuses provide excellent protection of motor branch circuits containing IEC or NEMA-rated motor controllers or contactors. The KLDR Series fuses closely match most control power transformer characteristics, which permits them to be sized in accordance with the latest revisions of UL 508 (Industrial Control) and UL 845 (Motor Control Centers).

Features & Benefits

FEATURES	BENEFITS
Current-limiting	Reduces damage caused by heating and magnetic effects of short-circuit currents
Short-circuit protection	Improves safety with faster response times to fault currents
Rejection capability	Prevents use of fuses with lower interrupting ratings or voltage when used with corresponding fuse holders
Time-delay	Allows for a temporary current surge for a short period of time without blowing

Applications

- Transformer and solenoid protection

Specifications

Voltage Rating	Ac: 600 V Dc: 300 V
Amperage Range	1/10 – 30 A
Interrupting Ratings	Ac: 200,000 A rms symmetrical Dc: 20,000 A self-certified
Material	Body: Melamine Caps: Nickel-plated Bronze
Fuse Weight	.019 lb (8.62g)
Applicable Standards	UL 248-4, Class CC
Environmental	RoHS Compliant
Country of Origin	Mexico

DRAFT

©2022 Littelfuse, Inc.
Specifications are subject to change without notice.

Certification & Compliance

UL	UL Listed (File: E81895)
CSA	CSA Certified (File: LR29862)
CE	EU_DOC-KLDR_P_210128
RoHS	RoHS 2 Directive 2011/65/EU; Directive (EU) 2015/863

Accessories

L60030C series fuse holder
LPSC/LFPSC Touch-Safe series fuse holder
LEC series inline fuse holder
571/572 series panel mount fuse holder

Ordering Information

AMPERE RATING	CATALOG NUMBER	PRODUCT MARKING	PACK QUANTITY	ORDERING NUMBER	UPC
1/10	KLDR.100	KLDR 1/10 A	10 100	KLDR.100TXP KLDR.100HXP	07945896877 07945879278
1/8	KLDR.125	KLDR 1/8 A	10 100	KLDR.125TXP KLDR.125HXP	07945896878 07945879279
15/100	KLDR.150	KLDR 15/100 A	10 100	KLDR.150TXP KLDR.150HXP	07945896879 07945879280
3/16	KLDR.187	KLDR 3/16 A	10 100	KLDR.187TXP KLDR.187HXP	07945896880 07945879281
2/10	KLDR.200	KLDR 2/10 A	10 100	KLDR.200TXP KLDR.200HXP	07945879239 07945879282
1/4	KLDR.250	KLDR 1/4 A	10 100	KLDR.250TXP KLDR.250HXP	07945879240 07945879283
3/10	KLDR.300	KLDR 3/10 A	10 100	KLDR.300TXP KLDR.300HXP	07945879241 07945879284
4/10	KLDR.400	KLDR 4/10 A	10 100	KLDR.400TXP KLDR.400HXP	07945879242 07945879285
1/2	KLDR.500	KLDR 1/2 A	10 100	KLDR.500TXP KLDR.500HXP	07945879243 07945879286
6/10	KLDR.600	KLDR 6/10 A	10 100	KLDR.600TXP KLDR.600HXP	07945879244 07945879287
3/4	KLDR.750	KLDR 3/4 A	10 100	KLDR.750TXP KLDR.750HXP	07945879245 07945879288
8/10	KLDR.800	KLDR 8/10 A	10 100	KLDR.800TXP KLDR.800HXP	07945879246 07945879289
1	KLDR001	KLDR 1 A	10 100	KLDR001.TXP KLDR001.HXP	07945879247 07945879290
1 1/8	KLDR1.12	KLDR 1 1/8 A	10 100	KLDR1.12TXP KLDR1.12HXP	07945879248 07945879291
1 1/4	KLDR1.25	KLDR 1 1/4 A	10 100	KLDR1.25TXP KLDR1.25HXP	07945879249 07945879292
1 4/10	KLDR01.4	KLDR 1 4/10 A	10 100	KLDR01.4TXP KLDR01.4HXP	07945879250 07945879293

DRAFT

©2022 Littelfuse, Inc.
Specifications are subject to change without notice.

Ordering Information

AMPERE RATING	CATALOG NUMBER	PRODUCT MARKING	PACK QUANTITY	ORDERING NUMBER	UPC
1½	KLDR01.5	KLDR 1½A	10 100	KLDR01.5TXP KLDR01.5HXP	07945879251 07945879294
1⅘	KLDR01.6	KLDR 1⅘A	10 100	KLDR01.6TXP KLDR01.6HXP	07945879252 07945879295
1⅘	KLDR01.8	KLDR 1⅘A	10 100	KLDR01.8TXP KLDR01.8HXP	07945879253 07945879296
2	KLDR002	KLDR 2A	10 100	KLDR002.TXP KLDR002.HXP	07945879254 07945879297
2¼	KLDR2.25	KLDR 2¼A	10 100	KLDR2.25TXP KLDR2.25HXP	07945879255 07945879298
2½	KLDR02.5	KLDR 2½A	10 100	KLDR02.5TXP KLDR02.5HXP	07945879256 07945879299
2⅘	KLDR02.8	KLDR 2⅘A	10 100	KLDR02.8TXP KLDR02.8HXP	07945879257 07945879300
3	KLDR003	KLDR 3A	10 100	KLDR003.TXP KLDR003.HXP	07945879258 07945879301
3⅕	KLDR03.2	KLDR 3⅕A	10 100	KLDR03.2TXP KLDR03.2HXP	07945879259 07945879302
3½	KLDR03.5	KLDR 3½A	10 100	KLDR03.5TXP KLDR03.5HXP	07945879260 07945879303
4	KLDR004	KLDR 4A	10 100	KLDR004.TXP KLDR004.HXP	07945879261 07945879304
4½	KLDR04.5	KLDR 4½A	10 100	KLDR04.5TXP KLDR04.5HXP	07945879262 07945879305
5	KLDR005	KLDR 5A	10 100	KLDR005.TXP KLDR005.HXP	07945879263 07945879306
5⅘	KLDR05.6	KLDR 5⅘A	10 100	KLDR05.6TXP KLDR05.6HXP	07945879264 07945879307
6	KLDR006	KLDR 6A	10 100	KLDR006.TXP KLDR006.HXP	07945879265 07945879308
6¼	KLDR6.25	KLDR 6¼A	10 100	KLDR6.25TXP KLDR6.25HXP	07945879266 07945879309
7	KLDR007	KLDR 7A	10 100	KLDR007.TXP KLDR007.HXP	07945879267 07945879310
7½	KLDR07.5	KLDR 7½A	10 100	KLDR07.5TXP KLDR07.5HXP	07945879268 07945879311
8	KLDR008	KLDR 8A	10 100	KLDR008.TXP KLDR008.HXP	07945879269 07945879312
9	KLDR009	KLDR 9A	10 100	KLDR009.TXP KLDR009.HXP	07945879270 07945879313
10	KLDR010	KLDR 10A	10 100	KLDR010.TXP KLDR010.HXP	07945879271 07945879314
12	KLDR012	KLDR 12A	10 100	KLDR012.TXP KLDR012.HXP	07945879272 07945879315
15	KLDR015	KLDR 15A	10 100	KLDR015.TXP KLDR015.HXP	07945879273 07945879316
17½	KLDR17.5	KLDR 17½A	10 100	KLDR17.5TXP KLDR17.5HXP	07945879274 07945879317

DRAFT

©2022 Littelfuse, Inc.
Specifications are subject to change without notice.

Ordering Information

AMPERE RATING	CATALOG NUMBER	PRODUCT MARKING	PACK QUANTITY	ORDERING NUMBER	UPC
20	KLDR020	KLDR 20A	10 100	KLDR020.TXP KLDR020.HXP	07945879275 07945879318
25	KLDR025	KLDR 25A	10 100	KLDR025.TXP KLDR025.HXP	07945879276 07945879319
30	KLDR030	KLDR 30A	10 100	KLDR030.TXP KLDR030.HXP	07945879277 07945879320

Dimensions Inches (mm)

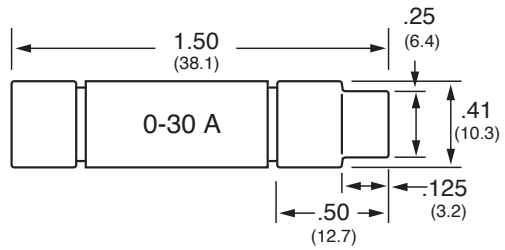

Electrical Specification - Agency Requirements

AMPERAGE RATING	OPENING TIME		
	100 % OF AMP RATING PER UL	135 % OF AMP RATING PER UL	200 % OF AMP RATING PER UL
1/10–30	Temperature Stabilization	60 Minutes Max	12 Seconds Minimum

Electrical Specifications

CATALOG NUMBER	VOLTAGE RATING (V)		INTERRUPTING RATING (A)		MELT (PRE-ARC) I^2T (A^2S)	TOTAL CLEARING I^2T (A^2 SEC) 200 KA	AGENCY APPROVALS	
	AC	DC	AC	DC			UL	CSA
KLDR.100	600	300	200,000	20,000	.0004	.0059	•	•
KLDR.125	600	300	200,000	20,000	.0007	.0055	•	•
KLDR.150	600	300	200,000	20,000	.0016	.0059	•	•
KLDR.187	600	300	200,000	20,000	.0040	.0267	•	•
KLDR.200	600	300	200,000	20,000	.0018	.0230	•	•
KLDR.250	600	300	200,000	20,000	.0138	.0967	•	•
KLDR.300	600	300	200,000	20,000	.0111	.1005	•	•
KLDR.400	600	300	200,000	20,000	.0579	.1420	•	•
KLDR.500	600	300	200,000	20,000	.0877	.3121	•	•
KLDR.600	600	300	200,000	20,000	.1404	.3742	•	•
KLDR.750	600	300	200,000	20,000	.2911	1.972	•	•
KLDR.800	600	300	200,000	20,000	.2416	2.064	•	•
KLDR001	600	300	200,000	20,000	.4494	5.883	•	•
KLDR1.12	600	300	200,000	20,000	.5049	5.149	•	•

DRAFT

©2022 Littelfuse, Inc.
Specifications are subject to change without notice.

CATALOG NUMBER	VOLTAGE RATING (V)		INTERRUPTING RATING (A)		MELT (PRE-ARC) I^2T (A^2S)	TOTAL CLEARING I^2T (A^2 SEC) 200 KA	AGENCY APPROVALS	
	AC	DC	AC	DC			UL	CSA
KLDR1.25	600	300	200,000	20,000	.4367	7.354	•	•
KLDR01.4	600	300	200,000	20,000	.8135	7.639	•	•
KLDR01.5	600	300	200,000	20,000	.9302	5.885	•	•
KLDR01.6	600	300	200,000	20,000	.7495	6.682	•	•
KLDR01.8	600	300	200,000	20,000	.9964	6.594	•	•
KLDR002	600	300	200,000	20,000	.8615	14.01	•	•
KLDR2.25	600	300	200,000	20,000	1.126	26.41	•	•
KLDR02.5	600	300	200,000	20,000	2.087	35.35	•	•
KLDR02.8	600	300	200,000	20,000	21.28	45.47	•	•
KLDR003	600	300	200,000	20,000	23.21	55.99	•	•
KLDR03.2	600	300	200,000	20,000	37.92	57.27	•	•
KLDR03.5	600	300	200,000	20,000	21.42	109.4	•	•
KLDR004	600	300	200,000	20,000	83.81	258.6	•	•
KLDR04.5	600	300	200,000	20,000	83.89	110.6	•	•
KLDR005	600	300	200,000	20,000	63.33	84.04	•	•
KLDR05.6	600	300	200,000	20,000	87.66	114.0	•	•
KLDR006	600	300	200,000	20,000	129.5	161.9	•	•
KLDR6.25	600	300	200,000	20,000	147.6	261.7	•	•
KLDR007.	600	300	200,000	20,000	202.4	513.4	•	•
KLDR07.5	600	300	200,000	20,000	321.8	813.0	•	•
KLDR008	600	300	200,000	20,000	111.2	1,145	•	•
KLDR009	600	300	200,000	20,000	73.40	1,334	•	•
KLDR010	600	300	200,000	20,000	132.0	934.8	•	•
KLDR012	600	300	200,000	20,000	154.7	1,723	•	•
KLDR015	600	300	200,000	20,000	200.5	2,248	•	•
KLDR17.5	600	300	200,000	20,000	87.50	722.8	•	•
KLDR020	600	300	200,000	20,000	123.8	1,363	•	•
KLDR025	600	300	200,000	20,000	226.0	1,710	•	•
KLDR030	600	300	200,000	20,000	299.6	1,990	•	•

DRAFT

©2022 Littelfuse, Inc.
Specifications are subject to change without notice.

Temperature Rerating Curve

Ambient temperature: temperature of air immediately surrounding fuse

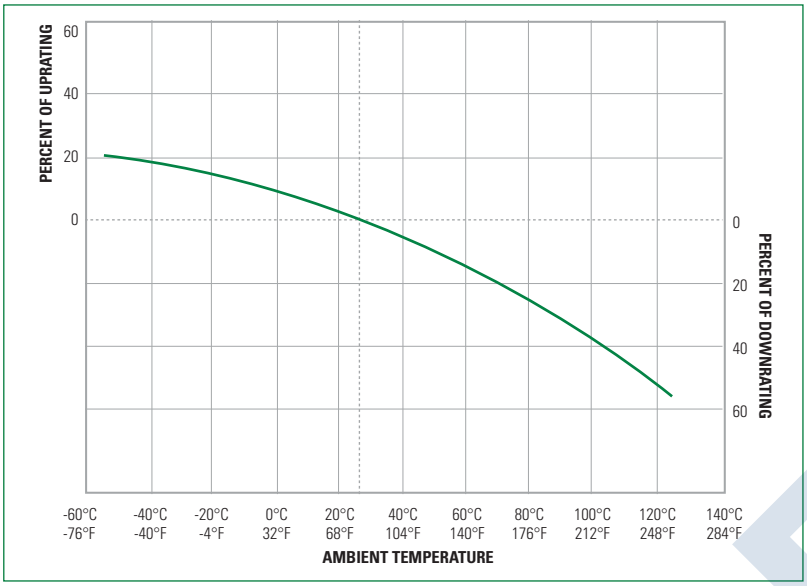

Current-Limiting Effects

SHORT CIRCUIT CURRENT*	APPARENT RMS SYMMETRICAL CURRENT FOR VARIOUS FUSE RATINGS								
	4 A	6 A	7.5 A	8 A	10 A	12 A	15 A	20 A	30 A
5,000	349	420	521	437	359	369	435	456	621
10,000	440	529	656	551	452	465	548	575	783
15,000	504	605	751	631	517	532	627	658	896
20,000	554	666	827	694	569	585	690	724	986
25,000	597	718	890	748	613	630	743	780	1063
30,000	634	763	946	795	651	670	790	829	1129
35,000	668	803	996	837	686	705	832	872	1189
40,000	698	840	1041	875	717	737	870	912	1243
50,000	752	904	1122	942	772	794	937	983	1339
60,000	799	961	1192	1001	821	844	995	1044	1423
80,000	880	1058	1312	1102	903	929	1096	1149	1566
100,000	948	1139	1413	1187	973	1001	1180	1238	1687
150,000	1085	1304	1618	1359	1114	1146	1351	1417	1931
200,000	1194	1436	1781	1496	1226	1261	1487	1560	2125

*Prospective RMS Symmetrical Amperes Short-Circuit Current

Note: Data Derived from Peak Let-Thru Curve

DRAFT

©2022 Littelfuse, Inc.
Specifications are subject to change without notice.

Peak Let-Thru Curves

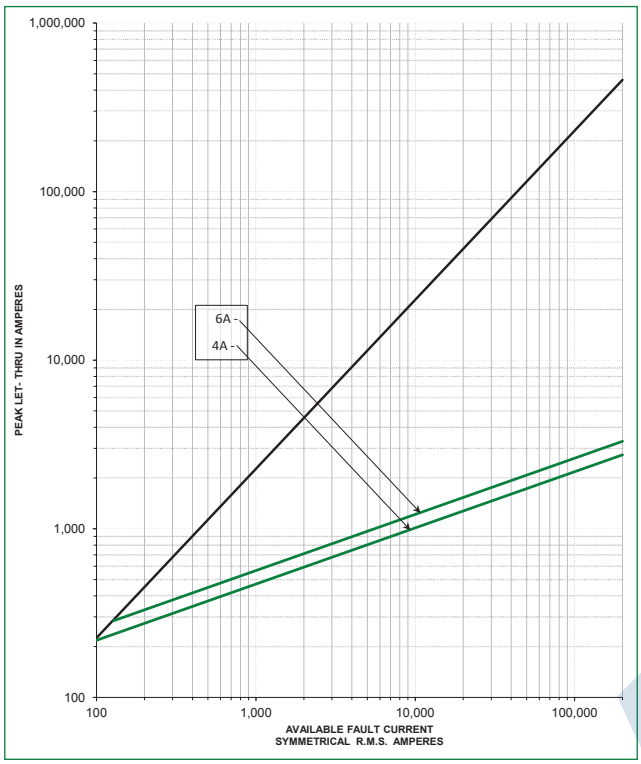

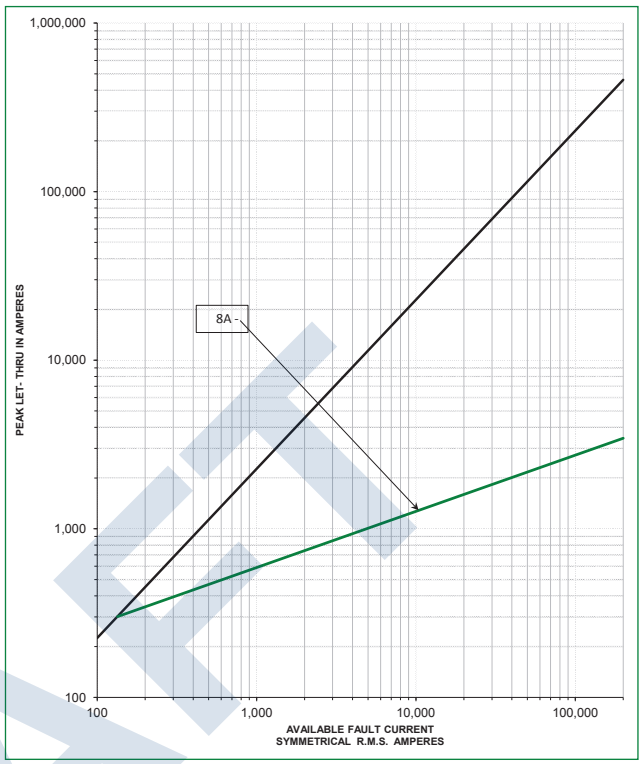

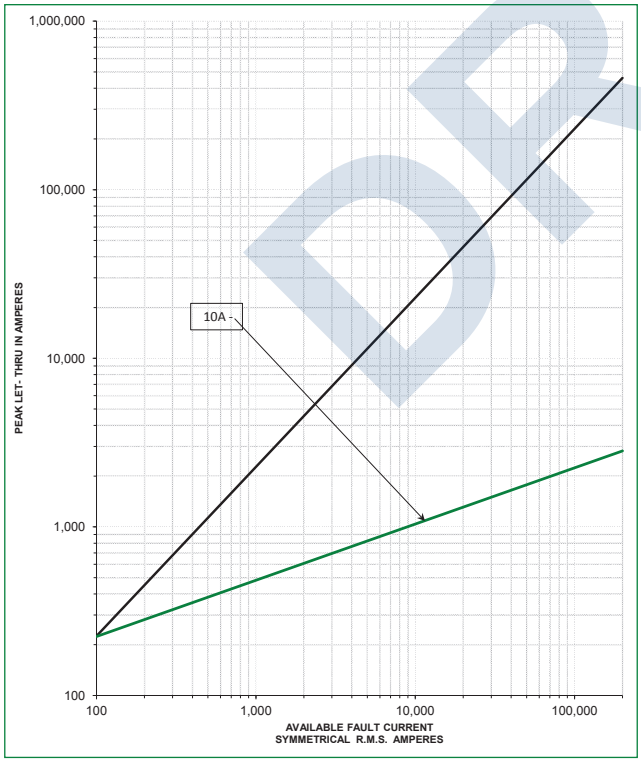

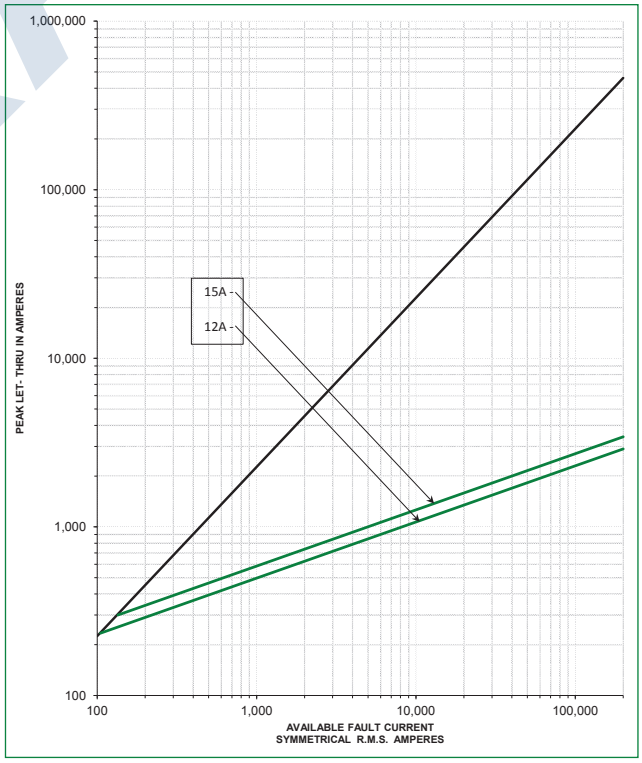

DRAFT

©2022 Littelfuse, Inc.
Specifications are subject to change without notice.

Peak Let-Thru Curves

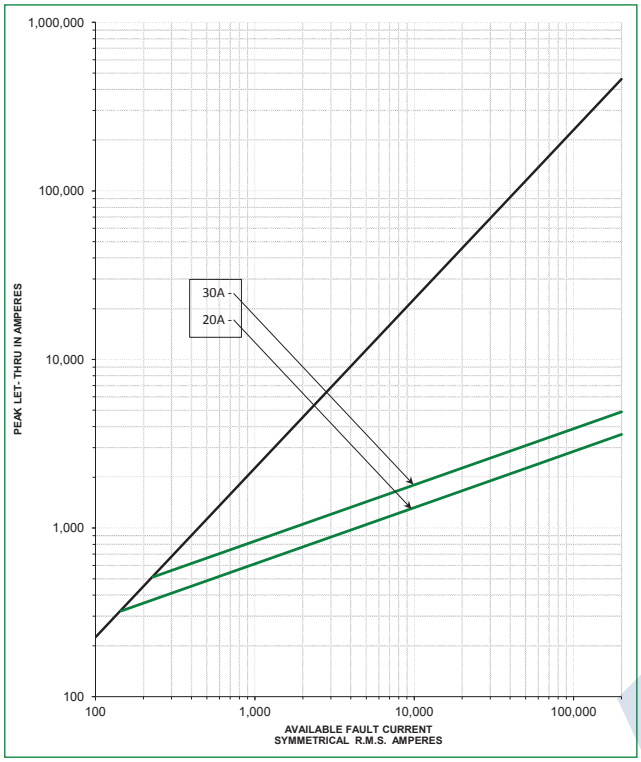

Time Current Curves

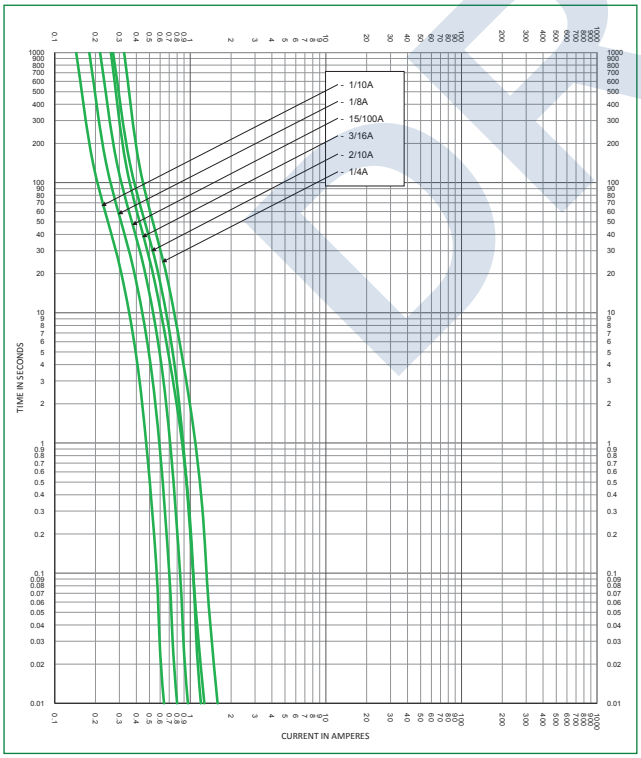

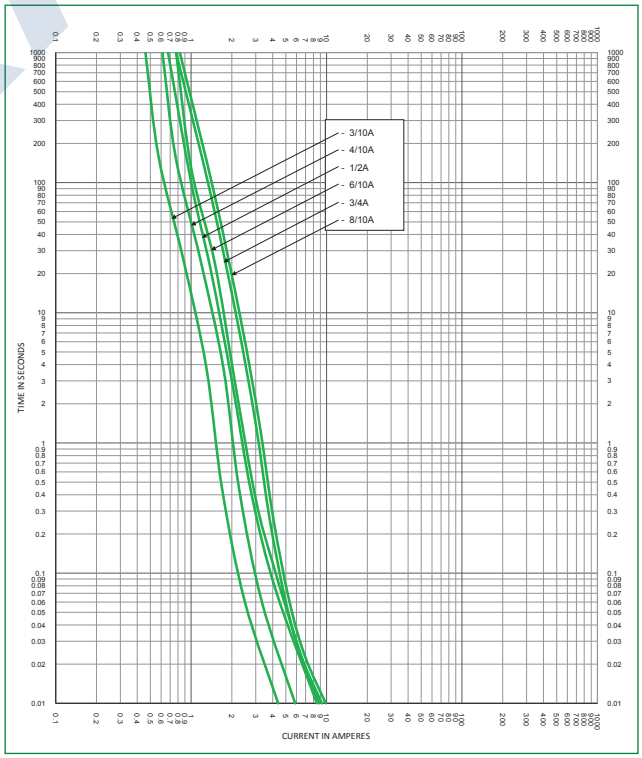

DRAFT

©2022 Littelfuse, Inc.
Specifications are subject to change without notice.

Time Current Curves

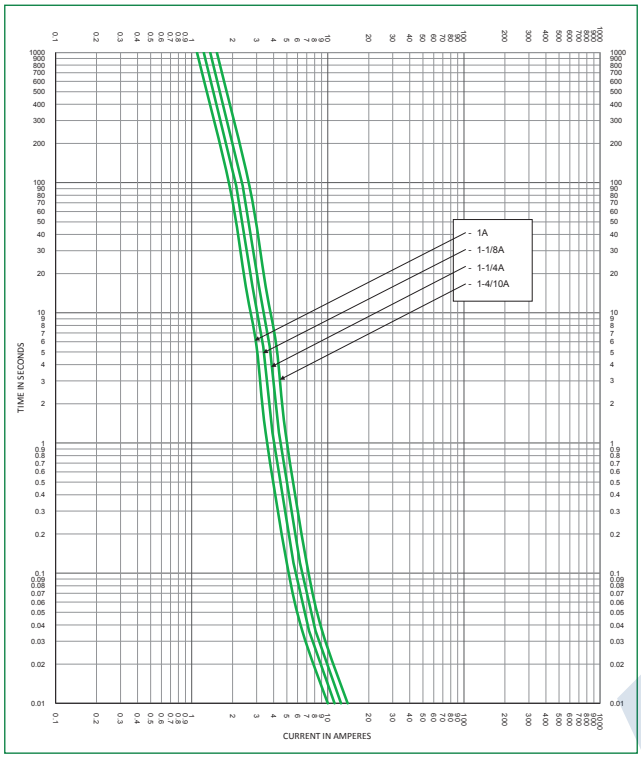

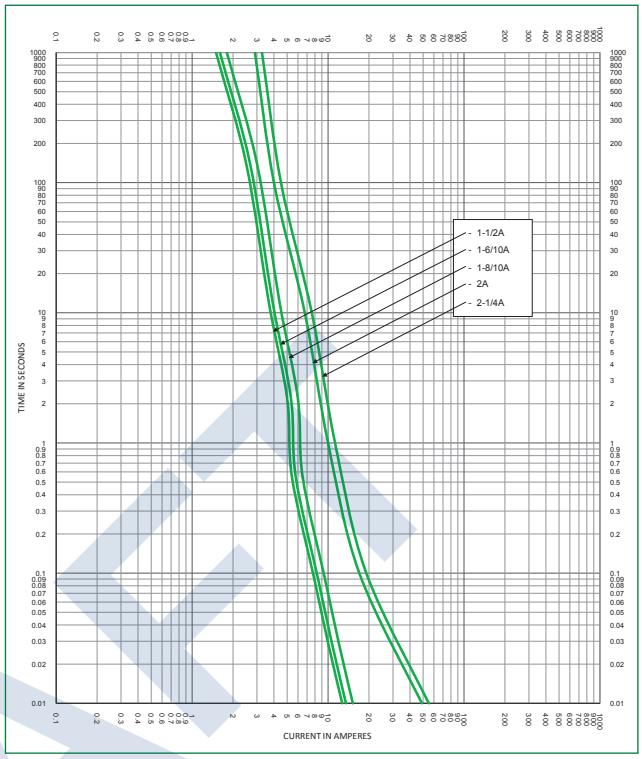

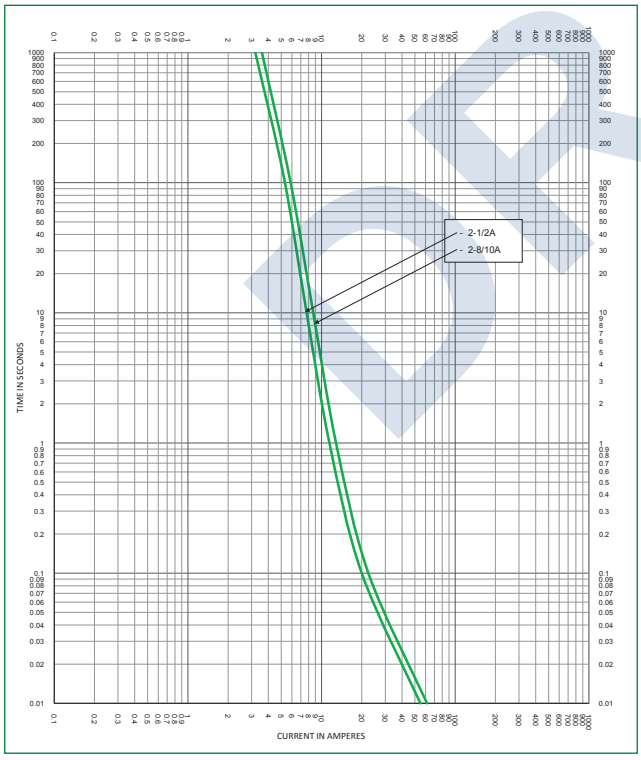

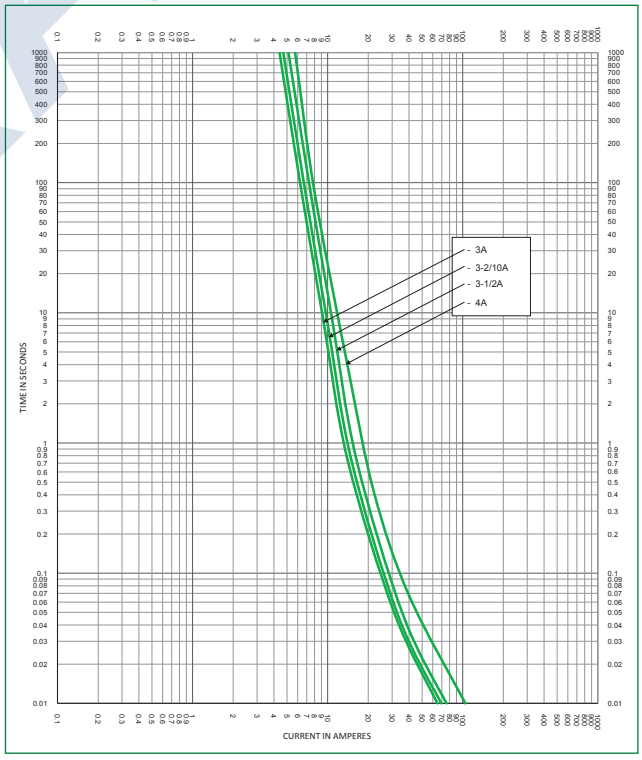

DRAFT

©2022 Littelfuse, Inc.
Specifications are subject to change without notice.

Time Current Curves

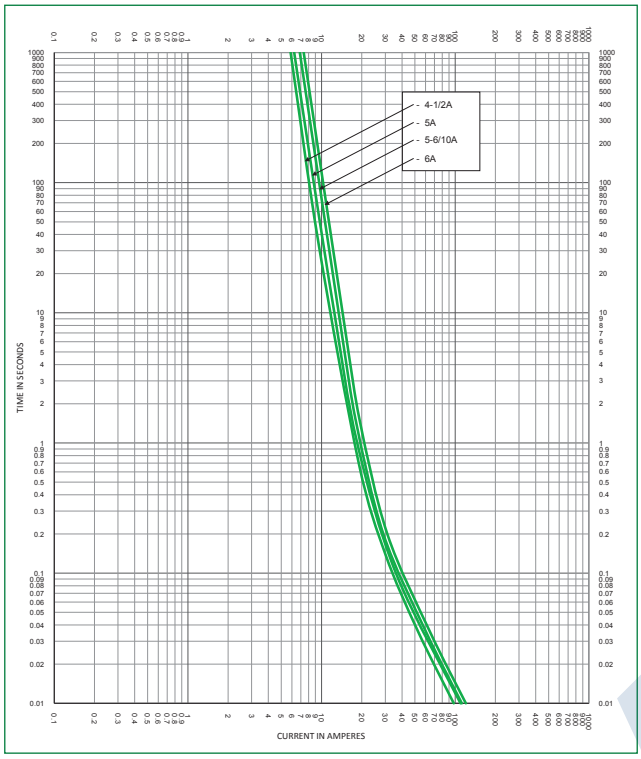

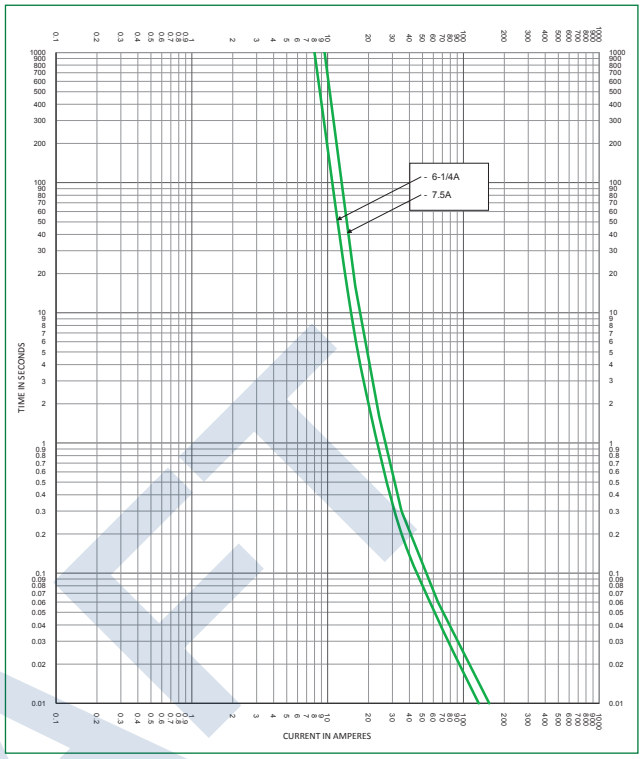

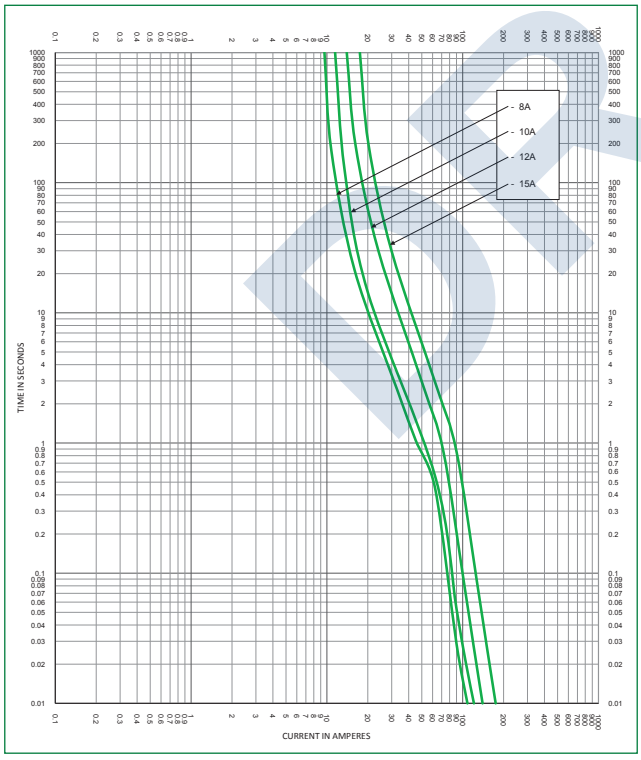

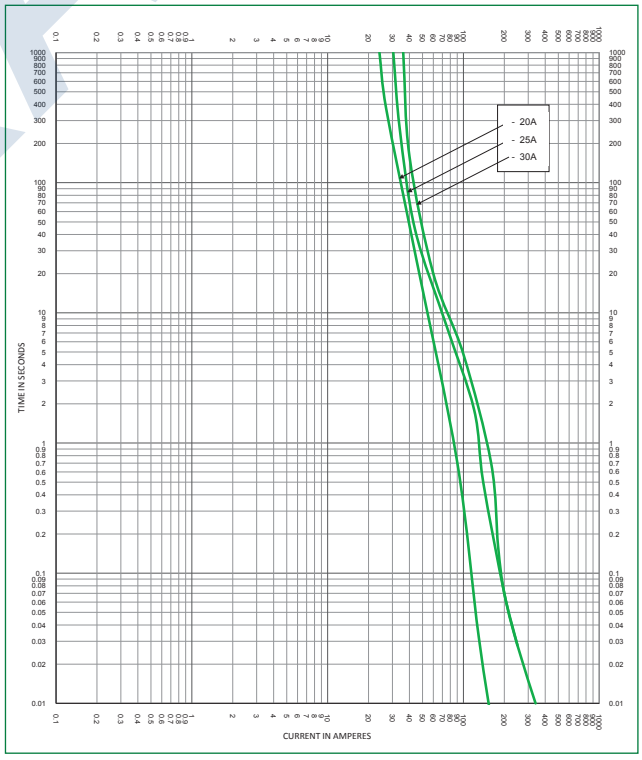

DRAFT

Disclaimer Notice – Information furnished is believed to be accurate and reliable. However, users should independently evaluate the suitability of and test each product selected for their own applications. Littelfuse products are not designed for, and may not be used in, all applications. Read complete Disclaimer Notice at **www.littelfuse.com/product-disclaimer.**

©2022 Littelfuse, Inc.
Specifications are subject to change without notice.

Type T and Type TF

Type T transformers are designed with low impedance windings for excellent voltage regulation and can accommodate the high inrush current associated with contactors, starters, solenoids, and relays. Type T transformers are manufactured using the most advanced insulating materials and are the best choice if size and cost are of concern.

Type TF transformers include factory-installed primary and secondary fuse blocks. Type TF transformers consist of two primary fuse blocks and one secondary fuse block. The primary includes rejection-style clips to increase the AIC ratings for the fuses. Since the fuse blocks are mounted on the top of the transformer, Type TF transformers are interchangeable with Type T transformers except for their increased height.

Selection Guide

1. Determine the inrush and sealed VA of each coil in the control circuit and the VA of all other components.
2. Total the **sealed** VA of all operating coils and the VA of all other loads. (This determines the minimum VA size required for the circuit.)
3. Total the **inrush** VA of all coils that are starting at the same time and all loads and coils that are running.
4. Locate a value in the VA column of Table 14.23 Regulation Chart for Type T, page 14-14, shown below, that is **equal to** or **greater than** the value calculated in step 2.
5. In the VA row selected in step 4, find the inrush value under the appropriate voltage regulation column of Table 14.23 Regulation Chart for Type T, page 14-14, shown below. If this value is **greater than** the calculated value from step 3, this is the correct transformer VA rating.

   If the inrush value on the selected VA row is **not greater than** the calculated value from step 3, use the next higher transformer VA rating, that is, the rating on the next row.

If your supply voltage is stable and fluctuates less than 5%, Schneider Electric recommends you use the 90% secondary voltage column. If your supply voltage is not stable and fluctuates more than 10% we recommend you use the 95% secondary voltage column. We recommend that you never use the 85% secondary voltage column since magnetic devices lose life expectancy if they are continuously started at 85% of rated voltage.

Table 14.23: Regulation Chart for Type T

VA	Inrush VA @ 20% power factor			Inrush VA @ 40% power factor		
	95% Secondary Voltage	90% Secondary Voltage	85% Secondary Voltage	95% Secondary Voltage	90% Secondary Voltage	85% Secondary Voltage
50	193	266	339	151	215	282
75	271	396	20	210	318	430
100	339	499	659	266	404	549
150	666	893	1120	529	731	942
200	588	815	1041	459	659	866
250	1416	1910	2388	1057	1494	1936
300	1634	2184	2709	1194	1681	2169
350	1894	2592	3261	1392	2005	621
500	3197	4104	4981	2374	3195	4019
750	3770	5515	7231	2887	4391	5945
1000	6587	9079	11430	4706	6886	9051
1500	19324	23983	28607	15066	19361	23756
2000	31384	38777	6161	24794	31630	38667
3000	26539	39934	52713	19355	30721	42216
5000	53111	85265	116277	39368	66309	93882



DRAFT

© 2019 Schneider Electric
All Rights Reserved

Table 14.24: 240 x 480 V Primary, 120 V Secondary; 230 x 460 V Primary, 115 V Secondary; 220 x 440 V Primary, 110 V Secondary

VA		Type T	Type TF	Weight	Height				Width		Depth		Accesso-ry Finger-safe Covers
					Type T		Type TF						
UL/CSA/NOM	CE	Catalog No.			in.	mm	in.	mm	in.	mm	in.	mm	
25	25	9070T25D1	9070TF25D1	2.5	2.58	66	4.00	102	3.00	76	3.09	79	FSC1
50	50	9070T50D1	9070TF50D1	2.5	2.58	66	4.00	102	3.00	76	3.09	79	FSC1
75	75	9070T75D1	9070TF75D1	3.8	2.89	73	4.18	106	3.38	86	3.34	85	FSC1
100	100	9070T100D1	9070TF100D1	3.8	2.89	73	4.18	106	3.38	86	3.34	85	FSC1
150	150	9070T150D1	9070TF150D1	5.5	3.20	81	4.50	114	3.75	95	3.59	91	FSC1
200	200	9070T200D1	9070TF200D1	5.5	3.20	81	4.50	114	3.75	95	3.59	91	FSC1
250	160	9070T250D1	9070TF250D1	7.1	3.20	81	4.50	114	3.75	95	5.30	135	FSC2
300	200	9070T300D1	9070TF300D1	8.5	3.84	98	5.13	130	4.50	114	4.74	120	FSC2
350	250	9070T350D1	9070TF350D1	10.5	3.84	98	5.13	130	4.50	114	5.11	130	FSC2
500	300	9070T500D1	9070TF500D1	11.9	3.84	98	5.13	130	4.50	114	5.49	139	FSC2
750	500	9070T750D1	9070TF750D1	11.0	4.51	115	5.80	147	5.25	133	5.61	143	FSC2
1000	630	9070T1000D1	9070TF1000D1	20.6	4.51	115	5.80	147	5.25	133	6.30	160	FSC2
1500	1000	9070T1500D1	9070TF1500D1	34.0	6.17	157	7.46	190	7.06	179	5.92	150	FSC2
2000	1500	9070T2000D1	9070TF2000D1	47.0	6.17	157	7.46	190	7.06	179	7.17	182	FSC2
3000	2000	9070T3000D1	—	60.0	8.75	222	—	—	9.00	229	7.24	184	FSC2
5000	3000	9070T5000D1	—	89.0	8.75	222	—	—	9.00	229	9.15	232	FSC2

Table 14.25: 208 Vac Primary, 120 Vac Secondary

VA		Type T	Type TF	Weight	Height				Width		Depth		Accesso-ry Finger-safe Covers
					Type T		Type TF						
UL/CSA/NOM	CE	Catalog No.			in.	mm	in.	mm	in.	mm	in.	mm	
25	25	9070T25D3	9070TF25D3	2.5	2.58	66	4.00	102	3.00	76	3.09	79	FSC1
50	50	9070T50D3	9070TF50D3	2.5	2.58	66	4.00	102	3.00	76	3.09	79	FSC1
75	75	9070T75D3	9070TF75D3	3.8	2.89	73	4.18	106	3.38	86	3.34	85	FSC1
100	100	9070T100D3	9070TF100D3	3.8	2.89	73	4.18	106	3.38	86	3.34	85	FSC1
150	150	9070T150D3	9070TF150D3	5.5	3.20	81	4.50	114	3.75	95	3.59	91	FSC1
200	200	9070T200D3	9070TF200D3	5.5	3.20	81	4.50	114	3.75	95	3.59	91	FSC1
250	160	9070T250D3	9070TF250D3	7.1	3.20	81	4.50	114	3.75	95	5.30	135	FSC2
300	200	9070T300D3	9070TF300D3	8.5	3.84	98	5.13	130	4.50	114	4.74	120	FSC2
350	250	9070T350D3	9070TF350D3	10.5	3.84	98	5.13	130	4.50	114	5.11	130	FSC2
500	300	9070T500D3	9070TF500D3	11.9	3.84	98	5.13	130	4.50	114	5.49	139	FSC2
750	500	9070T750D3	9070TF750D3	11.0	4.51	115	5.80	147	5.25	133	5.61	143	FSC2
1000	630	9070T1000D3	9070TF1000D3	20.6	4.51	115	5.80	147	5.25	133	6.30	160	FSC2
1500	1000	9070T1500D3	9070TF1500D3	34.0	6.17	157	7.46	190	7.06	179	5.92	150	FSC2
2000	1500	9070T2000D3	9070TF2000D3	47.0	6.17	157	7.46	190	7.06	179	7.17	182	FSC2
3000	2000	9070T3000D3	—	60.0	8.75	222	—	—	9.00	229	7.24	184	FSC2
5000	3000	9070T5000D3	—	89.0	8.75	222	—	—	9.00	229	9.15	232	FSC2

Table 14.26: 600 Vac Primary, 120 Vac Secondary

VA		Type T	Type TF	Weight	Height				Width		Depth		Accesso-ry Finger-safe Covers
					Type T		Type TF						
UL/CSA/NOM	CE	Catalog No.			in.	mm	in.	mm	in.	mm	in.	mm	
25	25	9070T25D5	9070TF25D5	2.5	2.58	66	4.00	102	3.00	76	3.09	79	FSC1
50	50	9070T50D5	9070TF50D5	2.5	2.58	66	4.00	102	3.00	76	3.09	79	FSC1
75	75	9070T75D5	9070TF75D5	3.8	2.89	73	4.18	106	3.38	86	3.34	85	FSC1
100	100	9070T100D5	9070TF100D5	3.8	2.89	73	4.18	106	3.38	86	3.34	85	FSC1
150	150	9070T150D5	9070TF150D5	5.5	3.20	81	4.50	114	3.75	95	3.59	91	FSC1
200	200	9070T200D5	9070TF200D5	5.5	3.20	81	4.50	114	3.75	95	3.59	91	FSC1
250	160	9070T250D5	9070TF250D5	7.1	3.20	81	4.50	114	3.75	95	5.30	135	FSC2
300	200	9070T300D5	9070TF300D5	8.5	3.84	98	5.13	130	4.50	114	4.74	120	FSC2
350	250	9070T350D5	9070TF350D5	10.5	3.84	98	5.13	130	4.50	114	5.11	130	FSC2
500	300	9070T500D5	9070TF500D5	11.9	3.84	98	5.13	130	4.50	114	5.49	139	FSC2
750	500	9070T750D5	9070TF750D5	11.0	4.51	115	5.80	147	5.25	133	5.61	143	FSC2
1000	630	9070T1000D5	9070TF1000D5	20.6	4.51	115	5.80	147	5.25	133	6.30	160	FSC2
1500	1000	9070T1500D5	9070TF1500D5	34.0	6.17	157	7.46	190	7.06	179	5.92	150	FSC2
2000	1500	9070T2000D5	9070TF2000D5	47.0	6.17	157	7.46	190	7.06	179	7.17	182	FSC2
3000	2000	9070T3000D5	—	60.0	8.75	222	—	—	9.00	229	7.24	184	FSC2
5000	3000	9070T5000D5	—	89.0	8.75	222	—	—	9.00	229	9.15	232	FSC2

Table 14.27: 277 Vac Primary, 120 Vac Secondary

VA		Type T	Type TF[1]	Weight	Height				Width		Depth		Accesso-ry Finger-safe Covers
					Type T		Type TF						
UL/CSA/NOM	CE	Catalog No.			in.	mm	in.	mm	in.	mm	in.	mm	
25	25	9070T25D4	—	2.5	2.58	66	—	—	3.00	76	3.09	79	FSC1
50	50	9070T50D4	—	2.5	2.58	66	—	—	3.00	76	3.09	79	FSC1
75	75	9070T75D4	—	3.8	2.89	73	—	—	3.38	86	3.34	85	FSC1
100	100	9070T100D4	—	3.8	2.89	73	—	—	3.38	86	3.34	85	FSC1
150	150	9070T150D4	—	5.5	3.20	81	—	—	3.75	95	3.59	91	FSC1
200	200	9070T200D4	—	5.5	3.20	81	—	—	3.75	95	3.59	91	FSC1
250	160	9070T250D4	—	7.1	3.20	81	—	—	3.75	95	5.30	135	FSC2
300	200	9070T300D4	—	8.5	3.84	98	—	—	4.50	114	4.74	120	FSC2
350	250	9070T350D4	—	10.5	3.84	98	—	—	4.50	114	5.11	130	FSC2
500	300	9070T500D4	—	11.9	3.84	98	—	—	4.50	114	5.49	139	FSC2
750	500	9070T750D4	—	11.0	4.51	115	—	—	5.25	133	5.61	143	FSC2
1000	630	9070T1000D4	—	20.6	4.51	115	—	—	5.25	133	6.30	160	FSC2
1500	1000	9070T1500D4	—	34.0	6.17	157	—	—	7.06	179	5.92	150	FSC2
2000	1500	9070T2000D4	—	47.0	6.17	157	—	—	7.06	179	7.17	182	FSC2
3000	2000	9070T3000D4	—	60.0	8.75	222	—	—	9.00	229	7.24	184	FSC2
5000	3000	9070T5000D4	—	89.0	8.75	222	—	—	9.00	229	9.15	232	FSC2

[1] TF units are design for line to line voltages on the primary, 277 Vac is a line to neutral voltage.

© 2019 Schneider Electric
All Rights Reserved

Table 14.28: 240 x 480 V Primary, 120/240 V Secondary; 230 x 460 V Primary, 115/230 V Secondary; 220 x 440 V Primary, 110/220 V Secondary

VA		Type T	Type TF[2]	Weight	Height				Width		Depth		Accesso-ry Finger-safe Covers
					Type T		Type TF						
UL/CSA/NOM	CE	Catalog No.			in.	mm	in.	mm	in.	mm	in.	mm	
25	25	9070T25D31	9070TF25D31	2.5	2.58	66	4.00	102	3.00	76	3.09	79	FSC1
50	50	9070T50D31	9070TF50D31	2.5	2.58	66	4.00	102	3.00	76	3.09	79	FSC1
75	75	9070T75D31	9070TF75D31	3.8	2.89	73	4.18	106	3.38	86	3.34	85	FSC1
100	100	9070T100D31	9070TF100D31	3.8	2.89	73	4.18	106	3.38	86	3.34	85	FSC1
150	150	9070T150D31	9070TF150D31	5.5	3.20	81	4.50	114	3.75	95	3.59	91	FSC1
200	200	9070T200D31	9070TF200D31	5.5	3.20	81	4.50	114	3.75	95	3.59	91	FSC1
250	160	9070T250D31	9070TF250D31	7.1	3.20	81	4.50	114	3.75	95	5.30	135	FSC2
300	200	9070T300D31	9070TF300D31	8.5	3.84	98	5.13	130	4.50	114	4.74	120	FSC2
350	250	9070T350D31	9070TF350D31	10.5	3.84	98	5.13	130	4.50	114	5.11	130	FSC2
500	300	9070T500D31	9070TF500D31	11.9	3.84	98	5.13	130	4.50	114	5.49	139	FSC2
750	500	9070T750D31	9070TF750D31	11.0	4.51	115	5.80	147	5.25	133	5.61	143	FSC2
1000	630	9070T1000D31	9070TF1000D31	20.6	4.51	115	5.80	147	5.25	133	6.30	160	FSC2
1500	1000	9070T1500D31	9070TF1500D31	34.0	6.17	157	7.46	190	7.06	179	5.92	150	FSC2
2000	1500	9070T2000D31	9070TF2000D31	47.0	6.17	157	7.46	190	7.06	179	7.17	182	FSC2
3000	2000	9070T3000D31	—	60.0	8.75	222	—	—	9.00	229	7.24	184	FSC2
5000	3000	9070T5000D31	—	89.0	8.75	222	—	—	9.00	229	9.15	232	FSC2

Table 14.29: 600 Vac Primary, 120/240 Vac Secondary

VA		Type T	Type TF[2]	Weight	Height				Width		Depth		Accesso-ry Finger-safe Covers
					Type T		Type TF						
UL/CSA/NOM	CE	Catalog No.			in.	mm	in.	mm	in.	mm	in.	mm	
25	25	9070T25D37	9070TF25D37	2.5	2.58	66	4.00	102	3.00	76	3.09	79	FSC1
50	50	9070T50D37	9070TF50D37	2.5	2.58	66	4.00	102	3.00	76	3.09	79	FSC1
75	75	9070T75D37	9070TF75D37	3.8	2.89	73	4.18	106	3.38	86	3.34	85	FSC1
100	100	9070T100D37	9070TF100D37	3.8	2.89	73	4.18	106	3.38	86	3.34	85	FSC1
150	150	9070T150D37	9070TF150D37	5.5	3.20	81	4.50	114	3.75	95	3.59	91	FSC1
200	200	9070T200D37	9070TF200D37	5.5	3.20	81	4.50	114	3.75	95	3.59	91	FSC1
250	160	9070T250D37	9070TF250D37	7.1	3.20	81	4.50	114	3.75	95	5.30	135	FSC2
300	200	9070T300D37	9070TF300D37	8.5	3.84	98	5.13	130	4.50	114	4.74	120	FSC2
350	250	9070T350D37	9070TF350D37	10.5	3.84	98	5.13	130	4.50	114	5.11	130	FSC2
500	300	9070T500D37	9070TF500D37	11.9	3.84	98	5.13	130	4.50	114	5.49	139	FSC2
750	500	9070T750D37	9070TF750D37	11.0	4.51	115	5.80	147	5.25	133	5.61	143	FSC2
1000	630	9070T1000D37	9070TF1000D37	20.6	4.51	115	5.80	147	5.25	133	6.30	160	FSC2
1500	1000	9070T1500D37	9070TF1500D37	34.0	6.17	157	7.46	190	7.06	179	5.92	150	FSC2
2000	1500	9070T2000D37	9070TF2000D37	47.0	6.17	157	7.46	190	7.06	179	7.17	182	FSC2
3000	2000	9070T3000D37	—	60.0	8.75	222	—	—	9.00	229	7.24	184	FSC2
5000	3000	9070T5000D37	—	89.0	8.75	222	—	—	9.00	229	9.15	232	FSC2

Table 14.30: 380/400/415 Vac Primary, 115/230 Vac Secondary

VA		Type T	Type TF	Weight	Height				Width		Depth		Accesso-ry Finger-safe Covers
					Type T		Type TF						
UL/CSA/NOM	CE	Catalog No.			in.	mm	in.	mm	in.	mm	in.	mm	
25	25	9070T25D33	9070TF25D33	2.5	2.58	66	4.00	102	3.00	76	3.09	79	FSC1
50	50	9070T50D33	9070TF50D33	2.5	2.58	66	4.00	102	3.00	76	3.09	79	FSC1
75	75	9070T75D33	9070TF75D33	3.8	2.89	73	4.18	106	3.38	86	3.34	85	FSC1
100	100	9070T100D33	9070TF100D33	3.8	2.89	73	4.18	106	3.38	86	3.34	85	FSC1
150	150	9070T150D33	9070TF150D33	5.5	3.20	81	4.50	114	3.75	95	3.59	91	FSC1
200	200	9070T200D33	9070TF200D33	5.5	3.20	81	4.50	114	3.75	95	3.59	91	FSC1
250	160	9070T250D33	9070TF250D33	7.1	3.20	81	4.50	114	3.75	95	5.30	135	FSC2
300	200	9070T300D33	9070TF300D33	8.5	3.84	98	5.13	130	4.50	114	4.74	120	FSC2
350	250	9070T350D33	9070TF350D33	10.5	3.84	98	5.13	130	4.50	114	5.11	130	FSC2
500	300	9070T500D33	9070TF500D33	11.9	3.84	98	5.13	130	4.50	114	5.49	139	FSC2
750	500	9070T750D33	9070TF750D33	11.0	4.51	115	5.80	147	5.25	133	5.61	143	FSC2
1000	630	9070T1000D33	9070TF1000D33	20.6	4.51	115	5.80	147	5.25	133	6.30	160	FSC2
1500	1000	9070T1500D33	9070TF1500D33	34.0	6.17	157	7.46	190	7.06	179	5.92	150	FSC2
2000	1500	9070T2000D33	9070TF2000D33	47.0	6.17	157	7.46	190	7.06	179	7.17	182	FSC2
3000	2000	9070T3000D33	—	60.0	8.75	222	—	—	9.00	229	7.24	184	FSC2
5000	3000	9070T5000D33	—	89.0	8.75	222	—	—	9.00	229	9.15	232	FSC2

Field Installed Fuse Blocks—Design for Line to Line Primary Voltages and Line to Neutral Secondary Voltages

Table 14.31: Accessories

Catalog No.	Voltage Codes			Description	Order Qty
Fuse Kit					
—	D1, D2, D3, D4, D5, D13, D14,D15, D23, D31, D33, D37	D20, D32	D19, D50	—	—
9070FB3A	T25–T200	T25–T150	—	3-pole fuse block for primary and secondary fusing, accommodates 1-1/2 x 13/32 in. midget fuse (2 rejection and 1 non-rejection)	1
9070FB3B	T250–T3000	T250–T2000	T25–T2000		1
9070FB2A	T25–T200	T25–T150	—	2-pole fuse block for primary fusing, accommodates 1-1/2 x 13/32 in. midget fuse (2 rejection)	1
9070FB2B	T250–T3000	T250–T2000	T25–T2000		1
9070SF25A	T25–T200	T25–T150	—	Secondary fuse clips accommodates 1-1/4 x 1/4 in. fuse	10
9070SF25B	T250–T3000	T250–T2000	T25–T2000		10
9070SF41A	T25–T200	T25–T150	—	Secondary fuse clips accommodates 1-1/2 x 13/32 in. fuse	10
9070SF41B	T250–T3000	T250–T2000	T25–T2000		10
9070FB1A	T25–T200	T25–T150	—	Secondary fuse block accommodates 1-1/4 x 1/4 in. fuse	1
9070FB1B	T250–T3000	T250–T2000	T25–T2000		1
9070FP1	—	—	—	Fuse puller for TF and FB kits	10

[2] TF designed for line to line primary and line to neutral secondary. If secondary connected in series, fuse block should be disconnected.

© 2019 Schneider Electric
All Rights Reserved

Table 14.32: 208/230/460 Vac Primary, 115 Vac Secondary

VA		Type T	Type TF	Weight	Height				Width		Depth		Accessory Finger-safe Covers
					Type T		Type TF						
UL/CSA/NOM	CE	Catalog No.			in.	mm	in.	mm	in.	mm	in.	mm	
50	50	9070T50D20	9070TF50D20	4.0	2.89	73	4.18	106	3.38	86	3.34	85	FSC1
75	75	9070T75D20	9070TF75D20	5.5	2.89	73	4.18	106	3.38	86	3.34	85	FSC1
100	100	9070T100D20	9070TF100D20	5.5	3.20	81	4.50	114	3.75	95	3.59	91	FSC1
150	150	9070T150D20	9070TF150D20	5.5	3.20	81	4.50	114	3.75	95	3.59	91	FSC1
200	200	9070T200D20	9070TF200D20	8.5	3.20	81	4.50	114	3.75	95	5.30	135	FSC2
250	160	9070T250D20	9070TF250D20	10.5	3.84	98	5.13	130	4.50	114	4.74	120	FSC2
300	200	9070T300D20	9070TF300D20	10.5	3.84	98	5.13	130	4.50	114	5.11	130	FSC2
350	250	9070T350D20	9070TF350D20	11.9	3.84	98	5.13	130	4.50	114	5.49	139	FSC2
500	300	9070T500D20	9070TF500D20	11.0	4.51	115	5.80	147	5.25	133	5.61	143	FSC2
750	500	9070T750D20	9070TF750D20	20.6	4.51	115	5.80	147	5.25	133	6.30	160	FSC2
1000	630	9070T1000D20	9070TF1000D20	34.0	6.17	157	7.46	190	7.06	179	5.92	150	FSC2
1500	1000	9070T1500D20	9070TF1500D20	47.0	6.17	157	7.46	190	7.06	179	7.17	182	FSC2
2000	1500	9070T2000D20	9070TF2000D20	60.0	8.75	222	—	—	9.00	229	7.24	184	FSC2
3000	2000	9070T3000D20	—	89.0	8.75	222	—	—	9.00	229	9.15	232	FSC2

Table 14.33: 240/480/600 V Primary, 120 V Secondary; 230/460/575 V Primary, 115 V Secondary; 220/440/550 V Primary to 110 V Secondary

VA		Type T	Type TF	Weight	Height				Width		Depth		Accessory Finger-safe Covers
					Type T		Type TF						
UL/CSA/NOM	CE	Catalog No.			in.	mm	in.	mm	in.	mm	in.	mm	
50	50	9070T50D32	9070TF50D32	3.8	2.89	73	4.18	106	3.38	86	3.34	85	FSC1
75	75	9070T75D32	9070TF75D32	3.8	2.89	73	4.18	106	3.38	86	3.34	85	FSC1
100	100	9070T100D32	9070TF100D32	5.5	3.20	81	4.50	114	3.75	95	3.59	91	FSC1
150	150	9070T150D32	9070TF150D32	5.5	3.20	81	4.50	114	3.75	95	3.59	91	FSC1
200	200	9070T200D32	9070TF200D32	7.1	3.20	81	4.50	114	3.75	95	5.30	135	FSC2
250	160	9070T250D32	9070TF250D32	8.5	3.84	98	5.13	130	4.50	114	4.74	120	FSC2
300	200	9070T300D32	9070TF300D32	10.5	3.84	98	5.13	130	4.50	114	5.11	130	FSC2
350	250	9070T350D32	9070TF350D32	11.9	3.84	98	5.13	130	4.50	114	5.49	139	FSC2
500	300	9070T500D32	9070TF500D32	11.0	4.51	115	5.80	147	5.25	133	5.61	143	FSC2
750	500	9070T750D32	9070TF750D32	20.6	4.51	115	5.80	147	5.25	133	6.30	160	FSC2
1000	630	9070T1000D32	9070TF1000D32	34.0	6.17	157	7.46	190	7.06	179	5.92	150	FSC2
1500	1000	9070T1500D32	9070TF1500D32	47.0	6.17	157	7.46	190	7.06	179	7.17	182	FSC2
2000	1500	9070T2000D32	9070TF2000D32	60.0	8.75	222	—	—	9.00	229	7.24	184	FSC2
3000	2000	9070T3000D32	—	89.0	8.75	222	—	—	9.00	229	9.15	232	FSC2

Table 14.34: 240/416/480/600 Vac Primary, 99/120/130 Vac Secondary; 230/400/460/575 Vac Primary, 95/115/125 Vac Secondary; 220/380/440/550 Vac Primary, 90/110/120 Vac Secondary; 208/360/416/520 Vac Primary, 85/104/115 Vac Secondary

VA		Type T	Type TF	Weight	Height				Width		Depth		Accessory Finger-safe Covers
					Type T		Type TF						
UL/CSA/NOM	CE	Catalog No.			in.	mm	in.	mm	in.	mm	in.	mm	
50	50	9070T50D50	9070TF50D50	4.0	2.89	73	4.19	106	3.38	86	4.43	113	FSC23
75	75	9070T75D50	9070TF75D50	7.2	3.20	81	4.50	114	3.75	95	4.70	119	FSC23
100	100	9070T100D50	9070TF100D50	7.1	3.20	81	4.50	114	3.75	95	4.70	119	FSC23
150	150	9070T150D50	9070TF150D50	8.5	3.84	98	5.14	131	4.50	114	4.74	120	FSC23
200	200	9070T200D50	9070TF200D50	10.5	3.84	98	5.14	131	4.50	114	5.11	130	FSC23
250	160	9070T250D50	9070TF250D50	10.5	3.84	98	5.14	131	4.50	114	5.11	130	FSC23
300	200	9070T300D50	9070TF300D50	11.9	3.84	98	5.14	131	4.50	114	5.49	139	FSC23
350	250	9070T350D50	9070TF350D50	11.0	4.51	115	5.81	148	5.25	133	5.61	143	FSC23
500	300	9070T500D50	9070TF500D50	11.0	4.51	115	5.81	148	5.25	133	5.61	143	FSC23
750	500	9070T750D50	9070TF750D50	20.6	4.51	115	5.81	148	5.25	133	6.3.	160	FSC23
1000	630	9070T1000D50	9070TF1000D50	34.0	6.17	157	7.47	190	7.06	179	5.92	150	FSC23
1500	1000	9070T1500D50	9070TF1500D50	47.0	6.17	157	7.47	190	7.06	179	7.17	182	FSC23
2000	1500	9070T2000D50	9070TF2000D50	60.0	7.63	194	8.93	227	9.00	229	6.38	162	FSC23

Table 14.35: 240 x 480 Vac Primary, 120/24 Vac Secondary (24 Vac limited to 20% of nameplate VA)

VA		Type T	Type TF	Weight	Height				Width		Depth		Accessory Finger-safe Covers
					Type T		Type TF						
UL/CSA/NOM	CE	Catalog No.			in.	mm	in.	mm	in.	mm	in.	mm	
50	50	9070T50D15	—	2.5	2.58	66	—	—	3.00	76	3.09	79	FSC1
75	75	9070T75D15	—	3.8	2.89	73	—	—	3.38	86	3.34	85	FSC1
100	100	9070T100D15	—	3.8	2.89	73	—	—	3.38	86	3.34	85	FSC1
150	150	9070T150D15	—	5.5	3.20	81	—	—	3.75	95	3.59	91	FSC1
200	200	9070T200D15	—	5.5	3.20	81	—	—	3.75	95	3.59	91	FSC1
250	160	9070T250D15	—	7.1	3.20	81	—	—	3.75	95	5.30	135	FSC2
300	200	9070T300D15	—	8.5	3.84	98	—	—	4.50	114	4.74	120	FSC2
350	250	9070T350D15	—	10.5	3.84	98	—	—	4.50	114	5.11	130	FSC2
500	300	9070T500D15	—	11.9	3.84	98	—	—	4.50	114	5.49	139	FSC2
750	500	9070T750D15	—	11.0	4.51	115	—	—	5.25	133	5.61	143	FSC2
1000	630	9070T1000D15	—	20.6	4.51	115	—	—	5.25	133	6.30	160	FSC2
1500	1000	9070T1500D15	—	34.0	6.17	157	—	—	7.06	179	5.92	150	FSC2
2000	1500	9070T2000D15	—	47.0	6.17	157	—	—	7.06	179	7.17	182	FSC2
3000	2000	9070T3000D15	—	60.0	8.75	222	—	—	9.00	229	7.24	184	FSC2
5000	3000	9070T5000D15	—	89.0	8.75	222	—	—	9.00	229	9.15	232	FSC2

Table 14.36: Accessories

Catalog No.	Voltage Codes			Description	Order Qty
—	D1, D2, D3, D4, D5, D13, D14,D15, D23, D31, D33, D37	D20, D32	D19, D50	—	—
9070FSC1	T25–T200	T25–T150	—	2 covers per kit	10
9070FSC2	T250–T5000	T250–T5000	—	2 covers per kit	10
9070FSC23	—	—	T25–T5000	2 covers per kit	10

© 2019 Schneider Electric
All Rights Reserved

Table 14.37: 240 x 480 Vac Primary, 24 Vac Secondary

VA		Type T	Weight	Height Type T		Width		Depth		Accesory Fingersafe Covers
UL/CSA/NOM	CE	Catalog No.		in.	mm	in.	mm	in.	mm	
50	50	9070T50D2	2.5	2.58	66	3.00	76	3.09	79	FSC1
75	75	9070T75D2	3.8	2.89	73	3.38	86	3.34	85	FSC1
100	100	9070T100D2	3.8	2.89	73	3.38	86	3.34	85	FSC1
150	150	9070T150D2	5.5	3.20	81	3.75	95	3.59	91	FSC1
200	200	9070T200D2	5.5	3.20	81	3.75	95	3.59	91	FSC1
250	160	9070T250D2	7.1	3.20	81	3.75	95	5.30	135	FSC2
300	200	9070T300D2	8.5	3.84	98	4.50	114	4.74	120	FSC2
350	250	9070T350D2	10.5	3.84	98	4.50	114	5.11	130	FSC2
500	300	9070T500D2	11.9	3.84	98	4.50	114	5.49	139	FSC2
750	500	9070T750D2	11.0	4.51	115	5.25	133	5.61	143	FSC2
1000	630	9070T1000D2	20.6	4.51	115	5.25	133	6.30	160	FSC2

Table 14.38: 208 Vac Primary, 24 Vac Secondary

VA		Type T	Weight	Height Type T		Width		Depth		Accesory Fingersafe Covers
UL/CSA/NOM	CE	Catalog No.		in.	mm	in.	mm	in.	mm	
50	50	9070T50D14	2.5	2.58	66	3.00	76	3.09	79	FSC1
75	75	9070T75D14	3.8	2.89	73	3.38	86	3.34	85	FSC1
100	100	9070T100D14	3.8	2.89	73	3.38	86	3.34	85	FSC1
150	150	9070T150D14	5.5	3.20	81	3.75	95	3.59	91	FSC1
200	200	9070T200D14	5.5	3.20	81	3.75	95	3.59	91	FSC1
250	160	9070T250D14	7.1	3.20	81	3.75	95	5.30	135	FSC2
300	200	9070T300D14	8.5	3.84	98	4.50	114	4.74	120	FSC2
350	250	9070T350D14	10.5	3.84	98	4.50	114	5.11	130	FSC2
500	300	9070T500D14	11.9	3.84	98	4.50	114	5.49	139	FSC2
750	500	9070T750D14	11.0	4.51	115	5.25	133	5.61	143	FSC2
1000	630	9070T1000D14	20.6	4.51	115	5.25	133	6.30	160	FSC2

Table 14.39: 120 x 240 Vac Primary, 24 Vac Secondary

VA		Type T	Weight	Height Type T		Width		Depth		Accesory Fingersafe Covers
UL/CSA/NOM	CE	Catalog No.		in.	mm	in.	mm	in.	mm	
50	50	9070T50D23	2.5	2.58	66	3.00	76	3.09	79	FSC1
75	75	9070T75D23	3.8	2.89	73	3.38	86	3.34	85	FSC1
100	100	9070T100D23	3.8	2.89	73	3.38	86	3.34	85	FSC1
150	150	9070T150D23	5.5	3.20	81	3.75	95	3.59	91	FSC1
200	200	9070T200D23	5.5	3.20	81	3.75	95	3.59	91	FSC1
250	160	9070T250D23	7.1	3.20	81	3.75	95	5.30	135	FSC2
300	200	9070T300D23	8.5	3.84	98	4.50	114	4.74	120	FSC2
350	250	9070T350D23	10.5	3.84	98	4.50	114	5.11	130	FSC2
500	300	9070T500D23	11.9	3.84	98	4.50	114	5.49	139	FSC2
750	500	9070T750D23	11.0	4.51	115	5.25	133	5.61	143	FSC2
1000	630	9070T1000D23	20.6	4.51	115	5.25	133	6.30	160	FSC2

Table 14.40: 120 Vac Primary, 12/24 Vac Secondary

VA		Type T	Weight	Height Type T		Width		Depth		Accesory Fingersafe Covers
UL/CSA/NOM	CE	Catalog No.		in.	mm	in.	mm	in.	mm	
50	50	9070T50D13	2.5	2.58	66	3.00	76	3.09	79	FSC1
75	75	9070T75D13	3.8	2.89	73	3.38	86	3.34	85	FSC1
100	100	9070T100D13	3.8	2.89	73	3.38	86	3.34	85	FSC1
150	150	9070T150D13	5.5	3.20	81	3.75	95	3.59	91	FSC1
200	200	9070T200D13	5.5	3.20	81	3.75	95	3.59	91	FSC1
250	160	9070T250D13	7.1	3.20	81	3.75	95	5.30	135	FSC2
300	200	9070T300D13	8.5	3.84	98	4.50	114	4.74	120	FSC2
350	250	9070T350D13	10.5	3.84	98	4.50	114	5.11	130	FSC2
500	300	9070T500D13	11.9	3.84	98	4.50	114	5.49	139	FSC2
750	500	9070T750D13	11.0	4.51	115	5.25	133	5.61	143	FSC2
1000	630	9070T1000D13	20.6	4.51	115	5.25	133	6.30	160	FSC2

Table 14.41: 208/240/277/380/480 Vac Primary, 24 Vac Secondary

VA		Type T	Weight	Height Type T		Width		Depth		Accesory Fingersafe Covers
UL/CSA/NOM	CE	Catalog No.		in.	mm	in.	mm	in.	mm	
50	50	9070T50D19	4.0	2.89	106	3.38	86	3.34	85	FSC23
75	75	9070T75D19	5.5	2.89	106	3.38	86	3.34	85	FSC23
100	100	9070T100D19	5.5	3.20	114	3.75	95	3.59	91	FSC23
150	150	9070T150D19	5.5	3.20	114	3.75	95	3.59	91	FSC23
200	200	9070T200D19	8.5	3.20	114	3.75	95	5.30	135	FSC23
250	160	9070T250D19	10.5	3.84	130	4.50	114	4.74	120	FSC23
300	200	9070T300D19	10.5	3.84	130	4.50	114	5.11	130	FSC23
350	250	9070T350D19	11.9	3.84	130	4.50	114	5.49	139	FSC23
500	300	9070T500D19	11.0	4.51	147	5.25	133	5.61	143	FSC23
750	500	9070T750D19	20.6	4.51	147	5.25	133	6.30	160	FSC23
1000	630	9070T1000D19	34.0	6.17	190	7.06	179	5.92	150	FSC23

DRAFT

© 2019 Schneider Electric
All Rights Reserved

Item 15bc

Accessories

Table 43 - Fingersafe™ Covers (not supplied with unit) – Compliant with IP2X per EN-60529

Class	Type	VA Accessory Key[14]			Description
		I	II	III	
9070	FSC-1 FSC-2 FSC-23	25–200 VA 250–5000 VA N/A	25–100 VA 150–5000 VA N/A	N/A N/A 25–5000 VA	2 covers per kit



Table 44 - Fuse Puller—For ease in installing fuses and finger protection, used with fuse blocks with 1-1/2 in. x 13/32 in. fuses

Class	Type	VA Accessory Key			Description
		I	II	III	
9070	FP-1	ALL	ALL	ALL	Fuse puller kit complies with IP00 per EN-60529, 3 pullers per kit.

NOTE: Final IP rating is determined by the enclosure where the transformer is used.

DRAFT

14. Kits must be ordered separately. Also supplied in bulk packages of 100 individual covers. Add “B” to Type number if ordering bulk (available only on FSC-1B and FSC-2B).

Supplemental Fuses
FLM Series

Item 15e

250 V ac • 10x38 (Midget) • Time-Delay • 1/10–30 A



Description

The FLM series 250 V fuses are designed to protect control circuit transformers, solenoids, and other circuits with high in-rush currents. They are also excellent for supplemental protection of small motors. The time-delay design can carry an overload several times the normal load for a short period of time without blowing. The FLM fuses are non-indicating and may be used with an indicating fuse block to identify a blown fuse.

Features & Benefits

FEATURES	BENEFITS
10x38 mm size	Common dimensions used in a variety of applications
Time-delay	Allows for temporary current surge for a short period of time without blowing
Paper body	Cost effective materials provide a lower cost alternative for supplemental circuit protection
POWR-GARD® technology	Ensures quality backup overcurrent protection

Applications

- Control circuit transformers
- Solenoids
- Circuits with high in-rush currents
- Small motors

DRAFT

©2022 Littelfuse, Inc.
Specifications are subject to change without notice.

Specifications

Voltage Rating	Ac: 250 V Dc: 125 V
Interrupting Ratings	Ac: 10,000 A Dc: 10,000 A Self Certified
Ampere Range	1/10 – 30 A
Applicable Standards	UL 248-14
Environmental	REACH, RoHS
Material	Body: Paper Cap: Nickel plated bronze
Country of Origin	Mexico
Fuse Weight	.010 lbs (4.54g)

Certification & Compliance

UL	UL Listed (File: E10480)
CSA	CSA Certified (File: LR29862)
CE	EU_DOC-FLM_210323
QPL	MIL-F-15160/9
RoHS	RoHS 2 Directive 2011/65/EU; Directive (EU) 2015/863

Accessories

L60030M series fuse block
LEB/LEX series inline fuse holder
LPSM Touch-safe series fuse holder
571/572 series panel mount fuse holder

Ordering Information

AMPERE	CATALOG NUMBER	PRODUCT MARKING	PACK QUANTITY	ORDERING NUMBER	UPC
1/10	FLM.100	FLM 1/10 A	10	0FLM.100T	07945814011
15/100	FLM.125	FLM 15/100 A	10	0FLM.125T	07945814013
2/10	FLM.200	FLM 2/10 A	10	0FLM.200T	07945814018
1/4	FLM.250	FLM 1/4 A	10	0FLM.250T	07945814019
3/10	FLM.300	FLM 3/10 A	10	0FLM.300T	07945800083
4/10	FLM.400	FLM 4/10 A	10	0FLM.400T	07945814023
1/2	FLM.500	FLM 1/2 A	10	0FLM.500T	07945814024
6/10	FLM.600	FLM 6/10 A	10	0FLM.600T	07945800084
8/10	FLM.800	FLM 8/10 A	10	0FLM.800T	07945800085
1	FLM001	FLM 1A	10	0FLM001.T	07945814031
1 1/8	FLM1.12	FLM 1-1/8 A	10	0FLM1.12T	07945814032
1 1/4	FLM1.25	FLM 1-1/4 A	10	0FLM1.25T	07945814034
1 4/10	FLM01.4	FLM 1-4/10 A	10	0FLM01.4T	07945814036
1 1/2	FLM01.5	FLM 1-1/2 A	10	0FLM01.5T	07945814037

DRAFT

©2022 Littelfuse, Inc.
Specifications are subject to change without notice.

Ordering Information

AMPERE	CATALOG NUMBER	PRODUCT MARKING	PACK QUANTITY	ORDERING NUMBER	UPC
1 9/10	FLM01.6	FLM 1-9/10A	10	0FLM01.6T	07945814038
1 8/10	FLM01.8	FLM 1-8/10A	10	0FLM01.8T	07945814040
2	FLM002	FLM 2A	10	0FLM002.T	07945814041
2 1/4	FLM2.25	FLM 2-1/4A	10	0FLM2.25T	07945814042
2 1/2	FLM02.5	FLM 2-1/2A	10	0FLM02.5T	07945814043
2 8/10	FLM02.8	FLM 2-8/10A	10	0FLM02.8T	07945814046
3	FLM003	FLM 3A	10	0FLM003.T	07945814047
3 2/10	FLM03.2	FLM 3-2/10A	10	0FLM03.2T	07945814049
3 1/2	FLM03.5	FLM 3-1/2A	10	0FLM03.5T	07945814051
4	FLM004	FLM 4A	10	0FLM004.T	07945814053
4 1/2	FLM04.5	FLM 4-1/2A	10	0FLM04.5T	07945814054
5	FLM005	FLM 5A	10	0FLM005.T	07945814055
5 9/10	FLM05.6	FLM 5-9/10A	10	0FLM05.6T	07945814056
6	FLM006	FLM 6A	10	0FLM006.T	07945814058
6 1/4	FLM6.25	FLM 6-1/4A	10	0FLM6.25T	07945814059
7	FLM007	FLM 7A	10	0FLM007.T	07945814061
8	FLM008	FLM 8A	10	0FLM008.T	07945814063
9	FLM009	FLM 9A	10	0FLM009.T	07945814064
10	FLM010	FLM 10A	10	0FLM010.T	07945814065
12	FLM012	FLM 12A	10	0FLM012.T	07945814066
15	FLM015	FLM 15A	10	0FLM015.T	07945814068
20	FLM020	FLM 20A	10	0FLM020.T	07945814071
25	FLM025	FLM 25A	10	0FLM025.T	07945814072
30	FLM030	FLM 30A	10	0FLM030.T	07945814073

Electrical Specification - Agency Requirements

AMPERAGE RATING	OPENING TIME (MINUTES)		
	100 % OF AMP RATING PER UL	135 % OF AMP RATING PER UL	200 % OF AMP RATING PER UL
1/10–3	Temperature Stabilization	60 Minutes Max	5 Seconds Minimum
3 2/10–30	Temperature Stabilization	60 Minutes Max	12 Seconds Minimum

Electrical Specifications

CATALOG NUMBER	VOLTAGE AC (V)	INTERRUPTING RATING (A)	NOMINAL COLD RESISTANCE (OHMS)	AGENCY APPROVALS			
				UL	CSA	QPL	CE
FLM.100	250	10,000	188.0	•	•	•	•
FLM.125	250	10,000	87.00	•	•	•	•
FLM.200	250	10,000	35.10	•	•	•	•
FLM.250	250	10,000	16.82	•	•	•	•
FLM.300	250	10,000	6.739	•	•	•	•
FLM.400	250	10,000	5.413	•	•	•	•

DRAFT

©2022 Littelfuse, Inc.
Specifications are subject to change without notice.

Electrical Specifications

CATALOG NUMBER	VOLTAGE AC (V)	INTERRUPTING RATING (A)	NOMINAL COLD RESISTANCE (OHMS)	AGENCY APPROVALS			
				UL	CSA	QPL	CE
FLM.500	250	10,000	3.790	•	•	•	•
FLM.600	250	10,000	2.050	•	•	•	•
FLM.800	250	10,000	1.024	•	•	•	•
FLM001	250	10,000	1.024	•	•	•	•
FLM1.12	250	10,000	.6231	•	•	•	•
FLM1.25	250	10,000	.6231	•	•	•	•
FLM01.4	250	10,000	.3950	•	•	•	•
FLM01.5	250	10,000	.3390	•	•	•	•
FLM01.6	250	10,000	.2860	•	•	•	•
FLM01.8	250	10,000	.2530	•	•	•	•
FLM002	250	10,000	.2191	•	•	•	•
FLM2.25	250	10,000	.1840	•	•	•	•
FLM02.5	250	10,000	.1620	•	•	•	•
FLM02.8	250	10,000	.1250	•	•	•	•
FLM003	250	10,000	.1020	•	•	•	•
FLM03.2	250	10,000	.0904	•	•	•	•
FLM03.5	250	10,000	.0735	•	•	•	•
FLM004	250	10,000	.0700	•	•	•	•
FLM04.5	250	10,000	.0561	•	•	•	•
FLM005	250	10,000	.0413	•	•	•	•
FLM05.6	250	10,000	.0326	•	•	•	•
FLM006	250	10,000	.0280	•	•	•	•
FLM6.25	250	10,000	.0277	•	•	•	•
FLM007	250	10,000	.0213	•	•	•	•
FLM008	250	10,000	.0124	•	•	•	•
FLM009	250	10,000	.0106	•	•	•	•
FLM010	250	10,000	.0090	•	•	•	•
FLM012	250	10,000	.0069	•	•	•	•
FLM015	250	10,000	.0053	•	•	•	•
FLM020	250	10,000	.0038	•	•	•	•
FLM025	250	10,000	.0027	•	•	•	•
FLM030	250	10,000	.0022	•	•	•	•

DRAFT

Dimensions Millimeters (inches)

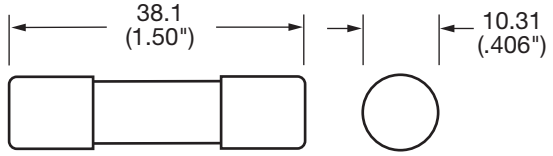

©2022 Littelfuse, Inc.
Specifications are subject to change without notice.

Temperature Rerating Curve

Ambient temperature: temperature of air immediately surrounding fuse

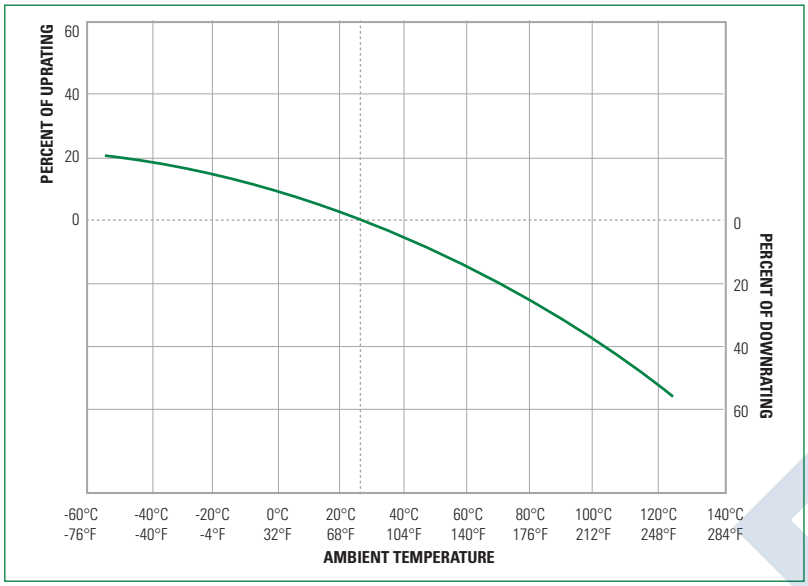

Time Current Curves

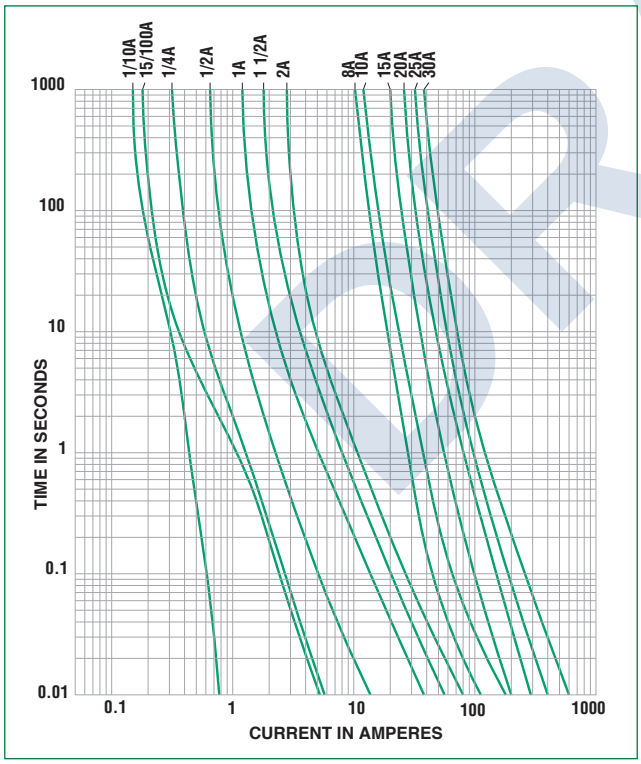

DRAFT

Disclaimer Notice – Information furnished is believed to be accurate and reliable. However, users should independently evaluate the suitability of and test each product selected for their own applications. Littelfuse products are not designed for, and may not be used in, all applications. Read complete Disclaimer Notice at **www.littelfuse.com/product-disclaimer.**

©2022 Littelfuse, Inc.
Specifications are subject to change without notice.

UL489 / CSA C22.2 No 5 / IEC/EN 60947-2 / GB14048-2
Miniature Circuit Breakers

Multi9 C60BP and C60BPR Miniature Circuit Breakers

C60BP and C60BPR are multi-standard miniature circuit breakers and branch circuit protection as defined by UL489. They combine the following functions:

- circuit protection against short-circuit curves
- circuit protection against overload currents
- tripping and fault indication by the addition of auxiliary accessories

Number of 18 mm (0.71 in.) Poles	Rating (A) 25°C/77°F	Breaking Capacity (kA rms)							
		AIR UL 489 / CSA C22.2 No 5				Icu IEC 60947-2			
	Voltage (Ue)	277 Vac	240 Vac	120 Vac	60 Vdc	440 Vac	415 Vac	240 Vac	60 Vdc
1P	0.5 to 35	10	14	14	10	—	3	10	20
	40 to 63	—	10	10	10	—	3	10	20
	Voltage (Ue)	480Y/277 Vac		240 Vac	125 Vdc	440 Vac	415 Vac	240 Vac	125 Vdc
2P	1 to 25	10		14	10	6	10	20	—
	30 to 35	10		14	—	6	10	20	—
3P	1 to 35	10		14	—	6	10	20	—
2P/3P	40 to 63	—		10	—	6	10	20	—


C60BP 1P


C60BP 2P


C60BP 3P


C60BPR 1P


C60BPR 2P


C60BPR 3P

Table 7.36: C60BP and C60BPRCatalog Numbers

Type Rating (In)	UL489 and CSA Voltages	1P Curve			2P Curve		3P Curve	
		Z	C	D (= K)	C	D (= K)	C	D (= K)
C60BP (Tunnel Terminal Connection)								
0.5	480Y/277 V and 240 V	M9F44170	M9F42170	M9F43170	—	—	—	—
1		M9F44101	M9F42101	M9F43101	M9F42201	M9F43201	M9F42301	M9F43301
2		M9F44102	M9F42102	M9F43102	M9F42202	M9F43202	M9F42302	M9F43302
3		M9F44103	M9F42103	M9F43103	M9F42203	M9F43203	M9F42303	M9F43303
4		M9F44104	M9F42104	M9F43104	M9F42204	M9F43204	M9F42304	M9F43304
5		M9F44105	M9F42105	M9F43105	M9F42205	M9F43205	M9F42305	M9F43305
6		M9F44106	M9F42106	M9F43106	M9F42206	M9F43206	M9F42306	M9F43306
8		M9F44108	M9F42108	M9F43108	M9F42208	M9F43208	M9F42308	M9F43308
10		M9F44110	M9F42110	M9F43110	M9F42210	M9F43210	M9F42310	M9F43310
15		M9F44115	M9F42115	M9F43115	M9F42215	M9F43215	M9F42315	M9F43315
20		M9F44120	M9F42120	M9F43120	M9F42220	M9F43220	M9F42320	M9F43320
25		M9F44125	M9F42125	M9F43125	M9F42225	M9F43225	M9F42325	M9F43325
30		M9F44130	M9F42130	M9F43130	M9F42230	M9F43230	M9F42330	M9F43330
35		M9F44135	M9F42135	M9F43135	M9F42235	M9F43235	M9F42335	M9F43335
40	240 V only	M9F44140	M9F42140	M9F43140	M9F42240	M9F43240	M9F42340	M9F43340
45		M9F44145	M9F42145	M9F43145	M9F42245	M9F43245	M9F42345	M9F43345
50		M9F44150	M9F42150	M9F43150	M9F42250	M9F43250	M9F42350	M9F43350
63		M9F44163	M9F42163	M9F43163	M9F42263	M9F43263	M9F42363	M9F43363
C60BPR (Ring Tongue Terminal Connection)								
1	480Y/277 V and 240 V	M9F54101	M9F52101	M9F53101	M9F52201	M9F53201	M9F52301	M9F53301
2		M9F54102	M9F52102	M9F53102	M9F52202	M9F53202	M9F52302	M9F53302
4		M9F54104	M9F52104	M9F53104	M9F52204	M9F53204	M9F52304	M9F53304
6		M9F54106	M9F52106	M9F53106	M9F52206	M9F53206	M9F52306	M9F53306
8		M9F54108	M9F52108	M9F53108	M9F52208	M9F53208	M9F52308	M9F53308
10		M9F54110	M9F52110	M9F53110	M9F52210	M9F53210	M9F52310	M9F53310
15		M9F54115	M9F52115	M9F53115	M9F52215	M9F53215	M9F52315	M9F53315
20		M9F54120	M9F52120	M9F53120	M9F52220	M9F53220	M9F52320	M9F53320
25		M9F54125	M9F52125	M9F53125	M9F52225	M9F53225	M9F52325	M9F53325
30		M9F54130	M9F52130	M9F53130	M9F52230	M9F53230	M9F52330	M9F53330
35		M9F54135	M9F52135	M9F53135	M9F52235	M9F53235	M9F52335	M9F53335
40	240 V only	M9F54140	M9F52140	M9F53140	M9F52240	M9F53240	M9F52340	M9F53340
45		M9F54145	M9F52145	M9F53145	M9F52245	M9F53245	M9F52345	M9F53345
50		M9F54150	M9F52150	M9F53150	M9F52250	M9F53250	M9F52350	M9F53350
63		M9F54163	M9F52163	M9F53163	M9F52263	M9F53263	M9F52363	M9F53363

DRAFT

© 2024 Schneider Electric
All Rights Reserved
11/1/2024

Item 19a

Product data sheet

Specifications



Circuit breaker, PowerPacT H, 40A, 3 pole, 600VAC, 14kA, lugs, thermal magnetic, 80%

HDL36040

Main

Range	PowerPact
Product name	PowerPact H
Product or Component Type	Circuit breaker
Device Application	Distribution

Complementary

Line Rated Current	40 A
Number of Poles	3P
Protected poles description	3t
Control type	Toggle
Breaking capacity code	D
Breaking capacity	25 kA 240 V AC 50/60 Hz UL 489 18 kA 480 V AC 50/60 Hz 14 kA 600 V AC 50/60 Hz 20 kA 250 V DC
[Ue] rated operational voltage	690 V AC 50/60 Hz IEC 60947-3
Network Frequency	50/60 Hz
[Ics] rated service breaking capacity	25 kA 220/240 V AC 50/60 Hz IEC 60947-2 18 kA 380/440/415 V AC 50/60 Hz IEC 60947-2 14 kA 500/525 V AC 50/60 Hz IEC 60947-2 20 kA 250 V DC IEC 60947-2 20 kA 500 V DC IEC 60947-2
[Uimp] rated impulse withstand voltage	8 kV IEC 60947-2
Trip unit technology	Thermal-magnetic
Magnetic tripping current	850 A
Magnetic hold current	400 A
Continuous current rating	80 %
[Ui] rated insulation voltage	750 V IEC 60947-2
Suitability for isolation	Yes IEC 60947-2
Utilisation category	Category A
AWG gauge	AWG 14...AWG 3/0 aluminium/copper terminal

* Price is “List Price” and may be subject to a trade discount – check with your local distributor or retailer for actual price.

DRAFT

Disclaimer: This documentation is not intended as a substitute for and is not to be used for determining suitability or reliability of these products for specific user applications

Local signalling	Switched off (OFF) 1 trip indicator green)
Mounting mode	Unit mount lug)
Mounting Support	Lug
Electrical connection	Lugs, line Lugs, load
Terminal identifier	AL150HD
Tightening torque	44.25 lbf.in (5 N.m) 0.00…0.01 in² (2.5…6 mm²) (AWG 14...AWG 10) 123.91 lbf.in (14 N.m) 0.02…0.15 in² (10…95 mm²) (AWG 8...AWG 3/0)
Number of slots	2 auxiliary switch OF plug-in) 1 alarm switch SD plug-in) 1 overcurrent trip switch SDE plug-in) 1 voltage release MN or MX plug-in)
Power wire stripping length	0.63 in (16 mm)
Color	Black
Height	6.42 in (163 mm)
Width	4.09 in (104 mm)
Depth	3.39 in (86 mm)
Net Weight	4.85 lb(US) (2.2 kg)
Quantity per Set	1
Communication interface	Modbus Ethernet
Circuit breaker application	HACR rated

Environment

Quality labels	CE
Standards	UL CSA NEMA NOM-003-SCFI-2000 IEC 60947-2
Product certifications	UL CSA NOM
IP degree of protection	Front cover IP40 IEC 60529
Pollution degree	3 IEC 60947-1
Ambient air temperature for operation	28…158 °F (-2…70 °C)
Ambient Air Temperature for Storage	-58…185 °F (-50…85 °C)
Operating altitude	< 6561.68 ft (2000 m) without derating 5000 m with derating

Ordering and shipping details

Category	01110-HD,JD UNIT MT BREAKER/SWITCH
Discount Schedule	DE2
GTIN	785901577928
Returnability	Yes
Country of origin	MX

Packing Units

Unit Type of Package 1	PCE
Number of Units in Package 1	1

DRAFT

Package 1 Height	7.40 in (18.796 cm)
Package 1 Width	6.50 in (16.51 cm)
Package 1 Length	9.10 in (23.114 cm)
Package 1 Weight	4.12 lb(US) (1.87 kg)

Offer Sustainability

Sustainable offer status	Green Premium product
California proposition 65	WARNING: This product can expose you to chemicals including: DINP, which is known to the State of California to cause cancer, and DIDP, which is known to the State of California to cause birth defects or other reproductive harm. For more information go to www.P65Warnings.ca.gov
REACh Regulation	REACh Declaration
EU RoHS Directive	Compliant EU RoHS Declaration
Mercury free	Yes
China RoHS Regulation	China RoHS declaration Product out of China RoHS scope. Substance declaration for your information.
RoHS exemption information	Yes
Environmental Disclosure	Product Environmental Profile
Circularity Profile	End of Life Information
WEEE	The product must be disposed on European Union markets following specific waste collection and never end up in rubbish bins.
PVC free	Yes

Contractual warranty

Warranty	18 months

DRAFT

Dimensions

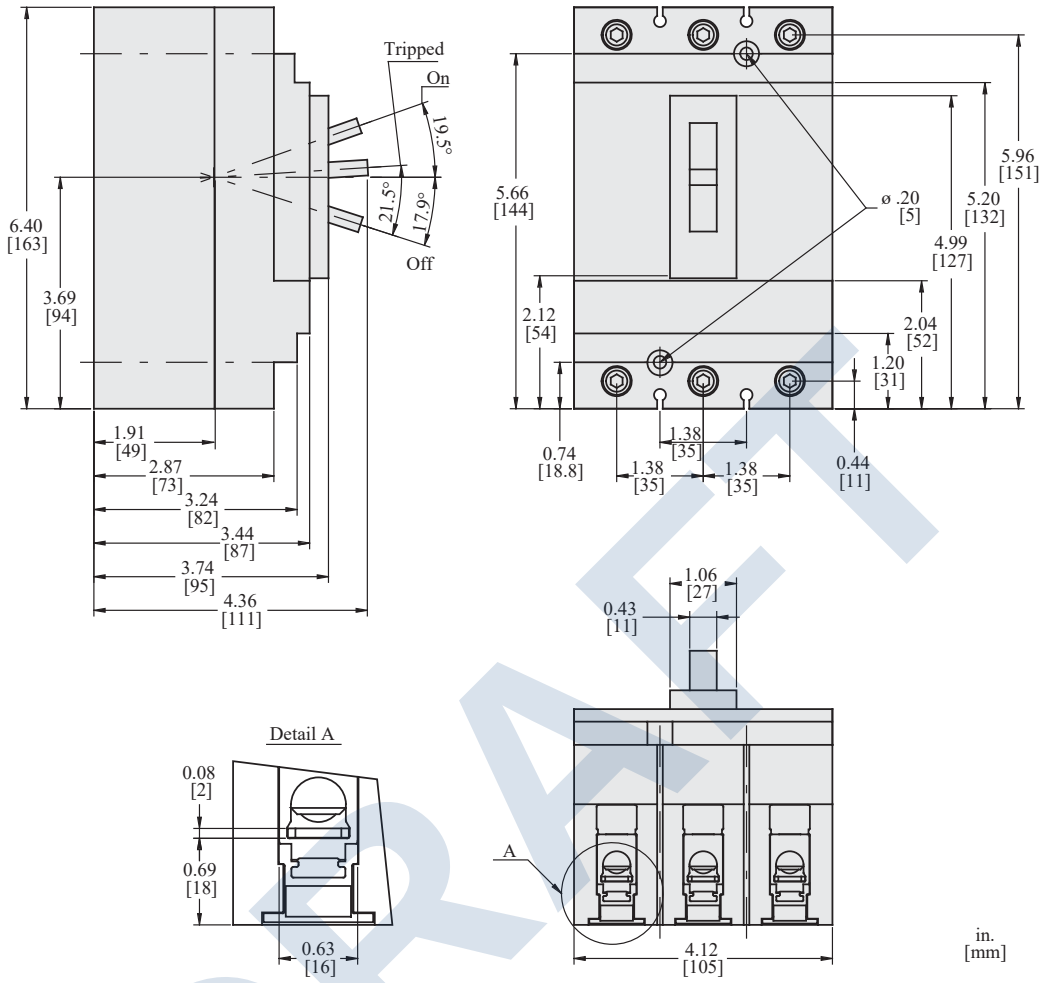

All dimensions are approximate. Also refer to technical drawings and documentation.

Recommended replacement(s)

DRAFT

Product data sheet

Specifications

Circuit breaker accessory, shield, terminal

S37449



Main

Range of Product	PowerPact multistandard
Range	PowerPact
Product or Component Type	Lug shield
Accessory / separate part category	Connection accessory
Range compatibility	PowerPact (PowerPact Multistandard) circuit breaker
Product Compatibility	Long lug PowerPact H-Frame

Complementary

Poles description	3P
Location of connection	Upstream Downstream

Ordering and shipping details

Category	01103-H,J,COMPACT NS UL/IEC CIRCUIT BREAKER ACCESSORIES
Discount Schedule	DE2
GTIN	785901704218
Returnability	Yes
Country of origin	US

Packing Units

Unit Type of Package 1	PCE
Number of Units in Package 1	1
Package 1 Height	4.90 in (12.446 cm)
Package 1 Width	4.60 in (11.684 cm)
Package 1 Length	7.40 in (18.796 cm)
Package 1 Weight	8.00 oz (226.796 g)
Unit Type of Package 2	S04
Number of Units in Package 2	10

* Price is “List Price” and may be subject to a trade discount – check with your local distributor or retailer for actual price.

DRAFT

Disclaimer: This documentation is not intended as a substitute for and is not to be used for determining suitability or reliability of these products for specific user applications

Package 2 Height	11.81 in (30.0 cm)
Package 2 Width	15.75 in (40.0 cm)
Package 2 Length	23.62 in (60.0 cm)
Package 2 Weight	6.45 lb(US) (2.926 kg)

Offer Sustainability

Sustainable offer status	Green Premium product
California proposition 65	WARNING: This product can expose you to chemicals including: DINP, which is known to the State of California to cause cancer, and DIDP, which is known to the State of California to cause birth defects or other reproductive harm. For more information go to www.P65Warnings.ca.gov
REACh Regulation	REACh Declaration
EU RoHS Directive	Pro-active compliance (Product out of EU RoHS legal scope) EU RoHS Declaration
Toxic heavy metal free	Yes
Mercury free	Yes
China RoHS Regulation	China RoHS declaration Product out of China RoHS scope. Substance declaration for your information.
RoHS exemption information	Yes
Circularity Profile	End of Life Information
PVC free	Yes

Contractual warranty

Warranty	18 months

Recommended replacement(s)

DRAFT



9421 Type L
Circuit Breaker Operating Mechanism

Type L Circuit Breaker Mechanisms

Type L door-mounted, variable depth operating mechanisms feature heavy duty, all metal construction with trip indication. All mechanisms can be padlocked in the Off position when the enclosure door is open. Further, the handle assemblies can be locked Off with up to three padlocks, which also locks the enclosure when the door is closed. (The 3 in. handle accepts one padlock.) Complete kits are rated for NEMA 1, 3R, and 12 enclosures. They include a handle assembly, operating mechanism, and shaft assembly.

Table 8.89: Complete Kits

Complete Kit Does Not Include Circuit Breaker			Includes Operating Mechanism and Handle					
Use With			Standard 6 in. Handle				Short 3 in. Handle	
			Standard Shaft Kit		Long Shaft Kit		Long Shaft Kit	
Circuit Breaker or Interrupter Type	No. of Poles	Frame Size (A)	Cat. No.	Mounting Depth [1]	Cat. No.	Mounting Depth [1]	Cat. No.	Mounting Depth [1]
PowerPact™ B	2–3	125	9421LB1	5.50–10.75	9421LB4	5.50–21.38	9421LB3	5.50–21.38
PowerPact H and J	2–3	250	9421LJ1	5.50–10.75	9421LJ4	5.50–21.38	9421LJ3	5.50–21.38
PowerPact L	2–3	600	9421LD1	7.25–12.06	9421LD4	7.25–22.63	3 in. handles are not recommended for use with these circuit breakers.	
PowerPact M and P [2]	3	1200	9421LW1 [3]	9.00–12.50	9421LW4 [3]	9.00–23.50		

Table 8.90: Component Parts

Use With			3 in. Handle Assemblies NEMA 1, 3R, 12	Standard Handle Assemblies NEMA 1, 3R, 12	Operating Mechansm Includes Lockout	Standard Shaft (Support Bracket *Not* Required)		Long Shaft (Support Bracket Required)	
Circuit Breaker or Interrupter Type	No. of Poles	Frame Size (A)	Cat. No.	Cat. No.	Cat. No.	Mounting Depth [1]	Cat. No.	Mounting Depth [1]	Cat. No.
PowerPact B	2–3	125	9421LH3 [4]	9421LH6 [4]	9421LB7	5.50–10.75	9421LS8	5.50–21.38	9421LS13
PowerPact H & J	2–3	250	9421LH3 [4]	9421LH6 [4]	9421LJ7	5.50–10.25	9421LS8	5.50–21.38	9421LS13
PowerPact D & L	2–3	600	[5]	9421LH6 [4]	9421LD7	7.25–12.06	9421LS8	7.25–22.63	9421LS13
	4	1200 (300 V)	—	9421LH6 [4]	9421LD14	7.25–12.06	9421LS8	—	—
				9421LH6 [4]	9421LD44	—	—	7.25–22.63	9421LS13
				—	9421LD74	—	—	—	—
PowerPact M & P [2]	3	1200	[5]	9421LHP8 [4]	9421LW7	7.19–11.63	9421LS8	7.19–22.25	9421LS10

Table 8.91: NEMA 4 and 4X Handle Assemblies

Use With			Standard Handle Assemblies		Special 3 in. Version	
Circuit Breaker or Interrupter Type	No. of Poles	Frame Size (A)	NEMA 1, 3R, 4, 12 (Painted)	NEMA 1, 3R, 4, 4X, 12 (Chrome Plated)	NEMA 1, 3R, 4, 12 (Painted)	NEMA 1, 3R, 4, 4X, 12 (Chrome Plated)
			Cat. No.	Cat. No.	Cat. No.	Cat. No.
PowerPact B	2–3	125	9421LH46	9421LC46	9421LH43	9421LC43
PowerPact H and J; NSF	2–3	250	9421LH46	9421LC46	9421LH43	9421LC43
PowerPact D and L	2–3	600	9421LH46	9421LC46	3 in. handles are not recommended for use with these circuit breakers.	
PowerPact M and P	3	1200	9421LHP48	9421LCP48		



3 in. Handle Assembly



Standard Handle Assembly



Handle Mechanisms

Table 8.92: Auxiliary and Alarm Switches for PowerPact™ Circuit Breakers

Description	B-Frame	H- and J-Frame	D- and L-Frame	D- and L-Frame
1 Auxiliary Switch 1a 1b	LV26950	S29450	S29450	S29450
2 Auxiliary Switch 2a 2b	—	2 x S29450	2 x S29450	2 x S29450
3 Auxiliary Switch 3a 3b	—	—	3 x S29450	3 x S29450

NOTE: The location of the accessory in the circuit breaker determines its function.

[1] Mounting depth measured in inches from circuit breaker mounting surface (control panel) to outside of enclosure door.
[2] These circuit breaker operating mechanisms must use the 9421LHP•• or LCP•• handles only.
[3] Type LW1 and LW4 include an 8 in. handle (9421LHP8) rather than a 6 in. handle.
[4] For a red handle and yellow bezel, add suffix RY to catalog number, e.g., 9421LH6RY.
[5] 3 in. handles are not recommended for use with these circuit breakers.

© 2019 Schneider Electric
All Rights Reserved



Crimp lugs or PDC connectors extension "A" past end of circuit breaker

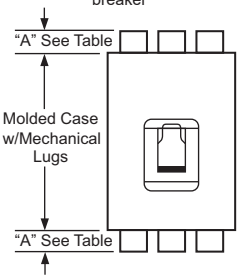

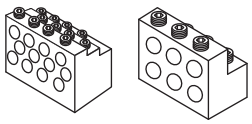

Power Distribution Connectors

Power distribution connectors (PDCs) can be used for multiple load wire connections on one circuit breaker in place of standard distribution block to save space and time.

The connectors are attached to circuit breaker terminals equipped with separately provided terminal nut connectors.*[29]*

Applications:

- For use on load end of circuit breaker only
- For use in UL 508 Industrial Control applications
- For use in UL 1995/CSA C22.2 No. 236 heating and cooling equipment
- For copper wire only

Table 7.108: Power Distribution Connectors for B-Frame, H-Frame, J-Frame and L-Frame Circuit Breakers *[30]*

Use with Circuit Breaker Type	Ampere Rating	(Wires Per Terminal) Wire Range	Dimension A (in.)	Cat. No.	Qty. Per Kit	Kit Contents
BD, BG, BJ	125 A	(3) 14 - 2 AWG	1.2	PDC3BD2	3	Mounting hardware, lugs
	125 A	(6) 14 - 6 AWG	1	PDC6BD6	3	
HD, HG, HJ, HL *[31]*	15–150 A	(6) 14–6 AWG Cu	1.0	PDC6HD6	3	Mounting hardware, lugs, special purpose label and instructions
	15–150 A	(3) 14–2 AWG Cu	1.2	PDC3HD2	3	
JD, JG, JJ, JL *[31]*	150–250 A	(6) 14–4 AWG Cu	1.0	PDC6JD4	3	
	150–250 A	(2) 14–1 AWG and (1) 3–2/0 AWG Cu	1.5	PDC3JD20	3	
LD, LG, LJ, LL *[32]*	150–600 A	(3) 14–1 AWG and (2) 3–2/0 AWG	1.28	PDC5DG20L3	3	Mounting hardware, lugs, special purpose label, Medium Terminal Shield and instructions
	150–600 A	(12) 14–4 AWG	1.31	PDC12DG4L3	3	Mounting hardware, lugs, special purpose label, Long Terminal Shield and instructions

Table 7.109: Power Distribution Connectors for M-Frame and P-Frame Circuit Breakers *[30]*

	Ampere Rating	(Wires Per Terminal) Wire Range	Cat. No.	Qty Per Kit	Kit Contents
Use for multiple load connections on one circuit breaker in place of standard distribution block to save space and time. • Use on load end of circuit breaker only • Use in UL508 Industrial Control applications only. • Use in UL1995/CSA C22.2 No. 236 heating and cooling equipment. • For Cu wire only.	250–1200 A	(6) 12–2/0 AWG Cu	PDC6P20	3	Mounting hardware, lugs, special purpose label and instructions
		(6) 12–2/0 AWG Cu	PDC6P204	4	Mounting hardware, lugs, special purpose label and instructions
	250–1200 A	(12) 10–4 AWG Cu	PDC12P4	3	Mounting hardware, lugs, special purpose label and instructions
			PDC12P44	4	Mounting hardware, lugs, special purpose label and instructions

DRAFT

[29] Refer to Table xxxxxx: Terminal Shields and Phase Barriers
[30] Not for use with I-Line™ circuit breakers.
[31] Special Purpose—Not for General Use. Use on ON end of the circuit breaker only when ON end is used as Load end. Use on OFF end of the circuit breaker only when OFF end is used as Load end.
[32] Kit includes long terminal shield and cover, which adds 1.65 inches to standard lug with short terminal shield.

© 2019 Schneider Electric
All Rights Reserved



SDSA1175



SDSA 3-Phase

SDSA1175 and SDSA 3-Phase Surge Protective Devices

Surgelogic™ SDSA1175 surge protective devices are designed and listed for indoor or outdoor installation and surge suppression for single-phase three-wire 120/240 Vac or two-wire 120 Vac 60 Hz electrical services. This product is ideal for panel builders as well as manufacturers and integrators of instrumentation cabinets for industrial and commercial applications for single-phase power systems. Two SDSA1175 surge protection devices can be installed to provide suppression for 208Y/120 Vac three-phase four-wire services.

Surgelogic™ SDSA 3-Phase surge protective devices are designed and listed for indoor or outdoor installation and surge suppression for three-phase electrical services up to 600 Vac. The SDSA 3-Phase series is used extensively in service entrance panels to provide an efficient and economical means of surge suppression and also ideal for point of use applications for that added level of protection.

US and Canadian UL® Listed as Type 1 SPD to the UL 1449 standard. Complies with requirements of NEC® Article 285, CSA 233.1-87, and CSA C22.2 No. 8-M1986 as appropriate.

- LED indicates operational status
- Short circuit current rating 25 kA (SDSA1175), 200 kA (SDSA 3-Phase)
- Suitable for indoor and outdoor applications (NEMA Type 4X rated)
- Convenient back-nipple mounting
- Optional mounting bracket QOSAMK (for SDSA1175/SDSA1175T)

Table 6.9: SDSA1175 and SDSA 3-Phase Surge Protective Devices

System Voltage	Peak Surge Current Rating per Phase (kA)	Cat. No.
SDSA1175		
120/240 V, 1-phase, 3-wire	36	SDSA1175
120 V, 1-phase, 2-wire	36	SDSA1175T
SDSA 3-Phase		
208Y/120 V, 3-phase, 4-wire *[10] [11]*	40	SDSA2040
240 V Delta, 3-phase, 3-wire *[12]*	40	SDSA2040D
480Y/277 V, 3-phase, 4-wire *[13] [10]*	40	SDSA4040
480 V Delta, 3-phase, 3-wire	40	SDSA4040D
600Y/347 V, 3-phase, 4-wire *[10]*	40	SDSA3650
600 V Delta, 3-phase, 3-wire	40	SDSA3650D

DRAFT

[10] Do not use on ungrounded systems. Systems must be solidly grounded.
[11] Applicable voltages: 220Y/127V, 208Y/120V.
[12] Applicable voltages: 240V Delta, 240/120V High-Leg Delta.
[13] Applicable voltages: 480Y/277V, 415Y/240V, 400Y/230V, 380Y/220V.

© 2019 Schneider Electric
All Rights Reserved

Table 1.64: Plug-on Neutral Load Center Surge Packs (Compatible with Plug-On and Plug-On Neutral Circuit Breakers)

	Mains Rating	Max. 1P Circuits	Max. Tandem Circuit Breakers	Load Center Box, Interior, Cover and Branch Circuit Breakers		Equipment Ground Bars	Main Wire Size AWG/kcmil		Box No.
				Catalog Number	Included Load Center / Circuit Breakers / SPD	Catalog Number	Al	Cu	
Indoor	225	60	30	HOM3060L225PGCSVP2	(1) HOM3060l225PGC, (1) HOM230, (2) HOM120, (1) Plug-on Neutral HOM250PSPD, Cover & Ground Bar	PK9GTA, PK18GTAL (included)	4-300	4-250	10
Rainproof	200	16	8	HOM816M200PFTRBSP2	(1) HOM816M200PFTRB & (1) Plug-on Neutral HOM250PSPD	PK15GTA (order separately)	4-250		6R

QO Load Center Accessories

Table 1.65: QO Load Center Accessories

Description			Cat. No.	Schedule
Circuit Identification Stickers	Circuit identification stickers for use on cover directory labels to identify branch circuits		PSDS	DE5
Cover Sealing Strap	Provides means of sealing trim mounting screws on QO load center covers		QO1SE	DE3A
Door Lock Kits	Use with QO612L100DF/S, QO612L100DFCU/SCU, QO612L100DTF/S, QO816L100DF/S, QO816L100DFCU/SCU, QO816L100DTF/S, QO48M30DSGP, or QO48M60DSGP		PK8FL *[4]*	DE3A
	Use with convertible mains, 1Ø and 3Ø 100–225 A, and fixed mains, 3Ø 125–225 A indoor load centers		PK6FL	DE3A
	Use with 300 and 400 ampere indoor load centers		PK4FL	PE1A
Filler Plates	Fills opening in covers if twistout is removed in error		QOFP	DE3A
	Fills main circuit breaker opening in convertible load center covers 100–125 A		QOM1FP	DE3A
	Fills main circuit breaker opening in convertible load center covers 150–225 A		QOM2FP	DE3A
	Fills main circuit breaker opening in 3Ø load center covers (S01 and S02 Series)		KFP	DE3A
	Fills main circuit breaker opening in "Q" style 3Ø load center covers (S03 Series)		Q2FP	DE3A
Ground Bar Kits	Ground Bar Assembly—3 connectors		PK3GTA1	DE3A
	Ground Bar Assembly—4 connectors		PK4GTA	DE3A
	Ground Bar Assembly—7 connectors		PK7GTA	DE3A
	Ground Bar Assembly—9 connectors		PK9GTA	DE3A
	Ground Bar Assembly—12 connectors		PK12GTA	DE3A
	Ground Bar Assembly—15 connectors		PK15GTA	DE3A
	Ground Bar Assembly—18 connectors		PK18GTA	DE3A
	Ground Bar Assembly—23 connectors		PK23GTA	DE3A
	Ground Bar Assembly—27 connectors		PK27GTA	DE3A
	Ground Bar Assembly—21 connectors. Use in high amperage load centers.		PK15GTA6	DE3A
	Standard PK15GTA with a 1–4/0 Al/Cu Lug		PK15GTAL	DE3A
	Standard PK18GTA with a 1–4/0 Al/Cu Lug		PK18GTAL	DE3A
	Standard PK23GTA with a 1–4/0 Al/Cu Lug		PK23GTAL	DE3A
	Ground Bar Pack— PK9GTA, PK9GTA, & LK100AN		PKGTALP1	DE3A
	Ground Bar Pack— PK9GTA, PK18GTA, & LK100AN		PKGTALP2	DE3A
	Ground Bar Pack—PK15GTA, PK18GTA, & LK100AN		PKGTALP3	DE3A
	Insulator Kit for PK7GTA through PK27GTA		PKGTAB	DE3A
Handle Padlock Attachments	For padlocking main circuit breakers in convertible load centers OFF	50A–125A	QOM1PA	DE2E
	For padlocking main circuit breakers in convertible load centers OFF	100A–225A	QOM2PA	DE2E
Neutral Bonding Screw	For use on all Homeline and QO 125A convertible main load centers		4028344850K	DE5
	For use on QO 150A–225A convertible main load centers		4028345850K	DE5
Neutral / Ground Lugs	Field-installed for 12– 2 Al or 14–4 Cu AWG wire		LK70AN	DE3A
	Field-installed for 6–2/0 Al/Cu AWG wire		LK100AN	DE3A
	Field-installed for 14–2/0 Al/Cu AWG wire		LK125AN	DE3A
	Field-installed for 2–3/0 Al/Cu AWG wire		LK150AN	DE3A
	Field-installed for 4 AWG to 300 kcmil Al/Cu wire. Use in Series S, 150-225A QO load center or S03 and below, 150-225A HOM load center		LK225AN LK225ANHOM	DE3A
Replacement Cover Directory Label	1 through 42 numbered universal replacement directory label for load center covers		LSDL	DE5
Retaining Kit for Breakers Used as Back-fed Mains	Secures circuit breaker to interior when used as a back-fed main. For QO612L100F/S, RB, QO612L100DF/S, QO816L100F/S, RB, QO816L100DF/S and QO148L125GF/S, GRB load centers		PK2MB	DE3A
	Secures 3P circuit breaker without accessories to left side of interior when used as a back-fed main. For 3Ø load centers		PK3MB	DE3A
	Secures circuit breaker to interior when used as a back-fed main for 2P QO 150–200 A circuit breakers		PK5RK OBS	DE3A
	Secures ONE circuit breaker with or without electrical accessories to right side of interior when used as a back-fed main For 1Ø 100–125 ampere convertible main load centers. Series S01 and S02		PK4MB2LA	DE3A
	Secures ONE circuit breaker with or without electrical accessories to right side of interior when used as a back-fed main For 1Ø 150–225 ampere convertible main load centers. Series S01 and S02		PK4MB2HA	DE3A
Service Entrance Barriers	QO / Homeline 1Ø 100–125 A QOM1 convertible main load centers		PKSB1LA	DE3A
	QO / Homeline 1Ø 150–225 A QOM2 convertible main load centers		PKSB1HA	DE3A
	QO 3Ø convertible main load centers		PKSB3	DE3A
	QO 1Ø back-fed main breaker applications		PKSB1QOBF	DE3A
	QO 3Ø back-fed main breaker applications		PKSB3BF	DE3A
QO Load Center Manual Power Transfer Accessories				
Generator Circuit Breaker Interlock Kit	For use on "G" and "S" Series NEMA 1 and "G", "S1" and "S2" Series NEMA 3R load centers. Interlocks a QOM1 2P main circuit breaker of a load center (100–125 A) with a QO 2P (15–125 A) branch circuit breaker. Includes a retaining kit.		QOCRBGK1C	DE3A
	For use on "G" and "S" Series NEMA 1 and "G" and "S1" Series NEMA 3R load centers. Interlocks a QOM2 2P main circuit breaker of a load center (150–225 A) with a QO 2P (15–125 A) branch circuit breaker. Includes a retaining kit.		QOCGK2C	DE3A
	For use on "S2" Series NEMA 3R load centers. Interlocks a QOM2 2P main circuit breaker of a load center (150–225 A) with a QO 2P (15–125 A) branch circuit breaker. Includes a retaining kit.		QORBGK2C	DE3A

[4] QO403L60NF/S does not have provisions for a field-installed lock.

© 2021 Schneider Electric
All Rights Reserved
10/28/2021



LBA365212



LBA161104



LBC165212

Open Power Distribution Blocks

Table 24.52: Aluminum Power Distribution Blocks

Lug Wire Range *[1]*		Aluminum *[2]*		
Main	Branch	One Pole Type	Two Pole Type	Three Pole Type
(1) #14–2/0	(1) #14–2/0	LBA162101	LBA262101	LBA362101
(1) #6–350 kcmil	(1) #6–350 kcmil	LBA163101	LBA263101	LBA363101
(1) #4–600 kcmil	(1) #4–600 kcmil	LBA164101	N/A	LBA364101
(2) #4–350 kcmil	(2) #4–350 kcmil	LBA165202	LBA265202	LBA365202
(2) #6–500 kcmil	(2) #4–500 kcmil	LBA1652021	LBA2652021	LBA3652021
(1) #14–2/0	(4) #14–4	LBA162104	LBA262104	LBA362104
(1) #14–2/0	(6) #14–4	N/A	N/A	LBA362106
(1) #6–400 kcmil	(4) #14–2	LBA163104	LBA263104	LBA363104
(1) #6–400 kcmil	(6) #14–2	LBA163106	LBA263106	LBA363106
(1) #6–400 kcmil	(8) #14–2	LBA164108	LBA264108	LBA364108
(1) #4–500 kcmil	(6) #14–2/0	LBA165106	LBA265106	LBA365106
(1) #4–500 kcmil	(12) #14–2	LBA165112	LBA265112	LBA365112
(2) #14–2/0	(6) #14–4	LBA163206	LBA263206	LBA363206
(2) #6–500 kcmil	(8) #14–2/0	LBA165208	LBA265208	LBA365208
(2) #6–500 kcmil	(12) #14–4	LBA165212	LBA265212	LBA365212

Table 24.53: Miniature Aluminum Power Distribution Blocks

Lug Wire Range *[1]*		Aluminum *[2]*		
Main	Branch	One Pole Type	Two Pole Type	Three Pole Type
(1) #14–2	(1) #14–2	LBA161101	N/A	LBA361101
(1) #14–2	(4) #18–10	LBA161104	LBA261104	LBA361104

Table 24.54: Copper Power Distribution Blocks

Lug Wire Range *[1]*		Copper *[3]*		
Main	Branch	One Pole Type	Two Pole Type	Three Pole Type
(1) #18–1/0	(1) #18–1/0	LBC162101	N/A	LBC362101
(1) #6–250 kcmil	(1) #6–250 kcmil	LBC163101	N/A	LBC363101
(1) #14–2/0	(4) #14–4	LBC162104	LBC262104	LBC362104
(1) #4–500 kcmil	(6) #14–2	LBC163106	LBC263106	LBC363106
(2) #14–2/0	(6) #14–4	LBC163206	LBC263206	LBC363206
(2) #4–500 kcmil	(8) #14–2/0	LBC165208	N/A	LBC365208
(2) #6–500 kcmil	(12) #14–2	LBC165212	N/A	LBC365212

File: E60616
CCN: XCFR2

File: 70361
Class: 6228-01

RoHS Compliant

Table 24.55: Clear Plastic Covers (0.045 in. thick)

For LBA Type*[4]*	Type	Dim. A	Dim. B
LBA161...	LB11	0.824	2.31
LBA261...	LB12	1.459	2.31
LBA361	LB13	2.094	2.31
LBA162..., LBC162	LB21	1.062	2.750
LBA262..., LBC262	LB22	1.875	2.750
LBA362..., LBC362 *[5]*	LB23	2.688	2.750
LBA163..., LBC163	LB31	1.782	3.813
LBA263..., LBC263	LB32	3.313	3.813
LBA363.... LBC363	LB33	4.844	3.813
LBA164...	LB41	2.125	4.563
LBA264...	LB42	4.000	4.563
LBA364...	LB43	5.875	4.563
LBA165..., LBC165	LB51	2.719	5.313
LBA265..., LBC265	LB52	5.656	5.313
LBA365..., LBC365	LB53	8.375	5.313

Table 24.56: How to Order

To Order Specify	Catalog Number
• Class Number	9080
• Type Number	LBA162101

Application Information

Voltage Rating-Class B and C–600 V

Blocks are rated based on NEC Table 310-16 using 167 °F (75 °C) wire

Aluminum blocks are tin-plated high conductive aluminum. Copper blocks are tin-plated high conductive copper.

Housing material:

- Miniature Blocks are made from high impact thermoplastic rated at 257 °F (125 °C) max. and –40 °F (–40 °C) min.
- Full Size Blocks are made from general purpose phenolic rated at 302 °F (150 °C) max. and –40 °F (-40 °C) min.

All blocks have a flammability rating of UL 94V-0.

For the short-circuit current ratings and dimensions, see catalog **9080CT9603**.

[1] Lugs suitable for use with 75 °C (167 °F) conductors.
[2] Aluminum blocks will accept either aluminum or copper conductors.
[3] Copper blocks will accept copper conductors only.
[4] These covers must be ordered in multiples of 5. Each cover comes with two self-tapping screws.
[5] Will not work on a 9080LBA362106 block.

© 2019 Schneider Electric
All Rights Reserved

DRAFT

Type SK Corrosion Resistant Pilot Lights

Table 19.265: Pilot Lights—UL Types 4, 4X, *[105]*

Description			Voltage	Style	With Red Fresnel Color Cap *[106]*	With Green Fresnel Color Cap *[106]*	With Other Color Cap *[106] [107]*	Without Color Cap *[106]*
	9001SKP1	Standard Pilot Light (Fresnel color cap shown)	110–120 V, 50–60 Hz	Transformer	SKP1R31	SKP1G31	SKP1■	SKP1
			220–240 V, 50–60 Hz	Transformer	SKP7R31	SKP7G31	SKP7■	SKP7
			24–28 Vac/Vdc	Full Voltage	SKP35R31	SKP35G31	SKP35■	SKP35
			For other voltages *[106]*	Transformer, Flashing or LED *[108]*	SKP▲R31	SKP▲G31	SKP■	SKP▲
				Full Voltage, Neon or Resistor *[109]*	SKP▲R31	SKP▲G31	SKP▲■	SKP▲
	9001SKT1	Push-To-Test Pilot Light (Fresnel color cap shown)	110–120 V, 50–60 Hz	Transformer	SKT1R31	SKT1G31	SKT1■	SKT1
			220–240 V, 50–60 Hz	Transformer	SKT7R31	SKT7G31	SKT7■	SKT7
			24–28 Vac/Vdc	Full Voltage	SKT35R31	SKT35G31	SKT35■	SKT35
			For other voltages *[106]*	Transformer, Flashing or LED *[108]*	SKT▲R31	SKT▲G31	SKT▲■	SKT▲
				Full Voltage, Neon or Resistor *[109]*	SKT▲R31	SKT▲G31	SKT▲■	SKT▲
	9001SKTR38	Remote Test Pilot Light (Fresnel color cap shown)	120 Vac Only	Resistor	SKTR38R31	SKTR38G31	SKTR38■	SKTR38
			24–28 Vac Only	Full Voltage	SKTR35R31	SKTR35G31	SKTR35■	SKTR35
			For other voltages *[106] [107] [110]*	Full Voltage or Resistor *[111]*	SKTR▲R31	SKTR▲G31	SKTR▲■	SKTR▲


Plastic Fresnel


Plastic Domed

Table 19.266: Color Caps

Color	Plastic Fresnel *[112]*	Plastic Domed *[112]*
Amber	A31	A9
Blue	L31	L9
Clear	C31	C9
Green	G31	G9
Red	R31	R9
White	W31	W9
Yellow	Y31	Y9

Typical Wiring Diagram

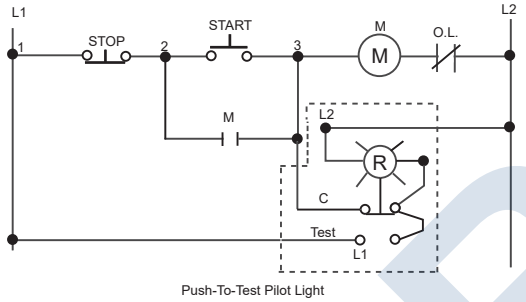

Push-To-Test Pilot Light

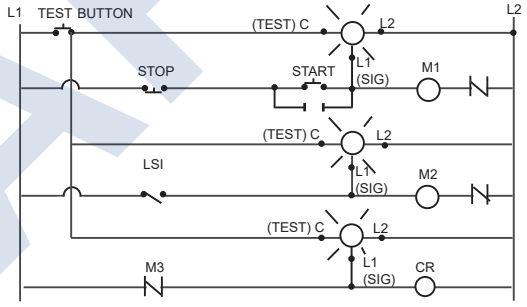

Remote Test Pilot Light

NOTE: To select and order Contact Blocks, Light Modules, Knobs, and Accessories, see Type KA Contact Blocks, page 19-90 through Hermetically Sealed Power Reed Contact Blocks, page 19-92.

NOTE: For use in hazardous locations—See Square D Offering According to Class, Division, and Group, page 19-92. Contact blocks and legend plate not included unless otherwise noted.

DRAFT

[105] When ordering, add prefix 9001 to the catalog number.
[106] ▲ Add the voltage assembly code as chosen from Standard and Shallow Depth Light Modules, page 19-91.**EXAMPLE: SKT•••R31 with 208 Vac red LED voltage = SKT37LRR31.**
[107] ■ Add the color code as chosen from the color cap table below.**EXAMPLE: SKP1 with a blue fresnel cap = SKP1L31.**
[108] The cap must be the same color as the LED light module chosen, e.g., for a green LED, use a green color cap.
[109] On neon light modules, use clear color caps only.
[110] Use only full voltage or resistor voltage assembly codes on remote test pilot lights. Do not choose LED, neon or transformer codes. For AC use only.
[111] Use only full voltage or resistor voltage assembly codes on remote test pilot lights. Do not choose LED (exception — these LED codes are allowed: 38LG, 38LL, 38LR, 38LW, 38LY), neon or transformer codes. For AC use only.
[112] Add the color code as chosen from the color cap table below.**EXAMPLE: SKP1 with a blue fresnel cap = SKP1L31.**

© 2019 Schneider Electric
All Rights Reserved

Standard and Shallow Depth Light Modules

Table 19.273: Standard Light Modules for Types K, SK, and KX Control Units *[121][122][123][124]*



Voltage	Description	Light Module Type *[125]*	Voltage Assembly Code	Rating	Temperature Code T-Code	Replacement Lamp Part Number *[121]*
All	Full Voltage (without Bayonet Base Lamp)	KM40	40	—	—	None
6 Vac/Vdc	Full Voltage	KM31	31	.9 VA	T5	2550101020
6 Vac/Vdc	LED Red	KM31LR	31LR		T6	6508805201
6 Vac/Vdc	LED Green	KM31LG	31LG		T6	6508805203
6 Vac/Vdc	LED Yellow	KM31LY	31LY		T6	6508805202
12–14 Vac/Vdc	Full Voltage	KM32	32	1.2 VA	T5	2550101037
12–14 Vac/Vdc	LED Red	KM32LR	32LR		T6	6508805201
12–14 Vac/Vdc	LED Green	KM32LG	32LG		T6	6508805203
12–14 Vac/Vdc	LED Yellow	KM32LY	32LY		T6	6508805202
18 Vac/Vdc	Resistor	KM33	33	1.4 VA	T5	2550101037
24–28 Vac/Vdc	Full Voltage	KM35	35	1.2 VA	T3C	2550101002
24–28 Vac/Vdc	LED Red	KM35LR	35LR	.28 VA	T4	6508805210
24–28 Vac/Vdc	LED Green	KM35LG	35LG	.28 VA	T4	6508805212
24–28 Vac/Vdc	LED Yellow	KM35LY	35LY	.28 VA	T4	6508805211
24–28 Vac/Vdc	LED White	KM35LW	35LW	.28 VA	T4	6508805214
24–28 Vac/Vdc	LED Blue	KM35LL	35LL	.28 VA	T4	6508805213
48 Vac/Vdc	Full Voltage	KM36	36	2.6 VA	T3A	2550101025
110–120 V, 50–60 Hz	LED Red	KM1LR	1LR		T6	6508805201
110–120 V, 50–60 Hz	LED Green	KM1LG	1LG		T6	6508805203
110–120 V, 50–60 Hz	LED Yellow	KM1LY	1LY		T6	6508805202
110–120 V, 50–60 Hz	Transformer	KM1	1	2.4 VA	T6	2550101020
110–120 V, 50–60 Hz	Flashing	KMF1	F1	.85 VA	T6	2550101036
120 Vac/Vdc	Full Voltage/Resistor	KM38	38	3.0 VA	T4	2550101027
120 Vac/Vdc	Neon *[126]*	KM11	11	0.2 VA	T6	2550101013
120 Vac/Vdc	LED Red	KM38LR	38LR	1.4 VA	T4A	6508805210
120 Vac/Vdc	LED Green	KM38LG	38LG	1.4 VA	T4A	6508805212
120 Vac/Vdc	LED Yellow	KM38LY	38LY	1.4 VA	T4A	6508805211
120 Vac/Vdc	LED White	KM38LW	38LW	1.4 VA	T4A	6508805214
120 Vac/Vdc	LED Blue	KM38LL	38LL	1.4 VA	T4A	6508805213
208–220 V, 50–60 Hz	Transformer	KM3	3	2.5 VA	T6	2550101020
208–220 V, 50–60 Hz	LED Red	KM3LR	3LR		T6	6508805201
208–220 V, 50–60 Hz	LED Green	KM3LG	3LG		T6	6508805203
208–220 V, 50–60 Hz	LED Yellow	KM3LY	3LY		T6	6508805202
208–220 V, 50–60 Hz	LED White	KM3LW	3LW		T6	6508805215
208–220 V, 50–60 Hz	LED Blue	KM3LL	3LL		T6	6508805216
220–240 V, 50–60 Hz	Transformer	KM7	7	2.0 VA	T6	2550101020
220–240 V, 50–60 Hz	LED Red	KM7LR	7LR		T6	6508805201
220–240 V, 50–60 Hz	LED Green	KM7LG	7LG		T6	6508805203
220–240 V, 50–60 Hz	LED Yellow	KM7LY	7LY		T6	6508805202
220–240 V, 50–60 Hz	LED White	KM7LW	7LW		T6	6508805215
220–240 V, 50–60 Hz	LED Blue	KM7LL	7LL		T6	6508805216
240 Vac/Vdc	Resistor	KM25	25	6.0 VA	T3A	2550101027
240 Vac/Vdc	Neon *[126]*	KM12	12	0.3 VA	T6	2550101013
277 V, 50–60 Hz	Transformer	KM8	8	2.4 VA	T6	2550101020
380–480 V, 50–60 Hz	Transformer	KM5	5	2.8 VA	T6	2550101020
480 Vac/Vdc	Neon *[126]*	KM14	14	0.5 VA	T6	2550101013
550–600 V, 50–60 Hz	Transformer	KM6	6	2.5 VA	T6	2550101020

NOTE: Light modules are available in other voltages. For additional information, refer to Catalog **9001CT0001**.

The products in Table 19.273 have been assigned Temperature Classifications (T-Codes) in accordance with **UL 121201 (2017) — Nonincendive Electrical Equipment for Use in Class I and II, Division 2 and Class III, Divisions 1 and 2 Hazardous (Classified) Locations.** These codes can aid the user in proper application of these products in accordance with **ISO/ISA/IEC 60079–0 (2017–12) Explosive Atmospheres — Part 0: Equipment — General Requirements** and the **National Electric Code NFPA 70 — Article 500.**

NOTE: Light modules shown in Table 19.274 are not UL Certified for use in hazardous locations.

Table 19.274: Shallow Depth Light Modules For Types K and SK Control Units *[121] [123] [127] [122]*



Voltage	Description	Light Module Type *[125]*	Voltage Assembly Code	Rating	Temperature Code T-Code	Replacement Lamp Part Number
24–28 Vac/Vdc	Full Voltage	KM55	55	1.2 VA	—	2550101002
	LED Red	KM55LR	55LR	0.5 VA	—	6508805204
	LED Green	KM55LG	55LG		—	6508805206
	LED Yellow	KM55LY	55LY		—	6508805205
110–120 Vac/Vdc	Full Voltage	KM58	58	3.0 VA	—	2550101027
	LED Red	KM58LR	58LR	0.5 VA	—	6508805204
	LED Green	KM58LG	58LG		—	6508805206
	LED Yellow	KM58LY	58LY		—	6508805205

File: E78403
CCN: NKCR

File: LR25490
Class: 3211 03

CE marked

[121] For use with all operators except KX and remote test pilot.
[122] For use in hazardous locations—See Square D Offering According to Class, Division, and Group, page 19-92.
[123] With LED light modules, use either a clear color cap or a cap the same color as the LED.
[124] With neon type light modules, use a **clear** color cap only.
[125] When ordering, add prefix 9001 to the catalog number.
[126] Not for use on KX operators.
[127] Reduces the depth of illuminated push buttons with contact blocks by over 33%.

© 2019 Schneider Electric
All Rights Reserved

30 mm Multifunction Operators UL Types 4, 4X, 13/NEMA 4, 4X, 13

Table 19.144: Non-Illuminated Push-Pull Screw-on Mushroom Operators, Plastic Head [57]

	Description	Color	With 2 N.C. Contacts (1 KA3, 1 KA5)	With 1 N.O. / 1 N.C. Contact (1 KA1)	Without Contacts [58]
 9001SKR9R Non-Illuminated 1-5/8 in. Diameter Knob Includes Type KN179WP Legend Plate Marked Pull To Start Push To Stop	**3 Position**				
	Momentary Pull-Maintained Neutral-Momentary Push [59]	Red	SKR8RH25	—	SKR8R
		Green	SKR8GH25	—	SKR8G
		Other [60]	SKR8▲H25	—	SKR8▲
	2 Position [61]				
	Maintained Pull-Maintained Push	Red	—	SKR9RH13	SKR9R
		Green	—	SKR9GH13	SKR9G
		Other [60]	—	SKR9▲H13	SKR9▲

Table 19.145: Non-Illuminated Turn-to-Release Mushroom Operators [57]

	Description	Color	With 1 N.O. Contact (KA1)	With 2 N.O. / 2 N.C. Contacts (2 KA1)	Without Contacts
 9001SKR16H2	2 Position, Plastic Head Turn-to-Release Trigger Action	Red	SKR16H13	SKR16H2	SKR16

Table 19.146: Screw-On Plastic Illuminated Push-Pull Mushroom Operators [57]

Illuminated	Description	Voltage	With Red Knob and 2 N.C. Contacts (1 KA3, 1 KA5) [62]	With Other Color Knob and 2 N.C. Contacts [60] [62]	With Other Color Knob Without Contacts [58] [60] [62]
 9001SKR9P1 Illuminated 1-5/8 in. Diameter Knob Includes Type KN179WP Legend Plate Marked Pull to Start Push To Stop	**3 Position**				
	Momentary Pull-Maintained Neutral-Momentary Push [63]	110–120 V, 50–60 Hz	SKR8P1RH25	SKR8P1▲H25	SKR8P1▲
		Other—Transformer, LED, Flashing [64]	SKR8P♦RH25	SKR8P♦▲H25	SKR8P♦▲
		Other—Full Voltage, Resistor, Neon [59]	SKR8P♦RH25	SKR8P♦▲H25	SKR8P♦▲
	Description	**Voltage**	**With Red [61] Knob and 1 N.O. & 1 N.C. Contact (KA1)**	**With Other Color Knob and 1 N.O. & 1 N.C. Contact (KA1) [60]**	**With Other Color Knob Without Contacts [60]**
	2 Position				
	Maintained Pull-Maintained Push	110–120 V, 50–60 Hz	SKR9P1RH13	SKR9P1▲H13	SKR9P1▲
		Other—Transformer, L.E.D., Flashing [64]	SKR9P♦RH13	SKR9P♦▲H13	SKR9P♦▲
		Other—Full Voltage, Resistor, Neon [59]	SKR9P♦RH13	SKR9P♦▲H13	SKR9P♦▲

Table 19.147: Color Codes

Color	SKR11, SKR12	SKR8, SKR9
Black [65]	B	B
Red	R	R
Green	G	G
Blue	L	L
Yellow	Y	Y
White	W	W
Orange [65]	S	S
Clear	—	C
Amber	—	A
Gray	E	—

Table 19.148: Positions for 9001SKR8RH1 or H13

		9001SKR8RH1 or H13		
		PULL	CTR	PUSH
(KA1)	KA3	X	O	O
	KA2	O	O	X

Table 19.149: Positions for 9001SKR8H25

	9001SKR8H25		
	PULL	CTR	PUSH
KA3	X	O	O
KA5	X	X	O
KA2	O	O	X

NOTE: To select and order Contact Blocks, Light Modules, Knobs, and Accessories, see Type KA Contact Blocks, page 19-62 through Hermetically Sealed Power Reed Contact Blocks, page 19-64.

[57] When ordering, add prefix 9001 to the catalog number.
[58] These operators can be ordered complete with contact blocks. For maximum block usage, see "H" Codes, page 19-65. Add the chosen "H" number to the end of the operator.
[59] On neon light modules, use clear knobs only.
[60] ▲ See Table 19.147 Color Codes, page 19-56 and insert the color code in the Type number. **Example: SKR9( ) with a yellow knob = SKR9Y**
[61] To obtain a red knob with "Push Emergency Stop" printed on the red knob—substitute "R05" in place of "R"
[62] ♦ Add the voltage assembly code as chosen from Standard and Shallow Depth Light Modules, page 19-63. **Example: SKR8P♦ with 277 V 50–60 Hz = SKR8P8**
[63] For positions, refer to Table 19.148 Positions for 9001SKR8RH1 or H13, page 19-56 and Table 19.149 Positions for 9001SKR8H25, page 19-56.
[64] The knob must be the same color as the LED light module chosen, for example, for a green LED, use a green knob.
[65] These colors are not available on illuminated push-pull operators.

© 2024 Schneider Electric
All Rights Reserved

DRAFT

Product data sheet
Characteristics

9001SKR1BH2
PUSHBUTTON 600VAC 10AMP 30MM SK +OPTIONS

Product availability : Non-Stock - Not normally stocked in distribution facility



Main

Range of product	Harmony 9001SK
Product or component type	Push-button
Device short name	9001SK

Complementary

Bezel material	Plastic
Mounting diameter	1.18 in (30 mm)
Contacts type and composition	2 NO + 2 NC
Contact operation	Standard
Mechanical durability	5000000 cycles
Device presentation	Complete product

Environment

Standards	EN/IEC 60947-1 JIS C 4520 EN/IEC 60947-5-4 EN/IEC 60947-5-1 CSA C22.2 No 14 JIS C 852 UL 508
IP degree of protection	IP66
NEMA degree of protection	NEMA 1/2/3/3R/4/4X/6/12/13

Ordering and shipping details

Category	21429 - 9001 SK,SKY
Discount Schedule	CS1

* Price is "List Price" and may be subject to a trade discount – check with your local distributor or retailer for actual price.

DRAFT

Disclaimer: This documentation is not intended as a substitute for and is not to be used for determining suitability or reliability of these products for specific user applications

RSPSupply - 1-888-532-2706 - https://www.RSPSupply.com
See the product details here
Page 218

GTIN	00785901521266
Nbr. of units in pkg.	1
Package weight(Lbs)	0.5 lb(US) (0.23 kg)
Returnability	No
Country of origin	MX

Packing Units

Package 1 Height	5.08 in (12.903 cm)
Package 1 width	2.00 in (5.080 cm)
Package 1 Length	12.90 in (32.774 cm)

Offer Sustainability

Sustainable offer status	Green Premium product
REACh Regulation	REACh Declaration
REACh free of SVHC	Yes
EU RoHS Directive	Pro-active compliance (Product out of EU RoHS legal scope) EU RoHS Declaration
Toxic heavy metal free	Yes
Mercury free	Yes
RoHS exemption information	Yes
China RoHS Regulation	China RoHS declaration
Environmental Disclosure	Product Environmental Profile
WEEE	The product must be disposed on European Union markets following specific waste collection and never end up in rubbish bins.

Contractual warranty

Warranty	18 months

DRAFT

RSPSupply - 1-888-532-2706 - https://www.RSPSupply.com
See the product details here
Page 219

9001SK 3-Position Selector Switches

Table 19.259: 3-Position Selector Switches

Contact Block Required						1 — Contact Closed 0 — Contact Open																				
Contact Block Position	Quantity and Type			Mount on Side																						
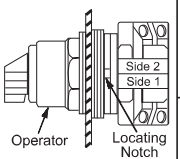 Top View	KA1	or	KA3 / KA2	KA1 #2	or	KA3 #2	1	0	0	1	0	0	0	0	1	1	0	0	1	0	0	1	0	0	1	0	0	1	0	1	1	0
						KA2 #2	0	1	1	0	0	1	0	1	0	0	1	0	0	0	1	0	1	1	0	1	1	1	0	0	0	0	1
	KA1	or	KA3 / KA2	KA1 #1	or	KA3 #1	0	0	1	1	0	0	0	0	1	1	0	0	0	1	0	0	0	1	1	0	1	0	0	1	0	1	1
						KA2 #1	1	1	0	0	0	1	0	1	0	0	1	0	0	0	1	1	0	0	0	1	0	0	1	0	1	0	0
For Cam, see Type K, KX, and SK Selector Switch Guide, page 19-78							B			C			D			E			F			G			J			L			M		

Non-Illuminated Operators [93]	Type	Type	Type	Type	Type	Type	Type	Type	Type
Manual Return, Operator Only (without contact blocks) [94]									
Without Knob	SKS42	SKS43	SKS44	SKS45	SKS46	SKS47	SKS49	SKS401	SKS402
With Knob [95]	SKS42♦	SKS43♦	SKS44♦	SKS45♦	SKS46♦	SKS47♦	SKS49♦	SKS401♦	SKS402♦
Operator with Contact Blocks and Standard black knob [96]									
With 1 KA1 on Side #2 (H13)	SKS42B-H13	SKS43B-H13	SKS44B-H13	SKS45B-H13	SKS46BH13	SKS47B-H13	SKS49B-H13	SKS401B-H13	SKS402B-H13
With 1 KA1 on Side #1 (H1)	SKS42B-H1	SKS43BH1	SKS44BH1	SKS45B-H1	SKS46BH1	SKS47BH1	SKS49BH1	SKS401BH1	SKS402BH1
With 1 KA1 on Side #1 and 1 KA1 on side #2 (H2)	SKS42B-H2	SKS43BH2	SKS44BH2	SKS45B-H2	SSKS46B-H2	SKS47BH2	SKS49BH2	SKS401BH2	SKS402BH2
Spring Return from Left to Center, Operator Only (without contact blocks) [94]									
Without Knob	SKS62	SKS63	SKS64	SKS65	SKS66	SKS67	SKS69	SKS601	SKS602
With Knob [95]	SKS62♦	SKS63♦	SKS64♦	SKS65♦	SKS66♦	SKS67♦	SKS69♦	SKS601♦	SKS602♦
Spring Return from Right to Center, Operator Only (without contact blocks) [94]									
Without Knob	SKS72	SKS73	SKS74	SKS75	SKS76	SKS77	SKS79	SKS701	SKS702
With Knob [95]	SKS72♦	SKS73♦	SKS74♦	SKS75♦	SKS76♦	SKS77♦	SKS79♦	SKS701♦	SKS702♦
Spring Return from Both Sides to Center, Operator Only (without contact blocks) [94]									
Without Knob	SKS52	SKS53	SKS54	SKS55	SKS56	SKS57	SKS59	SKS501	SKS502
With Knob [95]	SKS52♦	SKS53♦	SKS54♦	SKS55♦	SKS56♦	SKS57♦	SKS59♦	SKS501♦	SKS502♦

Illuminated Operators [93]	Type	Type	Type	Type	Type	Type	Type	Type	Type
Manual Return, Operator Only (without contact blocks) [94]									
Without Knob, 110-120V 50-60 Hz Transformer	SK42J1	SK43J1	SK44J1	SK45J1	SK46J1	SK47J1	SK49J1	SK401J1	SK402J1
With Standard Red Knob, 110-120V 50-60 Hz Transformer	SK42J1R	SK43J1R	SK44J1R	SK45J1R	SK46J1R	SK47J1R	SK49J1R	SK401J1R	SK402J1R
With other Color Knob [95] and other Voltage Light Module [97]	SK42J■♦	SK43J■♦	SK44J■♦	SK45J■♦	SK46J■♦	SK47J■♦	SK49J■♦	SK401J■♦	SK402J■♦
Spring Return from Left to Center, Operator Only (without contact blocks) [94]									
Without Knob, 110-120V 50-60 Hz Transformer	SK62J1	SK63J1	SK64J1	SK65J1	SK66J1	SK67J1	SK69J1	SK601J1	SK602J1
With Standard Red Knob, 110-120V 50-60 Hz Transformer	SK62J1R	SK63J1R	SK64J1R	SK65J1R	SK66J1R	SK67J1R	SK69J1R	SK601J1R	SK602J1R
With other Color Knob [95] and other Voltage Light Module [97]	SK62J■♦	SK63J■♦	SK64J■♦	SK65J■♦	SK66J■♦	SK67J■♦	SK69J■♦	SK601J■♦	SK602J■♦
Spring Return from Right to Center, Operator Only (without contact blocks) [94]									
Without Knob, 110-120V 50-60 Hz Transformer	SK72J1	SK73J1	SK74J1	SK75J1	SK76J1	SK77J1	SK79J1	SK701J1	SK702J1
With Standard Red Knob, 110-120V 50-60 Hz Transformer	SK72J1R	SK73J1R	SK74J1R	SK75J1R	SK76J1R	SK77J1R	SK79J1R	SK701J1R	SK702J1R
With other Color Knob [95] and other Voltage Light Module [97]	SK72J■♦	SK73J■♦	SK74J■♦	SK75J■♦	SK76J■♦	SK77J■♦	SK79J■♦	SK701J■♦	SK702J■♦
Spring Return from Both Sides to Center, Operator Only (without contact blocks) [94]									
Without Knob, 110-120V 50-60 Hz Transformer	SK52J1	SK53J1	SK54J1	SK55J1	SK56J1	SK57J1	SK59J1	SK501J1	SK502J1
With Standard Red Knob, 110-120V 50-60 Hz Transformer	SK52J1R	SK53J1R	SK54J1R	SK55J1R	SK56J1R	SK57J1R	SK59J1R	SK501J1R	SK502J1R
With other Color Knob [95] and other Voltage Light Module [97]	SK52J■♦	SK53J■♦	SK54J■♦	SK55J■♦	SK56J■♦	SK57J■♦	SK59J■♦	SK501J■♦	SK502J■♦

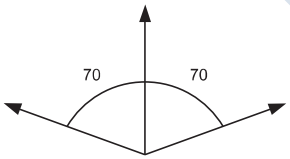

3 Position

Table 19.260: Selector Switch Assembly Code and Knob Cat. No.

Color	Standard Knob		Gloved Hand Knob	
	[98] Knob Code	Cat. No. [93]	[98] Knob Code	Cat. No. [93]
Black	B	B11	FB	B25
Red	R	R8	FR	R24
Green	G	G8	FG	G24
Yellow	Y	Y8	FY	Y24
Blue	L	L8	FL	L24
White	W	W8	FW	W24
Amber	A	A8	FA	A24
Clear	C	C8	FC	C24

Contact Blocks: Contact Blocks, page 19-90,Hermetically Sealed Logic Reed Contact Blocks, page 19-92, Hermetically Sealed Power Reed Contact Blocks, page 19-92
Light Modules:Standard Light Modules, page 19-91
Knobs and Accessories:Additional Accessories for Type K and SK Operators, page 19-99

[93] When ordering, add prefix 9001 to the catalog number.
[94] These operators can be ordered complete with contact blocks. Add the "H code" from "H" Codes, page 19-93 as needed for your application.
[95] ♦ Add the knob color code chosen from the Selector Switch Assembly Code table. For LED, knob color must match LED.
[96] For other color knobs replace the B with knob color code. See Table 19.260 Selector Switch Assembly Code and Knob Cat. No., page 19-86 .
[97] ■ Add the voltage assembly code as chosen from Standard Light Modules, page 19-91. **Example: K25J with 208Vac = K25J3**
[98] Add the knob color code. For LED, knob color must match LED.

© 2019 Schneider Electric
All Rights Reserved

DRAFT

Item 32

Item # T50B212 with NEMA 4x12 Gasket



with NEMA 4x12 Gasket

ENM's series T50 AC hour meter in a large 3-hole flange. Includes NEMA 4X. 12 rated panel gasket for water and corrosion resistant panel mounting (see accessories). A quartz crystal time base insures accurate time keeping. This model is also frequency insensitive.

DRAFT

Specifications

Series	T50
Display	6-Digit
Voltage	115 V AC
Reset	None
Size	1.68W x 1.68H x 1.26D Inch
Face Dia - Flange	2.8 Inch
Face Dia - Cutout	2 Inch
Weight	2 oz.
Mounting Style	3-Hole Panel
Power	Less than 0.4 W

Item T50B212, with NEMA 4x12 Gasket

Dimensional Drawing

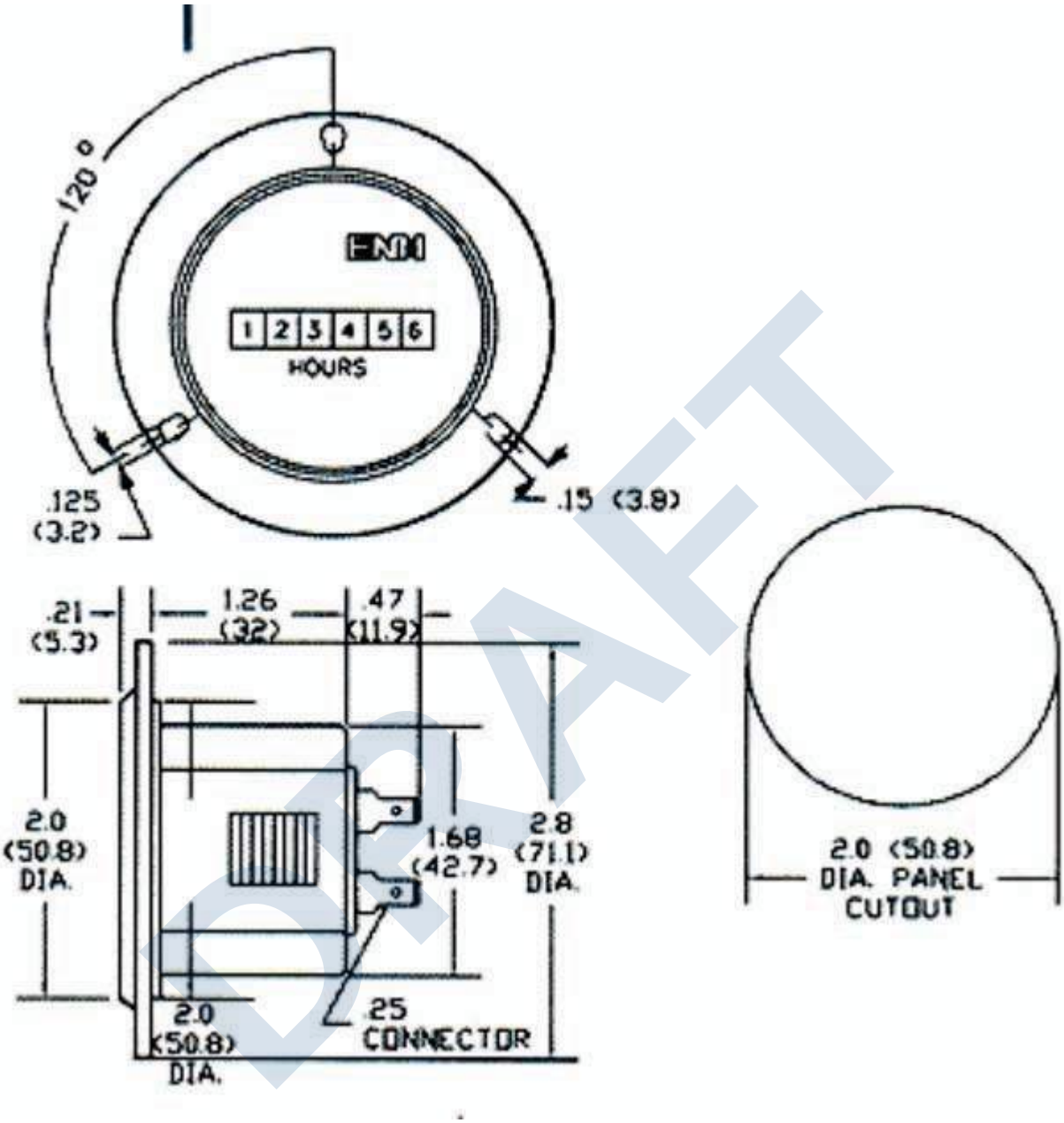

DRAFT

Standard Mounting Types

[illegible]L

Panel Mounting is obtained by cutting a circular or rectangular cut-out in the desired panel and the instrument is inserted with the flange resting on the top of the panel. The instrument is held in place by compressing a plastic or steel spring clip from behind the panel. This type of mounting is very popular because it requires no additional fasteners. Models are also considered panel mounted when they are inserted into a panel cut-out and mounted from the front using a two or more hole flange and fastened with screws from the front of the panel (pictured to the right).



[illegible] [illegible] [illegible]L

Back of panel mounting is usually achieved by cutting an opening in a thin panel large enough to read the display. Two or more holes are drilled in the panel and screws are inserted from the front to secure the instrument against the back of the panel wall.



[illegible]

Base mounting is usually a free standing mount and connections are made with a two or more hole flange at the bottom of the unit. This is a standard mount for most mechanical counters and is sometimes used for hour meters when a panel is not available.

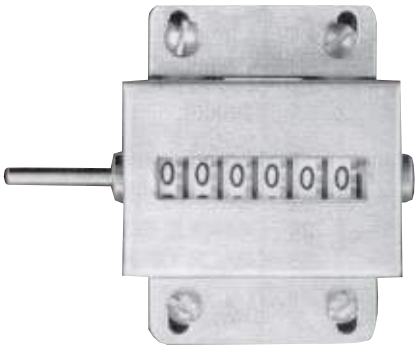

[illegible]

PC board mounting is common for using counters in add-on PCB modules to electronic machinery. This type of mounting eliminates the need for any wires and multiple counters can be assembled as one unit. The counters are attached by soldering the protruding pins into the PCB and two or more fasteners are also screwed into the bottom of the unit for additional support onto the PC board.

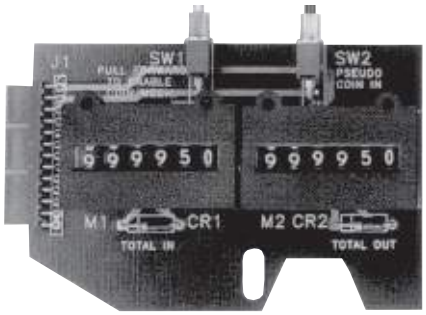

[illegible]

Rear mounting is similar to PCB mounting except there are no pins for soldering, only two or more holes on the bottom for threaded or self-tapping screws. This is an optional type of mounting used mainly when a suitable panel is not available.



DRAFT

Monitoring Relays
1-Phase True RMS AC Over or Under Current
Type DIB01 100A

CARLO GAVAZZI



- **TRMS AC over or under current monitoring relay**
- **Current measuring through built-in current transformer**
- **Selection of measuring range by DIP-switches**
- **Measuring ranges from 2 A to 100 A AC**
- **Adjustable current on relative scale**
- **Adjustable hysteresis on relative scale**
- **Adjustable delay function (0.1 to 30 s)**
- **Programmable latching or inhibit at set level**
- **Output: 8 A SPDT relay N.D. or N.E. selectable**
- **For mounting on DIN-rail in accordance with DIN/EN 50 022**
- **22.5 mm Euronorm housing**
- **LED indication for relay, alarm and power supply ON**
- **Galvanically separated power supply**

Product Description

DIB01 is a precise TRMS AC over or under current (selectable by DIP-switch) monitoring relay.
Owing to the built-in latch function, the ON-position of the relay output can be maintained. Inhibit function can be used to avoid relay operation when not desired (maintenance, transitions).
The LED's indicate the state of the alarm and the output relay. Through the built-in current transformer it is possible to monitor loads up to 100 A AC.

Ordering Key

DIB 01 C M24 100A

- **Housing**
- **Function**
- **Type**
- **Item number**
- **Output**
- **Power supply**
- **Measuring range**

Type Selection

Mounting	Output	Measuring range	Supply: 24 VDC and 24 to 240 VAC
DIN-rail	SPDT	2 to 100 A AC	**DIB 01 C M24 100A**

Input Specifications

Input (current level)		
DIB01 100A	Built-in current transformer	
Measuring ranges		
Selectable by DIP-switch		**Max current**
2 to 20 A AC		120 A
5 to 50 A AC		120 A
10 to 100 A AC		120 A
Max. current for 30 s	250 A	
Max. current for 1 s	2000 A	

Contact input	
DIB01	Terminals A1, Y1
Disabled	Open
Enabled	< 10 kΩ
Latch disable	> 500 ms

Supply Specifications

Power supply	Overvoltage cat. III (IEC 60664, IEC 60038)
Rated operational voltage through terminals:	
A1, A2	24 VDC - 15% +10% 24 to 240 VAC ± 15% 45 to 65 Hz
Dielectric voltage	
Supply to input	4 kV
Supply to output	4 kV
Input to output	4 kV
Rated operational power	
DC	1 W
AC	1 W / 35 VA

Output Specifications

Output		SPDT relay
Rated insulation voltage		250 VAC
Contact ratings ($AgSnO_2$)		μ
Resistive loads	AC 1	8 A @ 250 VAC
	DC 12	5 A @ 24 VDC
Small inductive loads	AC 15	2.5 A @ 250 VAC
	DC 13	2.5 A @ 24 VDC
Mechanical life		≥ 30 x 10^6 operations
Electrical life		≥ 10^5 operations (at 8 A, 250 V, cos φ = 1)
Operating frequency		≤ 7200 operations/h
Dielectric strength		
Dielectric voltage		≥ 2 kVAC (rms)
Rated impulse withstand volt.		4 kV (1.2/50 μs)

DRAFT

CARLO GAVAZZI

General Specifications

Power ON delay	1 s ± 0.5 s or 6 s ± 0.5 s
Reaction time	
Alarm ON delay	< 100 ms
Alarm OFF delay	< 100 ms
Accuracy	(15 min warm-up time)
Temperature drift	± 500 ppm/°C
Delay ON alarm	± 10% on set value ± 50 ms
Repeatability	± 0.5% on full-scale
Indication for	
Power supply ON	LED, green
Alarm ON	LED, red (flashing 2 Hz during delay time)
Output relay ON	LED, yellow
Environment	(EN 60529)
Degree of protection	IP 20
Pollution degree	3
Operating temperature	-20 to 60°C, R.H. < 95%
Storage temperature	-30 to 80°C, R.H. < 95%

Housing	
Dimensions	22.5 x 80 x 99.5 mm
Material	PA66 or Noryl
Weight	Approx. 155 g
Screw terminals	
Tightening torque	Max. 0.5 Nm acc. to IEC 60947
Product standard	EN 60255-6
Approvals	UL, CSA
CE Marking	L.V. Directive 2006/95/EC EMC Directive 2004/108/EC
EMC	
Immunity	According to EN 60255-26 According to EN 61000-6-2
Emissions	According to EN 60255-26 According to EN 61000-6-3

Mode of Operation

DIB01 monitors AC over or under current through an internal current transformer.

Example 1
(connection between terminals A1, Y1 - latching function enabled - Relay ND)
The relay operates and latches in operating position when the measured value exceeds (or drops below) the set level for more than the set delay time. Provided that the current has dropped below (or has exceeded) the set point (see hysteresis setting), the relay releases when the interconnection between terminals A1, Y1 is interrupted or the power supply is interrupted as well. The red LED flashes until the delay time has expired.

Example 2
(no connection between terminals A1, Y1 - latch function disabled - Relay ND)
The relay operates when the measured value exceeds (or drops below) the set level for more than the set delay time. It releases when the current drops below (or exceeds) the set level (see hysteresis setting) or when power supply is interrupted.

Note
When the inhibit contact is opened, if the input signal is already in alarm position, the delay time needs to elapse before relay activation.

Function/Range/Level and Time Delay Setting

Adjust the input range setting DIP switches 1 and 2 as shown below.
Select the desired function setting DIP switches 3 to 6 as shown below.
To access the DIP switches open the grey plastic cover as shown below.
Selection of level and time delay:

Upper knob:
Setting of hysteresis on relative scale: 0 to 30% on set value.

Centre knob:
Current level setting on relative scale: 10 to 110% on full scale.

Lower knob:
Setting of delay on alarm time on absolute scale (0.1 to 30 s).

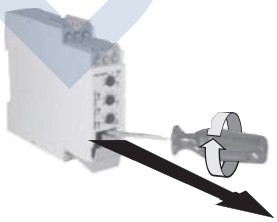

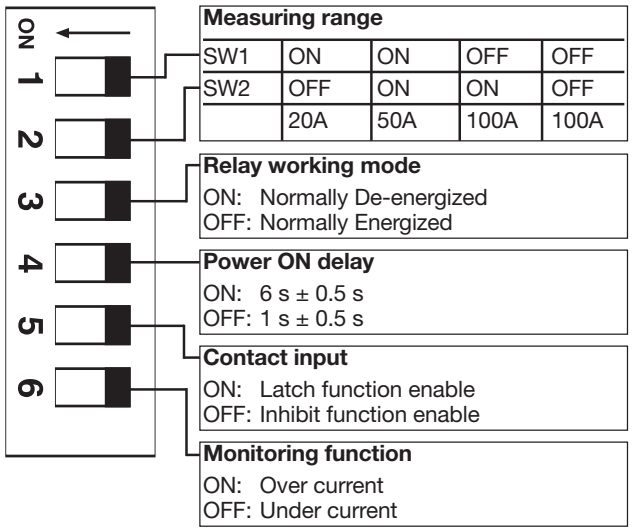

Measuring range

SW1	ON	ON	OFF	OFF
SW2	OFF	ON	ON	OFF
	20A	50A	100A	100A

Relay working mode
ON: Normally De-energized
OFF: Normally Energized

Power ON delay
ON: 6 s ± 0.5 s
OFF: 1 s ± 0.5 s

Contact input
ON: Latch function enable
OFF: Inhibit function enable

Monitoring function
ON: Over current
OFF: Under current

DRAFT

Specifications are subject to change without notice (19.05.10)

Operation Diagrams

Over current - N.D. relay

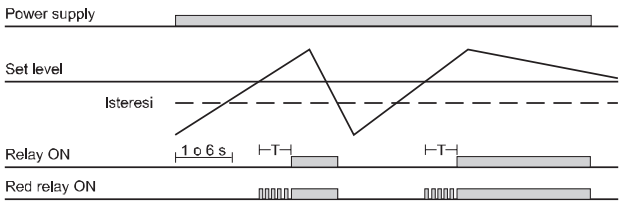

Under current - Latch function - N.D. relay

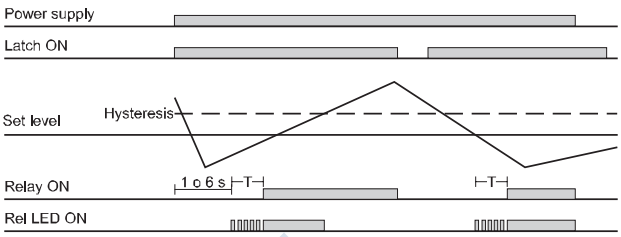

Under current - N.D. relay

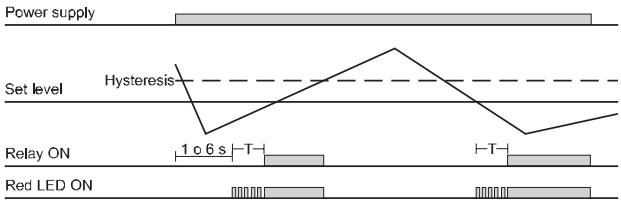

Over current - Inhibit function - N.D. relay

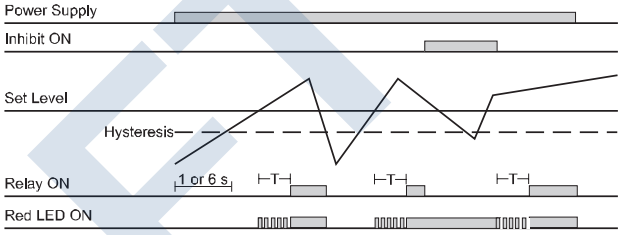

Wiring Diagram

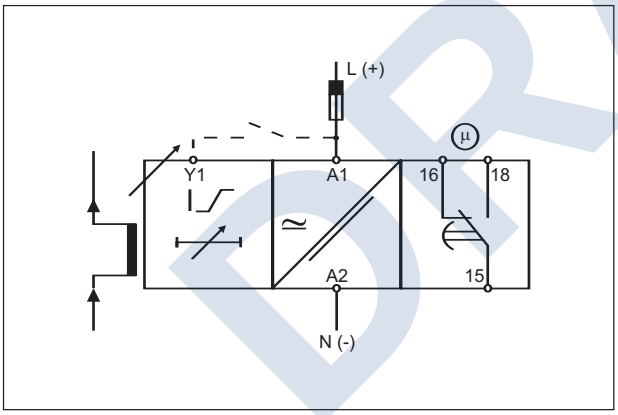

Dimensions

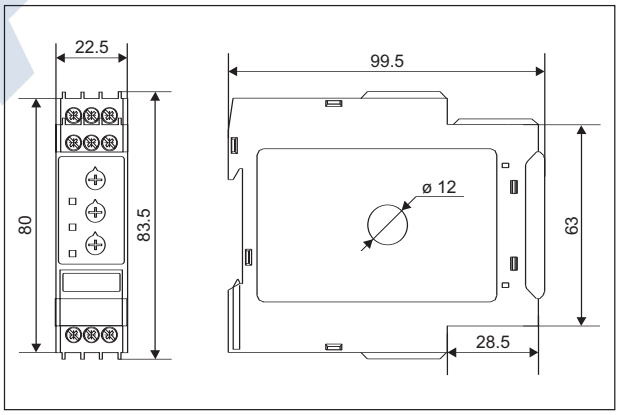

DRAFT

finder
SWITCH TO THE FUTURE

Item 34

REPORT

7L Series
LED Panel Light



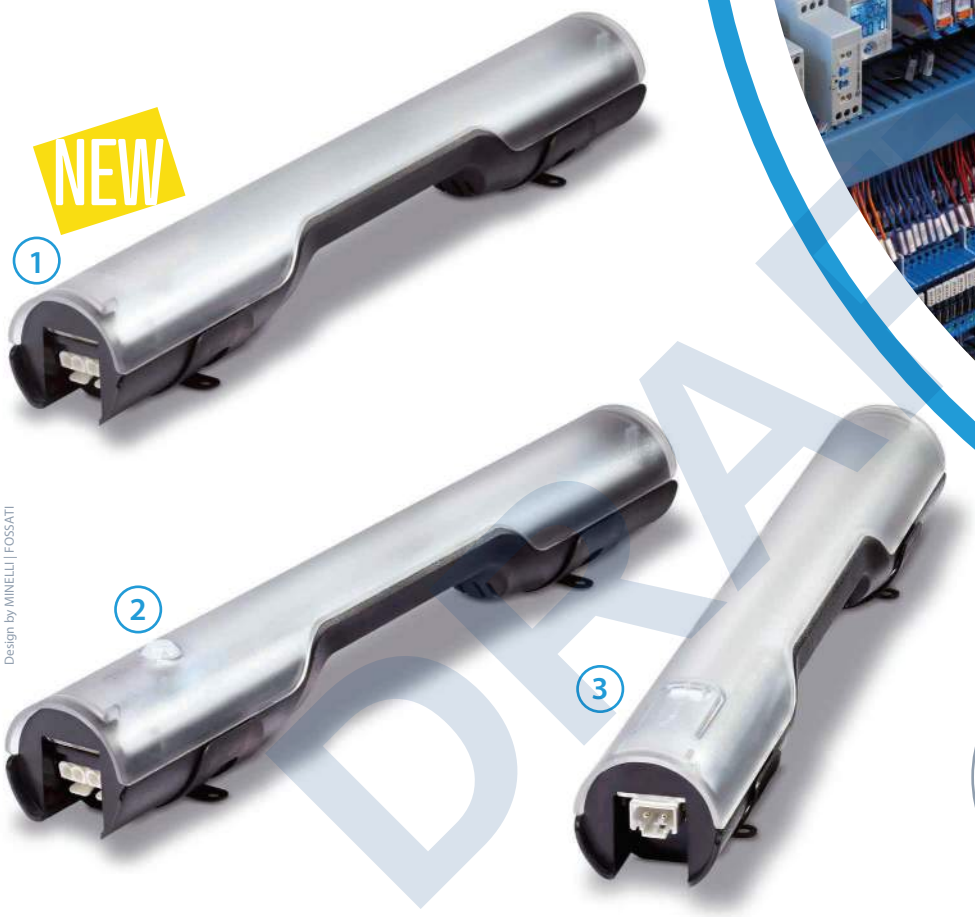

Design by MINELLI | FOSSATI



Connector
Type 07L.11
included in
the packaging

LED light for electrical panels - with magnetic mount

- **"Two in One" mount - direct magnetic mount or through a screw-mounted metallic bracket**
- **Brightness levels: 600 or 1200 lumens**
- **Versions with: 1 - direct switching**
  2 - motion detector
  3 - ON/OFF switch
- Power supply - Multi-voltage: (12…48)V AC/DC and (110…240)V AC/DC
- Available with push-in terminals or plug-in terminals

Approvals

DRAFT

Type 7L.43 (600 lumens)
Type 7L.46 (1200 lumens)

- Direct magnetic mount or through a screw-mounted metallic bracket
- Power supply: (12…48)V AC/DC and (110…240)V AC/DC
- Nominal power consumption: 6 W (600 lm), 9 W (1200 lm)
- Radiation angle: 120°
- Colour temperature: 5,000 K
- Protection category: IP20

Direct switching



Switching via ON/OFF soft latch switch

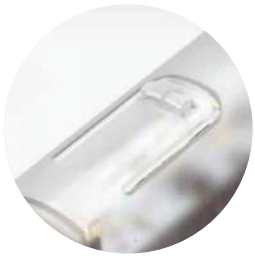

Switching via motion detector



Magnetic mount directly to metallic panel



Magnetic mount via screw-mounted metallic bracket



Quick and simple wiring system via **push-in connectors** for the connection to a single unit, or via **plug-in connectors** for the connection to a single or multiple units.

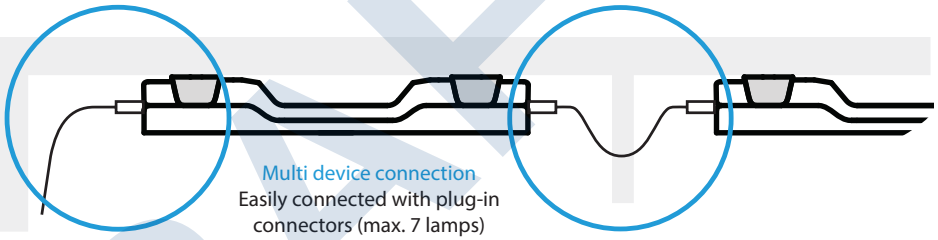

Multi device connection
Easily connected with plug-in connectors (max. 7 lamps)

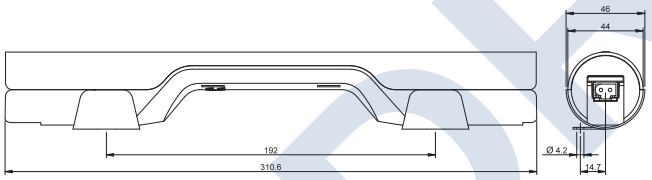

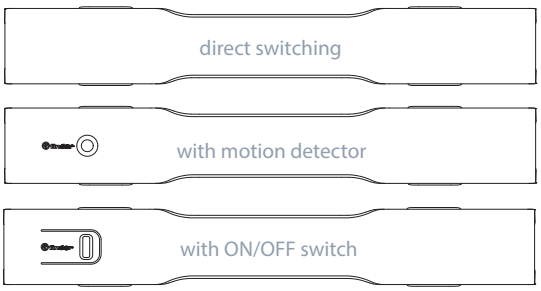

Part Number	Lumen	Part Number	Lumen	Supply voltage	Switching	Connections
7L.43.0.024.0100	600	**7L.46.0.024.0100**	**1200**	024 = (12…48)V AC/DC	**Direct switching**	Push-in connection
7L.43.0.024.0200	600	**7L.46.0.024.0200**	**1200**	024 = (12…48)V AC/DC	**Direct switching**	Plug-in connection
7L.43.0.230.0100	600	**7L.46.0.230.0100**	**1200**	230 = (110…240)V AC/DC	**Direct switching**	Push-in connection
7L.43.0.230.0200	600	**7L.46.0.230.0200**	**1200**	230 = (110…240)V AC/DC	**Direct switching**	Plug-in connection
7L.43.0.024.1100	600	7L.46.0.024.1100	1200	024 = (12…48)V AC/DC	ON/OFF switch	Push-in connection
7L.43.0.024.1200	600	7L.46.0.024.1200	1200	024 = (12…48)V AC/DC	ON/OFF switch	Plug-in connection
7L.43.0.024.2100	600	7L.46.0.024.2100	1200	024 = (12…48)V AC/DC	PIR - motion detector	Push-in connection
7L.43.0.024.2200	600	7L.46.0.024.2200	1200	024 = (12…48)V AC/DC	PIR - motion detector	Plug-in connection
7L.43.0.230.1100	600	7L.46.0.230.1100	1200	230 = (110…240)V AC/DC	ON/OFF switch	Push-in connection
7L.43.0.230.1200	600	7L.46.0.230.1200	1200	230 = (110…240)V AC/DC	ON/OFF switch	Plug-in connection
7L.43.0.230.2100	600	7L.46.0.230.2100	1200	230 = (110…240)V AC/DC	PIR - motion detector	Push-in connection
7L.43.0.230.2200	600	7L.46.0.230.2200	1200	230 = (110…240)V AC/DC	PIR - motion detector	Plug-in connection

DRAFT

FINDER reserves the right to alter characteristics at any time without notice.FINDER assumes no liability for damage to persons or property, caused as a result of the incorrect use or application of its products.

RU Series Universal Relays



Key features:

- Full featured universal miniature relays
- Designed with environment taken into consideration
- Two terminal styles: plug-in and PCB mount
- Non-polarized LED indicator
- No internal wires, lead-free construction
- Cadmium-free contacts
- Mechanical flag indicator
- Manual latching lever with color coding for AC or DC coil
- Snap-on yellow marking plate; optional marking plates are available in four other colors
- Maximum contact ratings: 10A (RU2), 6A (RU4), 3A (RU42)
- UL Recognized, CSA Certified, EN Compliant

EN61810-1

With Latching or Momentary Lever

Mechanical Indicator*
The contact position can be confirmed through the five small windows.

Marking Plate
Standard yellow marking plate is easily replaced with optional marking plates in four colors for easy identification of relays.

LED Indicator*
Non-polarized green LED indicator is standard provision for plug-in terminal, latching lever types

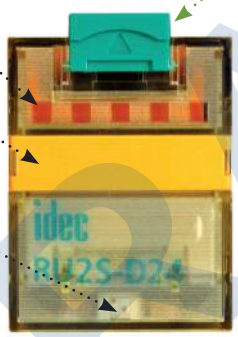

Latching and Momentary Lever
Using the lever, operation can be checked without energizing the coil. The lever is color coded for AC and DC coils.

	Latching	Momentary
AC coil:	Orange	Red
DC coil:	Green	Blue

In Normal Operation



Note: Turn off the power to the relay coil when using the latching lever. After checking the operation, return the latching lever in the normal position.

Standard (without lever)

AC/DC Color Marking
For identification of AC or DC coils.
AC coil: Yellow
DC coil: Blue

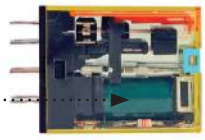

Mechanical Indicator*

Marking Plate

LED Indicator*
Non-polarized green LED indicator is standard provision for plug-in terminal types.

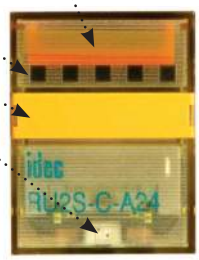

AC Coil

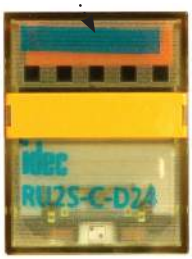

DC Coil

Coil Voltage	Tape Color
24V AC	White
100 to 110V AC	Clear
110 to 120V AC	Blue
200 to 220V AC	Black
220 to 240V AC	Red
24V DC	Green
6V DC	Voltage marking on yellow tape
12V DC	
48V DC	
110V DC	

*Not available on PCB type.

DRAFT

Part Number Selection

Contact	Model	Part Number: Standard	Part Number: With Latching Lever	Part Number: With Momentary Lever	Coil Voltage Code (Standard Stock in bold)
DPDT (10A) 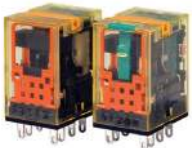	Standard	RU2S-C-□	RU2S-□	RU2S-M-□	A24, **A110**, **A220** D6, D12, **D24**, D48, D110
	With RC (AC coil only)	RU2S-CR-□	RU2S-R-□	RU2S-MR-□	A110, A220
	With diode (DC coil only)	RU2S-CD-□	RU2S-D-□	RU2S-MD-□	D6, D12, **D24**, D48, D110
	PCB	RU2V-NF-□	—	—	A24, A110, A220 D6, D12, **D24**, D48, D110
4PDT (6A) 	Standard	RU4S-C-□	RU4S-□	RU4S-M-□	A24, **A110**, **A220** D6, D12, **D24**, D48, D110
	With RC (AC coil only)	RU4S-CR-□	RU4S-R-□	RU4S-MR-□	A110, A220
	With diode (DC coil only)	RU4S-CD-□	RU4S-D-□	RU4S-MD-□	D6, D12, D24, D48, D110
	PCB	RU4V-NF-□	—	—	A24, **A110**, A220 D6, D12, **D24**, D48, D110
4PDT Bifurcated (3A) 	Standard	RU42S-C-□	RU42S-□	RU42S-M-□	A24, A110, A220 D6, D12, **D24**, D48, D110
	With RC (AC coil only)	RU42S-CR-□	RU42S-R-□	RU42S-MR-□	A110, A220
	With diode (DC coil only)	RU42S-CD-□	RU42S-D-□	RU42S-MD-□	D6, D12, D24, D48, D110
	PCB	RU42V-NF-□	—	—	A24, A110, A220 D6, D12, **D24**, D48, D110

1. Plug-in terminal models have an LED indicator and a mechanical indicator as standard.
2. PCB models do not have an LED indicator or a mechanical indicator.

Ordering Information
When ordering, specify the Part No. and coil voltage code:
(example) **RU2S-C** **A110**
Part No. Coil Voltage Code

Coil Voltage Table

Coil Voltage Code	A24	A110	A220	D6	D12	D24	D48	D110
Coil Rating	24V AC	110-120V AC	220-240V AC	6V DC	12V DC	24V DC	48V DC	110V DC

Sockets

Relays	Spring Clamp DIN Rail Mount	Standard DIN Rail Mount	Finger-safe DIN Rail Mount	Panel Mount	PCB Mount
RU2S (DPDT)	SU2S-11L	SM2S-05	SM2S-05C	SY4S-51	SM2S-61 SM2S-62
RU4S (4PDT) RU42S (4PDT)	SU4S-11L	SY4S-05	SY4S-05C		SY4S-61 SY4S-62
					

DRAFT

Hold Down Springs & Clips

Appearance	Item	Relay	For DIN Mount Socket	For Through Panel & PCB Mount Socket
	Pullover Wire Spring	RU2S/RU4S/ RU42S	SY4S-02F1	SY4S-51F1
	Leaf Spring (side latch)	RU2S/RU4S/ RU42S	SFA-202*	SFA-302*
	Leaf Spring (top latch)	RU2S/RU4S/ RU42S	SFA-101*	SFA-301*

Note: Order 2 pieces for each relay

Accessories

Name	Part Number	Color Code *
Marking Plate	RU9Z-P*	A (orange), G (green), S (blue), W (white), Y (yellow)

Specify a color code when ordering. The marking plate can be removed from the relay by inserting a flat screwdriver under the marking plate.

Specifications

Model (Contact)	RU2 (DPDT)	RU4 (4PDT)	RU42 (4PDT-bifurcated)
Contact Material	Silver alloy	Silver (gold clad)	Silver-nickel (gold clad)
Contact Resistance [1]	50 mΩ maximum		
Minimum Applicable Load [2]	24V DC, 5 mA (reference value)	1V DC, 1 mA	1V DC, 0.1 mA
Operating Time [3]	20 ms maximum		
Release Time [3]	20 ms maximum		
Power Consumption	AC: 1.1 to 1.4VA (50 Hz), 0.9 to 1.2VA (60 Hz) DC: 0.9 to 1.0W		
Insulation Resistance	100MΩ minimum (500V DC megger)		
Dielectric Strength	Between contact and coil: 2500V AC, 1 minute		
	Between contacts of different poles:		
	2500V AC, 1 minute	2000V AC, 1 minute	
	Between contacts of the same pole: 1000V AC, 1 minute		
Operating Frequency	Electrical: 1800 operations/h maximum Mechanical: 18,000 operations/h maximum		
Vibration Resistance	Damage limits: 10 to 55 Hz, amplitude 0.5 mm Operating extremes: 10 to 55 Hz, amplitude 0.5 mm		
Shock Resistance	Damage limits: 1000 m/s^2 (100G) Operating extremes: 150 m/s^2 (15G)		
Mechanical Life	AC: 50,000,000 operations DC: 100,000,000 operations		50,000,000 operations
Electrical Life [4]	See table on page 894		
Operating Temperature [5]	PCB model: –55 to +70°C (no freezing) Blade model: –55 to +60°C (no freezing)		
Operating Humidity	5 to 85% RH (no condensation)		
Weight	Approx. 35g		

1. Measured using 5V DC, 1A voltage drop method
2. Measured at operating frequency of 120 operations/min (failure rate level P, reference value)
3. Measured at the rated voltage (at 20°C), excluding contact bouncing;
   Release time of AC relays with RC: 25 ms maximum
   Release time of DC relays with diode: 40 ms maximum
4. Contact Load and Electrical Life (at ambient temperature 20°C)
5. Measured at the rated voltage.

DRAFT

Accessories

Item	Appearance	Use with	Part No.	Remarks
Aluminum DIN Rail (1 meter length)		All DIN rail sockets	BNDN1000	The BNDN1000 is designed to accommodate DIN mount sockets. Made of durable extruded aluminum, the BNDN1000 measures 0.413 (10.5mm) in height and 1.37 (35mm) in width (DIN standard). Standard length is 39" (1,000mm).
DIN Rail End Stop		DIN rail	BNL5	9.1 mm wide.
Replacement Hold-Down Spring Anchor		Horseshoe clip for DIN rail sockets	Y778-011	For use on DIN rail mount socket when using pullover wire hold down spring. 2 pieces included with each socket.

Coil Ratings

Rated Voltage (V)		Coil Voltage Code	Rated Current (mA) ±15% (at 20°C)		Coil Resistance (Ω) ±10% (at 20°C)	Operating Characteristics (values at 20°C)		
			50 Hz	60 Hz		Maximum Continuous Applied Voltage	Pickup Voltage	Dropout Voltage
AC (50/60 Hz)	24	A24	49.3	42.5	164	110%	80% maximum	30% minimum
	110-120	A110	8.4-10.0	7.1-8.2	4,550			
	220-240	A220	4.2-5.0	3.6-4.2	18,230			
DC	6	D6	155		40	110%	80% maximum	10% minimum
	12	D12	80		160			
	24	D24	44.7		605			
	48	D48	18		2,560			
	110	D110	8.9		12,100			

1. The rated current includes the current of the LED indicator.

Surge Suppressor Ratings

Model		Ratings
AC Coil	With RC	RC series circuit R: 20 kΩ, C: 0.033 µF
DC Coil	With Diode	Diode reverse voltage: 1000V Diode forward current: 1A

Contact Ratings

Maximum Contact Capacity						
Contact	Continuous Current	Allowable Contact Power		Voltage (V)	Rated Load	
		Resistive Load	Inductive Load		Res. Load	Ind. Load
DPDT	10A	2500VA AC	1250VA AC	250 AC	10A	5A
		300W DC	150W DC	30 DC	10A	5A
4PDT	6A	1500VA AC	600VA AC	250 AC	6A	0.8A
		180W DC	90W DC	30 DC	6A	1.5A
4PDT bifurcated	3A	750VA AC	200VA AC	250 AC	3A	0.8A
		90W DC	45W DC	30 DC	3A	1.5A

1. On 4PDT relays, the maximum allowable total current of neighboring two poles is 6A. At the rated load, make sure that the total current of neighboring two poles does not exceed 6A (3A + 3A = 6A).
2. Inductive load for the rated load — cos ø = 0.3, L/R = 7 ms

UL and c-UL Ratings

Voltage	Resistive			General Use			Horse Power Rating		
	RU2	RU4	RU42	RU2	RU4	RU42	RU2	RU4	RU42
250V AC	10A	—	3A	—	6A	—	—	1/10HP	—
30V DC	10A	6A	3A	—	—	—	—	—	—

CSA Ratings

Voltage	Resistive
	RU42
250V AC	3A
30V DC	3A

TÜV Ratings

Voltage	Resistive			Inductive		
	RU2	RU4	RU42	RU2	RU4	RU42
250V AC	10A	6A	3A	5A	0.8A	0.8A
30V DC	10A	6A	3A	5A	1.5A	1.5A

DRAFT

Socket Specifications

	Sockets	Terminal	Electrical Rating	Wire Size	Torque
DIN Rail Mount Sockets	SU2S-11L	Spring clamp terminals	250V/10A	24-16 AWG	—
	SU4S-11L	Spring clamp terminals	250V/6A (using RU4), 10A (using RU2)	24-16 AWG	—
	SM2S-05	M3 screw with captive wire clamp	300V, 10A	Maximum up to 2–#14AWG	5.5 - 9in•lbs
	SM2S-05C	M3 screw with captive wire clamp, fingersafe	300V, 10A	Maximum up to 2–#14AWG	5.5 - 9in•lbs
	SY4S-05	M3 screw with captive wire clamp	300V, 7A (using RU4), 10A (using RU2)	Maximum up to 2–#14AWG	5.5 - 9in•lbs
	SY4S-05C	M3 screw with captive wire clamp, fingersafe	300V, 7A (using RU4), 10A (using RU2)	Maximum up to 2–#14AWG	5.5 - 9in•lbs
Through Panel Mount Socket	SY4S-51	Solder	300V, 7A	—	—
PCB Mount Socket	SY4S-61	PCB mount	300V, 7A	—	—
	SY4S-62	PCB mount	250V, 7A	—	—

Electrical Life Curves

RU2 (Resistive Load)

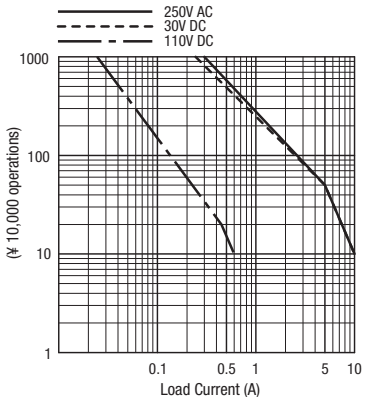

RU4 (Resistive Load)

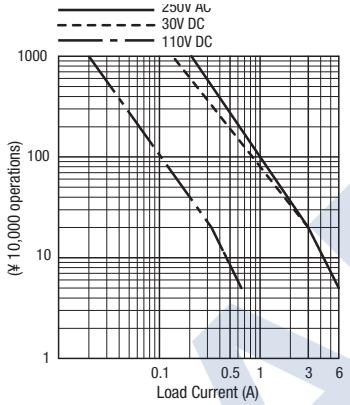

RU42 (Resistive Load)

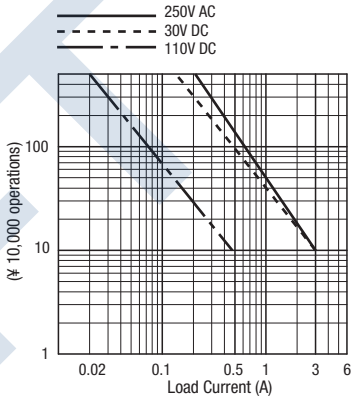

RU2 (Inductive Load)

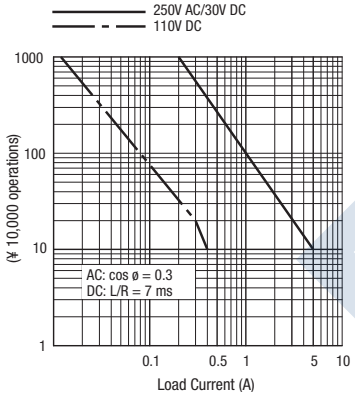

RU4 (Inductive Load)

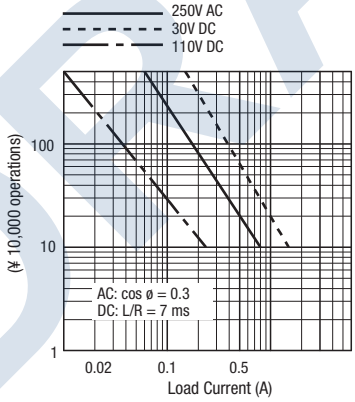

RU42 (Inductive Load)

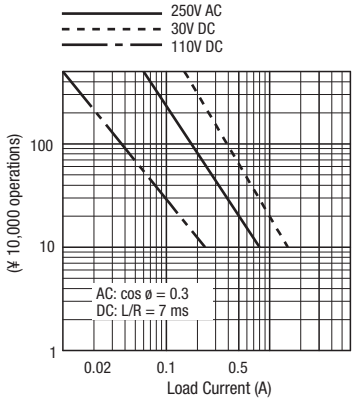

Maximum Switching Current

RU2

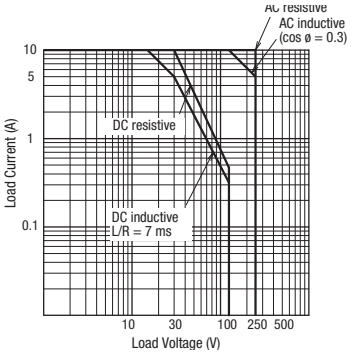

RU4

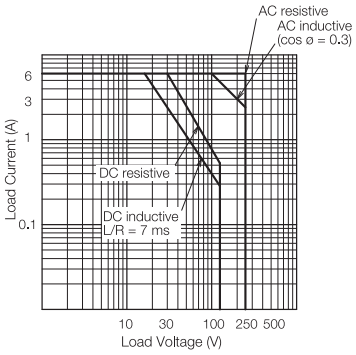

RU42 (Bifurcated)

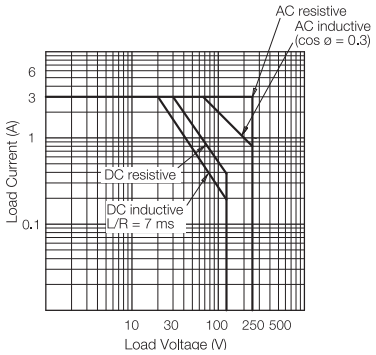

DRAFT

Ambient Temperature vs. Temperature Rise Curves

RU2 (AC Coil, 50 Hz)

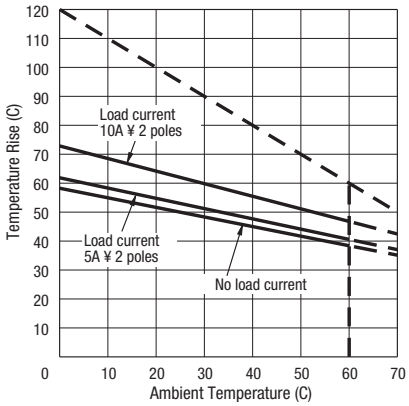

RU2 (AC Coil, 60 Hz)

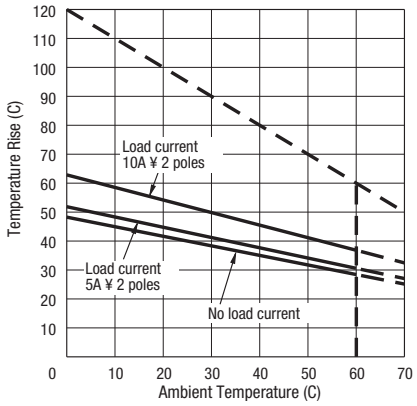

RU2 (DC Coil)

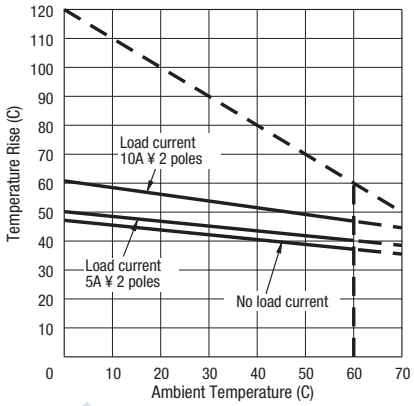

RU4/RU42 (AC Coil, 50 Hz)

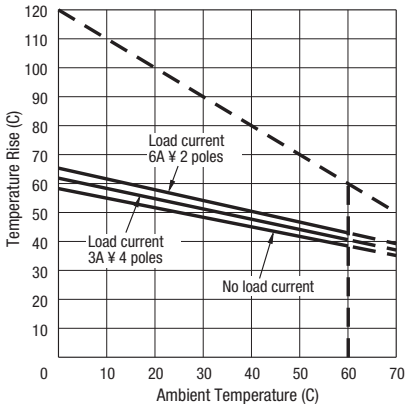

RU4/RU42 (AC Coil, 60 Hz)

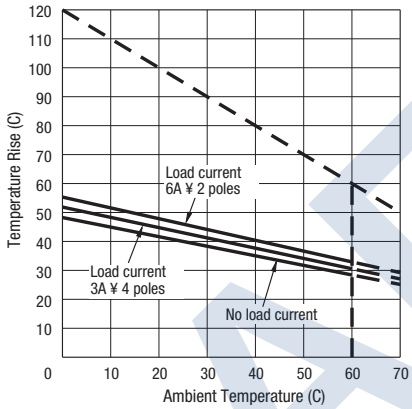

RU4/RU42 (DC Coil)

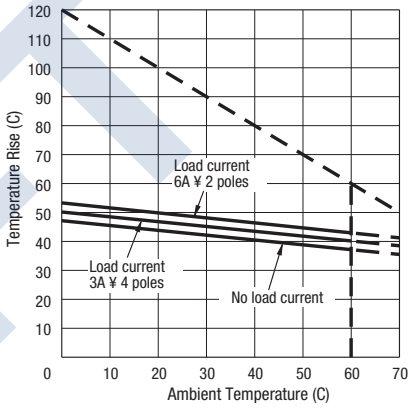

The above temperature rise curves show the characteristics when 100% the rated coil voltage is applied.
The heat resistance of the coil is 120°C. The slant dashed line indicates the allowable temperature rise for the coil at different ambient temperatures.
Load current 6A x 2 poles is for the RU4 models only.

DRAFT

Internal Connection (View from Bottom)

RU2S-* Standard

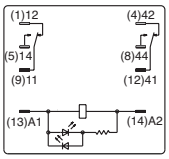

24V AC/DC coil or less

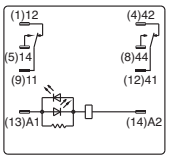

Over 24V AC/DC coil

RU2S-*R with RC

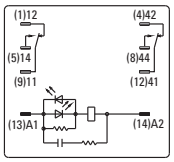

RU2S-*D With Diode

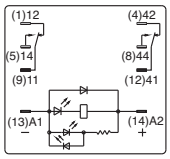

24V DC coil or less

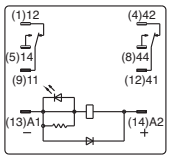

Over 24V DC coil

RU2V-NF-*

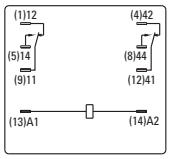

RU4S-*/RU42S-* Standard

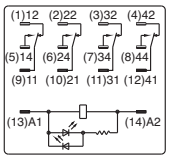

24V AC/DC coil or less

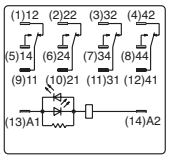

Over 24V AC/DC coil

RU4S-*R/RU42S-*R With RC

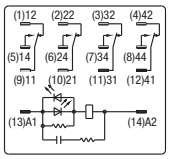

RU4S-*D/RU42S-*D With Diode

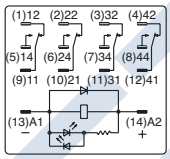

24V DC coil or less

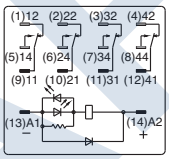

Over 24V DC coil

RU4V-NF-*/RU42V-NF-*

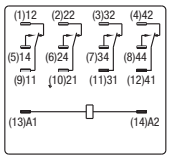

Dimensions (mm)

RU2S

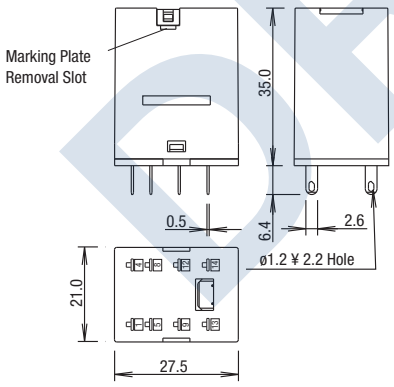

Marking plate removal slot is provided only on one side. Insert a flat screwdriver into the slot to remove the marking plate.

RU2V

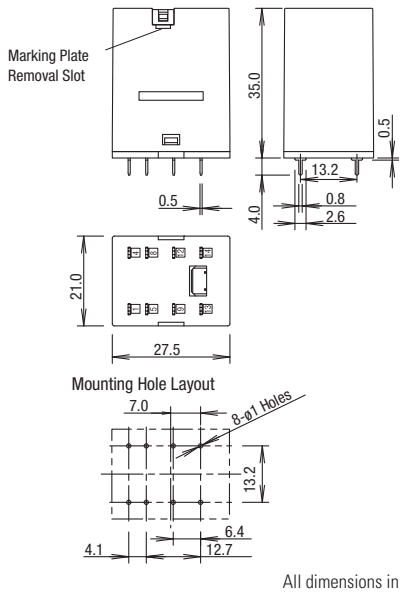

All dimensions in mm.

DRAFT

Dimensions con't (mm)

RU4S/RU42S

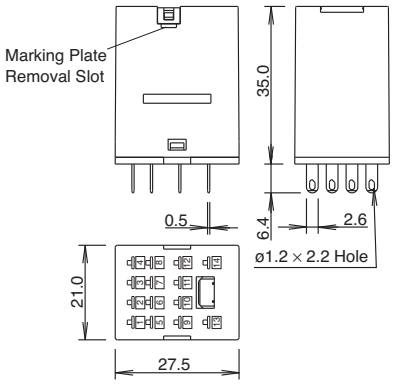

Marking plate removal slot is provided only on one side. Insert a flat screwdriver into the slot to remove the marking plate.

RU4V/RU42V

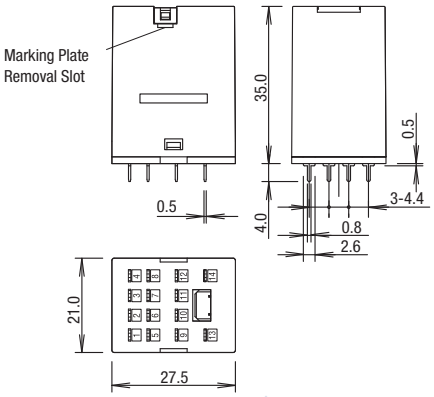

Mounting Hole Layout

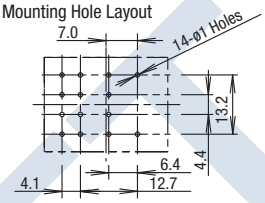

All dimensions in mm.

Spring Clamp DIN Rail Mount Sockets

SU2S-11L

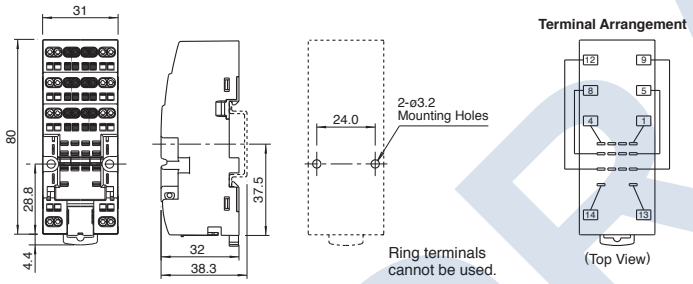

SU4S-11L

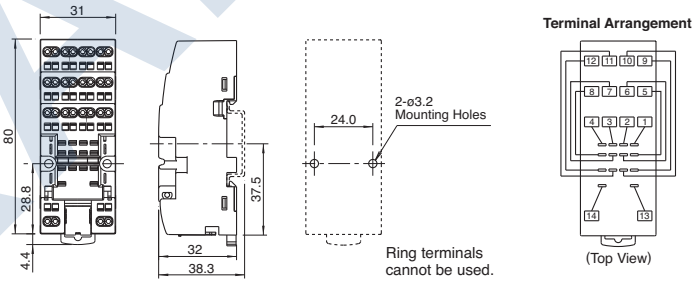

Standard DIN Rail Mount Sockets

SM2S-05

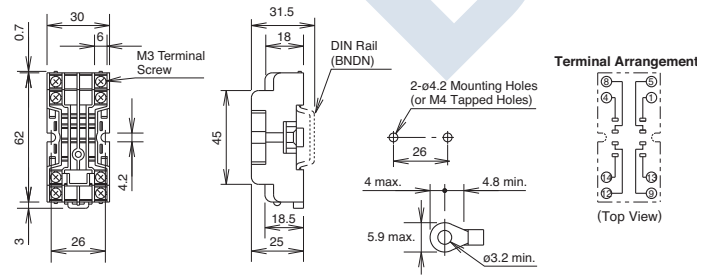

SY4S-05

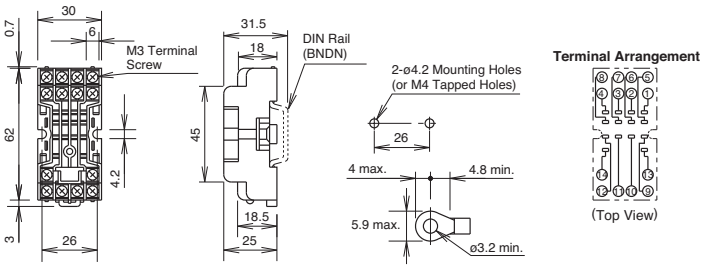

DRAFT

Dimensions con't (mm)

Finger-safe DIN Rail Mount Sockets

SM2S-05C

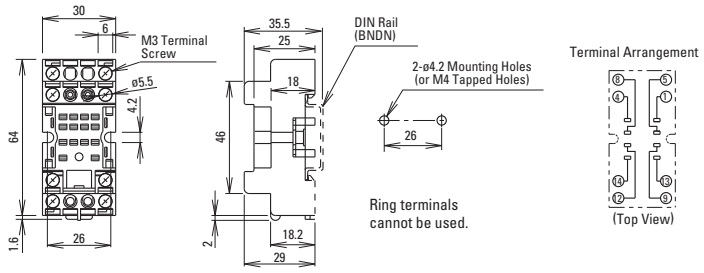

SY4S-05C

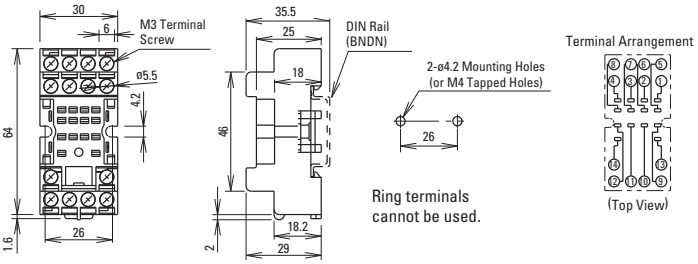

PCB Mount Sockets

SM2S-61

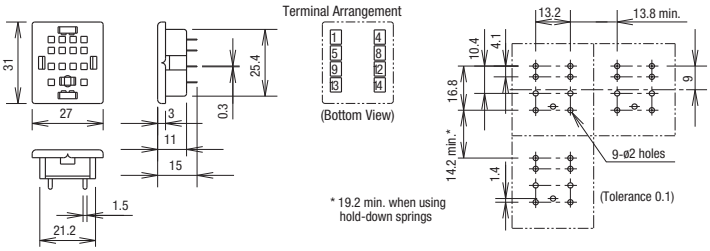

SM2S-62

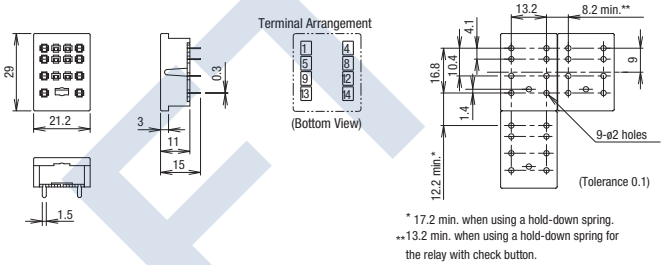

SY4S-61

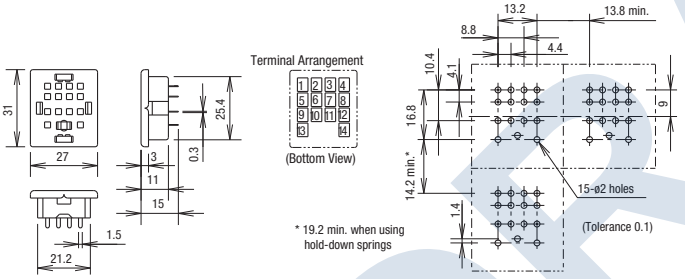

SY4S-62

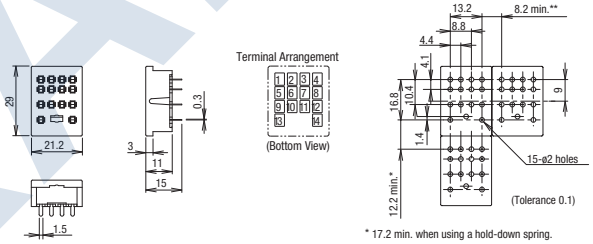

Through Panel Mount Socket

SY4S-51

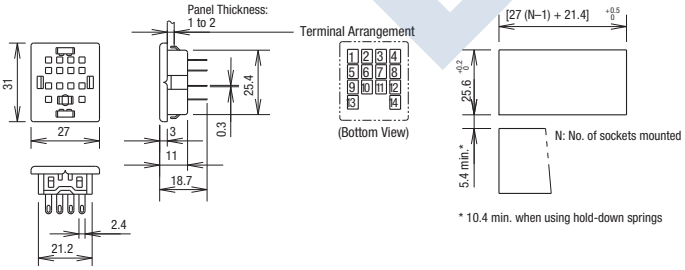

DRAFT

6mm and 14mm Slim Interface Relay

RV8 Series 6mm Width

Electromechanical Screw Terminal



Solid State Spring Clamp Terminal



PRODUCT DESCRIPTION

IDEC 6mm and 14mm interface relays provide a compact solution for general purpose relay requirements. Available in electromechanical and solid state models, the RV8 series Interface relays are ideal for PLC and electronic systems, industrial automation, panel builders, assembly machine applications and other applications that require a high switching capability in a compact space. The RV8 series interface relays can be used as interfaces between the controller and the actuator to switch small and medium size loads.

KEY FEATURES

- Class I, Division 2 and Class I, Zone 2 Hazardous Location options (electromechanical relays only)
- Solid State relay versions available (6mm only)
- Only 70mm in height from DIN rail
- Gold-plated contacts (electrical mechanical relays only)
- Pre-assembled relay and DIN mount socket
- Universal screw terminals (flat and phillips) or spring clamp terminals
- Universal AC/DC socket with built-in surge suppression and green LED
- 6A-16A contact rating (electromechanical relays only)
- Lever for easy locking and removal of relay
- Operating temperature of -40°C ~ +70°C (-20°C ~ +60°C for SSR)
- RoHS compliant

CE c UL us

(when using combination of RV relay and SV socket)

SPECIFICATIONS

		Electromechanical Standard/ Hazardous Location C1D2	Solid State
Ratings		Class I, Division 2, Groups A, B, C, D, T4A Class I, Zone 2 AEx nA nC IIC T4 Class I, Zone 2 Ex nA nC IIC T4 X Gc UL/c-UL Listed CE	UL/c-UL Listed, CE
Number of Poles		1 Pole	1 Pole
Contact Configuration		1C (SPDT)	1A (SPST)
Contact Material		AgNi (Au plating)	MOSFET, Transistor or Triac
Degree of Protection		IP20	IP20
Dielectric Strength	Between Contact and Coil	4,000V AC for 1 minute	2,500V AC for 1 minute
	Between Pole	1,000V AC for 1 minute	-
Vibration Resistance	Operating Extremes	Frequency 10 to 55Hz, Amplitude 0.5mm (NO contact), 0.2mm (NC contact)	Frequency 10 to 55Hz, Amplitude 1.0mm
	Damage Limits		
Shock Resistance	Operating Extremes	NO: 49m/s² NC: 29.4m/s²	980m/s²
	Damage Limits	980m/s²	
Mechanical Life (no load)		Over 10,000,000 operations (operation frequency 18,000 operations per hour)	-
Operating Temperature		-40 to +70°C no freezing (-40 to +55°C for AD110 and AD220 coil voltages)	-20 to +60°C
Operating Humidity		5 to 85% (no condensation)	5 to 85% (no condensation)
Weight (approx.)		Screw Terminal: 30g, Spring Clamp Terminal: 26g	Screw Terminal: 30g, Spring Clamp Terminal: 26g

DRAFT

6mm and 14mm Slim Interface Relay

RV8 Series 14mm Width

Top View with Marking Plate



14mm wide

Electromechanical Screw Terminal



Electromechanical Spring Clamp Terminal



PRODUCT DESCRIPTION

14mm interface relays are ideal for panels with limited room, these low-profile relays provide up to a 40% reduction in DIN rail space when compared with standard plug-in relays. RV8 relays are good for higher load switching applications, panels with high I/O content and commercial HVAC panels. UL listed when paired with a corresponding socket.

CE c UL us

(when using combination of RV relay and SV socket)

SPECIFICATIONS

Number of Poles		1 Pole	2 Pole
Ratings		Class I, Division 2, Groups A, B, C, D, T4 Class I, Zone 2 AEx nA nC IIC T4 Class I, Zone 2 Ex nA nC IIC T4 X Gc UL/c-UL Listed CE	
Contact Configuration		1C (SPDT)	2C (DPDT)
Contact Material		AgNi	AgNi (Au-plated)
Degree of Protection		IP20	IP20
Dielectric strength	Between contact and coil	5,000V AC for 1 minute	
	Between contacts of the same pole	1,000V AC for 1 minute	
	Between contact sets	-	2,500V AC for 1 minute
Vibration Resistance	Operating extremes	Frequency 10 to 55Hz, Amplitude 0.75mm (NO contact), 0.175mm (NC contact)	Frequency 10 to 55Hz, Amplitude 0.75mm (NO contact), 0.1mm (NC contact)
	Damage limits		
Shock Resistance	Operating extremes	NO: 98m/s² NC: 24.5m/s²	
	Damage limits	980m/s²	980m/s²
Electrical Life - Screw terminal		AC load:30,000 operations minimum (250V AC, 16A resistive load, operation frequency 360 operation per hour)	AC load:100,000 operations minimum (250V AC, 8A resistive load, ozperation frequency 360 operation per hour)
Electrical Life - Spring Clamp terminal		AC load:30,000 operations minimum (250V AC, 12A resistive load, operation frequency 360 operation per hour)	AC load:100,000 operations minimum (250V AC, 6A resistive load, operation frequency 360 operation per hour)
Mechanical Life (no load)		Over 10,000,000 operations (Operation frequency 18,000 operations per hour)	Over 10,000,000 operations (Operation frequency 18,000 operations per hour)
Operating Temperature		RV8H-1L1-D6, D9, D12, D18, D24, AD12, AD18, AD24, AD48, AD60, AD110 : -40 to +70°C (Contact current 12A max, 6A per terminal) no freezing : -40 to +55°C (Contact current 16A max, 8A per terminal) no freezing	RV8H-2L-D6, D9, D12, D18, D24, AD12, AD18, AD24, AD48, AD60, AD110 : -40 to +70°C (Contact current 6A max) no freezing : -40 to +55°C (Contact current 8A max) no freezing
		RV8H-1L1- AD220 : -40 to +55°C (Contact current 16A max, 8A per terminal) no freezing	RV8H-2L- AD220 : -40 to +55°C (Contact current 8A max) no freezing
		RV8H-1S1-D6, D9, D12, D18, D24, AD12, AD18, AD24, AD48, AD60, AD110 : -40 to +70°C (Contact current 12A max, 6A per terminal) no freezing	RV8H-2S-D6, D9, D12, D18, D24, AD12, AD18, AD24, AD48, AD60, AD110 : -40 to +70°C (Contact current 6A max) no freezing
		RV8H-1S1- AD220 : -40 to +55°C (Contact current 12A max, 6A per terminal) no freezing	RV8H-2S- AD220 : -40 to +55°C (Contact current 6A max) no freezing
Operating Humidity		5 to 85% (no condensation)	
Weight (approx.)		Screw Terminal: 52g Spring Clamp Terminal: 49g	Screw Terminal: 52g Spring Clamp Terminal: 49g

DRAFT

PART NUMBERS

6mm Electromechanical Relay

		Screw Terminal		Spring Clamp Terminal	
					
Input Voltage		General Purpose	Hazardous Location (C1D2)	General Purpose	Hazardous Location (C1D2)
DC	6V	RV8H-L-D6	RV8H-L-D6-C1D2	RV8H-S-D6	RV8H-S-D6-C1D2
	9V	RV8H-L-D9	RV8H-L-D9-C1D2	RV8H-S-D9	RV8H-S-D9-C1D2
	12V	RV8H-L-D12	RV8H-L-D12-C1D2	RV8H-S-D12	RV8H-S-D12-C1D2
	18V	RV8H-L-D18	RV8H-L-D18-C1D2	RV8H-S-D18	RV8H-S-D18-C1D2
	24V	RV8H-L-D24	RV8H-L-D24-C1D2	RV8H-S-D24	RV8H-S-D24-C1D2
AC/DC	12V	RV8H-L-AD12	RV8H-L-AD12-C1D2	RV8H-S-AD12	RV8H-S-AD12-C1D2
	18V	RV8H-L-AD18	RV8H-L-AD18-C1D2	RV8H-S-AD18	RV8H-S-AD18-C1D2
	24V	RV8H-L-AD24	RV8H-L-AD24-C1D2	RV8H-S-AD24	RV8H-S-AD24-C1D2
	48V	RV8H-L-AD48	RV8H-L-AD48-C1D2	RV8H-S-AD48	RV8H-S-AD48-C1D2
	60V	RV8H-L-AD60	RV8H-L-AD60-C1D2	RV8H-S-AD60	RV8H-S-AD60-C1D2
	110V - 125V	RV8H-L-AD110	RV8H-L-AD110-C1D2	RV8H-S-AD110	RV8H-S-AD110-C1D2
	220V - 240V	RV8H-L-AD220	RV8H-L-AD220-C1D2	RV8H-S-AD220	RV8H-S-AD220-C1D2

6mm Solid State Relay

			Screw Terminal	Spring Clamp Terminal
				
Input Voltage		Output Voltage	Part Number	Part Number
DC	6V	24V DC, 3.5A	RV8S-L-D24-D6	RV8S-S-D24-D6
		48V DC, 0.1A	RV8S-L-D48-D6	RV8S-S-D48-D6
		240V AC, 2A zero cross	RV8S-L-A240Z-D6	RV8S-S-A240Z-D6
		240V AC, 2A random	RV8S-L-A240-D6	RV8S-S-A240-D6
	24V	24V DC, 3.5A	RV8S-L-D24-D24	RV8S-S-D24-D24
		48V DC, 0.1A	RV8S-L-D48-D24	RV8S-S-D48-D24
		240V AC, 2A zero cross	RV8S-L-A240Z-D24	RV8S-S-A240Z-D24
		240V AC, 2A random	RV8S-L-A240-D24	RV8S-S-A240-D24
AC	120V	24V DC, 3.5A	RV8S-L-D24-A120	RV8S-S-D24-A120
		48V DC, 0.1A	RV8S-L-D48-A120	RV8S-S-D48-A120
		240V AC, 2A zero cross	RV8S-L-A240Z-A120	RV8S-S-A240Z-A120
		240V AC, 2A random	RV8S-L-A240-A120	RV8S-S-A240-A120
	240V	24V DC, 3.5A	RV8S-L-D24-A240	RV8S-S-D24-A240
		48V DC, 0.1A	RV8S-L-D48-A240	RV8S-S-D48-A240
		240V AC, 2A zero cross	RV8S-L-A240Z-A240	RV8S-S-A240Z-A240
		240V AC, 2A random	RV8S-L-A240-A240	RV8S-S-A240-A240

DRAFT

RATINGS

6mm Electromechanical Coil Ratings

	Rated Voltage	Rated Current ±15% (mA)[1] (at 23°C)	Circuit AC Resistance ±15% (Ω)[1] (at 23°C)	Circuit DC Resistance ±15% (Ω)[1] (at 23°C)	Operating Characteristics			Power Consumption (W)
					Pickup Voltage (at 23°C)	Dropout Voltage (at 23°C)	Maximum Allowable Voltage (at 23°C)	
DC	6V	35	-	170	90% max	7% min	110%	0.21
	9V	18.6	-	485				0.2
	12V	14.6	-	820				0.2
	18V	11.6	-	1550				0.2
	24V	10.6	-	2270				0.25
AC/DC	12V	15.5	755	800	90% max	7% min	110%	0.2
	18V	13.3	1365	1345				0.25
	24V	13.7	1730	1790				0.33
	48V	4	11880	12230				0.2
	60V	3.4	17600	17910				0.2
	110V - 125V	3.4 - 3.9	31790 - 31890	32450 - 32900				0.5
	220V - 240V	3.3 - 3.6	65670 - 66070	65940 - 68570				0.85

Note 1 ±10% for 6V, 9V and 12V

6mm Electromechanical Contact Ratings

Allowable Contact Power	Resistive Load	1500VA, 180W DC
Rated Load	Resistive Load	250V AC 6A, 30V DC 6A
Allowable Switching Current		6A
Allowable Switching Voltage		400V AC, 125V DC
Allowable Switching Power		1500VA, 180W DC
Minimum Applicable Load		6V DC/10mA

6mm Solid State Input Ratings

Type	Control Voltage Range	Output / Input Voltage	Pickup Voltage	Dropout Voltage	Input Current	Maximum Operation Time	Maximum Release Time
	4.5-12V DC	24V DC / 6V DC	4.5V DC	1.5V DC	10mA±10%(±6VDC)	120µs	200µs
	19.6-30V DC	24V DC / 24V DC	19.6V DC	5V DC	9mA±10%(±24VDC)	350µs	200µs
	96-132V AC	24V DC / 120V AC	96V AC	12V AC	10mA±10%(±120VAC)	11ms	14ms
	192-264V AC	24V DC / 240V AC	192V AC	24V AC	10mA±10%(±240VAC)	11ms	14ms
	4.5-12V DC	48V DC / 6V DC	4.5V DC	1.5V DC	6mA±10%(±6VDC)	40µs	300µs
	19.6-30V DC	48V DC / 24V DC	19.6V DC	5V DC	7mA±10%(±24VDC)	40µs	300µs
	96-132V AC	48V DC / 120V AC	96V AC	12V AC	10mA±10%(±120VAC)	8ms	14ms
	192-264V AC	48V DC / 240V AC	192V AC	24V AC	10mA±10%(±240VAC)	8ms	14ms
Zero Crossing	4.5-12V DC	240V AC / 6V DC	4.5V DC	2V DC	15mA±10%(±6VDC)	10ms	10ms
	19.6-30V DC	240V AC / 24V DC	19.6V DC	5V DC	7mA±10%(±24VDC)	10ms	10ms
	96-132V AC	240V AC / 120V AC	96V AC	12V AC	10mA±10%(±120VAC)	16ms	20ms
	192-264V AC	240V AC / 240V AC	192V AC	24V AC	10mA±10%(±240VAC)	16ms	20ms
Random Crossing	4.5-12V DC	240V AC / 6V DC	4.5V DC	2V DC	15mA±10%(±6VDC)	300µs	10ms
	19.6-30V DC	240V AC / 24V DC	19.6V DC	5V DC	7mA±10%(±24VDC)	300µs	10ms
	96-132V AC	240V AC / 120V AC	96V AC	12V AC	10mA±10%(±120VAC)	8ms	20ms
	192-264V AC	240V AC / 240V AC	192V AC	24V AC	10mA±10%(±240VAC)	8ms	20ms

DRAFT

6mm Solid State Output Ratings

Typical Input Voltage	24V DC	48V DC	240V AC
Output Device	MOSFET	Photo-transistor	Triac
Operating Voltage Range	0-24V DC	0-48V DC	24-280V AC (47-63Hz)
Maximum Load Current	3.5A	100mA	2A
Minimum Load Current	1mA	1mA	70mA
Maximum Blocking Voltage	30V DC	60V DC	600V AC
Maximum Surge Current	9A (10ms)	300mA (10ms)	120A pk (16.6ms)
Maximum I2t for Fusing	–	–	60A² sec
Typical On-State Leakage Current	0.4V	1V	1.1V (peak)
Maximum Off-State Leakage Current	0.001mA	0.001mA	4mA
Switching Configuration	Normally Open	Normally Open	Normally Open

14mm Electromechanical Coil Ratings

Rated Voltage		Rated Current ±15% (mA)[1] (at 23°C)			Circuit AC Resistance ±15% (Ω)[1] (at 23°C)			Operating Characteristics (Against Rated Voltage)				Operation and release time	Power Consumption (W)		
		DC	AC 50Hz	AC 60Hz	DC	AC 50Hz	AC 60Hz	Pickup Voltage (at 23°C)	Dropout Voltage (at 23°C)	Maximum Allowable Voltage (at 23°C)	Maximum Allowable Voltage[2]		DC	AC (50Hz)	AC (60Hz)
DC	6V	75.0			80			80% max	7% min	120%	110%[2]	15ms max	0.45	-	-
	9V	44.0			205								0.40	-	-
	12V	32.0			375								0.38	-	-
	18V	24.0			750								0.43	-	-
	24V	20.0			1200								0.48	-	-
AC/DC	12V	32.0	29.0	29.0	375	414	414			110%			0.38	0.35	0.35
	18V	24.0	24.0	24.0	750	750	750						0.43	0.43	0.43
	24V	20.0	21.0	21.0	1200	1143	1143						0.48	0.50	0.50
	48V	7.6	9.0	9.0	6316	5333	5333						0.36	0.43	0.43
	60V	7.6	9.0	9.0	7895	6667	6667						0.46	0.54	0.54
	110V - 125V	4.4~5.1	5.3-5.8	5.3-5.8	24510	21552	21552						0.64	0.73	0.73
	220V - 240V	4~4.6	4.5-5.2	4.8-5.5	52174	46154	43636						1.10	1.25	1.32

Note 1: Input voltages lower than 24V: ±10%
Note 2: At rated operating temperature

14mm Contact Ratings

		Screw Terminal	Spring Clamp Terminal
Allowable contact power	Resistive load	1 Pole 4,000VA	1 Pole 3,000VA
		2 Pole 2,000VA	2 Pole 1,500VA
	Inductive load	B300 (pilot duty)	B300 (pilot duty)
Rated Load	Resitive load	1 Pole 250V AC, 16A (8A per terminal) at 55°C, 12A (6A per terminal) at 70°C	1 Pole 250V AC, 12A (6A per terminal) at 70°C
		2 Pole 250V AC, 8A at 55°C, 6A at 70°C	2 Pole 250V AC, 6A at 70°C
	Inductive load	B300 (pilot duty)	B300 (pilot duty)
Allowable Switching Current		1 Pole 16A (8A per terminal) at 55°C, 12A (6A per terminal) at 70°C	1 Pole 12A (6A per terminal) at 70°C
		2 Pole 8A at 55°C, 6A at 70°C	2 Pole 6A at 70°C
Allowable Switching Power		1 Pole 4,000VA	1 Pole 3,000VA
		2 Pole 2,000VA	2 Pole 1,500VA
Minimum Applicable Load (reference value)		1 Pole 6VDC 100mA	1 Pole 6VDC 100mA
		2 Pole 5VDC 10mA	2 Pole 5VDC 10mA

DRAFT

LF SERIES CLASS T FUSE BLOCKS

300 V • 600 V



Description

The Littelfuse Class T fuse blocks offer many advantages such as space saving design, universal mounting holes, snap-to-release DIN rail mounts and available covers.

Features/Benefits

- Space-saving design
- Universal mounting holes for easy replacement
- One hand release from DIN rail for 30–60 A fuses
- Reinforced fuse clips are standard
- Covers available for most amperages to enhance safety

Specifications

Voltage Ratings	300 V/600 V
Ampere Ratings	0 – 600 A
Leakage Current	<0.6 mA at 600 V
Withstand Rating	200 kA RMS SYM
Flammability Rating	UL94 V-0
Approvals	UL Listed (File: E14721) CSA Certified (File: LR7316)
Environmental	RoHS Compliant, Lead (Pb) Free

Recommended Fuses

300 V JLLN
600 V JLLS

Web Resources

Sample requests, downloadable CAD drawings and other technical information:
littelfuse.com/lft
littelfuse.com/fuseblocks

Ordering Information (Class T 300 V)

AMP RATING	ORDERING NUMBER							TORQUE	WIRE RANGE	WIRE TYPE		BASE TEMP RATING	DIN RAIL MOUNT	COVER ORDERING NUMBER*
	BASE ORDERING NUMBER	POLES			TERMINAL SUFFIX									
		1	2	3	BOX LUG	PRESSURE PLATE	SCREW							
30	LFT30030	1	2	3	C	—	—	5.6 N-m (50 in-lbs)	2-4 AWG	CU-AL	Solid/Stranded	125°C	•	LFT30030FBC
								2.8 N-m (25 in-lbs)	6-14 AWG					
60	LFT30060	1	2	3	C	—	—	5.6 N-m (50 in-lbs)	2-4 AWG			125°C	•	LFT30060FBC
								2.8 N-m (25 in-lbs)	6-14 AWG					
100	LFT30100	1	—	3	CS	—	—	13.6 N-m (120 in-lbs)	2/0-6 AWG			130°C	—	LFT30100FBC
								4.5 N-m (40 in-lbs)	8 AWG					
								4.0 N-m (35 in-lbs)	10-14 AWG					
200	LFT30200	1	—	3	CS	—	—	31.1 N-m (275 in-lbs)	250 kcmil-6			130°C	—	—
400	LFT30400	1	—	3	CS	—	—	(2) 31.1 N-m (275 in-lbs)	250 kcmil-6			130°C	—	—
600	LFT30600	1	—	3	CS	—	—	(2) 42.4 N-m (375 in-lbs)	500 kcmil-6			130°C	—	—

Ordering Information (Class T 600 V)

AMP RATING	ORDERING NUMBER							TORQUE	WIRE RANGE	WIRE TYPE		BASE TEMP RATING	DIN RAIL MOUNT	COVER ORDERING NUMBER*
	BASE ORDERING NUMBER	POLES			TERMINAL SUFFIX									
		1	2	3	BOX LUG	PRESSURE PLATE	SCREW							
30	LFT60030	1	2	3	C	P	S	5.6 N-m (50 in-lbs)	2-4 AWG	† see note	Solid/Stranded	125°C	•	LFT60030FBC
								2.8 N-m (25 in-lbs)	6-14 AWG					
60	LFT60060	1	2	3	C	—	—	5.6 N-m (50 in-lbs)	2-4 AWG	CU-AL		125°C	•	LFT60060FBC
								2.8 N-m (25 in-lbs)	6-14 AWG					
100	LFT60100	1	—	3	CS	—	—	13.6 N-m (120 in-lbs)	2/0-6 AWG			130°C	—	LT60100FBC
								4.5 N-m (40 in-lbs)	8 AWG					
								4.0 N-m (35 in-lbs)	10-14 AWG					
200	LFT60200	1	—	3	CS	—	—	31.1 N-m (275 in-lbs)	250 kcmil-6			130°C	—	LT60200FBC
400	LFT60400	1	—	3	CS	—	—	(2) 31.1 N-m (275 in-lbs)	250 kcmil-6			130°C	—	LT60400FBC
600	LFT60600	1	—	3	CS	—	—	(2) 42.4 N-m (375 in-lbs)	500 kcmil-6			130°C	—	LT60600FBC

** Covers sold individually. One cover needed for each pole.*
† Wire Type for Pressure Plate and Screw Terminal is CU only

DRAFT

© 2018 Littelfuse POWR-GARD® Products

LF SERIES CLASS T FUSE BLOCKS

Dimensions mm (inches)

300 V 30 A

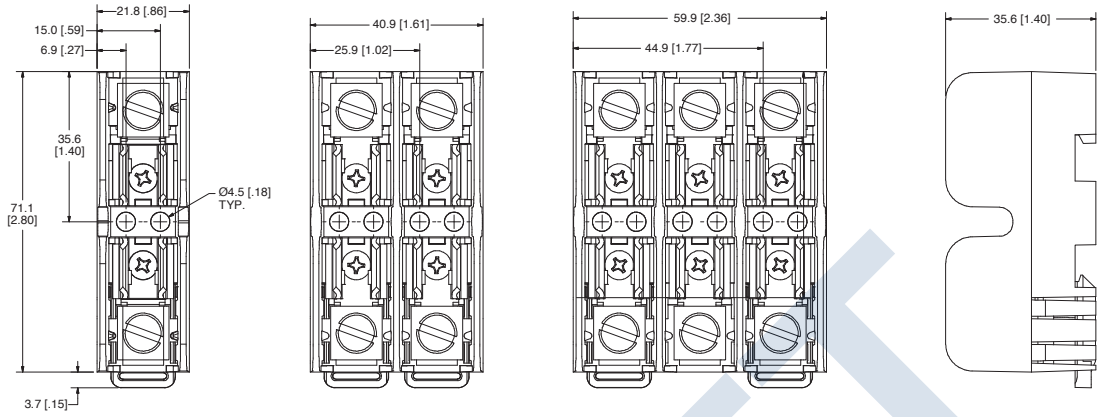

300 V 60 A

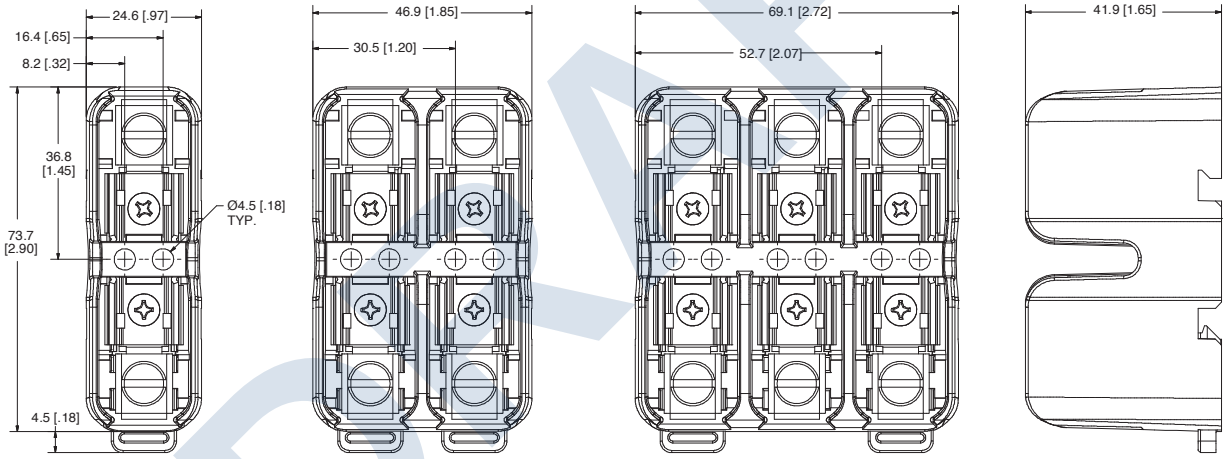

300 V 100 A

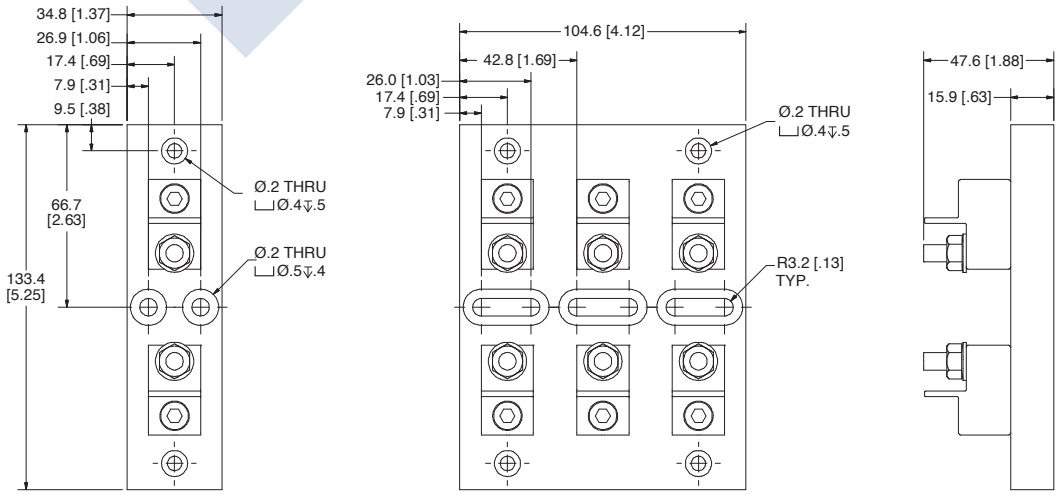

DRAFT

© 2018 Littelfuse POWR-GARD® Products

LF SERIES CLASS T FUSE BLOCKS

Dimensions mm (inches)

300 V 200 A

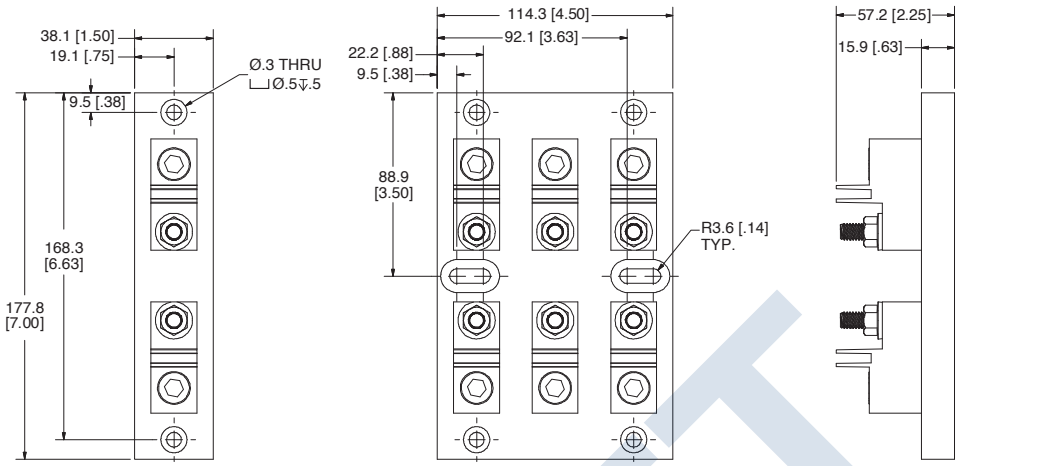

300 V 400 A

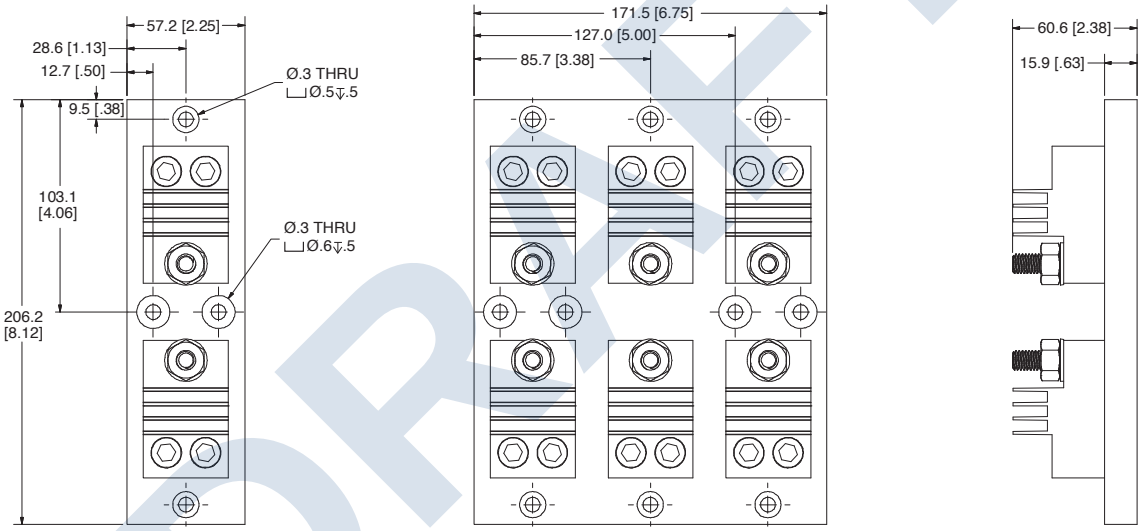

300 V 600 A

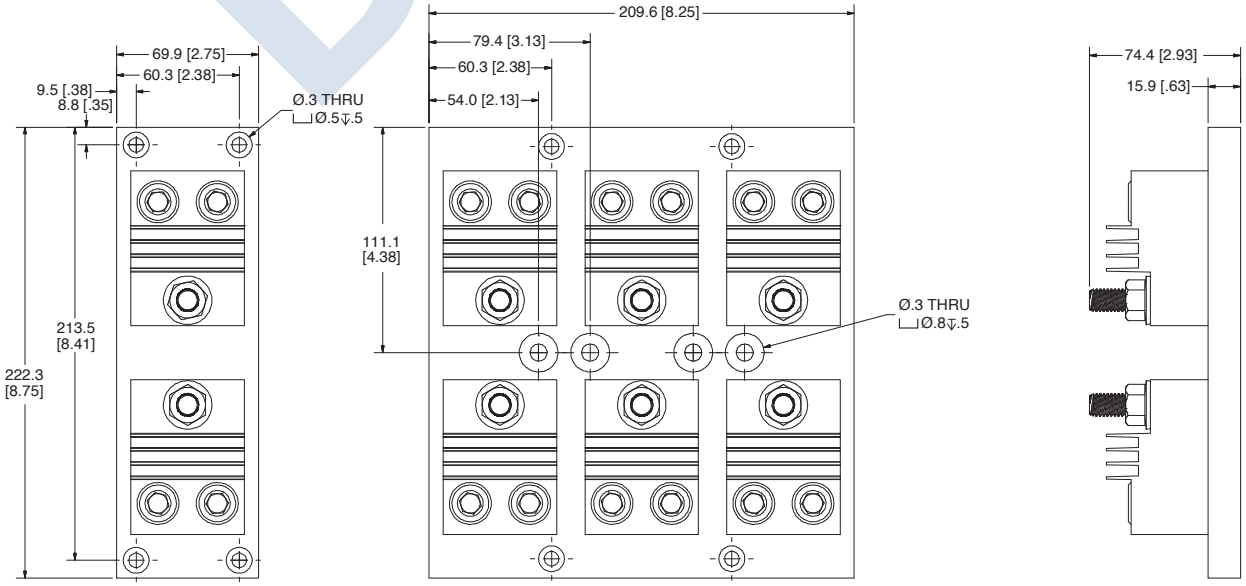

DRAFT

© 2018 Littelfuse POWR-GARD® Products

LF SERIES CLASS T FUSE BLOCKS

Dimensions mm (inches)

600 V 30 A

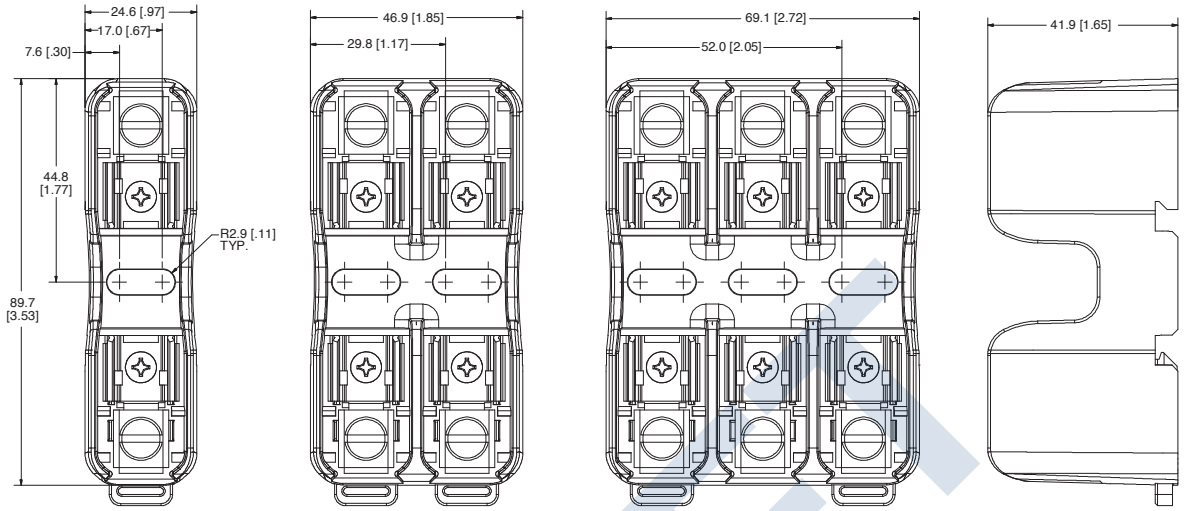

600 V 60 A

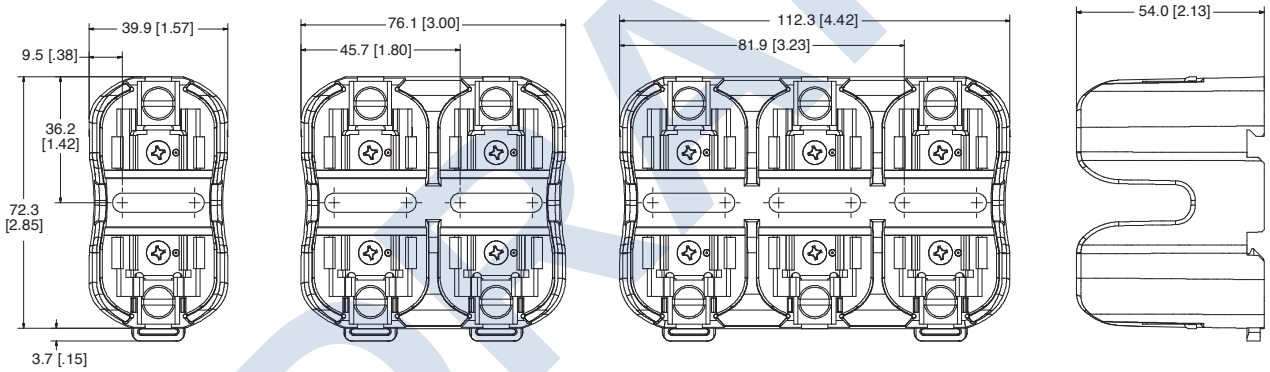

600 V 100 A

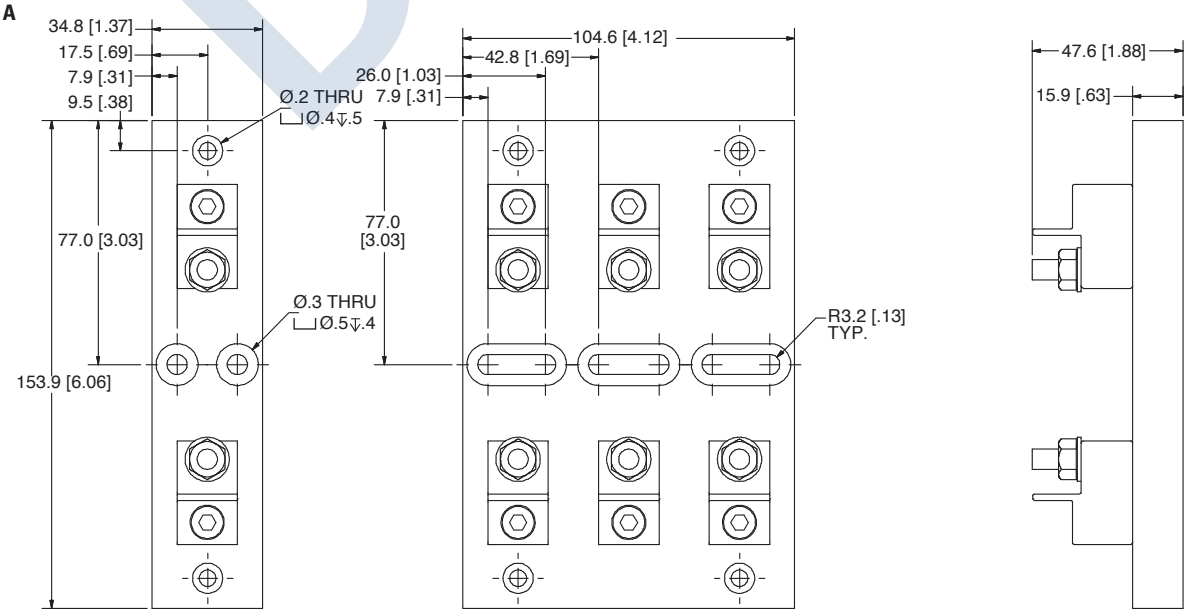

DRAFT

© 2018 Littelfuse POWR-GARD® Products

LF SERIES CLASS T FUSE BLOCKS

Dimensions mm (inches)

600 V 200 A

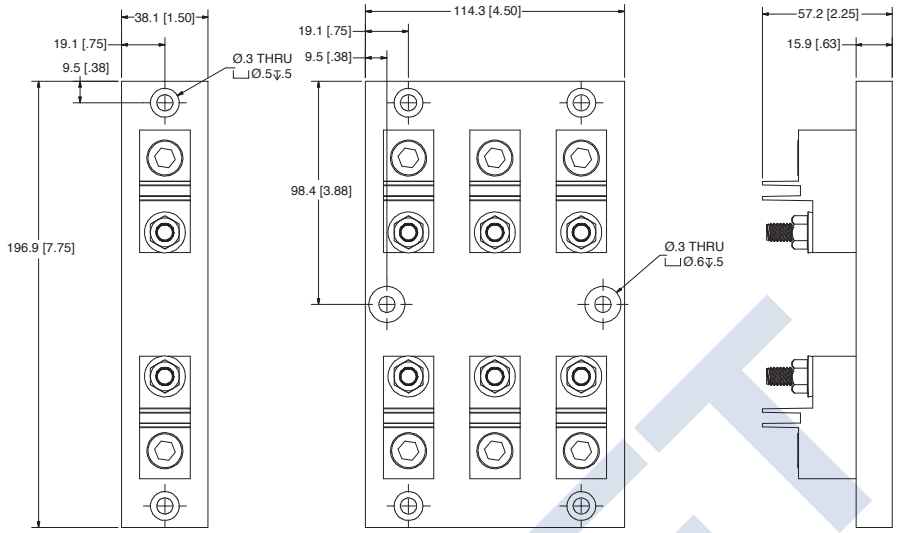

600 V 400 A

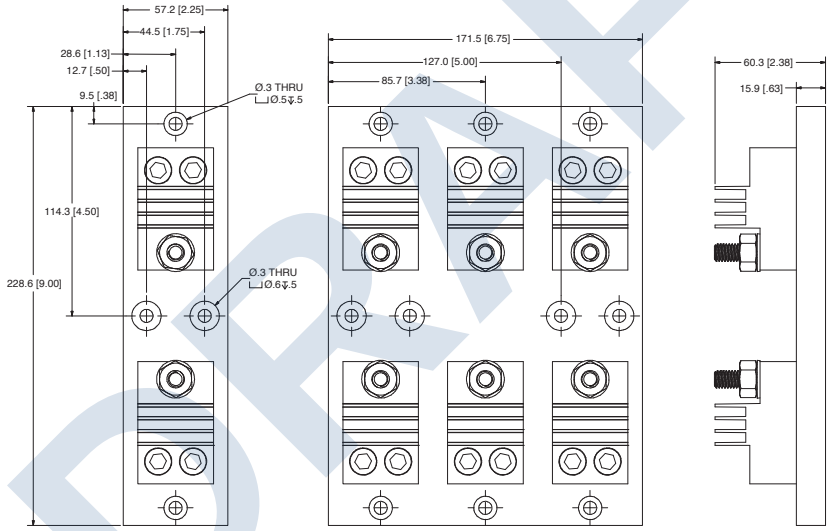

600 V 600 A

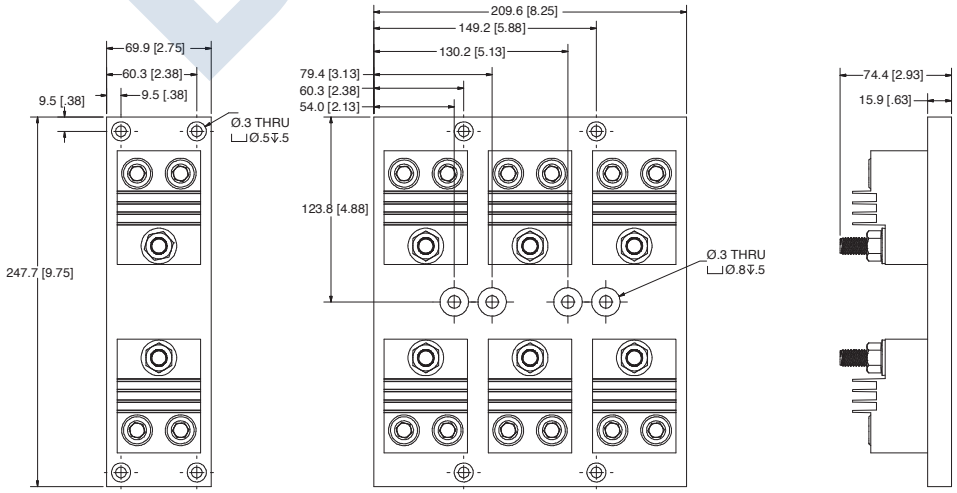

DRAFT

Disclaimer Notice – Information furnished is believed to be accurate and reliable. However, users should independently evaluate the suitability of and test each product selected for their own applications. Littelfuse products are not designed for, and may not be used in, all applications. Read complete Disclaimer Notice at **www.littelfuse.com/product-disclaimer.**

© 2018 Littelfuse POWR-GARD® Products

Class T Fuses
JLLS Series

600 V ac • Fast-Acting • 1–1200 A



Description

The JLLS series fast-acting fuses are the most compact fuses available in ratings above 30 amperes — less than one-third the size of comparable Class R fuses. The JLLS fuses are used for short-circuit protection of drives and surge-sensitive components. When rated in accordance with the NEC, these fuses provide fast-acting overload and short-circuit protection for non-inductive circuits and equipment. Main switches containing JLLS fuses can be used to provide compact protection for meter stacks. It should be noted that molded case circuit breaker load centers and panelboards have increased interrupting ratings when "series rated" with Littelfuse Class T fuses. JLLS fuses are available in non-plated and silver plated terminations.

Features & Benefits

FEATURES	BENEFITS
200,000 AIR	Safety feature providing reliable interruption of all overcurrents up to 200,000 A
Current-limiting	Reduces damage caused by heating and magnetic effects of short-circuit currents; extends the equipment's lifecycle
Fast-acting	Provides fast short-circuit response for equipment requiring fast overload protection
POWR-GARD® technology	Ensures quality overcurrent protection
Compact size	More efficient use of available space – typical three-pole Class T fuse blocks require less than 50% of the panel area required for Class R fuse blocks
Functional protection	When used as input or output fuses for surge-sensitive components, they can prevent opening of expensive semiconductor fuses that protect individual components

Applications

- Variable speed drives
- Power conversion devices (inverters, rectifiers, UPS)
- Power supplies and power distribution units
- Compact main switches
- Individual electric services and meters

DRAFT

©2022 Littelfuse, Inc.
Specifications are subject to change without notice.

Specifications

Voltage Ratings	Ac: 600 V Dc: 300 V
Ampere Range	1–1200 A
Interrupting Rating	Ac: 200 kA rms symmetrical Dc: 20 kA Littelfuse self-certified
Material	1–30 A: melamine body, copper caps 35–60 A: melamine body, bronze caps 70–1200 A: melamine body, copper caps
Applicable Standards	UL 248-15, Class T
Environmental	RoHS Compliant
Country of Origin	Mexico

Certification & Compliance

UL	UL Listed (File: E81895)
CSA	CSA Certified (File: LR29862)
CE	Declaration of Conformity: EU_DOC-JLLS_210701
RoHS	RoHS 2 Directive 2011/65/EU; Directive (EU) 2015/863

Accessories

LFT60 series fuse holder
LSCR series fuse holder for 70–800 amperes

Ordering Information

	UNPLATED					PLATED				
AMPERE	CATALOG NUMBER	PRODUCT MARKING	PACK QUANTITY	ORDERING NUMBER	UPC	CATALOG NUMBER	PRODUCT MARKING	PACK QUANTITY	ORDERING NUMBER	UPC
1	JLLS001	JLLS 1A	10	JLLS001.T	07945819031	JLLS001P	JLLS 1A-P	10	JLLS001.TXP	07945882156
2	JLLS002	JLLS 2A	10	JLLS002.T	07945819041	JLLS002P	JLLS 2A-P	10	JLLS002.TXP	07945882157
3	JLLS003	JLLS 3A	10	JLLS003.T	07945819047	JLLS003P	JLLS 3A-P	10	JLLS003.TXP	07945882158
6	JLLS006	JLLS 6A	10	JLLS006.T	07945819058	JLLS006P	JLLS 6A-P	10	JLLS006.TXP	07945882159
10	JLLS010	JLLS 10A	10	JLLS010.T	07945819065	JLLS010P	JLLS 10A-P	10	JLLS010.TXP	07945882160
15	JLLS015	JLLS 15A	10	JLLS015.T	07945819068	JLLS015P	JLLS 15A-P	10	JLLS015.TXP	07945882161
20	JLLS020	JLLS 20A	10	JLLS020.T	07945819071	JLLS020P	JLLS 20A-P	10	JLLS020.TXP	07945882162
25	JLLS025	JLLS 25A	10	JLLS025.T	07945819072	JLLS025P	JLLS 25A-P	10	JLLS025.TXP	07945882163
30	JLLS030	JLLS 30A	10	JLLS030.T	07945819073	JLLS030P	JLLS 30A-P	10	JLLS030.TXP	07945882164
35	JLLS035	JLLS 35A	10	JLLS035.T	07945819074	JLLS035P	JLLS 35A-P	10	JLLS035.TXP	07945882165
40	JLLS040	JLLS 40A	10	JLLS040.T	07945819075	JLLS040P	JLLS 40A-P	10	JLLS040.TXP	07945882166
45	JLLS045	JLLS 45A	10	JLLS045.T	07945819076	JLLS045P	JLLS 45A-P	10	JLLS045.TXP	07945882167
50	JLLS050	JLLS 50A	10	JLLS050.T	07945819077	JLLS050P	JLLS 50A-P	10	JLLS050.TXP	07945882168
60	JLLS060	JLLS 60A	10	JLLS060.T	07945819078	JLLS060P	JLLS 60A-P	10	JLLS060.TXP	07945882169
70	JLLS070	JLLS 70A	5	JLLS070.V	07945819079	JLLS070P	JLLS 70A-P	5	JLLS070.VXP	07945882170
80	JLLS080	JLLS 80A	5	JLLS080.V	07945819080	JLLS080P	JLLS 80A-P	5	JLLS080.VXP	07945882171
90	JLLS090	JLLS 90A	5	JLLS090.V	07945819081	JLLS090P	JLLS 90A-P	5	JLLS090.VXP	07945882172
100	JLLS100	JLLS 100A	5	JLLS100.V	07945819082	JLLS100P	JLLS 100A-P	5	JLLS100.VXP	07945882173

DRAFT

©2022 Littelfuse, Inc.
Specifications are subject to change without notice.

Ordering Information

AMPERE	UNPLATED					PLATED				
	CATALOG NUMBER	PRODUCT MARKING	PACK QUANTITY	ORDERING NUMBER	UPC	CATALOG NUMBER	PRODUCT MARKING	PACK QUANTITY	ORDERING NUMBER	UPC
110	JLLS110	JLLS 110A	1	JLLS110.X	07945819083	JLLS110P	JLLS 110A-P	1	JLLS110.XXP	07945882175
125	JLLS125	JLLS 125A	1	JLLS125.X	07945819084	JLLS125P	JLLS 125A-P	1	JLLS125.XXP	07945882178
150	JLLS150	JLLS 150A	1	JLLS150.X	07945819086	JLLS150P	JLLS 150A-P	1	JLLS150.XXP	07945882179
175	JLLS175	JLLS 175A	1	JLLS175.X	07945819087	JLLS175P	JLLS 175A-P	1	JLLS175.XXP	07945882180
200	JLLS200	JLLS 200A	1	JLLS200.X	07945819088	JLLS200P	JLLS 200A-P	1	JLLS200.XXP	07945882182
225	JLLS225	JLLS 225A	1	JLLS225.X	07945819089	JLLS225P	JLLS 225A-P	1	JLLS225.XXP	07945882183
250	JLLS250	JLLS 250A	1	JLLS250.X	07945819090	JLLS250P	JLLS 250A-P	1	JLLS250.XXP	07945882184
300	JLLS300	JLLS 300A	1	JLLS300.X	07945819091	JLLS300P	JLLS 300A-P	1	JLLS300.XXP	07945882185
350	JLLS350	JLLS 350A	1	JLLS350.X	07945819092	JLLS350P	JLLS 350A-P	1	JLLS350.XXP	07945882186
400	JLLS400	JLLS 400A	1	JLLS400.X	07945819093	JLLS400P	JLLS 400A-P	1	JLLS400.XXP	07945882187
450	JLLS450	JLLS 450A	1	JLLS450.X	07945819095	JLLS450P	JLLS 450A-P	1	JLLS450.XXP	07945882188
500	JLLS500	JLLS 500A	1	JLLS500.X	07945819096	JLLS500P	JLLS 500A-P	1	JLLS500.XXP	07945882189
600	JLLS600	JLLS 600A	1	JLLS600.X	07945819098	JLLS600P	JLLS 600A-P	1	JLLS600.XXP	07945882190
700	JLLS700	JLLS 700A	1	JLLS700.X	07945805363	JLLS700P	JLLS 700A-P	1	JLLS700.XXP	07945882191
800	JLLS800	JLLS 800A	1	JLLS800.X	07945819103	JLLS800P	JLLS 800A-P	1	JLLS800.XXP	07945882192
900	JLLS900	JLLS 900A	1	JLLS900.X	07945801059	JLLS900P	JLLS 900A-P	1	JLLS900.XXP	07945882193
1000	JLLS1000	JLLS 1000A	1	JLLS1000X	07945801060	JLLS1000XP	JLLS 1000A-P	1	JLLS1000XXP	07945882174
1100	JLLS1100	JLLS 1100A	1	JLLS1100X	07945801061	JLLS1100XP	JLLS 1100A-P	1	JLLS1100XXP	07945882176
1200	JLLS1200	JLLS 1200A	1	JLLS1200X	07945801062	JLLS1200XP	JLLS 1200A-P	1	JLLS1200XXP	07945882177

Dimensions

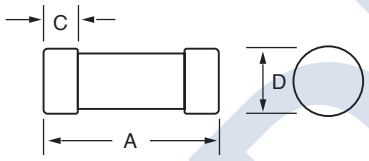

Fig. 1

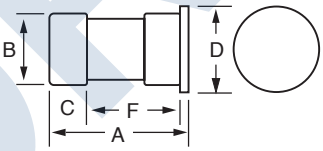

Fig. 2

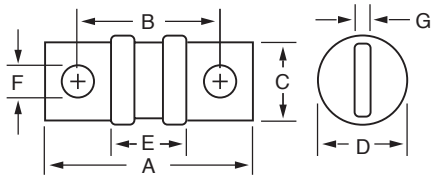

Fig. 3

AMPERAGE	REFER TO FIG. NO.	DIMENSIONS INCHES (MM)						
		A	B	C	D	E	F	G
1–30	1	1.500 (38.1)	—	.281 (7.1)	.562 (14.3)	—	—	—
35–60	2	1.562 (39.7)	.812 (20.6)	.406 (10.3)	.994 (25.2)	.062 (1.6)	1.094 (27.8)	—
70–100	3	2.953 (75.0)	2.352 (59.7)	.750 (19.1)	.828 (21.0)	1.625 (41.3)	.281 (7.1)	.125 (3.2)
110–200	3	3.250 (82.6)	2.507 (63.7)	.875 (22.2)	1.078 (27.4)	1.656 (42.1)	.343 (8.7)	.187 (4.8)
225–400	3	3.625 (92.1)	2.718 (69.1)	1.000 (25.4)	1.593 (40.5)	1.712 (43.5)	.406 (10.3)	.250 (6.4)
450–600	3	3.984 (101.2)	2.953 (75.0)	1.250 (31.8)	2.062 (52.4)	1.765 (44.8)	.484 (12.3)	.312 (7.9)
700–800	3	4.328 (109.9)	3.171 (80.6)	1.750 (44.5)	2.500 (63.5)	1.860 (47.2)	.546 (13.9)	.375 (9.5)
900–1200	3	5.271 (133.9)	3.801 (96.5)	2.000 (50.8)	2.625 (66.7)	2.303 (58.5)	.609 (15.5)	.437 (11.1)

DRAFT

©2022 Littelfuse, Inc.
Specifications are subject to change without notice.

Current-Limiting Effects

SHORT CIRCUIT CURRENT*	APPARENT RMS SYMMETRICAL CURRENT FOR VARIOUS FUSE RATINGS							
	30 A	60 A	100 A	200 A	400 A	600 A	800 A	1200 A
5,000	750	1,225	1,810	2,500	4,600	5,000	5,000	5,000
10,000	945	1,525	2,300	3,150	6,000	8,500	9,400	10,000
15,000	1,050	1,700	2,610	3,600	6,600	9,750	10,500	13,000
20,000	1,150	1,900	2,900	3,950	7,250	10,500	11,000	14,750
25,000	1,300	2,050	3,100	4,250	8,000	11,500	12,500	15,500
30,000	1,375	2,150	3,300	4,500	8,250	12,000	13,750	16,500
35,000	1,400	2,250	3,500	4,750	8,500	13,000	14,000	17,000
40,000	1,425	2,400	3,650	4,950	8,700	14,000	14,750	18,000
50,000	1,600	2,450	3,900	5,350	9,500	14,500	16,000	20,000
60,000	1,650	2,625	4,150	5,650	10,000	15,500	17,300	21,000
80,000	1,825	2,800	4,570	6,250	11,000	17,000	18,750	23,000
100,000	2,000	3,100	4,950	6,700	12,000	18,000	20,000	25,000
150,000	2,250	3,400	5,650	7,700	13,000	21,000	23,000	28,500
200,000	2,450	3,800	6,200	8,450	15,000	23,000	25,000	31,000

*Prospective RMS Symmetrical Amperes Short-Circuit Current

Note: Data Derived from Peak Let-Thru Curve

Peak Let-Thru Curves

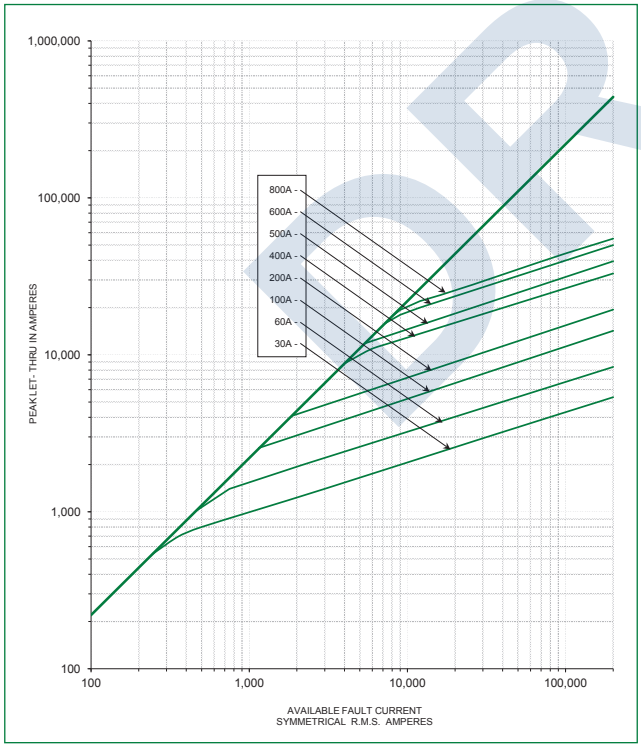

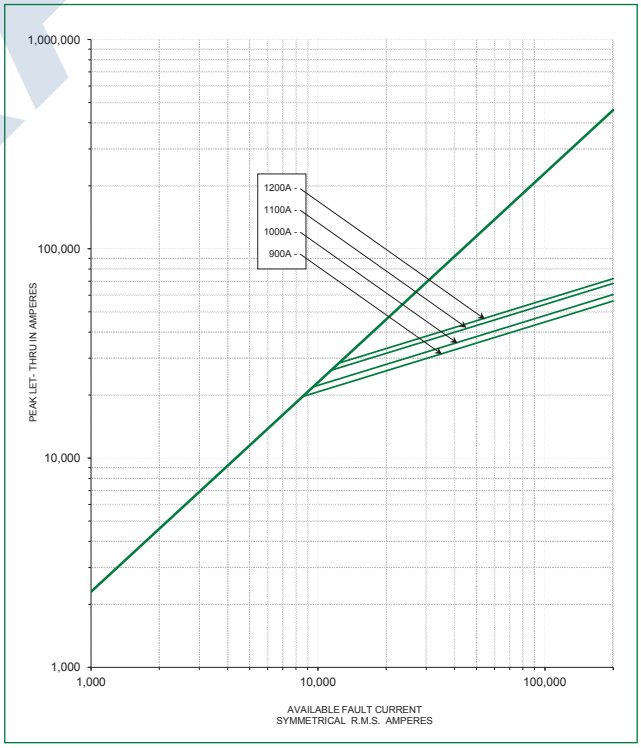

DRAFT

©2022 Littelfuse, Inc.
Specifications are subject to change without notice.

Time Current Curves

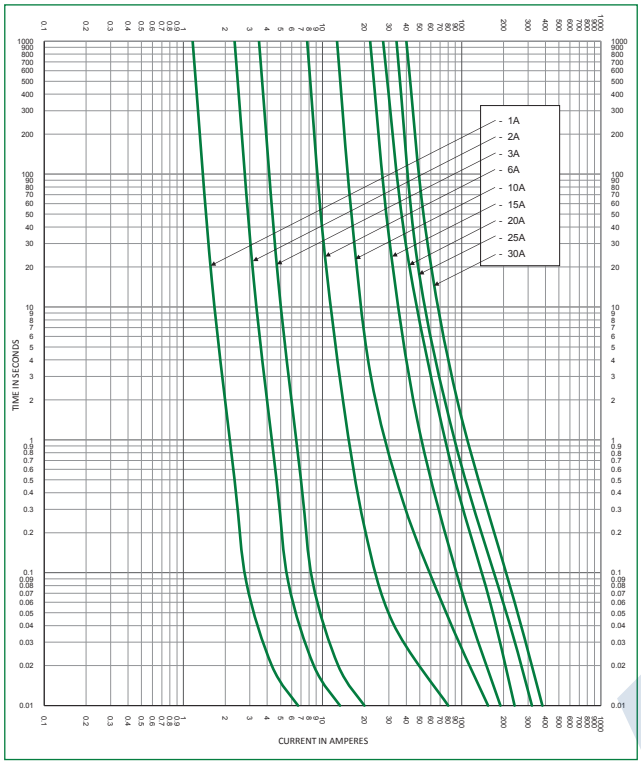

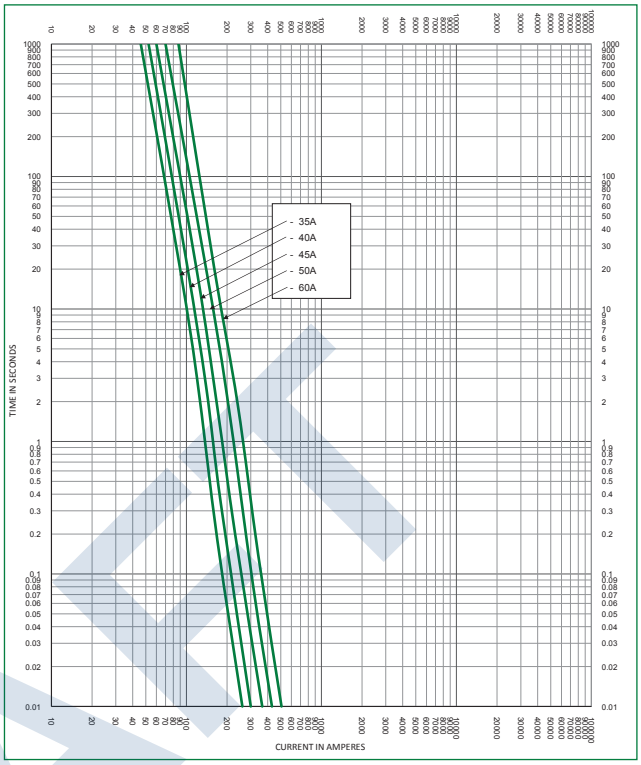

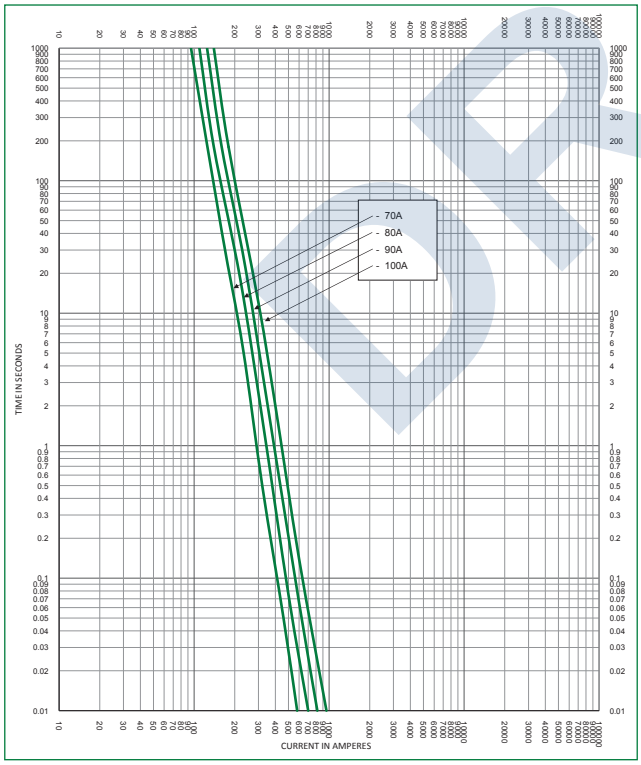

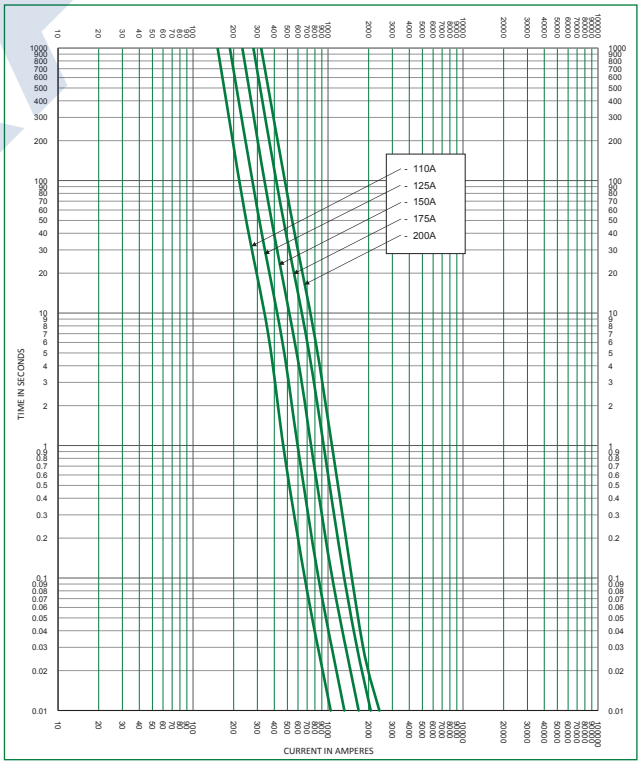

DRAFT

©2022 Littelfuse, Inc.
Specifications are subject to change without notice.

Time Current Curves

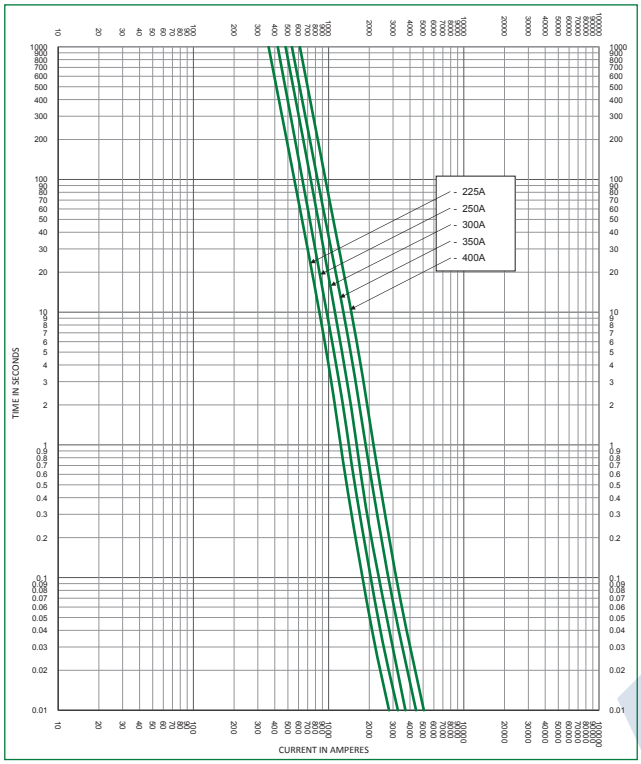

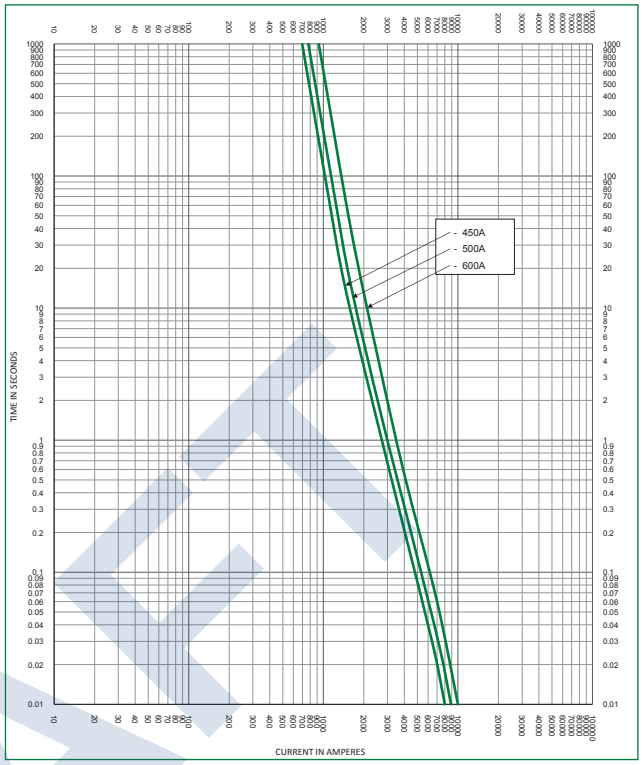

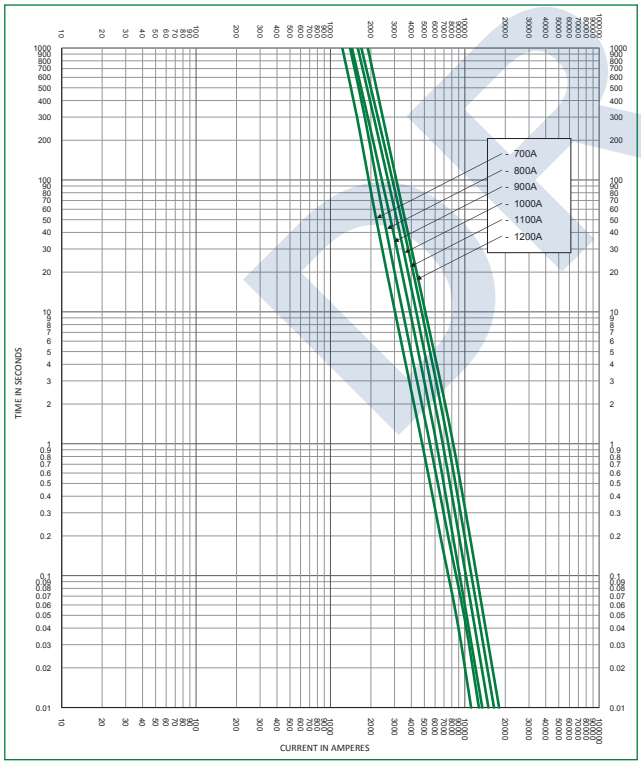

DRAFT

Disclaimer Notice – Information furnished is believed to be accurate and reliable. However, users should independently evaluate the suitability of and test each product selected for their own applications. Littelfuse products are not designed for, and may not be used in, all applications. Read complete Disclaimer Notice at **www.littelfuse.com/product-disclaimer.**

©2022 Littelfuse, Inc.
Specifications are subject to change without notice.

TECHNICAL CATALOG

Low voltage AC drives

ABB general purpose drives
ACS580, 1 to 350 hp

DRAFT



Technical data

Mains connection	
Voltage and power range	3-phase, U_N 380 to 480 V, +10%/-15% ACS580-01: 1 to 350 hp (0.75 to 250 kW)
Frequency	from 48 to 63 Hz
Power factor	cosϕ = 0.98
Efficiency (at nominal power)	98%
Motor connection	
Voltage	0 to U_N, 3-phase
Frequency	0 to 500 Hz
Motor control	Scalar and vector control
Torque control	Torque step rise time: <10 ms with nominal torque Non-linearity: ± 5% with nominal torque
Speed control	Static accuracy: 20% of motor nominal slip Dynamic accuracy: 1% seconds with 100% torque step
Product compliance	
CE Low Voltage Directive 2006/95/EC, EN 61800-5-1: 2007 Machinery Directive 2006/42/EC, EN 61800-5-2: 2007 EMC Directive 2004/108/EC, EN 61800-3: 2004 + A1: 2012 RoHS directive 2011/65/EU Quality assurance system ISO 9001 and Environmental system ISO 14001 Waste electrical and electronic equipment directive (WEEE) 2002/96/EC RoHS directive 2011/65/EU UL, EAC, RCM, UL, cUL	

EMC according to EN 61800-3: 2004 + A1: 2012	
Frames R1 to R9 with built-in C2 category filter as standard	
Environmental limits	
Ambient temperature	
Transport **Storage**	-40 to +70 °C -40 to +70 °C
Operation area	ACS580-01: -15 to +50 °C. No frost allowed R1 to R9 from +40 to +50 °C with derating
Cooling method **Air-cooled**	Dry clean air
Altitude **0 to 1 ,000 m** **1,000 to 4,000 m**	 Without derating With derating of 1%/100 m
Relative humidity	5 to 95%, no condensation allowed
Degree of protection	ACS580-01: UL Type 1 (IP21) as standard. UL Type 12 (IP55) as option (frames R1 to R9)
Functional safety	Safe torque off (STO according EN 61800-5-2) IEC 61508 ed2: SIL 3. IEC 61511: SIL 3. IEC 62061: SIL CL 3. EN ISO 13849-1: PL e
Contamination levels	No conductive dust allowed
Storage	IEC 60721-3-1. Class 1C2 (chemical gases). Class 1S2 (solid particles)*
Operation	IEC 60721-3-3. Class 3C2 (chemical gases). Class 3S2 (solid particles)*
Transportation	IEC 60721-3-2. Class 2C2 (chemical gases) Class 2S2 (solid particles)*

*C = chemically active substances
S = mechanically active substances

DRAFT

Dimensions

ACS580-01 UL Type 1 (IP21)										
	Height				Width		Depth		Weight	
Frames	H1* in	mm	H2** in	mm	in	mm	in	mm	lb	kg
R1	14.7	373	13	331	4.9	125	8.8	223	10.6	4.8
R2	18.6	473	17	432	4.9	125	9	229	14.3	6.5
R3	19.3	490	---	---	8	203	9	229	26	11.8
R4	22.9	580	---	---	8	203	10.1	257	41.9	19
R5	28.8	732	23.5	596	8	203	11.6	295	62.4	28.3
R6	28.6	727	21.6	548	9.9	252	14.5	369	93.5	42.4
R7	34.6	880	23.6	600	11.2	284	14.6	370	119.1	54
R8	38	965	26.8	680	11.8	300	15.5	393	152.2	69
R9	37.6	955	26.8	680	15	380	16.5	418	213.9	97

* Front height of the drive with conduit box
** Front height of the drive without conduit box

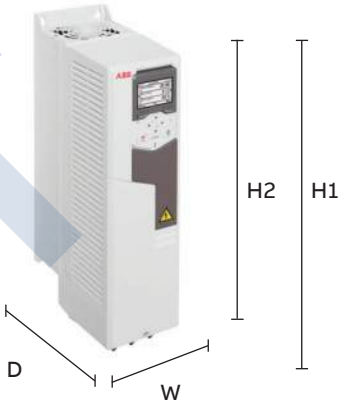

ACS580-01 UL Type 12 (IP55) (option +B056)								
	Height*		Width		Depth		Weight	
Frames	in	(mm)	in	mm	in	mm	lb	kg
R1	15.9	403	5.6	128	9.2	233	11.25	5.1
R2	19.8	503	5.1	128	9.4	239	14.8	6.7
R3	19.3	490	8.1	206	9.3	237	28.7	13
R4	25	636	8	203	10.4	265	44.1	20
R5	28.9	732	8	203	12.6	320	64	29
R6	28.6	726	9.9	252	15	380	94.9	43
R7	34.7	880	11.2	284	15	380	123.5	56
R8	38	965	11.8	300	17.8	452	169.8	77
R9	37.6	955	15	380	18.8	380	227.1	103

* Front height of the drive with conduit box



DRAFT

Ratings, types and voltages

Wall-mounted drives, ACS580-01						
3-phase, U_N= 440, 460, 480 V						
		Max. output current	**Light overload use**		**Heavy-duty use**	
Type code	**Frame Size**	I_{max} **(A)**	I_{Ld} **(A)**	P_{Ld} **(hp)**	I_{Hd} **(A)**	P_{Hd} **(hp)**
ACS580-01-02A1-4	R1	2.9	2.1	1	1.6	0.75
ACS580-01-03A0-4	R1	3.8	3	1.5	2.1	1
ACS580-01-03A5-4	R1	5.4	3.5	2	3	1.5
ACS580-01-04A8-4	R1	6.1	4.8	3	3.4	2
ACS580-01-06A0-4	R1	7.2	6	3	4	3
ACS580-01-07A6-4	R1	8.6	7.6	5	4.8	3
ACS580-01-012A-4	R1	11.4	12	7.5	7.6	5
ACS580-01-014A-4	R2	19.8	14	10	11	7.5
ACS580-01-023A-4	R2	25.2	23	15	14	10
ACS580-01-027A-4	R3	37.8	27	20	21	15
ACS580-01-034A-4	R3	48.6	34	25	27	20
ACS580-01-044A-4	R3	61.2	44	30	34	25
ACS580-01-052A-4	R4	76	52	40	40	30
ACS580-01-065A-4	R4	104	65	50	52	40
ACS580-01-077A-4 ‡	*R4*	*122*	*77*	*60*	*65*	*50*
ACS580-01-078A-4	R5	122	77	60	65	50
ACS580-01-096A-4	R5	148	96	75	77	60
ACS580-01-124A-4	R6	178	124	100	96	75
ACS580-01-156A-4	R7	247	156	125	124	100
ACS580-01-180A-4	R7	287	180	150	156	125
ACS580-01-240A-4	R8	350	240	200	180	150
ACS580-01-260A-4	R8	418	260	200	240*	150
ACS580-01-302A-4 ‡	*R8*	*TBD*	*302*	*250*	*260*	*200*
ACS580-01-361A-4	R9	542	361	300	302	250
ACS580-01-414A-4	R9	542	414	350	361**	300

‡ *Coming soon*

Nominal ratings	
I_N	Rated current available continuously without overloadability at 40 °C.
P_N	Typical motor power in no-overload use.
Maximum output current	
I_{max}	Maximum output current. Available for 2 seconds at start, then as long as allowed by drive temperature.
Light-overload use	
I_{Ld}	Continuous current allowing 110% I_{Ld} for 1 minute every 10 minutes at 40 °C.
P_{Ld}	Typical motor power in light-overload use.
Heavy-duty use	
I_{Hd}	Continuous current allowing 150% I_{Hd} for 1 minute every 10 minutes at 40 °C. * Continuous current allowing 130% I_{Hd} for 1 minute every 10 minutes at 40 °C. ** Continuous current allowing 125% I_{Hd} for 1 minute every 10 minutes at 40 °C.
P_{Hd}	Typical motor power in heavy-duty use.

The ratings apply for the frames R1 to R9 up to +40 °C in enclosure class 21.
For derating at higher altitudes, temperatures, switching frequencies or enclosure classes, see the HW manuals, document codes: 3AXD50000018826 and 3AXD50000015497.

DRAFT

Control panel options

—
01 Assistant control panel is included as standard.
—
02 Optional Bluetooth panel. USB connection as standard.
—
03 By using the CDPI-01 panel adapter, the assistant control panel is able to manage up to 32 drives.

Assistant control panel
Set up the drive using the assistant control panel delivered as standard with all ACS580 drives. There is no need to know any drive parameters, as the control panel helps to set up the essential settings quickly and get the drive into action.

- Drive setup with the primary settings menu including embedded assistants
- Process monitoring with one glance at the control panel's editable home view showing you the status of the drive and process
- Drive maintenance with the help function providing context-sensitive guidance and troubleshooting instructions
- Drive diagnostics under the diagnostics menu informing the user of the root cause.

Bluetooth panel
The optional Bluetooth panel enables connection with the Drivetune mobile app. The app is available for free on the Google Play and the Apple App store.

Some of the Drivetune features are: commissioning, troubleshooting, monitoring and controlling the drive. Drivetune also has full parameter access.



— 01 — 02 — 03

—
Control panel options
Assistant control panel ACS-AP-S is included as standard in the delivery. ACS-AP-S (+J400) can be replaced by +J options below.

Option code	Description	Type designation
+J400	Assistant control panel (+J400 option automatically included)	ACS-AP-S
+J425	Industrial Assistant control panel*	ACS-AP-I
+J429	Control panel with Bluetooth interface*	ACS-AP-W
+J424	Blank control panel cover (no control panel delivered)	CDUM-01
3AXD50000004419	Panel bus adapter	CDPI-01
3AUA0000108878	Control panel mounting platform (flush mounted, requires also panel bus adapter on the drive)	DPMP-01
3AXD50000010763	Door mounting kit for the panel, surface mounted (for one drive, contains both DPMP-02 and CDPI-01)	DPMP-EXT

* Also compatible with ACS880 drives

DRAFT

Additional options

04 Cold configuration adapter CCA-01
—
05 Remote monitoring tool NETA-21
—
06 Drive composer PC tool

Safe configuration for unpowered drives
The CCA-01 cold configuration adapter provides a serial communication interface for unpowered ACS580 drives. With the adapter, safety isolation of both serial communication and control board power supply is possible. The power supply is taken from a PC USB port.

Remote monitoring access worldwide
The NETA-21 remote monitoring tool gives easy access to the drive via the Internet or local Ethernet network. NETA-21 comes with a built-in web server. Compatible with standard web browsers, it ensures easy access to a web-based user interface. Through the web interface, the user can configure drive parameters, and monitor drive log data, load levels, runtime, energy consumption, I/O data and bearing temperatures of the motor connected to the drive.

PC tools
The Drive composer PC tool offers fast and harmonized setup, commissioning and monitoring for all-compatible drives. The free version of the tool provides start-up and maintenance capabilities and gathers all drive information, such as parameter loggers, faults, backups and lists, into a support diagnostics file. Drive composer pro provides additional features such as custom parameter windows, graphical control diagrams of the drive's configuration, and improved monitoring and diagnostics.



—
04


—
05


—
06

Ordering code	Description	Type designation
3AXD50000019865	Cold configurator adapter, packed kit	CCA-01

—
Remote monitoring option

Ordering code	Description	Type designation
3AUA0000094517	2 x panel bus interface 2 x 32 = max. 64 drives 2 x Ethernet interface SD memory card USB port for WLAN/3G	NETA-21

DRAFT

Connectivity options

— 07 ACS580 is compatible with many fieldbus protocols
— 08 Input/output extension modules

Fieldbus adapter modules
The ACS580 general purpose drives are compatible with a wide range of fieldbus protocols. The drive comes with Modbus RTU fieldbus interface as standard. Fieldbus communication reduces wiring costs when compared to traditional hard-wired input/output connections.



—
07

Option code	Fieldbus protocol	Adapter
+K451	DeviceNet™	FDNA-01
+K454	PROFIBUS DP. DPV0/DPV1	FPBA-01
+K457	CANopen®	FCAN-01
+K458	Modbus RTU	FSCA-01
+K462	ControlNet	FCNA-01
+K469	EtherCAT®	FECA-01
+K470	POWERLINK	FEPL-02
+K473	EtherNet/IP™, Modbus TCP, PROFINET IO	FENA-11
+K475	Two port EtherNet/IP™, Modbus TCP, PROFINET IO	FENA-21

Input/output extension modules
Standard input and output can be extended by using optional analog and digital input/output extension modules. The modules are easily installed in the extension slots located on the drive.



—
08

I/O options

Option code	Description	Type designation
+L501	External 24 V AC and DC 2 x RO and 1 x DO	CMOD-01
+L523	External 24 V and isolated PTC interface	CMOD-02
+L512	115/230 V digital input 6 x DI and 2 x RO	CHDI-01
+L537	ATEX certified PTC interface and external 24V	CPTC-02

DRAFT

Connectivity options

— 07 ACS580 is compatible with many fieldbus protocols
— 08 Input/output extension modules

Fieldbus adapter modules
The ACS580 general purpose drives are compatible with a wide range of fieldbus protocols. The drive comes with Modbus RTU fieldbus interface as standard. Fieldbus communication reduces wiring costs when compared to traditional hard-wired input/output connections.



— 07

Fieldbus adapters

Option code	Fieldbus protocol	Adapter
+K451	DeviceNet™	FDNA-01
+K454	PROFIBUS DP. DPV0/DPV1	FPBA-01
+K457	CANopen®	FCAN-01
+K458	Modbus RTU	FSCA-01
+K462	ControlNet	FCNA-01
+K469	EtherCAT®	FECA-01
+K470	POWERLINK	FEPL-02
+K473	EtherNet/IP™, Modbus TCP, PROFINET IO	FENA-11
+K475	Two port EtherNet/IP™, Modbus TCP, PROFINET IO	FENA-21
+K490	Two port Ethernet/IP (TM)	FEIP-21
+K491	Two port Modbus/TCP	FMBT-21
+K492	Two port PROFINET IO	FPNO-21

Input/output extension modules
Standard input and output can be extended by using optional analog and digital input/output extension modules. The modules are easily installed in the extension slots located on the drive.



— 08

I/O options

Option code	Description	Type designation
+L500	Bipolar Analog IO Extension	CBAI-01
+L501	External 24 V AC and DC 2 x RO and 1 x DO	CMOD-01
+L523	External 24 V and isolated PTC interface	CMOD-02
+L512	115/230 V digital input 6 x DI and 2 x RO	CHDI-01
+L537	ATEX certified PTC interface and external 24V	CPTC-02

DRAFT

EMC – electromagnetic compatibility

Every ACS580 drive is equipped with a built-in filter to reduce high-frequency emissions. EMC product standard (EN 61800-3) category C2 is fulfilled in wall-mounted drives.

EMC standards
The EMC product standard (EN 61800-3) covers the specific EMC requirements stated for drives (tested with motor and motor cable) within the EU. EMC standards such as EN 55011 or EN 61000-6-3/4 are applicable to industrial and domestic equipment and systems, including the components inside the drive. Drive units complying with the requirements of EN 61800-3 are compliant with comparable categories in EN 55011 and EN 61000-6-3/4 but not necessarily vice versa. EN 55011 and EN 61000-6-3/4 do not specify cable length or require a motor to be connected as a load. The emission limits are comparable to EMC standards according to the table below.

Domestic environments versus public low voltage networks
The first environment includes domestic premises. It also includes establishments directly connected without an intermediate transformer to a low voltage power supply network that supplies buildings used for domestic purposes. The second environment includes all establishments directly connected to public low voltage power supply networks.

Comparison of EMC standards

EMC according to EN 61800-3 product standard	EN 61800-3 product standard	EN 55011. product family standard for industrial, scientific and medical (ISM) equipment	EN 61000-6-4, generic emission standard for industrial environments	EN 61000-6-3, generic emission standard for residential, commercial and light-industrial environment
1st environment, unrestricted distribution	Category C1	Group 1. Class B	Not applicable	Applicable
1st environment, restricted distribution	Category C2	Group 1. Class A	Applicable	Not applicable
2nd environment, unrestricted distribution	Category C3	Group 2. Class A	Not applicable	Not applicable
2nd environment, restricted distribution	Category C4	Not applicable	Not applicable	Not applicable

EMC compliance and maximum cable length of ACS580-01/07 units*

Type	Voltage	Frame sizes	1st environment, restricted distribution, C2, grounded network (TN)	2nd environment, unrestricted distribution, C3, grounded network (TN)	2nd environment, unrestricted distribution, C3, ungrounded network (IT)
ACS580-01	380 - 480 V	R1 - R5	Standard device, cable length 100 m	Standard device, cable length 100 m	-
ACS580-01	**380 - 480 V**	**R6 - R9**	**Standard device, cable length 150 m**	**Standard device, cable lenght 150 m**	**-**

* Motor cable operational functionality up to 300 m. See ACS580 hardware manuals 3AXD50000018826, 3AXD50000015497, 3AXD50000045815 and 3AXD50000032622 for frame specific information.

DRAFT

Cooling and fuses

Cooling
ACS580 drives are fitted with variable-speed cooling air fans. The cooling air must be free from corrosive materials and not exceed the maximum ambient temperature of 40°C for frames R1 to R9 (50°C with derating). The speed-controlled fans cool the drive only when needed, which reduces overall noise level and energy consumption.

Fuse connections
Standard fuses can be used with ABB general purpose drives. For input fuses, see the table below.

Wall-mounted drives, ACS580-01

Cooling air flow and recommended input protection fuses for 380 to 415 V units

Type designation	Frame size	Cooling Air Flow 380 to 480V units					Reccomended UL Input Protection fuses			
		Heat dissipation*		Air flow		Max. noise level**	I_N	Voltage rating	Bussmann type***	UL class
		W	BTU/Hr	m3/h	ft3/hr	dBA	A	V		
ACS580-01-02A1-4	R1	45	155	34	20	55	15	600	JJS-15	T
ACS580-01-03A0-4	R1	55	187	34	20	55	15	600	JJS-15	T
ACS580-01-03A5-4	R1	66	224	34	20	55	15	600	JJS-15	T
ACS580-01-04A8-4	R1	84	288	34	20	55	15	600	JJS-15	T
ACS580-01-06A0-4	R1	106	362	50	29	55	15	600	JJS-15	T
ACS580-01-07A6-4	R1	133	454	50	29	55	15	600	JJS-15	T
ACS580-01-012A-4	R1	174	593	50	29	55	15	600	JJS-15	T
ACS580-01-014A-4	R2	228	777	128	75	66	30	600	JJS-30	T
ACS580-01-023A-4	R2	322	1100	128	75	66	30	600	JJS-30	T
ACS580-01-027A-4	R3	430	1469	179	105	70	40	600	JJS-40	T
ACS580-01-034A-4	R3	525	1791	179	105	70	50	600	JJS-50	T
ACS580-01-044A-4	R3	619	2114	179	105	70	60	600	JJS-60	T
ACS580-01-052A-4	R4	835	2852	134	79	69	80	600	JJS-80	T
ACS580-01-065A-4	R4	1024	3497	134	79	69	90	600	JJS-90	T
ACS580-01-077A-4 ‡	*R4*	*1240*	*4235*	*139*	*82*	*63*	*110*	*600*	*JJS-110*	*T*
ACS580-01-078A-4	R5	1240	4235	139	82	63	110	600	JJS-110	T
ACS580-01-096A-4	R5	1510	5157	139	82	63	150	600	JJS-150	T
ACS580-01-124A-4	R6	1476	5041	435	256	67	200	600	JJS-200	T
ACS580-01-156A-4	R7	1976	6748	450	265	67	225	600	JJS-225	T
ACS580-01-180A-4	R7	2346	8012	450	265	67	300	600	JJS-300	T
ACS580-01-240A-4	R8	3336	11393	550	324	65	350	600	JJS-350	T
ACS580-01-260A-4	R8	3936	13422	550	324	65	400	600	JJS-400	T
ACS580-01-302A-4 ‡	*R8*	*4836*	*16516*	*1150*	*677*	*68*	*500*	*600*	*JJS-500*	*T*
ACS580-01-361A-4	R9	4836	16516	1150	677	68	500	600	JJS-500	T
ACS580-01-414A-4	R9	6036	20614	1150	677	68	600	600	JJS-600	T

‡ Coming soon
* Heat dissapation value is a reference for cabinet thermal design
** The maximum noise level is at full fan speed. When the drive is not operating at full load and at maximum ambient temperature the noise level is lower.
***ABB does not require Bussmann brand fuses. Fuses which meet the appropriate UL class type, current rating, and are rated at 600V, 200 kA may be used.

DRAFT

Item 39a

AF09 ... AF38 3-pole contactors

4 to 18.5 kW

AC / DC operated



AF09-30-10



AF26-30-00

AF09 ... AF38 contactors are mainly used for controlling 3-phase motors and power circuits up to 690 V AC and 220 V DC. These contactors are of the block type design with 3 main poles.

- control circuit: AC or DC operated with electronic coil interface accepting a wide control voltage range (e.g. 100...250 V AC and DC), only 4 control voltage ranges covering 24...500 V 50/60 Hz and 20...500 V DC
  - can manage large control voltage variations
  - reduced panel energy consumption
  - very distinct closing and opening.
- built-in surge suppression
- add-on auxiliary contact blocks for front or side mounting and a wide range of accessories.

IEC		UL/CSA		Rated control circuit voltage Uc min. ... Uc max.		Auxiliary contacts fitted	Type	Order code	Weight
Rated operational power 400 V AC-3	current θ ≤ 40 °C AC-1	3-phase motor rating 480 V	General use rating 600 V AC						Pkg (1 pce)
kW	A	hp	A	V 50/60 Hz	V DC				kg
4	25	5	25	24...60	20...60 (1)	1 0	AF09-30-10-11	1SBL137001R1110	0.270
						0 1	AF09-30-01-11	1SBL137001R1101	0.270
				48...130	48...130	1 0	AF09-30-10-12	1SBL137001R1210	0.270
						0 1	AF09-30-01-12	1SBL137001R1201	0.270
				100...250	100...250	1 0	AF09-30-10-13	1SBL137001R1310	0.270
						0 1	AF09-30-01-13	1SBL137001R1301	0.270
				250...500	250...500	1 0	AF09-30-10-14	1SBL137001R1410	0.310
						0 1	AF09-30-01-14	1SBL137001R1401	0.310
5.5	28	7.5	28	24...60	20...60 (1)	1 0	AF12-30-10-11	1SBL157001R1110	0.270
						0 1	AF12-30-01-11	1SBL157001R1101	0.270
				48...130	48...130	1 0	AF12-30-10-12	1SBL157001R1210	0.270
						0 1	AF12-30-01-12	1SBL157001R1201	0.270
				100...250	100...250	1 0	AF12-30-10-13	1SBL157001R1310	0.270
						0 1	AF12-30-01-13	1SBL157001R1301	0.270
				250...500	250...500	1 0	AF12-30-10-14	1SBL157001R1410	0.310
						0 1	AF12-30-01-14	1SBL157001R1401	0.310
7.5	30	10	30	24...60	20...60 (1)	1 0	AF16-30-10-11	1SBL177001R1110	0.270
						0 1	AF16-30-01-11	1SBL177001R1101	0.270
				48...130	48...130	1 0	AF16-30-10-12	1SBL177001R1210	0.270
						0 1	AF16-30-01-12	1SBL177001R1201	0.270
				100...250	100...250	1 0	AF16-30-10-13	1SBL177001R1310	0.270
						0 1	AF16-30-01-13	1SBL177001R1301	0.270
				250...500	250...500	1 0	AF16-30-10-14	1SBL177001R1410	0.310
						0 1	AF16-30-01-14	1SBL177001R1401	0.310
11	45	15	45	24...60	20...60 (1)	0 0	AF26-30-00-11	1SBL237001R1100	0.310
				48...130	48...130	0 0	AF26-30-00-12	1SBL237001R1200	0.310
				100...250	100...250	0 0	AF26-30-00-13	1SBL237001R1300	0.310
				250...500	250...500	0 0	AF26-30-00-14	1SBL237001R1400	0.350
15	50	20	50	24...60	20...60 (1)	0 0	AF30-30-00-11	1SBL277001R1100	0.310
				48...130	48...130	0 0	AF30-30-00-12	1SBL277001R1200	0.310
				100...250	100...250	0 0	AF30-30-00-13	1SBL277001R1300	0.310
				250...500	250...500	0 0	AF30-30-00-14	1SBL277001R1400	0.350
18.5	50	25	50	24...60	20...60 (1)	0 0	AF38-30-00-11	1SBL297001R1100	0.310
				48...130	48...130	0 0	AF38-30-00-12	1SBL297001R1200	0.310
				100...250	100...250	0 0	AF38-30-00-13	1SBL297001R1300	0.310
				250...500	250...500	0 0	AF38-30-00-14	1SBL297001R1400	0.350

(1) AF..-30-..-11 not suitable for direct control by PLC-output.

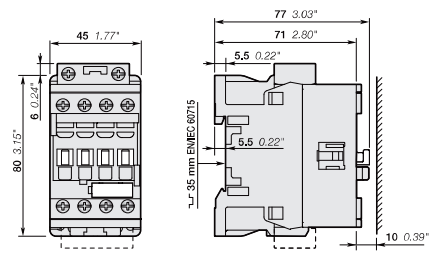

AF09, AF12, AF16 AF26, AF30, AF38

Main dimensions mm, inches

PRODUCT-DETAILS

CA4-10

CA4-10 Auxiliary Contact Block



DRAFT

General Information

Extended Product Type	CA4-10
Product ID	1SBN010110R1010
EAN	3471523130005
Catalog Description	CA4-10 Auxiliary Contact Block
Long Description	CA4-10 is a 1-pole front mounted auxiliary contact block equipped with screw terminals and can be fitted on AF(C)09(Z)(B)...96 contactors and NF(C)(Z)(B) contactor relays. CA4-10 is available with 1 N.O. instantaneous contacts for standard industrial environments.

Ordering

Minimum Order Quantity	1 piece
Customs Tariff Number	85389099
Product Main Type	Accessories for Block Contactors

Popular Downloads

Instructions and Manuals	1SBC101041M6801
CAD Dimensional Drawing	2CDC001079B0201

© 2023 ABB. All rights reserved.

Dimensions

Product Net Width	9.9 mm
Product Net Depth / Length	39.5 mm
Product Net Height	43 mm
Product Net Weight	0.014 kg

Technical

Connecting Capacity Auxiliary Circuit	Flexible with Ferrule 1/2x 0.75 ... 2.5 mm² Flexible with Insulated Ferrule 2x 0.75 ... 1.5 mm² Flexible with Insulated Ferrule 1x 0.75 ... 2.5 mm² Rigid Solid 1/2x 1 ... 2.5 mm² Rigid Stranded 1/2x 1 ... 2.5 mm²
Maximum Electrical Switching Frequency	(AC-15) 1200 cycles per hour (DC-13) 900 cycles per hour
Maximum Mechanical Switching Frequency	3600 cycles per hour
Mounted Auxiliary Contacts	1 NO, 0 NC
Mounting Type	Front mounting
Number of Auxiliary Contacts NC	0
Number of Auxiliary Contacts NO	1
Number of Poles	1
Rated Frequency (f)	Auxiliary Circuit 50 / 60 Hz
Rated Impulse Withstand Voltage (U_{imp})	6 kV
Rated Insulation Voltage (U_i)	acc. to IEC 60947-5-1 690 V acc. to UL/CSA 600 V
Rated Operational Current AC-15 (I_e)	(500 V) 2 A (690 V) 2 A (24 / 127 V) 6 A (220 / 240 V) 4 A (400 / 440 V) 3 A
Rated Operational Current DC-13 (I_e)	(24 V) 6 A / 144 W (48 V) 2.8 A / 134 W (72 V) 1 A / 72 W (110 V) 0.55 A / 60 W (125 V) 0.55 A / 69 W (220 V) 0.27 A / 60 W (250 V) 0.27 A / 68 W (400 V) 0.15 A / 60 W (500 V) 0.13 A / 65 W (600 V) 0.1 A / 60 W
Rated Operational Voltage	Auxiliary Circuit 690 V
Rated Short-time Withstand Current Low Voltage (I_{cw})	for 0.1 s 140 A for 1 s 100 A
Standards	IEC/EN 60947-5-1, UL 60947-5-1, CSA C22.2 No. 60947-5-1-14
Suitable For	AF09 AF09Z AF12

DRAFT

© 2023 ABB. All rights reserved. 2023/11/17 Subject to change without notice

	AF12Z AF16 AF16Z AF26 AF26Z AF30 AF30Z AF38 AF38Z AF40 AF52 AF65 AF80 AF96 AFC09 AFC12 AFC16 AFC26 AFC30 AFC38 AFC40 AFC52 AFC65 AFC80 AFC96 AF09B AF09ZB AF12B AF12ZB AF16B AF16ZB AF26B AF26ZB AF30B AF30ZB AF38B AF38ZB AF40B AF52B AF65B AF80B AF96B NF22E NFZ22E NF31E NFZ31E NF40E NFZ40E NFC22E NFC31E NFC40E NFZB22E NFB22E NFZB31E NFB31E NFZB40E NFB40E
Terminal Type	Screw Terminals
Tightening Torque	Auxiliary Circuit 1.2 N·m
Wire Stripping Length	Auxiliary Circuit 10 mm

Technical UL/CSA

Connecting Capacity Auxiliary Circuit UL/CSA	Rigid Solid 1/2x 18-14 AWG Rigid Stranded 1/2x 18-14 AWG
Pilot Duty UL/CSA	A600

© 2023 ABB. All rights reserved.

	Q600
Tightening Torque UL/CSA	Auxiliary Circuit 11 in·lb

Environmental

Conflict Minerals Reporting Template (CMRT)	9AKK108467A5658
Conventional Free-air Thermal Current (I_{th})	acc. to IEC 60947-5-1, Θ = 40 °C 16 A
Degree of Protection	acc. to IEC 60529, IEC 60947-1, EN 60529 Auxiliary Terminals IP20
REACH Declaration	2CMT2021-006202
RoHS Information	2CMT2021-006277
RoHS Status	Following EU Directive 2011/65/EU
WEEE B2C / B2B	Business To Business
WEEE Category	5. Small Equipment (No External Dimension More Than 50 cm)

Certificates and Declarations

ABS Certificate	ABS_20-2060694-PDA
BV Certificate	BV_2634H24900C0
CB Certificate	CB_SE-93052A1
CQC Certificate	CQC2011010304496319 CQC2013010304651497 CQC2019010304264779
Declaration of Conformity - CCC	2020980304001258 2020980304001259 2020980304001053
Declaration of Conformity - CE	1SBD250007U1000
Declaration of Conformity - UKCA	1SBD250038U1000
DNV Certificate	DNV_TAE00001BV-5
EAC Certificate	EAC_RU C-FR ME77 B03391
GOST Certificate	GOST_POCCFR.ME77.B07175.pdf
LR Certificate	LRS_LR2002723TA-02
RINA Certificate	RINA_ELE084013XG
RMRS Certificate	RMRS_1802703280
UL Certificate	UL-US-L252354-131-82119002-6 UL-CA-L252354-331-82119002-5
UL Listing Card	UL_E252354

Container Information

Package Level 1 Units	bag 1 piece
Package Level 1 Width	100 mm
Package Level 1 Depth / Length	100 mm
Package Level 1 Height	10 mm

© 2023 ABB. All rights reserved.

Package Level 1 Gross Weight	0.014 kg
Package Level 1 EAN	3471523130005
Package Level 2 Units	box 720 piece
Package Level 2 Gross Weight	10.08 kg
Package Level 3 Units	12960 piece

Classifications

eClass	V11.0 : 27371302
E-Number (Finland)	3706500
E-Number (Sweden)	3211416
ETIM 6	EC000041 - Auxiliary contact block
ETIM 7	EC000041 - Auxiliary contact block
ETIM 8	EC000041 - Auxiliary contact block
ETIM 9	EC000041 - Auxiliary contact block
IDEA Granular Category Code (IGCC)	4743 >> Auxiliary contact block
Object Classification Code	K
UNSPSC	39121522

Categories

Low Voltage Products and Systems → Control Products → Contactors → Block Contactors Accessories



DRAFT

© 2023 ABB. All rights reserved. 2023/11/17 Subject to change without notice

AF09 ... AF38 4-pole contactors
Accessory fitting details

Contactor and main accessories (other accessories available)

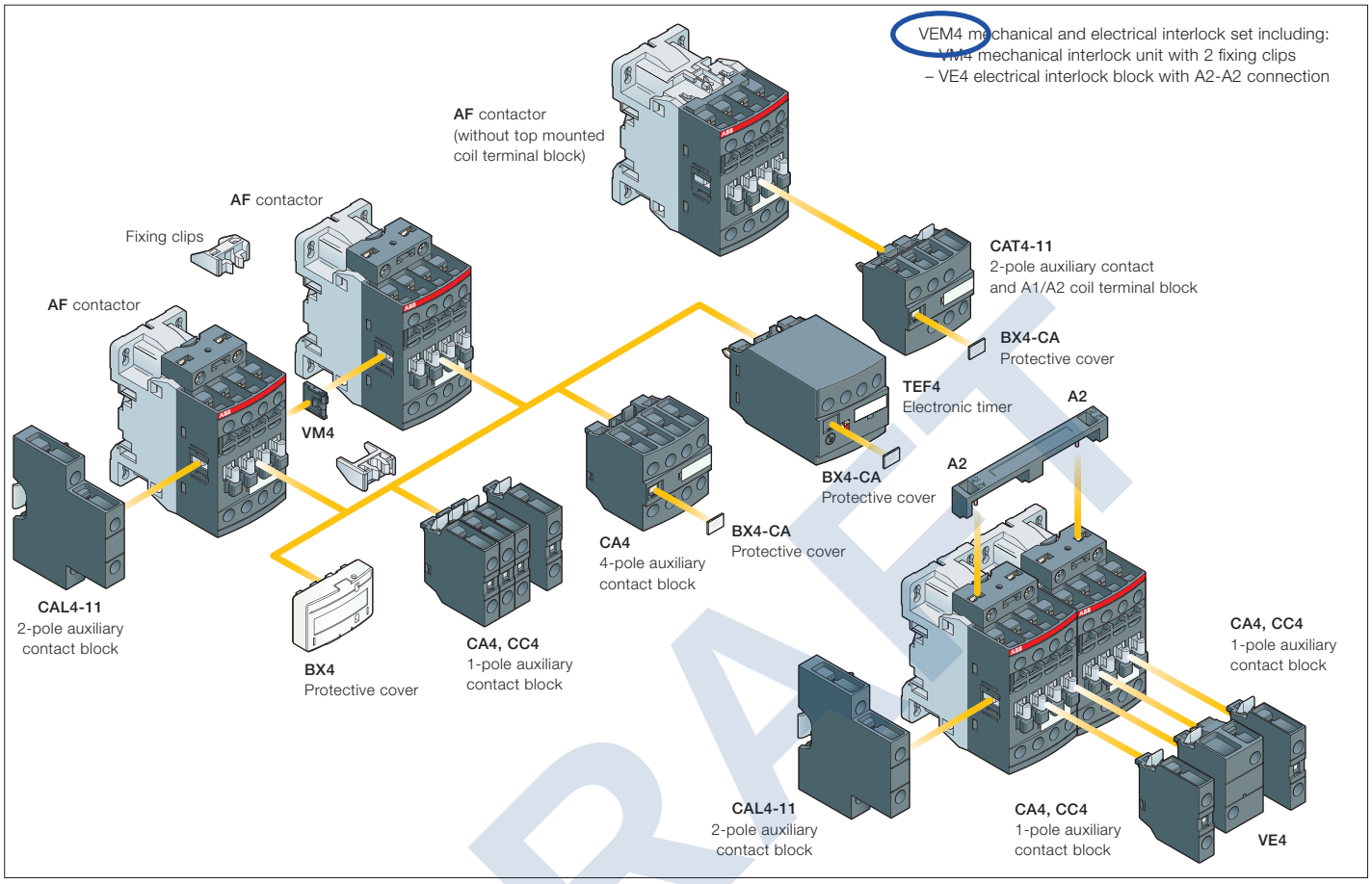

Main accessory fitting details

Many configurations of accessories are possible depending on whether these are front-mounted or side-mounted.

Contactor types	Main poles		Built-in auxiliary contacts		Front-mounted accessories: Auxiliary contact blocks 1-pole CA4 / 1-pole CC4		2-pole CAT4-11		4-pole CA4		Electronic timer TEF4		Electrical and mechanical interlock set (between 2 contactors) VEM4		Side-mounted accessories: Auxiliary contact blocks Left side 2-pole CAL4-11		Right side
					Max. add-on N.C. auxiliary contacts: 4 N.C. max. on positions 1, 2, 3, 4 and 3 N.C. max. on positions 1 ±30°, 5												
AF09 ... AF16	4	0	0	0	4 max.	or	1	or	1	or	1		–	+	1		–
					2 max.	or	1		–	or	1		–	+	1	+	1
					3 max.		–		–		–	+	1	+	1	or	1
					Max. add-on N.C. auxiliary contacts: 3 N.C. max. on positions 1, 2, 3, 4 and 2 N.C. max. on positions 1 ±30°, 5												
AF26 ... AF38	4	0	0	0	4 max.	or	1	or	1	or	1		–	+	1		–
					2 max.	or	1		–	or	1		–	+	1	+	1
					3 max.		–		–		–	+	1	+	1	or	1
AF09 ... AF16	2	2	0	0	4 max.	or	1	or	1	or	1		–	+	1		–
AF26 ... AF38	2	2	0	0	2 max.	or	1		–	or	1		–	+	1	+	1

DRAFT

Item 40b

Connection sets for reversing contactors

Connection with standard ferrules



BER16-4

Connection sets for reversing contactors with screw terminals

The BER connection sets are used to connect the main poles of two 3-pole contactors with screw terminals mounted side by side.
The BER connection sets are made up of 1 upstream and 1 downstream connections.
BER connection sets are insulated and made of solid copper bars.

For 3-pole contactors	Type	Order code	Pkg qty	Weight (1 pce) kg
AF09(Z)B ... AF16(Z)B	BER16-4	1SBN081311R1000	1	0.045
AF26(Z)B ... AF38(Z)B	BER38-4	1SBN082311R1000	1	0.100
AF40B ... AF65B	BER65-4	1SBN083411R1000	1	0.175
AF80B, AF96B	BER96-4	1SBN083911R1000	1	0.250
AF116B ... AF146B	BER140-4	1SFN084211R1000	1	0.615
AF190B, AF205B	BER205-4	1SFN084811R1000	1	1.237
AF265B ... AF370B	BER370-4	1SFN085411R1000	1	2.140



BER16-4KF

Connection sets for reversing contactors with Push-in Spring terminals

The BER..-4KF connection sets are used to connect the main poles of two 3-pole AF09(Z)B..K ... AF38(Z)B..K contactors mounted side by side.
The connection sets are made up of:

- 1 upstream and 1 downstream connections
- Insulated, solid copper bars
- Black fork pieces for a quick dismounting of reversing contactors.

AF09(Z)B..K ... AF16(Z)B..K	BER16-4KF	1SBN081322R1000	1	0.050
AF26(Z)B..K ... AF38(Z)B..K	BER38-4KF	1SBN082322R1000	1	0.080

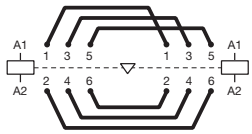

BER
Reversing connections

DRAFT

Items 41,42

Accessories

MS132-(K)B, MO132-B

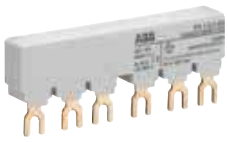

PS1-2-0-65



PS1-3-1-100

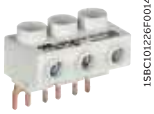

S1-M1-25



S1-M2-25



SA2



PB1-1-32



S1-PB1-25

2CDC241005S0014

Three-phase busbars ensure a quick and safe connection and are therefore a cost effective solution. A variety of different three-phase busbars up to 100 A are in the assortment. Between 2 and 4 manual motor starters with none, one or two lateral auxiliary contacts can be connected. Different three-phase feeder terminals are available according to the application.

Phase connecting links and phase power infeed blocks are also available for single-phase applications.

Suitable for	Rated operational current A	Number of manual motor starters	Number of lateral auxiliary contacts	Type	Order code	Pkg qty	Weight (1 pce) kg
Three-phase busbars							
MS132-B, MO132-B	65	2	0	PS1-2-0-65	1SAM201906R1102	10	0.034
	65	3	0	PS1-3-0-65	1SAM201906R1103	10	0.055
	65	4	0	PS1-4-0-65	1SAM201906R1104	10	0.077
	65	5	0	PS1-5-0-65	1SAM201906R1105	10	0.098
	65	2	1	PS1-2-1-65	1SAM201906R1112	10	0.036
	65	3	1	PS1-3-1-65	1SAM201906R1113	10	0.060
	65	4	1	PS1-4-1-65	1SAM201906R1114	10	0.087
	65	5	1	PS1-5-1-65	1SAM201906R1115	10	0.108
	65	2	2	PS1-2-2-65	1SAM201906R1122	10	0.040
	65	3	2	PS1-3-2-65	1SAM201906R1123	10	0.067
	65	4	2	PS1-4-2-65	1SAM201906R1124	10	0.095
	65	5	2	PS1-5-2-65	1SAM201906R1125	10	0.122
MS132-B, MO132-B	100	3	0	PS1-3-0-100	1SAM201916R1103	10	0.084
	100	4	0	PS1-4-0-100	1SAM201916R1104	10	0.117
	100	5	0	PS1-5-0-100	1SAM201916R1105	10	0.154
	100	3	1	PS1-3-1-100	1SAM201916R1113	10	0.094
	100	4	1	PS1-4-1-100	1SAM201916R1114	10	0.134
	100	5	1	PS1-5-1-100	1SAM201916R1115	10	0.172
	100	3	2	PS1-3-2-100	1SAM201916R1123	10	0.105

Note: busbars are only suitable for screw versions

Suitable for	Rated operational current A	Rated cross section mm²	Mounting form	Type	Order code	Pkg qty	Weight (1 pce) kg
Three-phase feeder terminals							
MS132-B, MO132-B	65	25	Flat	S1-M1-25	1SAM201907R1101	10	0.038
	65	25	High	S1-M2-25	1SAM201907R1102	10	0.051
	65	25	UL/CSA Type E/F and IEC	S1-M3-25	1SAM201907R1103	10	0.042
	100	35	UL/CSA Type E/F and IEC	S1-M3-35	1SAM201913R1103	10	0.060

Suitable for	Description	Type	Order code	Pkg qty	Weight (1 pce) kg
MS132-B, MO132-B	Protection cover for busbars	BS1-3	1SAM201908R1001	50	0.003
MS132-(K)B, MO132-B,	Screw fixing kit	FS116	1SAM201909R1001	1	0.020
	Padlock + two keys	SA2	GJF1101903R0002	10	0.020
Accessories for single-phase connection (IEC only)					
MS132-B, MO132-B	Phase connecting link	PB1-1-32	1SAM201914R1001	1	0.009
	Phase power infeed block	S1-PB1-25	1SAM201914R1002	1	0.013

DRAFT

Main accessories
MS116, MS132, MS165, MO132, MO165, MS132-T



1SBC101208F0014

HKF1-11


1SBC101209F0014

HK1-11


1SBC101210F0014

SK1-11


1SBC101286F0014

CK1-11

Description

MMS and MS132-T can be equipped with auxiliary contacts for lateral/front mounting, signaling contacts for lateral mounting, undervoltage releases and shunt trips. Two different signaling contacts are available. The accessories can be fitted wiring free and without tools. A variety of combinations is possible as required for the application. The auxiliary contacts change position with the main contacts. The signaling contact SK signals tripping regardless if it was caused by short-circuit or overload. The signaling contact CK signals tripping in case it was caused by short-circuit. Undervoltage releases are used for remote tripping of the manual motor starters especially for emergency stop circuits. Shunt trips release the MMS used for remote tripping. These main accessories are suitable throughout the MS116/MS132/MS165-range.

Ordering details

Suitable for	Auxiliary contacts N.O.	Auxiliary contacts N.C.	Description	Type	Order code		Pkg qty	Weight (1 pce) kg
Auxiliary contacts – mountable on the front								
MS116, MS132, MS165 MO132, MO165 MS132-T	1	1		HKF1-11	1SAM201901R1001		10	0.015
	1	0		HKF1-10	1SAM201901R1003		10	0.013
	0	1		HKF1-01	1SAM201901R1004		10	0.013
	2	0		HKF1-20	1SAM201901R1002		10	0.015
Auxiliary contacts – mountable on the right								
MS116, MS132, MS165 MO132, MO165 MS132-T	1	1	max. 2 pieces	HK1-11	1SAM201902R1001		2	0.035
	2	0	max. 2 pieces	HK1-20	1SAM201902R1002		2	0.035
	0	2	max. 2 pieces	HK1-02	1SAM201902R1003		2	0.035
MS116, MS132, MO132, MS132-T	2	0	with lead contacts	HK1-20L	1SAM201902R1004		2	0.035
Signaling contacts – mountable on the right								
MS116, MS132, MS165 MO132, MO165 MS132-T	1	1	for tripped alarm, max. 2 pieces	SK1-11	1SAM201903R1001		2	0.035
	2	0	for tripped alarm, max. 2 pieces	SK1-20	1SAM201903R1002		2	0.035
	0	2	for tripped alarm, max. 2 pieces	SK1-02	1SAM201903R1003		2	0.035
MS132, MS165, MS132-T	1	1	for short-circuit alarm, max. 2 pieces	CK1-11	1SAM301901R1001		2	0.035
	2	0	for short-circuit alarm, max. 2 pieces	CK1-20	1SAM301901R1002		2	0.035
	0	2	for short-circuit alarm, max. 2 pieces	CK1-02	1SAM301901R1003		2	0.035

Main dimensions mm, *inches*

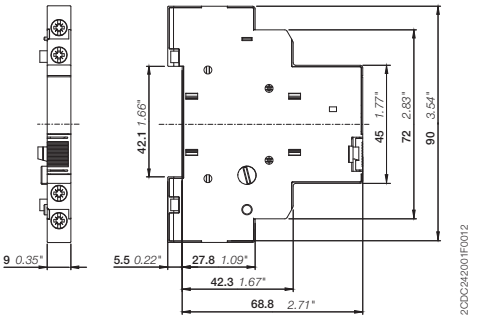

2CDC242001F0012

HK1

2CDC131050C0201

DRAFT

Data sheet

Manual motor starter MS132

Manual motor starters are electrome-chanical protection devices for the main circuit. They are used mainly to switch motors manually ON/OFF and protect them fuse less against short-circuit, overload and phase failures.
Fuse less protection with a manual motor starter saves costs, space and ensures a quick reaction under short-circuit condition, by switching off the motor within milliseconds. Fuse less starter combinations are setup together with contactors.



DRAFT

Description

- Overload protection – trip class 10
- Phase loss sensitivity
- Disconnect function
- Temperature compensation from -25 … +60 °C
- Adjustable current setting for overload protection
- Suitable for three- and single-phase application
- Trip-free mechanism
- Trip indication
- Clear switch position indication ON/OFF/TRIP
- Lockable handle

Ordering details

MS132 screw terminal



Setting range [A]	Type	Trip class	Order code	Packaging unit [Pcs]	Weight [g]
0.10 ... 0.16	MS132-0.16	10A	1SAM350000R1001	1	215
0.16 ... 0.25	MS132-0.25	10	1SAM350000R1002	1	215
0.25 ... 0.40	MS132-0.4	10	1SAM350000R1003	1	215
0.40 ... 0.63	MS132-0.63	10	1SAM350000R1004	1	215
0.63 ... 1.00	MS132-1.0	10	1SAM350000R1005	1	215
1.00 ... 1.60	MS132-1.6	10	1SAM350000R1006	1	265
1.60 ... 2.50	MS132-2.5	10	1SAM350000R1007	1	265
2.50 ... 4.00	MS132-4.0	10	1SAM350000R1008	1	265
4.00 ... 6.30	MS132-6.3	10	1SAM350000R1009	1	265
6.30 ... 10.00	MS132-10	10	1SAM350000R1010	1	265
10.00 ... 16.00	MS132-16	10	1SAM350000R1011	1	310
16.00 ... 20.00	MS132-20	10	1SAM350000R1013	1	310
20.00 ... 25.00	MS132-25	10	1SAM350000R1014	1	310
25.00 ... 32.00	MS132-32	10	1SAM350000R1015	1	310

Note: MS132 with pre-assembled auxiliary conact HKF1-11, please order as follow 1SAM250005Rxxxx

Application

The manual motor starters protect the load and the installation against short-circuit and overload. They are three pole protection devices with thermal tripping elements for overload protection and electro-magnetic tripping elements for short-circuit protection. Furthermore, they provide a disconnect function for safely isolation of the installation and the supply and can be used for the manual switching of loads.

The manual motor starters have a setting scale in Amperes, which allows the direct adjusting of the device without any additional calculation. In compliance with international and national standards, the setting current is the rated current of the motor and not the tripping current (no tripping at 1.05 x I, tripping at 1.2 x I; I = setting current).

Operation mode

Single-phase operation

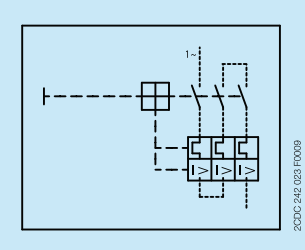

Three-phase operation

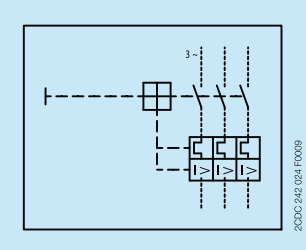

Connections

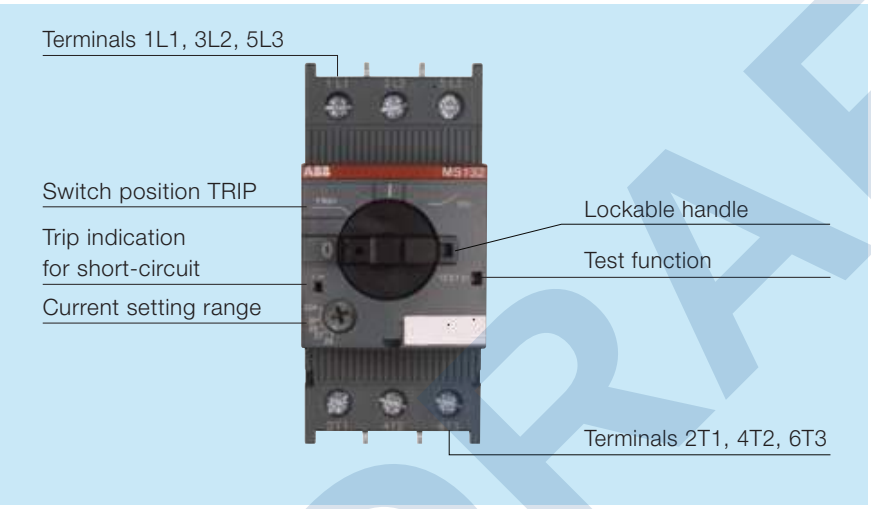

Resistance and power losses per phase

Type	Lower value setting range [A]	Upper value setting range [A]	Resistance per phase [Ω]	Power loss per Phase [W] at Lower value of setting range	Power loss per Phase [W] at Upper value of setting range
MS132-0.16	0.10	0.16	66.00	0.7	1.7
MS132-0.25	0.16	0.25	25.50	0.7	1.7
MS132-0.4	0.25	0.40	10.38	0.7	1.7
MS132-0.63	0.40	0.63	4.36	0.7	1.7
MS132-1.0	0.63	1.00	1.605	0.7	1.7
MS132-1.6	1.00	1.60	0.648	0.7	1.7
MS132-2.5	1.60	2.50	0.272	0.7	1.7
MS132-4.0	2.50	4.00	0.106	0.7	1.7
MS132-6.3	4.00	6.30	0.046	0.7	1.7
MS132-10	6.30	10.0	0.024	0.9	2.4
MS132-16	10.0	16.0	0.011	1.1	2.8
MS132-20	16.0	20.0	0.0057	1.5	2.3
MS132-25	20.0	25.0	0.0045	1.8	2.8
MS132-32	25.0	32.0	0.0030	1.9	3.1

DRAFT

Dimensions

MS132 ≤ 10 A

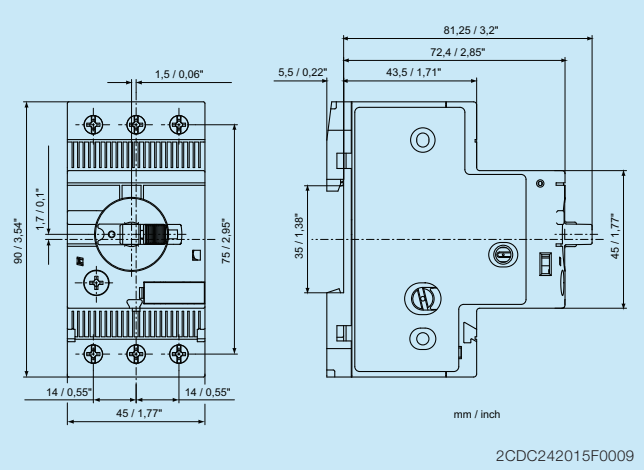

MS132 > 10 A

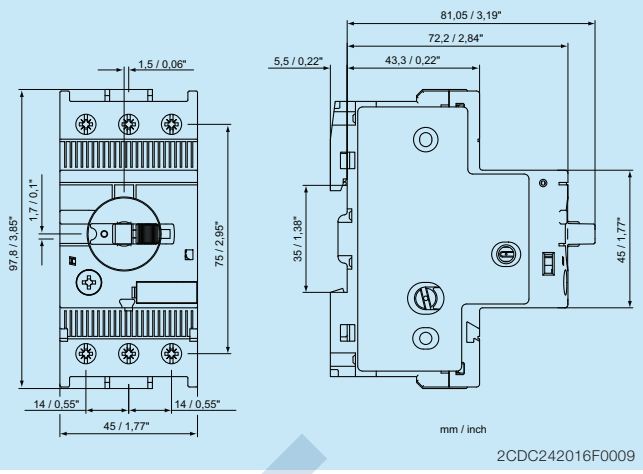

MS132 ≤ 10 A + screw fixing kit

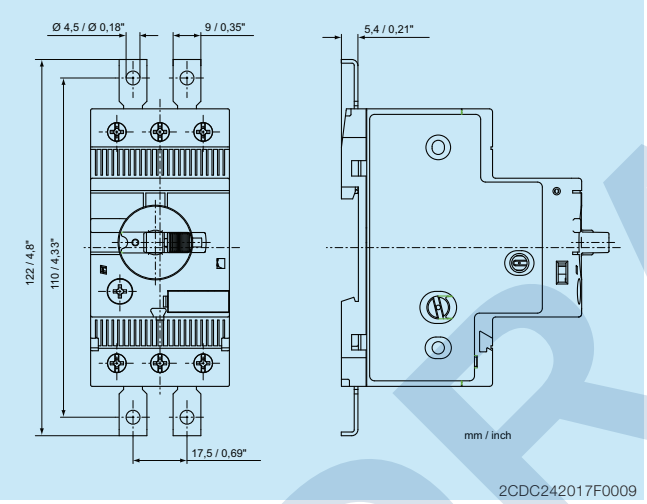

MS132 > 10 A + screw fixing kit

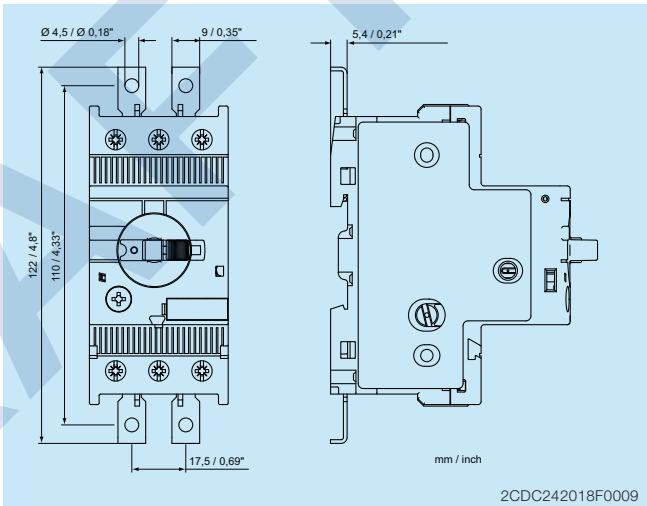

Wiring diagram

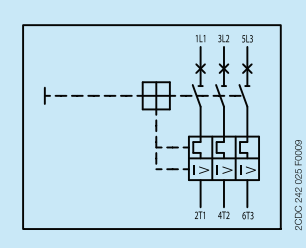

DRAFT

Data at T_A = 40 °C and at rated values, if nothing else indicated

Type			MS132
Technical data		**Terminals**	
Main circuit		**1L1-3L3-5L5** **2T1-4T2-6T3**	
Rated operational voltage U_e acc. to IEC/EN 60947-1	AC		690 V
	DC		-
Rated operational current I_e			see separate table
Rated current I_n / Conventional free-air thermal current I_{th}			see „Rated Operational Current“
Setting range - thermal overload protection			see ordering data
Rated instantaneous short-circuit current setting I			see separate table
Rated service short-circuit breaking capacity I_{cs}			see separate table
Rated ultimate short-circuit breaking capacity I_{cu}			see separate table
Trip class acc. to IEC/EN 60947-4-1			see ordering data
Rated frequency acc. to IEC/EN 60947-1			50 / 60 Hz
Number of poles			3
Resistence per phase			see separate table
Power loss per phase	lower value of setting range		see separate table
	upper value of setting range		see separate table
Isolation data			
Rated impulse withstand voltage U_{imp} acc. to IEC/EN 60947-1			6 kV
Rated insulation voltage U_i acc. to IEC/EN 60947-1			690 V
Pollution degree acc. to IEC/EN 60664			3
Electrical connection			
MS132 ≤ 10A			
Connecting capacity	solid		1/2 x 1 ... 4 mm²
	flexible with ferrule		1/2 x 0.75 ... 2.5 mm²
	flexible with ferrule isolated		1/2 x 0.75 ... 2.5 mm²
	flexible without ferrule		1/2 x 0.75 ... 2.5 mm²
Stripping length			9 mm
Tightening torque			0.8 ... 1.2 Nm
Connection screw			M3.5 (Pozidrive 2)
MS132-16			
Connecting capacity	solid		1/2 x 1 ... 4 mm²
	flexible with ferrule		1/2 x 0.75 ... 2.5 mm²
	flexible with ferrule isolated		1/2 x 0.75 ... 2.5 mm²
	flexible without ferrule		1/2 x 0.75 ... 2.5 mm²
Stripping length			10 mm
Tightening torque			1.5 Nm
Connection screw			M4 (Pozidrive 2)
MS132-20, -25, -32			
Connecting capacity	solid		1/2 x 2.5 ... 6 mm²
	flexible with ferrule		1/2 x 1 ... 6 mm²
	flexible with ferrule isolated		1/2 x 1 ... 6 mm²
	flexible without ferrule		1/2 x 2.5 ... 6 mm²
Stripping length			10 mm
Tightening torque			2 Nm
Connection screw			M4 (Pozidrive 2)

DRAFT

Type			MS132
General Data			
Mechniacl durability			10^5
Electrical durability			5×10^4
Duty time			100%
Dimensions (W x H x D)			see dimension drawing
Weight			see ordering data
Mounting			DIN-rail (EN 60715)
Mounting positions			optional for single mounting (position 1-6)
Group Mounting			on request
Minimum distance to other units same type	horizontal		none
	vertical		150 mm
Minimum distance to electrical conductive wall (earthed)	horizontal		none
	vertical		75 mm
Degree of protection acc. to IEC/EN 60947-1	enclosure / terminals		IP20
Utilization Category acc. to IEC/EN 60947-2			A
Altitude			up to 2000 m
Environmental data			
Ambient air temperature range			
Operation	open - compensated		-25 °C ... +60 °C
	open		-25 °C ... +60 °C
Storage			-50 °C ... +80 °C
Temperature compensation			continuous
Vibration (sinusoidal) acc. to IEC/EN 60068-2-6 (Fc)			5 g / 3 - 150 Hz
Shock (half-sine) acc. to IEC/EN 60068-2-27 (Ea)			25 g / 11 ms
Standards / Directives			
Standard			IEC/EN 60947–2, ICE/EN 60947-4-1, IEC/EN 60947-1, UL 508; CSA 22.2 No. 14
Low Voltage Directive			2006/95/EC
EMC Directive			2004/108/EC
RoHS Directive			2002/95/EC
Electromagnetic compatibility			
			not applicable
Approvals, markings			
Approvals			see last page
Markings			see last page
UL/CSA			
Max. operational voltage			600 V
General purpose rating at max. 600 VAC			see separate table
Motor ratings			
Horse power			see separate table
Full load amps (FLA)			see separate table
Locked rotor amps (LRA)			see separate table
Short circuit rating RMS at 480 VAC			30 kA
Short circuit rating RMS at 600 VAC			18 kA
Short-Circuit Protective devices			see separate table

DRAFT

Type			MS132
Technical data			
Electrical connection			
MS132 ≤ 10A			
Connecting capacity	solid		1/2 x AWG16 ... AWG12
	stranded		1/2 x AWG16 ... AWG12
	flexible without ferrule		1/2 x AWG16 ... AWG12
Stripping length			9 mm
Tightening torque			10 - 12 lb-in
Connection screw			M3.5 (Pozidrive 2)
MS132-16			
Connecting capacity	solid		1/2 x AWG16 ... AWG12
	stranded		1/2 x AWG16 ... AWG12
	flexible without ferrule		1/2 x AWG16 ... AWG12
Stripping length			10 mm
Tightening torque			14 lb-in
Connection screw			M4 (Pozidrive 2 / 6.5 mm)
MS132-20, -25, -32			
Connecting capacity	stranded		1/2 x AWG12 ... AWG8
	flexible without ferrule		1/2 x AWG12 ... AWG8
Stripping length			10 mm
Tightening torque			18 lb-In
Connection screw			M4 (Pozidrive 2)

Type	Rated instantaneous short-circuit current setting I_i [A]	Rated current I_n / Conventional free-air thermal current I_{th} [A]
MS132-0.16	1.25 ... 1.87	0.16
MS132-0.25	1.95 ... 2.92	0.25
MS132-0.4	3.12 ... 4.68	0.40
MS132-0.63	4.91 ... 7.37	0.63
MS132-1.0	9.20 ... 13.8	1.00
MS132-1.6	14.7 ... 22.1	1.60
MS132-2.5	23.0 ... 34.5	2.50
MS132-4.0	40.0 ... 60.0	4.00
MS132-6.3	63.0 ... 94.5	6.30
MS132-10	120 ... 180	10.0
MS132-16	192 ... 288	16.0
MS132-20	240 ... 360	20.0
MS132-25	300 ... 450	25.0
MS132-32	384 ... 576	32.0

Short-Circuit protection

Type	400 V AC			690 V AC		
	I_{cs} [kA]	I_{cu} [kA]	gG [A]	I_{cs} [kA]	I_{cu} [kA]	gG [A]
MS132-0.16	100	100	°	100	100	°
MS132-0.25	100	100	°	100	100	°
MS132-0.4	100	100	°	100	100	°
MS132-0.63	100	100	°	100	100	°
MS132-1.0	100	100	°	100	100	°
MS132-1.6	100	100	°	100	100	°
MS132-2.5	100	100	°	100	100	°
MS132-4.0	100	100	°	3	3	on request
MS132-6.3	100	100	°	3	3	on request
MS132-10	100	100	°	3	3	on request
MS132-16	50	50	on request	3	3	on request
MS132-20	50	50	on request	3	3	on request
MS132-25	50	50	on request	3	3	on request
MS132-32	25	25	on request	3	3	on request

I_{cs} = Rated service short-circuit breaking capacity
I_{cu} = Rated ultimate short-circuit breaking capacity
o = No back-up fuse required, because short-circuit proof up to 100 kA

DRAFT

UL / CSA ratings

Type	Motor rating, single phase								
	120 VAC			240 VAC			480 VAC		
	hp	FLA	LRA	hp	FLA	LRA	hp	FLA	LRA
MS132-0.16	-	0.16	0.96	-	0.16	0.96	-	0.16	0.96
MS132-0.25	-	0.25	1.5	-	0.25	1.5	-	0.25	1.5
MS132-0.4	-	0.4	2.4	-	0.4	2.4	-	0.4	2.4
MS132-0.63	-	0.63	3.78	-	0.63	3.78	-	0.63	3.78
MS132-1.0	-	1	6	-	1	6	-	1	6
MS132-1.6	-	1.6	9.6	1/10	1.6	9.6	-	1.6	9.6
MS132-2.5	-	2.5	15	1/6	2.5	15	1/2	2.5	15
MS132-4.0	1/8	4	24	1/3	4	24	1/2	4	24
MS132-6.3	1/4	6.3	37.8	1/2	6.3	37.8	1	6.3	37.8
MS132-10	1/2	9.8	58.8	1-1/2	10	60	3	-	-
MS132-16	1	16	96	2	12	72	5	-	-
MS132-20	1-1/2	20	120	3	-	-	5	-	-
MS132-25	2	24	144	3	-	-	7-1/2	-	-
MS132-32	2	24	144	5	-	-	10	-	-

Type	Motor rating, three phase											
	120 VAC			240 VAC			480 VAC			600 VAC		
	hp	FLA	LRA	hp	FLA	LRA	hp	FLA	LRA	hp	FLA	LRA
MS132-0.16	-	0.16	0.96	-	0.16	0.96	-	0.16	0.96	-	0.16	0.96
MS132-0.25	-	0.25	1.5	-	0.25	1.5	-	0.25	1.5	-	0.25	1.5
MS132-0.4	-	0.4	2.4	-	0.4	2.4	-	0.4	2.4	-	0.4	2.4
MS132-0.63	-	0.63	3.78	-	0.63	3.78	-	0.63	3.78	-	0.63	3.78
MS132-1.0	-	1	6	-	1	6	-	1	6	1/2	1	6
MS132-1.6	-	1.6	9.6	-	1.6	9.6	3/4	1.6	9.6	3/4	1.6	9.6
MS132-2.5	-	2.5	15	1/2	2.5	15	1	2.5	15	1-1/2	2.5	15
MS132-4.0	-	4	24	1	4	24	2	4	24	3	-	-
MS132-6.3	1/2	6.3	37.8	1-1/2	6.3	37.8	3	-	-	5	-	-
MS132-10	3/4	10	60	3	-	-	5	-	-	7-1/2	-	-
MS132-16	2	16	84	5	-	-	10	-	-	10	-	-
MS132-20	3	-	-	5	-	-	10	-	-	15	-	-
MS132-25	3	-	-	7-1/2	-	-	15	-	-	20	-	-
MS132-32	5	-	-	10	-	-	20	-	-	25	-	-

Type	General purpose rating at max. 600 VAC [A]	Protective devices	
		Fuse K5 / RK5 [A]	Circuit breaker [A]
MS132-0.16	0.16	250	250
MS132-0.25	0.25	250	250
MS132-0.4	0.40	250	250
MS132-0.63	0.63	250	250
MS132-1.0	1.00	250	250
MS132-1.6	1.60	250	250
MS132-2.5	2.50	250	250
MS132-4.0	4.00	250	250
MS132-6.3	6.30	250	250
MS132-10	10.0	250	250
MS132-16	16.0	250	250
MS132-20	20.0	250	250
MS132-25	25.0	250	250
MS132-32	32.0	250	250

DRAFT

Contact us

ABB STOTZ-KONTAKT GmbH
P. O. Box 10 16 80
69006 Heidelberg, Germany
Phone: +49 (0) 6221 7 01-0
Fax: +49 (0) 6221 7 01-13 25
E-Mail: info.desto@de.abb.com

You can find the address of your local sales organisation on the ABB home page
http://www.abb.com/contacts
-> Low Voltage products

Approvals

cULus UL 508

GOST-F

GOST-R

CB Scheme

Markings

CE

Note:
We reserve the right to make technical changes or modify the contents of this document without prior notice. With regard to purchase orders, the agreed particulars shall prevail. ABB AG does not accept any responsibility whatsoever for potential errors or possible lack of information in this document.

We reserve all rights in this document and in the subject matter and illustrations contained therein. Any reproduction, disclosure to third parties or utilization of its contents – in whole or in parts – is forbidden without prior written consent of ABB AG.

Copyright© 2009 ABB
All rights reserved

Order Number 2CDC 131 021 D0201 Printed in Germany (08/09 - x - xxx)

DRAFT

Power and productivity for a better world™

CompactLogix Controllers

The CompactLogix system is designed to provide a Logix solution for differently sized applications. Most CompactLogix controllers are ideal for small and mid-size applications. These applications are machine-level control applications. The CompactLogix 5480 controllers, however, are more ideal for use in mid to large-size applications.



The CompactLogix platform brings together the benefits of a common programming environment, common networks, and common control engine in a small footprint with high performance. Combined with 1769 Compact I/O or Compact 5000 I/O modules, the CompactLogix platform supports simple to more complex motion, with unprecedented power and scalability. A CompactLogix platform is ideal for systems that require standalone and system-connected control over EtherNet/IP, ControlNet, or DeviceNet networks.

A simple system can consist of a standalone controller with one bank of I/O modules and DeviceNet communication. In a more complex system, add other networks, motion control, and safety control. As part of the Integrated Architecture® system, the CompactLogix controllers use the same programming software, network protocol, and information capabilities as all Logix 5000™ controllers. This system provides a common development environment for all control disciplines.

For detailed specifications, see the following publications:

- CompactLogix 5380, Compact GuardLogix 5380, and CompactLogix 5480 Controllers Specifications Technical Data, publication 5069-TD002
- CompactLogix Controllers Specifications Technical Data, publication 1769-TD005

Characteristic	CompactLogix 5380 Controllers	Compact GuardLogix 5380 Controllers	CompactLogix 5480 Controller
Controller application	High-performance applications Local Compact 5000 I/O modules	High-performance applications Local Compact 5000 I/O modules	High-performance applications Local Compact 5000 I/O modules Large motion applications Industrial Internet of Things (IIoT) applications
Controller tasks	32 1000 programs/task	32 1000 programs/task	32 1000 programs/task
Event tasks	Consumed tag, EVENT instruction triggers, Module Input Data Change, and motion events	Consumed tag, EVENT instruction triggers, Module Input Data Change, and motion events	Consumed tag, EVENT instruction triggers, Module Input Data Change, and motion events

DRAFT

Characteristic	CompactLogix 5380 Controllers		Compact GuardLogix 5380 Controllers		CompactLogix 5480 Controller	
User memory	5069-L306ER, 5069-L306ERM	0.6 MB	5069-L306ERS2, 5069-L306ERMS2	0.6 MB + 0.3 MB safety	5069-L46ERMW	Logix control engine: 20 MB Windows 10: • RAM - 6 GB • SSD - 64 GB
	5069-L310ER, 5069-L310ER-NSE, 5069-L310ERM	1 MB	5069-L310ERMS, 5069-L310ERMS2	1 MB + 0.5 MB safety		
	5069-L320ER, 5069-L320ERM, 5069-L320ERMK	2 MB	5069-L320ERS2, 5069-L320ERMS2 5069-L320ERS2K, 5069-L320ERMS2K	2 MB + 1 MB safety		
	5069-L330ER, 5069-L330ERM, 5069-L330ERMK	3 MB	5069-L330ERS2, 5069-L330ERMS2 5069-L330ERS2K, 5069-L330ERMS2K	3 MB + 1.5 MB safety		
	5069-L340ER, 5069-L340ERM	4 MB	5069-L340ERS2, 5069-L340ERMS2	4 MB + 2 MB safety		
	5069-L350ERM, 5069-L350ERMK	5 MB	5069-L350ERS2, 5069-L350ERMS2 5069-L350ERS2K, 5069-L350ERMS2K	5 MB + 2.5 MB safety		
	5069-L380ERM	8 MB	5069-L380ERS2, 5069-L380ERMS2	8 MB + 4 MB safety		
	5069-L3100ERM	10 MB	5069-L3100ERS2, 5069-L3100ERMS2	10 MB + 5 MB safety		
Built-in ports	2 - Ethernet(1) 1 - USB		• 2 - Ethernet(2) • 1 - USB		Logix control engine: • 3 - Ethernet, 10 Mbps/100 Mbps/1 Gbps(3) • 1- USB client Windows 10: • 1 - Ethernet, 10 Mbps/100 Mbps/1 Gbps • 2 - USB 3.0 ports • 1 - DisplayPort	
Communication options	Dual-port EtherNet/IP USB Client		Dual-port EtherNet/IP USB Client		Dual-port EtherNet/IP USB Client	

(1) CompactLogix 5380 controllers support Dual-IP mode and DLR/Linear mode. Mode use is user-configurable.

(2) Compact GuardLogix 5380 controllers support Dual-IP mode and DLR/Linear mode. Mode use is user-configurable.

(3) CompactLogix 5480 controller supports Dual-IP mode and DLR/Linear mode on ports A1 and A2. Mode is user-configurable.

DRAFT

CompactLogix 5380 Controllers

The CompactLogix 5380 controllers are the first Logix controllers to offer configurable EtherNet/IP modes, that is, Dual-IP mode or Linear/DLR mode. With CompactLogix 5380 controller firmware revision 29.011 or later, you can configure the embedded Ethernet ports to connect to separate networks, an enterprise-level EtherNet/IP network, and a device-level network. When the controller operates in Dual-IP mode, each port requires its own network configuration.



The CompactLogix 5380 controllers deliver scalable control that is ideal for applications from small standalone equipment to high-performance indexing tables, process skids, case packers and erectors, and packaging. The CompactLogix 5380 controllers also provide a truly integrated motion solution.

In a CompactLogix 5380 controller system, Compact 5000 I/O modules are installed to the right of the controller as local I/O modules. As many as 31 modules can be installed in the system. The CompactLogix 5380 controllers come with:

- Dual embedded Ethernet ports for use in star, linear, and DLR EtherNet/IP network topologies
- USB port for firmware updates and programming
- Support for Dual-IP mode
- 5069-ECR end cap

Energy Depletion characteristics for the 5069-L310ER-NSE controller.

The residual stored energy of the 5069-L310ER-NSE controller depletes to 20 µJ or less in 2 minutes. The 5069-L310ER-NSE controller does not maintain the real-time clock on power cycle.

Characteristic	5069-L306ER, 5069-L306ERM	5069-L310ER, 5069-L310ER-NSE, 5069-L310ERM	5069-L320ER, 5069-L320ERM, 5069-L320ERMK	5069-L330ER, 5069-L330ERM, 5069-L330ERMK	5069-L340ER, 5069-L340ERM	5069-L350ERM, 5069-L350ERMK	5069-L380ERM	5069-L3100ERM
Available user memory	0.6 MB	1 MB	2 MB	3 MB	4 MB	5 MB	8 MB	10 MB
Memory card	1784-SD1 (1 GB) 1784-SD2 (2 GB), ships with controller							
Communication ports	2 - Ethernet, 10 Mbps/100 Mbps/1 Gbps 1- USB client							
EtherNet/IP nodes in one Logix Designer application, max(1)	16	24	40	60	90	120	150	180
Integrated motion on an EtherNet/IP network	As many as two axes (5069-L306ERM only)	As many as 4 axes (5069-L310ERM)	As many as 8 axes (5069-L320ERM, 5069-L320ERMK)	As many as 16 axes (5069-L330ERM, 5069-L330ERMK)	As many as 20 axes (5069-L340ERM)	As many as 24 axes	As many as 28 axes	As many as 32 axes
Local I/O modules, max	8		16	31(2)				
Battery	None							

DRAFT

Characteristic	5069-L306ER, 5069-L306ERM	5069-L310ER, 5069-L310ER-NSE, 5069-L310ERM	5069-L320ER, 5069-L320ERM, 5069-L320ERMK	5069-L330ER, 5069-L330ERM, 5069-L330ERMK	5069-L340ER, 5069-L340ERM	5069-L350ERM, 5069-L350ERMK	5069-L380ERM	5069-L3100ERM
Power supply terminals (sold separately)	5069-RTB64-SCREW kit - Includes RTB catalog numbers 5069-RTB6-SCREW and 5069-RTB4-SCREW 5069-RTB64-SPRING - Includes RTB catalog numbers 5069-RTB6-SPRING and 5069-RTB4-SPRING							
Programming software support	Based on catalog number: • Version 28 or later - 5069-L320ER, 5069-L340ERM only • Version 29 or later - 5069-L306ER, 5069-L306ERM, 5069-L310ER, 5069-L310ER-NSE, 5069-L310ERM, 5069-L320ERM, 5069-L320ERMK, 5069-L330ER, 5069-L330ERM, 5069-L330ERMK, 5069-L340ER • Version 30 or later - 5069-L350ERM, 5069-L350ERMK, 5069-L380ERM, 5069-L3100ERM							

(1) The maximum number of nodes that are listed represents when the controller is used with the Logix Designer application, version 31 or later. Some controllers can be used with earlier Logix Designer application versions. The maximum number of nodes that a controller supports can be fewer in Logix Designer application, versions 30 or earlier.

(2) When you use a 5069-L330ER, 5069-L330ERM, or 5069-L330ERMK controller with the Logix Designer application, version 29.00.00, the application limits the number of local I/O modules in the project to 16. For more information, see the Rockwell Automation Knowledgebase article #942580, '5380 CompactLogix controllers limited to 16 local 5069 modules in V29 of Studio 5000® software.'The document is available at http://www.rockwellautomation.com/knowledgebase.
With the Logix Designer application, version 30.00.00 or later, the controller supports as many as 31 local I/O modules.

Example CompactLogix 5380 System on an EtherNet/IP Network

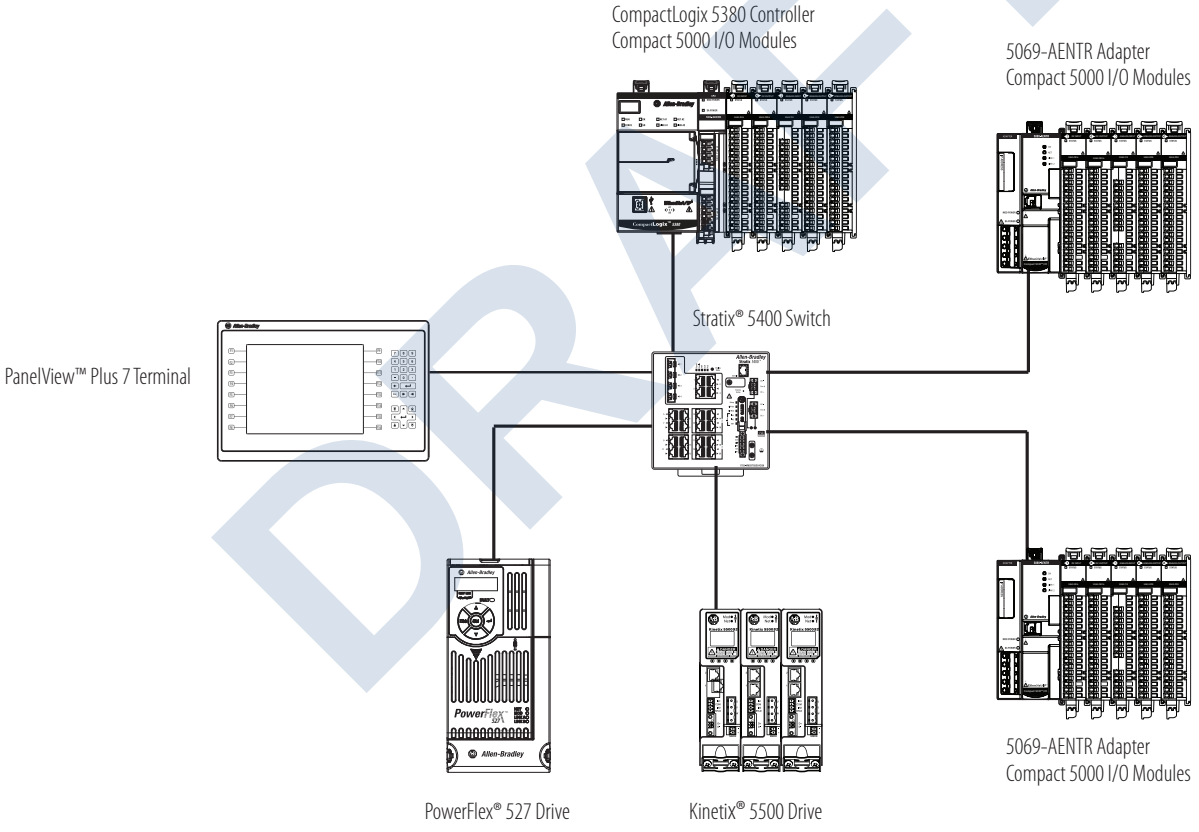

DRAFT

Compact 5000 I/O Modules

You can install Compact 5000 I/O modules as local I/O modules in a CompactLogix 5380, Compact GuardLogix 5380, or CompactLogix 5480 control system.

The Compact 5000 I/O architecture provides a wide range of input and output modules to span many applications, from high-speed digital to process control. The architecture uses Producer/Consumer technology that allows input information and output status to be shared among multiple Logix 5000 controllers.

The Compact 5000 I/O modules are installed to the right of a CompactLogix 5380, Compact GuardLogix 5380, or CompactLogix 5480 controller and require removable terminal blocks (RTBs) to connect field-side wiring. The RTBs that are used with CompactLogix 5380 or Compact GuardLogix 5380 controllers are sold separately. The RTBs that are used with the CompactLogix 5480 controller ship with the controller.

You can use Compact 5000 I/O safety modules with Compact GuardLogix 5380 controllers only. You cannot use them with CompactLogix 5380 controllers.

The modules draw system-side power, which is known as Module (MOD) power, and field-side power, which is known as Sensor Actuator (SA) power from the system backplane as needed. The modules then pass the remaining power to the next module in the system.

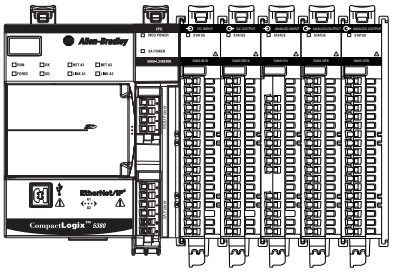

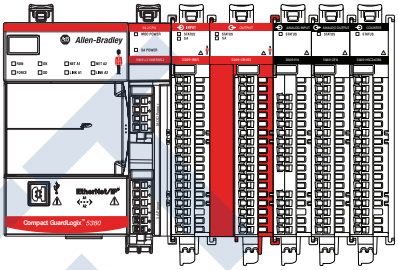

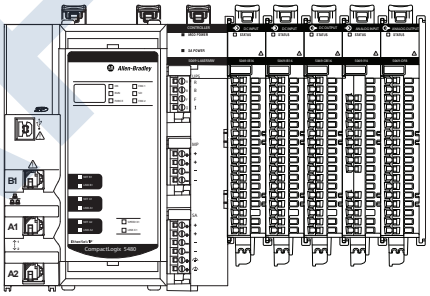

DRAFT

The following apply when you use Compact 5000 I/O modules:

- You cannot use Compact 5000 I/O modules with the other CompactLogix controllers.
- Some restrictions that apply when you use Compact 5000 I/O modules with Compact GuardLogix 5380 controllers. For more information, see the CompactLogix 5380 and Compact GuardLogix Controllers User Manual, publication 5069-UM001 and the Compact 5000 I/O Digital Modules User Manual, publication 5000-UM004.

Compact 5000 I/O DC Digital Modules

Cat. No.	Inputs/Outputs	Voltage Category	MOD Current, Max	SA Power Current, Max
5069-IB16, 5069-IB16K	16 inputs, sink	24V DC	75 mA	200 mA
5069-IB16F				
5069-IB6F-3W	6 inputs, sink			150 mA per channel 900 mA module
5069-OB16, 5069-OB16K	16 outputs, source			Local Actuator (LA) Power Current(1) 0.5 A per channel 8 A module
5069-OB16F				
5069-OB8	8 outputs (2 groups of 4)			LA Power Current(1) 2 A per channel 8 A per group 16 A per module

(1) The module does not draw current from the SA power bus that is internal to the system. Local Actuator (LA+ and LA-) connections are used to supply field-side power to the module.

Compact 5000 I/O AC Digital Modules

Cat. No.	Inputs/Outputs	Voltage Category	MOD Current, Max	SA Power Current, Max
5069-IA16	16 inputs	120/240V AC	75 mA	240 mA
5069-OA16	16 outputs	120/240V AC	100 mA	4 A

Compact 5000 I/O Relay Output Modules

Cat. No.	Outputs	Voltage Range	Module Power Current, Max	Sensor Actuator Power Current, Max
5069-OW4I	4 - Form A (normally open)	5...125V DC 5...264V AC	75 mA	–
5069-OW16	2 groups of 8 - Form A (normally open)	5...125V DC 5...264V AC		150 mA
5069-OX4I	4 - Form C (SPDT)	5...125V DC 5...264V AC		–

DRAFT

Compact 5000 I/O Analog, Resistance, and Temperature Modules

Cat. No.	Inputs/Outputs	Range	Resolution	Module Power Current, Max	Sensor Actuator Power Current, Max
5069-IF8	8 differential	Voltage ±10V 0…10V 0…5V	 ±10.5V: <320 µV/count (15 bits plus sign bipolar) 0…10.5V: <160 µV/count (16 bits unipolar) 0…5.25V: <80 µV/count (16 bits unipolar)	75 mA	100 mA
		Current 0…20 mA 4…20 mA	 0…21 mA: <0.32 µA/count (16 bits) 3.6…21 mA: <0.27 µA/count (16 bits)		
5069-IY4, 5069-IY4K	4 differential	Voltage ±10V 0…10V 0…5V	 ±10.5V: <320 µV/count (15 bits plus sign bipolar) 0…10.5V: <160 µV/count (16 bits unipolar) 0…5.25V: <80 µV/count (16 bits unipolar)		
		Current 0…20 mA 4…20 mA	 0…21 mA: <0.32 µA/count (16 bits) 3.6…21 mA: <0.27 µA/count (16 bits)		
		RTD[1] (Input types PT 385, PT 3916, CU 427, NI 618, NI 672 available) 1…500 Ω 2…1000 Ω 4…2000 Ω 8…4000 Ω	 < 7.9 mΩ/cnt in 1…500 Ω mode < 15.8 mΩ/cnt in 2…1000 Ω mode < 31.7 mΩ/cnt in 4…2000 Ω mode < 63.4 mΩ/cnt in 8…4000 Ω mode		
		Thermocouple (Input types B, C, D, E, J, K, N, R, S, T, TXK/XK (L) available) ±100 mV	< 3.1 µV/cnt in ±100 mV mode		
5069-OF4, 5069-OF4K	4 current or voltage	Voltage ± 10V 0…10V 0…5V	 16 bits across ± 10.5V - 320 µV/bit 16 bits across 10.5V - 160 µV/bit 16 bits across 5.25V - 80 µV/bit	75 mA	150 mA
		Current 0…20 mA 4…20 mA	16 bits across 21 mA - 320 nA/bit		
5069-OF8	8 current or voltage	Voltage ± 10V 0…10V 0…5V	 16 bits across ± 10.5V - 320 µV/bit 16 bits across 10.5V - 160 µV/bit 16 bits across 5.25V - 80 µV/bit		250 mA
		Current 0…20 mA 4…20 mA	16 bits across 21 mA - 320 nA/bit		

(1) Operating in 3-wire mode.

DRAFT

Compact 5000 I/O Safety Modules

Cat. No.	Inputs/Outputs	Voltage Category	MOD Current, Max	SA Power Current, Max
5069-IB8S, 5069-IB8SK	8 inputs, sink	24V DC	75 mA	80 mA
5069-OBV8S, 5069-OBV8SK	8 outputs (used as bipolar or sourcing outputs)	24V DC	75 mA	Local Actuator (LA) Power Current(1) 0.5 A per channel 8 A module

(1) The module does not draw current from the SA power bus that is internal to the system. Local Actuator (LA+ and LA-) connections are used to supply field-side power to the module.

Compact 5000 I/O EtherNet/IP Adapters

Cat. No.	Description	Module Power Current, Max	Sensor Actuator Power Current, Max
5069-AENTR	The adapter connects remote Compact 5000 I/O modules, to star, linear, and DLR EtherNet/IP network topologies.	220 mA	5 mA (DC power) 2 mA (AC power)
5069-AEN2TR		450 mA	10 mA (DC power) 25 mA (AC power)

Compact 5000 I/O Specialty Modules

Cat. No.	Description	Module Power Current, Max	Sensor Actuator Power Current, Max
5069-HSC2x0B4	Compact 5000 I/O high-speed counter module	50 mA	3 A(1)
5069-SERIAL	Compact 5000 I/O serial module	100 mA	–
5069-ARM	Compact 5000 I/O address reserve module	45 mA	–
5069-FPD	Compact 5000 I/O field potential distributor	–	10 mA (DC power) 25 mA (AC power)

(1) SA power current is drawn only when the embedded output channels are used.

For more information on how to use local Compact 5000 I/O modules, see the following:

- Compact 5000 I/O Digital and Safety Modules in Logix 5000 Control Systems User Manual, publication 5000-UM004
- Compact 5000 I/O Analog Modules in Logix 5000 Control Systems User Manual, publication 5000-UM005
- Compact 5000 I/O High-speed Counter Modules in Logix 5000 Control Systems User Manual, publication 5000-UM006

Compact 5000 I/O End Caps

The right-most Compact 5000 I/O module in a CompactLogix 5380 or CompactLogix 5480 control system requires an end cap. The end cap catalog number is 5069-ECR. An end cap ships with the CompactLogix 5380, CompactLogix 5480 controllers, and Compact 5000 I/O EtherNet/IP adapters. You do not need to order one separately. However, you can order replacement 5069-ECR end caps.

DRAFT

Removable Terminal Blocks

You can order removable terminal blocks (RTBs) with the CompactLogix 5380 and Compact GuardLogix 5380 controllers and 5069-FPD field potential distributor modules separately. The RTBs are used to connect wiring to the controllers. The following table describes the RTBs.

Cat. Nos.	Device Supported	Description
5069-RTB14CJC-SCREW	Compact 5000 I/O module	14-pin screw type terminal block with embedded CJC thermistors
5069-RTB14CJC-SPRING		14-pin spring type terminal block with embedded CJC thermistors
5069-RTB18-SCREW		18-pin screw type terminal block
5069-RTB18-SPRING		18-pin spring type terminal block
5069-RTB6-SCREW	5069-FPD module	6-pin screw type terminal block
5069-RTB6-SPRING		6-pin spring type terminal block
5069-RTB64-SCREW	CompactLogix 5380 and Compact GuardLogix 5380 controllers 5069-AEN2TR EtherNet/IP adapter	4 and 6-pin screw type terminal block
5069-RTB64-SPRING		4 and 6-pin spring type terminal block
5069-RTB5-SCREW	5069-AENTR EtherNet/IP adapter	5-pin screw type terminal block
5069-RTB5-SPRING		5-pin spring type terminal block

The CompactLogix 5480 controller uses RTBs for power supply connections. The

1734 POINT I/O Modules

Additional 1734 POINT I/O modules can be installed on a CompactLogix 5370 L1 controller. The POINT I/O family is ideal for applications where flexibility and low cost of ownership are key for successful control system design and operation.

An RTB provides the wiring and terminations for field-side connections, and system power for the backplane.

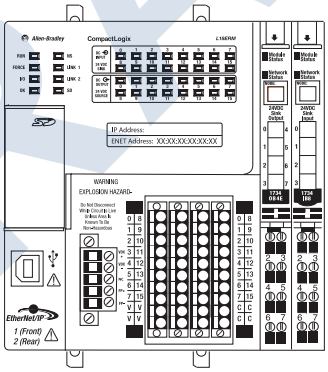

1734 AC Digital Modules

Cat. No.	Inputs/Outputs	Voltage Category	Wiring Base	POINTBus™ Current @ 5V DC
1734-IA2	2 inputs, nonisolated, sink	120V AC	1734-TB, 1734-TBS, 1734-TOP, 1734-TOPS	75 mA
1734-IA4	4 inputs, nonisolated, sink			
1734-IM2	2 inputs, nonisolated, sink	220V AC		
1734-IM4	4 inputs, nonisolated, sink			
1734-OA2	2 outputs, nonisolated, source	120/220V AC		
1734-OA4	4 outputs, nonisolated, source			

DRAFT

Technical Data

Original Instructions

Allen-Bradley by ROCKWELL AUTOMATION

PanelView Plus 7 Standard Terminals

Catalog Numbers 2711P-T4W21D8S, 2711P-T4W22D8S, 2711P-T4W21D8S-B, 2711P-T4W22D8S-B, 2711P-T6C21D8S, 2711P-T6C22D8S, 2711P-T6C21D8S-B, 2711P-T6C22D8S-B, 2711P-T7C21D8S, 2711P-T7C22D8S, 2711P-T7C21D8S-B, 2711P-T7C22D8S-B, 2711P-T9W21D8S, 2711P-T9W22D8S, 2711P-T9W21D8S-B, 2711P-T9W22D8S-B, 2711P-T10C21D8S, 2711P-T10C22D8S, 2711P-T10C21D8S-B, 2711P-T10C22D8S-B, 2711P-T12W21D8S, 2711P-T12W22D8S, 2711P-T12W21D8S-B, 2711P-T12W22D8S-B, 2711P-T15C21D8S, 2711P-T15C22D8S, 2711P-T15C21D8S-B, 2711P-T15C22D8S-B

Topic	Page
Summary of Changes	1
Environmental Specifications	2
Certifications	3
Technical Specifications	4
Product Dimensions	7
HMI Software	8
Additional Resources	9

Summary of Changes

Topic	Pages
Updated the Certifications table.	3
Added the Firmware line (for Series D terminals) to the Technical Specifications tables.	4...6

The PanelView™ Plus 7 Standard terminals are operator interface devices. They monitor and control devices that are attached to ControlLogix® 5570 and CompactLogix™ 5370 controllers on an EtherNet/IP™ network. Animated graphic and text displays provide operators a view into the operating state of a machine or process. Operators interact with the control system by using touch screen input.

The PanelView Plus 7 Standard terminals include these features:

- Terminal functionality permits connection to 1 controller, up to 100 screens, and up to 500 alarms.
- FactoryTalk® View Machine Edition software provides a familiar environment for creating HMI applications.
- Windows CE operating system with desktop access for configuration and third-party applications.
- Ethernet communication that supports linear and star network topology.
- PDF viewer to access PDF files that are stored on the terminal.
- More screen options including 4-in., 6-in., 7-in., 9-in., 10-in., 12-in., and 15-in. terminals.
- Widescreen on three sizes, 4-in., 9-in., and 12-in. terminals.
- Greater screen resolution.
- Terminals are available with an Allen-Bradley brand marking, or with no marking for customers who want to put their own brand label on the terminal.
- Certifications including Class I, Div. 2; Class II, Div. 2; Class III; and ATEX, IECEx, and INMETRO Zones 2 and 22.

DRAFT

Environmental Specifications

Table 1 - Environmental Specifications - 2711P-T4W21D8S, 2711P-T4W22D8S, 2711P-T4W21D8S-B, 2711P-T4W22D8S-B, 2711P-T6C21D8S, 2711P-T6C22D8S, 2711P-T6C21D8S-B, 2711P-T6C22D8S-B, 2711P-T7C21D8S, 2711P-T7C22D8S, 2711P-T7C21D8S-B, 2711P-T7C22D8S-B, 2711P-T9W21D8S, 2711P-T9W22D8S, 2711P-T9W21D8S-B, 2711P-T9W22D8S-B, 2711P-T10C21D8S, 2711P-T10C22D8S, 2711P-T10C21D8S-B, 2711P-T10C22D8S-B, 2711P-T12W21D8S, 2711P-T12W22D8S, 2711P-T12W21D8S-B, 2711P-T12W22D8S-B, 2711P-T15C21D8S, 2711P-T15C22D8S, 2711P-T15C21D8S-B, 2711P-T15C22D8S-B[1]

Attribute	Value
Temperature, operating	0…55 °C (32…131 °F)
Temperature, nonoperating	-25…+70 °C (-13…+158 °F)
Relative humidity	5…95% without condensation
Heat dissipation	4 in., 15 W = 51 BTU 6 in., 15 W = 51 BTU 7 in., 15 W = 51 BTU 9 in., 20 W = 68 BTU 10 in., 20 W= 68 BTU 12 in., 30 W= 102 BTU 15 in., 30 W= 102 BTU
Altitude, operating	2000 M
Vibration 4.3-in., 5.7-in., 6.5-in., 9.0-in., 10.4-in., 12.1-in., and 15-in.	 0.012 pk-pk, 10…57 Hz 2g peak at 57…500 Hz
Shock, operating	15 g at 11 ms
Shock, nonoperating	30 g at 11 ms
Enclosure ratings	NEMA and UL Type 12, 13, 4X (indoor use only), also rated IP54 or IP66 as Classified by UL

(1) Catalog numbers with a -B extension denote terminals that do not include the Allen-Bradley brand marking. Customers can put their own brand labels on these terminals.

DRAFT

Certifications

Table 2 - Certifications - 2711P-T4W21D8S, 2711P-T4W22D8S, 2711P-T4W21D8S-B, 2711P-T4W22D8S-B, 2711P-T6C21D8S, 2711P-T6C22D8S, 2711P-T6C21D8S-B, 2711P-T6C22D8S-B, 2711P-T7C21D8S, 2711P-T7C22D8S, 2711P-T7C21D8S-B, 2711P-T7C22D8S-B, 2711P-T9W21D8S, 2711P-T9W22D8S, 2711P-T9W21D8S-B, 2711P-T9W22D8S-B, 2711P-T10C21D8S, 2711P-T10C22D8S, 2711P-T10C21D8S-B, 2711P-T10C22D8S-B, 2711P-T12W21D8S, 2711P-T12W22D8S, 2711P-T12W21D8S-B, 2711P-T12W22D8S-B, 2711P-T15C21D8S, 2711P-T15C22D8S, 2711P-T15C21D8S-B, 2711P-T15C22D8S-B(1)

Certification(2)	Value
IECEx	IEC 60079-0; IEC 60079-7; IEC 60079-11; and IEC 60079-31 II 3 GD Ex ec ic IIC T4 Gc Ex tc IIIC T135 °C (275 °F) Dc IP66 Tamb = 0 °C... +55 °C (32 °F...131 °F) IECEx UL 20.0046X
CCC	GB/T 3836.1-2021; GB/T 3836.3-2021; GB/T 3836.4-2021; GB/T 3836.31-2021 Ex ec ic IIC T4 Gc Ex tc IIIC T135°C (275 °F) Dc Tamb = 0°C...+55°C (32°F...131F) 2020122309111713
cULus	cULus Listed Industrial Control Equipment for use in Hazardous Locations (E10314) per standards ANSI / ISA 12.12.01 and CSA C22.2 No. 213. rated: • Class I, Division 2, Groups A, B, C and D • Class II, Division 2, Groups F and G • Class III Enclosure type ratings per UL50 and CSA C22.2 No. 94.2-07. Enclosure ingress protection classified by UL per IEC 60529
ATEX	European Union 2014/34/EU ATEX Directive, compliant with: EN 60079-0; EN 60079-7; EN 60079-11; and EN 60079-31 • II 3 GD • Ex ec ic IIC T4 Gc • Ex tc IIIC T135 °C (275 °F) Dc IP66 • Tamb = 0 °C ...+55 °C (32 °F ...+131 °F) • DEMKO 14 ATEX 1302X
INMETRO	ABNT NBR IEC 60079-0 ABNT NBR IEC 60079-8 ABNT NBR IEC 60079-11 ABNT NBR IEC 60079-31 Ex ec ic IIC T4 Gc Ex tc IIIC T135 °C (275 °F) Dc IP66 Tamb = 0 °C ...+55 °C (32 °F ...+131 °F) UL-BR 14.0716X
CE	European Union • EN 61000-6-2; Industrial Immunity • EN 61000-6-4; Industrial Emissions • EN 61131-2; Programmable Controllers
UKCA	United Kingdom • EN 61000-6-2; Industrial Immunity • EN 61000-6-4; Industrial Emissions • EN 61131-2; Programmable Controllers
RCM	Australian Radio Communications Act, compliant with: AS/NZS CISPR 11; Industrial Emissions
Morocco	NM EN 61131-2 (EMC pertinent sections)
EAC	Certificate of compliance
RoHS	China RoHS, Turkey RoHS, European RoHS
KCC	Certificate of compliance

(1) Catalog numbers with a -B extension denote terminals that do not include the Allen-Bradley brand marking. Customers can put their own brand labels on these terminals.

(2) When marked. See the Product Certification link on http://www.ab.com for declarations of conformity, certificates, and other certification details.

DRAFT

Table 4 - PanelView Plus 7 Standard 7-in., 9-in., and 10-in. Terminals

Attribute	7-in. Touch 2711P-T7C21D8S, 2711P-T7C21D8S-B, 2711P-T7C22D8S, 2711P-T7C22D8S-B	9-in. Touch 2711P-T9W21D8S, 2711P-T9W21D8S-B, 2711P-T9W22D8S, 2711P-T9W22D8S-B	10-in. Touch 2711P-T10C21D8S, 2711P-T10C21D8S-B, 2711P-T10C22D8S, 2711P-T10C22D8S-B
Operator input	Touch	Touch	Touch
Display type	Color TFT LCD	Color TFT LCD	Color TFT LCD
Display size, diagonal	6.5 in.	9 in. widescreen	10.4 in.
Viewing area	132 x 99 mm	196 x 118 mm	211 x 158 mm
Display resolution	640 x 480 VGA, 18-bit color graphics	800 x 480 WVGA, 18-bit color graphics	800 x 600 SVGA, 18-bit color graphics
Aspect ratio	4:3	5:3	4:3
Brightness, typical	300 nits		
Backlight life	50,000 hr life, min at 40° C (104 °F) to half-brightness. Backlight is not replaceable.		
Touch screen	Analog resistive Actuation rating: 1 million presses Operating force: 100 grams		
Battery (real-time clock backup)	Accuracy: ±2 minutes per month. Battery life: 4 years min at 25 °C (77 °F) Replacement: CR2032 lithium coin cell (Allen-Bradley part number 2711P-RY2032)		
Memory System User	512 MB RAM and 512 MB storage 80 MB nonvolatile storage for applications		
Secure Digital (SD) card slot	One SD card slot for storing application files Replacement: Allen-Bradley part number 1784-SD1 (1 GB), 1784-SD2 (2 GB), 1784-SDHC8 (8 GB), and 1784-SDHC32 (32 GB)		
USB ports Host Device	One USB 2.0 high-speed host port (type A) support removal flash drives for storage One high-speed 1.0 device port (type B) supports connection to host computer		
Ethernet port Cat. Nos. with 21 Cat. Nos. with 22	One 10/100Base-T, Auto MDI/MDI-X Ethernet port with IEEE1588 support Two 10/100Base-T, Auto MDI/MDI-X Ethernet ports supporting star, linear, or DLR network topology		
Operating system	Windows CE includes FTP, VNC client server, ActiveX controls, PDF reader, third-party device support		
Firmware	PanelView Plus 7 Standard Series D is only compatible with version 13.x firmware and later		
Software	FactoryTalk View Studio for Machine Edition, version 8.0 or later, FactoryTalk ViewPoint, version 2.6 or later		
Electrical			
Input voltage, DC	24V DC nom (18...30V DC), nonisolated DC power supply		
Power consumption, DC	50 W max (2.1A at 24V DC)		
Power supply	DIN-rail power supply, AC-to-DC, 85...265V AC, 47...63 Hz Recommended Replacement: Allen-Bradley part number 2711P-RSACDIN		
Mechanical			
Weight, approx	0.85 kg (1.86 lb)	1.29 kg (2.84 lb)	1.82 kg (4.0 lb)
Dimensions, HxWxD, approx	170 x 212 x 56.5 mm (6.69 x 8.35 x 2.22 in.)	190 x 280 x 56.5 mm (7.48 x 11.02 x 2.22 in.)	252 x 297 x 56.5 mm (9.92 x 11.69 x 2.22 in.)
Cutout dimensions, HxW, approx.	142 x 184 mm (5.59 x 7.24 in.)	162 x 252 mm (6.38 x 9.92 in.)	224 x 269 mm (8.82 x 10.59 in.)

DRAFT

Product Dimensions

The table provides product dimensions. The 5.7-in. and 10.4-in. touch-screen terminals are shown for illustrative purposes. All other terminal sizes look similar. For information on proper mounting clamp installation, refer to the PanelView Plus 7 Standard Terminals User Manual, publication 2711P-UM007.

Figure 1 - PanelView Plus 7 Standard Terminals, Front View

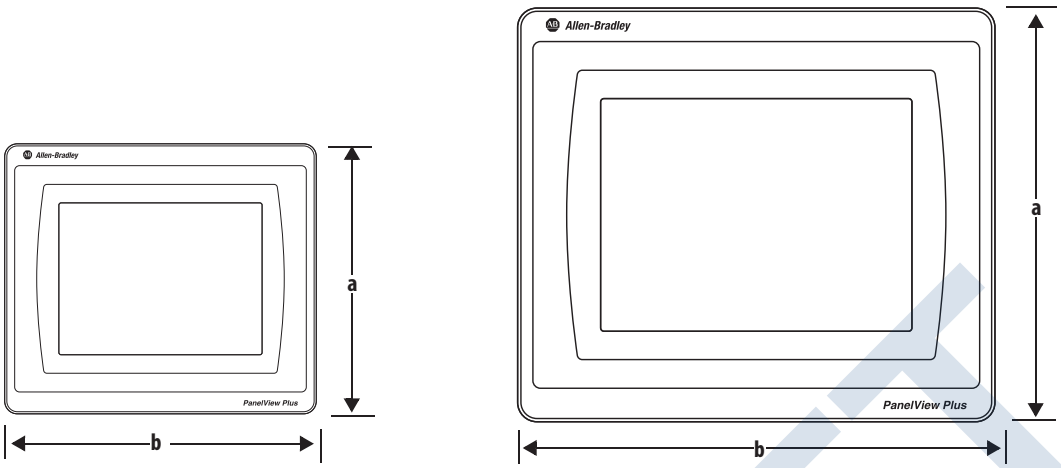

Figure 2 - PanelView Plus 7 Standard Terminals with Single Ethernet Port, Bottom View

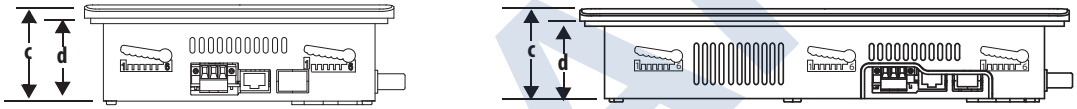

Figure 3 - PanelView Plus 7 Standard Terminals with Dual Ethernet Ports, Bottom View

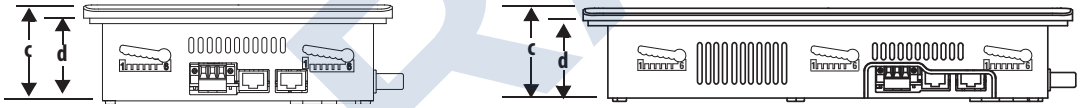

Table 6 - PanelView Plus 7 Standard Terminals Dimensions

Terminal Size	Input Type	Height (a) mm (in.)	Width (b) mm (in.)	Overall Depth (c) mm (in.)	Mounted Depth (d) mm (in.)
4.3 in.	Touch	110 (4.33)	135 (5.31)	56.5 (2.22)	50.14 (1.97)
5.7 in.	Touch	152 (5.98)	176 (6.93)	56.5 (2.22)	50.14 (1.97)
6.5 in.	Touch	170 (6.69)	212 (8.35)	56.5 (2.22)	50.14 (1.97)
9 in.	Touch	190 (7.48)	280 (11.02)	56.5 (2.22)	50.14 (1.97)
10.4 in.	Touch	252 (9.92)	297 (11.69)	56.5 (2.22)	50.14 (1.97)
12.1 in.	Touch	246 (9.69)	340 (13.39)	56.5 (2.22)	50.14 (1.97)
15 in.	Touch	318 (12.52)	381 (15.00)	56.5 (2.22)	50.14 (1.97)

When mounted in a panel, the front of the bezel extends less than 6.36 mm (0.25 in.) from the front of the panel.

DRAFT

HMI Software

All PanelView Plus 7 terminals are configured with FactoryTalk View Studio software and have an integrated runtime system called FactoryTalk View Machine Edition Station.

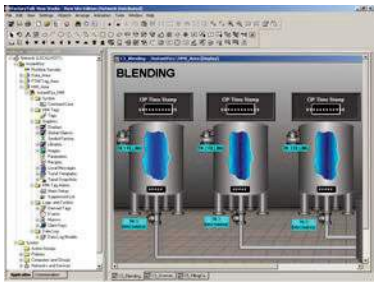

Machine Edition Station runs projects developed with FactoryTalk View Studio software and is included on all PanelView Plus 7 terminals.

Two versions of FactoryTalk View Studio software support application development for PanelView Plus 7 terminals.

Cat. No.[1]	Description
9701-VWSTMENE	FactoryTalk View Studio for Machine Edition software - Configuration software for developing and testing machine level human machine interface (HMI) applications. Includes RSLinx® Enterprise and KEPServer Enterprise software.
9701-VWSTENE	FactoryTalk View Studio software - Configuration software for developing and testing machine level and supervisory level human machine interface (HMI) applications.

(1) Order localized versions of the software by replacing EN in the catalog number with DE for German, FR for French, JP for Japanese, or ZH for Chinese.

You can import PanelView Standard/PanelBuilder™ 32 and PanelView *e* applications into FactoryTalk View Studio software as Machine Edition applications by using the Machine Edition Import Wizard. The Import Wizard steps you through a few options such as scaling to a new screen resolution size, and then converts objects, text, tags, and communication configurations to ones that are available in Machine Edition.



FactoryTalk ViewPoint software, an add-on to FactoryTalk View Studio software, allows plant managers, production supervisors, system integrators, and other key stakeholders to view and control real-time plant floor operations remotely from a web browser. FactoryTalk ViewPoint enabled displays are fully scalable and animated in the browser. The remote user can also view displays that are not the active display of the terminal.

Each PanelView Plus 7 terminal contains one license supporting a single client connection to the terminal. No additional software is required.

For a complete list of available HMI software, visit http://www.rockwellautomation.com/rockwellsoftware.

DRAFT

Additional Resources

These documents contain additional information concerning related products from Rockwell Automation. You can view or download publications at rok.auto/literature.

Resource	Description
PanelView Plus 7 Standard Terminals User Manual, publication 2711P-UM007	Provides details on how to install, configure, and operate the PanelView Plus 7 Standard terminals.
Industrial Automation Wiring and Grounding Guidelines, publication 1770-4.1	Provides general guidelines for installing a Rockwell Automation industrial system.
Product Certifications website, rok.auto/certifications.	Provides declarations of conformity, certificates, and other certification details.

DRAFT

Rockwell Automation Support

Use these resources to access support information.

Technical Support Center	Find help with how-to videos, FAQs, chat, user forums, Knowledgebase, and product notification updates.	rok.auto/support
Local Technical Support Phone Numbers	Locate the telephone number for your country.	rok.auto/phonesupport
Technical Documentation Center	Quickly access and download technical specifications, installation instructions, and user manuals.	rok.auto/techdocs
Literature Library	Find installation instructions, manuals, brochures, and technical data publications.	rok.auto/literature
Product Compatibility and Download Center (PCDC)	Download firmware, associated files (such as AOP, EDS, and DTM), and access product release notes.	rok.auto/pcdc

Documentation Feedback

Your comments help us serve your documentation needs better. If you have any suggestions on how to improve our content, complete the form at rok.auto/docfeedback.

DRAFT

Allen-Bradley, CompactLogix, ControlLogix,, expanding human possibility, FactoryTalk, PanelBuilder, PanelView, Rockwell Automation, and RSLinx are trademarks of Rockwell Automation, Inc.
EtherNet/IP is a trademark of ODVA, Inc.
SD is a trademark of SD-3C LLC.
Trademarks not belonging to Rockwell Automation are property of their respective companies.

Rockwell Automation maintains current product environmental compliance information on its website at rok.auto/pec.

Rockwell Otomasyon Ticaret A.Ş. Kar Plaza İş Merkezi E Blok Kat:6 34752, İçerenköy, İstanbul, Tel: +90 (216) 5698400 EEE Yönetmeliğine Uygundur

Connect with us.

rockwellautomation.com — expanding **human possibility**®

AMERICAS: Rockwell Automation, 1201 South Second Street, Milwaukee, WI 53204-2496 USA, Tel: (1) 414.382.2000, Fax: (1) 414.382.4444
EUROPE/MIDDLE EAST/AFRICA: Rockwell Automation NV, Pegasus Park, De Kleetlaan 12a, 1831 Diegem, Belgium, Tel: (32) 2 663 0600, Fax: (32) 2 663 0640
ASIA PACIFIC: Rockwell Automation, Level 14, Core F, Cyberport 3, 100 Cyberport Road, Hong Kong, Tel: (852) 2887 4788, Fax: (852) 2508 1846
UNITED KINGDOM: Rockwell Automation Ltd. Pitfield, Kiln Farm Milton Keynes, MK11 3DR, United Kingdom, Tel: (44)(1908) 838-800, Fax: (44)(1908) 261-917

Publication 2711P-TD008J-EN-P - March 2023
Supersedes Publication 2711P-TD008I-EN-P - March 2021

Copyright © 2023 Rockwell Automation, Inc. All rights reserved. Printed in the U.S.A.

User Manual

Original Instructions

Allen-Bradley

Stratix 2000 Ethernet Unmanaged Switches

Catalog Numbers 1783-US5T, 1783-US5TG, 1783-US4T1F, 1783-US4T1H, 1783-US8T, 1783-US6T2F, 1783-US6T2H, 1783-US7T1F, 1783-US7T1H, 1783-US6T2TG2F, 1783-US6T2TG2H, 1783-US8TG2GX, 1783-US16T, 1783-US16T2S

Topic	Page
Broadcast Storm Protection	3
DIP Switches	4
Status Indicators	4
Additional Resources	10

DRAFT

Important User Information

Read this document and the documents listed in the additional resources section about installation, configuration, and operation of this equipment before you install, configure, operate, or maintain this product. Users are required to familiarize themselves with installation and wiring instructions in addition to requirements of all applicable codes, laws, and standards.

Activities including installation, adjustments, putting into service, use, assembly, disassembly, and maintenance are required to be carried out by suitably trained personnel in accordance with applicable code of practice.

If this equipment is used in a manner not specified by the manufacturer, the protection provided by the equipment may be impaired.

In no event will Rockwell Automation, Inc. be responsible or liable for indirect or consequential damages resulting from the use or application of this equipment.

The examples and diagrams in this manual are included solely for illustrative purposes. Because of the many variables and requirements associated with any particular installation, Rockwell Automation, Inc. cannot assume responsibility or liability for actual use based on the examples and diagrams.

No patent liability is assumed by Rockwell Automation, Inc. with respect to use of information, circuits, equipment, or software described in this manual.

Reproduction of the contents of this manual, in whole or in part, without written permission of Rockwell Automation, Inc., is prohibited

Throughout this manual, when necessary, we use notes to make you aware of safety considerations.

	**WARNING:** Identifies information about practices or circumstances that can cause an explosion in a hazardous environment, which may lead to personal injury or death, property damage, or economic loss.
	**ATTENTION:** Identifies information about practices or circumstances that can lead to personal injury or death, property damage, or economic loss. Attentions help you identify a hazard, avoid a hazard, and recognize the consequence.
IMPORTANT	Identifies information that is critical for successful application and understanding of the product.

Labels may also be on or inside the equipment to provide specific precautions.

	**SHOCK HAZARD:** Labels may be on or inside the equipment, for example, a drive or motor, to alert people that dangerous voltage may be present.
	**BURN HAZARD:** Labels may be on or inside the equipment, for example, a drive or motor, to alert people that surfaces may reach dangerous temperatures.
	**ARC FLASH HAZARD:** Labels may be on or inside the equipment, for example, a motor control center, to alert people to potential Arc Flash. Arc Flash will cause severe injury or death. Wear proper Personal Protective Equipment (PPE). Follow ALL Regulatory requirements for safe work practices and for Personal Protective Equipment (PPE).

DRAFT

Broadcast Storm Protection

A broadcast storm occurs when a network is overwhelmed by continuous multicast or broadcast traffic typically caused by loops in the network. A severe broadcast storm can block all other network traffic. Stratix® 2000 switches provide protection against broadcast storms. When the broadcast storm protection feature is enabled, the switch drops incoming broadcast traffic if the traffic exceeds a certain threshold.

Stratix 2000 switches use two methods to determine the threshold for incoming broadcast traffic, depending on the switch catalog number:

- Packet-based threshold—The switch counts the number of broadcast packets received within a time cycle. Once the number of broadcast packets reaches the maximum number of packets in the time cycle, the port drops any excess broadcast packets. For threshold values based on packet number, see Table 1.
- Rate-based threshold—The switch tracks the bandwidth of each port based on a maximum bit rate. Once a port reaches the maximum bit rate, the port drops any excess broadcast packets. For threshold values based on rate, see Table 2.

Table 1 - Packet-based Thresholds

Cat. No.	Broadcast Storm Threshold (Packets per Second)
1783-US5T	20 pps for 10 Mbps per port; 200 pps for 100 Mbps per port
1783-US4T1F	20 pps for 10 Mbps per port; 200 pps for 100 Mbps per port
1783-US4T1H	20 pps for 10 Mbps per port; 200 pps for 100 Mbps per port
1783-US8T	20 pps for 10 Mbps per port; 200 pps for 100 Mbps per port
1783-US6T2F	20 pps for 10 Mbps per port; 200 pps for 100 Mbps per port
1783-US6T2H	20 pps for 10 Mbps per port; 200 pps for 100 Mbps per port
1783-US7T1F	20 pps for 10 Mbps per port; 200 pps for 100 Mbps per port
1783-US7T1H	20 pps for 10 Mbps per port; 200 pps for 100 Mbps per port
1783-US6T2TG2F	128 pps for 10/100/1000 Mbps
1783-US6T2TG2H	128 pps for 10/100/1000 Mbps
1783-US8TG2GX	128 pps for 10/100/1000 Mbps

Table 2 - Rate-based Thresholds

Cat. No.	Broadcast Storm Threshold
1783-US16T	10 Mbps per port
1783-US16T2S	10 Mbps per port
1783-US5TG	25 Mbps per port

You can enable or disable broadcast storm protection by using DIP switch SW1 on the top panel of the switch:

- To enable the feature, set SW1 to the On position and restart the switch.
- To disable the feature, set SW1 to the Off position. By default, the feature is disabled.

DRAFT

DIP Switches

There are two DIP switches on the top panel of the switches. Each switch has On and Off states.

IMPORTANT To activate DIP switch settings, you must restart the switch.

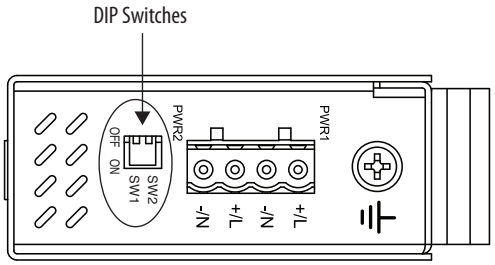

32695-M

The function of the DIP switches varies by catalog number.

Cat. No.	DIP Switch	Status	Description	Default
1783-US5T, 1783-US4T1F, 1783-US4T1H, 1783-US8T, 1783-US6T2F, 1783-US6T2H, 1783-US7T1F, 1783-US7T1H, 1783-US16T, 1783-US16T2S	SW1	On	Enables broadcast storm protection.	Off
		Off	Disables broadcast storm protection.	
	SW2	Reserved		Off
1783-US6T2TG2F 1783-US6T2TG2H	SW1	On	Enables broadcast storm protection.	Off
		Off	Disables broadcast storm protection.	
	SW2	On	Sets the SFP fiber port speed to 100 Mbps (100Base-FX). SW2 must remain in the On position.	On
		Off	Reserved	
1783-US5TG 1783-US8TG2GX	SW1	On	Enables broadcast storm protection.	Off
		Off	Disables broadcast storm protection.	
	SW2	On	Transmits jumbo frames up to 10 KB on the 1783-US5TG switch and up to 9.6 KB on the 1783-US8TG2GX switch.	Off
		Off	Drops jumbo frames.	

Status Indicators

The status indicators on the switches indicate the following:

- Status of each power supply
- Status of port speed
- Status of network connection or activity

The function of the status indicators varies by catalog number:

- 5- and 8-port Fast Ethernet Switches on page 5
- 10-port Fast Ethernet Switches on page 6
- 16- and 18-port Fast Ethernet Switches on page 7
- 5- and 10-port Gigabit Ethernet Switches on page 8

DRAFT

5- and 8-port Fast Ethernet Switches

These illustrations show the status indicators on the 1783-US5T, 1783-US6T2F, and 1783-US7T1F switches. The status indicators on the 1783-US4T1F, 1783-US4T1H, 1783-US8T, 1783-US6T2H, 1783-US7T1H switches function the same as these switches.

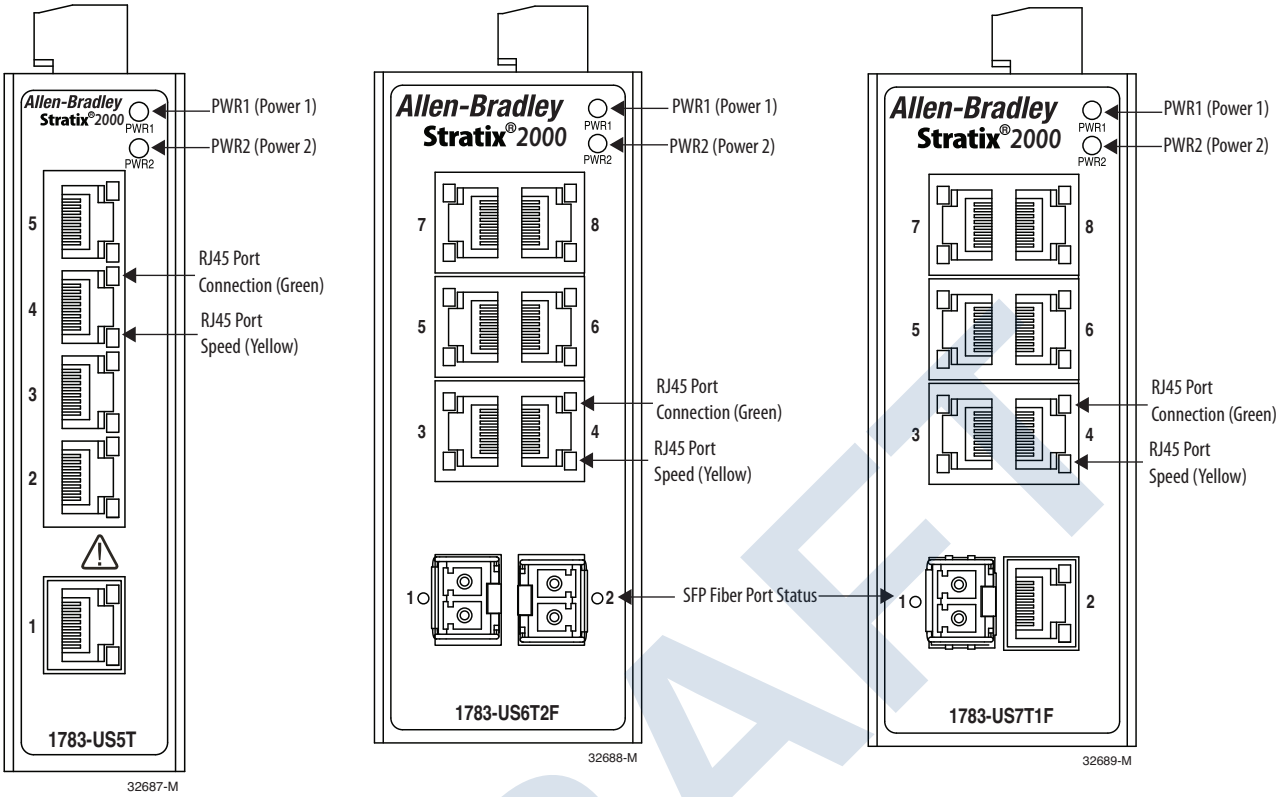

Indicator	Status	Description
PWR1	On	PWR1 is connected and operates normally.
	Off	PWR1is not connected or operates abnormally.
PWR2	On	PWR2 is connected and operates normally.
	Off	PWR2 is not connected or operates abnormally.
RJ45 port connection (green)	On	The port has an operating network connection.
	Blinking(1)	There is network activity on the port.
	Off	The port has no network connection.
RJ45 port speed (yellow)	On	The port is operating at 100 Mbps (100Base-TX).
	Off	The port is operating at 10 Mbps, or the port has no network connection.
SFP fiber port status (green)	On	The port has an operating network connection.
	Blinking(1)	There is network activity on the port.
	Off	The port has no network connection.

(1) For blink rate, see page 9.

DRAFT

10-port Fast Ethernet Switches

This illustration shows the status indicators on the 1783-US6T2TG2F and 1783-US6T2TG2H switches.

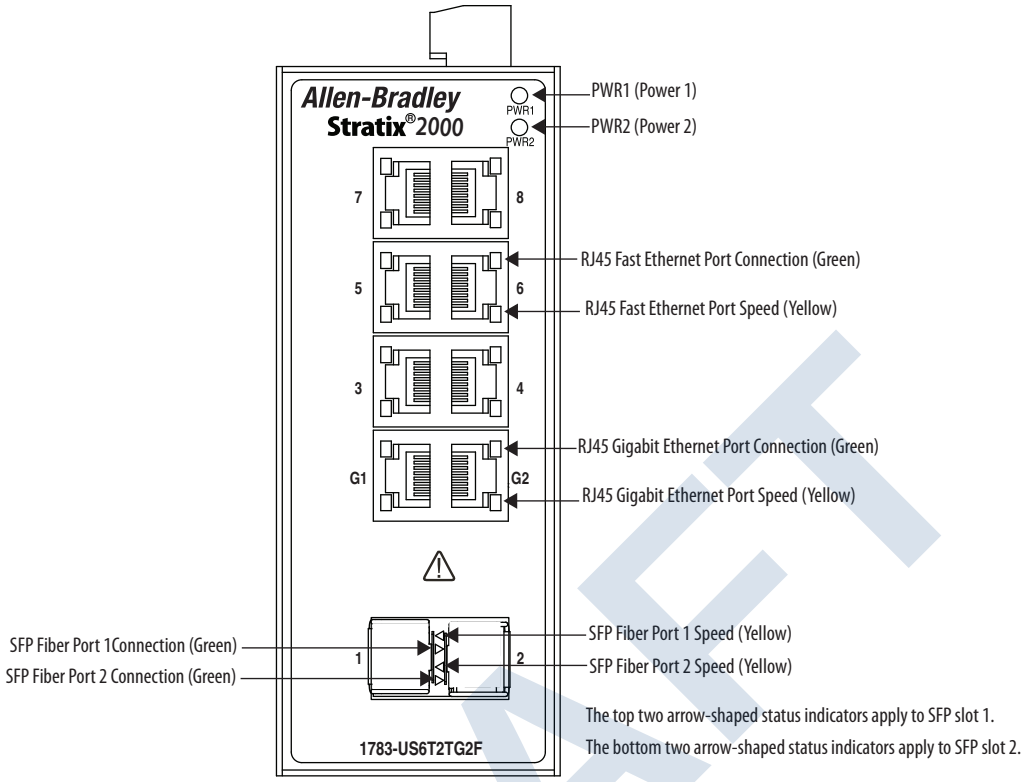

Indicator	Status	Description
PWR1	On	PWR1 is connected and operates normally.
	Off	PWR1is not connected or operates abnormally.
PWR2	On	PWR2 is connected and operates normally.
	Off	PWR2 is not connected or operates abnormally.
RJ45 Fast Ethernet port connection (green)	On	The port has an operating network connection.
	Blinking	There is network activity on the port.
	Off	The port has no network connection. For the blink rate, see page 9.
RJ45 Fast Ethernet port speed (yellow)	On	The port is operating at 100 Mbps (100Base-TX).
	Off	The port is operating at 10 Mbps, or the port has no network connection.
RJ45 Gigabit Ethernet port connection (green)	On	The port has an operating network connection.
	Blinking	There is network activity on the port. For the blink rate, see page 9.
	Off	The port has no network connection.
RJ45 Gigabit Ethernet port speed (yellow)	On	The port is operating at 1000 Mbps (1000Base-TX).
	Off	The port is operating at 10/100 Mbps (10/100Base-T(X)), or the port has no network connection.
SFP fiber port connection	On	The port has an operating network connection.
	Blinking	There is network activity on the port. For the blink rate, see page 9.
	Off	The port has no network connection.
SFP fiber port speed (yellow)	On	The port is operating at 1000 Mbps (1000Base-X).
	Off	The port is operating at 100 Mbps (100Base-FX), or the port has no network connection. **IMPORTANT:** By default, the switch operates at 100 Mbps and the SFP fiber port speed indicator is Off.

DRAFT

16- and 18-port Fast Ethernet Switches

These illustrations show the status indicators on the 1783-US16T and 1783-US16T2S switches.

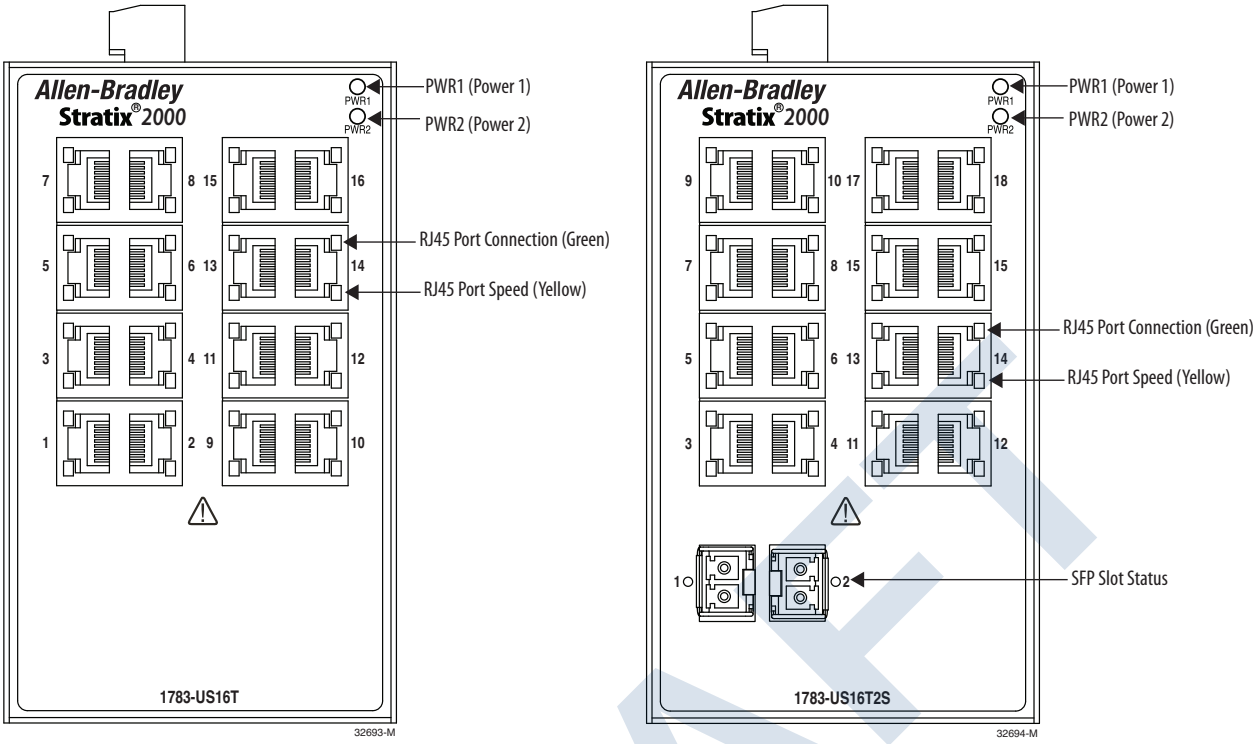

Indicator	Status	Description
PWR1	On	PWR1 is connected and operates normally.
	Off	PWR1is not connected or operates abnormally.
PWR2	On	PWR2 is connected and operates normally.
	Off	PWR2 is not connected or operates abnormally.
RJ45 port connection (green)	On	The port has an operating network connection.
	Blinking(2)	There is network activity on the port.
	Off	The port has no network connection.
RJ45 port speed (yellow)	On	The port is operating at 100 Mbps (100Base-TX).
	Off	The port is operating at 10 Mbps, or the port has no network connection.
SFP slot status(1)	On	The port has an operating network connection.
	Blinking(2)	There is network activity on the port.
	Off	The port has no network connection.

(1) Available only on 1783-US16T2S switches.
(2) For blink rate, see page 9.

DRAFT

5- and 10-port Gigabit Ethernet Switches

These illustrations show the status indicators on the 1783-US5TG and 1783-US8TG2GX switches.

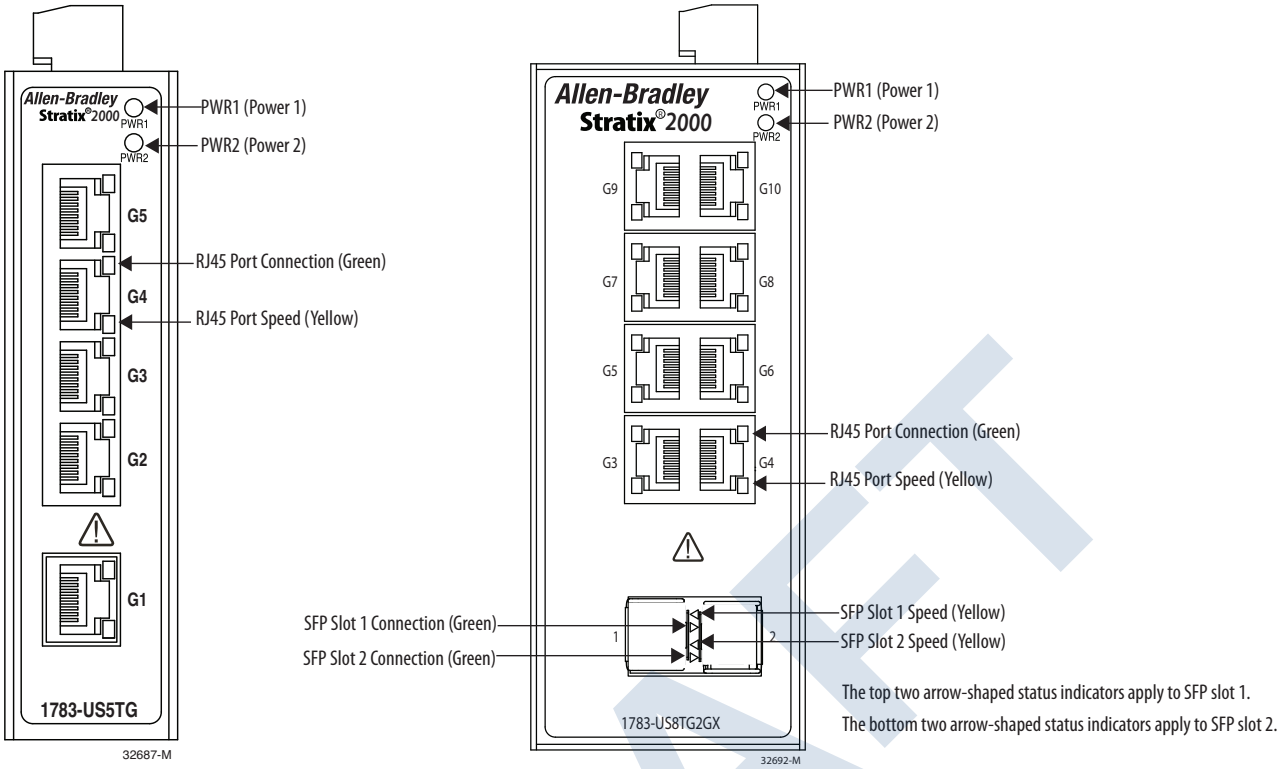

Indicator	Status	Description
PWR1	On	PWR1 is connected and operates normally.
	Off	PWR1is not connected or operates abnormally.
PWR2	On	PWR2 is connected and operates normally.
	Off	PWR2 is not connected or operates abnormally.
RJ45 port connection (green)	On	The port has an operating network connection.
	Blinking	There is network activity on the port.
	Off	The port has no network connection.
RJ45 port speed (yellow)	On	The port is operating at 1000 Mbps (1000Base-TX).
	Off	The port is operating at 10/100 Mbps (10/100Base-TX), or the port has no network connection.
SFP slot speed (yellow)(1)	On	The port is operating at 1000 Mbps (1000Base-X).
	Off	The port is operating at 100 Mbps (100Base-FX), or the port has no network connection.
SFP slot connection (green)(1)	On	The port has an operating network connection.
	Blinking	There is network activity on the port.
	Off	The port has no network connection.

(1) Available only on 1783-US8TG2GX switches.

DRAFT

Status Indicator Blink Rate

A port status indicator blinks to indicate network activity on the port. The rate at which a status indicator blinks varies by catalog number.

Cat. No.	Rate
1783-US5T	105 ms
1783-US5TG	84 ms
1783-US4T1F	105 ms
1783-US4T1H	105 ms
1783-US8T	105 ms
1783-US6T2F	105 ms
1783-US6T2H	105 ms
1783-US7T1F	105 ms
1783-US7T1H	105 ms
1783-US6T2TG2F	100 ms
1783-US6T2TG2H	100 ms
1783-US8TG2GX	100 ms
1783-US16T	42 ms
1783-US16T2S	42 ms

DRAFT

Additional Resources

These documents contain additional information concerning related products from Rockwell Automation.

Resource	Description
Stratix 2000 Ethernet Unmanaged Switches Installation Instructions, publication 1783-IN003	Describes how to install Stratix 2000 switches.
Stratix Ethernet Device Specifications Technical Data, publication 1783-TD001	Provides specification information for Stratix 2000 switches and other Ethernet devices.
Industrial Automation Wiring and Grounding Guidelines, publication 1770-4.1	Provides general guidelines for installing a Rockwell Automation industrial system.
Product Certifications website, http://www.rockwellautomation.com/global/certification/overview.page	Provides declarations of conformity, certificates, and other certification details.

You can view or download publications at http://www.rockwellautomation.com/global/literature-library/overview.page. To order paper copies of technical documentation, contact your local Allen-Bradley distributor or Rockwell Automation sales representative.

Rockwell Automation Support

Use the following resources to access support information.

Technical Support Center	Knowledgebase Articles, How-to Videos, FAQs, Chat, User Forums, and Product Notification Updates.	https://rockwellautomation.custhelp.com/
Local Technical Support Phone Numbers	Locate the phone number for your country.	http://www.rockwellautomation.com/global/support/get-support-now.page
Direct Dial Codes	Find the Direct Dial Code for your product. Use the code to route your call directly to a technical support engineer.	http://www.rockwellautomation.com/global/support/direct-dial.page
Literature Library	Installation Instructions, Manuals, Brochures, and Technical Data.	http://www.rockwellautomation.com/global/literature-library/overview.page
Product Compatibility and Download Center (PCDC)	Get help determining how products interact, check features and capabilities, and find associated firmware.	http://www.rockwellautomation.com/global/support/pcdc.page

DRAFT

Rockwell Automation maintains current product environmental information on its website at http://www.rockwellautomation.com/rockwellautomation/about-us/sustainability-ethics/product-environmental-compliance.page.

Allen-Bradley, Rockwell Automation, Rockwell Software, and Stratix are trademarks of Rockwell Automation, Inc.
Trademarks not belonging to Rockwell Automation are property of their respective companies.

Rockwell Otomasyon Ticaret A.Ş., Kar Plaza İş Merkezi E Blok Kat:6 34752 İçerenköy, İstanbul, Tel: +90 (216) 5698400

www.rockwellautomation.com

Power, Control and Information Solutions Headquarters

Americas: Rockwell Automation, 1201 South Second Street, Milwaukee, WI 53204-2496 USA, Tel: (1) 414.382.2000, Fax: (1) 414.382.4444
Europe/Middle East/Africa: Rockwell Automation NV, Pegasus Park, De Kleetlaan 12a, 1831 Diegem, Belgium, Tel: (32) 2 663 0600, Fax: (32) 2 663 0640
Asia Pacific: Rockwell Automation, Level 14, Core F, Cyberport 3, 100 Cyberport Road, Hong Kong, Tel: (852) 2887 4788, Fax: (852) 2508 1846

Publication 1783-UM011B-EN-P - September 2017
Supersedes Publication 1783-UM011A-EN-P - April 2017

Copyright © 2017 Rockwell Automation, Inc. All rights reserved. Printed in the U.S.A.

PULS

DIMENSION CP-Series

CP5.241, CP5.241-C1, CP5.241-S1, CP5.241-S2, CP5.242

24V, 5A, 120W, SINGLE PHASE INPUT



POWER SUPPLY

- AC 100-240V Wide-range Input
- Width only 32mm
- Efficiency up to 94.3%
- Excellent Partial Load Efficiency
- 20% Output Power Reserves
- Easy Fuse Breaking – 3 times nominal current for 12ms
- Safe Hiccup^{PLUS} Overload Mode
- Active Power Factor Correction (PFC)
- Minimal Inrush Current Surge
- Full Power Between -25°C and +60°C
- DC-OK Relay Contact
- 3 Year Warranty

PRODUCT DESCRIPTION

The Dimension CP-Series are cost optimized power supplies without compromising quality, reliability and performance. The CP-Series is part of the DIMENSION power supply family.

The CP5.241 power supplies come with three connection terminal options: screw, spring-clamp or push-in terminals, which are optimized for automated wiring.

The CP5.241-C1 is equipped with conformal coated pc-boards preferred for the use in harsh environments and the CP5.242 features an enhanced DC input voltage range.

The most outstanding features of these units are the small size, the high efficiency, the electronic inrush current limitation, active PFC and the wide operational temperature range. The devices have a power reserve of 20% included, which may even be used continuously at temperatures up to +45°C. Additionally, they can deliver 3 times the nominal output current for 12ms which helps to trip fuses on faulty output branches.

High immunity to transients and power surges as well as low electromagnetic emission, a DC-OK signal contact for remote monitoring, and a large international approval package for a variety of applications makes this unit suitable for nearly every situation.

SHORT-FORM DATA

Output voltage	DC 24V	Nominal
Adjustment range	24 - 28V	Factory setting 24.1V
Output current	6.0 - 5.1A	Below +45°C ambient
	5.0 – 4.3A	At +60°C ambient
	3.8 – 3.2A	At +70°C ambient
	Derate linearly between +45°C and +70°C	
Input voltage AC	AC 100-240V	-15%/+10%
Mains frequency	50-60Hz	±6%
Input current AC	1.09 / 0.6A	At 120 / 230Vac
Power factor	0.98 / 0.91	At 120 / 230Vac
Input voltage DC	DC 110-150V ±20%	For CP5.241 (-xx)
	DC 110-300V ±20%	For CP5.242
Input current DC	1.21 / 0.43A	At 110 / 300Vdc
AC Inrush current	4 / 4A	At 120 / 230Vac
Efficiency	93.6 / 94.3%	At 120 / 230Vac
Losses	8.2 / 7.3W	At 120 / 230Vac
Hold-up time	35 / 35ms	At 120 / 230Vac
Temperature range	-25°C to +70°C	
Size (WxHxD)	32x124x102mm	Without DIN-rail
Weight	440g / 0.97lb	

ORDER NUMBERS

Power Supply	**CP5.241**	Screw terminals
	CP5.241-C1	Screw terminals and conformal coated pc-boards
	CP5.241-S1	Spring-clamp terminals
	CP5.241-S2	Push-in terminals
	CP5.242	Screw terminals and enhanced DC input
Mechanical Accessory		
	ZM10.WALL	Wall/Panel mount bracket

MAIN APPROVALS

For details or a complete approval list see chapter 19.

IECEE CB SCHEME
IEC 62368-1
IEC 61010-1
IEC 61010-2-201

c UL US LISTED IND. CONT. EQ.
planned

CE

DRAFT

INDEX

	Page
1. Intended Use	3
2. Installation Instructions	3
3. AC-Input	5
4. DC-Input	6
5. Input Inrush Current	7
6. Output	8
7. Hold-up Time	10
8. DC-OK Relay Contact	10
9. Efficiency and Power Losses	11
10. Functional Diagram	12
11. Front Side and User Elements	12
12. Connection Terminals	13
13. Lifetime Expectancy	14
14. MTBF	14
15. EMC	15
16. Environment	16
17. Safety and Protection Features	17
18. Dielectric Strength	18
19. Approvals and Fulfilled Standards	19
20. Regulatory Compliance	19
21. Physical Dimensions and Weight	20
22. Accessories	21
22.1. ZM10.WALL – Wall/Panel Mount Bracket	21
22.2. YR2.DIODE - Redundancy Module	22
22.3. YR20.242 - Redundancy Module	22
22.4. YR20.246 - Redundancy Module with Automated Load Sharing	22
22.5. UF20.241 Buffer Module	23
23. Application Notes	24
23.1. Peak Current Capability	24
23.2. Charging of Batteries	25
23.3. Series Operation	25
23.4. Parallel Use to Increase Output Power	25
23.5. Parallel Use for Redundancy	26
23.6. Operation on Two Phases	28
23.7. Use in a Tightly Sealed Enclosure	28
23.8. Mounting Orientations	29

The information given in this document is correct to the best of our knowledge and experience at the time of publication. If not expressly agreed otherwise, this information does not represent a warranty in the legal sense of the word. As the state of our knowledge and experience is constantly changing, the information in this data sheet is subject to revision. We therefore kindly ask you to always use the latest issue of this document (available under www.pulspower.com).

No part of this document may be reproduced or utilized in any form without our prior permission in writing.

Packaging and packaging aids can and should always be recycled. The product itself may not be disposed of as domestic refuse.

DRAFT

TERMINOLOGY AND ABREVIATIONS

PE and ⏚ symbol	PE is the abbreviation for **P**rotective **E**arth and has the same meaning as the symbol ⏚.
Earth, Ground	This document uses the term "earth" which is the same as the U.S. term "ground".
T.b.d.	To be defined, value or description will follow later.
AC 230V	A figure displayed with the AC or DC before the value represents a nominal voltage with standard tolerances (usually ±15%) included. E.g.: DC 12V describes a 12V battery disregarding whether it is full (13.7V) or flat (10V)
230Vac	A figure with the unit (Vac) at the end is a momentary figure without any additional tolerances included.
50Hz vs. 60Hz	As long as not otherwise stated, AC 230V parameters are valid at 50Hz mains frequency.
may	A key word indicating flexibility of choice with no implied preference.
shall	A key word indicating a mandatory requirement.
should	A key word indicating flexibility of choice with a strongly preferred implementation.

1. INTENDED USE

This device is designed for installation in an enclosure and is intended for commercial use, such as in industrial control, process control, monitoring and measurement equipment or the like.

Do not use this device in equipment where malfunction may cause severe personal injury or threaten human life.

If this device is used in a manner outside of its specification, the protection provided by the device may be impaired.

2. INSTALLATION INSTRUCTIONS

⚠ Risk of electrical shock, fire, personal injury or death.

- Turn power off before working on the device. Protect against inadvertent re-powering.
- Do not modify or repair the unit.
- Do not open the unit as high voltages are present inside.
- Use caution to prevent any foreign objects from entering the housing.
- Do not use in wet locations or in areas where moisture or condensation can be expected.
- Do not touch during power-on, and immediately after power-off. Hot surfaces may cause burns.

Obey the following installation instructions:

This device may only be installed and put into operation by qualified personnel.

This device does not contain serviceable parts. The tripping of an internal fuse is caused by an internal defect.

If damage or malfunction should occur during installation or operation, immediately turn power off and send unit to the factory for inspection.

Install the device in an enclosure providing protection against electrical, mechanical and fire hazards.

Install the device onto a DIN-rail according to EN 60715 with the input terminals on the bottom of the device. Other mounting orientations require a reduction in output current.

Make sure that the wiring is correct by following all local and national codes. Use appropriate copper cables that are designed for a minimum operating temperature of 60°C for ambient temperatures up to +45°C, 75°C for ambient temperatures up to +60°C and 90°C for ambient temperatures up to +70°C. Ensure that all strands of a stranded wire enter the terminal connection. Use ferrules for wires on the input terminals. Unused screw terminals should be securely tightened.

The device is designed for pollution degree 2 areas in controlled environments. No condensation or frost is allowed.

The enclosure of the device provides a degree of protection of IP20.

The isolation of the device is designed to withstand impulse voltages of overvoltage category III according to IEC 60664-1.

The device is designed as “Class of Protection I” equipment according to IEC 61140. Do not use without a proper PE (Protective Earth) connection.

The device is suitable to be supplied from TN, TT or IT mains networks. The continuous voltage between the input terminal and the PE potential must not exceed 300Vac.

The input can also be powered from batteries or similar DC sources. The continuous voltage between the supply voltage and the PE/ground potential must not exceed 360Vdc.

A disconnecting means shall be provided for the input of the device.

The device is designed for convection cooling and does not require an external fan. Do not obstruct airflow and do not cover ventilation grid!

The device is designed for altitudes up to 5000m (16400ft). Above 2000m (6560ft) a reduction in output current and over voltage category is required.

DRAFT

Keep the following minimum installation clearances: 40mm on top, 20mm on the bottom, 5mm left and right side. Increase the 5mm to 15mm in case the adjacent device is a heat source. When the device is permanently loaded with less than 50%, the 5mm can be reduced to zero.

The device is designed, tested and approved for branch circuits up to 32A (IEC) and 30A (UL) without additional protection device. If an external fuse is utilized, do not use circuit breakers smaller than 6A B- or C-Characteristic to avoid a nuisance tripping of the circuit breaker.

The maximum surrounding air temperature is +70°C (+158°F). The operational temperature is the same as the ambient or surrounding air temperature and is defined 2cm below the device.

The device is designed to operate in areas between 5% and 95% relative humidity.

DRAFT

3. AC-INPUT

The device is suitable to be supplied from TN, TT or IT mains networks with AC voltage. For suitable DC supply voltages see chapter 4.

AC input	Nom.	AC 100-240V	
AC input range	Min.	85-264Vac	Continuous operation
	Min.	264-300Vac	Occasionally for maximal 500ms
Allowed voltage L or N to earth	Max.	300Vac	Continuous, according to IEC 60664-1
Input frequency	Nom.	50–60Hz	±6%
Turn-on voltage	Typ.	80Vac	Steady-state value, see Fig. 3-1
Shut-down voltage	Typ.	74Vac	Steady-state value, see Fig. 3-1
External input protection	See recommendations in chapter 2.		

		AC 100V	AC 120V	AC 230V	
Input current	Typ.	1.30A	1.09A	0.60A	At 24V, 5A, see Fig. 3-3
Power factor	Typ.	0.99	0.98	0.91	At 24V, 5A, see Fig. 3-4
Crest factor	Typ.	1.7	1.8	2.2	At 24V, 5A, The crest factor is the mathematical ratio of the peak value to RMS value of the input current waveform.
Start-up delay	Typ.	420ms	380ms	385ms	See Fig. 3-2
Rise time	Typ.	80ms	80ms	80ms	At 24V, 5A const. current load, 0mF load capacitance, see Fig. 3-2
	Typ.	100ms	100ms	110ms	At 24V, 5A const. current load, 5mF load capacitance,, see Fig. 3-2
Turn-on overshoot	Max.	200mV	200mV	200mV	See Fig. 3-2

Fig. 3-1 **Input voltage range**

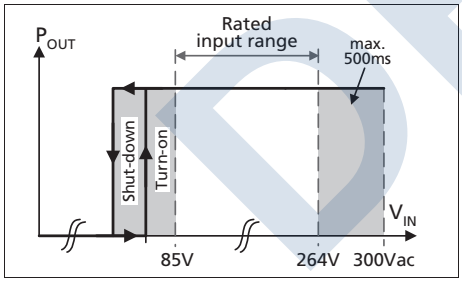

Fig. 3-2 **Turn-on behavior, definitions**

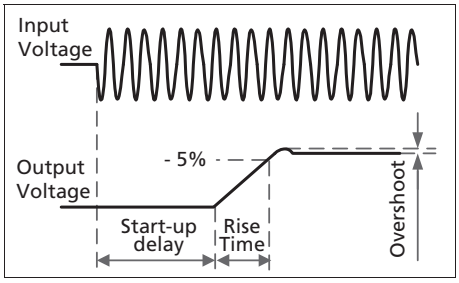

Fig. 3-3 **Input current vs. output current at 24V output voltage**

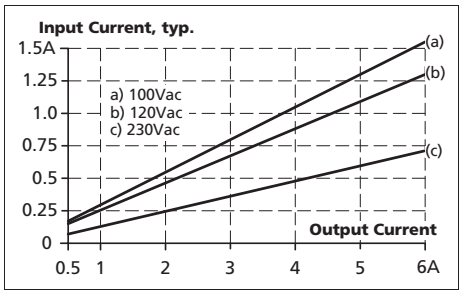

Fig. 3-4 **Power factor vs. output current at 24V output voltage**

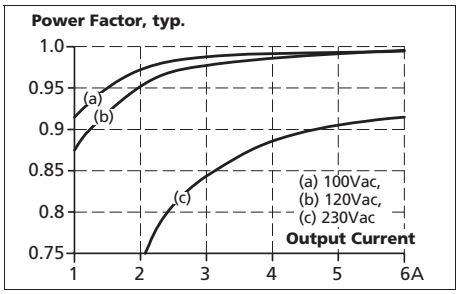

DRAFT

4. DC-INPUT

The device is suitable to be supplied from a DC input voltage. Use a battery or a similar DC source. A supply from the intermediate DC-bus of a frequency converter is not recommended and can cause a malfunction or damage the unit.

Connect +pole to L, –pole to N and the PE terminal to an earth wire or to the machine ground.

DC input	Nom.	DC 110-150V	±20% For CP5.241, CP5.241-C1, CP5.241-S1, CP5.241-S2
	Nom.	DC 110-300V	±20% For CP5.242
DC input range	Min.	88-180Vdc	Continuous operation For CP5.241, CP5.241-C1, CP5.241-S1, CP5.241-S2
		88-360Vdc	Continuous operation for CP5.242
DC input current	Typ.	1.21A	At 110Vdc, at 24V, 5A
	Typ.	0.43A	At 300Vdc, at 24V, 5A
Allowed Voltage (+) or (-) input to Earth	Max.	360Vdc	Continuous according to IEC 60664-1
Turn-on voltage	Typ.	74Vdc	Steady state value
Shut-down voltage	Typ.	67Vdc	Steady state value

Fig. 4-1 **Wiring for DC Input**

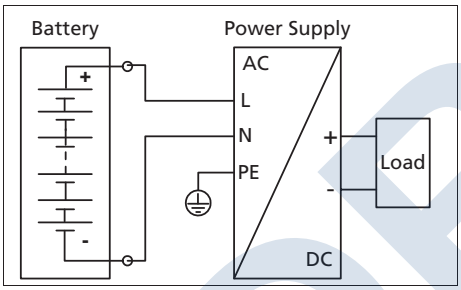

DRAFT

5. INPUT INRUSH CURRENT

An active inrush limitation circuit (NTCs, which are bypassed by a relay contact) limits the input inrush current after turn-on of the input voltage.

The charging current into EMI suppression capacitors is disregarded in the first microseconds after switch-on.

		AC 100V	AC 120V	AC 230V	
Inrush current	Max.	$8A_{peak}$	$7A_{peak}$	$7A_{peak}$	At 40°C, cold start
	Typ.	$5A_{peak}$	$4A_{peak}$	$4A_{peak}$	At 25°C, cold start
	Typ.	$5A_{peak}$	$5A_{peak}$	$6A_{peak}$	At 40°C, cold start
Inrush energy	Max.	$0.4A^2s$	$0.5A^2s$	$1A^2s$	At 40°C, cold start

Fig. 5-1 **Typical turn-on behaviour at nominal load, 120Vac input and 25°C ambient**

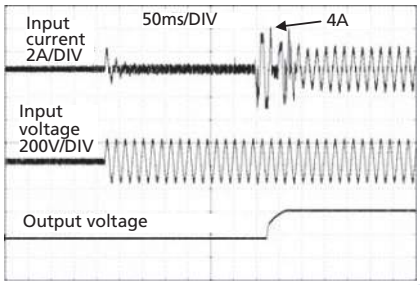

Fig. 5-2 **Typical turn-on behaviour at nominal load, 230Vac input and 25°C ambient**

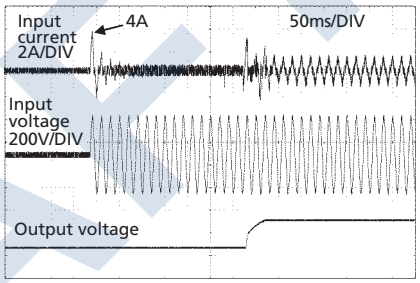

DRAFT

6. OUTPUT

The output provides a SELV/PELV rated voltage, which is galvanically isolated from the input voltage.

The output is designed to supply any kind of loads, including capacitive and inductive loads. If extreme large capacitors, such as EDLCs (electric double layer capacitors or "UltraCaps") with a capacitance > 0.3F are connected to the output, the unit might charge the capacitor in an intermittent mode.

The output is electronically protected against overload, no-load and short-circuits. In case of a protection event, audible noise may occur.

Output voltage	Nom.	24V	
Adjustment range	Min.	24-28V	Guaranteed value
	Max.	30.0V	This is the maximum output voltage which can occur at the clockwise end position of the potentiometer due to tolerances. It is not a guaranteed value which can be achieved.
Factory settings	Typ.	24.1V	±0.2%, at full load and cold unit
Line regulation	Max.	10mV	Between 85 and 300Vac
Load regulation	Max.	50mV	Between 0A and 6A, static value, see Fig. 6-1
Ripple and noise voltage	Max.	50mVpp	Load >0.2A, Bandwidth 20Hz to 20MHz, 50Ohm
	Max.	200mVpp	Load <0.2A, Bandwidth 20Hz to 20MHz, 50Ohm
Output current	Nom.	6A[1)]	At 24V and an ambient temperatures below 45°C
	Nom.	5A	At 24V and 60°C ambient temperature
	Nom.	3.8A	At 24V and 70°C ambient temperature
	Nom.	5.1A[1)]	At 28V and an ambient temperatures below 45°C
	Nom.	4.3A	At 28V and 60°C ambient temperature
	Nom.	3.2A	At 28V and 70°C ambient temperature
		Derate linearely between +45°C and +70°	
Fuse breaking current	Typ.	15A	Up to 12ms once every five seconds, see Fig. 6-2. The fuse braking current is an enhanced transient current which helps to trip fuses on faulty output branches. The output voltage stays above 20V.
Overload behaviour		Continuous current	For output voltage above 13Vdc, see Fig. 6-1
		Intermittent current[2)]	For output voltage below 13Vdc, see Fig. 6-1
Overload/ short-circuit current	Max.	7.2A	Continuous current, see Fig. 6-1
	Typ.	9A	Intermitted current peak value for typ. 1s Load impedance 50mOhm, see Fig. 6-3 Discharge current of output capacitors is not included.
	Max.	3.5A	Intermitted current average value (R.M.S.) Load impedance 50mOhm, see Fig. 6-3
Output capacitance	Typ.	1 800µF	Included inside the power supply
Back-feeding loads	Max.	35V	The unit is resistant and does not show malfunctioning when a load feeds back voltage to the power supply. It does not matter whether the power supply is on or off. The absorbing energy can be calculated according to the built-in large sized output capacitor.

1) This current is also available for temperatures up to +70°C with a duty cycle of 10% and/ or not longer than 1 minute every 10 minutes.

2) At heavy overloads (when output voltage falls below 13V), the power supply delivers continuous output current for 1s. After this, the output is switched off for approx. 9s before a new start attempt is automatically performed. This cycle is repeated as long as the overload exists. If the overload has been cleared, the device will operate normally. See Fig. 6-3.

DRAFT

Fig. 6-1 **Output voltage vs. output current, typ.**

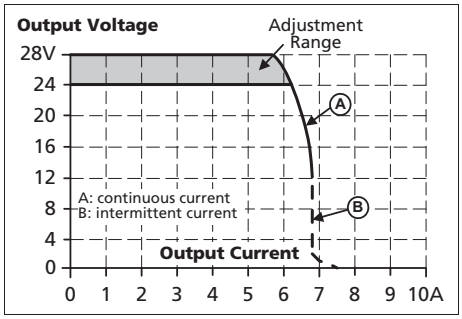

Fig. 6-2 **Dynamic output current capability, typ.**

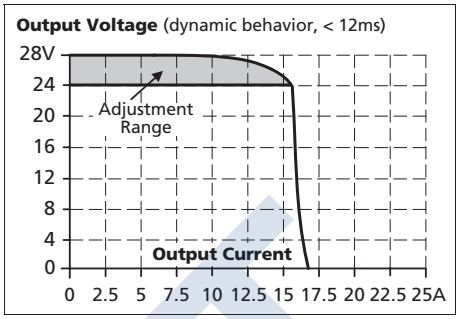

Fig. 6-3 **Short-circuit on output, Hiccup^{PLUS} mode, typ.**

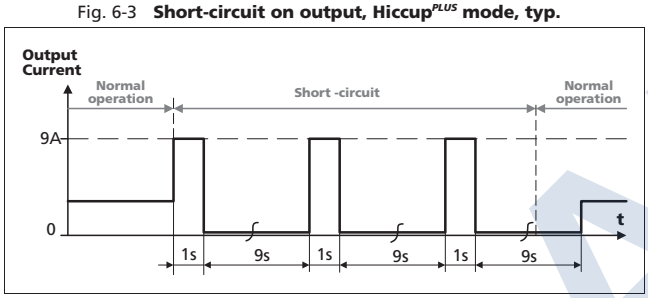

DRAFT

7. HOLD-UP TIME

The hold-up time is the time during which a power supply's output voltage remains within specification following the loss of input power. The hold-up time is output load dependent. At no load, the hold-up time can be up to several seconds. The green DC-ok lamp is also on during this time.

		AC 100V	AC 120V	AC 230V	
Hold-up Time	Typ.	70ms	70ms	70ms	At 24V, 2.5A, see Fig. 7-1
	Min.	55ms	55ms	55ms	At 24V, 2.5A, see Fig. 7-1
	Typ.	35ms	35ms	35ms	At 24V, 5A, see Fig. 7-1
	Min.	27ms	27ms	27ms	At 24V, 5A, see Fig. 7-1

Fig. 7-1 **Hold-up time vs. input voltage**

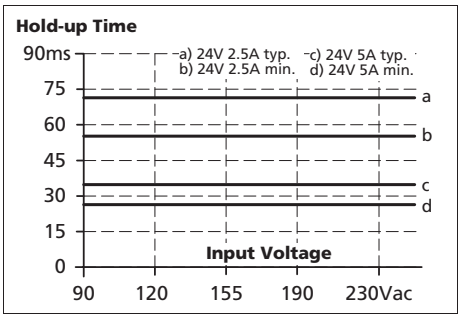

Fig. 7-2 **Shut-down behavior, definitions**

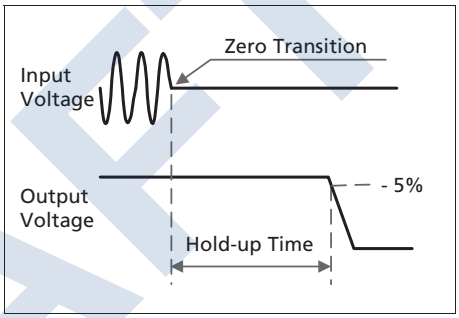

8. DC-OK RELAY CONTACT

This feature monitors the output voltage on the output terminals of a running power supply.

Contact closes	As soon as the output voltage reaches typ. 90% of the adjusted output voltage level.
Contact opens	As soon as the output voltage dips more than 10% below the adjusted output voltage. Short dips will be extended to a signal length of 100ms. Dips shorter than 1ms will be ignored.
Switching hysteresis	Typically 0.7V
Contact ratings	Maximal 60Vdc 0.3A, 30Vdc 1A, 30Vac 0.5A, resistive load Minimal permissible load: 1mA at 5Vdc
Isolation voltage	See dielectric strength table in section 18.

Fig. 8-1 **DC-ok relay contact behavior**

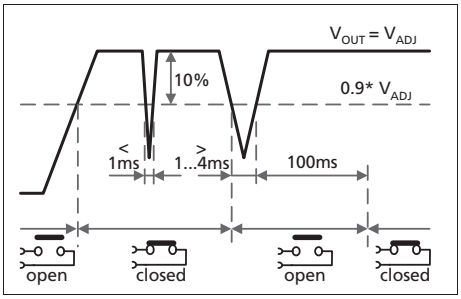

DRAFT

9. EFFICIENCY AND POWER LOSSES

		AC 100V	AC 120V	AC 230V	
Efficiency	Typ.	92.9%	93.6%	94.3%	At 24V, 5A
	Typ.	92.7%	93.5%	94.5%	At 24V, 6A (Power Boost)
Average efficiency*)	Typ.	91.3%	91.7%	92.0%	25% at 1.25A, 25% at 2.5A, 25% at 3.75A. 25% at 5A
Power losses	Typ.	1.3W	1.3W	1.4W	At 24V, 0A
	Typ.	4.6W	4.4W	4.1W	At 24V, 2.5A
	Typ.	9.2W	8.2W	7.3W	At 24V, 5A
	Typ.	11.3W	9.8W	8.4W	At 24V, 6A (Power Boost)

*) The average efficiency is an assumption for a typical application where the power supply is loaded with 25% of the nominal load for 25% of the time, 50% of the nominal load for another 25% of the time, 75% of the nominal load for another 25% of the time and with 100% of the nominal load for the rest of the time.

Fig. 9-1 **Efficiency vs. output current at 24V, typ.**

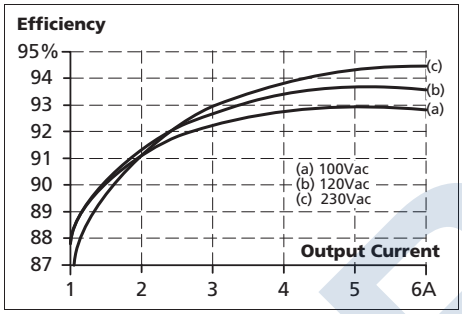

Fig. 9-2 **Losses vs. output current at 24V, typ.**

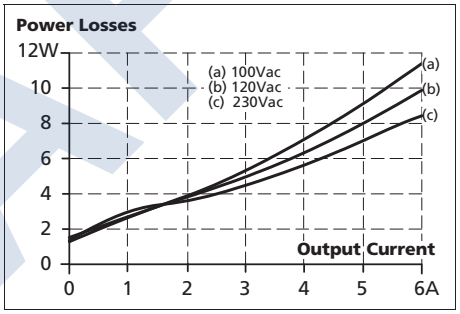

Fig. 9-3 **Efficiency vs. input voltage at 24V, 5A, typ.**

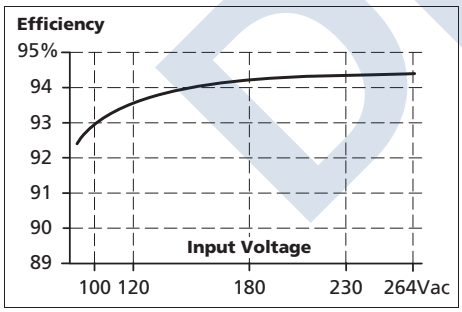

Fig. 9-4 **Losses vs. input voltage at 24V, 5A, typ.**

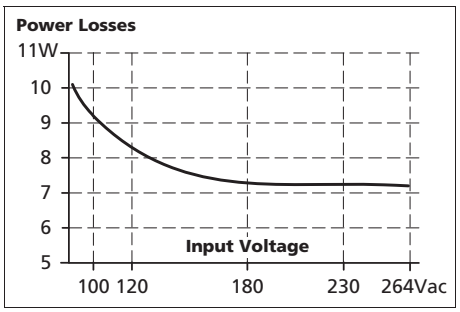

DRAFT

10. FUNCTIONAL DIAGRAM

Fig. 10-1 **Functional diagram**

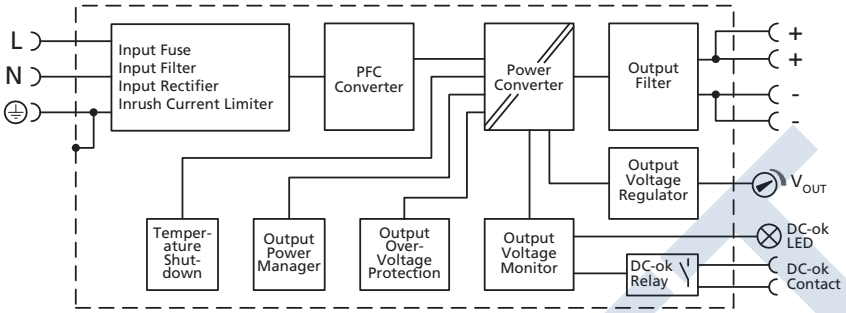

11. FRONT SIDE AND USER ELEMENTS

Fig. 11-1 **Front side**

CP5.241, CP5.241-C1 **CP5.241-S1** **CP5.241-S2** **CP5.242**

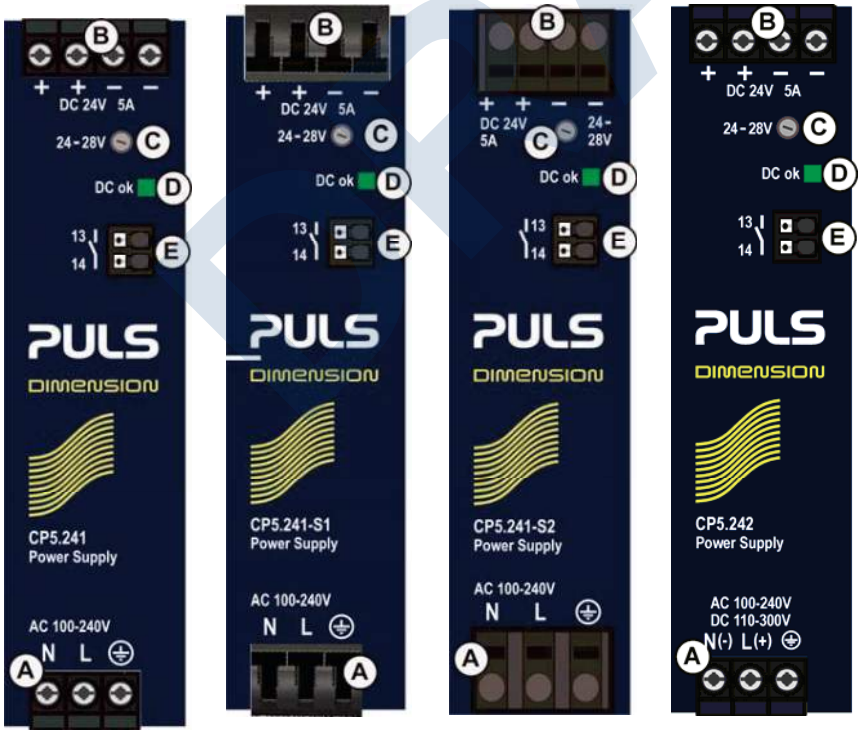

A Input Terminals
N, L Line input
PE (Protective Earth) input

B Output Terminals
Two identical + poles and two identical - poles
+ Positive output
– Negative output (return)

C Output Voltage Potentiometer

D DC-OK LED (green)
On, when the output voltage is >90% of the adjusted output voltage

E DC-OK Relay Contact
The DC-OK relay contact is synchronized with the DC-OK LED. See chapter 8 for details.

DRAFT

12. CONNECTION TERMINALS

The terminals are IP20 Finger safe constructed and suitable for field- and factory wiring.

CP5.241, CP5.241-C1, CP5.242	**Input**	**Output**	**DC-OK-Signal**
Type	Screw termination	Screw termination	Push-in termination
Solid wire	Max. 6mm²	Max. 6mm²	Max. 1.5mm²
Stranded wire	Max. 4mm²	Max. 4mm²	Max. 1.5mm²
American Wire Gauge	AWG 20-10	AWG 20-10	AWG 24-16
Max. wire diameter (including ferrules)	2.8mm	2.8mm	1.6mm
Recommended tightening torque	Max. 1Nm, 9lb-in	Max. 1Nm, 9lb-in	-
Wire stripping length	7mm / 0.28inch	7mm / 0.28inch	7mm / 0.28inch
Screwdriver	3.5mm slotted or cross-head No 2	3.5mm slotted or cross-head No 2	3mm slotted to open the spring

CP5.241-S1	**Input**	**Output**	**DC-OK-Signal**
Type	Quick-connect spring-clamp termination	Quick-connect spring-clamp termination	Push-in termination
Solid wire	Max. 6mm²	Max. 6mm²	Max. 1.5mm²
Stranded wire	Max. 4mm²	Max. 4mm²	Max. 1.5mm²
American Wire Gauge	AWG 20-10	AWG 20-10	AWG 24-16
Max. wire diameter (including ferrules)	2.8mm	2.8mm	1.6mm
Wire stripping length	10mm / 0.4inch	10mm / 0.4inch	7mm / 0.28inch
Screwdriver	-	-	3mm slotted to open the spring

CP5.241-S2	**Input**	**Output**	**DC-OK-Signal**
Type	Push-in termination	Push-in termination	Push-in termination
Solid wire	Max. 2.5mm²	Max. 2.5mm²	Max. 1.5mm²
Stranded wire	Max. 2.5mm²	Max. 2.5mm²	Max. 1.5mm²
Stranded wire with ferrules	Max. 1.5mm²	Max. 1.5mm²	Max. 1.5mm²
American Wire Gauge	AWG 24-12	AWG 24-12	AWG 24-16
Max. wire diameter (including ferrules)	2.3mm	2.3mm	1.6mm
Wire stripping length	10mm / 0.4inch	10mm / 0.4inch	7mm / 0.28inch
Screwdriver	3.0mm slotted to open the spring	3.0mm slotted to open the spring	3mm slotted to open the spring

Daisy chaining:

Daisy chaining (jumping from one power supply output to the next) is allowed as long as the average output current through one terminal pin does not exceed 25A or 15A for the CP5.241-S2. If the current is higher, use a separate distribution terminal block as shown in Fig. 12-2.

Fig. 12-1 **Daisy chaining of outputs**

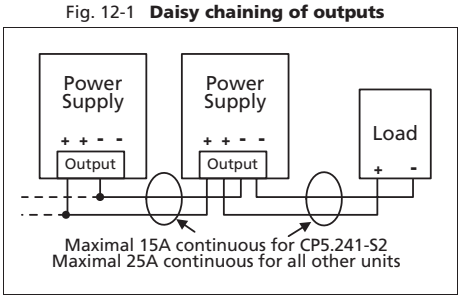

Fig. 12-2 **Using distribution terminals**

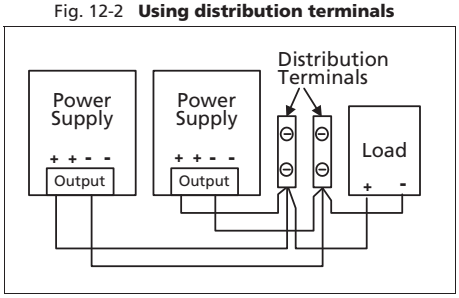

DRAFT

13. LIFETIME EXPECTANCY

The Lifetime expectancy shown in the table indicates the minimum operating hours (service life) and is determined by the lifetime expectancy of the built-in electrolytic capacitors. Lifetime expectancy is specified in operational hours and is calculated according to the capacitor's manufacturer specification. The manufacturer of the electrolytic capacitors only guarantees a maximum life of up to 15 years (131 400h). Any number exceeding this value is a calculated theoretical lifetime which can be used to compare devices.

	AC 100V	AC 120V	AC 230V	
Lifetime expectancy	265 000h	270 000h	274 000h	At 24V, 2.5A and 40°C
	748 000h	764 000h	775 000h	At 24V, 2.5A and 25°C
	128 000h	143 000h	166 000h	At 24V, 5A and 40°C
	363 000h	405 000h	469 000h	At 24V, 5A and 25°C
	81 000h	96 000h	119 000h	At 24V, 6A and 40°C
	228 000h	271 000h	336 000h	At 24V, 6A and 25°C

14. MTBF

MTBF stands for **M**ean **T**ime **B**etween **F**ailure, which is calculated according to statistical device failures, and indicates reliability of a device. It is the statistical representation of the likelihood of a unit to fail and does not necessarily represent the life of a product.

The MTBF figure is a statistical representation of the likelihood of a device to fail. A MTBF figure of e.g. 1 000 000h means that statistically one unit will fail every 100 hours if 10 000 units are installed in the field. However, it can not be determined if the failed unit has been running for 50 000h or only for 100h.

For these types of units the MTTF (**M**ean **T**ime **T**o **F**ailure) value is the same value as the MTBF value.

	AC 100V	AC 120V	AC 230V	
MTBF SN 29500, IEC 61709	800 000h	807 000h	867 000h	At 24V, 5A and 40°C
	1 402 000h	1 414 000h	1 510 000h	At 24V, 5A and 25°C
MTBF MIL HDBK 217F	339 000h	343 000h	368 000h	At 24V, 5A and 40°C; Ground Benign GB40
	490 000h	496 000h	529 000h	At 24V, 5A and 25°C; Ground Benign GB25
	81 000h	83 000h	89 000h	At 24V, 5A and 40°C; Ground Fixed GF40
	109 000h	111 000h	119 000h	At 24V, 5A and 25°C; Ground Fixed GF25

DRAFT

15. EMC

The EMC behavior of the device is designed for applications in industrial environment as well as in residential, commercial and light industry environments.

The device is investigated according to EN 61000-6-1, EN 61000-6-2, EN 61000-6-3 and EN 61000-6-4.

EMC Immunity

Electrostatic discharge	EN 61000-4-2	Contact discharge Air discharge	8kV 15kV	Criterion A Criterion A
Electromagnetic RF field	EN 61000-4-3	80MHz-2.7GHz	20V/m	Criterion A
Fast transients (Burst)	EN 61000-4-4	Input lines Output lines DC-OK signal (coupling clamp)	4kV 2kV 2kV	Criterion A Criterion A Criterion A
Surge voltage on input	EN 61000-4-5	L → N L → PE, N → PE	2kV 4kV	Criterion A Criterion A
Surge voltage on output	EN 61000-4-5	+ → - + / - → PE	1kV 2kV	Criterion A Criterion A
Surge voltage on DC-OK	EN 61000-4-5	DC-OK signal → PE	1kV	Criterion A
Conducted disturbance	EN 61000-4-6	0.15-80MHz	20V	Criterion A
Mains voltage dips	EN 61000-4-11	0% of 100Vac 40% of 100Vac 70% of 100Vac 0% of 200Vac 40% of 200Vac 40% of 200Vac 70% of 200Vac	0Vac, 20ms 40Vac, 200ms 70Vac, 500ms 0Vac, 20ms 80Vac, 200ms, <4A 80Vac, 200ms, >4A 140Vac, 500ms	Criterion A Criterion C Criterion A Criterion A Criterion A Criterion C Criterion A
Voltage interruptions	EN 61000-4-11	0% of 200Vac (=0V)	5000ms	Criterion C
Powerful transients	VDE 0160	Over entire load range	750V, 0.3ms	Criterion A

Performance criterions:
A: The device shows normal operation behavior within the defined limits.
C: Temporary loss of function is possible. The device may shut-down and restarts by itself. No damage or hazards for the device will occur.

EMC Emission

Conducted emission input lines	EN 55011, EN 55022, FCC Part 15, CISPR 11, CISPR 22	Class B
Conducted emission output lines	IEC/CISPR 16-1-2, IEC/CISPR 16-2-1	Limits for local DC power networks fulfilled
Radiated emission	EN 55011, EN 55022	Class B
Harmonic input current (PFC)	EN 61000-3-2	Fulfilled for Class A equipment
Voltage fluctuations, flicker	EN 61000-3-3	Fulfilled, tested with constant current loads, non pulsing

This device complies with FCC Part 15 rules.
Operation is subjected to following two conditions: (1) this device may not cause harmful interference, and (2) this device must accept any interference received, including interference that may cause undesired operation.

Switching Frequencies

PFC converter	30kHz to 140kHz	Input voltage and output load dependent
Main converter	60kHz to 140kHz	Output load dependent
Auxiliary converter	30kHz to 60kHz	Output load dependent

DRAFT

16. ENVIRONMENT

Operational temperature	-25°C to +70°C (-13°F to 158°F)	Operational temperature is the same as the ambient or surrounding temperature and is defined as the air temperature 2cm below the unit.
Storage temperature	-40°C to +85°C (-40°F to 185°F)	For storage and transportation
Output de-rating	1.6W/°C 3W/°C 0.33A/1000m or 5°C/1000m	Between +45°C and +60°C (113°F to 140°F) Between +60°C and +70°C (140°F to 158°F) For altitudes >2000m (6560ft), see Fig. 16-2
	The de-rating is not hardware controlled. The user has to take this into consideration to stay below the de-rated current limits in order not to overload the unit.	
Humidity	5 to 95% r.h.	According to IEC 60068-2-30
Atmospheric pressure	110-54kPa	See Fig. 16-2 for details
Altitude	Up to 5000m (16 400ft)	See Fig. 16-2 for details
Over-voltage category	III	According to IEC 60664-1 for altitudes up to 2000m
	II	According to IEC 60664-1, for altitudes above 2000m
Degree of pollution	2	According to IEC 62477-1, not conductive
Vibration sinusoidal	2-17.8Hz: ±1.6mm; 17.8-500Hz: 2g 2 hours / axis	According to IEC 60068-2-6
Shock	30g 6ms, 20g 11ms 3 bumps per direction, 18 bumps in total	According to IEC 60068-2-27
	Shock and vibration is tested in combination with DIN-Rails according to EN 60715 with a height of 15mm and a thickness of 1.3mm and standard orientation.	
LABS compatibility	As a rule, only non-silicon precipitating materials are used. The unit conforms to the LABS criteria and is suitable for use in paint shops.	
Corrosive gases	Tested according to ISA-71.04-1985, Severity Level G3 and IEC 60068-2-60 Test Ke Method 4 for a service life of minimum 10years in these environments.	
Audible noise	Some audible noise may be emitted from the power supply during no load, overload or short circuit.	

Fig. 16-1 **Output current vs. ambient temp.**

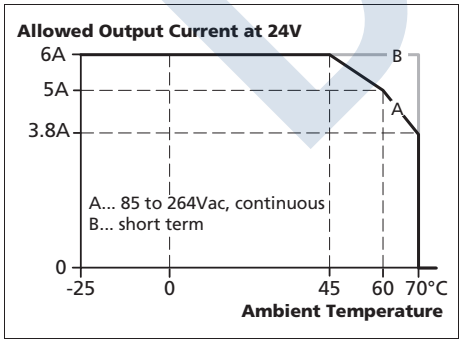

Fig. 16-2 **Output current vs. altitude**

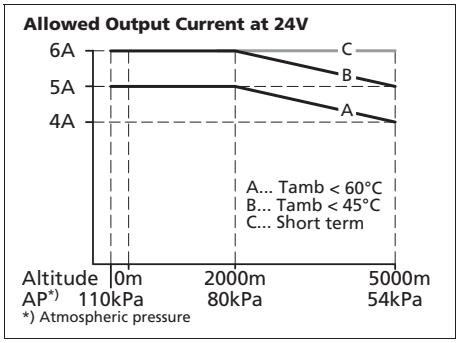

DRAFT

17. SAFETY AND PROTECTION FEATURES

Isolation resistance	Min.	500MOhm	At delivered condition between input and output, measured with 500Vdc
	Min.	500MOhm	At delivered condition between input and PE, measured with 500Vdc
	Min.	500MOhm	At delivered condition between output and PE, measured with 500Vdc
	Min.	500MOhm	At delivered condition between output and DC-OK contacts, measured with 500Vdc
PE resistance	Max.	0.1Ohm	Resistance between PE terminal and the housing in the area of the DIN-rail mounting bracket.
Output over-voltage protection	Typ.	30.5Vdc	
	Max.	32.0Vdc	
		In case of an internal defect, a redundant circuit limits the maximum output voltage. The output shuts down and performs three restart attempts. If the failure continues, the output shuts down. Cycle input power to reset.	
Class of protection		I	According to IEC 61140 A PE (Protective Earth) connection is required
Degree of protection		IP 20	According to EN/IEC 60529
Over-temperature protection		Included	Output shut-down with automatic restart. Temperature sensors are installed on critical components inside the unit and turn the unit off in safety critical situations, which can happen e.g. when ambient temperature is too high, ventilation is obstructed or the de-rating requirements are not followed. There is no correlation between the operating temperature and turn-off temperature since this is dependent on input voltage, load and installation methods.
Input transient protection		MOV (Metal Oxide Varistor)	For protection values see chapter 15 (EMC).
Internal input fuse		Included	Not user replaceable slow-blow high-braking capacity fuse
Touch current (leakage current)	Typ.	0.10mA / 0.27mA	At 100Vac, 50Hz, TN-,TT-mains / IT-mains
	Typ.	0.13mA / 0.38mA	At 120Vac, 60Hz, TN-,TT-mains / IT-mains
	Typ.	0.20mA / 0.60mA	At 230Vac, 50Hz, TN-,TT-mains / IT-mains
	Max.	0.13mA / 0.35mA	At 110Vac, 50Hz, TN-,TT-mains / IT-mains
	Max.	0.17mA / 0.51mA	At 132Vac, 60Hz, TN-,TT-mains / IT-mains
	Max.	0.27mA / 0.81mA	At 264Vac, 50Hz, TN-,TT-mains / IT-mains

DRAFT

18. DIELECTRIC STRENGTH

The output voltage is floating and has no ohmic connection to the ground.

The output is insulated to the input by a double or reinforced insulation.

Type and routine tests are conducted by the manufacturer. Field tests may be conducted in the field using the appropriate test equipment which applies the voltage with a slow ramp (2s up and 2s down). Connect all input-terminals together as well as all output poles before conducting the test. When testing, set the cut-off current settings to the value in the table below.

We recommend that either the + pole or the – pole shall be connected to the protective earth system. This helps to avoid situations in which a load starts unexpectedly or can not be switched off when unnoticed earth faults occur.

Fig. 18-1 **Dielectric strength**

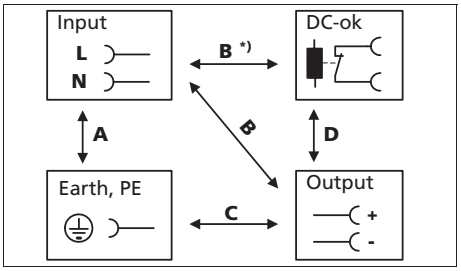

		A	B	C	D
Type test	60s	2500Vac	3000Vac	1000Vac	500Vac
Routine test	5s	2500Vac	2500Vac	500Vac	500Vac
Field test	5s	2000Vac	2000Vac	500Vac	500Vac
Field test cut-off current settings		> 10mA	> 10mA	> 20mA	> 1mA

B*)
When testing input to DC-OK ensure that the maximal voltage between DC-OK and the output is not exceeded (column D). We recommend connecting DC-OK pins and the output pins together when performing the test.

DRAFT

Edco DRS Series

DIN Rail Protection

The Edco DRS Series is a din rail mountable, single pair surge suppression module implementing three-stage hybrid technology. This module addresses over-voltage transients with gas tubes and silicon avalanche components. In addition, sneak currents are mitigated with resetable fuses (PTCs). The PTCs increase resistance several orders of magnitude when over-currents exceed safe levels. A normal state resumes when over-currents are removed. The ability to self-restore in this manner significantly increases suppressor performance and survivability.

The Edco DRS Series mounts onto a standard 35mm industrial din rail. There are three "Field Side" and three "Electronics Side" screw terminals. One is reserved for a shield. Three electrically tied ground terminals are provided for grounding the Edco DRS Series unit to Building-Approved Ground. Shield is isolated from ground. For a 2-terminal version without a shield, order the Edco DRS-xxx-2.



UL® 497B

General Technical Specifications

Part Number	Max Peak Signal Voltage	Nominal Breakdown Voltage	Max Current Ip 10x1000?s (Occurrences)	Peak Current 8x20?s	Typ Cap (pf)	Max Continuous Current	Nominal Series Resistance
DRS-008	6	8	>100	10KA	1500	150ma	5 Ω
DRS-015	12	15	>100	10KA	1500	150ma	5 Ω
DRS-232	15	22	>100	10KA	1500	150ma	5 Ω
DRS-030	24	30	>100	10KA	1500	150ma	5 Ω
DRS-036	30	36	>100	10KA	1500	150ma	5 Ω
DRS-043	35	43	>100	10KA	1500	150ma	5 Ω
DRS-050	43	50	>100	10KA	1500	150ma	5 Ω
DRS-060	52	60	>100	10KA	1500	150ma	5 Ω
DRS-175	200	250	>10	8KA	1500	150ma	5 Ω
*DRS-130 RMS	170	200	>10	8KA	1500	5A	None

* *WARNING!! Edco DRS-130 RMS is for Discrete Signal Use Only. Do not use Edco DRS-130 RMS on 120 VAC Power Lines. This unit is a Non-Hybrid, MOV design, rated above 5A operational current and can withstand greater than eight occurrences of a 10kA 8x20µs waveform, and greater than 1000 occurrences of a 200A 10x1000µs waveform.*

Features

- Low-voltage data surge protection
- Three-stage hybrid protection
- Sneak/fault current protection with resettable fuses (PTCs)
- Low profile packaging
- Easy installation
- Fits standard 35mm din rail
- Fast response time <1 nanosecond
- UL 497B Listed
- 5 year warranty

DRAFT

EMERSON
Network Power

Installation

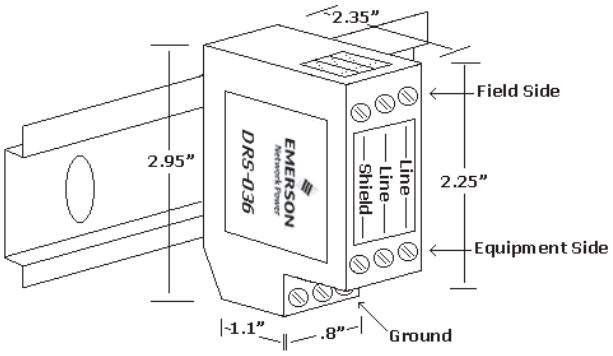

3-Terminal Device

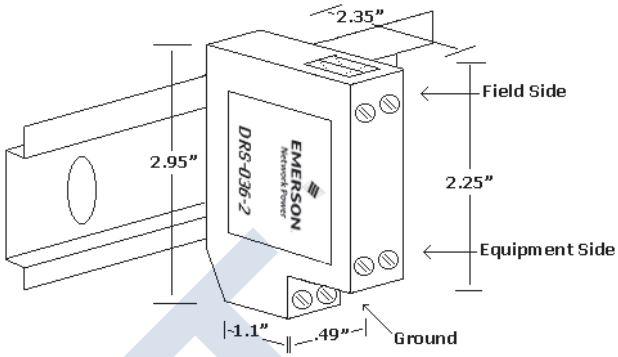

2-Terminal Device

Maximum Wire Size = 12 AWG

Installation Instructions

Read and Understand These Instructions:

These protectors are intended for indoor use on communication loop circuits which have been isolated from the Public Switch Telephone Network.

The communication loop circuits shall not be exposed to accidental contact with the electric light or power conductors. The protectors shall be installed per the applicable requirements of the National Electric Code, ANSI/NFPA 70.

DRAFT

Emerson Network Power.
The global leader in enabling *Business-Critical Continuity™*.

- AC Power
- Connectivity
- DC Power
- Embedded Computing
- Embedded Power
- Monitoring
- Outside Plant
- Power Switching & Control
- Precision Cooling
- Racks and Integrated Cabinets
- Services
- **Surge Protection**

Emerson Network Power Contact information

www.emersonnetworkpower.com

Headquarters
Surge Protection
328 Water Street
Binghamton, NY 13901
T: (607) 721-8840
T: (800) 288-6169
F: (607) 722-8713
E: contactsurge@emerson.com

650 SW 27th Avenue
Ocala, FL 34471
T: (352) 732-3029
T: (800) 648-4076
F: (352) 867-1237

EMERSON™
Network Power

Business-Critical Continuity, Emerson Network Power and the Emerson Network Power logo are trademarks and service marks of Emerson Electric Co. ©2009 Emerson Electric Co.

1-CHANNEL INTRINSICALLY SAFE RELAYS

ISE SERIES



- Approved for use in Class I, Class II, and Class III Hazardous Locations (Zones 0 & 1 in Canada)
- 1-Channel
- 5A relay output
- Universal input voltage of 102-132V AC & 10-125V DC
- Compact 17.5mm wide enclosure for both DIN-rail or panel-mount
- LED status indicator

c UL us

UL913 8th Edition

CE

MACROMATIC

Better. By Design.

800.238.7474

WWW.MACROMATIC.COM

SALES@MACROMATIC.COM

The ISE Series of Intrinsically Safe Relays provide a safe and reliable method to control a single load (motor starters, relays, etc.) with a single input device (switches, sensors, etc.) located in a hazardous area. These products are approved for use in Class I Groups A, B, C, D, Class II Groups E, F, G, and Class III Hazardous Locations (Zones 0 & 1 in Canada). The ISE Series relay must be mounted in a safe area, following Macromatic Control Drawing Number ISD2A01, as shown in Instruction Sheet 901-0000-329.

The ISE Series relays utilize a compact 17.5mm wide enclosure that can be both mounted on 35mm DIN rail or panel-mounted with two screws. Hazardous terminals are on the bottom of the unit for easy access in the enclosure to incoming wiring from the hazardous area and are clearly marked.

Standard Operation

Each ISE Series relay consists of an intrinsically safe input and a corresponding electromechanical relay output. There is one bi-color LED for status indication. With input voltage applied, the LED will be ON (Green) to indicate power is applied.

When the input device from the hazardous area is *closed*, the output relay is energized and the LED is ON (Orange). When the input device *opens*, the output relay will de-energize and the LED will be ON (Green).

Inverted Operation (V-suffix)

Each ISE Series relay consists of an intrinsically safe input and a corresponding electromechanical relay output. There is one bi-color LED for status indication. With input voltage applied, the LED will be ON (GREEN) to indicate power is applied.

When the input device from the hazardous area is *open*, the output relay is energized and the LED is ON (ORANGE). When the input device *closes*, the output relay will be de-energized and the LED will be ON (GREEN).

INPUT VOLTAGE	NUMBER OF CHANNELS	CATALOG NUMBER	WIRING
102-132V AC (50/60Hz) & 10-125V DC	1	ISEUR1	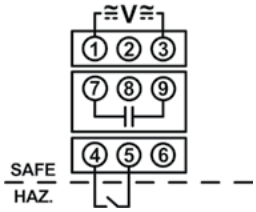 **DIAGRAM 811**
102-132V AC (50/60Hz) & 10-125V DC	1	ISEUR1V	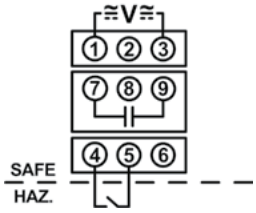 **DIAGRAM 811**

DRAFT

1-CHANNEL INTRINSICALLY SAFE RELAYS

ISE Series

Application Data

Input Voltage: 102-132V AC (50/60Hz.) & 10-125V DC

Load (Burden): 2VA Maximum

Input Switch Open Circuit Voltage: 10V DC

Output Contacts:
SPST-NO (Form A) 3A Resistive @ 125V AC @ 60ºC & 30V DC Resistive, Pilot Duty Rating D300

SPST-NO (Form A) 5A Resistive @ 125V AC @ 40ºC & 30V DC Resistive, Pilot Duty Rating D300

Life: Electrical: 50,000 Closures @ Full Load AC
Mechanical: 5 Million Closures @ No Load

Response Times: < 50ms

Temperature:
Operating: -28º to + 60º C (-18º F to +140º F)
Storage: -55º to +85º C (-67º to 185º F)

LED Indication:
Standard Operation, ON (Green) - Input voltage; ON (Orange) - Input closed and relay energized;
Inverse Operation (V-suffix), ON (Green) - Input voltage; ON (Orange) - Input open and relay energized

Insulation Voltage:
1500 V AC between coil & contacts
750 V AC between open contacts
1500 V AC between hazardous and safe circuits

Wire Sizes:
One #14-24 AWG Conductor or
Two #16 or 18 AWG Conductors

Mounting: Mounts on 35mm DIN-rail or panel-mounted with two #8 screws when DIN-rail clips are fully extended from under the enclosure.

Control Drawing: See Instruction Sheet 901-0000-329, which includes Control Drawing ISD1A04.

Approvals:

UL913 8th Edition
E318075

Dimensions

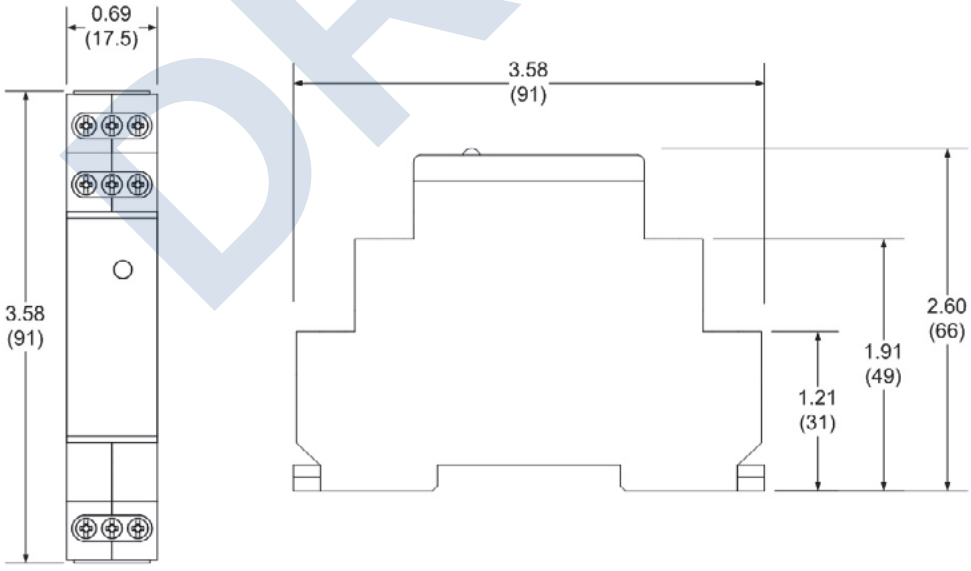

All Dimensions in
Inches (Millimeters)

DRAFT

GracePort® Ethernet Port Connector Code Data Sheet

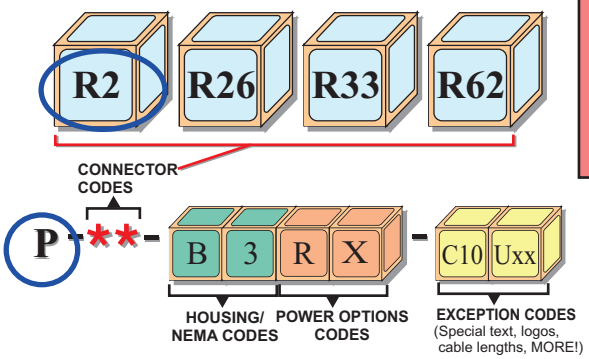



P-R2-B3RX



P-R2-K3RF3



P-R2-F3R0

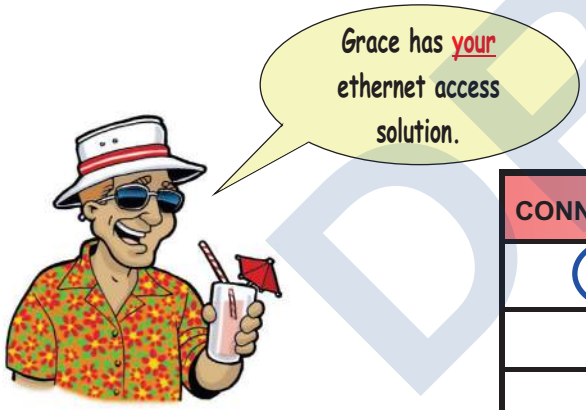

CONNECTOR CODE	DESCRIPTION
R2	CATEGORY 5 RJ45 F/F BULKHEAD
R26	CATEGORY 5 RJ45 F/IDT BULKHEAD
R33	CATEGORY 5 SHIELDED RJ45 F/F BULKHEAD
R62	CATEGORY 6 RJ45 F/F BULKHEAD

⚠ INSTALLATION

GracePorts® are intended to be mounted in or on an enclosure product. Installation should be performed by a qualified technician and adhere to applicable regulatory codes. These devices are for mounting on the flat surface of enclosures having the same type of environmental rating.

SPECIFICATIONS: ELECTRICAL

Low voltage (data), limited to 30 VDC
High voltage supply (for computer use only)
120 VAC, 15A (UL), 5A (CSA)
230-240 VAC, 16A (CE only)

SPECIFICATIONS: MECHANICAL

Housing: Cast aluminum base
Latch: Type 304 Stainless Steel (1CR18NI19)
Cover: Polycarbonate, UV rated, V-O Flame rated
Gasket: Thermoplastic elastomer
Insert Material: Acrylic UL94HB

APPROVALS

RoHS

UL RECOGNIZED: E207344 (Outdoor Use)
CSA: LR110845 (not for interrupting circuit)
CE: EN61010/EN60950 (Foreign Power Outlets)

GRACE ENGINEERED PRODUCTS, INC
www.GracePort.com

5001 Tremont Avenue
Davenport, IA 52807
(800) 280-9517 Fax: (563) 386-9639

©2006 Grace Engineered Products, Inc.
GracePort® is a registered Trademark of Grace Engineered Products, Inc

DRAFT

Panel Mount Housing Dimensions
UL Type 4 - IP65 Ratings

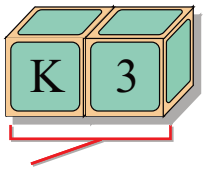

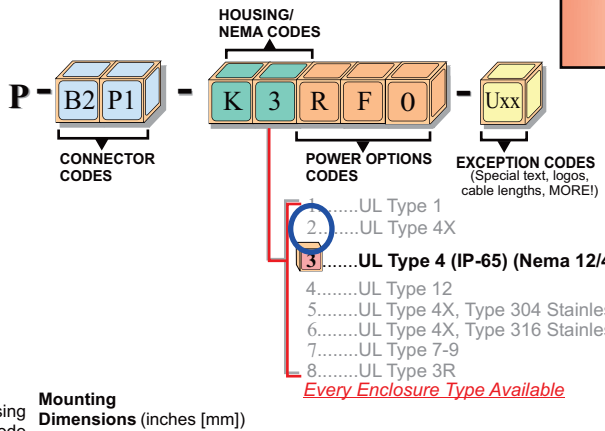

ThruView™ Housings

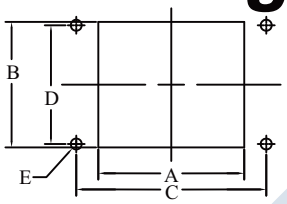

Housing Code — **Mounting Dimensions** (inches [mm])

	Weight (oz)	A	B	C	D	EØ
B	3.8	2.06∓.010 [52.4∓.2]	1.42∓.010 [36.0∓.2]	2.76∓.004 [70.0∓.1]	1.26∓.004 [32.0∓.1]	.18+.010 [4.5+.2]
F	5.1	3.36∓.010 [85.4∓.2]	1.42∓.010 [36.0∓.2]	4.03∓.004 [102.4∓.1]	1.26∓.004 [32.0∓.1]	.18+.010 [4.5+.2]
H	5.9	4.42∓.010 [112.4∓.2]	1.42∓.010 [36.1∓.2]	5.12∓.004 [130.0∓.1]	1.26∓.004 [32.0∓.1]	.18+.010 [4.5+.2]
K	10.8	3.39∓.010 [86.0∓.2]	2.91∓.010 [74.0∓.2]	4.41∓.004 [112.0∓.1]	2.76∓.004 [70.0∓.1]	.26+.010 [6.5+.2]
M	13.2	4.80∓.010 [122.0∓.2]	3.15∓.010 [80.0∓.2]	5.83∓.004 [148.0∓.1]	2.76∓.004 [70.0∓.1]	.26+.010 [6.5+.2]

Housing Code — **Overall Dimensions** (inches [mm])

	F	G	H	I	J	K	LØ	MØ
B	3.15 [80.0]	1.72 [43.6]	3.20 [81.2]	1.60 [40.7]	4.33 [110.1]	.96 [24.4]	N/A	.18∓.004 [4.5∓.1]
F	4.45 [113.0]	1.72 [43.6]	3.20 [81.2]	1.60 [40.7]	4.87 [123.7]	.57 [14.4]	N/A	.18∓.004 [4.5∓.1]
H	5.51 [140.0]	1.72 [43.6]	3.20 [81.2]	1.60 [40.7]	4.87 [123.7]	.57 [14.4]	N/A	.18∓.004 [4.5∓.1]
K	5.08 [129.0]	3.54 [90.0]	4.79 [121.6]	1.60 [40.7]	8.28 [210.2]	.45 [11.4]	.45 [11.5]	.26∓.004 [6.5∓.1]
M	6.50 [165.0]	3.78 [96.0]	5.02 [127.6]	1.60 [40.7]	8.52 [216.4]	.57 [14.4]	.45 [11.5]	.26∓.004 [6.5∓.1]

Drawings available at www.graceport.com

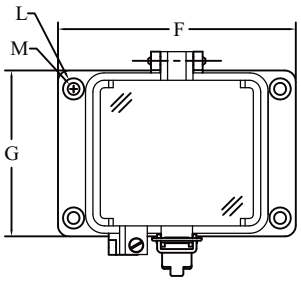

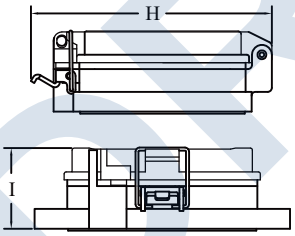

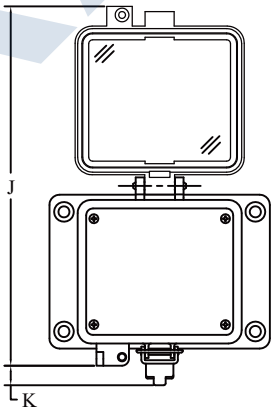


HOUSING CODE: B 3


HOUSING CODE: F 3

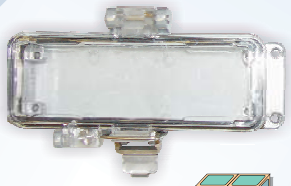
HOUSING CODE: H 3

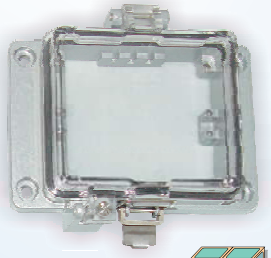
HOUSING CODE: K 3


HOUSING CODE: M 3

INSTALLATION

GracePorts® are intended to be mounted in or on an enclosure product. Installation should be performed by a qualified technician and adhere to applicable regulatory codes. These devices are for mounting on the flat surface of enclosures having the same type environmental ratings.

All installations:

1) Cut panel opening and mount GracePort® assembly to enclosure with gasket.
2) Connect low voltage interface wiring according to documentation provided with unit.

On units configured for optional AC power:

1) Connect outlet device as per code. *Note: It is the responsibility of the installer to ensure adequate separation of high and low voltage circuits in the end-use product.*
2) Ensure that the metal housing is reliably grounded using grounding means provided.

SPECIFICATIONS: ELECTRICAL

Low voltage (data), limited to 30 VDC
High voltage supply (for computer use only)
120 VAC, 15A (UL), 5A (CSA)
230-240 VAC, 16A (CE only)

SPECIFICATIONS: MECHANICAL

Housing: Cast aluminum base
Latch: Type 304 Stainless Steel (1CR18NI19)
Cover: Polycarbonate, UV rated, V-O Flame rated
Gasket: Thermoplastic elastomer
Insert Material: Acrylic UL94HB

APPROVALS

RoHS

UL RECOGNIZED: E207344 Type 4, IP-65 (Outdoor Use)
CSA: LR110845 (not for interrupting circuit)
CE: EN61010/EN60950 (Foreign Power Outlets)

GRACE ENGINEERED PRODUCTS, INC
www.GracePort.com

5001 Tremont Avenue
Davenport, IA 52807
(800) 280-9517 Fax: (563) 386-9639

©2012 Grace Engineered Products, Inc. DataSheets:PMH_T4_2/2012
GracePort® is a registered Trademark of Grace Engineered Products, Inc

GracePort® Interface Products
Power Options
Connector Code Data Sheet

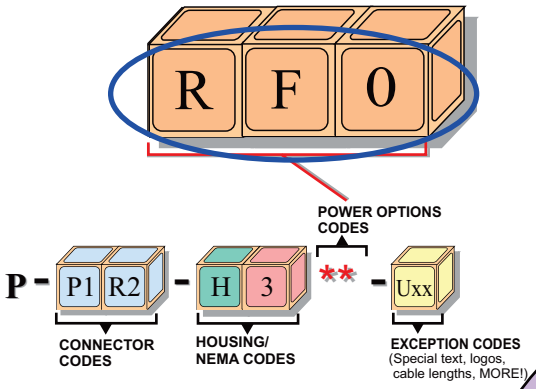

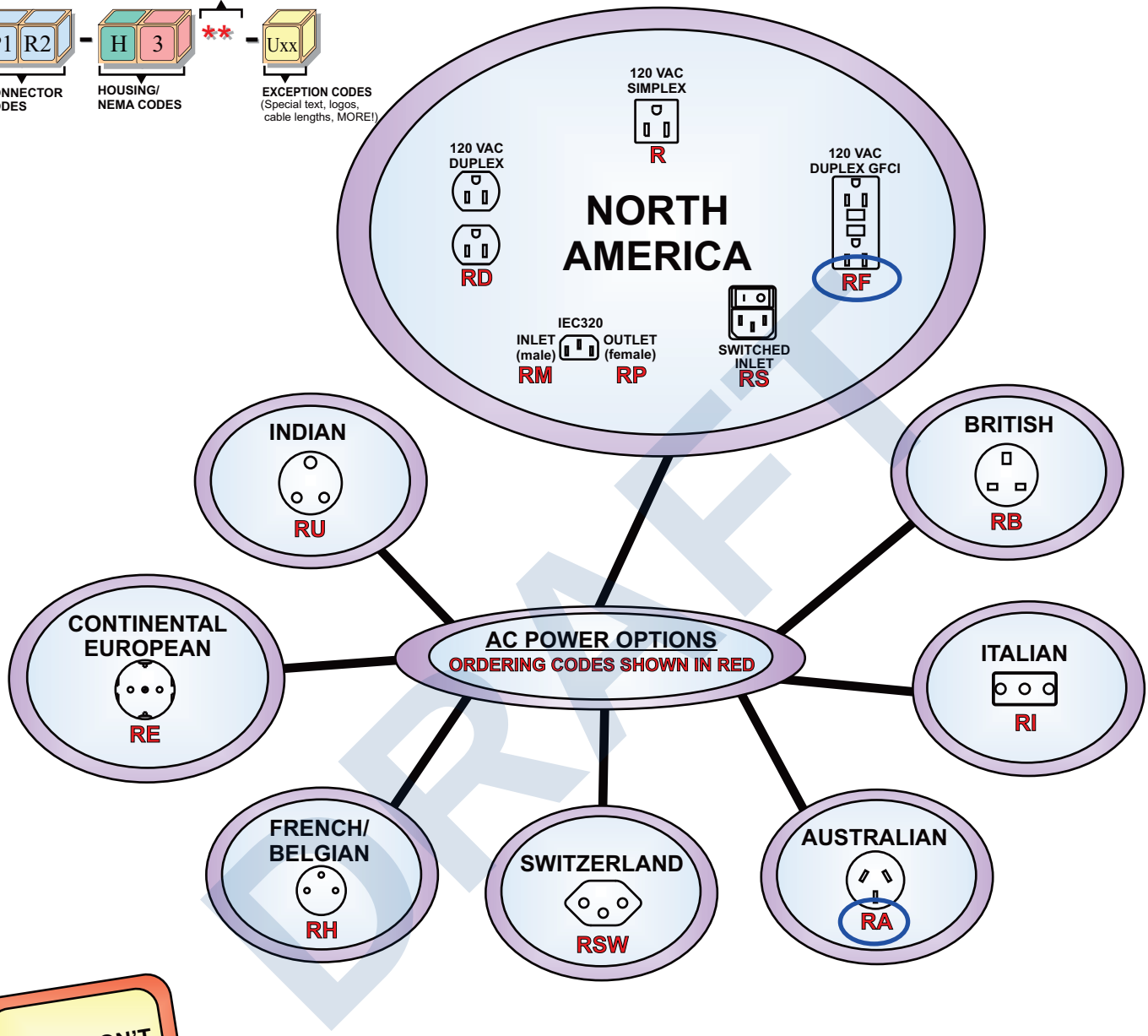

DRAFT

IF YOU DON'T SEE WHAT YOU NEED, ASK US!!!

If circuit protection is desired, place amperage value as a suffix to power codes shown. Example: US duplex outlet with 3A breaker = RD3

⚠ INSTALLATION

GracePorts® are intended to be mounted in or on an enclosure product. Installation should be performed by a qualified technician and adhere to applicable regulatory codes.

UL RECOGNIZED: E207344 **Type 4/4X/IP-65** (outdoor use)
CSA: LR110845 (not for interrupting circuit)
CE: EN61010/EN60950 (Foreign Power Outlets)

GRACE ENGINEERED PRODUCTS, INC
www.GracePort.com

5001 Tremont Avenue
Davenport, IA 52807
(800) 280-9517 Fax: (563) 386-9639

© 2006 Grace Engineered Products, Inc.
GracePort® is a registered Trademark of Grace Engineered Products, Inc

R3-2006-07

Product data sheet
Characteristics

SMT1500
APC Smart-UPS 1500VA LCD 120V (Not for sale in CO, VT or WA)

Green Premium™



Overview

Lead time	Usually Ships within 2 Weeks

General

Provided equipment	CD with software Documentation CD Smart UPS signalling RS-232 cable USB cable
Performance multiplier	1
Number of tare power	30 W
Number of power module free slots	0
Number of power module filled slots	0
Redundant	No
Size UPS version	Internetworking Server Telecom
UPS size	S
Value multiplier	5

Physical

Cable length	6 ft (1.83 m)
Color	Black
Depth	17.28 in (43.9 cm)
Height	8.62 in (21.9 cm)
Mounting location	Front
Mounting preference	No preference
Net Weight	53.11 lb(US) (24.09 kg)
Mounting mode	Not rack-mountable

DRAFT

Disclaimer: This documentation is not intended as a substitute for and is not to be used for determining suitability or reliability of these products for specific user applications

Two post mountable	0
USB compatible	Yes
Maximum Width	6.73 in (17.1 cm)

Input

Input Frequency	50/60 Hz +/- 3 Hz auto-sensing
Plug standard	NEMA 5-15P
Efficiency at full load	75...154 V adjustable 82...144 V
Number of cables	1
Nominal Input Voltage	120 V

Output

Kw Rating	1000 W
Max Configurable Power (Watts)	1000 W
Harmonic distortion	Less than 5%
Output frequency	50/60 Hz +/- 3 Hz sync to mains
Topology	Line Interactive
Waveform Type	Sine wave
Nb of power socket outlets	8 NEMA 5-15R
Curve equation	Efficiency
Curve fixed loss	0.0083
Curve load maximum	100 %
Curve load minimum	1 %
Curve proportional loss	0
Curve square loss	0.0119
Curve X-axis maximum	100 %
Curve test cond ID	Curve fit of data measured in accordance with the US DOE Test Procedure for Uninterruptible Power Supplies. All measurements taken in normal mode(s), at typical environmental conditions, with 120V/60Hz electrical input and balanced resistive load (PF = 1.0) output.
Curve X-axis minimum	0 %
Curve X-axis title	Load
Curve X-axis units	Percentage
Curve Y-axis maximum	100 %
Curve Y-axis minimum	50 %
Curve Y-axis title	Efficiency
Curve Y-axis units	Percentage
Graph display	1
Output voltage	120 V
Maximum configurable power in VA	1440 VA
Rated power in VA	1440 VA
Transfer Time	4ms typical : 8ms maximum

Conformance

Product certifications	CSA
Standards	UL 1778
Equipment protection policy	Lifetime : $150000

Environmental

Ambient air temperature for operation	32…104 °F (0…40 °C)
Relative humidity	0…95 %
Operating altitude	0...10000 ft

DRAFT

Ambient air temperature for storage	5…113 °F (-15…45 °C)
Storage altitude	0…50000 ft (0.00…15240.00 m)
Acoustic level	45 dBA
Heat dissipation	135 Btu/h
Show note OP temperature	No

Batteries & Runtime

Battery type	Lead-Acid battery
Included Battery Modules	0
Battery Slots Empty	0
Typical recharge time	3 h
RBC Quantity	1
Liquid Electrolyte Value	0
Battery curve	Z
Battery Charge Power (Watts)	136 W rated
Battery power in VAH	408 VAh runtime
Battery life	3…5 year(s)
Extendable Run Time	0

Communications & Management

Free slots	1
Control panel	Multi-function LCD status and control console
Audible Alarm	Alarm when on battery : distinctive low battery alarm : configurable delays

Surge Protection and Filtering

Surge energy rating	459 J
Filtering	Full time multi-pole noise filtering : 0.3% IEEE surge let-through : zero clamping response time : m

Ordering and shipping details

Category	11309 - APC RESALE PRODUCTS
Nbr. of units in pkg.	1
Package weight(Lbs)	53 lb(US) (24.04 kg)
Returnability	No

Packing Units

Package 1 Height	14.80 in (37.6 cm)
Package 1 width	12.91 in (32.8 cm)
Package 1 Length	23.43 in (59.5 cm)
SCC14	731304268666
Number of Units in Package 3	12

Offer Sustainability

Sustainable offer status	Green Premium product
California proposition 65	WARNING: This product can expose you to chemicals including: Lead and lead compounds, which is known to the State of California to cause cancer and birth defects or other reproductive harm. For more information go to www.P65Warnings.ca.gov
Energy Star	ENERGY STAR UPS V1.0 (USA)
REACh Regulation	REACh Declaration
EU RoHS Directive	Compliant EU RoHS Declaration
Mercury free	Yes
RoHS exemption information	Yes

DRAFT

Environmental Disclosure	Product Environmental Profile
Circularity Profile	End of Life Information
Optimized Energy Efficiency	Energy efficient product

Contractual warranty

Warranty	3 years repair or replace (excluding battery) and 2 years for battery

DRAFT

Product data sheet
Characteristics

AP9613
Dry Contact I/O SmartSlot Card

Item 56b



Overview

Presentation	UPS management SmartSlot Card with Dry Contact (relay) support to monitor external triggers and initiate actions on external devices.
Lead time	Usually in Stock

General

Provided Equipment	User Manual USB cable

Physical

Color	Black
Depth	4.49 in (11.4 cm)
Height	1.50 in (3.8 cm)
Product Weight	0.46 lb(US) (0.21 kg)
Width	4.76 in (12.1 cm)

Conformance

Standards	EN 55022 Class A EN 55024 EN 61000-3-2 EN 61000-3-3 EN 61000-4-2 EN 61000-4-3 EN 61000-4-4 EN 61000-4-6 FCC Part 15 class A

Environmental

Ambient Air Temperature for Operation	32…104 °F (0…40 °C)
Relative Humidity	0…95 %

DRAFT

Disclaimer: This documentation is not intended as a substitute for and is not to be used for determining suitability or reliability of these products for specific user applications

Operating altitude	0...10000 ft
Ambient Air Temperature for Storage	5…149 °F (-15…65 °C)
Storage Relative Humidity	0…95 %
Storage altitude	0…50000 ft (0.00…15240.00 m)

Ordering and shipping details

Category	09305 - INDUSTRIAL UPS
GTIN	00731304293842
Nbr. of units in pkg.	1
Package weight(Lbs)	1 lb(US) (0.45 kg)
Returnability	No
Country of origin	PH

Packing Units

Package 1 Height	2.01 in (5.1 cm)
Package 1 width	9.25 in (23.5 cm)
Package 1 Length	6.26 in (15.9 cm)
Number of Units in Package 3	896

Offer Sustainability

Sustainable offer status	Green Premium product
REACh Regulation	REACh Declaration
EU RoHS Directive	Compliant EU RoHS Declaration
Lead free	Yes
WEEE	The product must be disposed on European Union markets following specific waste collection and never end up in rubbish bins.
Optimized Energy Efficiency	Energy efficient product
Take-back	Take-back program available

Contractual warranty

Warranty	2 years repair or replace

DRAFT

Explosion-Proof Control Stations
"CXI" Series



"When a smaller enclosure is needed for industrial controls, our CXI Series cannot be beat."

Features:

All enclosures are available in NEMA 4X with neoprene gasket for water tight applications.

All enclosures are suitable for surface or panel mounting.

Cast from light - weight corrosion resistant aluminum

Attractive wheelabrate finish

Durable cast mounting feet and easily accessible grounding screw.

Expanded internal space for splicing or terminal blocks.

Available to use with Mini Pilot Device Series (1" center to center)



Ordering Instructions:

All "CXI" enclosures are machined with operator (3/4" NPSM in cover) and standard conduit holes as specified in chart. (Consult factory for custom specifications).

To order NEMA-4 gasket, add suffix "N4" to part number (CXI 333-X1-N4). For Panel Mount Applications (3/4" NPSM in base instead of cover), use prefix "CXP" instead of "CXI" (CXP 333-X1).

To order Junction Box type enclosures, order "AXI" Series Enclosures.

Spacing constraints may apply when using some operator types (Mushroom Head P.B., Illum. P.B., Push to Test P.L., etc.); C/F

Consult factory for terminal installation or custom layouts.

See "order form page" on additional information to customize this enclosure.

Applications:

Locations such as Waste Water Treatment Plant (WWTP), Processing Facilities (Oil, Gas, etc.), Refineries, & Chemical Plants explosion

CXI series can be used for Control Stations, Manual Motor Starters, or Pendant Stations



Try our spacious CXI 484 when Group B is required

Materials:

Enclosures: Copper-free Aluminum (less than 0.25% copper content)

Cover Bolts: Cad-Plated or Stainless Steel (please specify)

Mounting Pan (Opt.): Aluminum*;

Galvanized Steel or Phenolic Materials available upon request.

*Note: Aluminum Mounting Pan will be provided if mounting pan is requested, unless otherwise noted.

Compliances:

N.E.C. - Class. I, Div. 1 & 2 Groups B*, C & D

Class. II, Div. 1 & 2 Groups E, F & G

Class. III

NEMA 7 & 9 (Optional 3, 4X)

* - CXI 484 Only

Certificate Number 03.059.1

ISO 9001 With Design

Approvals:

UL CLASSIFIED - Standard 886 - E94590

cUL (CXI 4 & 6) - Standard C22.2 No. 30-M1986 and No. 25-1966

CSA Certified (CXI 3) - Standard C22.2 No. LR64264

1025 Eagon Street Barberton, Ohio 44203 Ph: 330-745-8891 Fax: 330-745-2504
www.AkronElectric.Com E-Mail: Sales@AkronElectric.Com

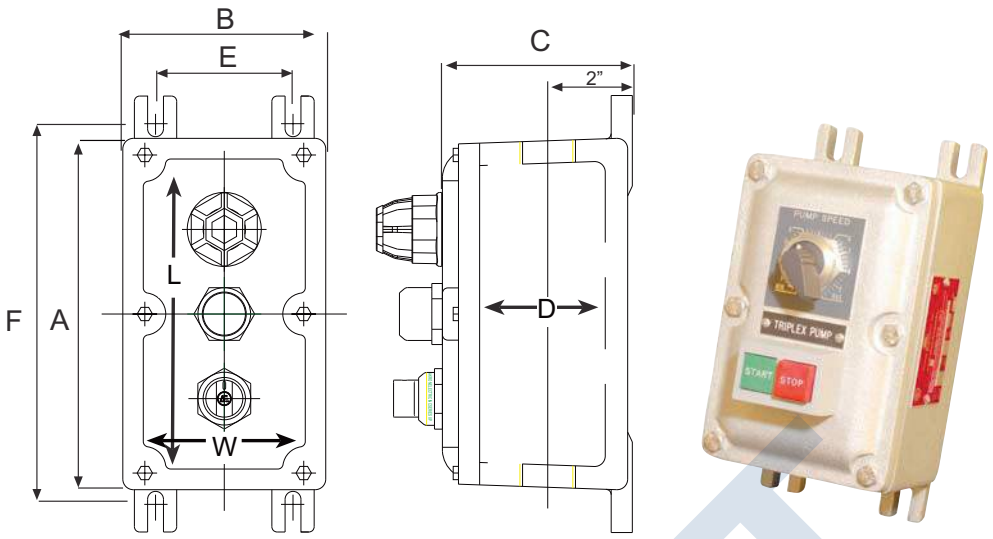

CXI Dimensions

Catalog Number	Nominal Inside Dimensions W	L	D	Dimensions In Inches A	B	C	F	E	Est. Lbs.	Std. Conduit Size	Mtg. Bolt Size
CXI 333-X1	3-1/2	3-1/2	3	4-9/16	4-9/16	4-1/2	5-1/2	3-1/4	5	3/4"	1/4"
CXI 363-X2	3-1/2	6	3	7-1/16	4-9/16	4-1/2	8	3-1/4	6	3/4"	1/4"
CXI 373-X3	3-1/2	7	3	8-1/16	4-9/16	4-1/2	9	3-1/4	7	3/4"	1/4"
CXI 393-X4	3-1/2	9	3	10-1/16	4-9/16	4-1/2	11	3-1/4	8	1"	1/4"
CXI 3113-X5	3-1/2	11	3	12-1/16	4-9/16	4-1/2	13	3-1/4	10	1-1/4"	1/4"
CXI 3133-X6	3-1/2	13	3	14-1/16	4-9/16	4-1/2	15	3-1/4	11	1-1/4"	1/4"
CXI 3153-X7	3-1/2	15	3	16-1/16	4-9/16	4-1/2	17	3-1/4	12	1-1/4"	1/4"
CXI 3183-X8/X9	3-1/2	18	3	19-1/16	4-9/16	4-1/2	20	3-1/4	14	1-1/4"	1/4"

CXI Dimensions

Catalog Number	Nominal Inside Dimensions W	L	D	Dimensions In Inches A	B	C	F	E	Est. Lbs.	Max. Conduit Size	Mtg. Bolt Size
CXI 484	4-1/4	8	4	10-29/64	6-45/64	5-5/8	11-1/2	5-1/4	19	2"	1/4"
CXI 6104	6-1/2	10	4	11-1/16	7-9/16	6-1/8	11-27/32	6-1/4	21	2"	1/4"
CXI 6174	6-1/2	17	4	18-5/16	7-13/16	6-1/8	18-3/4	6-1/4	33	2"	1/4"
CXI 6244	6-1/2	24	4	25-13/16	7-13/16	6-1/8	26-1/4	6-1/4	45	2"	1/4"
CXI 6304	6-1/2	30	4	31-13/16	7-13/16	6-1/8	32-1/4	6-1/4	56	2"	1/4"

Note: All dimensions are for reference only

CXI SUFFIX	Number of Operators (Vert.)
X1	1
X2	2
X3	3
X4	4
X5	5
X6	6
X7	7
X8/X9	8/9

Note:

Each CXI Enclosure includes the appropriate number of operator holes as specified in the table to the left

By adding the suffixes (X1, X2, X3, etc.), one standard conduit size NPT hole will be placed at both the top and bottom of the enclosure along with the respective NPSM entries

If these specifications are not desired, please use simply the CXI number with the desired modifications listed underneath as shown on the "AKRON Easy Catalog Ordering Information" on Page 22.

DRAFT

TABLE III - OPTIONAL MODIFICATIONS

BD= Breather or Drain with 1/2" NPT (please specify)
2BD=Breather & Drain
C1= Circuit Breaker Handle, 100 AMP - installed
C2= Circuit Breaker Handle, 225 AMP - installed
C4= Circuit Breaker Handle, 600 AMP - installed
C5= Circuit Breaker Handle, 800 AMP - installed
C8= Circuit Breaker Handle, Custom - installed
C10= Panel Board Breaker Handle
CEN= Cenelec (ATEX) Option
E1= Corrosion-Resistant Epoxy Paint (Outside only)
E2= Corrosion-Resistant Epoxy Paint (Inside & Outside)
E3= Stainless Steel (316) Triple Lead Captive Quick Thread Cover Bolts
E4= Stainless Steel Mounting Hardware (Internal Hardware)
E5= Corrosion-Resistant Epoxy Paint (Inside Only)
E8= Custom Mounting Bracket (For meter, etc.)
E9= Clear Anodizing
G1= 1" Diameter Round Window Glass (Installed)
G2= 2" Diameter Round Window Glass (Installed)
G3= 3" Diameter Round Window Glass (Installed)
G4= 4" Diameter Round Window Glass (Installed)
G5= 5-1/4" Diameter Round Window Glass (Installed)
G6= 6-3/4" Diameter Round Window Glass (Installed)
G7= 7-5/8" Diameter Round Window Glass (Installed)
G8= Custom Square or Rectangular Window Glass (Installed / Specify)
H1= Stainless Steel Hinge Kit (for AXJ12126 and smaller)
HC1= Aluminum Cast Hinge Kit (for AXJ12126 and smaller)
H2= Medium Duty Cast Aluminum Hinge Kit (for CXJ12184 to CXJ18308)
H3= Heavy Duty Cast Aluminum Hinge Kit (for CXJ18368 to CXJ346810)
HL*= Hinge Lifter Guide Pin
K+= Terminal Block (Specify Qty.)
MS= Standard XJIH Mounting Strap
MSR= Raised XJIH Mounting Strap
MSD= Diamond Shaped XJIH Mounting Strap
N1= Aluminum Mounting Panel
N2= Galvanized Mounting Panel
N3= Phenolic Mounting Panel
N4= NEMA 4 O-ring Gasket
N5= Stainless Steel Rust Proof Cover Bolts
N6= Metallic Legend Plates
JN6= Jumbo Metallic Legend Plates
MN6= Mini Metallic Legend Plates
N7= Phenolic Legend Plates
N8= Custom Legend Plates
R3 = 3/4" NPSM Close-Up Plug
RP1= 1/2" NPT Conduit Entry Close-Up Plug
RP2= 3/4" NPT Conduit Entry Close-Up Plug
RP3= 1" NPT Conduit Entry Close-Up Plug
RP4= 1-1/4" NPT Conduit Entry Close-Up Plug
RP5= 1-1/2" NPT Conduit Entry Close-Up Plug
RP6= 2" NPT Conduit Entry Close-Up Plug
RP7= 2-1/2" NPT Conduit Entry Close-Up Plug
RP8= 3" NPT Conduit Entry Close-Up Plug
RP9= 3-1/2" NPT Conduit Entry Close-Up Plug
RP10= 4" NPT Conduit Entry Close-Up Plug

* - HL is suggested for enclosures with 30" of length, or when hinges are installed on the short side of the enclosure.

TABLE IV - CONDUIT SPACING

Outlet Code		MINIMUM CENTER TO CENTER CONDUIT SEPARATIONS INCHES (mm)									
		4 (M90)	3-1/2 (M85)	3 (M80)	2-1/2 (M75)	2 (M63)	1-1/2 (M50)	1-1/4 (M40)	1 (M32)	3/4 (M25)	1/2 (M20)
1	1/2	3-5/8 (92.08)	3-3/8 (85.73)	3 (76.2)	2-5/8 (66.68)	2-3/8 (60.33)	2 (50.8)	2 (50.8)	1-3/4 (44.45)	1-5/8 (41.28)	1-1/2 (38.1)
2	3/4	3-3/4 (95.25)	3-1/2 (88.9)	3-1/8 (79.38)	2-3/4 (69.85)	2-1/2 (63.5)	2-1/8 (53.98)	2-1/8 (53.98)	1-7/8 (47.63)	1-3/4 (44.45)	
3	1	4 (101.6)	3-5/8 (92.08)	3-1/4 (82.55)	3 (76.2)	2-5/8 (66.68)	2-3/8 (60.33)	2-3/8 (60.33)	2 (50.8)		
4	1-1/4	4-1/4 (107.95)	4 (101.6)	3-5/8 (92.08)	3-1/4 (82.55)	3 (76.2)	2-5/8 (66.68)	2-5/8 (66.68)			
5	1-1/2	4-1/4 (107.95)	4 (101.6)	3-5/8 (92.08)	3-1/4 (82.55)	3 (76.2)	2-5/8 (66.68)				
6	2	4-5/8 (117.48)	4-1/4 (107.95)	3-7/8 (98.43)	3-5/8 (92.08)	3-1/4 (82.55)					
7	2-1/2	4-7/8 (123.83)	4-5/8 (117.48)	4-1/4 (107.95)	3-7/8 (98.43)						
8	3	5-3/8 (136.53)	5 (127)	4-5/8 (117.48)							
9	3-1/2	5-5/8 (142.88)	5-1/4 (133.35)								
10	4	5-7/8 (149.23)									

* If seals are used, extra clearance may be required. Check dimensions of seals and fittings to determine required spacing. Consult factory for assistance.

Size	Pitch	Trade Size of Conduit (NPT)	Threads Per Inches	Minimum Wall Thickness (Inches)
M50	1.5, 2	1/2 - 3/4	14	.357
M80	2	1 - 2	11-1/2	.435
M90	2	2-1/2 - 4	8	.625

DRAFT

Explosion-Proof Pilot Devices

Nema Type 4, 4X, 7 & 9



Pilot Lights
- Pigtail
- Saddle Clamp
- Transformer
- Illuminated P.B.
- Push-To-Test
- Mini

Push Buttons
- Flush
- Extended
- Dual
- Mushroom Head
- Mini
- Maintained

Potentiometers
- 1k, 2k, 5k & 10k Ohms

Reset Push Buttons
- Standard
- Mini

Selector Switches
- 2-Position
- 2-Position Keyed
- 3-Position
- 3-Position Keyed
- Mini - Consult Factory

ATEX 100a Directive 94/9/EC

Consult factory to confirm certifications for complete product line

Specifications / XM & XP Series North American
- -25°C to +40°C Ambient
- NEMA 4X
- 3/4-14 npsm thread - standard series (XP-type)
- 3/8-16 unc thread - mini series (XM type)

XM (Mini) & XP (-CEN) Cenelec Series
- Ⓔx II 2 G Ex d IIB + H2
- Ⓔx II 2 D
- -55°C to +100°C Ambient
- IP66 when installed in an IP66 rated enclosure
- DEMKO 06 ATEX 0605697U
- Directive 94/9/EC
- "U" Component Certification
- EN 60079-0: 2004+ prAA:2005
- EN 60079-1: 2004
- EN 50281-1-1: 1998 incl. A1: 2002
- Please add "-CEN" to designate ATEX (Optional)

DRAFT

2 & 3 Position Push-Pull Switch Operators



2 Position Push-Pull Switch Operator
XPPPS-2GE

Specifications

XPPP S - 2 _ R A - FS (-CEN)
a b c d e f
ATEX Optional

a = Barrel Type

Code	Description
S	Short Barrel
L	Long Barrel

b = Number of Positions

Code	Description
2	2-Position
3	3-Position

c = **Mushroom Heads

Code	Description
Blank	Standard Mushroom Head
J	Jumbo Mushroom Head

Note: To engrave mushroom heads, C/F

d = Button Color

Code	Description
G	Green
R	Red

e = Contact Blocks

Code	Description
Blank	No Contacts
A	1 N.O.
B	1 N.C.
2A	2 N.O.
2B	2 N.C.
C	1 N.O. / 1 N.C.
*D	2 N.O. / 2 N.C.
E	1 N.C.L.B.
F	1 N.O.E.M.
2E	2 N.C.L.B.
2F	2 N.O.E.M.
*G	1 N.O. / 1 N.C.L.B.
*H	1 N.C. / 1 N.C.L.B.
*J	3 N.O. / 3 N.C.
*K	4 N.O. / 4 N.C.
L	N.O.E.M.-N.C.
M	N.O.E.M.-N.O.
N	N.C.L.B.-N.O.E.M.
P	2 N.O. / 2 N.C. (300V)

f = Accessories

Code	Description
-FS	Finger Safe Option

CONTACT ABBREVIATION
N.O.= Normally Open
N.C.= Normally Closed
N.C.L.B.= Normally Closed- Late Break
N.O.E.M.= Normally Open- Early Make
E.C.N.O.= Early Close-Normally Open
L.O.N.C.= Late Open-Normally Closed

All contact blocks are rated 600V unless noted.

N4= NEMA 4 locking collar is standard on all Akron Electric operators

3/4"-14 NPSM standard thread

Pushbuttons can also be used with Allen Bradley or C3 Controls contact blocks. (C/F)

*Denotes multiple block configuration

**Mushroom heads are made of Anodized Aluminum

DRAFT

Explosion-Proof Pilot Devices

Nema Type 4, 4X, 7 & 9



Pilot Lights
- Pigtail
- Saddle Clamp
- Transformer
- Illuminated P.B.
- Push-To-Test
- Mini

Push Buttons
- Flush
- Extended
- Dual
- Mushroom Head
- Mini
- Maintained

Potentiometers
- 1k, 2k, 5k & 10k Ohms

Reset Push Buttons
- Standard
- Mini

Selector Switches
- 2-Position
- 2-Position Keyed
- 3-Position
- 3-Position Keyed
- Mini - Consult Factory

ATEX 100a Directive 94/9/EC

Consult factory to confirm certifications for complete product line

Specifications / XM & XP Series North American
- -25°C to +40°C Ambient
- NEMA 4X
- 3/4-14 npsm thread - standard series (XP-type)
- 3/8-16 unc thread - mini series (XM type)

XM (Mini) & XP (-CEN) Cenelec Series
- Ⓔx II 2 G Ex d IIB + H2
- Ⓔx II 2 D
- -55°C to +100°C Ambient
- IP66 when installed in an IP66 rated enclosure
- DEMKO 06 ATEX 0605697U
- Directive 94/9/EC
- "U" Component Certification
- EN 60079-0: 2004+ prAA:2005
- EN 60079-1: 2004
- EN 50281-1-1: 1998 incl. A1: 2002
- Please add "-CEN" to designate ATEX (Optional)

DRAFT

2 & 3 Position Selector Switches

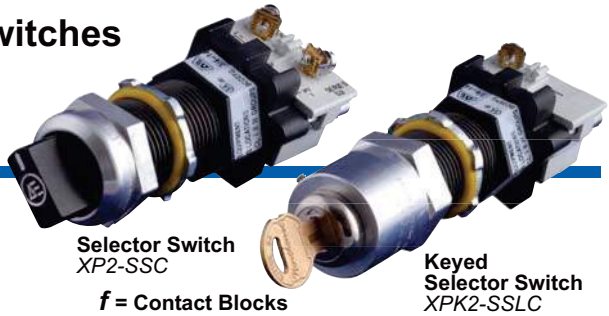

Selector Switch
XP2-SSC

Keyed
Selector Switch
XPK2-SSLC

Specifications

XP _ 2 - S _ C C - AE1 - FS (-CEN)
a b c d e f g h

ATEX Optional

a = Switch Type

Code	Description
Blank	Standard
K	Keyed

b = Number of Positions

Code	Description
2	Two Position Switch
3	Three Position Switch

C/F for Selector Switches with greater than 3 positions

c = Sequence

Code	Description
S	Maintained
C	Return to Center
R	Return From Left
L	Return From Right

d = Barrel Type

Code	Description
S	Short Barrel
L	Long Barrel

e = Key Removal Position

Code	Description
Blank	No Key
C	Center Removal
R	Right Removal
L	Left Removal

g = Unique Key Configurations

Code	Description
AE1	Key #1
AE2	Key #2
AE3	Key #3

f = Contact Blocks

Code	Description
Blank	No Contacts
A	1 N.O.
B	1 N.C.
2A	2 N.O.
2B	2 N.C.
C	1 N.O. / 1 N.C.
*D	2 N.O. / 2 N.C.
E	1 N.C.L.B.
F	1 N.O.E.M.
2E	2 N.C.L.B.
2F	2 N.O.E.M.
*G	1 N.O. / 1 N.C.L.B.
*H	1 N.C. / 1 N.C.L.B.
*J	3 N.O. / 3 N.C.
*K	4 N.O. / 4 N.C.
L	N.O.E.M.-N.C.
M	N.O.E.M.-N.O.
N	N.C.L.B.-N.O.E.M.
P	2 N.O. / 2 N.C. (300V)

h = Accessory

Code	Description
-FS	Finger Safe Options

N4= NEMA 4 locking collar is standard on all Akron Electric operators

3/4"-14 NPSM standard thread

CONTACT ABBREVIATION
N.O.= Normally Open
N.C.= Normally Closed
N.C.L.B.= Normally Closed- Late Break
N.O.E.M.= Normally Open- Early Make

All contact blocks are rated 600V unless noted.

Consult factory for switching sequences with multiple contacts. Up to four contacts may be stacked.

See Cam Page for Reference to Switching Sequences.

Pushbuttons can also be used with Allen Bradley or C3 Controls contact blocks. (C/F)

*Denotes multiple block configuration

DRAFT

XP 2 & 3 Selector Switch Operators (Keyed & Non-Keyed) Dimensional Data

Dimensions (Inches [mm])

Note: All dimensions are for reference only

CLASS I, Div 1 & 2, GROUPS B, C & D;
CLASS II, Div 1 & 2, GROUPS E, F & G;
CLASS III,
NEMA TYPE 4, 4X, 7 & 9

UL 698 Industrial Control Equipment in Hazardous (Classified) Locations.

UL 1203 Explosion-Proof and Dust-Ignition-Proof Electrical Equipment for Use in Hazardous (Classified) Locations.

CSA C22.2 No. 30-LR86146 Explosion-Proof Enclosures for use in Class I Hazardous locations.

FILE NO. E203605
FILE NO. E181300
FILE NO. E139669

LR86146

(Optional)

FEATURES

- Operator bodies are black anodized & teflon impregnated.
- Operating Shafts are stainless steel.
- 3/4-14 NPSM threaded body size
- **Long Series:** Accommodates up to 2-1/2" thick enclosure wall thickness.
- **Short Series:** Accommodates up to 1" thick enclosure wall thickness.
- Explosion-Proof Operators are suitable for panel or surface mount applications.
- See Contact Block Information sheet for mounting and rating information.
- Selector Switches available in 2 or 3 positions (For Keyed - specify key removal position)
- Three unique key configurations available - Specify AE1, AE2, or AE3

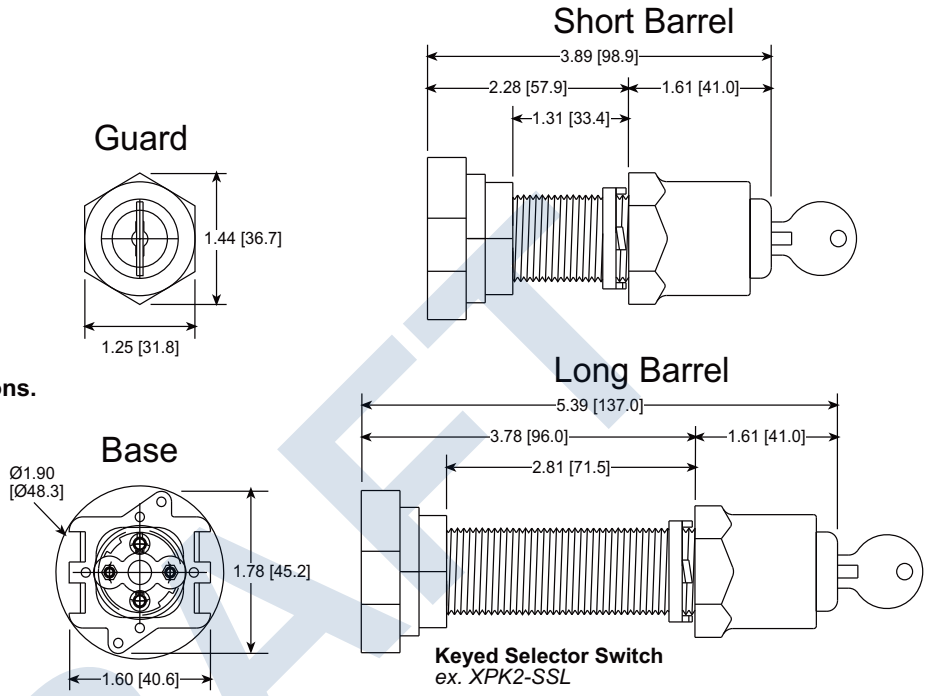

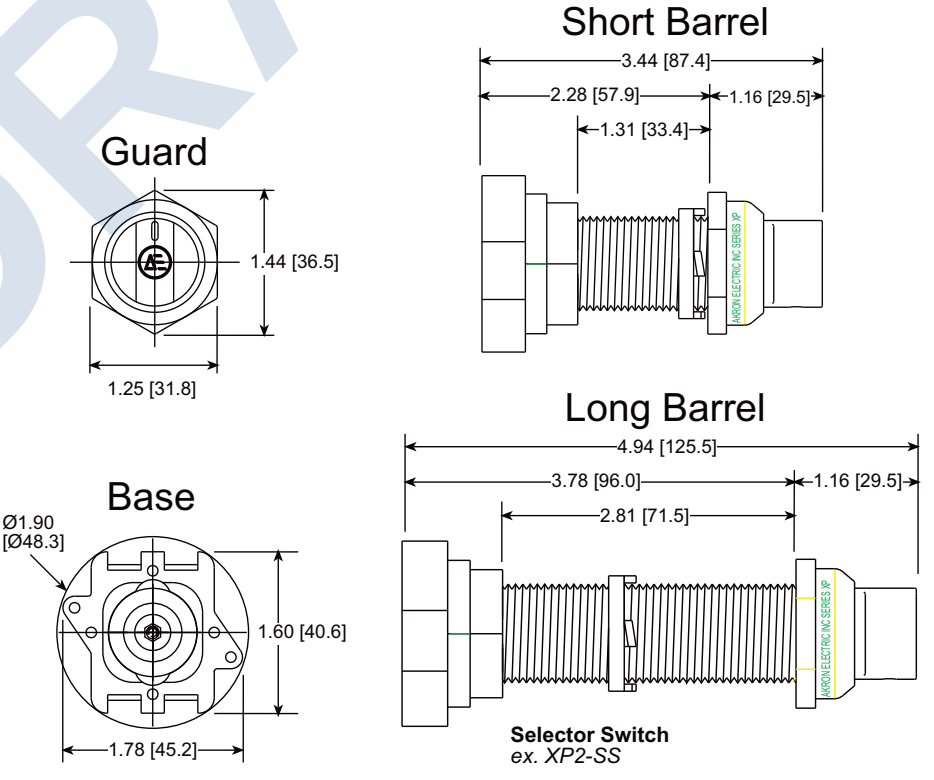

DRAFT

Selector Switch Contact Sequence Chart

Contact Block Switching Sequences (Standard Installation)

AE SUFFIX	CONTACT BLOCK (AE)	CONTACT BLOCK (CH)	CIRCUIT OF CONTACT BLOCK	MTG. POS.	2 POSITION	3 POSITION				
					CAM 1	CAM 2	CAM 3	CAM 4	CAM 5	CAM 6
	KNOB POSITION →				L R	L C R	L C R	L C R	L C R	L C R
"A"	2003ABB	10250T53	1 N.O.	A	O X	O O X	X O O	O X O	X X O	O X O
"B"	2003AAB	10250T51	1 N.C.	A	X O	X X O	O X X	X O X	O O X	O O X
"2A"	2003AEB	10250T2	1 N.O. 1 N.O.	A B	O X O X	O O X X O X	X O O O O X	O X O O X X	X X O X O O	O X O O O X
"2B"	2003ADB	10250T3	1 N.C. 1 N.C.	A B	X O X O	X X O O X O	O X X X X O	X O X X O O	O O X O X X	O O X X O O
"C"	2003ACB	10250T1	1 N.C. 1 N.O.	A B	X O O X	X X O X O X	O X X O O X	X O X O X X	O O X X O O	O O X O O X
"D"	(2) 2003ACB	(2) 10250T1	2 N.C. 2 N.O.	A B	X O O X	X X O X O X	O X X O O X	X O X O X X	O O X X O O	O O X O O X
"E"	2003AGB	10250T71	1 N.C.L.B	A	X O	X X O	O X X	X O X	O O X	O O X
"2E"	2003AHB	10250T45	1 N.C.L.B. 1 N.C.L.B.	A B	X O X O	X X O O X O	O X X X X O	X O X X O O	O O X O X X	O O X X O O
"J"	(3) 2003ACB	(3) 10250T1	3 N.C. 3 N.O.	A B	X O O X	X X O X O X	O X X O O X	X O X O X X	O O X X O O	O O X O O X
"K"	(4) 2003ACB	(4) 10250T1	4 N.C. 4 N.O.	A B	X O O X	X X O X O X	O X X O O X	X O X O X X	O O X X O O	O O X O O X
"L"	2003AJB	10250T47	1 E.C.N.O. 1 N.C	A B	O X X O	0 O X O X O	X O O X X O	O X O X O O	X X O O X X	X X O X O O
"M"	2003AKB	10250T57	1 E.C.N.O. 1	A B	O X O X	O O X X O X	X O O O O X	O X O O X X	X X O X O O	O X O O O X
"N"	2003ALB	10250T55	1 L.O.N.C. 1 E.C.N.O.	A B	X O O X	X X O X O X	O X X O O X	X O X O X X	O O X X O O	X O X O X X
"P"	2003AFB -RATED- -300V	10250T44 -RATED- -300V	1 N.C. 1 N.O. 1 N.C. 1 N.O.	A A B B	X O O X X O O X	X X O O O X O X O X O X	O X X X O O X X O O O X	X O X O X O X O O O X X	O O X X X O O X X X O O	O O X O X O X O O O O X

Inverted Contact Blocks (Rotated 180° from Standard)

AE SUFFIX	CONTACT BLOCK (AE)	CONTACT BLOCK (CH)	CIRCUIT OF CONTACT BLOCK	MTG. POS.	2 POSITION	3 POSITION				
					CAM 1	CAM 2	CAM 3	CAM 4	CAM 5	CAM 6
	KNOB POSITION →				L R	L C R	L C R	L C R	L C R	L C R
"A*"	2003ABB	10250T53	1 N.O.	B	O X	X O X	O O X	O X X	X O O	O O X
"B*"	2003AAB	10250T51	1 N.C.	B	X O	O X O	X X O	X O O	O X X	X O O
"E*"	2003AGB	10250T71	1 N.C.L.B	B	X O	O X O	X X O	X O O	O X X	X X O
"C*"	2003ACB	10250T1	1 N.O. 1 N.C.	A B	O X X O	O O X O X O	X O O X X O	O X O X O O	X X O O X X	O X O X O O
"D*"	(2) 2003ACB	(2) 10250T1	2 N.O. 2 N.C.	A B	O X X O	O O X O X O	X O O X X O	O X O X O O	X X O O X X	O X O X O O
"J*"	(3) 2003ACB	(3) 10250T1	3 N.O. 3 N.C.	A B	O X X O	O O X O X O	X O O X X O	O X O X O O	X X O O X X	O X O X O O
"K*"	(4) 2003ACB	(4) 10250T1	4 N.O. 4 N.C.	A B	O X X O	O O X O X O	X O O X X O	O X O X O O	X X O O X X	O X O X O O
"L*"	2003AJB	10250T47	1 L.O.N.C. 1 E.C.N.O.	A B	X O O X	X X O X O X	X O O X X O	O X O X O O	X X O O X X	O X O X O O
"M*"	2003AKB	10250T57	1 N.O. 1 E.C.N.O.	A B	O X O X	O O X X O X	X O O O O X	O X O O X X	X X O X O O	O X O O X X
"N*"	2003ALB	10250T55	1 E.C.N.O. 1 L.O.N.C.	A B	O X X O	O O X O X O	X O O X X O	O X O X O O	X X O O X X	X X O X X O

Note: Please consult our Engineering Department for assistance with the interpretation of this chart

DRAFT

CONTINUOUS HINGE, TYPE 4X



INDUSTRY STANDARDS

Mounting brackets required to meet UL/CSA external mounting requirements.

UL 508A Listed; Type 4, 4X, 12, 13; File No. E61997 cUL Listed per CSA C22.2 No 94; Type 4, 4X, 12, 13; File No. E61997 Enclosure flammability evaluated per UL 508A Window flammability evaluated per UL 508A

NEMA/EEMAC Type 4, 4X, 12, 13
IEC 60529, IP66

APPLICATION

The efficient design and simple construction of these enclosures make them durable in corrosive environments, yet aesthetically pleasing. Corner latches provide unobstructed access. The continuous hinge provides a secure seal, and double latching creates added security.

SPECIFICATIONS

- Compression-molded fiberglass has outstanding chemical- and temperature-resistance qualities and exhibits excellent weatherability and physical properties
- Fiberglass is easily punched, drilled, filed or sawed
- Gasket assures watertight and dust-tight seal
- Polyester mounting brackets and stainless steel attachment screws are provided with each enclosure
- Scratch-resistant polycarbonate windows are permanently bonded in place
- Molded-in-place threaded brass inserts and plated steel screws are provided for mounting optional panels and terminal block kits
- Removable hinged cover attached to body with Type 316 stainless steel hinge pin
- Screw-cover enclosures are secured with two captivated Type 316 stainless steel slotted cover screws
- Enclosures with quick-release latches have corrosion-resistant polyester latches located in corners that provide unobstructed access to enclosure
- Hinge pin and bail are corrosion-resistant Type 316 stainless steel
- Padlock provisions included in each latch
- Material is halogen free

FINISH

Standard fiberglass material finish is light-gray inside and out. Optional steel panels are painted white. Optional stainless steel, aluminum, conductive and composite panels are unpainted.

ACCESSORIES

See also Accessories.
H2OMIT Vent Drains, Type 4X
HOL-SEALERS, Non-Metallic Hole Seals
Panels for Junction Boxes
Threaded Panel Extenders
Quick-Release Latch Kit
Swing-Out Panel Kit

MODIFICATION AND CUSTOMIZATION

Hoffman excels at modifying and customizing products to your specifications. Contact your local Hoffman sales office or distributor for complete information.

BULLETIN: A48

DRAFT

Standard Product **Solid Cover**

Catalog Number	AxBxC in./mm	Type	Steel Panel	Alum. Panel	Panel Size D x E in./mm	Mounting G x H in./mm	Overall L x W in./mm	F in./mm	J in./mm	K in./mm	O in./mm	P in./mm	Q in./mm	T in./mm	U in./mm
A664CHSCFG	6.00 x 6.00 x 4.00 152 x 152 x 102	Screw Cover	A6P6	A6P6AL	4.88 x 4.88 124 x 124	6.94 x 4.00 176 x 102	6.50 x 6.50 165 x 165	3.45 88	3.25 83	1.00 25	4.25 108	4.25 108	5.64 143	0.12 3	5.64 143
A664CHQRFG	6.00 x 6.00 x 4.00 152 x 152 x 102	Quick Release	A6P6	A6P6AL	4.88 x 4.88 124 x 124	6.94 x 4.00 176 x 102	6.50 x 6.50 165 x 165	3.45 88	3.25 83	1.00 25	4.25 108	4.25 108	5.64 143	0.12 3	5.64 143
A864CHSCFG	8.00 x 6.00 x 4.00 203 x 152 x 102	Screw Cover	A8P6	A8P6AL	6.75 x 4.88 171 x 124	8.94 x 4.00 227 x 102	8.50 x 6.50 216 x 165	3.45 88	3.25 83	1.00 25	4.25 108	6.25 159	7.64 194	0.12 3	5.64 143
A864CHQRFG	8.00 x 6.00 x 4.00 203 x 152 x 102	Quick Release	A8P6	A8P6AL	6.75 x 4.88 171 x 124	8.94 x 4.00 227 x 102	8.50 x 6.50 216 x 165	3.45 88	3.25 83	1.00 25	4.25 108	6.25 159	7.64 194	0.12 3	5.64 143
A1086CHSCFG	10.00 x 8.00 x 6.00 254 x 203 x 152	Screw Cover	A10P8	A10P8AL	8.75 x 6.88 222 x 175	10.94 x 6.00 278 x 152	10.50 x 8.50 267 x 216	5.45 138	4.94 125	1.31 33	6.25 159	8.25 210	9.61 244	0.12 3	7.61 193
A1086CHQRFG	10.00 x 8.00 x 6.00 254 x 203 x 152	Quick Release	A10P8	A10P8AL	8.75 x 6.88 222 x 175	10.94 x 6.00 278 x 152	10.50 x 8.50 267 x 216	5.45 138	4.94 125	1.31 33	6.25 159	8.25 210	9.61 244	0.12 3	7.61 193
A12106CHSCFG	12.00 x 10.00 x 6.00 305 x 254 x 152	Screw Cover	A12P10	A12P10AL	10.75 x 8.88 273 x 226	12.94 x 8.00 329 x 203	12.50 x 10.50 318 x 267	5.45 138	4.69 119	1.56 40	8.25 210	10.25 260	11.58 294	0.12 3	9.58 243
A12106CHQRFG	12.00 x 10.00 x 6.00 305 x 254 x 152	Quick Release	A12P10	A12P10AL	10.75 x 8.88 273 x 226	12.94 x 8.00 329 x 203	12.50 x 10.50 318 x 267	5.45 138	4.69 119	1.56 40	8.25 210	10.25 260	11.58 294	0.12 3	9.58 243
A14128CHSCFG	14.00 x 12.00 x 8.00 356 x 305 x 203	Screw Cover	A14P12	A14P12AL	12.75 x 10.88 324 x 276	14.94 x 10.00 379 x 254	14.55 x 12.55 370 x 319	7.45 189	6.50 165	1.81 46	10.25 260	12.25 311	13.59 345	0.15 4	11.59 294
A14128CHQRFG	14.00 x 12.00 x 8.00 356 x 305 x 203	Quick Release	A14P12	A14P12AL	12.75 x 10.88 324 x 276	14.94 x 10.00 379 x 254	14.55 x 12.55 370 x 319	7.45 189	6.50 165	1.81 46	10.25 260	12.25 311	13.59 345	0.15 4	11.59 294
A16148CHSCFG	16.00 x 14.00 x 8.00 406 x 356 x 203	Screw Cover	A16P14	A16P14AL	14.75 x 12.88 375 x 327	16.94 x 12.00 430 x 305	16.55 x 14.55 420 x 370	7.45 189	6.23 158	2.08 53	12.25 311	14.25 362	15.56 395	0.15 4	13.56 344
A16148CHQRFG	16.00 x 14.00 x 8.00 406 x 356 x 203	Quick Release	A16P14	A16P14AL	14.75 x 12.88 375 x 327	16.94 x 12.00 430 x 305	16.55 x 14.55 420 x 370	7.45 189	6.23 158	2.08 53	12.25 311	14.25 362	15.56 395	0.15 4	13.56 344
A181610CHSCFG	18.00 x 16.00 x 10.00 457 x 406 x 254	Screw Cover	A18P16	A18P16AL	16.75 x 14.88 425 x 378	18.94 x 14.00 481 x 356	18.58 x 16.58 472 x 421	9.45 240	7.66 195	2.66 68	14.25 362	16.25 413	17.53 445	0.16 4	15.53 394
A181610CHQRFG	18.00 x 16.00 x 10.00 457 x 406 x 254	Quick Release	A18P16	A18P16AL	16.75 x 14.88 425 x 378	18.94 x 14.00 481 x 356	18.58 x 16.58 472 x 421	9.45 240	7.66 195	2.66 68	14.25 362	16.25 413	17.53 445	0.16 4	15.53 394
A201610CHSCFG	20.00 x 16.00 x 10.00 508 x 407 x 254	Screw Cover	A20P16J	A20P16JAL	18.75x14.88 476x378	20.94 x14.00 532x356	20.58x16.58 523x421	9.45 240	7.66 195	2.66 68	13.81 351	17.81 452	19.64 499	0.16 4	15.64 397
A201610CHQRFG	20.00 x 16.00 x 10.00 508 x 407 x 254	Quick Release	A20P16J	A20P16JAL	18.75x14.88 476x378	20.94 x14.00 532x356	20.58x16.58 523x421	9.45 240	7.66 195	2.66 68	13.81 351	17.81 452	19.64 499	0.16 4	15.64 397

Purchase panels separately. Optional stainless steel, aluminum, conductive and composite material panels available for most sizes.

Standard Product **Window Cover**

Catalog Number	AxBxC in./mm	Type	Steel Panel	Alum. Panel	Panel Size D x E in./mm	Mounting G x H in./mm	Overall L x W in./mm	F in./mm	J in./mm	K in./mm	M in./mm	N in./mm	O in./mm	P in./mm	Q in./mm	T in./mm	U in./mm
A664CHSCFGW	6.00 x 6.00 x 4.00 152 x 152 x 102	Screw Cover	A6P6	A6P6AL	4.88 x 4.88 124 x 124	6.94 x 4.00 176 x 102	6.50 x 6.50 165 x 165	3.45 88	3.25 83	1.00 25	4.25 108	4.25 108	4.25 108	4.25 108	5.64 143	0.12 3	5.64 143
A664CHQRFGW	6.00 x 6.00 x 4.00 152 x 152 x 102	Quick Release	A6P6	A6P6AL	4.88 x 4.88 124 x 124	6.94 x 4.00 176 x 102	6.50 x 6.50 165 x 165	3.45 88	3.25 83	1.00 25	4.25 108	4.25 108	4.25 108	4.25 108	5.64 143	0.12 3	5.64 143
A864CHSCFGW	8.00 x 6.00 x 4.00 203 x 152 x 102	Screw Cover	A8P6	A8P6AL	6.75 x 4.88 171 x 124	8.94 x 4.00 227 x 102	8.50 x 6.50 216 x 165	3.45 88	3.25 83	1.00 25	6.25 159	4.25 108	4.25 108	6.25 159	7.64 194	0.12 3	5.64 143
A864CHQRFGW	8.00 x 6.00 x 4.00 203 x 152 x 102	Quick Release	A8P6	A8P6AL	6.75 x 4.88 171 x 124	8.94 x 4.00 227 x 102	8.50 x 6.50 216 x 165	3.45 88	3.25 83	1.00 25	6.25 159	4.25 108	4.25 108	6.25 159	7.64 194	0.12 3	5.64 143
A1086CHSCFGW	10.00 x 8.00 x 6.00 254 x 203 x 152	Screw Cover	A10P8	A10P8AL	8.75 x 6.88 222 x 175	10.94 x 6.00 278 x 152	10.50 x 8.50 267 x 216	5.45 138	4.94 125	1.31 33	8.25 210	6.25 159	6.25 159	8.25 210	9.61 244	0.12 3	7.61 193
A1086CHQRFGW	10.00 x 8.00 x 6.00 254 x 203 x 152	Quick Release	A10P8	A10P8AL	8.75 x 6.88 222 x 175	10.94 x 6.00 278 x 152	10.50 x 8.50 267 x 216	5.45 138	4.94 125	1.31 33	8.25 210	6.25 159	6.25 159	8.25 210	9.61 244	0.12 3	7.61 193
A12106CHSCFGW	12.00 x 10.00 x 6.00 305 x 254 x 152	Screw Cover	A12P10	A12P10AL	10.75 x 8.88 273 x 226	12.94 x 8.00 329 x 203	12.50 x 10.50 318 x 267	5.45 138	4.69 119	1.56 40	10.25 260	8.25 210	8.25 210	10.25 260	11.58 294	0.12 3	9.58 243
A12106CHQRFGW	12.00 x 10.00 x 6.00 305 x 254 x 152	Quick Release	A12P10	A12P10AL	10.75 x 8.88 273 x 226	12.94 x 8.00 329 x 203	12.50 x 10.50 318 x 267	5.45 138	4.69 119	1.56 40	10.25 260	8.25 210	8.25 210	10.25 260	11.58 294	0.12 3	9.58 243
A14128CHSCFGW	14.00 x 12.00 x 8.00 356 x 305 x 203	Screw Cover	A14P12	A14P12AL	12.75 x 10.88 324 x 276	14.94 x 10.00 379 x 254	14.55 x 12.55 370 x 319	7.45 189	6.50 165	1.81 46	12.25 311	10.25 260	10.25 260	12.25 311	13.59 345	0.15 4	11.59 294
A14128CHQRFGW	14.00 x 12.00 x 8.00 356 x 305 x 203	Quick Release	A14P12	A14P12AL	12.75 x 10.88 324 x 276	14.94 x 10.00 379 x 254	14.55 x 12.55 370 x 319	7.45 189	6.50 165	1.81 46	12.25 311	10.25 260	10.25 260	12.25 311	13.59 345	0.15 4	11.59 294
A16148CHSCFGW	16.00 x 14.00 x 8.00 406 x 356 x 203	Screw Cover	A16P14	A16P14AL	14.75 x 12.88 375 x 327	16.94 x 12.00 430 x 305	16.55 x 14.55 420 x 370	7.45 189	6.23 158	2.08 53	14.25 362	12.25 311	12.25 311	14.25 362	15.56 395	0.15 4	13.56 344
A16148CHQRFGW	16.00 x 14.00 x 8.00 406 x 356 x 203	Quick Release	A16P14	A16P14AL	14.75 x 12.88 375 x 327	16.94 x 12.00 430 x 305	16.55 x 14.55 420 x 370	7.45 189	6.23 158	2.08 53	14.25 362	12.25 311	12.25 311	14.25 362	15.56 395	0.15 4	13.56 344
A181610CHSCFGW	18.00 x 16.00 x 10.00 457 x 406 x 254	Screw Cover	A18P16	A18P16AL	16.75 x 14.88 425 x 378	18.94 x 14.00 481 x 356	18.58 x 16.58 472 x 421	9.45 240	7.66 195	2.66 68	16.25 413	14.25 362	14.25 362	16.25 413	17.53 445	0.16 4	15.53 394
	18.00 x 16.00 x 10.00 457 x 406 x 254	Quick Release	A18P16	A18P16AL	16.75 x 14.88 425 x 378	18.94 x 14.00 481 x 356	18.58 x 16.58 472 x 421	9.45 240	7.66 195	2.69 68	16.25 413	14.25 362	14.25 362	16.25 413	17.53 445	0.16 4	15.53 394
A201610CHSCFGW	20.00 x 16.00 x 10.00 508 x 407 x 254	Screw Cover	A20P16J	A20P16JAL	18.75x14.88 476x378	20.94 x14.00 532x356	20.58x16.58 523x421	9.45 240	7.66 195	2.69 68	18.25 464	14.25 362	13.81 351	17.81 452	19.64 499	0.16 4	15.64 397
	20.00 x 16.00 x 10.00 508 x 407 x 254	Quick Release	A20P16J	A20P16JAL	18.75x14.88 476x378	20.94 x14.00 532x356	20.58x16.58 523x421	9.45 240	7.66 195	2.69 68	18.25 464	14.25 362	13.81 351	17.81 452	19.64 499	0.16 4	15.64 397

Purchase panels separately. Optional stainless steel, aluminum, conductive and composite material panels available for most sizes.

DRAFT

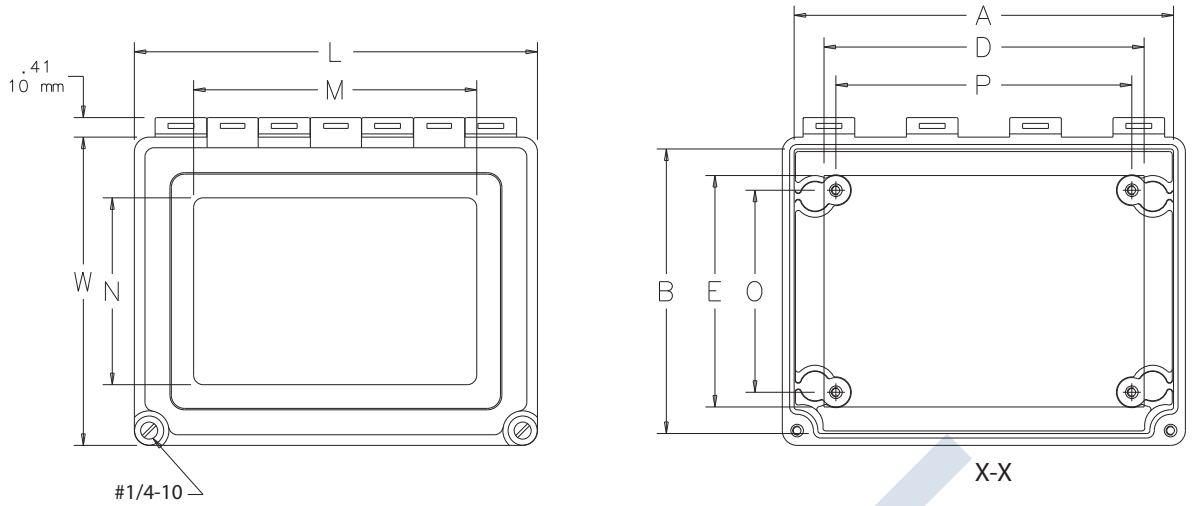

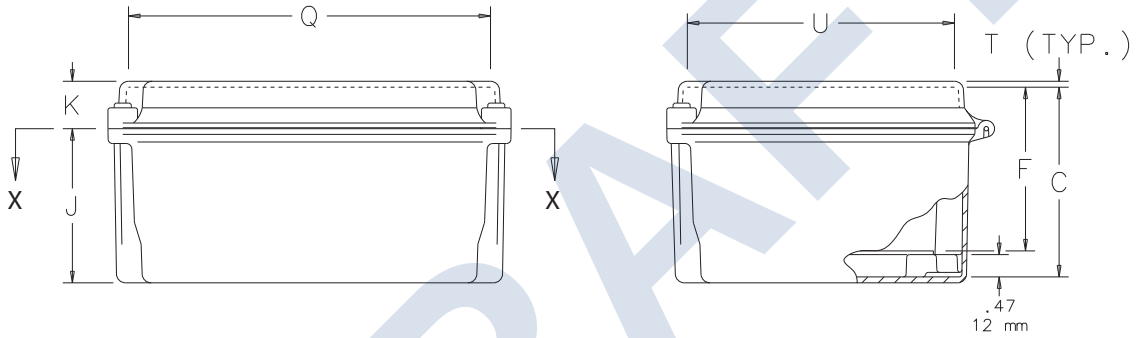

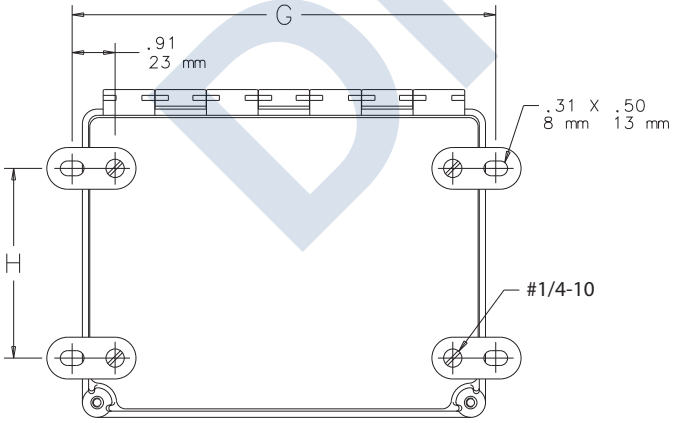

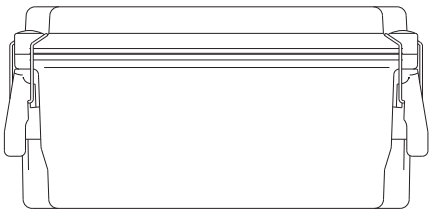

SIDE VIEW
(QUICK-RELEASE COVER ENCLOSURE)

C2567-C

DRAFT

© Siemens AG 2024

Item 64

Overview



SITRANS LT500 is a versatile, single and multi-vessel level monitor/controller for virtually any application in a wide range of industries.

Benefits

- Easy to use HMI display with local four-button programming, menu-driven parameters, and Wizard support for key applications.
- English, German, French, Spanish, Chinese, Italian, Portuguese, Japanese, Danish, Dutch, Swedish, Finnish, Polish, Russian, and Korean texts on the HMI.
- Removable terminal blocks for ease of wiring.
- Digital input for back-up level override from point level device.
- Communication options for HART, Modbus RTU, PROFIBUS PA, PROFIBUS DP, and PROFINET.
- Single or dual point level monitoring.
- Advanced process intelligence echo processing for reliable accurate measurement in difficult applications.
- Auto False-Echo Suppression for fixed obstruction avoidance.
- IQ Guard for health monitoring, NE107 diagnostics, saved echo profiles, event logging, data logging, parameter change logging, hundreds of diagnostics, self check validation, and programming configuration backup/report
- Up to 6 independent programmable relays for pump control, alarms, or remote totalization.
- Level, volume, and flow measurements in open channels, differential control, extended pump control, and alarm functions.
- Wall, panel, and remote panel mounting options.
- Remote configuration via EDD with SIMATIC PDM and SITRANS DTM via USB.
- MCERTS certified for open channel flow.

Application

SITRANS LT500 mA HART version can be used with SITRANS LR110, LR120, Probe LU240 or any level device generating a mA signal. The ultrasonic version can connect any EchoMax or legacy transducer. SITRANS LT500 offers true dual point monitoring and digital communications. SITRANS LT500 is low maintenance and economical. With its advanced control functions, it can operate pumps during lower cost time periods and manage pump rosters for efficiency.

SITRANS LT500 will monitor open channel flow and features advanced relay alarming and pump control functions as well as volume conversion.

- Key Applications: wet wells, flumes/weirs, bar screen control, hoppers, chemical storage, liquid storage, crusher bins, dry solids storage

Design

SITRANS LT500 is available in wall, panel, or remote panel mounting options.

DRAFT

© Siemens AG 2024

Selection and ordering data

SITRANS LT500 mA Hart version Continuous, non-contact, for liquids, slurries, and solids. Monitors level, volume, and volume flow, for virtually any application in a wide range of process industries.	Article No. 7ML60 ● ● - ● ● ● ● ● - ● A A ●
Click on the Article No. for the online configuration in the PIA Life Cycle Portal.	
Product type	
HydroRanger	0
MultiRanger	1
Feature set	
Level, Volume, and Flow (MCERTS class 2 certified)	3
Level, Volume, and Flow, high accuracy (MCERTS class 1 certified)	4
Sensor input type	
4 ... 20 mA input(s)	0
Number of measurement points	
Single point version	A
Dual point version	B
Relay output	
1 relay (1 Form A), 250 V AC	A
3 relays (2 Form A, 1 Form C), 250 V AC	B
6 relays (4 Form A, 2 Form C), 250 V AC	C
Mounting, enclosure design	
Wall mount, standard enclosure	0
Wall mount, 4 entries, M20 cable glands included	1
Panel mount	2
Remote panel mount	3
Type of protection	
Ordinary Locations/General Purpose (Non-Ex), $_{c}CSA_{US}$, $_{c}UL_{US}$ FM, CE, UKCA, RCM, EAC	0
Ex rated[1)]	1
Removable data storage	
Included, (8 GB micro SD)	1
Input voltage	
12 ... 30 V DC	2
100 ... 230 V AC	3

Selection and ordering data	
Further designs	**Order code**
Please add "-Z" to Article No. and specify Order code(s).	
Stainless steel tag [13 x 45 mm (0.5 x 1.75 inch)]: ***Tag (device parameter, max. 32 characters) plate stainless steel 304/1.4301***	**Y15**
Approvals	
CSA (USA & Canada)	
CSA Class I, Div. 2, Group A, B, C and D; Class II, Div 2, Group F & G; Class III	**E21**
Certificates	
Declaration of compliance 2.1 (EN 10204) - delivery meets order requirements	**C19**
Factory certificate 2.2 (EN 10204)	**C14**
Communication	
4 ... 20 mA, active output, with HART	**F01**
Modbus RTU	**F04**
PROFIBUS PA	**F05**
PROFIBUS DP	**F06**
PROFINET	**F07**

Selection and ordering data	
Specials	
Special design For customs, contact a local sales person. For more information please visit http://www.automation.siemens.com/aspa_app	**Y99**
Operating Instructions	
All literature is available to download for free, in a range of languages, at http://www.siemens.com/processinstrumentation/documentation	

Selection and ordering data	
Optional equipment	**Article No.**
Tag, stainless steel, 12 x 45 mm, one text line, (max. 16 characters)	**7ML1930-1AC**
Barriers in a NEMA 4X/IP65 enclosure	**A5E50255823**
Barrier suitable for LR1xx & LU240 (STAHL: 9001/01-280-110-101)	**A5E50113513**
Sunshield/pipe mount plate, 304 Stainless steel	**7ML1930-1GA**
USB cable, 2 m (6.56 ft), standard USB-B to USB-mini B	**7ML1930-1GD**

DRAFT

© Siemens AG 2024

Selection and ordering data (continued)

Selection and ordering data	
SITRANS RD100, loop powered display	7ML5741-.....-.
SITRANS RD150, remote digital display for 4 ... 20 mA and HART devices	7ML5742-.....-....
SITRANS RD200, universal input display with Modbus conversion	7ML5740-.....-..
SITRANS RD300, dual line display with totalizer and linearization curve and Modbus conversion	7ML5744-.....-..
Spare parts	
Replacement motherboard, single point, includes DC power module	A5E50113558
Replacement motherboard, dual point, includes DC power module	A5E50113557
Replacement motherboard, single point, includes AC power module	A5E50113542
Replacement motherboard, dual point, includes AC power module	A5E50113543
Replacement lid with 4 button HMI	A5E50113559
Replacement lid with 4 button HMI panel mount version	A5E50113560
Replacement lid with 4 button HMI remote panel mount version	A5E52897553
Replacement lid with blind remote panel mount version	A5E53276261

Selection and ordering data	
Retrofit kit for wall mount to panel mount version	A5E50114010
Retrofit kit for wall mount to remote panel mount version	A5E53276259
Panel mount cable extension, 2.5 m (8.2 ft)	7ML1930-1GF
Remote panel mount gasket and fastener kit	7ML1830-1PK
Replacement terminal blocks for 4 ... 20 mA input(s) sensor type version	A5E38824197
Replacement SD card	A5E50113554
HART communications module	A5E50113564
PROFIBUS PA communications module	A5E50113568
Modbus RTU communications module	A5E50113565
PROFIBUS DP communications module	A5E50113567
PROFINET communications module	A5E50113569

1) Available only with order code E21 and Mounting, enclosure design option 0 or 1.
2) Available only with Sensor input type option 1.

SITRANS LT500 Ultrasonic version
Continuous, non-contact, for liquids, slurries, and solids. Monitors level, volume, and volume flow, for virtually any application in a wide range of process industries.

Article No. 7ML60 ● ● - ● ● ● ● ● - ● A A ●

Click on the Article No. for the online configuration in the PIA Life Cycle Portal.

Product type	
HydroRanger	0
MultiRanger	1
Feature set	
Level, Volume, and Flow (MCERTS class 2 certified)	3
Level, Volume, and Flow, high accuracy (MCERTS class 1 certified)	4
Sensor input type	
Ultrasonic transducer input(s)	1
Number of measurement points	
Single point version	A
Dual point version	B
Relay output	
1 relay (1 Form A), 250 V AC	A
3 relays (2 Form A, 1 Form C), 250 V AC	B
6 relays (4 Form A, 2 Form C), 250 V AC	C
Mounting, enclosure design	
Wall mount, standard enclosure	0
Wall mount, 4 entries, M20 cable glands included	1
Panel mount	2
Remote panel mount	3
Type of protection	
Ordinary Locations/General Purpose (Non-Ex), CSA, $_{c}UL_{us}$, FM, CE, UKCA, RCM, EAC	0
Ex rated[1]	1
Removable data storage	
Included, (8 GB micro SD)	1
Input voltage	
12 ... 30 V DC	2
100 ... 230 V AC	3

DRAFT

© Siemens AG 2024

Selection and ordering data (continued)

Selection and ordering data	
Further designs	**Order code**
Please add "-Z" to Article No. and specify Order code(s).	
Stainless steel tag [13 x 45 mm (0.5 x 1.75 inch)]: Tag (device parameter, max. 32 characters) plate stainless steel 304/1.4301	**Y15**
Approvals	
CSA (USA & Canada)	
CSA Class I, Div. 2, Group A, B, C and D; Class II, Div 2, Group F & G; Class III	**E21**
Certificates	
Declaration of compliance 2.1 (EN 10204) - delivery meets order requirements	**C19**
Factory certificate 2.2 (EN 10204)	**C14**
Mass storage (SD card access via USB)	
Disable mass storage function with SD card (Required for USA)[2]	**J07**
Communication	
4 ... 20 mA, active output, with HART	**F01**
Modbus RTU	**F04**
PROFIBUS PA	**F05**
PROFIBUS DP	**F06**
PROFINET	**F07**
Specials	
Special design	**Y99**
For customs, contact a local sales person. For more information please visit http://www.automation.siemens.com/aspa_app	
Operating Instructions	
All literature is available to download for free, in a range of languages, at http://www.siemens.com/processinstrumentation/documentation	

Selection and ordering data	
Optional equipment	**Article No.**
Tag, stainless steel, 12 x 45 mm, one text line, (max. 16 characters)	**7ML1930-1AC**
Sunshield/pipe mount plate, 304 Stainless steel	**7ML1930-1GA**

Selection and ordering data	
USB cable, 2 m (6.56 ft), standard USB-B to USB-mini B	**7ML1930-1GD**
SITRANS RD100, loop powered display	**7ML5741-.....-.**
SITRANS RD150, remote digital display for 4 ... 20 mA and HART devices	**7ML5742-.....-....**
SITRANS RD200, universal input display with Modbus conversion	**7ML5740-.....-..**
SITRANS RD300, dual line display with totalizer and linearization curve and Modbus conversion	**7ML5744-.....-..**
Spare parts	
Replacement motherboard, single point, US comes with DC power module	**A5E52897550**
Replacement motherboard, dual point, US comes with DC power module	**A5E52897552**
Replacement motherboard, single point, US comes with AC power module	**A5E52897548**
Replacement motherboard, dual point, US comes with AC power module	**A5E52897549**
Replacement lid with 4 button HMI	**A5E50113559**
Replacement lid with 4 button HMI panel mount version	**A5E50113560**
Replacement lid with 4 button HMI remote panel mount version	**A5E52897553**
Replacement lid with blind remote panel mount version	**A5E53276261**
Retrofit kit for wall mount to panel mount version	**A5E50114010**
Retrofit kit for wall mount to remote panel mount version	**A5E53276259**
Replacement terminal blocks for Ultrasonic transducer input(s) sensor type version	**A5E52897545**
Panel mount cable extension, 2.5 m (8.2 ft)	**7ML1930-1GF**
Remote panel Mount Gasket and Fastener Kit	**7ML1830-1PK**
Replacement SD card	**A5E50113554**
HART communications module	**A5E50113564**
PROFIBUS PA communications module	**A5E50113568**
Modbus RTU communications module	**A5E50113565**
PROFIBUS DP communications module	**A5E50113567**
PROFINET communications module	**A5E50113569**

[1] Available only with order code E21 and Mounting, enclosure design option 0 or 1.
[2] Available only with Sensor input type option 1.

DRAFT

© Siemens AG 2024

Technical specifications

SITRANS LT500 mA HART version	
Mode of operation	Level, space, distance, volume, flow, head, difference, average, totalization
Sensor input, mA HART version	
Number of inputs	1 or 2
PV measurement	Advanced process intelligence
Terminal voltage	Max. 26 V, Min. 18 V (0 ... 22.6 mA)
Wiring	2 conductor, twisted, shielded, 0.5 ... 0.75 mm² (22 ... 18 AWG)
Max. cable length	500 m (1 640.42 ft)
Sensor input communication	• 4 ... 20 mA • HART protocol, for supported sensors: SITRANS LR110, LR120, SITRANS Probe LU240
4 ... 20 mA sensor input	
• Resolution	0.025 % of full scale
• Accuracy	0.1 % of full scale
HART sensor input	Resolution, range, and accuracy are dependent on connected sensor
Digital input	
Quantity	2
Switching threshold, low	0 ... 0.5 V DC
Switching threshold, high	10 ... 50 V DC
Input current	Max. 3 mA
Bias voltage	24 V
Analog output	
Quantity	1 or 2
Range	0 ... 20 mA or 4 ... 20 mA isolated
• Max. load	750 Ω
• Resolution	0.1 % of range
Accuracy	±20 µA
Startup current	3.6 mA
Fail-safe	Programmable as high, low, last reliable, set value, or hold per NAMUR NE43
Wiring	2 conductor, twisted, shielded, 0.5 ... 0.75 mm² (22 ... 18 AWG)
Relay output	
Quantity	Up to 6, 4 form A and 2 form C
Rating	5 A at 250 V AC, 5 A at 30 V DC, non-inductive
Durability	50 000 operations min. per relay (5 A at 30 V DC, resistive load)
Fail-safe	Programmable as energized, de-energized, or hold
Wiring	Copper conductors per local requirements to meet 250 V 5 A contact rating
Rated operating conditions	
Installation conditions	
• Location	Indoor/outdoor
• Installation category	II
• Pollution degree	4
Ambient conditions	
• Ambient temperature	-20 ... +50 °C (-4 ... +122 °F)
• Storage temperature	-20 ... +50 °C (-4 ... +122 °F)
• Humidity	Maximum relative humidity 80 % for temperatures up to 31 °C decreasing linearly to 50 % relative humidity at 40 °C
• Altitude	2 000 m (6 565 ft) maximum
• Vibration resistence	
- Vibration broad-band random, according to IEC 60068-2-64	• 10 ... 200 Hz, 0.0104 g²/Hz • 200 ... 500 Hz, 0.005 g²/Hz

Technical specifications (continued)

SITRANS LT500 mA HART version	
- Vibration non-stationary including shock, according to IEC 60068-2-27	• Peak Acceleration: 25 g • Duration: 6 ms • Number of impacts per direction: 1 000 • Impact directions: 6
• Bump/shock resistence	25 g
EMC performance	IEC/EN 61326-1, EN 55011 (Class A)
Design	
Weight	
• Wall mount	1.22 kg (2.68 lb)
• Panel mount	1.35 kg (2.97 lb)
• Remote panel mount	1.73 kg (3.80 lb)
Enclosure	
• Material	Polycarbonate
• Degree of protection	
• Wall mount	IP65/Type 4X
• Panel mount	IP54/Type 3
• Remote panel mount	IP65/Type 3 (front panel), IP20 (enclosure)
UV exposure	F1 rating per UL746C
Display and control	
• LCD display	60 x 40 mm (2.36 x 1.57 inch) LCD, 240 x 160 pixels resolution
• Menu navigation	4 push button keys
Update time	1 second or less
Memory	Program and parameters stored in non-volatile Flash memory
Real time clock memory retention without power	48 hours
CPU speed	96 MHz
Memory card	8 GB Industrial micro SD
Power supply	
AC version	100 ... 230 V AC, ±15 %, 50/60 Hz, 36 VA (17 W)
DC version	12 ... 30 V DC (20 W)
Certificates and approvals	• CE, UKCA, RCM, EAC, FM, $_{C}CSA_{US}$, $_{C}UL_{US}$ • $_{C}CSA_{US}$ Class I, Div. 2, Group A, B, C and D; Class II, Div 2, Group F & G; Class III • MCERTS
Communication	
Service interface	USB 2.0 mini A cable
Optional Fieldbus	• HART 7, with Active/Passive 4 ... 20 mA • Modbus RTU • PROFIBUS PA per profile 4.01 • PROFIBUS DP • PROFINET
Remote configuration via service interface	• EDD via SIMATIC PDM • SITRANS DTM via PACTware

SITRANS LT500 Ultrasonic version	
Mode of operation	Level, space, distance, volume, flow, head, difference, average, totalization
Sensor input, ultrasonic version	
Number of inputs	1 or 2
PV measurements	Advanced process intelligence
Measuring range	0.3 ... 60 m (1 ... 196 ft), transducer dependent
Transducer frequency	10 ... 52 kHz

DRAFT

© Siemens AG 2024

Technical specifications (continued)

SITRANS LT500 Ultrasonic version	
Ultrasonic transducer	Compatible transducers: all EchoMax and ST-H series transducers, legacy coaxial cable connections via converter
Accuracy	
• Error in measurement	• Standard operation: ±1 mm (0.04 inch) plus 0.17 % of measured distance • High accuracy OCM: ±1 mm (0.04 inch), within 3 m (9.84 ft) range
• Resolution	• Standard operation: 0.1 % of range or 2 mm (0.08 inch), whichever is greater • High accuracy OCM: 0.6 mm (0.02 inch), within 3 m (9.84 ft) range
• Temperature compensation	• -40 ... +150 °C (-40 ... +300 °F) • Integral temperature sensor in t-ransducer • External TS-3 temperature sensor (optional) • Programmable fixed temperature values
Wiring	Transducer: 2 copper conductors, twisted, with foil shield/drain wire, 300 V 0.5 ... 0.75 mm² (22 ... 18 AWG)
• Max. cable length	365 m (1 200 ft)
Analog input	
• Resolution	0.025 % of full scale
• Accuracy	0.1 % of full scale
• Polling rate	>1 Hz
• Maximum cable length	500 m (1640.42 ft)
Digital input	
Quantity	2
Switching threshold, low	0 ... 0.5 V DC
Switching threshold, high	10 ... 50 V DC
Input current	Max. 3 mA
Bias voltage	24 V
Analog output	
Quantity	1 or 2
Range	0 ... 20 mA or 4 ... 20 mA isolated
• Max. load	750 Ω
• Resolution	0.1 % of range
Accuracy	±20 µA
Startup current	3.6 mA
Fail-safe	Programmable as high, low, last reliable, set value, or hold per NAMUR NE43
Wiring	2 conductor, twisted, shielded, 0.5 ... 0.75 mm² (22 ... 18 AWG)
Relay output	
Quantity	Up to 6, 4 form A and 2 form C
Rating	5 A at 250 V AC, 5 A at 30 V DC, non-inductive
Durability	50 000 operations min. per relay (5 A at 30 V DC, resistive load)
Fail-safe	Programmable as energized, de-energized, or hold
Wiring	Copper conductors per local requirements to meet 250 V 5 A contact rating
Rated operating conditions	
Installation conditions	
• Location	Indoor/outdoor
• Installation category	II
• Pollution degree	4
Ambient conditions	

Technical specifications (continued)

SITRANS LT500 Ultrasonic version	
• Ambient temperature	-20 ... +50 °C (-4 ... +122 °F)
• Storage temperature	-20 ... +50 °C (-4 ... +122 °F)
• Humidity	Maximum relative humidity 80 % for temperature up to 31 °C decreasing linearly to 50 % relative at 40 °C
• Altitude	2 000 m (6 565 ft) maximum
• Vibration resistence	
- Vibration broad-band random, according to IEC 60068-2-64	• 10 ... 200 Hz, 0.0104 g^2/Hz • 200 ... 500 Hz, 0.005 g^2/Hz
- Vibration non-stationary including shock, according to IEC 60068-2-27	• Peak Acceleration: 25 g • Duration: 6 ms • Number of impacts per direction: 1 000 • Impact directions: 6
• Bump/shock resistence	25 g
EMC performance	IEC/EN 61326-1, EN 55011 (Class A)
Design	
Weight	
• Wall mount	1.22 kg (2.68 lb)
• Panel mount	1.35 kg (2.97 lb)
• Remote panel mount	1.73 kg (3.80 lb)
Enclosure	
• Material	Polycarbonate
• Degree of protection	
• Wall mount	IP65/Type 4X
• Panel mount	IP54/Type 3
• Remote panel mount	IP65/Type 3 (front panel), IP20 (enclosure)
UV exposure	F1 rating per UL746C
Display and control	
• LCD display	60 x 40 mm (2.36 x 1.57 inch) LCD, 240 x 160 pixels resolution
• Menu navigation	4 push button keys
Update time	1 second or less
Memory	Program and parameters stored in non-volatile Flash memory
Real time clock memory retention without power	48 hours
CPU speed	96 MHz
Memory card	8 GB Industrial micro SD
Power supply	
AC version	100 ... 230 V AC, ±15 %, 50/60 Hz, 36 VA (17 W)
DC version	12 ... 30 V DC (20 W)
Certificates and approvals	• $_{C}CSA_{US}$, CE, UKCA, RCM, EAC, FM, $_{C}UL_{US}$ • $_{C}CSA_{US}$ Class I, Div. 2, Group A, B, C and D; Class II, Div 2, Group F & G; Class III • MCERTS
Communication	
Service interface	USB 2.0 mini A cable
Optional Fieldbus	• HART 7, with Active/Passive 4 ... 20 mA • Modbus RTU • PROFIBUS PA per profile 4.01 • PROFIBUS DP • PROFINET
Remote configuration via service interface	• EDD via SIMATIC PDM • SITRANS DTM via PACTware

DRAFT

© Siemens AG 2024

Dimensional drawings

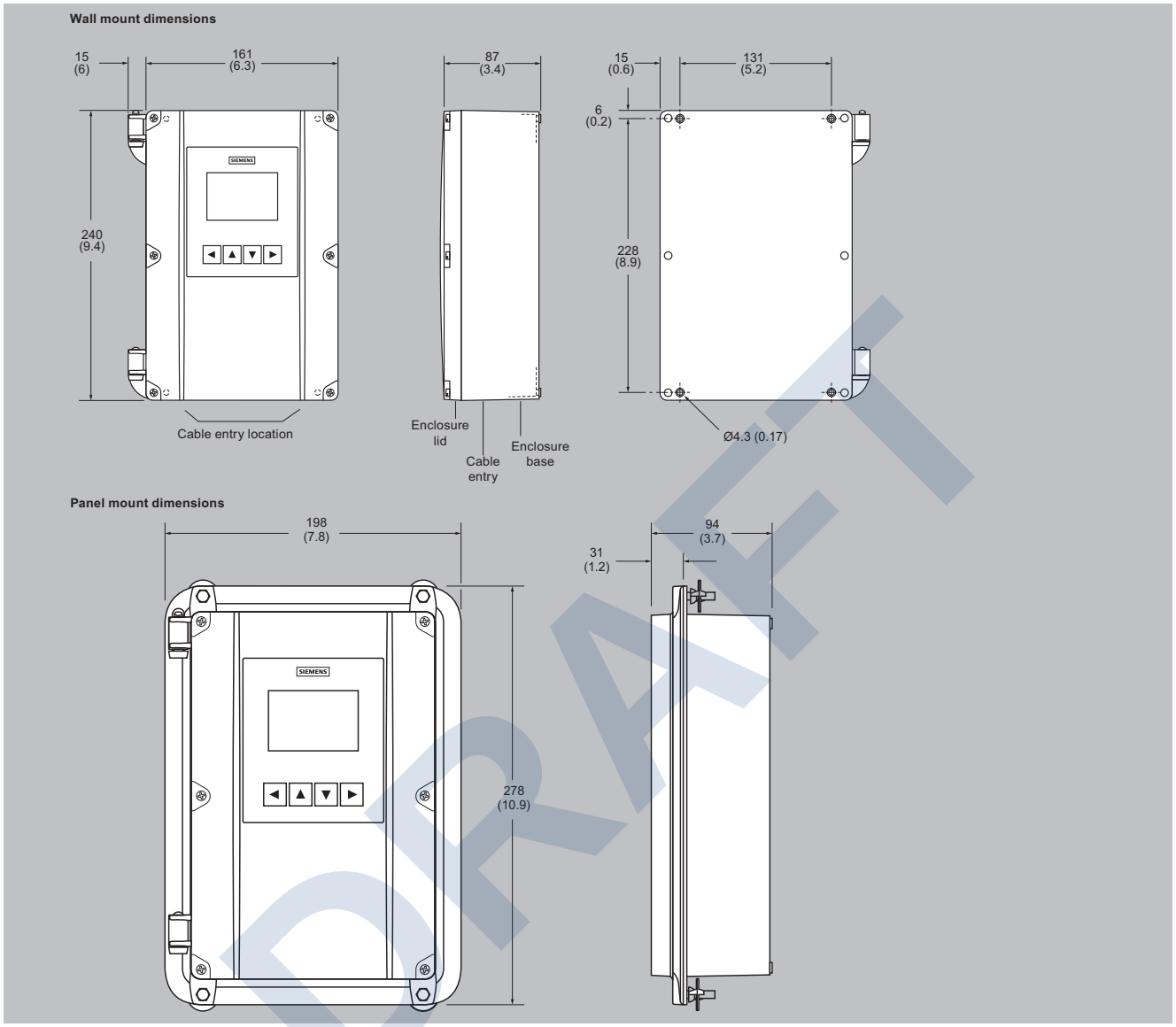

SITRANS LT500, dimensions in mm (inch)

DRAFT

© Siemens AG 2024

Dimensional drawings (continued)

SITRANS LT500 Remote panel unit

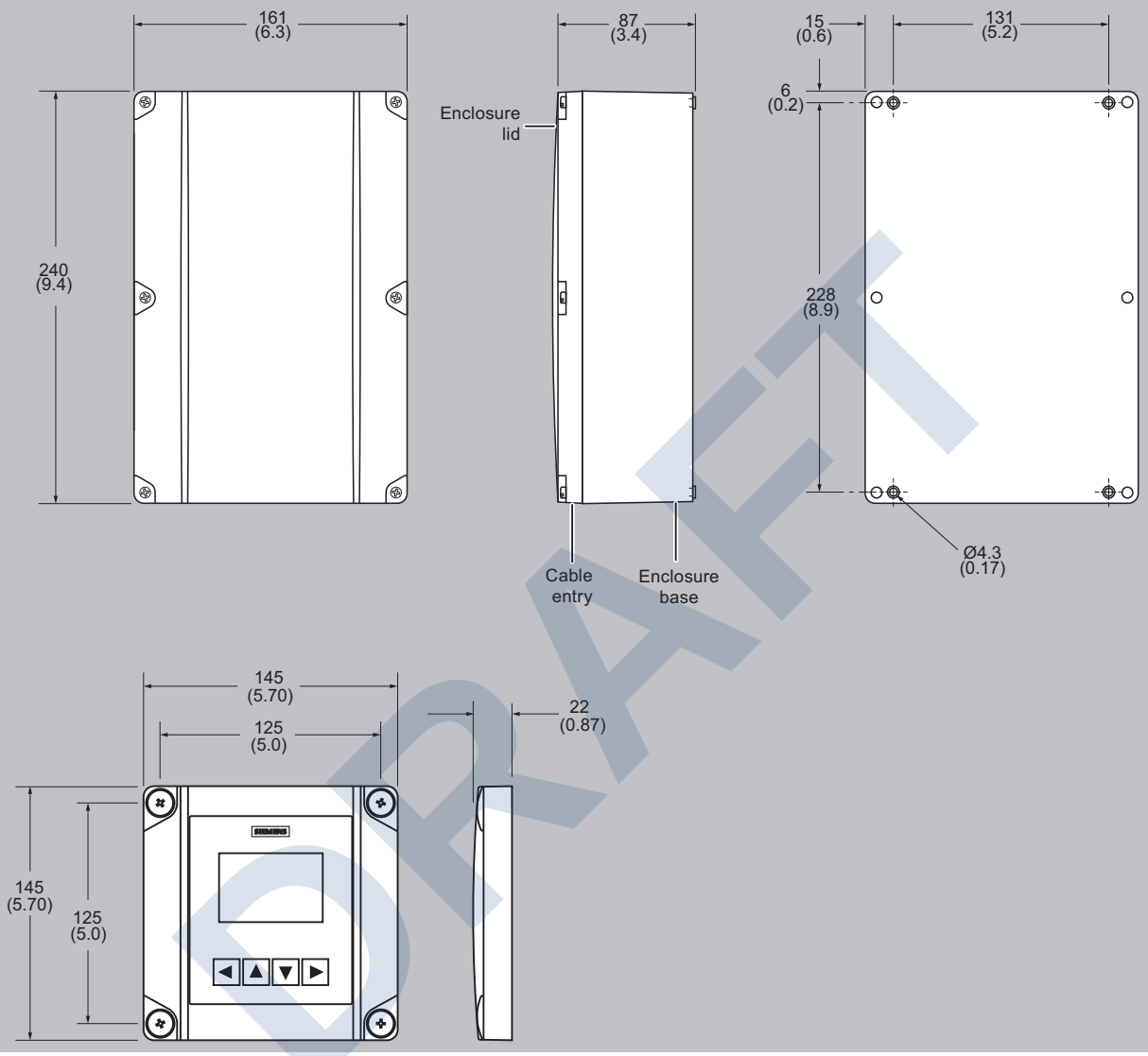

SITRANS LT500 Remote panel unit, dimensions in mm (inch)

DRAFT

© Siemens AG 2024

Circuit diagrams

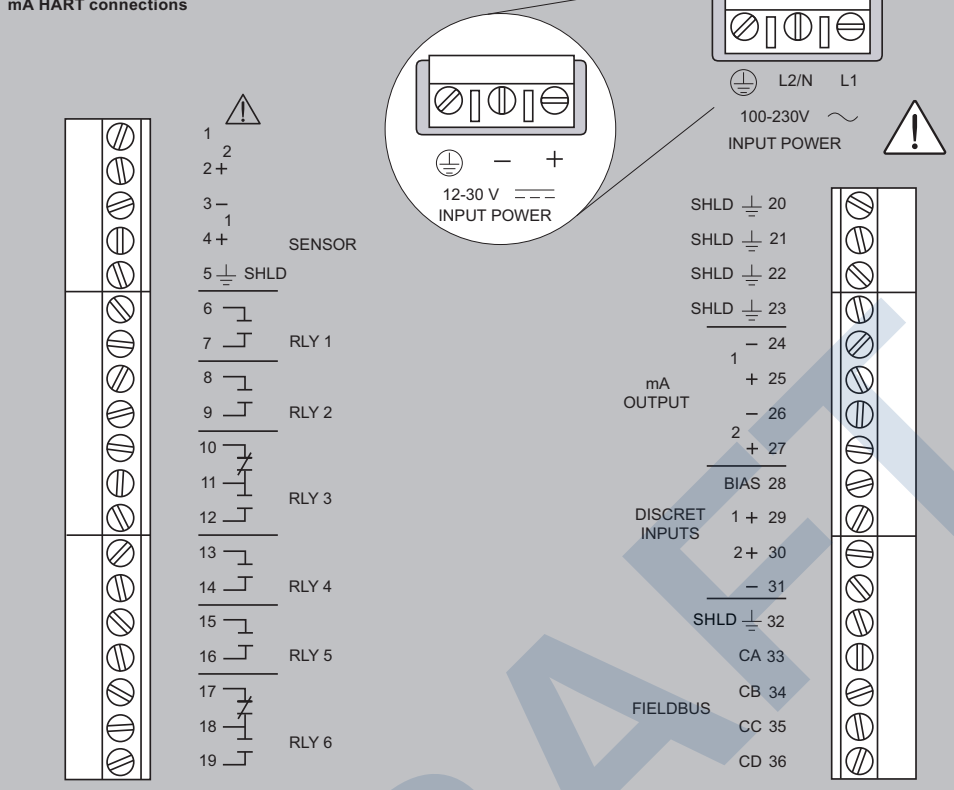

Note:

1. Use 2-core copper wire, twisted, with shield, for expansion up to 365 m (1 200 ft). Route cable in grounded metal conduit, separate from other cables.
2. Verify that all system components are installed in accordance with instructions.
3. Connect all cable shields to the SITRANS LT500 shield connections. Avoid differential ground potentials by not connecting cable shields to ground (earth) anywhere else.
4. Keep exposed conductors on shielded cables as short as possible to reduce noise on the line caused by stray transmissions and noise pickup.

SITRANS LT500 mA HART connections

DRAFT

© Siemens AG 2024

Circuit diagrams (continued)

Ultrasonic transducer connections

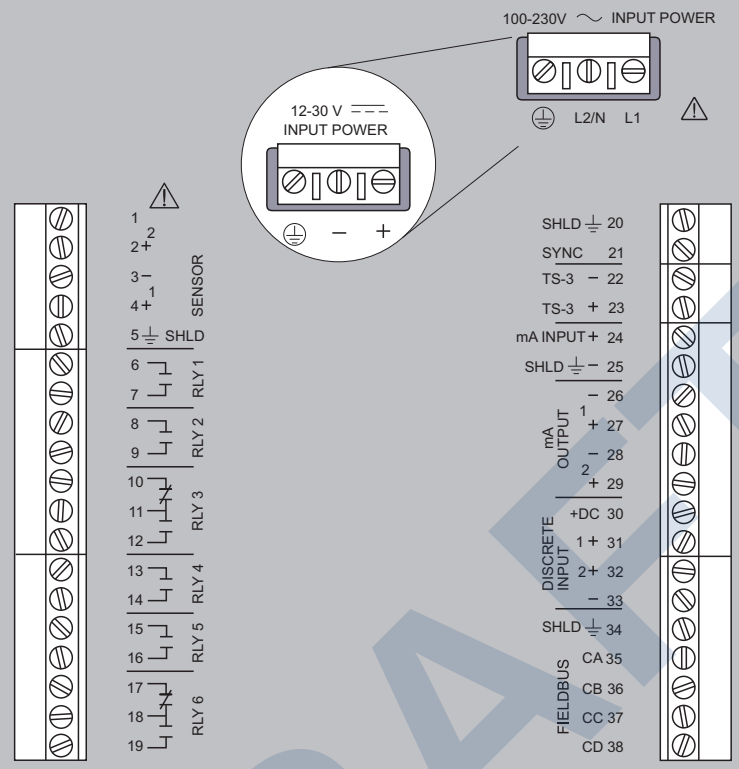

Relays shown in released state

Note:

1. Use 2-core copper wire, twisted, with shield, for expansion up to 365 m (1 200 ft). Route cable in grounded metal conduit, separate from other cables.
2. Verify that all system components are installed in accordance with instructions.
3. Connect all cable shields to the SITRANS LT500 shield connections. Avoid differential ground potentials by not connecting cable shields to ground (earth) anywhere else.
4. Keep exposed conductors on shielded cables as short as possible to reduce noise on the line caused by stray transmissions and noise pickup.

SITRANS LT500 Ultrasonic transducer connections

DRAFT

© Siemens AG 2023

Item 65

Overview



EchoMax XPS transducers use ultrasonic technology to measure level in a wide range of liquids and solids.

Benefits

- Integral temperature compensation
- Low ringing effect reduces blanking distance
- Optional foam facing for dusty applications
- Self-cleaning and low-maintenance
- Chemically resistant
- Hermetically sealed

Application

XPS transducers can be fully immersed, are resistant to steam and corrosive chemicals, and can be installed without flanges.

The XPS series offers versions for various measuring ranges up to 30 m (100 ft) and up to a max. temperature of 95 °C (203 °F).

During operation, the EchoMax transducers emit acoustic pulses in a narrow beam. The level monitor measures the propagation time between pulse emission and its reflection (echo) to calculate the distance.

DRAFT

© Siemens AG 2023

Selection and ordering data (continued)

Selection and ordering data	Article No.
Operating Instructions	
All literature is available to download for free, in a range of languages, at http://www.siemens.com/processinstrumentation/documentation	
Accessories	
Tag, stainless steel with hole, 12 x 45 mm (0.47 x 1.77 inch), one text line for fastening on sensors	7ML1930-1BJ
Submergence shield kit	7ML1830-1BJ
Universal box bracket, mounting kit	7ML1830-1BK
Channel bracket, wall mount	7ML1830-1BL
Extended channel bracket, wall mount	7ML1830-1BM

Selection and ordering data	Article No.
Channel bracket, floor mount	7ML1830-1BN
Extended channel bracket, floor mount	7ML1830-1BP
Bridge channel bracket, floor mount (see Mounting Brackets catalog page for more information)	7ML1830-1BQ
1" NPT locknut, plastic	7ML1830-1DS
1" BSP locknut, plastic	7ML1830-1DR
1" BSP locknut, flanged, plastic	7ML1830-1DN
Easy Aimer 2, aluminum, NPT with ¾" x 1" PVC coupling	7ML1830-1AQ
Easy Aimer 2, aluminum with M20 adapter and 1" and 1½" BSPT aluminum couplings	7ML1830-1AX
Easy Aimer 304, NPT with 1" stainless steel coupling	7ML1830-1AU
Easy Aimer 304, with M20 adapter and 1" and 1½" BSPT 304 stainless steel couplings	7ML1830-1GN
Plastic adapter 1" BSP - 20 mm	7ML1830-1EA
Plastic adapter 1" NPT	7ML1930-1FX
Plastic adapter 1" NPT/M20	7ML1830-1EF

EchoMax XPS-15F Ultrasonic level transducer Continuous, non-contact, 15 m (49.21 ft), for liquids and solids.	**Article No. 7ML1171-** ● ● ● ● 0
Click on the Article No. for the online configuration in the PIA Life Cycle Portal.	
Mounting thread and facing	
1" NPT [(Taper), ASME B1.20.1]	1
Cable length	
5 m (16.40 ft)	B
10 m (32.81 ft)	C
30 m (98.43 ft)	D
50 m (164.04 ft)	E
100 m (328.08 ft)	F
Mounting flange, flush mount	
None	A
6" ASME, 150 lb, flat faced	B
8" ASME, 150 lb, flat faced (Note: Flange bolting patterns and facings dimensionally correspond to the applicable ASME B16.5, or EN 1092-1, or JIS B 2220 standard.)	C
Approvals	
FM Class I, Div. 1, Groups A, B, C, and D, Class II Div. 1, Groups E, F, and G, Class III	1

Selection and Ordering data	Order code
Further designs	
Please add "**-Z**" to Article No. and specify Order code(s).	
Stainless steel tag [69 x 50 mm (2.71 x 1.97 inch)]: Measuring point number/ identification (max. 27 characters) specify in plain text	**Y15**

Selection and ordering data	Article No.
Operating Instructions	
All literature is available to download for free, in a range of languages, at http://www.siemens.com/processinstrumentation/documentation	
Accessories	
Tag, stainless steel with hole, 12 x 45 mm (0.47 x 1.77 inch), one text line for fastening on sensors	7ML1930-1BJ
Submergence shield kit	7ML1830-1BJ
Universal box bracket, mounting kit	7ML1830-1BK
Channel bracket, wall mount	7ML1830-1BL
Extended channel bracket, wall mount	7ML1830-1BM
Channel bracket, floor mount	7ML1830-1BN
Extended channel bracket, floor mount	7ML1830-1BP
Bridge channel bracket, floor mount (see Mounting Brackets catalog page for more information)	7ML1830-1BQ

DRAFT

© Siemens AG 2023

Technical specifications

Input	XPS-10	XPS-15 (standard and F models)	XPS-30
Measuring range[1)]	0.3 ... 10 m (1 ... 33 ft)	***Standard:*** 0.3 ... 15 m (1 ... 50 ft) XPS-15F: 0.45 ... 15 m (1.5 ... 50 ft)	0.6 ... 30 m (2 ... 100 ft)
Output			
Frequency	44 kHz	44 kHz	30 kHz
Beam angle	12°	6°	6°
Environmental			
Location	Indoors/outdoors	Indoors/outdoors	Indoors/outdoors
Ambient temperature	-40 ... +95 °C (-40 ... +203 °F)	***Standard:*** -40 ... +95 °C (-40 ... +203 °F) ***XPS-15F:*** -20 ... +95 °C (-4 ... +203 °F)	-40 ... +95 °C (-40 ... +203 °F)
Storage temperature	-40 ... +95 °C (-40 ... +203 °F)	***Standard:*** -40 ... +95 °C (-40 ... +203 °F) ***XPS-15F:*** -20 ... +95 °C (-4 ... +203 °F)	-40 ... +95 °C (-40 ... +203 °F)
Pollution degree	4	4	4
Pressure	8 bar g (120 psi g) Flanged: 0.5 bar g (7.25 psi g)	8 bar g (120 psi g) Flanged: 0.5 bar g (7.25 psi g)	0.5 bar g (7.25 psi g) Flanged: 0.5 bar g (7.25 psi g)
Design			
Weight	0.8 kg (1.8 lb)	1.3 kg (2.8 lb) Flanged: 2 kg (4.4 lb)	4.3 kg (9.5 lb)
Power supply	Operation of transducer only with approved Siemens controllers	Operation of transducer only with approved Siemens controllers	Operation of transducer only with approved Siemens controllers
Material	Standard: PVDF Flanged: PVDF with CPVC flange Option: PTFE face with CPVC flange	Standard: PVDF Flanged: PVDF with CPVC flange Option: PTFE face with CPVC flange	Standard: PVDF Flanged: PVDF with CPVC flange Option: PTFE face with CPVC flange
Color	Blue	Standard: Blue XPS-15F: Gray	Blue
Process connection	1" NPT or 1" BSPT	Standard: 1" NPT or 1" BSPT XPS-15F: 1" NPT	1.5" universal thread (NPT or BSPT)
Degree of protection	IP66/68	IP66/68	IP66/68
Cable	2-wire twisted pair/braided and foil shielded 0.5 mm² (20 AWG) PVC jacket	2-wire twisted pair/braided and foil shielded 0.5 mm² (20 AWG) PVC jacket	2-wire twisted pair/braided and foil shielded 0.5 mm² (20 AWG) PVC jacket
Separation	Max. 365 m (1 200 ft)	Max. 365 m (1 200 ft)	Max. 365 m (1 200 ft)
Certificates and approvals	Standard: CE, UKCA, CSA, FM, ATEX, UKEX, IECEx	Standard: CE, UKCA, CSA, FM, ATEX, UKEX, IECEx XPS-15F: FM Class I, Div. 1, Groups A, B, C, and D, Class II Div. 1, Groups E, F, and G, Class III	CE, UKCA, CSA, FM, ATEX, UKEX, IECEx

DRAFT

© Siemens AG 2023

Dimensional drawings

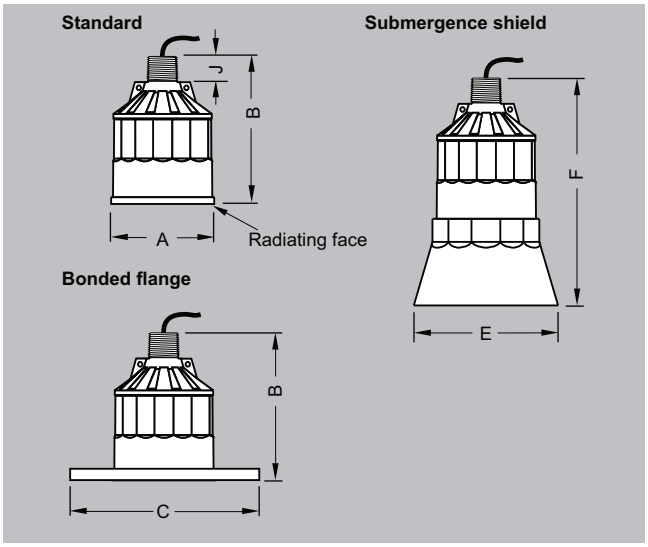

XPS ultrasonic transducer

Version Dimension	XPS-10	XPS-15	XPS-30
A	88 mm (3.464 inch)	121 mm (4.764 inch)	175 mm (6.890 inch)
B	122 mm (4.803 inch)	132 mm (5.197 inch)	198 mm (7.795 inch)
C	According to ASME, DIN, and JIS	According to ASME, DIN, and JIS	According to ASME, DIN, and JIS
E	124 mm (4.882 inch)	158 mm (6.220 inch)	n/a
F	152 mm (5.984 inch)	198 mm (7.795 inch)	n/a
J	28 mm (1.1 inch)	28 mm (1.1 inch)	28 mm (1.1 inch)

DRAFT

© Siemens AG 2023

Circuit diagrams

Direct connection

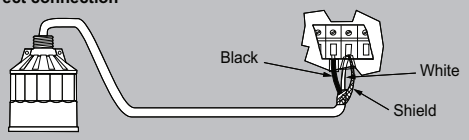

Coaxial connection

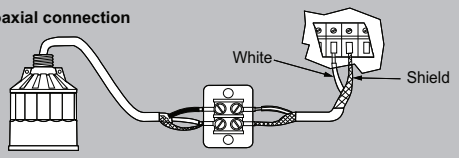

3 terminal direct*

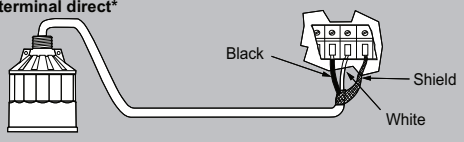

3 terminal extension*

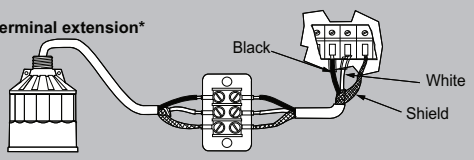

* For SITRANS LUT400, MultiRanger 100/200, HydroRanger 200

Mounting
Make particularly sure that the radiating face of the transducer is protected from damage. Mount the transducer so that it is above the maximum material level by at least the blanking value. On liquid applications, the transducer must be mounted so that the axis of transmission is perpendicular to the liquid surface. On solids applications, an Easy Aimer should be used to facilitate aiming the transducer. Consider the optional temperature sensor when mounting the transducer.

Interconnection
Do not route cable openly or near high voltage or current runs, contactors and SCR control drives. For optimum isolation against electrical noise, run cable separately in a grounded metal conduit. Seal all thread connections to prevent ingress of moisture.

XPS ultrasonic transducer connections

DRAFT

SIEMENS

Datasheet for

Pointek CLS200 RF Capacitance point level switch, rod design. Detects level and interface in liquids, solids, slurries, and foam. Adjustable, 5.5 m (18.04 ft), insertion, adaptable sensitivity, with the ability to tune out build-up on probe.

Ordering data: **7ML56300AB000GA0**

General

Manufacturer	Siemens
Supplier	Siemens
Product designation	Point level measurement - Capacitance switch
Brand name	Pointek CLS200
Type designation	Pointek CLS200 RF Capacitance point level switch, rod design. Detects level and interface in liquids, solids, slurries, and foam. Adjustable, 5.5 m (18.04 ft), insertion, adaptable sensitivity, with the ability to tune out build-up on probe.
Article number	7ML56300AB000GA0
Net weight	0,5 kg
Slogan	Precise and versatile - Inverse frequency shift capacitance level switch for liquids and solids

Mode of operation and application

Measuring principle	capacitive

Input

Measurand	Level
Unit of the measurand	pF

Output

Digital output

Number	2

Relay output

Number	1
Type	Single Pole Double Throw (SPDT)
Switching capacity voltage, AC (maximum)	250 V
Switching capacity current, AC (maximum)	8 A
Switching capacity voltage, DC (maximum)	30 V
Switching capacity current, DC (maximum)	5 A
Switching capacity real power (maximum)	150 W
Switching capacity apparent power (maximum)	2.000 VA
Time constant for smoothing	
Time constant for smoothing (minimum)	1 s
Time constant for smoothing (maximum)	60 s
Number of outputs	1
Switching capacity voltage, AC (maximum)	30 V
Switching capacity voltage, DC (maximum)	30 V
Switching capacity current, AC (maximum)	82 mA
Switching capacity current, DC (maximum)	82 mA

Operating conditions

Medium temperature	
Medium temperature (minimum)	-40 °C

DRAFT

The information provided in this datasheet contains descriptions or characteristics of performance which in case of actual use do not always apply as described or which may change as a result of further development of the products. An obligation to provide the respective characteristics shall only exist if expressly agreed in the terms of contract. Availability and technical specifications are subject to change without notice.

Creation date: May 8, 2025, 9:01:46 PM

SIEMENS

Datasheet for

Pointek CLS200 RF Capacitance point level switch, rod design. Detects level and interface in liquids, solids, slurries, and foam. Adjustable, 5.5 m (18.04 ft), insertion, adaptable sensitivity, with the ability to tune out build-up on probe.

Ordering data: **7ML56300AB000GA0**

Medium temperature (maximum)	85 °C
Degree of pollution	Pollution degree 4
Overvoltage class	Installation category II
Process medium	
Dielectric constant (minimum)	1,5
Pressure	
Operating pressure, relative	
Operating pressure, relative (minimum)	-1 bar
Operating pressure, relative (maximum)	25 bar
Environmental conditions	
Ambient temperature during operation	
Ambient temperature during operation (minimum)	-40 °C
Ambient temperature during operation (maximum)	85 °C
Ambient temperature during storage	
Ambient temperature during storage (minimum)	-40 °C
Ambient temperature during storage (maximum)	85 °C
Ambient temperature during transport	
Ambient temperature during transport (minimum)	-40 °C
Ambient temperature during transport (maximum)	85 °C
Degree of protection	
IP rating	IP65
NEMA Enclosure Type	NEMA 4

Structural Design

Mechanical design	
Design of the device	compact version, transmitter integrated
Process connection	
Design	male thread
Standard	ANSI B1.20.1
Nominal size	3/4"-14 NPT
Material	
Process connection	
Material	stainless steel
Material number according to DIN EN 10027-2	1.4404
Material number according to AISI	316L
Gasket	fluorocarbon-rubber (FKM/FPM/Viton)
Enclosure	
Material	aluminum
Material of the lid	polycarbonate (PC)
Sensor	
Material of the wetted parts	polyphenylensulfide (PPS)
Cable entry & cable gland	
Material of the cable entry	Die-cast aluminum
Dimensions	
Length of the sensor jacket	84 mm

DRAFT

The information provided in this datasheet contains descriptions or characteristics of performance which in case of actual use do not always apply as described or which may change as a result of further development of the products. An obligation to provide the respective characteristics shall only exist if expressly agreed in the terms of contract. Availability and technical specifications are subject to change without notice.

Creation date: May 8, 2025, 9:01:46 PM

SIEMENS

Datasheet for

Pointek CLS200 RF Capacitance point level switch, rod design. Detects level and interface in liquids, solids, slurries, and foam. Adjustable, 5.5 m (18.04 ft), insertion, adaptable sensitivity, with the ability to tune out build-up on probe.

Ordering data: **7ML56300AB000GA0**

Length of the extension	166 mm
Mounting	
Mounting position	vertical
Mounting position	horizontal
Electrical connections	
Potential insulation	galvanic
Potential insulation	to all outputs
Potential insulation	to all supplies
Number of cable entries	2
Design of the cable entry	1/2" NPT
Cross-sectional area of the signal cable (maximum)	2,5 m²
AWG wire size (maximum)	14
Display and operating controls	
Display	LED
Design of the lid	Blanking cover

Power supply

Electrical	
Voltage type	AC
Voltage type	DC
Nominal voltage, DC	24 V
Supply voltage, DC	
Supply voltage, DC (minimum)	12 V
Supply voltage, DC (maximum)	250 V
Nominal voltage, AC	115 V
Nominal voltage, AC	230 V
Supply voltage, AC	
Supply voltage, AC (minimum)	12 V
Supply voltage, AC (maximum)	250 V
Supply voltage frequency	
Supply voltage frequency (minimum)	0 Hz
Supply voltage frequency (maximum)	60 Hz
Power consumption effective power	2 W

Certificates and approvals

Verification of suitability	CSA
Verification of suitability	FM
Marine approval	Lloyd‘s Register of Shipping (LR)
Environmental class according to Lloys´s Register approval system	ENV1
Environmental class according to Lloys´s Register approval system	ENV2
Environmental class according to Lloys´s Register approval system	ENV5

DRAFT

The information provided in this datasheet contains descriptions or characteristics of performance which in case of actual use do not always apply as described or which may change as a result of further development of the products. An obligation to provide the respective characteristics shall only exist if expressly agreed in the terms of contract. Availability and technical specifications are subject to change without notice.

Creation date: May 8, 2025, 9:01:46 PM

GENERAL DESCRIPTION

The Roto-Float SSTNM is a non-mercury, direct acting float switch. Each float contains a single pole, single throw reed switch which changes state at +30 from horizontal and -30 from horizontal. The float housing is 5" in diameter, made of 316 stainless steel and Teflon coated for preventing grease and debris from collecting on the float. Extra-hard usage electrical cable is used to electrically connect the switch back to the control panel. The cable and switch are epoxy encapsulated in the float housing potting tube, forming a watertight, impact resistant unit. The Roto-Float SSTNM **Type P** is equipped with a stainless steel bracket for attachment to a 1" pipe, (by others). The **Type W** mounting style is equipped with a stainless steel bracket and clip assembly that secures the float to a WRW wire rope kit. The **Type S** suspended has an external lead weight attached to the cable and is suspended fro above on the floats own cable.

Applications

The Roto-Float SSTNM was designed primarily for controlling pumps in wastewater applications for turning pumps on and off in emptying or filling situations; signal alarm levels, and other application where liquid levels need to be automatically monitored. Its use may be suitable in other liquids, as well.

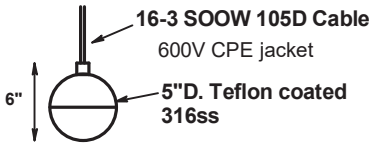

Specification Information

Electrical Rating: 1A @ 120Vac; reed switch
Temp. Limit: 110F
Circuit Configuration: NO, *normally open
NC, *normally closed
This switch is compatible with intrinsically safe circuits. The switch neither stores nor generates an electrical charge.

Mounting Styles:
Type P- Pipe mounted for 1" pipe
Type W- Wire rope mounted, (use w. WRW Kit)
Type S- Suspended, external weight on cable

Mounting Style	Cable Length	*Switch Configuration	*Model No.	Wgt
Type P	20	NO	P20NO-SSTNM	3.4
Type P	30	NO	P30NO-SSTNM	4.3
Type P	40	NO	P40NO-SSTNM	5.2
Type W	20	NO	W20NO-SSTNM	3.2
Type W	30	NO	W30NO-SSTNM	4.1
Type W	40	NO	W40NO-SSTNM	5.0
Type S	20	NO	S20NO-SSTNM	7.2
Type S	30	NO	S30NO-SSTNM	8.1
Type S	40	NO	S40NO-SSTNM	9.0
Type S	100	NC	S100NC-SSTNM	

*Normal is defined as state of switch with no liquid present.

*Change 'NO' to 'NC' for normally closed floats. Longer lengths are available.

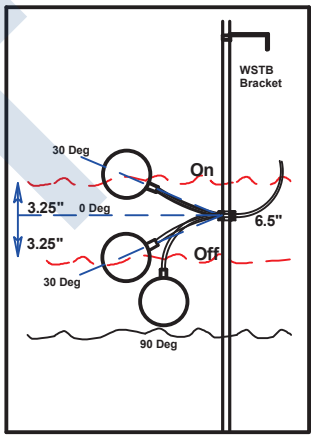

Normally Open Type P SSTNM
Switch Status vs. Liquid Level

Nominal Duplex Circuit (Reference Only!)

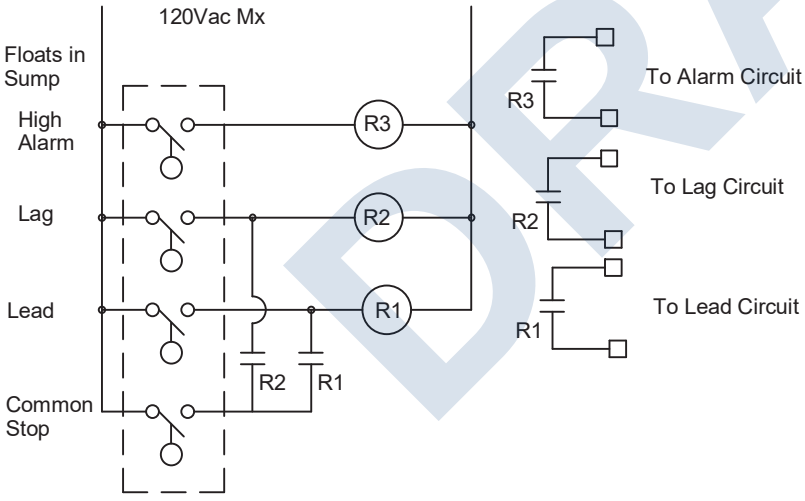

Submitted_____

Approved_____

Important Information:

The green wire should always be properly grounded, per NEC. Use this product in accordance with the NEC, local codes, and the authority having jurisdiction. Roto-Float SSTNM is suitable for use with intrinsically safe circuits.

Do not use Roto-Float SSTNM in gasoline or other volatiles and combustibles. Check with the factory for exotic applications.

anchor scientific, inc.
Box 378
Long Lake, MN 55356 Ph: 952-473-7115

Drwn	Date	Roto-Float SSTNM
j.p.	3/11/11	
		Rev.
		DWG. SSTNM-BS1

DRAFT

GREAT WHITE CENTER FLOW SCREEN
INSTALLATION PROCEDURE

Important! The Hydro-Dyne Engineering equipment installation layout drawings (as built) in the Operations & Maintenance Manual must be reviewed and comprehended prior to the development of the installation plan. Hydro-Dyne recommends applying a food grade anti-seize compound on all hardware to be installed by contractor to facilitate removal and replacement as needed. White Knight NSF H1 (or equal) is the recommended anti-seize compound.

Important! The Hydro-Dyne Engineering equipment may use components not manufactured by Hydro-Dyne Engineering. It is imperative that the installation personnel read and follow all installation instructions for each component supplied, including those not manufactured by Hydro-Dyne Engineering. Reference the Operations & Maintenance Manual Guide, which explains various sections regarding equipment installation details. For additional information regarding installation of the equipment, please contact Hydro-Dyne Engineering customer service at 813-818-0777.

1.0 Safety Precautions:

1.1 **DANGER:** This equipment should be installed, adjusted and serviced by qualified electrical and mechanical personnel. The personnel must be familiar with the construction and operation of this equipment and the hazards involved. Fatal injury could occur if this precaution is not observed.

A. Be sure to always wear safety glasses, gloves and hard hats as required.

B. Be sure the power input disconnect is in the correct position. Power either on or off depending on the work to be performed.

C. Have a backup technician who is always in sight and ready to assist in the case of an emergency.

D. Be sure the motor frame is connected to earth ground.

2.0 Installation of Screen:

2.1 **Important!** Use the lifting eyes on the head for setting the unit upright. The lifting eyes are designed for vertical lifts only. Additional “pull eyes” may be furnished mid-level screen to help keep screen vertical.

2.2 Care should be taken to protect lubrication fittings, automatic grease dispensers (if supplied) and drive during lifting and installation.

2.3 If supplied with stainless steel channel filler plates and not installed onto screen, secure each channel filler plate assembly to appropriate screen side. Adjust supporting flat bar to within one half of the true slot opening being used. Ensure to stay parallel to screen over entire screen length.

A. Depending on application, it may be best to install the filler plates after the installation of the screen into the channel. Contractor to determine.

DRAFT

Note: Please align effluent deflector in the up position. This will allow the deflector to rest against the rear cover. See the correct installation position in the image below.



2.4 Each screen must be installed as located on the detailed Hydro-Dyne installation layout drawings. Lower each screen assembly into channel using the pad eyes welded to the top of the head section, making sure the unit drops vertically. Additional "pull eyes" may be furnished mid-level screen to help keep screen vertical.

A. Verify outlet fit to position.
B. Bolt to invert first, based on outlet.
C. Then bolt the rest of the screen.
D. Grout as needed for leveling.

2.5 If supplied with external compactor(s) and sluice, loosely assemble entire sluice, then loosely assemble sluice to external compactor(s). Then loosely assemble sluice to screen for proper fit prior to anchoring equipment or support stands. Reference compactor installation procedure.

A. If supplied with sluice support stand(s), loosely secure stand(s) onto the screen with supplied hardware. Then anchor stand(s) onto top of channel. Grout as needed for leveling. Ensure stand(s) are flush to mounting surface. Anchor equipment securely to top of channel then secure to screen.

2.6 If supplied with integral compactor(s), each integral compactor must be installed as located on the detailed Hydro-Dyne layout drawings relative to the screen discharge chute. Each compactor collection hopper must be fastened to the screen discharge chute. Reference compactor installation procedure.

2.7 Anchor screen securely.

A. Mark anchor locations, move screen out of way, drill and install anchors, lift screen down over anchors and secure.

DRAFT

B. Be certain to drill to embed depth as shown on drawings or per manufacturer's specifications were applicable.

C. If anchors have not been specified per HDE Installation layout drawings, use ¾ inch dia. torque setting anchors for screen base and ½ inch dia. torque setting anchors for filler plates and braces.

2.8 If supplied with braces, securely anchor each brace to the top of the channel walls as indicated on the installation layout drawings.

2.9 Install channel filler plates to screen (if not previously installed). Securely anchor each filler plate to the channel side walls as indicated on installation layout drawings. If channel filler plates are supplied with neoprene channel seals, no channel wall anchors are needed.

2.10 Before each screen is placed into service, each Shaft Seal internal clamp must be adjusted per manufacturer's requirements to eliminate leakage. Each shaft seal is located on both the shaft drive end and shaft driven end. The motor will need to be jogged until the screw head of the adjustable clamp can be accessed through the adjustment port. Finger tighten the clamp about a ¼ turn. See maintenance section for details.

2.11 Before each screen is placed into service, each Shaft Seal located on both the shaft drive end and shaft driven end must be greased. Pump grease through each grease fitting, until full as needed. If supplied with an auto grease dispenser, ensure each grease dispenser container is full as needed. "Lubriplate-FGL" food grade grease (or equivalent) is the recommended lubricant for all shaft seals.

2.12 Before each screen is placed into service, each 4-Bolt Flange Bearing located on both the shaft drive end and shaft driven end must be greased. Use only one pump of grease through each grease fitting. If supplied with an auto grease dispenser, ensure each grease dispenser container is full. "Lubriplate-FGL" food grade grease (or equivalent) is the recommended lubricant for all flange bearings.

3.0 Accessory Components:

3.1 **Important!** Hydro-Dyne Engineering does not provide installation of any accessories or piping, unless noted per the Manufacturer's Scope of Work. As each application differs, Hydro-Dyne Engineering does not typically supply any piping, mounting brackets or flange accessories unless noted per the Manufacturer's Scope of Work. Reference installation drawings and accessory section for details.

A. If wash water is required, upon installing any plumbing to any wash water header inlet, a union coupling (or true union valve) is necessary to facilitate appropriate adjustment as needed.

B. Hydro-Dyne Engineering recommends the use of a true union ball valve installed in-line with each wash water header inlet (if supplied). This will facilitate the maintenance of each wash water header and nozzles without having to shut off the water supply at the main and will enable the ability to conserve water by controlling the amount of water being used.

DRAFT

3.2 If supplied, install all wash water accessories such as sediment filters, strainers, solenoid valves, ball valves, check valves, needle valves, flow meters, pressure gauges and pumps. Reference accessory section for details.

3.3 If supplied, install all level sensing accessories, such as transducers, sensors and float switches. Reference controls section for details.

3.4 If supplied, install all freeze protection, thermal or speed control accessories, such as motion sensors, thermostats and heat tracing. Reference accessory section and controls section for installation details.

A. **Important!** If supplied with an ambient thermostat or heat trace thermostat, the device setting must be verified to be set at a minimum 40 degrees Fahrenheit or higher as required at start-up.

B. Each thermostat must be installed outside, preferably in a shady area as close to the equipment as possible.

4.0 Gear Reducers:

4.1 If supplied, each gear reducer usually will be shipped lubricated. Lubricant may leak during shipment. Thus, the shipping container or skid should be checked for signs of leakage. It is recommended that each gear reducer be checked and filled to proper lubrication levels per manufacturer specifications. Reference reducer section for details.

A. If supplied with standard quality oil, Mobilgear600 (or equal) is the manufacturer recommended lubricant. Only add standard oil to existing standard oil. If synthetic oil is preferred, the reducer must be drained of existing oil before replacing with synthetic oil.

B. If supplied with high quality synthetic oil, Mobile SHC630 (or equal) is the manufacturer recommended lubricant. Only add synthetic oil to exiting synthetic oil. ***WARNING: NEVER MIX SYNTHETIC OIL WITH STANDARD OIL***

4.2 Each gear reducer vent plug (breather) is designed to prevent dirt and water from entering the gear reducer. Without proper air venting, the increase in air pressure may force lubricant through the oil seals resulting in oil seal leakage and damage. Do not restrict the operation of the vent with paint or other obstruction. Reference reducer section for details.

A. Each gear reducer may be shipped with a rubber seal (strip or plug) installed in the vent hole (breather) and MUST be removed before each gear reducer is placed into operation.

B. Each gear reducer may be shipped with a hex-head metal plug in the vent hole (breather), which MUST be removed and the attached pressure relief vent plug must be inserted into the filler/vent hole of the reducer, before the unit is placed into operation.

DRAFT

C. Each gear reducer may be shipped with an Auto-vent breather, which operates as needed. Hydro-Dyne Engineering recommends inspection for leaks and replace as needed.

5.0 Drive Motors:

5.1 If commissioning service is provided by Hydro-Dyne Engineering, do not power up any motor installed onto the equipment, as damage to the motor and equipment may occur. Each motor will be powered at start-up by the Hydro-Dyne Engineering service technician.

A. During Start-up, each motor will be validated as wired per manufacturer recommendations for appropriate voltage and orientation. Each motor will be checked for proper rotation and speed.

B. During Start-up, each motor will have a full load amp draw test documented for future reference. The initial amp draw value should be compared to each successive full amp draw test to determine the integrity of the motor.

6.0 Wash Water Service:

6.1 As required, connect wash water service to equipment upon completion of installing wash water accessories as supplied. Verify each wash water accessory is properly installed and has no leakage present. Adjust or replace accessory as needed.

7.0 Electric Service:

7.1 If supplied with electrical components such as motors, pumps, transducers, solenoids, limit switches or freeze protection connection kit, connect electrical service as required.

8.0 Wiring Size:

8.1 It is the user's responsibility to verify that all interconnected wiring is sized and installed in conformance with the National Electrical Code (NEC) published by the National Fire Protection Association and the Canadian Electrical Code (CEC) and other applicable local codes.

8.2 Refer to the controller and motor nameplates for electrical data. Electrical drawings are in the controls section of this manual as well as in the control panel itself.

End of Document

DRAFT

WHITETIP SHARK WASHING COMPACTOR
INSTALLATION PROCEDURE

Important! The Hydro-Dyne Engineering equipment installation layout drawings (as built) in the Operations & Maintenance Manual must be reviewed and comprehended prior to the development of the installation plan. Hydro-Dyne recommends applying a food grade anti-seize compound on all hardware to be installed by contractor to facilitate removal and replacement as needed. White Knight NSF H1 (or equal) is the recommended anti-seize compound.

Important! The Hydro-Dyne Engineering equipment may use components not manufactured by Hydro-Dyne Engineering. It is imperative that the contractor/owner read and follow all installation instructions for each component supplied, including those not manufactured by Hydro-Dyne Engineering. Reference various sections of the Hydro-Dyne Operations & Maintenance Manual for details. Optional components may be referenced, (but not be supplied) within this document. For additional information, please contact Hydro-Dyne Engineering customer service at 813-818-0777.

1.0 Safety Precautions:

1.1 **DANGER:** This equipment should be installed, adjusted and serviced by qualified electrical and mechanical personnel. The personnel must be familiar with the construction and operation of this equipment and the hazards involved. Fatal injury could occur if this precaution is not observed.

A. Be sure to always wear safety glasses, gloves and hard hats as required.

B. Be sure the power input disconnect is in the correct position. Power either on or off depending on the work to be performed.

C. Have a backup technician who is always in sight and ready to assist in the case of an emergency.

D. Be sure the motor frame is connected to earth ground.

2.0 Installation of Washing Compactor/Sluice:

2.1 **Important!** Secure compactor with lifting straps. Each compactor may be provided with lifting eyes. Do not lift equipment using the gear motor lifting eye. If no lifting eyes are provided, then lifting should be done with straps on full pipe section and on drive adapter spool section.

2.2 Care should be taken to protect lubrication fittings, automatic grease dispensers (if supplied) and drive during lifting and installation.

2.3 Each compactor must be installed as located on the detailed Hydro-Dyne layout drawings relative to the screen discharge chute or sluice.

A. Each compactor collection hopper or collection flange must be fastened to the screen discharge chute or sluice as detailed on the installation layout drawings.

DRAFT

B. If supplied with sluice, loosely assembly entire sluice, then loosely assemble sluice to compactor. Then loosely assemble sluice to screen for proper fit prior to anchoring equipment or support stands.

2.4 If supplied with sluice or discharge chute support stand(s), loosely secure stand(s) onto the screen with supplied hardware. Then anchor stand(s) onto top of channel. Grout as needed for leveling. Ensure stand(s) are flush to mounting surface. Anchor equipment securely to top of channel then secure to screen.

2.5 Anchor equipment (without casters) securely.

A. Mark each anchor location, move compactor or stands out of way, drill and install anchors, lift compactor down over anchors and secure.

B. Be certain to drill to embed depth as shown on drawings or per manufacturer's specifications were applicable.

C. If anchors have not been specified per HDE Installation layout drawings, use ½ inch dia. torque setting anchors.

2.6 If compactor is supplied with casters. Ensure to lock the wheels after set in place. Ensure to leave conduit slack and flexible plumbing to enable the compactor the ability to move out from under the screen.

3.0 Accessory Components:

3.1 **Important!** Hydro-Dyne Engineering does not provide installation of any accessories or piping, unless noted per the Manufacturer's Scope of Work. As each application differs, Hydro-Dyne Engineering does not typically supply any piping, mounting brackets or flange accessories unless noted per the Manufacturer's Scope of Work. Reference installation drawings for details.

A. If wash water is required, upon installing any plumbing to any wash water header inlet, a union coupling (or true union valve) is necessary to facilitate appropriate adjustment as needed.

B. Hydro-Dyne Engineering recommends the use of a true union ball valve installed in-line with each wash water header inlet (if supplied). This will facilitate the maintenance of each wash water header and nozzles without having to shut off the water supply at the main and will enable the ability to control the amount of water being used.

3.2 If supplied, install all wash water accessories such as sediment filters, strainers, solenoid valves, ball valves, check valves, needle valves, flow meters, pressure gauges and pumps. Reference accessory section for details.

3.3 If supplied, install all level sensing accessories, such as transducers, sensors and float switches. Reference controls section for details.

3.4 If supplied, install all freeze protection, thermal or speed control accessories, such as motion sensors, thermostats and heat tracing. Reference accessory section and controls section for details.

DRAFT

A. **Important!** If supplied with an ambient thermostat or heat trace thermostat, the device setting must be verified to be set at a minimum 40 degrees Fahrenheit or higher as required.

B. Each thermostat must be installed outside, preferably in a shady area as close to the equipment as possible.

4.0 Gear Reducers:

4.1 If supplied, each gear reducer usually will be shipped lubricated. Lubricant may leak during shipment. Thus, the shipping container or skid should be checked for signs of leakage. It is recommended that each gear reducer be checked and filled to proper lubrication levels per manufacturer specifications. Reference reducer section for details.

A. If supplied with standard quality oil, Mobilgear600 (or equal) is the manufacturer recommended lubricant. Only add standard oil to existing standard oil. If synthetic oil is preferred, the reducer must be drained of existing oil before replacing with synthetic oil.

B. If supplied with high quality synthetic oil, Mobile SHC630 (or equal) is the manufacturer recommended lubricant. Only add synthetic oil to exiting synthetic oil. ***WARNING: NEVER MIX SYNTHETIC OIL WITH STANDARD OIL***

4.2 Each gear reducer vent plug (breather) is designed to prevent dirt and water from entering the gear reducer. Without proper air venting, the increase in air pressure may force lubricant through the oil seals resulting in oil seal leakage and damage. Do not restrict the operation of the vent with paint or other obstruction. Reference reducer section for details.

A. Each gear reducer may be shipped with a rubber seal (strip or plug) installed in the vent hole (breather) and MUST be removed before each gear reducer is placed into operation.

B. Each gear reducer may be shipped with a hex-head metal plug in the vent hole (breather), which MUST be removed and the attached pressure relief vent plug must be inserted into the filler/vent hole of the reducer, before the unit is placed into operation.

C. Each gear reducer may be shipped with an Auto-vent breather, which operates as needed. Hydro-Dyne Engineering recommends inspection for leaks and replace as needed.

5.0 Drive Motors:

5.1 If commissioning service is provided by Hydro-Dyne Engineering, do not power up any motor installed onto the equipment, as damage to the motor and equipment may occur. Each motor will be powered at start-up by the Hydro-Dyne Engineering service technician.

DRAFT

A. During Start-up, each motor will be validated as wired per manufacturer recommendations for appropriate voltage and orientation. Each motor will be checked for proper rotation and speed.

B. During Start-up, each motor will have a full load amp draw test documented for future reference. The initial amp draw value should be compared to each successive full amp draw test to determine the integrity of the motor.

6.0 Wash Water Service:

6.1 As required, connect wash water service to equipment upon completion of installing wash water accessories as supplied. Verify each wash water accessory is properly installed and has no leakage present. Adjust or replace accessory as needed.

7.0 Electric Service:

7.1 If supplied with electrical components such as motors, pumps, transducers, solenoids, limit switches or freeze protection connection kit, connect electrical service as required.

8.0 Wiring Size:

8.1 It is the user's responsibility to verify that all interconnected wiring is sized and installed in conformance with the National Electrical Code (NEC) published by the National Fire Protection Association and the Canadian Electrical Code (CEC) and other applicable local codes.

8.2 Refer to the controller and motor nameplates for electrical data. Electrical drawings are in the controls section of this manual as well as in the control panel itself.

End of Document

DRAFT

SECTIONAL SLUICE
INSTALLATION PROCEDURE

Important! The Hydro-Dyne Engineering equipment installation layout drawings (as built) in the Operations & Maintenance Manual must be reviewed and comprehended prior to the development of the installation plan. Hydro-Dyne recommends applying a food grade anti-seize compound on all hardware to be installed by contractor (such as the filler plates) This will facilitate future removal and replacement as needed. White Knight NSF H1 (or equal) is the recommended anti-seize compound.

Important! The Hydro-Dyne Engineering equipment may use components not manufactured by Hydro-Dyne Engineering. It is imperative that the contractor/owner read and follow all installation instructions for each component supplied, including those not manufactured by Hydro-Dyne Engineering. Reference various sections of the Hydro-Dyne Operations & Maintenance Manual for details. Optional components may be referenced, (but not be supplied) within this document. For additional information, please contact Hydro-Dyne Engineering customer service at 813-818-0777.

1.0 Safety Precautions:

1.1 **DANGER:** This equipment should be installed, adjusted and serviced by qualified electrical and mechanical personnel. The personnel must be familiar with the construction and operation of this equipment and the hazards involved. Fatal injury could occur if this precaution is not observed.

A. Be sure to wear safety glasses, gloves and hard hats as required always.

B. Be sure the power input disconnect is in the correct position. Power either on or off depending on the work to be performed.

C. Have a backup technician who is always in sight and ready to assist in the case of an emergency.

D. Be sure the motor frame is connected to earth ground.

2.0 Installation Sectional Sluice:

2.1 **Important!** If sluice sections are provided with lifting eyes Use the lifting eyes on individual piece lift. Do not use any sluice lifting eyes to lift entire assembly. The fully assembled sluice must be lifted with straps.

2.2 Care should be taken to protect any fittings or access cover hardware (if provided).

2.3 Do not anchor or fully tighten any part of sluice until entire assembly is together.

2.4 Fully assemble sluice and support legs with gaskets installed at operating level (upper level). Adjoin flanges and loosely secure bolts about a ¼" turn past hand tight.

2.5 Move sluice into rough position as shown on the layout drawing. Do not anchor supports at this time. Temporary shoring may be required as sluice may be unstable until anchored.

DRAFT

2.6 Roughly position compactor(s) as shown on equipment drawing installation layout and per the compactor installation procedure.

2.7 If provided with a discharge chute, assemble discharge chute and lift into position using straps to check compactor center location.

A. Do not use any lifting eyes on sluice sections for entire lift. If provided, the lifting eyes are for individual section lifts only.

B. Do not assemble discharge chute to compactor. Only check for compactor centers and position. Supports are slotted for adjustability. Set discharge chute aside until installation.

2.8 Move sluice into position and bolt to compactor(s) with gaskets. Tighten bolts about 1/4 turn past hand tight. Sluice position will now allow screen(s) to be positioned.

2.9 Install screen(s) into channel as shown on equipment drawing installation layouts and per the screen installation procedure. Ensure each screen is set on level channel invert (grout level if needed).

A. If installing multiple screens, each screen can only be installed into one dedicated channel as determined by sluice connection height (highest sluice connection away from compactors, lowest nearest compactors).

B. Position of screen(s) in channel should allow sluice connection smoothly and should be approximately on channel center-line. Screen filler plates will bend slightly when bolting to channel walls to take care of any slight off-center.

2.10 Verify fit-up locations and ensure sluice connections are not forcing screen(s) out of plumb.

2.11 Secure the single discharge chute into position per the equipment drawings installation layout and anchor stand as required.

A. The position of chute should not put pressure on compactor discharge elbows. Support is from stand not from elbows.

2.12 Working from discharge chute, pull flanges tight together with gaskets, torque bolts approximately 3/4 past hand tight in a star pattern.

2.13 Perform final screen position adjustment, mark holes in invert, remove screen for concrete bolt drilling, set bolts and re-position screen over bolts, tighten screen mounting bolts. Install and tighten screen upper channel supports and filler plates.

2.14 Anchor each compactor and its sluice legs. Each compactor may need to be slid away to get to anchor bolts.

2.15 Tighten flanges from sluice to compactor inlet with gaskets, then to screen(s) with gaskets.

2.16 Check for leaks and re-tighten as required.

DRAFT

2.17 If only one screen is going in at a time, install sluice blank-off plates with gaskets as required.

2.18 Plumb compactor drain as shown on the installation layout drawings.

2.19 Install wash water accessory components and piping per the HDE recommended plumbing arrangement and per each component manufacturer installation procedure.

2.20 Install electrical to wash water accessory components per manufacturer recommendation.

3.0 Accessory Components:

3.1 **Important!** As each application differs, Hydro-Dyne Engineering does not supply any piping, mounting brackets or flange accessories unless noted per the Manufacturer's Scope of Work. Reference installation drawings and accessory section for details.

A. If wash water is required, upon installing any plumbing to any wash water header inlet, a union coupling (or true union valve) is necessary to facilitate appropriate adjustment as needed.

B. Hydro-Dyne Engineering recommends the use of a true union ball valve installed in-line with each wash water header inlet (if supplied). This will facilitate the maintenance of each wash water header and nozzles without having to shut off the water supply at the main and will enable the ability to conserve water by controlling the amount of water being used.

3.2 If supplied, install all wash water accessories such as sediment filters, strainers, solenoid valves, ball valves, check valves, needle valves, flow meters, pressure gauges and pumps. Reference accessory section for details.

3.3 If supplied, install all level sensing accessories, such as transducers, sensors and float switches. Reference controls section for details.

3.4 If supplied, install all freeze protection, thermal or speed control accessories, such as motion sensors, thermostats and heat tracing. Reference accessory section and controls section for installation details.

A. **Important!** If supplied with an ambient thermostat or heat trace thermostat, the device setting must be verified to be set at a minimum 40 degrees Fahrenheit or higher as required at start-up.

B. Each thermostat must be installed outside, preferably in a shady area as close to the equipment as possible.

4.0 Wash Water Service:

4.1 As required, connect wash water service to equipment upon completion of installing wash water accessories as supplied. Verify each wash water accessory is properly installed and has no leakage present. Adjust or replace accessory as needed.

DRAFT

5.0 Electric Service:

5.1 If supplied with electrical components such as motors, pumps, transducers, solenoids, limit switches or freeze protection connection kit, connect electrical service as required.

6.0 Wiring Size:

6.1 It is the user's responsibility to verify that all interconnected wiring is sized and installed in conformance with the National Electrical Code (NEC) published by the National Fire Protection Association and the Canadian Electrical Code (CEC) and other applicable local codes.

6.2 Refer to the controller and motor nameplates for electrical data. Electrical drawings are in the controls section of this manual as well as in the control panel itself.

End of Document

DRAFT

SAND SHARK GRIT TRAP
INSTALLATION PROCEDURE

Important! The Hydro-Dyne Engineering equipment installation layout drawings (as built) in the Operations & Maintenance Manual must be reviewed and comprehended prior to the development of the installation plan. Hydro-Dyne recommends applying a food grade anti-seize compound on all hardware to be installed by contractor to facilitate removal and replacement as needed. White Knight NSF H1 (or equal) is the recommended anti-seize compound. Hardware may be preinstalled, which will need to be removed prior to component assembly.

Important! The Hydro-Dyne Engineering Grit Trap Slewing Gearbox Assembly is shipped without oil due to shipping and installation requirements. Each Grit Trap Slewing gearbox must be filled per specification prior to start-up. Reference maintenance section for detail.

Important! The Hydro-Dyne Engineering equipment may use components not manufactured by Hydro-Dyne Engineering. It is imperative that the contractor/owner read and follow all installation instructions for each component supplied, including those not manufactured by Hydro-Dyne Engineering. Reference various sections of the Hydro-Dyne Operations & Maintenance Manual for details. Optional components may be referenced, (but not be supplied) within this document. For additional information, please contact Hydro-Dyne Engineering customer service at 813-818-0777.

1.0 Safety Precautions:

1.1 **DANGER:** This equipment should be installed, adjusted and serviced by qualified electrical and mechanical personnel. The personnel must be familiar with the construction and operation of this equipment and the hazards involved. Fatal injury could occur if this precaution is not observed.

A. Be sure to always wear safety glasses, gloves and hard hats as required.

B. Be sure the power input disconnect is in the correct position. Power either on or off depending on the work to be performed.

C. Have a backup technician who is always in sight and ready to assist in the case of an emergency.

D. Be sure the motor frame is connected to earth ground.

2.0 Installation of Grit Trap (Top Mount Option):

2.1 **Important!** Use the lifting eyes on the Grit Trap Slewing Gearbox to lift over the chamber into position. Use two straps crossed from corner to corner with a clevis on the end of each strap and one clevis in the center of the ‘X’.

2.2 Care should be taken to protect lubrication fittings, drive(s) and other accessory components supplied during lifting and installation.

2.3 Each Grit Trap Assembly must be installed as located on the detailed Hydro-Dyne installation layout drawings, relative to the Grit Classifier installation.

2.4 Remove (12) bolts attached to Drive Pipe Assembly (torque tube) Flange.

DRAFT

2.5 Lower torque tube onto Grit Trap Drive from above. Block under gearbox approximately 12 inches. Set the Grit Trap in place and position to easily access oil drain plug.

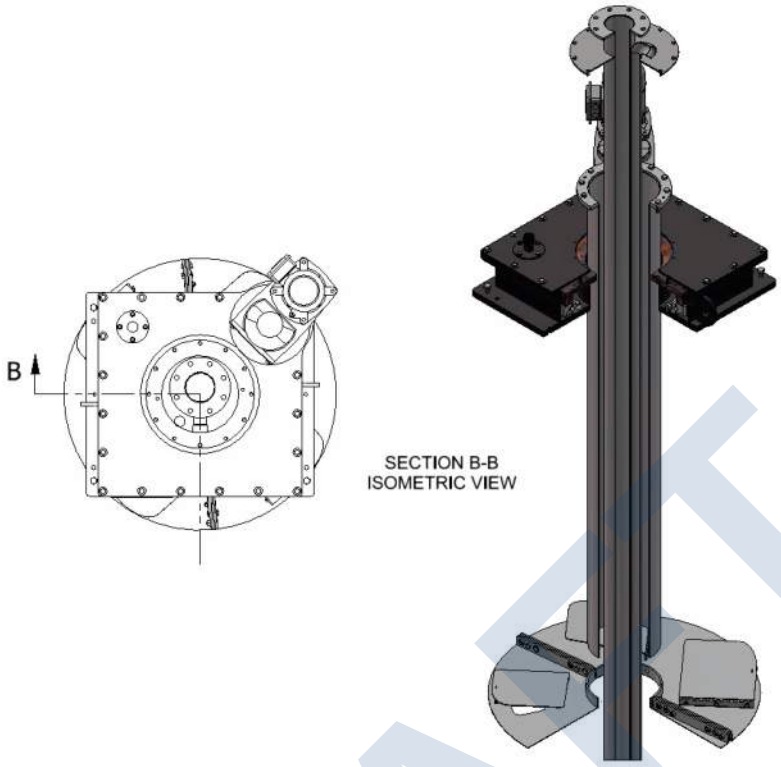

2.6 Lower torque tube through the opening in Bridge. At bottom of angled sides (just above grit settlement area) use 2x4's to support bottom of tube approximately 12 inches above bottom corner of angled sides.

2.7 Install torque tube flange bolts into gearbox flange and torque all bolts to 200 in-lbs. Torque lock nuts from above to 200 in-lbs. Torqueing should be done in a star pattern to ensure proper alignment.

2.8 Remove blocking from below, lift Grit Trap Drive off blocking and set on bridge. Grout to level as needed.

2.9 Anchor equipment securely.

A. Mark anchor locations, lift Grit Trap out of the way, drill and install anchors, lift Grit Trap down over anchors and secure. Anchors size minimum is 5/8" with 4.5" minimum concrete embedment.

B. Be certain to drill to embed depth as shown on drawings or per manufacturer's specifications were applicable.

2.10 Bolt Vane Assembly to bottom of torque tube at desired level above bottom of angled sides (usually 3-8 inches). Use double nuts for locking position bolt. Torque all bolts to 200 in-lbs.

2.11 Install flanged fluidizing / suction pipes through center of gear-box into torque tube. Secure using hardware provided.

DRAFT

A. Be certain fluidizing tube is pointing away from drive motor.

B. Torque all bolts to 200 in-lbs. Torqueing should be done in a star pattern to ensure proper alignment.

2.12 If supplied, with Grit Trap Suction Pipe Support, install support (adjust as needed) and anchor securely to sides of channel.

3.0 Installation of Grit Trap (Flood Suction Option):

3.1 **Important!** Use the lifting eyes on the Grit Trap Slewing Gearbox to lift over the chamber into position. Use two straps crossed from corner to corner with a clevis on the end of each strap and one clevis in the center of the 'X'.

3.2 Care should be taken to protect lubrication fittings, drive(s) and other accessory components supplied during lifting and installation.

3.3 Each Grit Trap Assembly must be installed as located on the detailed Hydro-Dyne installation layout drawings, relative to the Grit Classifier installation.

3.4 Lower Grit Trap Drive over the chamber into position. Set the Grit Trap in place and position to easily access oil drain plug. Grout to level as needed.

3.5 Anchor equipment securely.

A. Mark anchor locations, move Grit Trap out of way, drill and install anchors, lift Grit Trap down over anchors and secure. Anchors size minimum is 5/8" with 4.5" minimum concrete embedment.

B. Be certain to drill to embed depth as shown on drawings or per manufacturer's specifications were applicable.

3.6 Remove Flood Suction Top Cover and retain hardware.

3.7 Lift drive pipe into position and secure using supplied hardware with Loctite 242.

3.8 Install propeller/impeller clamp and secure hardware using Loctite 242.

3.9 Install one half of propeller/impeller and secure hardware using Loctite 242.

3.10 Install second half of propeller/impeller and secure hardware using Loctite 242.

3.11 Reinstall Grit Trap Flood Suction Top Cover and secure using retained hardware.

3.12 If supplied, with Grit Trap Suction Pipe Support, install support (adjust as needed) and anchor securely to sides of channel.

3.13 Install Grit Pump Assembly. Install piping, accessory components and electric service as needed.

4.0 Installation of Grit Trap (Airlift Assembly Option):

DRAFT

4.1 **Important!** Use the lifting eyes on the Grit Trap Slewing Gearbox to lift over the chamber into position. Use two straps crossed from corner to corner with a clevis on the end of each strap and one clevis in the center of the 'X'.

4.2 Care should be taken to protect lubrication fittings, drive(s) and other accessory components supplied during lifting and installation.

4.3 Each Grit Trap Assembly must be installed as located on the detailed Hydro-Dyne installation layout drawings, relative to the Grit Classifier installation.

4.4 Lower Grit Trap Drive over the chamber into position. Set the Grit Trap in place and position to easily access oil drain plug. Use jacking bolts to make torque tube plumb and level. Grout to level as needed.

4.5 Anchor equipment securely.

A. Mark anchor locations, move Grit Trap out of way, drill and install anchors, lift Grit Trap down over anchors and secure. Anchors size minimum is 5/8" with 4.5" minimum concrete embedment.

B. Be certain to drill to embed depth as shown on drawings or per manufacturer's specifications were applicable.

4.6 Lift drive pipe into position and secure using supplied hardware with Loctite 242.

4.7 Install propeller/impeller clamp and secure hardware using Loctite 242.

4.8 Install one half of propeller/impeller and secure hardware using Loctite 242.

4.9 Install second half of propeller/impeller and secure hardware using Loctite 242.

4.10 Install Grit Trap Airlift Assembly and secure using retained hardware.

4.11 If supplied, with Grit Trap Airlift Pipe Support, install support (adjust as needed) and anchor securely to sides of channel.

4.12 Install Airlift Pump Assembly

A. Install piping, accessory components and electric service as needed

5.0 Accessory Components:

5.1 **Important!** Hydro-Dyne Engineering does not provide installation of any accessories or piping, unless noted per the Manufacturer's Scope of Work. As each application differs, Hydro-Dyne Engineering does not typically supply any piping, mounting brackets or flange accessories unless noted per the Manufacturer's Scope of Work. Reference installation drawings and accessory section for details.

A. If wash water is required, upon installing any plumbing to any wash water header inlet, a union coupling (or true union valve) is necessary to facilitate appropriate adjustment as needed.

DRAFT

B. Hydro-Dyne Engineering recommends the use of a true union ball valve installed in-line with each wash water header inlet (if supplied). This will facilitate the maintenance of each wash water header and nozzles without having to shut off the water supply at the main and will enable the ability to conserve water by controlling the amount of water being used.

5.2 If supplied, install all wash water accessories such as sediment filters, strainers, solenoid valves, ball valves, check valves, needle valves, flow meters, pressure gauges and pumps. Reference accessory section for details.

5.3 If supplied, install all level sensing accessories, such as transducers, sensors and float switches. Reference controls section for details.

5.4 If supplied, install all freeze protection, thermal or speed control accessories, such as motion sensors, thermostats and heat tracing. Reference accessory section and controls section for installation details.

A. **Important!** If supplied with an ambient thermostat or heat trace thermostat, the device setting must be verified to be set at a minimum 40 degrees Fahrenheit or higher as required at start-up.

B. Each thermostat must be installed outside, preferably in a shady area as close to the equipment as possible.

6.0 Gear Reducers & Slewing Gearbox:

6.1 Each Grit Trap Slewing Gearbox Assembly is shipped without oil due to shipping and installation requirements. Each Grit Trap Slewing gearbox must be filled per prior to start-up. Mobilgear600 (or equivalent) is the recommended lubricant. The Grit Trap slewing gearbox oil capacity is approximately 3 gallons. The appropriate leve1 should be verified using the dipstick markers. Unscrew filler breather dipstick and verify level is above red mark and below green mark on dipstick. Do not use tools to tighten filler breather dipstick, hand tighten only.

6.2 If supplied, each gear reducer usually will be shipped lubricated. Lubricant may leak during shipment. Thus, the shipping container or skid should be checked for signs of leakage. It is recommended that each gear reducer be checked and filled to proper lubrication levels per manufacturer specifications. Reference reducer section for details.

A. If supplied with standard quality oil, Mobilgear600 (or equal) is the manufacturer recommended lubricant. Only add standard oil to existing standard oil. If synthetic oil is preferred, the reducer must be drained of existing oil before replacing with synthetic oil.

B. If supplied with high quality synthetic oil, Mobile SHC630 (or equal) is the manufacturer recommended lubricant. Only add synthetic oil to exiting synthetic oil. ***WARNING: NEVER MIX SYNTHETIC OIL WITH STANDARD OIL***

6.3 Each gear reducer vent plug (breather) is designed to prevent dirt and water from entering the gear reducer. Without proper air venting, the increase in air pressure may force lubricant through the oil seals resulting in oil seal leakage and damage. Do

DRAFT

not restrict the operation of the vent with paint or other obstruction. Reference reducer section for details.

A. Each gear reducer may be shipped with a rubber seal (strip or plug) installed in the vent hole (breather) and MUST be removed before each gear reducer is placed into operation.

B. Each gear reducer may be shipped with a hex-head metal plug in the vent hole (breather), which MUST be removed and the attached pressure relief vent plug must be inserted into the filler/vent hole of the reducer, before the unit is placed into operation.

C. Each gear reducer may be shipped with an Auto-vent breather, which operates as needed. Hydro-Dyne Engineering recommends inspection for leaks and replace as needed.

7.0 Drive Motors:

7.1 If commissioning service is provided by Hydro-Dyne Engineering, do not power up any motor installed onto the equipment, as damage to the motor and equipment may occur. Each motor will be powered at start-up by the Hydro-Dyne Engineering service technician.

A. During Start-up, each motor will be validated as wired per manufacturer recommendations for appropriate voltage and orientation. Each motor will be checked for proper rotation and speed.

B. During Start-up, each motor will have a full load amp draw test documented for future reference. The initial amp draw value should be compared to each successive full amp draw test to determine the integrity of the motor.

8.0 Wash Water Service:

8.1 As required, connect wash water service to equipment upon completion of installing wash water accessories as supplied. Verify each wash water accessory is properly installed and has no leakage present. Adjust or replace accessory as needed.

9.0 Electric Service:

9.1 If supplied with electrical components such as motors, pumps, transducers, solenoids, limit switches or freeze protection connection kit, connect electrical service as required.

10.0 Wiring Size:

10.1 It is the user's responsibility to verify that all interconnected wiring is sized and installed in conformance with the National Electrical Code (NEC) published by the National Fire Protection Association and the Canadian Electrical Code (CEC) and other applicable local codes.

10.2 Refer to the controller and motor nameplates for electrical data. Electrical drawings are in the controls section of this manual as well as in the control panel itself.

DRAFT

End of Document

DRAFT

SAND SHARK GRIT CLASSIFIER
INSTALLATION PROCEDURE

Important! The Hydro-Dyne Engineering equipment installation layout drawings (as built) in the Operations & Maintenance Manual must be reviewed and comprehended prior to the development of the installation plan. Hydro-Dyne recommends applying a food grade anti-seize compound on all hardware to be installed by contractor to facilitate removal and replacement as needed. White Knight NSF H1 (or equal) is the recommended anti-seize compound.

Important! The Hydro-Dyne Engineering equipment may use components not manufactured by Hydro-Dyne Engineering. It is imperative that the contractor/owner read and follow all installation instructions for each component supplied, including those not manufactured by Hydro-Dyne Engineering. Reference various sections of the Hydro-Dyne Operations & Maintenance Manual for details. Optional components may be referenced, (but not be supplied) within this document. For additional information, please contact Hydro-Dyne Engineering customer service at 813-818-0777.

1.0 Safety Precautions:

1.1 **DANGER:** This equipment should be installed, adjusted and serviced by qualified electrical and mechanical personnel. The personnel must be familiar with the construction and operation of this equipment and the hazards involved. Fatal injury could occur if this precaution is not observed.

A. Be sure to always wear safety glasses, gloves and hard hats as required.

B. Be sure the power input disconnect is in the correct position. Power (either on or off depending on the work to be performed).

C. Have a backup technician who is always in sight and ready to assist in the case of an emergency.

D. Be sure the motor frame is connected to earth ground.

2.0 Installation of Grit Classifier:

2.1 **Important!** Secure classifier with lifting straps. Each classifier may be provided with lifting eyes. Do not lift equipment using the gear motor lifting eye. If no lifting eyes are provided, then lifting should be done with straps on full pipe section and on drive adapter spool section.

2.2 Care should be taken to protect lubrication fittings, automatic grease dispensers (if supplied) and drive during lifting and installation.

2.3 Each Grit Classifier must be installed as located on the detailed Hydro-Dyne installation layout drawings, relative to the Grit Trap installation.

2.4 Lower each Grit Classifier into position and set in place.

A. Each Grit Classifier may be supplied with support stands, which may need to be secured to the top of the channel or as specified per manufacturer recommended specifications.

DRAFT

B. Leveling is obtained by adjustment of each support leg. Ensure supports are flush to mounting surface. Grout as needed for leveling.

2.5 Anchor equipment securely.

A. Mark anchor locations, move Classifier/support stands out of way, drill and install anchors, lift Grit Classifier down over anchors and secure. Use ½ inch dia. torque setting anchors, if anchors have not been specified per HDE Installation layout drawings.

B. Be certain to drill to embed depth as shown on drawings or per manufacturer's specifications were applicable.

2.6 Each Grit Classifier must be piped to each Grit Trap Assembly.

A. If supplied with a Flood Suction Option, the piping will connect from the Grit Pump to the Classifier Degritting Cyclone.

B. If supplied with a Top Mount option, the piping from the Grit Pump will connect to the Classifier Degritting Cyclone.

C. If supplied with an Airlift Pump System, the piping will connect to the Classifier Top Tank Assembly.

3.0 Accessory Components:

3.1 **Important!** As each application differs, Hydro-Dyne Engineering does not supply any piping, mounting brackets or flange accessories unless noted per the Manufacturer's Scope of Work. Reference installation drawings and accessory section for details.

A. If wash water is required, upon installing any plumbing to any wash water header inlet, a union coupling (or true union valve) is necessary to facilitate appropriate adjustment as needed.

B. Hydro-Dyne Engineering recommends the use of a true union ball valve installed in-line with each wash water header inlet (if supplied). This will facilitate the maintenance of each wash water header and nozzles without having to shut off the water supply at the main and will enable the ability to conserve water by controlling the amount of water being used.

3.2 If supplied, install all wash water accessories such as sediment filters, strainers, solenoid valves, ball valves, check valves, needle valves, flow meters, pressure gauges and pumps. Reference accessory section for details.

3.3 If supplied, install all level sensing accessories, such as transducers, sensors and float switches. Reference controls section for details.

3.4 If supplied, install all freeze protection, thermal or speed control accessories, such as motion sensors, thermostats and heat tracing. Reference accessory section and controls section for installation details.

DRAFT

A. **Important!** If supplied with an ambient thermostat or heat trace thermostat, the device setting must be verified to be set at a minimum 40 degrees Fahrenheit or higher as required at start-up.

B. Each thermostat must be installed outside, preferably in a shady area as close to the equipment as possible.

4.0 Gear Reducers:

4.1 If supplied, each gear reducer usually will be shipped lubricated. Lubricant may leak during shipment. Thus, the shipping container or skid should be checked for signs of leakage. It is recommended that each gear reducer be checked and filled to proper lubrication levels per manufacturer specifications. Reference reducer section for details.

A. If supplied with standard quality oil, Mobilgear600 (or equal) is the manufacturer recommended lubricant. Only add standard oil to existing standard oil. If synthetic oil is preferred, the reducer must be drained of existing oil before replacing with synthetic oil.

B. If supplied with high quality synthetic oil, Mobile SHC630 (or equal) is the manufacturer recommended lubricant. Only add synthetic oil to exiting synthetic oil. ***WARNING: NEVER MIX SYNTHETIC OIL WITH STANDARD OIL***

4.2 Each gear reducer vent plug (breather) is designed to prevent dirt and water from entering the gear reducer. Without proper air venting, the increase in air pressure may force lubricant through the oil seals resulting in oil seal leakage and damage. Do not restrict the operation of the vent with paint or other obstruction. Reference reducer section for details.

A. Each gear reducer may be shipped with a rubber seal (strip or plug) installed in the vent hole (breather) and MUST be removed before each gear reducer is placed into operation.

B. Each gear reducer may be shipped with a hex-head metal plug in the vent hole (breather), which MUST be removed and the attached pressure relief vent plug must be inserted into the filler/vent hole of the reducer, before the unit is placed into operation.

C. Each gear reducer may be shipped with an Auto-vent breather, which operates as needed. Hydro-Dyne Engineering recommends inspection for leaks and replace as needed.

5.0 Drive Motors:

5.1 If commissioning service is provided by Hydro-Dyne Engineering, do not power up any motor installed onto the equipment, as damage to the motor and equipment may occur. Each motor will be powered at start-up by the Hydro-Dyne Engineering service technician.

DRAFT

A. During Start-up, each motor will be validated as wired per manufacturer recommendations for appropriate voltage and orientation. Each motor will be checked for proper rotation and speed.

B. During Start-up, each motor will have a full load amp draw test documented for future reference. The initial amp draw value should be compared to each successive full amp draw test to determine the integrity of the motor.

6.0 Wash Water Service:

6.1 As required, connect wash water service to equipment upon completion of installing wash water accessories as supplied. Verify each wash water accessory is properly installed and has no leakage present. Adjust or replace accessory as needed.

7.0 Electric Service:

7.1 If supplied with electrical components such as motors, pumps, transducers, solenoids, limit switches or freeze protection connection kit, connect electrical service as required.

8.0 Wiring Size:

8.1 It is the user's responsibility to verify that all interconnected wiring is sized and installed in conformance with the National Electrical Code (NEC) published by the National Fire Protection Association and the Canadian Electrical Code (CEC) and other applicable local codes.

8.2 Refer to the controller and motor nameplates for electrical data. Electrical drawings are in the controls section of this manual as well as in the control panel itself.

9.0 Grit Classifier Sand Bed Seeding:

9.1 Optional instructions to immediately produce grit discharge to the dumpster at startup. The grit classifier tank can be seeded with 100 pounds of playground sand prior to introducing any wet product into the classifier. The purpose of doing this is to fill the 1/2-inch gap designed between the auger and the classifier tank bottom. This gap is designed for the auger to ride on a bed of grit or sand for better wear life.

9.2 To seed the classifier, load 100 pounds of playground sand into the lowest point of the dry classifier tank. Turn on the auger which will evenly distribute the sand into the space or gap. Capture any sand discharged and repeat until no more sand is accepted.

9.3 If this seeding step is not done, then the grit classifier will take hours if not days to discharge grit product to the dumpster with no technical consequences. There simply will be a delay in grit discharge to the dumpster, since the newly captured grit will be forming the bed in the gap between the auger and the classifier tank.

End of Document

DRAFT

Accessory Catalog Cuts

DRAFT

Included:

Solenoid Valve
Union Valve
Sediment Strainer
Pressure Gauge
Wedge Anchors (by others)
Epoxy (by others)
Krebs Cyclone
Grit Pump (by others)

The valve outlined below is a stand-alone unit. All wiring devices including conduit and junction boxes which may be required when wiring power to these valves, is supplied by others.

ASCO® RedHat

Pilot Operated

General Service Solenoid Valves

Brass or Stainless Steel Bodies
3/8" to 2 1/2" NPT

2/2 SERIES 8210

2-WAY

Features

- Wide range of pressure ratings, sizes, and resilient materials provide long service life and low internal leakage
- High flow valves for liquid, corrosive, and air/inert gas service
- Industrial applications include:
  - Car wash
  - Laundry equipment
  - Air compressors
  - Industrial water control
  - Pumps

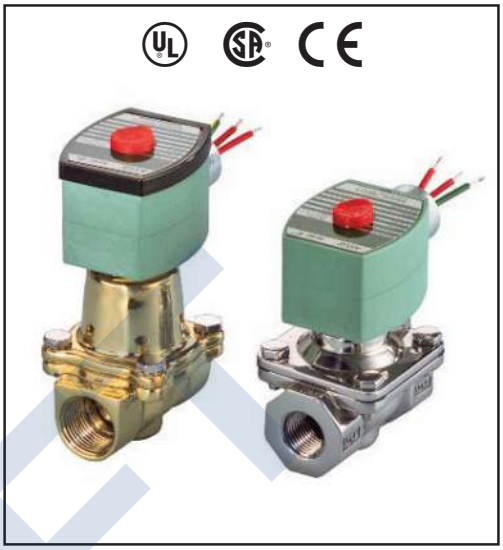

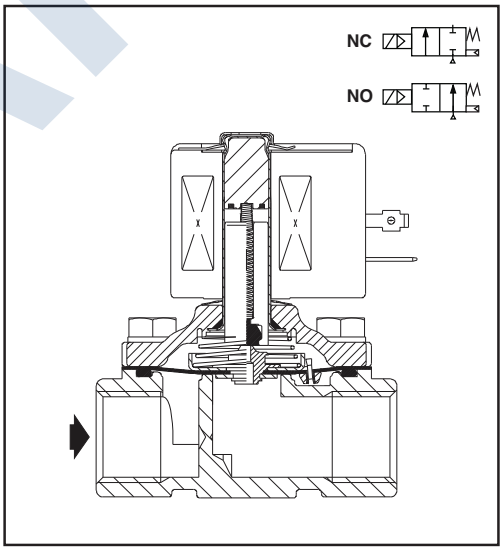

Construction

Valve Parts in Contact with Fluids		
Body	Brass	304 Stainless Steel*
Seals and Discs	NBR or PTFE	
Disc-Holder	PA	
Core Tube	305 Stainless Steel	
Core and Plugnut	430F Stainless Steel	
Springs	302 Stainless Steel	
Shading Coil	Copper	Silver

*Catalog Numbers 8210G127, 8210G129, 8210G132, 8210G133 have 316L Stainless Steel bodies.

Electrical

Standard Coil and Class of Insulation	Watt Rating and Power Consumption				Spare Coil Part Number			
		AC			General Purpose		Explosionproof	
	DC Watts	Watts	VA Holding	VA Inrush	AC	DC	AC	DC
F	-	6.1	16	40	238210	-	238214	-
F	11.6	10.1	25	70	238610	238710	238614	238714
F	16.8	16.1	35	180	272610	97617	272614	97617
F	-	17.1	40	93	238610	-	238614	-
F	-	20	43	240	99257	-	99257	-
F	-	20.1	48	240	272610	-	272614	-
F	30.8	-	-	-	-	501695	-	501696
H	40.6	-	-	-	-	238910	-	238914

Standard Voltages: 24, 120, 240, 480 volts AC, 60 Hz (or 110, 220 volts AC, 50 Hz). 6, 12, 24, 120, 240 volts DC. Must be specified when ordering.
Other voltages available when required.

Solenoid Enclosures

Standard: RedHat II - Watertight, Types 1, 2, 3, 3S, 4, and 4X; RedHat - Type I

Optional: RedHat II - Explosionproof and Watertight, Types 3, 3S, 4, 4X, 6, 6P, 7, and 9; Red-Hat - Explosionproof and Watertight, Types 3, 4, 4X, 7, and 9.
(To order, add prefix "EF" to catalog number, except Catalog Numbers 8210B057, 8210B058, and 8210B059, which are not available with Explosionproof enclosures.)
See Optional Features Section for other available options.

Hydro-Dyne Engineering does not provide installation or any accessory unless noted in the Scope of Work.

Nominal Ambient Temp. Ranges

RedHat II/RedHat AC: 32˚F to 125˚F (0˚C to 52˚C)
RedHat II DC: 32˚F to 104˚F (0˚C to 40˚C)
RedHat DC: 32˚F to 77˚F (0˚C to 25˚C)
(104˚F/40˚C occasionally)
8210G227 AC: 32˚F to 130˚F (0˚C to 54˚C)
DC: 32˚F to 90˚F (0˚C to 32˚C)
Refer to Engineering Section for details.

Approvals

UL listed as indicated. CSA certified.
RedHat II meets applicable CE directives.
Refer to Engineering Section for details.
ATEX/IECEx certified with prefix "EV" as listed. *Refer to Optional Features Electrical Section for details.*

2-WAY

2/2 SERIES 8210

Hydro-Dyne Engineering does not provide installation or any accessories unless noted per the Manufacturer's Scope of Work. Reference Equipment Drawings recommended plumbing layout for location details.

ASCO®

Specifications (English units)

Pipe Size (in)	Orifice Size (in)	Cv Flow Factor	Operating Pressure Differential (psi)							Max. Fluid Temp. °F		Brass Body			Stainless Steel Body			Watt Rating/ Class of Coil Insulation ⑦	
			Min.	Max. AC			Max. DC												
				Air-Inert Gas	Water	Light Oil @ 300 SSU	Air-Inert Gas	Water	Light Oil @ 300 SSU	AC	DC	Catalog Number	Const. Ref. ④	UL ⑤ Listing	Catalog Number	Const. Ref. ④	UL ⑤ Listing	AC	DC
NORMALLY CLOSED (Closed when de-energized), NBR or PTFE ② Seating																			
3/8	3/8	1.5	①	150	125	-	40	40	-	180	150	8210G073 ③	1P	●	8210G036 ③	1P	●	6.1/F	11.6/F
3/8	5/8	3	0	150	150	-	40	40	-	180	150	8210G093	5D	❍	-	-	-	10.1/F	11.6/F
3/8	5/8	3	5	200	150	135	125	100	100	180	150	8210G001 ▼	6D	❍	-	-	-	6.1/F	11.6/F
3/8	5/8	3	5	300	300	300	-	-	-	175	-	8210G006 ✓	5D	❍	-	-	-	17.1/F	-
1/2	7/16	2.2	①	150	125	-	40	40	-	180	150	8210G015 ③	2P	●	8210G037 ③	2P	●	6.1/F	11.6/F
1/2	5/8	4	0	150	150	-	40	40	-	180	150	8210G094 ✓	5D	❍	-	-	-	10.1/F	11.6/F
1/2	5/8	4	0	150	150	125	40	40	-	175	150	-	-	-	8210G087 ✓	7D	●	17.1/F	11.6/F
1/2	5/8	4	5	200	150	135	125	100	100	180	150	8210G002 ▼	6D	❍	-	-	-	6.1/F	11.6/F
1/2	5/8	4	5	300	300	300	-	-	-	175	-	8210G007	5D	❍	-	-	-	17.1/F	-
1/2	3/4	4	5	-	300	-	-	300	-	130	90	8210G227	5D	❍ †	-	-	-	17.1/F	40.6/H
3/4	5/8	4.5	0	150	150	125	40	40	-	175	150	-	-	-	8210G088 ✓	7D	●	17.1/F	11.6/F
3/4	3/4	5	5	125	125	125	100	90	75	180	150	8210G009 ▼	9D	❍	-	-	-	6.1/F	11.6/F
3/4	3/4	5	0	150	150	-	40	40	-	180	150	8210G095 ✓	8D	❍	-	-	-	10.1/F	11.6/F
3/4	3/4	6.5	5	250	150	100	125	125	125	180	150	8210G003 ▼	11D	❍	-	-	-	6.1/F	11.6/F
3/4	3/4	6	0	300	300	200	200	200	200	200	180	8210G026 ② ‡	40P/40D	●	-	-	-	16.1F	30.8/F
1	1	12	0	150	125	125	125	120	120	180	180	8210G054 ‡	41D/31D	●	8210G089 ‡	45D/15D	●	16.1/F	30.8/F
1	1	13	5	150	150	100	125	125	125	180	150	8210G004 ▼	12D	❍	-	-	-	6.1/F	11.6/F
1	1	13.5	0	300	225	175	-	-	-	200	-	8210G027 ‡	42P	●	-	-	-	20.1/F	-
1	1	13.5	10	300	300	300	-	-	-	175	-	8210G078 ②	13P	-	-	-	-	17.1/F	-
1 1/4	1 1/8	15	0	150	125	125	135	120	120	180	180	8210G055 ‡	43D/32D	●	-	-	-	16.1/F	30.8/F
1 1/4	1 1/8	15	5	150	150	100	125	125	125	180	150	8210G008 ▼	16D	❍	-	-	-	6.1/F	11.6/F
1 1/2	1 1/4	22.5	0	150	125	125	135	120	120	180	180	8210G056 ‡	44D/33D	●	-	-	-	16.1/F	30.8/F
1 1/2	1 1/4	22.5	5	150	150	100	125	125	125	180	150	8210G029 ▼	18D	❍	8210G127	-	-	6.1/F	11.6/F
2	1 3/4	43	5	150	125	90	50	50	50	180	150	8210G100	20P	●	8210G129	-	-	6.1/F	11.6/F
2 1/2	1 3/4	45	5	150	125	90	50	50	50	180	150	8210G101	21P	●	-	-	-	6.1/F	11.6/F
NORMALLY OPEN (Open when de-energized), NBR Seating (PA Disc-Holder, except as noted)																			
3/8	5/8	3	0	150	150	125	125	125	80	180	150	8210G033	23D	●	-	-	-	10.1/F	11.6/F
3/8	5/8	3	5	250	200	200	250	200	200	180	180	8210G011 ⑧ ⑨	39D	●	-	-	-	10.1/F	11.6/F
1/2	5/8	4	0	150	150	125	125	125	80	180	150	8210G034 ✓	23D	●	-	-	-	10.1/F	11.6/F
1/2	5/8	3	0	150	150	100	125	125	80	180	150	-	-	-	8210G030 ✓	37D	●	10.1/F	11.6/F
1/2	5/8	4	5	250	200	200	250	200	200	180	180	8210G012 ⑧ ⑨	39D	●	-	-	-	10.1/F	11.6/F
3/4	3/4	5.5	0	150	150	125	125	125	80	180	150	8210G035 ✓	25D	●	-	-	-	10.1/F	11.6/F
3/4	5/8	3	0	150	150	100	125	125	80	180	150	-	-	-	8210G038 ✓	38D	●	10.1/F	11.6/F
3/4	3/4	6.5	5	-	-	-	250	200	200	-	180	8210C013	24D	●	-	-	-	-	16.8/F
3/4	3/4	6.5	5	250	200	200	-	-	-	180	-	8210G013	46D	●	-	-	-	16.1/F	-
1	1	13	0	125	125	125	-	-	-	180	-	8210B057 ⑥ ⑩	34D	●	-	-	-	20/F	-
1	1	13	5	-	-	-	125	125	125	-	180	8210D014	26D	●	-	-	-	-	16.8/F
1	1	13	5	150	150	125	-	-	-	180	-	8210G014	47D	●	-	-	-	16.1/F	-
1 1/4	1 1/8	15	0	125	125	125	-	-	-	180	-	8210B058 ⑥ ⑩	35D	●	-	-	-	20/F	-
1 1/4	1 1/8	15	5	-	-	-	125	125	125	-	180	8210D018	28D	●	-	-	-	-	16.8/F
1 1/4	1 1/8	15	5	150	150	125	-	-	-	180	-	8210G018	48D	●	-	-	-	16.1/F	-
1 1/2	1 1/4	22.5	0	125	125	125	-	-	-	180	-	8210B059 ⑥ ⑩	36D	●	-	-	-	20/F	-
1 1/2	1 1/4	22.5	5	-	-	-	125	125	125	-	180	8210D032	29D	●	-	-	-	-	16.8/F
1 1/2	1 1/4	22.5	5	150	150	125	-	-	-	180	-	8210G032	49D	●	8210G132	-	-	16.1/F	-
2	1 3/4	43	5	-	-	-	125	125	125	-	150	8210 103	30P	●	-	-	-	-	16.8/F
2	1 3/4	43	5	125	125	125	-	-	-	180	-	8210G103	50P	●	8210G133	-	-	16.1/F	-
2 1/2	1 3/4	45	5	-	-	-	125	125	125	-	150	8210 104	27P	●	-	-	-	-	16.8/F
2 1/2	1 3/4	45	5	125	125	125	-	-	-	180	-	8210G104	51P	●	-			16.1/F	-

① 5 psi on Air; 1 psi on Water.
② Valve provided with PTFE main disc.
③ Valve includes Ultem (G.E. trademark) piston.
④ Letter "D" denotes diaphragm construction; "P" denotes piston construction.
⑤ ❍ Safety Shutoff Valve; ● General Purpose Valve.
Refer to Engineering Section (Approvals) for details.
⑥ Valves not available with Explosionproof enclosures.
⑦ On 50 hertz service, the watt rating for the 6.1/F solenoid is 8.1 watts.
⑧ AC construction also has PA seating.
⑨ No disc-holder.
⑩ Stainless steel disc-holder.
† UL listed for fire protection systems per UL429A.
‡ DC constructions must have solenoid mounted vertical and upright.
✓ ATEX/IECEx certified with prefix "EV".
▼ ATEX/IECEx certified for DC only with prefix "EV".

DRAFT

The valve is a stand-alone unit. All wiring devices including conduit and junction boxes which may be required when wiring power to these valves, is supplied by others.

ASCO®

Optional Features

How to Select and Specify

Not all optional features are appropriate or available for all valves.

Table 1 lists the optional electrical feature prefixes available for each RedHat II solenoid and coil. Specify these features by adding the indicated prefixes to the valve catalog number.

For those prefixes marked with a "●" or for optional RedHat electrical features not covered here, contact your local ASCO sales office.

Table 2 lists the suffixes for optional construction features available for each valve Series. Specify these features by adding the indicated suffixes to the valve catalog number.

Table 1: Optional RedHat II Electrical Feature Prefixes (For RedHat optional electrical features, contact your local sales office.)

Code	Solenoid
EF	Class I, Division 1 Explosionproof
EV	Class I, Division 1 Explosionproof with 316 Stainless Steel Hub and Stainless Steel Base Plate
EE	Class I, Division 2 General Purpose
GP	Panel Mount Type 1 General Purpose Solenoid
J	Junction Box
JP	Panel Mount Junction Box
OF	Open Frame Spade and Screw Terminal Solenoids
OP	Panel Mount Spade, Screw and DIN Terminal Solenoids
Code	**Coil**
HB	Class H - Intermediate Power
● HC	Class H - Battery Charging Coil
HT	Class H - High Temperature
KB	Class H - Intermediate Power - Screw Terminals
● KC	Class H - Battery Charging Circuit - Screw Terminals
KF	Class F - High Temperature - Screw Terminals
KH	Class H - High Temperature - Screw Terminals
KP	Class F - Intermediate Power - Screw Terminals
SC	Class F - High Temperature - DIN Connection
SD	Class F - Intermediate Power - DIN Connection
SF	Class F - High Temperature - Spade Terminals
SP	Class F - Intermediate Power - Spade Terminals
SS	Class H - Intermediate Power - Spade Terminals
ST	Class H - High Temperature - Spade Terminals
SU	Class H - High Temperature - DIN Connection
SV	Class H - Intermediate Power - DIN Connection
● SW	Class H - Battery Charging Circuit - Spade Terminals
VT	Class F - High Temperature - Micro 4 Pin Connector
VB	Class F - Intermediate Power - Micro 4 Pin Connector
ZT	Class F - High Temperature - Mini 3 Pin Connector
ZB	Class F - Intermediate Power - Mini 3 Pin Connector
Code	**Feature**
● L	72" continuous leads
● X	Other special constructions
Note: See chart on next page for specific power and temperature ratings.	

Table 2: Suffixes for Optional Construction Features

SUFFIX I		SUFFIX II		SUFFIX III	
Code	**Seat/Disc/Etc. Material**	**Code**	**Form of Flow**	**Code**	**Feature**
E	EPDM (Ethylene Propylene)	F ①	Normally Closed	HW ①	Hot Water Construction
J	CR (Chloroprene, Neoprene)	G ①	Normally Open	LT ①	Low Temperature
K ①	Air Operated, 3-30 psi	U ①	Universal	M	Metering Device
N	Oxygen			MB ①	Mounting Bracket
Q ①	Long-Life Construction			MO	Manual Operator
R ①	Resilient			MS	Screw Type Manual Operator
T	PTFE			VH ①	High Vacuum
V	FKM			VM ①	Medium Vacuum
① Covered on the pages of the Series in which it is used.					

An example of an ASCO valve catalog number with prefixes and suffixes:

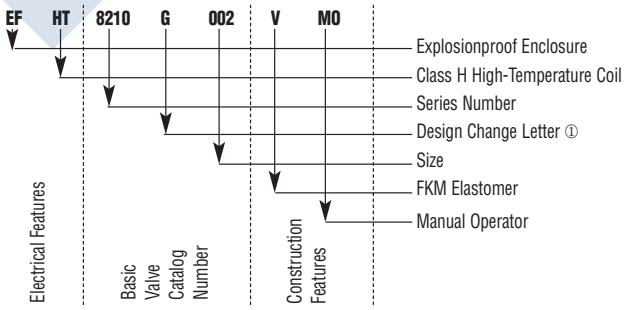

① The Design Change Letter indicates a major design change affecting spare parts kits, rebuild kits, and coils. The correct replacement parts for each change letter are shown in ASCO's Rebuild Kits and Coils Catalog.

DRAFT

ASCO®

Optional Features
Electrical

Important Note: One-piece molded epoxy RedHat II solenoids are a unique combination of coil and enclosure. When ordering some RedHat II options, it may be necessary to specify the appropriate catalog number prefixes for both the enclosure and the coil.

Type 1 **General Purpose Solenoids with Class F High-Temperature Coils**	**Enclosures:** • Also meet Type 2 Dripproof, Types 3 and 3S Raintight, and Types 4 and 4X Watertight requirements. • Supplied standard with 1/2" threaded conduit hub and built-in strain relief for leads. **Coils:** • Insulation system for coil temperatures up to 311°F (155°C). ① • *For ambient temperature requirement, refer to specific Series and charts in Engineering Information Section.* • Suitable for 50 and 60 Hz. ②	**Ordering Information:** Supplied standard on all RedHat II valves.	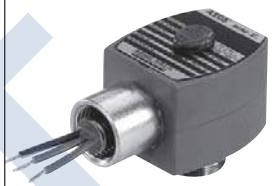
Type 1 **General Purpose Solenoids with Class H High-Temperature Coils**	**Enclosures:** • Same as Class F. **Coils:** • Insulation system suitable for coil temperatures up to 356°F (180°C).① • *For ambient temperature requirements, refer to specific Series and charts in Engineering Information Section.* • Suitable for 50 and 60 Hz. ②	**Ordering Information:** Depending on wattage, use catalog number prefix "HT" or "HB" (e.g., HT8210H002).	
Panel Mount Type 1 **General Purpose Solenoids with Class F or H High-Temperature Coils**	**Enclosures:** • Same as above, but with provision for mounting on a panel (panel not included). **Coils:** • Same as Class F or H above.	**Ordering Information:** For Class F coil, use catalog number prefix "GP" (e.g., GP8210G2) and specify voltage. For Class H coil, depending on wattage, use catalog number prefix "GPHT" or "GPHB" (e.g., GPHT8210G002) and specify voltage.	
Type 7 (A, B, C, and D) **Explosionproof Solenoids with Class F High-Temperature Coils**	**Enclosures:** • Also meets Types 3 and 3S Raintight, Types 4 and 4X Watertight, Types 6 and 6P Submersible, and Type 9 (E, F, and G) Dust Ignitionproof requirements. *Refer to Engineering Information Section.* **Coils:** • Insulation systems suitable for coil temperatures up to 311°F (155°C). ① • *For ambient temperature requirements, refer to specific Series charts in Engineering Information Section.* • Suitable for 50 and 60 Hz. ②	**Approvals:** UL listed; CSA certified. **Ordering Information:** Use catalog number prefix "EF" (e.g., EF8210G002) and specify voltage.	

① UL limitations are 284°F (140°C) for Class F insulation systems and 320°F (160°C) for Class H insulation systems.
② Can be supplied for 50 Hz at a reduced voltage, which is standard throughout the world; i.e., 120/60, 110/50.

DRAFT

TRUE UNION 2000 INDUSTRIAL BALL VALVES



Features – PVC, CPVC

This multi-featured, space saving quarter-turn shutoff valve is designed to meet the demands of today's industrial and chemical processing applications. PVC and CPVC valves are available in IPS sizes 1/2" through 6" with socket/regular thread, SR (Special Reinforced) thread, flanged or spigot end connectors and 8" Venturied valve with socket or flanged ends. Also available in metric socket and BSP thread sizes 1/2" through 2".

- Chemical & Corrosion Resistant PVC or CPVC Construction
- Also Available in **Spears® LXT™** High Purity, Low Extractable PVC Material
- Interchangeable with all True Union 2000 Valves Mates with Union 2000 Pipe Unions
- High Impact Polypropylene Handle
- Built-in Handle Lockout
- Schedule 80 Full-Bore Design
- Strong, Buttress Thread Union Nuts
- Spears® Double O-ring Safe-T-Shear® Stem Design
- EPDM or Viton® O-rings
- Spears® Safe-T-Blocked® Seal Carrier
- Self Adjusting PTFE Floating Seat Design
- Fully Serviceable, Replaceable Components
- Sizes 1/2" - 4" pressure rated to 235 psi @ 73°F. Sizes 6" and 8" Venturied and all Flanged to 150 psi @ 73°F.
- NSF Certified for Potable Water use
- Suitable for Vacuum Service
- Assembled with Silicone-Free, Water Soluble Lubricants
- Manufactured to ASTM F 1970

Sample Engineering Specification

All thermoplastic ball valves shall be True Union 2000 Industrial type manufactured to ASTM F 1970 and constructed from PVC Type I, ASTM D 1784 Cell Classification 12454 or CPVC Type IV, ASTM D1784 Cell Classification 23447. All O-rings shall be EPDM or Viton®. All valves shall have Safe-T-Shear® stem with double O-ring stem seals. All valve handles shall be polypropylene with built-in lockout mechanism. All valve union nuts shall have Buttress threads. All seal carriers shall be Safe-T-Blocked®. All valve components shall be replaceable. All valves shall be certified by NSF International for use in potable water service. All 1/2" through 4" valves shall be pressure rated to 235 psi, all 6" and 8" Venturied and all flanged valves shall be pressure rated to 150 psi for water at 73°F.

Quick-View Valve Selection Chart

Valve Size	O-ring Material	PVC Part Number [1]					Pressure Rating
		Socket	Threaded	SR Threaded	Flanged	Spigot	
1/2	EPDM	1829-005	included	1821-005SR	1823-005	1827-005	235 psi Non-Shock Water @ 73°F (Flanged 150 psi Non-Shock) Water @ 73°F
	Viton®	1839-005	included	1831-005SR	1833-005	1837-005	
3/4	EPDM	1829-007	included	1821-007SR	1823-007	1827-007	
	Viton®	1839-007	included	1831-007SR	1833-007	1837-007	
1	EPDM	1829-010	included	1821-010SR	1823-010	1827-010	
	Viton®	1839-010	included	1831-010SR	1833-010	1837-010	
1-1/4	EPDM	1829-012	included	1821-012SR	1823-012	1827-012	
	Viton®	1839-012	included	1831-012SR	1833-012	1837-012	
1-1/2	EPDM	1829-015	included	1821-015SR	1823-015	1827-015	
	Viton®	1839-015	included	1831-015SR	1833-015	1837-015	
2	EPDM	1829-020	included	1821-020SR	1823-020	1827-020	
	Viton®	1839-020	included	1831-020SR	1833-020	1837-020	
2-1/2	EPDM	1822-025	1821-025	1821-025SR	1823-025	1827-025	
	Viton®	1832-025	1831-025	1831-025SR	1833-025	1837-025	
3	EPDM	1822-030	1821-030	1821-030SR	1823-030	1827-030	
	Viton®	1832-030	1831-030	1831-030SR	1833-030	1837-030	
4	EPDM	1822-040	1821-040	1821-040SR	1823-040	1827-040	
	Viton®	1832-040	1831-040	1831-040SR	1833-040	1837-040	
6	EPDM	1822-060	1821-060	1821-060SR	1823-060	1827-060	150 psi Non-Shock Water @ 73°F
	Viton®	1832-060	1831-060	1831-060SR	1833-060	1837-060	
8[3]	EPDM	1822-080	—	—	1823-080	—	
	Viton®	1832-080	—	—	1833-080	—	

1) For CPVC, add the letter "C" following the size code of part number listed (e.g.,1829-005**C**, 1821-005**C**SR)
2) For Special Ball Vent Design, add the letter "V" before the dash separator (e.g.,1829**V**-005, 1821**V**-005CSR)
3) 8" Venturied Valves are 6" ball valves fitted with 6x8 end connector adapters.

Optional Vented Ball Valves

Same valve with special ball vent design for sodium hypochlorite (bleach) and other chemical applications where entrapped fluids may form caustic crystalline residues and pressure build up from gases developed. Valve has a 1/8" vent hole in ball to equalize internal fluid pressures. Install valve with ball vent on the pressure (upstream) side when in closed position.

Optional Accessories*

- Retro-Fit End Connector Sets for Valve Replacement
- Split-Nut Repair Kits for Union Nut Replacement
- Supplemental End Connectors
- Round Safety Handles
- Handle Lockout Ring
- Stem Extension Kits
- Square Operator Nuts
- Multi Mount Valve/Actuation Mounting Kits
- Mini-Mount Actuation Mounting Kits

* See ***"BALL VALVE ACCESSORIES"*** section for details of individual products.

DRAFT

TRUE UNION 2000 INDUSTRIAL BALL VALVES

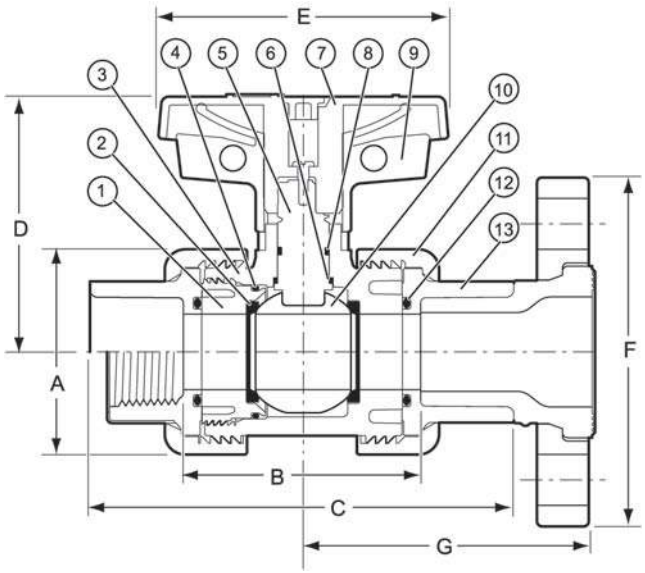

Replacement Parts

No.	Component	Qty.	Material
1	Seal Carrier	1	PVC/CPVC
2	Seat	2	PTFE
3	Body	1	PVC/CPVC
4	Carrier O-ring	1	EPDM/Viton®
5	Stem	1	PVC/CPVC
6	Stem Bearing	1	PP
7	Handle	1	PP
8	Stem O-ring	2	EPDM/Viton®
9	Handle Lock	1	PP
10	Ball	1	PVC/CPVC
11	Union Nut	2	PVC/CPVC
12	End Connector O-ring	2	EPDM/Viton®
13	End Connector	2	PVC/CPVC

Dimensions, Weights, Operating Torque & C_V Values

Nominal Size	Dimensions Reference (inches, ± 1/16)										Approx. Wt. (Lbs.)		Oper.[2] Torque (in. lbs.)	Cv^3 Values		
	A	B[1]		C			D	E	F	G	PVC	CPVC		Soc/Thd	Flanged	Spigot
		Soc/Thd	Spigot	Socket	Thread	Spigot										
1/2	1-7/8	2-3/8	2-7/8	4-3/16	3-3/16	4-5/8	2-9/16	2-13/16	3-1/2	2-31/32	.36	.38	16	29	18	27
3/4	2-1/4	2-3/4	3-1/4	4-3/4	4-1/4	5-1/4	2-7/8	3-3/8	3-7/8	3-5/16	.56	.58	17	63	39	57
1	2-1/2	2-7/8	3-1/2	5-1/8	4-11/16	5-3/4	3-1/8	3-7/16	4-1/2	3-5/8	.74	.77	22	120	73	108
1-1/4	3-1/16	3-1/4	3-13/16	5-3/4	5-3/16	6-5/16	3-5/8	3-7/8	4-5/8	3-31/32	1.13	1.19	28	243	151	223
1-1/2	3-1/2	3-1/2	4	6-1/4	5-7/16	6-3/4	4	4-3/16	5	4-3/8	1.54	1.60	61	357	223	333
2	4-1/4	4-3/4	5-3/16	7-3/4	6-3/4	8-1/4	4-1/2	5-1/8	6	5-1/4	2.72	2.85	77	599	395	571
2-1/2	5-3/8	6-7/8	7-13/16	10-7/16	9-11/16	11-3/8	5-1/8	6-1/4	7-1/2	6	7.42	7.70	132	856	579	734
3	6-3/16	7	7-13/16	10-11/16	9-7/8	11-9/16	5-7/8	7-5/8	7-1/2	6-13/16	7.46	7.81	132	1416	974	1322
4	7-5/8	7-5/16	8-1/4	11-7/8	10-1/4	12-3/4	6-3/4	9-3/16	9	7-1/2	12.35	12.48	396	2865	1952	2672
6	11-5/8	11-1/16	13	17-1/16	15-3/4	18-1/2	8-1/8	14-5/16	11-1/4	10-3/16	37.53	40.55	732	6638	4824	6149
8[4]	11-5/8	23-3/16	---	31-7/8	---	---	8-1/8	14-5/16	13-1/2	17-13/16	50.84	55.92	732	N/A	N/A	N/A

1: Valve Lay Length
2: Torque required at valve maximum internal pressure rating, 5ft/sec. Flow velocity; due to adjustment differences during installation, actual valves may vary.
3: Gallons per minute at 1 psi pressure drop. Valves calculated from laying length, based on derivative of Hazen-Williams equation with surface roughness factor of C=150.
4: 8" Venturied Valves are 6" ball valves fitted with 6x8 end connector adapters.

Temperature Pressure Rating

System Operating Temperature °F (°C)			100 (38)	110 (43)	120 (49)	130 (54)	140 (60)	150 (66)	160 (71)	170 (77)	180 (82)	190 (88)	200 (93)	210 (99)
Valve Pressure Rating psi (MPa)	1/2" - 4"	PVC	235 (1.62)	211 (1.45)	150 (1.03)	75 (.52)	50 (.34)	-0- (-0-)	-0- (-0-)	-0- (-0-)	-0- (-0-)	-0- (-0-)	-0- (-0-)	-0- (-0-)
		CPVC	235 (1.62)	219 (1.51)	170 (1.17)	145 (1.00)	130 (.90)	110 (.76)	90 (.62)	80 (.55)	70 (.48)	60 (.41)	50 (.34)	-0- (-0-)
	6" and 8"	PVC	150 (1.03)	135 (.93)	110 (.76)	75 (.52)	50 (.34)	-0- (-0-)	-0- (-0-)	-0- (-0-)	-0- (-0-)	-0- (-0-)	-0- (-0-)	-0- (-0-)
		CPVC	150 (1.03)	140 (.97)	130 (.90)	120 (.83)	110 (.76)	100 (.70)	90 (.62)	80 (.55)	70 (.48)	60 (.41)	50 (.34)	-0- (-0-)

NOTE: Flanged Valves have a base pressure rating of 150 psi.

NOT FOR USE WITH COMPRESSED AIR OR GASES

DRAFT

True Union 2000 Standard Ball Valves



Features – PVC, CPVC

Economical, low profile quarter-turn shutoff valve is excellent for general purpose and many O.E.M applications. PVC and CPVC valves are available in IPS sizes 1/2" through 4" with socket, regular thread, SR threaded (Special Reinforced), flanged or spigot end connectors.

- Chemical & Corrosion Resistant PVC or CPVC Construction
- Interchangeable with all True Union 2000 Valves, Mates with Union 2000 Pipe Unions
- High Impact Polypropylene Handle
- Schedule 80 Full-Bore Design
- Strong, Buttress Thread Union Nuts
- Spears® Single O-ring Safe-T-Shear® Stem Design
- Spears® Safe-T-Blocked® Seal Carrier
- Replaceable PTFE/HDPE Floating Seat Design
- EPDM or FKM O-rings
- Sizes 1/2" - 2" pressure rated to 235 psi @ 73°F
- Sizes 2-1/2" - 4" and all flanged pressure rated to 150 psi @ 73°F
- EPDM valves NSF® Certified for Potable Water use
- Suitable for Vacuum Service
- Assembled with Silicone-Free, Water Soluble Lubricants
- Manufactured to ASTM F 1970

Sample Engineering Specification

All thermoplastic ball valves shall be True Union 2000 Standard type manufactured to ASTM F 1970 and constructed from PVC Type I, ASTM D 1784 Cell Classification 12454 or CPVC Type IV, ASTM D 1784 Cell Classification 23447. All O-rings shall be EPDM or FKM. All valves shall have Safe-T-Shear® stem with O-ring stem seal. All handles shall be polypropylene. All union nuts shall have Buttress threads. All seal carriers shall be Safe-T-Blocked®. All EPDM valves shall be certified by NSF International for use with potable water. All 1/2" - 2" valves shall be pressure rated to 235 psi, all 2-1/2" - 4" and all flanged valves to 150 psi for water @ 73°F, as manufactured by Spears® Manufacturing Company.

Quick-View Valve Selection Chart

Valve Size	O-ring Material	PVC Part Number[1] Socket	Threaded	SR Threaded	Flanged	Spigot	Pressure Rating
1/2	EPDM	3629-005	included	3621-005SR	3623-005	3627-005	235 psi Non-Shock Water @ 73°F (Flanged 150 psi Non-Shock) Water @ 73°F
	FKM	3639-005	included	3631-005SR	3633-005	3637-005	
3/4	EPDM	3629-007	included	3621-007SR	3623-007	3627-007	
	FKM	3639-007	included	3631-007SR	3633-007	3637-007	
1	EPDM	3629-010	included	3621-010SR	3623-010	3627-010	
	FKM	3639-010	included	3631-010SR	3633-010	3637-010	
1-1/4	EPDM	3629-012	included	3621-012SR	3623-012	3627-012	
	FKM	3639-012	included	3631-012SR	3633-012	3637-012	
1-1/2	EPDM	3629-015	included	3621-015SR	3623-015	3627-015	
	FKM	3639-015	included	3631-015SR	3633-015	3637-015	
2	EPDM	3629-020	included	3621-020SR	3623-020	3627-020	
	FKM	3639-020	included	3631-020SR	3633-020	3637-020	
2-1/2	EPDM	3622-025	3621-025	3621-025SR	3623-025	3627-025	150 psi Non-Shock Water @ 73°F
	FKM	3632-025	3631-025	3631-025SR	3633-025	3637-025	
3	EPDM	3622-030	3621-030	3621-030SR	3623-030	3627-030	
	FKM	3632-030	3631-030	3631-030SR	3633-030	3637-030	
4	EPDM	3622-040	3621-040	3621-040SR	3623-040	3627-040	
	FKM	3632-040	3631-040	3631-040SR	3633-040	3637-040	

1: For CPVC valve, add the letter "C" to the part number (e.g., 3629-005**C**, 3621-005**C**SR)

Optional Accessories*

- Retro-Fit End Connector Sets for Valve Replacement
- Split-Nut Repair Kits for Union Nut Replacement
- Supplemental End Connectors
- Round Safety Handles
- Stem Extension Kits
- Square Operator Nuts
- Multi Mount Valve/ Actuation Mounting Kits
- Mini-Mount Actuation Mounting Kits

* See ***"BALL VALVE ACCESSORIES"*** section for details of individual products.

DRAFT

True Union 2000 Standard Ball Valves

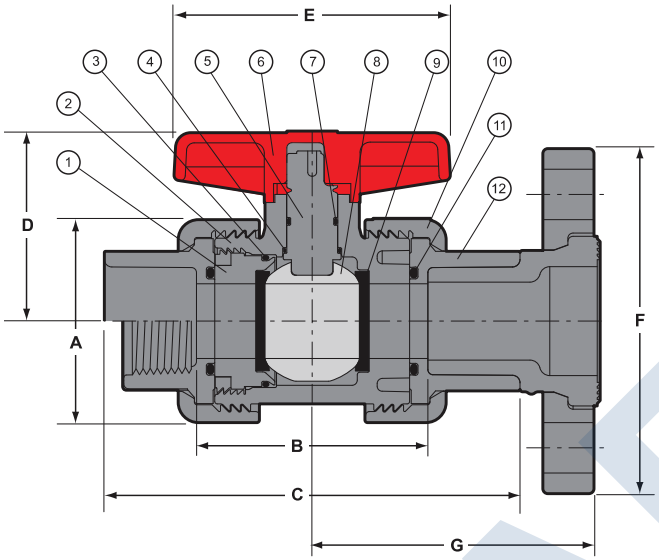

Replacement Parts

No.	Component	Qty.	Material
1	Seal Carrier	1	PVC/CPVC
2	Body	1	PVC/CPVC
3	Carrier O-ring	1	EPDM/FKM
4	Stem Bearing [1,2]	1	PP
5	Stem	1	PVC/CPVC
6	Handle	1	PP
7	Stem O-ring	1	EPDM/FKM
8	Ball	1	PVC/CPVC
9	Seat	2	PTFE/HDPE
10	Union Nut	2	PVC/CPVC
11	End Connector O-ring	2	EPDM/FKM
12	End Connector	2	PVC/CPVC

1: O-Ring up to 2"
2: PTFE Thrust Bearing: 2-1/2", 3" & 4"

Dimensions, Weights, Operating Torque & Cv Values

Nominal Size	A	B[1]		C			D	E	F	G	Approx. Wt. (Lbs.)		Oper.[2] Torque (in. lbs.)	Cv Values[3]	
		Soc/Thd	Spigot	Socket	Thread	Spigot					PVC	CPVC		Soc/Thd/Spig	Flanged
1/2	1-7/8	2-7/16	2-7/8	4-3/16	3-13/16	4-5/8	1-5/8	2-1/2	3-1/2	2-31/32	.33	.35	12	29	18
3/4	2-1/4	2-3/4	3-1/4	4-3/4	4-1/4	5-1/4	2	3	3-7/8	3-5/16	.51	.54	20	63	39
1	2-1/2	2-7/8	3-1/2	5-1/8	4-11/16	5-3/4	2-5/16	3-7/16	4-1/4	3-5/8	.71	.75	25	120	73
1-1/4	3-1/16	3-1/4	3-13/16	5-3/4	5-3/16	6-5/16	2-13/16	3-9/16	4-5/8	3-31/32	1.12	1.17	35	243	151
1-1/2	3-1/2	3-1/2	4	6-1/4	5-7/16	6-3/4	3-1/16	3-7/8	5	4-3/8	1.47	1.53	45	357	223
2	4-1/4	4-3/4	5-13/16	7-3/4	6-3/4	8-1/4	3-3/4	5	6	5-1/4	2.62	2.75	94	599	395
2-1/2	6-3/16	7	7-13/16	10-1/2	8-1/2	11-3/8	5-7/8	7-5/8	7	6	7.42	7.70	120	856	579
3	6-3/16	7	7-13/16	10-11/16	9-3/4	11-9/16	5-7/8	7-5/8	7-1/2	6-13/16	7.46	7.81	120	1416	974
4	7-5/8	7-1/2	8-1/4	12-1/16	10-1/4	12-3/4	6-3/4	6-3/4	9-1/16	7-1/2	12.35	12.48	336	2865	1952

1: Valve Lay Length
2: Torque required at valve maximum internal pressure rating, 5ft/sec. Flow velocity; due to adjustment differences during installation, actual valves may vary.
3: Gallons per minute at 1 psi pressure drop. Valves calculated from laying length, based on derivative of Hazen-Williams equation with surface roughness factor of C=150.

Temperature Pressure Rating

System Operating Temperature °F (°C)			100 (38)	110 (43)	120 (49)	130 (54)	140 (60)	150 (66)	160 (71)	170 (77)	180 (82)	190 (88)	200 (93)	210 (99)
Valve Pressure Rating psi (MPa)	1/2" - 2"	PVC	235 (1.62)	211 (1.45)	150 (1.03)	75 (.52)	50 (.34)	-0- (-0-)	-0- (-0-)	-0- (-0-)	-0- (-0-)	-0- (-0-)	-0- (-0-)	-0- (-0-)
		CPVC	235 (1.62)	219 (1.51)	170 (1.17)	145 (1.00)	130 (.90)	110 (.76)	90 (.62)	80 (.55)	70 (.48)	60 (.41)	50 (.34)	-0- (-0-)
	2-1/2" - 4"	PVC	150 (1.03)	135 (.93)	110 (.76)	75 (.52)	50 (.34)	-0- (-0-)	-0- (-0-)	-0- (-0-)	-0- (-0-)	-0- (-0-)	-0- (-0-)	-0- (-0-)
		CPVC	150 (1.03)	140 (.97)	130 (.90)	120 (.83)	110 (.76)	100 (.70)	90 (.62)	80 (.55)	70 (.48)	60 (.41)	50 (.34)	-0- (-0-)

DRAFT

ZURN WILKINS

Model SXL

Cast Bronze "Y" Type Strainer

Application

Ideal for use on potable water lines where Lead-Free* fittings are required. Recommended for a variety of water service lines including residential and commercial irrigation, swimming pools and cooling tower water. They are also designed to protect delicate equipment such as regulators and backflow preventers by filtering sediment which could cause premature failure.



NSF/ANSI 61

Standards Compliance

- Meets the requirements of NSF/ANSI 61*

*(0.25% MAX. WEIGHTED AVERAGE LEAD CONTENT)

Materials

Main valve body	Low Lead Cast Bronze ASTM B 806
Access covers	Low Lead Cast Bronze ASTM B 806
Screens	20 Mesh Stainless Steel, 300 Series

Features

Sizes: 3/8", 1/2", 3/4", 1", 1 1/4", 1 1/2", 2", 2 1/2", 3"

Temperature/pressure rating	180°F 300 psi WOG
Threaded connections (FNPT) (Supplied with brass closure plug)	ANSI B1.20.1

Options

☐ C - with copper sweat connections (3/4" & 1")

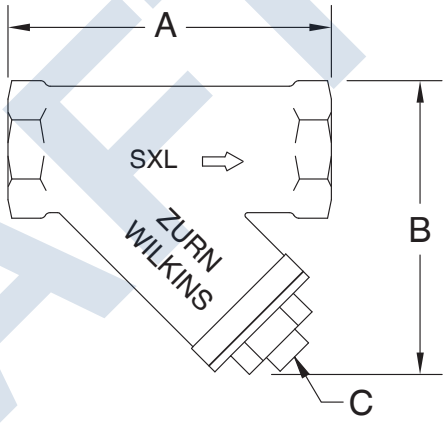

Dimensions & Weights (do not include pkg.)

MODEL SXL (NPT CONNECTION)								
SIZE		DIMENSIONS (approximate)					WEIGHT	
		A		B		C		
in.	mm	in.	mm	in.	mm	in.	lbs.	kg
3/8	10	3 1/4	83	3	76	3/8 NPT	1	0.5
1/2	15	3 1/4	83	3	76	3/8 NPT	1	0.5
3/4	20	3 7/8	98	3 1/2	89	3/8 NPT	1 1/4	0.6
1	25	4 1/2	114	4	102	1/2 NPT	1 3/4	0.8
1 1/4	32	5 5/16	135	4 3/4	121	1/2 NPT	2 3/4	1.2
1 1/2	40	6 5/16	160	5	127	1/2 NPT	3 1/2	1.6
2	50	7 1/2	191	6	152	1/2 NPT	6	2.7
2 1/2	65	9	229	7 1/2	191	1/2 NPT	9 1/4	4.2
3	80	10	254	8 1/2	216	1/2 NPT	14	6.4
MODEL SXLC (COPPER SWEAT CONNECTION)								
SIZE		DIMENSIONS (approximate)					WEIGHT	
		A		B		C		
in.	mm	in.	mm	in.	mm	in.	lbs.	kg
3/4	20	3 15/16	100	3 5/16	84	3/8 NPT	1	0.5
1	25	5	127	3 15/16	100	1/2 NPT	1.5	0.7

Hydro-Dyne Engineering does not provide installation or any accessory unless noted in the Scope of Work.

Rev. D
Date: 8/16
Document No. STR-SXL
Product No. Model SXL

DRAFT

Flow Characteristics

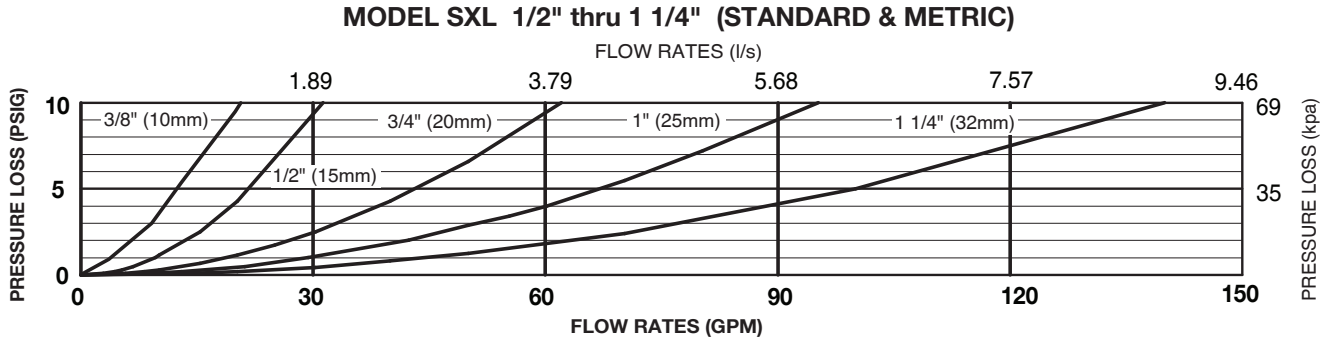

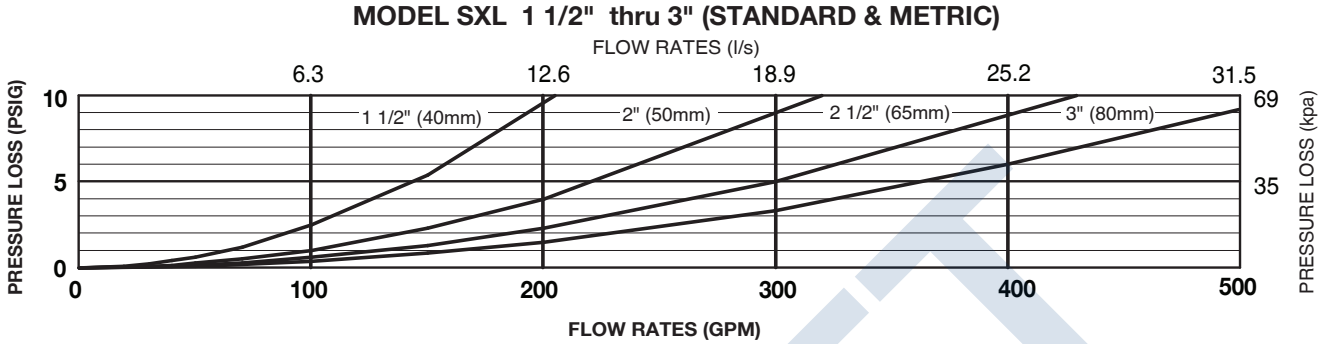

Typical Installation

Local codes shall govern installation requirements. Unless otherwise specified, the assembly shall be mounted in accordance with the latest edition of the Uniform Plumbing Code. If installed below grade, be certain adequate drainage is provided to prevent the device from being submerged. Horizontal installation with the strainer cap facing downward is the preferred installation orientation; however the strainer will provide protection in any orientation.

Capacity thru Schedule 40 Pipe				
Pipe size	5 ft/sec	7.5 ft/sec	10 ft/sec	15 ft/sec
1/8"	1	1	2	3
1/4"	2	2	3	5
3/8"	3	4	6	9
1/2"	5	7	9	14
3/4"	8	12	17	25
1"	13	20	27	40
1 1/4"	23	35	47	70
1 1/2	32	48	63	95
2"	52	78	105	167

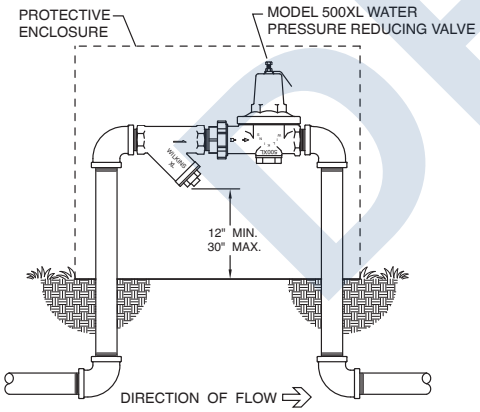

OUTDOOR INSTALLATION

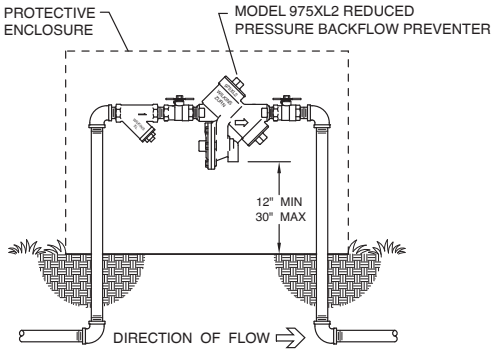

OUTDOOR INSTALLATION

Specifications

The "Y" type strainer shall be a manufactured import certified to NSF/ANSI 61. The main body and cover shall be low lead cast bronze (ASTM B 806), the strainer screen shall be 20 mesh 300 series stainless steel and accessible for maintenance without removing the device from the line. The "Y" type strainer shall be a ZURN WILKINS Model SXL.

DRAFT

MODEL SXL & S

1/2, 3/4", 1", 1-1/4", 1-1/2", 2", 2-1/2", 3"

Item No.	Description	1/2"	3/4"	1"	1-1/4"	1-1/2"	2"	2-1/2"	3"
1	NIPPLE	101-21B	102-21B	103-21B	104-21B	105-21B	106-21B	107-21B	108-21B
2	SCREEN (20MESH)	101-41S	102-41S	103-41S	104-41S	105-41S	106-41S	107-41S	108-41S
3	O-RING	119N	124N	127N	133N	142N	231N	235N	238N
3	GASKET (OLD STYLE)	101-12S	102-12S	103-12S	104-12S	105-12S	106-12S	107-12S	108-12S
4	CAP	N/A	N/A	N/A	N/A	N/A	N/A	N/A	N/A
5	PLUG	101-7B	101-7B	558-7	558-7	558-7	558-7	558-7	558-7

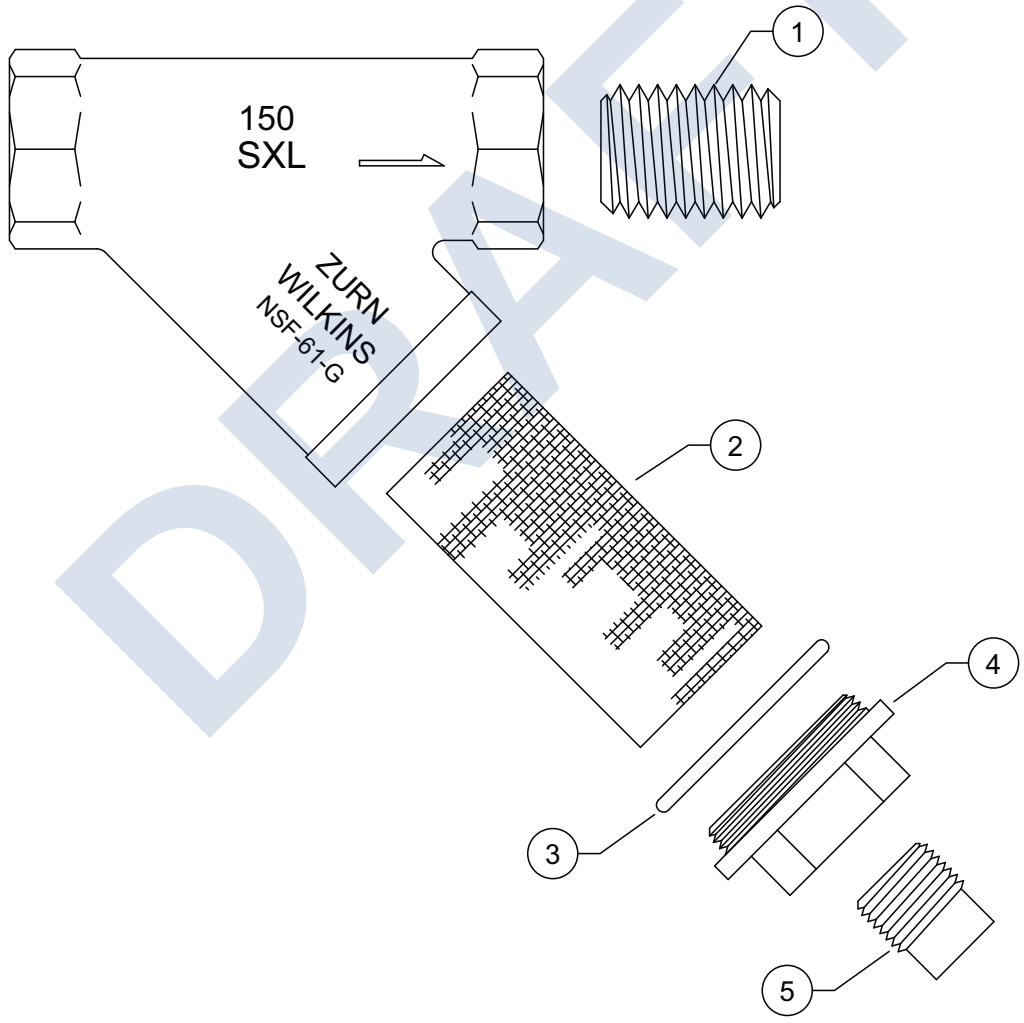

DRAFT

Rev. D

Provided by Hydro-Dyne to be installed by others at the end of the screen spray bar.

Mechanical Pressure Measurement

Bourdon Tube Pressure Gauge Stainless Steel Construction Model 21X.53

Standard pressure indication range - 0-160 psi / 0-11 BAR

Applications

- Intended for adverse service conditions where pulsating or vibration exists (with liquid filling)
- Hydraulics & compressors
- Suitable for gaseous or liquid media that will not obstruct the pressure system

Special Features

- Vibration and shock resistant (with liquid filling)
- Stainless steel case
- Pressure ranges up to 15,000 psi



Bourdon Tube Pressure Gauge Model 21X.53

Standard Features

Design
ASME B40.100 & EN 837-1

Sizes
2", 2½" & 4" (50, 63 & 100 mm)

Accuracy class
2" & 2½": ± 2/1/2% of span (ASME B40.100 Grade A)
4": ± 1% of span (ASME B40.100 Grade 1A)

Ranges
Vacuum / Compound to 200 psi
Pressure from 15 psi to 15,000 psi
Pressure from 15 psi to 10,000 psi - 2" size
or other equivalent units of pressure or vacuum

Working pressure

2 & 2½":	Steady:	¾ full-scale value
	Fluctuating:	⅔ full-scale value
	Short time:	full-scale value
4":	Steady:	full-scale value
	Fluctuating:	0.9 x full-scale value
	Short time:	1.3 x full-scale value

Operating temperature
Ambient: -40°F to +140°F (-40°C to +60°C) - dry
-4°F to +140°F (-20°C to +60°C) - glycerine filled
-40°F to +140°F (-40°C to +60°C) - silicone filled
Medium: +140°F (+60°C) maximum

Temperature error
Additional error when temperature changes from reference temperature of 68°F (20°C) ±0.4% for every 18°F (10°C) rising or falling. Percentage of span.

Weather protection
Weather tight (NEMA 4X / IP 65)

Pressure connection
Material: copper alloy
Lower mount (LM) or center back mount (CBM) - 2" & 2½"
Lower mount (LM) or lower back mount (LBM) - 4"
⅛" NPT, ¼" NPT or ½" NPT limited to wrench flat areaABS (2" & 2½") and white aluminum (4")

DRAFT

Bourdon tube
2½" Size- Material: Copper alloy
30" Hg (VAC) to 800 psi - C-type (soldered)
1000 psi to 15,000 psi - helical type (soldered)
Changes to stainless steel at 7,500 psi brazed
4" Size- Material: Copper alloy ≤ 1,000 psi
316 stainless steel ≥ 1,500 psi
30" Hg (Vac) to 1,000 psi- C-type (soldered)
1,500 psi to 15,000 psi- helical type (brazed)
Changes to stainless steel at 1,500 psi

Movement
Copper alloy

Dial
White ABS (2" & 2½") and white aluminum (4")

Pointer
Black aluminum

Case
304 stainless steel with vent plug and stainless steel crimp ring. Suitable for liquid filling.

Case connection sealed with O-ring, (O-ring material dependent on the case fill):
- 2½": EPDM O-ring for Glycerine case fill; Viton O-ring for Silicone fill
- 4": EPDM O-ring for Glycerine or Silicone case fill; Viton O-ring for Halocarbon or Fluorolube fill

Window
Polycarbonate with Buna-N gasket

Case fill
Glycerine 99.7% - Type 213.53

Optional extras
- Brass restrictor
- Stainless steel front or rear flange - 2½" & 4"
- Zinc-plated steel or SS U-clamp bracket (field installable)
- External zero adjustment (2½" only)
- Red drag pointer or mark pointer
- Silicone or Fluorolube case filling
- Special connections limited to wrench flat area
- Custom dial layout
- Other pressure scales available
  bar, kPa, MPa, kg/cm^2 and dual scales

DRAFT

Dimensions

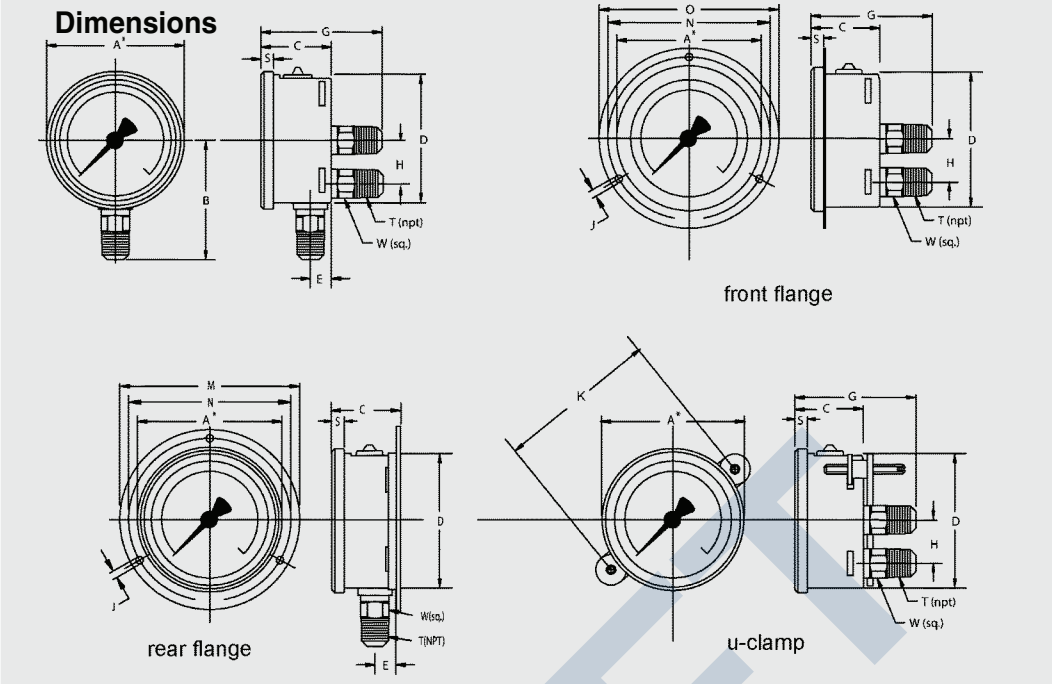

Size		A	B	C	D	E	G	H	J	K	M	N	O	S	T	W	Weight	
2”	mm	55	48	30	50	12	53	-	3.6	72	71	60	17	5.5		14	0.27 lb.	dry
	in	2.17	1.89	1.18	1.97	0.47	2.09	-	0.14	2.83	2.80	2.36	2.80	0.22	¼”	0.55	0.33 lb.	filled
2½”	mm	69	54	32	62	13	54	-	3.6	72	88.1	75	85	6.5		14	0.36 lb.	dry
	in	2.69	2.13	1.26	2.45	0.51	2.13	-	0.14	2.83	3.47	2.95	3.35	0.26	¼”	0.55	0.44 lb.	filled
4”	mm	107	87	48	100	15.5	79.5	30	4.8	109	132	116	132	8		22	1.10 lb.	dry
	in	4.21	3.43	1.89	3.91	0.61	3.13	1.18	0.19	4.29	5.20	4.57	5.20	0.31	½”	0.87	1.76 lb.	filled

Note: For ¼” NPT connections on 4” gauges, reduce B dimension by 5mm/0.2”

Recommended panel cut-out:

2”- U-clamp: 51mm
front flange: n/a

2½”- U-clamp: 63mm
front flange: 65mm

4”- U-clamp: 101mm
front flange: 104mm

4½”- panel mount adapter 104mm minimum
(not shown)

DRAFT

Red-Head 316SS expansion anchors SWW-38503/8" X 5.0" 316SS WEDGE ANCHOR (RED HEAD), or Simpson equivalent wedge anchors are acceptable here besides what is listed below. Note - These Expansion Style Anchors are used for Submerged grit baffle only, All others Hilti Epoxy - All anchors supplied by others.

BRIG TON BEST, INC.
COMMERCIAL ANC OR - ENGINEERING DATA S EET

Products

Wedge Anchors – Carbon Steel, Zinc-Plated and Hot Dip Galvanized

Wedge Anchors – Stainless Steel, Types 304, 316

Drop In Anchors – Carbon Steel

The load data is based on testing in accordance with ASTM E488-15, *Standard Test Methods for Strength of Anchors in Concrete Elements,* performed by CEL Consulting and documented in CEL Test Report No. 20B435.

Tables with average ultimate loads from the testing are included plus tables with allowable strength design (ASD) values based on a safety factor of 4 applied to the average ultimate loads. It is noted that building codes in the United States require ultimate strength design (USD) also called load factor and resistance design (LFRD) for design of anchorages to concrete. ASD values are provided to facilitate use by those who want to use ASD.

Installation Requirements

General:

- Drill holes using a rotary hammer drill in the percussion mode perpendicular to the concrete surface. Use drill bits of the correct diameter meeting the requirements of ANSI B212.15-1994, *Carbide-Tipped Masonry Drills and Blanks for Carbide-Tipped Masonry Drills.*
- Concrete thickness must be at least two times anchor nominal diameter greater than the drilled hole depths.
- Follow all applicable safety requirements.

Wedge Anchors (all types):

- Drill holes perpendicular to the concrete surface to the minimum nominal embedment (see table below) or deeper if specified, plus 1/2” for 3/8” through 5/8” diameters and plus 3/4” for 3/4” diameter.
- Remove drilling debris from the holes using compressed air or by hand using a blow out bulb or plastic tubing. A clean hole is necessary to insure the minimum embedment and full expansion.
- Drive the anchor into the hole with a hammer to the required embedment taking care to avoid damaging the threads.
- Position the fixture to be attached over the hole, install the washer and nut and tighten to the required torque value (see table below) using a torque wrench. Alternatively, the fixture may be positioned over the hole and the anchor driven through the clearance hole in the fixture.

DRAFT

BRIG TON BEST, INC.
COMMERCIAL ANC OR - ENGINEERING DATA S EET

- If torque is not achieved in 8 turns of the nut, loosen the nut, drive the anchor back into the hole to the required embedment and retorque the anchor. If torque still cannot be achieved, remove the anchor and install another anchor at deeper embedment of at least two anchor diameter more than the original embedment.

Anchor Diameter, in.	Minimum Nominal Embedment, in. [1]	Installation Torque, ft.-lbs.
3/8	2 1/4	25
1/2	2 1/2	40
5/8	3 1/2	80
3/4	4	110

[1] Measured from the concrete surface to the embedded end of the anchor

Drop In Anchors:

- Drill holes perpendicular to the concrete surface to a depth equal to the length of the anchor (see table below) or slightly deeper
- Remove drilling debris from the holes using compressed air or by hand using a blow out bulb or plastic tubing. A clean hole is necessary to insure the minimum embedment and full expansion.
- Place the anchor into the hole and drive in with a hammer to at least flush with the concrete surface.
- Insert the setting tool supplied with the anchors into the anchor and apply sharp blows with a hammer to drive the setting tool into the anchor until the shoulder of the setting tool contacts the top of the anchor body.
- Install the fixture to be attached over the hole, install the bolt through the fixture into the anchor and tighten.

Anchor Type	Anchor Diameter, in.	Anchor Length, in. [1]
Standard	3/8	1 9/16
	1/2	2
Shorty	3/8	13/16

[1] Hole depth measured from the concrete surface

DRAFT

BRIG TON BEST, INC.
COMMERCIAL ANC OR - ENGINEERING DATA S EET

CEL Ultimate Test Results

The following tables provide the average ultimate load results and the installation parameters used for the testing by CEL.

TABLE 1 – Wedge Anchors Carbon Steel inc Plated
Brighton Best Family 279

Loading	Anchor Diameter, in.	Minimum Embedment, in.	Installation Torque, ft.-lbs.	Average ltimate Load, lbs.
Tension	3/8	2 1/4	25	4399
	1/2	2 1/2	40	5837
	5/8	3 1/2	80	8456
	3/4	4	110	11510
Shear	3/8	2 1/4	25	3341
	1/2	2 1/2	40	5805
	5/8	3 1/2	80	10949
	3/4	4	110	17194

TABLE 2 – Wedge Anchors Carbon Steel ot Dip Galvani ed
Brighton Best Family 158

Loading	Anchor Diameter, in.	Minimum Embedment, in.	Installation Torque, ft.-lbs.	Average ltimate Load, lbs.
Tension	3/8	2 1/4	25	3154
	1/2	2 1/2	40	5509
	5/8	3 1/2	80	8349
	3/4	4	110	9360
Shear	3/8	2 1/4	25	3882
	1/2	2 1/2	40	7038
	5/8	3 1/2	80	12827
	3/4	4	110	19112

TABLE 3 – Wedge Anchors Stainless Steel
Brighton Best: Family 616, Type 304; Family 617, Type 316

Loading	Anchor Diameter, in.	Minimum Embedment, in.	Installation Torque, ft.-lbs.	Average ltimate Load, lbs.
Tension	3/8	2 1/4	25	3993
	1/2	2 1/2	40	4758
	5/8	3 1/2	80	7112
	3/4	4	110	10318
Shear	3/8	2 1/4	25	6928
	1/2	2 1/2	40	8288
	5/8	3 1/2	80	15603
	3/4	4	110	20897

DRAFT

BRIG TON BEST, INC.
COMMERCIAL ANC OR - ENGINEERING DATA S EET

TABLE 4 – Drop In Shorty Carbon Steel Anchors
Brighton Best Family 268

Loading	Anchor Diameter, in.	Minimum Embedment, in.	Average ltimate Load, lbs.
Tension	3/8	13/16	1563
Shear		13/16	2102

TABLE 5 – Drop In Standard Carbon Steel Anchors
Brighton Best Family 268

Loading	Anchor Diameter, in.	Minimum Embedment, in.	Average ltimate Load, lbs.
Tension	3/8	1 9/16	3016
	1/2	2	4612
Shear	3/8	1 9/16	5353
	1/2	2	8105

Allowable Strength Design Values

Wedge Anchors Carbon Steel inc Plated
Brighton Best Family 279
Allowable Tension Design Values, lbs.

ANC OR DIAMETER, (inches)	MINIM M CONCRETE COMPRESSIVE STRENGT , f_c, psi			
	2500	3000	3500	4000
3/8	1100	1205	1300	1390
1/2	1460	1600	1725	1845
5/8	2115	2315	2505	2675
3/4	2880	3155	3410	3645

Wedge Anchors Carbon Steel inc Plated
Brighton Best Family 279
Allowable Shear Design Values, lbs.

ANC OR DIAMETER, (inches)	MINIM M CONCRETE COMPRESSIVE STRENGT , f_c, psi
	2500
3/8	835
1/2	1450
5/8	2735
3/4	4300

DRAFT

BRIG TON BEST, INC.
COMMERCIAL ANC OR - ENGINEERING DATA S EET

Wedge Anchors Carbon Steel ot Dip Galvani ed
Brighton Best Family 158
Allowable Tension Design Values, lbs.

ANC OR DIAMETER, (inches)	MINIM M CONCRETE COMPRESSIVE STRENGT , f_c, psi			
	2500	3000	3500	4000
3/8	790	865	935	1000
1/2	1375	1505	1625	1740
5/8	2085	2285	2465	2635
3/4	2340	2565	2770	2960

Wedge Anchors Carbon Steel ot Dip Galvani ed
Brighton Best Family 158
Allowable Shear Design Values, lbs.

ANC OR DIAMETER, (inches)	MINIM M CONCRETE COMPRESSIVE STRENGT , f_c, psi
	2500
3/8	970
1/2	1760
5/8	3205
3/4	4780

Wedge Anchors Stainless Steel
Brighton Best: Family 616, Type 304; Family 617, Type 316
Allowable Tension Design Values, lbs.

ANC OR DIAMETER, (inches)	MINIM M CONCRETE COMPRESSIVE STRENGT , f_c, psi			
	2500	3000	3500	4000
3/8	1000	1095	1185	1265
1/2	1190	1305	1410	1505
5/8	1780	1950	2105	2250
3/4	2580	2825	3055	3265

DRAFT

BRIG TON BEST, INC.
COMMERCIAL ANC OR - ENGINEERING DATA S EET

Wedge Anchors Stainless Steel Types 304, 316
Brighton Best: Family 616, Type 304; Family 617, Type 316
Allowable Shear Design Values, lbs.

ANC OR DIAMETER, (inches)	MINIM M CONCRETE COMPRESSIVE STRENGT , f_c, psi
	2500
3/8	1730
1/2	2070
5/8	3900
3/4	5225

Drop In Anchors Carbon Steel Shorty Version
Brighton Best Family 268
Allowable Tension Design Values, lbs.

ANC OR DIAMETER, (inches)	MINIM M CONCRETE COMPRESSIVE STRENGT , f_c, psi			
	2500	3000	3500	4000
3/8	390	425	460	495

Drop In Anchors Carbon Steel Shorty Version
Brighton Best Family 268
Allowable Shear Design Values, lbs.

ANC OR DIAMETER, (inches)	MINIM M CONCRETE COMPRESSIVE STRENGT , f_c, psi
	2500
3/8	525

Drop In Anchors Carbon Steel Standard Version
Brighton Best Family 268
Allowable Tension Design Values, lbs.

ANC OR DIAMETER, (inches)	MINIM M CONCRETE COMPRESSIVE STRENGT , f_c, psi			
	2500	3000	3500	4000
3/8	755	825	895	955
1/2	1155	1265	1365	1460

DRAFT

BRIG TON BEST, INC.
COMMERCIAL ANC OR - ENGINEERING DATA S EET

Drop In Anchors Carbon Steel Standard Version
Brighton Best Family 268
Allowable Shear Design Values, lbs.

ANC OR DIAMETER, (inches)	MINIM M CONCRETE COMPRESSIVE STRENGT , f_c, psi
	2500
3/8	1340
1/2	2025

Wedge and Drop In Anchor Spacing Edge Distances

ANC OR DIAMETER, (inches)	Spacing or Edge Distance, (inches)	
	Tension	Shear Capacity
	100	50 [1]
3/8	6 3/4	3 3/8
1/2	7 1/2	3 3/4
5/8	10 1/2	5 1/4
3/4	12	6

[1] Minimum distances for use - reduce load capacities in tables by 50%; use linear interpolation for load capacity reductions for distances between 100% & 50%

DRAFT

HIT-HIY 200-R adhesive by others. 316SS all thread rod, nuts and flats by others.
Hilti HAS threaded rod anchors shown below should be used
All drill bits and installation tools by others.
All Hilti installation instructions must be followed.



ANCHOR SELECTOR / Chemical — Adhesives

		For Use with		Concrete Condition				Acceptable Drilling Method				ICC-ES, IAPMO-ER Approvals or Hilti Technical Data (■)									Base Material Temperature at Installation	
		Rebar	Anchor Rod	Dry	Water Saturated	Water Filled Holes	Submerged	Hammer Drilling	Hollow Drill Bit	Diamond Core	SafeSet Installation	Uncracked	Cracked	Seismic	Grouted Masonry	Hollow Masonry	Solid Brick	Hollow Brick	Hollow core	Multi Wythe Brick	Minimum	Maximum
Hybrid Adhesives (Fast Cure)																						
HIT-HY 200-R		■	■	■	■ No Load Reduction			■	■	■	■	ESR-3187	ESR-3187	ESR-3187/ ESR-3963	ESR-3963						14 °F (-10 °C)	104 °F (40 °C)
HIT-HY 200-A		■	■	■	■ No Load Reduction			■	■	■	■	ESR-3187	ESR-3187	ESR-3187/ ESR-3963	ESR-3963						14 °F (-10 °C)	104 °F (40 °C)
HIT-HY 100		■	■	■	■			■	■		■	ESR-3574	ESR-3574	ESR-3574/ ER-547	ER-547						14 °F (-10 °C)	104 °F (40 °C)
HIT-HY 270		■	■	■	■			■	■		■			ESR-4143	ESR-4143	ESR-4143	ESR-4143	ESR-4143	ESR-4143	ESR-4144	23 °F (-5 °C)	104 °F (40 °C)
HIT-HY 10 PLUS		■	■	■				■				■			■	■		■			41 °F (5 °C)	104 °F (40 °C)
HIT-ICE		■	■	■	■			■	■		■	■	■		■						-10 °F (-23 °C)	90 °F (32 °C)
Epoxy Resins (Slow Cure)																						
HIT-RE 500 V3		■	■	■	■ No Load Reduction	■	■	■	■	■	■	ESR-2322/ ESR3814	ESR-2322/ ESR3814	ESR-2322/ ESR3814							23 °°F (-5 °C)	104 °F (40 °C)
HIT-RE 100		■	■	■	■	■	■	■	■		■	ESR-3829	ESR-3829	ESR-3829							41 °F (5 °C)	104 °F (40 °C)
HIT-RE 10		■	■	■	■			■				■									41 °F (5 °C)	104 °F (40 °C)
Adhesive Capsules (Fast Cure)																						
HVU2			■	■	■ No Load Reduction			■	■	■	■	ESR-4372	ESR-4372	ESR-4372							14 °F (-10 °C)	104 °F (40 °C)

DRAFT

The following excerpt are pages from the North American Product Technical Guide, Volume 2: Anchor Fastening, Edition 19.

Please refer to the publication in its entirety for complete details on this product including data development, product specifications, general suitability, installation, corrosion and spacing and edge distance guidelines.
US&CA: https://submittals.us.hilti.com/PTGVol2/

To consult directly with a team member regarding our anchor fastening products, contact Hilti's team of technical support specialists between the hours of 7:00am – 6:00pm CST.
US: 877-749-6337 or HNATechnicalServices@hilti.com
CA: 1-800-363-4458, ext. 6 or CATechnicalServices@hilti.com

DRAFT

Hilti, Inc.
7250 Dallas Parkway, Suite 1000
Plano, TX 75024

1-800-879-8000
www.hilti.com

No need for piston plug with 3/8" dia anchors. For 1/2 " horizontal anchors use 1xIP 9/16" NG piston plug (by others) if required to keep epoxy from flowing

3.2.2 HIT-HY 200 ADHESIVE ANCHORING SYSTEM

PRODUCT DESCRIPTION

HIT-HY 200 with HIT-Z rods, Threaded Rod, Rebar, and HIS-N/RN Inserts

Anchor System		Features and Benefits
	Hilti HIT-HY 200-R Cartridge	• Two great products with equal performance data • User can select product gel time suitability based on temperature of the base material and jobsite time requirements • No hole cleaning requirement when installed SafeSet™ hollow drill bit technology
	Hilti HIT-HY 200-A Cartridge	• No hole cleaning requirement when installing HIT-Z anchor rods in dry conditions with hammer drilled holes • ICC-ES approved for cracked concrete and seismic service
	Hilti HIT-Z Anchor Rod	• May be installed in diamond cored holes with HIT-Z anchor rod only when addition cleaning steps are employed
	Hilti HAS Threaded Rod	• ICC-ES approved for grout-filled concrete masonry
	Rebar	
	Hilti HIS-N/RN	

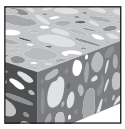

Uncracked concrete

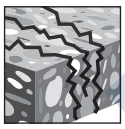

Cracked concrete

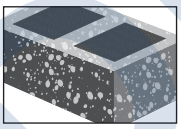

Grout-filled concrete masonry

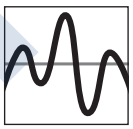

Seismic Design Categories A-F

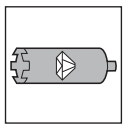

Diamond cored holes for Cracked and Uncracked Concrete



Hollow Drill Bit



Profis Anchor design software

Approvals/Listings	
ICC-ES (International Code Council)	ESR-3187 in concrete per ACI 318-14 Ch. 17 / ACI 355.2/ ICC-ES AC308 ESR-3963 in grout-filled CMU per ICC-ES AC58 ELC-3187 in concrete per CSA A23.3-14 / ACI 355.2
NSF/ANSI Std 61	Certification for use in potable water
European Technical Approval	ETA-11/0492, ETA-11/0493 ETA-12/0006, ETA-12/0028 ETA-12/0083, ETA-12/0084
City of Los Angeles	City of Los Angeles 2017 LABC Supplement (within ESR-3187 for Concrete) Research Report No. 26077 for Masonry
Florida Building Code	2017 Florida Building Code Supplement (within ESR-3187)
U.S. Green Building Council	LEED® Credit 4.1-Low Emitting Materials
Department of Transportation	Contact Hilti for various states

DRAFT

MATERIAL SPECIFICATIONS

For material specifications for anchor rods and inserts, please refer to section 3.2.8.

DESIGN DATA IN CONCRETE PER ACI 318

ACI 318-14 Chapter 17 design

The load values contained in this section are Hilti Simplified Design Tables. The load tables in this section were developed using the Strength Design parameters and variables of ESR-3187 and the equations within ACI 318-14 Chapter 17. For a detailed explanation of the Hilti Simplified Design Tables, refer to section 3.1.8. Data tables from ESR-3187 are not contained in this section, but can be found at www.icc-es.org or at www.hilti.com.

HIT-HY 200 adhesive with HIT-Z and HIT-Z-R anchor rods



Figure 1 - Hilti HIT-Z and HIT-Z-R installation conditions

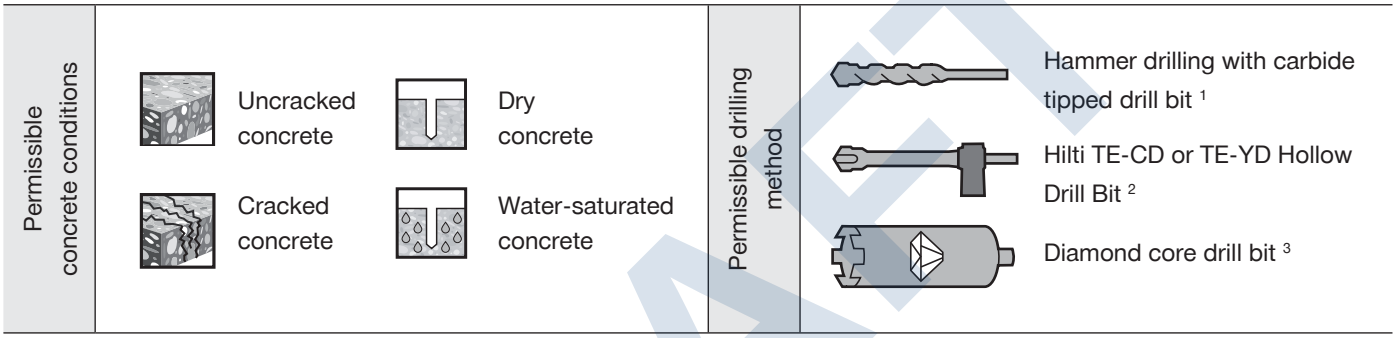

1 Anchor may be installed in a hole drilled with a carbide-tipped bit without cleaning the drilling dust from the hole. Temperature must be 41° F or higher. Drilling dust must be removed from the hole if the temperature is below 41° F. See Manufacturer's Published Installation Instructions (MPII).
2 When temperatures are below 41° F, TE-CD or TE-YD Hollow Drill Bits used with a Hilti vacuum cleaner are viable methods for removing drilling dust from the hole.
3 Holes drilled by diamond coring require cleaning with a wire brush, a water hose and compressed air. See MPII.

Table 1 - Specifications for Hilti HIT-Z and HIT-Z-R installed with Hilti HIT-HY 200 adhesive

Setting information		Symbol	Units	Nominal anchor diameter			
				3/8	1/2	5/8	3/4
Nominal bit diameter		d_o	in.	7/16	9/16	3/4	7/8
Effective embedment	minimum	$h_{ef,min}$	in. (mm)	2-3/8 (60)	2-3/4 (70)	3-3/4 (95)	4 (102)
	maximum	$h_{ef,max}$	in. (mm)	4-1/2 (114)	6 (152)	7-1/2 (190)	8-1/2 (216)
Diameter of fixture hole	through-set		in.	1/2	5/8	13/16[1]	15/16[1]
	preset		in.	7/16	9/16	11/16	13/16
Installation torque		T_{inst}	ft-lb (Nm)	15 (20)	30 (40)	60 (80)	110 (150)

1 Install using (2) washers. See Figure 3.

Figure 2 - Hilti HIT-Z and HIT-Z-R specfications

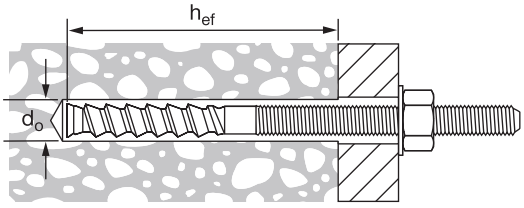

Figure 3 - Installation with (2) washers



DRAFT

INSTALLATION INSTRUCTIONS

Installation Instructions For Use (IFU) are included with each product package. They can also be viewed or downloaded online at www.hilti.com. Because of the possibility of changes, always verify that downloaded IFU are current when used. Proper installation is critical to achieve full performance. Training is available on request. Contact Hilti Technical Services for applications and conditions not addressed in the IFU.

MATERIAL SPECIFICATIONS

Figure 15 - Hilti HIT-HY 200 adhesive cure time and working time (approx.)

HIT-HY 200-A					
		HAS HIS-N Rebar		HIT-Z[1]	
[°C]	[°F]	t_{work}	t_{cure}	t_{work}	t_{cure}
-10...-5	14...23	1.5 h	7 h	–	–
-4...0	24...32	50 min	4 h	–	–
1...5	33...41	25 min	2 h	–	–
6...10	42...50	15 min	1.25 h	15 min	1.25 h
11...20	51...68	7 min	45 min	7 min	45 min
21...30	69...86	4 min	30 min	4 min	30 min
31...40	87...104	3 min	30 min	3 min	30 min

HIT-HY 200-R					
		HAS HIS-N Rebar		HIT-Z[1]	
[°C]	[°F]	t_{work}	t_{cure}	t_{work}	t_{cure}
-10...-5	14...23	3 h	20 h	–	–
-4...0	24...32	2 h	8 h	–	–
1...5	33...41	1 h	4 h	–	–
6...10	42...50	40 min	2.5 h	40 min	2.5 h
11...20	51...68	15 min	1.5 h	15 min	1.5 h
21...30	69...86	9 min	1 h	9 min	1 h
31...40	87...104	6 min	1 h	6 min	1 h

1 It is permitted to install Hilti HIT-HY 200 with HIT-Z anchor rod down to 14° F (-10° C) provided the drilled hole has the drilling dust fully removed. This can be done with Hilti TE-CD or TE-YD hollow drill bit or with cleaning procedures used with standard threaded rod.

Resistance of cured Hilti HIT-HY 200 to chemicals

Chemical		Behavior
Acetic acid	10%	+
Acetone		●
Ammonia	5%	+
Benzyl alcohol		–
Hydrochloric acid	10%	●
Chlorinated lime	10%	+
Citric acid	10%	+
Concrete plasticizer		+
De-icing salt (Calcium chloride)		+
Demineralized water		+
Diesel fuel		+
Drilling dust suspension pH 13.2		+
Ethanol	96%	–
Ethylacetate		–
Formic acid	10%	+
Formwork oil		+
Gasoline		+
Glycole		●
Hydrogen peroxide	10%	●
Lactic acid	10%	+
Maschinery oil		+
Methylethylketon		●
Nitric acid	10%	●
Phosphoric acid	10%	+
Potassium Hydroxide pH 13.2		+
Sea water		+
Sewage sludge		+
Sodium carbonate 10%	10%	+
Sodium hypochlorite 2%	2%	+
Sulphuric acid	10%	+
	30%	+
Toluene		●
Xylene		●

Key: – non-resistant
+ resistant
● limited resistance

Samples of the HIT-HY 200 adhesive were immersed in the various chemical compounds for up to one year. At the end of the test period, the samples were analyzed. Any samples showing no visible damage and having less than a 25% reduction in bending (flexural) strength were classified as “Resistant.” Samples that had slight damage, such as small cracks, chips, etc. or reduction in bending strength of 25% or more were classified as “Limited Resistance” (i.e. exposed for 48 hours or less until chemical is cleaned up). Samples that were heavily damaged or destroyed were classified as “Non-Resistant.”

Note: In actual use, the majority of the adhesive is encased in the base material, leaving very little surface area exposed.

DRAFT



Metric Threaded Rod and EU Metric Reinforcing Bars



Steel Strength

TABLE 15—STEEL DESIGN INFORMATION FOR METRIC THREADED ROD AND EU METRIC REINFORCING BARS

DESIGN INFORMATION		Symbol	Units	Nominal rod diameter (mm)[1]						
				10	12	16	20	24	27	30
Rod Outside Diameter		d	mm	10	12	16	20	24	27	30
			(in.)	(0.39)	(0.47)	(0.63)	(0.79)	(0.94)	(1.06)	(1.18)
Rod effective cross-sectional area		A_{se}	mm^2	58.0	84.3	157	245	353	459	561
			($in.^2$)	(0.090)	(0.131)	(0.243)	(0.380)	(0.547)	(0.711)	(0.870)
ISO 898-1 Class 5.8	Nominal strength as governed by steel strength	N_{sa}	kN	29.0	42.0	78.5	122.5	176.5	229.5	280.5
			(lb)	(6,519)	(9,476)	(17,647)	(27,539)	(39,679)	(51,594)	(63,059)
		V_{sa}	kN	14.5	25.5	47.0	73.5	106.0	137.5	168.5
			(lb)	(3,260)	(5,685)	(10,588)	(16,523)	(23,807)	(30,956)	(37,835)
	Reduction for seismic shear	$\alpha_{V,seis}$	-	0.70						
	Strength reduction factor for tension[2]	ϕ	-	0.65						
	Strength reduction factor for shear[2]	ϕ	-	0.60						
ISO 898-1 Class 8.8	Nominal strength as governed by steel strength	N_{sa}	kN	46.5	67.5	125.5	196.0	282.5	367.0	449.0
			(lb)	(10,431)	(15,161)	(28,236)	(44,063)	(63,486)	(82,550)	(100,894)
		V_{sa}	kN	23.0	40.5	75.5	117.5	169.5	220.5	269.5
			(lb)	(5,216)	(9,097)	(16,942)	(26,438)	(38,092)	(49,530)	(60,537)
	Reduction for seismic shear	$\alpha_{V,seis}$	-	0.70						
	Strength reduction factor for tension[2]	ϕ	-	0.65						
	Strength reduction factor for shear[2]	ϕ	-	0.60						
ISO 3506-1 Class A4 Stainless[3]	Nominal strength as governed by steel strength	N_{sa}	kN	40.6	59.0	109.9	171.5	247.1	183.1	223.8
			(lb)	(9,127)	(13,266)	(24,706)	(38,555)	(55,550)	(41,172)	(50,321)
		V_{sa}	kN	20.3	35.4	65.9	102.9	148.3	109.9	134.3
			(lb)	(4,564)	(7,960)	(14,824)	(23,133)	(33,330)	(24,703)	(30,192)
	Reduction for seismic shear	$\alpha_{V,seis}$	-	0.70						
	Strength reduction factor for tension[2]	ϕ	-	0.65						
	Strength reduction factor for shear[2]	ϕ	-	0.60						

DESIGN INFORMATION		Symbol	Units	Reinforcing bar size							
				10	12	14	16	20	25	28	32
Nominal bar diameter		d	mm	10.0	12.0	14.0	16.0	20.0	25.0	28.0	32.0
			(in.)	(0.394)	(0.472)	(0.551)	(0.630)	(0.787)	(0.984)	(1.102)	(1.260)
Bar effective cross-sectional area		A_{se}	mm^2	78.5	113.1	153.9	201.1	314.2	490.9	615.8	804.2
			($in.^2$)	(0.122)	(0.175)	(0.239)	(0.312)	(0.487)	(0.761)	(0.954)	(1.247)
DIN 488 BSt 550/500	Nominal strength as governed by steel strength	N_{sa}	kN	43.0	62.0	84.5	110.5	173.0	270.0	338.5	442.5
			(lb)	(9,711)	(13,984)	(19,034)	(24,860)	(38,844)	(60,694)	(76,135)	(99,441)
		V_{sa}	kN	26.0	37.5	51.0	66.5	103.0	162.0	203.0	265.5
			(lb)	(5,827)	(8,390)	(11,420)	(14,916)	(23,307)	(36,416)	(45,681)	(59,665)
	Reduction for seismic shear	$\alpha_{V,seis}$	-	0.70							
	Strength reduction factor for tension[2]	ϕ	-	0.65							
	Strength reduction factor for shear[2]	ϕ	-	0.60							

For SI: 1 inch ≡ 25.4 mm, 1 lbf = 4.448 N, 1 psi = 0.006897 MPa.
For pound-inch units: 1 mm = 0.03937 inches, 1 N = 0.2248 lbf, 1 MPa = 145.0 psi

[1] Values provided for common rod material types are based on specified strengths and calculated in accordance with ACI 318-11 Eq. (D-2) and Eq. (D-29). Nuts and washers must be appropriate for the rod.
[2] For use with the load combinations of IBC Section 1605.2, ACI 318-14 5.3 or ACI 318-11 9.2, as set forth in ACI 318-14 17.3.3 or ACI 318-11 D.4.3. If the load combinations of ACI 318-11 Appendix C are used, the appropriate value of ϕ must be determined in accordance with ACI 318-11 D.4.4. Values correspond to a brittle steel element.
[3] A4-70 Stainless (M8- M24); A4-502 Stainless (M27- M30)

DRAFT



Metric Threaded Rod and EU Metric Reinforcing Bars

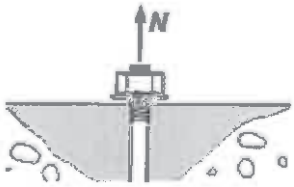

Concrete Breakout Strength

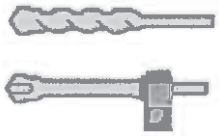

Carbide Bit or Hilti Hollow Carbide Bit

TABLE 16—CONCRETE BREAKOUT DESIGN INFORMATION FOR METRIC THREADED ROD AND EU METRIC REINFORCING BARS IN HOLES DRILLED WITH A HAMMER DRILL AND CARBIDE BIT (OR HILTI HOLLOW CARBIDE DRILL BIT)[1]

DESIGN INFORMATION	Symbol	Units	Nominal rod diameter (mm)						
			10	12	16	20	24	27	30
Minimum Embedment	$h_{ef,min}$	mm	60	70	80	90	96	108	120
		(in.)	(2.4)	(2.8)	(3.1)	(3.5)	(3.8)	(4.3)	(4.7)
Maximum Embedment	$h_{ef,max}$	mm	200	240	320	400	480	540	600
		(in.)	(7.9)	(9.4)	(12.6)	(15.7)	(18.9)	(21.3)	(23.6)
Min. anchor spacing[3]	s_{min}	mm	50	60	80	100	120	135	150
		(in.)	(2.0)	(2.4)	(3.2)	(3.9)	(4.7)	(5.3)	(5.9)
Min. edge distance[3]	c_{min}	-	5d; or see Section 4.1.9.2 of this report for design with reduced minimum edge distances						
Minimum concrete thickness	h_{min}	mm	h_{ef} + 30	h_{ef} + $2d_o$[4]					
		(in.)	(h_{ef} + $1^1/_4$)						

DESIGN INFORMATION	Symbol	Units	Reinforcing bar size							
			10	12	14	16	20	25	28	32
Minimum Embedment	$h_{ef,min}$	mm	60	70	75	80	90	100	112	128
		(in.)	(2.4)	(2.8)	(3.0)	(3.1)	(3.5)	(3.9)	(4.4)	(5.0)
Maximum Embedment	$h_{ef,max}$	mm	200	240	280	320	400	500	560	640
		(in.)	(7.9)	(9.4)	(11.0)	(12.6)	(15.7)	(19.7)	(22.0)	(25.2)
Min. anchor spacing[3]	s_{min}	mm	50	60	80	100	120	135	140	160
		(in.)	(2.0)	(2.4)	(3.2)	(3.9)	(4.7)	(5.3)	(5.5)	(6.3)
Min. edge distance[3]	c_{min}	-	5d; or see Section 4.1.9 of this report for design with reduced minimum edge distances							
Minimum concrete thickness	h_{min}	mm	h_{ef} + 30	h_{ef} + $2d_o$[4]						
		(in.)	(h_{ef} + $1^1/_4$)							
Critical edge distance – splitting (for uncracked concrete)	c_{ac}	-	See Section 4.1.10.2 of this report.							
Effectiveness factor for cracked concrete	$k_{c,cr}$	SI	7.1							
		(in-lb)	(17)							
Effectiveness factor for uncracked concrete	$k_{c,uncr}$	SI	10							
		(in-lb)	(24)							
Strength reduction factor for tension, concrete failure modes, Condition B[2]	ϕ	-	0.65							
Strength reduction factor for shear, concrete failure modes, Condition B[2]	ϕ	-	0.70							

For SI: 1 inch ≡ 25.4 mm, 1 lbf = 4.448 N, 1 psi = 0.006897 MPa.
For pound-inch units: 1 mm = 0.03937 inches, 1 N = 0.2248 lbf, 1 MPa = 145.0 psi

[1] Additional setting information is described in Figure 9, Manufacturers Printed Installation Instructions (MPII).
[2] Values provided for post-installed anchors installed under Condition B without supplementary reinforcement as defined in ACI 318-14 17.3.3 or ACI 318-11 D.4.3.
[3] For installations with $1^3/_4$-inch edge distance, refer to Section 4.1.9.2 for spacing and maximum torque requirements.
[4] d_o = hole diameter.

DRAFT

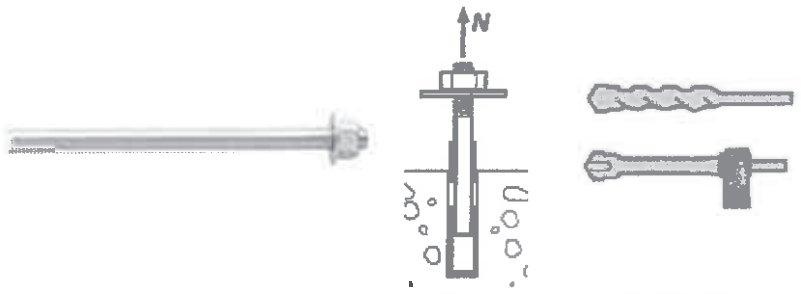

Metric Threaded Rod | Bond Strength | Carbide Bit or Hilti Hollow Carbide Bit

TABLE 18—BOND STRENGTH DESIGN INFORMATION FOR METRIC THREADED ROD IN HOLES DRILLED WITH A HAMMER DRILL AND CARBIDE BIT (OR HILTI HOLLOW CARBIDE DRILL BIT)[1]

DESIGN INFORMATION		Symbol	Units	Nominal rod diameter (mm)						
				10	12	16	20	24	27	30
Minimum Embedment		$h_{ef,min}$	mm	60	70	80	90	96	108	120
			(in.)	(2.4)	(2.8)	(3.1)	(3.5)	(3.8)	(4.3)	(4.7)
Maximum Embedment		$h_{ef,max}$	mm	200	240	320	400	480	540	600
			(in.)	(7.9)	(9.4)	(12.6)	(15.7)	(18.9)	(21.3)	(23.6)
Temperature range A[2]	Characteristic bond strength in cracked concrete	$\tau_{k,cr}$	MPa	7.3	7.6	8.1	8.8	9.0	9.2	9.4
			(psi)	(1,055)	(1,105)	(1,170)	(1,270)	(1,305)	(1,340)	(1,365)
	Characteristic bond strength in uncracked concrete	$\tau_{k,uncr}$	MPa	15.3	15.3	15.3	15.3	15.3	15.3	15.3
			(psi)	(2,220)	(2,220)	(2,220)	(2,220)	(2,220)	(2,220)	(2,220)
Temperature range B[2]	Characteristic bond strength in cracked concrete	$\tau_{k,cr}$	MPa	7.3	7.6	8.1	8.8	9.0	9.2	9.4
			(psi)	(1,055)	(1,105)	(1,170)	(1,270)	(1,305)	(1,340)	(1,365)
	Characteristic bond strength in uncracked concrete	$\tau_{k,uncr}$	MPa	15.3	15.3	15.3	15.3	15.3	15.3	15.3
			(psi)	(2,220)	(2,220)	(2,220)	(2,220)	(2,220)	(2,220)	(2,220)
Temperature range C[2]	Characteristic bond strength in cracked concrete	$\tau_{k,cr}$	MPa	6.0	6.3	6.6	7.2	7.4	7.6	7.7
			(psi)	(865)	(905)	(960)	(1,040)	(1,070)	(1,095)	(1,120)
	Characteristic bond strength in uncracked concrete	$\tau_{k,uncr}$	MPa	12.6	12.6	12.6	12.6	12.6	12.6	12.6
			(psi)	(1,820)	(1,820)	(1,820)	(1,820)	(1,820)	(1,820)	(1,820)
Permissible Installation Conditions	Dry and water saturated concrete	Anchor Category	-	1						
		ϕ_{d}, ϕ_{ws}	-	0.65						
Reduction for seismic tension		$\alpha_{N,seis}$	-	0.88	0.88	1.0	1.0	0.97	0.97	0.97

For SI: 1 inch ≡ 25.4 mm, 1 lbf = 4.448 N, 1 psi = 0.006897 MPa.
For pound-inch units: 1 mm = 0.03937 inches, 1 N = 0.2248 lbf, 1 MPa = 145.0 psi

[1] Bond strength values correspond to concrete compressive strength f'_c = 2,500 psi (17.2 MPa). For concrete compressive strength, f'_c, between 2,500 psi (17.2 MPa) and 8,000 psi (55.2 MPa) [minimum of 24 MPa is required under ADIBC Appendix L, Section 5.1.1], the tabulated characteristic bond strength may be increased by a factor of $(f'_c / 2{,}500)^{0.1}$ [For SI: $(f'_c / 17.2)^{0.1}$]. See Section 4.1.4 of this report for bond strength determination.

[2] Temperature range A: Maximum short term temperature = 130°F (55°C), Maximum long term temperature = 110°F (43°C).
Temperature range B: Maximum short term temperature = 176°F (80°C), Maximum long term temperature = 110°F (43°C).
Temperature range C: Maximum short term temperature = 248°F (120°C), Maximum long term temperature = 162°F (72°C).
Short term elevated concrete temperatures are those that occur over brief intervals, e.g., as a result of diurnal cycling. Long term concrete temperatures are roughly constant over significant periods of time.

DRAFT

DEFORMED REINFORCMENT

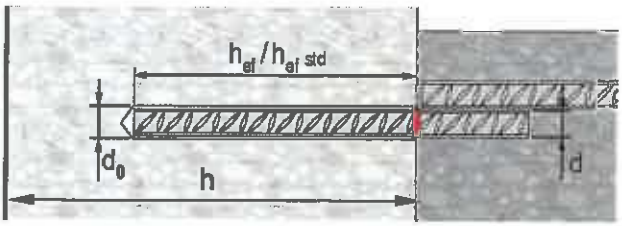

US REBAR

#3	½	3⅜	2⅜...7½
#4	⅝	4½	2¾...10
#5	¾	5⅝	3⅛...12½
#6	⅞	6¾	3½...15
#7	1	7⅞	3½...17½
#8	1⅛	9	4...20
#9	1⅜	10⅛	4½...22½
#10	1½	11¼	5...25

CANADIAN REBAR

10 M	⅜	115	70...226
15 M	¾	145	80...320
20 M	1	200	90...390
25 M	1¼	230	101...504
30 M	1½	280	120...598

EUROPEAN REBAR

10	14	90	60...200
12	16	110	70...240
14	18	125	75...280
16	20	125	80...320
20	25	170	90...400
25	32	210	100...500
28	35	270	112...560
32	40	300	128...640

THREADED ROD

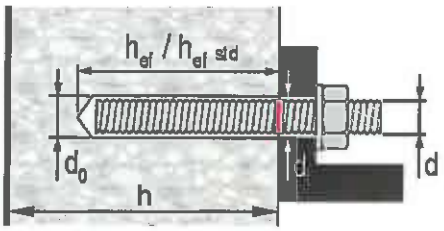

FRACTIONAL THREADED ROD

⅜	7/16	3⅜	2⅜...7½	15	20
½	9/16	4½	2¾...10	30	41
⅝	¾	5⅝	3⅛... 12½	60	81
¾	⅞	6¾	3½.. 15	100	136
⅞	1	7⅞	3½... 17½	125	169
1	1⅛	9	4...20	150	203
1¼	1⅜	11¼	5...25	200	271

METRIC THREADED ROD

M10	12	90	60...200	20
M12	14	110	70...240	40
M16	18	125	80...320	80
M20	22	170	90...400	150
M24	28	210	96...480	200
M27	30	240	108...540	270
M30	35	270	120...600	300

HILTI HIS-N AND HIS-RN THREADED INSERTS

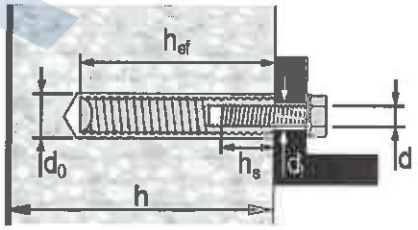

FRACTIONAL HILTI HIS-N AND HIS-RN THREADED INSERTS

⅜	11/16	4⅜	7/16	⅜...15/16	15	20
½	⅞	5	9/16	½...1 3/16	30	41
⅝	1⅛	6¾	11/16	⅝...1½	60	81
¾	1¼	8⅛	13/16	¾...1⅞	100	136

METRIC HILTI HIS-N AND HIS-RN THREADED INSERTS

M8	14	90	9	8...20	10
M10	18	110	12	10...25	20
M12	22	125	14	12...30	40
M16	28	170	18	16...40	80
M20	32	205	22	20...50	150

FIGURE 1—INSTALLATION PARAMETERS FOR POST INSTALLED ADHESIVE ANCHORS (Continued)

DRAFT

TABLE 2—SPECIFICATIONS AND PHYSICAL PROPERTIES OF FRACTIONAL AND METRIC HIT-Z AND HIT-Z RODS

HIT-Z AND HIT-Z-R ROD SPECIFICATION			Minimum specified ultimate strength, f_{uta}	Minimum specified yield strength 0.2 percent offset, f_{ya}	f_{uta}/f_{ya}	Elongation, min. percent	Reduction of Area, min. percent	Specification for nuts[2]
CARBON STEEL	$^3/_8$-in. to $^5/_8$-in. and M10 to M12 - AISI 1038 $^3/_4$-in. - AISI 1038 or 18MnV5	psi (MPa)	94,200 (650)	75,300 (520)	1.25	8	20	ASTM A563 Grade A
	M16 - AISI 1038	psi (MPa)	88,400 (610)	71,000 (490)				
	M20 - AISI 1038 or 18MnV5	psi (MPa)	86,200 (595)	69,600 (480)				
STAINLESS STEEL	$^3/_8$-in. to $^3/_4$-in. and M10 to M12 Grade 316 DIN-EN 10263-5 X5CrNiMo 17-12-2+AT	psi (MPa)	94,200 (650)	75,300 (520)	1.25	8	20	ASTM F594 Type 316
	M16 Grade 316 DIN-EN 10263-5 X5CrNiMo 17-12-2+AT	psi (MPa)	88,400 (610)	71,000 (490)				
	M20 Grade 316 DIN-EN 10263-5 X5CrNiMo 17-12-2+AT	psi (MPa)	86,200 (595)	69,600 (480)				

[1] Steel properties are minimum values and maximum values will vary due to the cold forming of the rod.
[2] Nuts of other grades and styles having specified proof load stresses greater than the specified grade and style are also suitable. Nuts must have specified proof load stresses equal to or greater than the minimum tensile strength of the specified threaded rod.

TABLE 3—SPECIFICATIONS AND PHYSICAL PROPERTIES OF COMMON CARBON AND STAINLESS STEEL THREADED ROD MATERIALS[1]

THREADED ROD SPECIFICATION			Minimum specified ultimate strength, f_{uta}	Minimum specified yield strength 0.2 percent offset, f_{ya}	f_{uta}/f_{ya}	Elongation, min. percent[7]	Reduction of Area, min. percent	Specification for nuts[8]
CARBON STEEL	ASTM A193[2] Grade B7 ≤ 2 $^1/_2$ in. (≤ 64 mm)	psi (MPa)	125,000 (862)	105,000 (724)	1.19	16	50	ASTM A563 Grade DH
	ASTM F568M[3] Class 5.8 M5 ($^1/_4$ in.) to M24 (1 in.) (equivalent to ISO 898-1)	psi (MPa)	72,500 (500)	58,000 (400)	1.25	10	35	ASTM A563 Grade DH[9] DIN 934 (8-A2K)
	ASTM F1554, Grade 36[7]	psi (MPa)	58,000 (400)	36,000 (248)	1.61	23	40	ASTM A194 or ASTM A563
	ASTM F1554, Grade 55[7]	psi (MPa)	75,000 (517)	55,000 (379)	1.36	21	30	ASTM A194 or ASTM A563
	ASTM F1554, Grade 105[7]	psi (MPa)	125,000 (862)	105,000 (724)	1.19	15	45	ASTM A194 or ASTM A563
	ISO 898-1[4] Class 5.8	MPa (psi)	500 (72,500)	400 (58,000)	1.25	22	-	DIN 934 Grade 6
	ISO 898-1[4] Class 8.8	MPa (psi)	800 (116,000)	640 (92,800)	1.25	12	52	DIN 934 Grade 8
STAINLESS STEEL	ASTM F593[5] CW1 (316) $^1/_4$-in. to $^5/_8$-in.	psi (MPa)	100,000 (689)	65,000 (448)	1.54	20	-	ASTM F594
	ASTM F593[5] CW2 (316) $^3/_4$-in. to 1 $^1/_2$-in.	psi (MPa)	85,000 (586)	45,000 (310)	1.89	25	-	ASTM F594
	ASTM A193 Grade 8(M), Class 1[2] - 1 ¼-in.	psi (MPa)	75,000 (517)	30,000 (207)	2.50	30	50	ASTM F594
	ISO 3506-1[6] A4-70 M8 – M24	MPa (psi)	700 (101,500)	450 (65,250)	1.56	40	-	ISO 4032
	ISO 3506-1[6] A4-50 M27 – M30	MPa (psi)	500 (72,500)	210 (30,450)	2.38	40	-	ISO 4032

[1] Hilti HIT-HY 200 adhesive may be used in conjunction with all grades of continuously threaded carbon or stainless steel rod (all-thread) that comply with the code reference standards and that have thread characteristics comparable with ANSI B1.1 UNC Coarse Thread Series or ANSI B1.13M M Profile Metric Thread Series. Values for threaded rod types and associated nuts supplied by Hilti are provided here.
[2] *Standard Specification for Alloy-Steel and Stainless Steel Bolting Materials for High-Temperature Service*
[3] *Standard Specification for Carbon and Alloy Steel Externally Threaded Metric Fasteners*
[4] *Mechanical properties of fasteners made of carbon steel and alloy steel – Part 1: Bolts, screws and studs*
[5] *Standard Steel Specification for Stainless Steel Bolts, Hex Cap Screws, and Studs*
[6] *Mechanical properties of corrosion-resistant stainless steel fasteners – Part 1: Bolts, screws and studs*
[7] Based on 2-in. (50 mm) gauge length except for A 193, which are based on a gauge length of 4d and ISO 898, which is based on 5d.
[8] Nuts of other grades and styles having specified proof load stresses greater than the specified grade and style are also suitable. Nuts must have specified proof load stresses equal to or greater than the minimum tensile strength of the specified threaded rod.
[9] Nuts for fractional rods.

DRAFT

TABLE 9—PRE-CALCULATED EDGE DISTANCE AND SPACING COMBINATIONS FOR HILTI HIT-Z AND HIT-Z-R RODS (Continued)

DESIGN INFORMATION		Symbol	Units	Nominal Rod Diameter (in.) – Fractional								
Rod O.D.		d	in. (mm)	3/4 (19.1)								
Effective embedment		h_{ef}	in. (mm)	4 (102)			6 3/4 (171)			8 1/2 (216)		
Drilled hole condition[1]		-	-	2	1 or 2		2	1 or 2		2	1 or 2	
Minimum concrete thickness		h	in. (mm)	5 3/4 (146)	8 (203)	11 1/2 (292)	8 1/2 (216)	10 3/4 (273)	13 1/8 (333)	10 1/4 (260)	12 1/2 (318)	14 1/2 (368)
UNCRACKED CONCRETE	Minimum edge and spacing Case 1[2]	$c_{min,1}$	in. (mm)	9 3/4 (248)	7 (178)	5 (127)	6 5/8 (168)	5 1/4 (133)	4 1/4 (108)	5 1/2 (140)	4 1/2 (114)	4 (102)
		$s_{min,1}$	in. (mm)	28 3/4 (730)	20 5/8 (524)	14 (356)	19 3/8 (492)	15 1/4 (387)	12 5/8 (321)	16 (406)	13 1/4 (337)	11 (279)
	Minimum edge and spacing Case 2[2]	$c_{min,2}$	in. (mm)	18 1/8 (460)	12 5/8 (321)	8 1/2 (216)	11 7/8 (302)	9 1/8 (232)	7 1/4 (184)	9 5/8 (244)	7 3/4 (197)	6 1/2 (165)
		$s_{min,2}$	in. (mm)	3 3/4 (95)	3 3/4 (95)	3 3/4 (95)	3 3/4 (95)	3 3/4 (95)	3 3/4 (95)	3 3/4 (95)	3 3/4 (95)	3 3/4 (95)
CRACKED CONCRETE	Minimum edge and spacing Case 1[2]	$c_{min,1}$	in. (mm)	7 1/4 (184)	5 1/4 (133)	4 1/8 (105)	5 (127)	4 (102)	3 3/4 (95)	4 1/8 (105)	3 3/4 (95)	3 3/4 (95)
		$s_{min,1}$	in. (mm)	21 3/4 (552)	15 1/2 (394)	12 1/4 (311)	14 1/2 (368)	11 3/8 (289)	9 (229)	12 1/8 (308)	8 3/4 (222)	6 1/2 (165)
	Minimum edge and spacing Case 2[2]	$c_{min,2}$	in. (mm)	13 1/4 (337)	9 1/4 (235)	6 (152)	8 5/8 (219)	6 5/8 (168)	5 1/5 (130)	7 (178)	5 1/2 (140)	4 1/2 (114)
		$s_{min,2}$	in. (mm)	3 3/4 (95)	3 3/4 (95)	3 3/4 (95)	3 3/4 (95)	3 3/4 (95)	3 3/4 (95)	3 3/4 (95)	3 3/4 (95)	3 3/4 (95)

DESIGN INFORMATION		Symbol	Units	Nominal Rod Diameter (mm) – Metric								
Rod O.D.		d	mm (in.)	10 (0.39)								
Effective embedment		h_{ef}	mm (in.)	60 (2.36)			90 (3.54)			120 (4.72)		
Drilled hole condition[1]		-	-	2	1 or 2		2	1 or 2		2	1 or 2	
Minimum concrete thickness		h	mm (in.)	100 (3.94)	120 (4.72)	156 (6.14)	120 (4.72)	150 (5.91)	176 (6.91)	150 (5.91)	180 (7.09)	197 (7.74)
UNCRACKED CONCRETE	Minimum edge and spacing Case 1[2]	$c_{min,1}$	mm (in.)	99 (3.90)	83 (3.27)	64 (2.52)	83 (3.27)	66 (2.60)	57 (2.24)	66 (2.60)	55 (2.17)	51 (2.01)
		$s_{min,1}$	mm (in.)	295 (11.61)	244 (9.61)	187 (7.36)	244 (9.61)	197 (7.76)	166 (6.54)	197 (7.76)	164 (6.46)	148 (5.83)
	Minimum edge and spacing Case 2[2]	$c_{min,2}$	mm (in.)	181 (7.13)	148 (5.83)	110 (4.33)	148 (5.83)	115 (4.53)	96 (3.78)	115 (4.53)	93 (3.66)	84 (3.31)
		$s_{min,2}$	mm (in.)	50 (1.97)	50 (1.97)	50 (1.97)	50 (1.97)	50 (1.97)	50 (1.97)	50 (1.97)	50 (1.97)	50 (1.97)
CRACKED CONCRETE	Minimum edge and spacing Case 1[2]	$c_{min,1}$	mm (in.)	71 (2.80)	59 (2.32)	52 (2.05)	59 (2.32)	50 (1.97)	50 (1.97)	50 (1.97)	50 (1.97)	50 (1.97)
		$s_{min,1}$	mm (in.)	209 (8.23)	174 (6.85)	150 (5.91)	174 (6.85)	131 (5.16)	106 (4.17)	131 (5.16)	84 (3.31)	66 (2.60)
	Minimum edge and spacing Case 2[2]	$c_{min,2}$	mm (in.)	124 (4.88)	101 (3.98)	74 (2.91)	101 (3.98)	77 (3.03)	64 (2.52)	77 (3.03)	62 (2.44)	55 (2.17)
		$s_{min,2}$	mm (in.)	50 (1.97)	50 (1.97)	50 (1.97)	50 (1.97)	50 (1.97)	50 (1.97)	50 (1.97)	50 (1.97)	50 (1.97)

DESIGN INFORMATION		Symbol	Units	Nominal Rod Diameter (mm) – Metric								
Rod O.D.		d	mm (in.)	12 (0.47)								
Effective embedment		h_{ef}	mm (in.)	70 (2.76)			108 (4.25)			144 (5.67)		
Drilled hole condition[1]		-	-	2	1 or 2		2	1 or 2		2	1 or 2	
Minimum concrete thickness		h	mm (in.)	100 (3.94)	130 (5.12)	184 (7.24)	138 (5.43)	168 (6.61)	209 (8.21)	174 (6.85)	204 (8.03)	234 (9.21)
UNCRACKED CONCRETE	Minimum edge and spacing Case 1[2]	$c_{min,1}$	mm (in.)	139 (5.47)	107 (4.21)	76 (2.99)	101 (3.98)	83 (3.27)	67 (2.64)	80 (3.15)	68 (2.68)	60 (2.36)
		$s_{min,1}$	mm (in.)	416 (16.38)	320 (12.60)	225 (8.86)	300 (11.81)	247 (9.72)	199 (7.83)	239 (9.41)	204 (8.03)	176 (6.93)
	Minimum edge and spacing Case 2[2]	$c_{min,2}$	mm (in.)	258 (10.16)	194 (7.64)	131 (5.16)	181 (7.13)	146 (5.75)	114 (4.49)	140 (5.51)	116 (4.57)	99 (3.90)
		$s_{min,2}$	mm (in.)	60 (2.36)	60 (2.36)	60 (2.36)	60 (2.36)	60 (2.36)	60 (2.36)	60 (2.36)	60 (2.36)	60 (2.36)
CRACKED CONCRETE	Minimum edge and spacing Case 1[2]	$c_{min,1}$	mm (in.)	101 (3.98)	78 (3.07)	62 (2.44)	74 (2.91)	61 (2.40)	60 (2.36)	60 (2.36)	60 (2.36)	60 (2.36)
		$s_{min,1}$	mm (in.)	303 (11.93)	232 (9.13)	186 (7.32)	217 (8.54)	178 (7.01)	126 (4.96)	168 (6.61)	117 (4.61)	79 (3.11)
	Minimum edge and spacing Case 2[2]	$c_{min,2}$	mm (in.)	182 (7.17)	136 (5.35)	90 (3.54)	127 (5.00)	101 (3.98)	77 (3.03)	96 (3.78)	79 (3.11)	67 (2.64)
		$s_{min,2}$	mm (in.)	60 (2.36)	60 (2.36)	60 (2.36)	60 (2.36)	60 (2.36)	60 (2.36)	60 (2.36)	60 (2.36)	60 (2.36)

For SI: 1 inch ≡ 25.4 mm

[1] See Figure 5 for description of drilled hole condition.

[2] Linear interpolation is permitted to establish an edge distance and spacing combination between case 1 and case 2. Linear interpolation for a specific edge distance c, where $c_{min,1} < c < c_{min,2}$, will determine the permissible spacing, s, as follows:

$$s \geq s_{min,2} + \frac{(s_{min,1} - s_{min,2})}{(c_{min,1} - c_{min,2})}(c - c_{min,2})$$

DRAFT



Metric Threaded Rod and EU Metric Reinforcing Bars

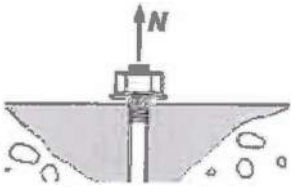

Concrete Breakout Strength



Carbide Bit or Hilti Hollow Carbide Bit

TABLE 16—CONCRETE BREAKOUT DESIGN INFORMATION FOR METRIC THREADED ROD AND EU METRIC REINFORCING BARS IN HOLES DRILLED WITH A HAMMER DRILL AND CARBIDE BIT (OR HILTI HOLLOW CARBIDE DRILL BIT)[1]

DESIGN INFORMATION	Symbol	Units	Nominal rod diameter (mm)						
			10	12	16	20	24	27	30
Minimum Embedment	$h_{ef,min}$	mm	60	70	80	90	96	108	120
		(in.)	(2.4)	(2.8)	(3.1)	(3.5)	(3.8)	(4.3)	(4.7)
Maximum Embedment	$h_{ef,max}$	mm	200	240	320	400	480	540	600
		(in.)	(7.9)	(9.4)	(12.6)	(15.7)	(18.9)	(21.3)	(23.6)
Min. anchor spacing[3]	s_{min}	mm	50	60	80	100	120	135	150
		(in.)	(2.0)	(2.4)	(3.2)	(3.9)	(4.7)	(5.3)	(5.9)
Min. edge distance[3]	c_{min}	-	5d; or see Section 4.1.9.2 of this report for design with reduced minimum edge distances						
Minimum concrete thickness	h_{min}	mm	h_{ef} + 30	$h_{ef} + 2d_o$[4]					
		(in.)	(h_{ef} + 1 1/4)						

DESIGN INFORMATION	Symbol	Units	Reinforcing bar size							
			10	12	14	16	20	25	28	32
Minimum Embedment	$h_{ef,min}$	mm	60	70	75	80	90	100	112	128
		(in.)	(2.4)	(2.8)	(3.0)	(3.1)	(3.5)	(3.9)	(4.4)	(5.0)
Maximum Embedment	$h_{ef,max}$	mm	200	240	280	320	400	500	560	640
		(in.)	(7.9)	(9.4)	(11.0)	(12.6)	(15.7)	(19.7)	(22.0)	(25.2)
Min. anchor spacing[3]	s_{min}	mm	50	60	80	100	120	135	140	160
		(in.)	(2.0)	(2.4)	(3.2)	(3.9)	(4.7)	(5.3)	(5.5)	(6.3)
Min. edge distance[3]	c_{min}	-	5d; or see Section 4.1.9 of this report for design with reduced minimum edge distances							
Minimum concrete thickness	h_{min}	mm	h_{ef} + 30	$h_{ef} + 2d_o$[4]						
		(in.)	(h_{ef} + 1 1/4)							
Critical edge distance – splitting (for uncracked concrete)	c_{ac}	-	See Section 4.1.10.2 of this report.							
Effectiveness factor for cracked concrete	$k_{c,cr}$	SI	7.1							
		(in-lb)	(17)							
Effectiveness factor for uncracked concrete	$k_{c,uncr}$	SI	10							
		(in-lb)	(24)							
Strength reduction factor for tension, concrete failure modes, Condition B[2]	ϕ	-	0.65							
Strength reduction factor for shear, concrete failure modes, Condition B[2]	ϕ	-	0.70							

For SI: 1 inch ≡ 25.4 mm, 1 lbf = 4.448 N, 1 psi = 0.006897 MPa.
For pound-inch units: 1 mm = 0.03937 inches, 1 N = 0.2248 lbf, 1 MPa = 145.0 psi

[1] Additional setting information is described in Figure 9, Manufacturers Printed Installation Instructions (MPII).
[2] Values provided for post-installed anchors installed under Condition B without supplementary reinforcement as defined in ACI 318-14 17.3.3 or ACI 318-11 D.4.3.
[3] For installations with 1 3/4-inch edge distance, refer to Section 4.1.9.2 for spacing and maximum torque requirements.
[4] d_o = hole diameter.

DRAFT

HIT-V, HAS and HIT-Z

Hilti Anchor Rod Specifications and Technical Data

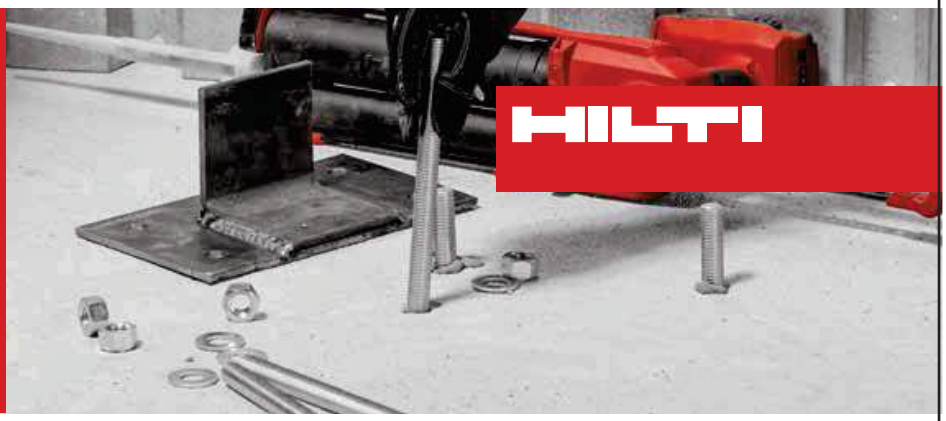

Hilti HIT-V and HAS Threaded Rod and Hilti HIT-Z Anchor Rod

Specifications and Technical Data

Hilti has provided threaded rod for many years for post-installed anchoring applications for Hilti adhesive anchor systems. In 2013 Hilti released the Hilti HIT-Z Anchor Rod as part of Hilti SAFEset™ technology along with the new Hilti HIT-HY 200 adhesive. And in 2014 Hilti introduced the new Hilti HIT-V threaded rod. The HIT-V threaded rod is the latest addition to the Hilti anchor rod portfolio and designed for reliable performance in a wide range of chemical anchoring applications in combination with Hilti HIT Injectable adhesive anchor systems.

Hilti HIT-Z Anchor Rod (SAFEset™)



For use with Hilti HIT-HY 200 adhesive, the Hilti HIT-Z anchor rod provides the ultimate in safety and load capacity combined with up to 60% faster installation due to zero-cleaning SAFEset™ * technology

* Zero-cleaning with SAFEsetTM technology with the Hilti HIT-Z anchor rod is currently for use at a base material temperature above 41 °F (+5 °C). For use below 41 °F (+5 °C) and for full installation procedures refer to the product instructions for use on the product packaging or contact Hilti.

Hilti HAS Threaded Rod



Broad portfolio including high-strength and stainless steel for the demand of increased performance and usability with capsule systems

Hilti HIT-V Threaded Rod



Reliable Hilti quality to fulfill the basic needs of chemical anchoring applications (cannot be used with Hilti HVU capsule system)

NEW

DRAFT

Hilti. Outperform. Outlast.

HIT-V, HAS and HIT-Z Anchor Rods

Specifications and Physical Properties of Hilti HIT-V, HAS, and HIT-Z Threaded Rods

	Threaded Rod Specification	Units	Minimum Specified Ultimate Strength, f_{uta}	Minimum Specified Yield Strength 0.2% Offset, f_{ya}	f_{uta} / f_{ya}	Elongation, Min. % [9]	Reduction of Area, Min. %	Specification for Nuts and Washers
CARBON STEEL	**HIT-V** Conforms to ultimate strength of ASTM A 307 Grade A [1,10]	psi (MPa)	60,000 (414)	37,500 [(2)] (259)	1.60 [(2)]	10 [(3)]	-	Nuts: SAE J995 Grade 5 Washers: ASTM F884, HV and ANSI B18.22.1 Type A Plain
	HAS-E ISO 898-1 class 5.8 [4,10]	psi (MPa)	72,500 (500)	58,000 (400)	1.25	10 [(5)]	-	Nuts: SAE J995 Grade 5 Washers: ASTM F884, HV and ANSI B18.22.1 Type A Plain
	HAS Super ASTM A 193, Grade B7 [6,10,11]	psi (MPa)	125,000 [(7)] (862) [(7)]	105,000 (724)	1.19	16	50	Nuts: ASTM A 194, Grade 2H, Heavy Washers: ASTM F884, HV and ANSI B18.22.1 Type A Plain
	HIT-Z Anchor Rod 3/8-in. to 5/8-in. - AISI 1038 3/4-in. - AISI 1038 or 18MnV5 [10]	psi (MPa)	94,200 (650)	75,300 (519)	1.25	8	20	Nuts: ASTM A 563 Grade A Washers: ASTM F884, HV and ANSI B18.22.1 Type A Plain
STAINLESS STEEL	**HAS-R 304 / 316** 3/8-in. to 5/8-in. AISI Type 304 / 316 ASTM F 593 CW1 [8]	psi (MPa)	100,000 (690)	65,000 (448)	1.54	20	-	Nuts: ASTM F 594 Washers: ASTM A 240 and ANSI B18.22.1 Type A Plain
	HAS-R 304 / 316 3/4-in. to 1-1/2-in. AISI Type 304 / 316 ASTM F 593 CW2 [8]	psi (MPa)	85,000 (586)	45,000 (310)	1.89	25	-	
	HIT-Z-R Anchor Rod Grade 316 DIN-EN 10263-5 X5CrNiMo 17-12-2+AT	psi (MPa)	94,200 (650)	75,300 (519)	1.25	8	20	Nuts: ASTM F 594 Washers: ASTM A 240 and ANSI B18.22.1 Type A Plain

1 Standard Specification for Carbon Steel Bolts and Studs, 60,000 psi Tensile Strength
2 ASTM A 307 does not have a minimum specified yield strength. Published yield strength is based on Hilti manufacturer specifications and maximum value of f_{uta} / f_y = 1.6 as specified in ACI 318-11 Appendix D section RD.5.1.2.
3 Hilti HIT-V threaded rods do not meet the minimum elongation requirements for ASTM A 307. HIT-V needs to be considered a brittle steel element.
4 Mechanical properties of fasteners made of carbon steel and alloy steel — Part 1: Bolts, screws and studs
5 Hilti HAS-E threaded rods do not meet the minimum elongation requirements for ISO 898-1. HAS-E needs to be considered a brittle steel element.
6 Standard Specification for Alloy-Steel and Stainless Steel Bolting Materials for High-Temperature Service
7 For designs according to CSA A23.3-04 (R2010) Annex D, the maximum value of f_{ut} is 860 MPa (124,700 psi) per clause D.6.1.2.
8 Standard Steel Specification for Stainless Steel Bolts, Hex Cap Screws, and Studs
9 Based on 2-in. (50 mm) gauge length except for A 193, which are based on a gauge length of 4d and ISO 898, which is based on 5d.
10 All HIT-V, HAS-E, HAS Super (except 7/8-in.), and HIT-Z carbon steel rods, nuts, and washers are zinc plated to ASTM B 633 SC 1.
11 7/8-inch HAS Super rods hot-dip galvanized in accordance with ASTM A 153.

DRAFT

Strength Design According to ACI 318 Appendix D

The following strength design technical data is for adhesive anchors designed in accordance with ACI 318 Appendix D. This includes Hilti HIT-HY 200, HIT-RE 500-SD, and HIT-HY 100.

Steel Design Information for Hilti HIT-V and HAS Threaded Rods and Hilti HIT-Z Anchor Rods for Use with ACI 318 Appendix D

Design Information		Symbol	Units	Nominal Rod Diameter (in.)						
				3/8	1/2	5/8	3/4	7/8	1	1-1/4
Rod O.D.		d	in.	0.375	0.5	0.625	0.75	.875	1.0	1.25
			(mm)	(9.5)	(12.7)	(15.9)	19.1)	(22.2)	(25.4)	(31.8)
Rod effective cross-sectional area		A_{se}	in.^{2}	0.0775	0.1419	0.2260	0.3345	0.4617	0.6057	0.9691
			(mm^2)	(50)	(92)	(146)	216)	298)	(391)	(625)
HIT-V ASTM A307 Grade A[1,2]	Nominal strength as governed by steel strength	N_{sa}	lb	4,650	8,515	13,560	20,070	-	36,340	-
			(kN)	(20.7)	(37.9)	60.3)	(89.3)	-	161.6)	-
		V_{sa}	lb	2,325	5,110	8,135	12,040	-	21,805	-
			(kN)	(10.3)	22.7)	36.2)	(53.6)	-	(97.0)	-
	Reduction factor, seismic shear	$\alpha_{v,seis}$	-	0.7						
	Steel strength reduction factor Φ for tension [3]	Φ	-	0.65						
	Steel strength reduction factor Φ for shear [3]	Φ	-	0.60						
HAS-E ISO 898-1 Class 5.8[1,4]	Nominal strength as governed by steel strength	N_{sa}	lb	5,620	10,290	16,385	24,250	33,475	43,915	70,260
			(kN)	(25.0)	(45.8)	(72.9)	(107.9)	(148.9)	(195.3)	(312.5)
		V_{sa}	lb	2,810	6,175	9,830	14,550	20,085	26,350	42,155
			(kN)	(12.5)	(27.5)	(43.7)	(64.7)	(89.3)	(117.2)	(187.5)
	Reduction factor, seismic shear	$\alpha_{v,seis}$	-	0.7						
	Steel strength reduction factor Φ for tension [3]	Φ	-	0.65						
	Steel strength reduction factor Φ for shear [3]	Φ	-	0.60						
HAS Super ASTM A 193 B7[1]	Nominal strength as governed by steel strength	N_{sa}	lb	9,690	17,740	28,250	41,815	57,715	75,715	121,135
			(kN)	(43.1)	(78.9)	(125.7)	(186.0)	(256.7)	(336.8)	(538.8)
		V_{sa}	lb	4,845	10,645	16,950	25,090	34,630	45,430	72,680
			(kN)	(21.6)	(47.4)	(75.4)	(111.6)	(154.0)	(202.1)	(323.3)
	Reduction factor, seismic shear	$\alpha_{v,seis}$	-	0.7						
	Steel strength reduction factor Φ for tension [3]	Φ	-	0.75						
	Steel strength reduction factor Φ for shear [3]	Φ	-	0.65						
HIT-Z Anchor Rod AISI 1038 or 18MnV5[1]	Nominal strength as governed by steel strength	N_{sa}	lb	7,306	13,377	21,306	31,472	-	-	-
			(kN)	(32.5)	(59.5)	(94.8)	(140.0)	-	-	-
		V_{sa}	lb	3,215	5,886	9,375	13,848	-	-	-
			(kN)	(14.3)	(26.2)	(41.7)	(61.6)	-	-	-
	Reduction factor, seismic shear	$\alpha_{v,seis}$	-	1.0	0.65			-		
	Steel strength reduction factor Φ for tension [3]	Φ	-	0.65				-		
	Steel strength reduction factor Φ for shear [3]	Φ	-	0.60				-		
HAS-R ASTM F 593, CW Stainless Steel[1]	Nominal strength as governed by steel strength	N_{sa}	lb	7,750	14,190	22,600	8,435	39,245	51,485	82,375
			(kN)	(34.5)	(63.1)	(100.5)	(126.5)	(174.6)	(229.0)	(366.4)
		V_{sa}	lb	3,875	8,515	13,560	17,060	23,545	30,890	49,425
			(kN)	(17.2)	(37.9)	(60.3)	(75.9)	104.7)	(137.4)	(219.9)
	Reduction factor, seismic shear	$\alpha_{v,seis}$	-	0.7						
	Steel strength reduction factor Φ for tension [3]	Φ	-	0.65						
	Steel strength reduction factor Φ for shear [3]	Φ	-	0.60						
HIT-Z-R Anchor Rod Stainless Steel[1]	Nominal strength as governed by steel strength	N_{sa}	lb	7,306	13,377	21,306	31,472	-	-	-
			(kN)	(32.5)	(59.5)	(94.8)	(140.0)	-	-	-
		V_{sa}	lb	4,384	8,026	12,783	18,883	-	-	-
			(kN)	(19.5)	(35.7)	(56.9)	(84.0)	-	-	-
	Reduction factor, seismic shear	$\alpha_{v,seis}$	-	1.0	0.75	0.65		-		
	Steel strength reduction factor Φ for tension [3]	Φ	-	0.65				-		
	Steel strength reduction factor Φ for shear [3]	Φ	-	0.60				-		

1 Values provided for Hilti threaded rod materials based on published strengths and calculated in accordance with ACI 318-11 Appendix D Eq. (D-2) and Eq. (D-28). Nuts and washers must be appropriate for rod strength.
2 HIT-V does not comply with % elongation requirements of ASTM A 307 Grade A steel.
3 For use with the load combinations of IBC Section 1605.2.1 or ACI 318 Section 9.2 as set forth in ACI 318 D.4.3. If the load combinations of ACI 318 Appendix C are used, the appropriate value of Φ must be determined in accordance with ACI 318 D.4.4.
4 HAS-E does not comply with % elongation requirements of ISO 898-1 Class 5.8 steel.

DRAFT

Strength Design According to ACI 318 Appendix D

The following are strength design values calculated from data on the previous page. This is intended for adhesive anchors designed in accordance with ACI 318 Appendix D and can be used in conjunction with the Hilti Simplified Strength Design Tables (refer to Section 3.1.7 of the 2014 Hilti Anchor Fastening Technical Guide for more information on the Hilti Simplified Tables). This includes Hilti HIT-HY 200, HIT-RE 500-SD and HIT-HY 100.

Steel Design Strength for Carbon Steel Hilti HIT-V and HAS Threaded Rods and Hilti HIT-Z Anchor Rods According to ACI 318 Appendix D

Anchor Diameter in. (mm)	HIT-V ASTM A307 Grade A [4]			HAS-E ISO 898 Class 5.8 [4]			HAS-Super ASTM A193 B7 [5]			HIT-Z Anchor Rod AISI 1038 or 18MnV5 [4]		
	Tensile[1] ΦN_{sa} lb (kN)	Shear[2] ΦV_{sa} lb (kN)	Seismic Shear[3] $\Phi V_{sa,eq}$ lb (kN)	Tensile[1] ΦN_{sa} lb (kN)	Shear[2] ΦV_{sa} lb (kN)	Seismic Shear[3] $\Phi V_{sa,eq}$ lb (kN)	Tensile[1] ΦN_{sa} lb (kN)	Shear[2] ΦV_{sa} lb (kN)	Seismic Shear[3] $\Phi V_{sa,eq}$ lb (kN)	Tensile[1] ΦN_{sa} lb (kN)	Shear[6] ΦV_{sa} lb (kN)	Seismic Shear[3] $\Phi V_{sa,eq}$ lb (kN)
3/8	3,025	1,395	975	3,655	1,685	1,180	7,265	3,150	2,205	4,750	1,930	1,930
(9.5)	(13.5)	(6.2)	(4.3)	(16.3)	(7.5)	(5.2)	(32.3)	(14.0)	(9.8)	(21.1)	(8.6)	(8.6)
1/2	5,535	3,065	2,145	6,690	3,705	2,595	13,300	6,915	4,840	8,685	3,530	2,295
(12.7)	(24.6)	(13.6)	(9.5)	(29.8)	(16.5)	(11.5)	(59.2)	(30.8)	(21.5)	(38.6)	(15.7)	(10.2)
5/8	8,815	4,880	3,415	10,650	5,900	4,130	21,190	11,020	7,715	13,840	5,625	3,655
(15.9)	(39.2)	(21.7)	(15.2)	(47.4)	(26.2)	(18.4)	(94.3)	(49.0)	(34.3)	(61.6)	(25.0)	(16.3)
3/4	13,045	7,225	5,060	15,765	8,730	6,110	31,360	16,305	11,415	20,480	8,310	5,400
(19.1)	(58.0)	(32.1)	(22.5)	(70.1)	(38.8)	(27.2)	(139.5)	(72.5)	(50.8)	(91.1)	(37.0)	(24.0)
7/8	-	-	-	21,755	12,050	8,435	43,285	22,505	15,755	-	-	-
(22.2)	-	-	-	(96.8)	(53.6)	(37.5)	(192.5)	(100.1)	(70.1)	-	-	-
1	23,620	13,085	9,160	28,540	15,805	11,065	56,785	29,525	20,670	-	-	-
(25.4)	(105.1)	(58.2)	(40.7)	(127.0)	(70.3)	(49.2)	(252.6)	(131.3)	(91.9)	-	-	-
1-1/4	-	-	-	45,670	25,295	17,705	90,850	47,240	33,070	-	-	-
(31.8)	-	-	-	(203.1)	(112.5)	(78.8)	(404.1)	(210.1)	(147.1)	-	-	-

1 Tensile = $\Phi A_{se,N} f_{uta}$ as noted in ACI 318 Appendix D
2 Shear = Φ 0.60 $A_{se,N} f_{uta}$ as noted in ACI 318 Appendix D
3 Seismic Shear = $\alpha_{V,seis} \Phi V_{sa}$: Reduction factor for seismic shear only. See ACI 318 Appendix D for additional information on seismic applications
4 HIT-V and HAS-E threaded rods and HIT-Z Anchor Rods are considered brittle steel elements. HIT-V does not comply with % elongation requirements of ASTM A307 Grade A steel. HAS-E does not comply with % elongation requirements of ISO 898-1.
5 HAS Super rods are considered ductile steel elements.
6 Shear value for HIT-Z Anchor Rod is based on static shear testing with $\Phi V_{sa} \leq \Phi 0.60\ A_{se,N} f_{uta}$ as noted in ACI 318 Appendix D

Steel Design Strength for Stainless Steel Hilti HAS Threaded Rods and Hilti HIT-Z-R Stainless Steel Anchor Rods According to ACI 318 Appendix D

Anchor Diameter in. (mm)	HAS Stainless Steel ASTM F 593 - AISI 304/316 SS [4]			HIT-Z-R Anchor Rod Stainless Steel [4]		
	Tensile[1] ΦN_{sa} lb (kN)	Shear[2] ΦV_{sa} lb (kN)	Seismic Shear[3] $\Phi V_{sa,eq}$ lb (kN)	Tensile[1] ΦN_{sa} lb (kN)	Shear[5] ΦV_{sa} lb (kN)	Seismic Shear[3] $\Phi V_{sa,eq}$ lb (kN)
3/8	5,040	2,325	1,630	4,750	2,630	2,630
(9.5)	(22.4)	(10.3)	(7.3)	(21.1)	(11.7)	(11.7)
1/2	9,225	5,110	3,575	8,695	4,815	3,610
(12.7)	(41.0)	(22.7)	(15.9)	(38.7)	(21.4)	(16.1)
5/8	14,690	8,135	5,695	13,850	7,670	4,985
(15.9)	(65.3)	(36.2)	(25.3)	(61.6)	(34.1)	(22.2)
3/4	18,480	10,235	7,165	20,455	11,330	7,365
(19.1)	(82.2)	(45.5)	(31.9)	(91.0)	(50.4)	(32.8)
7/8	25,510	14,125	9,890	-	-	-
(22.2)	(113.5)	(62.8)	(44.0)	-	-	-
1	33,465	18,535	12,975	-	-	-
(25.4)	(148.9)	(82.4)	(57.7)	-	-	-
1-1/4	53,540	29,655	20,760	-	-	-
(31.8)	(238.2)	(131.9)	(92.3)	-	-	-

1 Tensile = $\Phi A_{se,N} f_{uta}$ as noted in ACI 318 Appendix D
2 Shear = Φ 0.60 $A_{se,N} f_{uta}$ as noted in ACI 318 Appendix D
3 Seismic Shear = $\alpha_{V,seis} \Phi V_{sa}$: Reduction factor for seismic shear only. See ACI 318 Appendix D for additional information on seismic applications
4 HAS Stainless Steel threaded rods and HIT-Z-R Anchor Rods are considered brittle steel elements.
5 Shear value for HIT-Z-R Anchor Rod is based on static shear testing with $\Phi V_{sa} < \Phi$ 0.60 $A_{se,N} f_{uta}$ as noted in ACI 318 Appendix D

DRAFT

Limit States Design According to CSA A23.3-04 (R2010) Annex D

The following strength design technical data is for adhesive anchors designed in accordance with CSA A23.3-04 (R2010) Annex D. This includes Hilti HIT-HY 200, HIT-RE 500-SD, and HIT-HY 100.

Steel Design Information for Hilti HIT-V and HAS Threaded Rods and Hilti HIT-Z Anchor Rods for Use with CSA A23.3-04 (R2010) Annex D

Design Information		Symbol	Units	Nominal Rod Diameter (in.)						
				3/8	1/2	5/8	3/4	7/8	1	1-1/4
Rod O.D.		d	in.	0.375	0.5	0.625	0.75	0.875	1	1.25
			(mm)	(9.5)	(12.7)	(15.9)	(19.1)	(22.2)	(25.4)	(31.8)
Rod effective cross-sectional area		A_{se}	in.^{2}	0.0775	0.1419	0.226	0.3345	0.4617	0.6057	0.9691
			(mm^2)	(50)	(92)	(146)	(216)	(298)	(391)	(625)
HIT-V ASTM A307 Grade A[1,2]	Nominal strength as governed by steel strength	N_{sa}	lb	4,650	8,515	13,560	20,070	-	36,340	-
			(kN)	(20.7)	(37.9)	(60.3)	(89.3)	-	(161.6)	-
		V_{sa}	lb	2,325	5,110	8,135	12,040	-	21,805	-
			(kN)	(10.3)	(22.7)	(36.2)	(53.6)	-	(97.0)	-
	Reduction factor, seismic shear	$\alpha_{v,seis}$	-	0.7						
	Steel strength reduction factor R for tension [3,5]	R	-	0.70						
	Steel strength reduction factor R for shear [3,5]	R	-	0.65						
HAS-E ISO 898-1 Class 5.8[1,4]	Nominal strength as governed by steel strength	N_{sa}	lb	5,620	10,290	16,385	24,250	33,475	43,915	70,260
			(kN)	(25.0)	(45.8)	(72.9)	(107.9)	(148.9)	(195.3)	(312.5)
		V_{sa}	lb	2,810	6,175	9,830	14,550	20,085	26,350	42,155
			(kN)	(12.5)	(27.5)	(43.7)	(64.7)	(89.3)	(117.2)	(187.5)
	Reduction factor, seismic shear	$\alpha_{v,seis}$	-	0.7						
	Steel strength reduction factor R for tension [3,5]	R	-	0.70						
	Steel strength reduction factor R for shear [3,5]	R	-	0.65						
HAS Super ASTM A 193 B7[1]	Nominal strength as governed by steel strength	N_{sa}	lb	9,665	17,695	28,180	41,710	57,575	75,530	120,845
			(kN)	(43.0)	(78.7)	(125.4)	(185.5)	(256.1)	(336.0)	(537.5)
		V_{sa}	lb	4,835	10,615	16,910	25,025	34,545	45,320	72,505
			(kN)	(21.5)	(47.2)	(75.2)	(111.3)	(153.7)	(201.6)	(322.5)
	Reduction factor, seismic shear	$\alpha_{v,seis}$	-	0.7						
	Steel strength reduction factor R for tension [3,5]	R	-	0.80						
	Steel strength reduction factor R for shear [3,5]	R	-	0.75						
HIT-Z Anchor Rod AISI 1038 or 18MnV5[1]	Nominal strength as governed by steel strength	N_{sa}	lb	7,306	13,377	21,306	31,472	-	-	-
			(kN)	(32.5)	(59.5)	(94.8)	(140.0)	-	-	-
		V_{sa}	lb	3,215	5,886	9,375	13,848	-	-	-
			(kN)	(14.3)	(26.2)	(41.7)	(61.6)	-	-	-
	Reduction factor, seismic shear	$\alpha_{v,seis}$	-	1	0.65			-		
	Steel strength reduction factor R for tension [3,5]	R	-	0.70				-		
	Steel strength reduction factor R for shear [3,5]	R	-	0.65				-		
HAS-R ASTM F 593, CW Stainless Steel[1]	Nominal strength as governed by steel strength	N_{sa}	lb	7,750	14,190	22,600	28,435	39,245	51,485	82,375
			(kN)	(34.5)	(63.1)	(100.5)	(126.5)	(174.6)	(229.0)	(366.4)
		V_{sa}	lb	3,875	8,515	13,560	17,060	23,545	30,890	49,425
			(kN)	(17.2)	(37.9)	(60.3)	(75.9)	(104.7)	(137.4)	(219.9)
	Reduction factor, seismic shear	$\alpha_{v,seis}$	-	0.7						
	Steel strength reduction factor R for tension [3,5]	R	-	0.70						
	Steel strength reduction factor R for shear [3,5]	R	-	0.65						
HIT-Z-R Anchor Rod Stainless Steel[1]	Nominal strength as governed by steel strength	N_{sa}	lb	7,306	13,377	21,306	31,472	-	-	-
			(kN)	(32.5)	(59.5)	(94.8)	(140.0)	-	-	-
		V_{sa}	lb	4,384	8,026	12,783	18,883	-	-	-
			(kN)	(19.5)	(35.7)	(56.9)	(84.0)	-	-	-
	Reduction factor, seismic shear	$\alpha_{v,seis}$	-	1	0.75	0.65		-		
	Steel strength reduction factor R for tension [3,5]	R	-	0.70				-		
	Steel strength reduction factor R for shear [3,5]	R	-	0.65				-		

1 Values provided for Hilti threaded rod materials based on published strengths and calculated in accordance with CSA A23.3-04 (R2010) Annex D Eq. (D-2) and Eq. (D-30). Nuts and washers must be appropriate for rod strength.
2 HIT-V does not comply with % elongation requirements of ASTM A 307 Grade A steel.
3 For use with the load combinations of CSA A23.3-04 (R2010) Clause 8.
4 HAS-E does not comply with % elongation requirements of ISO 898-1 Class 5.8 steel.
5 The current publication of CSA A23.3-04 (R2010) Annex D is for cast-in anchors and post-installed anchors that do not include adhesive post-installed anchors. It is the position of Hilti that the steel strength reduction factor, R, that is noted in this document, determined from CSA A23.30-04 (R2010) Annex D, would be appropriate for the design of threaded rods used for post-installed adhesive anchors.

DRAFT

Limit States Design According to CSA A23.3-04 (R2010) Annex D

The following are strength design values calculated from data on the previous page. This is intended for adhesive anchors designed in accordance with CSA A23.3-04 (R2010) Annex D and can be used in conjunction with the Hilti Simplified Strength Design Tables (refer to Section 3.1.7 of the 2014 Hilti Anchor Fastening Technical Guide for more information on the Hilti Simplified Tables). This includes Hilti HIT-HY 200, HIT-RE 500-SD, and HIT-HY 100.

Steel Design Strength for Carbon Steel Hilti HIT-V and HAS Threaded Rods and Hilti HIT-Z Anchor Rods According to CSA A23.3-04 (R2010) Annex D

	HIT-V ASTM A307 Grade A [4]			HAS-E ISO 898 Class 5.8 [4]			HAS-Super ASTM A193 B7 [5]			HIT-Z Anchor Rod AISI 1038 or 18MnV5 [4]		
Anchor Diameter in. (mm)	Tensile[1] N_{sr} lb (kN)	Shear[2] V_{sr} lb (kN)	Seismic Shear[3] $V_{sr,eq}$ lb (kN)	Tensile[1] N_{sr} lb (kN)	Shear[2] V_{sr} lb (kN)	Seismic Shear[3] $V_{sr,eq}$ lb (kN)	Tensile[1] N_{sr} lb (kN)	Shear[2] V_{sr} lb (kN)	Seismic Shear[3] $V_{sr,eq}$ lb (kN)	Tensile[1] N_{sr} lb (kN)	Shear[2] V_{sr} lb (kN)	Seismic Shear[3] $V_{sr,eq}$ lb (kN)
3/8	2,765	1,285	900	3,345	1,555	1,090	6,585	3,090	2,165	4,345	1,775	1,775
(9.5)	(12.3)	(5.7)	(4.0)	(14.9)	(6.9)	(4.8)	(29.3)	(13.7)	(9.6)	(19.3)	(7.9)	(7.9)
1/2	5,065	2,825	1,975	6,125	3,410	2,385	12,060	6,785	4,750	7,960	3,250	2,115
(12.7)	(22.5)	(12.6)	(8.8)	(27.2)	(15.2)	(10.6)	(53.6)	(30.2)	(21.1)	(35.4)	(14.5)	(9.4)
5/8	8,070	4,495	3,145	9,750	5,430	3,800	19,210	10,805	7,565	12,675	5,180	3,365
(15.9)	(35.9)	(20.0)	(14.0)	(43.4)	(24.2)	(16.9)	(85.4)	(48.1)	(33.6)	(56.4)	(23.0)	(15.0)
3/4	11,940	6,650	4,655	14,430	8,040	5,630	28,430	15,990	11,195	18,725	7,650	4,975
(19.1)	(53.1)	(29.6)	(20.7)	(64.2)	(35.8)	(25.0)	(126.5)	(71.1)	(49.8)	(83.3)	(34.0)	(22.1)
7/8	-	-	-	19,915	11,095	7,765	39,245	22,075	15,450	-	-	-
(22.2)	-	-	-	(88.6)	(49.4)	(34.5)	(174.6)	(98.2)	(68.7)	-	-	-
1	21,620	12,045	8,430	26,125	14,555	10,190	51,485	28,960	20,270	-	-	-
(25.4)	(96.2)	(53.6)	(37.5)	(116.2)	(64.7)	(45.3)	(229.0)	(128.8)	(90.2)	-	-	-
1-1/4	-	-	-	41,805	23,290	16,305	82,370	46,335	32,435	-	-	-
(31.8)	-	-	-	(186.0)	(103.6)	(72.5)	(366.4)	(206.1)	(144.3)	-	-	-

1 Tensile = A_{se} Φ_s f_{ut} R as noted in CSA A23.3-04 (R2010) Annex D
2 Shear = A_{se} Φ_s 0.60 f_{ut} R as noted in CSA A23.3-04 (R2010) Annex D
3 Seismic Shear = $\alpha_{V,seis}$ V_{sr} : Reduction factor for seismic shear only. See CSA A23.3-04 (R2010) Annex D for additional information on seismic applications
4 HIT-V and HAS-E threaded rods and HIT-Z Anchor Rods are considered brittle steel elements. HIT-V does not comply with % elongation requirements of ASTM A307 Grade A steel. HAS-E does not comply with % elongation requirements of ISO 898-1.
5 HAS Super rods are considered ductile steel elements.
6 Shear value for HIT-Z Anchor Rod is based on static shear testing with $V_{sr} < A_{se}$ Φ_s 0.60 f_{ut} R as noted in CSA A23.3-04 (R2010) Annex D
7 The current publication of CSA A23.3-04 (R2010) Annex D is for cast-in anchors and post-installed anchors that do not include adhesive post-installed anchors. It is the position of Hilti that the steel strength reduction factor, R, used for calculating the values in this table and determined from CSA A23.3-04 (R2010) Annex D, would be appropriate for the design of threaded rods used for post-installed adhesive anchors.

Steel Design Strength for Stainless Steel Hilti HAS Threaded Rods and Hilti HIT-Z-R Stainless Steel Anchor Rods According to CSA A23.3-04 (R2010) Annex D

	HAS Stainless Steel ASTM F 593 - AISI 304/316 SS [4]			HIT-Z-R Anchor Rod Stainless Steel [4]		
Anchor Diameter in. (mm)	Tensile[1] N_{sr} lb (kN)	Shear[2] V_{sr} lb (kN)	Seismic Shear[3] $V_{sr,eq}$ lb (kN)	Tensile[1] N_{sr} lb (kN)	Shear[2] V_{sr} lb (kN)	Seismic Shear[3] $V_{sr,eq}$ lb (kN)
3/8	4,610	2,140	1,500	4,345	2,420	1,695
(9.5)	(20.5)	(9.5)	(6.7)	(19.3)	(10.8)	(7.5)
1/2	8,445	4,705	3,295	7,960	4,435	3,105
(12.7)	(37.6)	(20.9)	(14.7)	(35.4)	(19.7)	(13.8)
5/8	13,445	7,490	5,245	12,675	7,065	4,945
(15.9)	(59.8)	(33.3)	(23.3)	(56.4)	(31.4)	(22.0)
3/4	16,915	9,425	6,600	18,725	10,435	7,305
(19.1)	(75.2)	(41.9)	(29.4)	(83.3)	(46.4)	(32.5)
7/8	23,350	13,010	9,105	-	-	-
(22.2)	(103.9)	(57.9)	(40.5)	-	-	-
1	30,635	17,065	11,945	-	-	-
(25.4)	(136.3)	(75.9)	(53.1)	-	-	-
1-1/4	49,010	27,305	19,115	-	-	-
(31.8)	(218.0)	(121.5)	(85.0)	-	-	-

1 Tensile = A_{se} Φ_s f_{ut} R as noted in CSA A23.3-04 (R2010) Annex D
2 Shear = A_{se} Φ_s 0.60 f_{ut} R as noted in CSA A23.3-04 (R2010) Annex D
3 Seismic Shear = $\alpha_{V,seis}$ V_{sr} : Reduction factor for seismic shear only. See CSA A23.3-04 (R2010) Annex D for additional information on seismic applications
4 HAS Stainless Steel threaded rods and HIT-Z-R Anchor Rods are considered brittle steel elements.
5 Shear value for HIT-Z-R Anchor Rod is based on static shear testing with $V_{sr} < A_{se}$ Φ_s 0.60 f_{ut} R as noted in CSA A23.3-04 (R2010) Annex D
6 The current publication of CSA A23.3-04 (R2010) Annex D is for cast-in anchors and post-installed anchors that do not include adhesive post-installed anchors. It is the position of Hilti that the steel strength reduction factor, R, used for calculating the values in this table and determined from CSA A23.3-04 (R2010) Annex D, would be appropriate for the design of threaded rods used for post-installed adhesive anchors.

DRAFT

Technical Data — Allowable Stress Design (ASD)

The following strength design technical data is for adhesive anchors that will be designed in accordance with the Allowable Stress Design Method (ASD). This includes Hilti HIT-HY 70 for masonry, HIT-RE 500, HIT-ICE, HIT-HY 10 PLUS, HFX, HTE 50 and HVU Capsules.

Note:
- Hilti HIT-V threaded rods are not applicable for use with Hilti HVU Capsules since the end of the rod does not have a chisel point to break and mix the capsules during installation.
- Hilti HIT-Z Anchor Rods do not have ASD load data since they are only used in conjunction with Hilti HIT-HY 200.

Allowable Steel Strength for Hilti HIT-V and HAS Threaded Rods [1]

Anchor Diameter in. (mm)	HIT-V ASTM A307 Grade A [2]		HAS-E ISO 898 Class 5.8 [2]		HAS-Super ASTM A193 B7		HAS Stainless Steel ASTM F 593 - AISI 304/316 SS	
	Tensile lb (kN)	Shear lb (kN)	Tensile lb (kN)	Shear lb (kN)	Tensile lb (kN)	Shear lb (kN)	Tensile lb (kN)	Shear lb (kN)
3/8 (9.5)	2,185 (9.7)	1,125 (5.0)	2,640 (11.7)	1,360 (6.0)	4,555 (20.3)	2,345 (10.4)	3,645 (16.2)	1,875 (8.3)
1/2 (12.7)	3,885 (17.3)	2,000 (8.9)	4,700 (20.9)	2,420 (10.8)	8,100 (36.0)	4,170 (18.5)	6,480 (28.8)	3,335 (14.8)
5/8 (15.9)	6,075 (27.0)	3,130 (13.9)	7,340 (32.6)	3,780 (16.8)	12,655 (56.3)	6,520 (29.0)	10,125 (45.0)	5,215 (23.2)
3/4 (19.1)	8,750 (38.9)	4,505 (20.0)	10,570 (47.0)	5,445 (24.2)	18,225 (81.1)	9,390 (41.8)	12,390 (55.1)	6,385 (28.4)
7/8 (22.2)	- -	- -	14,385 (64.0)	7,410 (33.0)	24,805 (110.3)	12,780 (56.8)	16,865 (75.0)	8,690 (38.7)
1 (25.4)	15,550 (69.2)	8,010 (35.6)	18,790 (83.6)	9,680 (43.1)	32,400 (144.1)	16,690 (74.2)	22,030 (98.0)	11,350 (50.5)
1-1/4 (31.8)	- -	- -	29,360 (130.6)	15,125 (67.3)	50,620 (225.2)	26,080 (116.0)	34,425 (153.1)	17,735 (78.9)

1 Steel strength as defined in AISC Manual of Steel Construction (ASD):
Tensile = 0.33 x F_u x Nominal Area
Shear = 0.17 x F_u x Nominal Area
2 HIT-V and HAS-E do not comply with % elongation requirements of ASTM A 307 Grade A and ISO 898-1 specifications and are considered a brittle element.

Ultimate Steel Strength for Hilti HIT-V and HAS Threaded Rods [1]

Anchor Diameter in. (mm)	HIT-V ASTM A307 Grade A [2]			HAS Standard ISO 898 Class 5.8 [2]			HAS-Super ASTM A193 B7			HAS Stainless Steel ASTM F 593 - AISI 304/316 SS		
	Yield lb (kN)	Tensile lb (kN)	Shear lb (kN)	Yield lb (kN)	Tensile lb (kN)	Shear lb (kN)	Yield lb (kN)	Tensile lb (kN)	Shear lb (kN)	Yield lb (kN)	Tensile lb (kN)	Shear lb (kN)
3/8 (9.5)	2,905 (12.9)	4,970 (22.1)	2,980 (13.3)	4,495 (20.0)	6,005 (26.7)	3,605 (16.0)	8,135 (36.2)	10,350 (46.0)	6,210 (27.6)	5,035 (22.4)	8,280 (36.8)	4,970 (22.1)
1/2 (12.7)	5,320 (23.7)	8,835 (39.3)	5,300 (23.6)	8,230 (36.6)	10,675 (47.5)	6,405 (28.5)	14,900 (66.3)	18,405 (81.9)	11,040 (49.1)	9,225 (41.0)	14,720 (65.5)	8,835 (39.3)
5/8 (15.9)	8,475 (37.7)	13,805 (61.4)	8,285 (36.9)	13,110 (58.3)	16,680 (74.2)	10,010 (44.5)	23,730 (105.6)	28,760 (127.9)	17,260 (76.8)	14,690 (65.3)	23,010 (102.4)	13,805 (61.4)
3/4 (19.1)	12,545 (55.8)	19,880 (88.4)	11,930 (53.1)	19,400 (86.3)	24,020 (106.8)	14,415 (64.1)	35,120 (156.2)	41,420 (184.2)	24,850 (110.5)	15,050 (66.9)	28,165 (125.3)	16,800 (74.7)
7/8 (22.2)	- -	- -	- -	26,780 (119.1)	32,695 (145.4)	19,620 (87.3)	48,480 (215.6)	56,370 (250.7)	33,825 (150.5)	20,775 (92.4)	38,335 (170.5)	23,000 (102.3)
1 (25.4)	22,715 (101.0)	35,345 (157.2)	21,205 (94.3)	35,130 (156.3)	42,705 (190.0)	25,625 (114.0)	63,600 (282.9)	73,630 (327.5)	44,180 (196.5)	27,255 (121.2)	50,070 (222.7)	30,040 (133.6)
1-1/4 (31.8)	- -	- -	- -	56,210 (250.0)	66,730 (296.8)	40,035 (178.1)	101,755 (452.6)	115,050 (511.8)	69,030 (307.1)	43,610 (194.0)	78,235 (348.0)	46,940 (208.8)

1 Steel strength as defined in AISC Manual of Steel Construction 2nd Ed. (LRFD):
Yield = F_y x Tensile stress area
Tensile = 0.75 x F_u x Nominal Area
Shear = 0.45 x F_u x Nominal Area
2 HIT-V and HAS-E do not comply with % elongation requirements of ASTM A 307 Grade A and ISO 898-1 specifications and are considered a brittle element.

DRAFT

Ordering Information

Hilti HIT-Z Anchor Rods for Hilti HIT-HY 200 Anchoring System



HIT-Z Carbon Steel		HIT-Z-R 316 Stainless Steel	
Description	Qty	Description	Qty
3/8" x 4-3/8"	40	**3/8" x 4-3/8"**	40
3/8"x 5-1/8"	40	**3/8"x 5-1/8"**	40
3/8" x 6-3/8"	40	**3/8" x 6-3/8"**	40
1/2" x 4-1/2"	20	**1/2" x 4-1/2"**	20
1/2" x 6-1/2"	20	**1/2" x 6-1/2"**	20
1/2" x 7-3/4"	20	**1/2" x 7-3/4"**	20
5/8" x 6"	12	**5/8" x 6"**	12
5/8" x 8"	12	**5/8" x 8"**	12
5/8" x 9-1/2"	12	**5/8" x 9-1/2"**	12
3/4" x 8-1/2"	6	**3/4" x 8-1/2"**	6
3/4" x 9-3/4"	6	**3/4" x 9-3/4"**	6



Hilti Rods are now stamped on the end to show grade of steel and overall anchor length!



"/_\" = HIT-Z
"J" = Length Code



"E" = HAS-E
"6 1/2" = Length



"B" = HAS SUPER
"6 1/2" = Length



"V" = HIT-V
"6 1/2" = Length



"R1" = HAS-R 304 SS
"6 1/2" = Length



"R2" = HAS-R 316 SS
"6 1/2" = Length

Length ID code on bolt head — HIT-Z(-R)		**F**	**G**	**H**	**J**	**K**	**M**	**N**	**O**	**Q**
Length of HIT-Z(-R), ℓ (in)	From	4	4.5	5	6	6.5	7.5	8	8.5	9.5
	Up to but not including	4.5	5	5.5	6.5	7	8	8.5	9	10

Hilti HIT-V and HAS Threaded Anchor Rods for Hilti Chemical Anchoring Systems





HIT-V, A307 Steel		HAS-E, 5.8 Steel		HAS Super, B7 High Str. Steel		HAS-R 304 Stainless Steel		HAS-R 316 Stainless Steel	
Description	Qty	Description	Qty	Description	Qty	Description	Qty	Description	Qty
-	-	**3/8" x 3"**	10	-	-	-	-	-	-
3/8" x 4-1/2"	10	**3/8" x 4-3/8"**	10	-	-	-	-	-	-
3/8" x 5-1/2"	20	**3/8" x 5-1/8"**	20	**3/8" x 5-1/8"**	20	**3/8" x 5-1/8"**	20	**3/8" x 5-1/8"**	20
3/8" x 8"	10	**3/8" x 8"**	10	-	-	**3/8" x 8"**	10	**3/8" x 8"**	10
-	-	**3/8" x 12"**	10	-	-	-	-	-	-
-	-	**1/2" x 3-1/8"**	10	-	-	-	-	-	-
1/2" x 4-1/2"	10	**1/2" x 4-1/2"**	10	-	-	-	-	-	-
1/2" x 6-1/2"	20	**1/2" x 6-1/2"**	20	**1/2" x 6-1/2"**	20	**1/2" x 6-1/2"**	20	**1/2" x 6-1/2"**	20
1/2" x 8"	10	**1/2" x 8"**	10	-	-	**1/2" x 8"**	10	**1/2" x 8"**	10
-	-	**1/2" x 10"**	10	-	-	**1/2" x 10"**	10	**1/2" x 11"**	10
-	-	**1/2" x 12"**	10	-	-	-	-	**1/2" x 12"**	10
5/8" x 6"	10	**5/8" x 6"**	10	-	-	-	-	-	-
5/8" x 8"	20	**5/8" x 8"**	20	**5/8" x 7-5/8"**	20	**5/8" x 7-5/8"**	20	**5/8" x 7-5/8"**	20
5/8" x 10"	10	**5/8" x 9"**	10	-	-	**5/8" x 10"**	10	**5/8" x 9"**	10
5/8" x 12"	10	**5/8" x 12"**	10	-	-	-	-	**5/8" x 12"**	10
-	-	**5/8" x 17"**	10	-	-	-	-	-	-
3/4" x 6"	10	**3/4" x 6"**	10	-	-	-	-	-	-
3/4" x 8"	10	**3/4" x 8"**	10	-	-	-	-	-	-
3/4" x 10"	10	**3/4" x 10"**	10	**3/4" x 9-5/8"**	10	**3/4" x 9-5/8"**	10	**3/4" x 9-5/8"**	10
-	-	**3/4" x 11"**	10	-	-	-	-	**3/4" x 10"**	10
3/4" x 12"	10	**3/4" x 12"**	10	-	-	**3/4" x 12"**	10	-	-
-	-	**3/4" x 14"**	10	**3/4" x 14"**	10	**3/4" x 14"**	10	-	-
3/4" x 16"	10	**3/4" x 17"**	10	-	-	**3/4" x 16"**	10	**3/4" x 16"**	10
-	-	**3/4" x 19"**	10	-	-	-	-	-	-
-	-	**3/4" x 21"**	10	-	-	-	-	-	-
-	-	**3/4" x 25"**	10	-	-	-	-	-	-
-	-	**7/8" x 10"**	10	**7/8" x 10" HDG**[1]	5	**7/8" x 10"**	10	**7/8" x 10"**	10
-	-	**7/8" x 13"**	10	**7/8" x 12" HDG**[1]	5	-	-	-	-
-	-	-	-	**7/8" x 16" HDG**[1]	5	-	-	**7/8" x 16"**	10
1" x 12"	4	**1" x 12"**	4	**1" x 12"**	4	**1" x 12"**	4	**1" x 12"**	4
-	-	**1" x 14"**	2	**1" x 14"**	2	-	-	-	-
-	-	**1" x 16"**	2	**1" x 16"**	2	-	-	**1" x 16"**	2
-	-	**1" x 20"**	2	**1" x 20"**	2	-	-	**1" x 20"**	2
-	-	**1-1/4" x 16"**	4	**1-1/4" x 16"**	4	-	-	-	-
-	-	**1-1/4" x 22"**	4	**1-1/4" x 22"**	4	-	-	-	-

1 Hot Dip Galvanized

DRAFT

FIRM PROPOSAL TO S PPL SEWAGE DEGRITTING DROC CLONES

ydro-Dyne Engineering

Michael Trew
FLSmidth SA, Inc.
Ph: 520-744-8200
Email: michael.trew@flsmidth.com
August 20, 2018

Hydro-Dyne Engineering does not provide installation or any accessory unless noted in the Scope of Work.

FLSmidth Krebs Products



millMAX ™ Pumps



KREBS ® gMAX Cyclones



Technequip ™ Knife Gate Valves

DRAFT

KREBS ENGINEERS

Excelling in separation solutions since 1952

BULLETIN

2-200

Krebs Sewage Degritting Cyclones

Krebs Sewage Degritting Cyclones are used extensively in sewage treatment plants to remove grit, sand, and other inorganic solids from the primary clarifier or grit chamber underflow. Cyclones are more efficient and cost less than gravity sedimentation systems. Debris such as pencils, bottle caps, and other debris found in the raw sewage cause abrasive wear on process equipment and can damage the operation of the digester. Deposited inorganic material causes loss of digester capacity and will eventually result in a complete plant shutdown for cleaning and renovation.

Krebs Sewage Degritting Cyclones are designed to remove at least 98% of the grit entering the feed inlet that is larger than 150 mesh and having specific gravity of 2.65 or greater.

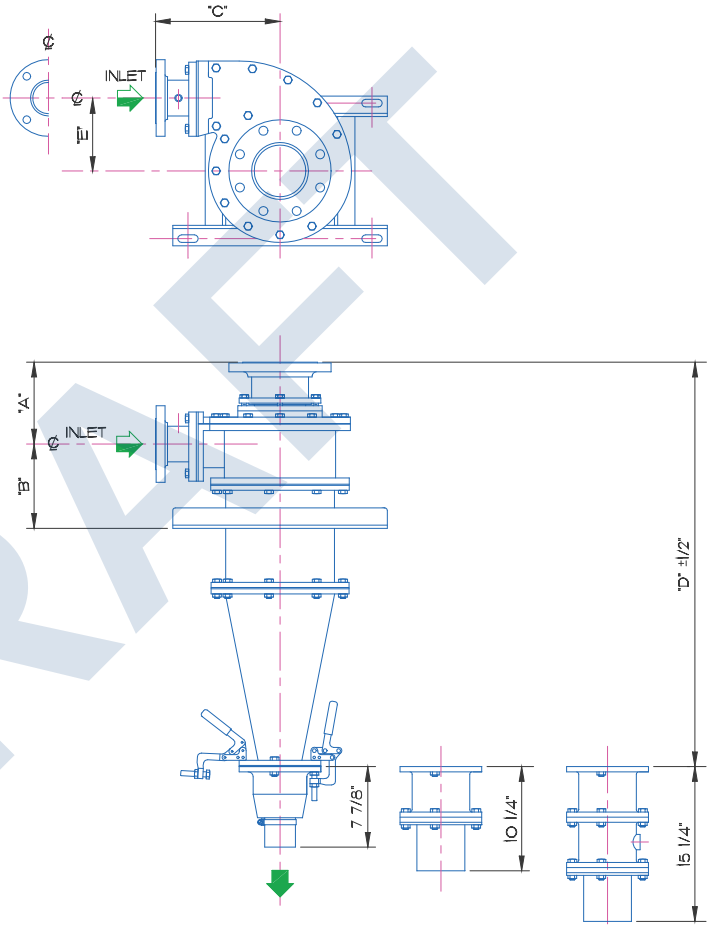

Features & Benefits:

- Fabricated and cast carbon steel housings
- Involuted feed entry
- Neoprene replaceable liners — other liners available on request
- Hinged apex housing to allow access for cleanout without disconnecting any piping
- Nihard vortex finder
- Choice of manually adjustable or fixed apex

Dimensional Data

UNIT	INLET	O'FLOW	A	B	C	D	E
D10B	3	4	7-3/4"	8-1/4"	12-1/4"	39-1/4"	7-1/8"
D10LB	4	5	7-3/4"	9-3/4"	13-3/8"	41-1/4"	8-7/8"
D15B	4	6	9-5/8"	7"	15"	63"	10"
D20B	6	8	10"	16"	16-3/4"	93"	13-1/2"

DRAFT

CORPORATE OFFICES 5505 WEST GILLETTE ROAD TUCSON ARIZONA 85743 USA TEL [520] 744-8200 FAX [520] 744-8300 www.krebs.com

FLSmidth SA, Inc.
5505 W. Gillette Rd., Tucson, AZ 85743
Ph: 520-744-8200 – Fax: 520-744-8300

Hydro-Dyne Engineering

Attention: Ms. Rebecca Tyser; Mr. Tim Hunt
Subject: Message from KM_C454e
Email: rebecca.tyser@hydro-dyne.com

change to 4"

Proposal No.: DH 713001-2 Rev 2

Ms. Tyser,

Based upon the information provided, FLSmidth USA, Inc. offers the following proposal. Please note that the attached drawings are for reference only and not for construction.

Sewage Degritting Hydrocyclone

One (1) Krebs Model D10LB-844-SDM Hydrocyclone .....
Complete with fabricated carbon steel housings, replaceable neoprene liners for all housing
Δ2 sections, a 3.5" nihard vortex finder, 9.6 sq. in. neoprene inlet head liner and a fixed 2" neoprene apex liner. The inlet and overflow connections are standard victaulic grooves. Also included are quick release toggle clamps for the apex and 1.25" pressure gauge connections on the inlet adapters.

Pressure Gauge Assembly.....

Complete with a protective diaphragm, 0 to 30 psi dial and 1.25" connection

Victaulic Connections.....

Includes one 4" Victaulic flange for the cyclone inlet; one 6" Victaulic 11.25° elbow, one 6" Victaulic coupling, and one 6" Victaulic flange for the cyclone overflow.

References: Similar to Drawing No. S844-SDM-160846U

***Mounting brackets are to be parallel to inlet.

DRAFT

The information transmitted by this document is the proprietary and confidential property of FLSmidth and may not be duplicated, disclosed or utilized without written consent from FLSmidth.

FLSmidth SA, Inc.
5505 W. Gillette Rd., Tucson, AZ 85743
Ph: 520-744-8200 – Fax: 520-744-8300

Additional Information

For Combined Sewer systems or any system with potential for large amounts of rocks, or large particles longer than ½" in any dimension we recommend the following to prevent orbiting and premature wear on the cyclone which can then disrupt performance and if not watched closely then the wear can go through the liners to the housings.

- Installing finer screens or other equipment to remove and prevent these particles going to the cyclone
- Stopping the cyclone at least every 1-4 hours and allow the cyclone to completely discharge (at least 10 seconds) before starting the pump and therefore cyclone again.
- Installing the cyclone at 45 degrees and stopping the cyclone and allowing it to discharge completely as described above to ensure any particles and large rocks discharge and do not cause orbiting and premature wear.
- Inspecting the cyclone more frequently for these types of systems looking for wear, for any particles remaining in the cyclone, any plugging of the apex, inlet or any other part of the cyclone and piping.
- Install a larger apex decreasing likelihood of plugging.

<u>If any of these non-standard methods will be used, you need to ask for more information and a requote as they may require different options.</u>

APEX TYPE

Fixed apex: If change in apex size is needed you can easily remove and order a new apex. Neoprene or BPC rubber apex insert available. Apex can be accessed to be inspected, cleaned or changed while cyclone is installed using quick disconnect clamp setup.

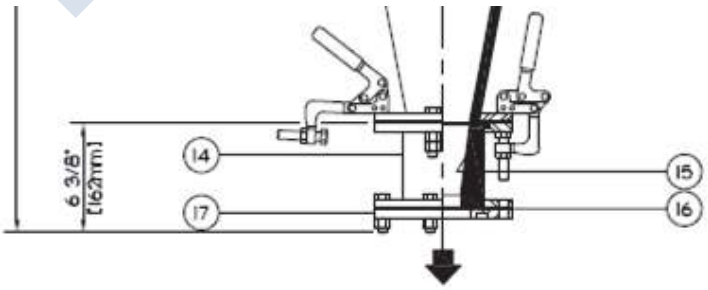

Fig. 1 Fixed Apex Assembly

The information transmitted by this document is the proprietary and confidential property of FLSmidth and may not be duplicated, disclosed or utilized without written consent from FLSmidth.

DRAFT

FLSmidth SA, Inc.
5505 W. Gillette Rd., Tucson, AZ 85743
Ph: 520-744-8200 – Fax: 520-744-8300

MOUNTING BRACKETS

You need to specify the mountain brackets to be perpendicular or parallel to the inlet with the order (same price). Otherwise we will use the standard parallel to inlet.

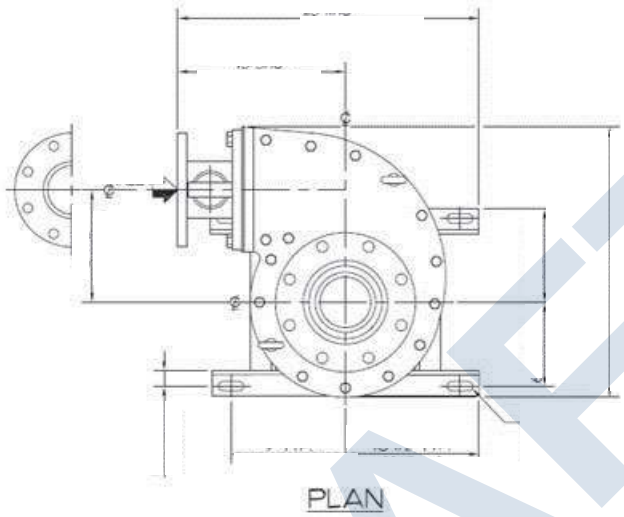

Fig. 2 Above is the standard mounting bracket (parallel to the inlet)

SIPHON CONTROL

****Important note**** siphon prevention. Siphoning can occur if the overflow pipe (stream with water with grit removed) path goes below ıe elevation of the cyclone inlet/inlet pipe. Siphoning disrupts cyclone operation anc must be prevented. The most common method is a vent pipe. The vent should connecl on the run from the cyclone overflow to the elbow (the highest elevation on the cyclc ıe overflow pipe). The vent pipe should be at least half of the overflow pipe diamete and extend at least 3 feet above the level of the pipe top elevation on the inlet to t e cyclone.

Below sketch showing the siphon vent setup as it relates to the cyclone.

Siphon vent setup or some siphon prevention required to prevent siphoning if overflow pipe goes below cyclone inlet maximum elevation.

The information transmitted by this document is the proprietary and confidential property of FLSmidth and may not be duplicated, disclosed or utilized without written consent from FLSmidth.

FLSmidth SA, Inc.
5505 W. Gillette Rd., Tucson, AZ 85743
Ph: 520-744-8200 – Fax: 520-744-8300

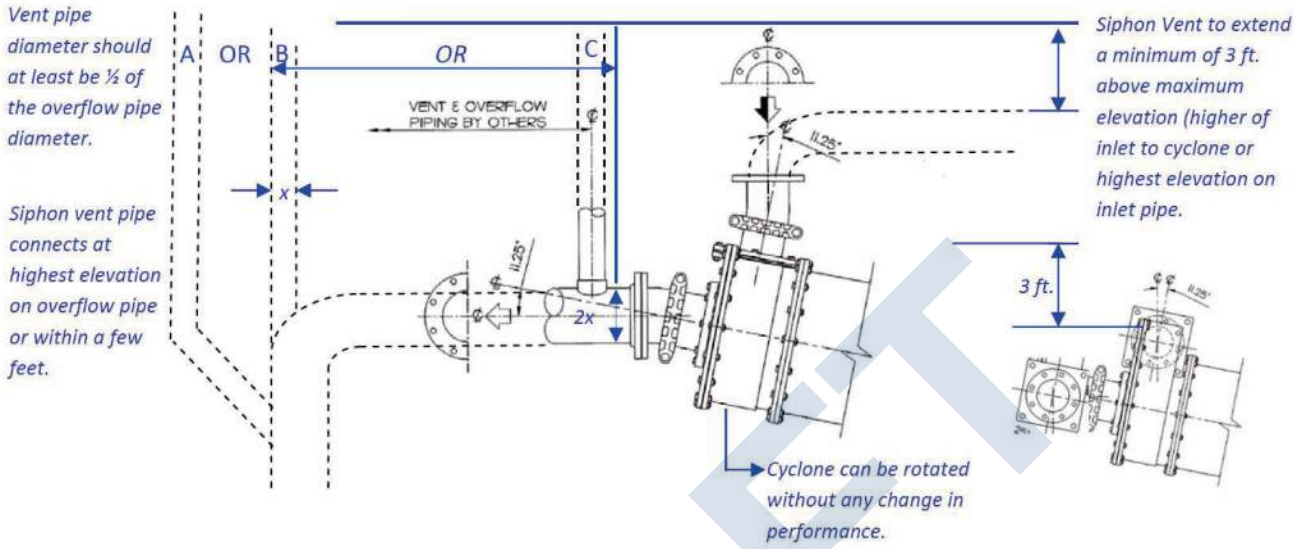

Fig. 3 Siphon Vent Setup & Recommendation for Minimum Requirement

Position A is best to prevent splashing. Position B is ok. Position C will sometimes splash if it's close to the cyclone. Extending the vent pipe higher usually helps prevent splashing.

DRAFT

The information transmitted by this document is the proprietary and confidential property of FLSmidth and may not be duplicated, disclosed or utilized without written consent from FLSmidth.

FLSmidth SA, Inc.
5505 W. Gillette Rd., Tucson, AZ 85743
Ph: 520-744-8200 – Fax: 520-744-8300

Clarification and Exceptions:

Please be advised all, or part, of the Technical Specifications were not made available to FLSmidth Krebs at the time of this proposal in the selection of equipment and peripheral items. Once available for review, a revised proposal may be required.

- Welding will be in accordance with AWS D1.1 specifications. Steel will be general structural grade steel (Q235B).
- If required by the contract, structural calculations can be provided in accordance with the IBC (International Building Code) for an additional fee.

TECHNICAL ASSISTANCE:

If requested Krebs can provide technical or mechanical troubleshooting assistance at a rate of $1,320 USD per day plus normal travel expenses, meals, and hotel accommodations plus 10% supported by invoices will be assessed. Schedule to be coordinated with Krebs Sales Engineer to find mutually agreeable dates.

Delivery:

Without approval drawings:

(GA Drawing shall be produced and sent to you as "FINAL- Manufacturing has commenced". The order will immediately go into production)

- Shipment of equipment: *8-10 weeks after the date of receipt of Purchase Order.
- The above proposal is quoted as Incoterms 2010 Ex-Works Factory.

***NOTES:**

- *If improved delivery is needed, please contact FLSmidth and request target lead time, we might be able to improve at no extra cost. If an urgent rush is necessary we may have the ability to expedite further at extra cost if needed.*
- *Once production has commenced any request for change/s may result to change order and a change in delivery date will be applicable.*
- *If required, GA drawings for approval can be provided at a COST ADDER and shall be produced and sent to you as "FOR APPROVAL- Manufacturing will not commence until approval is received".*

DRAFT

The information transmitted by this document is the proprietary and confidential property of FLSmidth and may not be duplicated, disclosed or utilized without written consent from FLSmidth.

Krebs Cyclone
Model No.: D10LB-SDM

CAPACITY CURVE
No.: D10LB-SDM-960-(11.25)-1197

9.60 SQ. IN. INLET ORIFICE

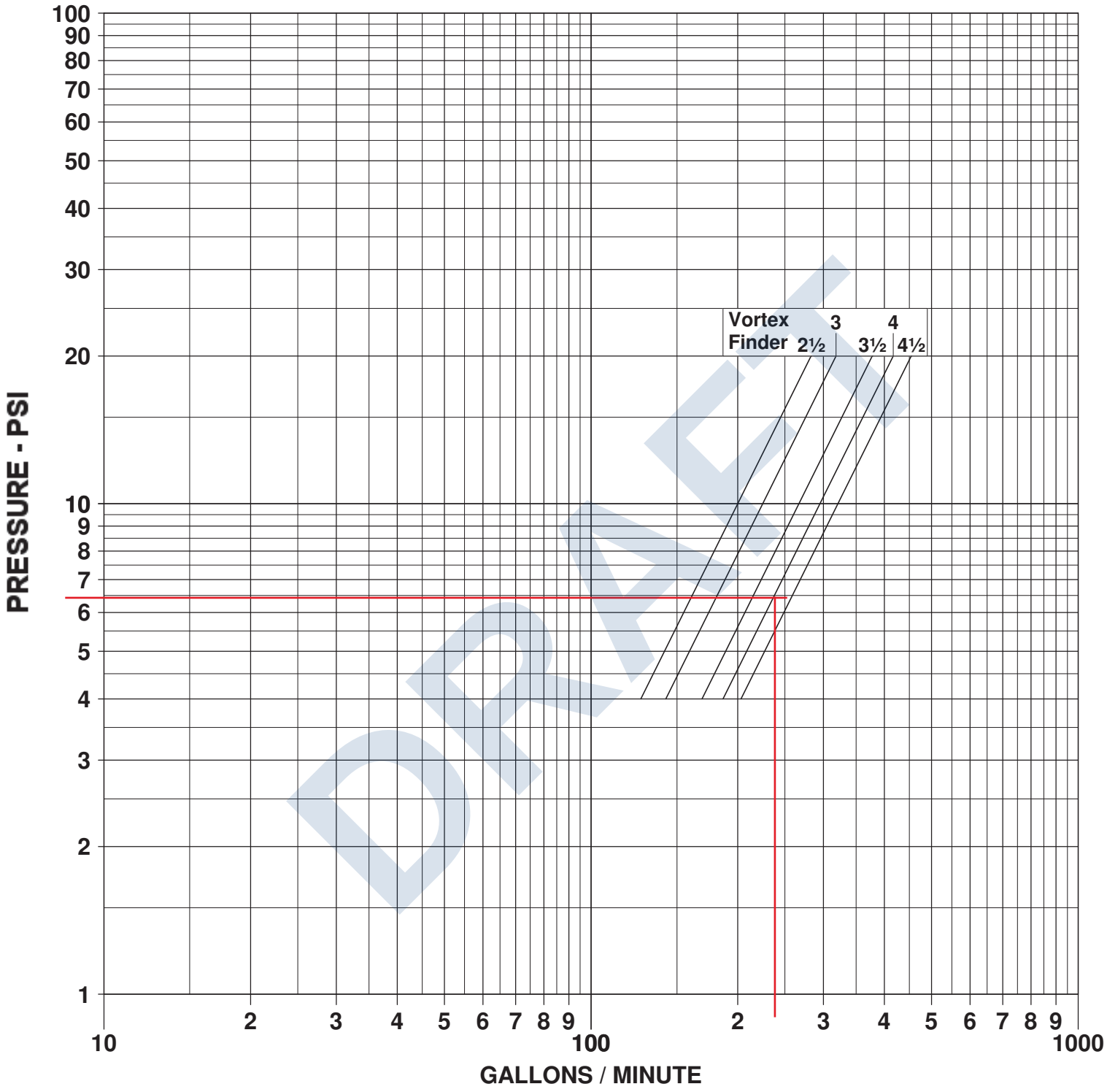

DRAFT

CAPACITY IS BASED ON WATER AT AMBIENT TEMPERATURE AND APEX DIAMETER EQUAL TO ONE HALF THE VORTEX FINDER DIAMETER, AND MAY VARY AT DIFFERENT RATIOS

This sheet is the property of Krebs Engineers, Tucson Arizona, and is loaned under the express condition that it is not to be used in any manner directly or indirectly detrimental to Krebs Engineers

KREBS ENGINEERS
5505 West Gillette Road
Tucson, AZ 85743
TEL: (520) 744-8200
FAX: (520) 744-8300
e-mail: www.krebs.com

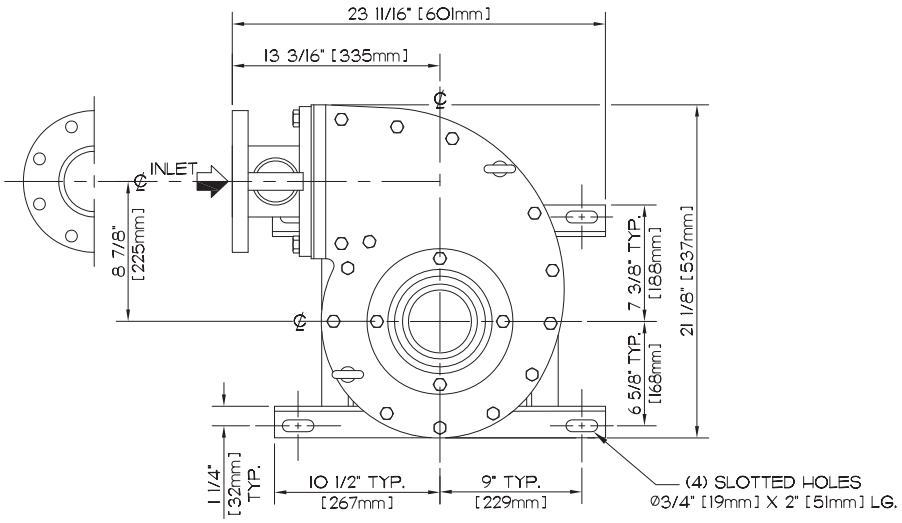

PLAN
(VICTAULIC FITTINGS NOT SHOWN)

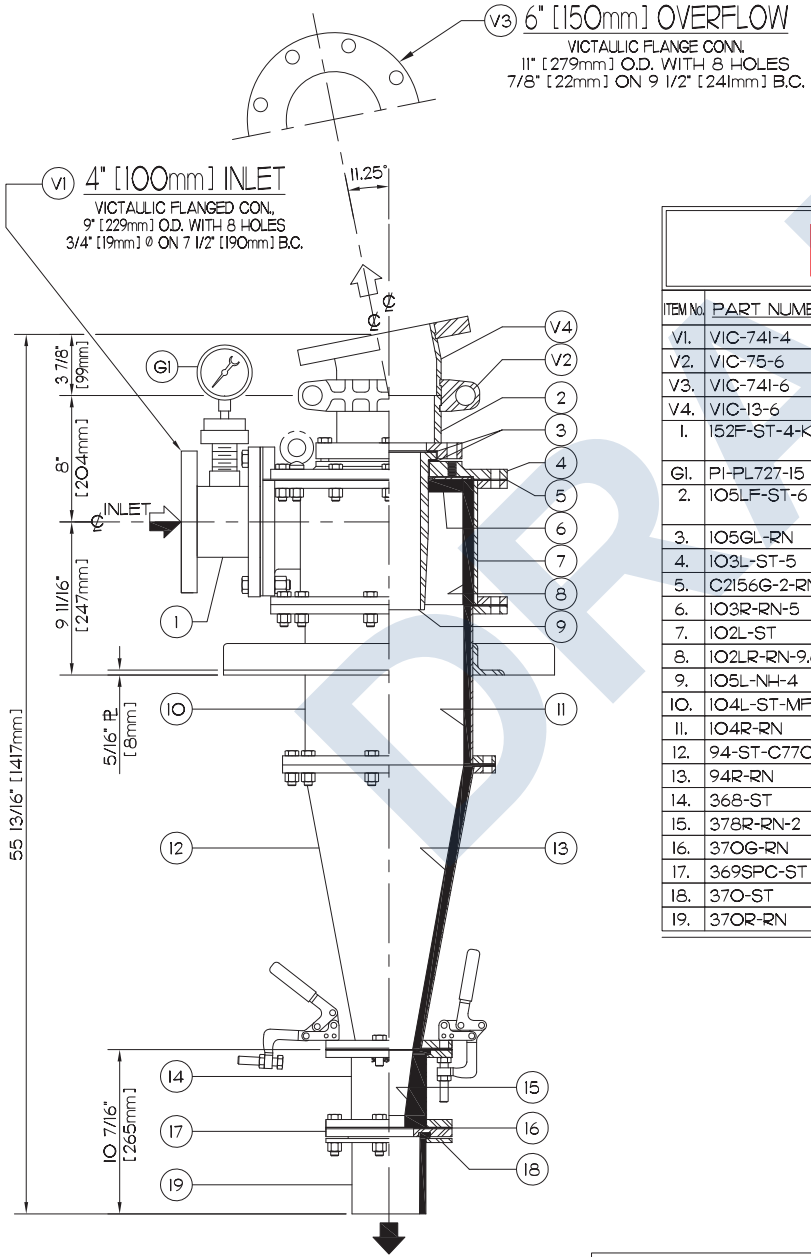

FASTENER REQUIREMENTS				
CONNECTION	DESCRIPTION	SIZE	LENGTH	QTY
1 TO 4	HEX BOLT	5/8-11	1 1/2"	2
1 TO 7	HEX BOLT & NUT	5/8-11	2 1/4"	2
2 TO 4	HEX BOLT	1/2-13	2"	4
4 TO 7	HEX BOLT & NUT	1/2-13	2"	14
4 TO 7	EYE BOLT & HEX NUT	1/2-13	2"	2
7 TO 10	HEX BOLT & NUT	1/2-13	2"	8
10 TO 12	HEX BOLT & NUT	1/2-13	2"	8
14 TO 17 & 18	HEX BOLT & NUT	1/2-13	2 1/4"	4

FASTENER NOTES:
1. ALL BOLTS AND NUTS, TO BE SAE IMPERIAL GRADE 5 ZINC PLATED. (OTHER GRADE/PLATING CAN BE OFFERED)
2. NUTS SUPPLIED TO BE NYLON LOCKING.
3. WASHERS TO BE USED ON ALL SLOTTED HOLES.
4. PLEASE NOTIFY CUSTOMER SERVICES OF ANY DEVIATION IN THIS LIST.
5. NO PAYMENT FOR CUSTOMER MODIFICATIONS, BACK CHARGES, OR ANY OTHER CHANGES WILL BE ACCEPTED, UNLESS PREVIOUSLY AUTHORIZED BY FLSmidth KREBS.
6. QUANTITIES SHOWN ARE FOR THE ASSEMBLY OF ONE CYCLONE.

Mounting brackets as shown are parallel to the inlet. Parallel as shown is standard but perpendicular to the inlet (rotated 90 degrees) is available at no additional cost. Please confirm with orders the orientation of brackets to be parallel or perpendicular to the inlet.

Vortex Finder and apex sizing to be confirmed before or with order. We can size them for you if you provide flow rate, acceptable pressure drop and % of flow to underflow for sizing apex standard apex size is 1/2 size of vortex finder size which when mounted 11.25 from horizontal gives 3% of inlet flow to underflow.

FOR REFERENCE ONLY
NOT FOR CONSTRUCTION

ITEM No.	PART NUMBER	DESCRIPTION
V1.	VIC-741-4	VICTAULIC ADAPTER FLANGE STYLE 741, 4" SIZE, STEEL
V2.	VIC-75-6	VICTAULIC COUPLING, 6" SIZE, STEEL
V3.	VIC-741-6	VICTAULIC ADAPTER FLANGE STYLE 741, 6" SIZE, STEEL
V4.	VIC-13-6	VICTAULIC 11.25° ELBOW, 6" SIZE, STEEL
1.	152F-ST-4-KEE	INLET FLANGED ADAPTER, 4" SIZE, VICTAULIC GROOVED CONN., WITH 1.25" NPT CONNECTION, UNLINED STEEL.
G1.	PI-PL727-15	PRESSURE GAUGE ASSEMBLY , (0-15) PSI GRADUATIONS.
2.	105LF-ST-6	OVERFLOW FLANGED ADAPTER, 6" SIZE, VICTAULIC GROOVED CONN., UNLINED STEEL.
3.	105GL-RN	GASKET, NEOPRENE. (2 REQUIRED.)
4.	103L-ST-5	TOP COVER PLATE, STEEL.
5.	C2156G-2-RN	GASKET, NEOPRENE.
6.	103R-RN-5	TOP COVER PLATE LINER, NEOPRENE.
7.	102L-ST	INLET HEAD, STEEL.
8.	102LR-RN-9.6	INLET HEAD LINER, 9.6 SQ. IN. INLET ORIFICE, NEOPRENE.
9.	105L-NH-4	VORTEX FINDER, 4" SIZE, NIHARD.
10.	104L-ST-MF	CYLINDER WITH MOUNTING FRAME, STEEL.
11.	104R-RN	CYLINDER SECTION LINER, NEOPRENE.
12.	94-ST-C7709	CONE SECTION, WITH TOGGLE CLAMPS, STEEL.
13.	94R-RN	CONE SECTION LINER, NEOPRENE.
14.	368-ST	APEX HOUSING, STEEL.
15.	378R-RN-2	APEX INSERT, 2" SIZE, NEOPRENE.
16.	370G-RN	GASKET, NEOPRENE.
17.	369SPC-ST	APEX RETAINER PLATE, STEEL.
18.	370-ST	SPLASH SKIRT RETAINER PLATE, STEEL.
19.	370R-RN	SPLASH SKIRT, NEOPRENE.

NOTES:
1. PAINT: EN-SPEC-4-3041
2. BARE WEIGHT: 300# [136kg]

TOLERANCE SCHEDULE: UNLESS OTHERWISE SPECIFIED.		
-24"=±1/4"	+24" thru 100"=±1/2"	+100"=±1"
[-600mm = ±6mm]	[+600mm thru 2500mm = ±12mm]	[+2500mm = ±25mm]

THIS DRAWING IS THE EXCLUSIVE PROPERTY OF FLSMIDTH KREBS, TUCSON, ARIZONA, AND CONTAINS INFORMATION WHICH IS PROPRIETARY TO FLSMIDTH KREBS. IT IS NOT TO BE COPIED OR DUPLICATED IN ANY MANNER, OR USED IN CONNECTION WITH THE MANUFACTURE AND/OR SALE OF ANY APPARATUS OR PARTS THEREOF, OR DISSEMINATED TO ANY THIRD PARTY WITHOUT THE PRIOR WRITTEN CONSENT OF FLSMIDTH KREBS. ANY AUTHORIZED REPRODUCTION OF THIS DRAWING, OR ANY PORTION THEREOF, SHALL INCLUDE THIS NOTICE.

CERTIFIED FOR _____
P.O. No. _____
S.O. No. _____ QUAN. _____
MODEL _____
SERIAL NO. _____
BY _____ DATE _____

5505 WEST GILLETTE ROAD
TUCSON, ARIZONA 85743
PHONE: (520) 744-8200 FAX: (520) 744-8300

FLSmidth KREBS

REVISION Rev. By:	FLSmidth KREBS 6	5505 WEST GILLETTE ROAD TUCSON, AZ 85743 www.krebs.com			
Rev. Date:	Scale:	Dwn. By:	Date Drawn:	Appvd. By:	Sheet:
12/16/2016	— — —	ISN	12-15-16	CAF ADG	1 OF 1

Appvd. By: 0

GENERAL PARTS ARRANGEMENT
KREBS CYCLONE MODEL D10LB-S844-SDM
WITH FIXED APEX ASSEMBLY NO. 368
(SO: 0199794)

C | © FLSmidth KREBS 2016 | DWG. NO. S844-SDM-160846U

KREBS CYCLONE PARTS LIST

Pressure Gauge & Diaphragm Assembly (APPCOR Non-Plugging Gauge Guard)

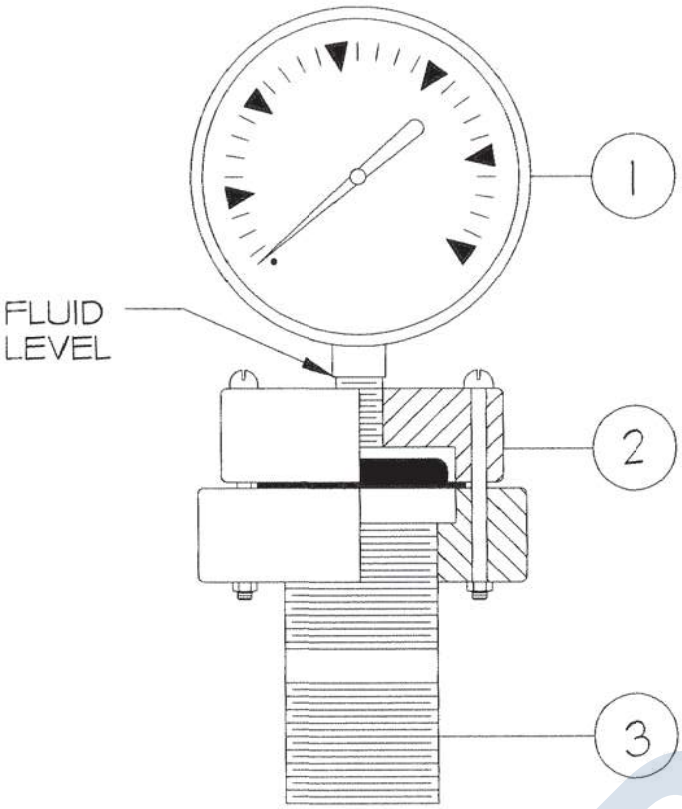

Revised To Date: March 12, 2008

	PART NUMBER	DESCRIPTION
1.	PI-GAUGE-015	Pressure Gauge, Bourdon Tube Type With 3.5" Diameter Dial, 0-15 P.S.I. Graduations With .25" NPT Connection.
	PI-GAUGE-030	Pressure Gauge, Bourdon Tube Type With 3.5" Diameter Dial, 0-30 P.S.I. Graduations With .25" NPT Connection.
	PI-GAUGE-060	Pressure Gauge, Bourdon Tube Type With 3.5" Diameter Dial, 0-60 P.S.I. Graduations With .25" NPT Connection.
	PI-GAUGE-100	Pressure Gauge, Bourdon Tube Type With 3.5" Diameter Dial, 0-100 P.S.I. Graduations With .25" NPT Connection.
	PI-GAUGE-200	Pressure Gauge, Bourdon Tube Type With 3.5" Diameter Dial, 0-200 P.S.I. Graduations With .25" NPT Connection.
2.	PI-DIAP-AP-S875	Diaphragm Assembly With Buna-N Diaphragm, Including Upper Body Half With .25" N.P.T. Connection & Lower Body Half With 1.25" N.P.T. Connection, PVC.
3.	PF-NIP-1.25X3GA	Pipe Nipple, 1.25" Size x 3" Long, Galvanized Steel.

NOTE: Upper Chamber Of Body Must Be Filled With Fluid – Any Light Weight Machine Oil Is Suitable.

DRAFT

Material Symbols: (10-26-05)									
A59: Alloy 59	CC: 90% Alumina	CMC: Ceramic Metal Composite	KR: KalRez	PP: Polypropylene	RCS: Royal Cast/Urethane	RH: Nitrile	RP: Hypalon	RV75: 75 Duro. Viton	SI: 625 Inconel
AL: Aluminum	CG: Silicon Carbide Composite	CX: Reaction Bonded Silicon Carbide	ML: Monel	PT: Teflon	RD: Compressed Non-Asbestos	RI: High Temp. Urethane Compound 9150	RQ: Food Grade Rubber	RV90: 90 Duro. Viton	SS: Stainless Steel
AR: AR Plate	CI: Cast Iron	CZ: Sintered Alpha Silicon Carbide	NH: Nihard	PA: Plastic	RE: EPDM	RJ: White Nitrile	RT90: 90 Durometer Ultrane II (Food Grade)	RW: Ultrane II	SSB: Boride Coated SS
AT: Alloy 20	CQ: Super Refrax-K	G: Gasket	NK: Nickel	PS: SDR Polyethylene	RF: Food Grade	RK: Ultrane HT	RU: 90 Durometer Urethane	RX: Silicon Rubber	SS6: AL-6XN
BG: Black Gold	CR: Nitride Bonded Silicon Carbide	GF: Gylon Fawn	NR: Niresist	PV: PVC	Neoprene(white)	RM: White Urethane(95)	RU7: Urethane	RY: Ultrane II (93)	SDB: Boride Coated SD
BPC: BPC Rubber	CS: Cast Steel	HC: High Chrome (Kreballoy)	PC: Polycarbonate	RA: Vibrathane Compound 6063	RFB: Food Grade Neoprene(black)	RN: Neoprene	RU95: 95 Duro. Urethane	RZ: Ultrane V	ST: Carbon Steel
CB: 96% Alumina	CPVS: CPVC	PE: HDPE	RB: Chlorobutyl	RNF: Food Grade Neoprene Gasket	RV: Viton	SA: Hastelloy	TI: Titanium		
		PF: FRP	RC: Royal Cast	RG: Gum Rubber		SC: CD4MCU	XZ: Corrosion Resist. Units		
		PK: Kynar PVDF				SD: Stainless Duplex	Z1: Zirconia Alumina Ceramic (ZAC 1681-3)		
		PN: Nylon							

NP

PLEASE SPECIFY PART NUMBER AND CYCLONE SERIAL NUMBER WHEN ORDERING PARTS.

FLSmidth KREBS
CORPORATE OFFICES - TUCSON, USA
PHONE: (1-520) 744-8200
FAX: (1-520) 744-8300
krebs@krebs.com
© FLSmidth KREBS 2008

FLSmidth KREBS AFRICA (Pty) Ltd.
PHONE: (27-11) 444-3662
FAX: (27-11) 444-6126
krebsafrica@krebs.com

FLSmidth KREBS AUSTRALIA Pty. Ltd.
PHONE: (61-7) 5571-6760
FAX: (61-7) 5571-6762
krebsaustralia@krebs.com

FLSmidth KREBSGmbH AUSTRIA
PHONE: (43-2167) 3345
FAX: (43-2167) 3337
krebseurope@krebs.com

FLSmidth KREBS BRASIL Ltda.
PHONE: (55-19) 3438-9800
FAX: (55-19) 3438-9801
krebsbrasil@krebs.com

FLSmidth KREBS CHILE S.A.
PHONE: (56-2) 463-8300
FAX: (56-2) 463-8383
krebschile@krebs.com

FLSmidth KREBS PACIFIC
PHONE: (63-2) 687-9251
FAX: (63-2) 687-4461
krebspacific@krebs.com



Description & Features:

- Most economical all purpose pressure gauge
- 1.5" to 4" sizes
- Friction bezel rings
- Black Steel Case
- Brass internals
- Grade B Accuracy (3%-2%-3%)
- CRN Registered

Applications:

- Plumbing, Heating, Air Conditioning, Pneumatic, Hydraulic, Water tanks, Air Compressors, OEM part.

Specifications	
Dial:	White aluminum with black and red markings
Case:	Steel painted black (plastic avail.)
Lens:	1 1/2" (40mm), 2" (50mm), 2 1/2" (63mm): polycarbonate, 4" (100mm): glass
Ring:	1 1/2" (40mm), 2" (50mm): steel, painted black, 2 1/2" (63mm), and 4" (100mm): steel, chrome plated
Pointer:	Steel, painted black
Socket:	Brass
Connection:	1/8" NPT or 1/4" NPT standard
Bourdon Tube:	Phosphor bronze
Movement:	Brass
Welding:	Silver alloy
Over-pressure Limit:	25% of full scale value
Working Pressure:	Maximum 75% of full scale value
Ambient Temperature:	-40°F to 150°F (-40°C to 65°C)
Process Temperature:	-40°F to 150°F (-40°C to 65°C)
Accuracy:	± 3%-2%-3% accuracy (ANSI/ASME Grade B)
Enclosure Rating:	IP52

DRAFT

FLSmidth KREBS

Excelling in separation solutions since 1952

BULLETIN

9-207

Krebs Non-Plugging Gauge Guard

FOR ISOLATION OF GAUGES FROM SLURRIES CARRYING SUSPENDED SOLIDS

- 1¼" NPT f tting is oversized to prevent accumulation of solids in guard housing.
- PVC housing is corrosion resistant and allows operating pressures to 200 PSI.
- BUNA N "rolling" diaphragm for temperatures to 150°F.
- No special technique required to f ll top of housing with light weight oil.
- ¼ inch purge connection, option of ¾ inch purge connection.
- Pressure gauges in 0-30 PSI, 0-60 PSI, 0-2 bar, and 0-4 bar, increment faces.

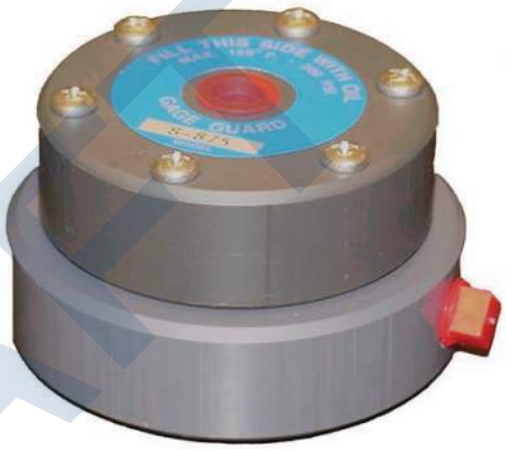

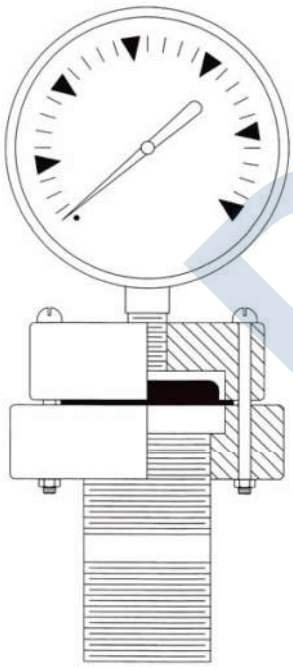

NON-PLUGGING

The Model S-875 "Slurry" gauge guard provides gauge protection and is specif cally designed for slurry use, with 1¼" NPT f tting, to prevent plugging of the guard with accumulated solids.

Net weight 1½ pounds, shipping weight 2½ pounds.

DRAFT

5505 WEST GILLETTE ROAD TUCSON ARIZONA 85743 USA TEL [520] 744-8200 FAX [520] 744-8300 www.krebs.com

INTERNATIONAL OFFICES AUSTRALIA AUSTRIA BRASIL CHILE CHINA PHILIPPINES SOUTH AFRICA

FLSmidth KREBS
5505 West Gillette Road, Tucson, AZ 85743

Date:	Document #:	Revision:	Original Document	Page:
July 2, 2013	EN-SPEC-4-3041	10	Date: Sept. 10, 1993	1 of 1

SUBJECT: SPECIFICATION FOR POLYURETHANE COATING

DEPARTMENTS AFFECTED: ENGINEERING, PURCHASING & PRODUCTION

AUTHORIZATION: 7.3.13 **Manager of Production**

7.3.13 **QA Manager**

JF Beyaert 7/3/13. **Engineering Director**

1. **SURFACE PREPARATION:** All surfaces to be coated shall present a clean finished appearance, free of all dirt, rust, grease, weld spatter, loose mill scale and any other deleterious coating, and shall be blast cleaned per Steel Structures Painting Council Specification SSPC-SP 6-63. Commercial Blast Cleaning or ISO Standard 8501-01, ISO-Sa2, Thorough Blast Cleaning.

2. **BASE PRIMER:** The base primer shall be one coat of National Coating Red Oxide modified epoxy primer 251-R-27-A (FLSmidth Krebs P/N PT-NC-251R27A). 1-1/2 to 3 mils nominal dry film thickness (dft).

3. **FINISH COAT:** One coat of Two Component, Modified Acrylic Polyurethane, color "Krebs Blue" manufactured by National Coatings Inc. (RAL 5023), as (Krebs P/N PT-NCI-RAL5023). 2 to 8 mils nominal dry film thickness (dft).

4. **INSPECTION PROCEDURE:** Coatings are visually inspected and are to be free of runs, sags, voids, drips, over spray, loss of adhesions, blistering, peeling, flaking, mud cracking or inadequate spray. Defects are to be corrected as they are detected.

5. **APPLICATION:** Carbon steel or stainless steel surfaces as specified per order requirements.

NOTES:

A) Recommended dry film thickness as specified above.
B) Application temperatures and drying time are per manufacturer's specification.

PLEASE DO WHAT CAN BE DONE TO PROTECT PAINT DURING TRANSIT

DRAFT

Specification Data	G-R Hard Iron Fitted Basic Pump	Sec. 55	PAGE 2140 SEPTEMBER 2009

CDS

Self Priming Centrifugal Pump

Super T SERIES
VARIOUS PATENTS APPLY

Model T4A71S-B
Size 4” x 4”

5 YEAR WARRANTY FIVE SUPER T SERIES

PUMP SPECIFICATIONS

Size: 4” x 4” (101 mm x 101 mm) NPT - Female.
Casing: Gray Iron 30.
Maximum Operating Pressure 86 psi (593 kPa).*
Semi-Open Type, Two Vane Impeller: G-R Hard Iron.
Handles 3” (76,2 mm) Diameter Spherical Solids.
Impeller Shaft: Alloy Steel 4150.
Shaft Sleeve: Alloy Steel 4130.
Replaceable Wear Plate: Hardened Alloy Steel.
Removable Adjustable Cover Plate: Gray Iron 30; 41 lbs. (18 kg).
Flap Valve: Neoprene w/Nylon and Steel Reinforcing.
Seal Plate: G-R Hard Iron.
Bearing Housing: Gray Iron 30.
Radial Bearing: Open Single Row Ball.
Thrust Bearing: Open Double Row Ball.
Bearing and Seal Cavity Lubrication: SAE 30 Non-Detergent Oil.
Flanges: 125# Gray Iron 30.
Gaskets: Buna-N, Compressed Synthetic Fibers, Vegetable Fiber, PTFE, Cork, and Rubber.
O-Rings: Buna-N.
Hardware: Standard Plated Steel.
Brass Pressure Relief Valve.
Bearing and Seal Cavity Oil Level Sight Gauges.
Optional Equipment: Metal Bellows Seal. Automatic Air Release Valve. 120V/240V Casing Heater. High Pump Temperature Shutdown Kit. G-R Hard Iron Casing. High Chrome Cast Iron Impeller. Self-Cleaning Wear Plate.
Gray Iron 30 Suction and Discharge Spool Flanges:
4” ASA **(Specify Model T4A71S-B /F)**.
100 mm DIN 2527 (PN 16) **(Specify Model T4A71S-B /FM)**.

**Consult Factory for Applications Exceeding Maximum Pressure and/or Temperature Indicated.*

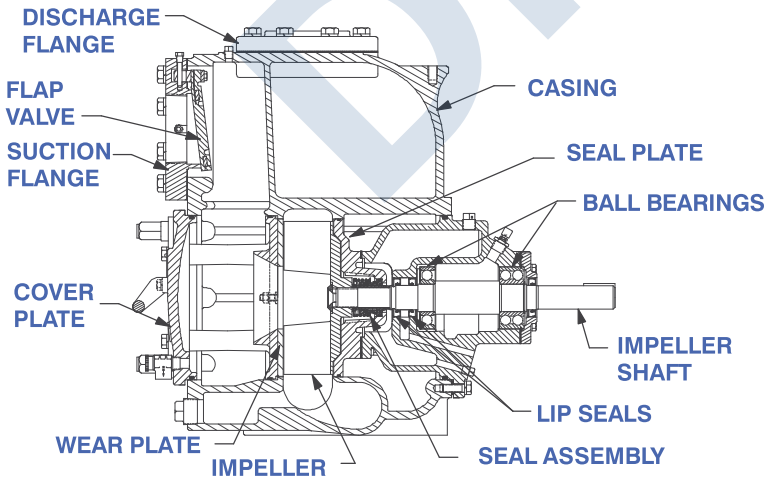



Shown with Optional Suction & Discharge Spool Flanges (Available in ASA or DIN Standard Sizes).

SEAL SPECIFICATIONS

Cartridge Type, Mechanical, Oil-Lubricated, Double Floating, Self-Aligning. Silicon Carbide Rotating and Stationary Faces. Stainless Steel 316 Stationary Seat. Fluorocarbon Elastomers (DuPont Viton® or Equivalent). Stainless Steel 18-8 Cage and Spring. Maximum Temperature of Liquid Pumped, 160°F (71°C).*

SEAL DETAIL

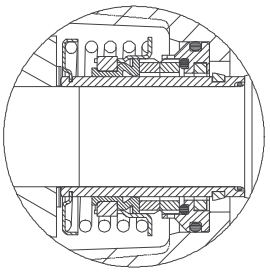

DRAFT

GORMAN-RUPP PUMPS
THE GORMAN-RUPP COMPANY ● MANSFIELD, OHIO
GORMAN-RUPP OF CANADA LIMITED ● ST. THOMAS, ONTARIO, CANADA
www.grpumps.com
Specifications Subject to Change Without Notice
Printed in U.S.A.

Hydro-Dyne Engineering does not provide installation or any accessory unless noted in the Scope of Work.

Specification Data	APPROXIMATE DIMENSIONS and WEIGHTS	NET WEIGHT: 585 LBS. (265 KG.)*
SECTION 55, PAGE 2140		SHIPPING WEIGHT: 624 LBS. (283 KG.)*
		EXPORT CRATE: 22.7 CU. FT. (0,64 CU. M.)
		*ADD 15 LBS. (6,8 KG.) W/EACH SPOOL FLANGE

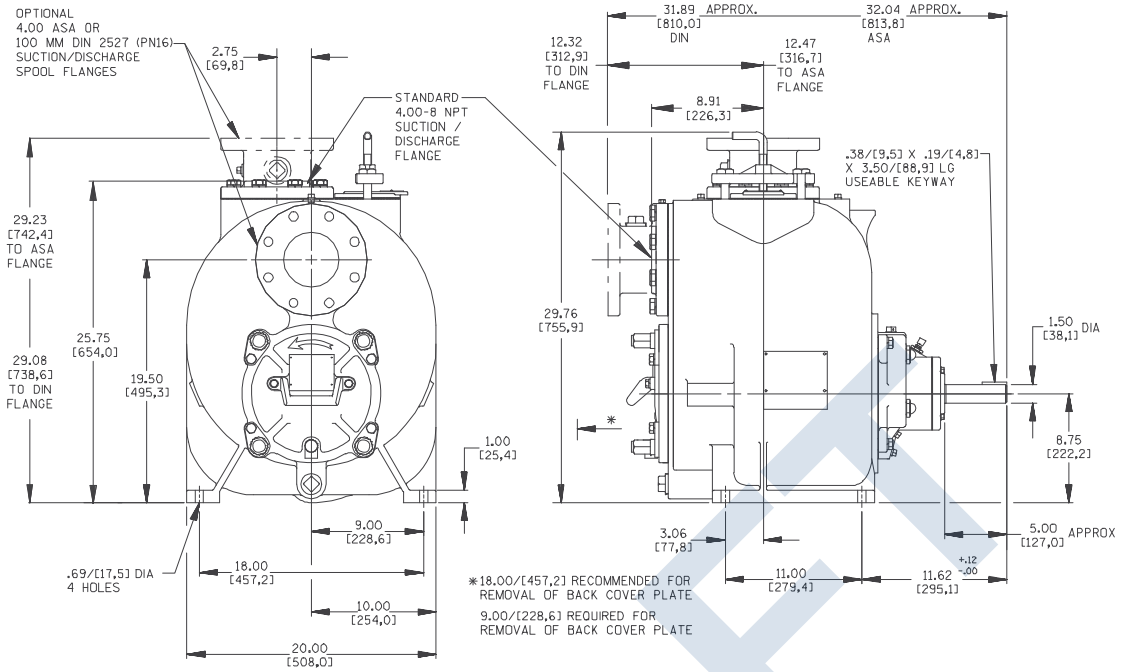

NOTE: OPTIONAL ASA OR DIN STANDARD SUCITON & DISCHARGE SPOOL FLANGES AVAILABLE.

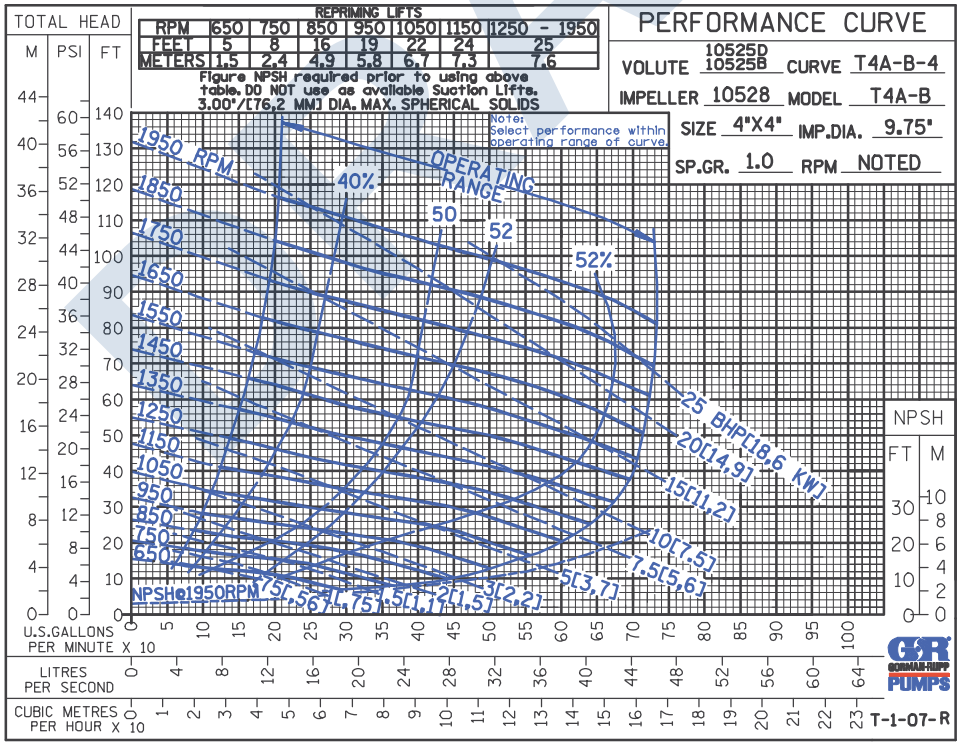

Self-Priming Pump, Gorman-Rupp Model T4A71S-B/F• • • • • • Suction & Discharge Flanges with 5 HP Explosion-Proof, Motor on Vertical V-Belt Baseplate with Non-Sparking Guard, Belts, Sheaves, Drain Kit with Hose, Casing Heater, and Spare Parts.

DRAFT

GORMAN-RUPP PUMPS

THE GORMAN-RUPP COMPANY ● MANSFIELD, OHIO

, ONTARIO, CANADA

The volute heater does not come with an enclosure. The only thing the heater needs form the control panel is 120 V

ice

Printed in U.S.A.

CDSW

All Gauges, Valves (except valve in drain kit), Anchor Bolts, etc. by Others. C1D2 5 hp continuous duty electric motor suitable for a 460/3/60 supply and rated for a Class 1 Div. 2 explosion proof. As a minimum, the motor will be TEFC with an IP55 enclosure rating and will conform to NEMA MG-1 requirements. no mods. included. No pump or motor testing included.

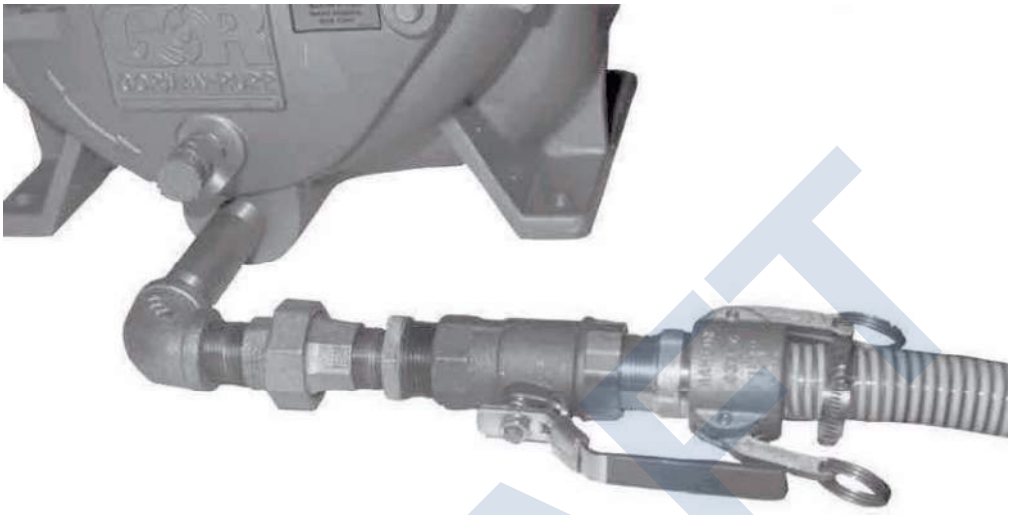

Components May Vary - Typical Installation Shown.

Description

Designed to provide easy case drainage when the pump requires maintenance. Casing drain plug in pump is replaced by pipe fittings, ball valve and quick-connect male adaptor.

Separate hose assembly consists of reinforced plastic hose with cast aluminum quick-connect female coupler on one end.

Model	Drain Kit (Standard)	Drain Kit (SST Fittings)
T2A-B	46346–303	46346–304
T3A-B	46346–264	46346–272
T4A, T6A, T8A, T10A-B	46346–265	46346–273
V/VS 3A & B-B, V/VS 4A-B, V/VS 6A-B	46346–265	46346–273

Hose Assemblies (Order Separately)	
10 Ft.	46341–007
20 Ft.	46341–420
30 Ft.	46341–421

Consult Factory for Other Applications

DRAFT

Specification Data	APPROXIMATE DIMENSIONS and WEIGHTS	NET WEIGHT: 20 LBS. (9,1 KG.) SHIPPING WEIGHT: 30 LBS. (13,6 KG.) EXPORT CRATE SIZE: 1.5 CU. FT. (0,04 CU. M.)
SECTION 10, PAGE 1350		

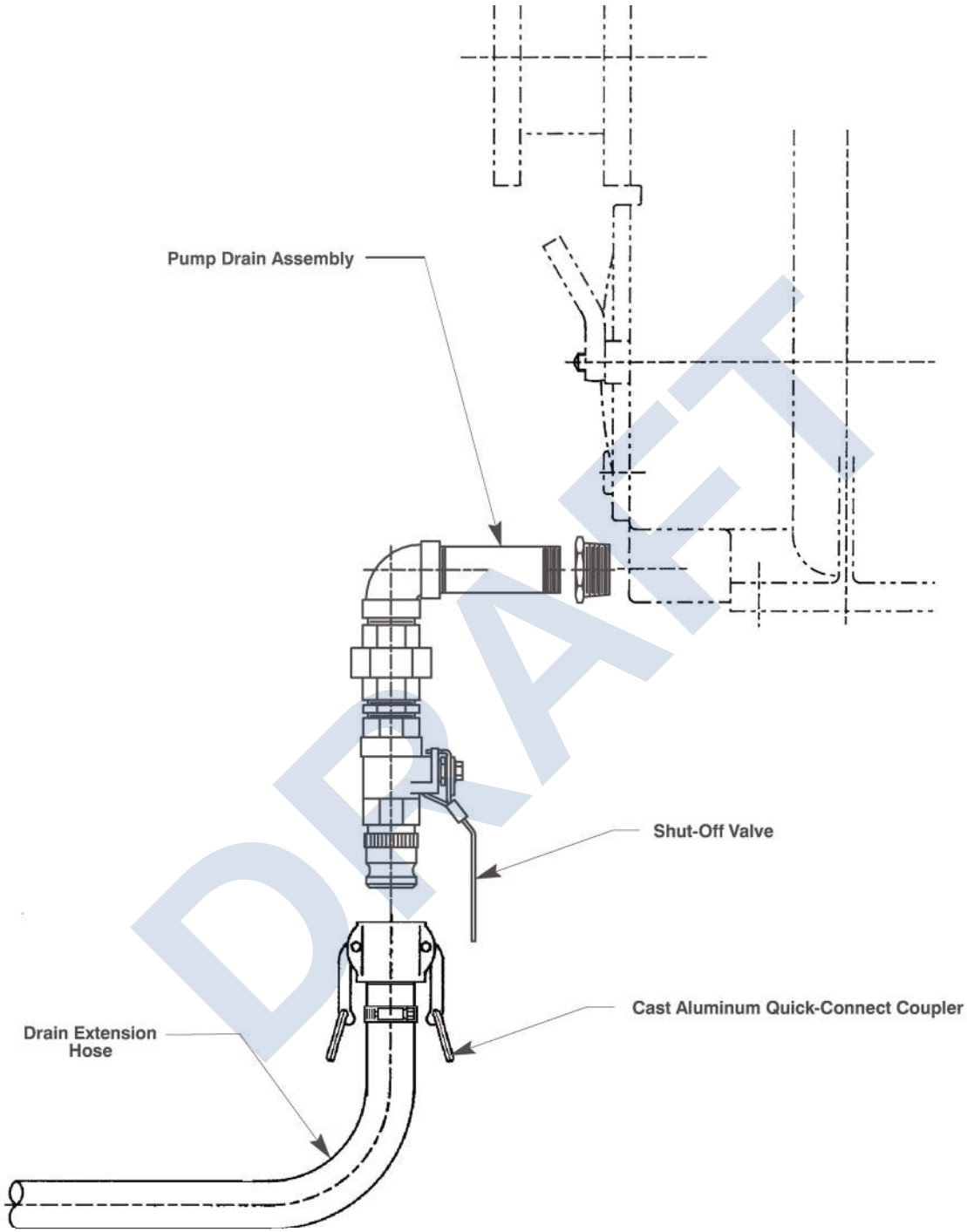

DRAFT

Components May Vary - Typical Installation Shown.

Pump Data Sheet - Gorman-Rupp IND 60Hz

Pump:

Size: T4A-B-4

Type: T-SERIES
Synch speed: Adjustable

Speed: 1030 rpm
Dia: 9.75 in

Curve: T4A-B-4

Impeller: 10528

Specific Speeds:

Ns: ---
Nss: ---

Dimensions:

Suction: 4 in
Discharge: 4 in

Pump Limits:

Temperature: ---
Pressure: ---
Sphere size: 3 in

Power: ---
Eye area: ---

Search Criteria:

Flow: 240 US gpm

Head: 29 ft

Fluid:

Water
SG: 1
Viscosity: 1.105 cP

Temperature: 60 °F
Vapor pressure: 0.2563 psi a
Atm pressure: 14.7 psi a

NPSHa: ---

Motor:

Standard: NEMA
Enclosure: TEFC

Speed: ---
Frame: ---

Sizing criteria: Max Power on Design Curve

---- Data Point ----	
Flow:	240 US gpm
Head:	29.1 ft
Eff:	48%
Power:	3.62 hp
NPSHr:	5.11 ft
---- Design Curve ----	
Shutoff head:	38.4 ft
Shutoff dP:	16.6 psi
Min flow:	---
BEP:	52% @ 343 US gpm
NOL power:	5.05 hp @ 544 US gpm
-- Max Curve --	
Max power:	29.8 hp @ 733 US gpm

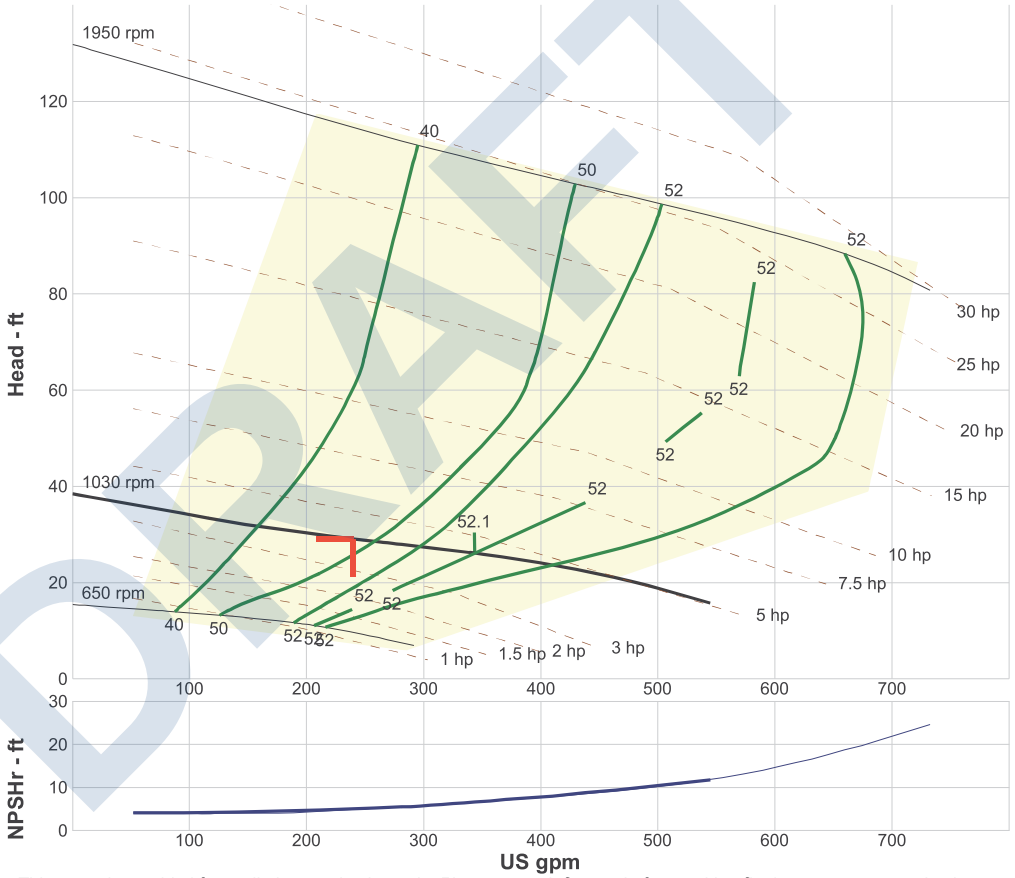

This curve is provided for preliminary selection only. Please consult factory before making final pump or motor selections.

Performance Evaluation:

Flow US gpm	Speed rpm	Head ft	Efficiency %	Power hp	NPSHr ft
288	1030	27.7	52	3.91	5.61
240	1030	29.1	48	3.62	5.11
192	1030	30.7	43	3.35	4.73
144	1030	32.3	36	3.22	4.42
96	1030	34.4	24	3.41	4.28

Selected from catalog: Gorman-Rupp Industrial Pumps.60 Vers: 4.64

DRAFT

MOTOR FRAME	"A" CENTER DISTANCE
143T-145T	13.12 [333,2]
182T-184T 182-184	14.12 [358,6]
213T-215T 213-215	14.88 [378,0]
254T-256T 254U-256U	15.88 [403,4]
284T-286T 284U-286U	16.62 [422,2]
324T-326T	17.62 [447,6]

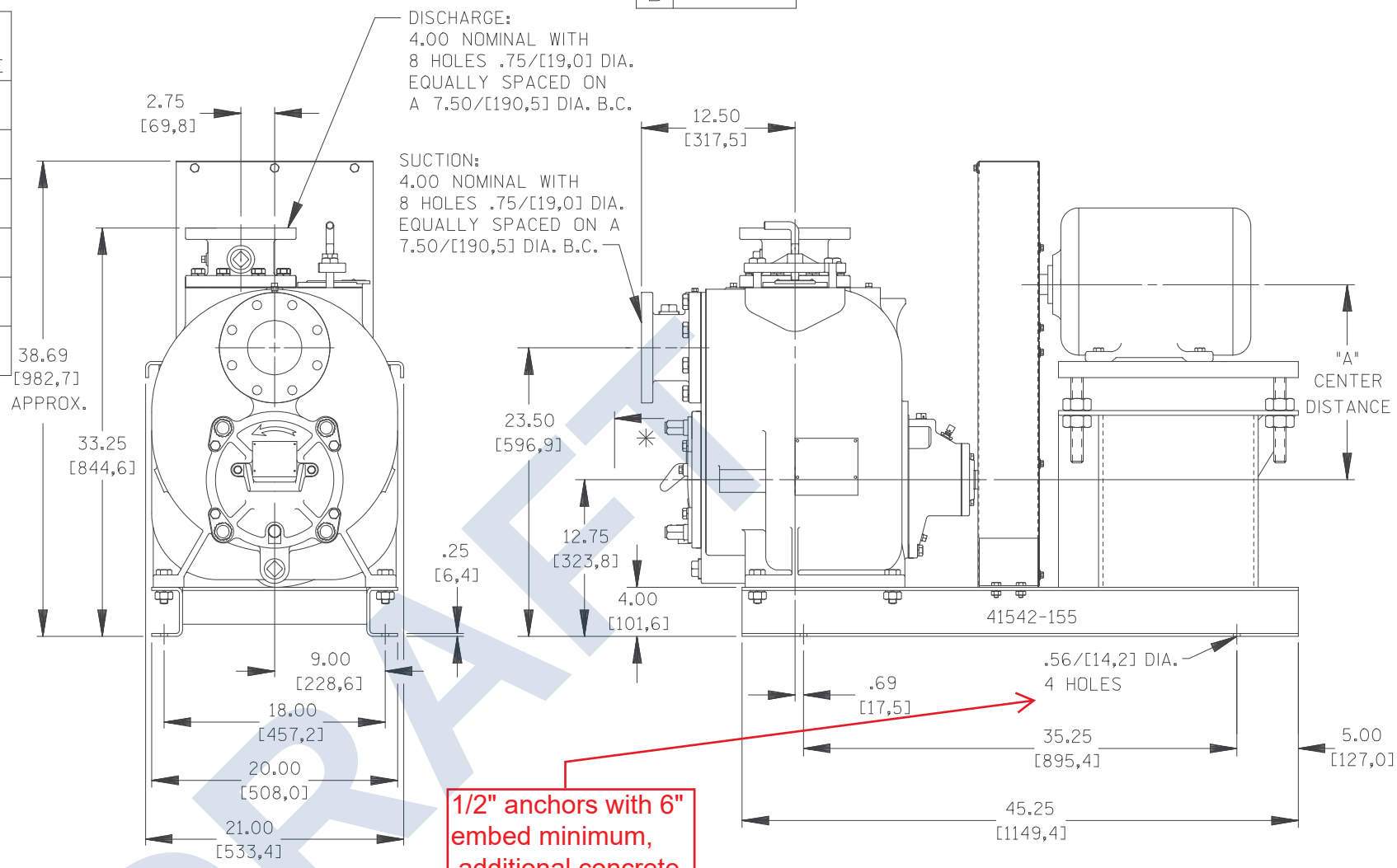

DRAFT

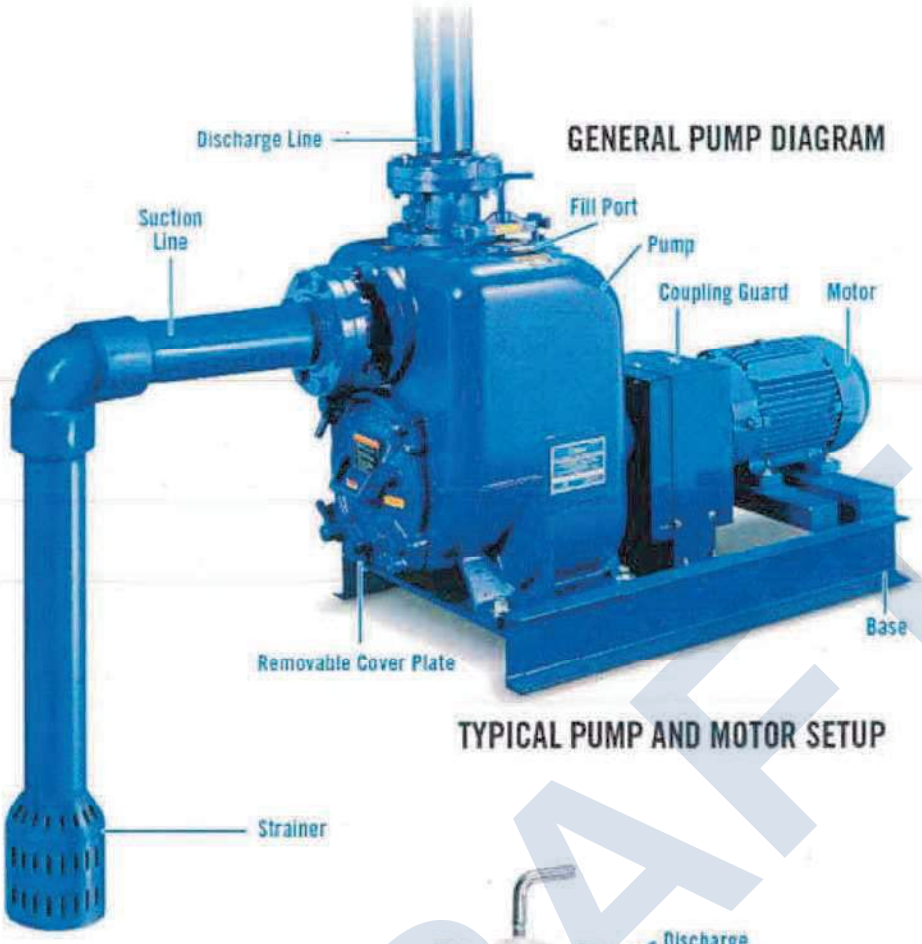
GENERAL PUMP DIAGRAM
Discharge Line
Suction Line
Fill Port
Pump
Coupling Guard
Motor
Base
Removable Cover Plate
TYPICAL PUMP AND MOTOR SETUP
Strainer

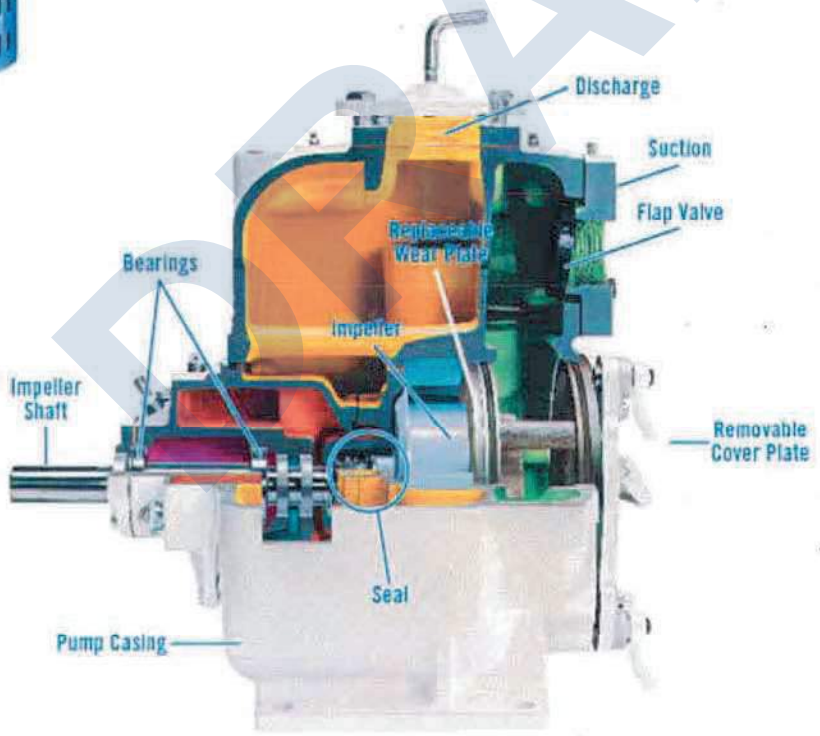
Discharge
Suction
Flap Valve
Bearings
Impeller
Impeller Shaft
Removable Cover Plate
Seal
Pump Casing

DRAFT

Grit Pump (by others)

C	47811-078	SHEET 1 OF 1

REVISIONS					
ZONE	SYM	DATE	RECORD	DR.	CK.
	C	07-14-10 10-021	ADDED NOTE 11; REVISED ORIENTATION OF JUNCTION BOX; UPDATED ILLUST. OF PUMP MODEL; ADDED TECH. SERVICES NOTE; REVISED NOTE 1, ADDING "WHEN TWO PUMPS POSITIONED SIDE-BY-SIDE....."	MLB	R.B.

REF. NO.	PART NO.		DESCRIPTION		TOT. REQ.	ASSEMBLY
1	27184-502		REO PIPE BUSHING		2	ALL
2	27151-102		CONNECTOR		1	ALL
3	31412-066	15130	CONDUIT	STL	1	ALL
4	47811-201		THERMOSTAT		1	ALL
5	CF*08-01	15991	RD PHLD MS	STL	2	ALL
6	J*08	15991	LOCK WASHER	STL	2	ALL
7	27144-011		JUNCTION BOX		1	ALL
8	AP1208	15079	BUSHING	STL	1	ALL
NOT SHOWN	27284-003		CONNECTOR		1	ALL
NOT SHOWN	GL-05220		INSTALLATION DWG.		1	ALL
ALTERNATE COMPONENTS						
9	27891-111		HTR PROBE 500W/120V		1	47811-078
9	27891-112		HTR PROBE 500W/240V		1	47811-079
10	BM*04-04	17000	DRIVE SCREW	SST	2	ALL

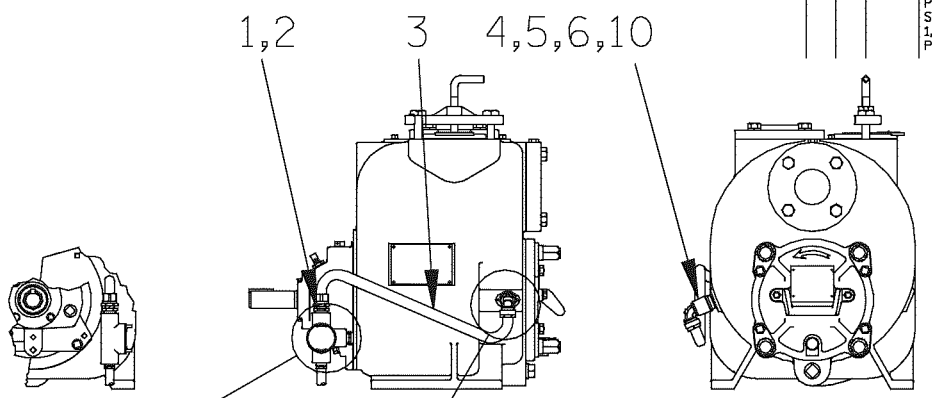

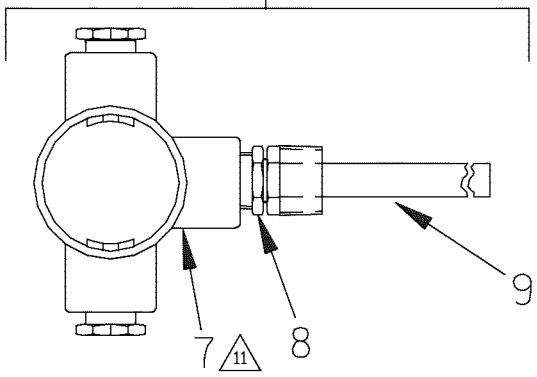

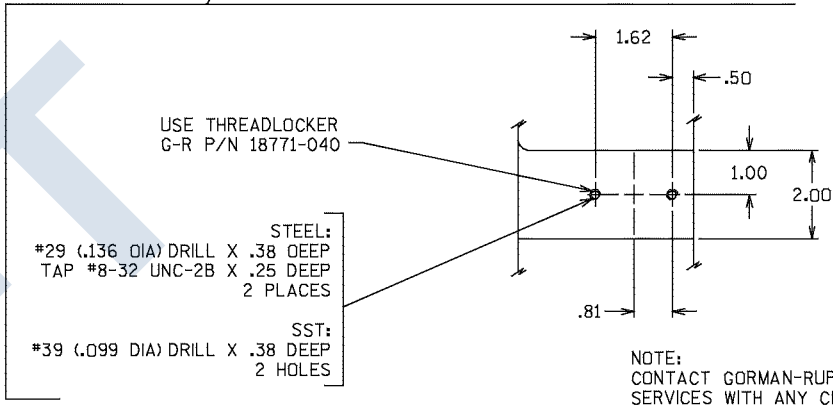

ASSEMBLY INSTRUCTIONS

1. REMOVE .500 PIPE PLUG ON BACKSIOE OF VOLUTE.
2. LOCATE AND DRILL THERMOSTAT MOUNTING HOLES.
3. MOUNT THERMOSTAT (P/N 47811-201) IN POSITION WITH MACHINE SCREWS (P/N CF*08-01) ANO LOCK WASHERS (P/N J*08). FOR SST VOLUTES, USE (2) BM*04-04 ORIVE SCREWS IN LIEU OF MACHINE SCREWS.
4. APPLY PIPE SEALANT G-R P/N 18771-055 TO THE THREADS OF PIPE BUSHINGS (P/N AP1208 & 27184-502) ANO INSTALL IN JUNCTION BOX (P/N 27144-011) OUTLETS.
5. INSTALL BUSHING (P/N AP1208), HEATER PROBE (REF. NO. 9) AND JUNCTION BOX (P/N 27144-011) IN SEQUENCE WITH JUNCTION BOX CAP. CAP POSITION (UP OR DOWN) TO ALLOW ROOM FOR CAP REMOVAL. HEATER PROBE LEADS ARE TO BE THREADED INTO JUNCTION BOX.
6. ATTACH CONNECTOR (P/N 27151-102) TO LEFT OUTLET OF JUNCTION BOX.
7. THREAD THERMOSTAT LEADS INTO CONOUIT (P/N 31412-066) ANO SECURE CONOUIT WITH CONNECTORS ON THERMOSTAT ANO JUNCTION BOX.
8. ATTACH (1) THERMOSTAT LEAD ANO ONE (1) HEATER PROBE LEAD TOGETHER USING CONNECTOR (P/N 27284-003).
9. INSTALL JUNCTION BOX CAP
10. REMAINING JUNCTION BOX OUTLET TO BE USED BY CUSTOMER TO WIRE IN APPROPRIATE POWER SOURCE.

11 MOUNT JUNCTION BOX AS SHOWN TO ALLOW REMOVAL OF ROTATING ASS'Y WITHOUT OISCONNECTING HEATER ASS'Y.

NOTES:

1. THE THERMOSTAT MAY BE INSTALLEO ON THE OPPOSITE SIDE OF THE CASING BY USING THESE INSTRUCTIONS.

   WHEN USED ON TWO PUMPS POSITIONED SIDE-BY-SIDE IN A LIFT STATION, INSTALL THE THERMOSTATS TOWARD THE INSIOE OF THE STATION, SO THE PUMP ROTATING ASSEMBLIES CAN BE REMOVED THROUGH THE LIFT STATION DOOR OPENINGS WITHOUT HAVING TO DISCONNECT THE CASING HEATERS.
2. CHECK THERMOSTAT WIRES WITH A CONTINUITY LIGHT BEFORE CONNECTING TO HEATER PROBE AT ASSEMBLY. (SWITCH SHOULO BE OPEN)
3. KITS TO BE SHIPPED SHOULD BE INSPECTED BY SAME METHOO BEFORE GOING TO CUSTOMER.

ADVERTISING FORM NO.: GL-05220

NOTE:
CONTACT GORMAN-RUPP TECHNICAL SERVICES WITH ANY CHANGES TO THIS DRAWING.

PART NUMBER: NOTED	MATERIAL CODE:
CAD/CAM FILE NUMBER: 47811078.S01	
ASSEMBLY (REFERENCE):	MODEL (REFERENCE): T3AS3-B & T4AS3-B

THE GORMAN-RUPP CO.
MANSFIELD, OHIO ST. THOMAS, ONTARIO
F.S.C.M. NO. 25567

NOTICE
THIS DRAWING INCLUDING ALL INFORMATION CONTAINED THEREON, IS PART OF THE PROPRIETARY DESIGN OWNED BY THE GORMAN-RUPP COMPANY.
IT IS FURNISHED TO YOU FOR CONFIDENTIAL PURPOSES ONLY AND IS NOT TO BE DISCLOSED TO OTHERS OR REPRODUCED IN WHOLE OR IN PART WITHOUT THE EXPRESS WRITTEN PERMISSION OF THE GORMAN-RUPP COMPANY.

UNLESS SPECIFIED, MACHINING TOLERANCE	DO NOT SCALE DRAWING	
.X +/- .015 .XX +/- .010 .XXX +/- .005 ANGLES +/- 1/2°	APPROVAL	DATE
	DWN. KAH	01-22-01
	CHK. R.B.	2-19-01
	APPR. RLB	2-19-01

MATERIAL: DESCRIPTION: SEE B/M
SPECIFICATION NUMBER | LENGTH/AREA (COSTING)

TITLE: CASING HEATER & THERMOSTAT INSTALL & ASSY INSTR (T4AS,T3AS)

DRAWING NUMBER: 47811-078 SIZE: C

DIST. CODE 01 | SCALE NONE | SHEET 1 OF 1

DRAFT

Drive Motors

DRAFT

Included:

Performance Specifications & Features
Motor Data Sheets

PREMIUM EFFICIENT MOTORS
HIGH PERFORMANCE & ENERGY SAVINGS

NORD DRIVESYSTEMS

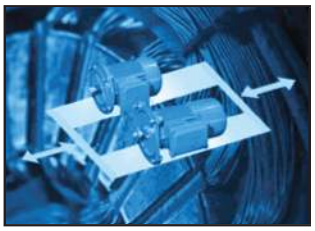

Mounting Styles

- Integral motor for use with speed reducer
- NEMA C-face flange
- NEMA T-Frame footed motor mount
- DIN B5, IEC FF metric face flange mount
- DIN B14, IEC metric face flange mount
- DIN B3, IEC metric foot mount



Inverter Duty & Inverter Duty Options

- Motors conform with NEMA MG-1-2006 Section 31.4.4.2
- Insulated with double coated magnet wire
- Speed range 5:1 constant torque from 60Hz to 12Hz
- 10:1 speed range : constant torque from 60Hz to 6Hz
- 20:1 speed range : constant torque from 80Hz to 4Hz
- 1000:1 speed range : constant torque from 60Hz to 0Hz
- Blower cooling fans
- Incremental encoder



Standard Construction Features

- Ambient temperature of 40° C (104° F)
- 3300 feet of elevation without derating
- Class B temperature rise : 105° C (221° F)
- Class F insulation system : 155° C (311° F)
- IP55 enclosure protection
- Totally Enclosed Fan Cooled (TEFC)
- Low rotor inertia
- Ball bearings & high temperature bearing grease
- Squirrel cage rotor
- Dynamically balanced, anti-corrosion coated rotor
- Corrosion resistant aluminum alloy housing
- 1045 carbon steel shaft with shaft lip seals on both end bells
- Sealed stator to end bell connections
- Gasket sealed conduit boxes
- Four conduit box & threaded cable entry locations
- Double coated magnet wire insulation
- Insulation lined slots
- Inorganic insulation for tropical protection
- Phase paper & separators
- First turn winding protection
- Varnish dipped stator
- Non sparking low inertia fan
- Terminal block power connector
- Reverseable roatation direction

Product Options

Thermal Winding Protection Options

- Thermistat Sensor (TW)
- Thermistor Sensor (TF)

Brakemotors

- Ready to go…wired by factory
- Manual hand release lever included
- Downward adjustable torque is included,specification is required
- AC to DC voltage rectifier is included
- IP55 enclosure protection is included

Brakemotor Options

- NSD+ severe duty protection
- Corrosion protection (RG)
- Dust protection (SR)
- Lockable hand release lever (FHL)
- Oversize & Undersize brake
- Inverter duty modifications
- Faster torque release enhancement
- Faster torque stopping enhancement
- Current sensing relay (IR)
- Heating circuit (BSH)
- Micro switch wear indicator
- IP 66 enclosure

Environmental Protection Options

- NSD+ severe duty protection
- Encapsulated windings for IEEE45 Marine Duty
- IP66 enclosure
- End bell drain holes
- Drip cover (RD)
- Wind protected double drip cover (RDD)
- Space heater (SH)
- Epoxy coated interior surfaces

Other Options

- Class H insulation system
- Over-running clutch (FK)
- Anti-rotation backstop (RLS)
- Extended motor shaft (WE)
- High inertia metal fan for soft start (Z)
- Quick power disconnect plug (MS1)

DRAFT

NORD DRIVESYSTEMS
www.nord.com

NORD Gear Corporation
MEMBER OF THE NORD DRIVESYSTEMS GROUP
info.us@nord.com

Waunakee, WI
800 NORD Drive
Waunakee, WI 53597
Tel. 608.849.7300

Corona, CA
1180 Railroad St.
Corona, CA 92882
Tel. 951.393.6565

Charlotte, NC
300 Forsyth Hall Dr.
Charlotte, NC 28273
Tel. 980.215.7575

NORD Gear Limited - Canada
MEMBER OF THE NORD DRIVESYSTEMS GROUP
info.ca@nord.com

Brampton, ON
41 West Drive
Brampton, ON L6T4A1
Tel. 800.668.4378

DS1006 Mat.-Nr. 6014603 / 0516



Global Vision, Local Support

NORD makes its wide product range easily available through a global network that includes representation in over 60 countries. By providing all of our customers with prompt delivery, and expert support services, we are firmly committed to exceeding customer expectations and being responsive to the ideas and specifications of every customer, anywhere in the world.

PREMIUM EFFICIENT MOTORS
HIGH PERFORMANCE & ENERGY SAVINGS

NORD DRIVESYSTEMS



60 Hz Line Frequency - SF 1.15

230/460 - 3 phase: 0.16 to 30 hp
460V - 3 phase: 40 to 200 hp
575V - 3 phase: 0.16 to 200 hp

50 Hz Line Frequency - SF 1.0

230/400V - 3 phase: 0.12 to 2.2 kW
400/690V - 3 phase: 3 to 90 kW

Motor Type	P_n Full Load Power		n_n Full-Load Speed	I_n Full-Load Current			I_a/I_n Locked Rotor Current Ratio	NEMA Code Letter	T_n Full-Load Torque	T_a/T_n Locked Rotor Torque Ratio	T_k/T_n Break Down Torque Ratio	pf Power Factor	η Full Load Efficiency	J_m Rotor Inertia
				230V	460V	575V								
	[hp]	[kW]	[rpm]	[A]	[A]	[A]	[%]		[lb-in]				[%]	[lb-ft²]
63 SP/4	0.16	0.12	1695	0.72	0.36	0.29	400%	D	5.95	3.4	3.3	0.62	68.5%	0.0057
63 LP/4	0.25	0.18	1705	1.08	0.54	0.43	430%	D	9.24	4.1	3.9	0.57	72.5%	0.0078
71 SP/4	0.33	0.25	1725	1.26	0.63	0.50	590%	F	12.1	3.7	3.9	0.67	75.8%	0.0204
71 LP/4	0.5	0.37	1725	1.62	0.81	0.65	610%	F	18.3	3.3	3.6	0.72	78.0%	0.0261
80 SP/4	0.75	0.55	1735	2.30	1.15	0.92	610%	D	27.2	3.4	6.1	0.72	82.7%	0.0344
80 LP/4	1	0.75	1730	3.14	1.57	1.26	650	K	36.4	3.5	3.8	0.70	86.1	0.045
90 SP/4	1.5	1.1	1740	4.20	2.10	1.68	840	L	54.3	4.2	4.9	0.76	86.9	0.081
90 LP/4	2	1.5	1730	5.60	2.80	2.24	760	K	72.9	3.9	4.3	0.78	87.0	0.093
100 LP/4	3	2.2	1770	7.68	3.84	3.07	920	L	107	3.0	4.5	0.79	90.0	0.192
112 MP/4	5	3.7	1755	13.0	6.50	5.20	950	L	180	4.1	4.6	0.80	90.3	0.332
132 SP/4	7.5	5.5	1770	19.5	9.75	7.80	1020	M	267	4.7	5.0	0.77	91.7	0.759
132 MP/4	10	7.5	1765	26.7	13.4	10.7	960	M	357	4.7	5.0	0.77	91.7	0.831
160 MP/4	15	11	1770	35.6	17.8	14.2	880	K	534	3.2	3.8	0.84	92.5	1.59
160 LP/4	20	15	1775	47.6	23.8	19.0	1080	M	710	4.3	4.7	0.85	93.0	2.18
180 MP/4	25	18.5	1780	60.6	30.3	24.2	1010	L	885	3.9	4.0	0.82	93.6	3.80
180 LP/4	30	22	1780	69.6	34.8	27.8	880	K	1062	3.3	3.4	0.85	93.6	3.80
225 RP/4	40	30	1785	-	49.5	39.6	890%	K	1420	3.4	3.8	0.81	94.5%	11.63
225 SP/4	50	37	1785	-	59.7	47.8	880%	K	1752	3.0	3.7	0.82	94.6%	12.81
225 MP/4	60	45	1785	-	72.0	57.6	910%	K	2131	3.3	3.6	0.83	95.2%	15.90
250 WP/4	75	55	1785	-	84.4	67.5	920%	J	2604	2.9	3.2	0.86	95.4%	19.46

DRAFT

Motor Data Sheet

3 phase motor	Motor type: **80SP/4 CUS TW**

Electrical data:		
Frequency (f):	60	Hz
Output (P):	0.55	kW
Speed (n):	1735	1/min
Connection of stator:	YY/Y	
Voltage (V):	230/460	V
Current (I):	2.30/1.15	A
Voltage range (U_{WB}):	USABLE AT 208YY	V
Wide range current (I_{WB}):		A
Starting current/Current (I_A/I):	6.11	
Rated motor torque (M_N):	3.03	Nm
Starting motor torque (M_A):	8.59 (2.83)*	Nm
Minimum motor torque (M_S):	7.67 (2.53)*	Nm
Breakdown motor torque (M_K):	10.30 (3.40)*	Nm
cos phi:	0.72	Last
Eta(%):	83.40	100%
Eta(%):	82.70	75%
Eta(%):	79.80	50%
Service Faktor:	1.15	
Code letter:	J	

Tested data:		
Connection of stator:	YY/Y	
Voltage (V):	230/460	V
No load current (I_0):	1.52/0.76	A
No load output (P_0):	0.071	kW
Noise level (L_{PA}):	51	dB(A)
Resistance stator winding at 20°C (R):	5.2 T1-T4	Ohm
Temperature rise (T):	25.70	K
(at the stator resistance method)		
Insulation resistance ($R_{isol.}$):	100	Mega Ohm
Winding test:	2352	V/4 sek.
Class of vibration:		A

Order data:			
Order No.:	13242526		
Customer reference No.:			
Serial No.:			
Motor No.:			
Stator No.:	13242526		

General data:			
Direction of rotation:	CW/CCW		
Design:	762 Mot moun.acc. IEC B14 Ø120		
Duty:	S1		
Type bearing:			
Housing material:	Aluminium		
Insulation class:	F		
Type of protection:	IP 66		
Cable entry:	1 III		
Moment of inertia:	0.00145	kgm^2	
Maximum altitude of site:	1,000	m	
Ambient temperature:	-20°C	to	+40°C
Fan Type:	Standard IC 411		

Classification authorities:

NEMA (ELECTRICAL), EISACT 2007

Motor options:

TW: Thermostat

DRAFT

* related dimension (without units)

Technical data are subject to change.

Torque and Current over Speed curves

80 SP/4 CUS TW

DRIVESYSTEMS

Stator:	13242526
Voltage (V):	460
Frequency (Hz):	60
Power (kW):	0,55
Load current (A):	1,15
Starting current (A):	7
No load current (A):	0,76
Starting torque (Nm):	8,59
Minimum torque (Nm):	7,67
Breakdown torque (Nm):	10,3
Load torque (Nm):	3,03
Connection:	Y

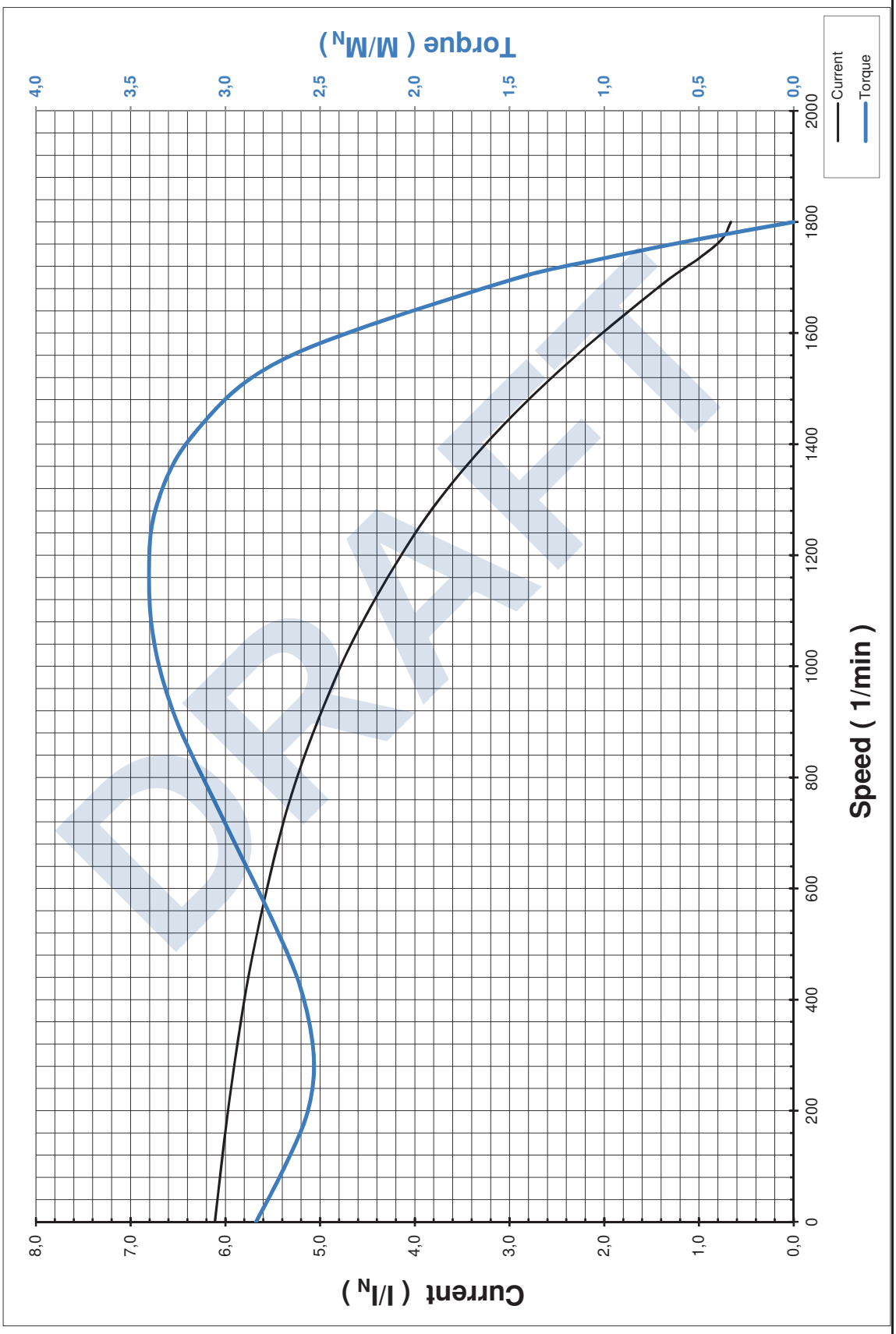

DRAFT

14.02.2019

PREMIUM EFFICIENT MOTORS
HIGH PERFORMANCE & ENERGY SAVINGS

NORD DRIVESYSTEMS

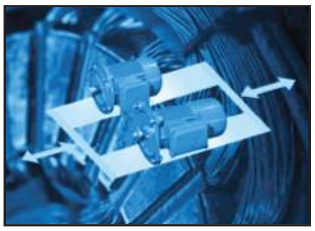

Mounting Styles

- Integral motor for use with speed reducer
- NEMA C-face flange
- NEMA T-Frame footed motor mount
- DIN B5, IEC FF metric face flange mount
- DIN B14, IEC metric face flange mount
- DIN B3, IEC metric foot mount



Inverter Duty & Inverter Duty Options

- Motors conform with NEMA MG-1-2006 Section 31.4.4.2
- Insulated with double coated magnet wire
- Speed range 5:1 constant torque from 60Hz to 12Hz
- 10:1 speed range : constant torque from 60Hz to 6Hz
- 20:1 speed range : constant torque from 80Hz to 4Hz
- 1000:1 speed range : constant torque from 60Hz to 0Hz
- Blower cooling fans
- Incremental encoder



Standard Construction Features

- Ambient temperature of 40° C (104° F)
- 3300 feet of elevation without derating
- Class B temperature rise : 105° C (221° F)
- Class F insulation system : 155° C (311° F)
- IP55 enclosure protection
- Totally Enclosed Fan Cooled (TEFC)
- Low rotor inertia
- Ball bearings & high temperature bearing grease
- Squirrel cage rotor
- Dynamically balanced, anti-corrosion coated rotor
- Corrosion resistant aluminum alloy housing
- 1045 carbon steel shaft with shaft lip seals on both end bells
- Sealed stator to end bell connections
- Gasket sealed conduit boxes
- Four conduit box & threaded cable entry locations
- Double coated magnet wire insulation
- Insulation lined slots
- Inorganic insulation for tropical protection
- Phase paper & separators
- First turn winding protection
- Varnish dipped stator
- Non sparking low inertia fan
- Terminal block power connector
- Reverseable roatation direction

Product Options

Thermal Winding Protection Options

- Thermistat Sensor (TW)
- Thermistor Sensor (TF)

Brakemotors

- Ready to go…wired by factory
- Manual hand release lever included
- Downward adjustable torque is included,specification is required
- AC to DC voltage rectifier is included
- IP55 enclosure protection is included

Brakemotor Options

- NSD+ severe duty protection
- Corrosion protection (RG)
- Dust protection (SR)
- Lockable hand release lever (FHL)
- Oversize & Undersize brake
- Inverter duty modifications
- Faster torque release enhancement
- Faster torque stopping enhancement
- Current sensing relay (IR)
- Heating circuit (BSH)
- Micro switch wear indicator
- IP 66 enclosure

Environmental Protection Options

- NSD+ severe duty protection
- Encapsulated windings for IEEE45 Marine Duty
- IP66 enclosure
- End bell drain holes
- Drip cover (RD)
- Wind protected double drip cover (RDD)
- Space heater (SH)
- Epoxy coated interior surfaces

Other Options

- Class H insulation system
- Over-running clutch (FK)
- Anti-rotation backstop (RLS)
- Extended motor shaft (WE)
- High inertia metal fan for soft start (Z)
- Quick power disconnect plug (MS1)

DRAFT

NORD DRIVESYSTEMS
www.nord.com

NORD Gear Corporation
MEMBER OF THE NORD DRIVESYSTEMS GROUP
info.us@nord.com

Waunakee, WI
800 NORD Drive
Waunakee, WI 53597
Tel. 608.849.7300

Corona, CA
1180 Railroad St.
Corona, CA 92882
Tel. 951.393.6565

Charlotte, NC
300 Forsyth Hall Dr.
Charlotte, NC 28273
Tel. 980.215.7575

NORD Gear Limited - Canada
MEMBER OF THE NORD DRIVESYSTEMS GROUP
info.ca@nord.com

Brampton, ON
41 West Drive
Brampton, ON L6T4A1
Tel. 800.668.4378

DS1006 Mat.-Nr. 6014603 / 0516



Global Vision, Local Support

NORD makes its wide product range easily available through a global network that includes representation in over 60 countries. By providing all of our customers with prompt delivery, and expert support services, we are firmly committed to exceeding customer expectations and being responsive to the ideas and specifications of every customer, anywhere in the world.

PREMIUM EFFICIENT MOTORS
HIGH PERFORMANCE & ENERGY SAVINGS

NORD DRIVESYSTEMS



60 Hz Line Frequency - SF 1.15

230/460 - 3 phase: 0.16 to 30 hp
460V - 3 phase: 40 to 200 hp
575V - 3 phase: 0.16 to 200 hp

50 Hz Line Frequency - SF 1.0

230/400V - 3 phase: 0.12 to 2.2 kW
400/690V - 3 phase: 3 to 90 kW

Motor Type	P_n Full Load Power		n_n Full-Load Speed	I_n Full-Load Current			I_a/I_n Locked Rotor Current Ratio	NEMA Code Letter	T_n Full-Load Torque	T_a/T_n Locked Rotor Torque Ratio	T_k/T_n Break Down Torque Ratio	pf Power Factor	η Full Load Efficiency	J_m Rotor Inertia
				230V	460V	575V								
	[hp]	[kW]	[rpm]	[A]	[A]	[A]	[%]		[lb-in]				[%]	[lb-ft²]
63 SP/4	0.16	0.12	1695	0.72	0.36	0.29	400%	D	5.95	3.4	3.3	0.62	68.5%	0.0057
63 LP/4	0.25	0.18	1705	1.08	0.54	0.43	430%	D	9.24	4.1	3.9	0.57	72.5%	0.0078
71 SP/4	0.33	0.25	1725	1.26	0.63	0.50	590%	F	12.1	3.7	3.9	0.67	75.8%	0.0204
71 LP/4	0.5	0.37	1725	1.62	0.81	0.65	610%	E	18.3	3.3	3.6	0.72	78.0%	0.0261
80 SP/4	0.75	0.55	1735	2.30	1.15	0.92	610%	D	27.2	3.4	6.1	0.72	82.7%	0.0344
80 LP/4	1	0.75	1730	3.14	1.57	1.26	650	K	36.4	3.5	3.8	0.70	86.1	0.045
90 SP/4	1.5	1.1	1740	4.20	2.10	1.68	840	L	54.3	4.2	4.9	0.76	86.9	0.081
90 LP/4	2	1.5	1730	5.60	2.80	2.24	760	K	72.9	3.9	4.3	0.78	87.0	0.093
100 LP/4	3	2.2	1770	7.68	3.84	3.07	920	L	107	3.0	4.5	0.79	90.0	0.192
112 MP/4	5	3.7	1755	13.0	6.50	5.20	950	L	180	4.1	4.6	0.80	90.3	0.332
132 SP/4	7.5	5.5	1770	19.5	9.75	7.80	1020	M	267	4.7	5.0	0.77	91.7	0.759
132 MP/4	10	7.5	1765	26.7	13.4	10.7	960	M	357	4.7	5.0	0.77	91.7	0.831
160 MP/4	15	11	1770	35.6	17.8	14.2	880	K	534	3.2	3.8	0.84	92.5	1.59
160 LP/4	20	15	1775	47.6	23.8	19.0	1080	M	710	4.3	4.7	0.85	93.0	2.18
180 MP/4	25	18.5	1780	60.6	30.3	24.2	1010	L	885	3.9	4.0	0.82	93.6	3.80
180 LP/4	30	22	1780	69.6	34.8	27.8	880	K	1062	3.3	3.4	0.85	93.6	3.80
225 RP/4	40	30	1785	-	49.5	39.6	890%	K	1420	3.4	3.8	0.81	94.5%	11.63
225 SP/4	50	37	1785	-	59.7	47.8	880%	K	1752	3.0	3.7	0.82	94.6%	12.81
225 MP/4	60	45	1785	-	72.0	57.6	910%	K	2131	3.3	3.6	0.83	95.2%	15.90
250 WP/4	75	55	1785	-	84.4	67.5	920%	J	2604	2.9	3.2	0.86	95.4%	19.46

DRAFT

Datenblatt
data sheet

Auftrag Nr. :

3 Phasen - Motor/Phase - Motor

Typ : Type:	100LP/4 CUS	Stator. Nr. : Stator. No. :	15542610
Leistung : Output :	2,2 kW 3 HP	Ständerschaltung: Connection of stator :	YY/Y
Spannung : Voltage :	230 / 460 V	Frequenz : Frequency :	60 Hz
Strom : Current :	7,68 / 3,84 A	Drehzahl : Speed :	1770 1/min
Cos.phi : Pf :	0,79 Betriebsart: Duty: S1	Schutzart: Type of protection:	IP 55
Drehrichtung: Direction of rotation :	beide/ cw, ccw	Bauform : Design :	B5

Vorschrift:
Classifikation Authorites: E191510 Energy Verified 189340 CC 092 A

Widerstand: (kalt) des Ständers pro Strang,bei 20° C: 0,983 T1-T4 Ohm Isol.Kl. : F
resistances:(cold) stator winding per phase Insul.Cl.

Meßwerte/measurement-values

U (V)	I (A)	n(1/min)/rpm	f (Hz)	Belastung /rating
230 / 460	4,32 / 2,16	1800	60	Leerlauf / no load
/	/			
/	/			
230 / 460	7,68 / 3,84	1770	60	Vollast / full load

Probe mit : 460 V und 3,84 A während 4 Stunden
Type-or-heat-run-test at and during hours

Temperaturerhöhung über umgebende Luft: 21,8 K , an der Ständerwicklung, gemessen
Temperatur rise above ambient temp. : at the stator winding
nach der Widerstandsmethode.
resistance method.

Wicklungsprüfung : 2352 V , 5 sek.
Winding test :

Überlast :Bemessungsdrehmoment x 1,6 - 15 s
Overload :

Isolationswiderstand: > 100 MOhm
Insulation resistace :

Schalldruckpegel, L_{pA} : 55 dB(A)
Noise level, L_{pA}

Wirkungsgrad bei Bemessungsleistung (%) : 90,0 (Premium energy efficient)
efficiency

Anlaufstrom / Bemessungsstrom : 9,2
starting current / rated current

Anlaufmoment / Bemessungsmoment: 3,0
starting torque / rated torque

Kippmoment / Bemessungsmoment : 4,5
maximum torque / rated torque

Trägheitsmoment,Motorläufer, J (kgm^2) : 0,0075
moment of inertia, motor-rotor

DRAFT

Torque and Curent over Speed curves 100LP/4 CUS (NORD)

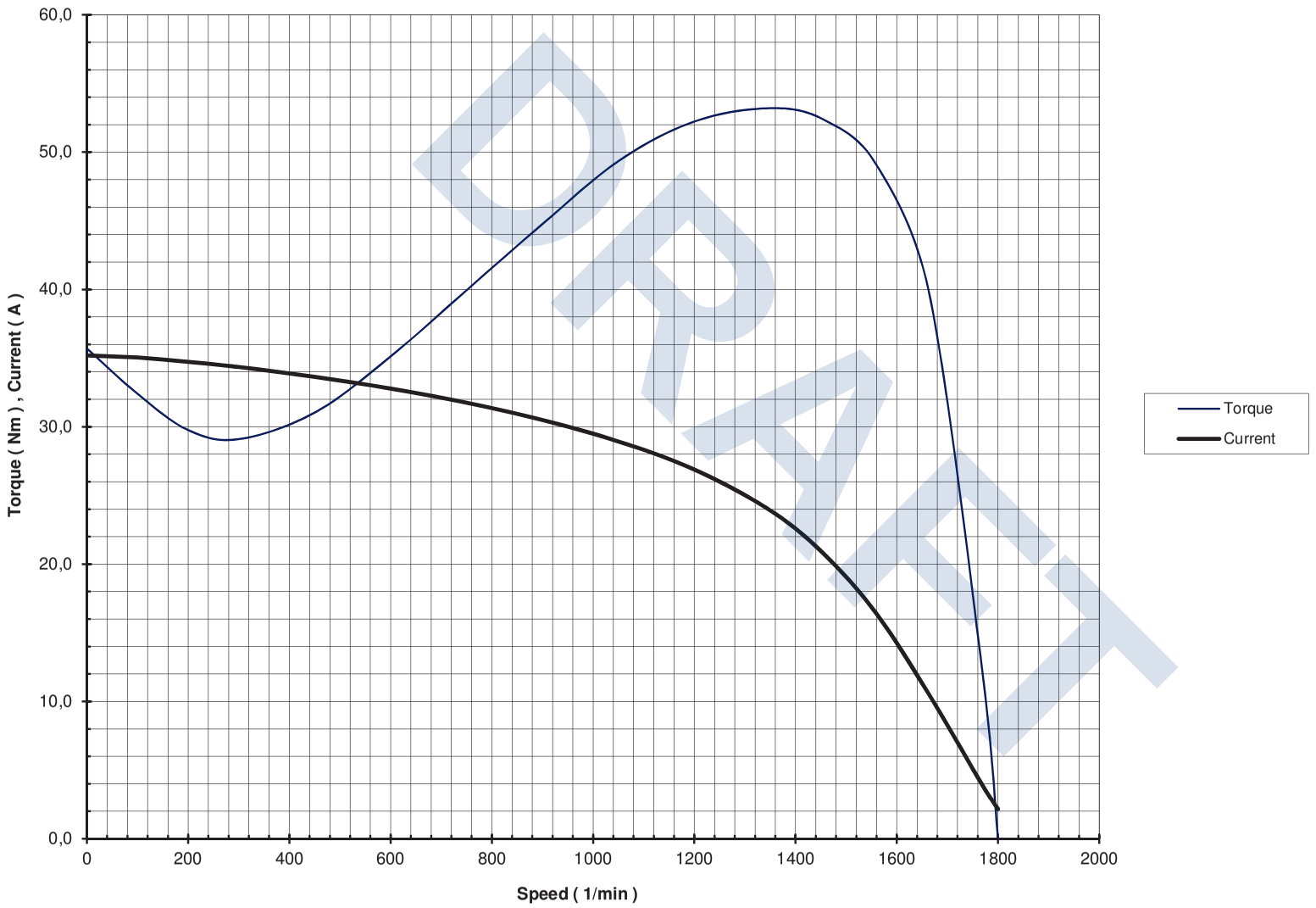

DRAFT

NORD DRIVESYSTEMS

Stator: 15542610

Ma=	35,7	Nm
Ms=	29,1	Nm
Mk=	53,2	Nm
Mn=	11,9	Nm
Ia=	35,2	A
In=	3,84	A
Io=	2,16	A
n=	1770	1/min
f=	60	Hz
Voltage:	460	V
Power:	2,2	kW
Duty:	S1	

05.03.2013

PREMIUM EFFICIENT MOTORS
HIGH PERFORMANCE & ENERGY SAVINGS

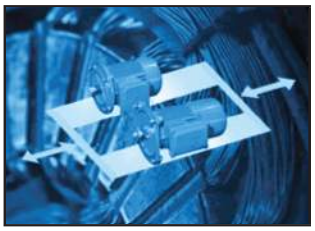

Mounting Styles

- Integral motor for use with speed reducer
- NEMA C-face flange
- NEMA T-Frame footed motor mount
- DIN B5, IEC FF metric face flange mount
- DIN B14, IEC metric face flange mount
- DIN B3, IEC metric foot mount



Inverter Duty & Inverter Duty Options

- Motors conform with NEMA MG-1-2006 Section 31.4.4.2
- Insulated with double coated magnet wire
- Speed range 5:1 constant torque from 60Hz to 12Hz
- 10:1 speed range : constant torque from 60Hz to 6Hz
- 20:1 speed range : constant torque from 80Hz to 4Hz
- 1000:1 speed range : constant torque from 60Hz to 0Hz
- Blower cooling fans
- Incremental encoder



Standard Construction Features

- Ambient temperature of 40° C (104° F)
- 3300 feet of elevation without derating
- Class B temperature rise : 105° C (221° F)
- Class F insulation system : 155° C (311° F)
- IP55 enclosure protection
- Totally Enclosed Fan Cooled (TEFC)
- Low rotor inertia
- Ball bearings & high temperature bearing grease
- Squirrel cage rotor
- Dynamically balanced, anti-corrosion coated rotor
- Corrosion resistant aluminum alloy housing
- 1045 carbon steel shaft with shaft lip seals on both end bells
- Sealed stator to end bell connections
- Gasket sealed conduit boxes
- Four conduit box & threaded cable entry locations
- Double coated magnet wire insulation
- Insulation lined slots
- Inorganic insulation for tropical protection
- Phase paper & separators
- First turn winding protection
- Varnish dipped stator
- Non sparking low inertia fan
- Terminal block power connector
- Reverseable roatation direction

Product Options

Thermal Winding Protection Options

- Thermistat Sensor (TW)
- Thermistor Sensor (TF)

Brakemotors

- Ready to go…wired by factory
- Manual hand release lever included
- Downward adjustable torque is included,specification is required
- AC to DC voltage rectifier is included
- IP55 enclosure protection is included

Brakemotor Options

- NSD+ severe duty protection
- Corrosion protection (RG)
- Dust protection (SR)
- Lockable hand release lever (FHL)
- Oversize & Undersize brake
- Inverter duty modifications
- Faster torque release enhancement
- Faster torque stopping enhancement
- Current sensing relay (IR)
- Heating circuit (BSH)
- Micro switch wear indicator
- IP 66 enclosure

Environmental Protection Options

- NSD+ severe duty protection
- Encapsulated windings for IEEE45 Marine Duty
- IP66 enclosure
- End bell drain holes
- Drip cover (RD)
- Wind protected double drip cover (RDD)
- Space heater (SH)
- Epoxy coated interior surfaces

Other Options

- Class H insulation system
- Over-running clutch (FK)
- Anti-rotation backstop (RLS)
- Extended motor shaft (WE)
- High inertia metal fan for soft start (Z)
- Quick power disconnect plug (MS1)

DRAFT

DRIVESYSTEMS
www.nord.com

NORD Gear Corporation
MEMBER OF THE NORD DRIVESYSTEMS GROUP
info.us@nord.com

Waunakee, WI
800 NORD Drive
Waunakee, WI 53597
Tel. 608.849.7300

Corona, CA
1180 Railroad St.
Corona, CA 92882
Tel. 951.393.6565

Charlotte, NC
300 Forsyth Hall Dr.
Charlotte, NC 28273
Tel. 980.215.7575

NORD Gear Limited - Canada
MEMBER OF THE NORD DRIVESYSTEMS GROUP
info.ca@nord.com

Brampton, ON
41 West Drive
Brampton, ON L6T4A1
Tel. 800.668.4378

DS1006 Mat.-Nr. 6014603 / 0516



Global Vision, Local Support

NORD makes its wide product range easily available through a global network that includes representation in over 60 countries. By providing all of our customers with prompt delivery, and expert support services, we are firmly committed to exceeding customer expectations and being responsive to the ideas and specifications of every customer, anywhere in the world.

PREMIUM EFFICIENT MOTORS
HIGH PERFORMANCE & ENERGY SAVINGS

NORD DRIVESYSTEMS



60 Hz Line Frequency - SF 1.15

230/460 - 3 phase: 0.16 to 30 hp
460V - 3 phase: 40 to 200 hp
575V - 3 phase: 0.16 to 200 hp

50 Hz Line Frequency - SF 1.0

230/400V - 3 phase: 0.12 to 2.2 kW
400/690V - 3 phase: 3 to 90 kW

Motor Type	P_n Full Load Power		n_n Full-Load Speed	I_n Full-Load Current			I_a/I_n Locked Rotor Current Ratio	NEMA Code Letter	T_n Full-Load Torque	T_a/T_n Locked Rotor Torque Ratio	T_k/T_n Break Down Torque Ratio	pf Power Factor	η Full Load Efficiency	J_m Rotor Inertia
				230V	460V	575V								
	[hp]	[kW]	[rpm]	[A]	[A]	[A]	[%]		[lb-in]				[%]	[lb-ft²]
63 SP/4	0.16	0.12	1695	0.72	0.36	0.29	400%	D	5.95	3.4	3.3	0.62	68.5%	0.0057
63 LP/4	0.25	0.18	1705	1.08	0.54	0.43	430%	D	9.24	4.1	3.9	0.57	72.5%	0.0078
71 SP/4	0.33	0.25	1725	1.26	0.63	0.50	590%	F	12.1	3.7	3.9	0.67	75.8%	0.0204
71 LP/4	0.5	0.37	1725	1.62	0.81	0.65	610%	E	18.3	3.3	3.6	0.72	78.0%	0.0261
80 SP/4	0.75	0.55	1735	2.30	1.15	0.92	610%	D	27.2	3.4	6.1	0.72	82.7%	0.0344
80 LP/4	1	0.75	1730	3.14	1.57	1.26	650	K	36.4	3.5	3.8	0.70	86.1	0.045
90 SP/4	1.5	1.1	1740	4.20	2.10	1.68	840	L	54.3	4.2	4.9	0.76	86.9	0.081
90 LP/4	2	1.5	1730	5.60	2.80	2.24	760	K	72.9	3.9	4.3	0.78	87.0	0.093
100 LP/4	3	2.2	1770	7.68	3.84	3.07	920	L	107	3.0	4.5	0.79	90.0	0.192
112 MP/4	5	3.7	1755	13.0	6.50	5.20	950	L	180	4.1	4.6	0.80	90.3	0.332
132 SP/4	7.5	5.5	1770	19.5	9.75	7.80	1020	M	267	4.7	5.0	0.77	91.7	0.759
132 MP/4	10	7.5	1765	26.7	13.4	10.7	960	M	357	4.7	5.0	0.77	91.7	0.831
160 MP/4	15	11	1770	35.6	17.8	14.2	880	K	534	3.2	3.8	0.84	92.5	1.59
160 LP/4	20	15	1775	47.6	23.8	19.0	1080	M	710	4.3	4.7	0.85	93.0	2.18
180 MP/4	25	18.5	1780	60.6	30.3	24.2	1010	L	885	3.9	4.0	0.82	93.6	3.80
180 LP/4	30	22	1780	69.6	34.8	27.8	880	K	1062	3.3	3.4	0.85	93.6	3.80
225 RP/4	40	30	1785	-	49.5	39.6	890%	K	1420	3.4	3.8	0.81	94.5%	11.63
225 SP/4	50	37	1785	-	59.7	47.8	880%	K	1752	3.0	3.7	0.82	94.6%	12.81
225 MP/4	60	45	1785	-	72.0	57.6	910%	K	2131	3.3	3.6	0.83	95.2%	15.90
250 WP/4	75	55	1785	-	84.4	67.5	920%	J	2604	2.9	3.2	0.86	95.4%	19.46

DRAFT

Datenblatt
data sheet

Auftrag Nr. :

3 Phasen - Motor/Phase - Motor

Typ : Type:	90SP/4 CUS	Stator. Nr. : Stator. No. :	14042410
Leistung : Output :	1,1 kW 1,5 HP	Ständerschaltung: Connection of stator :	YY/Y
Spannung : Voltage :	230 / 460 V	Frequenz : Frequency :	60 Hz
Strom : Current :	4,20 / 2,10 A	Drehzahl : Speed :	1740 1/min
Cos.phi : Pf :	0,76 Betriebsart: Duty: S1	Schutzart: Type of protection:	IP 55
Drehrichtung: Direction of rotation :	beide/ cw, ccw	Bauform : Design :	B5

Vorschrift:
Classifikation Authorites: E191510 Energy Verified 189340 CC 092 A

Widerstand: (kalt) des Ständers pro Strang,bei 20° C: 2,08 T1-T4 Ohm Isol.Kl. : F
resistances:(cold) stator winding per phase Insul.Cl.

Meßwerte/measurement-values

U (V)	I (A)	n(1/min)/rpm	f (Hz)	Belastung /rating
230 / 460	2,64 / 1,32	1800	60	Leerlauf / no load
/	/			
/	/			
230 / 460	4,20 / 2,10	1740	60	Vollast / full load

Probe mit : 460 V und 2,10 A während 4 Stunden
Type-or-heat-run-test at and during hours

Temperaturerhöhung über umgebende Luft: 21,1 K , an der Ständerwicklung, gemessen
Temperatur rise above ambient temp. : at the stator winding
nach der Widerstandsmethode.
resistance method.

Wicklungsprüfung : 2352 V , 5 sek.
Winding test :

Überlast :Bemessungsdrehmoment x 1,6 - 15 s
Overload :

Isolationswiderstand: > 100 MOhm
Insulation resistace :

Schalldruckpegel, L_{pA} : 53 dB(A)
Noise level, L_{pA}

Wirkungsgrad bei Bemessungsleistung (%) : 86,9 (Premium energy efficient)
efficiency

Anlaufstrom / Bemessungsstrom : 8,4
starting current / rated current

Anlaufmoment / Bemessungsmoment: 4,2
starting torque / rated torque

Kippmoment / Bemessungsmoment : 4,9
maximum torque / rated torque

Trägheitsmoment,Motorläufer, J (kgm^2) : 0,0034
moment of inertia, motor-rotor

DRAFT

Torque and Curent over Speed curves 90SP/4 CUS (NORD)

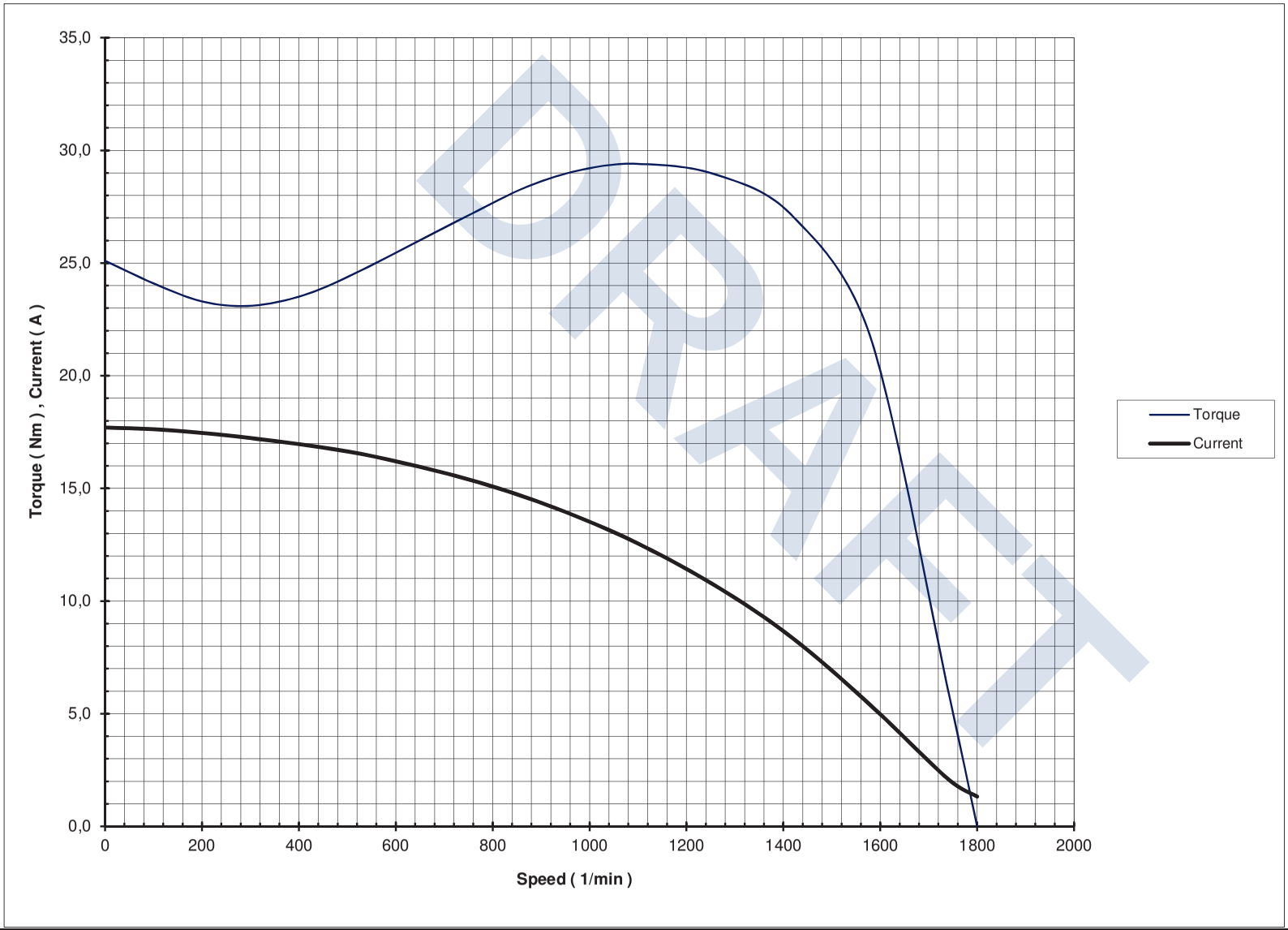

DRAFT

DRIVESYSTEMS

Stator: 14042410

Ma=	25,1	Nm
Ms=	23,1	Nm
Mk=	29,4	Nm
Mn=	6,0	Nm
Ia=	17,7	A
In=	2,10	A
Io=	1,32	A
n=	1740	1/min
f=	60	Hz
Voltage:	460	V
Power:	1,1	kW
Duty:	S1	

Fine Compactor Motors (or equal)

05.03.2013

HIGH PERFORMANCE MOTORS
GEAR MOTORS

NORD DRIVESYSTEMS

60 HERTZ LINE FREQUENCY - SF 1:15

230V - 3 phase : 0.16 to 40 hp
460V - 3 phase : 0.16 to 250 hp
575V - 3 phase : 0.16 to 250 hp

OPTIONS

115/230V - 1 phase : 0.16 to 2 hp
208V - 3 phase : 0.16 to 10 hp

50 HERTZ LINE FREQUENCY

230/400V - 3 phase : 0.12 to 2.2 kW
400/690V - 3 phase : 3 to 200 kW

OPTIONS

230V - 1 phase : 0.09 to 1.5 kW

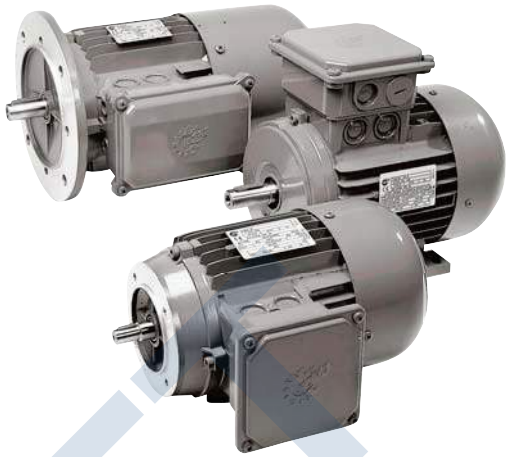

Motor Power		Full Load Speed	Integral Model Number	Mounting Options					Full Load Current			Starting Torque	Break-down Torque
				NEMA T-Frame	NEMA C-Face	IEC Footed B3 Style	IEC Flanged B3 Style	IEC Flanged B14 Style	230V	460V	575V		
[hp]	[kW]	[rpm]							[A]	[A]	[A]	[%]	[%]
0.16	0.12	1700	63S/4	56T	56C	63S-B3	63S-B5	63S-B14	0.88	0.44	0.37	210	220
0.25	0.18	1680	63L/4	56T	56C	63L-B3	63L-B5	63L-B14	1.12	0.56	0.46	210	220
0.33	0.25	1710	71S/4	56T	56C	71S-B3	71S-B5	71S-B14	1.56	0.78	0.66	250	240
0.50	0.37	1720	71L/4	56T	56C	71L-B3	71L-B5	71L-B14	1.90	0.95	0.80	245	260
0.75	0.55	1710	80S/4	56T	56C	80S-B3	80S-B5	80S-B14	2.70	1.35	1.12	220	220
1	0.75	1650	80L/4	56T	56C	80L-B3	80L-B5	80L-B14	3.66	1.83	1.46	220	230
1.5	1.1	1660	90S/4	56T, 143T	56C, 143TC	90S-B3	90S-B5	90S-B14	4.84	2.42	1.94	270	260
2	1.5	1660	90L/4	145T	145TC	90L-B3	90L-B5	90L-B14	6.34	3.17	2.54	255	250
3	2.2	1705	100L/4	182T	182TC	100L-B3	100L-B5	100L-B14	9.00	4.50	3.60	230	260
5	3.7	1725	100L/40	184T	184TC	100La-B3	100La-B5	100La-B14	15.2	7.62	6.10	270	310
7.5	5.5	1735	132S/4	213T	213TC	132S-B3	132S-B5	132S-B14	19.8	9.90	7.92	245	275
10	7.5	1735	132M/4	215T	215TC	132M-B3	132M-B5	132M-B14	26	12.9	10.3	290	320
15	11	1770	160M/4	254T	254TC	160M-B3	160M-B5	-	38	19.2	-	245	300
20	15	1765	160L/4	256TC	256TC	160L-B3	160L-B5	-	49	25	-	290	330
25	18.5	1750	180MX/4	-	-	-	-	-	60	30	-	295	340
30	22	1755	180LX/4	-	-	-	-	-	71	36	-	340	370
40	30	1780	200L/4	-	-	-	-	-	96	48	-	290	260
50	37	1765	225S/4	-	-	-	-	-	-	58	-	310	350
60	45	1770	225M/4	-	-	-	-	-	-	70	-	310	260
75	55	1782	250M/4	-	-	-	-	-	-	89	-	280	320
100	75	1788	280S/4	-	-	-	-	-	-	118	-	290	350
125	90	1786	280M/4	-	-	-	-	-	-	144	-	280	330
150	110	1788	315S/4	-	-	-	-	-	-	176	-	280	310
175	132	1790	315M/4	-	-	-	-	-	-	200	-	300	340
200	150	1790	315Ma/4	-	-	-	-	-	-	230	-	320	360
250	187	1790	315L/4	-	-	-	-	-	-	280	-	320	330

DRAFT

NORD Gear Corp.
800 NORD Drive
Waunakee, WI 53597
www.nord.com

Data Sheet No.: MDS_N13032020_US

3 phase - motor

Type : 80 S/4

Output : 0,75 hp / 0,55 kW

Connection of stator : YY/Y

Voltage: 230 / 460 V

Frequency : 60 Hz

Current : 2,70 / 1,35 A

Speed : 1710 rpm

pf : 0,71 Duty: Cont

Type of enclosure: IP 55

Direction of rotation : both

Design :

Code Letter: F

Service factor: 1.15

Resistances [20°C] T1, T4: 7,5 Ohm Insul.Cl. F

Standard: LR112560 E191510 NEMA, EN 60034

Measurement-values:

U (V)	I (A)	rpm	f (Hz)	Rating
230 / 460	1,96 / 0,98	1800	60	no load
/	/			
/	/			
230 / 460	2,70 / 1,35	1720	60	full load
/	/			
/	/			
230 / 460	3.73 / 2,16	1370	60	breakdown
/	/			
/	/			

Type-or-heat-run-test at: 460 V and 1,35 A during 4 hours

Temperatur rise above ambient temp. : 72 K , at the stator winding, resistance method.

Winding test : 1920 V , 5 sec. ,

Winding test : 690 V, 1 min.

Noise level, LpA 50 dB(A)

Overload : nominal current x 1,6 - 120 s

Insulation resistace : > 100 MOhm

Efficiency: 72 %

Starting current / Rated current: 3.55

Starting torque / Rated torque: 2.2

Breakdown torque / Rated torque: 2.2

Date : 08.12.2004

Signature :

DRAFT

NORD GEAR Corp.
800 NORD Drive
Waunakee, WI 53597
www.nord.com

Torque & Current vs. Speed 80S/4 230/460V - 60 Hz

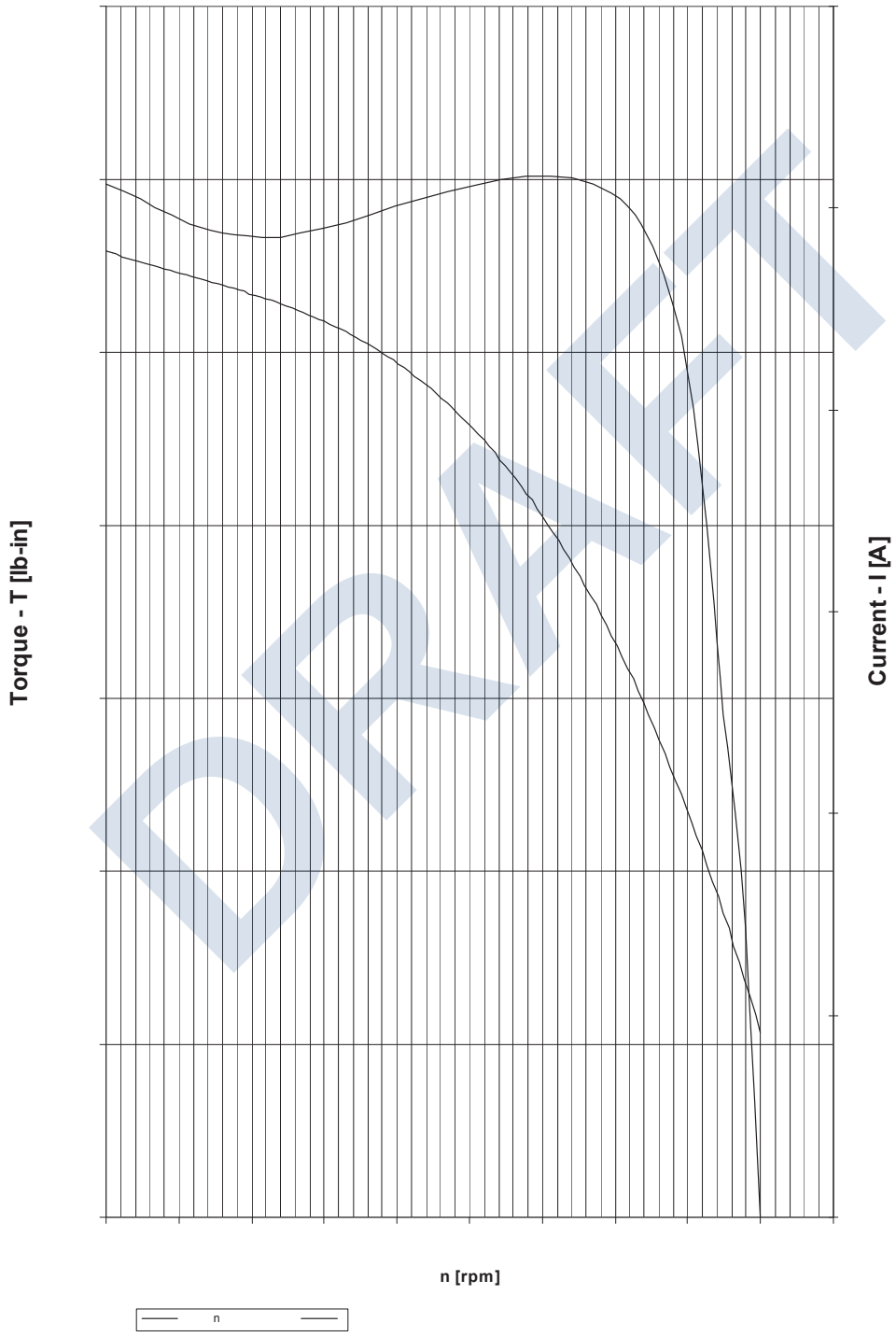

DRAFT

Da

20

HIGH PERFORMANCE MOTORS
GEAR MOTORS

NORD DRIVESYSTEMS

60 HERTZ LINE FREQUENCY - SF 1:15

230V - 3 phase : 0.16 to 40 hp
460V - 3 phase : 0.16 to 250 hp
575V - 3 phase : 0.16 to 250 hp

OPTIONS

115/230V - 1 phase : 0.16 to 2 hp
208V - 3 phase : 0.16 to 10 hp

50 HERTZ LINE FREQUENCY

230/400V - 3 phase : 0.12 to 2.2 kW
400/690V - 3 phase : 3 to 200 kW

OPTIONS

230V - 1 phase : 0.09 to 1.5 kW

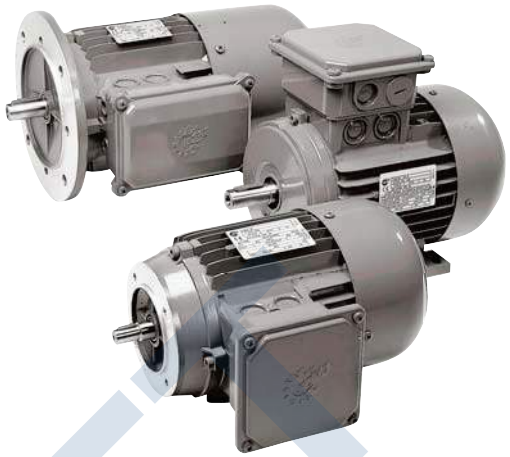

Motor Power		Full Load Speed	Integral Model Number	Mounting Options					Full Load Current			Starting Torque	Break-down Torque
				NEMA T-Frame	NEMA C-Face	IEC Footed B3 Style	IEC Flanged B3 Style	IEC Flanged B14 Style	230V	460V	575V		
[hp]	[kW]	[rpm]							[A]	[A]	[A]	[%]	[%]
0.16	0.12	1700	63S/4	56T	56C	63S-B3	63S-B5	63S-B14	0.88	0.44	0.37	210	220
0.25	0.18	1680	63L/4	56T	56C	63L-B3	63L-B5	63L-B14	1.12	0.56	0.46	210	220
0.33	0.25	1710	71S/4	56T	56C	71S-B3	71S-B5	71S-B14	1.56	0.78	0.66	250	240
0.50	0.37	1720	71L/4	56T	56C	71L-B3	71L-B5	71L-B14	1.90	0.95	0.80	245	260
0.75	0.55	1710	80S/4	56T	56C	80S-B3	80S-B5	80S-B14	2.70	1.35	1.12	220	220
1	0.75	1650	80L/4	56T	56C	80L-B3	80L-B5	80L-B14	3.66	1.83	1.46	220	230
1.5	1.1	1660	90S/4	56T, 143T	56C, 143TC	90S-B3	90S-B5	90S-B14	4.84	2.42	1.94	270	260
2	1.5	1660	90L/4	145T	145TC	90L-B3	90L-B5	90L-B14	6.34	3.17	2.54	255	250
3	2.2	1705	100L/4	182T	182TC	100L-B3	100L-B5	100L-B14	9.00	4.50	3.60	230	260
5	3.7	1725	100L/40	184T	184TC	100La-B3	100La-B5	100La-B14	15.2	7.62	6.10	270	310
7.5	5.5	1735	132S/4	213T	213TC	132S-B3	132S-B5	132S-B14	19.8	9.90	7.92	245	275
10	7.5	1735	132M/4	215T	215TC	132M-B3	132M-B5	132M-B14	26	12.9	10.3	290	320
15	11	1770	160M/4	254T	254TC	160M-B3	160M-B5	-	38	19.2	-	245	300
20	15	1765	160L/4	256TC	256TC	160L-B3	160L-B5	-	49	25	-	290	330
25	18.5	1750	180MX/4	-	-	-	-	-	60	30	-	295	340
30	22	1755	180LX/4	-	-	-	-	-	71	36	-	340	370
40	30	1780	200L/4	-	-	-	-	-	96	48	-	290	260
50	37	1765	225S/4	-	-	-	-	-	-	58	-	310	350
60	45	1770	225M/4	-	-	-	-	-	-	70	-	310	260
75	55	1782	250M/4	-	-	-	-	-	-	89	-	280	320
100	75	1788	280S/4	-	-	-	-	-	-	118	-	290	350
125	90	1786	280M/4	-	-	-	-	-	-	144	-	280	330
150	110	1788	315S/4	-	-	-	-	-	-	176	-	280	310
175	132	1790	315M/4	-	-	-	-	-	-	200	-	300	340
200	150	1790	315Ma/4	-	-	-	-	-	-	230	-	320	360
250	187	1790	315L/4	-	-	-	-	-	-	280	-	320	330

DRAFT

Grit Classifier Motor (or equal)

NORD Gear Corp.
800 NORD Drive
Waunakee, WI 53597
www.nord.com

Data Sheet No.: MDS_N12632020_US

3 phase - motor

Type : 71 L/4

Output : 0,50 hp / 0,37 kW

Connection of stator : YY/Y

Voltage: 230 / 460 V

Frequency : 60 Hz

Current : 1,90 / 0,95 A

Speed : 1720 rpm

pf : 0,69 Duty: Cont

Type of enclosure: IP 55

Direction of rotation : both

Design :

Code Letter: F

Service factor: 1.15

Resistances [20°C] T1, T4: 13,65 Ohm Insul.Cl. F

Standard: LR112560 E191510 NEMA, EN 60034

Measurement-values:

U (V)	I (A)	rpm	f (Hz)	Rating
230 / 460	1,48 / 0,74	1800	60	no load
/	/			
/	/			
230 / 460	1,90 / 0,95	1720	60	full load
/	/			
/	/			
230 / 460	3.04 / 1,52	1370	60	breakdown
/	/			
/	/			

Type-or-heat-run-test at: 460 V and 0,95 A during 4 hours

Temperatur rise above ambient temp. : 82 K , at the stator winding, resistance method.

Winding test : 1920 V , 5 sec. ,

Winding test : 690 V, 1 min.

Noise level, LpA 44 dB(A)

Overload : nominal current x 1,6 - 120 s

Insulation resistace : > 100 MOhm

Efficiency: 71 %

Starting current / Rated current: 3.55

Starting torque / Rated torque: 2.45

Breakdown torque / Rated torque: 2.60

DRAFT

NORD GEAR Corp.
800 NORD Drive
Waunakee, WI 53597
www.nord.com

Torque & Current vs. Speed 71L/4 230/460V-60 Hz

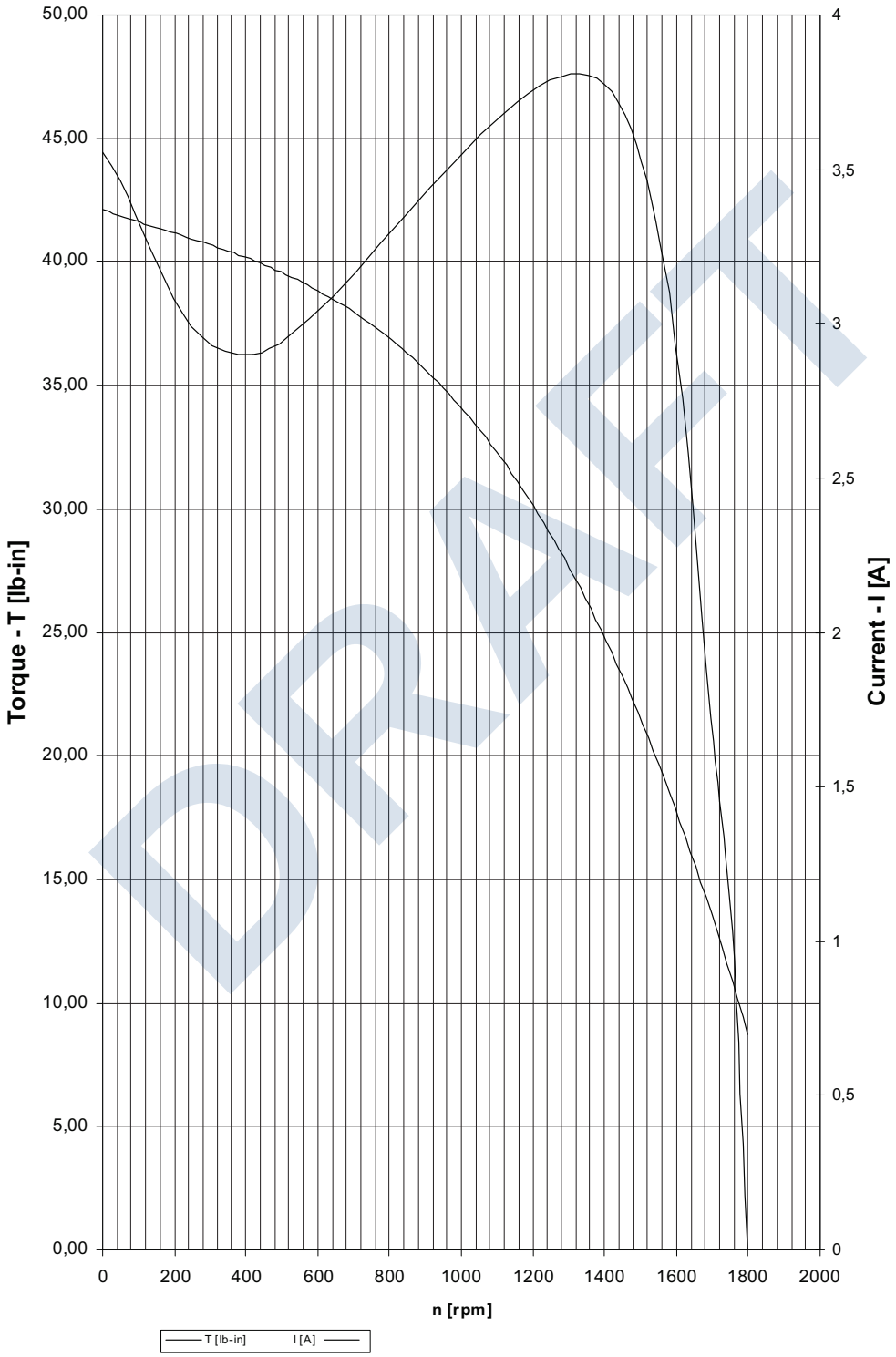

DRAFT

Da

PREMIUM EFFICIENT MOTORS
HIGH PERFORMANCE & ENERGY SAVINGS

NORD DRIVESYSTEMS



60 Hz Line Frequency - SF 1.15

230/460 - 3 phase: 0.16 to 30 hp
460V - 3 phase: 40 to 200 hp
575V - 3 phase: 0.16 to 200 hp

50 Hz Line Frequency - SF 1.0

230/400V - 3 phase: 0.12 to 2.2 kW
400/690V - 3 phase: 3 to 90 kW

Motor Type	P_n Full Load Power		n_n Full-Load Speed	I_n Full-Load Current			I_a/I_n Locked Rotor Current Ratio	NEMA Code Letter	T_n Full-Load Torque	T_a/T_n Locked Rotor Torque Ratio	T_k/T_n Break Down Torque Ratio	pf Power Factor	η Full Load Efficiency	J_m Rotor Inertia
				230V	460V	575V								
	[hp]	[kW]	[rpm]	[A]	[A]	[A]	[%]		[lb-in]				[%]	[lb-ft²]
63 SP/4	0.16	0.12	1695	0.72	0.36	0.29	400%	D	5.95	3.4	3.3	0.62	68.5%	0.0057
63 LP/4	0.25	0.18	1705	1.08	0.54	0.43	430%	D	9.24	4.1	3.9	0.57	72.5%	0.0078
71 SP/4	0.33	0.25	1725	1.26	0.63	0.50	590%	F	12.1	3.7	3.9	0.67	75.8%	0.0204
71 LP/4	0.5	0.37	1725	1.62	0.81	0.65	610%	E	18.3	3.3	3.6	0.72	78.0%	0.0261
80 SP/4	0.75	0.55	1735	2.30	1.15	0.92	610%	D	27.2	3.4	6.1	0.72	82.7%	0.0344
80 LP/4	1	0.75	1730	3.14	1.57	1.26	650	K	36.4	3.5	3.8	0.70	86.1	0.045
90 SP/4	1.5	1.1	1740	4.20	2.10	1.68	840	L	54.3	4.2	4.9	0.76	86.9	0.081
90 LP/4	2	1.5	1730	5.60	2.80	2.24	760	K	72.9	3.9	4.3	0.78	87.0	0.093
100 LP/4	3	2.2	1770	7.68	3.84	3.07	920	L	107	3.0	4.5	0.79	90.0	0.192
112 MP/4	5	3.7	1755	13.0	6.50	5.20	950	L	180	4.1	4.6	0.80	90.3	0.332
132 SP/4	7.5	5.5	1770	19.5	9.75	7.80	1020	M	267	4.7	5.0	0.77	91.7	0.759
132 MP/4	10	7.5	1765	26.7	13.4	10.7	960	M	357	4.7	5.0	0.77	91.7	0.831
160 MP/4	15	11	1770	35.6	17.8	14.2	880	K	534	3.2	3.8	0.84	92.5	1.59
160 LP/4	20	15	1775	47.6	23.8	19.0	1080	M	710	4.3	4.7	0.85	93.0	2.18
180 MP/4	25	18.5	1780	60.6	30.3	24.2	1010	L	885	3.9	4.0	0.82	93.6	3.80
180 LP/4	30	22	1780	69.6	34.8	27.8	880	K	1062	3.3	3.4	0.85	93.6	3.80
225 RP/4	40	30	1785	-	49.5	39.6	890%	K	1420	3.4	3.8	0.81	94.5%	11.63
225 SP/4	50	37	1785	-	59.7	47.8	880%	K	1752	3.0	3.7	0.82	94.6%	12.81
225 MP/4	60	45	1785	-	72.0	57.6	910%	K	2131	3.3	3.6	0.83	95.2%	15.90
250 WP/4	75	55	1785	-	84.4	67.5	920%	J	2604	2.9	3.2	0.86	95.4%	19.46

DRAFT

Datenblatt
data sheet

Auftrag Nr. :

3 Phasen - Motor/Phase - Motor

Typ : Type:	112MP/4 CUS	Stator. Nr. : Stator. No. :	16042620
Leistung : Output :	3,7 kW 5 HP	Ständerschaltung: Connection of stator :	YY/Y
Spannung : Voltage :	230 / 460 V	Frequenz : Frequency :	60 Hz
Strom : Current :	13,00 / 6,50 A	Drehzahl : Speed :	1755 1/min
Cos.phi : Pf :	0,80 Betriebsart: Duty: S1	Schutzart: Type of protection:	IP 55
Drehrichtung: Direction of rotation :	beide/ cw, ccw	Bauform : Design :	B5

Vorschrift:
Classifikation Authorites:

E191510 Energy Verified 189340 CC 092 A

Widerstand: (kalt) des Ständers pro Strang,bei 20° C: 0,450 T1-T4 Ohm Isol.Kl. : F
resistances:(cold) stator winding per phase Insul.Cl.

Meßwerte/measurement-values

U (V)	I (A)	n(1/min)/rpm	f (Hz)	Belastung /rating
230 / 460	7,10 / 3,55	1800	60	Leerlauf / no load
/	/			
/	/			
230 / 460	13,00 / 6,50	1755	60	Vollast / full load

Probe mit : 460 V und 6,50 A während 4 Stunden
Type-or-heat-run-test at and during hours

Temperaturerhöhung über umgebende Luft: 36 K , an der Ständerwicklung, gemessen
Temperatur rise above ambient temp. : at the stator winding
nach der Widerstandsmethode.
resistance method.

Wicklungsprüfung : 2352 V , 5 sek.
Winding test :

Überlast :Bemessungsdrehmoment x 1,6 - 15 s
Overload :

Isolationswiderstand: > 100 MOhm
Insulation resistace :

Schalldruckpegel, L_{pA} : 58 dB(A)
Noise level, L_{pA}

Wirkungsgrad bei Bemessungsleistung (%) : 90,3 (Premium energy efficient)
efficiency

Anlaufstrom / Bemessungsstrom : 9,6
starting current / rated current

Anlaufmoment / Bemessungsmoment: 4,1
starting torque / rated torque

Kippmoment / Bemessungsmoment : 4,7
maximum torque / rated torque

Trägheitsmoment,Motorläufer, J (kgm^2) : 0,014
moment of inertia, motor-rotor

DRAFT

Gear Reducers

DRAFT

Included:

Performance Specifications & Features
Data Sheets

NORD DRIVESYSTEMS

PARALLEL HELICAL CLINCHER

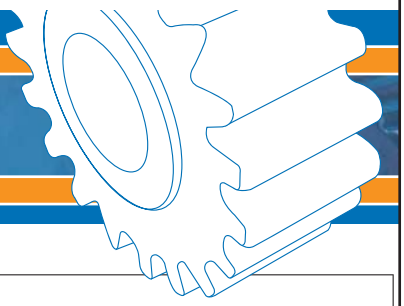



SHAFT DATA

- AISI 1045 or 4140 input and output shaft material
- Input and output shaft key dimensions are according to AISI B17 [in]
- Input and output shaft key dimensions are according to DIN 747 [mm]
- Standard output shaft drill and tap
- 2 hollow shaft keys
- Shrink disc size range [in] : 1.188 to 7.000
- Shrink disc size range [mm] : 30 to 180
- Minimum gripping safety factor range [h6 fit] : 2.2 to 5.9

SHAFT DATA OPTIONS
Double solid output shaft, Shaft fixing element, Custom shaft diameters, Hollow spline per DIN 5480, Custom spline, Cross drilled holes, 304 stainless steel



MOTOR MOUNTING

- Integral motor : 1/6 to 250 HP
- C-face adapter frame size range : 56C to 360TC
- IEC adapter [B5] frame size range : IEC 63 to IEC 315
- Sugar scoop motor availability : 56 to 365T
- Top mount platform motor availability : 56 to 405T

MOTOR MOUNTING OPTIONS
Custom motor adapter, Custom coupling diameter



GEARING

- Up to AGMA Class 13 gear quality rating
- 58 Rockwell C minimum gear hardness
- Ground or skive hobbed hard gear teeth finishing
- Standard drop forged gear blanks
- 275% momentary overload capacity
- Standard hunting tooth ratios



HOUSING

- Class 35 gray iron housing material
- Single setup machining method
- UNICASE™ one piece housing design
- Seals directly contact main housing
- Exceptional housing torsional stiffness
- Thick housing wall section
- Castings are dip sealed



BEARINGS

- ABEC-1 quality bearings
- Standard output ball bearings
- Tapered or spherical heavy-duty output bearings



LUBRICANT & SEALING COMPONENTS

- Factory filled ISO 220 mineral oil
- Standard AUTOVENT™ breather style
- QUADRILIP™ output seal design
- 1 double lip & 1 single lip output shaft oil seals
- Nitrile rubber oil seals

LUBRICANT & SEALING OPTIONS
Custom synthetic lubricating oil, Custom temperature lubricating oil, Fluid grease lubricant, Food grade lubricating oil, Long term storage preparation, Magnetic drain plug, Bulls eye sight glass, Custom drain plug, Fluorinated rubber oil seal material, Custom oil seals



INTERNAL PARTS ASSEMBLY

- Heavy press fit assembly method
- Standard reversing duty
- Typical backlash range [arc minutes] : 6 to 11

INTERNAL PARTS ASSEMBLY OPTIONS
Internal backstop



ENVIRONMENTAL PROTECTION

- Exterior primer coverage on all metal exterior surfaces
- Water Based Resin paint type
- 316 stainless steel flake paint additive
- H1 USDA incidental contact exposure

ENVIRONMENTAL OPTIONS
NSD+ protection, Custom paint, Shaft seal covers, High pressure washdown IP66 oil seals

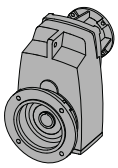

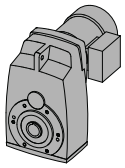

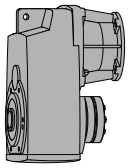

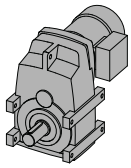

DRAFT

NORD DRIVESYSTEMS
www.nord.com

NORD Gear Corporation
National Customer Service Toll-Free: 888.314.6673
info.us@nord.com

NORD Gear Limited
Toll-Free in Canada: 800.668.4378
info.ca@nord.com

WEST
Corona, CA (Los Angeles)
Phone: 608.849.0190

MIDWEST
Waunakee, WI (Madison)
Phone: 608.849.7300

EAST
Charlotte, NC
Phone: 608.849.0140

CANADA
Brampton, ON (Toronto)
Phone: 905.796.3606

10020018/1011

Intelligent Drivesystems

NORD SEVERE DUTY EXTREME

ENHANCED CORROSION PROTECTION

NORD DRIVESYSTEMS

PERFORMANCE RANGE

With many standard features to help maximize operational processes, all of NORD's motors and speed reducers are constructed to provide a high level of protection against wet and severe environments – both inside and outside of your facilities. Extremely well-sealed against permeating moisture, our products use corrosion – and moisture – resistant components to reduce the effects of harmful environmental exposure. NSD-X3 sealed motor and gear units use a primer undercoat and stainless steel finish and clear top coat applied to the surface for increased protection in wet and outdoor installations. With a durable solvent-based coating, NSD-X3 units provide maximum protection for your extreme application conditions.



NSD-X3W White Coating

TYPICAL APPLICATION

- Indoor applications that are wet, dirty or include a chemical washdown
- Outdoor applications that are unprotected and exposed to severe environmental conditions

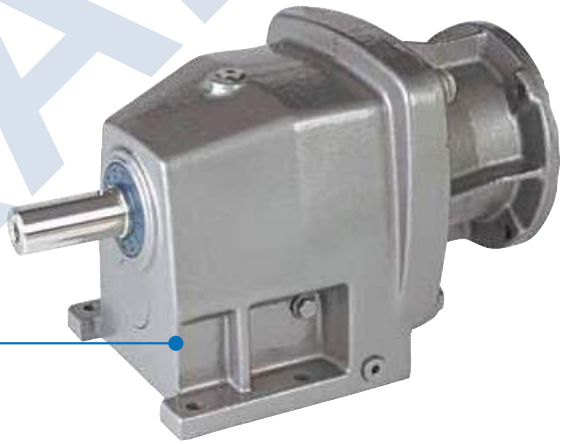

NSD-X3 Stainless Coating

Additionally a variety of coating options are available including our Severe Duty coatings:

Finish	Color	Coating	Use
NSD X3			
NORD Severe Duty Extreme NSD-X3	Stainless steel silver (Gray)	1 x Primer high solid alkyd system 1 x Stainless steel (316) (polyurethane) 1 x Clear top coat (polyurethane)	Indoor or outdoor more severe environment
NORD Severe Duty Extreme NSD-X3W	White	1 x Primer high solid alkyd system 1 x White (polyurethane) 1 x Clear top coat (polyurethane)	Indoor or outdoor more severe environment
Alternate color NSD-X3	Black, Blue, Red, Orange	1 x Primer high solid alkyd system 1 x Color (polyurethane) 1 x Clear top coat (polyurethane)	Indoor or outdoor more severe environment

Special colors and paints possible please contact NORD with your specific requirements.

DRAFT

NORD SEVERE DUTY EXTREME

STANDARD PROTECTIVE

REDUCERS

- Unicase® housing design
- Autovent™ pressure relief breather or sealed housing
- Gear housing internally and externally prime painted
- Quadrilip™ or double lip output shaft seals
- Stainless steel nameplate
- Factory oil-filled
- Stainless steel (316) protective paint coating – Suitable for use in a USDA inspected facility

MOTORS

- Shaft lip seals on both ends of the motor shafts
- Stator to end bell connections sealed to exclude moisture
- Double coated magnetic wire insulation
- Moisture-resistant varnish-dipped windings
- Inorganic insulating components for tropical protection
- Moisture-resistant motor windings
- Conduit box sealed with gaskets
- Corrosion resistant alloy materials
- Stainless steel (316) protective paint coating – USDA/H compliant Suitable for use in a USDA inspected facility



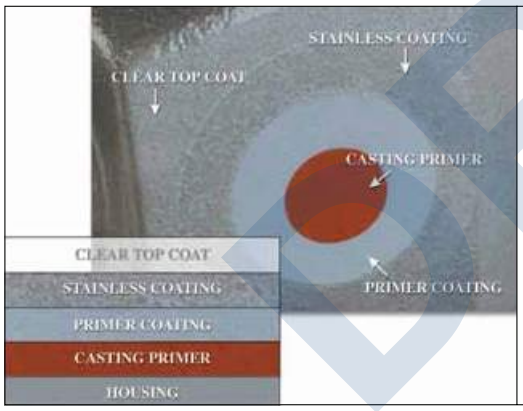

ADDED NSD-X3 PROTECTIVE BENEFITS

- Solvent-based paint for increased durability
- Includes additional primer undercoat for improved corrosion protection
- Clear top coat for added protection
- Outstanding exterior durability and corrosion resistance
- Superior chemical resistance when exposed to industrial solvents : laquer thinner, acetone, gasoline, Xylol, lubricants and cutting oils
- Cured coating develops 2H hardness, yet exhibits excellent high impact resistance
- Stands up to heat and humidity (tested for 500 hours at 100% humidity and 100°F)
- Available in stainless steel (316) – or white finish

DRAFT

DRIVESYSTEMS
www.nord.com

NORD Gear Corporation
National Customer Service Toll-Free: 888.314.6673
info.us@nord.com

NORD Gear Limited
Toll-Free in Canada: 800.668.4378
info.ca@nord.com

WEST
Corona, CA (Los Angeles)
Phone: 608.849.0190

MIDWEST
Waunakee, WI (Madison)
Phone: 608.849.7300

EAST
Charlotte, NC
Phone: 608.849.0140

CANADA
Brampton, ON (Toronto)
Phone: 905.796.3606

Input Section

Input

NORD's modular design allows for many different types of inputs to be added to gear reducers. All inputs are bolt on and include machined pilots to ensure simple and accurate assembly. NORD offers the following different input types:

- Integral motor
- Solid input shaft
- NEMA C-face motor adapter
- IEC B5 motor adapter
- Servo motor adapter
- Top mount motor platform
- Scoop mount motor platform
- Custom mounting interface

Nomenclature

After the letters, 'SK' Reducer sizes are indicated followed by the dash (-), then the input device such as:

- SK32 – 90L/4 (Integral motor)
- SK32 – W (Solid input shaft)
- SK32 – 140TC (NEMA C-face motor adaptor)
- SK32 – IEC80 (IEC B5 motor adaptor)
- SK32 – SEP100 (Servo motor adaptor)
- SK32 – MK140T (Top mount motor platform)
- SK32 – S140T (Scoop mount motor platform)
- SK32 – WII (Custom mounting interface)

Example Nomenclature

SK32 - W

- **Solid Input Shaft**
- **Gear unit**

Gear unit with solid input shaft.

SK32 -140TC

- **NEMA 140 TC Motor Adaptor**
- **Gear unit**

Gear unit to recieve standard NEMA C-Face motor adaptor.

SK32 - IEC80

- **IEC 80 B5 Motor Adaptor**
- **Gear unit**

Gear unit to recieve standard metric IEC B5 flange mount motor adaptor.

DRAFT

Solid Input Shaft	NEMA Motor Adapter	IEC Motor Adapter	Integral Motor		Integral Energy Efficent Motor		Scoop Mount Motor Platform	Top Mount Motor Platform	Servo Motor Adapter Keyed
W	N56C	IEC 63	**63S/4** - 0.16hp	**160L/4** - 20hp	**80LH/4** - 1hp	**200LH/4** - 40hp	S56	MKN056	SEP 100
	N140 TC	IEC 71	**63L/4** - 0.25hp	**180MX/4** - 25hp	**90SH/4** - 1.5hp	**225SH/4** - 50hp	S140T	MKN140	SEP 130
	N180TC	IEC 80	**71S/4** - 0.33hp	**180LX/4** - 30hp	**90LH/4** - 2hp	**2525MH/4** - 60hp	S180T	MKN180	SEP 165
	N210TC	IEC 90	**71L/4** - .05hp	**200L/4** - 40hp	**100LH/4** - 3hp	**250MH/4** - 75hp	S210T	MKN210	SEP 215
	N250TC	IEC 100	**80S/4** - 0.75hp	**225S/4** - 50hp	**112MH/4** - 5hp	**280SH/4** - 100hp	S250T	MKN250	SEP 300
	N280TC	IEC 112	**80L/4** - 1hp	**2525M/4** - 60hp	**132SH/4** - 7.5hp	**280MH/4** - 125hp	S280T	MKN280	Servo Motor Adapter Clamp
	N320TC	IEC 132	**90S/4** - 1.5hp	**250M/4** - 75hp	**132MH/4** - 10hp	**315SH/4** - 150hp	S320T	MKN320	
	N360TC	IEC160	**90L/4** - 2hp	**280S/4** - 100hp	**160MH/4** - 15hp	**315MH/4** - 175hp	S360T	MKN360	
	N400TC	IEC 180	**100L/4** - 3hp	**280M/4** - 125hp	**160LH/4** - 20hp	**315MAH/4** - 200hp	S400T	MKN400	SEK 100
		IEC 200	**100LA/4** - 5hp	**315S/4** - 150hp	**180MXH/4** - 25hp	**315LH/4** - 250hp			SEK 130
		IEC 225	**112M/4** - 5hp	**315M/4** - 175hp	**180LH/4** - 30hp				SEK 165
		IEC 250	**132S/4** - 7.5hp	**315MA/4** - 200hp					SEK 215
		IEC280	**132M/4** - 10hp	**315L/4** - 250hp					SEK 300
		IEC 315	**160M/4** - 15hp	Other Speeds Available		Other Speeds Available			

Intelligent Drivesystems

PARALLEL HELICAL CLINCHER

PERFORMANCE SPECIFICATIONS

NORD DRIVESYSTEMS

PERFORMANCE SPECIFICATIONS

Configuration : offset parallel
Integral motor HP (min/ max) : 0.16 / 200
Integral motor kW (min/ max) : 0.12 / 160
Typical efficiency : 97%
Number of gear reductions : 2 to 6



MOUNTING STYLES

Shaft mount housing style : standard
Integral torque tab : standard
B5 flange outside diameter range [in] : 5.51 to 25.98
B5 flange outside diameter range [mm] : 140 to 660
Footed housing style available
B14 flange outside diameter range [in] : 3.94 to 17.72
B14 flange outside diameter range [mm] : 100 to 450

OPTIONS

NEMA or IEC input
Custom adapter flange
Flange pilot removed
Shock dampeners
Effective drywell with flange

RATIO AND SPEED

Minimum standard ratio : 4.03:1
Maximum standard ratio : 6616.79 (compound assembly)
Minimum output speed from 1750 rpm motor : 0.26 rpm
Maximum output speed from 1750 rpm motor : 434 rpm

Unit Size	Torque Max.		Ratio Range	Keyed Hollow Shaft Dia.					Solid Shaft Dia.		Shrink Disc Shaft Dia.	
	[lb-in]	[Nm]	min.-max.	Std-[in]	Opt.-[in]	Opt.-[in]	Opt.-[in]	[mm]	[in]	[mm]	[in]	[mm]
SK 0182 NB	1,027	116	4.24 - 81.71	0.750	0.500	-	-	25	0.750	25	-	-
SK 0282 NB	1,460	165	4.03 - 139.16	1.000	1.1875	0.750	-	30	1.000	25	1.188	30
SK 1282	2,620	296	4.79 - 109.50	1.188	1.250	1.000	.0750	30	1.250	30	1.250	30
SK 1382 NB	3,275	370	16.28 - 381.45	1.375	1.4375	1.250	-	35	1.250	30	1.500	35
SK 2282	4,983	563	4.51 - 127.51	1.438	1.500	1.375	1.250	35	1.375	35	1.500	35
SK 2382	4,983	563	82.22 - 763.41	1.438	1.500	1.375	1.250	35	1.375	35	1.500	35
SK 3282	8,983	1,015	4.48 - 112.23	1.625	1.500	1.438	-	40	1.875	45	1.625	40
SK 3382	9,195	1,039	89.60 - 1022.42	1.625	1.500	1.438	-	40	1.875	45	1.625	40
SK 4282	17,700	2,000	4.76 - 155.40	2.062	2.000	1.938	1.688	50	2.250	55	2.000	50
SK 4382	18,381	2,077	66.68 - 1585.08	2.062	2.000	1.938	1.688	50	2.250	55	2.000	50
SK 5282	28,320	3,200	4.52 - 154.03	2.438	2.375	2.188	-	60	2.500	65	2.500	60
SK 5382	28,320	3,200	82.72 - 1367.08	2.438	2.375	2.188	-	60	2.500	65	2.500	60
SK 6282	40,152	4,537	4.39 - 80.33	2.750	2.938	2.438	-	70	3.000	75	3.000	70
SK 6382	53,100	6,000	24.42 - 551.58	2.750	2.938	2.438	-	70	3.000	75	3.000	70
SK 7282	57,266	6,471	4.26 - 69.73	3.188	3.250	2.938	-	80	3.500	90	3.188	80
SK 7382	73,455	8,300	23.46 - 338.79	3.188	3.250	2.938	-	80	3.500	90	3.188	80
SK 8282	93,969	10,618	4.52 - 72.71	4.062	4.000	3.938	3.438	100	4.250	110	4.000	100
SK 8382	116,820	13,200	30.92 - 386.68	4.062	4.000	3.938	3.438	100	4.250	110	4.000	100
SK 9282	158,681	17,930	5.34 - 34.38	4.750	4.938	4.438	-	120	5.250	140	4.750	125
SK 9382	224,790	25,400	35.61 - 352.36	4.750	4.938	4.438	-	120	5.250	140	4.750	125
SK 10282	283,200	32.000	5.20 - 18.24	-	-	-	-	160	6.250	160	6.250	160
SK 10382	329,220	37,200	21.00 - 357.40	-	-	-	-	160	6.250	160	6.250	160
SK 11282	371,700	42,000	7.67 - 34.85	-	-	-	-	180	7.000	180	7.000	180
SK 11382	610,650	69,000	31.96 - 224.76	-	-	-	-	180	7.000	180	7.000	180
SK 12382	796,500	90,000	69.12 - 201.75	-	-	-	-	180	7.000	180	7.000	180

SK 4382, SK 4282/12
NEMA-C + W
Ratings & Combinations

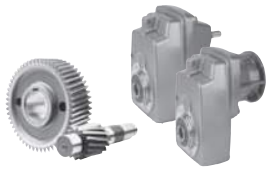

NORD DRIVESYSTEMS

Model Type	Gear Ratio	Output Speed	Output Torque*	Maximum input power◈ Solid input shafts type "W"				NEMA C-Face* Available Combinations							
				Input Speed											
	i_{tot}	n_2 1750 rpm	$T_{2\ max}$	1750 rpm	1150 rpm	875 rpm	580 rpm								
		[rpm]	[lb-in]	[hp]	[hp]	[hp]	[hp]	56C	140TC	180TC	210TC	250TC	280TC	320TC	360TC
SK 4382	66.65	26	10620	4.38	2.89	2.19	1.45	X	X	X*					
	86.83	20	17523	5.00	3.30	2.50	1.65	X	X	X					
	103.82	17	17700	4.77	3.15	2.39	1.58	X	X	X*					
	118.38	15	17700	4.21	2.78	2.11	1.39	X	X	X*					
	140.60	12	17700	3.37	2.22	1.69	1.11	X	X	X*					
	160.20	11	14664	2.56	1.69	1.28	0.84	X	X	X*					
	191.57	9.1	17612	2.54	1.68	1.27	0.84	X	X	X*					
	211.09	8.3	14470	1.91	1.26	0.95	0.63	X	X*						
	253.12	6.9	17355	1.90	1.25	0.95	0.63	X	X*						
	272.54	6.4	13912	1.41	0.93	0.71	0.47	X	X*						
	302.65	5.8	18381	1.69	1.12	0.85	0.56	X	X*						
	326.81	5.4	16727	1.43	0.95	0.72	0.47	X	X*						
	344.84	5.1	14709	1.19	0.79	0.60	0.39	X	X*						
	390.76	4.5	17700	1.26	0.83	0.63	0.42	X	X*						
	412.38	4.2	17612	1.17	0.77	0.59	0.39	X	X*						
	445.23	3.9	14744	0.91	0.60	0.46	0.30	X*	X*						
	532.44	3.3	17700	0.93	0.61	0.46	0.31	X*	X*						
	605.88	2.9	13054	0.60	0.40	0.30	0.20	X*	X*						
	654.27	2.7	10912	0.47	0.31	0.23	0.15	X*	X*						
	782.32	2.2	13063	0.46	0.30	0.23	0.15	X*	X*						
	1097.48	1.6	9629	0.24	0.16	0.12	0.08	X*	X*						
	1129.91	1.5	14160	0.34	0.22	0.17	0.11	X*	X*						
	1585.08	1.1	12567	0.22	0.14	0.11	0.07	X*	X*						

DRAFT

* Caution - The motor power may exceed the gear unit's mechanical torque capacity
◈ The mechanical power limit of the solid input shaft type "W" may limit the reducer rating.
All ratings are mechanical. See page 14 for thermal considerations.

lb	W	56C	140TC	180TC
SK 4382	176	171	181	190
SK 4282/12	152	157	163	179

SK 4382 + Motor





DRIVESYSTEMS

SK 4382V

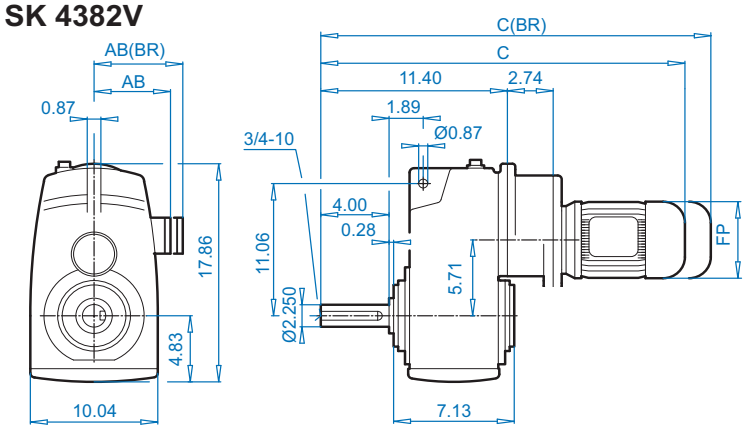

SK 4382A

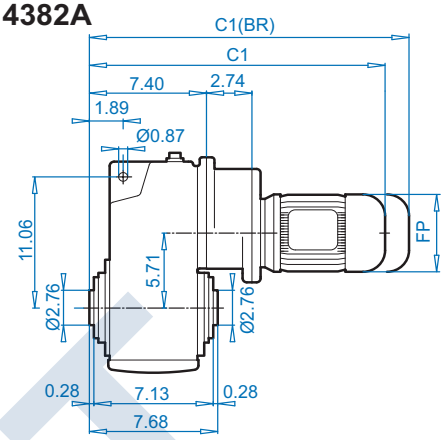

SK 4382VF

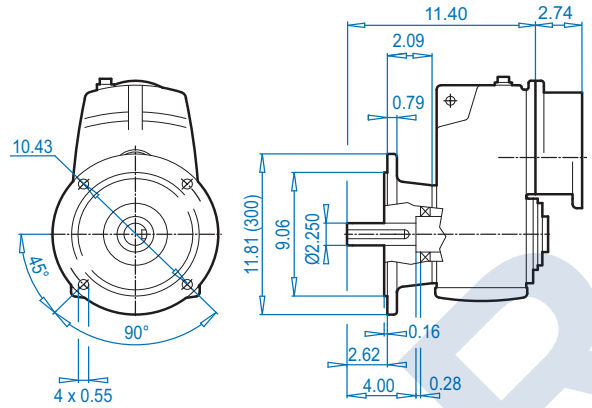

SK 4382AF

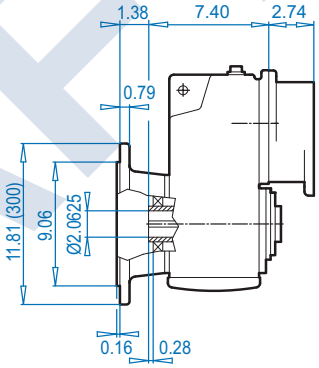

SK 4382V

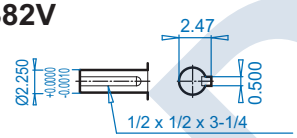

SK 4382A

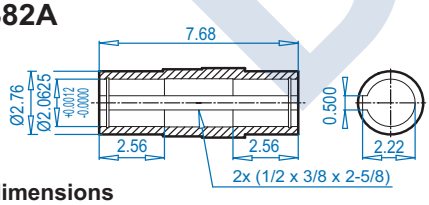

SK 4382AB ⇨📖 394

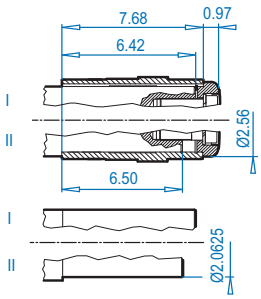

Motor dimensions

Standard efficiency	71S/L	80S/L	90S/L	100L			For Other Connection Possibilities please see ⇨📖 376 & 378
Energy efficiency		80LH	90SH/LH	100LH	112MH		
AB	4.88	5.59	5.79	6.65	7.05		
AB (BR)	5.24	5.63	5.83	6.26	6.69		
C1	19.22	20.20	21.81	22.99	23.90		
C1 (BR)	21.50	22.72	24.77	26.58	27.56		
C	23.22	24.20	25.81	26.99	27.90		
C (BR)	25.50	26.72	28.77	30.58	31.56		
FP	5.43	6.14	6.92	7.63	8.58		

(BR) denotes Brakemotor

DRAFT

Simple, Reliable & Efficient

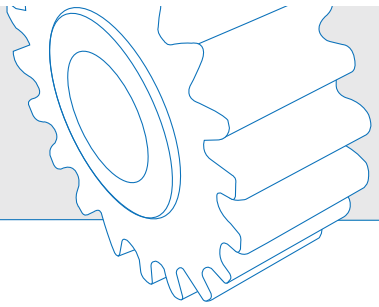



Simplicity - the NORD SCP screw conveyor package eliminates the need for costly separate V-belt drives by providing integral gearmotors or direct coupled motors to a NEMA C-face reducer.

SCP - PRODUCT FEATURES

OPTIMIZED SEALING SYSTEM
- Dual Viton lip seals
- Grease impregnated packing seal
- Dual gap seals (excludes particles) – 0.03" gap
- Material evacuation ports
- Shaft material ditch
- Quadrilip™ sealing

MOUNTING
- Standard CEMA mounting
- Versatile flange – multiple bolt patterns
- 3-Hole tapered CEMA drive shaft
  - Easy mounting
  - Easy removal (less fretting – due to less material contact)
- Reduced bearing loads – tapered shaft allows for screw pipe misalignment
- Quick external removal feature

FLANGE
- Standard CEMA mounting
- High strength class 35 gray cast iron
- Versatile flange – multiple bolt patterns

HIGH EFFICIENCY

The NORD SCP design is extremely effective due to the direct coupled gearmotor or NEMA C-face input design. Belted input systems have significantly lower total drive performance. You can further increase the overall efficiency by applying the NORD "H" line of energy efficient motors.



NORD DRIVESYSTEMS

DRAFT

SCP Overview



Screw Conveyor Package Overview

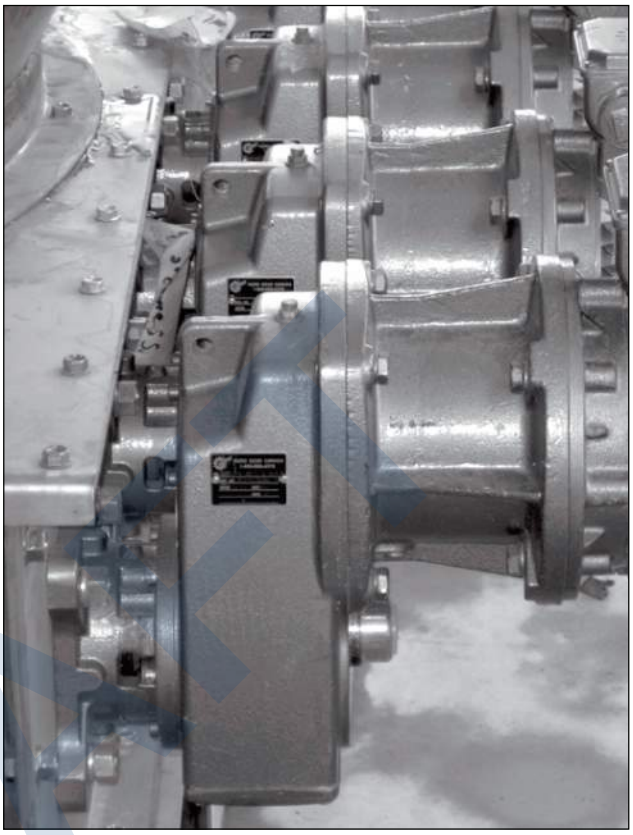

The NORD Screw Conveyor Package (SCP) offers a compact and cost effective alternative to traditional screw conveyor drives. Closely stepped speed reduction ratios combined with a directly coupled gearmotor or NEMA C-face input design eliminates the need for top motor mounts, pulleys, belts or guards. Minimizing parts and eliminating the belted input systems provides for easier system maintenance, increased reliability, and superior drive performance.

The SCP design is available for both CLINCHER™ Parallel Shaft gear units and Helical-Bevel Right Angle gear units. The CEMA flange and shaft assembly are a unique NORD design to offer superior protection against unwanted debris. A slight lead taper on the reducer shaft provides for easy mounting and removal, allowing for some screw pipe misalignment and reduced bearing loads.

Benefits

- Reduced cost
- Large ratio range
- Direct drive motor options (Integral or C-face)
- No belt maintence or belt guarding required.
- Reduced parts / higher reliability / space savings
- Higher efficiency
- More direct torque transfer.

DRAFT

Ratings Overview



CLINCHER™ SCP

- Torque Capacity: Up to 53,100 lb-in
- Power Range: 0.16 – 60 Hp
- Ratio Range: 4.32:1 – 1585.08:1
- Output Speed: 1.0 – 405 rpm
- Efficiency: Up to 97%
- CEMA Drive Shaft Sizes:
  1-1/2", 2", 2-7/16", 3", 3-7/16"

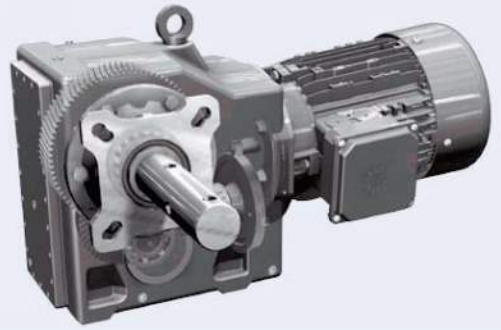

HELICAL-BEVEL SCP

- Torque Capacity: Up to 42,480 lb-in
- Power Range: 0.16 – 30 HP
- Ratio Range: 8.09:1 – 4246.38:1
- Output Speed: 0.41 – 216 rpm
- Efficiency: Up to 95%
- CEMA Drive Shaft Sizes:
  1-1/2", 2", 2-7/16", 3", 3-7/16"

Intelligent Drivesystems

PARALLEL HELICAL CLINCHER

PERFORMANCE SPECIFICATIONS

NORD DRIVESYSTEMS

PERFORMANCE SPECIFICATIONS

Configuration : offset parallel
Integral motor HP (min/ max) : 0.16 / 200
Integral motor kW (min/ max) : 0.12 / 160
Typical efficiency : 97%
Number of gear reductions : 2 to 6



MOUNTING STYLES

Shaft mount housing style : standard
Integral torque tab : standard
B5 flange outside diameter range [in] : 5.51 to 25.98
B5 flange outside diameter range [mm] : 140 to 660
Footed housing style available
B14 flange outside diameter range [in] : 3.94 to 17.72
B14 flange outside diameter range [mm] : 100 to 450

OPTIONS

NEMA or IEC input
Custom adapter flange
Flange pilot removed
Shock dampeners
Effective drywell with flange

RATIO AND SPEED

Minimum standard ratio : 4.03:1
Maximum standard ratio : 6616.79 (compound assembly)
Minimum output speed from 1750 rpm motor : 0.26 rpm
Maximum output speed from 1750 rpm motor : 434 rpm

Unit Size	Torque Max.		Ratio Range	Keyed Hollow Shaft Dia.					Solid Shaft Dia.		Shrink Disc Shaft Dia.	
	[lb-in]	[Nm]	min.-max.	Std-[in]	Opt.-[in]	Opt.-[in]	Opt.-[in]	[mm]	[in]	[mm]	[in]	[mm]
SK 0182 NB	1,027	116	4.24 - 81.71	0.750	0.500	-	-	25	0.750	25	-	-
SK 0282 NB	1,460	165	4.03 - 139.16	1.000	1.1875	0.750	-	30	1.000	25	1.188	30
SK 1282	2,620	296	4.79 - 109.50	1.188	1.250	1.000	.0750	30	1.250	30	1.250	30
SK 1382 NB	3,275	370	16.28 - 381.45	1.375	1.4375	1.250	-	35	1.250	30	1.500	35
SK 2282	4,983	563	4.51 - 127.51	1.438	1.500	1.375	1.250	35	1.375	35	1.500	35
SK 2382	4,983	563	82.22 - 763.41	1.438	1.500	1.375	1.250	35	1.375	35	1.500	35
SK 3282	8,983	1,015	4.48 - 112.23	1.625	1.500	1.438	-	40	1.875	45	1.625	40
SK 3382	9,195	1,039	89.60 - 1022.42	1.625	1.500	1.438	-	40	1.875	45	1.625	40
SK 4282	17,700	2,000	4.76 - 155.40	2.062	2.000	1.938	1.688	50	2.250	55	2.000	50
SK 4382	18,381	2,077	66.68 - 1585.08	2.062	2.000	1.938	1.688	50	2.250	55	2.000	50
SK 5282	28,320	3,200	4.52 - 154.03	2.438	2.375	2.188	-	60	2.500	65	2.500	60
SK 5382	28,320	3,200	82.72 - 1367.08	2.438	2.375	2.188	-	60	2.500	65	2.500	60
SK 6282	40,152	4,537	4.39 - 80.33	2.750	2.938	2.438	-	70	3.000	75	3.000	70
SK 6382	53,100	6,000	24.42 - 551.58	2.750	2.938	2.438	-	70	3.000	75	3.000	70
SK 7282	57,266	6,471	4.26 - 69.73	3.188	3.250	2.938	-	80	3.500	90	3.188	80
SK 7382	73,455	8,300	23.46 - 338.79	3.188	3.250	2.938	-	80	3.500	90	3.188	80
SK 8282	93,969	10,618	4.52 - 72.71	4.062	4.000	3.938	3.438	100	4.250	110	4.000	100
SK 8382	116,820	13,200	30.92 - 386.68	4.062	4.000	3.938	3.438	100	4.250	110	4.000	100
SK 9282	158,681	17,930	5.34 - 34.38	4.750	4.938	4.438	-	120	5.250	140	4.750	125
SK 9382	224,790	25,400	35.61 - 352.36	4.750	4.938	4.438	-	120	5.250	140	4.750	125
SK 10282	283,200	32.000	5.20 - 18.24	-	-	-	-	160	6.250	160	6.250	160
SK 10382	329,220	37,200	21.00 - 357.40	-	-	-	-	160	6.250	160	6.250	160
SK 11282	371,700	42,000	7.67 - 34.85	-	-	-	-	180	7.000	180	7.000	180
SK 11382	610,650	69,000	31.96 - 224.76	-	-	-	-	180	7.000	180	7.000	180
SK 12382	796,500	90,000	69.12 - 201.75	-	-	-	-	180	7.000	180	7.000	180

SK 4382, SK 4282/12
NEMA-C + W
Ratings & Combinations

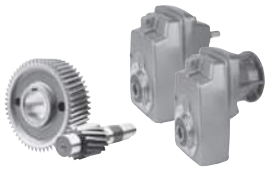

DRIVESYSTEMS

Model Type	Gear Ratio	Output Speed	Output Torque*	Maximum input power◈ Solid input shafts type "W"				NEMA C-Face* Available Combinations							
				Input Speed											
	i_{tot}	n_2 1750 rpm	$T_{2\ max}$	1750 rpm	1150 rpm	875 rpm	580 rpm								
		[rpm]	[lb-in]	[hp]	[hp]	[hp]	[hp]	56C	140TC	180TC	210TC	250TC	280TC	320TC	360TC
SK 4382	66.65	26	10620	4.38	2.89	2.19	1.45	X	X	X*					
	86.83	20	17523	5.00	3.30	2.50	1.65	X	X	X					
	103.82	17	17700	4.77	3.15	2.39	1.58	X	X	X*					
	118.38	15	17700	4.21	2.78	2.11	1.39	X	X	X*					
	140.60	12	17700	3.37	2.22	1.69	1.11	X	X	X*					
	160.20	11	14664	2.56	1.69	1.28	0.84	X	X	X*					
	191.57	9.1	17612	2.54	1.68	1.27	0.84	X	X	X*					
	211.09	8.3	14470	1.91	1.26	0.95	0.63	X	X*						
	253.12	6.9	17355	1.90	1.25	0.95	0.63	X	X*						
	272.54	6.4	13912	1.41	0.93	0.71	0.47	X	X*						
	302.65	5.8	18381	1.69	1.12	0.85	0.56	X	X*						
	326.81	5.4	16727	1.43	0.95	0.72	0.47	X	X*						
	344.84	5.1	14709	1.19	0.79	0.60	0.39	X	X*						
	390.76	4.5	17700	1.26	0.83	0.63	0.42	X	X*						
	412.38	4.2	17612	1.17	0.77	0.59	0.39	X	X*						
	445.23	3.9	14744	0.91	0.60	0.46	0.30	X*	X*						
	532.44	3.3	17700	0.93	0.61	0.46	0.31	X*	X*						
	605.88	2.9	13054	0.60	0.40	0.30	0.20	X*	X*						
	654.27	2.7	10912	0.47	0.31	0.23	0.15	X*	X*						
	782.32	2.2	13063	0.46	0.30	0.23	0.15	X*	X*						
	1097.48	1.6	9629	0.24	0.16	0.12	0.08	X*	X*						
	1129.91	1.5	14160	0.34	0.22	0.17	0.11	X*	X*						
	1585.08	1.1	12567	0.22	0.14	0.11	0.07	X*	X*						

DRAFT

* Caution - The motor power may exceed the gear unit's mechanical torque capacity
◈ The mechanical power limit of the solid input shaft type "W" may limit the reducer rating.
All ratings are mechanical. See page 14 for thermal considerations.

lb	W	56C	140TC	180TC
SK 4382	176	171	181	190
SK 4282/12	152	157	163	179

SK 4382 + Motor

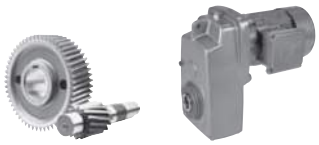

DRIVESYSTEMS

SK 4382V

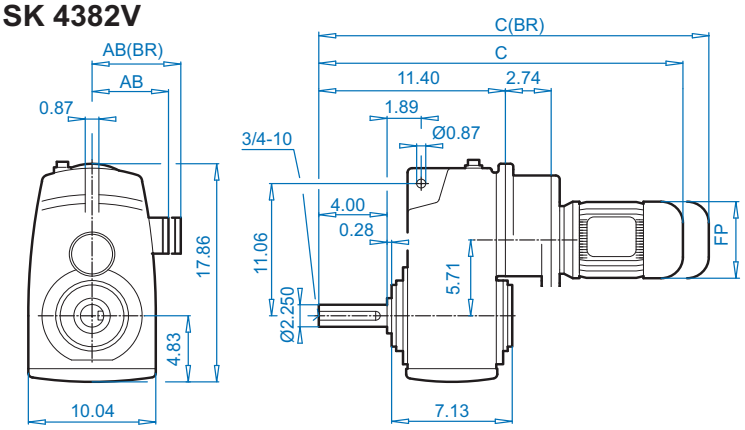

SK 4382A

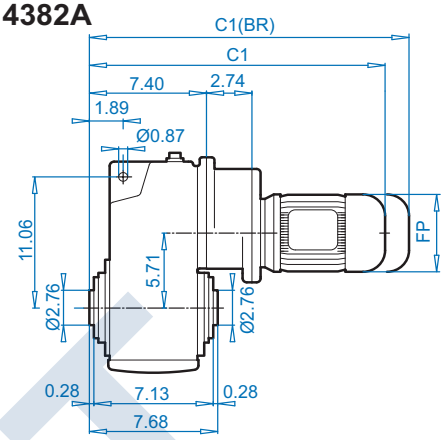

SK 4382VF

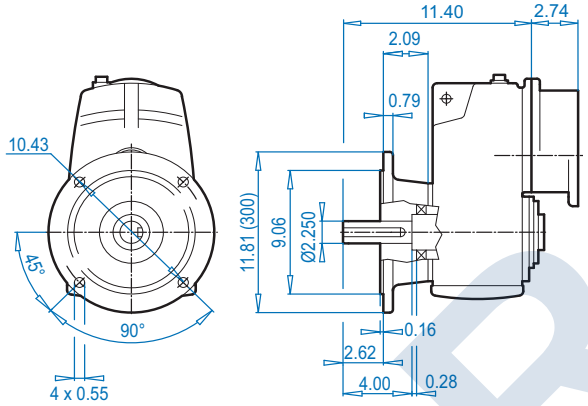

SK 4382AF

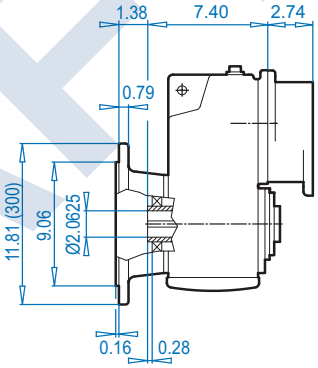

SK 4382V

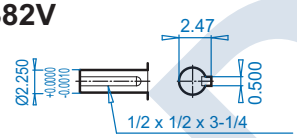

SK 4382A

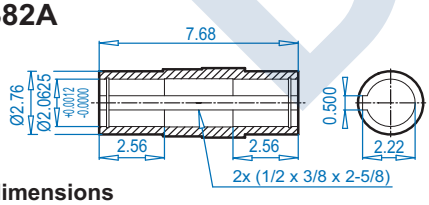

SK 4382AB ⇨📖 394

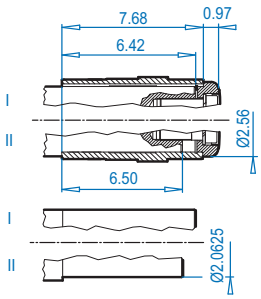

Motor dimensions

Standard efficiency	71S/L	80S/L	90S/L	100L			For Other Connection Possibilities please see ⇨📖 376 & 378
Energy efficiency		80LH	90SH/LH	100LH	112MH		
AB	4.88	5.59	5.79	6.65	7.05		
AB (BR)	5.24	5.63	5.83	6.26	6.69		
C1	19.22	20.20	21.81	22.99	23.90		
C1 (BR)	21.50	22.72	24.77	26.58	27.56		
C	23.22	24.20	25.81	26.99	27.90		
C (BR)	25.50	26.72	28.77	30.58	31.56		
FP	5.43	6.14	6.92	7.63	8.58		

(BR) denotes Brakemotor

DRAFT

SCP Overview



Screw Conveyor Package Overview

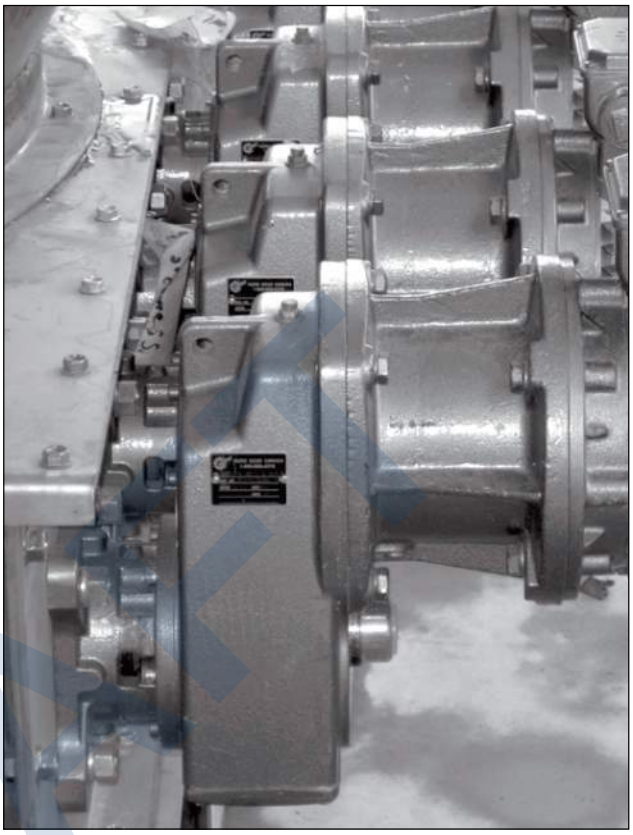

The NORD Screw Conveyor Package (SCP) offers a compact and cost effective alternative to traditional screw conveyor drives. Closely stepped speed reduction ratios combined with a directly coupled gearmotor or NEMA C-face input design eliminates the need for top motor mounts, pulleys, belts or guards. Minimizing parts and eliminating the belted input systems provides for easier system maintenance, increased reliability, and superior drive performance.

The SCP design is available for both CLINCHER™ Parallel Shaft gear units and Helical-Bevel Right Angle gear units. The CEMA flange and shaft assembly are a unique NORD design to offer superior protection against unwanted debris. A slight lead taper on the reducer shaft provides for easy mounting and removal, allowing for some screw pipe misalignment and reduced bearing loads.

Benefits

- Reduced cost
- Large ratio range
- Direct drive motor options (Integral or C-face)
- No belt maintence or belt guarding required.
- Reduced parts / higher reliability / space savings
- Higher efficiency
- More direct torque transfer.

DRAFT

Ratings Overview



CLINCHER™ SCP

- Torque Capacity: Up to 53,100 lb-in
- Power Range: 0.16 – 60 Hp
- Ratio Range: 4.32:1 – 1585.08:1
- Output Speed: 1.0 – 405 rpm
- Efficiency: Up to 97%
- CEMA Drive Shaft Sizes:
  1-1/2", 2", 2-7/16", 3", 3-7/16"

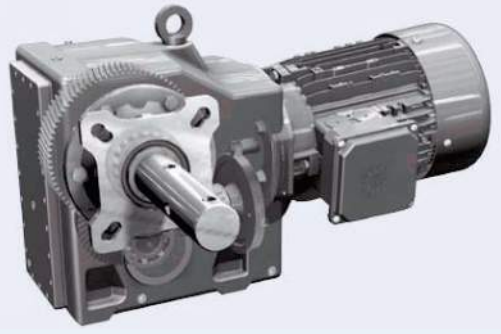

HELICAL-BEVEL SCP

- Torque Capacity: Up to 42,480 lb-in
- Power Range: 0.16 – 30 HP
- Ratio Range: 8.09:1 – 4246.38:1
- Output Speed: 0.41 – 216 rpm
- Efficiency: Up to 95%
- CEMA Drive Shaft Sizes:
  1-1/2", 2", 2-7/16", 3", 3-7/16"

DRIVESYSTEMS



SCP Capacity, Ratings & Combinations



Capacity & Ratings Overview

CEMA Drive Shaft Combinations

Model Type	Max Torque [lb-in]	Ratio Range [x:1]	Speed's [rpm]	Max Thrust Load Std Brgs [lb]	Max Thrust Load HD Brgs " VL " [lb]	Gear Stages	Efficiency [%]	1.5" Shaft	2.0" Shaft	2-7/16" Shaft	3.0" Shaft	3-7/16" Shaft
SK 1282 SCP	2620	4.79-109.5	365-16	1609	1609	2	97	X	X	X		
SK 1382 SCP	2425	87.94-624.45	20-2.8	1609	1609	3	95.5	X	X	X		
SK 2282 SCP	4611	4.51-127.51	388-14	2700	3375	2	97	X	X	X		
SK 2382 SCP	4983	82.22-763.41	21-2.3	2700	3375	3	95.5	X	X	X		
SK 3282 SCP	8983	4.48-112.23	391-16	3263	4500	2	97	X	X	X	X	
SK 3382 SCP	9195	89.60-1022.42	20-1.7	3263	4500	3	95.5	X	X	X	X	
SK 4282 SCP	16089	4.7-155.4	372-11	4950	6750	2	97		X	X	X	
SK 4382 SCP	18381	86.83-1585.08	26-1.1	4950	6750	3	95.5		X	X	X	
SK 5282 SCP	28630	4.32-134.03	405-13	7200	9000	2	97		X	X	X	X
SK 5382 SCP	28320	82.72-1367.08	21-1.3	7200	9000	3	95.5		X	X	X	X
SK 6282 SCP	40152	4.39-80.33	399-22	10463	13500	2	97				X	X
SK 6382 SCP	53100	24.42-551.58	72-3.2	10463	13500	3	95.5				X	X

DRAFT



SK 4382 SCP
Ratings & Combinations

Type	Ratio	Output Speed 1750 rpm input n_2 [rpm]	Max Torque T_{max} [lb-in]	Max Power 1750 rpm input ◈ P_{max} [hp]	NEMA C-face* 56C 1.0 max hp	140TC 2.0 max hp	180TC 5.0 max hp	210TC 10 max hp	250TC 20 max hp	280TC 30 max hp	320TC 50 max hp	360TC 75 max hp
SK 4382 SCP	86.83	20	17523	*5.00*	X	X	X*					
	103.82	17	17700	4.77	X	X	X*					
	118.38	15	17700	4.21	X	X	X*					
	140.60	12	17700	3.37	X	X	X*					
	160.20	11	14664	2.56	X	X	X*					
	191.57	9.1	17612	2.54	X	X	X*					
	211.09	8.3	14470	1.90	X	X*						
	253.12	6.9	17355	1.90	X	X*						
	272.54	6.4	13912	1.41	X	X*						
	302.65	5.8	18381	1.69	X	X*						
	326.81	5.4	16727	1.43	X	X*						
	344.84	5.1	14709	1.19	X	X*						
	390.76	4.5	17700	1.26	X	X*						
	412.38	4.2	17612	1.17	X	X*						
	445.23	3.9	14744	0.91	X*	X*						
	532.44	3.3	17700	0.93	X*	X*						
	605.88	2.9	13054	0.60	X*	X*						
	654.27	2.7	10912	0.47	X*	X*						
	782.32	2.2	13063	0.46	X*	X*						
	1,097.48	1.6	9629	0.24	X*	X*						
	1,129.91	1.5	14160	0.34	X*	X*						
	1,585.08	1.1	12567	0.22	X*	X*						

◈ The maximum input power limit shown is the largest motor power typically combined with the gear unit. *The Italicized power values shown are not the mechanical limit and often may be increased through discussion with our sales or engineering department.*

* The NEMA C-face power limit must also be considered when selecting a reducer. The C-face Adapter's Maximum Input Power values are displayed under the Available Combinations and based on a 1750 rpm motor.

DRAFT

DRIVESYSTEMS



SK 4382 SCP
Ratings & Combinations

Type	Ratio	Output Speed 1750 rpm input n_2 [rpm]	Max Torque T_{max} [lb-in]	Max Power 1750 rpm input ◈ P_{max} [hp]	Integral Motor 63L/4 0.25 hp	71S/4 0.33 hp	71L/4 0.5 hp	80S/4 0.75 hp	80L/4 80LH/4 80LP/4 1.0 hp	90S/4 90SH/4 90SP/4 1.5 hp	90L/4 90LH/4 90LP/4 2 .0 hp	100L/4 100LH/4 100LP/4 3.0 hp	100LA/4 112LH/4 112LP/4 5.0 hp	132S/4 132SH/4 132SP/4 7.5 hp	132M/4 132MH/4 132MP/4 10 hp
SK 4382 SCP	86.83	20	17523	*5.00*			X	X	X	X	X	X	X		
	103.82	17	17700	4.77			X	X	X	X	X	X	X		
	118.38	15	17700	4.21			X	X	X	X	X	X	X		
	140.60	12	17700	3.37			X	X	X	X	X	X	X		
	160.20	11	14664	2.56			X	X	X	X	X	X	X		
	191.57	9.1	17612	2.54			X	X	X	X	X	X	X		
	211.09	8.3	14470	1.90				X	X	X	X				
	253.12	6.9	17355	1.90				X	X	X	X				
	272.54	6.4	13912	1.41		X	X	X	X	X					
	302.65	5.8	18381	1.69				X	X	X	X				
	326.81	5.4	16727	1.43		X	X	X	X	X					
	344.84	5.1	14709	1.19				X	X	X	X				
	390.76	4.5	17700	1.26		X	X	X	X	X					
	412.38	4.2	17612	1.17				X	X	X	X				
	445.23	3.9	14744	0.91		X	X	X	X	X					
	532.44	3.3	17700	0.93		X	X	X	X	X					
	605.88	2.9	13054	0.60				X	X	X	X				
	654.27	2.7	10912	0.47		X	X	X	X	X					
	782.32	2.2	13063	0.46		X	X	X	X	X					
	1,097.48	1.6	9629	0.24		X	X	X	X	X					
	1,129.91	1.5	14160	0.34		X	X	X	X	X					
	1,585.08	1.1	12567	0.22		X	X	X	X	X					

◈ The maximum input power limit shown is the largest motor power typically combined with the gear unit. *The Italicized power values shown are not the mechanical limit and often may be increased through discussion with our sales or engineering department.*

DRAFT

SK 1382 - SK 6382
3 Stage Gearmotor & Reducers



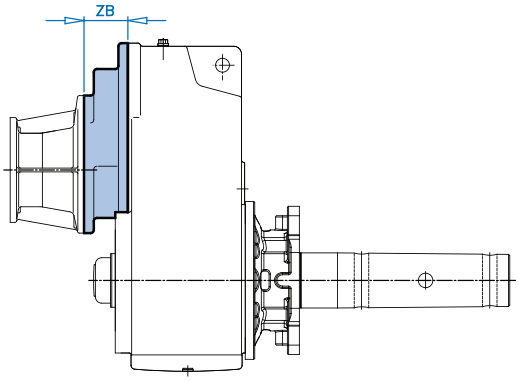

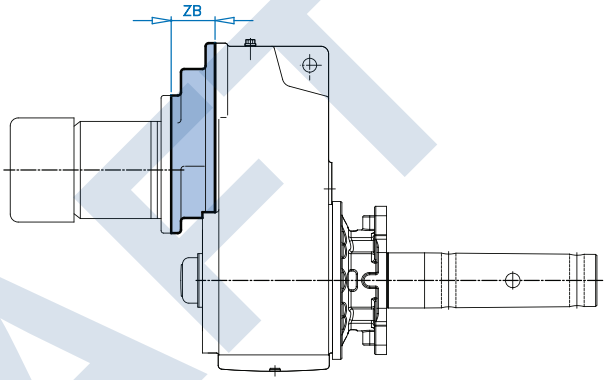

DRAFT

Clincher Model Type	ZB
SK 1382 SCP	2.28
SK 2382 SCP	2.36
SK 3382 SCP	2.36
SK 4382 SCP	2.72
SK 5382 SCP	2.72
SK 6382 SCP	0.00

Simple, Reliable & Efficient

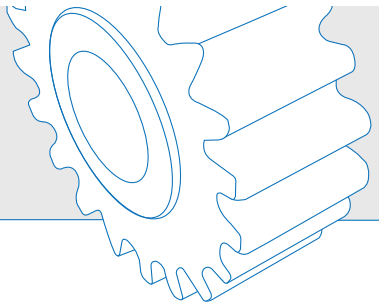



Simplicity - the NORD SCP screw conveyor package eliminates the need for costly separate V-belt drives by providing integral gearmotors or direct coupled motors to a NEMA C-face reducer.

SCP - PRODUCT FEATURES

OPTIMIZED SEALING SYSTEM
- Dual Viton lip seals
- Grease impregnated packing seal
- Dual gap seals (excludes particles) – 0.03" gap
- Material evacuation ports
- Shaft material ditch
- Quadrilip™ sealing

MOUNTING
- Standard CEMA mounting
- Versatile flange – multiple bolt patterns
- 3-Hole tapered CEMA drive shaft
  - Easy mounting
  - Easy removal (less fretting – due to less material contact)
- Reduced bearing loads – tapered shaft allows for screw pipe misalignment
- Quick external removal feature

FLANGE
- Standard CEMA mounting
- High strength class 35 gray cast iron
- Versatile flange – multiple bolt patterns

HIGH EFFICIENCY

The NORD SCP design is extremely effective due to the direct coupled gearmotor or NEMA C-face input design. Belted input systems have significantly lower total drive performance. You can further increase the overall efficiency by applying the NORD "H" line of energy efficient motors.



NORD DRIVESYSTEMS

DRAFT

SCP Overview



Screw Conveyor Package Overview

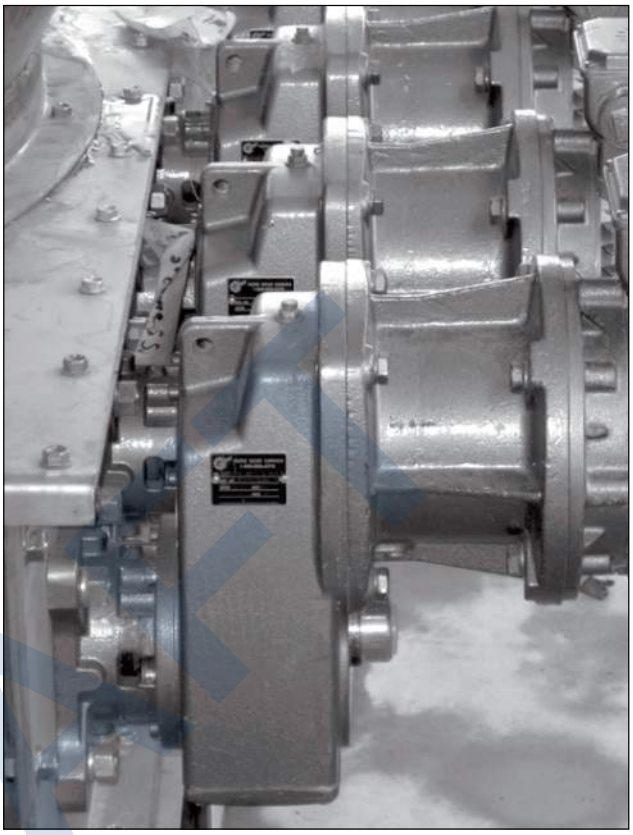

The NORD Screw Conveyor Package (SCP) offers a compact and cost effective alternative to traditional screw conveyor drives. Closely stepped speed reduction ratios combined with a directly coupled gearmotor or NEMA C-face input design eliminates the need for top motor mounts, pulleys, belts or guards. Minimizing parts and eliminating the belted input systems provides for easier system maintenance, increased reliability, and superior drive performance.

The SCP design is available for both CLINCHER™ Parallel Shaft gear units and Helical-Bevel Right Angle gear units. The CEMA flange and shaft assembly are a unique NORD design to offer superior protection against unwanted debris. A slight lead taper on the reducer shaft provides for easy mounting and removal, allowing for some screw pipe misalignment and reduced bearing loads.

Benefits

- Reduced cost
- Large ratio range
- Direct drive motor options (Integral or C-face)
- No belt maintence or belt guarding required.
- Reduced parts / higher reliability / space savings
- Higher efficiency
- More direct torque transfer.

Ratings Overview



CLINCHER™ SCP

- Torque Capacity: Up to 53,100 lb-in
- Power Range: 0.16 – 60 Hp
- Ratio Range: 4.32:1 – 1585.08:1
- Output Speed: 1.0 – 405 rpm
- Efficiency: Up to 97%
- CEMA Drive Shaft Sizes:
  1-1/2", 2", 2-7/16", 3", 3-7/16"

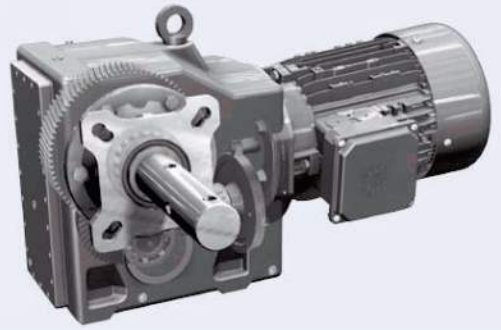

HELICAL-BEVEL SCP

- Torque Capacity: Up to 42,480 lb-in
- Power Range: 0.16 – 30 HP
- Ratio Range: 8.09:1 – 4246.38:1
- Output Speed: 0.41 – 216 rpm
- Efficiency: Up to 95%
- CEMA Drive Shaft Sizes:
  1-1/2", 2", 2-7/16", 3", 3-7/16"

DRAFT

DRIVESYSTEMS



SCP Capacity, Ratings & Combinations



Capacity & Ratings Overview

CEMA Drive Shaft Combinations

Model Type	Max Torque [lb-in]	Ratio Range [x:1]	Speed's [rpm]	Max Thrust Load Std Brgs [lb]	Max Thrust Load HD Brgs " VL " [lb]	Gear Stages	Efficiency [%]	1.5" Shaft	2.0" Shaft	2-7/16" Shaft	3.0" Shaft	3-7/16" Shaft
SK 1282 SCP	2620	4.79-109.5	365-16	1609	1609	2	97	X	X	X		
SK 1382 SCP	2425	87.94-624.45	20-2.8	1609	1609	3	95.5	X	X	X		
SK 2282 SCP	4611	4.51-127.51	388-14	2700	3375	2	97	X	X	X		
SK 2382 SCP	4983	82.22-763.41	21-2.3	2700	3375	3	95.5	X	X	X		
SK 3282 SCP	8983	4.48-112.23	391-16	3263	4500	2	97	X	X	X	X	
SK 3382 SCP	9195	89.60-1022.42	20-1.7	3263	4500	3	95.5	X	X	X	X	
SK 4282 SCP	16089	4.7-155.4	372-11	4950	6750	2	97		X	X	X	
SK 4382 SCP	18381	86.83-1585.08	26-1.1	4950	6750	3	95.5		X	X	X	
SK 5282 SCP	28630	4.32-134.03	405-13	7200	9000	2	97		X	X	X	X
SK 5382 SCP	28320	82.72-1367.08	21-1.3	7200	9000	3	95.5		X	X	X	X
SK 6282 SCP	40152	4.39-80.33	399-22	10463	13500	2	97				X	X
SK 6382 SCP	53100	24.42-551.58	72-3.2	10463	13500	3	95.5				X	X

DRAFT

NORD DRIVESYSTEMS



SK 3282 & SK 3382 SCP Ratings & Combinations

Type	Ratio	Output Speed 1750 rpm input n_2 [rpm]	Max Torque T_{max} [lb-in]	Max Power 1750 rpm input ◈ P_{max} [hp]	Integral Motor 63L/4 0.25 hp	71S/4 0.33 hp	71L/4 0.5 hp	80S/4 0.75 hp	80LH/4 80LP/4 1.0 hp	90SH/4 90SP/4 90LC/4 90S/4 1.5 hp	90L/4 90LH/4 90LP/4 2 .0 hp	100L/4 100LH/4 100LP/4 3.0 hp	112LP/4 112LH/4 100LA/4 5.0 hp	132SP/4 132SH/4 132S/4 7.5 hp	132MP/4 132MH/4 132M/4 10 hp
SK 3282 SCP	4.48	391	4080	*10.00*						X	X	X	X	X	X
	5.68	308	4912	*10.00*						X	X	X	X	X	X
	6.70	261	5372	*10.00*						X	X	X	X	X	X
	8.31	211	5983	*10.00*				X	X	X	X	X	X	X	X
	9.80	179	7425	*10.00*						X	X	X	X	X	X
	11.38	154	7266	*10.00*						X	X	X	X	X	X
	14.11	124	7584	*10.00*				X	X	X	X	X	X	X	X
	16.67	105	7443	*10.00*				X	X	X	X	X	X	X	X
	20.18	87	7275	*10.00*				X	X	X	X	X	X	X	X
	21.38	82	6390	8.31				X	X	X	X	X	X	X	X
	22.45	78	7080	8.76				X	X	X	X	X	X	X	X
	23.71	74	7124	8.36				X	X	X	X	X	X	X	X
	25.88	68	7487	8.07				X	X	X	X	X	X	X	X
	28.70	61	7700	7.45				X	X	X	X	X	X	X	X
	31.93	55	7761	6.77				X	X	X	X	X	X	X	X
	37.77	46	7390	5.39				X	X	X	X	X			
	38.62	45	5611	4.01						X	X	X			
	42.02	42	8222	5.48				X	X	X	X	X			
	44.85	39	6522	4.03						X	X	X			
	48.04	36	4885	2.79				X	X	X	X				
	52.97	33	7478	3.91						X	X	X			
	55.79	31	5682	2.79				X	X	X	X				
	64.12	27	8983	3.85						X	X	X			
	65.89	27	6708	2.87				X	X	X	X				
	70.56	25	4991	1.98		X	X	X	X	X					
	79.76	22	7523	2.62				X	X	X	X				
	88.74	20	8363	2.65				X	X	X	X				
	100.88	17	7142	1.93		X	X	X	X	X					
	112.23	16	6815	1.73		X	X	X	X	X					
SK 3382 SCP	89.60	20	5496	1.50	X	X	X	X	X	X	X				
	104.05	17	6505	1.50	X	X	X	X	X	X	X				
	126.93	14	6850	1.50	X	X	X	X	X	X	X				
	161.46	11	6974	1.22	X	X	X	X	X	X	X				
	190.69	9.2	7664	1.12	X	X	X	X	X	X	X				
	230.83	7.6	8850	1.07	X	X	X	X	X	X	X				
	287.14	6.1	8301	0.80	X	X	X	X	X	X	X				
	408.58	4.3	7045	0.48	X	X	X	X							
	482.56	3.6	7664	0.44	X	X	X	X							
	584.13	3	8850	0.42	X	X	X	X							
	726.61	2.4	8354	0.32	X	X	X	X							
	808.42	2.2	9195	0.32	X	X	X	X							
	919.00	1.9	7275	0.22	X	X	X	X							
	1,022.42	1.7	6965	0.19	X	X	X	X							

◈ The maximum input power limit shown is the largest motor power typically combined with the gear unit. *The Italicized power values shown are not the mechanical limit and often may be increased through discussion with our sales or engineering department.*

DRAFT

SK 1382 - SK 6382
3 Stage Gearmotor & Reducers



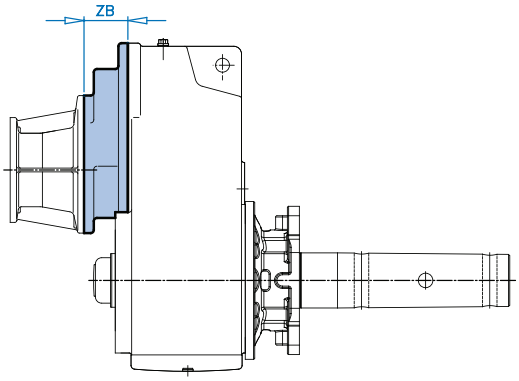

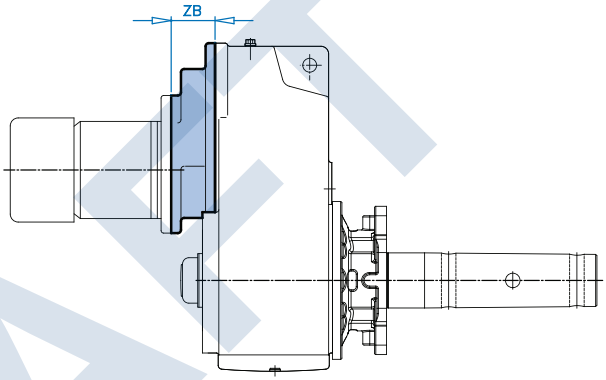

DRAFT

Clincher Model Type	ZB
SK 1382 SCP	2.28
SK 2382 SCP	2.36
SK 3382 SCP	2.36
SK 4382 SCP	2.72
SK 5382 SCP	2.72
SK 6382 SCP	0.00

Intelligent Drivesystems

PARALLEL HELICAL CLINCHER

PERFORMANCE SPECIFICATIONS

NORD DRIVESYSTEMS

PERFORMANCE SPECIFICATIONS

Configuration : offset parallel
Integral motor HP (min/ max) : 0.16 / 200
Integral motor kW (min/ max) : 0.12 / 160
Typical efficiency : 97%
Number of gear reductions : 2 to 6



MOUNTING STYLES

Shaft mount housing style : standard
Integral torque tab : standard
B5 flange outside diameter range [in] : 5.51 to 25.98
B5 flange outside diameter range [mm] : 140 to 660
Footed housing style available
B14 flange outside diameter range [in] : 3.94 to 17.72
B14 flange outside diameter range [mm] : 100 to 450

OPTIONS

NEMA or IEC input
Custom adapter flange
Flange pilot removed
Shock dampeners
Effective drywell with flange

RATIO AND SPEED

Minimum standard ratio : 4.03:1
Maximum standard ratio : 6616.79 (compound assembly)
Minimum output speed from 1750 rpm motor : 0.26 rpm
Maximum output speed from 1750 rpm motor : 434 rpm

Unit Size	Torque Max.		Ratio Range	Keyed Hollow Shaft Dia.					Solid Shaft Dia.		Shrink Disc Shaft Dia.	
	[lb-in]	[Nm]	min.-max.	Std-[in]	Opt.-[in]	Opt.-[in]	Opt.-[in]	[mm]	[in]	[mm]	[in]	[mm]
SK 0182 NB	1,027	116	4.24 - 81.71	0.750	0.500	-	-	25	0.750	25	-	-
SK 0282 NB	1,460	165	4.03 - 139.16	1.000	1.1875	0.750	-	30	1.000	25	1.188	30
SK 1282	2,620	296	4.79 - 109.50	1.188	1.250	1.000	.0750	30	1.250	30	1.250	30
SK 1382 NB	3,275	370	16.28 - 381.45	1.375	1.4375	1.250	-	35	1.250	30	1.500	35
SK 2282	4,983	563	4.51 - 127.51	1.438	1.500	1.375	1.250	35	1.375	35	1.500	35
SK 2382	4,983	563	82.22 - 763.41	1.438	1.500	1.375	1.250	35	1.375	35	1.500	35
SK 3282	8,983	1,015	4.48 - 112.23	1.625	1.500	1.438	-	40	1.875	45	1.625	40
SK 3382	9,195	1,039	89.60 - 1022.42	1.625	1.500	1.438	-	40	1.875	45	1.625	40
SK 4282	17,700	2,000	4.70 - 155.40	2.062	2.000	1.938	1.688	50	2.250	55	2.000	50
SK 4382	18,381	2,077	66.68 - 1585.08	2.062	2.000	1.938	1.688	50	2.250	55	2.000	50
SK 5282	28,630	3,235	4.32 - 134.03	2.438	2.375	2.188	-	60	2.500	65	2.500	60
SK 5382	28,320	3,200	82.72 - 1367.08	2.438	2.375	2.188	-	60	2.500	65	2.500	60
SK 6282	40,152	4,537	4.39 - 80.33	2.750	2.938	2.438	-	70	3.000	75	3.000	70
SK 6382	53,100	6,000	24.42 - 551.58	2.750	2.938	2.438	-	70	3.000	75	3.000	70
SK 7282	57,266	6,471	4.26 - 69.73	3.188	3.250	2.938	-	80	3.500	90	3.188	80
SK 7382	73,455	8,300	23.46 - 338.79	3.188	3.250	2.938	-	80	3.500	90	3.188	80
SK 8282	93,969	10,618	4.52 - 72.71	4.062	4.000	3.938	3.438	100	4.250	110	4.000	100
SK 8382	116,820	13,200	30.92 - 386.68	4.062	4.000	3.938	3.438	100	4.250	110	4.000	100
SK 9282	158,681	17,930	5.34 - 34.38	4.750	4.938	4.438	-	120	5.250	140	4.750	125
SK 9382	224,790	25,400	35.61 - 352.36	4.750	4.938	4.438	-	120	5.250	140	4.750	125
SK 10282	283,200	32.000	5.20 - 18.24	-	-	-	-	160	6.250	160	6.250	160
SK 10382	329,220	37,200	21.00 - 357.40	-	-	-	-	160	6.250	160	6.250	160
SK 11282	371,700	42,000	7.67 - 34.85	-	-	-	-	180	7.000	180	7.000	180
SK 11382	610,650	69,000	31.96 - 224.76	-	-	-	-	180	7.000	180	7.000	180
SK 12382	796,500	90,000	69.12 - 201.75	-	-	-	-	180	7.000	180	7.000	180

NORD DRIVESYSTEMS

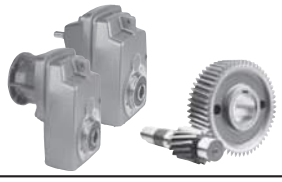

SK 3282 NEMA-C + W Ratings & Combinations

Model Type	Gear Ratio	Output Speed	Output Torque*	Maximum input power◈ Solid input shafts type "W"				NEMA C-Face* Available Combinations							
				Input Speed											
	i_{tot}	n_2 1750 rpm	$T_{2\,max}$	1750 rpm	1150 rpm	875 rpm	580 rpm								
		[rpm]	[lb-in]	[hp]	[hp]	[hp]	[hp]	56C	140TC	180TC	210TC	250TC	280TC	320TC	360TC
SK 3282	4.48	391	4080	10.00	6.60	5.00	3.30	X	X	X	X				
	5.74	305	4964	10.00	6.60	5.00	3.30	X	X	X	X				
	6.70	261	5372	10.00	6.60	5.00	3.30	X	X	X	X				
	8.31	211	5983	10.00	6.60	5.00	3.30	X	X	X	X				
	9.80	179	7425	10.00	6.60	5.00	3.30	X	X	X	X				
	11.38	154	7266	10.00	6.60	5.00	3.30	X	X	X	X				
	14.11	124	7584	10.00	6.60	5.00	3.30	X	X	X	X				
	16.67	105	7443	10.00	6.60	5.00	3.30	X	X	X	X				
	20.18	87	7275	10.00	6.60	5.00	3.30	X	X	X	X				
	21.38	82	6390	8.31	5.49	4.16	2.74	X	X	X	X*				
	22.45	78	7080	8.76	5.78	4.38	2.89	X	X	X	X*				
	23.71	74	7124	8.36	5.52	4.18	2.76	X	X	X	X*				
	25.88	68	7487	8.08	5.33	4.04	2.67	X	X	X	X*				
	28.70	61	7700	7.45	4.92	3.73	2.46	X	X	X	X*				
	31.93	55	7761	6.77	4.47	3.39	2.24	X	X	X	X*				
	37.77	46	7390	5.39	3.56	2.70	1.78	X	X	X					
	38.62	45	5611	4.01	2.64	2.00	1.32	X	X	X*					
	42.02	42	8222	5.48	3.62	2.74	1.81	X	X	X*					
	44.85	39	6522	4.04	2.66	2.02	1.33	X	X	X*					
	48.04	36	4885	2.79	1.84	1.40	0.92	X	X						
	52.97	33	7478	3.92	2.58	1.96	1.29	X	X	X*					
	55.79	31	5682	2.79	1.84	1.40	0.92	X	X						
	64.12	27	8983	3.85	2.54	1.92	1.27	X	X	X*					
	65.89	27	6708	2.87	1.90	1.44	0.95	X	X						
	70.56	25	4991	1.98	1.31	0.99	0.65	X	X*						
	79.76	22	7523	2.63	1.73	1.31	0.87	X	X						
	88.74	20	8363	2.65	1.75	1.33	0.88	X	X						
	100.88	17	7142	1.93	1.27	0.96	0.64	X	X*						
	112.23	16	6815	1.73	1.14	0.86	0.57	X	X*						

* Caution - The motor power may exceed the gear unit's mechanical torque capacity
◈ The mechanical power limit of the solid input shaft type "W" may limit the reducer rating.
All ratings are mechanical. See page 14 for thermal considerations.

DRAFT

	W	56C	140TC	180TC	210TC
SK 3282	110	106	115	123	143

DRIVESYSTEMS

NEMA & IEC Couplings

NEMA Motor Adapter Details

NEMA C-face Motor Frame Size	NEMA Adapter Nomenclature	4 pole Motor HP	Max Motor Weight [lb]	Coupling Description	Coupling Bore (inches)	Maximum Coupling Torque Capacity (in-lb)	Safety Factor
56 C	- 56C	≤ 1.0	66	J14	0.625	177	3.3 min
56 C	- 56C	≤ 1.5	66	J24	0.875	354	6.6 min
143 TC	- 140TC	≤ 1.5	88				6.6 min
145 TC	- 140TC	≤ 2	110				4.9 min
145 TC	- 140TC	3	110				3.3 min
182 TC	- 180TC	3	130	J28	1.125	797	7.4 min
184 TC	- 180TC	5	175				4.4 min
182 TC	- 180TC	3	130	M38	1.125	1416	13.1 min
184 TC	- 180TC	5	175				7.9 min
213 TC	- 210TC	7.5	220		1.375		5.2 min
215 TC	- 210TC	10	220				4.0 min
254 TC	- 250TC	15	450	M42	1.625	1770	3.3 min
256 TC	- 250TC	20	450				2.5 min
284 TC	- 280TC	25	550	M48	1.875	2478	2.8 min
286 TC	- 280TC	30	550				2.3 min
324 TC	- 320TC	40	770	R65	2.125	11,060	8.0 min
326 TC	- 320TC	50	1100				6.4 min
364 TC	- 360TC	60	1550	R90	2.375	42,480	19.9 min
365 TC	- 360TC	75	1550				16.1 min
404 TSC	- 400TSC	100	2205		2.875		12.1 min

IEC Motor Adapter Details

IEC Motor B5 4 pole	IEC Adapter Nomenclature	HP / kW	Max Weight Limit [lb]	Coupling Description	Coupling Bore (mm)	Maximum Coupling Torque Capacity (Nm)	Safety Factor
63 S/4	- IEC 63	0.16 / 0.12	56	J14	11	20	23.2 min
63 L/4	- IEC 63	0.25 / 0.18	56				15.8 min
71 S/4	- IEC 71	0.33 / 0.25	67		14		11.5 min
71 L/4	- IEC 71	0.50 / 0.37	67				7.8 min
80 S/4	- IEC 80	0.75 / 0.55	89	J24	19	40	10.4 min
80 L/4	- IEC 80	1.00 / 0.75	89				7.6 min
90 S/4	- IEC 90	1.5 / 1.1	111		24		5.3 min
90 L/4	- IEC 90	2.0 / 1.5	111				3.8 min
100 L/4	- IEC 100	3.0 / 2.2	133	J28	28	90	6.1 min
100 L/40	- IEC 100	5.0 / 3.7	133				4.4 min
112 M/4	- IEC 112	5.3 / 4.0	177				3.4 min
132 S/4	- IEC 132	7.5 / 5.5	221	M38	38	160	4.3 min
132 M/4	- IEC 132	10 / 7.5	221				3.2 min
160 M/4	- IEC 160	15 / 11	441	M42	42	200	2.2 min
160 L/4	- IEC 160	20 / 15	441				1.6 min
180 M/4	- IEC 180	25 / 18.5	552	M48	48	280	2.3 min
180 L/4	- IEC 180	30 / 22	552				1.9 min
200 L/4	- IEC 200	40 / 30	772	R65	55	1250	6.3 min
225 S/4	- IEC 225	50 / 37.5	1103		60		5.2 min
225 M/4	- IEC 225	60 / 45	1103				4.2 min
250 M/4	- IEC 250	75 / 55	1544	R90	70	4800	13.5 min
280 S/4	- IEC 280	100 / 75	1544		80		9.9 min
280 M/4	- IEC 280	125 / 90	2205				8.2 min
315 S/4	- IEC 315	150 / 110	3307		85		6.7 min
315 M/4	- IEC 315	175 / 132	3307				5.6 min
315 L/4	- IEC 315	250 / 200	3307				3.7 min

DRAFT

NORD DRIVESYSTEMS

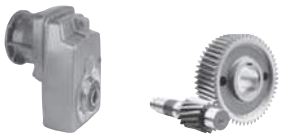

SK 3282 + NEMA

SK 3282V

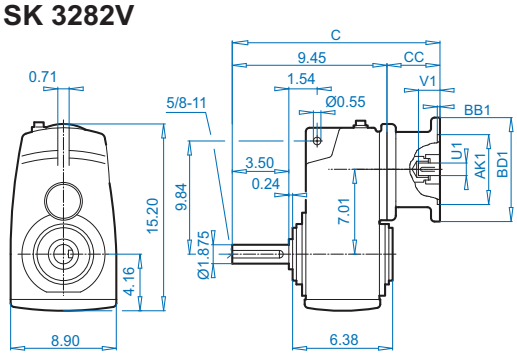

SK 3282A

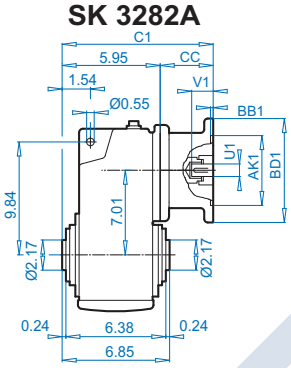

NEMA Input

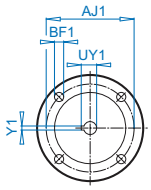

Dimensions in Inches

SK 3282VF

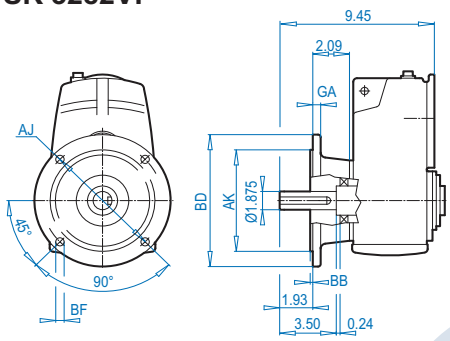

SK 3282AF

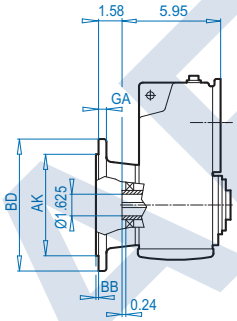

SK 3282ASH

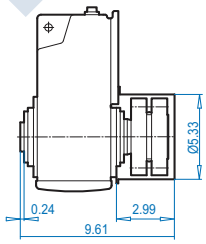

SK 3282V

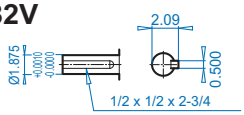

SK 3282A

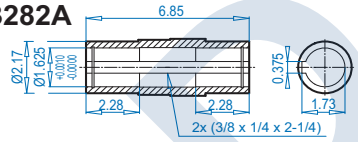

SK 3282AB ⇨📖 394

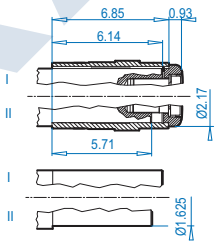

SK 3282AS ⇨📖 391

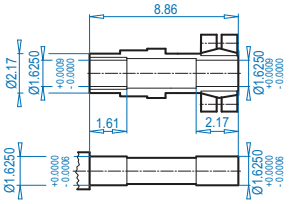

Mounting Flange

BD (mm)	AJ	AK	BB	BF	GA
9.84 (250)	8.46	7.09 +0.0006 -0.0005	0.16	0.53	0.59
11.81 (300)	10.43	9.06 +0.0000 -0.0013	0.16	0.55	0.79

NEMA Dimensions

Type	AJ1	AK1	BB1	BD1	BF1	U1	V1	UY1	Y1	C	C1	CC
56C	5.88	4.500	0.18	6.54	0.43	0.625	2.06	0.71	0.188	14.04	10.54	4.60
140TC	5.88	4.500	0.18	6.54	0.43	0.875	2.12	0.96	0.188	14.04	10.54	4.60
180TC	7.25	8.500	0.23	9.17	0.59	1.125	2.62	1.24	0.250	16.04	12.54	6.60
210TC	7.25	8.500	0.39	9.17	0.59	1.375	3.12	1.52	0.312	16.04	12.54	6.60

DRAFT

SK 2382, SK 2282/02
NEMA-C + W
Ratings & Combinations

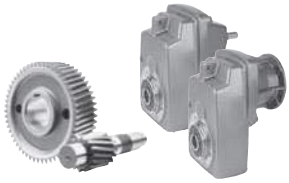

NORD DRIVESYSTEMS

Model Type	Gear Ratio	Output Speed	Output Torque*	Maximum input power◈ Solid input shafts type "W"				NEMA C-Face* Available Combinations							
				Input Speed											
	i_{tot}	n_2 1750 rpm	$T_{2\ max}$	1750 rpm	1150 rpm	875 rpm	580 rpm								
		[rpm]	[lb-in]	[hp]	[hp]	[hp]	[hp]	56C	140TC	180TC	210TC	250TC	280TC	320TC	360TC
SK 2382	82.22	21	4965	1.50	0.99	0.75	0.50	X	X*						
	98.35	18	4983	1.42	0.94	0.71	0.47	X	X*						
	116.35	15	4611	1.10	0.72	0.55	0.36	X	X*						
	131.86	13	4611	0.95	0.63	0.48	0.31	X*	X*						
	149.96	12	4611	0.88	0.58	0.44	0.29	X*	X*						
	185.11	9.5	4611	0.70	0.46	0.35	0.23	X*	X*						
	236.11	7.4	4186	0.49	0.32	0.25	0.16	X*							
	276.27	6.3	4894	0.49	0.32	0.24	0.16	X*							
	330.45	5.3	4983	0.42	0.28	0.21	0.14	X*							
	390.93	4.5	4611	0.33	0.22	0.16	0.11	X*							
	482.56	3.6	4611	0.26	0.17	0.13	0.09	X*							
	623.10	2.8	4611	0.20	0.14	0.10	0.07	X*							
	763.41	2.3	3876	0.14	0.09	0.07	0.05	X*							
SK 2282/02	174.78	10	4602	0.50	0.33	0.25	0.17	X*	X*						
	215.75	8.1	4602	0.50	0.33	0.25	0.17	X*	X*						
	287.51	6.1	4602	0.50	0.33	0.25	0.16	X*	X*						
	356.28	4.9	4602	0.41	0.27	0.21	0.14	X*	X*						
	423.50	4.1	4602	0.35	0.23	0.18	0.12	X*	X*						
	514.51	3.4	4602	0.30	0.20	0.15	0.10	X*	X*						
	662.92	2.6	4602	0.24	0.16	0.12	0.08	X*	X*						
	824.77	2.1	4602	0.21	0.14	0.10	0.07	X*	X*						
	1064.71	1.6	4602	0.17	0.11	0.09	0.06	X*	X*						
	1423.06	1.2	4602	0.14	0.09	0.07	0.05	X*							
	1728.15	1.0	4602	0.13	0.08	0.06	0.04	X*							
	2133.20	0.82	4602	0.11	0.07	0.06	0.04	X*							
	2654.05	0.66	4602	0.10	0.07	0.05	0.03	X*							
	3426.39	0.51	4602	0.09	0.06	0.05	0.03	X*							

* Caution - The motor power may exceed the gear unit's mechanical torque capacity
◈ The mechanical power limit of the solid input shaft type "W" may limit the reducer rating.
All ratings are mechanical. See page 14 for thermal considerations.

DRAFT

lb	W	56C	140TC
SK 2382	49	53	57
SK 2282/02	57	62	66

HYDRO-DYNE ENGINEERING INC.
EQUIPMENT WARRANTY

Hydro-Dyne Engineering (HDE) affirms that the portion of the equipment that are both designed and manufactured by HDE is warranted from defects in material and workmanship for the warranty period of 2 year(s).

The warranty period commencement date is the earlier of ninety (90) days from the date of delivery of the equipment or the date the equipment is beneficially occupied by the owner. Equipment delivered in stages will have commencement dates staggered in accordance with delivery dates or beneficial occupancy dates.

If any portions of equipment warranted has material defects or fails to maintain workmanship standards, the equipment owner must notify HDE of the suspect failure within the warranty period and no later than 5 days after the equipment owner discovers the suspect failure.

Portions of the equipment warranted by HDE that the owner has deemed failed will be examined by HDE to establish the failure has occurred under normal use and service operation in accordance with the guidelines stated in the applicable Hydro-Dyne Engineering Operation and Maintenance Manual and within the warranty period.

Provided, that if it would be impracticable for the equipment or portion of the equipment to be returned to Hydro-Dyne Engineering's facility as determined by HDE, HDE will visit the Owner's job site to inspect the suspect failure; however, if it is determined by HDE after inspection that HDE is not responsible under the Warranty, the owner will pay HDE's published service rates for all of the travel and associated costs of HDE with respect to the site visit. Equipment repaired or replaced under the terms of this warranty remain warranted under the original warranty period only. Proof of maintenance logs as dictated in the applicable Hydro-Dyne Engineering Operation and Maintenance Manual will be required by HDE from the owner.

Hydro-Dyne Engineering will repair or replace, at its option, free of charge to the owner at the owner's location or other location designated by HDE. Costs for labor to remove, install and ship equipment or parts is not included in this warranty and will be the responsibility of the equipment owner.

This warranty does not apply if any defect in material or workmanship is caused in whole or in part by any acts or omissions of Owner or any other person or entity other than Hydro-Dyne Engineering. Acts and omissions include but are not limited to negligence, willful misconduct, or alterations to the equipment by any person or entity other than HDE, failure to operate or maintain equipment under normal operating conditions in accordance with applicable Hydro-Dyne Engineering Operation and Maintenance Manual(s), compromising equipment protection via controls changes, or any event (e.g., an accident during transit) or condition (e.g. decomposition of equipment by chemical action, erosion or corrosion or wear to equipment or due to conditions of temperature, moisture and dirt), beyond the reasonable control of HDE, including any Force Majeure event. The Warranty does not apply to any products that are not designed and manufactured by Hydro-Dyne Engineering (e.g., parts, equipment, accessories or components that were either manufactured or were designed by any person or entity other than Hydro-Dyne Engineering itself), but if there is any pass-through warranty that HDE is permitted to pass-through to the equipment owner in connection with the portions of the products that are not designed or manufactured by Hydro-Dyne Engineering, HDE will do so.

Hydro-Dyne Engineering, Inc. values each of our customers/users and will continue to devise better ways of maintaining excellence in our products and services. For additional information, please contact Hydro-Dyne Engineering Service Department at 813-818-0777.

DRAFT

Certificate of Registration

nqa global assurance

This is to certify that the Quality Management System of:

Hydro-Dyne Engineering

4750 118th Ave. N.
Clearwater FL 33762
United States of America

applicable to:

Design, fabrication, assembly, refurbish, service and test of screening and grit removal equipment for municipal and industrial water and wastewater facilities

has been assessed and approved by
National Quality Assurance, U.S.A., against the provisions of:

ISO 9001:2015

DRAFT

Certificate Number:	17258
EAC Code:	18
Certified Since:	November 21, 2017
Valid Until:	November 20, 2026
Reissued:	November 21, 2023
Cycle Issued:	November 21, 2023

For and on behalf of NQA, USA

ANAB ACCREDITED ISO/IEC 17021 MANAGEMENT SYSTEMS CERTIFICATION BODY

This approval is subject to the company maintaining its system to the required standard, which will be monitored by NQA, USA, 289 Great Road, Suite 105, Acton, MA 01720, an accredited organization under the ANSI National Accreditation Board.



HYDRO DYNE ENGINEERING

Designed to Protect. Built to Perform.™



Coarse Screens

Extremely reliable and versatile screens through robust design. With a wide variety of models and grid options, our coarse screens easily remove large solids for unsurpassed downstream protection.



Bull Shark
Through Flow Screen

- Heavy-duty, high capacity system
- Unlimited support against deflection



Tiger Shark
Multi-Rake Screen

- No submerged sprockets
- Dry unloading of screenings



Dusky Shark
Septage Receiving Station

- Effortlessly screens high TSS and FOG flows
- Monitoring and billing control available



Saw Shark
Filter Stepper

- Low flow step-style screen
- Designed for smaller processes



Fine Screens

Our fine screens have been independently certified to have among the highest screening capture ratios available. Through flow, center flow and dual flow models capture solids as small as 0.5mm.



Great White Shark
Center Flow Screen

- Low headloss and no carryover
- Ideal for sensitive process protection



Bull Shark
Through Flow Screen

- Proprietary sealing eliminates ragging
- Multiple models and grid types



Dusky Shark
Septage Receiving Station

- All maintenance above tank
- Dual spray wash unloading



Great White Shark
Dual Flow Screen

- Side entrance/rear exit
- Ideal in influent chambers



Screenings Handling

Multiple models are designed for a variety of needs – from simple conveyance to sophisticated washing and compaction. Custom-designed equipment to perfectly complement a plant's screening system.



Whitetip Shark
Washing Compactor

- Collects, transports, washes, dewaters and compacts screenings
- Reduces disposal weight and volume



Thresher Shark
Washing Machine

- Highest capture of inorganics with no emulsification
- Excellent return of organics and fecals to plant



Spinner Shark
Screw Conveyor

- Effective transportation of solids
- Shafted and shaftless flights



Sluice Systems

- Proprietary bolt-on actuated gates available to retrofit existing sluice systems



Grit Removal

Highly efficient all stainless steel grit traps and classifiers effectively remove grit particles at variable flow rates with very little headloss. Durable and rugged equipment easily retrofits existing systems.



Sand Shark
Grit Trap

- Highly efficient vortex-style system
- Sized to trap 95% of 300 micron grit



Sand Shark
Grit Classifier & Hydro-Cyclone

- Specifically designed for de-gritting wastewater
- Elevates, dewaters and disposes grit

Equipment Sizing



Hammerhead
On-site Screen Sizing

- Proprietary technology to analyze a plant's unique flow to properly design equipment
- Decreases capital and maintenance costs of the entire plant

DRAFT



Hydro-Dyne Engineering

Our formula for success is simple: intelligently design and skillfully manufacture exceptional quality equipment that provides extraordinary value to our customers. We do so by having complete control of our products from start to finish. As a full-service manufacturer, all design, fabrication, assembly and testing is handled in-house. Since 1978, our time-proven designs in custom engineered water and wastewater screening equipment have been trusted at more than 2,000 installations worldwide. At Hydro-Dyne Engineering, our solutions are ***Designed to Protect. Built to Perform.***

At-a-glance

- In-house design, fabrication and assembly
- Time-proven design
- 2,000+ installations worldwide since 1978
- Exceptional quality equipment and services
- Custom engineered solutions
- All stainless steel fabrication
- 110,000 sq. ft (10,000 m^2) manufacturing facility
- Made in the U.S.A.



Applications

Municipal Wastewater
- Combined storm overflow
- Correctional facilities
- Headworks for wastewater treatment plants
- Membrane bioreactor (MBR) protection
- Package plants
- Pump and lift stations
- Sludge and septage screening

Municipal Water
- Algae removal
- Desalination plant/RO protection
- Drainage canals
- Membrane protection
- Raw water intake
- Stormwater

Industrial
- Agriculture
- Chemical processing
- Cooling water intake
- Food processing
- Manufacturing
- Membrane protection
- Mining
- Petroleum
- Pulp and paper
- Textiles

Service

At Hydro-Dyne Engineering our factory-trained technicians take great pride in providing exceptional service to our customers around the world. From on-site screen sizing, equipment start-up, scheduled maintenance, service contracts, optional equipment, replacement parts and equipment remanufacturing, our experts support our customers throughout the life of their equipment.



DRAFT

ThompsonRPM

THIS IS TO CERTIFY THAT THE:

HYDRO-DYNE HYDRO-FLO (6 mm APERTURES)

WAS TESTED AT THE:

NATIONAL SCREEN EVALUATION FACILITY
CHESTER LE STREET STW
NORTHUMBRIAN WATER
AUGUST 2011

AVERAGE SCREENINGS CAPTURE RATIO = 84%

FOR FURTHER DETAILS REFER TO:

THOMPSON RPM REPORT REF- TRPM-REP251

Barry Thompson
Thompson RPM Ltd

DRAFT

ThompsonRPM

THIS IS TO CERTIFY THAT THE:

HYDRO-DYNE HYDRO-FLO (2 mm APERTURES)

WAS TESTED AT THE:

NATIONAL SCREEN EVALUATION FACILITY
CHESTER LE STREET STW
NORTHUMBRIAN WATER
AUGUST 2011

AVERAGE SCREENINGS CAPTURE RATIO = 93%

FOR FURTHER DETAILS REFER TO:

THOMPSON RPM REPORT REF- TRPM-REP251

Barry Thompson
Thompson RPM Ltd

DRAFT



HYDRO DYNE ENGINEERING
DESIGNED TO PROTECT. BUILT TO PERFORM.™

4750 118th Ave. North | Clearwater, FL 33762

Ph (813) 818-0777 | Fax (813) 818-0770

Made in the USA



DRAFT

SHOP DRAWING REVIEW

Project: **San Luis West WWTP Improvements**

Submittal No. **#X3-001 Valve List**

Vendor No. **X3 Valve List**

Date Received: **12/11/2025**

Job #: **B777**

Comments:

No Exceptions Taken..... ☐
Submit Specific Item ..... ☒
Accepted with Corrections Noted..... ☒
Revise and Resubmit..... ☐
Rejected ..... ☐

Note:
Review is only for general conformance with the design concept of the project and general compliance with the information included in the Contract Documents. Any action shown is subjected to the requirements of the drawings and the specifications. Contractor is responsible for correlating and confirming dimensions at the job site, choice of fabrication processes and techniques of construction: coordination of his work with that of other trades; and performing the work in a safe satisfactory manner.

DATE: 12/19/2025 BY: DD/NT

Contractor to Note:

Submittal Comments:

Accepted with Corrections:

1. Items #54, 63, 73 (Dwyer 1" valve) all state quantity of 3 (9 total valves). It is understood that each train has a single 1" air relief ball valve (for a total of 3). Please verify quantities provided.
2. Verify material, manufacturer, and installation type (lug, wafer, etc.) for the 3" permeate valves. Valve list shows them as CI Bray valves, scope of supply has indicated these as PVC valves by Asahi.
3. Items #76-78 (12" Permeate Control Valves) are marked as Stainless Steel due to comments from the Actuated Valves Submittal. Following discussions with Kubota and piping material changes, these valves are no longer required to be SS.
4. Item #96 calls out Flanged valve, CIP drawing by Kubota appears to show Wafer. Verify connection type to update within plans.

DRAFT

8723 E. Via de Commercio, #A-204 | Scottsdale, AZ 85258
P: (480) 991-3595 F: (480) 751-1810 | www.pacewater.com

5. Additional minor isolation and check valves are required for the CIP system. It is acceptable that the valve list does not include every minor valve for the CIP, but it is understood that Kubota is providing all of these items.
6. Item #100, please change Tag to “PRV-04424A”.
7. It is noted that the minor valves required for instrumentation connection, e.g. isolation valves for pressure transmitters and turbidity analyzers are not included within the Valve List. Verify if the valves necessary for instrumentation connection and isolation are provided by Kubota (as marked on Kubota P&ID Submittal – see reference photo below)

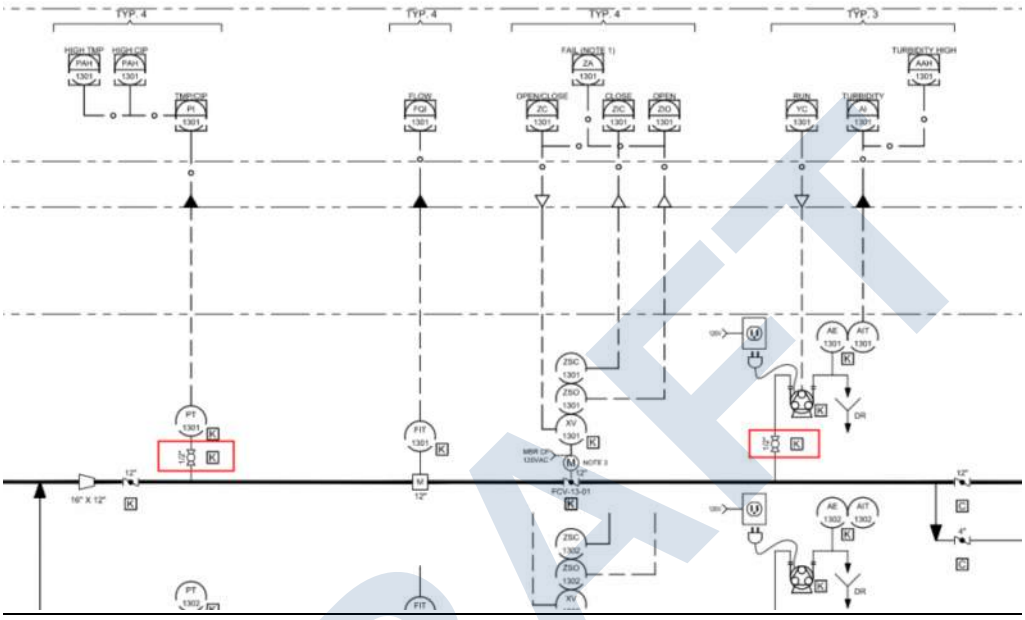

Submit Specific Item:

1. The 6” WAS plug valves & actuators are missing from this submittal, please provide.

DRAFT

For Earth, For Life
Kubota

Submittal Transmittal

Valve List

Project Name	San Luis, AZ West WWTP Phase 1 MBR Upgrades
Project Site	San Luis, AZ West WWTP
Engineer	PACIFIC ADVANCED CIVIL ENGINEERING (PACE) 8723 E. VIA de COMMERICO, SUITE A-204 SCOTTSDALE, AZ 85258
Submit to	Duong Do, PE PACE
Prepared by	Brian Travis KUBOTA Water and Environment USA Corporation 19910 North Creek Parkway Suite 100, Bothell WA 98011, USA
KMU Project #	4000580
Issued Date	December 11, 2025
Package #	4000580-4040-01,00 (Valve List – NOT FOR CONSTRUCTION)
Item	(1) Valve List

DRAFT

SUBMITTAL

San Luis, AZ West WWTP: Phase 1 MBR Upgrades

For Earth, For Life
Kubota

Submittal Modification Tracking List

#	Customer request	Kubota comments	Status *
1	Please confirm that the actuator can be installed 180° from the vertical position. Please submit any necessary support details required for this configuration.	Yes, actuators can be installed upside down.	Info
2	Please list the quantity of each type of valve and actuator being provided on the cover sheet.	This information is now available in the Valve List.	Info
3	Please submit cut sheets for two 6” WAS plug valves and electric actuator.	Updated.	Accepted
4	Please call out the 12” permeate valves to be stainless steel.	Updated.	Accepted
5	Please change the electric actuator power supply to be 120V/1 phase.	Updated.	Accepted
6			
7			
8			
9			

UG VALVES
ING. I6.0

* Status should be “Accepted”, “Info” or “No Change”

DRAFT

PERMEATE CONTROL VALVES WERE PREVIOUSLY 3" PVC BY ASAHI. CONFIRM MATERIAL, TYPE (TYP. OF ALL 3 TRAINS)

Project Number:	4000580
Project Name:	San Luis, AZ
Project Manager:	BT
Revision:	00
Date:	2025-12-11

Valve List

For Earth, For Life
Kubota

ID	Tag	QTY	Category	Manufacturer	Part Number	Item Description	P&ID Page	Datasheet	Cut Sheet	O&M	Revision
47	BFV-03021A-8A	8	VALVE	BRAY	300300-11010169-HDL	BUTTERFLY VALVE, SERIES 30, 3 INCH, CI BODY, EPDM SEAT/SEALS, SS DISC, 416SS SHAFT, LEVER OPERATOR, WAFER, 175 PSI PRESSURE RATING	I3.0	DATASHEET	CUT SHEET	O&M	00
48	BFV-03021B-8B	8	VALVE	BRAY	300300-11010119-HDL	BUTTERFLY VALVE, SERIES 30, 3 INCH, CI BODY, EPDM SEAT/SEALS, NYLON 11 COATED DI DISC, 416SS SHAFT, LEVER OPERATOR, WAFER, 175 PSI PRESSURE RATING	I3.0	DATASHEET	CUT SHEET	O&M	00
49	BFV-03021C-8C	8	VALVE	BRAY	300300-11010119-HDL	BUTTERFLY VALVE, SERIES 30, 3 INCH, CI BODY, EPDM SEAT/SEALS, NYLON 11 COATED DI DISC, 416SS SHAFT, LEVER OPERATOR, WAFER, 175 PSI PRESSURE RATING	I3.0	DATASHEET	CUT SHEET	O&M	00
54	BV-03028	3	VALVE	DWYER	WE01-ETD01-A	BALL VALVE, SERIES WE01, SS, 1 INCH, WITH 110 VAC ELECTRIC ACTUATOR WITH MANUAL OVERRIDE, FNPT ENDS, PTFE, 150PSI MAX	I3.0		CUT SHEET	O&M	00
56	BFV-03121A-8A	8	VALVE	BRAY	300300-11010169-HDL	BUTTERFLY VALVE, SERIES 30, 3 INCH, CI BODY, EPDM SEAT/SEALS, SS DISC, 416SS SHAFT, LEVER OPERATOR, WAFER, 175 PSI PRESSURE RATING	I3.1	DATASHEET	CUT SHEET	O&M	00
57	BFV-03121B-8B	8	VALVE	BRAY	300300-11010119-HDL	BUTTERFLY VALVE, SERIES 30, 3 INCH, CI BODY, EPDM SEAT/SEALS, NYLON 11 COATED DI DISC, 416SS SHAFT, LEVER OPERATOR, WAFER, 175 PSI PRESSURE RATING	I3.1	DATASHEET	CUT SHEET	O&M	00
58	BFV-03121C-8C	8	VALVE	BRAY	300300-11010119-HDL	BUTTERFLY VALVE, SERIES 30, 3 INCH, CI BODY, EPDM SEAT/SEALS, NYLON 11 COATED DI DISC, 416SS SHAFT, LEVER OPERATOR, WAFER, 175 PSI PRESSURE RATING	I3.1	DATASHEET	CUT SHEET	O&M	00
63	BV-03128	3	VALVE	DWYER	WE01-ETD01-A	BALL VALVE, SERIES WE01, SS, 1 INCH, WITH 110 VAC ELECTRIC ACTUATOR WITH MANUAL OVERRIDE, FNPT ENDS, PTFE, 150PSI MAX	I3.1		CUT SHEET	O&M	00
65	BFV-032121A-8A	8	VALVE	BRAY	300300-11010169-HDL	BUTTERFLY VALVE, SERIES 30, 3 INCH, CI BODY, EPDM SEAT/SEALS, SS DISC, 416SS SHAFT, LEVER OPERATOR, WAFER, 175 PSI PRESSURE RATING	I3.2	DATASHEET	CUT SHEET	O&M	00
66	BFV-032121B-8B	8	VALVE	BRAY	300300-11010119-HDL	BUTTERFLY VALVE, SERIES 30, 3 INCH, CI BODY, EPDM SEAT/SEALS, NYLON 11 COATED DI DISC, 416SS SHAFT, LEVER OPERATOR, WAFER, 175 PSI PRESSURE RATING	I3.2	DATASHEET	CUT SHEET	O&M	00
67	BFV-032121C-8C	8	VALVE	BRAY	300300-11010119-HDL	BUTTERFLY VALVE, SERIES 30, 3 INCH, CI BODY, EPDM SEAT/SEALS, NYLON 11 COATED DI DISC, 416SS SHAFT, LEVER OPERATOR, WAFER, 175 PSI PRESSURE RATING	I3.2	DATASHEET	CUT SHEET	O&M	00
72	BV-032128	3	VALVE	DWYER	WE01-ETD01-A	BALL VALVE, SERIES WE01, SS, 1 INCH, WITH 110 VAC ELECTRIC ACTUATOR WITH MANUAL OVERRIDE, FNPT ENDS, PTFE, 150PSI MAX	I3.2		CUT SHEET	O&M	00
73	BFV-04024	1	VALVE	BECK	11-369-420	ELECTRICAL ACTUATOR, GROUP 11, 120 VAC, 650 LB-INCH OF MAX TORQUE, CONTINUOUS DUTY, 4-20 MA	I4.0	DATASHEET	CUT SHEET	O&M	00
74	BFV-04025	1	VALVE	BECK	11-369-420	ELECTRICAL ACTUATOR, GROUP 11, 120 VAC, 650 LB-INCH OF MAX TORQUE, CONTINUOUS DUTY, 4-20 MA	I4.0	DATASHEET	CUT SHEET	O&M	00
75	BFV-04026	1	VALVE	BECK	11-369-420	ELECTRICAL ACTUATOR, GROUP 11, 120 VAC, 650 LB-INCH OF MAX TORQUE, CONTINUOUS DUTY, 4-20 MA	I4.0	DATASHEET	CUT SHEET	O&M	00
76	BFV-04024	1	VALVE	MPI	HP-12	BUTTERFLY VALVE, HP SERIES, 12 INCH,SSI BODY, SS SEAT/SEALS, SS DISC, 316SS SHAFT, BARE STEM, FLANGED, 275 PSI PRESSURE RATING	I4.0	DATASHEET	CUT SHEET	O&M	00
77	BFV-04025	1	VALVE	MPI	HP-12	BUTTERFLY VALVE, HP SERIES, 12 INCH,SSI BODY, SS SEAT/SEALS, SS DISC, 316SS SHAFT, BARE STEM, FLANGED, 275 PSI PRESSURE RATING	I4.0	DATASHEET	CUT SHEET	O&M	00
78	BFV-04026	1	VALVE	MPI	HP-12	BUTTERFLY VALVE, HP SERIES, 12 INCH,SSI BODY, SS SEAT/SEALS, SS DISC, 316SS SHAFT, BARE STEM, FLANGED, 275 PSI PRESSURE RATING	I4.0	DATASHEET	CUT SHEET	O&M	00
95	BV-04424	1	VALVE	BECK	11-263-OC	ELECTRICAL ACTUATOR, GROUP 11, 120 VAC, 250 LB-INCH OF MAX TORQUE, CONTINUOUS DUTY, OPEN/CLOSE	I4.4	DATASHEET	CUT SHEET	O&M	00
96	BV-04424	1	VALVE	MPI	4700-6	BUTTERFLY VALVE, SERIES 4700, 6 INCH, DI BODY, EPDM SEAT/SEALS, DI DISC, 316SS SHAFT, BARE STEM, FLANGED, 150 PSI PRESSURE RATING	I4.4	DATASHEET	CUT SHEET	O&M	00

ACCORDING TO CIP DRAWING, THIS APPEAR TO BE WAFER. PLEASE CONFIRM

DRAFT

Project Number:	4000580
Project Name:	San Luis, AZ
Project Manager:	BT
Revision:	00
Date:	2025-12-11

Valve List

For Earth, For Life
Kubota

DRAWING SHOWS HANDWHEEL. PLEASE CONFIRM WHICH SO DRAWINGS CAN BE UPDATED

ID	Tag	QTY	Category	Manufacturer	Part Number	Item Description	P&ID Page	Datasheet	Cut Sheet	O&M	Revision
97	BV-04425	1	VALVE	BRAY	300600-11010119-HDL	BUTTERFLY VALVE, SERIES 30, 6 INCH, CI BODY, EPDM SEAT/SEALS, NYLON 11 COATED DI DISC, 416SS SHAFT, LEVER OPERATOR, WAFER, 175 PSI PRESSURE RATING	I4.4	DATASHEET	CUT SHEET	O&M	00
98	BV-04426	1	VALVE	BRAY	300600-11010119-HDL	BUTTERFLY VALVE, SERIES 30, 6 INCH, CI BODY, EPDM SEAT/SEALS, NYLON 11 COATED DI DISC, 416SS SHAFT, LEVER OPERATOR, WAFER, 175 PSI PRESSURE RATING	I4.4	DATASHEET	CUT SHEET	O&M	00
99	BV-04429	1	VALVE	BRAY	300600-11010119-HDL	BUTTERFLY VALVE, SERIES 30, 6 INCH, CI BODY, EPDM SEAT/SEALS, NYLON 11 COATED DI DISC, 416SS SHAFT, LEVER OPERATOR, WAFER, 175 PSI PRESSURE RATING	I4.4	DATASHEET	CUT SHEET	O&M	00
100	PRV-04XXX	1	VALVE	ZURN	ZW209	PRESSURE REGULATING VALVE, ZW209, 6 INCH, DI BODY, 316SS SEAT/STEM/SPRING, BUNA-N DISC, COPPER PILOT ASSEMBLY, INLET/OUTLET PRESSURE GAUGES, 150 PSI PRESSURE RATING	I4.4		CUT SHEET	O&M	00
108	BFV-05220	1	VALVE	MPI	4700-12	BUTTERFLY VALVE, SERIES 4700, 12 INCH, DI BODY, EPDM SEAT/SEALS, DI DISC, 316SS SHAFT, BARE STEM, FLANGED, 150 PSI PRESSURE RATING	I5.2	DATASHEET	CUT SHEET	O&M	00
109	BFV-05220	1	VALVE	BECK	11-363-OC	ELECTRICAL ACTUATOR, GROUP 11, 120 VAC, 650 LB-INCH OF MAX TORQUE, CONTINUOUS DUTY, OPEN/CLOSE	I5.2	DATASHEET	CUT SHEET	O&M	00
110	BFV-05221	1	VALVE	MPI	4700-12	BUTTERFLY VALVE, SERIES 4700, 12 INCH, DI BODY, EPDM SEAT/SEALS, DI DISC, 316SS SHAFT, BARE STEM, FLANGED, 150 PSI PRESSURE RATING	I5.2	DATASHEET	CUT SHEET	O&M	00
111	BFV-05221	1	VALVE	BECK	11-363-OC	ELECTRICAL ACTUATOR, GROUP 11, 120 VAC, 650 LB-INCH OF MAX TORQUE, CONTINUOUS DUTY, OPEN/CLOSE	I5.2	DATASHEET	CUT SHEET	O&M	00
112	BFV-05222	1	VALVE	MPI	4700-12	BUTTERFLY VALVE, SERIES 4700, 12 INCH, DI BODY, EPDM SEAT/SEALS, DI DISC, 316SS SHAFT, BARE STEM, FLANGED, 150 PSI PRESSURE RATING	I5.2	DATASHEET	CUT SHEET	O&M	00
113	BFV-05222	1	VALVE	BECK	11-363-OC	ELECTRICAL ACTUATOR, GROUP 11, 120 VAC, 650 LB-INCH OF MAX TORQUE, CONTINUOUS DUTY, OPEN/CLOSE	I5.2	DATASHEET	CUT SHEET	O&M	00
122	BFV-05420	1	VALVE	MPI	4700-10	BUTTERFLY VALVE, SERIES 4700, 10 INCH, DI BODY, EPDM SEAT/SEALS, DI DISC, 316SS SHAFT, BARE STEM, FLANGED, 150 PSI PRESSURE RATING	I5.4	DATASHEET	CUT SHEET	O&M	00
123	BFV-05420	1	VALVE	BECK	11-369-420	ELECTRICAL ACTUATOR, GROUP 11, 120 VAC, 650 LB-INCH OF MAX TORQUE, CONTINUOUS DUTY, 4-20 MA	I5.4	DATASHEET	CUT SHEET	O&M	00
124	BFV-05421	1	VALVE	MPI	4700-10	BUTTERFLY VALVE, SERIES 4700, 10 INCH, DI BODY, EPDM SEAT/SEALS, DI DISC, 316SS SHAFT, BARE STEM, FLANGED, 150 PSI PRESSURE RATING	I5.4	DATASHEET	CUT SHEET	O&M	00
125	BFV-05421	1	VALVE	BECK	11-369-420	ELECTRICAL ACTUATOR, GROUP 11, 120 VAC, 650 LB-INCH OF MAX TORQUE, CONTINUOUS DUTY, 4-20 MA	I5.4	DATASHEET	CUT SHEET	O&M	00
126	BFV-05422	1	VALVE	MPI	4700-10	BUTTERFLY VALVE, SERIES 4700, 10 INCH, DI BODY, EPDM SEAT/SEALS, DI DISC, 316SS SHAFT, BARE STEM, FLANGED, 150 PSI PRESSURE RATING	I5.4	DATASHEET	CUT SHEET	O&M	00
127	BFV-05422	1	VALVE	BECK	11-369-420	ELECTRICAL ACTUATOR, GROUP 11, 120 VAC, 650 LB-INCH OF MAX TORQUE, CONTINUOUS DUTY, 4-20 MA	I5.4	DATASHEET	CUT SHEET	O&M	00

CHANGE TO PRV-04424A

DRAFT

SHOP DRAWING REVIEW

Project: **San Luis West WWTP Improvements**

Submittal No. **#O1-02 Kubota P&ID**

Vendor No. **A2_001**

Date Received: **05/22/2025**

Job #: **B777**

Comments:

No Exceptions Taken..... ☐
Submit Specific Item ..... ☐
Accepted with Corrections Noted..... ☒
Revise and Resubmit..... ☐
Rejected ..... ☐

Note:
Review is only for general conformance with the design concept of the project and general compliance with the information included in the Contract Documents. Any action shown is subjected to the requirements of the drawings and the specifications. Contractor is responsible for correlating and confirming dimensions at the job site, choice of fabrication processes and techniques of construction: coordination of his work with that of other trades; and performing the work in a safe satisfactory manner.

DATE: 7/25/2025 BY: DD / NE

Contractor to Note:

Submittal Comments:

1. Remove WAS pumps and WAS flow meter from scope of supply.
2. Feed forward level floats and transmitters shown on scope of supply but not P&ID—please reconcile or remove.
3. Please review PACE's P&ID for conformity. P&ID will be provided in sharefile.

DRAFT

8723 E. Via de Commercio, #A-204 | Scottsdale, AZ 85258
P: (480) 991-3595 F: (480) 751-1810 | www.pacewater.com

For Earth, For Life
Kubota

Submittal Transmittal

A-2 Piping and Instrumentation Diagrams

Project Name	San Luis, AZ West WWTP Phase 1 MBR Upgrades
Project Site	San Luis, AZ West WWTP
Engineer	PACIFIC ADVANCED CIVIL ENGINEERING (PACE) 8723 E. VIA de COMMERICO, SUITE A-204 SCOTTSDALE, AZ 85258
Submit to	Duong Do, PE PACE
Prepared by	Scott Jungwirth, PE KUBOTA Water and Environment USA Corporation 19910 North Creek Parkway Suite 100, Bothell WA 98011, USA
KMU Project #	OPID65
Issued Date	May 22, 2025
Package #	SMU
Item	(1) Piping and Instrumentation Diagrams

DRAFT

SAN LUIS WEST AZ WWTP
SAN LUIS, AZ

DRAWING LIST

SNL-I-01	COVER SHEET
SNL-I-02	SYMBOLS & LEGEND 1
SNL-I-03	SYMBOLS & LEGEND 2
SNL-I-04	INFLUENT/MLSS RETURN CHANNEL
SNL-I-05	ANOXIC BASIN B1
SNL-I-06	ANOXIC BASIN B2
SNL-I-07	ANOXIC BASIN B3
SNL-I-08	PRE-AERATION BASIN B1
SNL-I-09	PRE-AERATION BASIN B2
SNL-I-10	PRE-AERATION BASIN B3
SNL-I-11	ML FEED CHANNEL
SNL-I-12	RAS WET WELL
SNL-I-13	MEMBRANE BIOREACTOR BASIN 01
SNL-I-14	MEMBRANE BIOREACTOR BASIN 02
SNL-I-15	MEMBRANE BIOREACTOR BASIN 03
SNL-I-16	MEMBRANE BIOREACTOR BASIN 04
SNL-I-17	MEMBRANE BIOREACTOR BASIN 05
SNL-I-18	MEMBRANE BIOREACTOR BASIN 06
SNL-I-19	MBR PERMEATE COLLECTION 1
SNL-I-20	MBR PERMEATE COLLECTION 2 (FUTURE)
SNL-I-21	MBR PERMEATE COLLECTION HEADER
SNL-I-22	WAS PUMPS
SNL-I-23	PROCESS AIR BLOWERS
SNL-I-24	MBR BLOWERS
SNL-I-25	PROCESS AIR HEADER
SNL-I-26	MBR AIR HEADER
SNL-I-27	CIP SYSTEM

DRAFT

For Earth, For Life
Kubota
KUBOTA Membrane USA Cooporation
11807 North Creek Parkway S. Suite B109
Bothell, WA 98011 USA
Tel; +1 425 898 2853

REVISIONS			
REV	DESCRIPTION	DATE	APPROVED

DRAWN	ART	DATE 05/06/25
CHECKED	–	DATE –
APPROVED	–	DATE –
APPROVED	–	DATE –

SAN LUIS WEST AZ WWTP
SAN LUIS, AZ
COVER SHEET

SIZE	CONTRACT NO.	DRAWING NO.	REV.
D	–	SNL-I-01	A

SCALE	SHEET NO.
N/A	1-of-27

INSTRUMENT SYMBOL LABELS



INSTRUMENT & FUNCTION SYMBOLS

	FIELD ACCESSIBLE	FRONT MAIN ACCESSIBLE	FRONT AUX ACCESSIBLE	REAR MAIN INACCESSIBLE
DISCRETE INSTRUMENT	ID LOOP CON LOC			
SHARED DISPLAY SHARED CONTROL	ID LOOP TOP BTM LOC			
COMPUTER FUNCTION	ID LOOP LOC			
PROGRAMMABLE LOGIC CONTROL	TOP ID LOOP BTM LOC			

PLC INPUT/OUTPUT	ANALOG INPUT	ANALOG OUTPUT	DISCRETE INPUT	DISCRETE OUTPUT	HARDWARE INTERLOCK
	▲	▼	△	▽	◇ I

INSTRUMENT SYMBOL LABEL IDENTIFICATION

	FIRST LETTER		SUCCEEDING LETTERS		
	MEASURED OR INITIATING VARIABLE	MODIFIER	READOUT OR PASSIVE FUNCTION	OUTPUT FUNCTION	MODIFIER
A	ANALYSIS		ALARM		
B	BURNER,COMBUSTION		USER'S CHOICE	USER'S CHOICE	USER'S CHOICE
C	USER'S CHOICE			CONTROL	
D	DENSITY	DIFFERENTIAL			
E	VOLTAGE		SENSOR(PRIMARY ELEMENT)		
F	FLOW RATE	RATIO(FRACTION)			
G	USER'S CHOICE		GLASS,VIEWIG DEVIDE		
H	HAND				HIGH
I	CURRENT(ELECTRICAL)		INDICATE		
J	POWER	SCAN			
K	TIME,TIME SCHEDULE	TIME RATE OF CHANGE		CONTROL STATION	
L	LEVEL		LIGHT		LOW
M	MOISTURE	MOMENTARY			MIDDLE,INTERMEDIATE
N	USER'S CHOICE		USER'S CHOICE	USER'S CHOICE	USER'S CHOICE
O	USER'S CHOICE		ORIFICE,RESTRICTION		
P	PRESSURE,VACUUM		POINT(TEST) CONNECTION		
Q	QUANTITY	INTEGRATE,TOTALIZE			
R	RADIATION		RECORD		
S	SPEED,FREQUENCY	SAFETY		SWITCH	
T	TEMPERATURE			TRANSMIT	
U	MULTIVARIABLE		MULTIFUNCTION	MULTIFUNCTION	MULTIFUNCTION
V	VIBRATION,MECANICAL ANALYSIS			VALVE,DAMPER,OR LOUVER	
W	WEIGHT,FORCE		WELL		
X	UNCLASSIFIED	X AXIS	UNCLASSIFIED	UNCLASSIFIED	UNCLASSIFIED
Y	EVENT,STATE,PRESENCE	Y AXIS		RELAY,COMPUTE,CONVERT	
Z	POSITION,DIMENSION	Z AXIS		DRIVER,ACTUATOR, UNCLASSIFIED,FINAL CONTROL ELEMENT	

CONTROL ABBREVIATIONS

1/2	SELECT 1 OR 2 POSITION
A/M	REMOTE-MANUAL SETTING
AMSS	REMOTE-MANUAL-START-STOP FUNCTION
DO	DISSOLVED OXYGEN
ESTOP	EMERGENCY STOP
FAIL	FAILURE CONDITION
HOR	HAND-OFF-REMOTE
I/I	CURRENT TO CURRENT CONVERTER
I/P	CURRENT TO PNEUMATIC CONVERTER
LEL	LOWER EXPLOSIVE LIMIT
LOR	LOCAL-OFF-REMOTE
LOS	LOCK-OUT-STOP
LR	LOCAL-REMOTE
OC	OPEN-CLOSE
OCR	OPEN-CLOSE-REMOTE
OIL	LUBRICATING OR COOLING OIL
OIT	OPERATOR INTERFACE TERMINAL
ON	ON CONDITION
OPEN	OPEN CONDITION OR COMMAND
OSC	OPEN-STOP-CLOSE
RDY	READY CONDITION
RESET	RESET FAILURE
RUN	MAINTAINED RUN COMMAND
SP	SET POINT
SS	START-STOP
WND	MOTOR WINDING
BCN	BEACON
V/P	VOLTAGE TO PNEUMATIC CONVERTER
V/I	VOLTAGE TO CURRENT CONVERTER

GENERAL ABBREVIATIONS

AFD	ADJUSTABLE FREQUENCY DRIVE
AS	AIR SUPPLY
AXP	POST ANOXIC
BFV	BUTTERFLY VALVE
BV	BALL VALVE
CMPTR	COMPUTER
CS	CONSTANT SPEED
CTA	CITRIC ACID
CV	CHECK VALVE
DO	DISSOLVED OXYGEN
DR	DRAIN
DV	DIAPHRAGM VALVE
ES	ELECTRICAL SUPPLY
FC	FAIL CLOSED
FO	FAIL OPEN
FP	FIELD PANEL
GAL	GALLONS
GBV	GLOBAL VALVE
GND	GROUND
GV	GATE VALVE
HI	HIGH
HMI	HUMAN-MACHINE INTERFACE
I/O	INPUT/OUTPUT
INST	INSTRUMENT
KGV	KNIFE GATE VALVE
LCP	LOCAL CONTROL PANEL
MB	MBR BASIN
MBR	MEMBRANE BIOREACTOR
MCC	MOTOR CONTROL CENTER
MUX	TELEMETRY MULTIPLEXING
NC	NORMALLY CLOSED
NO	NORMALLY OPEN
NV	NEEDLE VALVE
OF	OVERFLOW
PA	PRE-AERATION
PAX	PRE-ANOXIC
PLC	PROGRAMMABLE LOGIC CONTROLLER
PRV	PRESSURE RELIEF VALVE
PT	PRESSURE TAG
PV	PLUG VALVE
PW	PLANT WATER
REQD	REQUIRED
RLS	RELEASE
RM	ROTOMETER
SB	SPLITTER BOX
SCADA	SUPERVISORY CONTROL AND DATA ACQUISITION
SH	SLUDGE HOLDING
SMU	SUBMERGED MEMBRANE UNIT
SP	SUMP PUMP
SWD	SIDE WATER DEPTH
TEMP	TEMPERATURE
TMP	TRANS MEMBRANE PRESSURE
TURB	TURBIDITY
TV	TELESCOPING VALVE
TYP	TYPICAL
UNO	UNLESS NOTED OTHERWISE
UPS	UNINTERRUTABLE POWER SUPPLY
V	VENT
VFD	VARIABLE FREQUENCY DRIVE
UV	ULTRA VIOLET
VS	VARIABLE SPEED

FLOW STREAM ABBREVIATIONS

CAS	CAUSTIC SODA
CIP	CLEAN IN PLACE
CTA	CITRIC ACID
FF	FEED FORWARD
INF	INFLUENT
IR	INTERNAL RECYCLE
MCRC	MICRO-C
NaOH	SODIUM HYDROXIDE
PA	PROCESS AIIR
PRM	PERMEATE
PW	PLANT WATER
RAS	RETURN ACTIVATED SLUDGE
SCA	SCOUR AIR
SHC	SODIUM HYPOCHLORITE
WAS	WASTE ACTIVATED SLUDGE

PROCESS ZONES

ZONE #	PROCESS DESCRIPTION
01	PUMP STATION
02	HEADWORKS
03	EQUALIZATION
04	DE-OX
05	ANAEROBIC
06	PRE-ANOXIC
07	SWING BASIN
08	PRE-AERATION
09	POST ANOXIC
10	MEMBRANE BIOREACTOR
11	REACTIVATED SLUDGE
12	INTERNAL RECYCLE
13	PERMEATE COLLECTION
14	SCOUR AIR
15	PROCESS AIR
16	CLEAN IN PLACE
17	WASTE ACTIVATED SLUDGE
18	ULTRA VIOLET DISINFECTION
19	CHEMICAL ADDITION
20	USER CHOICE 02
99	PLC / SCADA

EQUIPMENT LABELS

EQUIPMENT NUMBER
EQUIPMENT NAME
SPEC 01
SPEC 02
SPEC 03
SPEC 04

X-01-01

EQUIPMENT NAME ABBREVIATION	PROCESS ZONE NUMBER	INSTANCE NUMBER

PIPE LINE NUMBER IDENTIFIER

X-MTL-FSA-000

X = PIPE SIZE
MTL = PIPE MATERIAL
FSA = FLOW STREAM ABBREVIATION
000 = INSTANCE NUMBER

VALVE NUMBER IDENTIFIER

X
VA-PZ-000

X = VALVE SIZE
VA = VALVE TYPE ABBREVIATION
PZ = PROCESS ZONE
000 = INSTANCE NUMBER

SHEET CONNECTION SYMBOLS

- FLOW STREAM ORIGIN/DESTINATION SHT XX. — PROCESS CONNECTION IN THIS CONTRACT

X = INSTANCE NUMBER

FLOW STREAM ORIGIN/DESTINATION — PROCESS CONNECTION NOT IN THIS CONTRACT

FLOW STREAM ORIGIN/DESTINATION ORIGIN/DESTINATION — PROCESS CONNECTION NOT IN THIS CONTRACT OPTIONAL

LINE SYMBOLS

	MAIN PROCESS FLOW
	MAIN PROCESS FLOW (EXISTING)
	SECONDARY PROCESS FLOW
	SECONDARY (EXISTING)
	NON PROCESS FLOW
	PNEUMATIC INSTRUMENT AIR
	ANALOG ELECTRIC SIGNAL
	DISCRETE ELECTRIC SIGNAL
	CAPILLARY TUBE
	SONIC SIGNAL (UNGUIDED)
	SOFTWARE OR DATA LINK
	MECHANICAL LINK
	HYDRAULIC
120V	POWER SUPPLY
SA	SERVICE AIR AUPPLY

FLOW PRIMARY ELEMENT SYMBOLS

	ORIFICE PLATE
	SINGLE PORT PITOT TUBE OR PITOT-VENTURI TUBE
	AVERAGING PITOT TUBE
T	THERMAL MASS FLOWMETER
M	MAGNETIC FLOWMETER
	TURBINE OR PROPELLER-TYPE PRIMARY ELEMENT
	ROTOMETER
	POSITIVE DISPLACEMENT TYPE FLOW TOTALIZING INDICATOR
	VORTEX SENSOR
	TARGET TYPE SENSOR
	VENTURI TUBE
	SONIC FLOWMETER
D	DENSITY METER

GENERAL NOTES:

NOTE 1: CONTROL FAIL ALARM. FOR TROUBLESHOOTING, CHECK FIELD SWITCHES, MCC, PROTECTION MODULE, LOCAL CP AND/OR WIRES.

NOTE 2: SEE RECOMMENDED MOTOR CONTROL SCHEMATIC FOR DETAIL.

NOTE 3: STANDARD BRAY MODEL IS ASSUMED FOR ALL MODULATING AND ON/OFF VALVES EXCEPT FOR DEGAS VALVES. MODIFY BASED ON FINAL SELECTION.

NOTE 4: APPLY TRANSPARENT PIPE WITH 3" MIN. ON EACH PERMEATE PIPE BRANCH FOR GRAVITY FILTRATION WITH SUBMERGED PIPING.

DRAFT

For Earth, For Life
Kubota

KUBOTA Membrane USA Cooporation
11807 North Creek Parkway S. Suite B109
Bothell, WA 98011 USA
Tel; +1 425 898 2853

REVISIONS			
REV	DESCRIPTION	DATE	APPROVED

DRAWN	ART	DATE	05/06/25
CHECKED	–	DATE	–
APPROVED	–	DATE	–
APPROVED	–	DATE	–

SAN LUIS WEST AZ WWTP
SAN LUIS, AZ
SYMBOLS & LEGEND

SIZE	CONTRACT NO.	DRAWING NO.	REV.
D	–	SNL-I-02	A

SCALE	SHEET NO.
N/A	2-of-27

VALVE SYMBOLS

NORMALLY OPEN	NORMALLY CLOSED	3-WAY	
			GATE VALVE
			GLOBE VALVE
X" BV-XX	X" BV-XX	X" BV-XX	BALL VALVE
X" PV-XX	X" PV-XX		PLUG VALVE
	BF-XX		BUTTERFLY VALVE
			DIAPHRAGM VALVE
	X" CV-XX		CHECK VALVE
	NV-XX		NEEDLE VALVE
			KNIFE GATE VALVE
			PRESSURE RELIEF VALVE
	PG		PRESSURE REDUCING REGULATING VALVE. SELF-CONTAINED
	X" V-XX		BACK PRESSURE REGULATING VALVE. SELF-CONTAINED

VALVE OPERATOR SYMBOLS

	DIAPHRAGM, SPRING
	DIAPHRAGM, PRESSURE BALANCED
	HANDWHEEL
M	MOTOR
	CYLINDER
S	SOLENOID

MECHANICAL EQUIPMENT & PIPING SYMBOLS

	SUBMERSIBLE PUMP		INLET FILTER		WEIR		INJECTOR		FLOW DIRECTION ARROW				
	SUBMERSIBLE PUMP WITH GUIDE RAIL		INLET SILENCER / FILTER		SLIDE GATE		FLEXIBLE HOSE		LINE CROSS PRIMARY PROCESS				
	DRY SUMP PUMP		AIR COMPRESSOR		WALL MOUNT MIXER		TANK VENT		LINE CROSS SECONDARY PROCESS				
	CENTRIFUGAL PUMP		BUBBLE TRAP		MIXER		DRAIN	BY OTHERS / BY KMU	SCOPE OR SPEC BREAK				
	METERING PUMP		CHEMICAL STORAGE TOTE		INVENT MIXER		PIPE UNION		55 GALLON DRUM				
	ROTARY LOBE PUMP		CHEMICAL STORAGE TANK		TELESCOPING VALVE		FLANGE		SILENCER				
	DIAPHRAGM PUMP		ROTARY SIEVE DRUM SCREEN		ELECTRIC MOTOR		BLIND FLANGE						
	PARISTALTIC PUMP		ROTARY DRUM SCREEN		SAFETY SHOWER		REDUCER						
	POSITIVE DISPLACEMENT PUMP		WASHER CONVEYOR		ROLLER BIN		Y-STRAINER						
	PROGRESSIVE CAVITY PUMP		SMU SINGLE WITH CA		HOSE CONNECTION		PIPE CAP OR PLUG						
	AIR LIFT PUMP		SMU SINGLE 2 MNFD		RUPTURE DISK		PIPE WELD CAP						
	CENTRIFUGAL BLOWER		SMU DOUBLE WITH CA		DIAPHRAGM SEAL		PIPE EXPANSION JOINT						
	ROTARY BLOWER		SMU SINGLE WITHOUT CA		FLOW STRAIGHTENING VANE								
	ROTARY SCREW BLOWER		SMU DOUBLE WITHOUT CA		INLINE MIXER								

DRAFT

For Earth, For Life
Kubota
KUBOTA Membrane USA Cooporation
11807 North Creek Parkway S. Suite B109
Bothell, WA 98011 USA
Tel: +1 425 898 2853

REVISIONS			
REV	DESCRIPTION	DATE	APPROVED

DRAWN	ART	DATE	05/06/25
CHECKED	–	DATE	–
APPROVED	–	DATE	–
APPROVED	–	DATE	–

SAN LUIS WEST AZ WWTP
SAN LUIS, AZ
SYMBOLS & LEGEND

SIZE	CONTRACT NO.	DRAWING NO.	REV.
D	–	SNL-I-03	A

SCALE	SHEET NO.
N/A	3-of-27

C PLANT SCADA

K MBR OIT

K MBR PLC

C MCC/MCP

C PLANT SCADA
K MBR OIT
K MBR PLC
C MCC/MCP

K1 RAS FROM MB-01, MB-02, MB-03 SHT 13, 14, 15

INFLUENT FROM FINE SCREENS

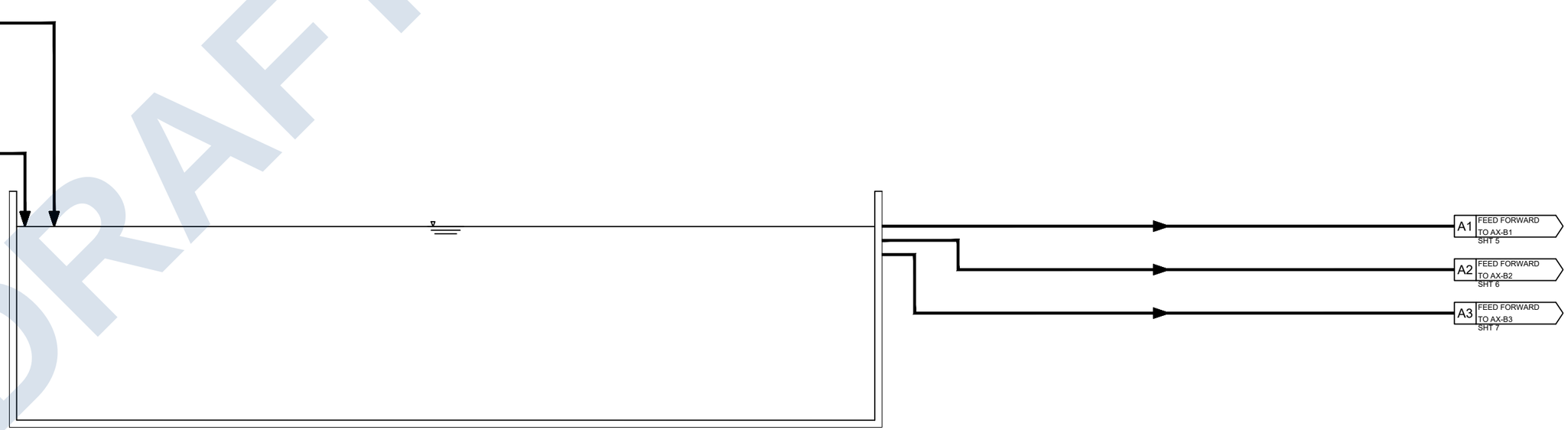

RC-01
INFLUENT/RAS CHANNEL

DRAFT

K PROVIDED BY KUBOTA
C PROVIDED BY OTHERS/CONTRACTOR

For Earth, For Life
Kubota
KUBOTA Membrane USA Cooporation
11807 North Creek Parkway S. Suite B109
Bothell, WA 98011 USA
Tel; +1 425 898 2853

REVISIONS			
REV	DESCRIPTION	DATE	APPROVED

DRAWN	DATE	SAN LUIS WEST AZ WWTP SAN LUIS, AZ INFLUENT RETURN CHANNEL	
ART	05/06/25		
CHECKED	DATE		
–	–		
APPROVED	DATE	SIZE D / CONTRACT NO. – / DRAWING NO. SNL-I-04 / REV. A	
–	–		
APPROVED	DATE	SCALE N/A / SHEET NO. 4-of-27	
–	–		

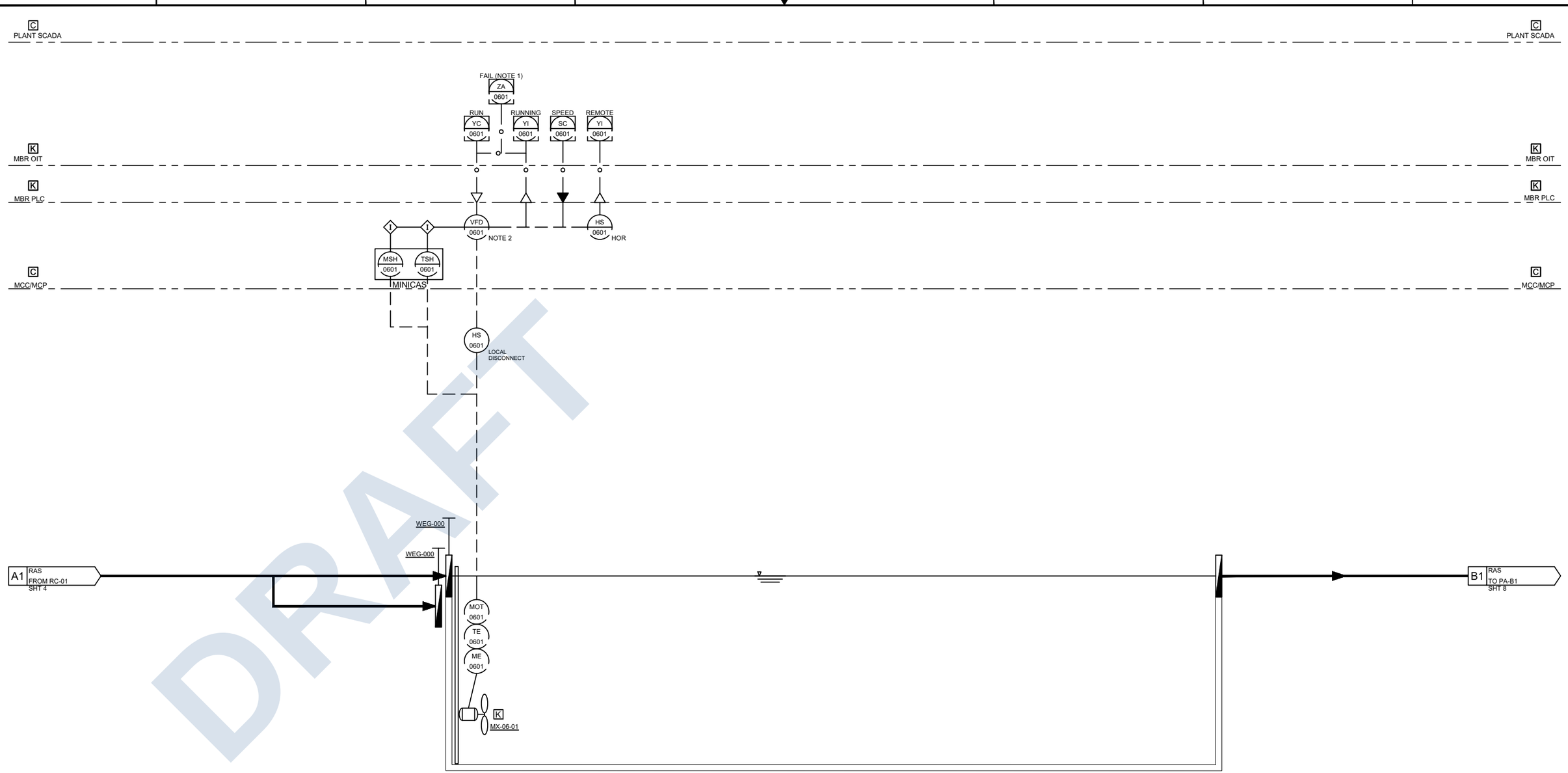

DRAFT

K PROVIDED BY KUBOTA
C PROVIDED BY OTHERS/CONTRACTOR

For Earth, For Life
Kubota
KUBOTA Membrane USA Cooporation
11807 North Creek Parkway S. Suite B109
Bothell, WA 98011 USA
Tel: +1 425 898 2853

REVISIONS			
REV	DESCRIPTION	DATE	APPROVED

DRAWN	ART	DATE	05/06/25
CHECKED	–	DATE	–
APPROVED	–	DATE	–
APPROVED	–	DATE	–

SAN LUIS WEST AZ WWTP
SAN LUIS, AZ
ANOXIC BASIN B1

SIZE	CONTRACT NO.	DRAWING NO.	REV.
D	–	SNL–I–05	A

SCALE N/A
SHEET NO. 5–of–27

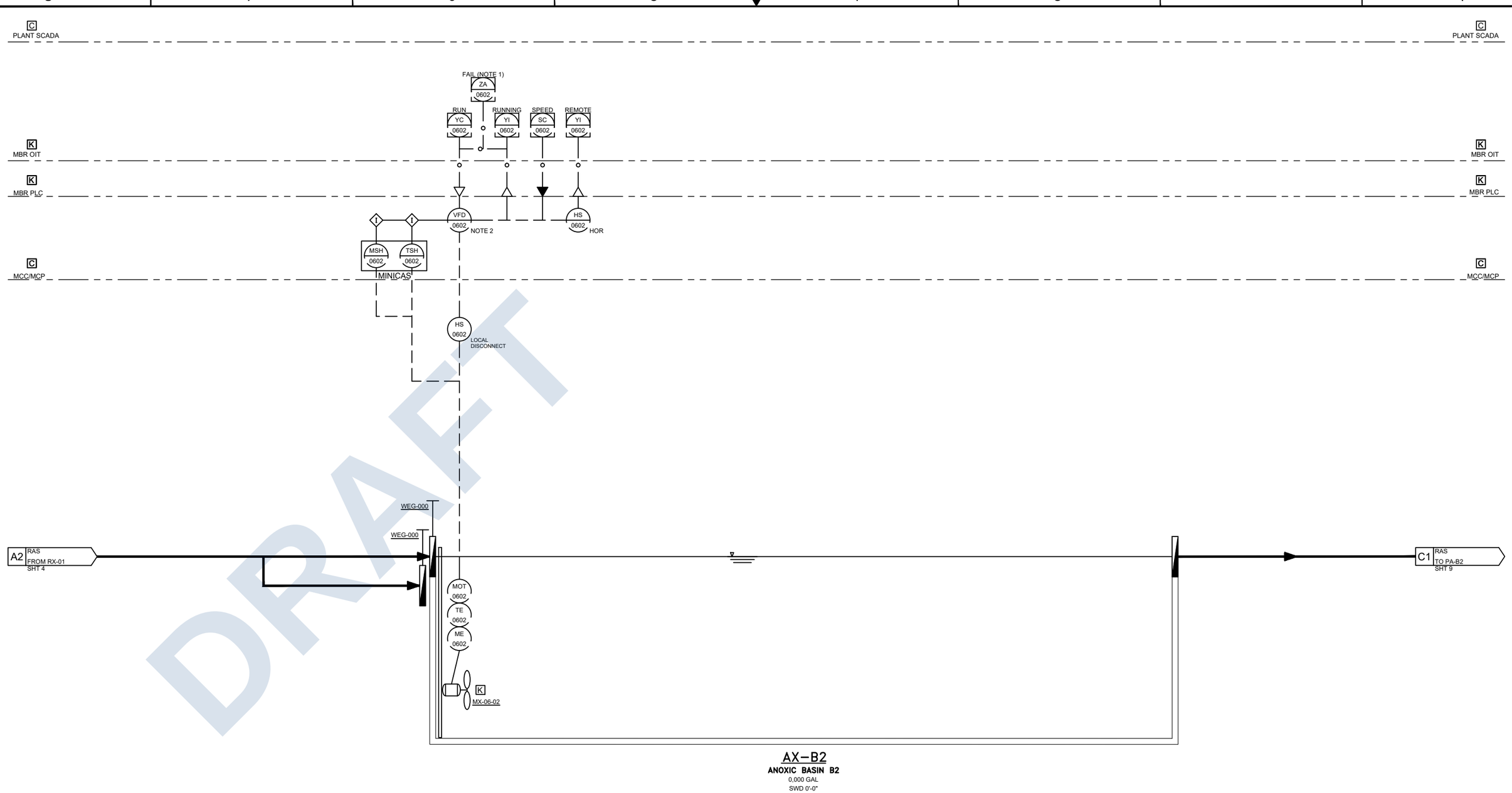

DRAFT

K PROVIDED BY KUBOTA
C PROVIDED BY OTHERS/CONTRACTOR

For Earth, For Life
Kubota
KUBOTA Membrane USA Cooporation
11807 North Creek Parkway S. Suite B109
Bothell, WA 98011 USA
Tel: +1 425 898 2853

REVISIONS			
REV	DESCRIPTION	DATE	APPROVED

DRAWN	DATE	SAN LUIS WEST AZ WWTP SAN LUIS, AZ ANOXIC BASIN B2	
ART	05/06/25		
CHECKED	DATE		
–	–		
APPROVED	DATE	SIZE: D	CONTRACT NO.: –
–	–	DRAWING NO.: SNL–I–06	REV.: A
APPROVED	DATE	SCALE: N/A	SHEET NO.: 6–of–27
–	–		

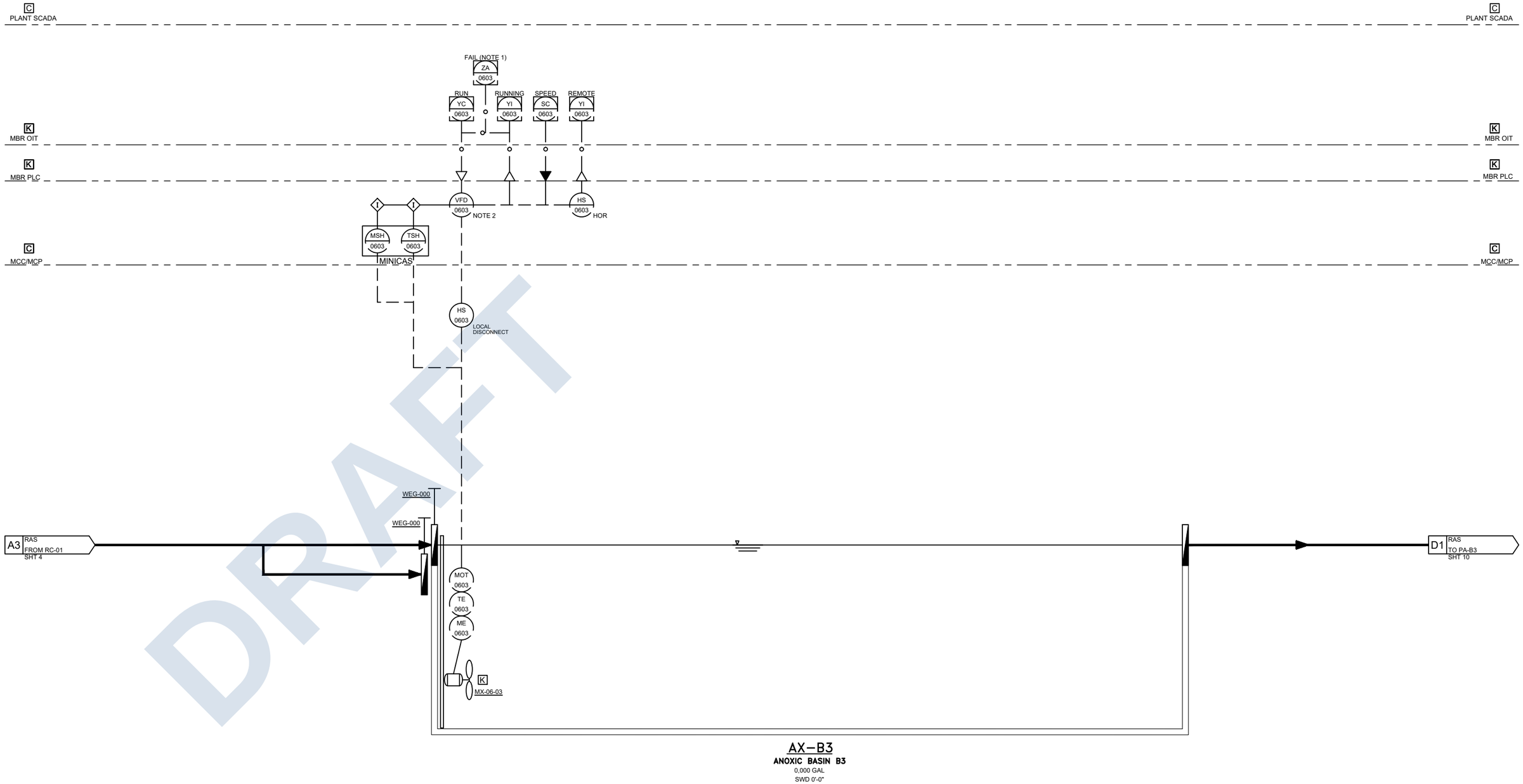

DRAFT

K PROVIDED BY KUBOTA

C PROVIDED BY OTHERS/CONTRACTOR

For Earth, For Life
Kubota

KUBOTA Membrane USA Cooporation
11807 North Creek Parkway S. Suite B109
Bothell, WA 98011 USA
Tel: +1 425 898 2853

REVISIONS			
REV	DESCRIPTION	DATE	APPROVED

DRAWN	DATE		
ART	05/06/25		
CHECKED	DATE		
–	–		
APPROVED	DATE		
–	–		
APPROVED	DATE		
–	–		

SAN LUIS WEST AZ WWTP
SAN LUIS, AZ
ANOXIC BASIN B3

SIZE	CONTRACT NO.	DRAWING NO.	REV.
D	–	SNL–I–07	A

SCALE	SHEET NO.
N/A	7–of–27

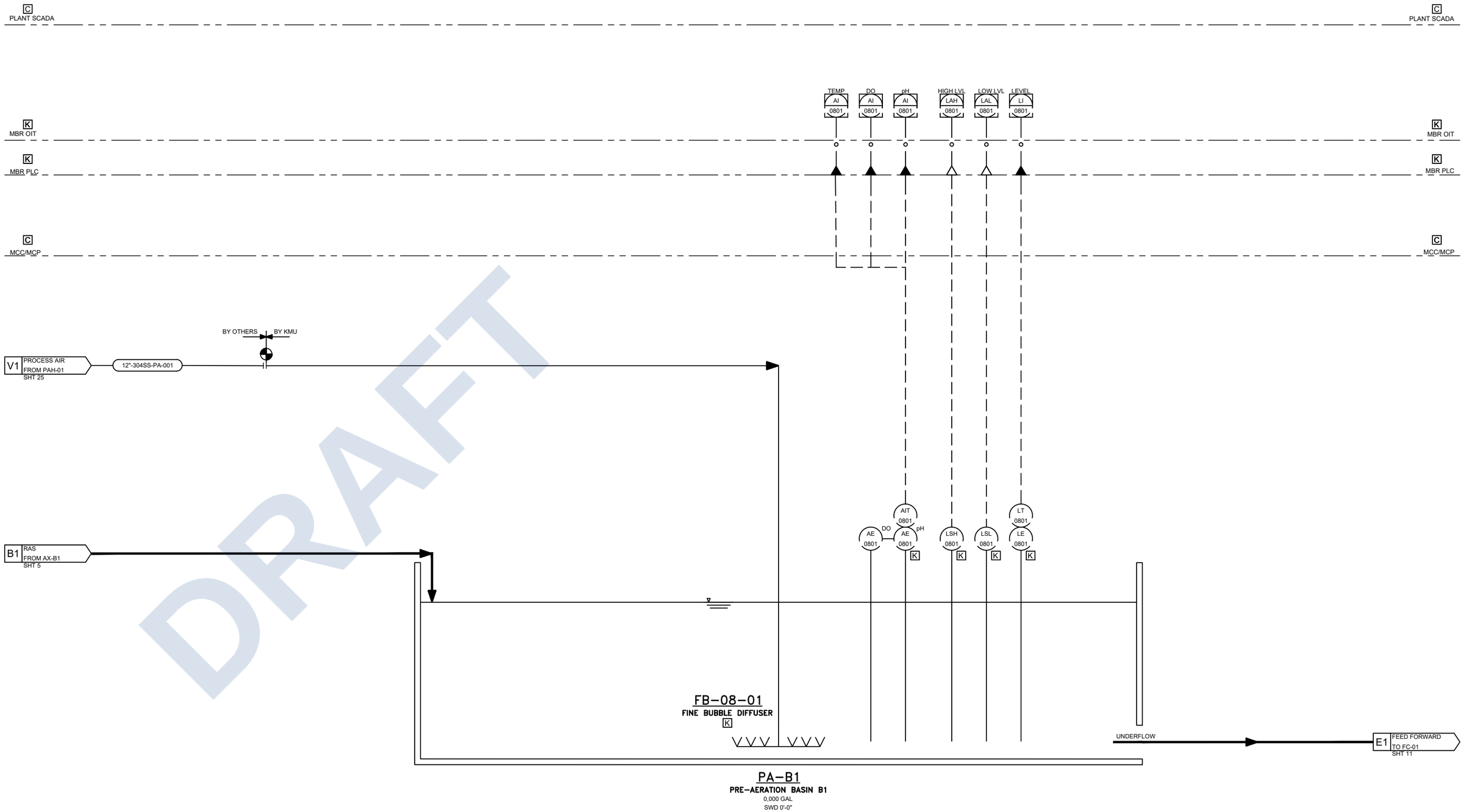

DRAFT

K PROVIDED BY KUBOTA
C PROVIDED BY OTHERS/CONTRACTOR

For Earth, For Life
Kubota

KUBOTA Membrane USA Cooporation
11807 North Creek Parkway S. Suite B109
Bothell, WA 98011 USA
Tel; +1 425 898 2853

REVISIONS			
REV	DESCRIPTION	DATE	APPROVED

DRAWN	ART	DATE	05/06/25
CHECKED	–	DATE	–
APPROVED	–	DATE	–
APPROVED	–	DATE	–

SAN LUIS WEST AZ WWTP
SAN LUIS, AZ
PRE-AERATION BASIN B1

SIZE	CONTRACT NO.	DRAWING NO.	REV.
D	–	SNL-I-08	A

SCALE	SHEET NO.
N/A	8-of-27

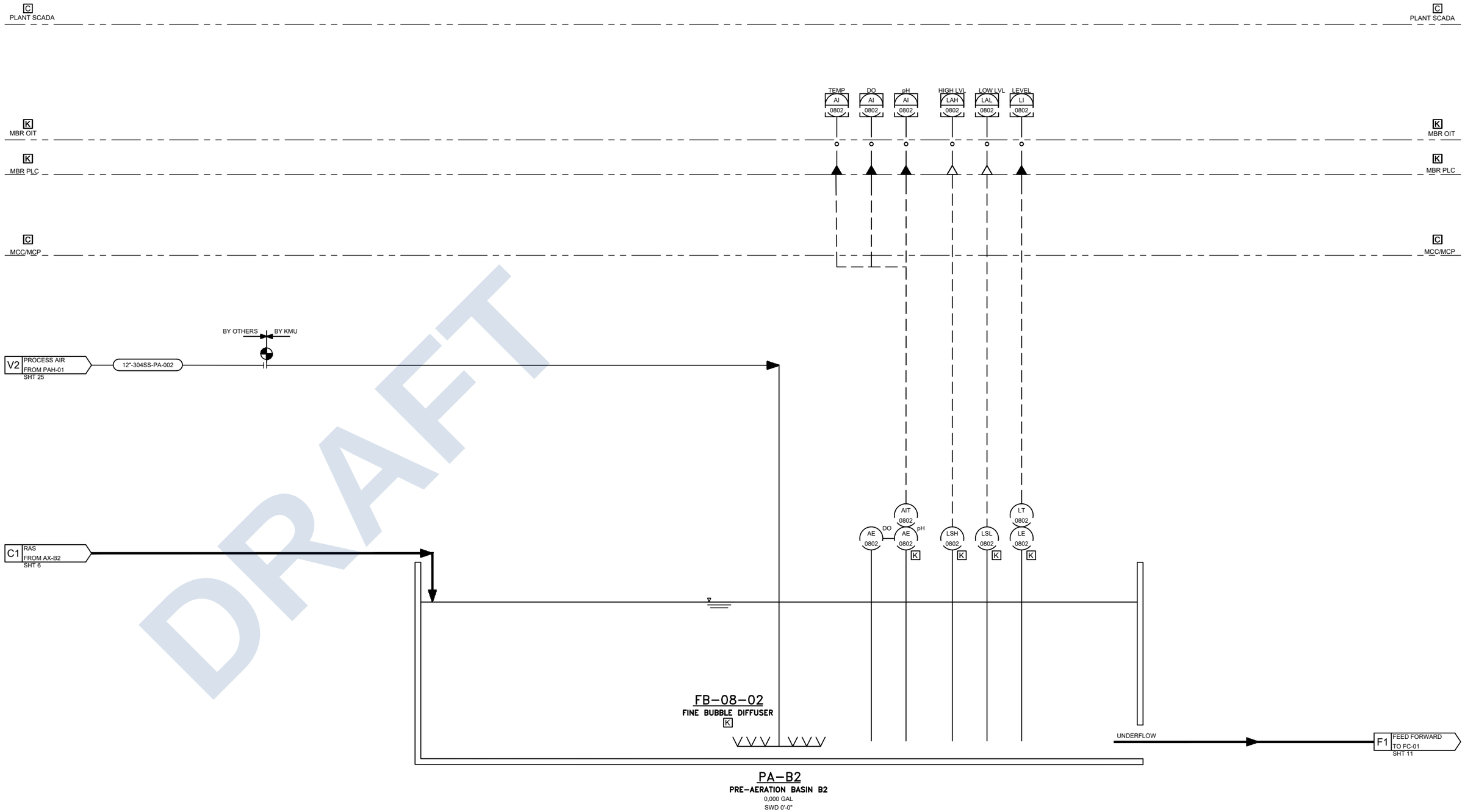

DRAFT

K PROVIDED BY KUBOTA
C PROVIDED BY OTHERS/CONTRACTOR

For Earth, For Life
Kubota

KUBOTA Membrane USA Cooporation
11807 North Creek Parkway S. Suite B109
Bothell, WA 98011 USA
Tel; +1 425 898 2853

REVISIONS			
REV	DESCRIPTION	DATE	APPROVED

DRAWN ART	DATE 05/06/25	SAN LUIS WEST AZ WWTP SAN LUIS, AZ PRE-AERATION BASIN B2	
CHECKED –	DATE –		
APPROVED –	DATE –	SIZE D	CONTRACT NO. –
APPROVED –	DATE –	DRAWING NO. SNL-I-09	REV. A
		SCALE N/A	SHEET NO. 9-of-27

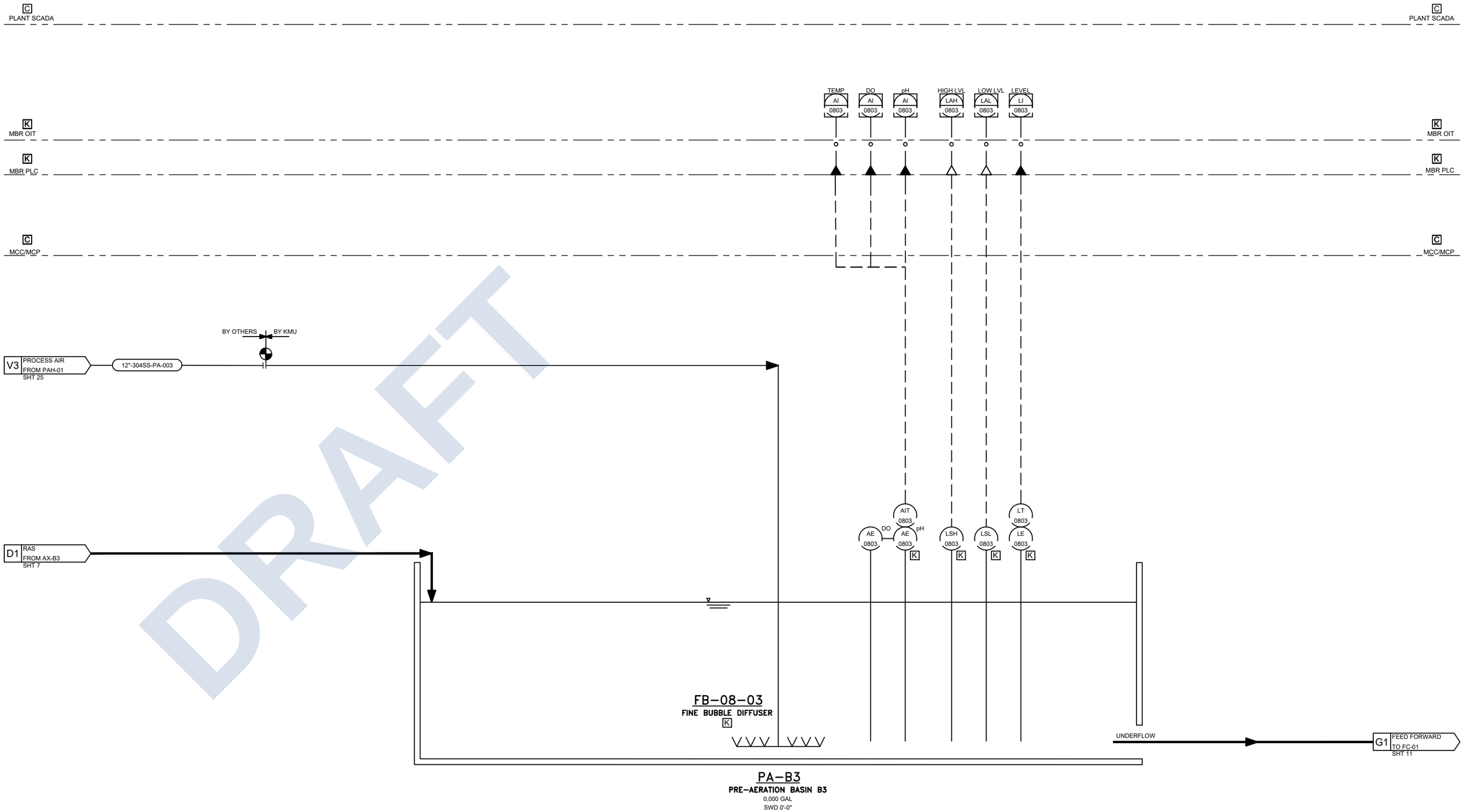

DRAFT

K PROVIDED BY KUBOTA
C PROVIDED BY OTHERS/CONTRACTOR

For Earth, For Life
Kubota

KUBOTA Membrane USA Cooporation
11807 North Creek Parkway S. Suite B109
Bothell, WA 98011 USA
Tel; +1 425 898 2853

REVISIONS			
REV	DESCRIPTION	DATE	APPROVED

DRAWN ART	DATE 05/06/25		
CHECKED –	DATE –		
APPROVED –	DATE –		
APPROVED –	DATE –		

SAN LUIS WEST AZ WWTP
SAN LUIS, AZ
PRE-AERATION BASIN B3

SIZE	CONTRACT NO.	DRAWING NO.	REV.
D	–	SNL-I-10	A

SCALE	SHEET NO.
N/A	10-of-27

C PLANT SCADA

K MBR OIT

K MBR PLC

C MCC/MCP

DRAFT

level transmitter (3) included in scope of supply

E1 ML FROM PA-B1 SHT 8

F1 ML FROM PA-B2 SHT 9

G1 ML FROM PA-B3 SHT 10

6"-DI-WAS-001

H2 WAS TO WAS PUMPS SHT 22

H1 FEED FORWARD TO WW-01 SHT 12

FC-01
ML FEED CHANNEL

K PROVIDED BY KUBOTA

C PROVIDED BY OTHERS/CONTRACTOR

For Earth, For Life
Kubota

KUBOTA Membrane USA Cooporation
11807 North Creek Parkway S. Suite B109
Bothell, WA 98011 USA
Tel: +1 425 898 2853

REVISIONS			
REV	DESCRIPTION	DATE	APPROVED

DRAWN	ART	DATE	05/06/25
CHECKED	–	DATE	–
APPROVED	–	DATE	–
APPROVED	–	DATE	–

SAN LUIS WEST AZ WWTP
SAN LUIS, AZ
ML FEED CHANNEL

SIZE	CONTRACT NO.	DRAWING NO.	REV.
D	–	SNL-I-11	A

SCALE	SHEET NO.
N/A	11-of-27

C PLANT SCADA

K MBR OIT

K MBR PLC

C MCC/MCP

TYP. 3

FAIL (NOTE 1) ZA 0101

RUN YC 0101

RUNNING YI 0101

SPEED SC 0101

REMOTE YI 0101

VFD 0101 NOTE 2

HS 0101 HOR

MSH 0101

TSH 0101

MINICAS

HS 0101 LOCAL DISCONNECT

level switch (6) included in scope of supply

MOT 0101

TE 0101

ME 0101

42"-DI-RAS-XXX

24"-DI-RAS-001 J1 RAS TO MB-01 SHT 13

24"-DI-RAS-002 J2 RAS TO MB-02 SHT 14

24"-DI-RAS-003 J3 RAS TO MB-03 SHT 15

24"-DI-RAS-004 J4 RAS TO MB-04 SHT 16

24"-DI-RAS-005 J5 RAS TO MB-05 SHT 17

24"-DI-RAS-006 J6 RAS TO MB-06 SHT 18

H1 RAS FROM FC-01 SHT 11

WW-01 FEED FORWARD WET WELL

P-01-01 FF COLUMN PUMP 01 (DUTY) 000 GPM

P-01-02 FF COLUMN PUMP 02 (DUTY) 000 GPM

P-01-03 FF COLUMN PUMP 03 (DUTY) 000 GPM

K PROVIDED BY KUBOTA

C PROVIDED BY OTHERS/CONTRACTOR

DRAFT

For Earth, For Life
Kubota

KUBOTA Membrane USA Cooporation
11807 North Creek Parkway S. Suite B109
Bothell, WA 98011 USA
Tel: +1 425 898 2853

REVISIONS			
REV	DESCRIPTION	DATE	APPROVED

DRAWN	ART	DATE	05/06/25
CHECKED	–	DATE	–
APPROVED	–	DATE	–
APPROVED	–	DATE	–

SAN LUIS WEST AZ WWTP
SAN LUIS, AZ
RAS WET WELL

SIZE	CONTRACT NO.	DRAWING NO.	REV.
D	–	SNL-I-12	A

SCALE	SHEET NO.
N/A	12-of-27

C PLANT SCADA

C MBR OIT

C MBR PLC

C MCC/MCP

FAIL (NOTE 1)
ZA 1001

OPEN/CLOSE ZC 1001

CLOSE ZIC 1001

OPEN ZIO 1001

ZSC 1001

ZSO 1001

XV 1001 K

MBR CP 120VAC

M NOTE 3

BV-10-01

W1 SCOUR AIR FROM SCH-01 SHT 26

10"-304SS-SCA-001

1"-PVC-DEGAS-001

16"-PVC-PRM-001

K1 PERMEATE TO COLLECTION 1 SHT 19

3" X 1"

K 3"

NOTE 4 (SHEET 2)

K2 RAS TO RC-01 SHT 4

J1 RAS FROM WW-01 SHT 12

24"-DI-RAS-XXX

24" PV-XX

X" PV-XX C

__"-PVC-WAS-XXX

K3 WAS TO WAS PUMPS SHT 22

MB-01
MBR BASIN 01
0,000 GAL
SWD 0'-0"

K PROVIDED BY KUBOTA

C PROVIDED BY OTHERS/CONTRACTOR

DRAFT

For Earth, For Life
Kubota
KUBOTA Membrane USA Cooporation
11807 North Creek Parkway S. Suite B109
Bothell, WA 98011 USA
Tel: +1 425 898 2853

REVISIONS			
REV	DESCRIPTION	DATE	APPROVED

DRAWN	ART	DATE	05/06/25
CHECKED	–	DATE	–
APPROVED	–	DATE	–
APPROVED	–	DATE	–

SAN LUIS WEST AZ WWTP
SAN LUIS, AZ
MBR BASIN 01

SIZE	CONTRACT NO.	DRAWING NO.	REV.
D	–	SNL-I-13	A

SCALE	SHEET NO.
N/A	13-of-27

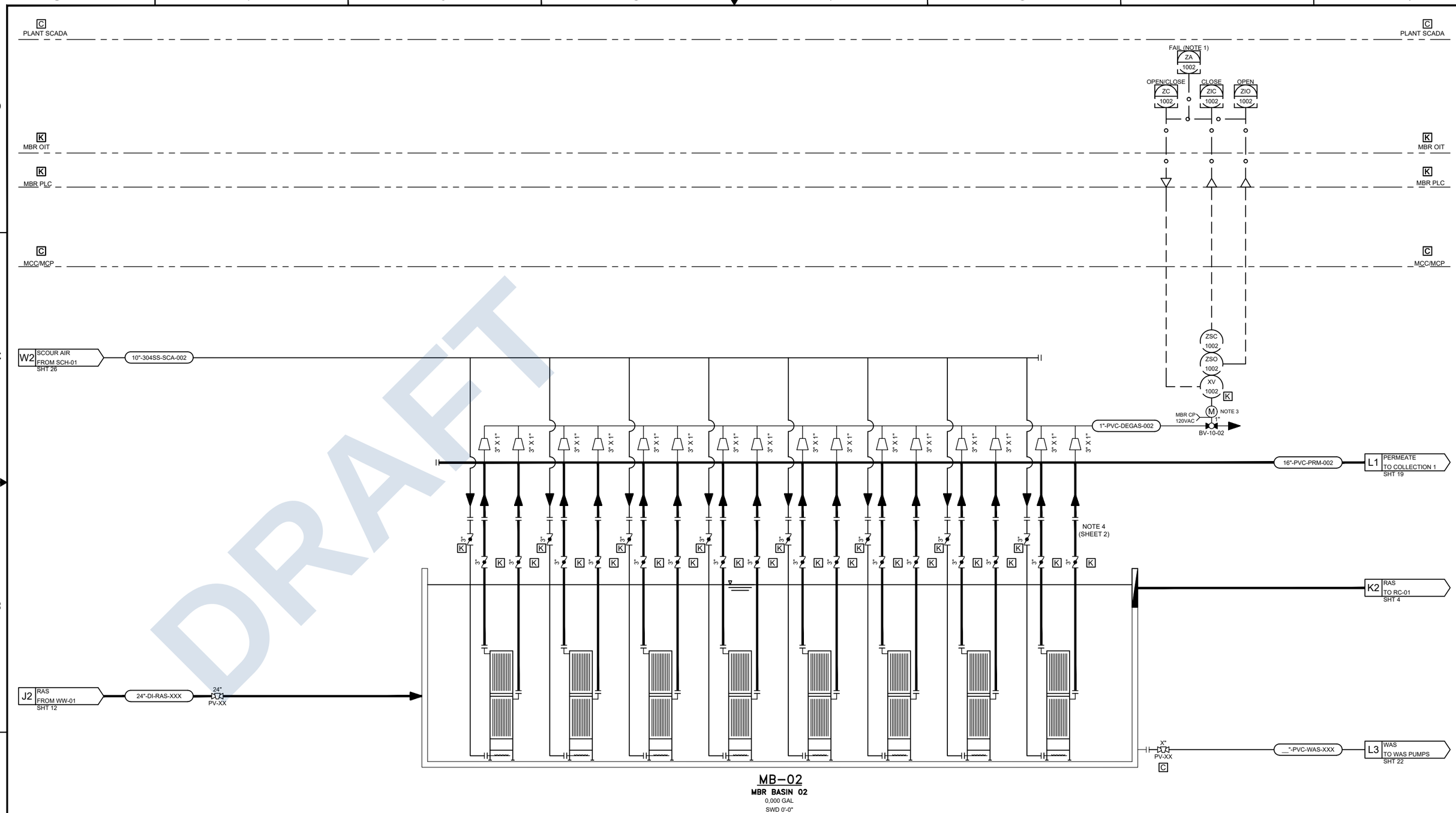

DRAFT

K PROVIDED BY KUBOTA
C PROVIDED BY OTHERS/CONTRACTOR

For Earth, For Life
Kubota

KUBOTA Membrane USA Cooporation
11807 North Creek Parkway S. Suite B109
Bothell, WA 98011 USA
Tel; +1 425 898 2853

REVISIONS			
REV	DESCRIPTION	DATE	APPROVED

DRAWN	ART	DATE	05/06/25
CHECKED	–	DATE	–
APPROVED	–	DATE	–
APPROVED	–	DATE	–

SAN LUIS WEST AZ WWTP
SAN LUIS, AZ
MBR BASIN 02

SIZE	CONTRACT NO.	DRAWING NO.	REV.
D	–	SNL-I-14	A

SCALE	SHEET NO.
N/A	14-of-27

C PLANT SCADA

C PLANT SCADA

K MBR OIT

K MBR OIT

K MBR PLC

K MBR PLC

C MCC/MCP

C MCC/MCP

FAIL (NOTE 1)
ZA
1003

OPEN/CLOSE
ZC
1003

CLOSE
ZIC
1003

OPEN
ZIO
1003

ZSC
1003

ZSO
1003

XV
1003
K

M
NOTE 3
MBR CP
120VAC
1"
BV-10-03

W3 SCOUR AIR
FROM SCH-01
SHT 26

10"-304SS-SCA-003

1"-PVC-DEGAS-003

16"-PVC-PRM-003

M1 PERMEATE
TO COLLECTION 1
SHT 19

3" X 1"

K 3"

NOTE 4
(SHEET 2)

K2 RAS
TO RC-01
SHT 4

J3 RAS
FROM WW-01
SHT 12

24"-DI-RAS-XXX

24"
PV-XX

X"
PV-XX
C

"-PVC-WAS-XXX

M3 WAS
TO WAS PUMPS
SHT 22

6"

MB–03
MBR BASIN 03
0,000 GAL
SWD 0'-0"

K PROVIDED BY KUBOTA

C PROVIDED BY OTHERS/CONTRACTOR

DRAFT

For Earth, For Life
Kubota

KUBOTA Membrane USA Cooporation
11807 North Creek Parkway S. Suite B109
Bothell, WA 98011 USA
Tel: +1 425 898 2853

REVISIONS			
REV	DESCRIPTION	DATE	APPROVED

DRAWN	ART	DATE	05/06/25
CHECKED	–	DATE	–
APPROVED	–	DATE	–
APPROVED	–	DATE	–

SAN LUIS WEST AZ WWTP
SAN LUIS, AZ
MBR BASIN 03

SIZE	CONTRACT NO.	DRAWING NO.	REV.
D	–	SNL–I–15	A

SCALE N/A

SHEET NO. 15–of–27

C PLANT SCADA

K MBR OIT

K MBR PLC

C MCC/MCP

FAIL (NOTE 1)
ZA 0000

OPEN/CLOSE ZC 0000

CLOSE ZIC 0000

OPEN ZIO 0000

ZSC 0000

ZSO 0000

XV 0000

MBR CP 120VAC

M NOTE 3

BV-XX

SCOUR AIR FROM FUTURE SCA BLOWERS

10"-304SS-SCA-004

1"-PVC-DEGAS-004

16"-PVC-PRM-004

N1 PERMEATE TO COLLECTION 2 SHT 20

3" X 1"

NOTE 4 (SHEET 2)

J4 RAS FROM WW-01 SHT 12

24"-DI-RAS-XXX

24" PV-XX

RAS TO RETURN CHANNEL

X" PV-XX

__"-PVC-WAS-XXX

N2 WAS TO WAS PUMPS SHT 22

MB-04

MBR BASIN 04 (FUTURE)

0,000 GAL

SWD 0'-0"

DRAFT

K PROVIDED BY KUBOTA

C PROVIDED BY OTHERS/CONTRACTOR

For Earth, For Life
Kubota

KUBOTA Membrane USA Cooporation
11807 North Creek Parkway S. Suite B109
Bothell, WA 98011 USA
Tel: +1 425 898 2853

REVISIONS			
REV	DESCRIPTION	DATE	APPROVED

DRAWN	ART	DATE	05/06/25
CHECKED	–	DATE	–
APPROVED	–	DATE	–
APPROVED	–	DATE	–

SAN LUIS WEST AZ WWTP
SAN LUIS, AZ
MBR BASIN 04 (FUTURE)

SIZE	CONTRACT NO.	DRAWING NO.	REV.
D	–	SNL-I-16	A

SCALE	SHEET NO.
N/A	16-of-27

C PLANT SCADA

K MBR OIT

K MBR PLC

C MCC/MCP

FAIL (NOTE 1)
ZA 0000

OPEN/CLOSE ZC 0000

CLOSE ZIC 0000

OPEN ZIO 0000

ZSC 0000

ZSO 0000

XV 0000 K

MBR CP 120VAC

M NOTE 3

1" BV-XX

SCOUR AIR FROM FUTURE SCA BLOWERS

10"-304SS-SCA-005

1"-PVC-DEGAS-005

3" X 1"

16"-PVC-PRM-005

P1 PERMEATE TO COLLECTION 2 SHT 20

NOTE 4 (SHEET 2)

J4 RAS FROM WW-01 SHT 12

24"-DI-RAS-XXX

24" PV-XX

RAS TO RETURN CHANNEL

X" PV-XX C

"-PVC-WAS-XXX

P2 WAS TO WAS PUMPS SHT 22

MB–05

MBR BASIN 05 (FUTURE)

0,000 GAL

SWD 0'-0"

K PROVIDED BY KUBOTA

C PROVIDED BY OTHERS/CONTRACTOR

DRAFT

For Earth, For Life
Kubota

KUBOTA Membrane USA Cooporation
11807 North Creek Parkway S. Suite B109
Bothell, WA 98011 USA
Tel: +1 425 898 2853

REVISIONS			
REV	DESCRIPTION	DATE	APPROVED

DRAWN	ART	DATE	05/06/25
CHECKED	–	DATE	–
APPROVED	–	DATE	–
APPROVED	–	DATE	–

SAN LUIS WEST AZ WWTP
SAN LUIS, AZ
MBR BASIN 05 (FUTURE)

SIZE	CONTRACT NO.	DRAWING NO.	REV.
D	–	SNL–I–17	A

SCALE	SHEET NO.
N/A	17–of–27

C PLANT SCADA

K MBR OIT

K MBR PLC

C MCC/MCP

FAIL (NOTE 1)
ZA
0000

OPEN/CLOSE
ZC
0000

CLOSE
ZIC
0000

OPEN
ZIO
0000

ZSC
0000

ZSO
0000

XV
0000
K

MBR CP
120VAC

M
NOTE 3

1"
BV-XX

SCOUR AIR FROM
FUTURE SCA BLOWERS

10"-304SS-SCA-006

1"-PVC-DEGAS-006

16"-PVC-PRM-006

Q1
PERMEATE
TO COLLECTION 2
SHT 20

3" X 1"

NOTE 4
(SHEET 2)

J4
RAS
FROM WW-01
SHT 12

24"-DI-RAS-XXX

24"
PV-XX

RAS TO
RETURN CHANNEL

X"
PV-XX
C

__"-PVC-WAS-XXX

Q2
WAS
TO WAS PUMPS
SHT 22

MB-06
MBR BASIN 06 (FUTURE)
0,000 GAL
SWD 0'-0"

WAS flow meter

K PROVIDED BY KUBOTA

C PROVIDED BY OTHERS/CONTRACTOR

DRAFT

For Earth, For Life
Kubota

KUBOTA Membrane USA Cooporation
11807 North Creek Parkway S. Suite B109
Bothell, WA 98011 USA
Tel: +1 425 898 2853

REVISIONS			
REV	DESCRIPTION	DATE	APPROVED

DRAWN	ART	DATE	05/06/25
CHECKED	–	DATE	–
APPROVED	–	DATE	–
APPROVED	–	DATE	–

SAN LUIS WEST AZ WWTP
SAN LUIS, AZ
MBR BASIN 06 (FUTURE)

SIZE	CONTRACT NO.	DRAWING NO.	REV.
D	–	SNL-I-18	A

SCALE	SHEET NO.
N/A	18-of-27

C PLANT SCADA

C PLANT SCADA

TYP. 4

TYP. 4

TYP. 4

TYP. 3

HIGH TMP PAH 1301

HIGH CIP PAH 1301

TMP/CIP PI 1301

FLOW FQI 1301

FAIL (NOTE 1) ZA 1301

OPEN/CLOSE ZC 1301

CLOSE ZIC 1301

OPEN ZIO 1301

RUN YC 1301

TURBIDITY AI 1301

TURBIDITY HIGH AAH 1301

K MBR OIT

K MBR OIT

K MBR PLC

K MBR PLC

C MCC/MCP

C MCC/MCP

PT 1301 K

FIT 1301 K

ZSC 1301

ZSO 1301

XV 1301 K

MBR CP 120VAC

M NOTE 3

FCV-13-01 K

120V

AE 1301 K

AIT 1301 K

DR

K1 PERMEATE FROM MB-01 SHT 13

16"-PVC-PRM-001

16" X 12"

12" K

1/2" K K

12" M 12"

12" C

12"-PVC-PRM-007

R1 PERMEATE TO COLLECTION HDR SHT 21

4" C

CIP DRAIN

PT 1302 K

FIT 1302 K

ZSC 1302

ZSO 1302

XV 1302 K

MBR CP 120VAC

M NOTE 3

FCV-13-02 K

AE 1302 K

AIT 1302 K

DR

L1 PERMEATE FROM MB-02 SHT 14

16"-PVC-PRM-002

12"-PVC-PRM-008

R2 PERMEATE TO COLLECTION HDR SHT 21

CIP DRAIN

PT 1303 K

FIT 1303 K

ZSC 1303

ZSO 1303

XV 1303 K

MBR CP 120VAC

M NOTE 3

FCV-13-03 K

AE 1303 K

AIT 1303 K

DR

M1 PERMEATE FROM MB-03 SHT 15

16"-PVC-PRM-003

12"-PVC-PRM-009

R3 PERMEATE TO COLLECTION HDR SHT 21

CIP DRAIN

4" C 4" C 4" C

Y1 CIP FROM CIP SYSTEM SHT 27

4"-PVC-CIP-001

6"

6"

DRAFT

K PROVIDED BY KUBOTA

C PROVIDED BY OTHERS/CONTRACTOR

For Earth, For Life
Kubota

KUBOTA Membrane USA Cooporation
11807 North Creek Parkway S. Suite B109
Bothell, WA 98011 USA
Tel: +1 425 898 2853

REVISIONS			
REV	DESCRIPTION	DATE	APPROVED

DRAWN	DATE		
ART	05/06/25		
CHECKED	DATE		
–	–		
APPROVED	DATE		
–	–		
APPROVED	DATE		
–	–		

SAN LUIS WEST AZ WWTP
SAN LUIS, AZ
PERMEATE COLLECTION 1

SIZE	CONTRACT NO.	DRAWING NO.	REV.
D	–	SNL-I-19	A

SCALE	SHEET NO.
N/A	19-of-27

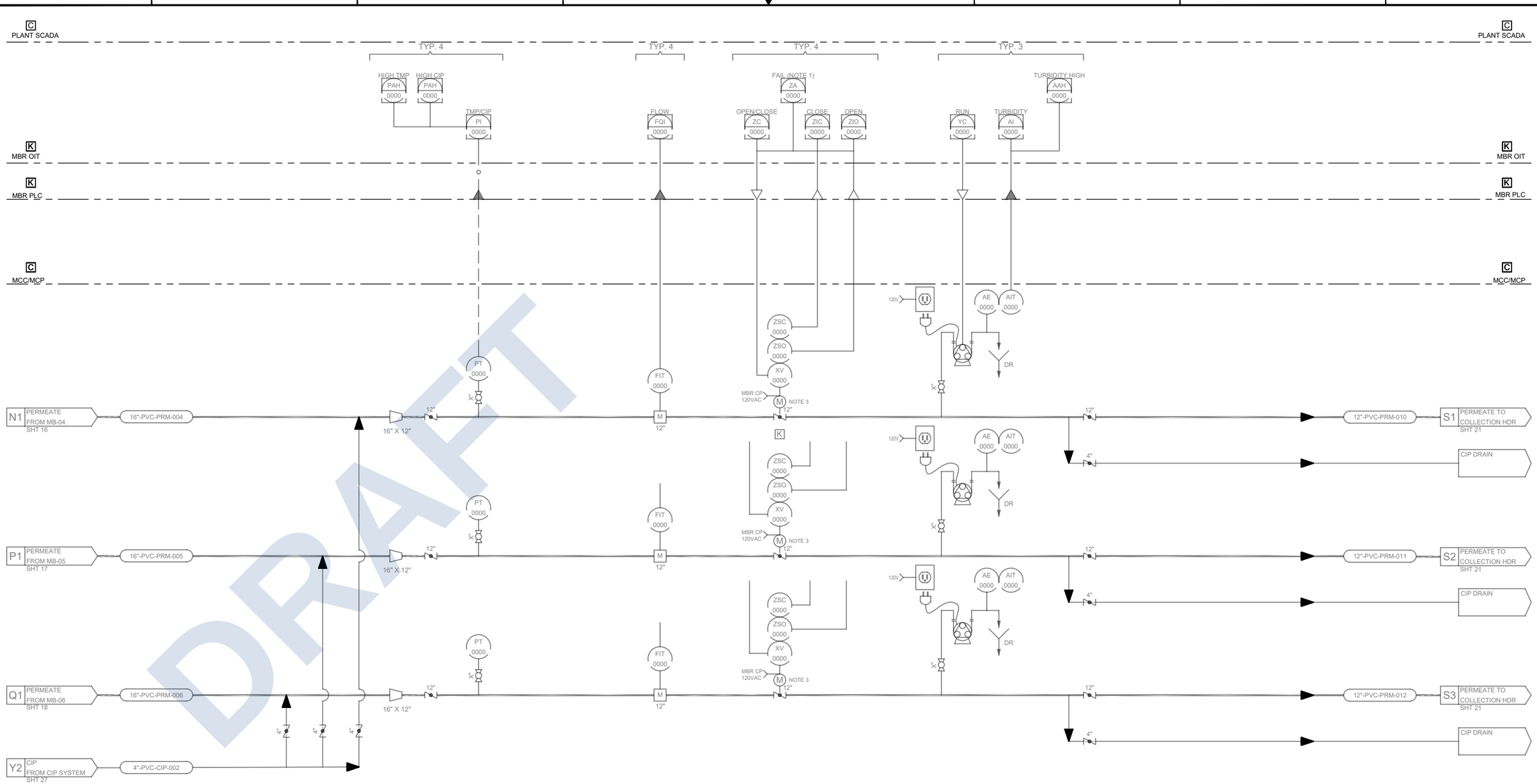

K PROVIDED BY KUBOTA

C PROVIDED BY OTHERS/CONTRACTOR

For Earth, For Life
Kubota

KUBOTA Membrane USA Cooporation
11807 North Creek Parkway S. Suite B109
Bothell, WA 98011 USA
Tel; +1 425 898 2853

REVISIONS			
REV	DESCRIPTION	DATE	APPROVED

DRAWN	ART	DATE	05/06/25
CHECKED	–	DATE	–
APPROVED	–	DATE	–
APPROVED	–	DATE	–

SAN LUIS WEST AZ WWTP
SAN LUIS, AZ
FUTURE PERMEATE COLLECTION 2

SIZE	CONTRACT NO.	DRAWING NO.	REV.
D	–	SNL-I-20	A

SCALE	SHEET NO.
N/A	20-of-27

C PLANT SCADA

C PLANT SCADA

K MBR OIT

K MBR OIT

K MBR PLC

K MBR PLC

C MCC/MCP

C MCC/MCP

R1 PERMEATE FROM COLLECTION 1 SHT 19 — 12"-PVC-PRM-007

R2 PERMEATE FROM COLLECTION 1 SHT 19 — 12"-PVC-PRM-008

R3 PERMEATE FROM COLLECTION 1 SHT 19 — 12"-PVC-PRM-009

S1 PERMEATE FROM COLLECTION 2 SHT 20 — 12"-PVC-PRM-010

S2 PERMEATE FROM COLLECTION 2 SHT 20 — 12"-PVC-PRM-011

S3 PERMEATE FROM COLLECTION 2 SHT 20 — 12"-PVC-PRM-012

12"-PVC-PRM-007 + 12"-PVC-PRM-008 + 12"-PVC-PRM-009 + 12"-PVC-PRM-010 + 12"-PVC-PRM-011 + 12"-PVC-PRM-012 → 24"-PVC-PRM-001 → PERMEATE TO DISCHARGE

DRAFT

K PROVIDED BY KUBOTA

C PROVIDED BY OTHERS/CONTRACTOR

For Earth, For Life
Kubota

KUBOTA Membrane USA Cooporation
11807 North Creek Parkway S. Suite B109
Bothell, WA 98011 USA
Tel; +1 425 898 2853

REVISIONS			
REV	DESCRIPTION	DATE	APPROVED

DRAWN	DATE		
ART	05/06/25		
CHECKED	DATE		
–	–		
APPROVED	DATE		
–	–		
APPROVED	DATE		
–	–		

SAN LUIS WEST AZ WWTP
SAN LUIS, AZ
PERMEATE COLLECTION HDR

SIZE	CONTRACT NO.	DRAWING NO.	REV.
D	–	SNL-I-21	A

SCALE	SHEET NO.
N/A	21–of–27

C PLANT SCADA

C PLANT SCADA

TYP. 3

FAIL (NOTE 1)
ZA 1701

RUN YC 1701

RUNNING YI 1701

SPEED SC 1701

REMOTE YI 1701

FLOW FQI 0000

K MBR OIT

K MBR OIT

K MBR PLC

K MBR PLC

VFD 1701

HS 1701 HOR

C MCC/MCP

C MCC/MCP

PG 1701

X"

4"-WAS-PRM-001

WAS TO

FIT 0000

M 4"

H2 WAS FROM FC-01 SHT 11

6"-DI-WAS-001

6"

PG 1702

P-17-01
WAS PUMP 01
(DUTY)
000 GPM

P-17-02
WAS PUMP 02
(STANDBY)
000 GPM

4"

keep in scope, move to sheet 18

remove from scope - See PACE P&ID

K PROVIDED BY KUBOTA

C PROVIDED BY OTHERS/CONTRACTOR

DRAFT

For Earth, For Life
Kubota
KUBOTA Membrane USA Cooporation
11807 North Creek Parkway S. Suite B109
Bothell, WA 98011 USA
Tel; +1 425 898 2853

REVISIONS			
REV	DESCRIPTION	DATE	APPROVED

DRAWN	ART	DATE	05/06/25
CHECKED	–	DATE	–
APPROVED	–	DATE	–
APPROVED	–	DATE	–

SAN LUIS WEST AZ WWTP
SAN LUIS, AZ
WAS PUMPS

SIZE	CONTRACT NO.	DRAWING NO.	REV.
D	–	SNL-I-22	A

SCALE	SHEET NO.
N/A	22-of-27

C PLANT SCADA

TYP. 3

FAIL (NOTE 1) YA 1501

SPEED SC 1501 | RUN YC 1501 | RUNNING YI 1501 | REMOTE YI 1501 | HI TEMP TAH 1501 | HI TEMP TAH 1501

K MBR OIT

K MBR PLC

VFD 1501 NOTE 2 | HS 1501 HOR

C MCC/MCP

B-15-01
PA BLOWER 01
(DUTY)
K

PG 1501 | MOT 1501 | TSH 1501 | PG 1501 | TSH 1501 | TG 1501

B-15-02
PA BLOWER 02
(DUTY)
K

PG 1502 | MOT 1502 | TSH 1502 | PG 1502 | TSH 1502 | TG 1502

B-15-03
MBR/PA BLOWER 03
(STANDBY)
K

PG 1503 | MOT 1503 | TSH 1503 | PG 1503 | TSH 1503 | TG 1503

10" C C

10" C C

10" C C

20"-304SS-PA-001 → T1 PROCESS AIR TO PAH-01 SHT 25

30"

10"-304SS-SCA-001 → T2 SCOUR AIR TO SCA BLOWERS SHT 24

24"

K PROVIDED BY KUBOTA

C PROVIDED BY OTHERS/CONTRACTOR

DRAFT

For Earth, For Life
Kubota
KUBOTA Membrane USA Cooporation
11807 North Creek Parkway S. Suite B109
Bothell, WA 98011 USA
Tel; +1 425 898 2853

REVISIONS			
REV	DESCRIPTION	DATE	APPROVED

DRAWN	ART	DATE	05/06/25
CHECKED	–	DATE	–
APPROVED	–	DATE	–
APPROVED	–	DATE	–

SAN LUIS WEST AZ WWTP
SAN LUIS, AZ
PROCESS AIR BLOWERS

SIZE	CONTRACT NO.	DRAWING NO.	REV.
D	–	SNL-I-23	A
SCALE	N/A	SHEET NO.	23-of-27

PLANT SCADA

TYP. 2

FAIL (NOTE 1) YA 1401

SPEED SC 1401 | RUN YC 1401 | RUNNING YI 1401 | REMOTE YI 1401 | HI TEMP TAH 1401 | HI TEMP TAH 1401

MBR OIT

MBR PLC

VFD 1401 NOTE 2 | HS 1401 HOR

MCC/MCP

B-14-01
MBR BLOWER 01
(DUTY)

TSH 1401 | MOT 1401 | PG 1401 | PG 1401 | TG 1401 | TSH 1401

8"

B-14-02
MBR BLOWER 02
(DUTY)

TSH 1402 | MOT 1402 | PG 1402 | PG 1402 | TG 1402 | TSH 1402

8"

18"-304SS-SCA-001 → U1 SCOUR AIR TO SCH-01 SHT 26

24"

T2 SCOUR AIR FROM STANDBY BLOWER SHT 23

10"-304SS-SCA-001

24"

[K] PROVIDED BY KUBOTA
[C] PROVIDED BY OTHERS/CONTRACTOR

DRAFT

For Earth, For Life
Kubota

KUBOTA Membrane USA Cooporation
11807 North Creek Parkway S. Suite B109
Bothell, WA 98011 USA
Tel: +1 425 898 2853

REVISIONS			
REV	DESCRIPTION	DATE	APPROVED

DRAWN	ART	DATE	05/06/25
CHECKED	–	DATE	–
APPROVED	–	DATE	–
APPROVED	–	DATE	–

SAN LUIS WEST AZ WWTP
SAN LUIS, AZ
MBR BLOWERS

SIZE	CONTRACT NO.	DRAWING NO.	REV.
D	–	SNL-I-24	A

SCALE	SHEET NO.
N/A	24-of-27

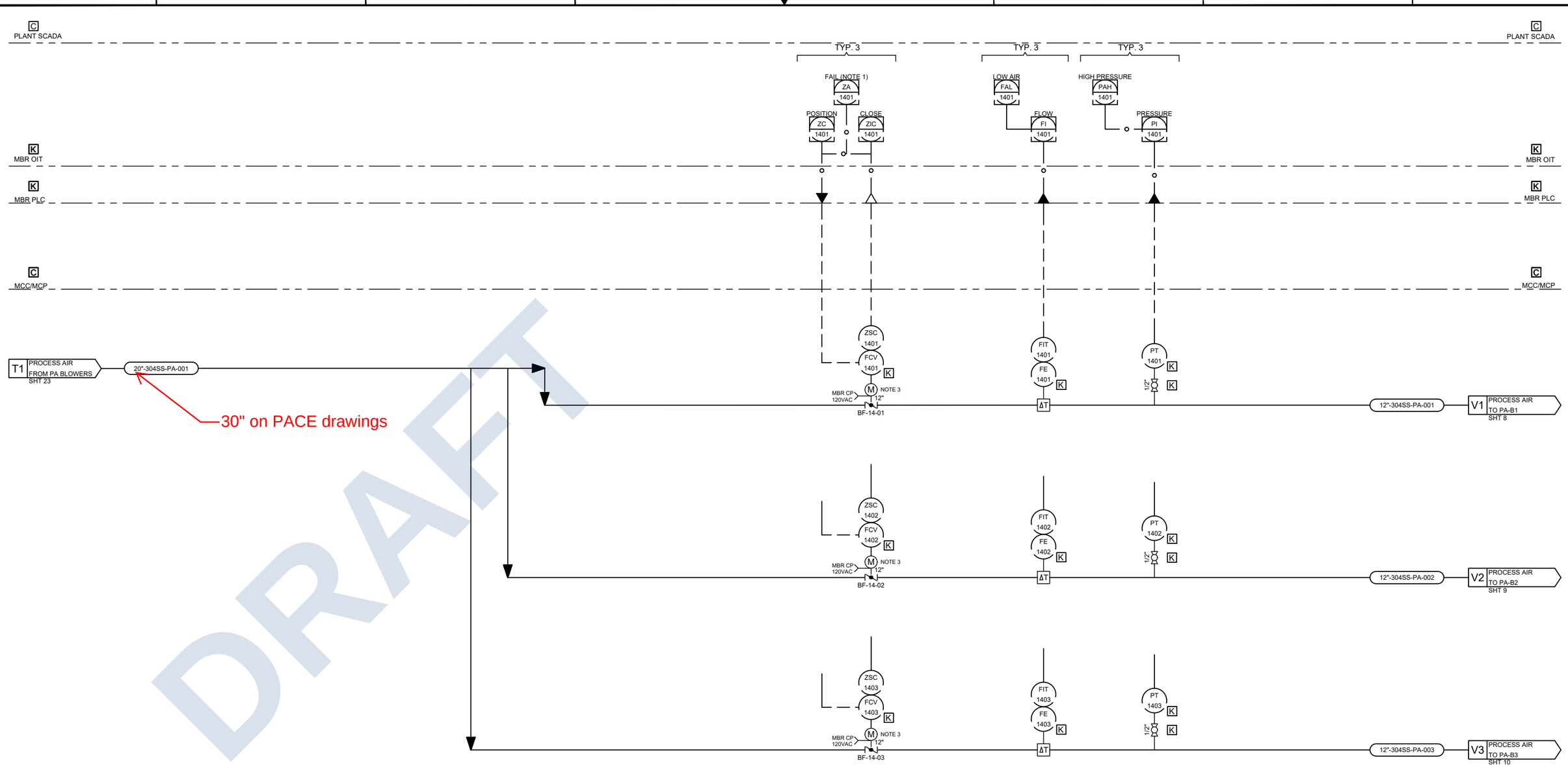

DRAFT

K PROVIDED BY KUBOTA
C PROVIDED BY OTHERS/CONTRACTOR

For Earth, For Life
Kubota

KUBOTA Membrane USA Cooporation
11807 North Creek Parkway S. Suite B109
Bothell, WA 98011 USA
Tel; +1 425 898 2853

REVISIONS			
REV	DESCRIPTION	DATE	APPROVED

DRAWN	ART	DATE	05/06/25
CHECKED	–	DATE	–
APPROVED	–	DATE	–
APPROVED	–	DATE	–

SAN LUIS WEST AZ WWTP
SAN LUIS, AZ
PROCESS AIR HEADER

SIZE	CONTRACT NO.	DRAWING NO.	REV.
D	–	SNL–I–25	A

SCALE	SHEET NO.
N/A	25–of–27

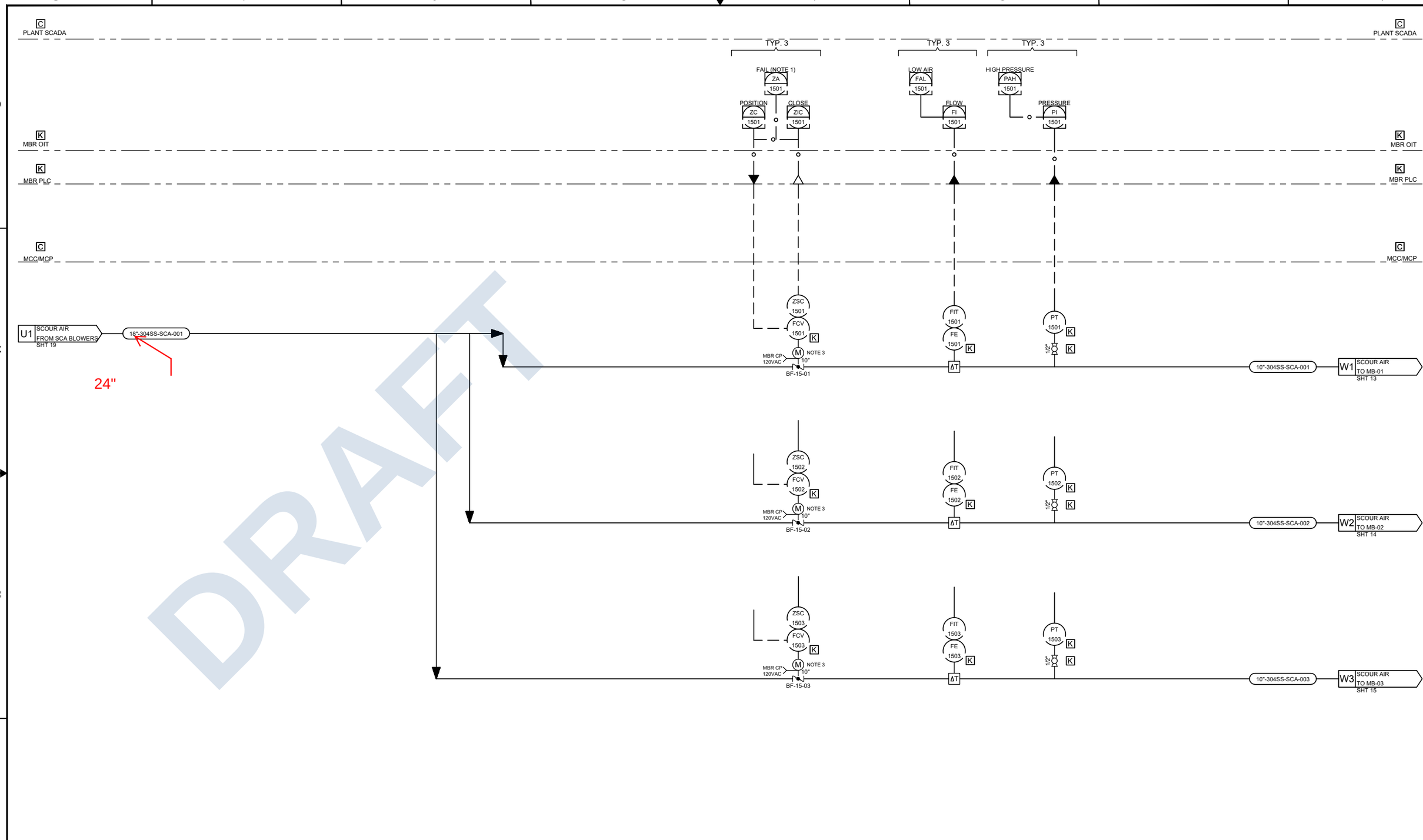

K PROVIDED BY KUBOTA

C PROVIDED BY OTHERS/CONTRACTOR

For Earth, For Life
Kubota

KUBOTA Membrane USA Cooporation
11807 North Creek Parkway S. Suite B109
Bothell, WA 98011 USA
Tel; +1 425 898 2853

REVISIONS			
REV	DESCRIPTION	DATE	APPROVED

DRAWN: ART	DATE: 05/06/25
CHECKED: –	DATE: –
APPROVED: –	DATE: –
APPROVED: –	DATE: –

SAN LUIS WEST AZ WWTP
SAN LUIS, AZ
SCOUR AIR HEADER

SIZE	CONTRACT NO.	DRAWING NO.	REV.
D	–	SNL-I-26	A

SCALE	SHEET NO.
N/A	26-of-27

C PLANT SCADA

K MBR OIT

K MBR PLC

C MCC/MCP

FAIL (NOTE 1) ZA 1601

OPEN/CLOSE ZC 1601 | CLOSE ZIC 1601 | OPEN ZIO 1601

ZSC 1601

ZSO 1601

XV 1601 K

M

6"

PLANT WATER
__ GPM
__ PSIG

4"-PVC-PW-XXX

4" PRV-16-01 K

PG

4" BF-16-01 K

4" BF-16-02 K

3/4"

4" BF-16-03 K

PG 1601 K

1/2"

4" X 3"

1 1/2" X 3/4"

PG 1602 K

1/2"

4" X 3"

4" CV-16-03

4" X 3"

4" BF-16-04 K

FLOW FICQ 1601

FIT 1601

FE 1601 K

M 4"

1" BV-16-05 K

DR

6"

4"-PVC-CIP-001 Y1 CIP TO PERMEATE COLLECTION 1 SHT 20

4"-PVC-CIP-002 Y2 CIP TO PERMEATE COLLECTION 2 SHT 21

future?

1 1/2" X 3/4"

1" X 3/4"

1" ROTOMETER RM-XX K

1" X 3/4"

3/4" K | 3/4" K

CHEMICAL FROM STORAGE

C 3/4" BV-16-01 K

3/4" BV-16-02 K

3/4" CV-16-01 K

CHEMICAL FROM STORAGE

C 3/4" BV-16-03 K

3/4" BV-16-04 K

3/4" CV-16-02 K

K PROVIDED BY KUBOTA

C PROVIDED BY OTHERS/CONTRACTOR

DRAFT

For Earth, For Life
Kubota

KUBOTA Membrane USA Cooporation
11807 North Creek Parkway S. Suite B109
Bothell, WA 98011 USA
Tel: +1 425 898 2853

REVISIONS			
REV	DESCRIPTION	DATE	APPROVED

DRAWN	DATE		
ART	05/06/25		
CHECKED	DATE		
–	–		
APPROVED	DATE		
–	–		
APPROVED	DATE		
–	–		

SAN LUIS WEST AZ WWTP
SAN LUIS, AZ
4" CIP SYSTEM

SIZE	CONTRACT NO.	DRAWING NO.	REV.
D	–	SNL-I-27	A
SCALE		SHEET NO.	
N/A		27-of-27	

SHOP DRAWING REVIEW

Project: **San Luis West WWTP Improvements**

Submittal No. **#O1-04 Kubota Membrane Units**

Vendor No. **A4_001**

Date Received: **05/22/2025**

Job #: **B777**

Comments:

No Exceptions Taken..... ☐
Submit Specific Item ..... ☐
Accepted with Corrections Noted..... ☒
Revise and Resubmit..... ☐
Rejected ..... ☐

Note:
Review is only for general conformance with the design concept of the project and general compliance with the information included in the Contract Documents. Any action shown is subjected to the requirements of the drawings and the specifications. Contractor is responsible for correlating and confirming dimensions at the job site, choice of fabrication processes and techniques of construction: coordination of his work with that of other trades; and performing the work in a safe satisfactory manner.

DATE: 7/25/2025 BY: DD /NE

Submittal Comments:

1. Please revise ancillary equipment list. This list seems to be generic and needs to be revised to remove any items that is already part of Kubota's scope and to list equipment required by the Contractor that is specific to this project. Cross out any items that are not relevant. For example, cross "suction filtration" and " siphon Filtration".
2. No exceptions taken on the SMU Membrane Units.

DRAFT

Submittal Transmittal

A-4 Submerged Membrane Units

Project Name	San Luis, AZ West WWTP Phase 1 MBR Upgrades
Project Site	San Luis, AZ West WWTP
Engineer	PACIFIC ADVANCED CIVIL ENGINEERING (PACE) 8723 E. VIA de COMMERICO, SUITE A-204 SCOTTSDALE, AZ 85258
Submit to	Duong Do, PE PACE
Prepared by	Scott Jungwirth, PE KUBOTA Water and Environment USA Corporation 19910 North Creek Parkway Suite 100, Bothell WA 98011, USA
KMU Project #	OPID65
Issued Date	May 22, 2025
Package #	SMU
Item	(1) Submerged Membrane Units

DRAFT

Table of Contents

1. Kubota SMU Specification Sheet SP900
2. Kubota SMU Assembly Drawing
3. Kubota SMU Installation Drawing
4. Kubota SMU Lifting Tool
5. Kubota Module Lifting Tool
6. Kubota SMU Instruction Manual (SP Type)
7. Kubota SMU Lifting Tool Instruction Manual (for SP/SPC model)

DRAFT

Submerged Membrane Unit (SMU) Specification Sheet

DRAFT

Specifications of KUBOTA Submerged Membrane Unit™

● Specifications of Product

Model			SP900-A
Dimensions (Height x Width x Length)			H5,257mm × W944mm × L2,186mm
Mass	Upper Membrane Block	Dry Mass	920 kg
	Lower Membrane Block	Dry Mass	920 kg
	Diffuser Block	Dry Mass	70 kg
	Attachment*1	Dry Mass	6 kg
	Unit Lifting Tool*2	Dry Mass	210 kg
	Maximum Lifting Load*3		3,230 kg
Number of Membrane Modules			80 modules
Effective Membrane Surface Area			900 m^2
Pore Size of Membrane Sheet			0.2 μm
Initial Flow Rate with Clean Water*4			492 L/min (20℃, 5 kPa)
Diffuser Air Supply Rate		Required	2.53 Nm^3/min
		Maximum*5	4.00 Nm^3/min
Pressure Loss in Diffuser			10 kPa or less
Filtration Pressure*6			20 kPa or less
Chemical Injection Pressure			10 kPa or less
Diameter of Pipe Connection		Air	JIS VP75, ASTM 3", or DIN d90 x 1
		Permeate	JIS VP75, ASTM 3", or DIN d90 x 2
Replacement Parts			Diffuser Rubber
			Membrane Module
Optional Parts (These parts shall be ordered separately)			Unit Lifting Tool
			Module Lifting Tool
Precautions in Storage			Avoid direct sunlight and wetness
			Keep fire away

3.5 TONS

*1 The attachement includes Manifold Adapter, Bracket, Pipe Support, and Diffuser Adapter all of which are attached to Membrane Unit.
*2 Optional part
*3 Assuming that all the gaps between the Membrane Elements are clogged. Mass of Lower Membrane Block, Diffuser Block, Attachment, and Unit Lifting Tool which is fully filled with water are also included.
*4 This does not indicate the treatment capacity with real mixed liquor.
*5 Supplying more air flow than this maximum value may cause damage on the Membrane Unit.
*6 Difference (P1-P2) between the pressures while the filtration is OFF (P1) and ON (P2).

DRAFT

● Design Considerations

Usage Conditions	Intended Use*7		Solid-Liquid Separation of Activated Sludge
	Filtration Method		Gravity, Suction, or Siphon Filtration
	Water Temperature		5~40 ℃
	pH		5~10
	Required min. Water Level		5,700 mm
	Sludge Properties*8 (recommended)	MLSS	5,000~13,000 mg/L
		Viscosity*9	120 mPa·s or less
		Paper Filtration Test	10 mL/5min or more
		DO	1 mg/L or more
		Water Temperature	15~35 ℃
		pH	6~8
Method of Fixation		Membrane Unit	Guide Set
Ancillary Equipment (to be provided by Customer)			
	Guide Set*10		
	Membrane Blower		
	Devices to discharge Permeate*11 (example)	Gravity Filtration	Motorized Valve (or Solenoid Valve), Pressure Gauge, Constant Flow Valve (or Flow Regulator and Flow Meter)
		Suction Filtration	Permeate Pump, Pressure Gauge (Negative Gauge or Combination Gauge), Constant Flow Valve (or Flow Regulator and Flow Meter)
		Siphone Filtration	Siphon formation equipment, Motorized Valve (or Solenoid Valve), Pressure Gauge (Negative Gauge or Combination Gauge), Constant Flow Valve (or Flow Regulator and Flow Meter)
	Chemical Injection Port or Equipment		
	Recommended Piping Diameter	Blower	JIS VP75, ASTM 3", or DIN d90
		Permeate*12	JIS VP75, ASTM 3", or DIN d90
Precautions in Operation			Avoid aeration while filtration stops as much as possible.
			Stop filtration when aeration stops.
			Provide continuous aeration when filtration is conducted.

*7 Pretreatment may be required for the following types of wastewater:
- Wastewater with oil, trash, or debris
- Wastewater with high contents of iron, manganese, calcium, or silicon

*8 Use these values as rough targets for treatment control.

*9 This is the value measured by an viscometer model TVC-10 (Rotor No.1, Speed 20 rpm) by Toki Sangyo Co., LTD. If measured by an viscometer model VT-03 by Rion Co., LTD., it is 60 mPa·s or less instead.

*10 Refer to "Instruction Manual" for details.

*11 Configuration of devices to discharge permeate is not limited to these examples. Refer to "Instruction Manual".

*12 Design the system so as to prevent permeate backflow and air trap while filtration stops.

● Maintenance Considerations

In Situ Chemical Cleaning	Chemical type	Sodium Hypochlorite	0.6% or less when MLSS is more than 10,000 mg/L
			0.3% or less when MLSS is 10,000 mg/L or less
		Oxalic Acid*13	1.0 % or less
	Dosage Volume		3,200 L
	Timing		When filtration pressure rises by 5~10 kPa from the initial or every six months or more often
Diffuser Pressure Loss Prevention		Procedure	Blow down
		Timing	Once a day, for one minute

*13 If calcium carbonate precipitates in the tank, dose hydrochloric acid or citric acid (1.0% or less).

[Before using this product, read "Instruction Manual for KUBOTA Submerged Membrane Unit™".]

included in K
scope of sup

Kubota s

PLEAE CHAN
CITRIC ACID

DRAFT

Kubota SMU Assembly Drawing

DRAFT

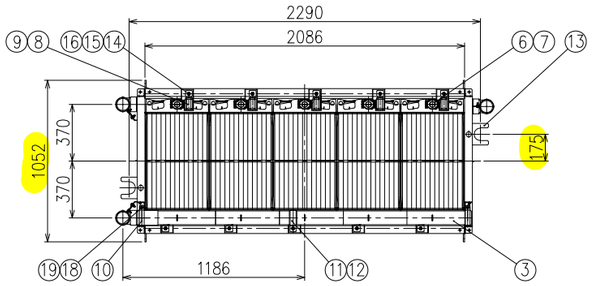

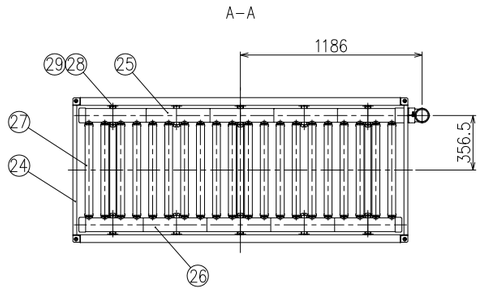

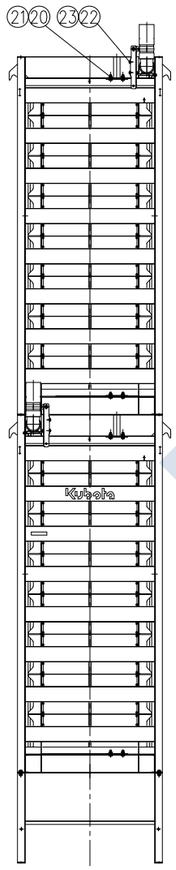

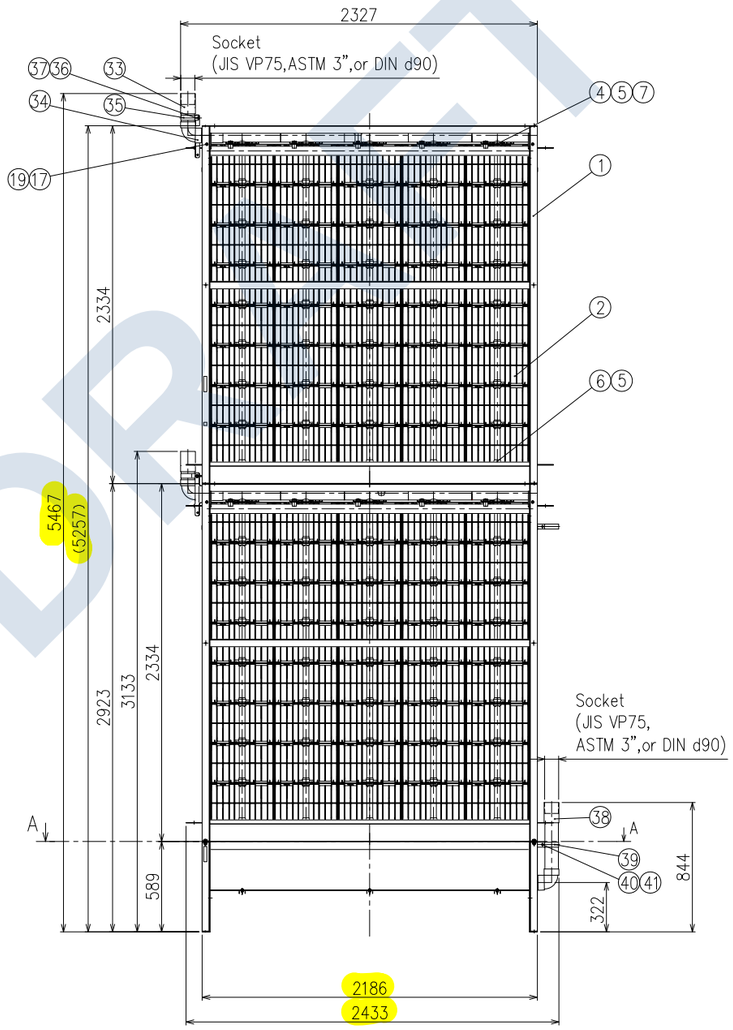

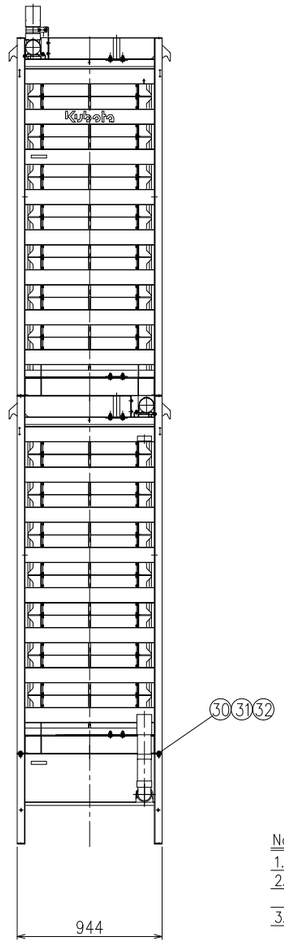

Notes

1. This drawing conforms to JIS standards.
2. This drawing shows an example that upper and lower Membrane Block are MB450–508L–A and MB450–508–A.
3. The upper and lower Membrane Blocks are replaceable mutually.

Materials
SUS304
SUS316

Model		Mass (kg)
Membrane Block	MB450–508–A	920
Membrane Block (L)	MB450–508L–A	920
Diffuser Block	DB005	70
Manifold Adapter	FT004	2
Manifold Adapter (L)	FT004L	2
Diffuser Adapter	FT002	2

PARTS NO.	NAME OF PARTS	MATERIALS	NO.REQD.	REMARKS
41	Washer	SUS	2	M8
40	Bolt	SUS	4	M8x25L
39	Support	SUS	2	
38	Diffuser Piping	PVC	1	
Diffuser Adapter			1	FT002
37	Washer	SUS	1	M8
36	Bolt	SUS	2	M8x25L
35	Support	SUS	1	
34	Bracket	SUS	1	
33	Manifold Piping	PVC	1	
Manifold Adapter (L)			1	FT004L
37	Washer	SUS	1	M8
36	Bolt	SUS	2	M8x25L
35	Support	SUS	1	
34	Bracket	SUS	1	
33	Manifold Piping	PVC	1	
Manifold Adapter			1	FT004
32	Washer	SUS	8	M12
31	Nut	SUS	4	M12
30	Bolt	SUS	4	M12x25L
29	Washer	SUS	12	M8
28	Nut	SUS	12	M8 (Locknut)
27	Diffuser Rubber	ABS etc.	20	
26	Diffuser Header Pipe (B)	ABS	1	
25	Diffuser Header Pipe (A)	ABS/PVC	1	
24	Diffuser Block Frame	SUS	1	
Diffuser Block			1	DB005
23	Washer	SUS	2	M8
22	Bolt	SUS	2	M8x25L
21	Nut	SUS	8	M12
20	Bolt	SUS	8	M12x30L
19	Washer	SUS	4	M8
18	Nut	SUS	2	M8
17	Bolt	SUS	2	M8x16L
16	Bolt	SUS	10	M12x25L (Squareheadbolt)
15	Washer	SUS	9	M12
14	Nut	SUS	10	M12
13	Guide Plate	SUS	4	
12	Sheet	EPDM	1	
11	Manifold Holder	SUS	1	
10	Manifold Saddle	SUS	2	
9	Retainer Pad	NBR	10	
8	Retainer	SUS	10	
7	O-Ring (P-46)	EPDM	80	
6	Plug	PS	15	
5	O-Ring (P-34)	NBR	85	
4	Joint	PS	75	
3	Manifold	ABS etc.	1	
2	Membrane Module	PP etc.	40	
1	Membrane Block Frame	SUS	1	
Membrane Block (L)			1	MB450–508L–A
23	Washer	SUS	2	M8
22	Bolt	SUS	2	M8x25L
21	Nut	SUS	8	M12
20	Bolt	SUS	8	M12x30L
19	Washer	SUS	4	M8
18	Nut	SUS	2	M8
17	Bolt	SUS	2	M8x16L
16	Bolt	SUS	10	M12x25L (Squareheadbolt)
15	Washer	SUS	9	M12
14	Nut	SUS	10	M12
13	Guide Plate	SUS	4	
12	Sheet	EPDM	1	
11	Manifold Holder	SUS	1	
10	Manifold Saddle	SUS	2	
9	Retainer Pad	NBR	10	
8	Retainer	SUS	10	
7	O-Ring (P-46)	EPDM	80	
6	Plug	PS	15	
5	O-Ring (P-34)	NBR	85	
4	Joint	PS	75	
3	Manifold	ABS etc.	1	
2	Membrane Module	PP etc.	40	
1	Membrane Block Frame	SUS	1	
Membrane Block			1	MB450–508–A

TYPE: SP900–516–A
CUSTOMER:
TITLE: Assembly Drawing of Membrane Unit

Membrane Engineering	APPROVED BY	CHECKED BY	DESIGNED BY	DRAWN BY
	K.Y	Y.M	H.S	S.K

THIRD ANGLE | DATE: 2021.11.1 | SCALE: 1:20
DWG NO.: SP–20–2099
ORDER NO.:
FILE NO.: R

KUBOTA Corporation

DRAFT

Kubota SMU Installation Drawing

DRAFT

DRAFT

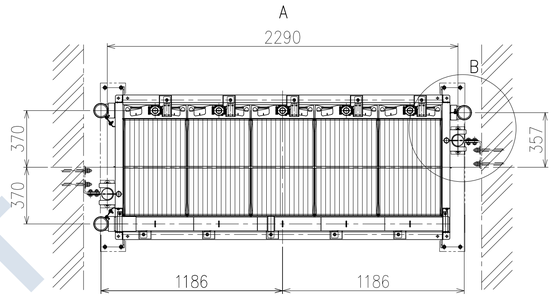

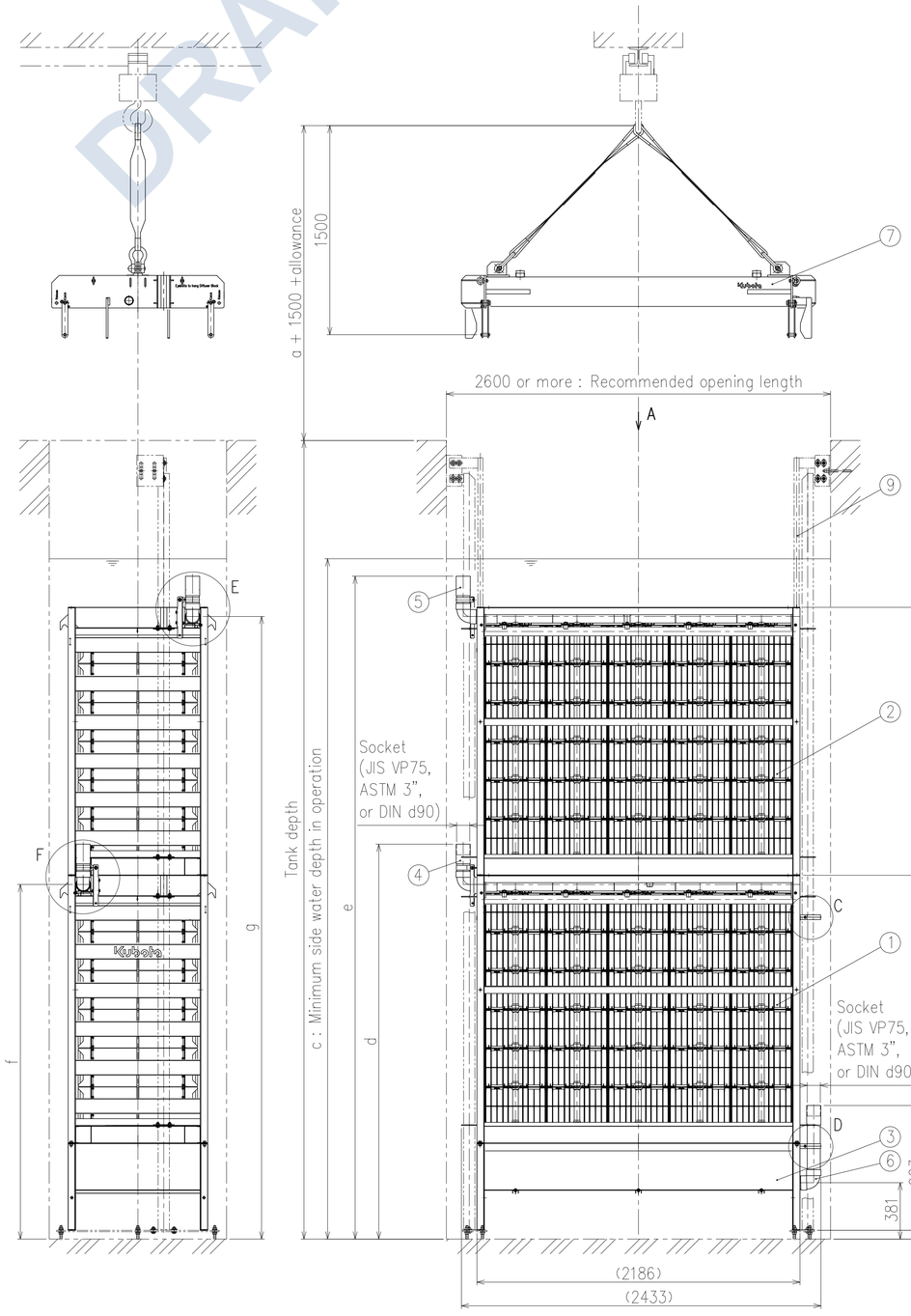

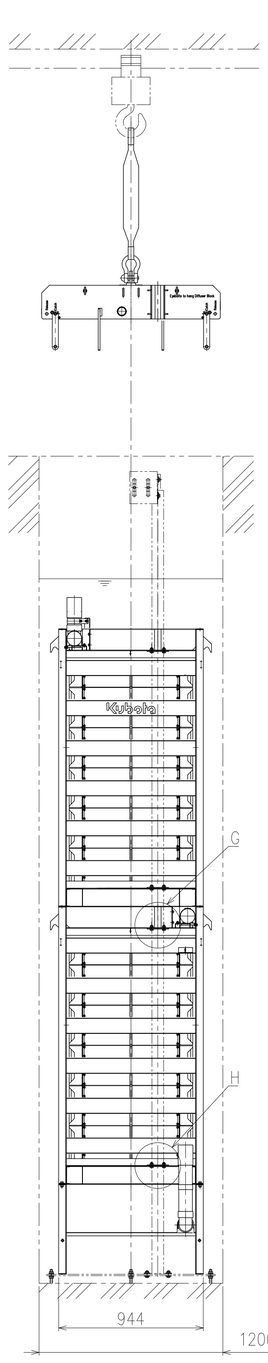

B (1:5)

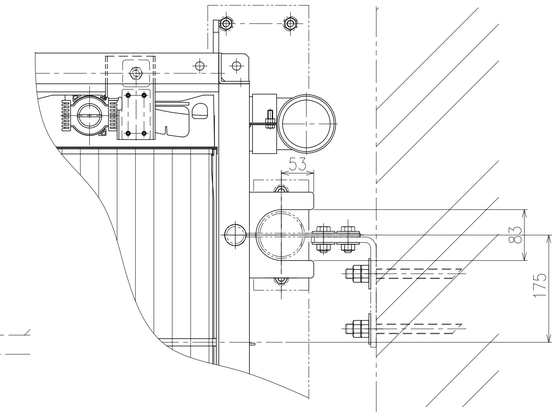

C (1:5)

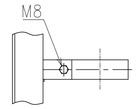

G (1:5)

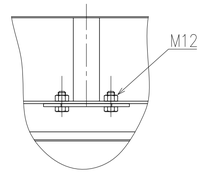

D (1:5)

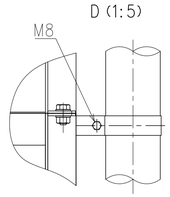

H (1:5)

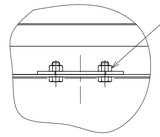

E (1:5)

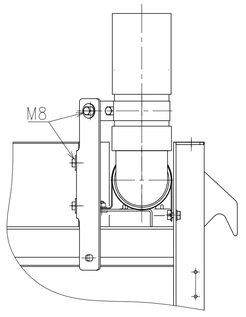

F (1:5)

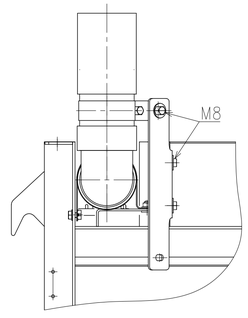

Notes

1. This drawing shows an example that Membrane Block (L) is placed as upper Membrane Block of SP675-512-A.
   Each model may be different in outline and dimensions.
2. The upper and lower Membrane Blocks are replaceable mutually.
3. This drawing conforms to JIS standards.
4. The Guide Set has to be prepared by Customer.
5. Membrane Block (Lower) and Diffuser Block are fixed with bolts. Never use bolts to fix the Membrane Block (Upper) and Membrane Block (Lower).
6. For lifting up Membrane Unit, use the specified Unit Lifting Tool.
7. Use Module Lifting Tool in taking out Membrane Modules.

How to use Module Lifting Tool

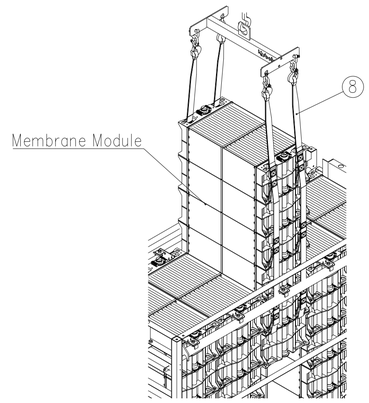

Model	a	b	c	d	e	f	g	Mass (kg) Membrane Block (Upper and Lower), Diffuser Block,and Adapter dry	Mass (kg) Membrane Block (Upper and Lower), Diffuser Block,and Adapter wet *1	Mass (kg) Lifting Tool	Maximum lifting load (kg) *2
SP450W-508-A	1877	3165	3600	2146	3434	1874	3162	1110	3070	210	1850
SP675-512-A	2401	4213	4600	2670	4482	2398	4210	1510	4450	210	2540
SP900-516-A	2923	5257	5700	3192	5526	2920	5254	1910	5830	210	3230

*1 "Wet" mass includes "dry" mass and expected mass of sludge when all the gaps between membrane elements are clogged with sludge.

*2 Assuming that all the gaps between membrane elements are clogged with sludge.Mass of Membrane Block(Lower), Diffuser Block, Adapters,and Unit Lifting Tool which is fully filled with water are also included.

PARTS NO.	NAME OF PARTS	MATERIALS	NO.REQD.	REMARKS
9	Guide Set	–	1	Customer's provision
8	Module Lifting Tool	STKR400 etc.	1	Optional
7	Lifting Tool	STKR400 etc.	1	Optional
6	Diffuser Adapter	PVC etc.	1	Membrane Unit
5	Manifold Adapter (L)	PVC etc.	1	
4	Manifold Adapter	PVC etc.	1	
3	Diffuser Block	SUS/ABS/PU etc.	1	
2	Membrane Block (L)	SUS/PP/ABS etc.	1	
1	Membrane Block	SUS/PP/ABS etc.	1	

TYPE	CUSTOMER	TITLE
SP450W-508-A SP675-512-A SP900-516-A		Installation drawing of Membrane Unit

	APPROVED BY	CHECKED BY	DESIGNED BY	DRAWN BY	THIRD ANGLE	DATE	SCALE
Membrane Engineering	K.Y	Y.M	H.S	S.K		2023.10.23	1:20

DWG NO. SP-20-2038

ORDER NO.

FILE NO. R

KUBOTA Corporation

Kubota SMU Lifting Tool

DRAFT

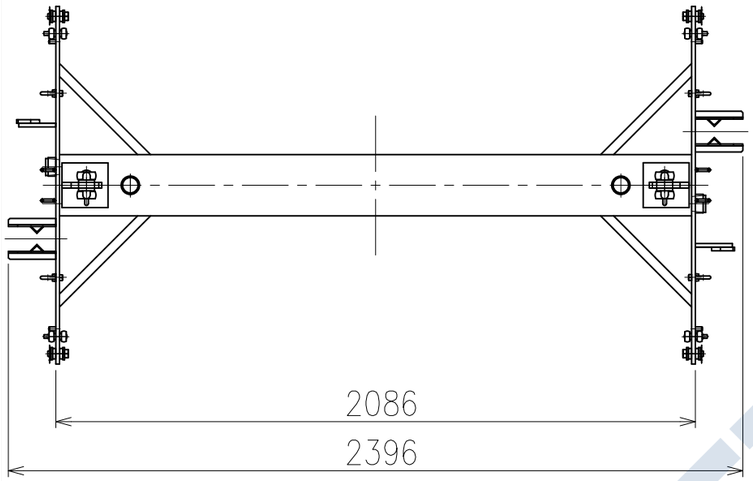

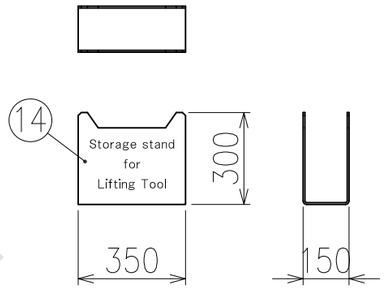

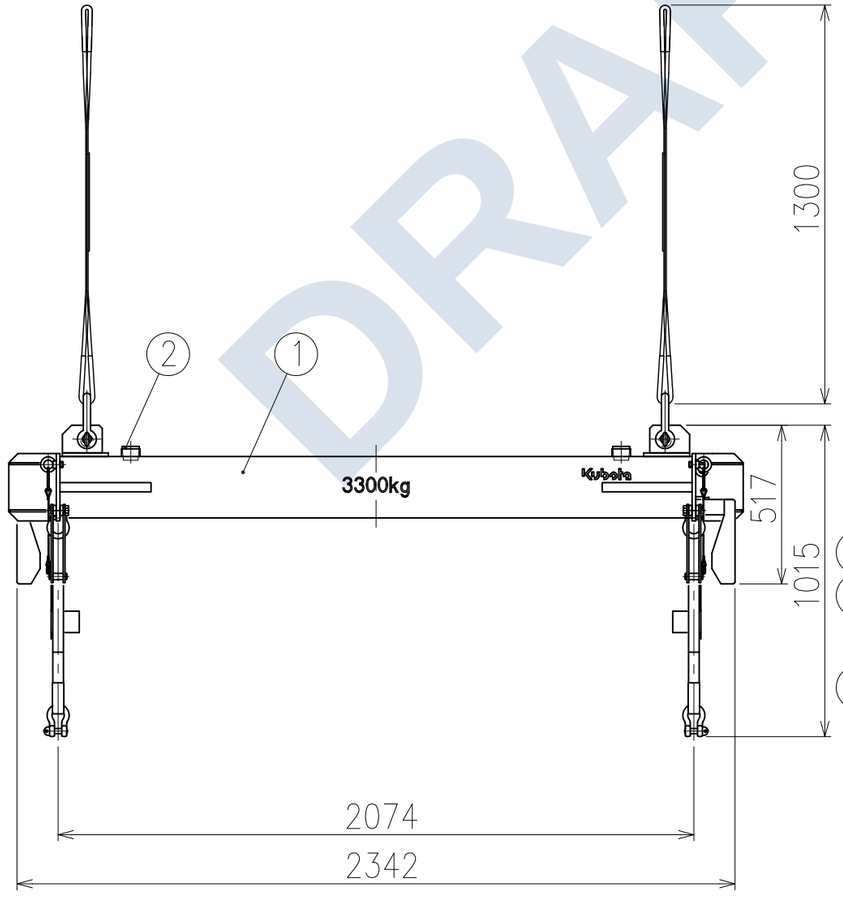

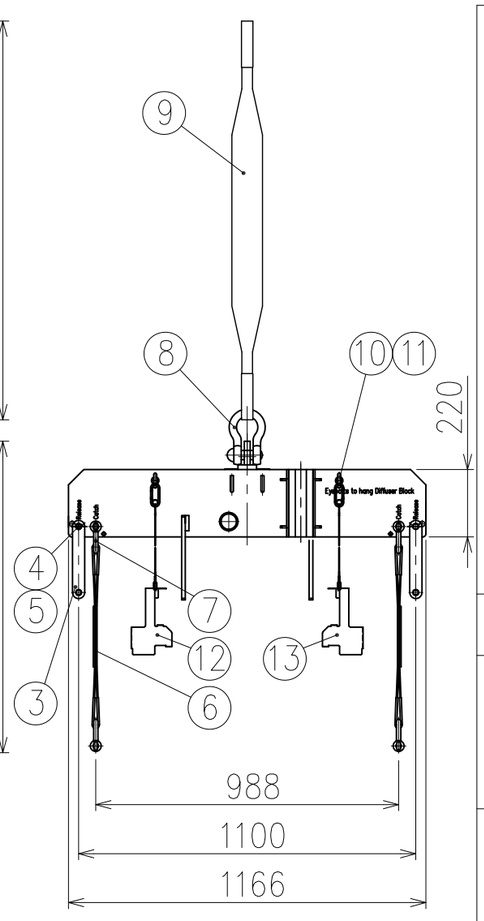

Notes

1. This drawing conforms to JIS standards.
2. Can include 70 kg water at maximum

PARTS NO.	NAME OF PARTS	MATERIALS	NO.REQD.	(kg) MASS	REMARKS
14	Stand	SS400	2	10	
13	Holder (B)	SUS304	2	0.49	
12	Holder (A)	SUS304	2	0.49	
11	Nut	SS400	4	0.02	M12 to lift a Diffuser Case
10	Eyebolt	SS400	4	0.12	M12 to lift a Diffuser Case
9	Hanger Sling	PET etc.	2	1.22	
8	Shackle	S25C etc.	2	2.75	
7	Shackle	S25C etc.	8	0.51	
6	Sling	PET etc.	4	0.2	
5	Stopper	SUS304	4	0.01	
4	Pin	SUS304	4	0.17	
3	Hanger	SUS304	4	1.14	
2	Plug	VMQ	4	0.11	
1	Frame	STKR400 etc.	1	177	
			1	210	
TGSP508			1	230	

TYPE	CUSTOMER	TITLE
TGSP508		Lifting Tool

Membrane Engineering	APPROVED BY	CHECKED BY	DESIGNED BY	DRAWN BY	THIRD ANGLE	DATE	SCALE
	K.Y	Y.M	Y.K	S.K		2024.10.11	1:20

DWG NO. SP-17-2156 (6)

KUBOTA Corporation

ORDER NO.

FILE NO. SP,SPC

DRAFT

SP Model Selection

✓ SP/SPC model can be selected based on water depth requirement and lifting height requirement.

Item	SP200 SP225	SP300 SP337	SP400 SP445	SP600 SP675	SP800 SP900
A (Membrane Block + Diffuser Block) [m]	1.88	2.41	2.93	2.41	2.93
B (Lifting Tool Height) [m]	1.50	1.50	1.50	1.50	1.50
Required Height of Hoist Hook (A+B) [m]	3.38	3.91	4.43	3.91	4.43

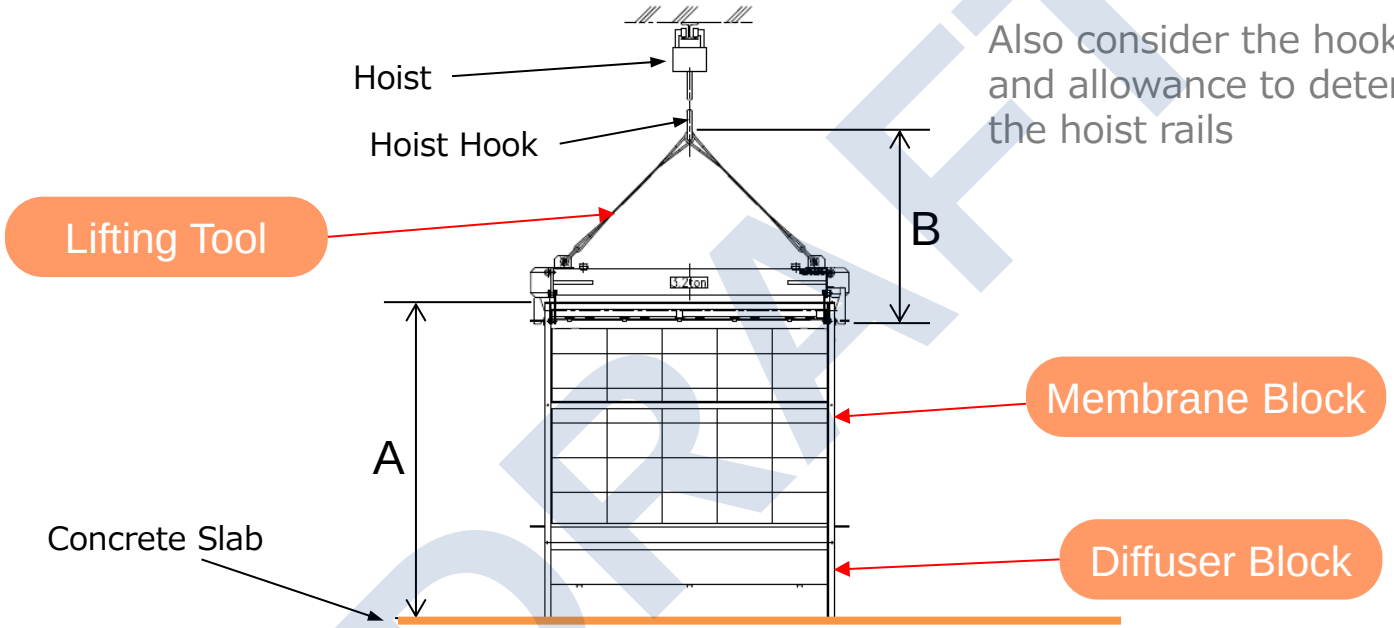

Also consider the hook, hoist main body, and allowance to determine the elevation of the hoist rails

DRAFT

Kubota Module Lifting Tool

DRAFT

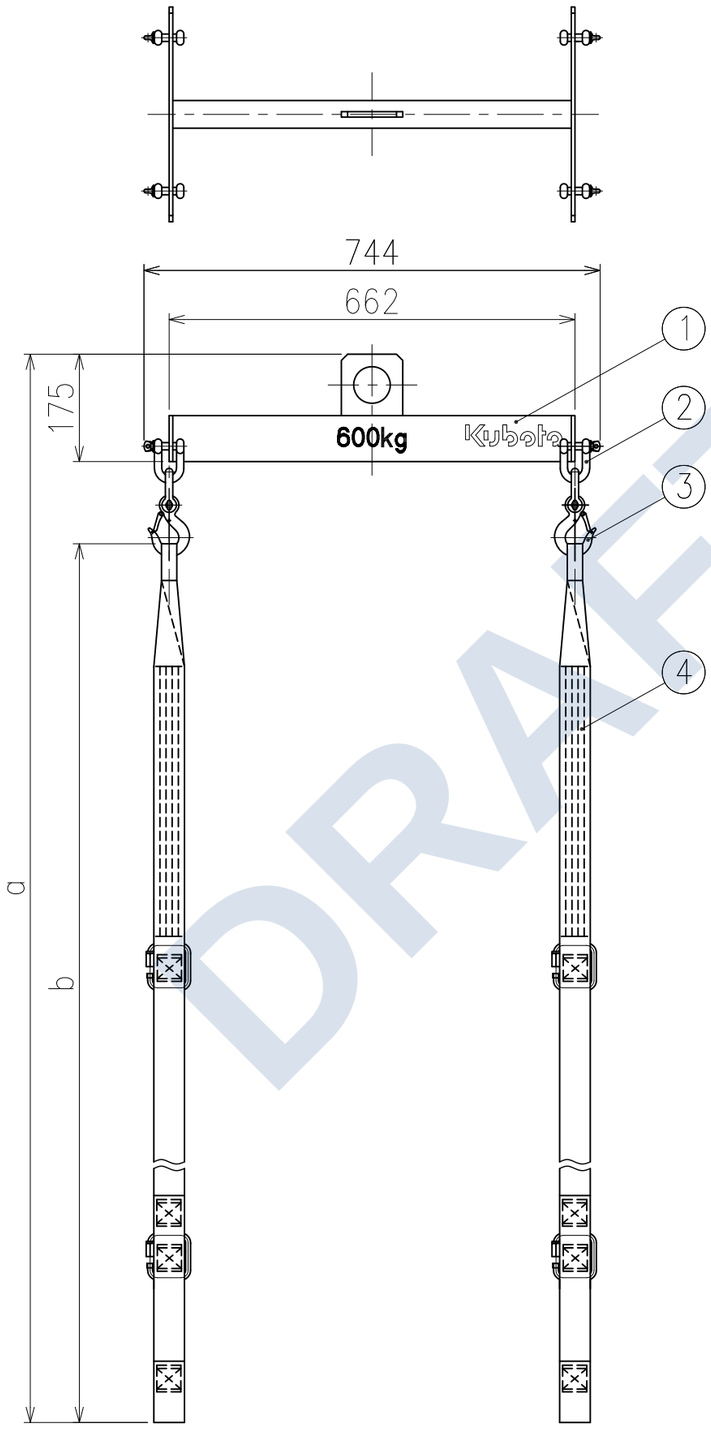

Notes

1. This drawing conforms to JIS standards.

	Model	a	b
	TGSPM004	1803	1488
	TGSPM006	2331	2016
	TGSPM008	2859	2544

PARTS NO.	NAME OF PARTS	MATERIALS	NO.REQD.	(kg) MASS	REMARKS
4	Sling	PET etc.	4	1.27	
3	Hook	SCM435	4	0.19	
2	Shackle	SUS304	8	0.20	
1	Frame	STKR400 etc.	1	7	
TGSPM008			1	15	
4	Sling	PET etc.	4	1.00	
3	Hook	SCM435	4	0.19	
2	Shackle	SUS304	8	0.20	
1	Frame	STKR400 etc.	1	7	
TGSPM006			1	14	
4	Sling	PET etc.	4	0.73	
3	Hook	SCM435	4	0.19	
2	Shackle	SUS304	8	0.20	
1	Frame	STKR400 etc.	1	7	
TGSPM004			1	13	

TYPE
TGSPM004
TGSPM006
TGSPM008

CUSTOMER

TITLE
Module Lifting Tool

Membrane Engineering	APPROVED BY	CHECKED BY	DESIGNED BY	DRAWN BY
	K.Y	Y.M	T.S	S.K

THIRD ANGLE | DATE 2022.11. 7 | SCALE 1:10

DWG NO. SP-17-2157 (2)

KUBOTA Corporation

ORDER NO.

FILE NO. SP,SPC

DRAFT

6 5 4 3 2 1 A3

SP Required Height of Hoist Hook when using a Module Lifting Tool

- ✓ Module Lifting Tool is used for lifting out a Membrane Modules.
- ✓ This table shows the required height of hoist hook for it.

Item	SP200 SP225	SP300 SP337	SP400 SP445	SP600 SP675	SP800 SP900
A (Membrane Block + Diffuser Block) [m]	1.88	2.41	2.93	2.41	2.93
B (Total height of one Membrane Module) [m]	0.27	0.27	0.27	0.27	0.27
C (Total height of Module Lifting Tool)[m]	1.81	2.34	2.86	2.34	2.86
Required height of hoist hook (A+B+C) [m]	3.96	5.02	6.06	5.02	6.06

Also consider the hook, hoist main body, and allowance to determine the elevation of the hoist rails

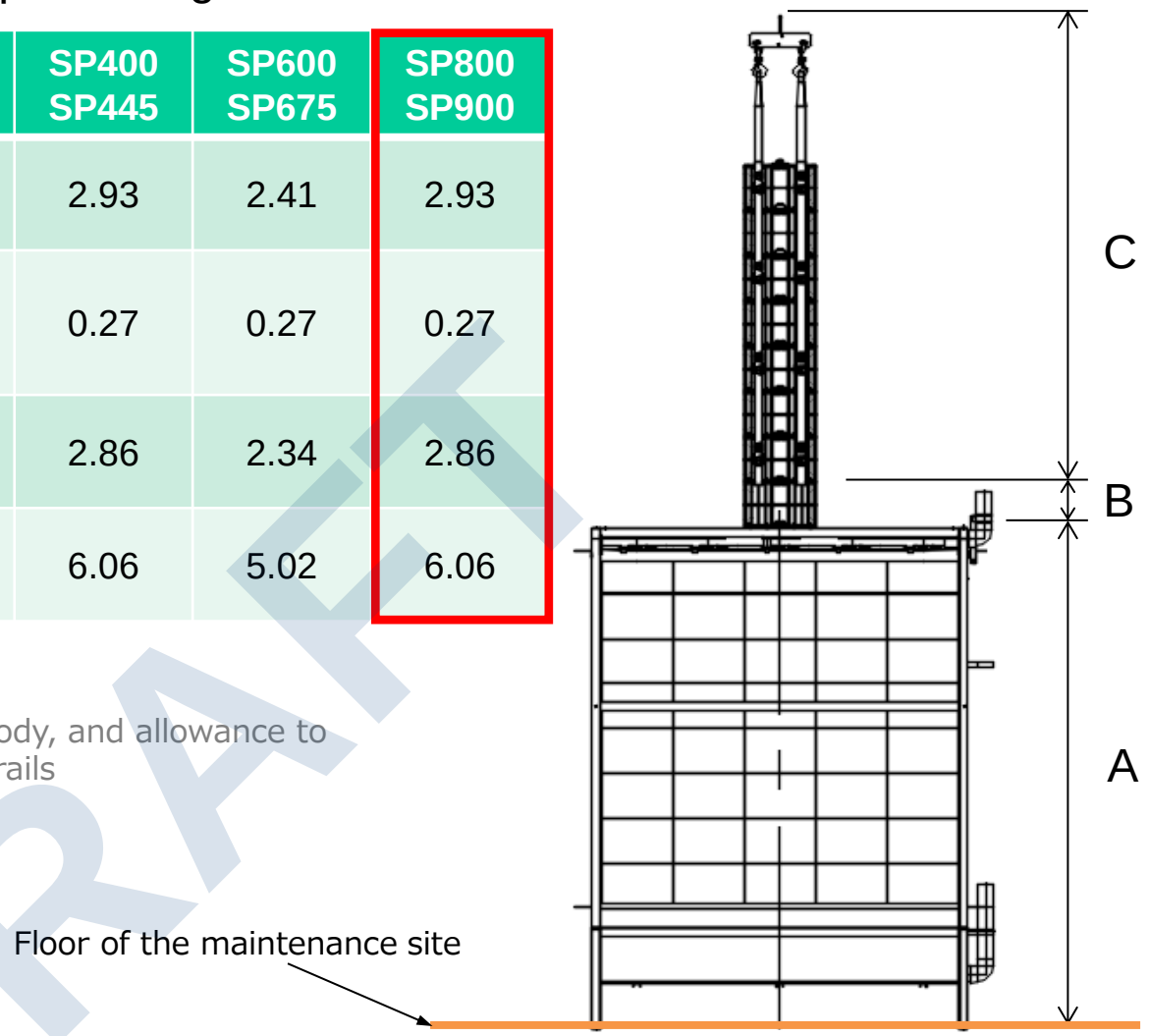

DRAFT

Kubota SMU Instruction Manual (SP Type)

DRAFT

KUBOTA Corporation

KUBOTA Submerged Membrane Unit ™

Instruction Manual (SP Type)

DRAFT

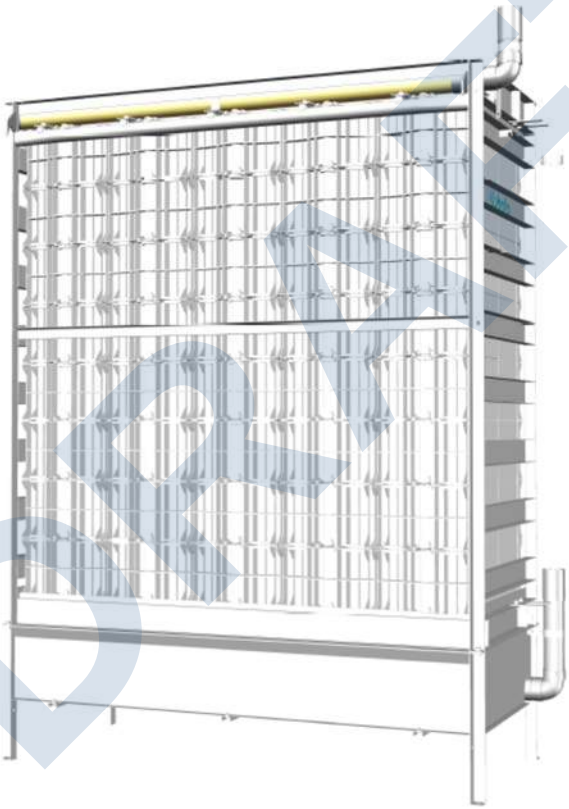

- Please read this manual carefully before using this product.
- Please keep this manual in a place where the operator has easy access.

61MU300012 (SP)

DRAFT

Introduction

Thank you for selecting KUBOTA Submerged Membrane Unit ™ (SMU). This manual shows an overview of the KUBOTA SMU and describes in detail how to handle, store, install, operate, and maintain the SMU.
First of all, please read and understand “The Safety Precautions”, which explains compliance rules that prevent danger to users and everyone concerned and damage on properties.
Please note that it is important to read this manual carefully in order to use this product safely and properly. Additionally, retaining a copy of this manual for future reference is recommended.
Please consult with the corresponding engineering company or KUBOTA if you have any questions or need further information about this manual, or if you find abnormalities during operation even when following the instructions properly.
Please also note that although the configuration of purchased products may not conform to those in this manual due to changes in Product Specification or other causes, no disruptions in explaining are expected.

* KUBOTA Submerged Membrane Unit™ is a trademark of KUBOTA Corporation.

DRAFT

Safety Precautions

The following contents are intended to minimize risks to users and property damage.
Please read and understand the following contents before proceeding with this manual as to comply with safety rules.

- The following markings indicate potential causes of physical injury, and are classified and explained according to seriousness of consequences.

Danger	Failure to comply with this information will imminently result in death or severe injury.
Warning	Failure to comply with this information could result in death or severe injury
Caution	Failure to comply with this information could result in minor injury or property damage

- The following markings classify and explain compliance rules about product handling and operation management.

Prohibited	Prohibited action
Important	Important rules to be complied with

Danger

Keep safe working environment in tanks

When working in a tank, keep the working environment safe by measuring the required items including oxygen and hydrogen sulfide in observance of local regulations/standards of each country/region. Failure to follow the procedure could result in a fatal accident such as anoxia.

Never mix sodium hypochlorite and acid

In the Chemical Cleaning, never mix sodium hypochlorite and acids such as Oxalic, Hydrochloric, and Citric Acid. Doing so will produce toxic chlorine gas, which may cause severe accident.

DRAFT

Warning

Select lifting equipment with an adequate strength

Mass of a Membrane Unit can increase by sludge adhesion to Membrane Modules, Membrane Block, and Diffuser Block, as well as sludge clogging of Membrane Modules. Select adequate lifting equipment also considering the maximum mass of Membrane Unit and the dynamic load.
Lack of strength can cause falling accident.

Never go beneath a lifted Membrane Block, Diffuser Block, Membrane Unit, or Membrane Module

If they fall down, fatal accident may occur.

Take safety measures to prevent falling accident

Ensure the safety of workers by installing handrails, scaffolding and safety equipment to prevent a fall accident. Pay particular attention near the tank opening because the floor may be slippery by wetness.
Poor safety measures may result in fatal accident.

Caution

Never climb on the Membrane Unit

Climbing on the Membrane Unit may cause you falling. Furthermore, climbing may tumble the Membrane Unit, causing fatal accident and equipment breakage.

Never wet the Lifting Tool (Optional Parts) nor expose it to corrosive gas.

If the Lifting Tool gets corroded, its strength may decrease to a critical level, resulting in a drop accident.

Before using Lifting Tool, make sure that they have no abnormality

Before using Lifting Tools supporting load, check if crack, corrosion, rust, abrasion, and deformation. And also, check the Slings of the KUBOTA's Lifting Tool for abnormalities such as a cut, abrasion, scratch, broken stitch, discoloration, coloration, fusion, and melting.
Immediately replace the tools with abnormality. Continued use of them may cause human accident by product dropping.

Do not use chemicals stimulating corrosion of stainless steel materials (e.g. Ferric chloride).

Corrosive chemicals that stimulate corrosion may cause corrosion of stainless steel materials of Membrane Unit or optional parts.
It may cause dropping accident by lack of strength.

DRAFT

⚠ Caution

Immediately replace the Membrane Unit and parts with abnormality
If any defects of parts or SMU abnormality such as cracks or corrosion are found upon inspection, replace the parts or SMU as soon as possible. Continuous usage of them will cause an accident.

Wear protective equipment before using chemicals
Before using chemicals, carefully read the Material Safety Data Sheet (SDS), and wear protective equipment such as masks, goggles, gloves, etc. Misuse of them may result in physical accident.

Wear adequate gloves such as cotton work gloves during work.
Working with bare hands may result in unexpected injuries.

Ventilate well
If the membrane bioreactor (MBR) tank and/or aeration tank are installed in a building with poor ventilation, prepare equipment for improving the ventilation to prevent health problem.

Lifting Tools should be used by four point lifting
When lifting up a Membrane Block, Diffuser Block, Membrane Unit, or Membrane Modules, always hang it at four points. If lifted at three or two points, it may drop or swing and result in a fatal accident.

Be sure to check that there are no slacks of Shackles, Eyebolts, and Catch Rings.
If the Shackles, Eyebolts, or Catch Rings come off, the product will drop down and result in fatal accident or damage on the surrounding equipment.

Lift Membrane Block, Diffuser Block, Membrane Unit, or Membrane Modules straight up and quietly using a Lifting Tool
When lifting it out of the tank, lift it straight up slowly and safely. If it swings, physical injuries and/or damage on surrounding equipment may occur.

Never lift a Membrane Block or Membrane Unit containing chemical solution or water in its Membrane Modules.
Spillage of the contained solution or damage of the Membrane Modules may cause physical injury or damage to equipment.

Conduct the lifting work by two or more persons.
If the crane or chain block operator alone conducts all the work, his risk prediction ability will significantly decrease due to increased blind spots.

DRAFT

⚠ Caution

Do not place any part of your body between a Lifting Tool and a Membrane Block or a Diffuser Block.

Do not place any part of your body, such as a hand or a head, between a Lifting Tool and a Membrane Block or a Diffuser Block. It may cause a fatal accident under unsafe operation or during an unexpected drop accident.

Check the slings for twist before use.

Make sure that a set of slings have the same length and no kinks while it is attached on the Unit Lifting Tool. Otherwise the load may be supported by only three or two slings, resulting in an accident.

Use eyebolts when lifting up a Diffuser Block by the Unit Lifting Tool.

When lifting up a Diffuser Block, always use the four eyebolts which are accompanied with the Unit Lifting Tool. If lifted in an unstable condition, it may drop or swing and result in a fatal accident.

Securely bolt the Membrane Block and Diffuser Block.

If the Membrane Block and Diffuser Block are not bolted securely, the Diffuser Block will drop off to cause a fatal accident.

DRAFT

Products Defect Warranty

Please see KUBOTA PRODUCTS WARRANTY in a separate document issued for a specific site.

DRAFT

Table of Contents

Introduction i

Safety Precautions ii

Products Defect Warranty vi

Table of Contents vii

1. Definition of Terms 1

2. Overview of KUBOTA Submerged Membrane Unit ™ 3
   - 2.1 Functions 3
   - 2.2 Models and Identifications 3
   - 2.3 SMU Specification 4
   - 2.4 SMU Structure 5
   - 2.5 Scope of KUBOTA and Ancillary Equipment 6
   - 2.6 Usage Conditions for SMU 9

3. How to Unload and Store SMU 10
   - 3.1 Before Unloading SMU 10
   - 3.2 How to Unload the Membrane Block and Diffuser Block 11
   - 3.3 Things to be Checked When SMU Arrives 15
   - 3.4 Storage of SMU 15

4. How to Assemble 17
   - 4.1 Unpacking the Membrane Block 17
   - 4.2 Unpacking the Diffuser Block 18
   - 4.3 Assembly of SMU 20

5. Installation of SMU 24
   - 5.1 Installation of Guide Set 24
   - 5.2 Lifting Up of SMU 25
   - 5.3 Installation of SMU into the Tank 26
   - 5.4 Installation of Stabilizer 26

6. Piping Connection to SMU 29
   - 6.1 Instruction of Piping 29
   - 6.2 Connection of Permeate Piping and Air Piping to Headers 29

7. Pretreatment Equipment 32
   - 7.1 Fine Screen 32
   - 7.2 FOG Separation 32
   - 7.3 Calcium Removal 32

8. Operation of Kubota SMU 34
   - 8.1 Water Level of Membrane Tank 34
   - 8.2 Management of Filtration Pressure 34

DRAFT

8.3 Prohibition of Filtration without Aeration 34
8.4 Prohibition of Aeration without Filtration 34
8.5 Mode of Operation 34

9. Clean Water Test 37
9.1 Before filling the water into the Membrane Tank 37
9.2 Clean Water Test 38

10. Actual Operation 40
10.1 Sludge Seeding 40
10.2 Check the Permeate Quality 41
10.3 Managing Permeate Flow Rate and Filtration Pressure 41
10.4 Managing Air Scour Flow Rate 41
10.5 Visual Check of Aeration 42
10.6 Diffuser Blow-down 42
10.7 Removal of Debris 42
10.8 Managing Mixed Liquor 43
10.9 Control of Foaming 44
10.10 Influent Quality Management 44
10.11 Countermeasures against Calcium Problem 44
【1 mm mesh CSS test】 46
【Diffuser Blow-down】 47
【Paper Filtration Test Method】 48

11. Maintenance 49
11.1 Cleaning of Membrane Module 49
11.2 Periodical Inspection 49
11.3 Replacement Parts 50
【Outline of In-Situ Chemical Cleaning】 51

12. Lifting up and reinstallation of SMU 54
12.1 Lifting up of SMU 56
12.2 Re-installation of SMU 58

13. Replacement of Membrane Modules 60
13.1 Lifting up of SMU 62
13.2 Pulling out of Membrane Modules 62
13.3 Assembly of Top-Stage Membrane Modules 65
13.4 Assembly of Middle-Stage Membrane Modules 66
13.5 Assembly of Bottom-Stage Membrane Modules 67
13.6 Reload of Membrane Modules 68
13.7 Re-Assembly of SMU 68
13.8 Installation of Membrane Unit 69

14. Replacement of Diffuser Rubbers 70
14.1 Lifting Out the SMU 71
14.2 Separation of Diffuser Block 71
14.3 Detachment and Disassembly of the Diffuser 72

DRAFT

14.4 Reassembly of Diffuser 72
14.5 Attachment of the Diffuser to the Diffuser Block 74
14.6 Reassembly of the SMU 74
14.7 Installation of Membrane Unit 74

15. Guide Set 75

16. Trouble Shooting 76

17. Parts List 77
17.1 Membrane Block 77
17.2 Diffuser Block 78
17.3 Adapters 78

DRAFT

1. Definition of Terms

Table 1-1 shows the definitions of the major terms used in this instruction manual.

Table 1-1 Definitions of Major Terms in This Manual

Term	Definition
Filtration Pressure	Differential pressure (P1-P2) when the filtration is suspended (P1) and conducted (P2).
Permeate	Water that permeates through membrane by the Filtration Pressure.
MBR Tank	Tank(s) where the activated sludge is retained and the SMU(s) are submerged and installed.
Permeate Pump	The pump(s) that generates the Filtration Pressure on the SMU(s). They vacuum the Permeate from the inlet side which connects to SMU(s) and discharge the Permeate from outlet side.
Membrane Blower	The blower(s) dedicated to providing air to the SMU(s).
Diffuser Air Pressure	Pressure of the air supplied to Membrane Unit. This is an important parameter for the management of the Diffuser of a Membrane Units.
Aeration Blower	The blower(s) dedicated to providing air to bioreactor tank(s) except the SMU(s).
Air Header	Header pipe to distribute air to multiple SMU(s) (see Fig. 1-1).
Permeate Header	Header pipe to collect Permeate from multiple SMU(s). In the dual-header configuration (see Fig. 1-1), the 2 headers can join into a single pipe before the Permeate Pump. Single-header configuration is also possible (see Fig. 1-2).
Permeate Piping	Piping to connect the Permeate Header and the SMU(s) (see Fig. 1-1).
Air Piping	Piping to connect the Air Header and the SMU(s) (see Fig. 1-1).
Suction Filtration	Filtration method by which the Filtration Pressure is generated by the Permeate Pump.
Gravity Filtration	Filtration method in which the Filtration Pressure is generated by level difference between the MBR Tank and the open-to-air point in the Permeate Piping (see Fig. 1-3).
Siphon Filtration	Filtration method in which the Filtration Pressure is generated by level difference between the MBR Tank and the Permeate Tank (see Fig. 1-3).
Blow-down	Operation method in which supply of air to the Diffuser(s) of the SMU(s) is temporarily stopped in order to restrain increase of the Diffuser Air Pressure caused by substance such as slime adhering on the Diffuser.
Filtration without Aeration	To conduct filtration while aeration is suspended (membrane surface is not scoured by bubble).
Aeration without Filtration	Continued aeration (membrane scouring) under the condition where filtration is suspended.

DRAFT

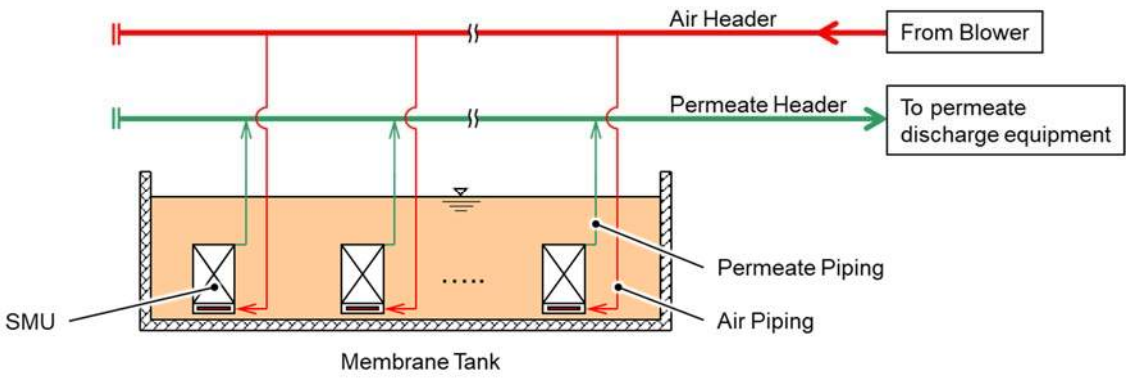

Fig. 1-1 Schematic of Header and Piping of Permeate and Air (for SP200, 300, 400, 225-A, 337-A, and 450-A)

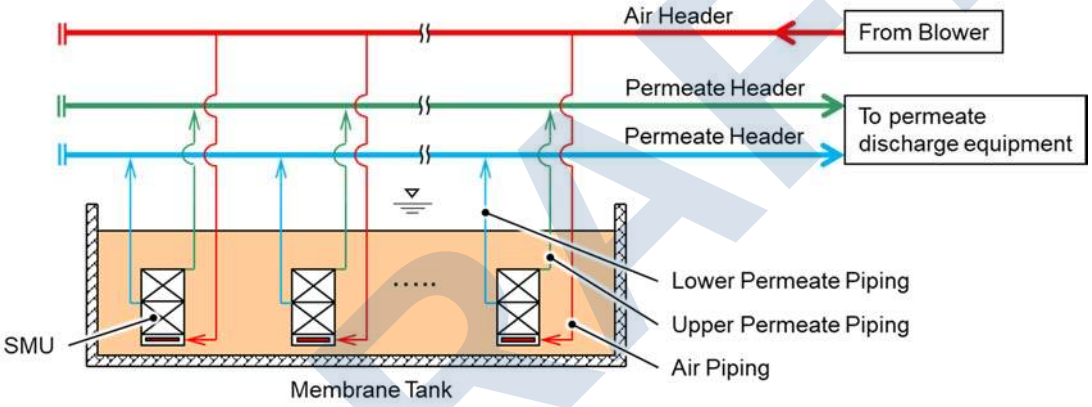

Fig. 1-2 Schematic of Header and Piping of Permeate and Air (for SP600, 800, 675-A, and 900-A)

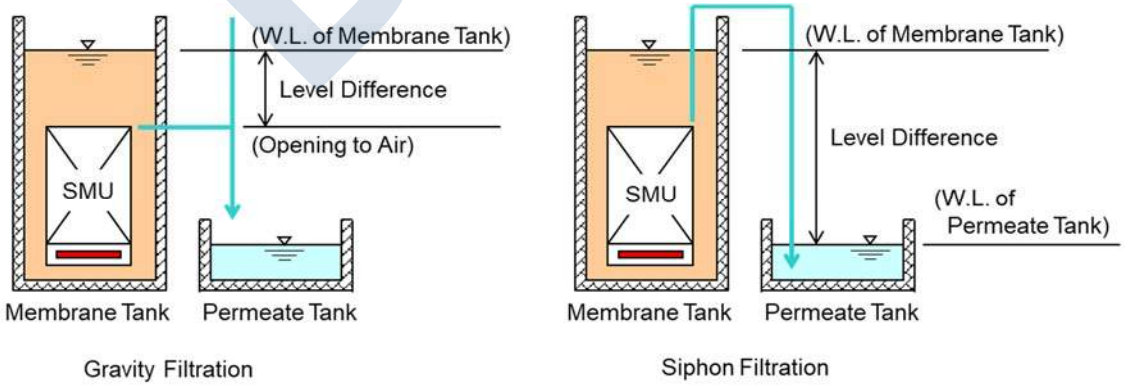

Fig. 1-3 Schematics of Gravity (Left) and Siphon (Right) Filtration Method

DRAFT

2. Overview of KUBOTA Submerged Membrane Unit ™

2.1 Functions

KUBOTA Submerged Membrane Unit ™ (SMU) is used for a solid-liquid separation that can be used to filter high-quality treated water from mixed liquor. The membranes serve as a physical barrier, preventing passage of particles with diameters larger than their pores while allowing the free passage of biologically treated water.

2.2 Models and Identifications

Different models can be recognized by the code described as follows:

SP	400	ND	-A
(a)	(b)	(c)	(d)

(a) Model

SP

(b) Total Membrane Area

200 ; 200 m^2
300 ; 300 m^2
400 ; 400 m^2
600 ; 600 m^2…Double Stack
800 ; 800 m^2…Double Stack
225 ; 225 m^2
337 ; 337.5 m^2
450 ; 450 m^2
675 ; 675 m^2…Double Stack
900 ; 900 m^2…Double Stack

(c) Metal Parts Material

Blank ; SUS304, non-pickled
D ; SUS304, acid-pickled
N ; SUS316, non-pickled
ND ; SUS316, acid-pickled

(d) Membrane

Blank ; H025-40
A ; H025-45

DRAFT

2.3 SMU Specification

Table 2-1 Specification of SMU

Model	Membrane Block Dry Weight [kg]		Diffuser Block Dry Weight [kg]	Maximum Weight *1 [kg]	Number of Membrane Modules	Effective Membrane Area [m^2]	Initial Flow Rate in Clean Water, minimum*2 [L/min]	Diffuser Air Supply Rate [Nm^3/min]*3 ([Sm^3/min]*3)	
	Upper	Lower						Required*4	Max*5
SP200	480	-	70	1,850	20	200	123	2.00 (2.15)	4.00 (4.29)
SP300	660	-	70	2,540	30	300	185	2.00 (2.15)	4.00 (4.29)
SP400	840	-	70	3,230	40	400	246	2.00 (2.15)	4.00 (4.29)
SP600	660	660	70	2,540	60	600	369	2.00 (2.15)	4.00 (4.29)
SP800	840	840	70	3,230	80	800	492	2.25 (2.41)	4.00 (4.29)
SP225-A	520	-	70	1,850	20	225	123	2.25 (2.42)	4.00 (4.29)
SP337-A	720	-	70	2,540	30	337.5	185	2.25 (2.42)	4.00 (4.29)
SP450-A	920	-	70	3,230	40	450	246	2.25 (2.42)	4.00 (4.29)
SP675-A	720	720	70	2,540	60	675	369	2.25 (2.42)	4.00 (4.29)
SP900-A	920	920	70	3,230	80	900	492	2.53 (2.72)	4.00 (4.29)

*1 The maximum weight includes maximum weight of the Membrane Block, Diffuser Block, Accessories and Unit Lifting Tool (Optional Parts) which is filled with water.
Maximum Membrane Block Weight is the weight when sludge clogs up all the gaps between membranes. If any other debris or screenings pile up on the SMU, the total maximum weight could exceed the weight shown in the above table.

*2 The table does not indicate a filtration capacity of SMU in activated sludge or mixed liquor.
Measurement Condition: Water temperature 20 [deg. C], Filtration pressure 5 [kPa]

*3 The unit of "Nm^3/min" means air flow rate measured at 0 [deg. C] and 1 [atm]. The unit of "Sm^3/min" means air flow rate measured at 20 [deg. C] and 1 [atm].

*4 The aeration equipment (e.g. Blower) must be capable of meeting the required Air Supply Rate. Insufficient air supply may deteriorate membrane permeability.

*5 The aeration equipment should have lower air supply capacity than the maximum diffuser Air Supply Rate. Using a blower with a greater rate may cause damage on SMU.

Important

Strictly observe the Diffuser Air Supply Rate

Insufficient air supply may cause filter performance deterioration and fouling. Excess air supply may cause membrane damage. Select a blower that can supply the indicated range of air considering the piping resistance and water level.

DRAFT

2.4 SMU Structure

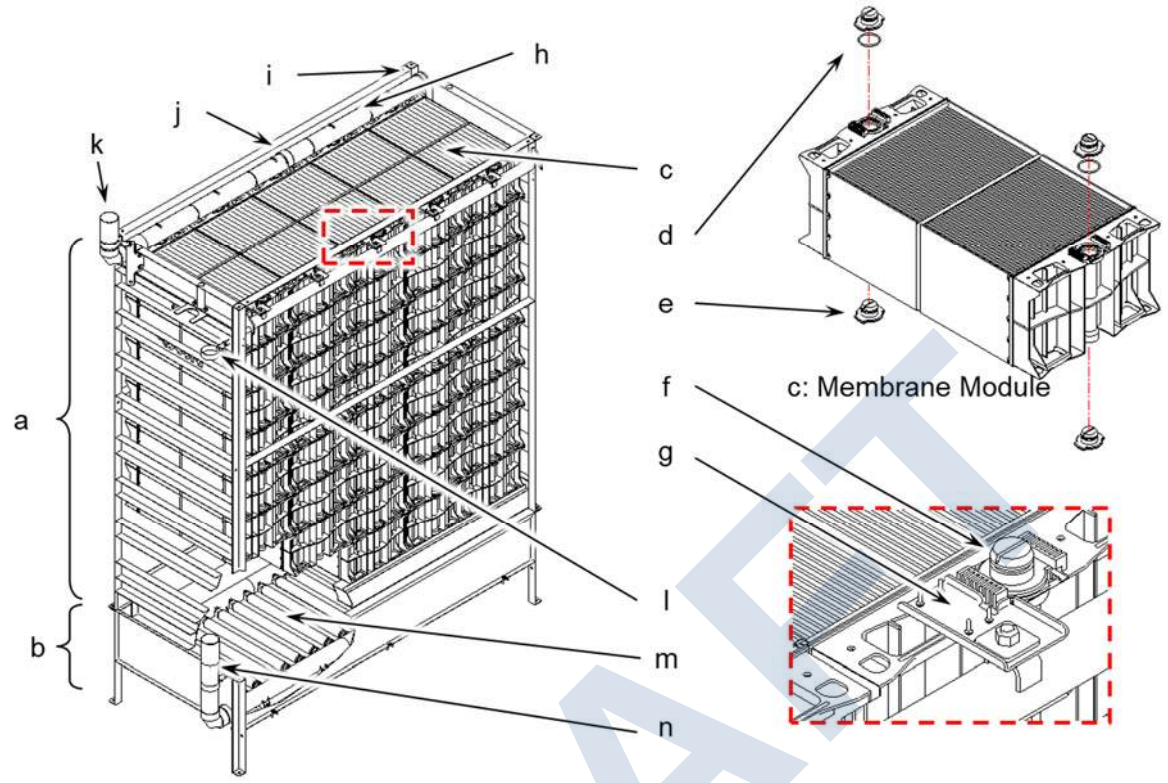

Fig. 2-1 Schematics of SMU

Table 2-2 List of Major Parts of SMU

Symbol	Name of Part	Function
a	Membrane Block	Containing Membrane Modules
b	Diffuser Block	Containing Diffuser
c	Membrane Module	Performing solid-liquid separation
d	Joint	Connecting vertically adjacent Membrane Modules
e	Lower Plug	Preventing sludge intrusion to the Membrane Module (Bottom Module only)
f	Plug	Preventing sludge intrusion to the Membrane Module (Top Module only)
g	Retainer	Fixing the Membrane Modules
h	Manifold	Collecting permeate of the Membrane Block
i	Manifold Saddle	Fixing the Manifold
j	Manifold Holder	Fixing the Manifold
k	Manifold Adapter	Connecting the Manifold to Permeate Piping
l	Pipe Support	Fixing the Permeate Piping, Air Piping and Diffuser Cleaning Piping
m	Diffuser	Ejecting air and create circulate flow
n	Diffuser Adapter	Connecting the Diffuser to the Air Piping and Diffuser Cleaning Piping

DRAFT

2.5 Scope of KUBOTA and Ancillary Equipment

The SMU functions with supports of ancillary equipment, not by itself. The ancillary equipment is roughly categorized into:

- The ancillaries needed for installation of SMU(s)
- The ancillaries needed for operation and control of SMU(s).

These ancillaries are NOT supplied by KUBOTA.

2.5.1 Ancillaries needed for installation of SMU(s) (piping is included)

Table 2-3 shows the ancillaries needed for installation of SMU.

Table 2-3 Ancillaries needed for Installation of SMU and KUBOTA's Provision

Item	KUBOTA Provision	Detailed Description
SMU	YES	The area surrounded by red broken line in Fig. 2-2.
Guide Set	NO	Structure to fix the SMU at proper position in the membrane tank. Please consult the corresponding engineering company for design information.
Unit Lifting Tool	YES	Tool to lift up a SMU. It is shown in Fig. 2-3, surrounded by the red broken line. A Unit Lifting Tool includes eight shackles, four Unit Slings, two Crane Slings, four Eyebolts, four Stoppers, and two Stands. See "Lifting Tool Instruction Manual" for details.
Piping		
Permeate Header	NO	
Air Header	NO	
Permeate Piping	NO	JIS VP75, DIN d90 or ASTM 3inch straight pipe can be connected to the Manifold Adapter.
Air Piping	NO	JIS VP75, DIN d90 or ASTM 3inch straight pipe can be connected to the Diffuser Adapter.

DRAFT

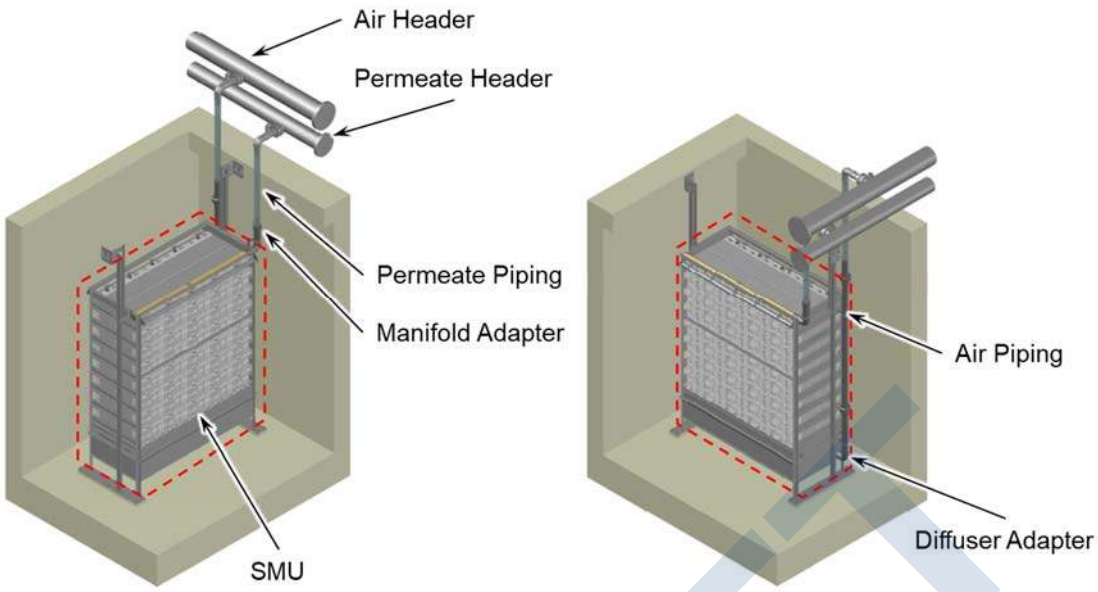

Fig. 2-2 Example of Installation of SMU

(KUBOTA's scope is surrounded by the red broken line)

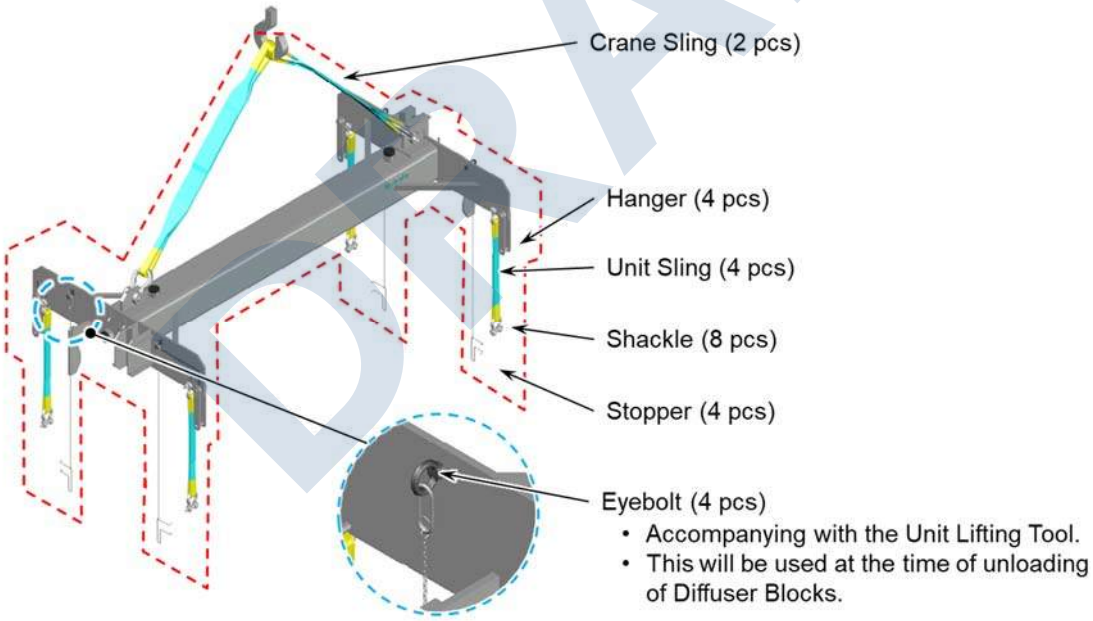

Fig. 2-3 Unit Lifting Tool and Accessories

(KUBOTA's scope is surrounded by the red broken line)

DRAFT

2.5.2 Ancillaries needed for Operation and Control of SMU

Table 2-4 shows the ancillaries needed for operation and control of SMU. They are NOT supplied by KUBOTA.

Table 2-4 Ancillaries needed for operation and control of SMU and KUBOTA's Provision

Equipment	KUBOTA Provision	Equipment and supportive ancillaries
Suction Filtration Equipment (for Suction Filtration)	NO	Control the permeate flow rate and filtration pressure using a Permeate Pump, a pressure gauge*1*2 and a constant flow valve (or a flow control valve and a flow meter*3). Flow rate can be controlled by frequency of the Permeate Pump or opening degree of motor valve.
Gravity Filtration Equipment (for Gravity Filtration)	NO	Control the permeate flow rate and filtration pressure using a motor-operated valve (or a solenoid valve), a pressure gauge*2, and a constant flow valve (or a flow control valve and a flow meter*3).
Siphon Filtration Equipment (for Siphon Filtration)	NO	Control the permeate flow rate and filtration pressure using a motor-operated valve (or a solenoid valve), a pressure gauge*2, and a constant flow valve (or a flow control valve and a flow meter*3). In this case siphoning equipment is needed to make and keep siphon.
Membrane Blower Equipment	NO	Air Supply Rate should be managed using a Membrane Blower with a flow meter. Control the Air Supply Rate to the Diffuser of a SMU within the range of "Diffuser Air Supply Rate" shown in Table 2-1.
Chemical Cleaning Equipment	NO	Chemical Feed Pump, a pressure gauge, and flow meter are required. An air vent valve is also needed at Permeate Header. In addition, piping configuration and/or controlling system are needed to limit the chemical feed pressure*4 under 10 [kPa].
Air Elimination Equipment (as needed)	NO	When air trap is anticipated to grow in the Permeate Piping, install air elimination equipment (for example, air separation tank and vacuum pump) around the anticipated points.

*1 The filtration pressure gauge should be installed at upstream of on-off valve in the suction side of the Suction Pump. The required measuring range depends on the installed site. If the installing site is not clearly determined, use a combination gauge (-100 ~ 100 [kPa].)

*2 Reading of the filtration pressure gauge is affected by the water level of the MBR Tank. In the case that the level is anticipated to fluctuate, install a level gauge in the MBR Tank to correct the filtration pressure gauge by the reading of the level gauge. For example, when the water level of the MBR Tank lowered by 100 [mm], the reading of the filtration pressure gauge will lower by about 1 [kPa].

*3 Recommended permeate flow meter is a direct-reading and integrating one.

*4 Chemical feed pressure is the pressure acting inside Membrane Modules during the chemical feed. The chemical feed pressure can be monitored by checking the difference in pressure indicated by the nearest pressure gauge to SMU. The difference between the pressure indicated when chemical feed pump is stopped (but the pipe between the pump and the SMU should be full) and the pressure indicated when the chemical feed pump is running is the chemical feed pressure.

DRAFT

2.6 Usage Conditions for SMU

Usage conditions for SMU are as follows. If using under other conditions, please consult with us.

Table 2-5 Usage Conditions for SMU

Item	Usage Condition
Purpose	Solid-Liquid Separation of Activated sludge
Filtration Condition	Gravity, Suction or Siphon Filtration
Diffuser Supply Air Flow Rate	See “Table 2-1”
Filtration Pressure*1	20 kPa or less
Chemical Feeding Pressure*2 (In-Situ Chemical Cleaning)	Continuous: 10 kPa or less
Cleaning Chemical*2 (for cleaning Membrane Module)	Sodium Hypochlorite Recommended effective chloride is: 0.6% or less when MLSS > 10,000 mg/L 0.3% or less when MLSS < 10,000 mg/L (Use with less than 1.0% effective chloride) Mainly for organic foulant
	Oxalic Acid Use at less than 1.0% concentration. (Adjust according to clogging degree) Mainly for inorganic foulant If Calcium Carbonate precipitate in the tank, use at less than 1.0% of chloric or citric acid instead.
Water Temperature*3	5~40 degree C
pH*3	5~10

*1 Filtration pressure means the difference (P1-P2) between the pressures in permeate pipe when filtration is suspended (P1) and filtration is conducted (P2).

*2 Refer to "【Outline of In-Situ Chemical Cleaning】" for additional information about the chemical cleaning.

*3 The water temperature and pH described above do not represent the operational condition of activated sludge process.

DRAFT

3. How to Unload and Store SMU

3.1 Before Unloading SMU

- Plan carefully an unloading route to the tank where the SMU is to be installed.
- Prepare the equipment (crane, hoist, and forklift) that will be used to unload the SMU shipment.
- Secure a temporary storage space for the SMU.
- Make sure that MBR Tank is finished in construction and carefully cleaned up.
- To prevent the SMU from welder or grinder sparks during construction work, adjust the time schedule. Covering it with fireproof sheet (Customer's Provision) is recommended.
- Combination of Membrane Block and Diffuser Block with different delivery date cannot be used due to design change or other reasons. Consult with us.

Prohibited	**Keep away from fire and spark** Keep SMU and Membrane Modules away from fire (and also spark from welding, fusing, and grinding). They may cause damage on parts of SMU, especially the membrane sheet can get holes and be no use.

Prohibited	**Never expose to high temperature or sunlight** Never leave out SMU (or Membrane Block or Diffuser Block) where they will be exposed to high temperature or sunlight such as daylight. This condition changes the shape or quality of the SMU parts so that proper operation cannot be conducted.

Prohibited	**Avoid wetting of Membrane Modules** Do not wet the Membrane Cartridges before use. When wet Membrane Cartridges dry, their filterability decreases significantly. Put a protective covering such as tarpaulin as needed.

Prohibited	**Do not remove the protective vinyl sheet on the Membrane Block before use** Do not remove the vinyl sheet on the Membrane Block until operation starts. It protects Membrane Modules from dust.

Prohibited	**Be careful not to damage the membrane surface** Hurt on the Membrane surface can cause Suspended Solids contamination in the permeate water. Because damaged membranes cannot be repaired, replacement will be needed.

DRAFT

3.2 How to Unload the Membrane Block and Diffuser Block

A Membrane Block and a Diffuser Block is shipped with the individual package. To unload a Membrane Block and a Diffuser Block, use a forklift, a crane or hoist with the Unit Lifting Tool.

3.2.1 Unload of Membrane Block

During shipment, the whole Membrane Block is wrapped up with plastic bag and fixed on a wooden pallet. Please follow below procedures to unload the Membrane Block.

(a) Unload using a forklift

Insert the fork under the wooden pallet on which the Membrane Block is fixed to unload it from a truck or container (see Fig. 3-1).

(b) Unload using a crane/hoist

In the case using a crane or hoist, always use Unit Lifting Tool (optional parts). **For more information about how to use the Unit Lifting Tool, see "Lifting Tool Instruction Manual".**

(1) Ensure safety of the components to which loads are imposed before use. Make sure that they are free from abnormality such as crack, corrosion, rust, abrasion, or wear before use.

(2) Attach Unit Slings to the holes (Catch) of the Unit Lifting Tool. Remove all Shackles at the lower end of the Unit Slings. And attach Hangers to the holes (Release) of the Unit lifting Tool and flip up them (see Fig. 3-1). **Please use the Unit Sling only for lifting a dry new Membrane Block (for unloading or assembling of Membrane Unit), Diffuser Block (for unloading), or Membrane Unit (for assembling of Membrane Unit or first installation to the tank). Please do not use the Unit Sling for lifting a wet or clogged Membrane Unit.**

(3) Lift up the Unit Lifting Tool using Crane Slings and move the Unit Lifting Tool to right above the Membrane Block. Be careful not to touch the lower end of the Unit Sling to Membrane Modules.

(4) Tear the plastic bag near Hooks (4 pcs) of the Membrane Block and attach Eye at lower end of the Unit Sling to the Hook (see Fig. 3-1). Do not tear the plastic more than necessary.

(5) Attach Stoppers to all the four (4) Hooks (see Fig. 3-1).

(6) Lift the Unit Lifting Tool slowly while checking safety to unload the Membrane Block.

DRAFT

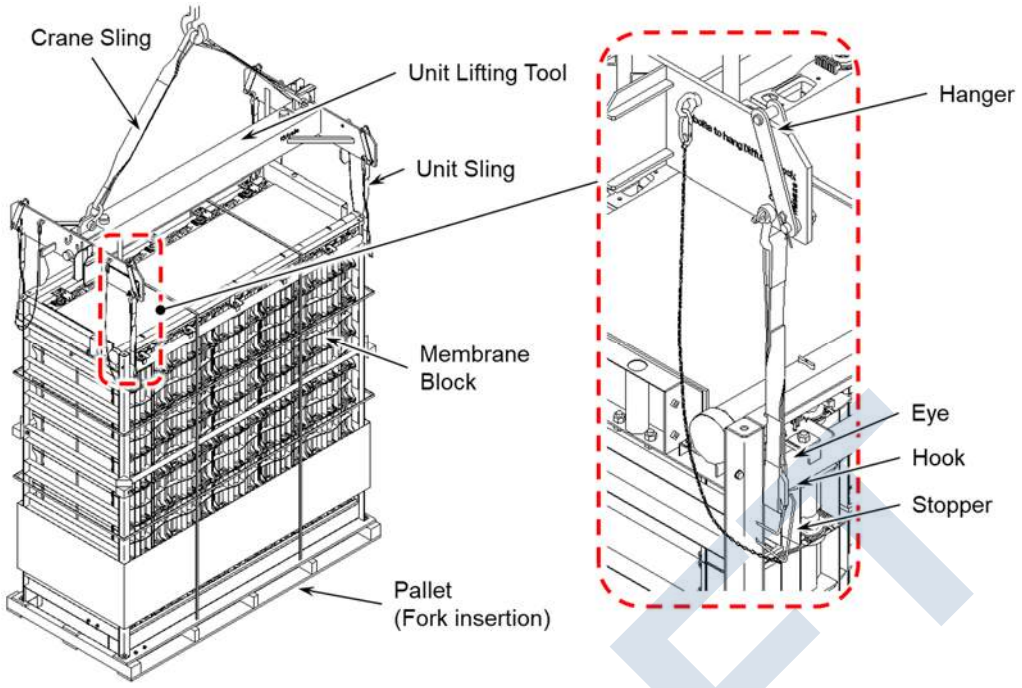

Fig. 3-1 Packing style and unloading way of Membrane Block

3.2.2 Unload of Diffuser Block

At shipping, up to 3 Diffuser Blocks are stacked up and capped with a plastic bag. **A stacked Diffuser Block is fixed to each other with bolts, nuts and washers (see Fig. 3-2). Store those bolts, nuts, and washers including those fixed on the top Diffuser Block until the assembly of SMU, because they will be reused for connecting the Membrane Block and Diffuser Block.** However, the bolts fixing the pallet and bottom Diffuser Block are not reused for the assembly.
Be careful not to damage the Diffuser and proceed the unloading work while checking safety.

(a) Unload using a forklift

In the case using a forklift, insert the fork under the wooden pallet to unload it from a truck or container (see Fig. 3-2).

(b) Unload using a crane/hoist

In the case using a crane or hoist, always use Unit Lifting Tool (optional parts). **For more information about how to use the Unit Lifting Tool, see "Lifting Tool Instruction Manual".**

(1) Ensure safety of the components to which loads are imposed before use. Make sure that they are free from abnormality such as crack, corrosion, rust, abrasion, or wear before use.

(2) Attach Unit Slings to the holes (Catch) of the Unit Lifting Tool. Attach Shackles at the lower end of the Unit Slings. Attach hangers to the holes (Release) of the Unit Lifting Tool and flip up them. And remove Stoppers. **Please use the Unit Sling only for lifting a dry new Membrane Block (for unloading or assembling of Membrane Unit), Diffuser Block (for unloading), or Membrane Unit (for assembling of Membrane Unit or first installation to the tank). Please do not use the Unit Sling for lifting a wet or clogged Membrane Unit.**

DRAFT

(3) Lift up the Unit Lifting Tool using Crane Slings and move the Unit Lifting Tool to right above the Diffuser Block. Be careful not to touch the lower end of the Unit Sling to Diffuser.

(4) Remove four (4) bolts at top corners of top Diffuser Block. Attach four (4) Eyebolts which are accompanied with the Unit Lifting Tool to the top corners of the top Diffuser Block (see Fig. 3-2). **Store the removed bolts from the top Diffuser Block until the assembly of SMU, because they will be reused for connecting the Membrane Block and Diffuser Block.**

(5) Connect the Shackles of the Unit Slings to Eyebolts (see Fig. 3-2).

(6) Lift the Unit Lifting Tool slowly while checking safety to unload the Diffuser Block. Up to 3 stacked Diffuser Blocks can be lifted up at once.

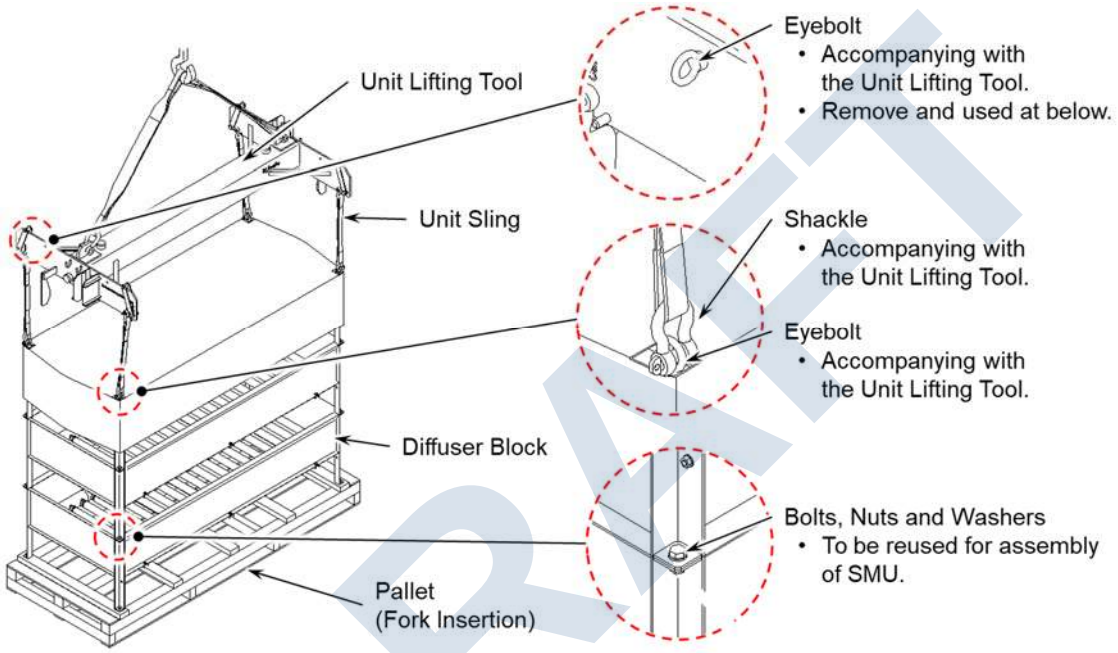

Fig. 3-2 Packing style and unloading way of Diffuser Block

Warning

Take safety measures not to cause fall accident

Ensure safety of workers by using handrails, scaffolds and safety belt or other devices when using the Unit Lifting Tool. Pay particular attention near the tank opening because the floor may be slippery by wetness.

Never climb on the Membrane Unit.

Poor safety measures may result in fatal accident.

Warning

Never go beneath a lifted Membrane Block or Diffuser Block

If they fall down, fatal accident may occur.

DRAFT

Caution

Check the Lifting Tool for abnormalities

Before using Lifting Tools supporting load, check if crack, corrosion, rust, abrasion, and deformation. And also, check the Slings of the KUBOTA's Lifting Tool for abnormalities such as a cut, abrasion, scratch, broken stitch, discoloration, coloration, fusion, and melting.

Immediately replace the tools with abnormality. Continued use of them may cause human accident by product dropping.

Caution

Lift a Membrane Block or Diffuser Block with the Lifting Tool straight up and quietly.

Lift a Membrane Block or Diffuser Block with the Lifting Tool straight up, quietly, and without swing. Swung Block may cause physical injuries and/or damage on surrounding equipment.

Caution

Conduct the lifting work by two or more persons.

If the crane or chain block operator alone conducts all the work, his risk prediction ability will significantly decrease due to increased blind spots.

Caution

Do not place any part of your body between a Lifting Tool and a Membrane Block or a Diffuser Block.

Do not place any part of your body, such as a hand or a head, between a Lifting Tool and a Membrane Block or a Diffuser Block. It may cause a fatal accident under unsafe operation or during an unexpected drop accident.

Caution

Be sure to check that there are no slacks of Shackles and Eyebolts. .

If the Shackles or Eyebolts come off, the product will drop down and result in fatal accident or damage on the surrounding equipment.

Caution

The Lifting Tools should be used by four point lifting.

When lifting up a Membrane Block or Diffuser Block, always hang it at four points. If lifted at three or two points, it may drop or swing and result in a fatal accident.

Caution

Check the slings for twist before use.

Make sure that a set of slings have the same length and no kinks while it is attached on the Unit Lifting Tool. Otherwise the load may be supported by only three or two slings, resulting in an accident.

DRAFT

Caution	**Use eyebolts when lifting up a Diffuser Block by the Unit Lifting Tool.** When lifting up a Diffuser Block, always use the four eyebolts which are accompanied with the Unit Lifting Tool. If lifted in an unstable condition, it may drop or swing and result in a fatal accident.

Caution	**Wear adequate gloves such as cotton work gloves during work.** Use work gloves such as cotton work gloves when handling the SMU. Bare-hand work may cause an unexpected injury.

Prohibited	**Never use the Lifting Tool for the purpose other than lifting a SMU.** The Unit Lifting Tool (optional part) is for lifting a Membrane Block, Diffuser Block, or Membrane Unit safely. Never use the Lifting Tool for any other purpose.

Prohibited	**Do not remove the protective vinyl sheet on the Membrane Block before use** When unloading, do not remove the vinyl sheet on the Membrane Block. It protects Membrane Modules from dust.

3.3 Things to be Checked When SMU Arrives

When a package of the SMU arrives, it is recommended to check the followings:

- Confirm that the package contains all the components and parts indicated in the packing list.
- Make sure all the components and parts are not damaged during the shipment.

3.4 Storage of SMU

Take care of the following matters in storage of SMU.

- SMU must be stored on a level and flat place.
- Always cover the SMU with the plastic bags during the storage.
- To avoid wetting of the SMU, put a protective covering such as tarpaulin as needed.
- Avoid an exposure to direct sunlight, and store SMU indoors at the room temperature between 5 and 40 degree C.
- Avoid high humidity or dusts during storage.
- Spare Membrane Modules for replacement should also be stored indoors. Refer to "11.3 Replacement Parts" for detail.

DRAFT

Prohibited	**Keep away from fire and spark** Keep SMU and Membrane Modules away from fire (and also spark from welding, fusing, and grinding). They may cause damage on parts of SMU, especially the membrane sheet can get holes and be no use.

Prohibited	**Never expose to high temperature or sunlight** Never leave out SMU (or Membrane Block or Diffuser Block) where they will be exposed to high temperature or sunlight such as daylight. This condition changes the shape or quality of the SMU parts so that proper operation cannot be conducted.

Prohibited	**Avoid wetting of Membrane Modules** Do not wet the Membrane Modules before use. When wet Membrane Modules dry, their filterability decreases significantly. Put a protective covering such as tarpaulin as needed.

Prohibited	**Do not remove the protective vinyl sheet on the Membrane Block before use** When unloading, do not remove the vinyl sheet on the Membrane Block. It protects Membrane Modules from dust.

Prohibited	**Be careful not to damage the Membrane Surface** Hurt on the Membrane surface can cause Suspended Solids contamination in the permeate water. Because damaged membranes cannot be repaired, replacement will be needed.

DRAFT

4. How to Assemble

Unpack the Membrane Block and Diffuser Block and fix the Membrane Block onto the Diffuser Block (see Fig. 4-6). In the case of double stack unit, upper Membrane Block is installed without connecting Diffuser Block.

4.1 Unpacking the Membrane Block

(1) Remove pallet and the Lashing Hooks (see Fig. 4-1).

(2) Remove Guide Plates which are attached to the pallet and attach them to the Membrane Block using bolts and nuts which are accompanied with the Membrane Block (see Fig. 4-1). The tightening torque of the bolts (size : M12) should be 50 - 60 N·m.

(3) Do not remove the plastic bag until the clean water test starts. **Do not tear it more than necessary,** during the procedure of (1) and (2).

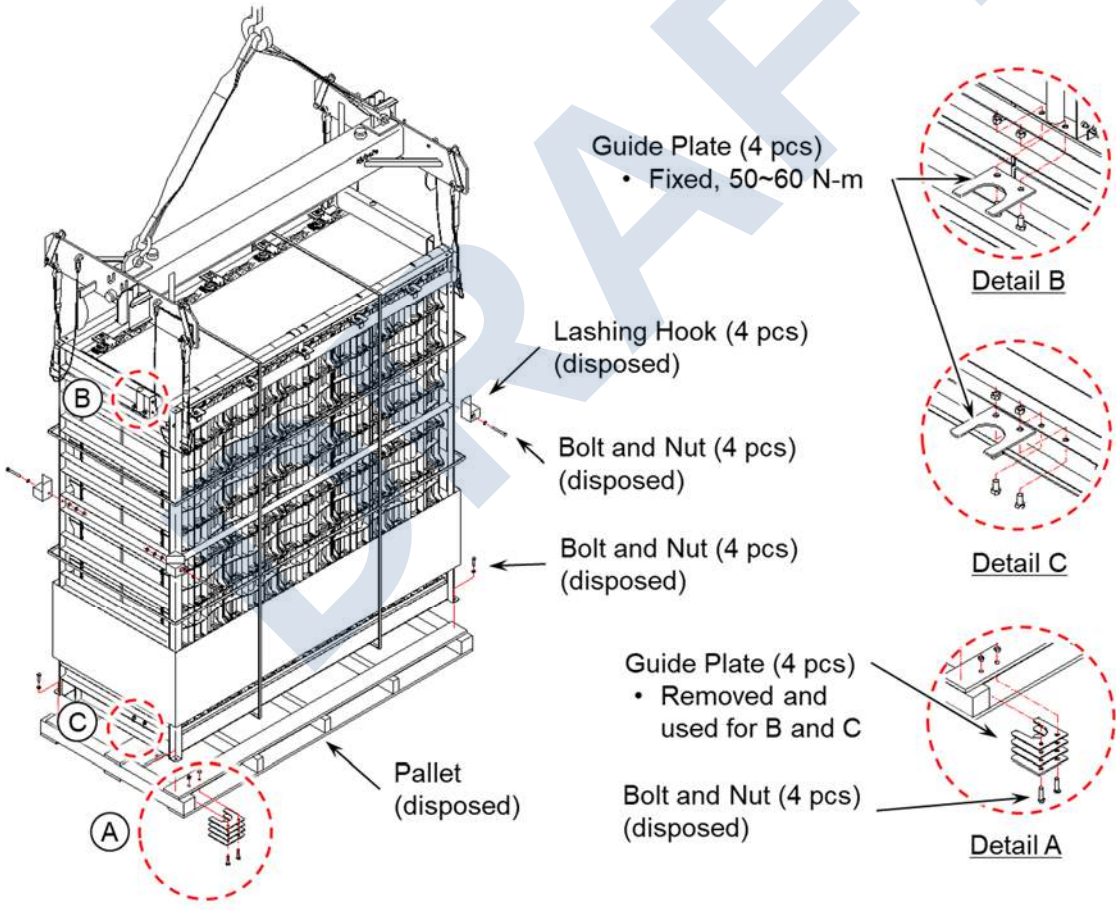

Fig. 4-1 How to unpack the Membrane Block

DRAFT

4.2 Unpacking the Diffuser Block

(1) Remove the plastic wrap.
(2) Remove the 4 Lashing Hooks (see Fig. 4-2).
(3) Remove the bolts, nuts, and washers at the four corners of the top Diffuser Block in the stack. **Keep them until the assembly of a SMU because they are reused to couple a Membrane Block and Diffuser Block** (see Fig. 4-2).
(4) Install the eyebolts (attached to the Unit Lifting Tool) at the four corners where the preinstalled bolts are removed in (3). Then fix the shackles of the Unit Lifting Tool onto the eyebolts (see Fig. 4-2 and Fig. 4-3).

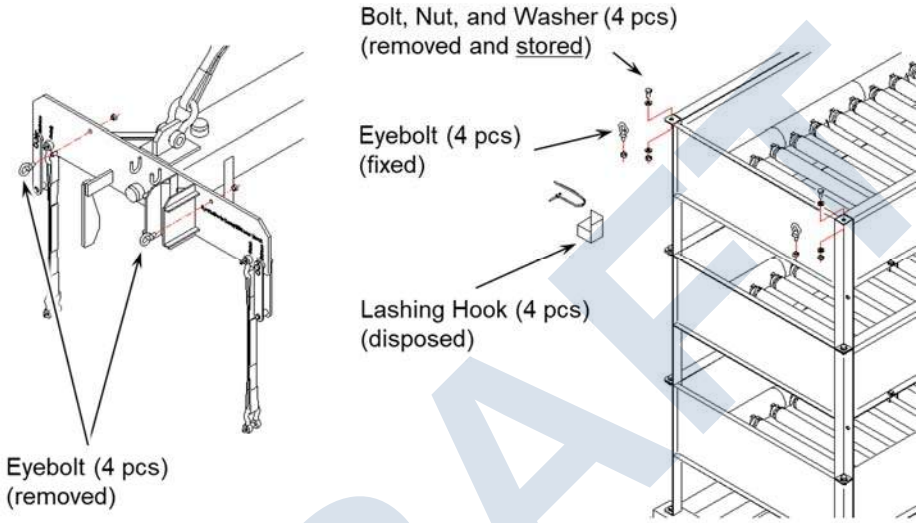

Fig. 4-2 How to Install Eyebolts and Remove the Lashing Hook

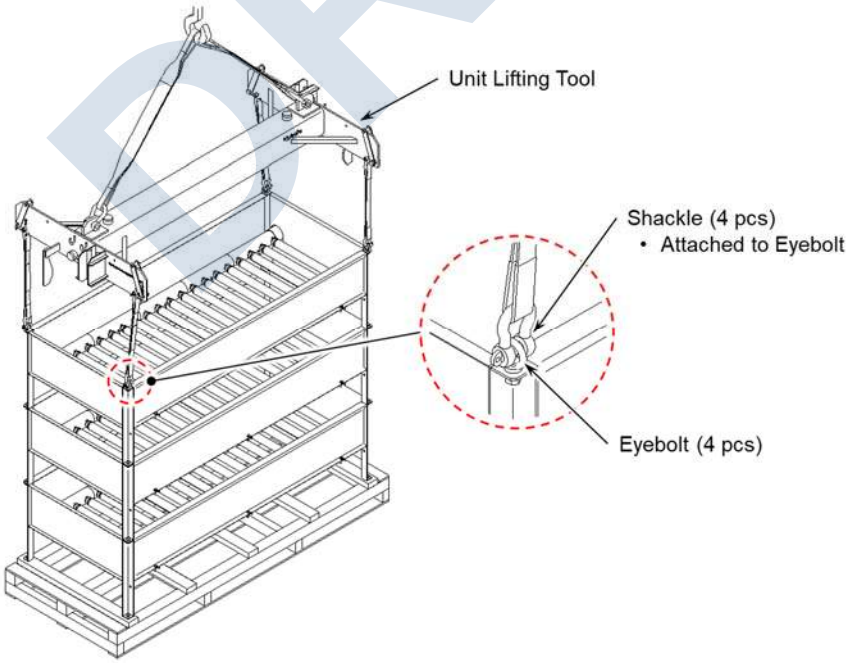

Fig. 4-3 How to attach the Unit Lifting Tool on to the top Diffuser Block

DRAFT

(5) Remove the bolts, nuts, and washers that connects the top Diffuser Block and the 2nd top Diffuser Block (see Fig. 4-4). **Keep them until the assembly of a SMU because they are reused to couple a Membrane Block and a Diffuser Block.**

(6) Lift up the top Diffuser Block only and place it on a flat ground (see Fig. 4-4).

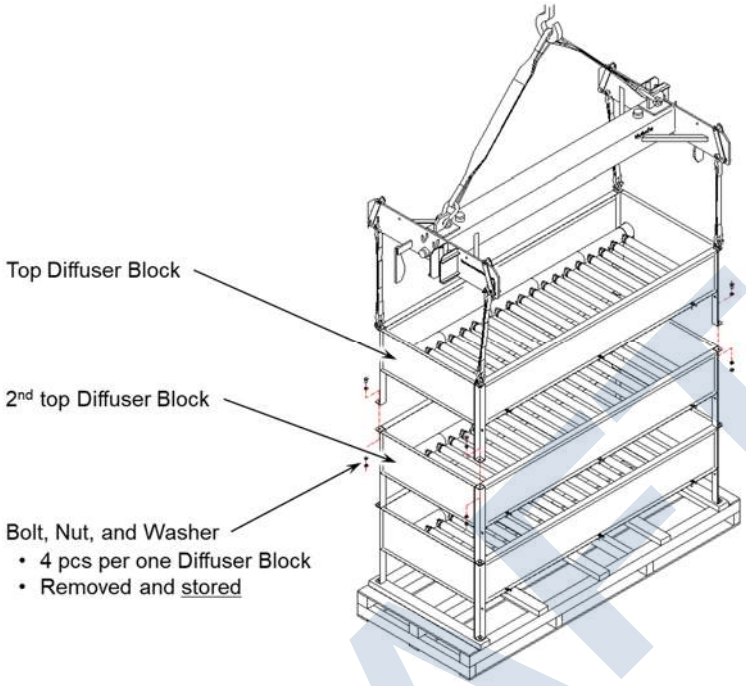

Fig. 4-4 How to Divide the Stacked Diffuser Blocks

(7) In the same way, place all the Diffuser Block on the flat ground.

(8) Remove the pallet from the bottom Diffuser Block (see Fig. 4-5). The bolts and washers on the pallet are not to be reused for the assembly of SMUs.

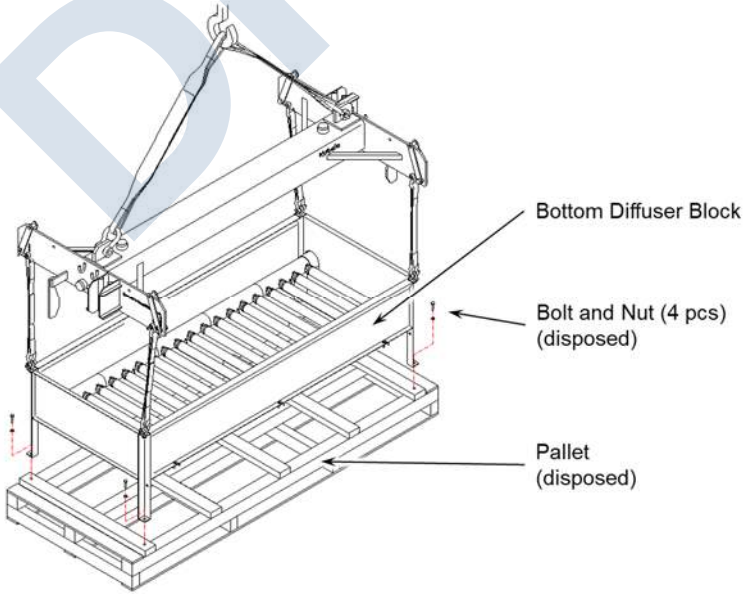

Fig. 4-5 How to Remove the Pallet

DRAFT

4.3 Assembly of SMU

(1) Place the Diffuser Block on a level and firm ground.

(2) Lift up the Membrane Block with a Unit Lifting Tool. Then place it on the Diffuser Block (see Fig. 4-6).

(3) Connect the Membrane Block and Diffuser Block with the bolts, nuts and washers which were removed when the Diffuser Block was disassembled. The tightening torque of the bolts (size: M12) should be 50 - 60 N·m.

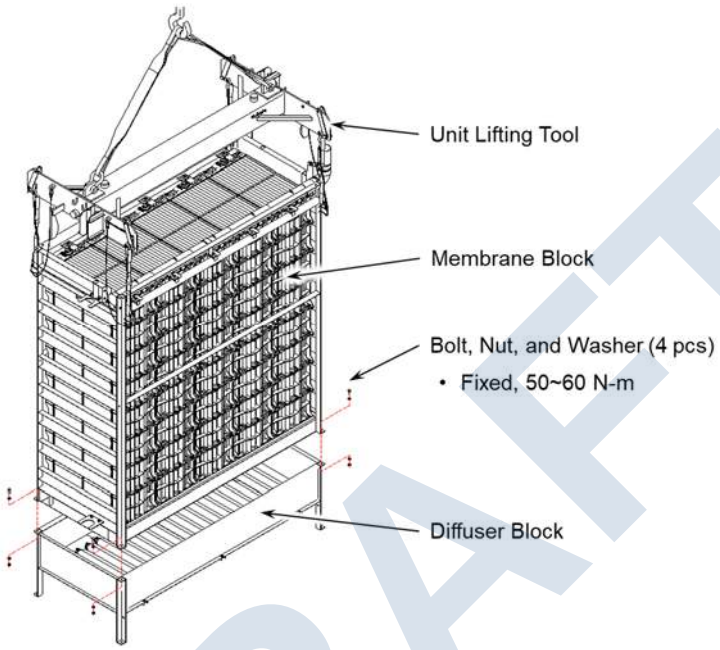

Fig. 4-6 How to Couple the Membrane Block and the Diffuser Block

(4) Glue Diffuser Adapters (1 pc) and Manifold Adapters (1 pc) onto the pipes in the SMU (see Fig. 4-7 and Fig. 4-8 respectively).

- Remove the dust and oil on the adhering surface.
- Use a commercial adhesive bond for PVC.
- Procedure of adhesion is same for general PVC pipes.
- Insert the Adapters until the mark-off line disappears in the sockets of the Diffuser and the Manifold.
- Using one of two pipe supports accompanying the Diffuser Adapter, fix the Diffuser Adapter to the Diffuser Block. The tightening torque of the bolts (size: M8) should be 14 - 17 N·m. **Remove and store the other pipe support from the Diffuser Adapter for later use for fixing Air Piping to the Membrane Block.**
- Remove a Bracket accompanying the Manifold Adapter temporarily. Once the Manifold Adapter is glued to Manifold, fix the Manifold Adapter to the Membrane Block by using the Pipe Support and Bracket. The tightening torque of the bolts (size : M8) should be 14 - 17 N·m. Also, tighten nuts of the Manifold Saddle this time because the nuts are not tightened perfectly at factory in order to avoid deformation of the Manifold during transportation. The tightening torque of the bolts (size : M8) should be 14 - 17 N·m. Note that the same assembly works need to be done for upper Membrane Block in the case of double deck unit.

DRAFT

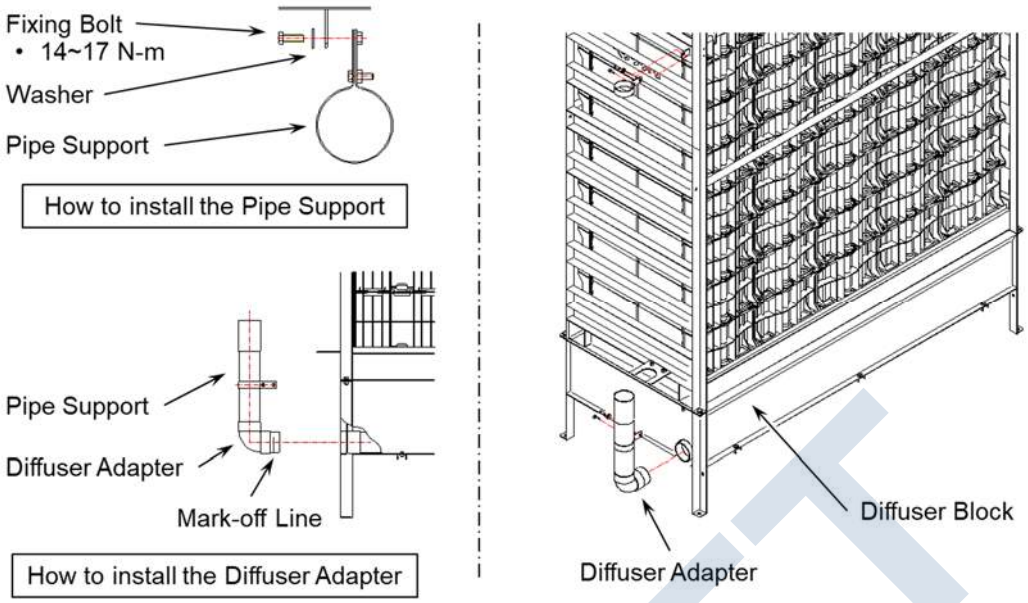

Fig. 4-7 How to Install Diffuser Adapter

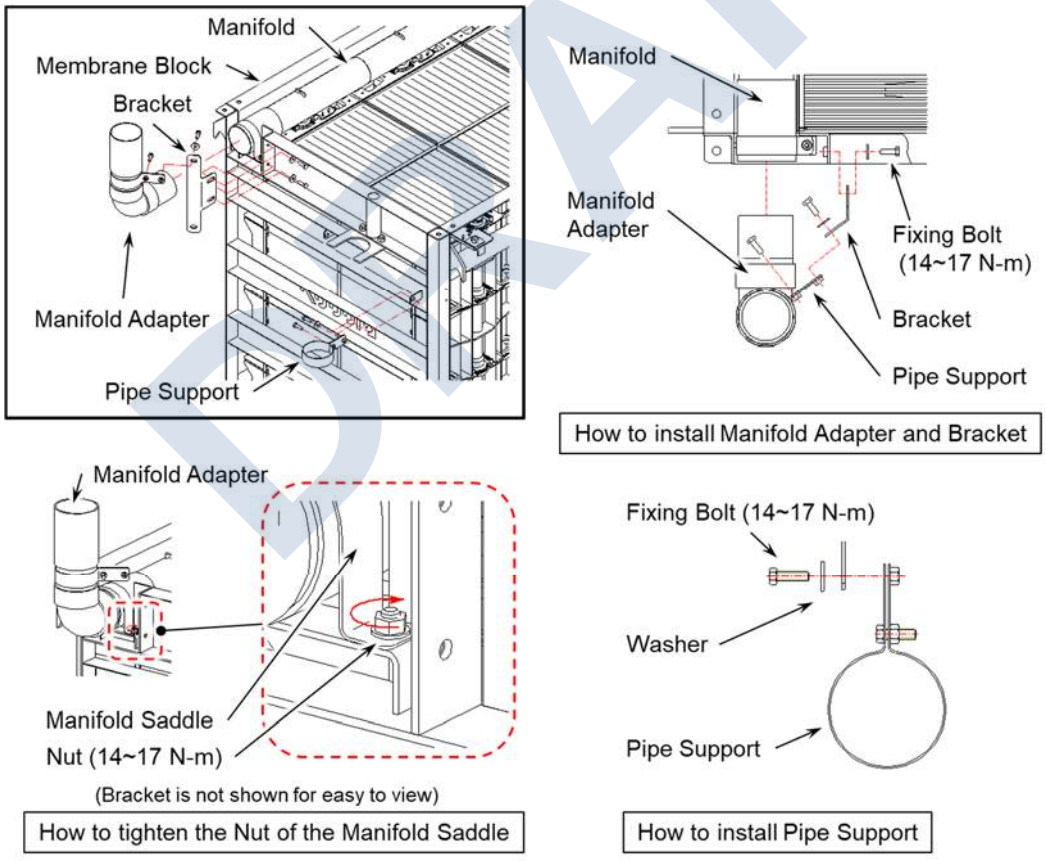

Fig. 4-8 How to Install Manifold Adapter

DRAFT

Warning

Take safety measures to prevent falling accident

Ensure the safety of workers by installing handrails, scaffolding and safety equipment to prevent a fall accident. Pay particular attention near the tank opening because the floor may be slippery by wetness.

Poor safety measures may result in fatal accident.

Warning

Never go beneath a lifted Membrane Block, Diffuser Block, Membrane Unit, or Membrane Module

If they fall down, fatal accident may occur.

Caution

Before using Lifting Tool, make sure that they have no abnormality

Before using Lifting Tools supporting load, check if crack, corrosion, rust, abrasion, and deformation. And also, check the Slings of the KUBOTA's Lifting Tool for abnormalities such as a cut, abrasion, scratch, broken stitch, discoloration, coloration, fusion, and melting.

Immediately replace the tools with abnormality. Continued use of them may cause human accident by product dropping.

Caution

Conduct the lifting work by two or more persons.

If the crane or chain block operator alone conducts all the work, his risk prediction ability will significantly decrease due to increased blind spots.

Caution

Securely bolt the Membrane Block and Diffuser Block.

If the Membrane Block and Diffuser Block are not bolted securely, the Diffuser Block will drop off to cause a fatal accident.

Caution

Do not place any part of your body between a Lifting Tool and a Membrane Block or a Diffuser Block.

Do not place any part of your body, such as a hand or a head, between a Lifting Tool and a Membrane Block or a Diffuser Block. It may cause a fatal accident under unsafe operation or during an unexpected drop accident.

Caution

Be sure to check that there are no slacks of Shackles and Eyebolts.

If the Shackles or Eyebolts come off, the product will drop down and result in fatal accident or damage on the surrounding equipment.

DRAFT

Caution	**Lift a Membrane Block or Diffuser Block straight up slowly and safety by using a Lifting Tool** When lifting a Membrane Block or Diffuser Block, lift it straight up slowly and safely. If it swings, physical injuries and/or damage on surrounding equipment may occur.

Caution	**The Lifting Tools should be used by four point lifting.** When lifting up a Membrane Block or Diffuser Block, always hang it at four points. If lifted at three or two points, it may drop or swing and result in a fatal accident.

Caution	**Check the slings for twist before use.** Make sure that a set of slings have the same length and no kinks while it is attached on the Unit Lifting Tool. Otherwise the load may be supported by only three or two slings, resulting in an accident.

Caution	**Wear adequate gloves such as cotton work gloves during work.** Working with bare hands may result in unexpected injuries.

Prohibited	**Never use the Lifting Tool for lifting other thing or for other purpose** The Unit Lifting Tool is for lifting up a Membrane Block or Diffuser Block safety. Do not lift other things or use for other purpose.

Prohibited	**Do not remove the protective vinyl sheet on the Membrane Block before use** Do not remove the vinyl sheet on the Membrane Block. It protects Membrane Modules from dust.

Prohibited	**Keep away from fire and spark** Keep SMU and Membrane Modules away from fire (and also spark from welding, fusing, and grinding). They may cause damage on parts of SMU, especially the membrane sheet can get holes and be no use.

Important	**Use the specified Lifting Tool to lift up the Membrane Block or Diffuser Block.** It can lift up the Membrane Block or Diffuser Block without too much load.

DRAFT

5. Installation of SMU

This section explains procedures of installation of SMU into the tank where there is no water/mixed liquor. To lift the SMU, always use Unit Lifting Tool (optional parts). **For more information about how to use the Unit Lifting Tool, see "Lifting Tool Instruction Manual".**

5.1 Installation of Guide Set

Install the Guide Set following to the instruction by corresponding engineering company. In this section, installation procedure of KUBOTA's recommended Guide Set is explained. Please check installation location of the SMU based on equipment layout drawing etc. and determine installation location of the Guide Set in advance.

(1) Installation of Base Plate
- Determine installation location of the Base Plates so as to keep pitch of the paired Guide Poles as 2290 [mm] in longer direction and 350 [mm] in shorter direction.
- Fix the Base Plates so as to keep distance from bottom of the tank by 50 [mm] (for mortar installation).
- The Base Plates should be installed so as to make horizontality of the paired Base Plates be 5 [mm] or less.

(2) Installation of Support Bracket
- Determine installation location of the Support Brackets so as to keep pitch of the paired Guide Poles as 2290 [mm] in longer direction and 350 [mm] in shorter direction.
- The Support Bracket should be fixed to tank wall so as to touch the surface of the Support Bracket onto the surface of the tank wall.

(3) Installation of Guide Pole
- Install the Guide Pales so as to keep pitch of the paired Guide Poles over whole length as 2290 [mm] in longer direction and 350 [mm] in shorter direction.

DRAFT

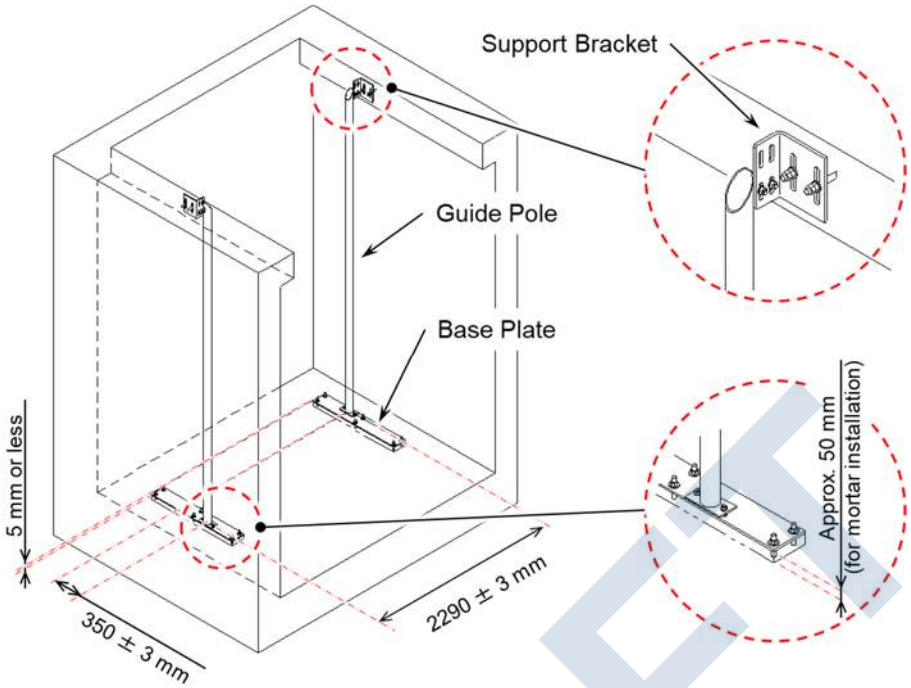

Fig. 5-1 Required Accuracy for Installation of Guide Set

5.2 Lifting Up of SMU

(1) Ensure safety of the components to which loads are imposed before use. Make sure that they are free from abnormality such as crack, corrosion, rust, abrasion, or wear before use.

(2) Attach Unit Slings to the holes (Catch) of the Unit Lifting Tool. **Please use the Unit Sling only for lifting a dry new Membrane Block (for unloading or assembling of Membrane Unit), Diffuser Block (for unloading), or Membrane Unit (for assembling of Membrane Unit or first installation to the tank). Please do not use the Unit Sling for lifting a wet or clogged Membrane Unit.**

(3) Remove Shackles at the lower end of the Unit Sling.

(4) Attach Hangers to the holes (Release) of the Unit Lifting Tool and flip up them (see Fig. 5-2 "Detail A").

(5) Lift up the Unit Lifting Tool and move it to right above the SMU.

(6) Attach the Unit Slings of the Unit Lifting Tool to Hooks at four corner of the SMU (see Fig. 5-2 "Detail B").

(7) Attach Stoppers (4 pcs) to the Membrane Block (see Fig. 5-2 "Detail B").

(8) Lift up the SMU.

DRAFT

5.3 Installation of SMU into the Tank

(1) While checking direction of the SMU, lower the SMU slowly toward bottom of the Tank so as to let Guide Plates of the SMU run along the Guide Pole (see Fig. 5-2 "Detail C").

(2) Detach the Stopper from the SMU and detach the Unit Sling from the Hook. Then lift up the Unit Lifting Tool only.

(3) In the case of double deck unit, install Upper Membrane Block on top of the Lower Membrane Block by following to the similar procedure above.

(4) After completing installation of the SMU, remove dirt from the Unit Lifting Tool, and dry the Unit Lifting Tool. Then store the Unit Lifting Tool indoor.

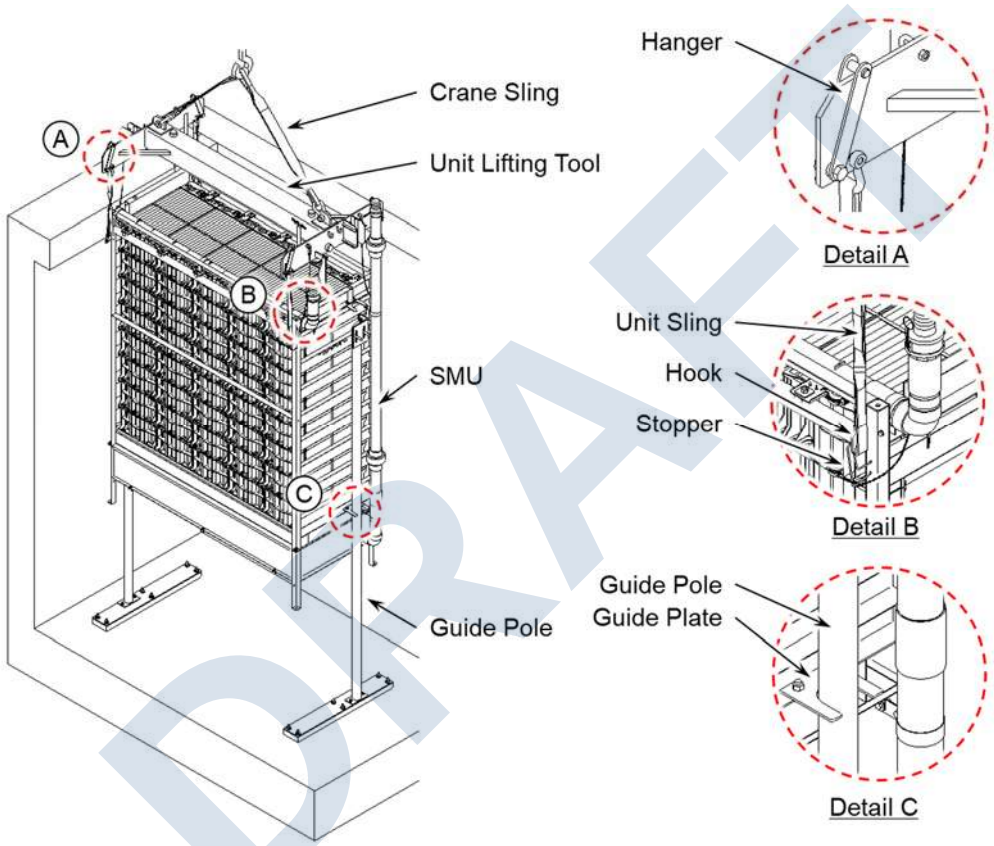

Fig. 5-2 How to Install SMU into Tank

5.4 Installation of Stabilizer

(1) Install Stabilizers in order to avoid flotation of SMU due to buoyancy while the SMU is submerged in the water or mixed liquor.

(2) Insert the Stabilizer into a hole on top of Membrane Block and fix top end of the Stabilizer to Support Bracket using bolts (see Fig. 5-3).

DRAFT

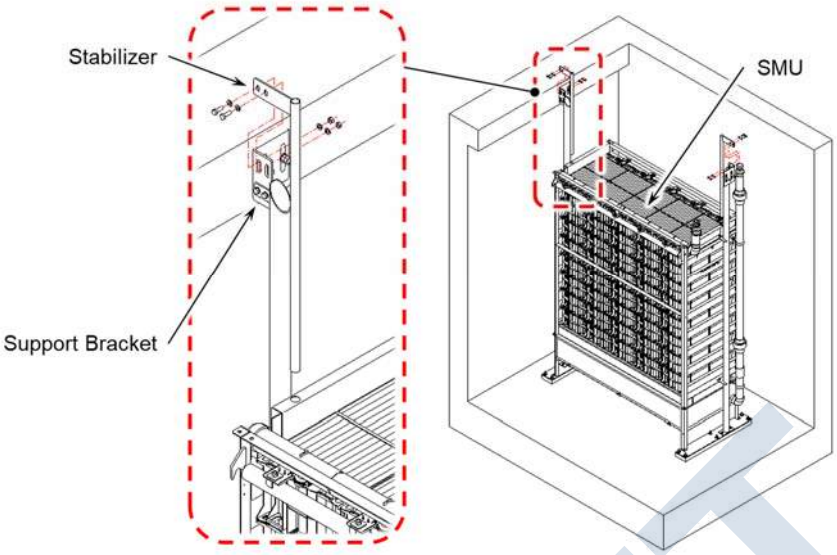

Fig. 5-3 How to Install Stabilizer

Warning

Take safety measures to prevent falling accident

Ensure the safety of workers by installing handrails, scaffolding and safety equipment to prevent a fall accident. Pay particular attention near the tank opening because the floor may be slippery by wetness.

Poor safety measures may result in fatal accident.

Warning

Never go beneath a lifted Membrane Block, Diffuser Block, Membrane Unit, or Membrane Module

If they fall down, fatal accident may occur.

Caution

Never wet the Lifting Tool nor expose it to corrosive gas.

If the Lifting Tool get corroded, its strength may decrease to a critical level, resulting in a drop accident.

Caution

Before using Lifting Tool, make sure that they have no abnormality

Before using Lifting Tools supporting load, check if crack, corrosion, rust, abrasion, and deformation. And also, check the Slings of the KUBOTA's Lifting Tool for abnormalities such as a cut, abrasion, scratch, broken stitch, discoloration, coloration, fusion, and melting.

Immediately replace the tools with abnormality. Continued use of them may cause human accident by product dropping.

Caution

Conduct the lifting work by two or more persons.

If the crane or chain block operator alone conducts all the work, his risk prediction ability will significantly decrease due to increased blind spots.

DRAFT

Caution	**Do not place any part of your body between a Lifting Tool and a Membrane Unit.** Do not place any part of your body, such as a hand or a head, between a Lifting Tool and a Membrane Unit. It may cause a fatal accident under unsafe operation or during an unexpected drop accident.

Caution	**Be sure to check that there are no slacks of Shackles and Eyebolts.** If the Shackles or Eyebolts come off, the product will drop down and result in fatal accident or damage on the surrounding equipment.

Caution	**Lift a Membrane Unit straight up slowly and safety by using a Lifting Tool** When lifting a Membrane Unit, lift it straight up slowly and safely. If it swings, physical injuries and/or damage on surrounding equipment may occur.

Caution	**The Lifting Tools should be used by four point lifting.** When lifting up a Membrane Unit, always hang it at four points. If lifted at three or two points, it may drop or swing and result in a fatal accident.

Caution	**Check the slings for twist before use.** Make sure that a set of slings have the same length and no kinks while it is attached on the Unit Lifting Tool. Otherwise the load may be supported by only three or two slings, resulting in an accident.

Caution	**Wear adequate gloves such as cotton work gloves during work.** Working with bare hands may result in unexpected injuries.

Prohibited	**Never use the Lifting Tool for lifting other thing or for other purpose** The Unit Lifting Tool is for lifting up a Membrane Unit, Membrane Block or Diffuser Block safety. Do not lift other things or use for other purpose.

Prohibited	**Keep away from fire and spark** Keep SMU and Membrane Modules away from fire (and also spark from welding, fusing, and grinding). They may cause damage on parts of SMU, especially the membrane sheet can get holes and be no use.

DRAFT

6. Piping Connection to SMU

6.1 Instruction of Piping

Design the piping around the SMU considering the location of Headers. Example piping layout is shown as Fig. 6-2.

(1) Install PVC piping from Manifold and Diffuser Adapter. For easy disassembly, install union joints, flange, or lever couplings at the connections of Membrane Block and Diffuser Block (see Fig. 6-1).

(2) Using a pipe support accompanying the Diffuser Adapter, bolt the Air Piping to the Membrane Block. The tightening torque of the bolts (size : M8) should be 14 - 17 N·m.

(3) Avoid any air-accumulating points in the Permeate Piping and/or Header.

(4) The piping connections from SMU are all sockets. Straight pipes with the diameter shown in Table 6-1 are applied to these sockets.

(5) **Never use flexible hose made of soft resin (e.g. soft PVC) for air piping.** The ingredient of the soft resin is delivered to Diffusers by air from blowers and it deteriorates materials of the Diffusers.

Table 6-1 Connection Diameter of Manifold and Diffuser and Its Number

SMU Model	Manifold Connection (Manifold Adapter)		Diffuser Connection (Diffuser Adapter)	
	Pipe Size	Nos. of Connection	Pipe Size	Nos. of Connection
SP200 SP300 SP400 SP225-A SP337-A SP450-A	JIS 75A, ASTM 3 inch, or DIN d90	1	JIS 75A, ASTM 3 inch, or DIN d90	1
SP600 SP800 SP675-A SP900-A	JIS 75A, ASTM 3 inch, or DIN d90	2	JIS 75A, ASTM 3 inch, or DIN d90	1

6.2 Connection of Permeate Piping and Air Piping to Headers

Note the following items in connecting Permeate Piping and Air Piping to the Headers (see Fig. 6-2).

- Install flanges or couplers at connections to Headers in order for piping and Headers to be decoupled easily at the time of maintenance. When using hoses to connect them, the length of hoses should NOT be too long. However, **never use the flexible hose which is made of soft resin for air piping.**
- Install union joints or flanges at every 2 m on the piping in order to avoid excess load on the Manifolds and the Diffuser.
- Design the Header so that permeate and air can be evenly distributed.

DRAFT

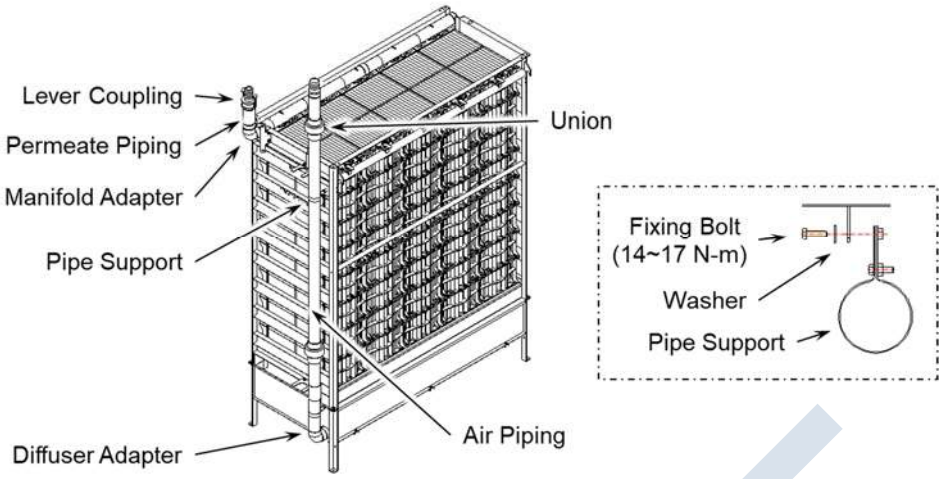

Fig. 6-1 How to Install Piping on SMU

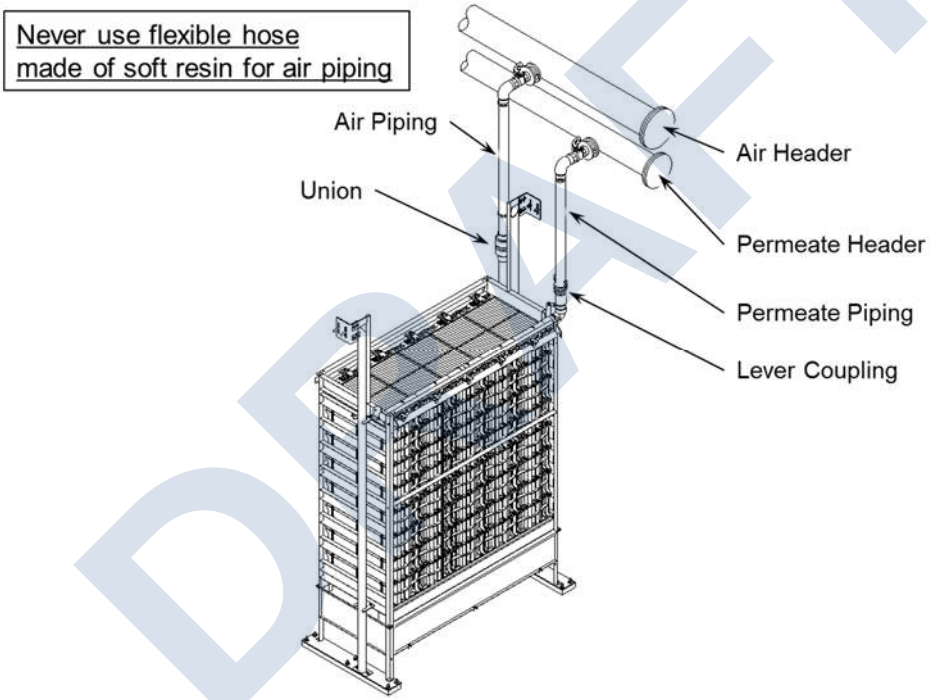

Fig. 6-2 Example of Piping Configuration around SMU

Prohibited	**Do not hammer on the pipes.** When connecting pipes to the Manifolds and Diffuser, do not insert them by hammering because they may be broken.

Prohibited	**Do not remove the protective vinyl sheet on the Membrane Block before use.** Do not remove the vinyl sheet on the Membrane Block. It protects Membrane Modules from dust.

DRAFT

Prohibited

Never use flexible hose made of soft resin for air piping.
The ingredient of the soft resin is delivered to diffusers by air from blowers and it may deteriorate the materials of the Diffusers.

Important

Remove cutting chips from the connecting pipes.
Remove the cutting chips from inside the connecting pipes to the Manifolds before connecting the pipes. Chips contaminating into SMU may cause membrane injury.
Remove the cutting chips from inside the connecting pipes to the Diffuser before connecting the pipes. Otherwise the chips discharged with aeration air may injure membranes.

Important

Use hoses of proper length.
The hose connected to the permeate header may get slack and cause air lock if it is too long.
The hose connected to the air header may cause unexpected vibration, resulting in breakage or abrasion of piping, if it is too long.

Important

Design the permeate piping so as not to cause air trap.
The dissolved gas in the permeate may gasify to make gas trap. Design the piping configuration hard to make gas trap. Air lock in the permeate piping may not only decrease the filtration performance but also break the membranes.

Important

Design the piping configuration such that the Manifold or the Diffuser are not under load
Design the piping configuration such that the Manifold or the Diffuser are not applied load nor vibration during operation.
Use unions or flanges to disconnect Permeate Pipes when lifting the Membrane Modules.

Important

Design the permeate piping to avoid backflow of the permeate.
A massive backflow to Membrane Unit from Permeate Tank or other tanks at the time of suspension infiltration causes damage to Membrane Modules or Membrane Units.

DRAFT

7. Pretreatment Equipment

7.1 Fine Screen

If the raw water or other influent contains considerable amount of debris and screenings, remove them by a fine screen prior to the Membrane Tank.

- The recommended fine screen is a 2mm perforate and a capture rate of more than 90%.
- The raw water never bypasses or overflows the fine screen.
- Drain from the screen washer and compactor never bypasses the fine screen.

Important	**Do not let screenings, debris, or any other solid substances flow into Membrane Tank.** If screenings, debris, or any other solid substance are flown into the Membrane Tank, they may cause clogging in the Diffuser or between membranes, and cause decrease in membrane performance. Hard debris such as sand and charcoal may cause damage to membrane and Membrane Unit or accelerate damage and degradation of piping and pipe support.

7.2 FOG Separation

If the influent contains a significant amount of fat, oil, and grease (FOG), remove them prior to the biological treatment.

- The raw water contains more than the following FOG, remove the FOG with Dissolved Air Flotation or other equipment.

  Animal and plant oil: 15% of influent BOD or less
  Mineral oil: 10 mg/L or less

Important	**Do not let a significant FOG flow into Membrane Tank** If the raw water contains significant amount of oil, it may adhere on the membrane surface to deteriorate filtration performance.

7.3 Calcium Removal

If a high concentration of calcium is contained in the inflow, calcium carbonate may precipitate on the membranes and obstruct the filtration. If the influent contains a significant amount of calcium, be sure to remove it by coagulation settling process or other methods to sufficiently reduce the calcium concentration flowing into the biological reaction tank.

- A rough criterion for the need for calcium removal is 100 [mg/L] influent calcium concentration (equivalent to 250 [mg/L] hardness). However, there are cases where calcium carbonate precipitates at less than 100 mg/L calcium concentration or where it does not precipitate even with more than 100 [mg/L] calcium concentration because the precipitation is affected by various parameters.

DRAFT

- Operation countermeasure is described in “10.11 Countermeasures against Calcium Problem”.

Important	**Do not let in high concentration of calcium flow into Membrane Tank** High concentration of calcium may precipitate into such as calcium carbonate crystals on the membranes to cause fouling and even break of membranes.

DRAFT

8. Operation of Kubota SMU

To operate an SMU properly, note the followings points:

8.1 Water Level of Membrane Tank

Keep the water level of 300 mm or more from the top of the Membrane Unit.

8.2 Management of Filtration Pressure

Do not conduct filtration under the filtration pressure over the specified value (20 kPa). Continued operation under such a pressure will cause membrane clogging and reduce the effect of chemical cleaning.

8.3 Prohibition of Filtration without Aeration

Filtration should not be conducted when Diffuser of the SMU does not supply air (air is not supplied to surface of the Membrane Cartridges) due to such reasons that the Membrane Blower is not running, Blow-down is conducted, and so on. Filtration without cleaning effect by scouring the membrane surface with aeration bubble causes rapid membrane fouling or clogging between membranes, resulting in significant deterioration of filtration performance.

8.4 Prohibition of Aeration without Filtration

Suspend aeration while filtration is suspended, except the short suspension of filtration in intermittent filtration (relaxation) during normal filtration mode (see “8.5.1 Normal Mode”).
More than 10 minutes of continued aeration without filtration will tend to shorten the life of the membranes or even break them.

8.5 Mode of Operation

To prevent long-time aeration without filtration, prepare “Low-Loading Mode” and “Normal Mode” and let both of the two modes can be automatically switched each other.

8.5.1 Normal Mode

“Normal Mode” is the operation mode when design flow rate of influent flows into the plant and biological process and membrane process are operated continuously near design conditions.

(a) Filtration

Intermittent filtration (e.g. OFF/ON = 1 min / 9 min) is recommended. To control the intermittent filtration, turn on or off the permeate pump. If using gravity filtration or siphon filtration, open or close a motorized or solenoid valve to control the intermittent filtration.

DRAFT

(b) Operation of Membrane Blower

Basically the Membrane Blower should run constantly. Even in the intermittent operation on the Normal Mode, the Membrane Blower should constantly run. Adjust the flow rate of the blowers as necessary.

8.5.2 Low-Loading Mode

"Low-Loading Mode" is the operation mode to prohibit long-term aeration without filtration in the period when the inflow rate is low (no flow into the bioreactor tank). Build the control system so that the operation modes can automatically switch.

(a) Switching of Operation Mode

Switch to the Low-Loading Mode when the influent flow rate into the bioreactor tank becomes zero (when filtration is not required).

(Example) When level of Equalization tank or RAS tank hits Low limit or after a certain time has passed since the water level of those tanks hits Low Limit.

When the influent starts to flow into the bioreactor tank again, switch to the Normal Mode (when filtration is resumed).

(Example) When the water level of Equalization tank or RAS tank hits Middle or High Limit.

Configurations of system vary from site to site. Thus the criteria for switching between the two modes should be determined as suitable for each site.

(b) Filtration

Stop the filtration because there is no flow into the bioreactor tank.

(c) Operation of Membrane Blower

To prevent aeration without filtration, reduce aeration time as much as possible.

(Example) Intermittent aeration: ON/OFF = 5 min/55 min.

The intermittent aeration schedule should be determined considering the operational conditions of aeration tank (degree of degradation of organic pollutants, degree of sludge settling, etc.).

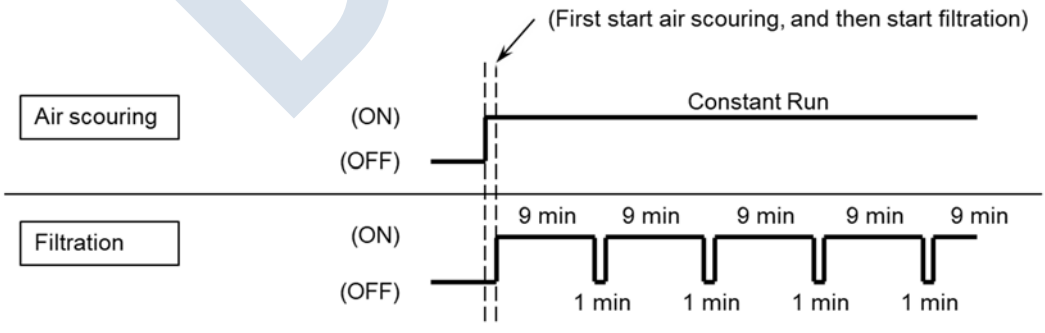

Fig. 8-1 ON/OFF schedule of Membrane Blower and Filtration in Normal Mode (Example)

DRAFT

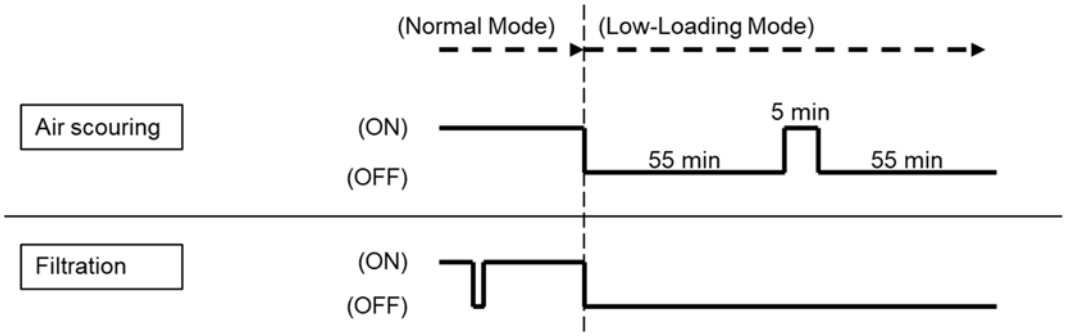

Fig. 8-2 ON/OFF schedule of Membrane Blower and Filtration in Low-Loading Mode (Example)

Prohibited	**Aeration without filtration is prohibited.** Suspend aeration to SMU as long as possible while filtration is suspended. Long-time aeration without filtration may cause damage to membranes.

Prohibited	**Filtration without aeration is prohibited.** Suspend filtration anytime aeration to SMU is suspended or Blow-down is executed. If filtration is done during such a time, rapid clogging of membrane and sludge clogging between membranes would occur, resulting in reduced filtration performance.

DRAFT

9. Clean Water Test

After completion of the installation of the wastewater treatment plant with KUBOTA Submerged Membrane Unit™, always conduct a clean water test before actual operation.
In the clean water test, check the following points:

- Levelness of the installed Membrane Units (uniformity of aeration)
- Secureness of pipe connection (leak from permeate or air piping)
- Performance of ancillary equipment (aeration rate, permeate flow)
- Correctness of sequential control and interlocks (actions of ancillaries such as Permeate Pumps and Membrane Blowers)

Be sure to adjust or repair the plant before actual operation if any abnormality is found during the clean water test.

Caution	**Ventilate Well** If the Membrane Tank and/or aeration tank are installed in a building with poor ventilation, be sure to ventilate the building. Filling gas in the air may cause health problem.

9.1 Before filling the water into the Membrane Tank

Before filling the MBR Tank with clean water, perform the following inspections and preparations.

- Make sure to clean the inside of Aeration Tanks and MBR Tanks completely before filling it with clean water. Dust and chips remaining in the MBR Tank can damage / foul membranes.
- Re-check if each SMU is leveled within the required deviation (5 mm).
- Re-check if multiple SMUs are leveled within the required deviation (10 mm).
- Re-check the Air Piping connection and the Permeate Piping connection.
- Make sure that all the required equipment for filtration is properly installed. The equipment are described in “Table 2-4”.
- In early stage of the clean water test or others, Membrane Tank or Permeate Tank may foam heavily and overflow because of the hydrophilic agent on the membrane surface. Be careful of such foaming event.
- When using secondary clarifier effluent from the existing sewage treatment plant instead of clean water, feed PAC or poly-ferric sulfate into the effluent. Feed concentration should be determined by jar test. Please consult with the corresponding engineering company when using secondary clarifier effluent.

After performing above the inspection and preparation, feed clean water such as tap or underground water to the operation level of the biological reaction tank. Make sure to open the valves at the Chemical Feeding Port or other location to vent the gas in the membrane.

Important	**Clean the Tank.** Remaining trash, sand, and dust in the tank can cause membrane break and clogging.

DRAFT

Important	**Release the air in the Membrane Modules when filling water into the Membrane Tank.** When filling water into the Membrane Tank, open the valve at Chemical Feeding Port or other locations to release the air in the Membrane Modules. No release of air causes increased inner pressure of Membrane Modules and break of the Membrane Sheet. Close the valve as soon as filling the water is finished. Foreign matter may enter the valve and cause clogging of tubes/pipes and trouble in Suction Pump.

9.2 Clean Water Test

After the MBR Tank is filled with clean water, perform clean water test operation according to the following procedure.

9.2.1 Membrane Blower

Start the Membrane Blower and check the followings:

- The Membrane Blower emits no abnormal noise or vibration.
- Required air flow rate is achieved.
- No leakage from air piping.

Hydrophilic agent in the membrane sheets may cause foaming in the Membrane Tank or permeate water tank in the early phase of operation including the clean water test. It is not an abnormal phenomenon. Manage it with antifoam agent as required.

9.2.2 Levelness of Membrane Units

If the horizontality of Membrane Units is not secured, uneven aeration bubble will deteriorate filtration. Run the Membrane Blower to check the followings:

- Measure pressure of the membrane blower, air rate, and level of the membrane tank.
- Check for uneven aeration in one Membrane Unit.
- When multiple SMUs are aerated by one Membrane Blower, check if the air flows to all the SMUs are even.
- If significant uneven aeration is found, check the piping configuration (e.g. narrow diameter of Header Pipe) and the installation levelness of Diffusers.

9.2.3 Blow-down

Blow-down is conducted to prevent Diffuser air pressure increase. Run the Blow-down program to check the followings:

- Check that air not supplied to the Membranes.
- Check that filtration is stopped.

Refer to "【Diffuser Blow-down】" for more information.

DRAFT

9.2.4 Status of Filtration

After starting the Membrane Blower to supply air to membrane surface, check the followings:

- Conduct filtration and make sure that permeate is discharged.
- No leak in permeate piping.
- Measure the flow rate, filtration pressure and temperature with clean water.

Be careful in early stage of filtration of foaming of permeate due to the hydrophilic agent on membrane sheet.

9.2.5 Control System

Check the control of Membrane Blower and Filtration Equipment to prevent membrane fouling or break of Membrane Cartridge.

- Make sure that filtration is stopped while the Membrane Blower is suspended or Diffuser Blow-down is performed.
- Make sure that if the Low-Loading Mode functions correctly.

After the clean water test finishes, stop filtration and then stop aeration.

Prohibited	**Prohibition of Filtration without Aeration** Suspend filtration anytime aeration to SMU is suspended or Diffuser Blow-down is executed. If filtration is done during such a time, clogging of the membrane would occur.

Important	**Complete the clean water test as soon as possible.** After finishing the operation check of Membrane Blower, immediately stop the Blower, because long-time aeration without filtration causes damage to Membrane Cartridge. In addition, do not perform the clean water test longer than required because long-time filtration may cause membrane clogging by dust and dirt in the tank.

Important	**Do not dry the Membranes** After the clean water test, if the membrane surfaces dry out, membranes get hydrophobic and permeate flow rate will drop. Do not drain the tank nor lift the SMU out of the tank until seed sludge is fed to the tank.

DRAFT

10. Actual Operation

After completing the clean water test, move to actual sludge operation. In the actual sludge operation, daily monitor the following items:

- Filtration Status (Permeate Flow Rate, Filtration Pressure, SS Leak)
- Aeration Status (Air Supply Rate, Uneven Aeration)
- Diffuser Blow-down
- Water Quality Check (Foreign Materials, Sludge Quality)

Caution	**Ventilate Well** If the Membrane Tank and/or aeration tank are installed in a building with poor ventilation, be sure to ventilate the building. Filling gas in the air may cause health problem.

10.1 Sludge Seeding

Feed seed sludge to start-up the biological treatment immediately before actual sludge operation.

- Required seed sludge is recommended to be fresh sludge of suspended activated sludge process such as biological nitrification denitrification process. The more quantity of seed sludge makes the more stable start-up operation.
- Feed the seed sludge so that the MLSS in Membrane Tank exceeds 3,000 mg/L (preferably 5,000 mg/L or more).

Important	**Be sure to feed the seed sludge** Membrane filtration of the raw water without feeding seed sludge causes membrane fouling. To get best performance of membranes, prepare seed sludge.

Important	**Remove foreign materials in seed sludge** Remove the foreign materials in seed sludge before feeding it into the tank. Otherwise membrane damage or Diffuser clogging will happen.

Important	**MLSS in seed sludge shall be 5,000 mg/L or more** Feed the seed sludge so that the MLSS in Membrane Tank exceeds 3,000 mg/L (preferably 5,000 mg/L or more). Seed sludge with 3,000 mg/L or less MLSS causes membrane fouling.

DRAFT

Important	**Do not use decayed seed sludge** Feed the seed sludge just before starting the actual sludge operation. Long time with no wastewater flow will cause decayed sludge and membrane fouling. If the seed sludge smells of decay, aerate it until the smell disappears (1 hour at the maximum) before starting filtration. Filtration with decayed sludge causes membrane fouling.

10.2 Check the Permeate Quality

Check if the SS leak in permeate. If significant amount of SS mixes in permeate by membrane damage or tube disconnection, treated water quality exceeds discharge standards. In this case, immediately stop filtration and take the required measures before restart.

Important	**Check the Permeate SS** Check of permeate SS is not only for the monitoring discharge water quality but also for finding of abnormality in membranes or ancillary equipment in early stage. Installation of turbidity meter in permeate piping makes easy permeate monitoring.

10.3 Managing Permeate Flow Rate and Filtration Pressure

Check the Permeate Flow and Filtration Pressure to understand filtration status.

- When the permeate flow rate stabilized, measure the temperature, flow rate, and filtration pressure in actual sludge filtration.

Important	**Daily monitor permeate flow rate and filtration pressure.** Monitoring of permeate flow rate and filtration pressure is essential to check the operation status of SMU. Collecting continuous data is recommended.

10.4 Managing Air Scour Flow Rate

Check if appropriate air supply rate is provided to SMU.

- Check if the monitored air supply rate is within the Diffuser Air Supply Rate described in “Table 2-1”.

Important	**Supply proper air flow rate to SMU** Too high air supply flow rate causes damage of the Membrane Cartridges. Too low air supply flow rate causes clogging between Membrane Cartridges and diffuser clogging.

DRAFT

10.5 Visual Check of Aeration

Visually check for abnormality in aeration of SMU.

- Aeration uniformity among multiple SMUs.
- Aeration uniformity in each SMU.
- No unusual non-uniform aeration

Important	**Check the uniformity in aeration** Diffuser clogging and clogging between membranes cause non-uniform aeration. To keep the filtration performance, check if there is no non-uniform aeration.

10.6 Diffuser Blow-down

To prevent the increase of the Diffuser Air Pressure due to the slime or the like on the Diffuser, periodically conduct Diffuser Blow-down. Procedure for Diffuser Blow-down is described in "【Diffuser Blow-down】".

- Conduct Diffuser Blow-down once a day.
- Check that filtration is stopped during Diffuser Blow-down.

The Blow-down does not always prevent diffuser clogging. If the Blow-down cannot recover the Diffuser Air Pressure, lift up the Membrane Unit out of the tank and check the Diffuser. Then wash by water (clean the Diffuser surface with brush) or replace the Diffuser if necessary.

Important	**Periodically conduct Diffuser Blow-down** Conduct Diffuser Blow-down periodically for 1 minutes once a day. If the diffuser becomes blocked, the aeration pressure increases so that the blowers be damaged and membranes get clogged to lose filtration ability.

Important	**Suspend filtration during Diffuser Blow-down** Never fail to stop the filtration during the Diffuser Blow-down because membrane scouring is stopped. Filtration during Diffuser Blow-down causes membrane fouling, resulting in decrease in filtration performance.

10.7 Removal of Debris

Check that the fine screen or other equipment properly works and foreign materials and debris is surely removed.

- Check if the raw water bypass or overflow the fine screen.
- Debris content in the mixed liquor taken from membrane tank should be checked periodically by 1 mm mesh CSS test (see "【1 mm mesh CSS test】" for detail procedure).
- Proper range of the debris content is below 30 [dry-mg/L]. If the debris content becomes 30 [dry-mg/L] or more, possibility of generation of dewatered sludge between the Membrane Modules becomes higher due to accumulation of such debris on the bottom of the Membrane Modules. In such a case, installation or operation of the fine screen should be reviewed and improved.

DRAFT

The debris flowing in the tank tangles with each other to grow large, causing clogging of diffuser and between membranes. Be sure to remove them.

Important

Do not let screenings, debris, or any other solid substances flow into Membrane Tank

If screenings, debris, or any other solid substance are flown into the Membrane Tank, they may cause clogging in the Diffuser or between Membrane Cartridges, and cause decrease in membrane performance.

Hard debris such as sand and charcoal may cause damage to membrane and Membrane Unit or accelerate damage and degradation of piping and pipe support.

10.8 Managing Mixed Liquor

Representative parameters to know the sludge characteristics in Membrane Tank are described in “Table 10-1”. Use the control values in the table as standard in operation adjustment.

Table 10-1 Representative Parameters to know Sludge Condition

Monitoring Parameters	Control Value	Remarks
Sludge Concentration (MLSS)	5,000~13,000 mg/L	Recommended; 8,000~12,000 mg/L
Viscosity	120 mPa·sec or less	Measured with a viscometer TVC-10 (Rotor No.1, Speed 20 rpm) by Toki Sangyo Co., LTD. If measured with a viscometer VT-03 by Rion Co., LTD., it is 60 mPa·s or less instead.
Paper Filtration Test	10 mL/5min or more	See 【Paper Filtration Test Method】
Dissolved Oxygen (DO)	1 mg/L or more (Average in Membrane Tank)	Recommended value is 2 mg/L or more when measured in the upper part of SMU

Important

MLSS in Membrane Tank shall be 5,000 mg/L or more

If MLSS in Membrane Tank decrease to less than 2,000 mg/L, add the seed sludge so that the MLSS in Membrane Tank exceeds 3,000 mg/L (preferably 5,000 mg/L or more). Operation in MLSS less than 3,000 mg/L causes membrane fouling.

Important

Operate with stable sludge condition

Even within the usage conditions of SMU, do not make rapid variation of flow or load in temperature, pH, and pressure. It may deteriorate sludge quality or reduce activity of the sludge, resulting in membrane fouling.

DRAFT

10.9 Control of Foaming

When using antifoaming chemical for controlling foam in Membrane Tank, note the following points:

- Use alcohol based antifoaming chemical. Silicone based antifoaming chemical may cause a membrane fouling. Our recommended product is Disfoam CC-118 made by NOF Corporation.
- Excess use of antifoaming chemical can be accumulated on the membrane surfaces and deteriorate the filtration performance. Use required-minimum quantity of antifoaming agent.
- Do not feed chemicals that makes adverse effect to activated sludge, poison, and a lot of oil. They decrease filterability of activated sludge and cause membrane fouling.

10.10 Influent Quality Management

Influent containing corrosive chemicals such as Ferric Chloride causes membrane fouling and corrosion in materials of stainless steel.

For example, if returning the dewaterer filtrate to Membrane Tank (Biological treatment), pay attention to the concentration of the remaining coagulants.

Caution	**Do not use chemicals stimulating corrosion of stainless steel materials.** Corrosive chemicals such as ferric chloride may cause corrosion of stainless steel materials of SMU or optional parts. It may cause dropping accident due to lack of strength.

10.11 Countermeasures against Calcium Problem

(a) Effect of Calcium Ion

If the raw water contains a significant content of calcium, the calcium ion precipitates as crystals of calcium carbonate. Since its solubility is quite low (15mg/L at 25 degree C), when operated near saturation, it will crystallize in a short time by change in operational conditions and deteriorate filtration performance.

If the calcium carbonate precipitates in the biological reaction tank, always remove calcium in pretreatment equipment.

(b) Operation Management Index

In wastewater treatment, the following changes in operational conditions are likely to cause crystallization.

- Rise in pH (addition of alkaline or increase in nitrogen removal rate)
- Rise in temperature
- Rise in filtration pressure

In addition, probability of calcium carbonate precipitation is estimated by the following value:

- Difference between “Alkalinity of sludge in Membrane Tank” and “Alkalinity of Permeate”

The longer this difference is, the longer the probability of calcium carbonate precipitation is. Periodic measurement of alkalinity is helpful to estimate precipitation of calcium carbonate.

DRAFT

(c) Chemical Cleaning

If the calcium carbonate is precipitated in the bioreactor tank, conduct chemical cleaning with citric or hydrochloric acid. If using oxalic acid, calcium oxalate will be precipitated. It will make the chemical cleaning be more difficult. Refer to "【Outline of In-Situ Chemical Cleaning】" for the details of chemical cleaning procedure.

Important	**Keep the calcium concentration low** Install calcium removal process (coagulation and settling, etc.), if calcium concentration is high. Raw water with high calcium concentration makes calcium precipitation (e.g. Calcium Carbonate), causing membrane fouling or membrane break due to the precipitated calcium.

DRAFT

【1 mm mesh CSS test】

The 1 mm mesh CSS test is used for checking amount of debris larger than 1 mm mesh in mixed liquor.

■ Measurement Procedure

(1) Prepare following apparatus
- Test sieve (JIS Z8801, aperture size 1 mm and wire diameter 0.56 mm)
- 25L bucket
- Beaker with handle
- Evaporating dish
- Drying oven (105 [deg. C])
- Analytical balance

(2) Sample 20 [L] of mixed liquor from membrane tank.
(3) Stir the sampled mixed liquor and pour it into the test sieve little by little using the beaker.
(4) Wash the surface of the sieve by tap water and filter mixed liquor (brown liquid) out of the sieve. Do not rub the surface of the sieve by hand.
(5) Repeat the above procedure #3 through #4 until a ball of the debris becomes around 40 [mm] diameter. The maximum amount of mixed liquor poured into the sieve should be 20 [L]. The amount of poured mixed liquor should be recorded.
(6) Measure weight of dry evaporating dish. Transfer the ball of the debris from the sieve to the evaporating dish and bake it in the oven at 105 [deg.C] overnight (more than 8 hours).
(7) After baking, transfer the dish and debris to desiccator for cooling down. Then measure total weight of the dish and debris. Calculate debris content in the mixed liquor using below equation.

$$\text{Debris content in the mixed liquor (mg/L)} = \frac{\text{Weight of deried dish and debris (mg)} - \text{Weight of dish (mg)}}{\text{Poured mixed liquor(L)}}$$



Fig. 10-1 1mm Test Sieve and Collected Debris

DRAFT

【Diffuser Blow-down】

(a) Purpose for the Blow-down

Purpose for Blow-down is to restrict the increase of Diffuser Air Pressure due to the substances adhering on the Diffuser Rubber such as slime.

(b) Procedure of the Blow-down

(1) Suspend Filtration

Because the membrane scouring effect is reduced during the Blow-down, suspend filtration.

- Turn off the permeate pump in suction filtration.
- Close the permeate valve in gravity filtration.

(2) Suspend the Air Flow to Membranes

Stop the air flow to the SMU(s). By this suspension of air flow to the SMUs, the inner pressure of the Diffuser decreases and the Diffuser Rubber shrinks. This shrinking action stimulates the removal of slime or other substances adhering on the Diffuser.

- Stop the Membrane Blower in the single train system.
- Suspend the air flow by closing the valve in the air header to the target train with the Membrane Blower running in the multiple train system.
- Before the execution, the procedure should be reviewed so as not to apply excessive load or pressure to the Membrane Blower or Air Piping.
- When closing the air supply valve to the target train with the Membrane Blower running, take countermeasure such as decreased flow rate of Membrane Blower so that the air supply rate to other trains will not exceed the maximum allowable rate of the Unit.

(3) Resuming after the Blow-down

Resume the air supply to the Diffuser where the Blow-down was conducted.

- Restart the suspended Membrane Blower or open the closed air header valve to the target train for resuming the air supply to the Diffuser.
- Because the specified rate of air flow cannot be sent stably immediately after the restart of air supply, filtration should be restarted about one minute after the air supply restarts.

(c) Blow-down Duration

- Blow-down time should be one minute or more. During the Blow-down, check if the Diffuser Air Pressure falls down to the static pressure corresponding to the water depth of the Diffuser.
- If the Diffuser Air Pressure cannot fall down to the static pressure of the Diffuser, extend the time of Blow-down.

(d) Blow-down Frequency

- The frequency of the Blow-down is recommended to be once a day at least.
- If the effect of the Blow-down was not been found, increase the frequency as needed.

DRAFT

【Paper Filtration Test Method】

The paper filtration test method is used to get an indicator to determine the filterability of activated sludge or mixed liquor.
Low filterability of activated sludge is one reason of low permeability of SMU. If decrease in filterability is found by this test, not only chemical cleaning to increase permeability of SMU but also increase in filterability by recovery of activated sludge status is required. The way to increase the filterability of the activated sludge includes change of MLSS concentration, improvement of biological treatment, and addition of coagulant.

Measure the filterability of activated sludge by the following procedure:

(1) Prepare the following apparatus:
- One piece of No. 5C filter paper with 185 mm diameter made by Toyo Roshi Co., Ltd. (equivalent to Type 5C specified in JIS P 3801)
- One 100 mL sample bottles
- Two 50 mL graduated cylinders
- One funnel
- One stop watch or clock

(2) Folds a filter paper into a cone shape as shown in the “Fig. 10-2”. The folded filter paper should have 16 equal partitions if folded properly.
(3) Set the folded filter paper into a funnel.
(4) Set the funnel into a graduated cylinder.
(5) Collect activated sludge to be tested into another 50 mL graduated cylinder from MBR Tank.
(6) Pour 50 mL of the collected activated sludge onto the filter paper in the funnel. After one droplet drops to the cylinder, start measuring the filtration time.
(7) After 5 minutes, remove the filter paper and funnel from the graduated cylinder.
(8) Measure the amount of the filtrate collected and record the value.

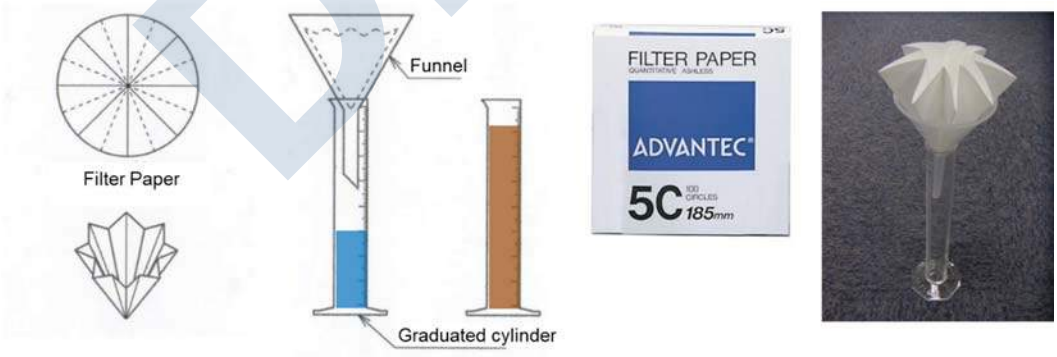

Fig. 10-2 Paper Filtration Test Method

Filtrate contains organic compounds which are eluted from the filter paper. Note that the TOC concentration of the filtrate may be higher than actual TOC which is contained in the liquid phase of the mixed liquor.

DRAFT

11. Maintenance

11.1 Cleaning of Membrane Module

In-Situ Chemical Cleaning or other cleanings are essential to keep permeability of the SMU. Conduct proper type of cleaning at proper timing.

11.1.1 In-Situ Chemical Cleaning of Membrane Modules

In-Situ Chemical Cleaning is a method feeding chemicals into Membrane Modules to clean membranes from inside. It can clean the SMU without lifting SMU out of the tank nor draining the tank.

(1) When Filtration Pressure increases by 5 to 10 kPa from the initial value, it is recommended to perform an in-situ chemical cleaning of the Membrane Modules.

(2) Even if no Filtration Pressure increase is found, it is important to perform a periodic in-situ chemical cleaning of the Membrane Modules at least once a half-year in order to keep stable operation.

For chemical cleaning procedure, see “【Outline of In-Situ Chemical Cleaning】”.

11.1.2 Ex-Situ Cleaning

Lift up the SMU to check and inspect in the following cases. If required, wash the membrane surface with water.

- Filtration pressure did not recover after the chemical cleaning.
- The gaps between membranes are clogged with sludge.

For drawing out the Membrane Modules, see “13 Replacement of Membrane Modules”.

11.2 Periodical Inspection

A Supplier’s periodical inspection every three years is recommended (The inspection service will be charged).

Please conduct Customer’s check and maintenance in addition to the Supplier’s periodical inspection.

- Please make sure that there is no crack, distortion, bend, corrosion or other abnormalities on any part of Membrane Blocks (especially, bolting points with Diffuser Block), Diffuser Blocks, and the Lifting Tools.

If using these parts in corrosive environment, increase the inspection frequency. If corrosion is found in any parts, replace them immediately.

Caution	**Immediately replace the SMU or parts with abnormality** If any abnormality in parts or SMU such as cracks or corrosion is found upon inspection, replace the parts or SMU as soon as possible. Continuous usage of them will cause an accident.

Caution	**Wear adequate gloves such as cotton work gloves during work.** Working with bare hands may result in unexpected injuries.

DRAFT

11.3 Replacement Parts

SMU has parts to be replaced depending on usage conditions.

11.3.1 Frequency of Replacement

- Membrane Module: 3 ~7 years (vary with usage condition)
- Diffuser Rubber: 3 ~ 7 years (vary with usage condition)

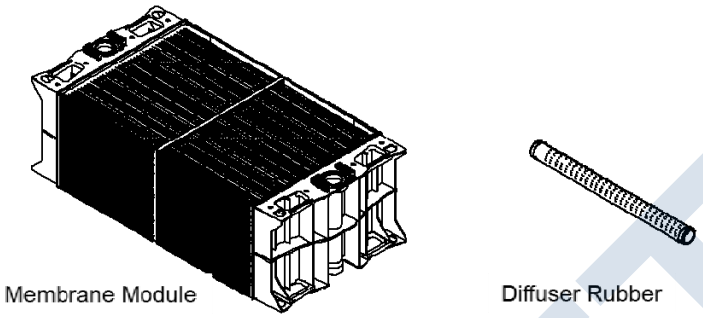

Fig. 11-1 Replacement Parts

Although other parts are not included in the Periodical Replacement Parts, they require replacement depending on usage conditions; for example, if O-Rings (see “17.1 Membrane Block”) are found to be worn at the periodical inspection, it is recommended to replace them.

11.3.2 Storage Instructions for Replacement Parts

For storage of the replacement parts, follow the instructions below. If the parts become deformed and/or change in quality, normal operation cannot be performed.

- Prevent the parts from exposure to direct sunlight and water. Store them indoors with temperature between 5 and 40 degree C.
- Replacements of Membrane Module are shipped in reinforced cardboard boxes. When storing the boxes, take care not to put them in a standing manner but stack them flat on a level and flat surface.
- Replacements of Diffuser Rubber are shipped as packages of one or multiple pieces. In their storage, flatly stack them on a flat floor.
- The stacking limit of the boxes by number is described in the pictorial marking on the box.
- Take protection measures against wetting and tumbling down by using protection sheet and reinforcement material.

Prohibited	**Never leave the replacement parts outdoors.** Never leave out replacement parts where they are exposed to sunlight or high temperature. This condition changes the shape or quality of the replacement parts and it disables proper operation.

Prohibited	**Do not wet the Membrane Modules before use.** Do not wet the Membrane Modules before use. When wet Membrane Modules becomes dry, their filterability decreases significantly.

DRAFT

【Outline of In-Situ Chemical Cleaning】

(1) Chemical Type and Amount

- Sodium Hypochlorite
  Organic fouling of the membrane micro-pores can be cleaned by using a dilute solution of bleach (sodium hypochlorite / NaClO). When the sludge concentration exceeds 10,000 mg/L, use solution of 0.6% or less. When sludge concentration is 10,000 mg/L or less, use solution of 0.3 % or less.
- Oxalic Acid
  Inorganic fouling (Iron, Aluminum, and/or others) of the membrane micro-pores can be cleaned by oxalic acid. Prepare oxalic acid solution of 1.0% or less. **If calcium concentration in the Membrane Tank is high, NEVER use oxalic acid. Hydrochloric acid or citric acid (1.0% or less) should be utilized.**
- Required chemical volume as diluted solution are shown in Table 11-1. Prepare the required volume of chemical considering the piping volume from chemical tank to SMU.

Table 11-1 Standard Volume of Chemical Solution and Feed Rate of One Membrane Unit

Model	Standard Volume [L]	Standard Feed Rate [L/min]
SP200 SP225-A	800	60 ~ 80
SP300 SP337-A	1,200	90 ~ 120
SP400 SP450-A	1,600	120 ~ 160
SP600 SP675-A	2,400 (1,200 for Upper, 1,200 for Lower)	180 ~ 240*1
SP800 SP900-A	3,200 (1,600 for Upper, 1,600 for Lower)	240 ~ 320*1

*1 In the case of SP600 / 800 / 675-A / 900-A, chemical feed to Upper Membrane Block and Lower Membrane Block should be carried out separately.
Standard volume of chemical and standard feed rate per **one Membrane Block of the SP600 / 675-A** will be same as those of SP300 / 337-A.
Standard volume of chemical and standard feed rate per **one Membrane Block of the SP800 / 900-A** will be same as those of SP400 / 450-A

Danger

Never mix sodium hypochlorite and acid
In the Chemical Cleaning, never mix sodium hypochlorite and acids such as oxalic, hydrochloric and citric acid. Doing so will produce toxic chlorine gas, which may cause severe accident.

Caution

Wear protective equipment before using chemicals
Before using chemicals, carefully read the Material Safety Data Sheet (SDS), and wear protective equipment such as masks, goggles, gloves, etc. Misuse of them may result in physical accident.

DRAFT

(2) Stop both filtration and aeration to SMUs.

- Stop filtration and aeration of SMU to be chemically cleaned.

(3) Chemical Feeding

- Feed the chemical by in-line method at a standard feed rate (see Table 11-1) from the Permeate Headers.
- **Be careful to prevent air entering into the Membrane Unit.** Involved air may make airlock which causes uneven feed rate among the Membrane Units.
- Do not aerate during the chemical cleaning.

(4) Inner Pressure of SMU

- **Design the piping configuration and feed system such that the chemical feed pressure will not exceed 10 [kPa] in the chemical cleaning (e.g. a feed system where the Chemical Feed Pump automatically stops when the chemical feed pressure reaches 10 [kPa]).**
- **Even when the standard volume cannot be fed, DO NOT try to push in the chemical.**

(5) Release of Reaction Gas

- The chemical reaction generates gas in SMU. The reaction gas has to be released because it raises the inner pressure in the SMU. When the chemical feeding process finishes, open the Air Relief Valve installed in the Permeate Header.
- Especially, when cleaning calcium carbonate fouling (caused by treating Calcium-rich wastewater) by acid, a careful attention should be paid because the chemical reaction would generate carbon dioxide gas, which may cause a sudden pressure rise.

(6) Soaking Time

- After feed, keep them still for one or two hours. As a guide, it takes approximately 2 hours for cleaning organic fouling, and 1 hour for cleaning inorganic fouling.
- Keep the air vent valve open because the reaction gas is generated even while the reaction.

(7) Resumption of Operation after Chemical Cleaning

- Just after restarting filtration, return more than twice volume of permeate compared to fed volume of chemical to the head of the plant where impact of the waste chemical to activated sludge can be mitigated as much as possible (usually to equalization tank or anoxic/denitrification tank).
- When using sodium hypochlorite, resume normal operation and start to discharge the permeate after the residual chlorine concentration in the permeate becomes less than the concentration that does not become a problem when the permeate is discharged to environment.
- When using acid, please neutralize waste chemical solution and MBR Tank, if necessary. After confirming that pH in all tanks is in normal range, restart the normal operation.

Because the chemical solution flows back slowly from the permeate side to activated sludge side by low pressure, it is more effective to clean the membrane before it is fully fouled, or during the period when increase in filtration pressure is still small since the operation has just started.
Never lift the SMU without conducting filtration for at least 30 minutes after the end of chemical cleaning. If a SMU is lifted up right after the chemical cleaning has finished, accidents due to chemical trickle and/or damage in Membrane Modules may occur.

DRAFT

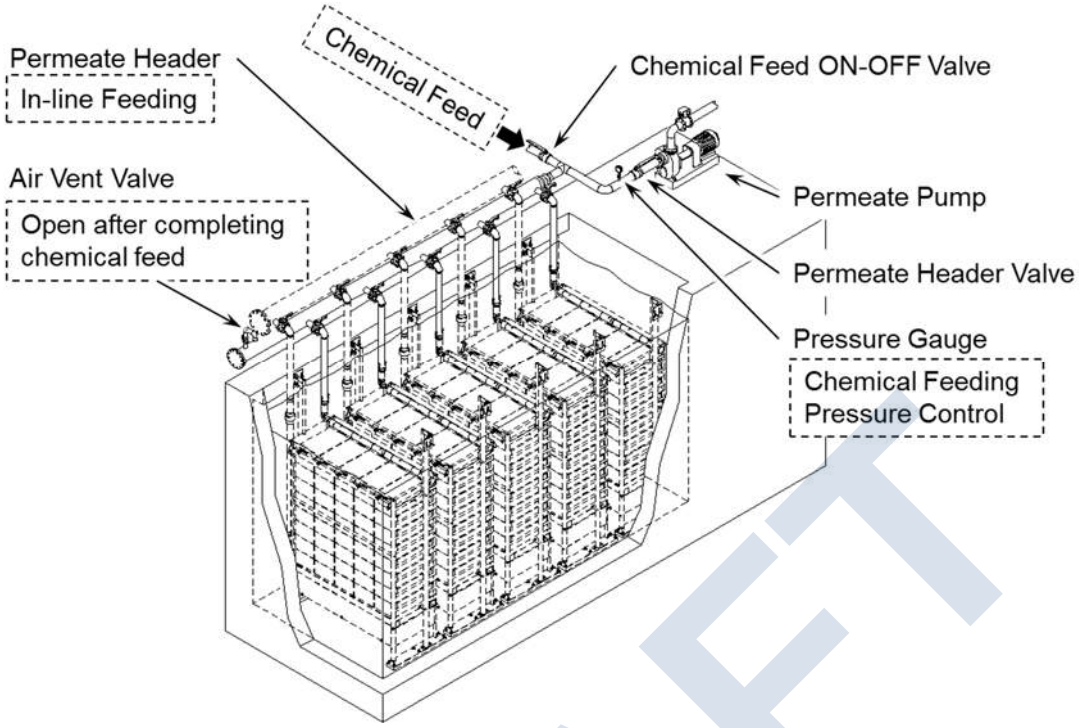

Fig. 11-2 Roles of Piping in Chemical Feed

DRAFT

12. Lifting up and reinstallation of SMU

In this section, procedures to lift and install SMU which is installed in membrane tank and submerged under water or mixed liquor out of the tank are described.

- Use the optional Unit Lifting Tool to lift and reinstall the Membrane Units. **For more information about how to use the Unit Lifting Tool, see "Lifting Tool Instruction Manual".**
- For SP200/300/400/225-A/337-A/450-A, the Membrane Block and the Diffuser Block should be combined during lifting and reinstallation.
- For SP600/800/675-A/900-A, the Lower Membrane Block and the Diffuser Block should be combined during lifting and reinstalled, although the Upper Membrane Block should be dealt singly. The same procedure described in this article can be applied to the Upper Membrane Block.
- This procedure is developed on condition that the SMU is installed with using Guide Set recommended by KUBOTA (see "15 Guide Set"). Since the accuracy of installation location of the Guide Set is important in this procedure, verify whether the accuracy is sufficient before commissioning of the plant.

Danger	**Keep safe working environment in tanks** When working in a tank, keep the working environment safe by measuring the required items including oxygen and hydrogen sulfide in observance of local regulations/standards of each country/region. Failure to follow the procedure could result in a fatal accident such as anoxia.

Warning	**Take safety measures to prevent falling accident** Ensure the safety of workers by installing handrails, scaffolding and safety equipment to prevent a fall accident. Pay particular attention near the tank opening because the floor may be slippery by wetness. Poor safety measures may result in fatal accident.

Warning	**Never go beneath a lifted Membrane Block, Diffuser Block, Membrane Unit, or Membrane Module** If they fall down, fatal accident may occur.

Caution	**Before using Lifting Tool, make sure that they have no abnormality** Before using Lifting Tools supporting load, check if crack, corrosion, rust, abrasion, and deformation. And also, check the Slings of the KUBOTA's Lifting Tool for abnormalities such as a cut, abrasion, scratch, broken stitch, discoloration, coloration, fusion, and melting. Immediately replace the tools with abnormality. Continued use of them may cause human accident by product dropping.

DRAFT

Caution	**Conduct the lifting work by two or more persons.** If the crane or chain block operator alone conducts all the work, his risk prediction ability will significantly decrease due to increased blind spots.

Caution	**Do not place any part of your body between a Lifting Tool and a Membrane Block.** Do not place any part of your body, such as a hand or a head, between a Lifting Tool and a Membrane Block. It may cause a fatal accident under unsafe operation or during an unexpected drop accident.

Caution	**Be sure to check that there are no slacks of Shackles and Eyebolts.** If the Shackles or Eyebolts come off, the product will drop down and result in fatal accident or damage on the surrounding equipment.

Caution	**Lifting Tools should be used by four point lifting** When lifting up a Membrane Block or Membrane Unit, always hang it at four points. If lifted at three or two points, it may drop or swing and result in a fatal accident.

Caution	**Lift Membrane Block or Membrane Unit straight up and quietly using a Lifting Tool** When lifting it out of the tank, lift it straight up slowly and safely. If it swings, physical injuries and/or damage on surrounding equipment may occur.

Caution	**Never lift a Membrane Block or Membrane Unit containing chemical solution or water in its Membrane Modules.** Spillage of the contained solution or damage of the Membrane Modules may cause physical injury or damage to equipment.

Caution	**Wear adequate gloves such as cotton work gloves during work.** Working with bare hands may result in unexpected injuries.

Important	**Use the specified Lifting Tool to lift up the Membrane Block or Membrane Unit.** It can lift up the Membrane Block or Membrane Unit without too much load.

Important	**Before lifting up a Membrane Block or Membrane Unit, remove connection pipes and Stabilizer.** If connection pipes or Stabilizer are not removed, pipes and/or Membrane Unit may be broken.

DRAFT

Important	**Do not damage the Manifold and Diffusers** Take care not to damage the Manifold and Diffusers during the lifting work of SMU. If damaged, they cannot be used and should be replaced. Pay attention not to apply the load of Permeate Piping/Air Piping to Manifold/Diffuser in order to prevent Manifold/Diffuser break.

12.1 Lifting up of SMU

(1) Ensure safety of the components to which loads are imposed before use. Make sure that they are free from abnormality such as crack, corrosion, rust, abrasion, or wear before use.
(2) Detach Unit Slings and Stoppers from Unit Lifting Tool. **Please do not use the Unit Sling for lifting a wet or clogged Membrane Unit.**
(3) Attach Hangers to "Catch" position of the Unit Lifting Tool and hang them down.
(4) Lift the Unit Lifting Tool up by crane.
(5) Move the Unit Lifting Tool to right above the SMU which is to be lifted up
(6) Disconnect piping around the SMU from headers.
(7) Remove Stabilizers. SMU may be floated in rare cases because of gas trapped in the SMU.
(8) After checking that the Hangers are hanged down, lower the Unit Lifting Tool slowly toward the water/mixed liquor while letting Guide Piece of the Unit Lifting Tool run along Guide Pole (see Fig. 12-1). Be sure to locate hook of the Crane at center of the SMU before lowering the Unit Lifting Tool.

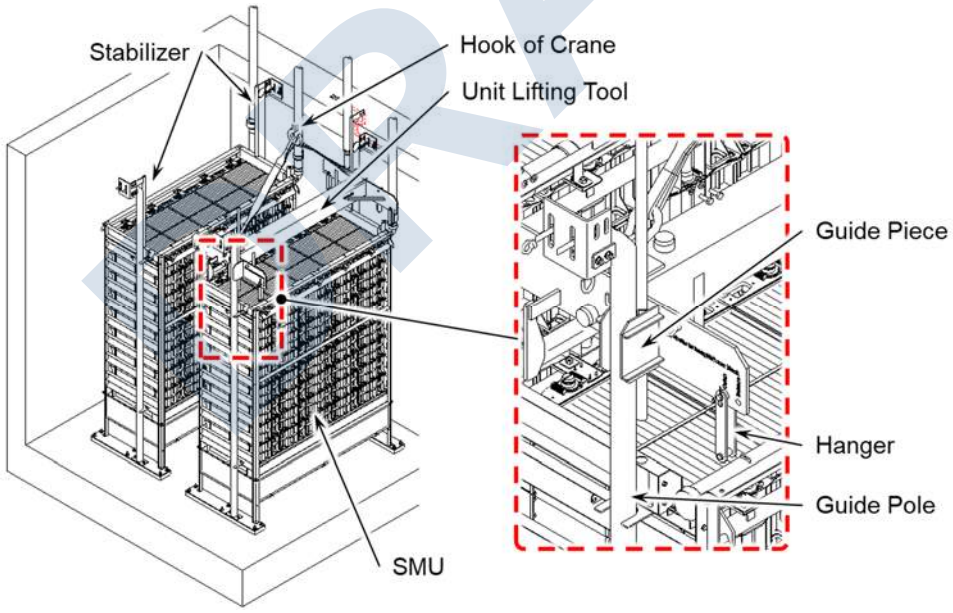

Fig. 12-1 How to Lower the Unit Lifting Tool

(9) Make sure that wire tension of the Crane is lowered when the Unit Lifting Tool arrives at top of the SMU. Then slowly lift up the Unit Lifting Tool. If it is found that abnormal load is applied to the crane, stop the lifting work immediately and carry out an inspection to find the cause by lowering water level of the tank.

DRAFT

(10) When top portion of the SMU appears above water surface, suspend the lifting work temporarily, and verify whether all four (4) Hangers attach to Hooks (4 pcs) of the SMU. Then, resume the lifting work. If the Hangers are not at right position, lower the SMU back to the initial position, and carry out an inspection by lowering water level.
(11) When SMU is completely above the water surface, attach Stoppers to the SMU (see Fig. 12-2).
(12) If Riser Pipe of Air/Permeate Piping can be disconnected at Union or Lever Coupling, disconnect them at this time (see Fig. 12-2).

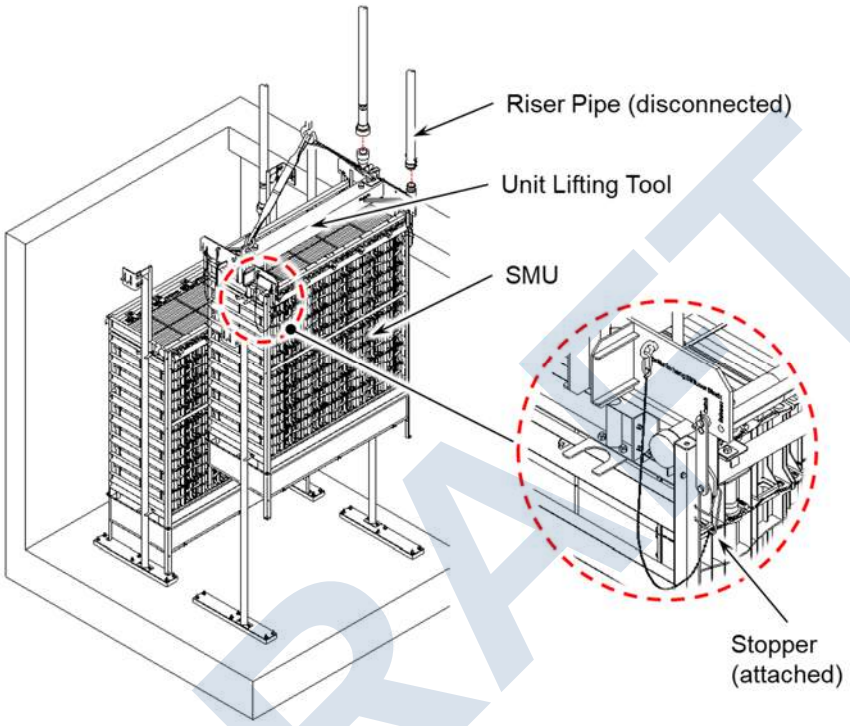

Fig. 12-2 How to Lift up the SMU

(13) Continue the lifting work till the SMU is completely out of the Guide Pole.
(14) Place the SMU onto the flat surface and leave the Unit Lifting Tool on top of the SMU.
(15) Detach Stopper from the Membrane Block.
(16) Flip Hangers up and detach the Unit Lifting Tool from the SMU.

In the lifting work right after the In-Situ Chemical Cleaning, to prevent an injury by dripping chemical or Membrane Module damage, the fed chemicals must be drained before starting the lifting work. To drain the chemical, never forget to restart the operation and filter more than twice volume of fed chemical after performing the In-Situ Chemical Cleaning.

DRAFT

12.2 Re-installation of SMU

(1) Ensure safety of the components to which loads are imposed before use. Make sure that they are free from abnormality such as crack, corrosion, rust, abrasion, or wear before use.
(2) Detach Unit Slings from Unit Lifting Tool. **Please do not use the Unit Sling for lifting a wet or clogged Membrane Unit.**
(3) Attach Hangers to "Release" position of the Unit Lifting Tool and flip them up.
(4) Fill the Unit Lifting Tool with water.
(5) Lift the Unit Lifting Tool up by crane.
(6) Slowly lower the Unit Lifting Tool onto top of the SMU while adjusting position of the Unit Lifting Tool so as to let four (4) Hangers be right above Hooks of the SMU.
(7) Hang down the Hangers and keep them inside of the Hooks, and then attach Stoppers (see Fig. 12-3).

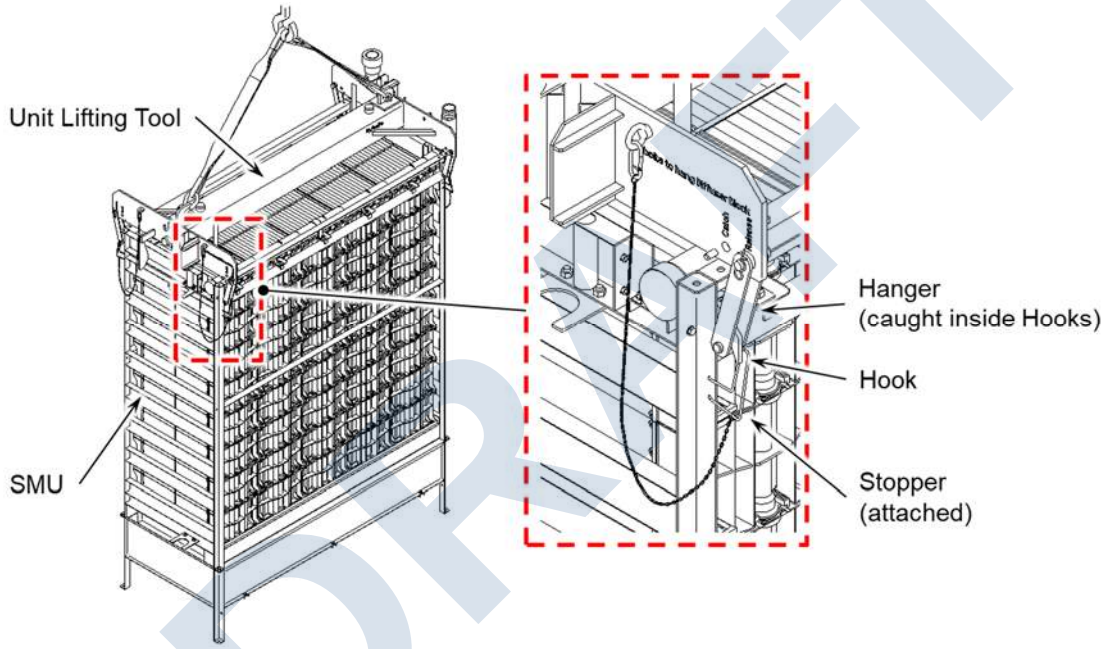

Fig. 12-3 How to connect the Unit Lifting Tool to SMU

(8) Lift the Unit Lifting Tool slowly. Make sure that all Hangers are caught inside the Hooks.
(9) Move the SMU to right above the place where the SMU is to be installed.
(10) Lower the SMU slowly while letting Guide Plates of the SMU run along Guide Poles.
(11) Suspend the lowering work when the Unit Lifting Tool is lowered enough to be reached by hand safely. Then detach Stoppers from both the SMU and the Unit Lifting Tool (see Fig. 12-4).
(12) Insert Stabilizers into hole on top of the SMU (see Fig. 12-4). **In the case of double stack SMU, insert the Stabilizers when re-installing Upper Membrane Block.**
(13) If Riser Pipes of Permeate/Air Piping were disconnected when SMU was lifted out of tank, connect them to the SMU at this time (see Fig. 12-4).

DRAFT

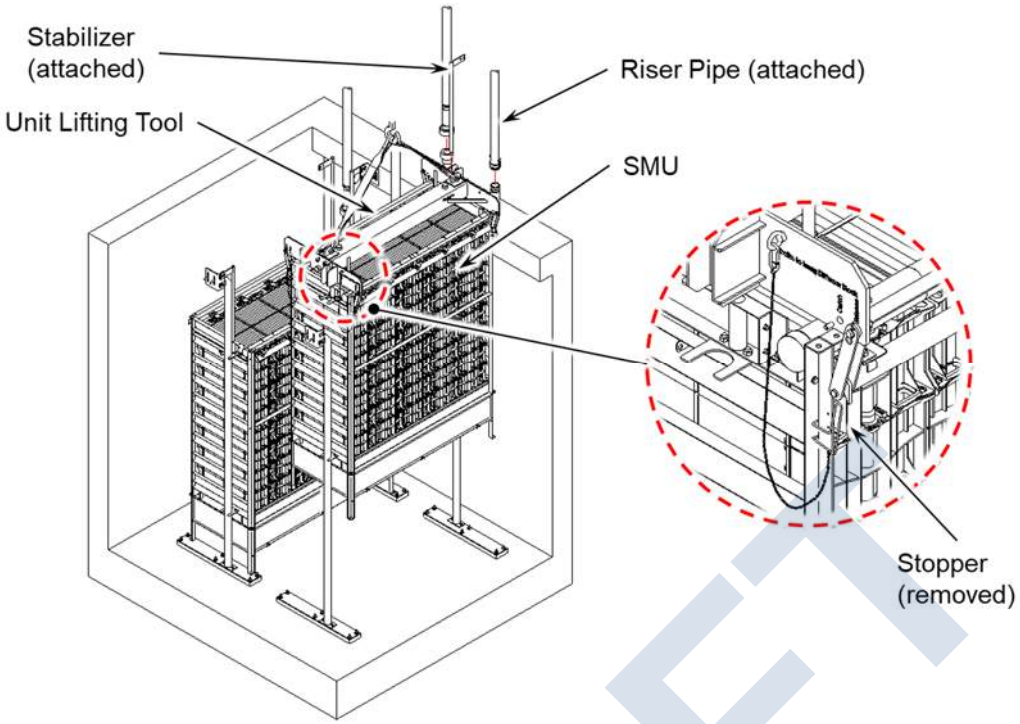

Fig. 12-4 How to re-install SMU

(14) Resume lowering the SMU and keep the lowering work till wire tension of crane is lowered when SMU arrives at installation location. Though the SMU may be forced to be floated due to gas trapped inside the SMU, leave the Unit Lifting Tool to sit on the SMU and submerge the SMU completely to bottom of tank by utilizing weight of the Unit Lifting Tool.

(15) After SMU arrives at the installation location, leave the Unit Lifting Tool on top of the SMU and fix top end of the Stabilizers to Support Brackets using bolts.

(16) Lift the Unit Lifting Tool slowly. If it is found that abnormal load is applied to the crane, stop the lifting work immediately and carry out an inspection to find the cause by lowering water level of the tank.

(17) Connect Air Piping and Permeate Piping to Headers.

(18) After completing the re-installation work, discharge water from the Unit Lifting Tool, and wash and dry the Unit Lifting Tool. Then, store the Unit Lifting Tool indoor.

In the case of double deck SMU, the Unit Lifting Tool needs to be lifted up after completing above step #(14). Lower Membrane Block and Diffuser Block may be floated up at this time, but they will be submerged again together with Upper Membrane Block later.

DRAFT

13. Replacement of Membrane Modules

Lift up a Membrane Unit from the Membrane Tank and then conduct replacement of the Membrane Module out of the tank. Procedure is as follows:

(1) Lifting up the Membrane Unit
(2) Replacement of Membrane Modules
(3) Installation of the Membrane Unit

Warning	**Take safety measures to prevent falling accident** Ensure the safety of workers by installing handrails, scaffolding and safety equipment to prevent a fall accident. Pay particular attention near the tank opening because the floor may be slippery by wetness. Poor safety measures may result in fatal accident.

Warning	**Never go beneath a lifted Membrane Unit, Membrane Block, or Membrane Module** If they fall down, fatal accident may occur.

Caution	**Before using Lifting Tool, make sure that they have no abnormality** Before using Lifting Tools supporting load, check if crack, corrosion, rust, abrasion, and deformation. And also, check the Slings of the KUBOTA's Lifting Tool for abnormalities such as a cut, abrasion, scratch, broken stitch, discoloration, coloration, fusion, and melting. Immediately replace the tools with abnormality. Continued use of them may cause human accident by product dropping.

Caution	**Conduct the lifting work by two or more persons.** If the crane or chain block operator alone conducts all the work, his risk prediction ability will significantly decrease due to increased blind spots.

Caution	**Do not place any part of your body between a Lifting Tool and a Membrane Block or Membrane Module.** Do not place any part of your body, such as a hand or a head, between a Lifting Tool and a Membrane Block or Membrane module. It may cause a fatal accident under unsafe operation or during an unexpected drop accident.

Caution	**Be sure to check that there are no slacks of Shackles and Catch Rings.** If the Shackles or Catch Rings come off, the product will drop down and result in fatal accident or damage on the surrounding equipment.

DRAFT

Caution

Lift Membrane Unit, Membrane Block, or Membrane Module straight up and quietly using a Lifting Tool

When lifting it out of the tank, lift it straight up slowly and safely. If it swings, physical injuries and/or damage on surrounding equipment may occur.

Caution

Lifting Tools should be used by four point lifting

When lifting up a Membrane Unit, Membrane Block, or Membrane Modules, always hang it at four points. If lifted at three or two points, it may drop or swing and result in a fatal accident.

Caution

Wear adequate gloves such as cotton work gloves during work.

Working with bare hands may result in unexpected injuries.

Important

Use the specified Lifting Tool to lift up the Membrane Unit, Membrane Block, or Membrane Module.

It can lift up the Membrane Unit, Membrane Block, or Membrane Modules without too much load.

Important

Membrane Modules should be put temporarily on a flat and smooth place.

Check that the temporal space to put the Membrane Modules is flat and smooth without protrusion or litter. If the membrane sheet get broken by protrusion, litter, or stone, it cannot be used.

Important

Be careful not to mistake the position of the top and bottom Membrane Module in the Membrane Block.

Top and bottom Membrane Module has plugs in addition to the joints. If you mistake their position, filtration cannot run normally and the Membrane Module may break.

Important

Handle the Membrane Module carefully one by one.

Take care not to admage the Membrane surface with a sharp edge and hard matters. The whole Membrane Module cannot be used and must be replaced with a new one if membrane is damaged.

DRAFT

13.1 Lifting up of SMU

When replacing Membrane Modules, take the SMUs out of the tank before the replacement work, according to "12.1 Lifting up of SMU". Choose a flat and smooth ground for temporary work space to prevent damage on Membrane Modules.

13.2 Pulling out of Membrane Modules

Pull the Membrane Modules out of the Membrane Block according to the following procedures. Always conduct the work by two people or more. **For more information about how to use the Module Lifting Tool, see "Lifting Tool Instruction Manual".**

(1) Ensure safety of the components to which loads are imposed before use. Make sure that they are free from abnormality such as crack, corrosion, rust, abrasion, or wear before use.

(2) Detach Manifold Saddle (2 pcs), Manifold Holder, Pipe Support, Manifold, and Retainer (10 pcs) (see Fig. 13-1).

(3) Reeve eyes (where hooks of Module Lifting Tool are attached) which are located at top end of four (4) Module Slings through handles of top Membrane Module in the stack which is to be pulled out.

(4) Wind top Sub-Slings around both bottom handles of top Membrane Module and top handles of Membrane Module which is underneath the top Membrane Module. Then fix the Sub-Slings with Catch Rings.

(5) Repeat the same procedure to wind Sub-Slings around the handles of two Membrane Modules as a pair which are located underneath the top two Membrane Modules and fix the Sub-Slings with corresponding Catch Rings. Note that the Module Slings should be passed through inner side of the handle of the Membrane Unit as shown in Fig. 13-2.

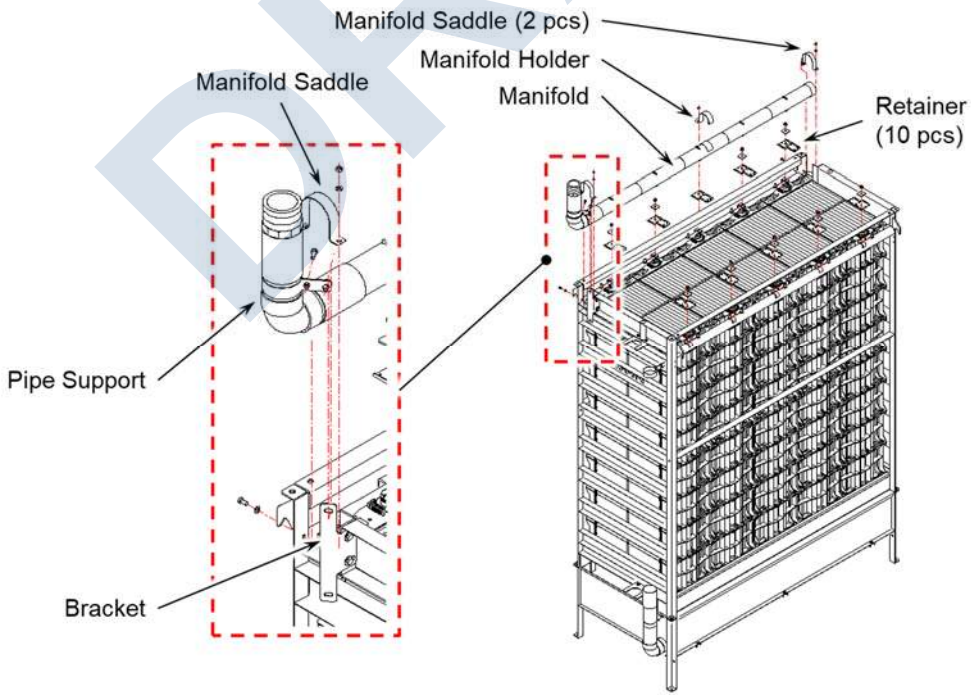

Fig. 13-1 How to disassemble SMU

DRAFT

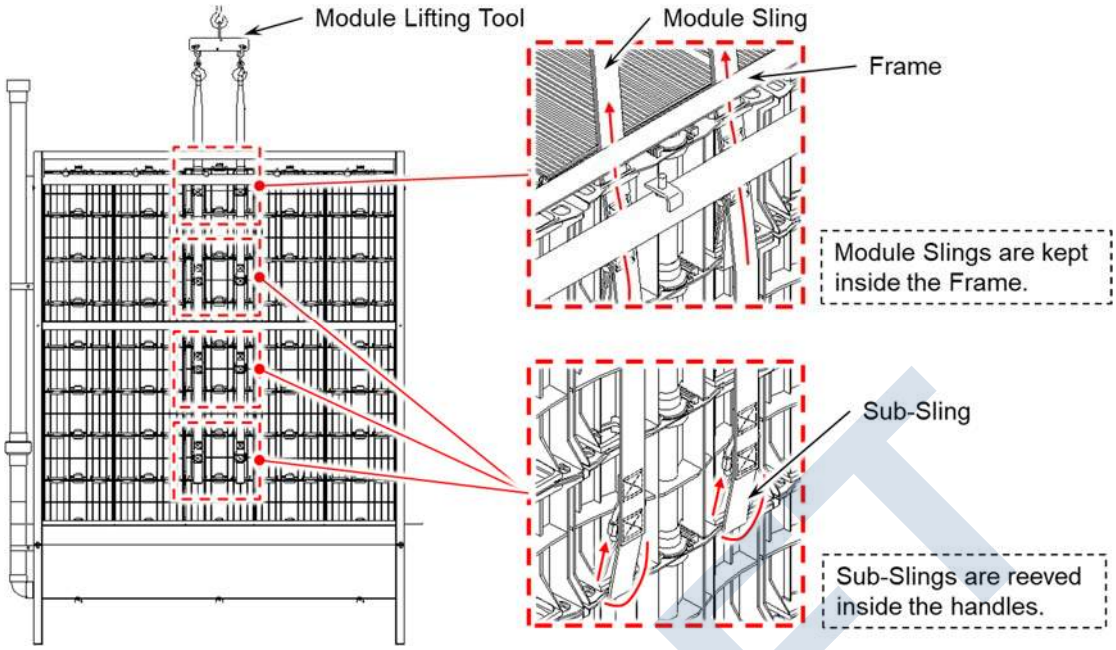

Fig. 13-2 Module Slings fixed onto the Membrane Modules to be pulled out

(6) Set the Module Sling such that the catch ring should locate the inner side of the handle before lifting (see Pic. 13-1 left). This is important for balanced lifting.

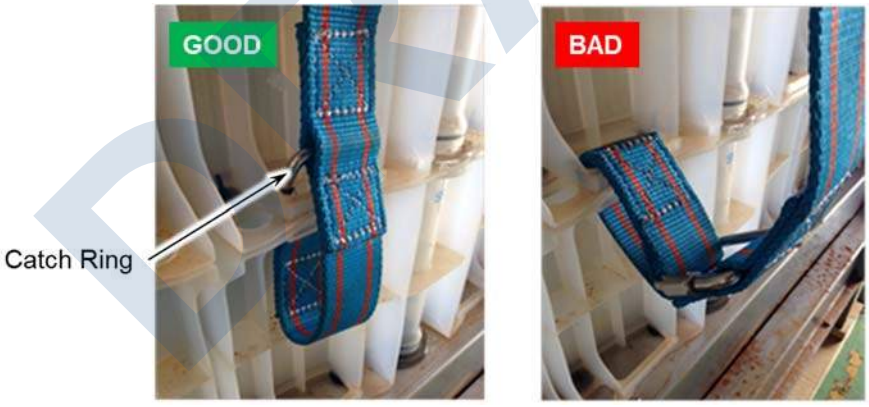

Pic. 13-1 Proper Position of Catch Ring

(7) After fixing the Module Slings, move the Module Lifting Tool to just above the Module Slings. Then attach Eyes of the Module Slings onto Hooks of Body of the Module Lifting Tool (see Fig. 13-3). Be careful that the surface of the Membrane Module shall not be touched with the Hooks of the Module Lifting Tool.

DRAFT

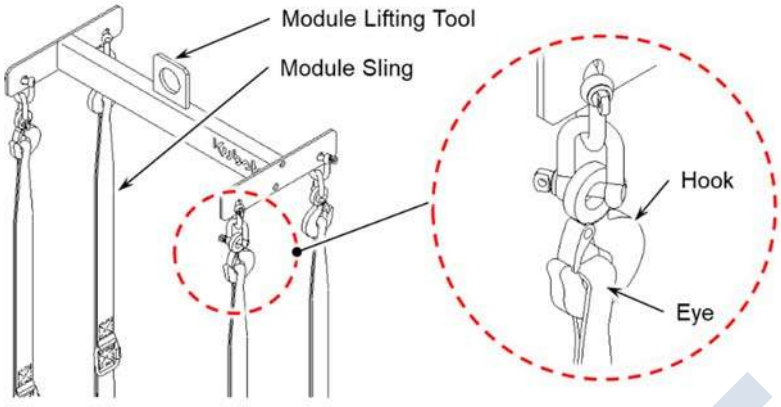

Fig. 13-3 Module Slings attached onto the Body of the Module Lifting Tool

(8) Slowly lift the Module Lifting Tool. Make sure that there is no distortion or trapping of the Catch Rings. (If there is a Catch Ring whose position is differ from others, Membrane Modules will be tilted during the lift because of inconsistency in lengths of the Sub-Slings.)

(9) Slowly place the Membrane Modules pulled out the Membrane Unit onto a flat level space. (Make sure that there is no substance such as stones which possibly damage the surface of the Membrane Module.)

(10) When stacking the separated Membrane Modules, slowly lower the Membrane Modules by two people while checking positions of two (2) joints.

(11) Maximum stackable number of Membrane Module is four because it is unstable to leave the stacked Membrane Modules on the ground. If one stack contains more than four (4) Membrane Modules, release only bottom four (4) Membrane Modules from Catch Rings and Sub-Slings.

(12) Slowly lift the rest Membrane Modules (other than the bottom four) and place them onto another flat level space.

(13) Release all Membrane Modules from the Catch Rings and the Sub-Slings and remove the eyes of the Module Slings from the Body of the Module Lifting Tool.

DRAFT

13.3 Assembly of Top-Stage Membrane Modules

Top-Stage Membrane Modules are indicated as the Membrane Modules circled in the red dashed line in Fig. 13-5. Attach the Joints, Plugs, and O-Ring P-46 on the new Membrane Module. O-rings must be securely attached. **The Membrane Module should be in standing position during this work.**

(1) Make sure every Joint has O-Ring P-34 on.

(2) Set O-Ring P-46 in the O-ring Grooves (see Fig. 13-4).

(3) Place the Joint and Plug over the O-Rings P-46 in such a way as “A” .Turn the Joint and Plug clockwise to fix in the Slits (see Fig. 13-6).

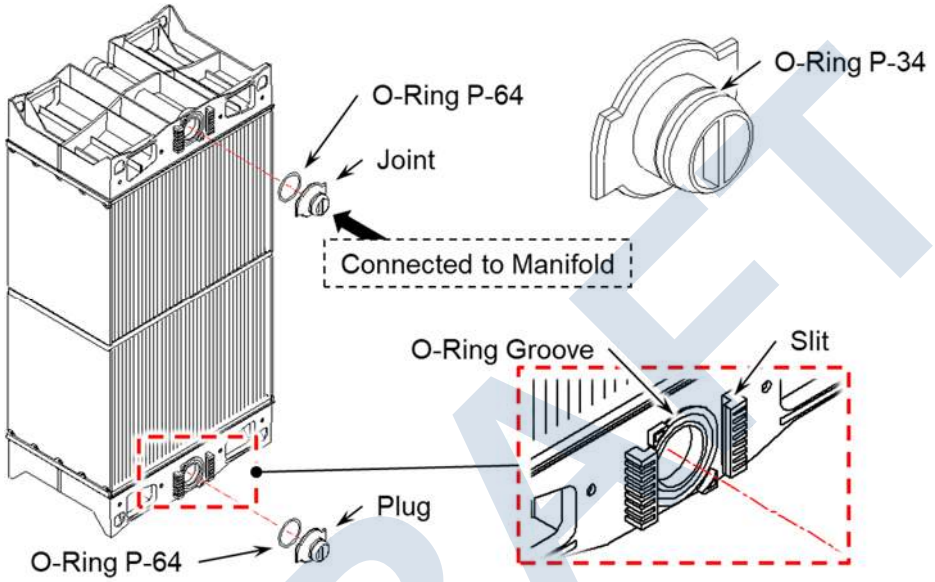

Fig. 13-4 How to Attach the Parts on a Top-Stage Membrane Module

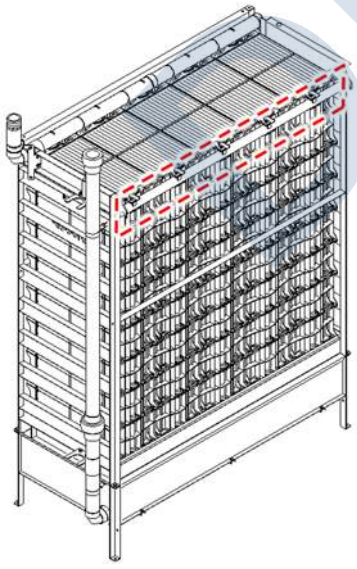

Fig. 13-5 Top-Stage Membrane Modules

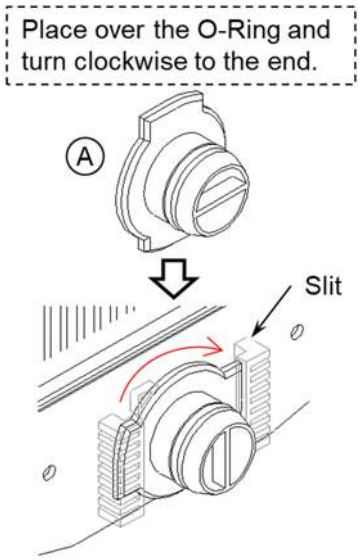

Fig. 13-6 How to fix the Plug and Joint

DRAFT

13.4 Assembly of Middle-Stage Membrane Modules

Middle-Stage Membrane Modules are indicated as the Membrane Modules circled in the red dashed line in Fig. 13-8. Attach the Joints, and O-Ring P-46 on the new Membrane Module. O-rings must be securely attached. **The Membrane Module should be in standing position during this work.**

(1) Make sure every Joint has O-Ring P-34 on.
(2) Set O-Ring P-46 in the O-ring Grooves (see Fig. 13-7).
(3) Place the Joint over the O-Rings P-46 in such a way as “A”. Turn the Joint clockwise to fix in the Slits (see Fig. 13-9).

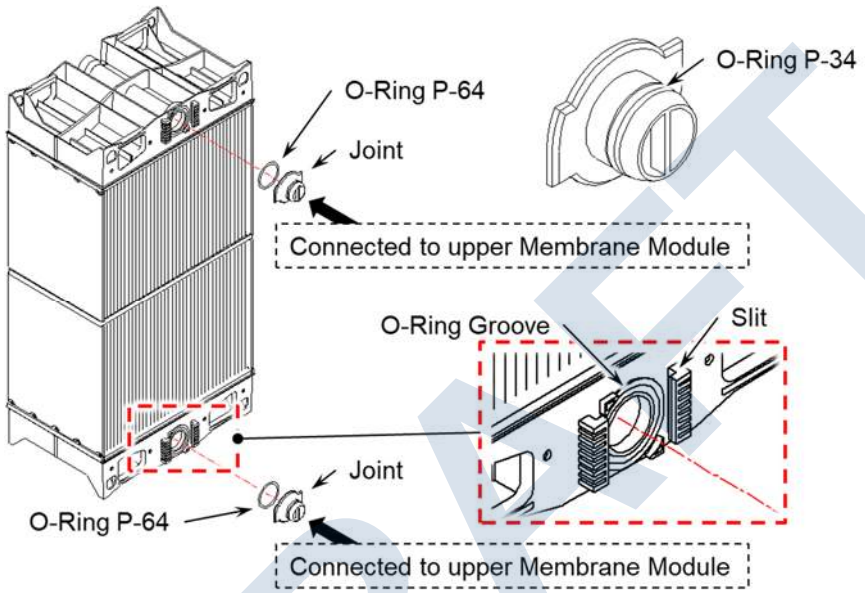

Fig. 13-7 How to Attach the Parts on a Middle-Stage Membrane Module

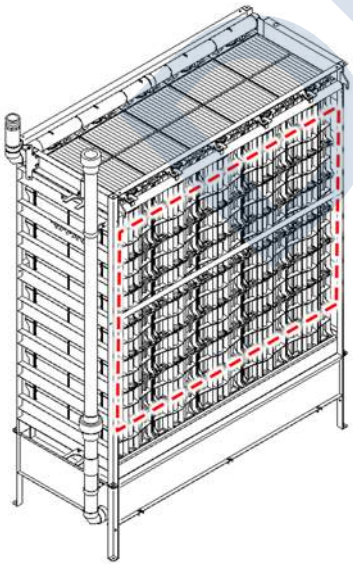

Fig. 13-8 Middle-Stage Membrane Modules

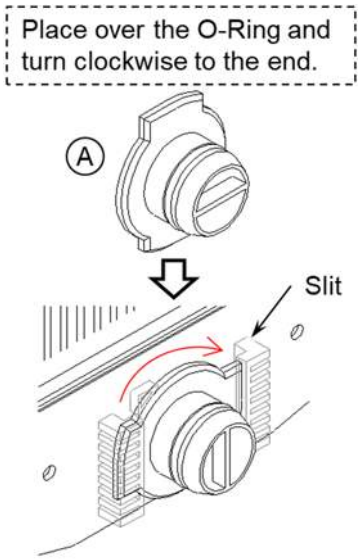

Fig. 13-9 How to Fix the Joint

DRAFT

13.5 Assembly of Bottom-Stage Membrane Modules

Bottom-stage Membrane Modules are indicated as the Membrane Modules circled in the red dashed line in Fig. 13-11. Attach the Joints, Plugs and O-Ring P-46 on the new Membrane Module. O-rings must be securely attached. **The Membrane Module should be in standing position during this work.**

(1) Make sure every Joint and Plug has O-Ring P-34 on.
(2) Set O-Ring P-46 in the O-ring grooves (see Fig. 13-10).
(3) Place the Joint over the O-Rings P-46 in such a way as “A”. Turn the Joint clockwise to fix in the Slits (see Fig. 13-12).
(4) Insert Plugs (with O-ring P-34) into bottom port of the Membrane Module (see Fig. 13-10).

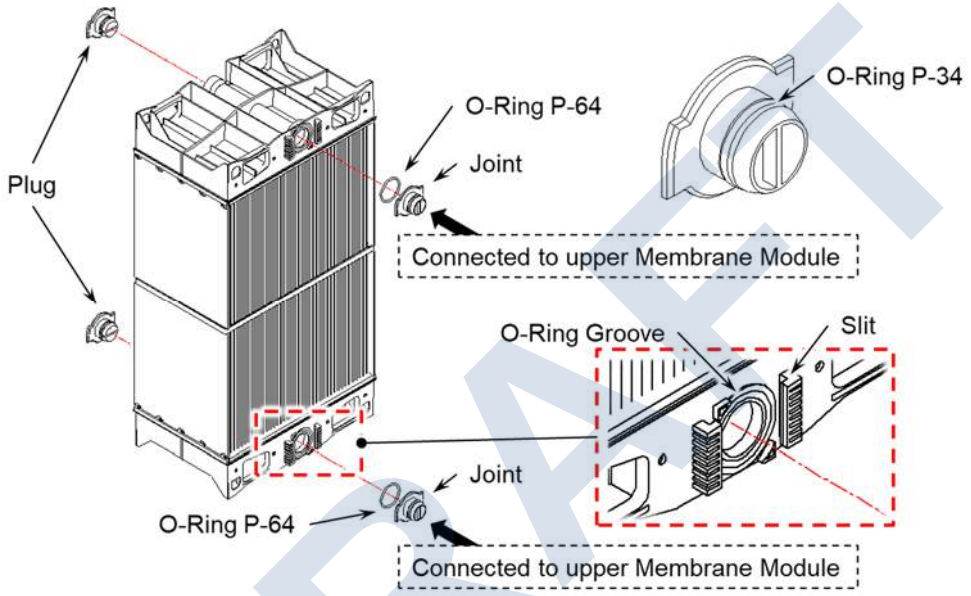

Fig. 13-10 How to Attach the Parts on a Bottom-Stage Membrane Module

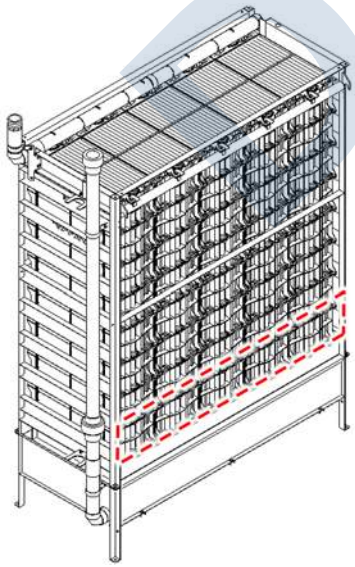

Fig. 13-11 Bottom-Stage Membrane Modules

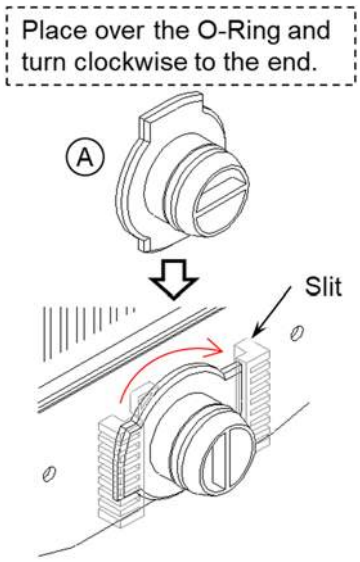

Fig. 13-12 How to Fix the Joint

DRAFT

13.6 Reload of Membrane Modules

Reload the Membrane Modules into the Membrane Block according to the following procedures. Always conduct the work by two people or more. **For more information about how to use the Module Lifting Tool, see "Lifting Tool Instruction Manual".**

(1) Ensure safety of the components to which loads are imposed before use. Make sure that they are free from abnormality such as crack, corrosion, rust, abrasion, or wear before use.
(2) Make sure that O-rings, Joints, and/or Plugs are properly fixed onto the Membrane Modules which are to be reloaded.
(3) Stack the Membrane Modules to be reloaded in the same order as they were pulled out so that misuse of Joints and Plugs will be prevented. Maximum stacks of Membrane Modules should be four (4) stacks and never stack five (5) or more Membrane Modules. When reloading more than five (5) Membrane Modules in a row, split the Membrane Modules into two (2) groups and stack them so that numbers of Membrane Modules in one group can be four (4) or less.
(4) Attach the Module Slings to Membrane Modules in the same way as they were pulled out "13.2 Pulling out of Membrane Modules". If the Membrane Modules were split to two stacks when they were pulled out, first attach the Module Slings to the Membrane Modules which are to be located on upper end, lift them up, lower them onto the Membrane Modules which are to be located on lower end, and attach the rest Sub-Slings to the Membrane Modules. Be careful not to touch the lower end of the Module Slings to Membrane Modules. When stacking the separated Membrane Modules, slowly lower the Membrane Modules by two people while checking positions of two (2) joints.
(5) Lift an entire row of the Membrane Modules and reload it into the Membrane Block. During the reload, the stack shall be slowly lowered with two persons standing at each side of the row in order to avoid interference with frame of the Membrane Unit or neighbor rows of Membrane Modules. Also, slowly lower the Membrane Modules as checking joints of the Membrane Modules are fit together when stacking two Membrane Modules together.
(6) After completing the reloading work, detach the Module Slings from both Membrane Modules and Module Lifting Tool.

13.7 Re-Assembly of SMU

Re-assemble the SMU and fix the piping according to the following procedures (see Fig. 13-1).

(1) Confirm that all the Membrane Modules are mounted in the SMU.
(2) Set the Retainers and temporarily tighten them.
(3) Place Manifold onto the Joints of the top Membrane Modules.
(4) Set Manifold Saddles, Manifold Holder and Pipe Support, and temporarily tighten them.
(5) Tighten all the Retainers. The tightening torque of the bolts (size: M12) should be 50 ~ 60 N-m.
(6) Tighten the Manifold Saddles, Manifold Holder, and Pipe Support. The tightening torque of the bolts (size: M8) should be 14 ~ 17 N-m.

DRAFT

13.8 Installation of Membrane Unit

After replacement of Membrane Modules, install the Membrane Unit to Membrane Tank. Referring to “12.2 Re-installation of SMU”, properly install the Membrane Unit.

Prohibited	**Do not operate with lack of Membrane Modules** Restart filtration with all the specified number of Membrane Modules installed. The Membrane Unit cannot be operated with lack of Membrane Module.

Important	**Submerge the Membrane Unit to allow trapped air in the Membrane Modules to escape.** Slowly submerge the Membrane Unit into the sludge or clean water to allow trapped air in the Membrane Modules to escape. If the Membrane Modules are forcedly immersed, the pressure inside the Membrane Modules would increase and may break the Membrane Sheet.

DRAFT

14. Replacement of Diffuser Rubbers

Lift up a Membrane Unit from the Membrane Tank and then conduct replacement of the Diffuser Rubbers out of the tank. Procedure is as follows:

(1) Lifting up the Membrane Unit
(2) Replacement of Diffuser Rubbers
(3) Installation of the Membrane Unit

- All Diffuser Rubbers in one SMU should be replaced at a time in order to avoid use of old ones and new ones in one SMU.
- When header piping controls the air flow rate to multiple SMUs, replace all the Diffuser Rubbers in the control range should be replaced at a time to avoid use of old and new ones in the same control range.

Warning

Take safety measures to prevent falling accident

Ensure the safety of workers by installing handrails, scaffolding and safety equipment to prevent a fall accident. Pay particular attention near the tank opening because the floor may be slippery by wetness.
Poor safety measures may result in fatal accident.

Warning

Never go beneath a lifted Membrane Block, Diffuser Block, Membrane Unit, or Membrane Module

If they fall down, fatal accident may occur.

Caution

Before using Lifting Tool, make sure that they have no abnormality

Before using Lifting Tools supporting load, check if crack, corrosion, rust, abrasion, and deformation. And also, check the Slings of the KUBOTA's Lifting Tool for abnormalities such as a cut, abrasion, scratch, broken stitch, discoloration, coloration, fusion, and melting.
Immediately replace the tools with abnormality. Continued use of them may cause human accident by product dropping.

Caution

Conduct the lifting work by two or more persons.

If the crane or chain block operator alone conducts all the work, his risk prediction ability will significantly decrease due to increased blind spots.

Caution

Do not place any part of your body between a Lifting Tool and a Membrane Block.

Do not place any part of your body, such as a hand or a head, between a Lifting Tool and a Membrane Block. It may cause a fatal accident under unsafe operation or during an unexpected drop accident.

DRAFT

Caution	**Lift a Membrane Unit or Membrane Block straight up slowly and safety by using a Lifting Tool** When lifting a Membrane Block or Diffuser Block, lift it straight up slowly and safely. If it swings, physical injuries and/or damage on surrounding equipment may occur.

Caution	**The Lifting Tools should be used by four point lifting.** When lifting up a Membrane Unit or Membrane Block, always hang it at four points. If lifted at three or two points, it may drop or swing and result in a fatal accident.

Caution	**Wear adequate gloves such as cotton work gloves during work.** Working with bare hands may result in unexpected injuries.

Important	**Use the specified Lifting Tool to lift up the Membrane Unit or Membrane Block.** It can lift up the Membrane Unit or Membrane Block without too much load.

Important	**Membrane Modules should be put temporarily on a flat and smooth place. Membrane Units should be put temporarily on a flat and smooth place.** Check that the temporal space to put the Membrane Units is flat and smooth without protrusion or litter. If the membrane sheet or Diffuser Rubber get broken by protrusion, litter, or stone, it cannot be used.

14.1 Lifting Out the SMU

Referring to “12.1 Lifting up of SMU”, lift the SMUs out of the tank before the replacement work. To prevent injury on the Diffuser Rubbers, temporary storage site should be flat and free of projection.

14.2 Separation of Diffuser Block

Divide the SMU into Membrane Block and Diffuser Block by the following procedure:

(1) Disconnect the connecting joint (union) at the rising part of air piping that was designed to separate the Membrane Block and Diffuser Block.

(2) Remove the bolts connecting the Membrane Block and Diffuser Block while the Unit Lifting Tool is attached to the Membrane Block to prevent falling of the Membrane Block.

(3) Lift up the Membrane Block with the Unit Lifting Tool.

DRAFT

14.3 Detachment and Disassembly of the Diffuser

Detach the Diffuser from the Diffuser Block and disassemble it into Diffuser Rubbers and Diffuser Headers by the following procedure:

(1) Decouple the pipe support of the Diffuser Adapter from the Diffuser Block Frame (See “Fig. 14-1 (a)”).

(2) Detach the bolts that connect the Diffuser Beam with the Diffuser Block Frame to remove the Diffuser and the Diffuser Beam from the Diffuser Block Frame (See “Fig. 14-1 (a)”).
To prevent drop of the Diffuser and the Diffuser Beam, support the whole Diffuser equipment from under with hands of two or more persons.

(3) Put the Diffuser and the Diffuser Beam on the floor slowly and move the Diffuser Block Frame to a place where it does not get in the way of the work.

(4) Detach the Diffuser Beam from the Diffuser. Be careful not to let the welded bolts on the Diffuser Beam touch the Diffuser Rubbers (See “Fig. 14-1 (b)”). For detaching the nuts between the Diffuser Rubbers, use an extension bar with the length of about 100 mm.

(5) Separate the Diffuser Headers and the Diffuser Rubbers by lightly hitting out the end of the Diffuser Header B with the Diffuser Header A fixed by the other hand. If some Diffuser Rubbers remained in the Diffuser Header, draw them out by hand to separate the Diffuser Headers and the Diffuser Rubbers completely (See “Fig. 14-1 (c)”).

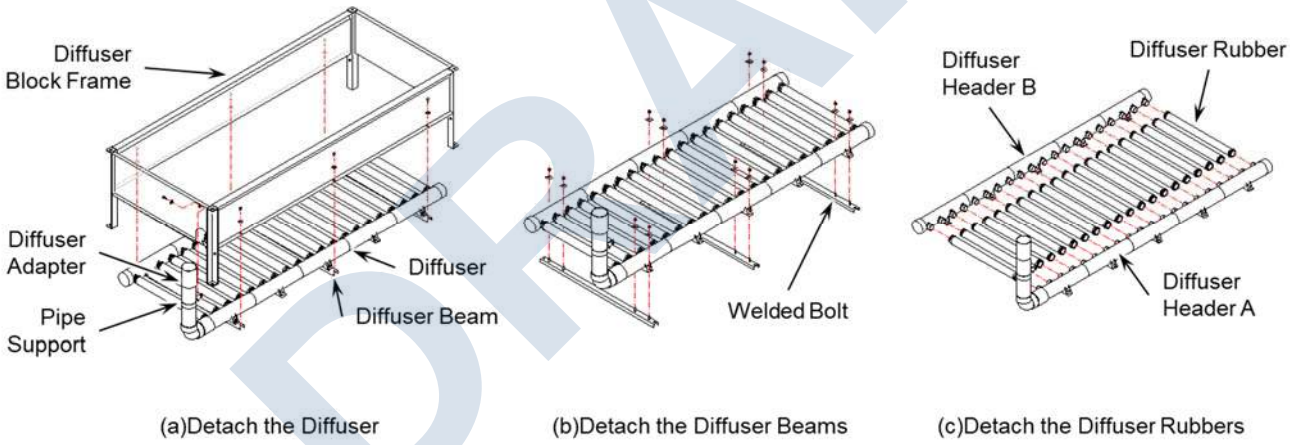

Fig. 14-1 How to Detach the Diffuser

14.4 Reassembly of Diffuser

Using new Diffuser Rubbers for replacement and the Diffuser Headers, assemble the Diffuser by the following procedure:

(1) If the connection of the Diffuser Header to the Diffuser Rubber is dirty, clean it off.

(2) Wet both ends of the Diffuser Rubber to insert the Diffuser Rubbers to the Diffuser Header smoothly.

(3) Insert the Diffuser Rubber to the Diffuser Header A with the triangle match marks on the Diffuser Rubber and the Diffuser Header fit (see “Fig. 14-2”). Go on to tap the Diffuser Rubber lightly with a larger plastic hammer until the Diffuser Rubber knock the end.

(4) After the first Diffuser Rubber is inserted, insert other Diffuser Rubbers one by one into the Diffuser

DRAFT

Header A.

(5) Rotate the Diffuser on the axis line of the Diffuser Header until it stands with the axis lines of the Diffuser Rubbers pointing vertically (see “Fig. 14-3”). Stand it slowly with hands of two persons on the center of Diffuser Rubbers not to drop the Diffuser Header or not to apply too much force to the Diffuser Header.

(6) Insert the Diffuser Header B to the Diffuser Rubber (see “Fig. 14-3”). Insert from one side in turn because it is difficult to insert all the Diffuser Rubbers at once.

(7) Tap the Tabs of the Diffuser Header lightly with a larger plastic hammer until all the Diffuser Rubbers approaches within 1mm from the Diffuser Header (see “Fig. 14-4”). Be careful for the Diffuser not to fall.

(8) Lay down the Diffuser into the usual direction.

(9) Put the Diffuser Beams under the Diffuser. Temporarily tighten the washers and nuts for temporary tightening of the Diffuser (see “Fig. 14-1 (b)”). For the temporary tightening of the nuts, use an extension bar with the length of about 100 [mm].

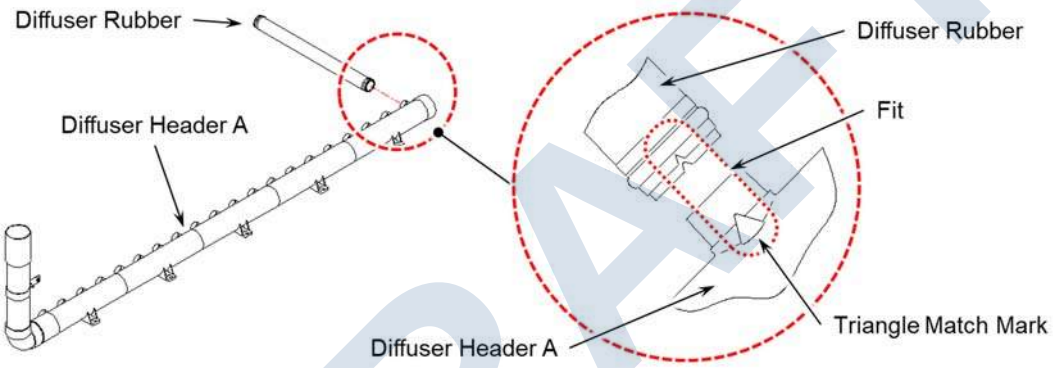

Fig. 14-2 How to Insert the Diffuser Rubber into Diffuser Header

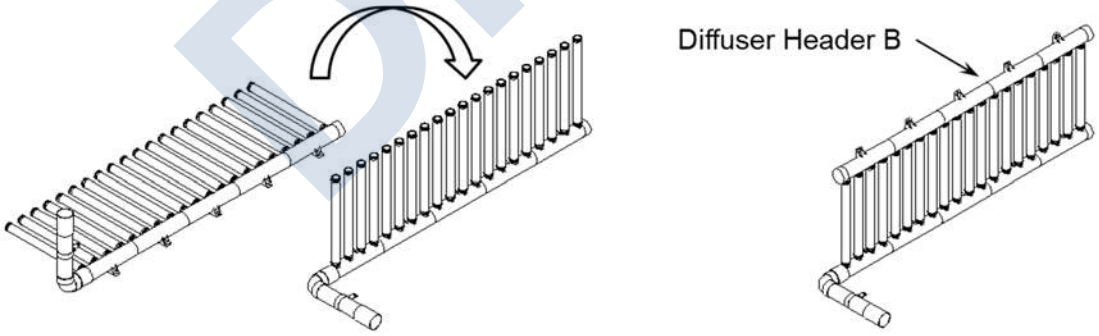

Fig. 14-3 How to Insert the Diffuser Header to Diffuser Rubbers

DRAFT

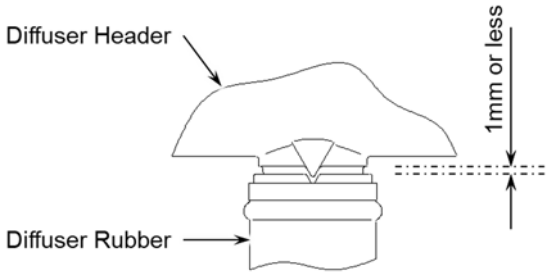

Fig. 14-4 Gap between the Diffuser Rubber and Diffuser Header

14.5 Attachment of the Diffuser to the Diffuser Block

Attach the Diffuser to the Diffuser Block by the following procedure:

(1) Place the Diffuser Block Frame on the Diffuser Beam and the Diffuser. Be careful that the legs of the Diffuser Block Frame will not hit the Diffuser.

(2) Raise the Diffuser and the Diffuser Beams by two or more persons. Temporarily fix the Diffuser Beams to the Diffuser Block Frame by bolts (see “Fig. 14-1”).

(3) Adjust the position of the Diffuser so that the gaps between the Diffuser Block Frame and the Diffuser Equipment are equal in every direction.

(4) Tighten all the nuts with the nominal diameter M8 for Diffuser, Diffuser Beams, and Pipe Support at the torque of 14~17 [N·m]. Use an extension bar with the length of about 100 [mm] to tighten the nuts when fixing the Diffuser to the Diffuser Beam.

14.6 Reassembly of the SMU

Reassemble the SMU by the following procedure:

(1) Combine the Membrane Block and the Diffuser Block by the procedure of “4.3 Assembly of SMU”.

(2) Connect the union joint in the riser part of air piping. If the center of the air piping and the union joint do not fit, adjust the position by loosening the bolt of Pipe Support and the bolts fixing the Diffuser Beams to Membrane Block Frame. After the adjustment is completed, tighten the bolts again.

14.7 Installation of Membrane Unit

After replacement of the Diffuser Rubbers, install the Membrane Unit to Membrane Tank. Referring to “12.2 Re-installation of SMU”, properly install the Membrane Unit.

DRAFT

15. Guide Set

"Guide Set" is a set of fabricated metal parts to install and keep position of SMU in a tank. Components of the Guide Set and their purposes are explained in Table 15-1.

- The Guide Set is NOT supplied by KUBOTA.
- For more information about design and fabrication condition of the Guide Set, please consult with corresponding engineering company.

Table 15-1 Components of Guide Set (By Others) and their Purpose

Item	Application / Objective	Note
Base Plate	・ Support Diffuser Block. ・ Secure horizontality of SMU. ・ Fix lower end of Guide Pole.	Please consult the corresponding engineering company for design information.
Support Bracket	・ Fix upper end of Guide Pole. ・ Secure verticality of Guide Pole.	
Guide Pole	・ Guide SMU when it is lifted up or lowered down. ・ Keep position of SMU at right place in tank.	
Stabilizer	・ Avoid floatation of SMU	

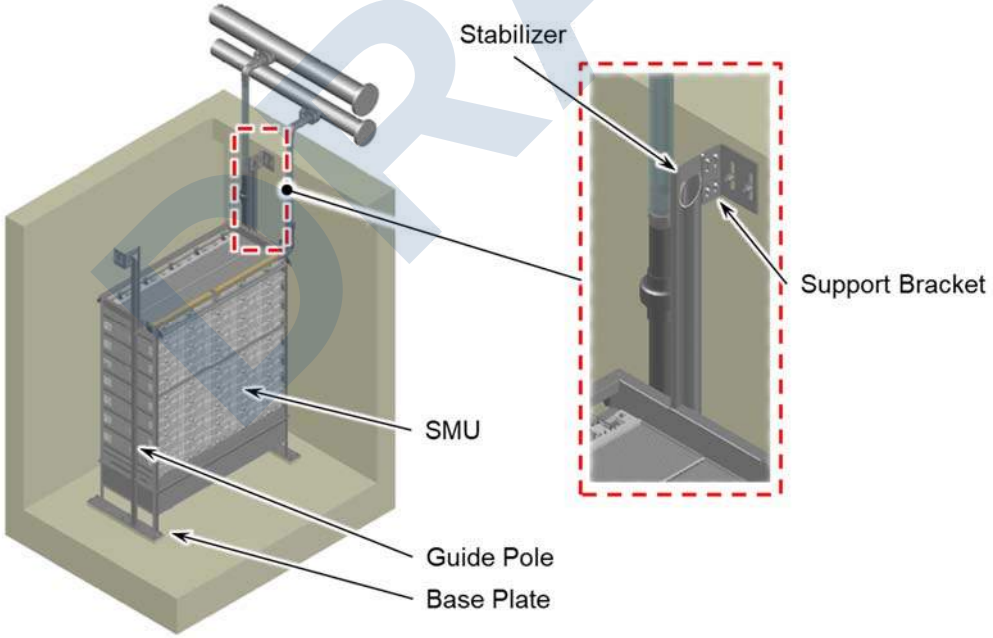

Fig. 15-1 Guide Set

DRAFT

16. Trouble Shooting

	Problem	Possible Cause	Remedies
1	Airflow rate fails to reach the specified value.	Blower is failed	Repair or replace the blower(s).
		Slime adheres to the Diffuser.	Perform the Blow-down.
		Diffuser is clogged.	Clean the Diffuser(s).
2	Non-uniform aeration is observed in an individual SMU. Non-uniform aeration is observed among multiple SMUs.	Diffuser is clogged.	Clean the Diffuser(s).
		Diffuser is broken.	Replace the Diffuser(s).
		Base Plates are not leveled within the specified tolerance.	Adjust the levelness of the Base Plates within the tolerance.
3	Filtration Pressure is high (suction filtration or gravity filtration), or water level of membrane tank is high (gravity filtration), or design filtration flow rate cannot be achieved.	Operational flux is higher than the design flux.	Adjust flux to the design figure.
		Membrane surface is fouled.	Conduct chemical cleaning.
		Sludge clogging occurred between Membranes.	Conduct chemical cleaning after manual cleaning.
		Characteristics of the activated sludge are unfavorable. (e.g. low filterability or high viscosity)	Improve the sludge condition.
		Membrane surface is hydrophobic.	Treat the Membrane with a hydrophilic agent.
		Foreign substances tangles with the Membrane Modules.	Remove the foreign substances from the Membrane Modules by manual cleaning. Confirm the capture rate of the screen is 90% or higher.
4	Permeate is turbid and has not been properly treated.	Joints or Plugs comes off or get damaged.	Replace the joints or plugs.
		Membrane Module is damaged.	Replace the Membrane Module.
		Manifold is damaged.	Replace the Manifold.
		Connection of pipes is loosen.	Repair the connection.

If other problems as shown below are found even though operation and maintenance are performed in accordance with this manual, please immediately consult with corresponding engineering company.

- Uneven installation of Membrane Modules.
- Collecting paths on the sides of Membrane Modules visibly changes black.
- Corrosion on the KUBOTA's Lifting Tools and other metal parts
- Low permeate flow, high filtration pressure, etc.

DRAFT

17. Parts List

17.1 Membrane Block

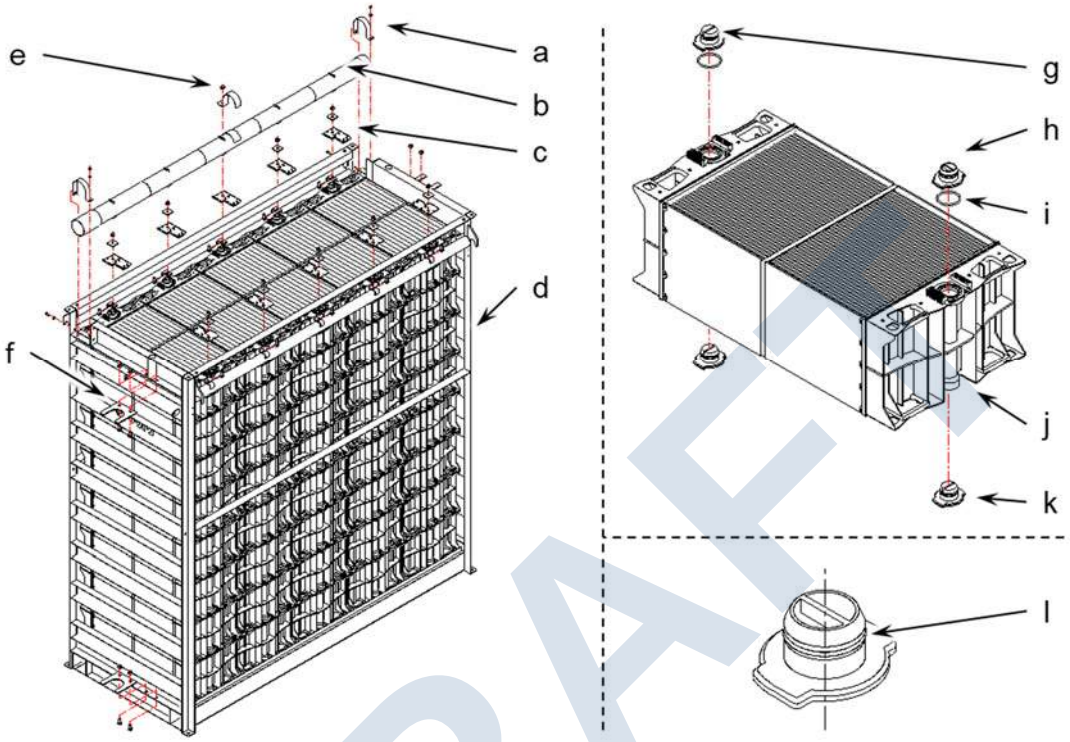

Symbol	Name	Material	Remarks
a	Manifold Saddle	SUS	
b	Manifold	PVC etc.	
c	Retainer	SUS, NBR	
d	Membrane Block Frame	SUS	
e	Manifold Holder	SUS	
f	Guide Plate	SUS	
g	Joint	PS, NBR	
h	Plug	PS	For Top Module only (for others, g: Joint)
i	O-Ring	EPDM	P-46
j	Membrane Module	PP etc.	Periodical replacement is recommended.
k	Lower Plug	PS, NBR	For Bottom Module only
l	O-Ring	NBR	P-34

DRAFT

17.2 Diffuser Block

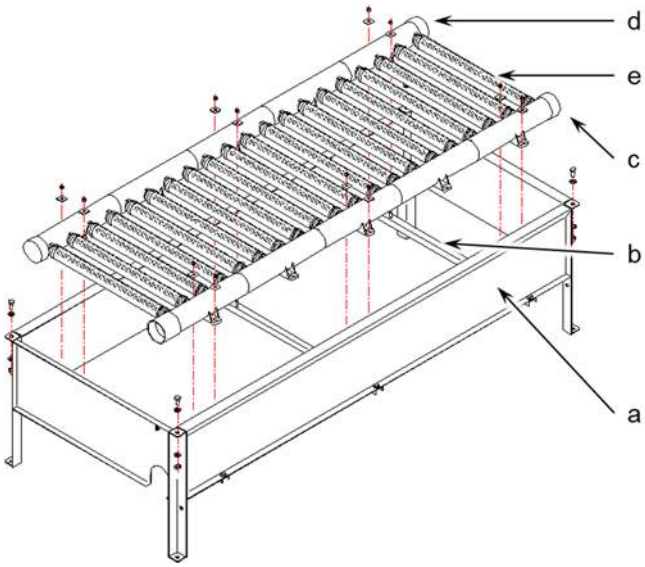

Symbol	Name	Material	Remarks
a	Diffuser Block Frame	SUS	
b	Side Cover	SUS	
c	Diffuser Header A	ABS etc.	
d	Diffuser Header B	ABS	
e	Diffuser Rubber	PU etc.	Periodical replacement is recommended.

17.3 Adapters

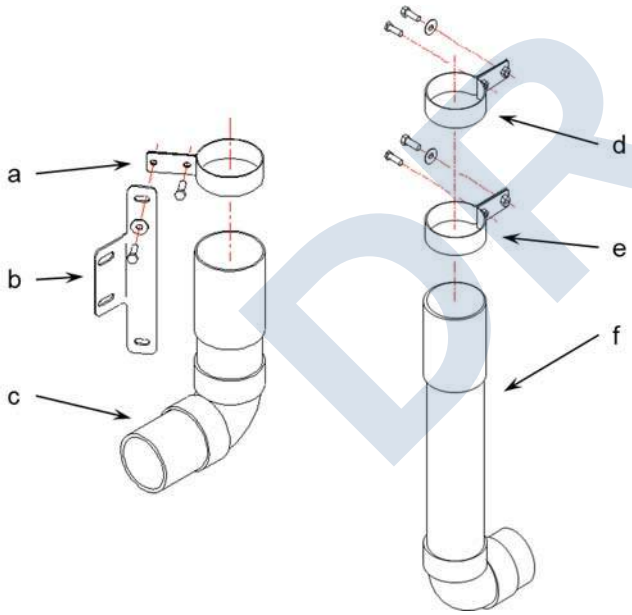

Symbol	Name	Material	Remarks
a	Pipe Support	SUS	
b	Bracket	SUS	
c	Manifold Adapter	ABS etc.	
d	Pipe Support	SUS	
e	Pipe Support	SUS	
f	Diffuser Adapter	ABS etc.	

DRAFT

DRAFT

DRAFT

KUBOTA Submerged Membrane Unit ® is a registered trademark of KUBOTA Corporation.
Registered in Commonwealth of Australia, Federal Republic of Germany, French Republic, Grand Duchy of Luxembourg, Hong Kong, Kingdom of Belgium, Kingdom of the Netherlands, People's Republic of China, Republic of Italy, Republic of Turkey, Spain, State of Israel, United Kingdom, and United States of America

© 2020 KUBOTA Corporation (No part of this document may be copied without permission.)

KUBOTA Corporation (Tokyo Head Office)
Membrane Systems Dept.
1-3, Kyobashi 2-chome, Chuo-ku, Tokyo 104-8307, Japan
Phone: +81-3-3245-3665, Fax: +81-3-3245-3407, http://www.kubota-global.net/

KUBOTA Membrane Europe Ltd.
3rd Floor No.1 Farrier's Yard, 77-85 Fulham Palace Road, London, W68JA, UK
Phone: +44-20-8741-5262, Fax: +44-20-8563-1616, http://www.kubota-mbr.com/

KUBOTA Membrane USA Corporation
11807 North Creek Parkway South, B-109, Bothell, WA 98011, USA
Phone: +1-425-898-2858, Fax: +1-425-898-2853, http://www.kubota-membrane.com/

DRAFT

Kubota SMU Lifting Tool Instruction Manual (for SP/SPC model)

DRAFT

KUBOTA Submerged Membrane Unit TM

Lifting Tool Instruction Manual (for SP/SPC model)

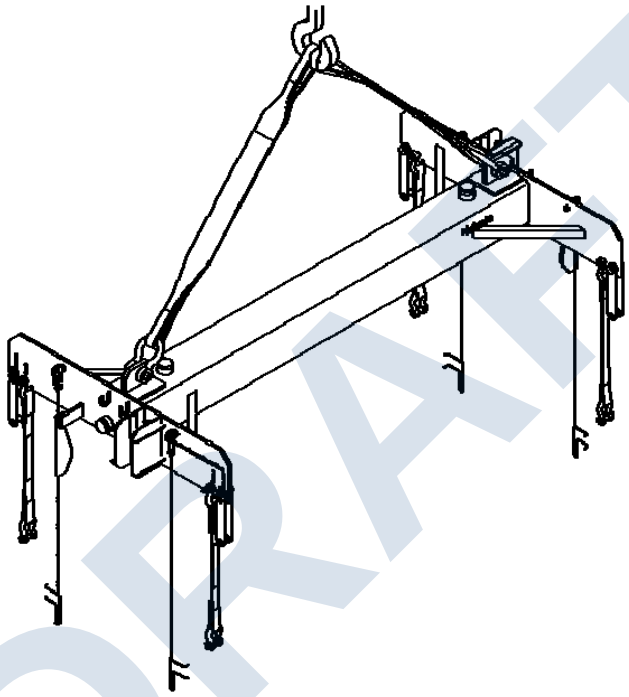

DRAFT

Check points upon delivery

Optional parts of the KUBOTA Submerged Membrane Unit™ are delivered according to purchase order.
Please confirm the following things once the purchase order has been checked.
(1) The shipment contains all the products shown in the packing list.
(2) The products have not been damaged during delivery.

- Please read this manual carefully before using this product.
- Please keep this manual in a place where the operator has easy access.

KUBOTA Corporation

61OP300014 (SP/SPC)

DRAFT

Introduction

This manual describes an overview, handling procedures, and precautions of Optional Parts for KUBOTA Submerged Membrane Unit™ (SMU).
First please read and understand the “Safety Precautions” which explains the compliance rules that prevent danger to users and everyone concerned and damage to properties.
It is important to read this manual carefully in order to use these optional parts safely and properly. Retaining a copy of this manual for future reference is recommended.
Please consult with engineering company who is in charge of your project if you have any questions or find any difficulty in using these products as described in this manual.
Please understand that there may be inconsistency between your delivered product and what is described in this manual because of changes in product specifications.

* KUBOTA Submerged Membrane Unit™ is a trademark of KUBOTA Corporation.

DRAFT

Safety Precautions

The following contents are intended to minimize risks to users and property damage.
Please read and understand the following contents before proceeding with this manual as to comply with safety rules.

■ The following markings indicate potential causes of physical injury, and are classified and explained according to seriousness of consequences

Danger	Failure to comply with this information will imminently result in death or severe injury.
Warning	Failure to comply with this information could result in death or severe injury
Caution	Failure to comply with this information could result in minor injury or property damage

■ The following markings classify and explain compliance rules about product handling and operation management.

Prohibited	Prohibited action
Important	Important rules to be complied with

DRAFT

Danger

Keep safe working environment in tanks

When working in a tank, keep the working environment safe by measuring the required items including oxygen and hydrogen sulfide in observance of local regulations/standards of each country/region. Failure to follow the procedure could result in a fatal accident such as anoxia.

Warning

Never go beneath a lifted Membrane Block, Diffuser Block, Membrane Unit, or Membrane Module

If they fall down, fatal accident may occur.

Take safety measures to prevent falling accident

Ensure the safety of workers by installing handrails, scaffolding and safety equipment such as helmets, gloves, and safety belts to prevent a fall accident. Pay particular attention near the tank opening because the floor may be slippery by wetness. Do not climb on a SMU. Neglecting the safety measures may cause falling accident.

Caution

Before using Lifting Tools, make sure that they have no abnormality

Before using Tools supporting load, check if crack, corrosion, rust, abrasion, and deformation. Check Slings for abnormalities such as a cut, abrasion, scratch, broken, stitch, discoloration, coloration, fusion, and melting.

Immediately replace the tools with abnormality. Continued use of them may cause human accident by product dropping.

Conduct the lifting work by two or more persons.

If a crane or chain block operator conducts all the work alone, his risk prediction ability will significantly decrease due to increased blind spots.

Do not place your hand or head between a Lifting Tool and a Membrane Block or others.

Do not place any part of your body between the Lifting Tool and the Membrane Block, the Diffuser Block, Membrane Unit, or the Membrane Module. It may cause a fatal accident under unsafe operation or during an unexpected drop accident.

Store the Lifting Tool without exposure to wetness or corrosive gas.

Exposure to water or corrosive gas may cause corrosion of Lifting Tool, resulting in decreased strength and drop accident

DRAFT

Be sure to check that there are no slacks of shackles or eyebolts.
If they drop off, a Membrane Block, a Diffuser Block, a Membrane Unit, or Membrane Modules may fall to cause human injury or equipment damage.

Wear adequate clothing and gloves such as cotton work gloves during work
Working in improper clothing or with bare hands may result in a caught-in accident or other unexpected injuries.

Lifting Tool should be used by four point lifting.
When lifting up a Membrane Block, a Diffuser Block, a Membrane Unit, or Membrane Modules, always hang it at four points. If lifted at three or two points, it may drop or swing and result in a fatal accident.

Always use Eyebolts when lifting up a Diffuser Block.
Eyebolts accompany at the Lifting Tool. If lifted unbalancedly, it may drop or swing and result in a fatal accident.

DRAFT

Index

Introduction i
Safety Precautions ii
Index v
1. List of Optional Parts described in this Manual 1
1.1 Unit Lifting Tool 1
1.2 Module Lifting Tool 1
2. Unit Lifting Tool 2
2.1 Overview of the Unit Lifting Tool 2
2.2 Before Using the Unit Lifting Tool 6
2.3 How to Use the Unit Lifting Tool 8
2.4 Temporary Placing of the Unit Lifting Tool 19
2.5 Storage of the Unit Lifting Tool 20
3. Module Lifting Tool 21
3.1 Overview off the Module Lifting Tool 21
3.2 Before using the Module Lifting Tool 24
3.3 How to use the Module Lifting Tool 26
3.4 Temporary Placing of the Module Lifting Tool 29
3.5 Storage of the Module Lifting Tool 29

DRAFT

1. List of Optional Parts described in this Manual

For safety and usability, KUBOTA Corporation provides optional parts for KUBOTA Submerged Membrane Unit™ (SMU). This instruction manual describes each of the optional parts shown below:

1.1 Unit Lifting Tool

The Unit Lifting Tool is used for lifting a Membrane Block, a Diffuser Block or a Membrane Unit.
See “2 Unit Lifting Tool” for the details.

1.2 Module Lifting Tool

The Module Lifting Tool is used for lifting Membrane Modules at a time of replacement of the Membrane Modules.
See “3 Module Lifting Tool” for the details.

DRAFT

2. Unit Lifting Tool

2.1 Overview of the Unit Lifting Tool

2.1.1 Purpose

- To lift up a Membrane Block or a Diffuser Block at a time of unloading.
- To lift up a Membrane Block, a Diffuser Block, or a Membrane Unit at a time of assembly of the Membrane Unit or maintenance work.

2.1.2 Specification

- Material of Construction： Rolled Steels for General Structure (SS400 in JIS G3101) etc.
- Components： Body of the Unit Lifting Tool**,** Crane Slings, Unit Slings**,** Hangers, Stoppers, Shackles, Eyebolts and Stands

Table 2-1 Specifications of Unit Lifting Tool

Model	Applicable Membrane Unit*1	Mass (dry) [kg]	Mass with full of water [kg]	Tool Height*2 [mm]	Allowable Maximum Load*3 [kg]
TGSP508-R	SP/SPC series	210	280	1,500	3,300

*1 This means model of Membrane Unit to which the Unit Lifting Tool can be applied. It is possible to lift up the Membrane Unit in which a Membrane Block is combined with a Diffuser Block. However, it is impossible to lift up a double deck Membrane Unit (SPC600, SP600 / 800 / 675-A / 900-A) in which an Upper Membrane Block and a Lower Membrane Block is combined.

*2 This means the occupying height of the Unit Lifting Tool in the lifting work of Membrane Unit or others with using Hangers. In the lifting work, the height of the Membrane Unit needs to be counted in. When using Unit Slings, the occupying height including the Unit Slings becomes 2000 [mm] (see Fig. 2-1).

*3 The Allowable Maximum Load of the Unit Lifting Tool with using the Hangers is determined considering the total weight when all the Membrane Modules in the Membrane Unit are clogged up by sludge. Additionally, if there is something else deposited, attached, or loaded on the top or side faces of the Membrane Module, remove it before lifting to prevent excess load. **Please use the Unit Sling only for lifting a dry new Membrane Block (for unloading or assembling of Membrane Unit), Diffuser Block (for unloading), or Membrane Unit (for assembling of Membrane Unit or first installation to the tank). Please do not use the Unit Sling for lifting a wet or clogged Membrane Unit.**

DRAFT

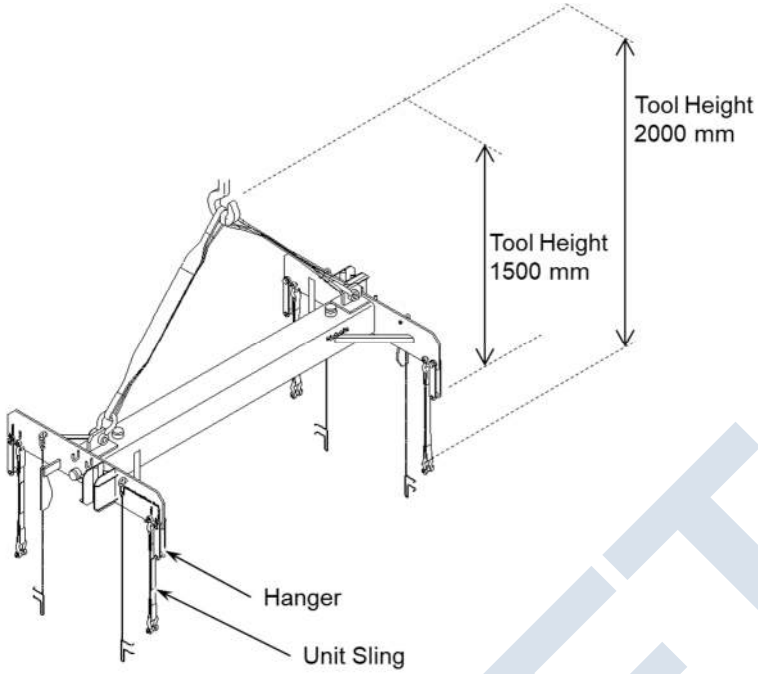

Fig. 2-1 Tool Height

2.1.3 Structure and Function

- Structure and components of the Unit Lifting Tool are shown in Fig. 2-2 and Table 2-2.
- Both two (2) Crane Slings should be attached to the Unit Lifting Tool and used in order to lift up the Unit Lifting Tool at two (2) points.
- Unit Slings and Shackles should be used when a Membrane Block or a Diffuser Block is unloaded or when they are assembled. The Unit Slings and Shackles should be attached to the holes (Catch) of the Unit Lifting Tool when using.
- Hangers should be used when lifting up a Membrane Unit which is submerged in water or when reinstalling the Membrane Unit into a tank under water level. The Hangers should be attached to the Unit Lifting Tool when using. The position of the Hangers needs to be changed based on a situation where the Unit Lifting Tool "catches" or "releases" the Membrane Unit.
- Carabiners, Leads, and Stoppers are used for preventing Hangers or Unit Slings from dropping off Hooks. The Carabiners should be attached to the Unit Lifting Tool, Stoppers should be attached to the Membrane Block near Hooks, and the Leads should be connected to the Carabiners and the Stoppers, as required.
- Eyebolts should be detached from the Unit Lifting Tool and attached to top four (4) corners of the Diffuser Block when the Diffuser Block is unloaded.
- Plugs are detached or attached when water is poured into or discharged from the Unit Lifting Tool.
- Stands are used when the Unit Lifting Tool is temporarily placed on ground or stored.

DRAFT

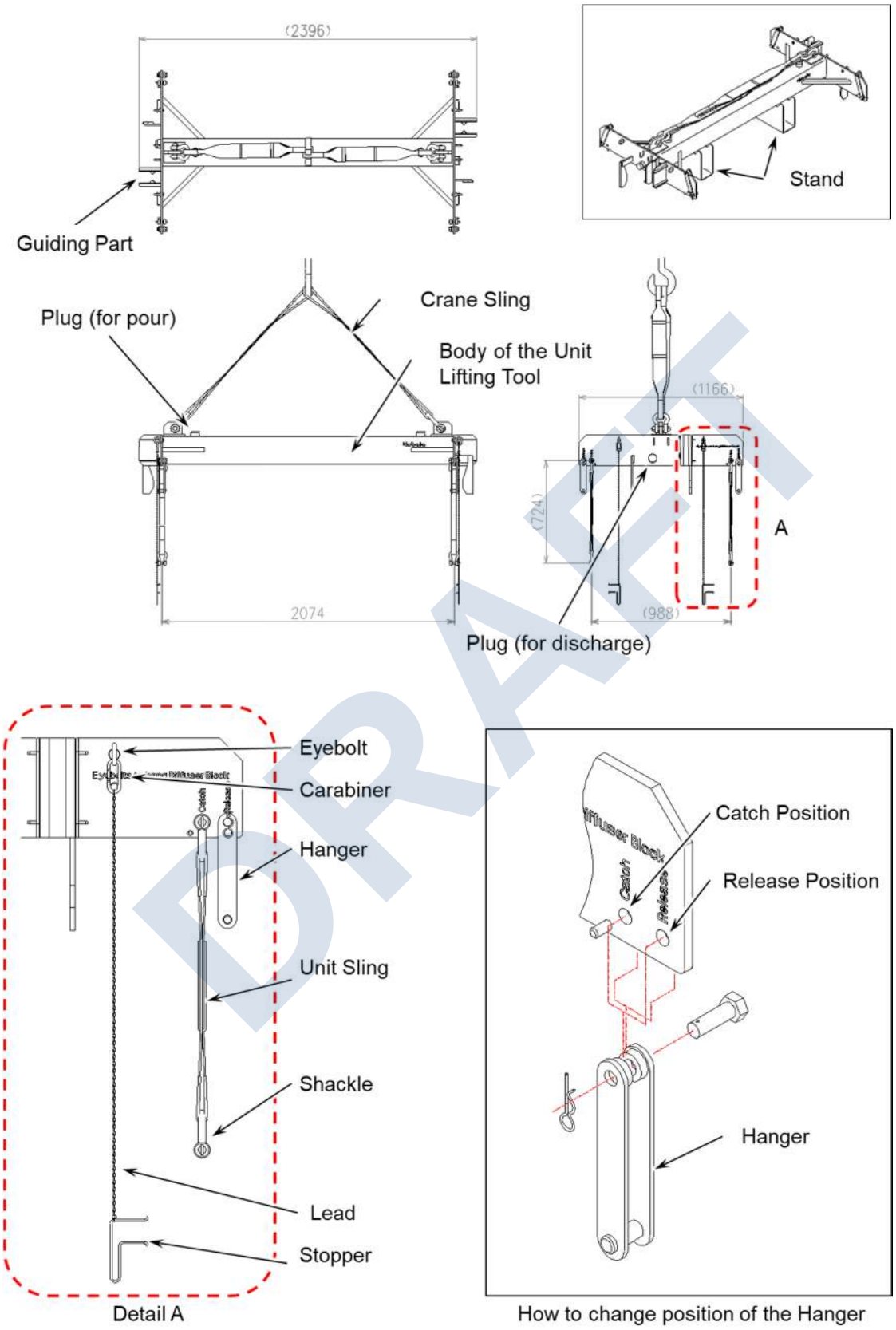

Fig. 2-2 Unit Lifting Tool (TGSP508-R)

Table 2-2 Components of Unit Lifting Tool and their Purposes

Component	Purposes
Hanger	The Hangers are used for connecting a Unit Lifting Tool and a Membrane Unit when the Membrane Unit in water is lifted up or the Membrane Unit is reinstalled into water.
Catch Position	The Catch Position indicates the position to attach the Hanger when the Unit Lifting Tool catches the Membrane Unit in water (lifts the Membrane Unit up).
Release Position	The Release Position indicates the position to attach the Hanger when the Unit Lifting Tool releases the Membrane Unit in water (reinstalls the Membrane Unit into tank).
Guide Part	By having the Guide Parts along Guide Poles which are installed in a Membrane Tank, the Unit Lifting Tool will be properly positioned against a Membrane Unit.
Unit Sling	The Unit Slings are used for connecting the Unit Lifting Tool to a Membrane Block or a Diffuser Block when they are unloaded. The Unit Slings should be attached to the “Catch Position” of the Unit Lifting Tool when using. **Please use the Unit Sling only for lifting a dry new Membrane Block (for unloading or assembling of Membrane Unit), Diffuser Block (for unloading), or Membrane Unit (for assembling of Membrane Unit or first installation to the tank). Please do not use the Unit Sling for lifting a wet or clogged Membrane Unit.**
Eyebolt	The Eyebolts are attached to the Diffuser Block and used for connecting the Diffuser Block to Shackles when the Diffuser Block is lifted up.
Shackle	The Shackles should be attached at lower end of the Unit Slings when the Diffuser Block is lifted. The Shackles are used for connecting the Eyebolts to the Unit Slings. The Shackles should be detached from the Unit Slings when the Membrane Block is lifted up.
Carabiner	The Carabiners connect Leads and Unit Lifting Tool.
Lead	The Leads connect Stoppers and Carabiners.
Stopper	The Stoppers prevent the Unit Slings or Hangers from dropping off while the Membrane Unit is lifted up.
Crane Sling	The Crane Slings connect the Unit Lifting Tool and a hook of crane when the Unit Lifting Tool is lifted up.
Plug	The Plugs plug water inlet or outlet of the Unit Lifting Tool.
Stand	The Stands supports the Unit Lifting Tool in order to avoid deformation or damage of the Unit Lifting Tool when the Unit Lifting Tool is temporarily placed on ground or stored in an indoor storage.

DRAFT

2.2 Before Using the Unit Lifting Tool

2.2.1 Compliance

Observe the applicable laws and rules of each country and region. Particularly, kinds of work that require qualification or permission such as crane operation and slinging have to be conducted by a qualified person. Be sure to take safety measures such as scaffolding, safety belt, helmet, etc.

2.2.2 Prior-to-use Inspection

Perform inspection before using the Unit Lifting Tool to check for abnormalities.

- Check the Body of the Unit Lifting Tool, Crane Slings, Hangers, Unit Slings, Shackles, and Eyebolt for deterioration such as abrasion, crack, and/or corrosion, etc.
- Check the Body of the Unit Lifting Tool, Eyebolts, and Shackles for coming-off of plating. Do not use a rusted Lifting Tool due to damaged plating because its strength may have decreased.
- Check the Shackles for looseness.
- Check the Body of the Unit Lifting Tool for abrasion and deformity.
- Check the Crane Slings and Unit Slings of the Unit Lifting Tool for deterioration such as a cut, abrasion, scratch, broken stitch, discoloration, coloration, fusion, and melting.
- Do not use and immediately replace a sling belt if its core material is exposed as Pic. 2-1.

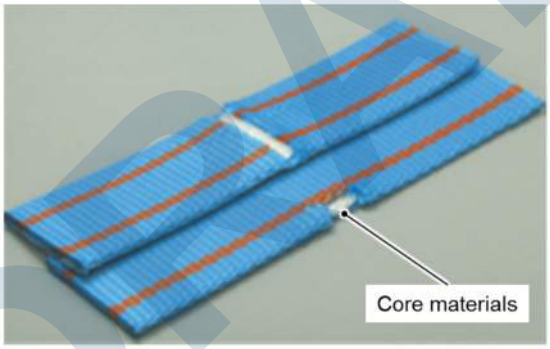

(The colors of the sling and the core material can differ depending on the model.)

Pic. 2-1 Sign of Replacement of the Sling Belt

Caution

Before using Lifting Tools, make sure that they have no abnormality

Before using Tools supporting load, check if crack, corrosion, rust, abrasion, and deformation. Check Slings for abnormalities such as a cut, abrasion, scratch, broken, stitch, discoloration, coloration, fusion, and melting. Immediately replace the tools with abnormality. Continued use of them may cause human accident by product dropping.

DRAFT

2.2.3 Prior-to-use Preparation

- Before mounting the Unit Lifting Tool, ensure safety of workers by using scaffolds and safety equipment such as helmets and safety belts to prevent a falling accident. Do not climb on a Membrane Unit.
- When working in a tank, keep the working environment safe by measuring the required items including oxygen and hydrogen sulfide in observance of local regulations/standards of each country/region.

Danger	**Keep safe working environment in tanks** When working in a tank, keep the working environment safe by measuring the required items including oxygen and hydrogen sulfide in observance of local regulations/standards of each country/region. Failure to follow the procedure could result in a fatal accident such as anoxia.

Warning	**Take safety measures not to cause fall accident** Ensure safety of workers by installing handrails, scaffolds and safety equipment such as helmets, gloves, and safety belts to prevent a fall accident when installing or lifting a SMU. Pay particular attention near the tank opening because the floor may be slippery by wetness. Do not climb on a SMU. Neglecting the safety measures may cause falling accident.

Caution	**Wear adequate clothing and gloves such as cotton work gloves during work.** Working in improper clothing or with bare hands may result in a caught-in accident or other unexpected injuries.

DRAFT

2.3 How to Use the Unit Lifting Tool

Per each work using the Unit Lifting Tool such as unloading of Membrane Block, assembly of Membrane Unit, installation of the Membrane Unit, and lifting up or re-installation of the Membrane Unit, ways of preparing and ways of using the Unit Lifting Tool are explained here. See "Instruction Manual for KUBOTA Submerged Membrane Unit™ (SP Type)" or "Instruction Manual for KUBOTA Submerged Membrane Unit™ (SPC Type)" for overall procedures including the steps where the Unit Lifting Tool is not used (such as connecting pipings and installing Stabilizers).

2.3.1 Attaching the Unit Lifting Tool to Hook of Crane

(1) Attach two (2) Crane Slings to the Unit Lifting Tool using two (2) Shackles.
(2) Hook eyes on upper end of the Crane Slings to the hook of the crane. The Unit Lifting Tool will be lifted at two-point.

2.3.2 Lifting the Membrane Block (when unloading the Membrane Block)

(1) Preparation

- Attach the Unit Slings (4 pcs), Carabiners (4 pcs), Leads (4 pcs) and Stoppers (4 pcs) to the Unit Lifting Tool (see Fig. 2-3).
- Remove Shackles (4 pcs) on the lower end of the Unit Slings (see Fig. 2-3).
- Flip Hangers (4 pcs) up (See Fig. 2-3).

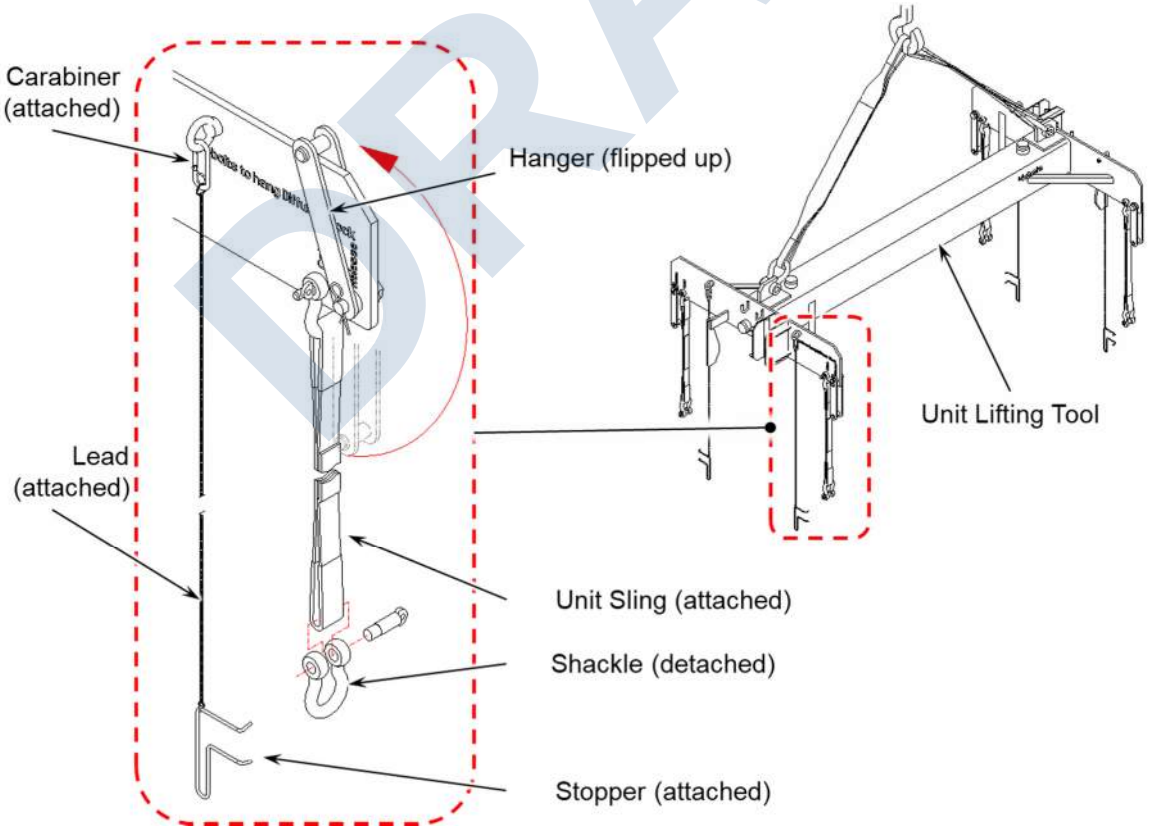

Fig. 2-3 Preparation of the Unit Lifting Tool (when unloading the Membrane Block)

DRAFT

(2) Attaching the Unit Lifting Tool to the Membrane Block

- Attach eyes of the Unit Slings (4 pcs) to Hooks (4 pcs) at four corners of the Membrane Block (see Fig. 2-4).
- Be sure to attach all of four (4) eyes to the Hooks in order to avoid two- or three-point lifting.

(3) Fall Protection

- Attach the Stoppers (4 pcs) to the specified positions in order to avoid a drop of the Membrane Block due to detachment of the Unit Slings from the Hooks during the lifting work (see Fig. 2-4). See "2.3.8 Attaching/Detaching the Stopper" for detailed information about the way of attaching or detaching the Stopper.

(4) Cautions during the Lifting Work

- Align center of the Unit Lifting Tool to center of the Membrane Block from both front view and side view.
- Lift the Membrane Block straight up slowly and safely to avoid any damage on the Membrane Block or surrounding equipment.
- Be careful not to get a part of your body caught in between the Unit Lifting Tool and the Membrane Block.
- **Please use the Unit Sling only for lifting a dry new Membrane Block (for unloading or assembling of Membrane Unit), Diffuser Block (for unloading), or Membrane Unit (for assembling of Membrane Unit or first installation to the tank). Please do not use the Unit Sling for lifting a wet or clogged Membrane Unit.**

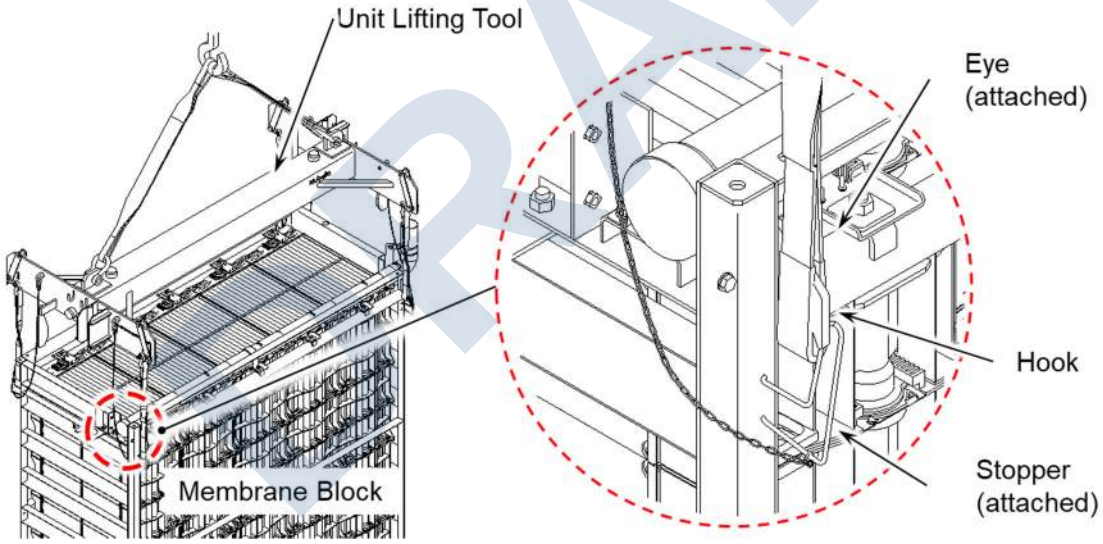

Fig. 2-4 How to use the Unit Lifting Tool (when unloading the Membrane Block)

2.3.3 Lifting the Diffuser Block (when unloading the Diffuser Block)

(1) Preparation

- Attach Unit Slings (4 pcs) and Shackles (4 pcs) to the Unit Lifting Tool (see Fig. 2-5).
- Detach Carabiners (4 pcs), Leads (4 pcs), Stoppers (4 pcs), and Eyebolts (4 pcs) from the Unit Lifting Tool (see Fig. 2-5).
- Flip Hangers (4 pcs) up (see Fig. 2-5).
- Attach Eyebolts (4 pcs) which are furnished with the Unit Lifting Tool to four (4) top corners of the Diffuser Block (see Fig. 2-6). Be sure to attach all four (4) Eyebolts to the Diffuser Block.

(2) Attaching the Unit Lifting Tool to the Diffuser Block

- Attach Shackles (4 pcs) at the lower end of the Unit Slings to Eyebolts (4 pcs) (see Fig. 2-6).
- Be sure to attach all of four (4) Shackles to the Eyebolts in order to avoid two- or three-point lifting.

(3) Fall Protection

- Avoid drop of the Diffuser Block during the lifting work by making sure that there are no slacks of the Shackles and Eyebolts.

(4) Cautions during the Lifting Work

- Align center of the Unit Lifting Tool to center of the Diffuser Block from both front view and side view.
- Lift the Diffuser Block straight up slowly and safely to avoid any damage on the Diffuser Block or surrounding equipment.
- Be careful not to get a part of your body caught in between the Unit Lifting Tool and the Diffuser Block.
- **Please use the Unit Sling only for lifting a dry new Membrane Block (for unloading or assembling of Membrane Unit), Diffuser Block (for unloading), or Membrane Unit (for assembling of Membrane Unit or first installation to the tank). Please do not use the Unit Sling for lifting a wet or clogged Membrane Unit.**

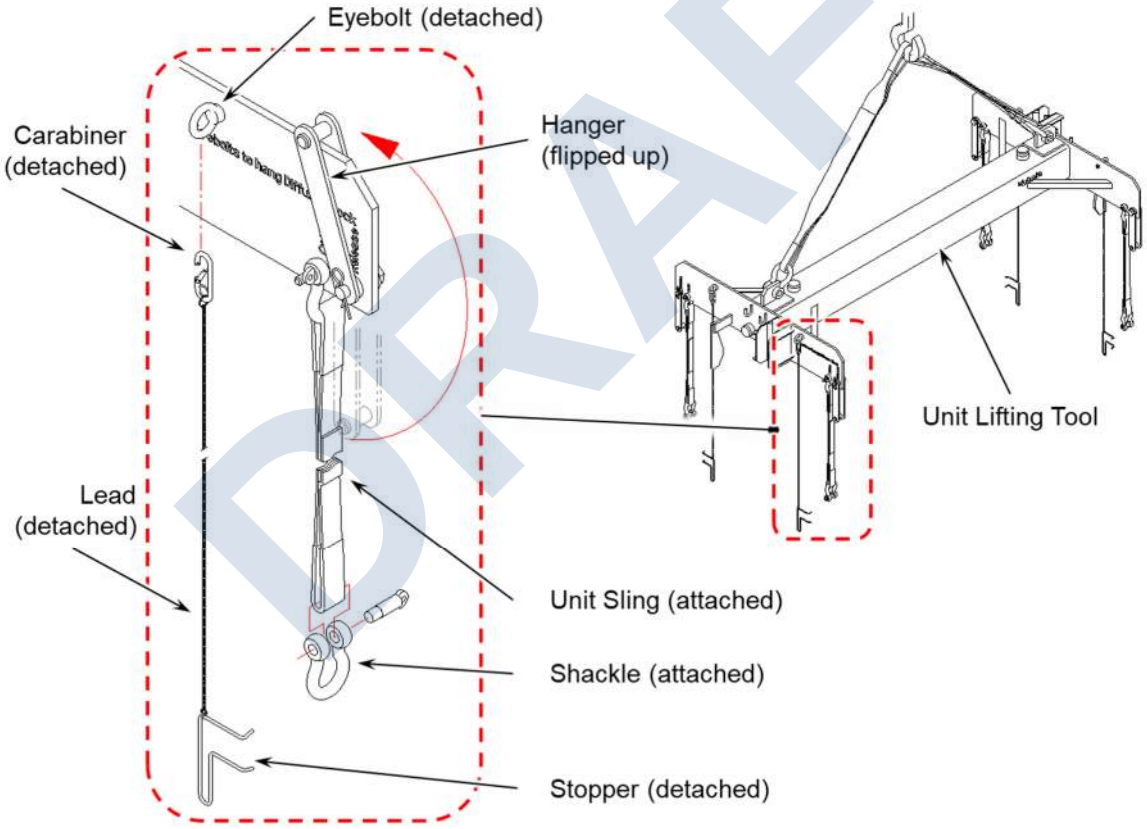

Fig. 2-5 Preparation of the Unit Lifting Tool (when unloading the Diffuser Block)

DRAFT

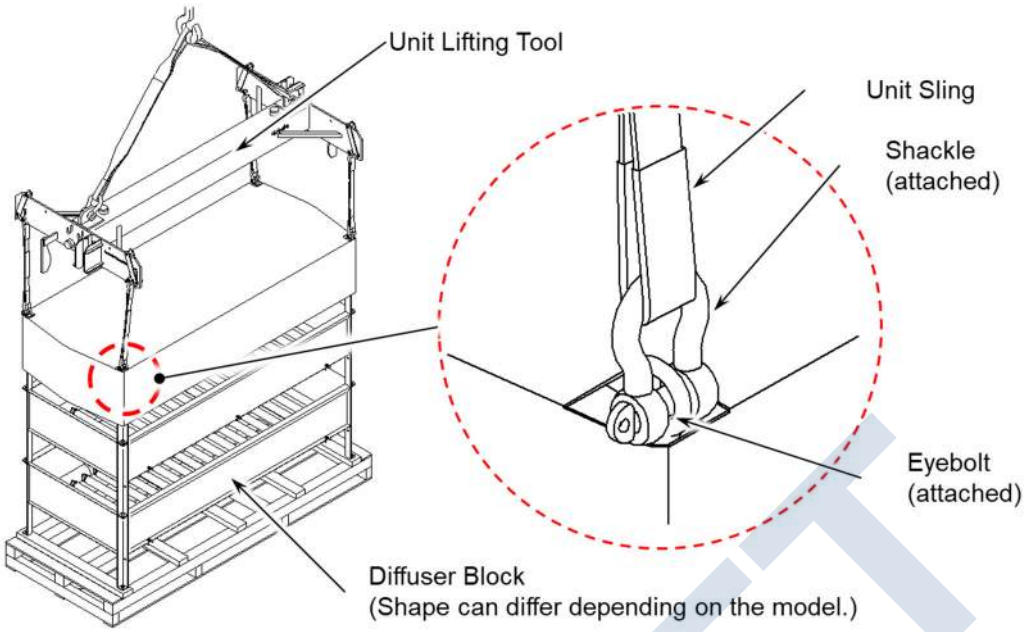

Fig. 2-6 How to use the Unit Lifting Tool (when unloading the Diffuser Block)

2.3.4 Lifting the Membrane Unit (when assembling the Membrane Unit etc.)

The way of using the Unit Lifting Tool is same as what is described in the above "2.3.2 Lifting the Membrane Block (when unloading the Membrane Block)".
Pay attention to below points when lifting the Membrane Unit.

- Align center of the Unit Lifting Tool to center of the Membrane Unit from both front view and side view.
- Lift the Membrane Unit straight up slowly and safely to avoid any damage on the Membrane Unit or surrounding equipment.
- Be careful not to get a part of your body caught in between the Unit Lifting Tool and the Membrane Unit.
- **Please use the Unit Sling only for lifting a dry new Membrane Block (for unloading or assembling of Membrane Unit), Diffuser Block (for unloading), or Membrane Unit (for assembling of Membrane Unit or first installation to the tank). Please do not use the Unit Sling for lifting a wet or clogged Membrane Unit.**

2.3.5 Lifting the Membrane Unit from the water

(1) Preparation

- Detach Unit Slings (4 pcs), Shackles (4 pcs), Carabiners (4 pcs), Leads (4 pcs), and Stoppers (4 pcs) from the Unit Lifting Tool (see Fig. 2-7).
- Attach Hangers (4 pcs) to "Catch" position of the Unit Lifting Tool and hang them down (See Fig. 2-7).

(2) Attaching the Unit Lifting Tool to the Membrane Unit

- Lower the Unit Lifting Tool toward the Membrane Unit. By lowering the Unit Lifting Tool along Guide Poles, make the Unit Lifting Tool approach to the Membrane Unit in the correct direction.
- When the Unit Lifting Tool touches on to the top of the Membrane Unit, the Hangers are automatically fitted inside the Hooks of the Membrane Unit, and the Membrane Unit becomes ready

DRAFT

to be lifted up (see Fig. 2-8).

- Make sure that all of Hangers (4 pcs) are appropriately fitted inside the Hooks (4 pcs) so as to avoid two- or three- point lifting when the Hooks of the Membrane Unit come out of the water surface.

(3) Fall Protection

- Attach the Carabiners (4 pcs), Leads (4 pcs), and Stoppers (4 pcs) to the Membrane Block and the Unit Lifting Tool in order to avoid drop of the Membrane Unit during further lifting work when the Membrane Unit can be reached by hand safely (see Fig. 2-9).

(4) Cautions during the Lifting Work

- Align center of the Unit Lifting Tool to center of the Membrane Unit from both front view and side view.
- Lift the Membrane Unit straight up slowly and safely to avoid any damage on the Membrane Unit or surrounding equipment.
- Be careful not to get a part of your body caught in between the Unit Lifting Tool and the Membrane Unit.
- **Please do not use the Unit Sling for lifting a wet or clogged Membrane Unit.**

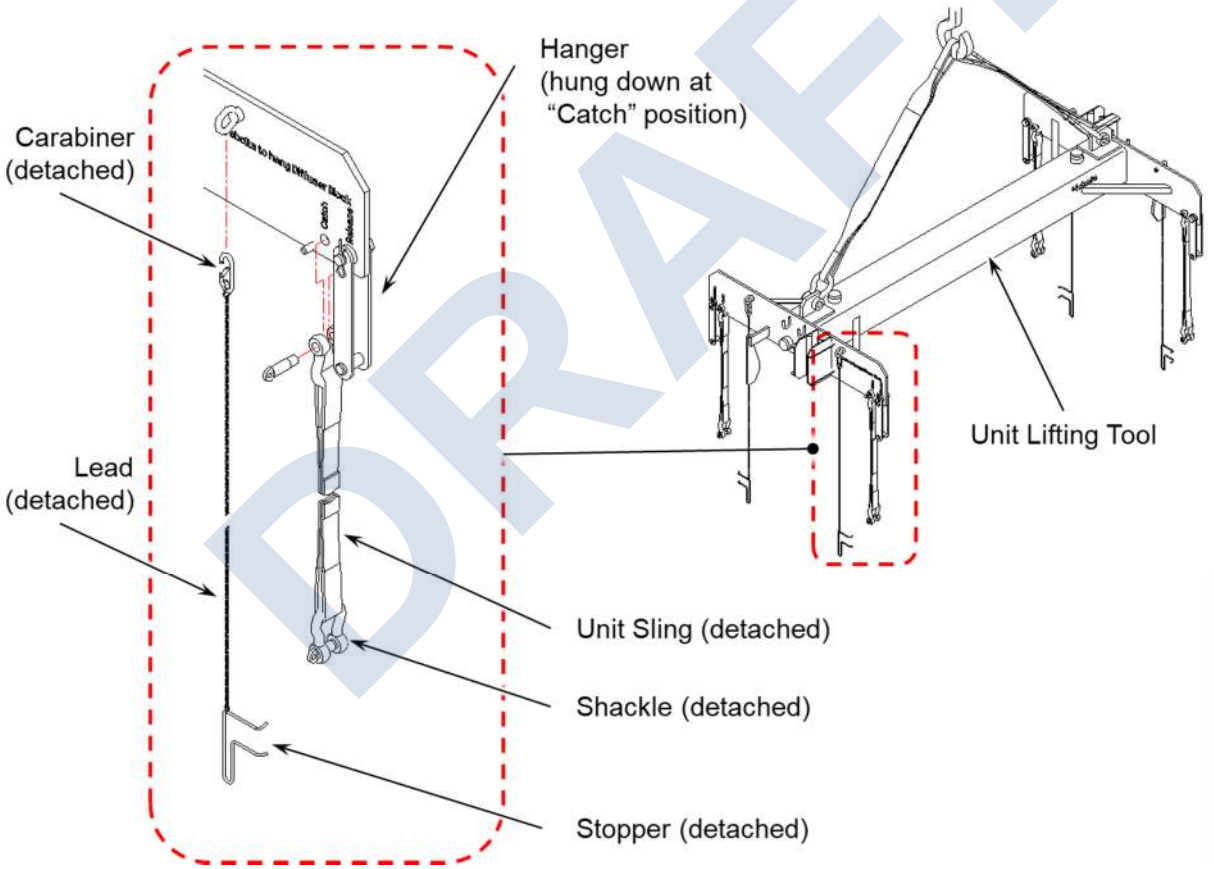

Fig. 2-7 Preparation of the Unit Lifting Tool (when lifting the Membrane Unit from the water)

DRAFT

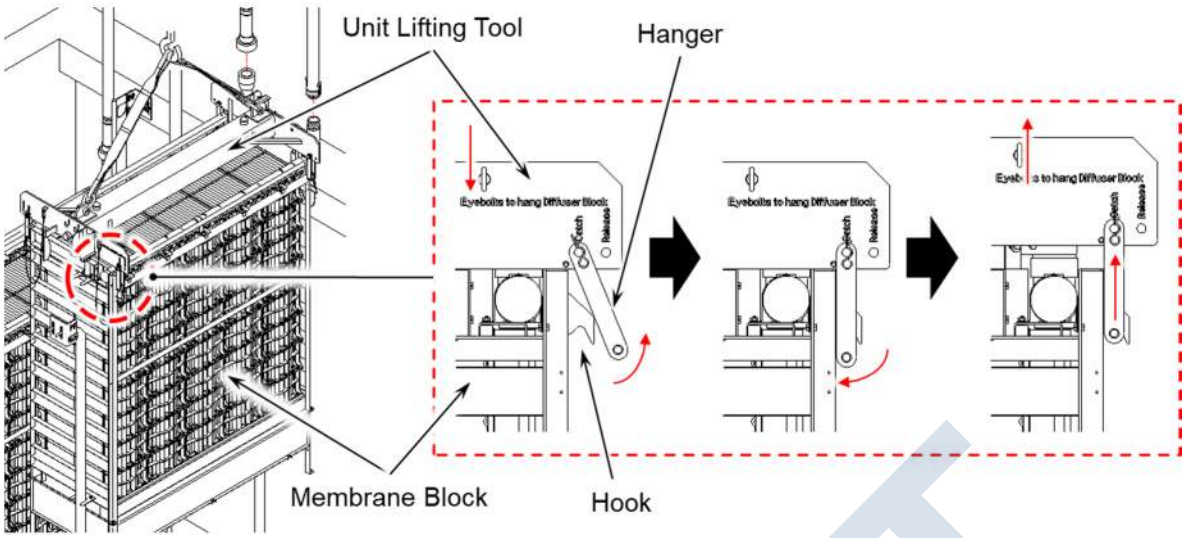

Fig. 2-8 Motion of the Hanger catching the Hook of the Membrane Unit

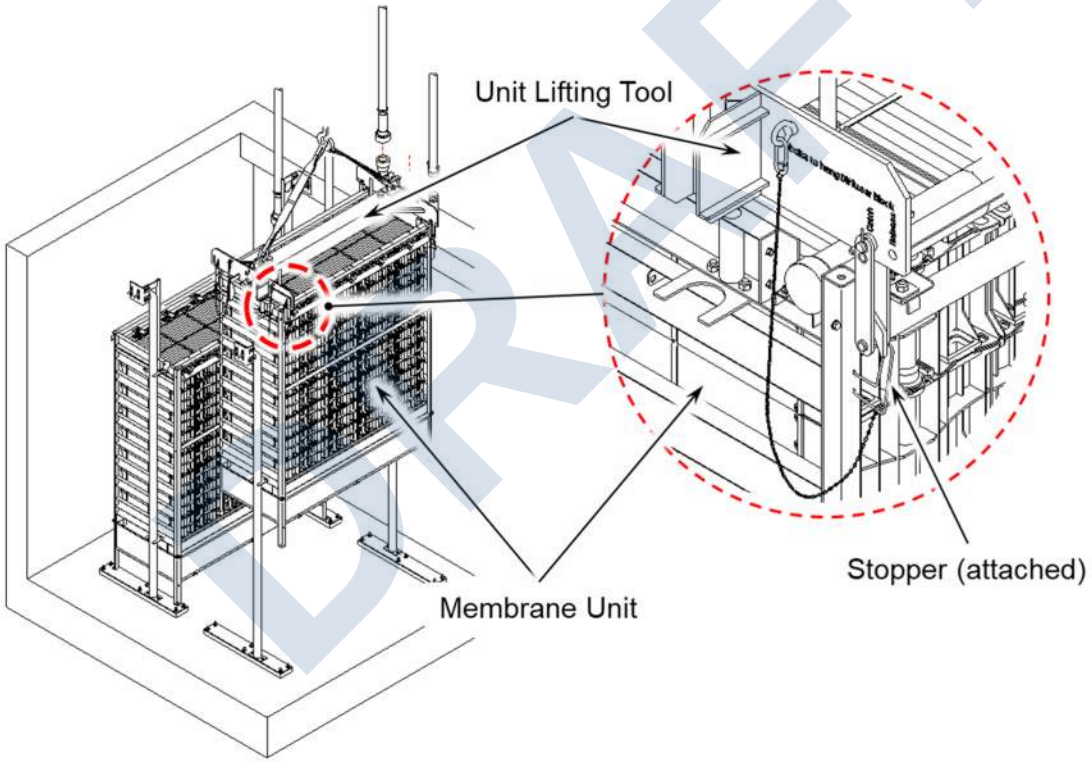

Fig. 2-9 How to use the Unit Lifting Tool when lifting the Membrane Unit from the water

2.3.6 Re-installation of the Membrane Unit into the water

(1) Preparation

- Fill inside of the Unit Lifting Tool with water. See "2.3.7 Filling or draining the water into/from the Unit Lifting Tool" for detailed information.
- Attach the Carabiners (4 pcs), Leads (4 pcs), and Stoppers (4 pcs) to the Unit Lifting Tool (see Fig. 2-10).

- Detach the Unit Slings (4 pcs) and Shackles (4 pcs) from the Unit Lifting Tool (see Fig. 2-10).
- Attach the Hangers (4 pcs) to "Release" position of the Unit Lifting Tool and flip them up (see Fig. 2-10).

(2) Attaching the Unit Lifting Tool to the Membrane Unit

- Attach the Hangers (4 pcs) to the Hooks (4 pcs) of the Membrane Unit (see Fig. 2-11).
- Make sure that all of Hangers (4 pcs) are attached to the Hooks in order to avoid two- or three-point lifting.

(3) Fall Protection

- Attach the Stoppers (4 pcs) to the specified positions in order to avoid a drop of the Membrane Unit due to detachment of the Unit Slings from the Hooks during the lifting work (see Fig. 2-11). See "2.3.8 Attaching/Detaching the Stopper" for detailed information about the way of attaching or detaching the Stopper.

(4) Re-installation of the Membrane Unit

- When lowering the Membrane Unit toward the predetermined position in the Tank, detach the Carabiners (4 pcs), Leads (4 pcs), and Stoppers (4 pcs) while the Membrane Unit can be reached by hand safely.
- The Hangers are automatically detached from the Hooks of the Membrane Unit when the Membrane Unit touches down to the predetermined position and the Unit Lifting Tool touches down to the top surface of the Membrane Unit, and the Unit Lifting Tool becomes ready to be lifted up without accompanying the Membrane Unit (see Fig. 2-12).
- Move the Unit Lifting Tool to a safe space and drain the water inside the Unit Lifting Tool after completing the re-installation work. See "2.3.7 Filling or draining the water into/from the Unit Lifting Tool" for detailed information about the way of draining the water.

(5) Cautions during the Lifting Work

- Align center of the Unit Lifting Tool to center of the Membrane Block from both front view and side view.
- Lift the Membrane Unit straight up slowly and safely to avoid any damage on the Membrane Unit or surrounding equipment.
- Be careful not to get a part of your body caught in between the Unit Lifting Tool and the Membrane Unit.
- **Please do not use the Unit Sling for lifting a wet or clogged Membrane Unit.**

DRAFT

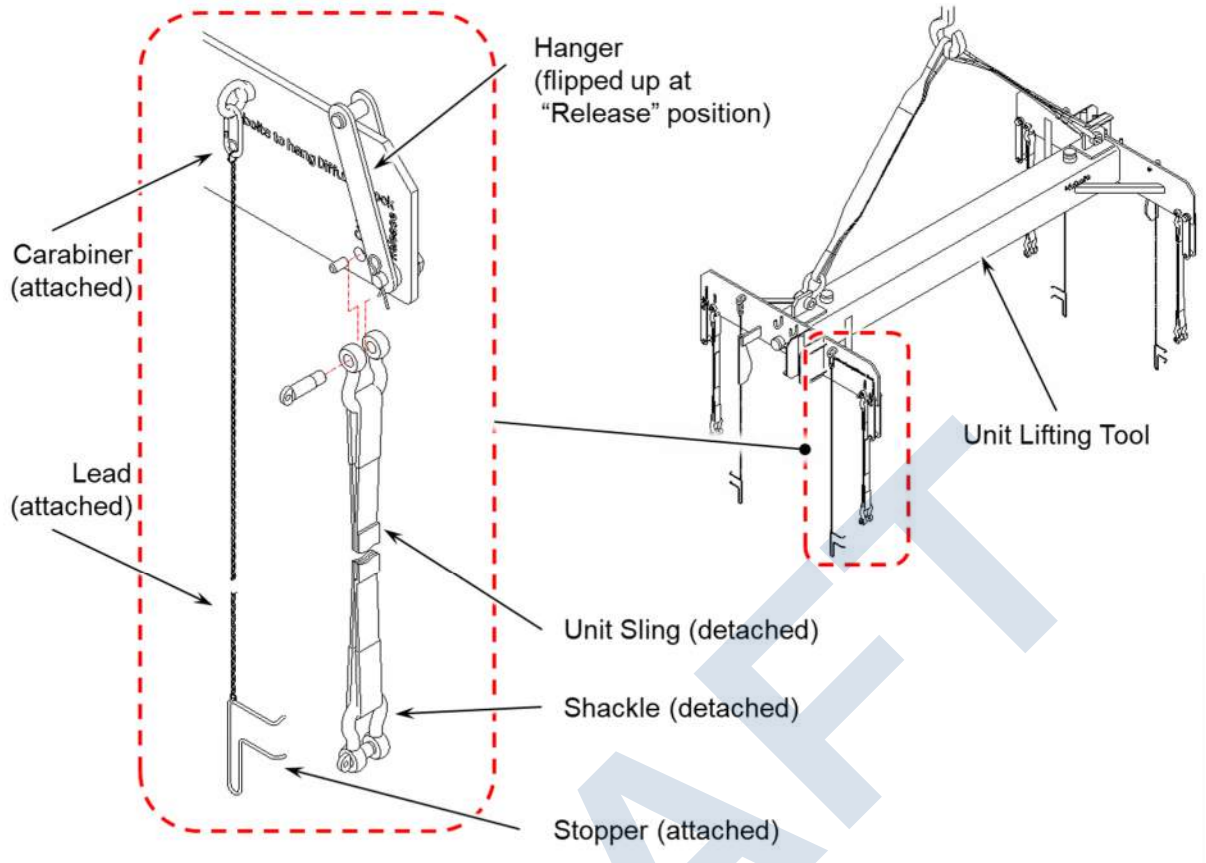

Fig. 2-10 Preparation of the Unit Lifting Tool (when re-installing the Membrane Unit into the water)

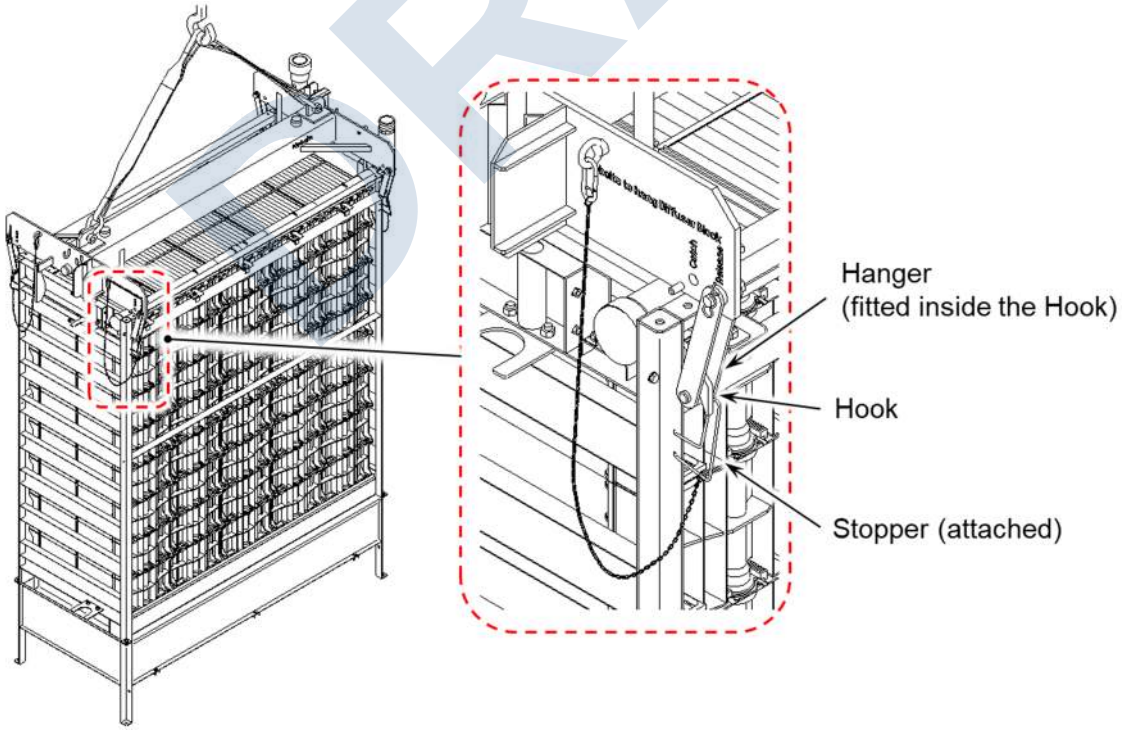

Fig. 2-11 How to use the Unit Lifting Tool when re-installing the Membrane Unit into the water

DRAFT

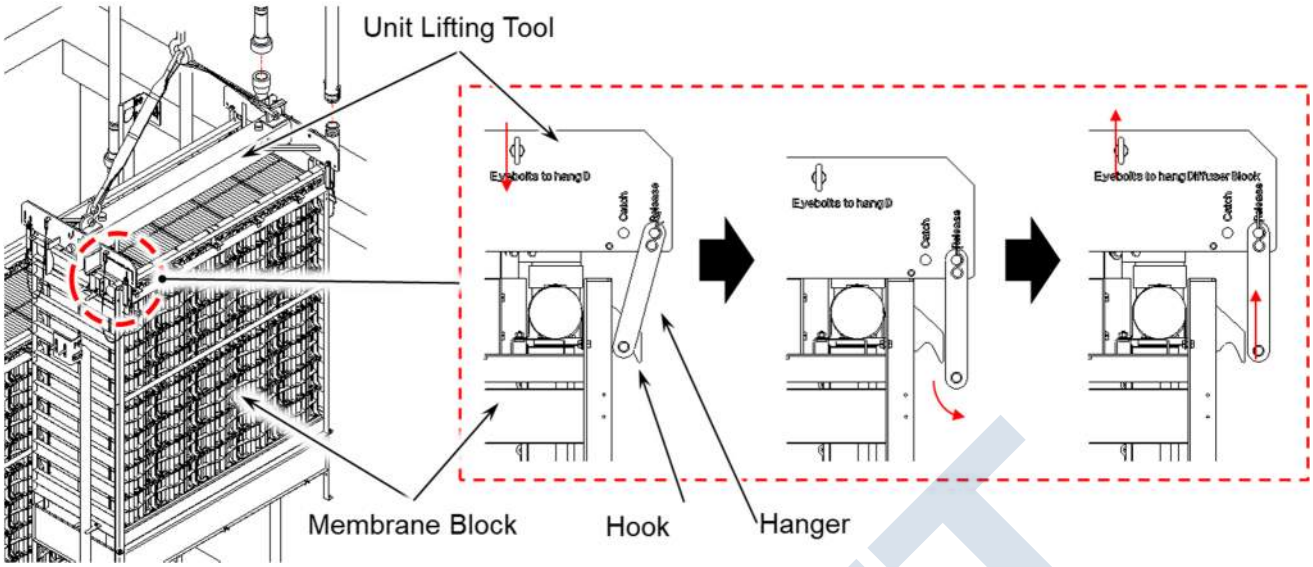

Fig. 2-12 Motion of the Hanger releasing the Hook of the Membrane Unit

2.3.7 Filling or draining the water into/from the Unit Lifting Tool

2.3.7.1 Filling the water

(1) Remove Plugs (2 pcs) on the top of the Unit Lifting Tool (see Fig. 2-13).
(2) Attach Plugs (2 pcs) on the side of the Unit Lifting Tool (see Fig. 2-13).
(3) Fill the water into the Unit Lifting Tool from the water filler on the top of the Unit Lifting Tool.
(4) Attach the Plugs (2 pcs) to the water filler on the top of the Unit Lifting Tool after completing the filling work.

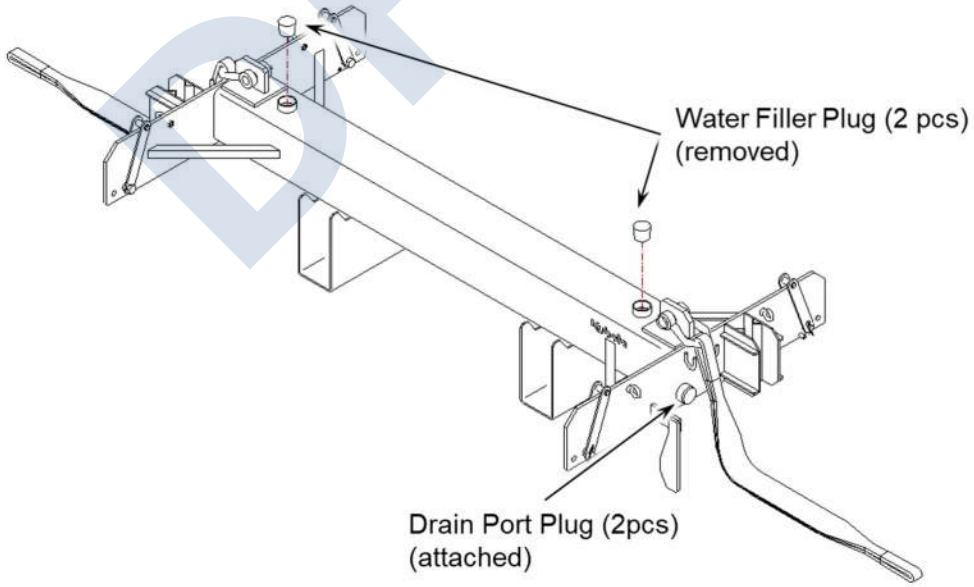

Fig. 2-13 Filling the water to the Unit Lifting Tool

DRAFT

2.3.7.2 Draining the water

(1) Remove the Plugs (2 pcs) on the top of the Unit Lifting Tool (see Fig. 2-14).
(2) Remove the Plugs (2 pcs) on the side of the Unit Lifting Tool (see Fig. 2-14). Then draining will be started.
(3) After completing the draining work, dry inside of the Unit Lifting Tool well and attach the Plugs.

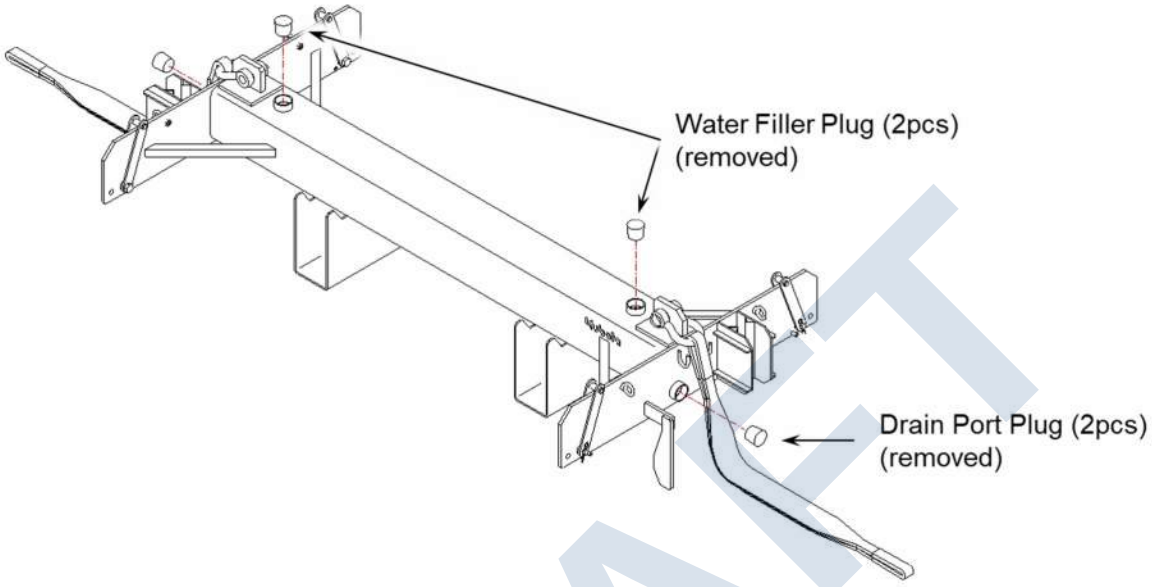

Fig. 2-14 Draining the water from the Unit Lifting Tool

2.3.8 Attaching/Detaching the Stopper

There are totally four (4) Stoppers, two (2) types (mirrored) and two (2) pcs per each type (see Fig. 2-15).

2.3.8.1 Attaching the Stopper

(1) Insert two (2) ends of the Stoppers into two (2) holes beneath the Hooks of the Membrane Unit (see Fig. 2-15 "(b) Inserting the Edges"). Adjusting pitch between the two (2) ends of the Stopper by grabbing near those ends of the Stopper makes the insertion work be easier.
(2) Lean the bend section of the Stopper toward the back side of the Hook by warping overall of the Stopper (see Fig. 2-15 "(c) Leaning the bend section" and "(d) The Bend Section being caught at the Hook ").
(3) Be careful not to install the Stopper in the opposite way because the Stopper installed in the opposite way may not achieve its function (see Fig. 2-15 "(e) Bad example").

2.3.8.2 Detaching the Stopper

(1) Follow reverse procedure mentioned (a) above when detaching the Stopper. It is necessary to remove the Carabiners and the Leads when the Unit Lifting Tool is submerged into water because the Leads are interfered with the work (see Fig. 2-15 "(f) Detaching from the Unit Lifting Tool").

DRAFT

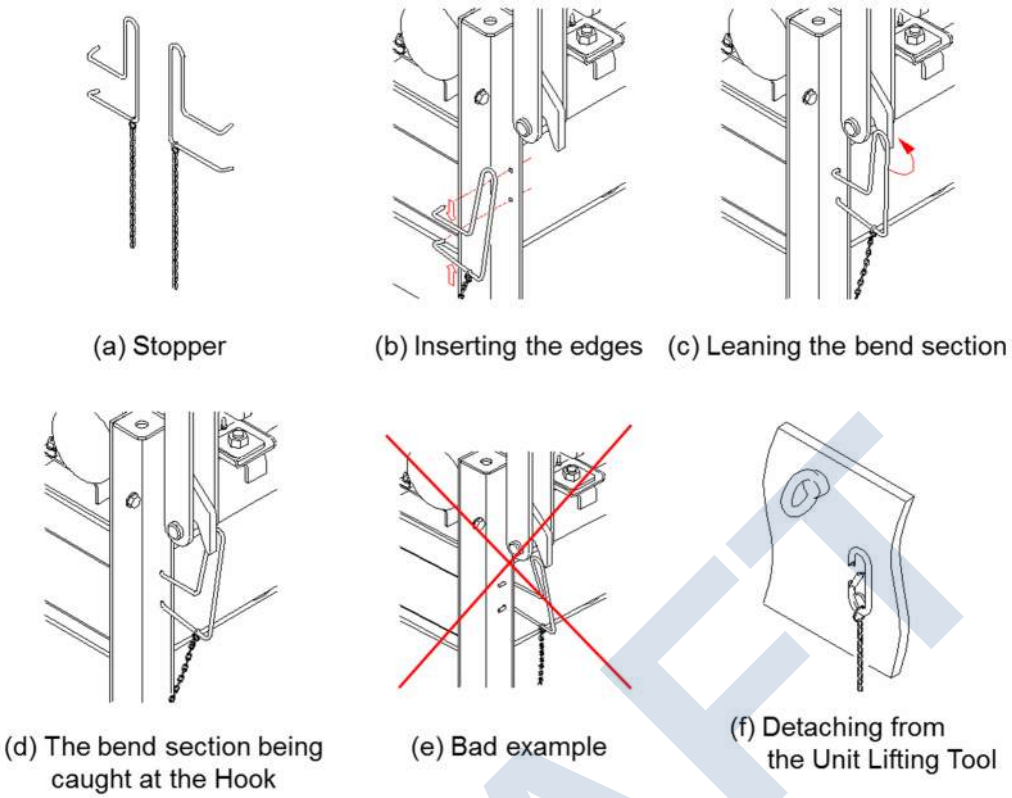

Fig. 2-15 How to attach/detach the Stopper

Warning	**Never go beneath a lifted Membrane Block, Diffuser Block, or Membrane Unit** If they fall down, fatal accident may occur.

Caution	**Before using Lifting Tools, make sure that they have no abnormality** Before using Tools supporting load, check if crack, corrosion, rust, abrasion, and deformation. Check Slings for abnormalities such as a cut, abrasion, scratch, broken, stitch, discoloration, coloration, fusion, and melting. Immediately replace the tools with abnormality. Continued use of them may cause human accident by product dropping.

Caution	**Conduct the lifting work by two or more persons.** If a crane or chain block operator conducts all the work alone, his risk prediction ability will significantly decrease due to increased blind spots.

Caution	**Do not place your hand or head between a Lifting Tool and a Membrane Block or others.** Do not place any part of your body between the Lifting Tool and the Membrane Block, the Diffuser Block, Membrane Unit, or the Membrane Module. It may cause a fatal accident under unsafe operation or during an unexpected drop accident.

DRAFT

Caution	**Be sure to check that there are no slacks of shackles or eyebolts** If they drop off, a Membrane Block, a Diffuser Block, a Membrane Unit, or Membrane Modules may fall to cause human injury or equipment damage.

Caution	**Lifting Tool should be used by four point lifting** when lifting up a Membrane Block, a Diffuser Block, a Membrane Unit, or Membrane Modules, always hang it at four points. If lifted at three or two points, it may drop or swing and result in a fatal accident.

Caution	**Always use Eye bolts when lifting up a Diffuser Block** Eyebolts accompany at the Lifting Tool. If lifted unbalancedly, it may drop or swing and result in a fatal accident.

Prohibited	**Never use the Lifting Tool for lifting other thing or for other purpose.** The Unit Lifting Tool is for lifting up a Membrane Block, a Diffuser Block, or a Membrane Unit safely. Do not lift other things or use for other purpose.

Important	**Always use the Lifting Tool** When lifting a Membrane Block, a Diffuser Block, or a Membrane Unit, always use the Unit Lifting Tool, it serves to lift them safely without excess load.

2.4 Temporary Placing of the Unit Lifting Tool

Be sure to place the Unit Lifting Tool onto the Stands which are furnished with the Unit Lifting Tool when the Unit Lifting Tool is temporarily placed (see Fig. 2-16). Placing the Unit Lifting Tool onto the ground without using the Stands may lead deformation or damage of the Unit Lifting Tool. Deformed or damaged Unit Lifting Tool can cause failure in the lifting work.

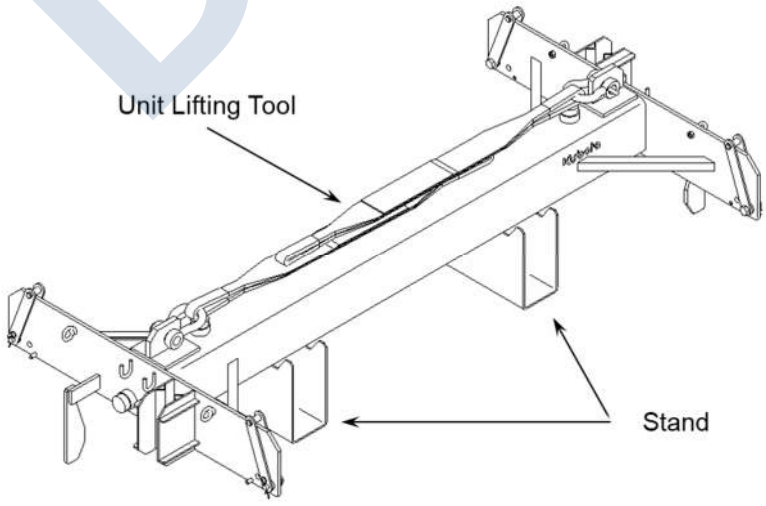

Fig. 2-16 How to temporarily place the Unit Lifting Tool

DRAFT

Important	**Be sure to place the Unit Lifting Tool onto the Stand when placing the Unit Lifting Tool** The Unit Lifting Tool may be deformed or damaged if the Unit Lifting Tool is placed onto the ground directly. Deformed or damaged Unit Lifting Tool can cause failure in the lifting work.

2.5 Storage of the Unit Lifting Tool

- Wash the Unit Lifting Tool to remove the sludge if the Unit Lifting Tool is submerged in to the sludge, drain the water inside the Unit Lifting Tool, and dry the Unit Lifting Tool well.
- Be sure to put the Unit Lifting Tool onto the Stands for storage (see Fig. 2-16).
- Store the Unit Lifting Tool indoor to protect it from rain or other kinds of wetness or corrosive gas. Corrosion decreases the strength of the Unit Lifting Tool.
- Avoid direct sunlight in storage of the Unit Lifting Tool to slow down aging deterioration.

Caution	**Store the Lifting Tool and Shackle without exposure to wetness or corrosive gas** Exposure to water or corrosive gas may cause corrosion of Lifting Tool and Shackle, resulting in decreased strength and drop accident.

Important	**Be sure to place the Unit Lifting Tool onto the Stand when placing the Unit Lifting Tool** The Unit Lifting Tool may be deformed or damaged if the Unit Lifting Tool is placed onto the ground directly. Deformed or damaged Unit Lifting Tool can cause failure in the lifting work.

Important	**Prevent use of Unit Lifting Tool by an outsider without permission or by mistake.** In selection of the storage place of Unit Lifting Tool, pay attention not to be used by an outsider without permission or by mistake

DRAFT

3. Module Lifting Tool

3.1 Overview off the Module Lifting Tool

3.1.1 Purpose

- To lift Membrane Modules when replacing the Membrane Modules.

3.1.2 Specification

- Material: Rolled Steels for General Structure (SS400 in JIS G3101) etc.
- Components: Body of the Module Lifting Tool, Module Slings, Hooks, and Shackles

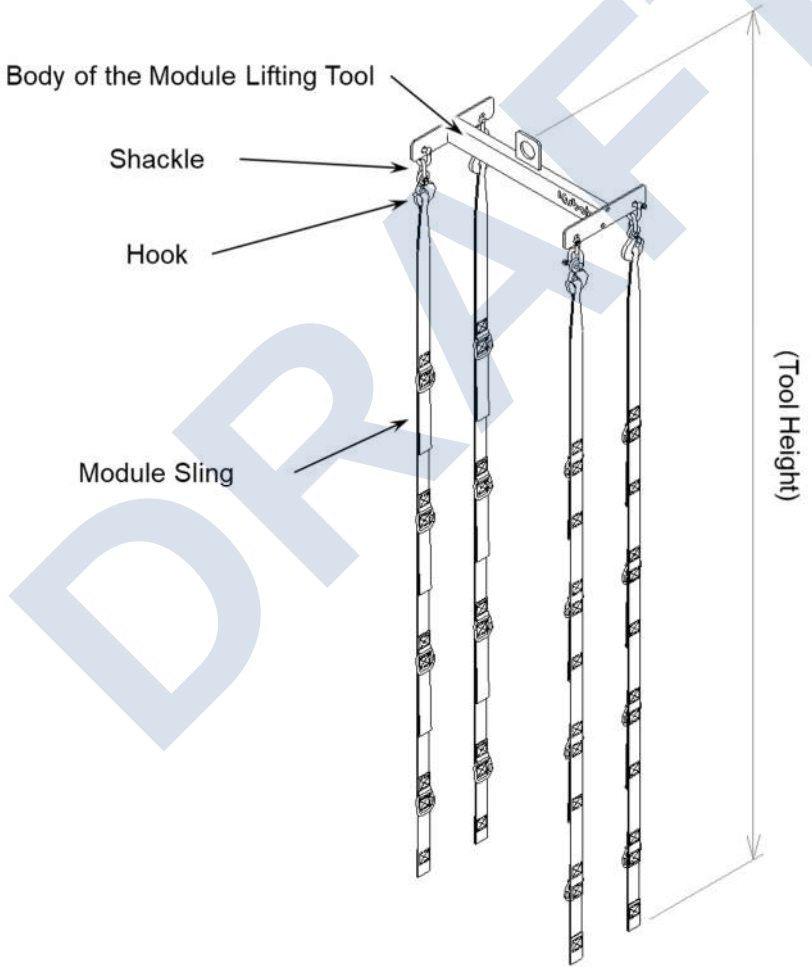

Fig. 3-1 Module Lifting Tool

DRAFT

Table 3-1 Components of the Module Lifting Tool and their Purposes

Components	Purpose
Module Sling	The Module Sling is used for connecting the Body of the Module Lifting Tool to Membrane Modules.
Hook	The Hook is used for connecting the Module Sling to the Body of the Module Lifting Tool.
Shackle	The Shackle is used for attaching the hook to the Body of the Module Lifting Tool.

Table 3-2 Specification of the Module Lifting Tool

Model	Applicable Membrane Unit	Weight*1 (kg)	Lifting Height (mm)	Allowable Maximum Load*2 (kg)
TGSPM004	SPC200 SP200 / 225-A	12	1,803	600
TGSPM006	SPC300 / 600 SP/300 / 600 / 338-A / 675-A	13	2,331	600
TGSPM008	SPC400 SP400 / 800 / 450-A / 900-A	15	2,859	600

*1 The "Weight" includes the weight of the Body of the Module Lifting Tool, Module Slings, Hooks, and Shackles.

*2 The "Allowable Maximum Load" is considered to endure the maximum weight when all the modules are clogged up by sludge.

3.1.3 Structure and Function

- Module Sling consists of Sub-Slings and Catch Rings as shown in Fig. 3-2. Attaching the Sub-Slings to handles of the Membrane Modules (see Pic. 3-1) enables to lift the maximum eight Membrane Modules at a time as shown in Fig. 3-3.
- Up to two (2) Membrane Modules can be hold by one (1) set of Sub-Slings. In that case, two (2) Membrane Modules will be lifted together as a pair as shown in Fig. 3-4.

DRAFT

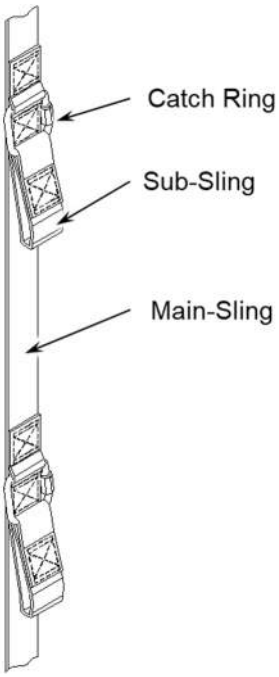

Fig. 3-2 Structure of the Module Sling

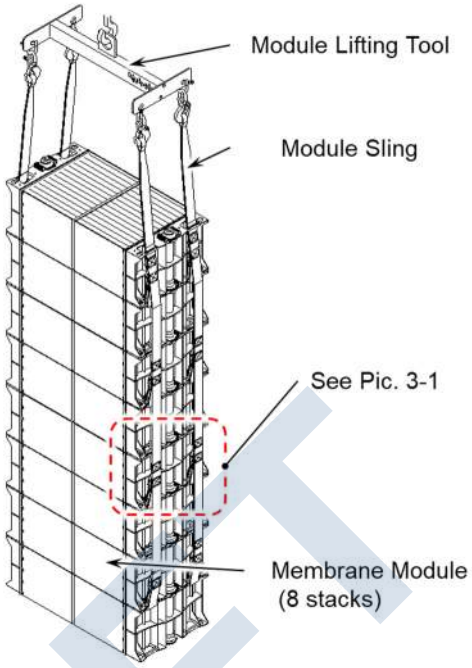

Fig. 3-3 Lifted Membrane Modules



Pic. 3-1 Sub-Slings attached onto handles of the Membrane Modules

DRAFT

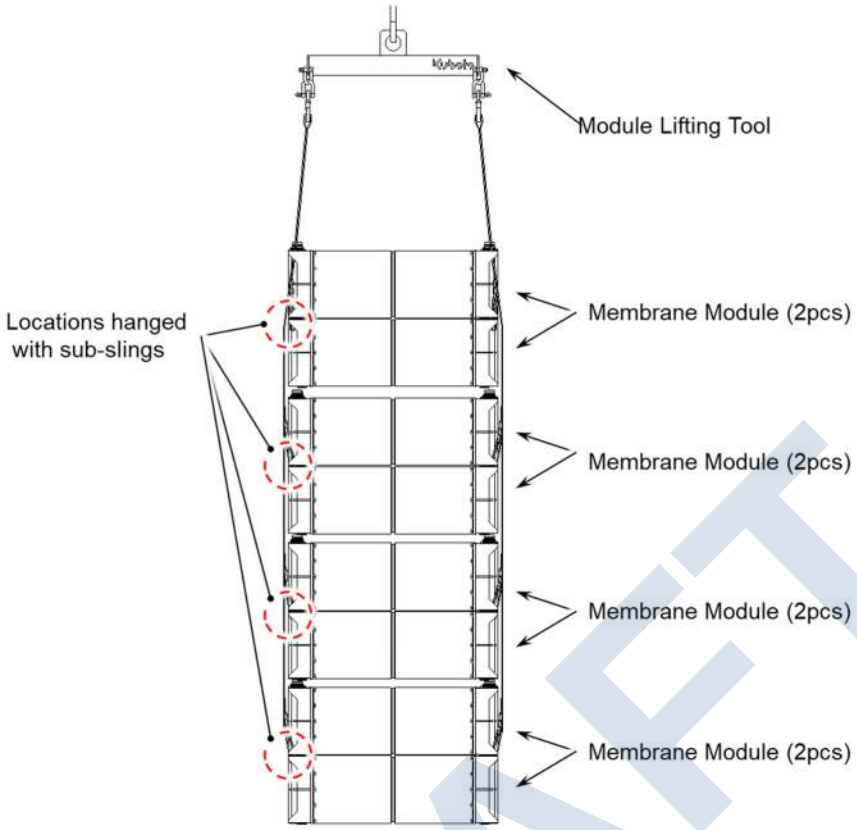

Fig. 3-4 Pairs of Membrane Modules Lifted Together

3.2 Before using the Module Lifting Tool

3.2.1 Compliance

Observe the applicable law and rules of each country and region. Particularly, works that require qualification or permission such as crane operation and slinging have to be conducted by a qualified person. Be sure to take safety measures such as scaffolding, safety belt, helmet, etc.

3.2.2 Prior-to-Use Inspection

Be sure to make inspection before using the Module Lifting Tool to check for abnormalities.

- Check the Body of the Module Lifting Tool, Shackles, Hooks, Module Slings, and Catch Rings connecting them for deterioration such as abrasion, crack, and/or corrosion etc.
- Check the Body of the Module Lifting Tool for coming-off of plating.
- Check the Shackles for looseness.
- Check the Body of the Module Lifting Tool for abrasion and deformity.
- Check the Module Slings for deterioration such as a cut, abrasion, scratch, broken stitch, discoloration, coloration, and melting.
- Do not use and immediately replace a sling belt if its core material is exposed as Pic. 3-2.

DRAFT

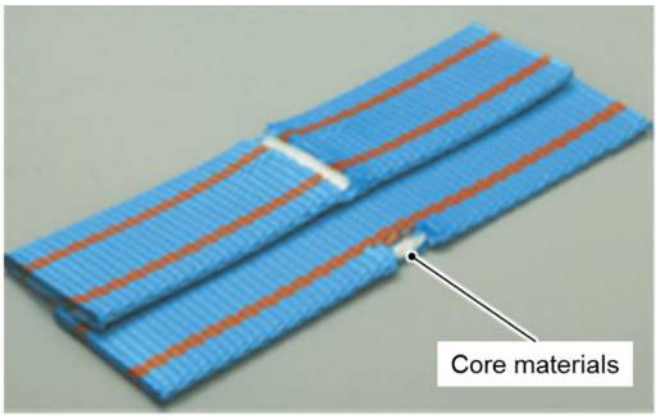

(The colors of the sling and the core material can differ depending on the model.)

Pic. 3-2 Sign of Replacement of the Sling Belt

Caution	**Before using Lifting Tools, make sure that they have no abnormality** Before using Tools supporting load, check if crack, corrosion, rust, abrasion, and deformation. Check Slings for abnormalities such as a cut, abrasion, scratch, broken, stitch, discoloration, coloration, fusion, and melting. Immediately replace the tools with abnormality. Continued use of them may cause human accident by product dropping.

3.2.3 Prior-to-Use Preparation

- Before mounting the Module Lifting Tool, ensure safety of workers by using scaffolds and safety equipment such as helmets and safety belts to prevent a falling accident. Do not climb on a Membrane Unit.
- When working in a tank, keep the working environment safe by measuring the required items including oxygen and hydrogen sulfide contents in observance of local regulations/standards of each country/region.

Danger	**Keep safe working environment in tanks** When working in a tank, keep the working environment safe by measuring the required items including oxygen and hydrogen sulfide in observance of local regulations/standards of each coutry/region. Failure to follow the procedure could result in a fatal accident such as anoxia.

Warning	**Take safety measures not to cause fall accident** Ensure safety of workers by installing handrails, scaffolds and safety equipment such as helmets, gloves, and safety belts to prevent a fall accident when installing or lifting Membrane Modules. Pay particular attention near the tank opening because the floor may be slippery by wetness. Do not climb on a SMU. Neglecting the safety measures may cause falling

DRAFT

Caution	**Wear adequate clothing and gloves such as cotton work gloves during work** Working in improper clothing or with bare hands may result in a caught-in accident or other unexpected injuries.

3.3 How to use the Module Lifting Tool

Ways of preparing and ways of using the Module Lifting Tool are explained here when Membrane Modules are pulled out of the Membrane Block. See "Instruction Manual for KUBOTA Submerged Membrane Unit™ (SP Type)" or "Instruction Manual for KUBOTA Submerged Membrane Unit™ (SPC Type)" for overall procedures including the steps where the Module Lifting Tool is not used (such as disassembling the Membrane Block) and the cautions when the Membrane Modules are temporarily placed on the ground.

3.3.1 Attaching the Module Lifting Tool to Hook of Crane

Directly attach the Hook of the Crane to lifting lug of the Module Lifting Tool.

3.3.2 Attaching the Module Slings to the Membrane Modules

The Module Slings can be attached to the Membrane Modules by attaching the Sub-Slings which are sewn on the Module Slings to Handles of the Membrane Modules.

(1) Preparation

- Detach the Module Sling from the Module Lifting Tool.

(2) Attaching the Module Slings to the Membrane Modules

- Reeve Eye of the Sub-Sling through the Handle of the Membrane Module from bottom to top*1, 2, 3.
- Open the Catch Ring which is located above the Sub-Sling and attach the Eye of the Sub-Sling to the Catch Ring.
- Close the Catch Ring.

*1 Start attaching the Sub-Sling from top Membrane Module.

*2 Attach one (1) Sub-Sling to both lower handle of the upper Membrane Module and upper handle of the lower Membrane Module together with when two (2) Membrane Modules are stacked (see Fig. 3-5).

*3 Attach one (1) Sub-Sling to upper handle of the Membrane Module if only one (1) Membrane Module is left over (see Fig. 3-6).

(3) Fall Protection

- Avoid drop of the Membrane Module during the lifting work by making sure that there are no slacks of the Catch Rings.

DRAFT

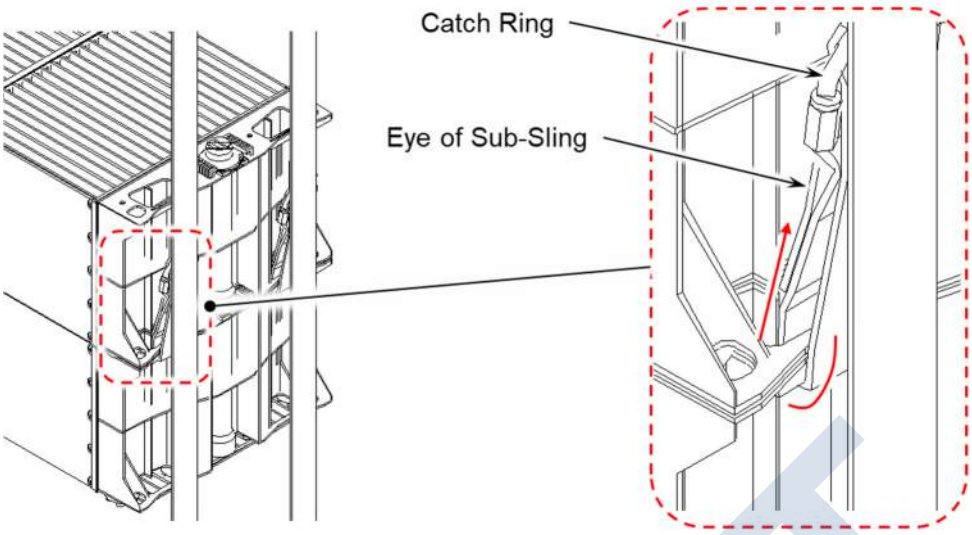

Fig. 3-5 How to attach the Sub-Sling (for two (2) Membrane Modules)

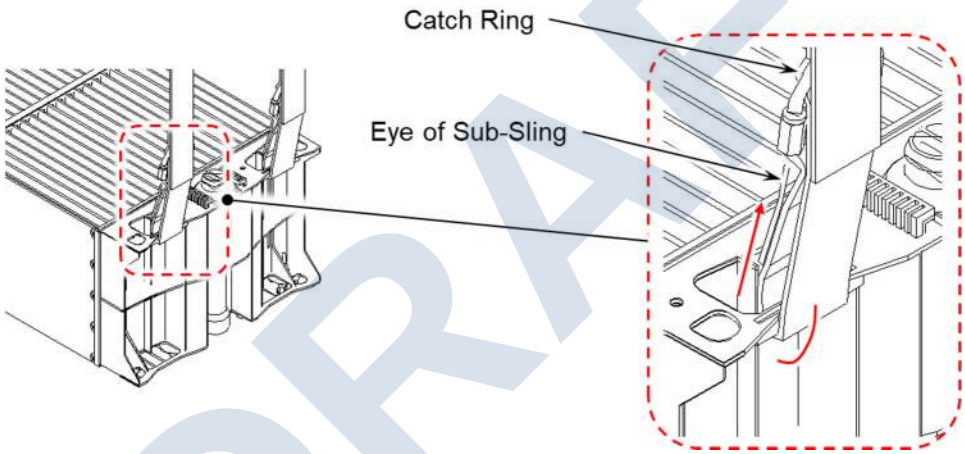

Fig. 3-6 How to attach the Sub-Sling (for one (1) Membrane Module)

3.3.3 Attaching the Module Slings to the Module Lifting Tool

(1) Attaching the Module Slings to the Module Lifting Tool

- Attach Eyes (4 pcs) at upper end of the Module Slings to Hooks (4 pcs) of the Module Lifting Tool (see Fig. 3-7).
- Be sure to attach all of four (4) Eyes to the Hooks in order to avoid two- or three-point lifting.

(2) Fall Protection

- Avoid a drop of the Membrane Modules during the lifting work by securely hooking the Eyes into the Hooks and latching the Hooks (see Fig. 3-7).

(3) Cautions

- Have all the Module Slings pass through inside the Frame of the Membrane Block when pulling Membrane Modules out of the Membrane Block. The Membrane Modules cannot be pulled out if a part of the Module Sling is passed through outside of the Frame.

DRAFT

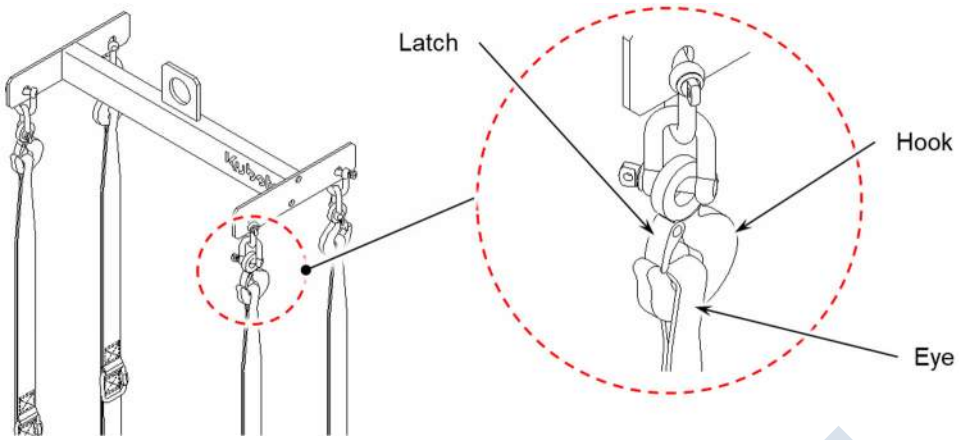

Fig. 3-7 How to attach the Module Slings to the Module Lifting Tool

Warning	**Never go beneath lifted Membrane Modules** If they fall down, fatal accident may occur.

Caution	**Before using Lifting Tools, make sure that they have no abnormality** Before using Tools supporting load, check if crack, corrosion, rust, abrasion, and deformation. Check Slings for abnormalities such as a cut, abrasion, scratch, broken, stitch, discoloration, coloration, fusion, and melting. Immediately replace the tools with abnormality. Continued use of them may cause human accident by product dropping.

Caution	**Conduct the lifting work by two or more persons** If a crane or chain block operator conducts all the work alone, his risk prediction ability will significantly decrease due to increased blind spots.

Caution	**Do not place your hand or head between a Lifting Tool and Membrane Modules** Do not place any part of your body between the Lifting Tool and the Membrane Modules. It may cause a fatal accident under unsafe operation or during an unexpected drop

Caution	**Be sure to check that there are no slacks of shackles or Catch Rings** If they drop off, Membrane Module may fall to cause human injury or equipment damage.

Caution	**Lifting Tool should be used by four point lifting** When lifting up Membrane Modules, always hang it at four points. If lifted at three or two points, it may drop or sing and result in a fatal accident.

DRAFT

Prohibited	**Never use the Module Lifting Tool for lifting other thing or for other purpose.** The Module Lifting Tool is for lifting up Membrane Modules safely. Do not lift other things or use for other purpose.

Important	**Select a level, flat floor to place Membrane Modules temporarily.** Before temporal placement of Membrane Modules, check the floor to be level, flat, and clear of intrusions or obstacles. If a Membrane sheet is broken by intrusion, trash or a stone, it cannot be used yet.

Important	**Always use the Lifting Tool** When lifting Membrane Modules, always use the Module Lifting Tool, it serves to lift them safely without excess load.

3.4 Temporary Placing of the Module Lifting Tool

Be sure to place the Module Lifting Tool on a flat level surface when placing the Module Lifting Tool temporarily.

3.5 Storage of the Module Lifting Tool

- Store the Unit Lifting Tool indoor to protect it from rain or other kinds of wetness or corrosive gas. Corrosion decreases the strength of the Unit Lifting Tool.
- Avoid direct sunlight in storage of the Unit Lifting Tool to slow down aging deterioration.

Caution	**Store the Lifting Tool without exposure to wetness or corrosive gas** Exposure to water or corrosive gas may cause corrosion of Lifting Tool, resulting in decreased strength and drop accident.

Important	**Prevent use of Module Lifting Tool by an outsider without permission or by mistake.** In selection of the storage place of Module Lifting Tool, pay attention not to be used by an outsider without permission or by mistake

DRAFT

Economic Operator of the Product (based on the Regulation (EU) 2019/1020)

EN	Name: Contact details: Email:	Kubota Holdings Europe B.V. Hoofdweg 1264, 2153 LR Nieuw-Vennep, The Netherlands kbt_g.eu_market_membrane@kubota.com
DE	Name: Details des Kontakts: Email:	Kubota Holdings Europe B.V. Hoofdweg 1264, 2153 LR Nieuw-Vennep, Die Niederlande kbt_g.eu_market_membrane@kubota.com
EL	Ονομα: Στοιχεία επικοινωνίας: Email:	Kubota Holdings Europe B.V. Hoofdweg 1264, 2153 LR Nieuw-Vennep, Ολλανδία kbt_g.eu_market_membrane@kubota.com
ES	Nombre: Detalles de contacto: Email:	Kubota Holdings Europe B.V. Hoofdweg 1264, 2153 LR Nieuw-Vennep, Los Países Bajos kbt_g.eu_market_membrane@kubota.com
FR	Nom: Détails du contact: Email:	Kubota Holdings Europe B.V. Hoofdweg 1264, 2153 LR Nieuw-Vennep, Les Pays-Bas kbt_g.eu_market_membrane@kubota.com
HR	Ime: Pojedinosti za kontakt: Email:	Kubota Holdings Europe B.V. Hoofdweg 1264, 2153 LR Nieuw-Vennep, Nizozemska kbt_g.eu_market_membrane@kubota.com
IT	Nome: Dettagli del contatto: Email:	Kubota Holdings Europe B.V. Hoofdweg 1264, 2153 LR Nieuw-Vennep, Paesi Bassi kbt_g.eu_market_membrane@kubota.com
NL	Naam: Contact details: Email:	Kubota Holdings Europe B.V. Hoofdweg 1264, 2153 LR Nieuw-Vennep, Nederland kbt_g.eu_market_membrane@kubota.com
PL	Nazwa: Szczegóły kontaktu: Email:	Kubota Holdings Europe B.V. Hoofdweg 1264, 2153 LR Nieuw-Vennep, Holandia kbt_g.eu_market_membrane@kubota.com
PT	Nome: Detalhes do contato: Email:	Kubota Holdings Europe B.V. Hoofdweg 1264, 2153 LR Nieuw-Vennep, Os Países Baixos kbt_g.eu_market_membrane@kubota.com
TR	Isim: İletişim detayları: Email:	Kubota Holdings Europe B.V. Hoofdweg 1264, 2153 LR Nieuw-Vennep, Hollanda kbt_g.eu_market_membrane@kubota.com

DRAFT

DRAFT

DRAFT

DRAFT

KUBOTA Submerged Membrane Unit ® is a registered trademark of KUBOTA Corporation.

Registered in Commonwealth of Australia, Federal Republic of Germany, French Republic, Grand Duchy of Luxembourg, Hong Kong, Kingdom of Belgium, Kingdom of the Netherlands, People's Republic of China, Republic of Italy, Republic of Turkey, Spain, State of Israel, United Kingdom, and United States of America

© 2013 KUBOTA Corporation

Lifting Tool Instruction Manual (for SP/SPC model)

KUBOTA Corporation (Tokyo Head Office)
Membrane Systems Dept.
1-3, Kyobashi 2-chome, Chuo-ku, Tokyo 104-8307, Japan
Phone: +81-3-3245-3665, Fax: +81-3-3245-3407, http://www.kubota-global.net/

KUBOTA Membrane Europe Ltd.
3rd Floor No.1 Farrier's Yard, 77-85 Fulham Palace Road, London, W68JA, UK
Phone: +44-20-8741-5262, Fax: +44-20-8563-1616, http://www.kubota-mbr.com/

KUBOTA Membrane USA Corporation
11807 North Creek Parkway South, B-109, Bothell, WA 98011, USA
Phone: +1-425-898-2858, Fax: +1-425-898-2853, http://www.kubota-membrane.com/

SHOP DRAWING REVIEW

Project: **San Luis West WWTP Improvements**

Submittal No. **#O1-08 – Blower Submittal**

Vendor No. **B1-001**

Date Received: **8/5/2025**

Job #: **B777**

Comments:

No Exceptions Taken..... ☒
Submit Specific Item ..... ☐
Accepted with Corrections Noted..... ☐
Revise and Resubmit..... ☐
Rejected ..... ☐

Note:
Review is only for general conformance with the design concept of the project and general compliance with the information included in the Contract Documents. Any action shown is subjected to the requirements of the drawings and the specifications. Contractor is responsible for correlating and confirming dimensions at the job site, choice of fabrication processes and techniques of construction: coordination of his work with that of other trades; and performing the work in a safe satisfactory manner.

DATE: 8/15/2025 BY: DD/NE

Submittal Comments:

1. No exceptions taken.

DRAFT

8723 E. Via de Commercio, #A-204 | Scottsdale, AZ 85258
P: (480) 991-3595 F: (480) 751-1810 | www.pacewater.com

Submittal Transmittal

B-1 PA and MBR Blowers

Project Name	San Luis, AZ West WWTP Phase 1 MBR Upgrades
Project Site	San Luis, AZ West WWTP
Engineer	PACIFIC ADVANCED CIVIL ENGINEERING (PACE) 8723 E. VIA de COMMERICO, SUITE A-204 SCOTTSDALE, AZ 85258
Submit to	Duong Do, PE PACE
Prepared by	Brian Travis KUBOTA Water and Environment USA Corporation 19910 North Creek Parkway Suite 100, Bothell WA 98011, USA
KMU Project #	OPID65
Issued Date	August 5, 2025
Package #	B-2
Item	(1) PA and MBR Blowers

DRAFT

Submittal

San Luiz AZ WWTP
GM60S DN200
Air Scour ALT-1 PD

DRAFT

Contractor/Purchaser
Kubota Membrane USA Corporation
19910 N Creek Pkwy Suite 100
Bothell, WA 98011

Manufacturer/Service/ Parts
Aerzen USA Corp.
108 Independence Way
Coatesville, PA 19320
800-444-1692 (tel)
610-380-0278 (fax)
www.aerzen.com/en-us



SECTION 1
Aerzen Blower Model GM60S
Performance Data
Bill of Material
General Arrangement Drawing
Performance Curves

SECTION 2
Blower Literature

SECTION 3
Blower Package Accessories

SECTION 4
Instrumentation/Controls

SECTION 5
Motor Spec
Motor Data

SECTION 6
Corrosion Protection/Paint Spec

SECTION 7
Startup Report

Customer:

Kubota Membrane USA Corporation
19910 N Creek Pkwy Suite 100
Bothell, WA 98011

Project:

San Luiz AZ WWTP

DRAFT

SECTION 1

DRAFT

AERZEN	**Aerzen USA Corporation** 108 Independence Way, Coatesville, PA 19320 Tel: (610) 380-0244 Fax: (610) 380-0278 website www.aerzen.com	**Job Specific Data Package**		
		DATE	**Aerzen Job #**	**Page**
		7.11.2025		1 of 3
		Revision Letter		-

CUSTOMER INFORMATION

CUSTOMER	Kubota Membrane USA Corp
CUSTOMER PO #	
PROJECT NAME	San Luiz AZ WWTP

PACKAGE DESCRIPTION

matches proposal

EQUIPMENT IDENTIFICATION	GM60S		**SERIAL NUMBERS**
BLOWER MODEL #	GM 060S-00	QTY. (2)	
PACKAGE DESCRIPTION	Pressure Unit w/ Enclosure		
DISCHARGE CONNECTION TYPE	150# ANSI (Stub Pipe) Discharge Conne		
INLET CONNECTION TYPE	150# ANSI Inlet Connection		
MOTOR CONDUIT LOCATION	F3 Conduit Box		
TOTAL PACKAGE WEIGHT	4914 lbs		

DOCUMENTATION

GENERAL ARRANGEMENT DRAWING	GB-006957-P4431000
MOTOR CABLE ROUTING	IA-004545
OPERATIONS & MAINTENANCE MANUAL	G4-006
WARRANTY TERMS & CONDITIONS	A2-001-USA

PERFORMANCE DATA

MEDIUM		AIR	
INLET CAPACITY	*ICFM*	1934	1198
INLET CAPACITY	*SCFM*	1600	992
INLET PRESSURE	*PSIA*	14.61	14.61
DISCHARGE PRESSURE	*PSI*	10.5	10.5
INLET TEMPERATURE	*°F*	120	120
DISCHARGE TEMPERATURE	*°F*	255	266
NOMINAL BLOWER SPEED	*RPM*	2904	1937
POWER @ BLOWER SHAFT	*BHP*	115	73
MOTOR RATING	*HP*	150	150
MOTOR SPEED	*RPM*	1780	1187
SOUND PRESSURE LEVEL *	*dB(A)*	79	79
MOTOR/VFD SPEED	*Hz*	60	40

* measured in free field at 3 foot distance from the outline of the unit (tol. +/- 2 dB(A))

Tolerance on Power & Flow is +/- 5%

DRAFT

CRITICAL INFORMATION / NOTES

1 PRIOR TO SHIPMENT - AERZEN DOES THE FOLLOWING
Removes V-Belts from the motor sheave and wraps them around the blower sheave
Locks the motor hinge plate
Always refer to the operations manual for determining the most suitable lubricant.
Operating and ambient conditions may impact which lubricant to use.

2 UPON ARRIVAL
Immediately remove stretch wrap from package when stored outdoors

3 LIFTING PACKAGE
Without Sound Enclosure: lifting eye holes in the corner of the base frame
With Sound Enclosure: lifting through slots in base with fork lift

4 READ OPERATION MANUAL FOR INSTALLATION INSTRUCTIONS
Call Aerzen After-Sales / Service if you have any questions

5 AT COMMISSIONING - CUSTOMER / CONTRACTOR IS TO
Check oil level (refer to operations manual) - and adjust if necessary
Anchor the base or sound enclosure
Make grounding connections
Connect motor cable per Aerzen Drawing IA-004545
Verify correct rotation of motor (counter-clockwise, looking at drive shaft)
Remove locking device from motor pivot plate
Reinstall V-belts
Apply the oil sight glass Sticker

6 **ALL CUSTOMER PIPING TO BE INDEPENDENTLY SUPPORTED**

7 Recommended MINIMUM clearance at front and rear of package for "normal"
(i.e. inspect machine, change oil, replace belts, etc.) maintenance is 32 inches.

DRAFT

Aerzen USA Corporation
108 Independence Way, Coatesville, PA 19320
Tel: (610) 380-0244 Fax: (610) 380-0278
website www.aerzen.com

Job Specific Data Package

Date	Aerzen Job #	Page
7.11.2025		3 of 3
Revision Letter		-

BILL OF MATERIAL for GM 060S DN-200

	QTY	DESCRIPTION	PART #
1	2	Delta Blower Stage	GM 060S-00
2	2	Motor 150 HP, 4-pole, NEMA, TEFC, 460 V / 60 Hz, NEMA Premium Efficiency, 445T, Tstats, Insulated Bearing, Aegis	21-MTR-WG4-150DD357
3	2	Combination Base Frame / Silencer DN-200	2000012591
4	2	Sound Enclosure (S.E.) w/ Dial Gauges	180741
5	2	Inlet Filter / Silencer Assembly	182117
6	2	Discharge Connection Housing	178667
7	2	Filter Element	2000049288
8	6	Drive Belts	163883000
9	2	One-way Valve EPDM Flap	178655
10	2	Discharge Connection 8" 150# ANSI (Stub Pipe)	21-002827-14
11	2	Inlet Connection 8" 150# ANSI	21-002827-08
12	2	Safety Relief Valve DN-125, set @ 1050 mbar	167375
13	-	Instrumentation	21-G5-IM-PS07-4001
14	2	Filter Maintenance Indicator	21-006757
15	2	Discharge Pressure Gauge	21-010129
16	2	Discharge Pressure Switch set @ 12 PSI	21-000746-02
17	2	Discharge Temperture Gauge/Switch set @ 280° F	21-006756
18	2	S.E. - Ventilation Fan 1350-4600 rpm	161706
19	2	Motor Sheave Bushing	165709000
20	2	Motor Sheave 450 mm	170198000
21	2	Blower Sheave Bushing	156250000
22	2	Blower Sheave 280 mm	162402000
23	8	Vibration Isolators	184821
24	2	Safety Relief Valve Hose	184096
25	6	Safety Relief Valve Hose Clamps	162923
	2	Oil Drain Valve	185388
	2	Seal Ring for drain valve	119086
	2	Oil Drain Hose	2000023662
	-	Standard oil (Delta Lube 06) 1 gal.	21-004391
		SPARE PARTS / SHIPS LOOSE	
	2	Filter Element	2000049288
	2	Drive Belts Sets (3 per set)	163883000
	4	1-GAL Delta Lube Oil	21-004391
	2	Endustra External Intake Silencer 8" 2500 SCFM	21-008030
		ONSITE SERVICES	
		1 trip(s), 2 day(s) total installation, startup, & training	

RECOMMENDED SPARE PARTS
* on hand items
** 2-5 year recommended items

NOTE(S): Always reference the blower s/n & the Aerzen Job # (if known) when ordering spare parts

DRAFT

ITEM	QTY	DESCRIPTION	DESCRIPTION 2
100	1	BLOWER TORSO	GM60S, DN200
110	1	PRESSURE RELIEF VALVE	
200	1	SOUND ENCLOSURE	
300	1	ELECTRIC MOTOR	SHOWN WITH A 440 NEMA MOTOR
310	1	MOTOR MOUNTING	
320	1	BELT DRIVE	
400	1	BELT GUARD	
500	1	COOLING FAN	
600	1	DISCHARGE CONNECTION	8"-150# ANSI
700	1	INLET CONNECTION	8"-150# ANSI
800	1	INSTRUMENTATION	
~~1100~~	1	~~UNLOADING VALVE~~	(OPTIONAL)

PLAN VIEW

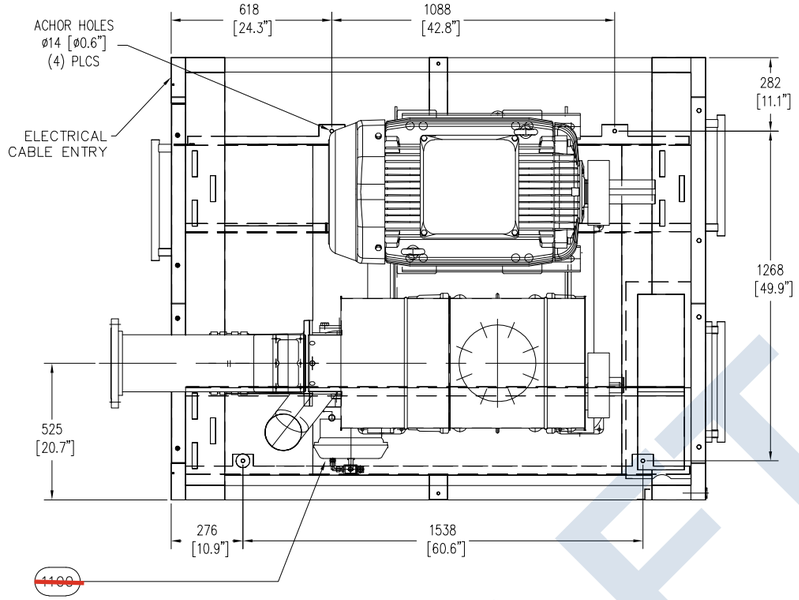

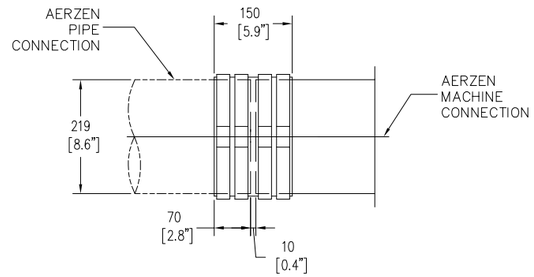

DETAIL Z
SLEEVE CONNECTION
CUSTOMER PIPE ENGAGEMENT
LEAVES 10 [0.4"] GAP
2X SCALE

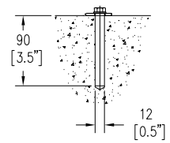

SOUND ENCLOSURE ANCHOR
RECOMMENDATION
SHOW WITH OPTIONAL ANCHOR
AERZEN PART NO. 2000053552
3X SCALE

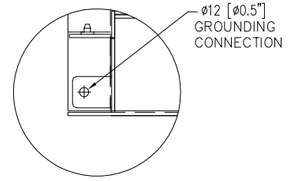

EARTH GROUND
MAT'L: 304 SS
3X SCALE

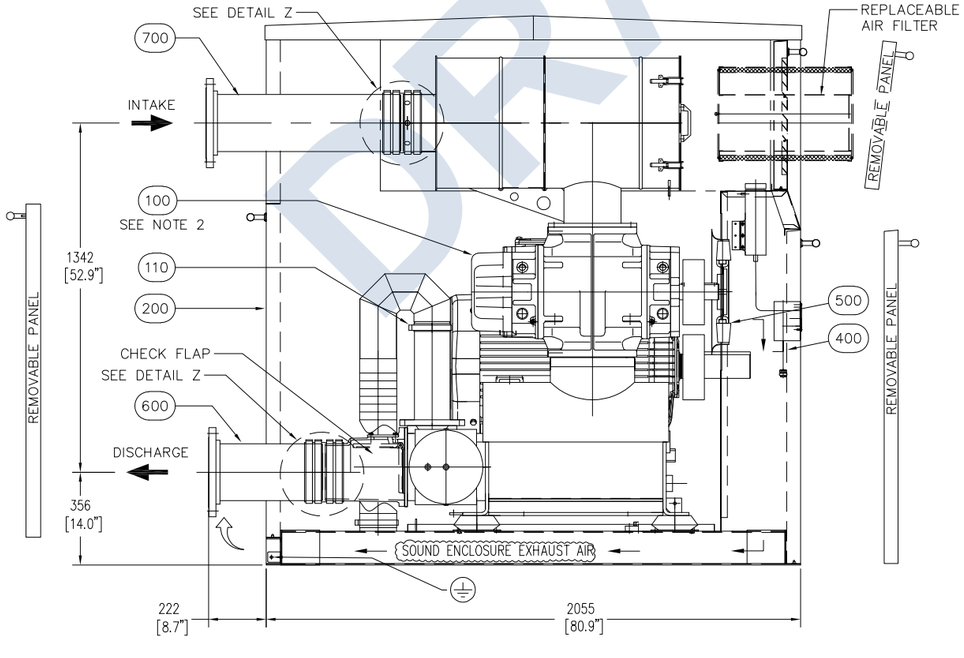

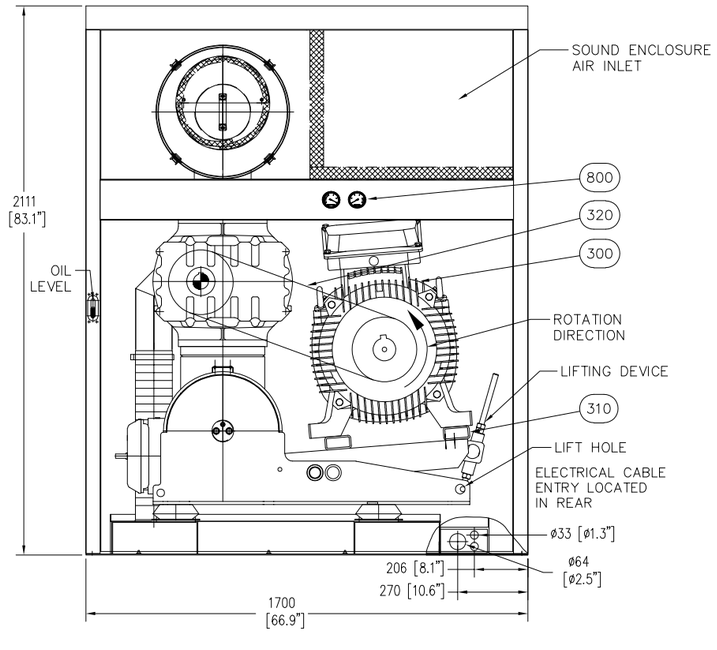

FRONT VIEW

NOTES:

1. TOLERANCE ON DIMENSIONS = ±12mm [0.5"]
2. ITEM 100 (BLOWER TORSO) INCLUDES BLOWER STAGE, INLET SILENCER, BASE FRAME/DISCHARGE SILENCER, VIBRATION ISOLATORS, & CONNECTION HOUSING WITH CHECK FLAP
3. CUSTOMER PIPING TO BE INDEPENDENTLY SUPPORTED
4. LIFT PACKAGE FROM FRONT SIDE THROUGH FORK LIFT POCKETS IN BASE
5. SEE JOB DATA SHEETS FOR PERFORMANCE DATA, PART NUMBERS, TOTAL PACKAGE WEIGHT, INSTRUMENTATION, ANY OTHER OPTIONAL EQUIPMENT & OWNERS MANUAL
6. REGUARDLESS OF THE OPERATING CONDITION, NO FORCES AND TORQUES MAY ACT ON THE MACHINE THROUGH THE CONNECTED SYSTEM PIPING. ALL CUSTOMER PIPING CONNECTIONS MUST BE DESIGNED AS FIXED POINTS AT THE AERZEN MACHINE LIMIT.

WEIGHT

BLOWER PACKAGE (LESS MOTOR)	1413 kg	3115 lb
ELECTRIC MOTOR (ITEM 300)	-	1799 lb
TOTAL (WET WEIGHT)		4914 lb

C

AERZEN

AERZEN USA *CORPORATION*
108 INDEPENDENCE WAY, COATESVILLE, PA.
PH: (610) 380-0244 FX: (610) 380-0278
WWW.AERZEN.COM

CLASS I

SCALE:- SHEET:1/ 1

	NAME	DATE
DRAWN BY	JRH	4.9.2019
CHECKED BY	RJP	4.9.2019
APPROVED BY	-	-

DRAWING NO.
GB-006957-P4431000
NAVISION P/N.
-

TITLE
GA DRAWING
GM60S, DN200, G5
F3 SOUND ENCL.
8"-150# ANSI (IN) / 8"-150# ANSI (OUT)
PRESSURE
-

REV.	NAME	DATE
A	JRH	4.15.2020
B	MAJ	1.13.2021
C	RCJ	03.22.2023
-	-	-
-	-	-
-	-	-

NOTICE: THIS DRAWING AND ALL INFORMATION HEREIN IS THE PROPERTY OF AERZEN USA INC. AND ITS SUBSIDIARIES AND SHALL NOT BE REPRODUCED BY ANY MEANS IN WHOLE OF IN PART USED AS THE BASIS FOR MANUFACTURE WITHOUT WRITTEN PERMISSION

AERZEN GM 60S DELTA PACKAGE, PRESSURE

INLET FLOW

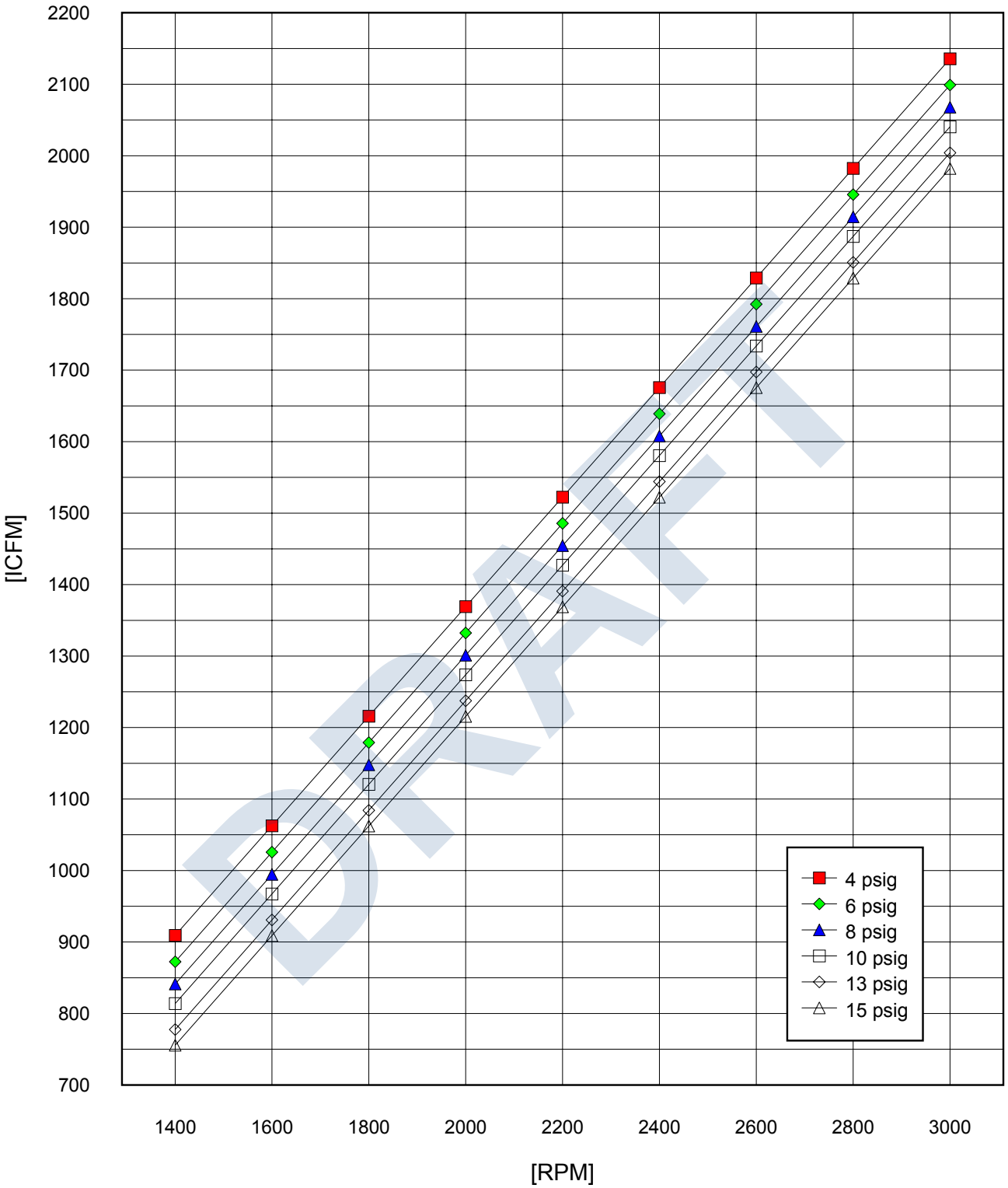

DRAFT

Performance data based on air @ 68 deg.F/ 14.7 psia inlet.

See temperature chart on second sheet for allowable operating range.

AERZEN GM 60S DELTA PACKAGE, PRESSURE

DISCHARGE TEMPERATURE

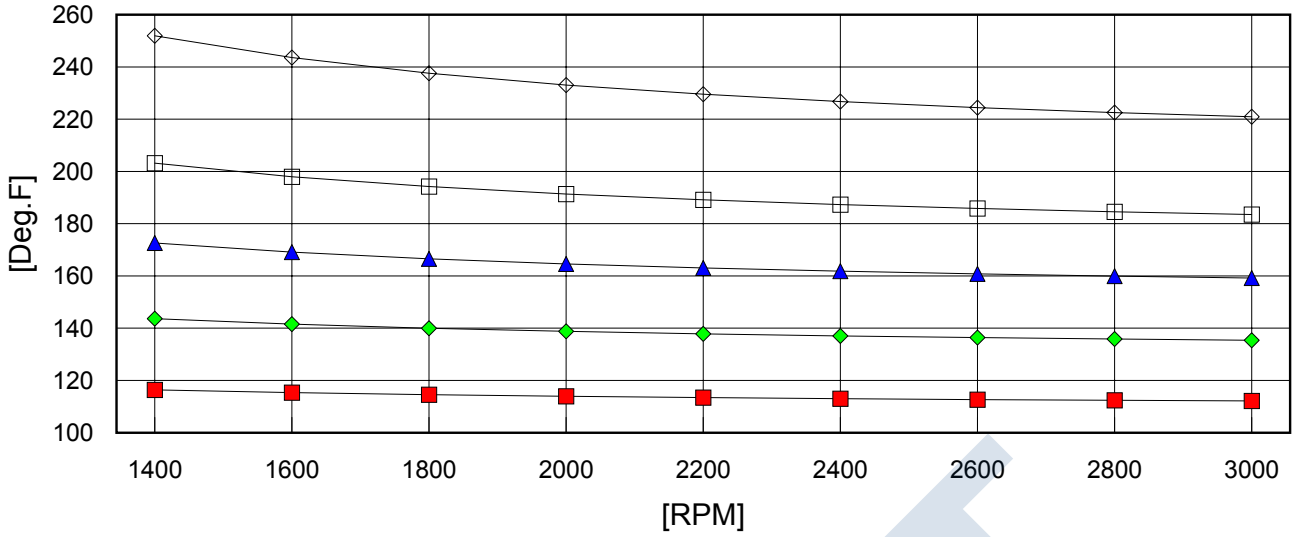

MAXIMUM ALLOWABLE DISCHARGE TEMPERATURE: 285 deg.F
Performance data based on air @ 68 deg.F/ 14.7 psia inlet.

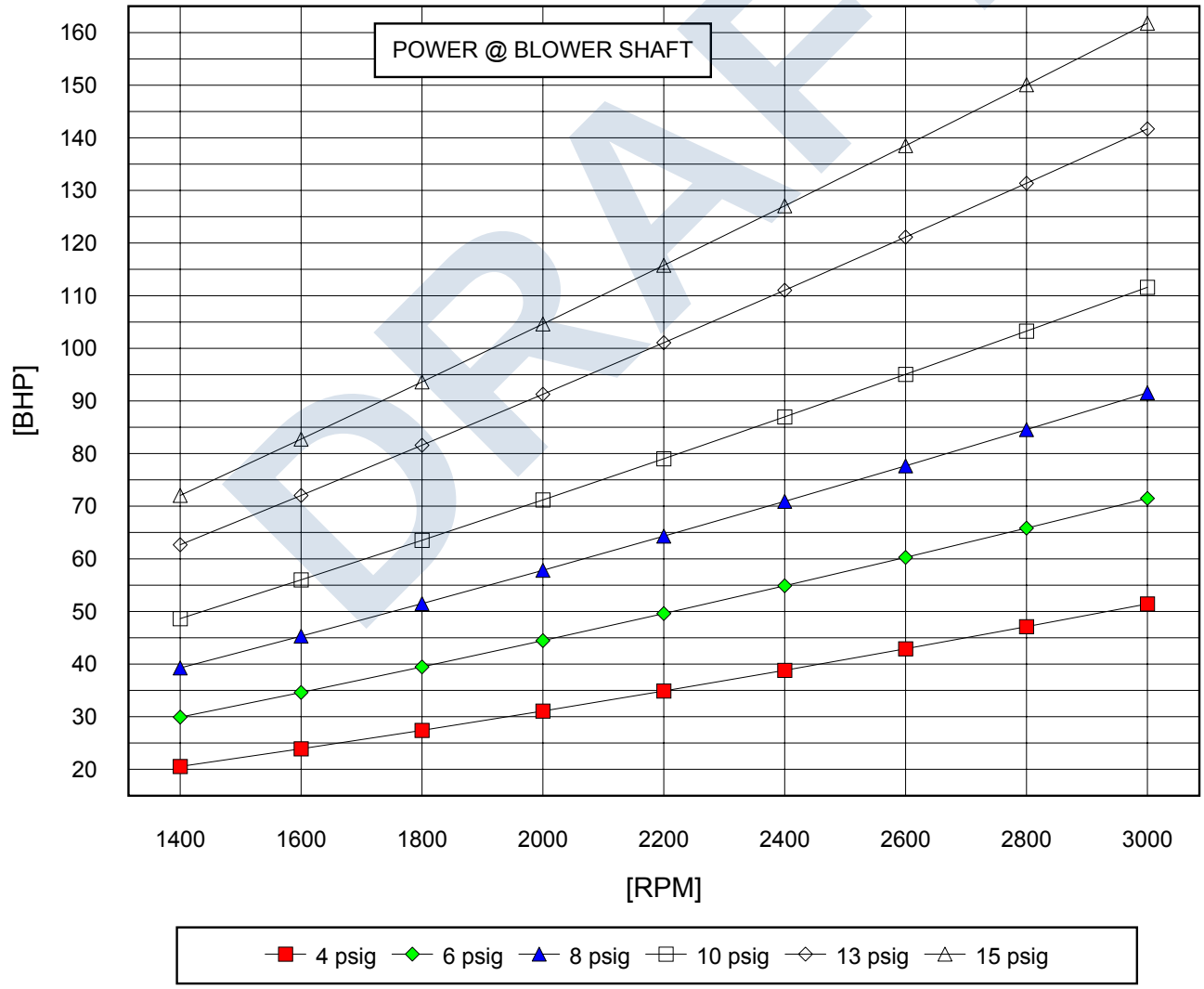

DRAFT

SAMPLE – FOR REFERENCE ONLY

Aerzen USA Corporation
108 Independence Way
Coatesville, PA 19320
(610) 380-0244 ph
(610) 380-0244 fax

Aerzener Machinenfabrik GmbH
Since 1864
Reherweg 28 - D31855 Aerzen
Telefon: 0 51 54 / 810
Telefax: 0 51 54 / 811 91

Certified Test Report

evaluated date: **1-Aug-19**
evaluated by: Rzepka
certified by: Jarrow

Performance & Order Data
Blower Model GM 90S **Serial #** 1619621

			Metric units		US units	
1)	Inlet flow	Q_1	56.19	m^3/min	1984.51	Icfm
2)	differential pressure	Δp	724	mbar	10.5	psig.
3)	Shaft Power	kW	85.15	kW	114.30	Bhp
4)	Blower Speed	rpm	1622	rpm	1622	rpm

Test Result			Metric units		US units	
5)	Volumetric Efficiency	$\eta_{vol, um}$	80%		80%	
6)	Actual Slip	$V_{verl, um}$	13.27	m^3/min	468.49	cfm
7)	Theoretical Volume	$V_{0, UM}$	67.35	m^3/min	2,378.28	cfm
8)	Actual Volume	$V_{1, UM}$	54.15	m^3/min	1,912.39	cfm
9)	Flow Variance	$V_{t, UM}$	-3.62%		-3.62%	
10	Actual Power	$P_{KU, UM}$	85.09	kW	114.10	Bhp
11	Power Variance	$P_{KU, UM}$	-0.08%		-0.08%	

Explanation and Summary
Lines 1), 2), 3). 4) above show required performance data (what was ordered).
Lines 5) through 11) show data that resulted from the performance test on the actual blower.
Line 9) shows a variance of 3.62% in the flow capacity of this unit.
Line 11) shows a variance of 0.08% in the power consumption of this unit.

Standard accepted tolerance is +/- 5%. The unit would be acceptable if the flow was no more than 5% below the expected flow and the power was no more than 5% of expected power.

For this specific case the flow is -3.62% **less than expected.**
For this specific case the power is -0.08% **less than expected.**

Serial number 1619621 **Model number GM 90S** **meets and exceeds the standard tolerance.**

Aerzen USA Corporation
108 Independence Way – Coatesville, PA 19320
Tel: (610) 380-0244 Fax: (610) 380-0278
Service Hotline (800) 444-1692
e-mail:USA-Inquiries@Aerzen.com website www.aerzen.com/en-us

Test Report AMUSA based on AMD Report	
DATE	**Document #**
5-Sep-19	**B-6-0202 rev "F"**

Blower Test Report will be provided in the project O&M Manual.

EC Declaration of Conformity

according to the Machinery Directive 2006/42/EC, Annex II, No.1 A

Company Name : Aerzener Maschinenfabrik GmbH
Reherweg 28
31855 Aerzen
Germany

Product Details :

The Declaration of Conformity for this piston engine is supplemented by the technical details in the chapter entitled "Performance Data".
The details provided therein identify the product and must be applied together with this Declaration of Conformity.

Appointed agent for the compilation of the technical documentation : Mr. Irtel, Managing Director
Aerzener Maschinenfabrik GmbH
Reherweg 28
31855 Aerzen
Germany

We hereby declare that the aforementioned product complies with all relevant provisions of Machinery Directive 2006/42/EC for the conveyance and compression of gaseous media.

The aforementioned product also fulfils all provisions of the following relevant EC-directives:

- EMC / Electromagnetic Compatibility 2004/108/EC
- Pressure Equipment Directive 97/23/EC
- The protection targets of the Low Voltage Directive 2006/95/EC have been fulfilled in accordance with Annex I, No. 1.5.1 of the Machinery Directive.

The following harmonised standards were applied:

• DIN EN ISO 12100	03-2011	Safety of Machines - General Design Principles Risk Assessment and Risk Reduction
• DIN EN 1012-1	02-2011	Compressors and Vacuum Pumps - Safety Requirements - Part 1: Compressors

This Declaration of Conformity applies to the product in its original state as placed on the market by the manufacturer. Any retrospective changes and/or retrospective work undertaken shall void this Declaration of Conformity.

Aerzen, 09-01-2012
Place, Date of issue

Mr. Björn Irtel, Managing Director-
Details of the Undersigned

A3-050 G EN / 01-2012
Document No. / Compiled

DRAFT

SECTION 2

DRAFT

POSITIVE DISPLACEMENT BLOWERS

DELTA BLOWER GENERATION 5

Volume flows from 18 cfm to 8830 cfm

DRAFT



AERZEN

DELTA BLOWER.
A TOUGH ENDURANCE RUNNER IN COUNTLESS COMPRESSION PROCESSES.



DRAFT

Delta Blower Generation 5

Positive displacement blowers of the Delta Blower Generation 5 act as the driving force behind many processes, and are the beating heart of a strong machine combination. This generation of assemblies from AERZEN compresses more than 150 years of experience as a world market leader in blower development. And it is more innovative than ever. AERZEN has introduced many innovations with this young series.

They provide a large volume-flow range from 18 cfm to 8830 cfm. With reduced life-cycle costs and quieter operation. But one thing remains the same: This blower class remains highly robust, thoroughly reliable and has an extremely long service life. No wonder customers choose it for continuous, long-term applications - over years and decades.


AERZEN
Delta Blower



Applications
- Water and Waste water treatment
- Aeration
- Backwash of filters
- Pneumatic conveying of bulk materials
- Gas conveying
- Degassing
- Dedusting
- Generation of negative pressure
- Biogas treatment
- Vehicle operation
- Ship unloading
- Tunnel boring

and much more

Industries
- Wastewater treatment plants
- Chemistry and process engineering
- Power plant
- Cement and lime
- Foodstuff technology
- Paper industry
- Pharmacy and many more

Goods conveyed
- Granules
- Sugar
- Cement
- Cereals
- Carbon

and much more

VERSATILE
FOR EACH APPLICATION.

The versatile compact power packages of the Delta Blower series can be used in all climate zones of the world. Just as safe under the most difficult environmental conditions as in indoor installation. They work stand-alone or in a machine combination.

Versatility in figures.
Delta Blowers are strong all-rounders: The smallest assemblies are mounted on silo trucks. The largest machines operate in lifting systems. They unload transport vessels. With an hourly performance of up to 1,000 tons.

Control range between
25 % and 100 %

Volume flows from
approx. 18 cfm to 8830 cfm

Pressures up to 14.5 Psi
Negative pressures down to
-7.25 Psi

Nominal diameters
DN 50 to DN 400

DRAFT



Indispensable for power plant technology



Conveying of powdery goods



Powerful for ship loading and unloading

MACHINES AND SERVICES FROM AERZEN. IN USE WORLDWIDE AND HIGHLY AVAILABLE.

The extremely high load capacity of Delta Blower packages is legendary. Just like their proverbial reliability, their durability or their intelligent operating and maintenance concept. Why are the services of AERZEN an issue at all? Because service is a must. And because our worldwide wellpositioned service teams are an important decision criterion for plant operators: for blowers made by AERZEN.

It's the inner values that matter: the AERZEN blower stage

Made in Germany



High availability.
The best blower packages are those that you do not notice. Because they are steadfast in their work. For years and decades. The Delta Blowers from AERZEN are such assemblies. AERZEN manufactures all core components itself.

From the assembly to the control system. From the idea to engineering and configuration. And thus ensures the high productivity of its machines. Our value contribution to the quality standard made in Germany.

On site worldwide.

Typical for AERZEN: The reliable availability of its solutions. This refers to our machines. And to our services. The fact that our service teams look after your systems over their entire life cycle protects the value of your investment. The fact that we have a dense network of 50 subsidiaries and agencies in more than 100 countries around the globe guarantees short distances. So we are quickly there for you - in case we are needed.

Safely AERZEN.

- Commissioning by qualified personnel
- Individual training of your specialist personnel
- Customer-specific service and maintenance contracts
- Machine repair also directly on site

Intelligently designed.

What does compact, easy handling or ease of maintenance mean? The value of these promises only becomes apparent in everyday practice. Just like these tangible benefits:

- Small footprint
- Flexible machinery mountings
- Easy to transport with forklift/lift truck
- Space-saving side-by-side installation
- Plug&play installation and commissioning
- Easy access to all wearing parts
- Oil level check from the outside while the machine is running
- Maintenance work such as oil and filter change from the front
- Low sound pressure level
- Belt drive for optimum volume flow design, subsequent power adjustment is quick and easy

Intelligent silencing: the AERZEN discharge silencer without absorption material

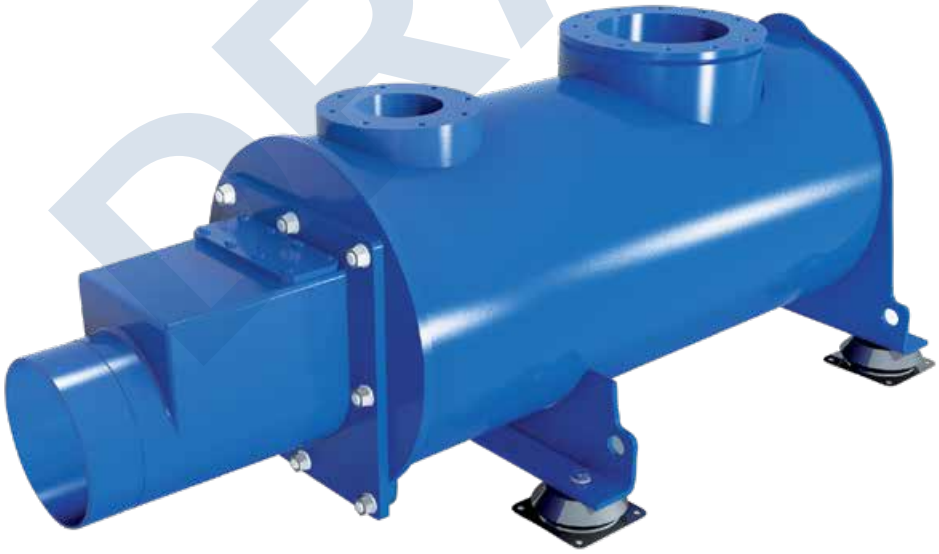

100 % clean.

How do we offer food suitability, avoid expensive cleaning or even production restrictions? We do not use absorption material for sound absorption. “Therefore, AERZEN made the base support a discharge silencer and reduces the noise exclusively by means of air deflections.

100 % free of absorption material, because this could wear out and contaminate the downstream system. By the way, the AERZEN base support is patented and certified as spark arrester for ATEX applications.

DRAFT

ROBUST BLOWER PACKAGE
READY TO PERFORM.

AERZEN belongs to the most innovative companies worldwide in the field of compressor technology. In 1868, we started manufacturing positive displacement blowers. By the way, we were the company that manufactured the first positive displacement blower in Europe. Since then, we have taken the performance features of this technology to the peak with every generation. Let yourself be surprised. Discover these special blowers: Delta Blower Generation 5.

Extremely robust blower package
- For a wide range of applications within a high control range from 25 to 100%
- Various modifications are possible

Compact design
- Space-saving side-by-side installation
- Small dimensioning of machine rooms

Easy operation and low-maintenance design
- Highly available at continuous operation even under toughest environmental conditions
- The front side is used for operation and maintenance

Plug&play Solution
- Completely configured, parameterized and ready for connection
- Integrated service kit with first oil fill

Oil-free as per class 0
- According to ISO 8573-1, certified by the TÜV (German technical inspection association)

Free from absorption material
- Suitability for use with foodstuffs in the pneumatic conveying of bulk materials (no impurities)
- Safety for energy-efficient productivity in the Water treatment (no sedimentation of absorption material in the aeration plates, no clogging of the aeration plugs, no pressure loss)

Integrated power supply panel (optional)
- Frequency converter, star-delta, direct, softstarter
- Intelligent AERZEN AERtronic control system

Smart oil system
- Oil level check while machine is running
- It can be read from the outside
- Oil instead of grease: Oil-lubricated bearings increase the service life



DRAFT



Advantages for the life cycle assessment
- Standard use of premium efficiency motors
- Suction on the cold side of the assembly
- Belt drive for optimal volume flow design
- Subsequent power adaptations are easily and quickly possible

Belt tensioning hinged motor mounting plate
- Fully automatic and maintenance-free belt tension
- Inspection of V-belt tension no longer necessary
- Easy assembly or replacement of V-belts

Multifunctional hoist for hinged motor mounting plate
- Transport safety lock
- Easy and safe installation of V-belts
- Mobile installation of assemblies (e.g. ship installation/earthquake design)
- Hinged motor mounting plate support for heavy motors

Low noise level
- Safe control of the sound values, close to building areas and production areas
- Lowest sound values by optimised acoustic hood
- Integrated method for reducing pulsation (Patented AERZEN blower stage)

PED pressure-vessel guidelines approval (pressure safety valve)
- for overpressure operation

ATEX-compliant
- AERZEN base supports certified as spark suppressor for ATEX applications

TÜV-certified zone separation filter (optional)

DRAFT

INTERESTED IN THE INNER VALUES? CONSTRUCTION AND DESIGN.

It is good to know what is in the assemblies of the Delta Blower line from AERZEN: The wealth of experience of the world market leader. The quality standard of the traditional German family business. The innovation goal "Best solution provider for our customers". In addition first-class material selection. And a principle that has proven itself in tens of thousands of applications: Roots.

Innovation pulsation reduction.
Especially for its Delta Blower stages AERZEN has developed a unique process and integrated it into all sizes: the pulsation reduction. The patented AERZEN process prevents pulsations and noise already at the origin within the blower stage. For this purpose the AERZEN blowers equipped with 3-lobe pistons have two special channels cast in the cylinder. These control the backflow of the medium into the conveying chamber in such a way that the typical backstroke and squeezing pulses (typical for 2-lobe blowers) are eliminated. The end for pulsations due to patented interference method.

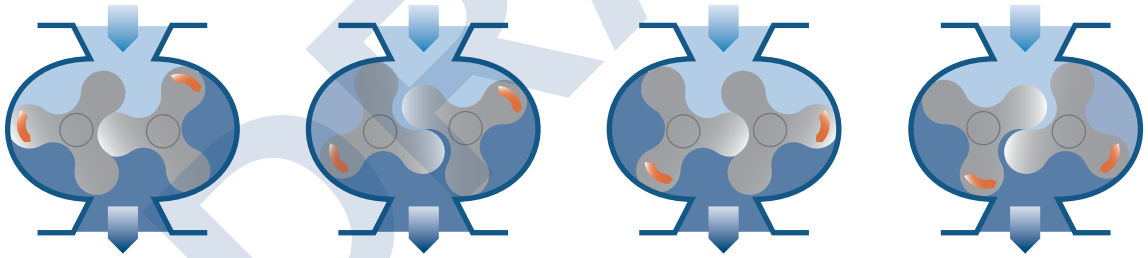

Conveying process in the AERZEN blower

Intelligent technical details ensure that the Delta Blower packages retain their value. One example of many: the patented pulsation reduction, an AERZEN innovation for longer bearing life.

DRAFT

Blower stage
- AERZEN Blowers with 3-lobe pistons and integrated pulsation reduction
- Housing consisting of: Cylinder (with two cylinder with cast-in pre-inlet channels at discharge side to minimise the sound by pulsation reduction), wheel housing, housing cover and side plates
- Material EN-GJL-200
- Ribbed surfaces

Pistons

Sizes GM 3 S to GM 130 L:
- Pistons and shafts in one piece

Sizes GM 150 S to GM 240 S:
- Pistons made of nodular cast iron, shafts made of tempered steel

Drive type
- Overhung via narrow V-belt
- Direct drive

Cooling
- Convection cooling

Lubrication
- Oil splash lubrication for bearings and timing gears

Oil-free conveying
- The oil-free design according to ISO 8573-1 class 0 is guaranteed by the piston ring labyrinth seal, which has proven itself over decades, in combination with neutral chambers (open to the atmosphere)

Timing gears
- Hardened and ground, helically geared and made of case-hardened steel
- They are fitted to the shafts by taper interference fit
- maximum running smoothness and service life

DRAFT

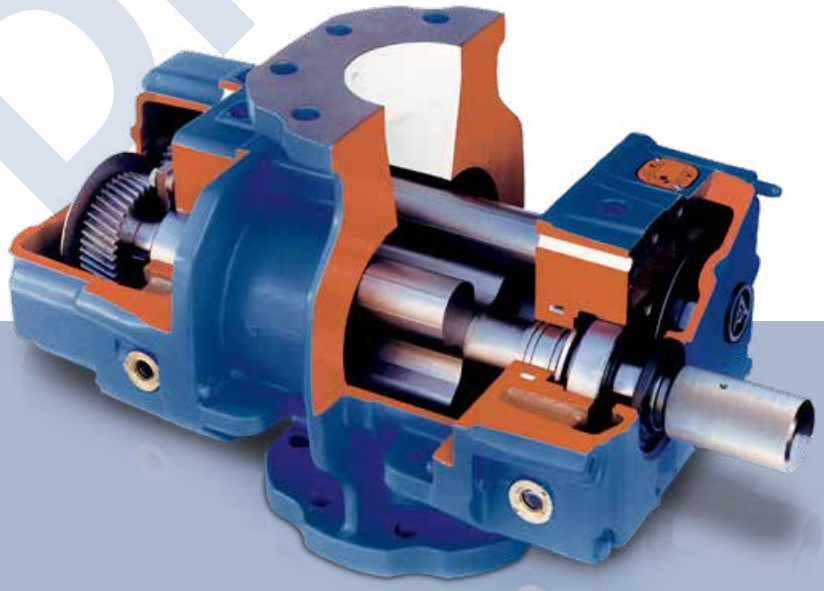

It's the inner values that matter: the AERZEN blower stage

ALREADY IN THE STANDARD VERSION EXTRAORDINARY.

THE DELIVERY CONCEPT OF AERZEN.

Some call it comfortable. The others efficient. We call it all-in: the delivery concept of AERZEN. When the Delta Blower package comes to you, it is already completely configured, parameterized and mounted ready for connection at the factory. Naturally, this is tailored to your processes. Including all standardised accessory components for trouble-free operation at the touch of a button.

All in: The scope of supply in the normal version.

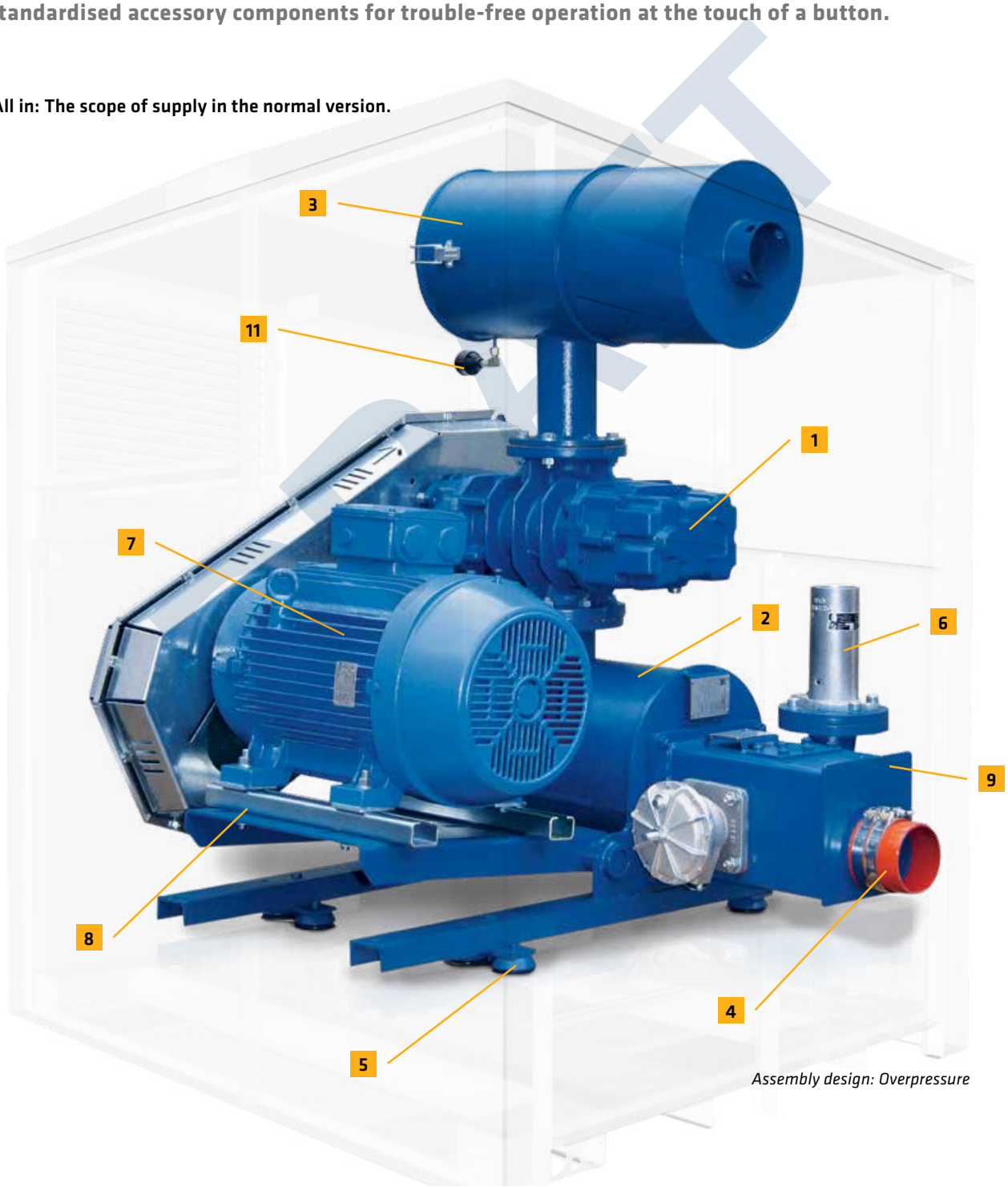

Assembly design: Overpressure

1 **3-lobe blower stage**
- With integrated pulsation reduction (see page 10/11)



2 **Base supports with integrated discharge silencer**
- Certified as spark arrester
- Absorbent-free silencing through patented discharge silencer

3 **Intake silencer with integrated air filter or strainer**
- Standard suction from the atmosphere (overpressure)
- Suction via piping optional (standard for negative pressure)
- Suction via filter element for negative pressure optional



Overpressure



Negative pressure

4 **Flexible rubber sleeve**
- with clamps

5 **Flexible machinery mountings**
- For the decoupling of structure-borne noise

6 **Pressure valve or suction valve**
- For machine protection

7 **Drive**
- Via high-performance narrow V-belt drive by means of three-phase motor
- Standard use of premium efficiency motors (up to motor size 447/9T)

8 **Hinged motor mounting plate**
- Automatic tensioning device for the belt drive
- Multifunctional hoist for hinged motor mounting plate



9 **Connecting housing**
- integrated check valve

10 **Integrated blow-off silencer**
- Horizontal version (up to DN 125)

11 **Standard instrumentation**
- Pressure gauge for indication of the conveying pressure (overpressure)
- Maintenance indicator for monitoring the intake filter (overpressure)
- Vacuum meter for indication of the conveying pressure (negative pressure)



Assembly design: Negative pressure

DRAFT

MODIFICATIONS AND ACCESSORIES.
THE BEST FOR EVERY APPLICATION.

Added value: The accessory components.

- Acoustic hood for indoor and outdoor installation, forced ventilation via mechanical fan
- Start unloading device, required for star-delta starting of the motor (overpressure),
- Vertical blow-off silencer with base plate (negative pressure)
- discharge side expansion joint instead of flexible rubber sleeve
- Power cabinet Star-delta, frequency converter, soft starter
- AERZEN AERtronic blower control
- AERZEN original spare parts
- Other accessories on request



AERZEN Start unloading device

Modifications.

- Special motors
- Special varnish
- ATEX compliant design
- Acoustic hood for desert installation with special sand collector
- Acoustic hood for low temperatures down to negative 104°F with heating and gravity louvers
- Acoustic hood for earthquake resistance and increased wind loads
- Ship installation and vehicle deployment
- Use for special gases through the use of special materials
- Customised documentation
- Compliance with legal requirements for delivery e.g. in Eurasian customs union



Always the safe choice: ATEX compliant design from AERZEN

The new AERtronic - the way into the digital future.
The new edition of the AERtronic control system offers a user-friendly and clear possibility for the analysis and processing of relevant process parameters and thus provides more transparency, safety and efficiency. All measured values converge in the new control system and can be transferred to the production control system via common interfaces in order to always operate the plant at the optimum operating point. The AERtronic is available in three versions:

Basic: As a fully digital display instrument
Advanced: For active process control
Premium: As an intelligent interface with cloud compatibility.



DRAFT

COMPACT DESIGN. CAN BE SET UP SIDE-BY-SIDE, OF COURSE.

Dimensions and weights (subject to technical changes - product is subject to technical change).

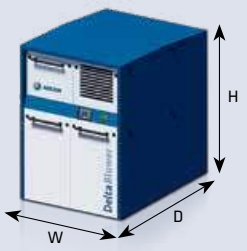

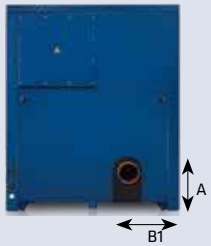

Delta Blower

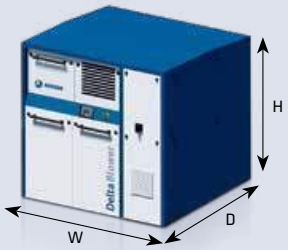

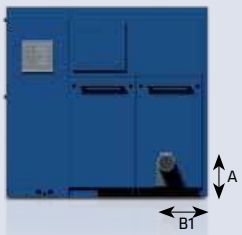

Delta Blower with integrated power supply panel.

Delta Blower.

Type	W in.	mm	D in.	mm	H in.	mm	A in.	mm	B1 in.	mm	Nominal diameter DN	Weight without acoustic hood lbs.	kg	Weight with acoustic hood lbs.	kg
GM 3 S	31	800	31	800	41	1,055	8	228	9	245	50	326	148	467	212
GM 4 S	36	925	44	1,135	50	1,280	10	258	10	258	80	456	207	659	299
GM 7 L	36	925	44	1,135	50	1,280	10	258	10	258	80	467	212	670	304
GM 10 S / DN 80	36	925	44	1,135	50	1,280	10	258	10	258	80	520	236	723	328
GM 10 S / DN 100	49	1,250	53	1,350	59	1,500	11	294	14	375	100	740	336	1093	496
GM 15 L	49	1,250	53	1,350	59	1,500	11	294	14	375	100	773	351	1126	511
GM 25 S	49	1,250	53	1,350	59	1,500	11	294	14	375	125	897	407	1250	567
GM 30 L	59	1,500	70	1,800	74	1,900	14	356	17	435	150	1521	690	2248	1020
GM 35 S	59	1,500	70	1,800	74	1,900	14	356	17	435	150	1719	780	2447	1110
GM 50 L	66	1,700	80	2,055	83	2,111	14	357	20	525	200	1995	905	3251	1475
GM 60 S	66	1,700	80	2,055	83	2,111	14	357	20	525	200	2281	1,035	3,538	1,605
GM 80 L	74	1,900	80	2,200	90	2,308	17	456	23	600	250	3417	1,550	4,850	2,200
GM 90 S	74	1,900	80	2,200	90	2,308	17	456	23	600	250	3571	1,620	5,004	2,270
GM 100 S	74	1,900	80	2,200	90	2,308	17	456	23	600	250	4012	1,820	5,445	2,470
GM 130 L	82	2,100	112	2,850	92	2,345	16	410	25	635	300	5370	2,436	7,517	3,410
GM 150 S	82	2,100	112	2,850	92	2,345	16	410	25	635	300	6164	2,796	8,267	3,750
GM 220 L *	82	2,800	169	4,304	137	3,500	16	410	31	800	400	10981	4,981	18,166	8,240
GM 240 S *	82	2,800	169	4,304	137	3,500	16	410	31	800	400	11841	5,371	19,025	8,630

* Design in Compact IV

Weights without motor and belt drive

Delta Blower with integrated power supply panel.

Type	W in.	mm	D in.	mm	H in.	mm	A in.	mm	B1 in.	mm	Nominal diameter DN	Weight with acoustic hood lbs.	kg
GM 10 S	72	1,850	53	1,350	59	1,500	11	294	14	375	100	1364	619
GM 15 L	72	1,850	53	1,350	59	1,500	11	294	14	375	100	1457	661
GM 25 S	72	1,850	53	1,350	59	1,500	11	294	14	375	125	1580	717
GM 30 L	82	2,100	70	1,800	74	1,900	14	356	17	435	150	2914	1,322
GM 35 S	82	2,100	70	1,800	74	1,900	14	356	17	435	150	3112	1,412
GM 50 L	82	2,300	80	2,055	83	2,111	14	357	20	525	200	4023	1,825
GM 60 S	82	2,300	80	2,055	83	2,111	14	357	20	525	200	4310	1,955

DRAFT

Weights without motor, power electrics and belt drive

DELTA BLOWER IN FIGURES.
SIZES AND PRESSURE RANGES.



Type	Positive displacement blower
Design	Overpressure
Volume flow	17 to 8617 CFM
Overpressure	up to 14.5 Psi
Conveying medium	Air, Neutral gases
Handling	oil-free

Figure:
Delta Blower GM 25 S - Assembly without acoustic hood

Performance data - DELTA BLOWER - overpressure operation

Blower Size	Differential pressure		Volume flow		Motor rating		Sound pressure level
	max. Psi	max. mbar	max. CFM	max. m3/h *	max. hp	max. kW	max. dB(A) **
GM 3 S	14.5	1,000	141	240	15	11	70
GM 4 S	14.5	1,000	196	334	20	15	70
GM 7 L	10	700	287	488	20	15	70
GM 10 S / DN 80	14.5	1,000	353	600	40	30	72
GM 10 S / DN 100	14.5	1,000	402	684	40	30	72
GM 15 L	10	700	36	1,020	40	30	72
GM 25 S	14.5	1,000	851	1446	73	55	73
GM 30 L	10	700	1211	2,058	100	75	75
GM 35 S	14.5	1,000	1,405	2,388	120	90	75
GM 50 L	10	700	1935	3,288	120	90	76
GM 60 S	14.5	1,000	2,076	3,528	177	132	78
GM 80 L	10	700	2924	4,968	214	160	80
GM 90 S	14.5	1,000	3,150	5,352	268	200	81
GM 100 S	14.5	1,000	3,701	6,288	335	250	82
GM 130 L	10	700	4661	7,920	335	250	84
GM 150 S	14.5	1,000	5,297	9,000	476	355	84
GM 220 L	8.7	600	7398	12.570	422	315	84
GM 240 S	11.6	800	8617	14,640	670	500	86

* Volume flow (corresponds to the delivery volume flow measured according to ISO 1217 and converted to the reference suction conditions according to the (informative) Annex F of ISO 1217 [inlet pressure = 1.0 bar / inlet temperature = 20°C, RH = 0%])

** Machine noise at a distance of 1m with acoustic hood and connected, insulated pipe, tolerance ± 2 dB(A)

Further pressure ranges can be requested for the AERZEN spectrum. Extensive performance data charts can be found in our Customer Net.

DRAFT



Type	Positive displacement blower
Design	Negative pressure
Volume flow	17 to 8829 CFM
Overpressure	down to -7.5 Psi
Conveying medium	Air, Neutral gases
Handling	oil-free

Figure:
Delta Blower GM 15 L - Assembly without acoustic hood

Performance data - DELTA BLOWER - negative pressure operation

Blower Size	Differential pressure		Volume flow		Motor rating		Sound pressure level
	max. Psi	max. mbar	max. CFM	max. m3/h *	max. hp	max. kW	dB(A) **
GM 3 S	-7.5	-500	147	250	10	7.5	68
GM 4 S	-7.5	-500	200	340	10	7.5	70
GM 7 L	-7.5	-500	306	520	14 - 25	11 - 18.5	70
GM 10 S / DN 80	-7.5	-500	353	600	20 - 50	15 - 37	70
GM 10 S / DN 100	-7.5	-500	429	730	20 - 50	15 - 37	70
GM 15 L	-7.5	-500	635	1,080	29 - 50	22 - 37	73
GM 25 S	-7.5	-500	888	1,510	40 - 73	30 - 55	73
GM 30 L	-7.5	-500	1247	2,120	60 - 120	45 - 90	75
GM 35 S	-7.5	-500	1424	2,420	73 - 120	55 - 90	75
GM 50 L	-7.5	-500	2030	3,450	100 - 335	75 - 250	78
GM 60 S	-7.5	-500	2142	3,640	100 - 335	75 - 250	78
GM 80 L	-7.5	-500	3031	5.150	147 - 335	110 - 250	80
GM 90 S	-7.5	-500	3296	5,600	147 - 335	110 - 250	80
GM 100 S	-7.5	-500	3884	6,600	147 - 335	110 - 250	80
GM 130 L	-7.5	-500	4750	8,070	536	400	82
GM 150 S	-7.5	-500	5709	9,700	536	400	82
GM 220 L	-7.5	-500	7534	12,800	536	400	82
GM 240 S	-7.5	-500	8829	15,000	536	400	80

* Volume flow (corresponds to the delivery volume flow measured according to ISO 1217 and converted to the reference suction conditions according to the (informative) Annex F of ISO 1217 [inlet pressure = 1.0 bar / inlet temperature = 20°C, RH = 0%])

** Machine noise at a distance of 1m with acoustic hood and connected, insulated pipe, tolerance ± 2 dB(A)

Further pressure ranges can be requested for the AERZEN spectrum. Extensive performance data charts can be found in our Customer Net.

DRAFT

MATURED TO PERFECTION IN 150 YEARS: THE SERVICE WORLD OF AERZEN.

The best kind of service is the kind you don't need. But every technology involves wear and tear. Our machines are designed to do their job for as long and efficiently as possible. If necessary, for decades. The goal of AERZEN Services is to extend service life and availability – simple added value for your investment!

Benefit from AERZEN OEM competence - at any time and anywhere



With your OEM's best recommendations.
We have been manufacturing quality products for over 150 years. At the same time, we also developed a corresponding service world. With tailor-made offers for every phase of your machine's lifespan. With OEM original parts, reliable logistics and excellent service at its core. And with decentralised service centres in your vicinity, which guarantee fast provision of spare parts and competent service - worldwide.

AERZEN on-site service.
Our service teams work where our machines are. All over the world. Onshore or offshore. Often under extreme conditions. How do we do it? With short distances. AERZEN has a dense network of service centres and decentralised parts warehouses around the globe. More than 200 excellently trained service technicians can come to your aid from there. Any time and anywhere you need us.



Contact worldwide

2,500 employees work for AERZEN. On every continent. With six sales offices in Germany alone, we're there for you. And with 50 subsidiaries in over 100 countries around the world. Hence we're never far away – should you ever need us. Give us a call:

+49 5154 81 0

Service-Infoline

Our German Service Centre is available for customers and operators. We are happy to help you. We look forward to your call:

+49 700 49318551

Customer Net

Where you can learn more about the company and the leading compressor technologies from Aerzen? It's simple: In our Customer Net on our website, where we have stored everything that is worth knowing for you:

www.aerzen.com

DRAFT

AERZEN. Compression - the key to our success.

AERZEN was founded in 1864 as Aerzener Maschinenfabrik. In 1868, we built Europe's first positive displacement blower. The first turbo blowers followed in 1911, the first screw compressors in 1943, and in 2010 the world's first rotary lobe compressor package. Innovations "made by AERZEN" keep driving forward the development of compressor technology. Today, AERZEN is among the world's longest established and most significant manufacturers of positive displacement blowers, rotary lobe compressors, screw compressors and turbo blowers. AERZEN is among the undisputed market leaders in many areas of application.

At our 50 subsidiaries around the world, more than 2,500 experienced employees are working hard to shape the future of compressor technology. Their technological expertise, our international network of experts, and the constant feedback we get from our customers provide the basis for our success. AERZEN products and services set the standard in terms of reliability, stability of value and efficiency. Go ahead – challenge us!

DRAFT



FIND YOUR LOCAL CONTACT

www.aerzen.com/worldwide



Aerzen USA
108 Independence Way
Coatesville, PA 19320
Phone: 610-380-0244
Order-USA@aerzen.com
www.aerzen.com

AERZEN
EXPECT PERFORMANCE

Delta Blower (G1-068-10)_Aerzen USA
12|2022

AERZEN DELTA BLOWER GENERATION 5
North American Standard
Positive Pressure

Standard range

Blower sizes: ..... GM 3S to GM 150S

Package nominal sizes: ..... 2” (DN 50) to 12” (DN 300)

Medium: ..... Air

Flow range: ..... 35 to 5297 icfm (1.0 to 150 m^3/min)

Differential pressure: ..... 15 psi (1000 mbar) for “S” and 10 psi (700 mbar) for “L” machines

Maximum operating temperature: 285ºF (140ºC)

Drive: ..... V-belt drive with totally automatic belt tension adjustment

Introduction

The Aerzen Blower is renowned for its performance and its reliability. There is no secret: From the blower-stage through the accessories, Aerzen enhances key features of each component by applying sound engineering, precision machining, and superior workmanship.

The Delta Blower Generation 5 (G5 for short) is the synthesis of four previous Aerzen blower package generations combined with an array of new technical innovations to provide five key advantages to our customers:

- The machinery noise level has been lowered yet another 6-8dBa[1] on average compared to the previous Delta Blower
- The blower package is even more user friendly especially in transport, installation, operation, and maintenance
- The oil level is visible from the outside of the package, so the blower does not need to be shut down
- No absorption material is used in the discharge combination silencer; this eliminates the possibility of foreign objects contaminating the air or gas stream
- Use of a shaft mounted cooling fan, which reduces installation and operating costs by eliminating extra wiring, motor starters, and its interlocking with the main blower motor
- The compact footprint allows units equipped with sound enclosure to be mounted side-by-side since there is only one main maintenance access side

[1] Measured in 1m free-field conditions

DRAFT

Aerzen Delta Blower Generation 5 are pre-engineered modular compact packages, which offer a wide range of options from proven and standardized components at reasonable costs and short delivery times.

Shipped completely assembled, the Aerzen Delta Blower Generation 5 is indoor and outdoor rated. There is no extensive installation work - neither grouting nor special anchoring is required, just simply level it and bolt it to any standard industrial flooring or surface.

Scope of supply: basic configuration

- Aerzen Rotary Lobe Blower stage
- Combination Base Frame / Silencer combined with hinged motor plate for automatic belt tensioning – with 2 ½" diameter discharge pressure gauge
- Making belt changes as easy as possible a motor hinge plate lifting and locking mechanism is included with DN100-300 units and a hydraulic bottle jack is supplied with DN50 and 80 units.
- Set of vibration isolating mounts under the entire blower package
- Inlet silencer – filter with filter maintenance indicator
- Narrow V-belt drive and protection guard
- Pressure safety valve
- Discharge manifold with integral check valve and flexible pipe connector
- Standard paint system
- NEMA electric motor TEFC, Premium efficiency, VFD duty, with conduit box on top
- First oil fill and "Service kit"
- Packaging for domestic trucking
- Standard documentation in electronic format: English language, drawings with US-customary and metric units of measure

Standard options include (not limited to)

- Inlet pipe connection kit
- Sound enclosure with skid / oil-drip pan and forced ventilation
- Start-unloading valve Aeromat, with or without solenoid valve
- Pressure modulating valve Aeropress or Aeropress10S, pilot operated
- Other motors, e.g. misc vendors Premium Efficiency with conduit box on top
- Instrumentation & controls, e.g. AERtronic Aerzen blower controller

DRAFT

Description of the main components

The combination of key components marked with a * in the description below significantly contribute to the reliability and performance of the Aerzen Blower:

At the heart of the package: The Aerzen Rotary Lobe Blower

Low vibration and low pulsations - a key feature:

* Internal pulsation interference channels in conjunction with 3-lobe rotors reduce the pulse in the discharge air stream by as much as 90% or 20 dB at the lobe-passing frequency. This significant attenuation contributes strongly to reducing vibrations in the entire package and lowering the noise emitted by the downstream piping.

Positive displacement characteristic:

- The blower moves a fixed volume of gas with each shaft rotation, nearly independently from the operating pressure.
- At constant differential pressure, the load torque remains constant.
- For a given pressure, the power is directly proportional to the speed.

Flow across the blower stage:

- Vertical from top to bottom

Drive shaft location:

- On the left when facing the blower shaft

Rotation:

- Counterclockwise when facing the blower shaft

Housing:

- The central section, “the cylinder” and the two side-plates house the rotors, while a gear case and a drive end cover contain the lubricating oil for bearings and gears. Individual side plates allow for optimal setting of the radial rotor clearances: a valuable feature on blowers with the gas flowing perpendicular to the rotors.
- Connections: full-size, flat-faced flanges
- * Maintaining internal alignment under all operating conditions is paramount for the reliability of any rotating equipment. The housing is, for this purpose, designed to support the entire blower stage on its outlet flange only; no need to worry about a “soft foot” or uneven base support
- Materials: Gray cast iron EN-GJL-200 equivalent to ASTM A48 Cl.30 AISI A278 Cl. 30

DRAFT

Rotors:

- Up to and including the model GM 80L, rotors and shafts are made of a single, drop forged steel piece made from C45 steel equivalent to AISI Type 1045. Models GM35S, 50L, 90S, and 130L are made from a single piece of EN-GJS-500-7 nodular cast iron equivalent to ASTM A 536. Model GM150S rotors are comprised of a through shaft made from C45 steel equivalent to AISI Type 1045 and a rotor made from EN-GJS-400-15 nodular cast iron equivalent to ASTM A536 Gr. 60-40-18. Solid or dust-tight rotors do not have any open cavities that can trap contaminants. This is particularly important in food applications and applications requiring high purity. Moreover, rotor balance is maintained, and vibration is therefore minimized.
- Stiff rotor design: the rotors' first critical speed is always at least 10% above the maximum operating speed.
- The rotors meet or exceed the ISO 1940 / ANSI S2.19 G6.3 criteria of dynamic balancing

Timing gears:

- Helical gears with hardened and ground teeth to meet AGMA 12 quality standard with an AGMA service factor of 1.70.
- To maintain the advantage of high-quality gears, the gear wheels are secured onto the shafts by means of a tapered interference fit. Optimum concentricity is achieved and neither gear hub nor shaft keys are used. To prevent damaging the seats, gear installation and removal are carried out using hydraulic pressure to expand the gear wheels within their elastic limit.

Bearings:

- The rotors are supported by anti-friction bearings
- The bearings are housed in the side-plates and are sized for an expected 5 years between overhauls.
- The drive-shaft bearing is a cylindrical roller bearing whereas the other bearings are selected to achieve the proper clearances between rotors and housing, axial loads from the helical bearings: smaller machines up to GM 50L feature double angular ball bearings.

Lubrication:

- Oil splash lubrication of all bearings and gears through oil spray disks on both blower ends
- An oil sight glass is provided on each oil sump.
- An oil drain valve is provided on each oil sump (units without sound enclosure). The oil drain valves are directly mounted to the oil sump covers for clean, easy and fast oil change.
- Units with sound enclosure are plumbed together to an oil reservoir that serves as oil fill and drain device, and its oil sight glass is visibly mounted to the maintenance side of the enclosure.
- Aerzen USA provides the first oil fill with a lubricant as recommended in the operating manual as well as a service-kit containing oil fill funnel, and oil drain hose.

Seals at the rotor chamber:

- The rotor chamber is sealed from the oil chambers by four, all metal, non-rubbing seals, each consisting of the following components and in that sequence:
  - Oil slinger ring
  - Two restrictive piston-rings in a labyrinth
  - "Neutral chamber" located between the piston rings used for venting the seal
  - Two restrictive piston-rings in a grooved labyrinth bushing

Seal at the drive shaft:

- Double, permanently lubricated Viton seal ring
- Shaft sleeve: replaceable, hardened steel

DRAFT

Testing

- Each blower stage is subject to a full-load test to verify the volumetric flow and power values.
- Acceptance criteria are +5% on power and –5% on flow for all machine sizes.
- Orifice flow measurement and conversion of results to the operating conditions in accordance with ISO 1217, simplified

The package component Aerzen Rotary Lobe Blower

Intake air silencer & filter

- Absorption-type silencer upstream of the air filter element. For reasons of cleanliness, there is no silencing material between the filter and the inlet blower flange.
- The carbon steel housing is powder coated. Quick-release latches for quick access to the filter element
- Filter performance: G4 per EN 779 (greater than 90% of synthetic dust particles), equivalent to ASHRAE 52.2 MERV 7 (50-70% @3-10 microns)
- Progressively compressed, thermally bound polyester fibers, free of PVC, smoothened and compressed on the clean airside for highest dust separation and retention capacity. The filter media is made of a single, 30 mm thick continuous mat that is white in color and is food safe. Filter element mounts with a quick release turn and lock arrangement.
- Included is a filter maintenance indicator. If the sound enclosure option is selected, the filter maintenance indicator is mounted to the enclosure wall.

Base with integral discharge silencer:

- In addition to the blower's internal pulsation cancellation feature, the combination discharge, three-chamber reactive silencer is used to further reduce the noise and residual pulsation in the air stream across a wide range of operating speeds. The residual pulsation downstream of the silencer meets or exceeds the API 619 recommended 2% peak-to-peak of the absolute line pressure.
- The discharge silencer is combined with the support base into one compact rugged unit. It is made from pressure vessel steel it forms a torsion resistant cylindrical vessel supporting the blower stage and other components.
- The mounting surface for the blower is a full-size steel flange machined and continuously welded to the base with the full number of tapped holes for the studs to fasten the blower to the base - no need to align blower feet or to worry about a soft-foot condition. A surface sealant is used instead of a gasket.
- Maximum operating pressure: 1.1 bar gauge (16 psig) and 150ºC (300ºF), built and certified to the latest European Pressure Vessel Code, PED. Test pressure: 1.9 bar g. (27.6 psig)
- The base is mounted on a set of vibration-isolating mounts

DRAFT

Belt drive

- Narrow, anti-static V-belts
- Selected for a minimum service factor of 1.4 times operating power (BHP), or 1.1 times the motor nominal power (nameplate HP), whichever is greater.[2]
- * The Aerzen Delta Blower Generation 5 package provides entirely automatic tensioning of the belts. Thanks to the package configuration, the drive geometry is such that the motor hinges parallel to the motor shaft centerline, using only the motor mass to maintain this tension without need for adjustments or springs. This not only reduces maintenance; it also reduces the potential for operating with too little (slipping belts) or excessive belt tension (excessive bearing and shaft load).
- DN100-300 blower packages feature a multipurpose lifting device for the motor swing plate. In its most basic function, it serves as shipping locking device preventing the motor from unwanted movement. It also serves as the lifting mechanism for changing out the drive belts. Another additional purpose is limiting the belt tension when oversized motors are used. Finally, the device can be configured to aid limited movement for seismic or mobile blower package service. The maintenance kit provided by Aerzen USA also includes a ratchet wrench used for lifting the motor to change V belts.
- DN50 & DN80 blower packages have a simple to use bracket and hydraulic jack included in the maintenance kit to lift the motor and change or install the belts.
- Sheaves and bushings are dynamically balanced to ISO 1940 / ANSI S2.19 G6.3. For linear tip speeds > 6500 ft/min (33 m/s), nodular cast-iron, ventilated sheaves are used.

Belt guard

- OSHA compliant personnel guard, made of galvanized steel: either perforated steel or solid sheets with vents, depending upon the model.
- Units with sound enclosure feature hand protection fan and belt guards, and the enclosure itself serves as the ultimate protection device. The removable maintenance panels comprise lockable latches that help facilitate OSHA prescribed tag-out-lock-out procedures.

Vibration isolating mounts

- A set of vibration isolating mounts are located under the blower package to hinder the transmission of structure borne noise from the blower and the discharge silencer into any structure the package is installed on, such as a mounting skid if supplied with acoustic enclosure.

Discharge manifold

- Flange-mounted to the discharge silencer, the discharge manifold serves for mounting the pressure safety valve, an optional start-unloading valve and for connecting the blower package to the discharge piping.
- Materials of construction: Gray Cast Iron EN-GJL-250 equivalent to ASTM A48 (Aluminum stub pipe for DN50)
- The discharge manifold houses the discharge check-valve

Pressure safety valve

- DN100-300 blower packages have a vertically mounted, spring loaded, safety pressure valve sized for the full flow of the blower. DN50 and DN80 blower packages feature horizontally mounted safety relief valves.

[2] Higher values are not necessarily better as they could lead to belt slippage due to excessive stiffness, and also shaft damage (deflection) caused by higher tension values required by over sized v-belt drives.

DRAFT

- The valve's characteristic is nearly proportional. It not only opens, but also closes at the set pressure
- The valve has a built-in dampener that allows the valve to actuate smoothly, which prevents the "pop-off" effect commercially available valves exhibit.
- Pressure rise up to 10% at full flow. Certification of conformity to PED
- Being an all-metal valve, it is not suitable as a pressure modulating valve. If this function is needed use an Aerzen pilot operated Aeropress or Aeropress10S pressure modulating valve.
- Materials: seat of gray cast iron and, depending on the size, a brass or anodized aluminum bell and piston, galvanized spring, steel spring rod, and an aluminum or fabricated external steel cylinder.
- Standard set points are 15.2 psig (1050 mbar) for "S" model blowers operating above 10 psi (700 mbar), and 10.9 psig (750 mbar) for all machines operating under 10 psi (700 mbar), including all "L" model blowers[3].
- The valve protects the blower stage against line surges, and spikes. It does not protect against prolonged overloads or excessive discharge temperature. Therefore, it is not an absolute protection device, nor is it "bubble tight".

Discharge check valve

- A full-bore check valve that can be easily removed for inspection and maintenance without disconnecting the discharge piping[4]
- With its horizontal top-located steel shaft[5], the check valve naturally closes by gravity at no-flow.
- Without any springs, the check valve will not chatter, even at low flow conditions (for example in adjustable speed applications)
- Flap material: EPDM on steel for operating temperatures up to the blower limit
- Optional check valve flap material: Silicone rubber

Discharge flexible connector

- A reinforced silicone-rubber discharge flexible connector with heavy-duty clamps connects to the discharge piping.
- It prevents the transmission of structure-borne noise from the blower and its discharge silencer to the discharge piping.
- Located downstream of the silencer and with only a small gap (~1/2") between the package and the pipe, the noise sent to the outside is maintained at a minimum.
- The sleeves are sized for standard, schedule 40 pipe diameters.

Discharge pressure gauge

- Liquid filled, 2 ½ "dial. Units: mbar and psi
- If the sound enclosure option is selected, the discharge pressure gauge is mounted to the sound enclosure wall.

DRAFT

[3] The valves are adjustable, and different springs are available for other set points depending upon operating conditions, motor limitations, or customer's requests.

[4] Except DN50

[5] Except DN50

Optional sound enclosure

- — Covering the entire blower package with the drive motor, the enclosure provides suitable protection for outdoor installation up to 50 mph winds and 25 lb/ft^2 snow load and rain at a 45º angle
- * — The enclosure and the blower package are both mounted on a skid / oil-drip pan, designed for meeting environmental protection standards as well as for easy transportation and installation.
- * — The unique Aerzen package design makes it possible to mount multiple blowers side-by-side without hindering access to the maintenance side (front). All pipe and wiring connections are made from the backside. This offers the best use of available floor space.
- * — All maintenance activities can be carried out from the front of the package, e.g. air filter, belts, and oil maintenance. The oil level is visible from the outside and eliminates any guesswork. Oil can be filled and drained from a common reservoir that also houses the oil level gauge.[6] The oil level check can be done with the blower in operation.
- — The enclosure reduces the package noise level to less than 80 dB(A) – 75dB(A) in most cases- at 1 m, free field, per DIN 45635.
- — Quick release panels, each less than 50 lb (as mandated by MSHA) provide quick and easy access to the blower and the package components for routine maintenance.
- * — Blower packages are fitted with a shaft-mounted cooling fan for sufficient heat removal. There is no need for a separate electric driven fan and required interlock and controls.
- — Aerzen mounts the blower package in the sound enclosure at our factory prior to shipment.
- * — Panels are made of galvanized steel sheet, with self-extinguishing, non-dripping high-density polyester foam as absorption material.
- — The enclosure is powder coated in a UV resistant Aerzen Royal Blue color, accented with light gray maintenance panels

DRAFT

[6] Except DN50

Hebevorrichtung für Motorwippe

Lifting device for motor base

Dispositif de levage pour moto-interrupteur à bascule

Hijsinrichting voor motorwip

Mecanismo de elevación para base de motor

Dispositivo di sollevamento per basamento oscillante del motore

DRAFT

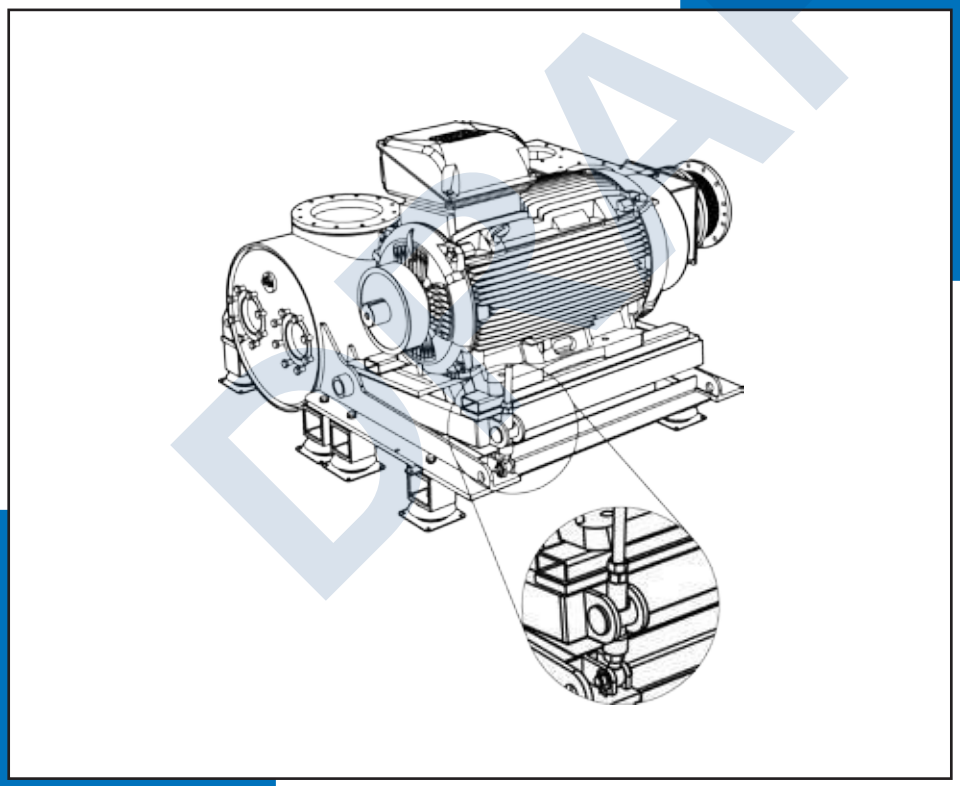

DEUTSCH
ENGLISH
FRANÇAIS
NEDERLANDS
ESPAÑOL
ITALIANO

AERZEN

AERZENER MASCHINENFABRIK GMBH

G4-079 B XT	
... ...	03-2014

Typ / *type*

Delta Hybrid
Delta Blower Generation 5
Delta Screw Generation 5

1. General notes

- This description serves as guide for the operation of the hinged motor lifting device.
- Usage requires special knowledge in using and handling this kind of machine.
- For correct operation of the hinged motor in the Delta unit, qualified and trained specialists are required.
- Only use envisaged and suitable tools for adjusting the hinged motor.

Every person involved in the adjustment of the hinged motor should read and understand this description and the corresponding operating instructions and especially the safety instructions!

WARNING!
Danger of injury if insufficiently qualified!
Incorrect use can lead to considerable personal injury and property damage.

- All actions should therefore only be carried out by adequately qualified specialists.

Specialists
are due to their technical training, knowledge and experience as well as knowledge of the relevant provisions able to carry out all work assigned to them and to recognise and avoid possible dangers.

Only personnel are allowed to work whom it can be expected to carry out the work in a reliable manner.

Persons whose responsiveness is influenced due to drugs, alcohol or medication are not allowed.

Age and job-specific regulations should be taken into consideration with the choice of personnel.

DRAFT



Typ / *type*		
Delta Hybrid Delta Blower Generation 5 Delta Screw Generation 5		

2. Safety information

The hinged motor should only be set or adjusted when the machine is not in operation and secured against reactivation!

Securing against reactivation

The machine should be secured against reactivation for all actions that require the machine to be in a non moving condition (e.g. work or fault rectification).

WARNING!
Lethal danger due to unauthorised, uncontrolled or impermissible reactivation!
Unauthorised or uncontrolled reactivation of the machine can lead to serious injuries or death!
Persons could be in the hazardous area.

Applying power can lethally injure these persons.
- Secure the main switch and lock.
- Signs should be placed on the main switch and users informed of the possible dangers.
- Before reactivation ensure that all safety equipment is assembled and fully functional and that there are no dangers existing to persons.
- Always adhere to the following procedure for securing against reactivation.

1. Switch off energy supply.
2. Secure the main switch using a lock which should be locked and a relevant sign should be placed on the main switch.
3. The key should be kept safe with a responsible person.
4. If the main switch cannot be secured, relevant signs should be placed indicating the dangers.
5. After all work is completed check that there are no persons in the hazardous area.
6. Make sure that all protection devices are installed and fully functional.
7. Unlock the main switch and remove the signs.

DRAFT



Typ / *type*

Delta Hybrid
Delta Blower Generation 5
Delta Screw Generation 5



CAUTION!
Danger of injury due to sharp edges and pointed corners!
Sharp edges and pointed corners can cause abrasions and cuts to the skin.
- Proceed carefully when working near sharp edges and pointed corners.
- If in doubt wear protection gloves.



WARNING!
Danger of injury due to moving and rotating components!
Moving and rotating components can cause serious injuries.
- Correctly take the machine out of operation and secure against reactivation before adjusting the hinged motor.
- During the adjustment of the hinged motor do not touch or grasp any moving components.
- Wear close fitting protective clothing with a low tear resistance when in the hazardous area.



WARNING!
Shear and crushing danger due to moving parts!
Moving components can cause shear and crushing injuries.
- Do not grasp between any moving components when working on the hinged motor.
- Never enter the swivel range of the hinged motor.

DRAFT



- Only use the ratchet spanner and the original mounting material that were delivered to adjust the hinged motor!

- The hinged motor should not rest on the guide bushing when in the operating position.
  Exception: Hinged motor support for motors with increased weight.

  Otherwise the belts slip and wear out sooner.
  Danger of property damage!

  The hinged motor should also have sufficient space to place the guide bushing after the belt has stretched.

Design with acoustic hood

- After adjusting the hinged motor correctly close the acoustic hood.

DRAFT

3. Delivery condition

Factory delivery condition / without drive belts.



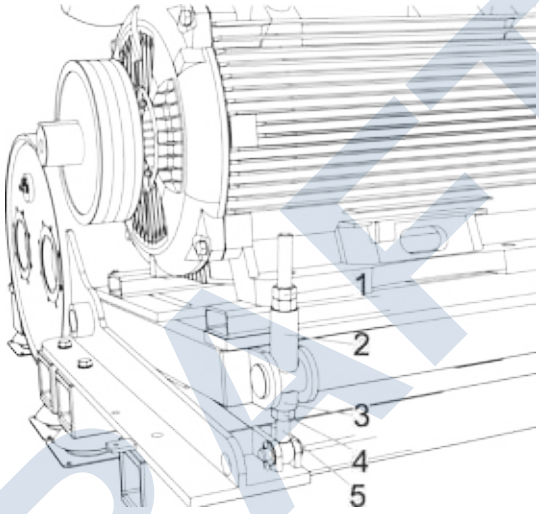

Fixed hinged motor / transportation lock

4. Assembly overview

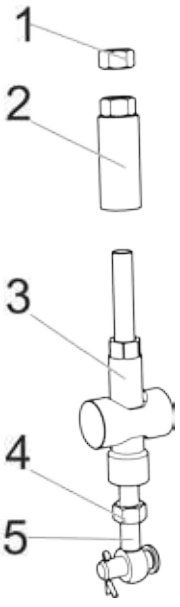

Pos.	designation
1	Locking nut 1
2	Locking sleeve
3	Guide bushing
4	Locking nut 2
5	Eyebolt

DRAFT

5. Adjusting the hinged motor before commissioning

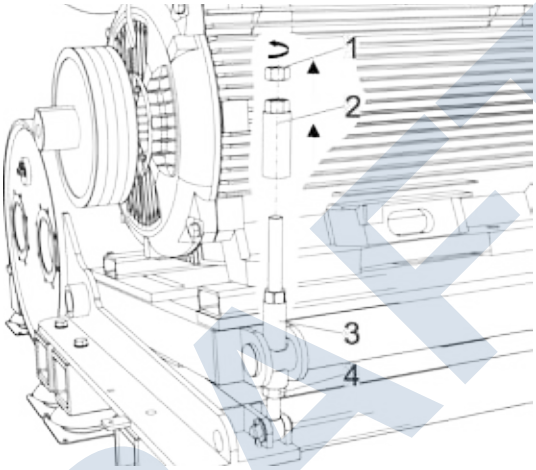

- Disassemble locking nut (1) and locking sleeve (2).

Check to direction of rotation
Observe the red direction of rotation label on the unit.
Briefly start the drive motor. (approx. 1 - 2 seconds)

Important: WITHOUT belt on the motor disc!

Incorrect direction will destroy the unit!
Direction of the drive motor and the unit must be the same.

- Mount the belt.

DRAFT

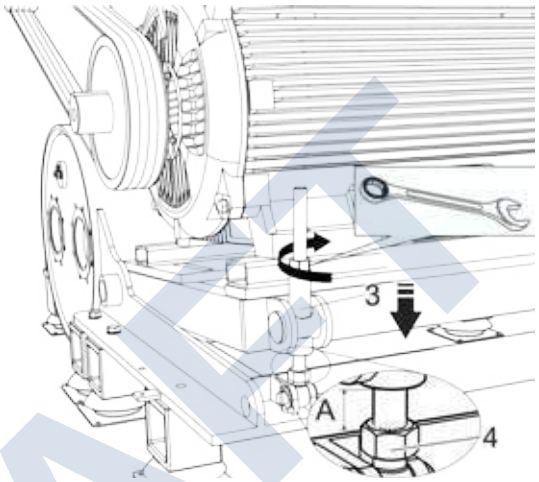

Pre tension the belt

- Screw down the guide bushing (3) with the ratchet spanner.
- The hinged motor is still slightly on the guide bushing (3).

Adjust dimension A

- Adjust the locking nut (4) to dimension A.
- Turn the guide bushing (3) onto the locking nut (4) with the ratchet spanner.

Delta Blower

DN	dimension A in mm
80	20
100	25
125	30
150	35
200	40
250	45
300	50

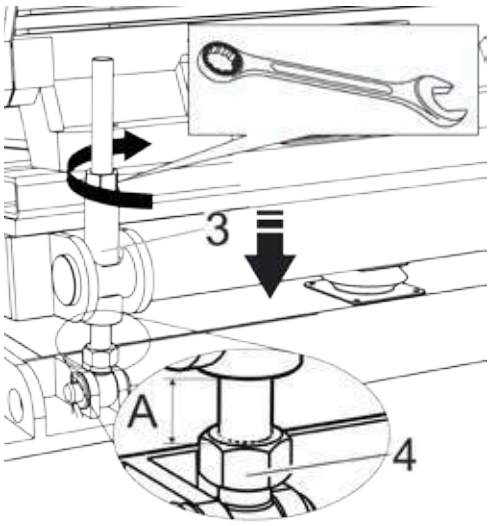

Delta Hybrid

DN	dimensions A in mm
100	25
125	25
150	30
200	35
250	40
300	45

DRAFT

- Lock the guide bushing (3) against the locking nut (4).
- The hinged motor is completely held into place by the belt drive.

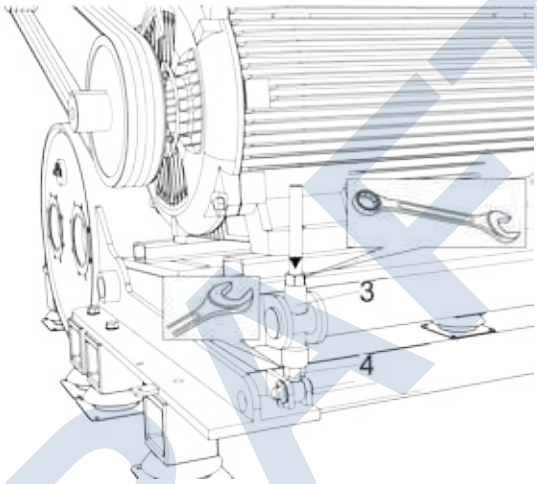

6. Operating condition, normal use

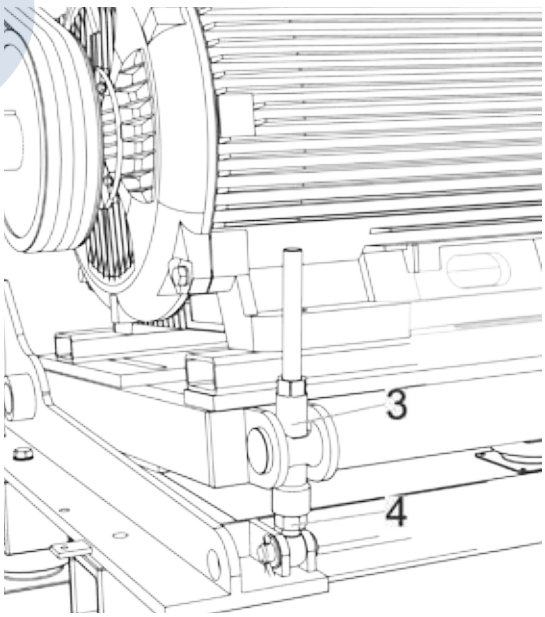

DRAFT

7. Adjustment of the hinged motor for truck, ship and earthquake preparation

Prepare the lifting device as with the standard application and set dimension A.

Rocker limit set to the upper position.

- Screw and tighten the locking sleeve (2) completely onto the eyebolt (5),
- Adjust the locking nut (1) to dimension B.

Delta Blower

DN	Size B in mm
80	5
100	5
125	5
150	10
200	10
250	10
300	10

Delta Hybrid

DN	Size B in mm
100	**5**
125	**5**
150	**5**
200	**5**
250	**5**
300	**5**

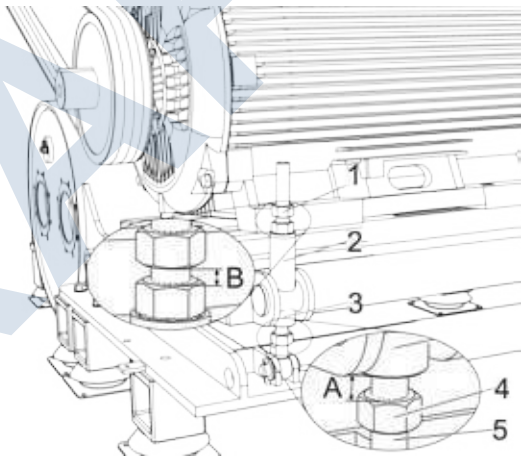

- Loosen the locking sleeve (2) turn upwards and lock with the locking nut (1).

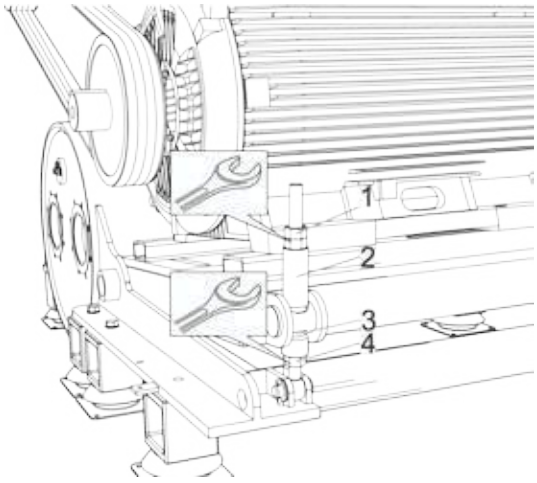

DRAFT

8. Operating condition
Truck, ship and earthquake preparation

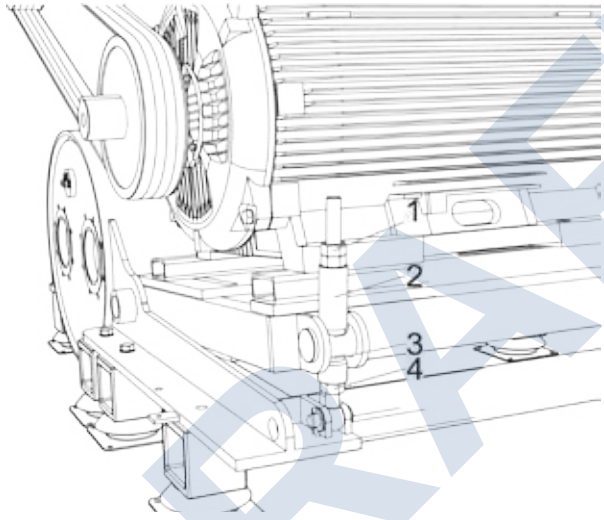

DRAFT

9. Adjustment of the hinged motor for rocker support

Prepare the lifting device as with normal use.

Lower the hinged motor until the belt is tensioned.

- Check the belt tension.
- If the belt tension is incorrect, lock the guide bushing (3) and the locking nut (2).
- Check the belt tension after the following intervals and adjust if necessary:
  after 24 op. hrs. after 500 op. hrs after 4000 opt. hrs

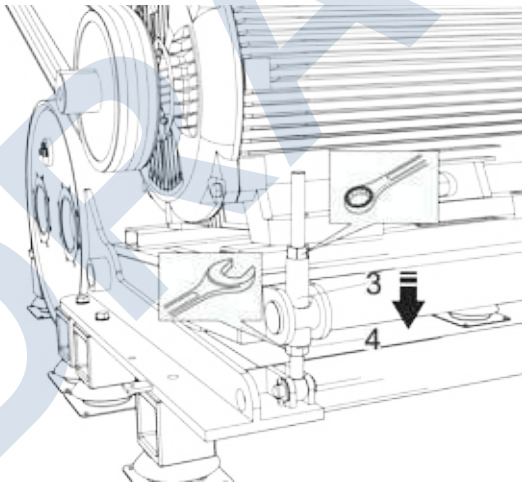

DRAFT

Belt tensioning

1. Set the testing force via the profile type.
2. Determine the disc diameter **dk** on the drive and derive from this the indentation depth **E.**
3. Calculate the indentation depth**Ea** with the existing axial distance **e.**
4. The testing force **f** is to be asserted in the middle of the axial distance **e** on the drive belt. The testing force should be exerted vertically on the strand! Pretension the drive to the calculated indentation depth **Ea.**

Pretension example: **Profile** = SPZ; **dk** = 100 mm; **e** = 380 mm; **f** = 2.5 daN; **E** = 2.00 mm; **Ea** = 7.6 mm

The drive belts should be re-tensioned after 30 min. of operation and be checked if possible after 24 hours.

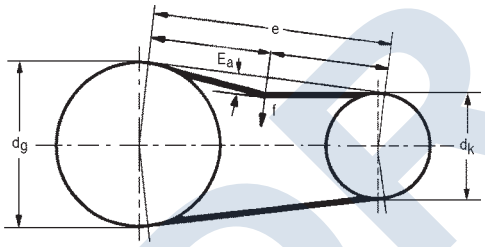

e = axial distance
E = indentation depth every 100 mm axial distance
E_a = indentation depth of the strand
f = testing force

$$E_a = \frac{E \cdot e}{100}$$

Profile	Testing force f for each drive belt (daN)	Diameter d_k (mm)	indentation depth E (mm) each 100 mm Strand length with initial assembly	indentation depth E (mm) each 100 mm Strand length in operation after running in.
SPZ/3V XPZ/3VX	2.5	≥ 56 - 71 > 71 - 90 > 90 - 125 > 125	2.20 1.95 1.50 1.20	2.45 2.20 2.00 1.70
SPA XPA	5.0	≥ 71 - 100 > 100 - 140 > 140 - 200 > 200	2.80 2.50 2.20 2.15	3.20 2.85 2.55 2.40
SPB/5V XPB/5VX	7.5	≥ 112 - 160 > 160 - 224 > 224 - 355 > 355	2.40 2.10 1.70 1.40	3.00 2.65 2.22 1.90
SPC XPC	12.5	≥ 180 - 250 > 250 - 355 > 355 - 560 > 560	2.30 1.90 1.65 1.60	2.65 2.30 1.90 1.70

DRAFT

Technische Dokumentation



Technical Documentation

DRAFT

Aerzener Maschinenfabrik GmbH
Reherweg 28 31855 Aerzen

Postfach 1163 31849 Aerzen
Telefax 0 51 54 / 81-191
e-mail info@aerzener.de

Kundenservice
0 51 54 / 81-7529

Aerzener International Rental B.V.
www.airental.nl
phone +31 (0) 26 44 64 723
Telefax +31 (0) 26 44 63 570
e-mail info@airental.nl

Aerzen im Internet
www.aerzener.com

SECTION 3

DRAFT

G-5 Combination Base - Discharge Silencer

Description: Combination base - discharge silencer

Base/discharge silencer includes three-chamber reactive silencer built as a pressure vessel, blower mounting-flange with studs, discharge connection with integrated check valve, hinged motor plate, entirely supported on vibration isolating feet.

Materials of construction:

Silencer: Pressure vessel quality carbon steel S 235 JR (St 37-2) equivalent to ASTM A 283 Grade B

Pressure vessel code: PED (European directive) PED – AD 2000, DGRL 97/23/EG with consideration given to static and dynamic stress (fatigue resistance)

Maximum operating data: 150 ºC (300 ºF) and 1.1 bar gauge (16 psig)

Test pressure: 1.9 bar gauge (27.5 psig)

Shell wall thickness: depending on size: 6mm (1/4") for DN-50 → 15mm (5/8") for DN-300

Performance:

Pulsations in the air stream are reduced below the API 619 standard of 2% peak-to-peak of the mean line pressure.

Pressure drop of the entire Base-Silencer with connecting housing and check valve, at the maximum allowable flow: 35 mbar (0.5 psi); included in the power calculations of the Delta Blower package

Combination Base - Discharge Silencer DN50

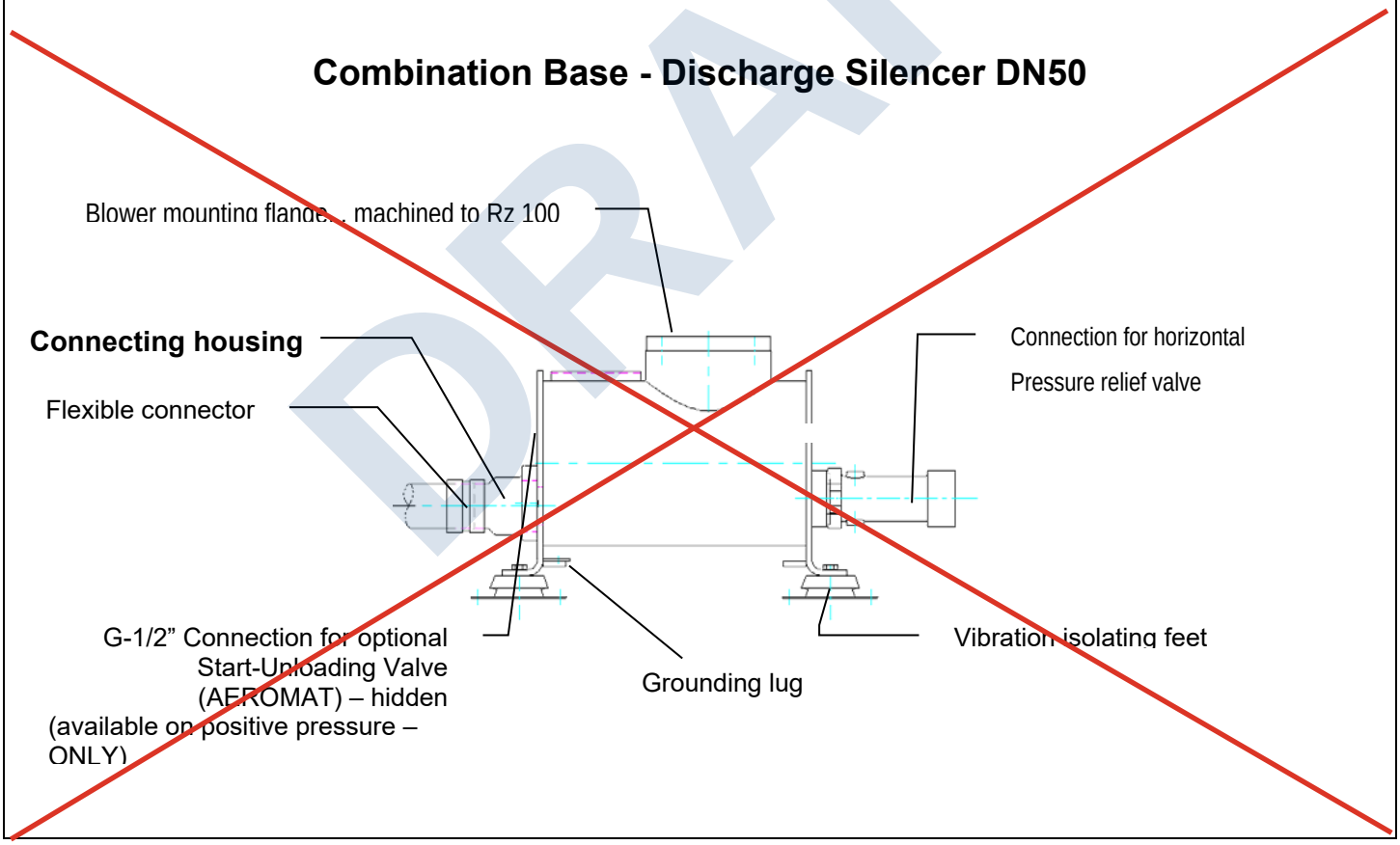

DRAFT

Combination Base - Discharge Silencer DN80

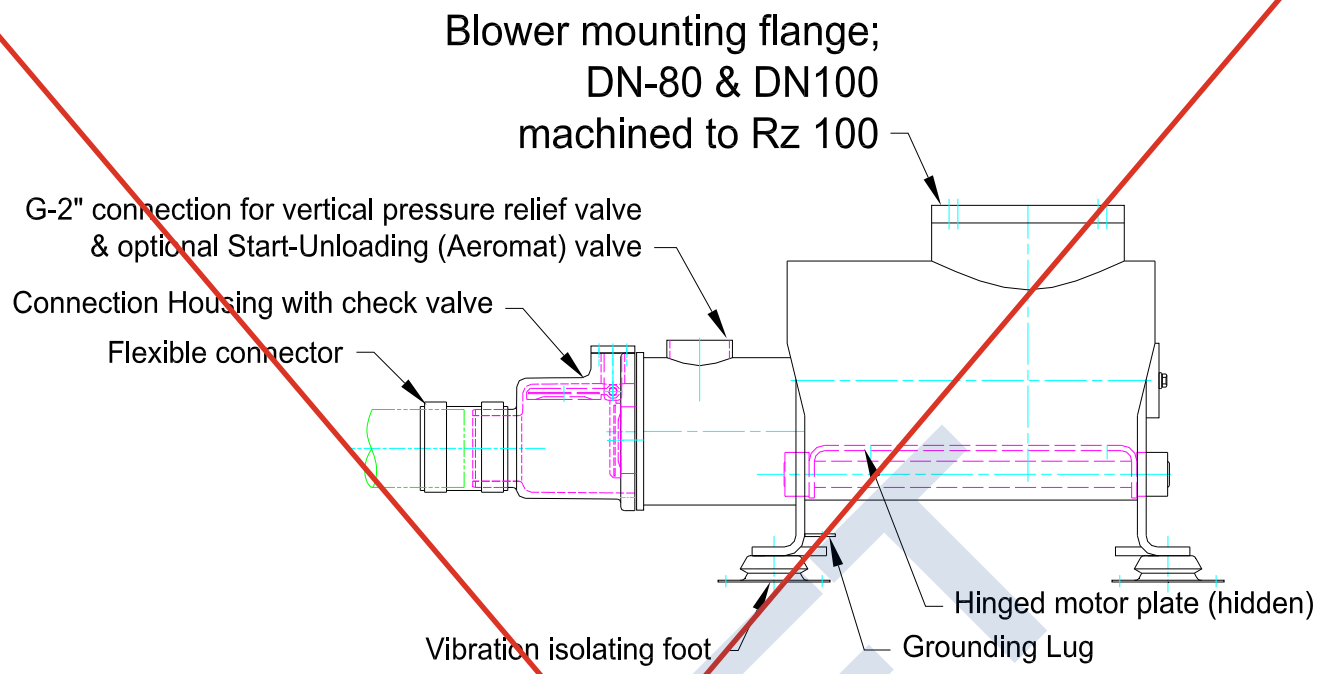

Combination Base - Discharge Silencer DN100/125

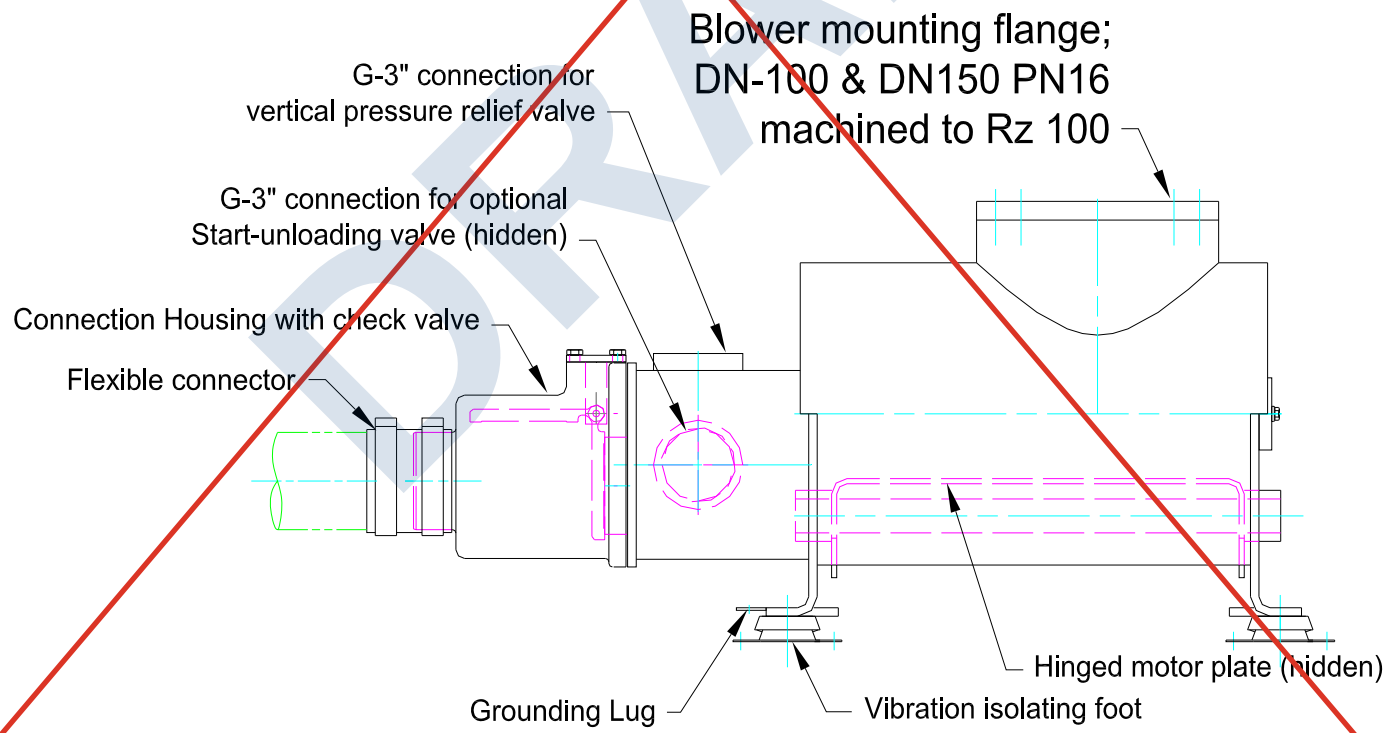

DRAFT

Combination Base - Discharge Silencer DN150 & DN-200

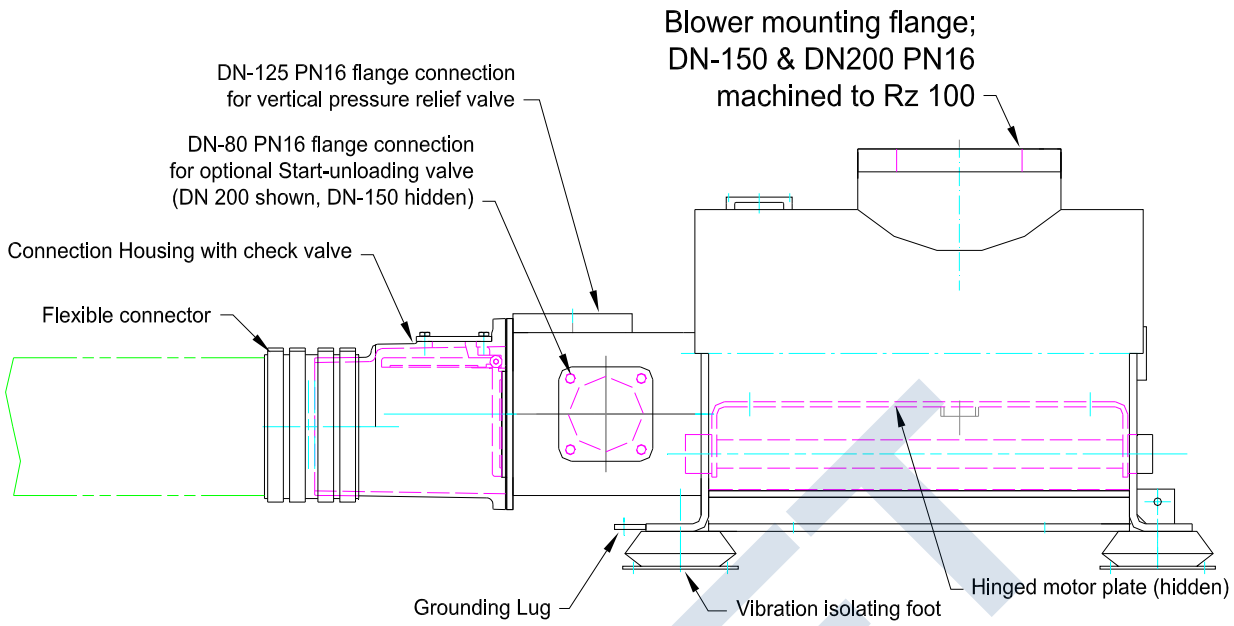

DRAFT

Combination Base-Discharge Silencer DN-250

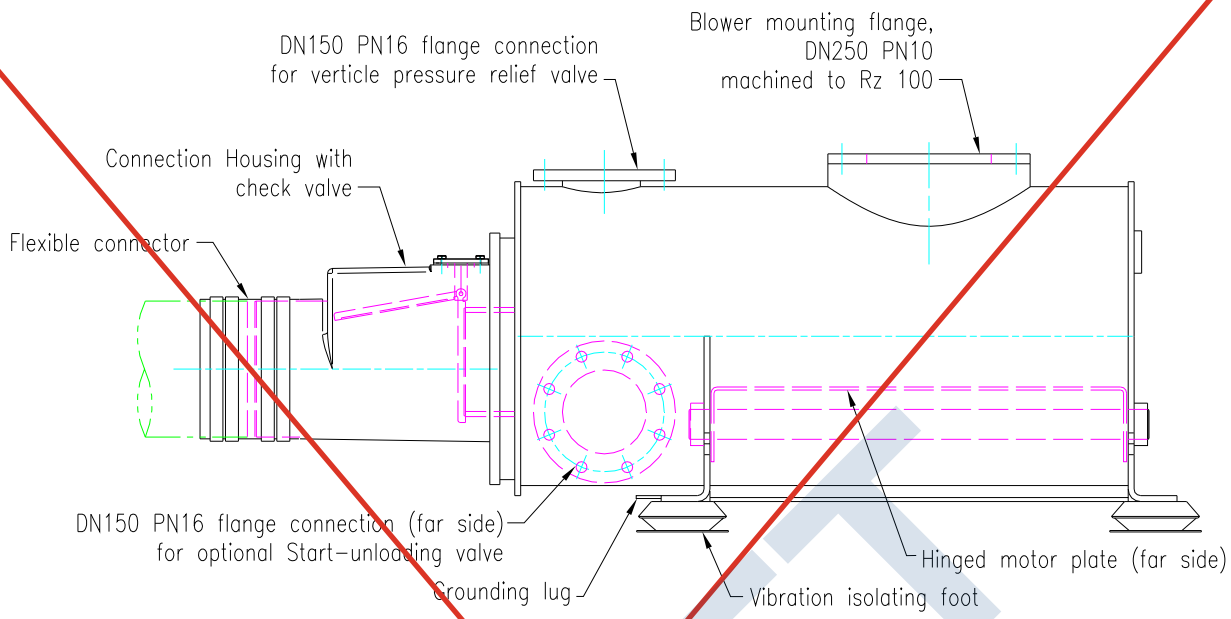

Combination Base-Discharge Silencer DN-300

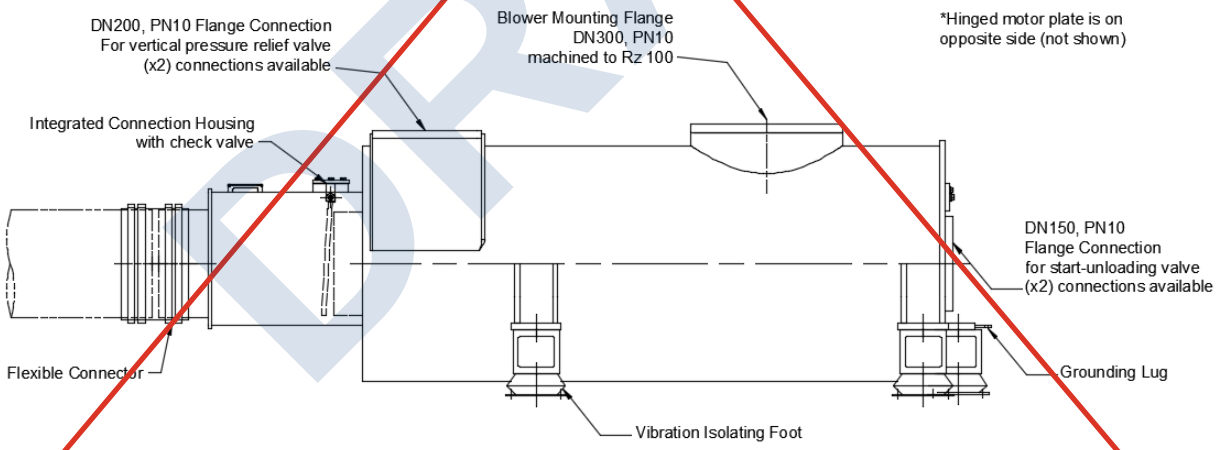

DRAFT

Combination Base - Discharge Silencer

Hinged Motor Plate DN50 –DN80

The hinged motor plate of the base frame in sizes DN50 and DN80 allows the motor mass to properly tension the drive belts during normal operation. The motor is mounted and aligned before leaving the factory. The hinged motor plate is then locked in place for shipment. (see photo on the left below) Remove the red locking bar and use the Aerzen supplied bracket and hydraulic jack to raise the hinged motor plate for installation or maintenance of the drive belts. (see photo on the right below) Refer to the Operations Manual for commissioning and maintenance of the blower.

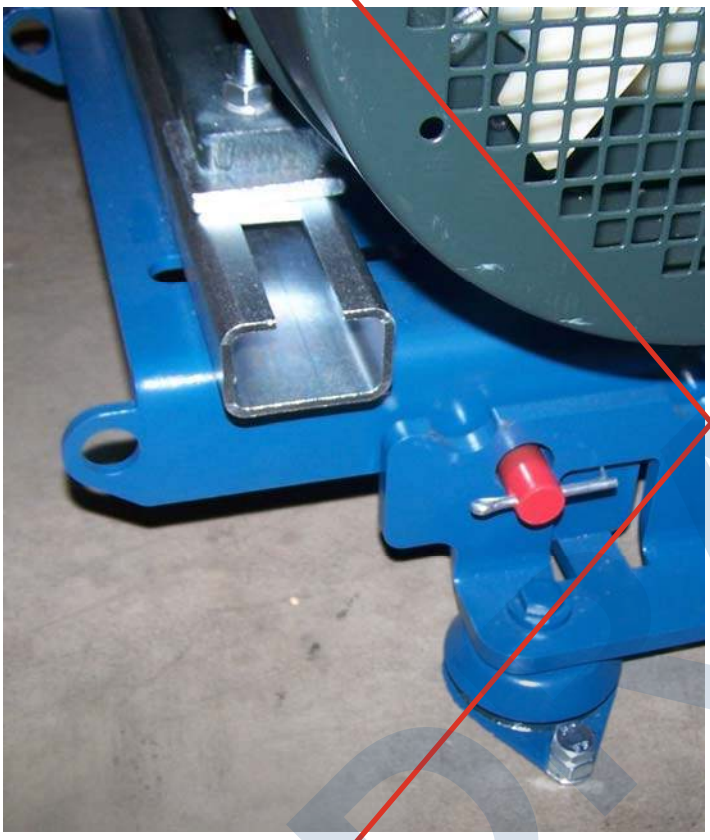

Hinge Plate with Locking Pin on Arrival

The red locking pin serves to keep the motor swing plate stable during shipping. Remove before attempting to raise the motor hinge plate.



Raising the Hinged Motor Plate

Use the Aerzen supplied bracket and jack to raise the hinged motor plate when installing or maintaining the belts.

Combination Base - Discharge Silencer

Hinged Motor Plate DN50 –DN300

The hinged motor plate for sizes DN100 through DN250 features a multipurpose lifting device. In its most basic function it serves as shipping locking device (red part) preventing the motor from unwanted movement. It also serves as the lifting mechanism (black part) for changing the drive belts. During normal operation the motor mass tensions the drive belts in the tried and true Aerzen way. The motor swing plate does not rest on the lifting mechanism (see photo on the right below). No speciaı adjustments are necessary during normal operation of the blower package. Another additional purpose is limiting the belt tension when oversized motors are used. Finally, the device can be configured to aid limited movement for seismic or mobile blower package service. Refer to G4-079 B XT for operation of Multipurpose Lifting Device. Depending on motor weight, DN300 units can have (1) or (2) lifting devices.

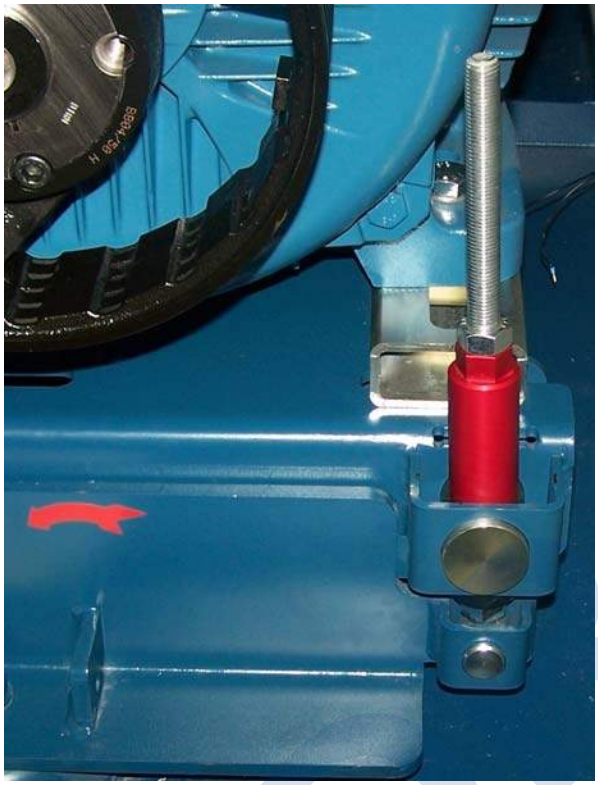

Lifting Device on Arrival

The red locking sleeve serves to keep the motor swing plate stable during shipping. It may also be used in seismic and mobile applications as a motor swing stop



Lifting Device in Normal Operation

The black guide bushing serves as a belt installation aid. Using an Aerzen supplied ratchet wrench, it helps lift the motor swing plate during belt installation and maintenance. Once new belts are installed it is backed down to the lock nut. **The motor hinge plate does not rest on the guide bushing during normal operation**. The guide bushing may also be used as tension limiter for use with overweight motors.

DRAFT

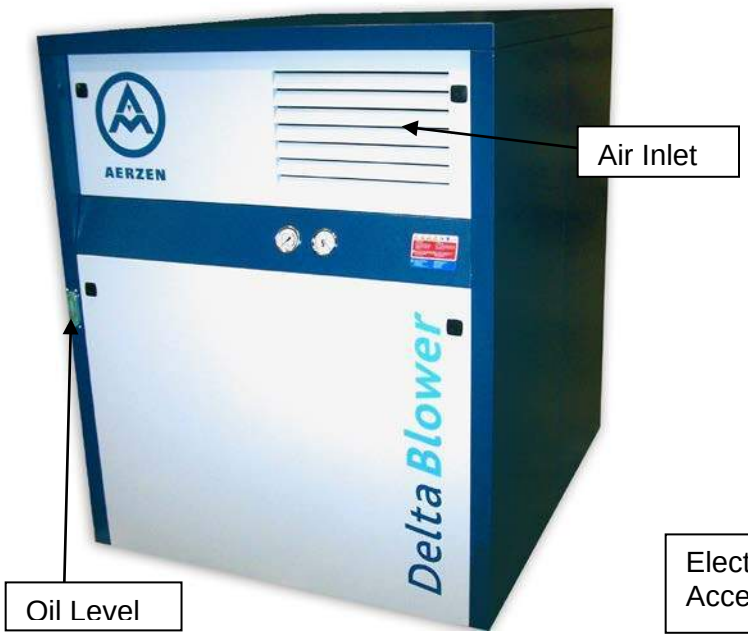

Shown is a DN-125 Sound Enclosure

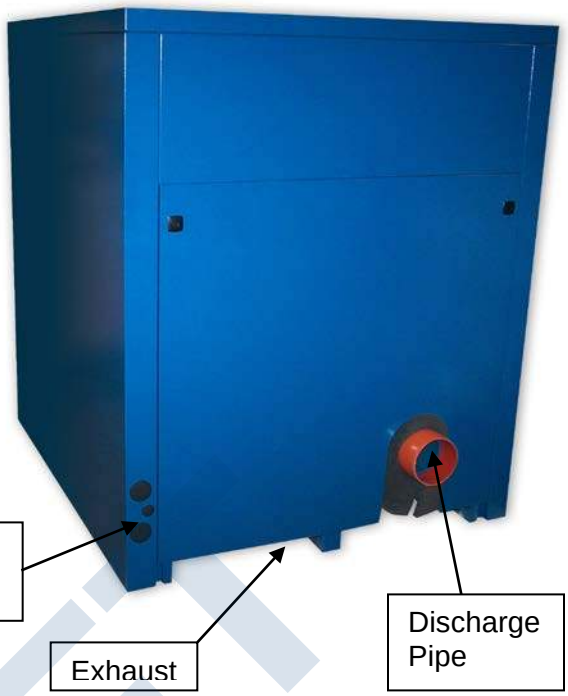

Rear View of the Enclosure

DRAFT

Description: The sound enclosure surrounds the entire blower package to reduce noise and protect the machine from the weather while allowing easy access for maintenance. The base of the enclosure supports the entire blower package and contains an oil drip pan for environmental protection. Aerzen mounts the entire blower package within the sound enclosure at the factory prior to shipment. Transportation and installation are simplified by having the entire package supported and contained within the enclosure. The unit may be moved with a pallet jack or forklift.

The sound enclosure is designed with strategic consideration for airflow through the unit. A fan is mounted on the end of the blower shaft, so there is no need for a separate electric motor driven fan. From the cool, front side of the blower, air is drawn in through a sound trap. The air then passes over the motor and blower housings and finally is exhausted through the floor at the rear of the unit.

Quick release panels, each less than 45 lbs., provide access for routine maintenance of the blower and the package components. All maintenance and connections are located in the front and rear, allowing multiple machines to be placed side-by-side.

The oil level gauge is visible from the outside of the sound enclosure in sizes GM 4S DN-80 through GM 150 S DN-300 with the oil fill port and drain mounted to the enclosure just inside a removable panel.







The smallest size, GM 3S DN-50, has an easily removable roof to facilitate maintenance.

Materials:

Base pan – Polyester based powder coated steel weldment, 3 to 5 mm thick

Exterior panels - Polyester based powder coated galvanized steel

Sound insulation -Self-extinguishing, non-dripping high-density polyester foam

Technical:

Package noise level reduced to 80 dB, or less, at 1 m, free field, per DIN 45635.

Snow Load – 122 kg / m^2 (25 lbs / ft^2)

Wind Load – 80.4 km / hr (50 mph)

Suitable for indoor or outdoor installation

Part Numbers:

Size	Part No.
DN-050	180723
DN-080	180724
DN-100	180725
DN-125	
DN-150	180740
DN-200	180741
DN-250	181753
DN-300	184737

DRAFT

G5 Pressure Inlet Filter/ Silencer
DN 50 - DN 300

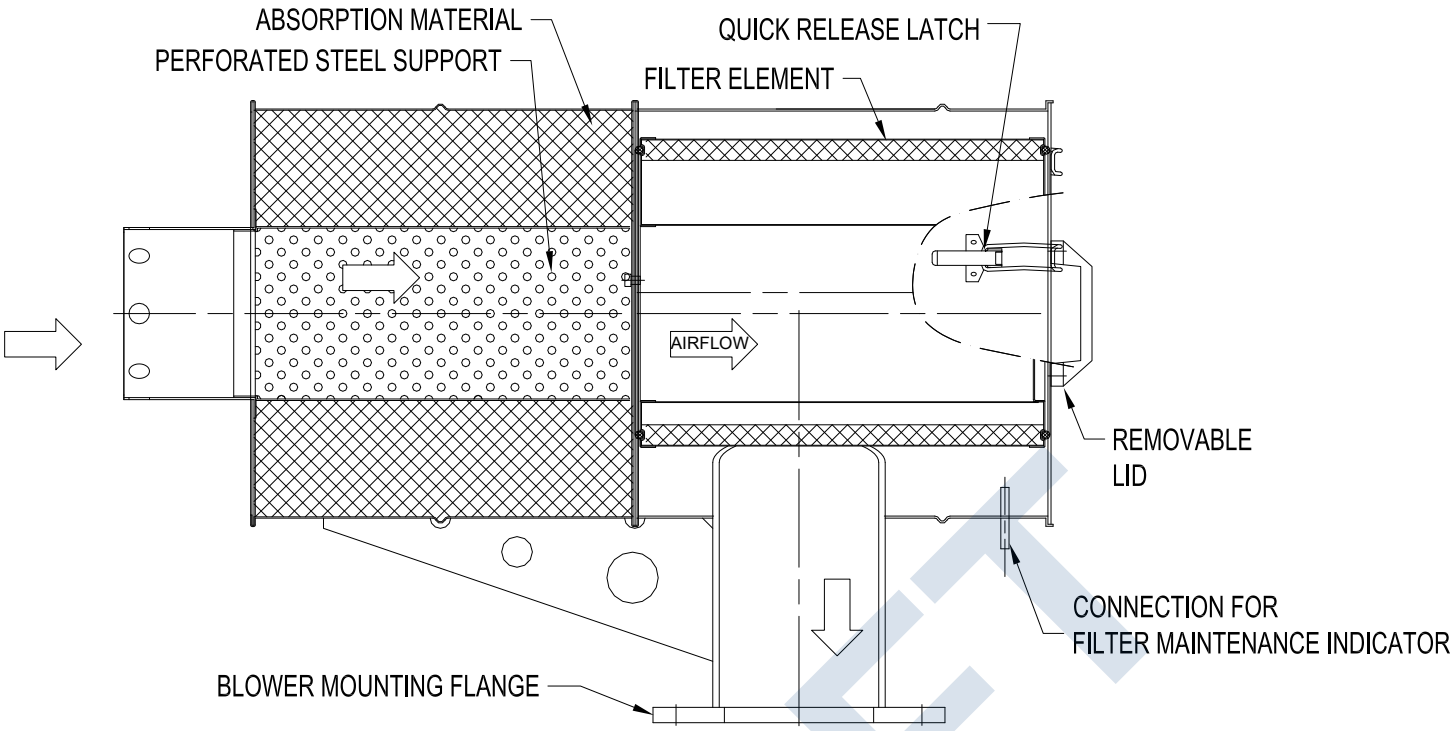

Description: Combination dry air intake filter and absorption type silencer with filter (or strainer) element located downstream from the silencer chamber

Materials of construction:

Casing:	Powder coated (RAL# 5001) Carbon Steel
	Maximum operating data: 60 °C (140 °F) and – 70 mbar (-2.07"Hg)
	Removable maintenance lid is held in place with quick release clamps
Absorption material:	Flame retardant, polyester based urethane foam, grey in color,
	secured in place with perforated steel
Filter element:	Thermally bound, food safe, polyester fibers, free of PVC, white in color
	Filter element mounts with a quick release turn and lock arrangement.

Performance:

Filtration class: G4 per EN 779 (greater than 90% of synthetic dust particles),
equivalent to ASHRAE 52.2 MERV 7 (50-70% @3-10 microns)
Pressure-drop of the entire silencer and clean filter at the maximum allowable flow: 10 mbar (0.15 psi)
Pressure drop filter element: 5 mbar (2" WC) clean, or replace at 45 mbar max. (18" WC)
Noise reduction: 10-15 dB mean noise reduction across audible octave bands

DRAFT

G5 Vacuum Inlet Silencer w/ Internal Strainer (No Filter)
DN 80 - DN 200

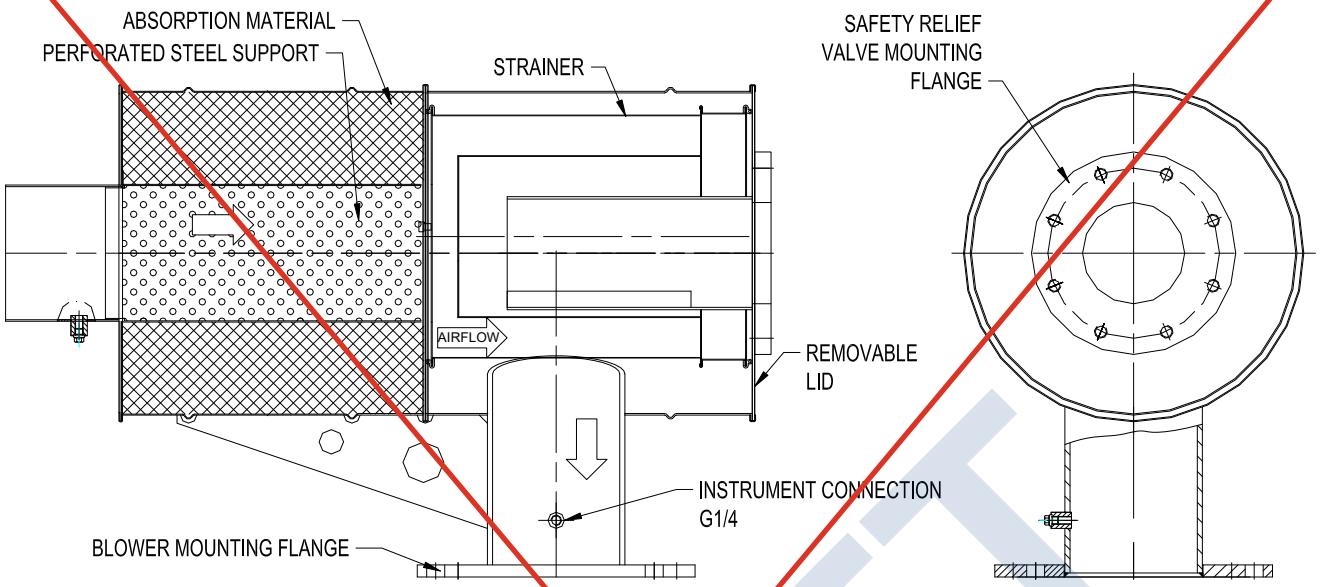

G5 Vacuum Inlet Filter/ Silencer
DN 80 - DN 200

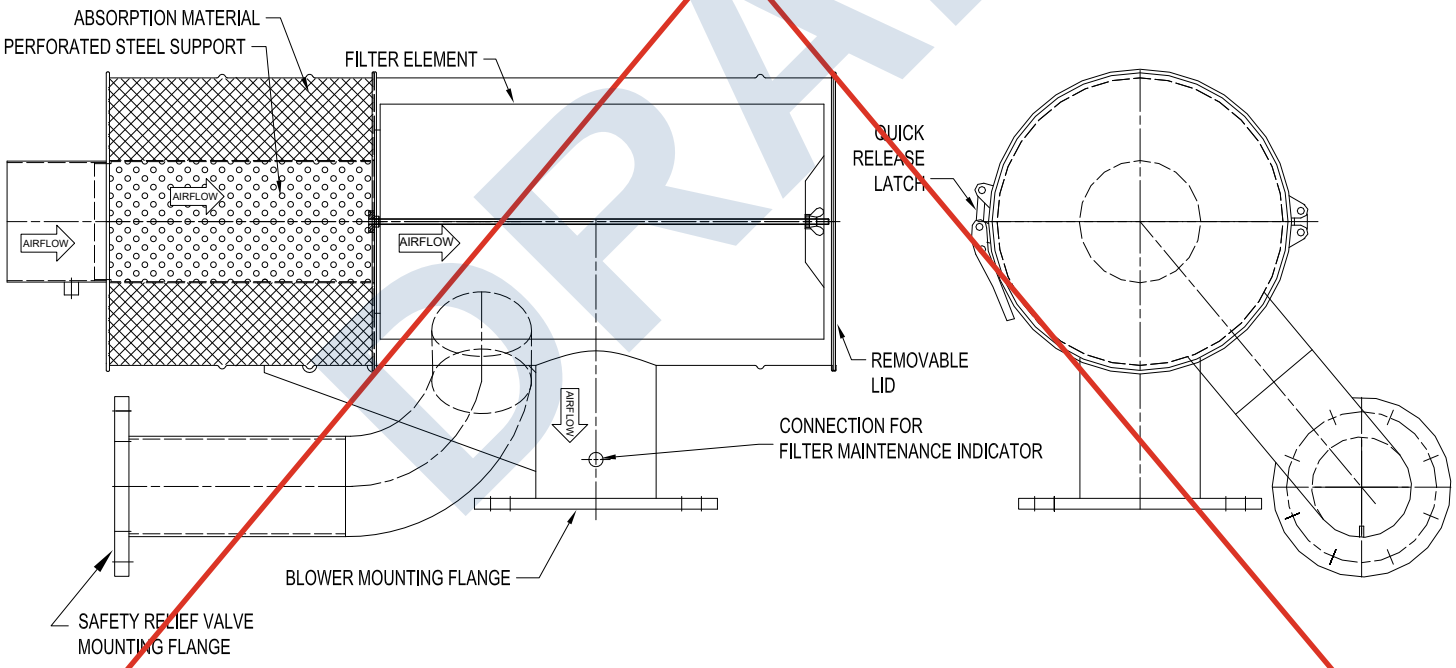

DRAFT

G5-WA Inlet Silencer Part Numbers

Filter nominal size	DN-50	DN-80		DN-100	DN-125	DN-150		DN-200	DN-250	DN-300
Blower size	**GM 3S**	**GM 4S GM 7L**	**GM 10S**	**GM 10S GM 15L**	**GM 25S**	**GM 30L GM 35S**	**GM 50L**	**GM 50L GM 60S**	**GM 80L GM 90S GM 100S**	**GM 130L/ GM 150S**
Pressure Filter / Silencer Assembly	182111	182112	182113	182114	182115	182116	182117		183114	184444/ 184443
Pressure Replacement Filter Element	2000049284	2000049285		2000049286		2000049287	2000049288		2000049289	2000049289 (x2)
Vacuum Inlet Silencer Assembly (No Filter)	182119	182120	182121	182122	182123	182124		182125	N/A	
Vacuum Filter / Silencer Assembly	N/A	184238001	184239001	184234001	184235001	186234000		184252001	N/A	
Vacuum Replacement Filter Element	N/A	2000008104		2000008109		185662		2000008113	N/A	

G5 (Original) Inlet Silencer Part Numbers

Filter nominal size	DN-50	DN-80		DN-100	DN-125	DN-150		DN-200	DN-250	DN-300
Blower size	**GM 3S**	**GM 4S GM 7L**	**GM 10S**	**GM 10S GM 15L**	**GM 25S**	**GM 30L GM 35S**	**GM 50L**	**GM 50L GM 60S**	**GM 80L GM 90S GM 100S**	**GM 130L GM 150S**
Filter / Silencer Assembly	175018	178810	173924	173882	173883	174143	173925		176294	N/A
Replacement Filter Element	2000049284	2000049285		2000049286		2000049287	2000049288		2000049289	2000049289 (x2)

DRAFT

Aerzen Delta Blower + G5

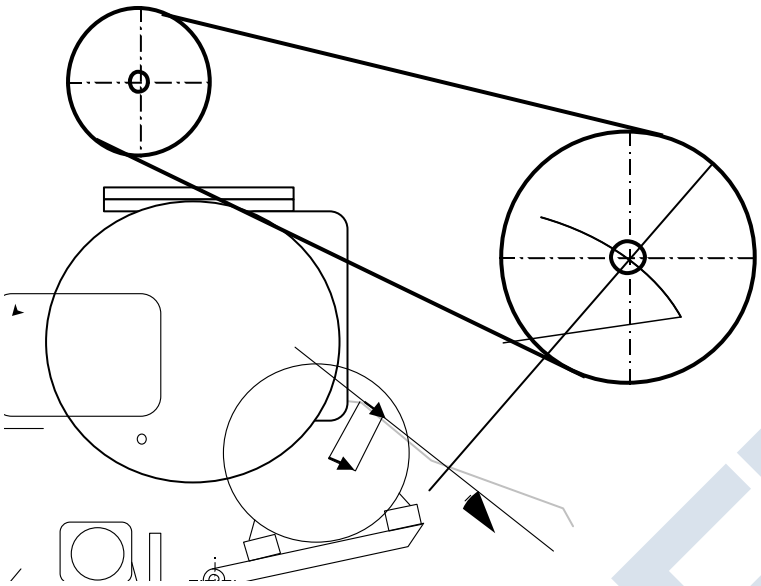

The drive configuration of the Aerzen Delta Blower is such that any change in the belt length (due to belt stretching) results in a nearly proportional displacement of the motor. Therefore, the motor weight alone can be used reliably for automatic belt tension adjustment.

This, however, is not achievable with a different geometry, such as shown below: In such cases, a slight change in the belt length requires a much greater displacement of the motor making a manual adjustment necessary. Improper adjustment leads to belt failure and other, more significant damages can follow.

Our belt tensioning principle offer two more benefits to the user, which are superior to any other system offered: We do not need any other tensioning mechanisms to tension the belts. This eliminates further wear and tear items that the user does not have to maintain or even check up on. Secondly, we have eliminated the need for re-aligning the motor upon changing belts. The motor stays put and is merely pivoted up and down during a belt change.

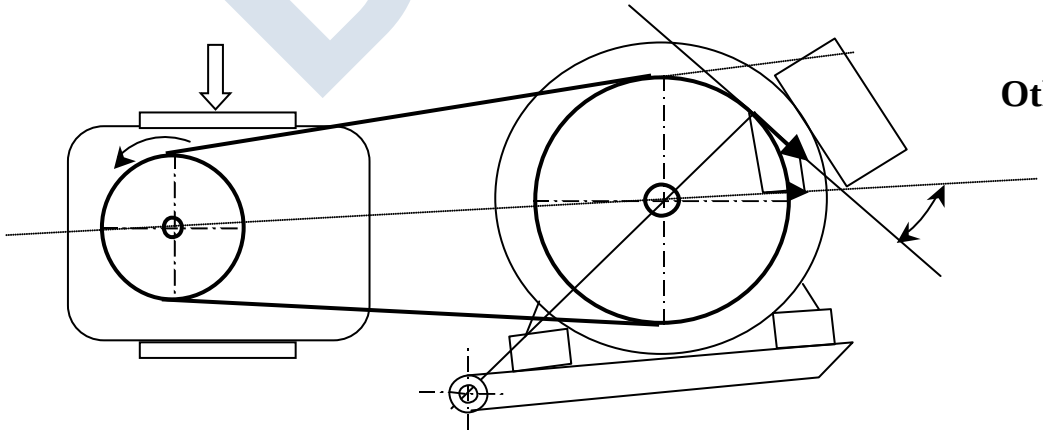

Others

DRAFT

DN-50 Check Valve

Description: The DN-50 check valve is a full-bore, cast aluminum housing with an embedded Viton flap sandwiched between the connection housing and the baseframe. The hinge is integrated to the rubber and closes naturally by gravity without use of a spring. Operating range is up to 150°C or 302°F.

Check Valve Assembly w/ Viton flap P/N: **146756**

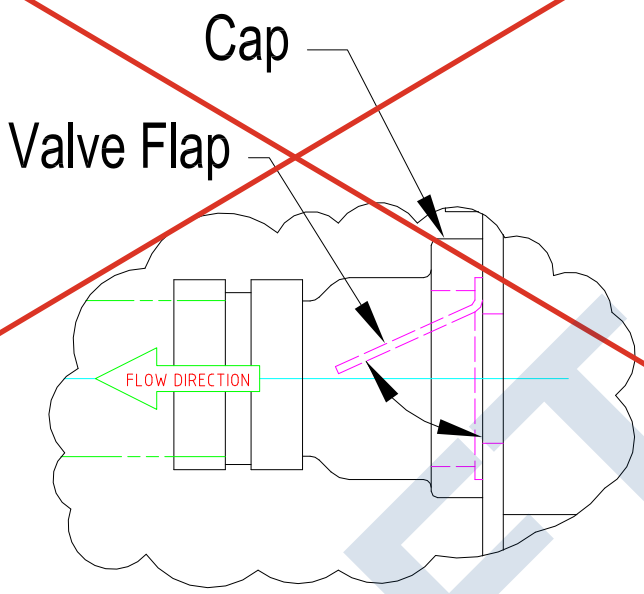

Check Valve – DN-80 Through DN-300

Description: Housed in the connecting housing is a full-bore, steel embedded in rubber check-valve that closes naturally by gravity without use of spring. The check-valve flap can easily be pulled out for inspection, maintenance or replacement without disconnecting the piping: removing the bolts and lifting the cap.

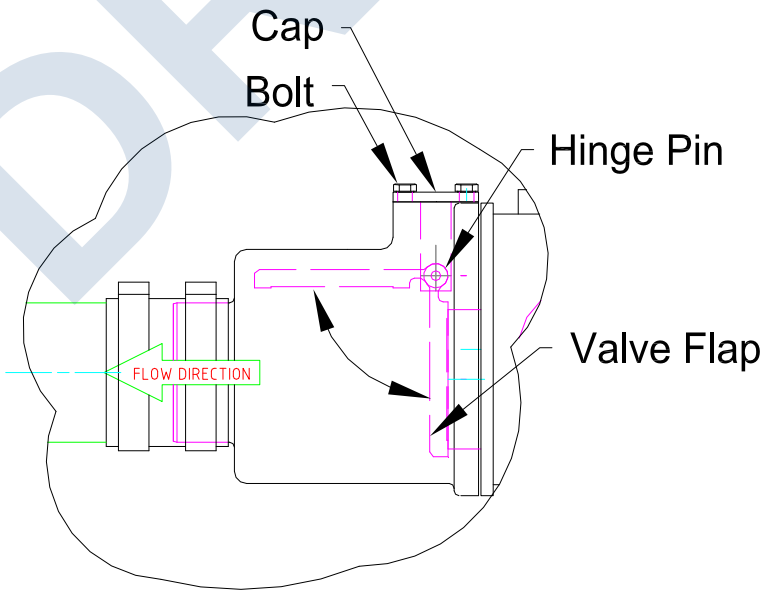

DRAFT

Materials of construction:

Discharge Temperature	Flap Sealing Material
Up to 285 °F (140 °C)	EPDM (standard)*
~~286 °F (141 °C) and above~~	~~Silicone*~~

*DN-250 & DN-300 units: Stainless steel plate with outer ring made of the sealing material

**DN-200 and smaller units: Steel plate fully embedded in the sealing material

Part Numbers:

Size DN	EPDM Check Valve Assembly P/N	EPDM Flap Only P/N	~~Silicone Check Valve Assembly P/N~~	~~Silicone Flap Only P/N~~
80	178653	178647	~~180877~~	~~N/A~~
100	178654	178648	~~180878~~	~~178651~~
125	178654	178648	~~180878~~	~~178651~~
150	178655	178649	~~180879~~	~~178652~~
200	178655	178649	~~180879~~	~~178652~~
250	168705	N/A	~~168711~~	~~N/A~~
300	158608	N/A	~~178266~~	~~N/A~~

DRAFT

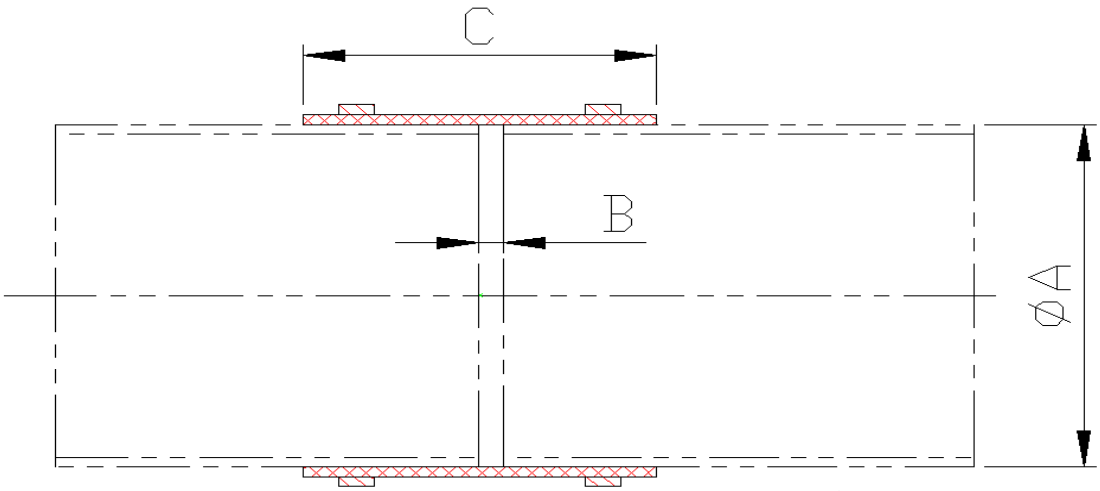

Nominal Pipe		Sleeve	Pipe O.D A		End Clearance B		Maximum Misalignment		Sleeve Length C		# of clamps	Clamp P/N
DN	USA	P/N	mm	in.	mm	in.	mm	in.	mm	in.		
50	2”	159127	60.3	2-3/8	10	3/8	3	.12	50	2	2	168036
80	3”	159128	88.9	3-1/2	10	3/8	3	.12	100	4	2	163238
100	4”	159129	114.3	4-1/2	10	3/8	3	.12	100	4	2	169603
125	5”	162677	139.7	5-1/2	10	3/8	5	.20	150	6	2	162923
150	6”	159131	168.3	6-5/8	10	3/8	5	.20	150	6	4	165903
200	8”	159132	219.1	8-5/8	10	3/8	5	.20	150	6	4	168658
250	10”	159134	273	10-3/4	15	5/8	7	.28	200	8	4	159353
300	12”	159135	323.9	12-3/4	20	3/4	11	.43	200	8	4	160404
400	16	157607	406.3	16	20	3/4	15	.59	300	12	4	157608

DRAFT

Technical Data

Maximum operating pressure: 1.2 bar g (17.4 psig)

Test pressure: 2.4 bar (34.8 psig)

Operating temperature –40 to 180° C (-40 to 356° F)

Materials

Silicone Rubber with embedded woven fiber reinforcement up to DN-300

Perbunan rubber in DN-400

60 +/- 5 Shore A

Shelf-life: up to 20 years, under clean, cool & dry conditions

CAUTION:

- Pipe misalignment could cause leaks and premature failure of the sleeve.
- It is imperative to maintain the recommended pipe-end clearance for the pipe connection to retain its flexibility and reduce the transmission of noise and vibrations from the blower package to the process piping.

NOTICE:
THIS DRAWING AND ALL INFORMATION HEREIN IS THE PROPERTY OF AERZEN USA INC. AND ITS SUBSIDIARIES AND SHALL NOT BE REPRODUCED BY ANY MEANS IN WHOLE OR IN PART OR USED AS THE BASIS FOR MANUFACTURE WITHOUT WRITTEN PERMISSION.

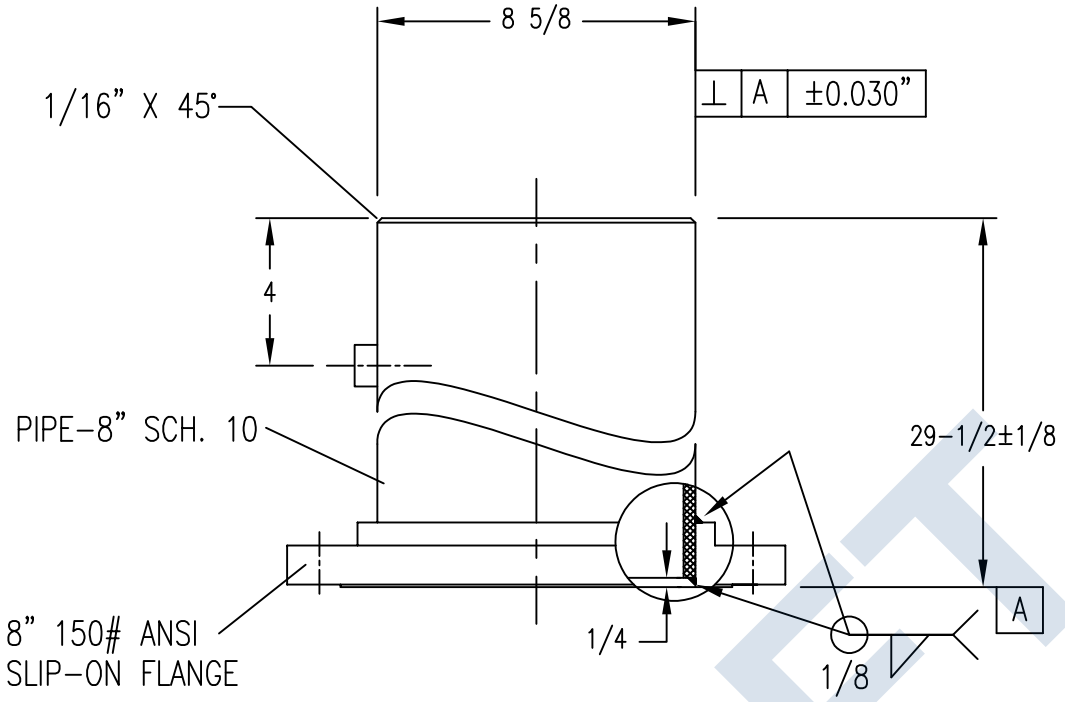

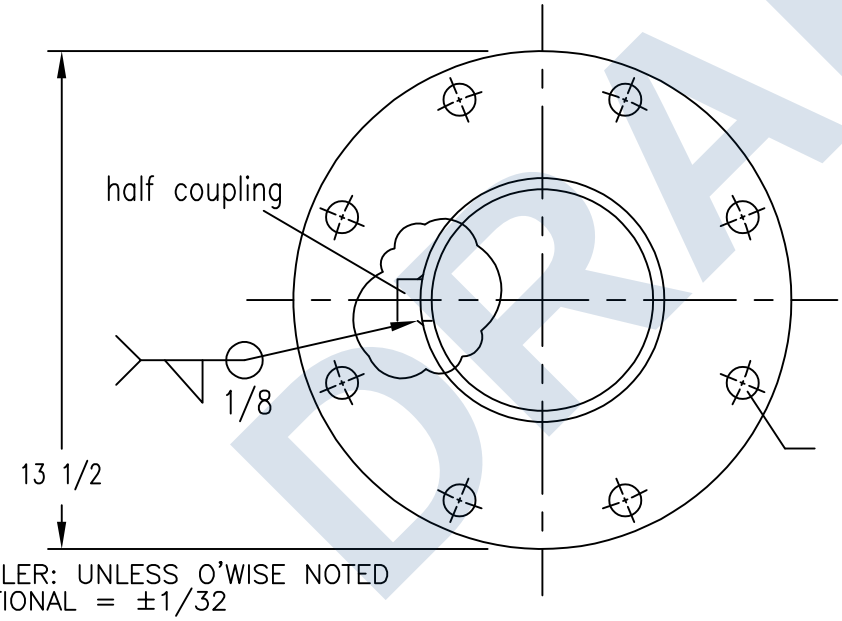

DRAFT

NOTES

1. STD TOLER: UNLESS O'WISE NOTED
   FRACTIONAL = ±1/32
   .X=±0.03 .XX=±0.01 .XXX=±0.005
   ANGULAR = ±1/4° (INCL IMPLIED 90°)
   WELDMENTS = ±1/16
2. BREAK ALL SHARP EDGES
3. AIR TIGHT ASSEMBLY
4. POWDER COATED RIVER ROCK BLUE
5. DO NOT PAINT INSIDE OF PIPE △D
6. DO NOT PAINT FLANGE RAISED FACE

NONE = without coupling
–01 = with 1/2"NPT coupling
–02 = with G3/8 coupling

NAVISION #:	21–002827–08 & 21–002827–08–XX
DRAWING NO.	PA–005100–08–08 REV "D"

AERZEN USA CORP.
108 Independence Way, COATESVILLE PA 19320
(610) 380–0244 PH, (610) 380–0278 FX

TITLE
STUB PIPE – CARBON STEEL
8" PIPE X 8" FLANGE X 29–1/2" LONG

SCALE	DATE	DRAWN BY	CHECKED BY
MODEL SPACE 1:1	11/01/2007	J. P. SHIELDS	D.L.M.

NOTICE:
THIS DRAWING AND ALL INFORMATION HEREIN IS THE PROPERTY OF AERZEN USA INC. AND ITS SUBSIDIARIES AND SHALL NOT BE REPRODUCED BY ANY MEANS IN WHOLE OR IN PART OR USED AS THE BASIS FOR MANUFACTURE WITHOUT WRITTEN PERMISSION.

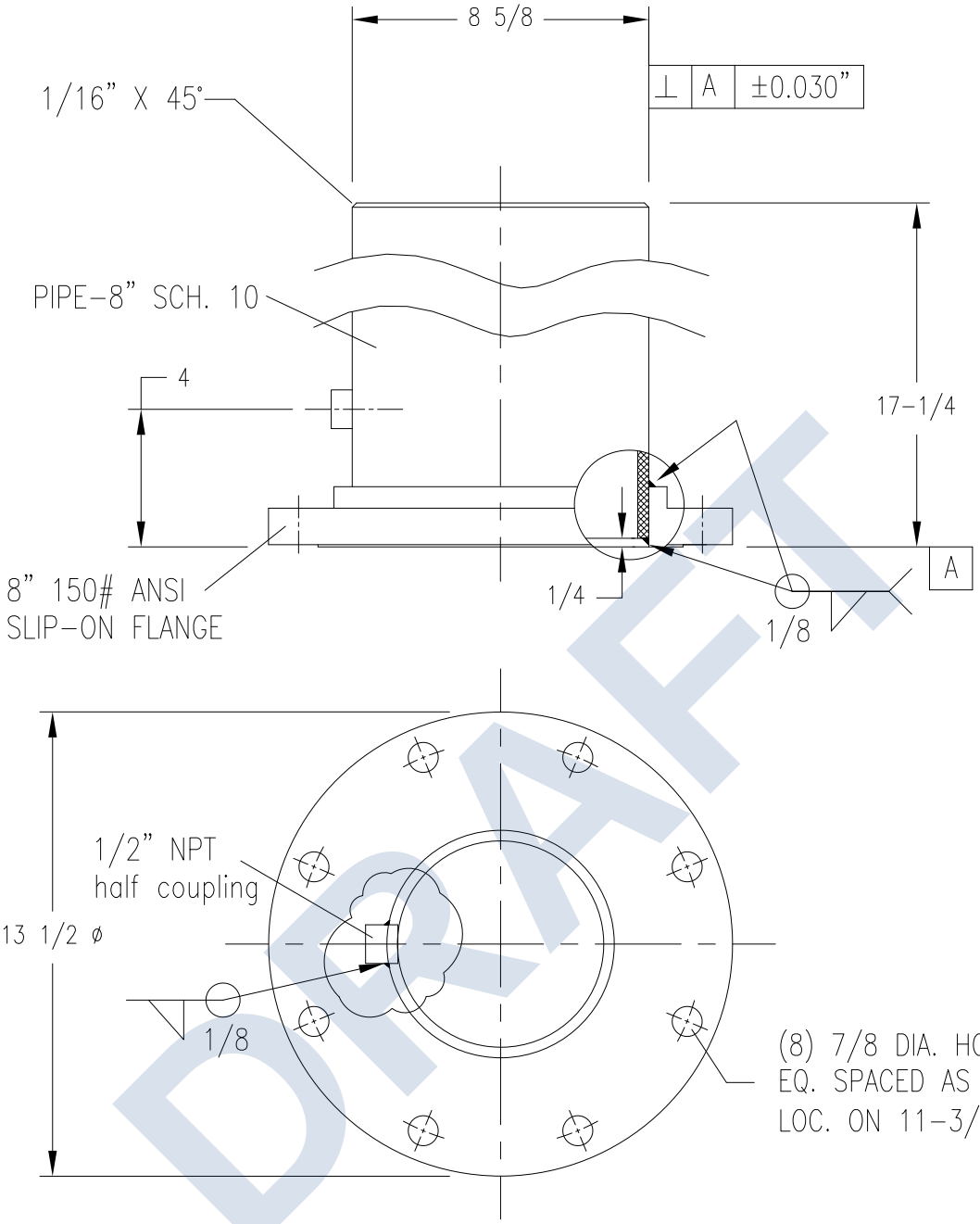

DRAFT

NOTES

1. STD TOLER: UNLESS O'WISE NOTED
   FRACTIONAL = ±1/32
   .X=±0.03 .XX=±0.01 .XXX=±0.005
   ANGULAR = ±1/4° (INCL IMPLIED 90°)
   WELDMENTS = ±1/16
2. BREAK ALL SHARP EDGES
3. AIR TIGHT ASSEMBLY
4. POWDER COAT AERZEN RIVER ROCK BLUE (RAL 5001)
5. NO POWDER COAT ON INSIDE OF PIPE OR FLANGE FACE

NONE = without coupling
–01 = with coupling

NAVISION #:	21–002827–14
DRAWING NO.	PA–005100–08–14 REV "C"

AERZEN USA CORP.
108 Independence Way, COATESVILLE PA 19320
(610) 380-0244 PH, (610) 380-0278 FX

TITLE
STUB PIPE – CARBON STEEL
8" PIPE X 8" FLANGE X 17–1/4" LONG

SCALE	DATE	DRAWN BY	CHECKED BY
MODEL SPACE 1:1	08/27/2009	J. P. SHIELDS	D.L.M.

Description:

The Pressure Relief Valve is designed for use with air or inert gases to protect the blower and its accessories from damage in the event of excessive pressure. It is not to be used as a pressure regulating device. It contains a spring-loaded valve guided by a spindle and surrounded by a protective sheath that is capable of venting the entire volume flow of the blower. In positive pressure machines, it is installed downstream from the positive displacement blower and before the check valve or any shut-off valve. In vacuum applications, it is installed on the intake side of the blower.

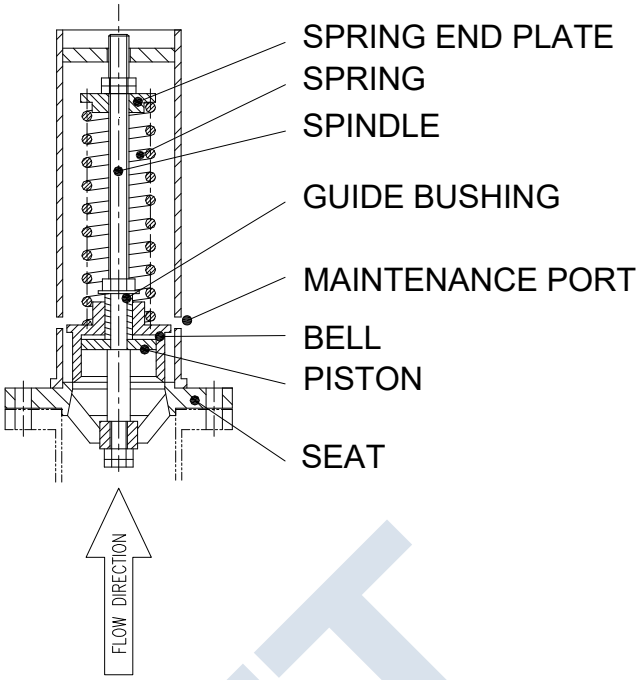

QTY	DESCRIPTION	MATERIAL
1	Connection Flange or Thread with Valve Seat	Grey Cast Iron
1	Valve Spindle	Carbon Steel
1	Bell	Brass
1	Spring End Plate	Carbon Steel
2	Hex Nut	Carbon Steel

QTY	DESCRIPTION	MATERIAL
2	Guide Nut	Carbon Steel
1	Spring	Spring Steel
1	Valve Disc / Piston	Brass
1	Valve Guide / Bushing	Brass
1	Cover	Aluminum

Technical Data:

Maximum Temperature: 200°C (392°F)	Valve Characteristic: Proportional
Conforms to PED 97 / 23 / EG	Pressure Rise: 10%
Maximum Pressure: 1.1 Bar (15.9 PSIG)	

Maintenance:

Periodically inspect for free movement of the valve. While the machine is stopped and the motor locked out, insert flat blade screwdrivers into both maintenance ports and lift the valve. Remove the screwdrivers and visibly ensure the valve is properly seated. When operated in clean environments, inspect valve either every six months or 1000 run hours, whichever occurs sooner. In dusty conditions, inspect every month. Refer to document G4-002 for complete operating instructions.

DRAFT

G5 Blower Pressure Relief Valves

Nominal Package Size	Blower Designation	Valve Size	Positive Pressure Valve Connection	Vacuum Valve Connection	Hose Kit Part Numbers
DN-50	GM 3S	DN -50	G-2” External	DN-50 PN 16 Flange	N/A
DN-80	GM 4S				734947000
	GM 7L				
	GM 10S				
DN-100	GM 10S	DN-80	G-3” External	DN-80 PN 16 Flange	734950000
	GM 15L				
DN-125	GM 25S				
DN-150	GM 30L	DN-125	DN-125, PN16 Flange	DN-125, PN16 Flange	734602000
	GM 35S				
	GM 50L				
DN-200	GM 50L				
	GM 60S				
DN-250	GM 80L	DN-150	DN-150, PN16 Flange	DN-150, PN16 Flange	733350000
	GM 90S				
	GM100S				
DN-300	GM 130L	DN-150	DN-150, PN16 Flange	DN-150, PN16 Flange	734372000 for 1 valve; 734373000 for 2 valves
	GM 150S				

DRAFT

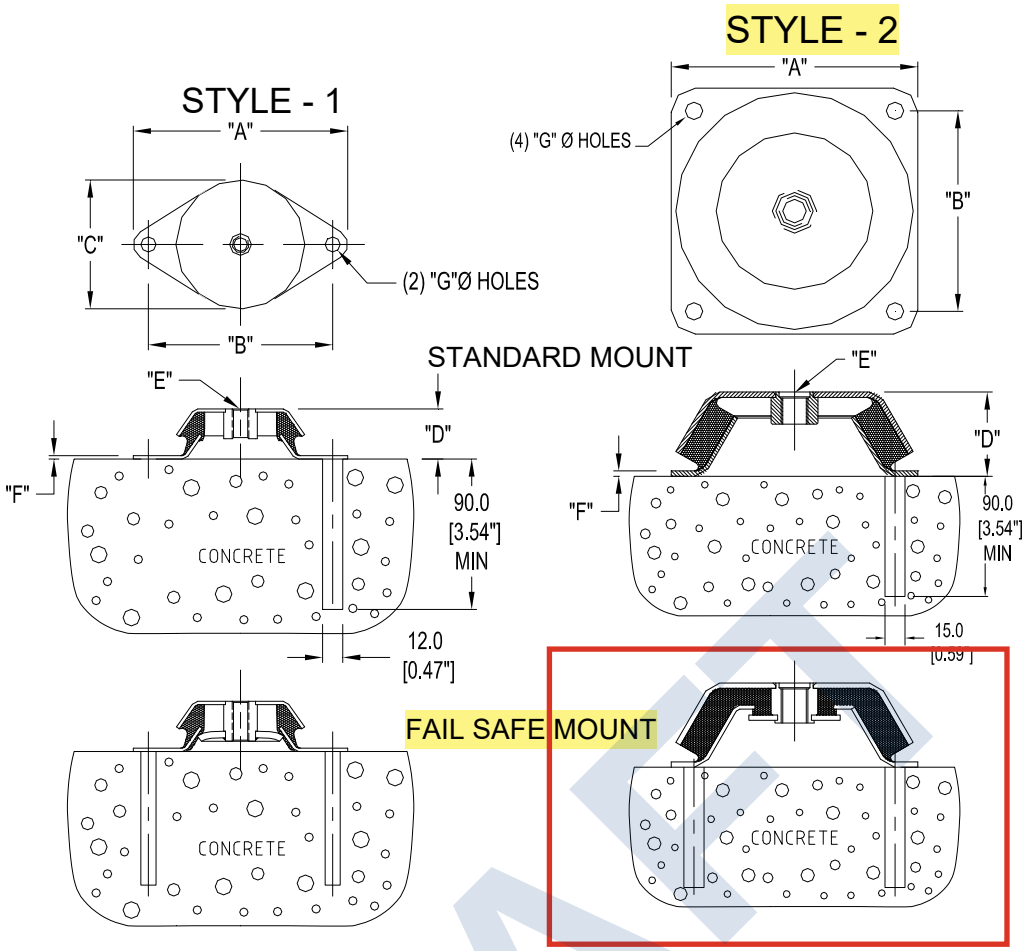

Only (1) anchor per foot is required for Standard mounts, anchor each hole (“G”) for Fail-safe mounts.

Standard mounts are not recommended for use where negative loads occur, (marine or earthquake zones) use Fail-safe mounts or contact Aerzen for alternates.

All vibrations isolators have a natural frequency that will not interfere with the fundamental blower package frequencies.

Baseframe	Standard P/N	Fail Safe P/N	Style	A (mm)	B (mm)	C (mm)	D (mm)	E	F (mm)	G (mm)	Maximum Load Per Foot		Recommended Anchor
											KN	Lbf	Aerzen P/N
DN-50	184818	184818	1	127	110	77	30	M10	2	9	1,4	315	200053552
DN-80	176394	184819	1	127	110	77	30	M10	2	9	2	450	200053552
DN-100													
DN-125													
DN-150	177128	184820	2	168	132	-	50	M16	4	13	4	899	120835000
DN-200	184821	184821	2	184	150	-	60	M20	4.5	13	9	2023	120835000
DN-250			2	184	150	-	60	M20	4.5	13	9	2023	120835000
DN-300													

DRAFT

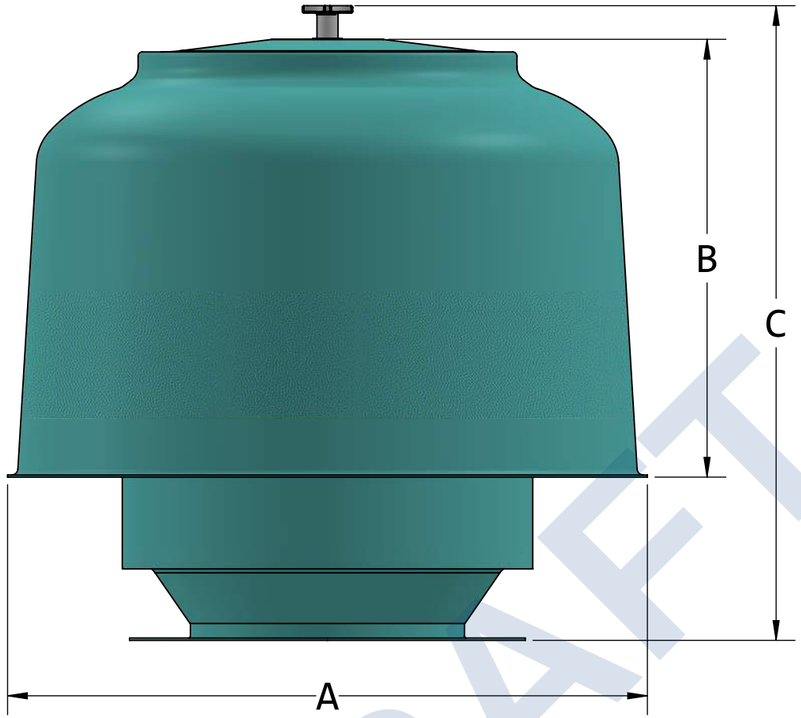

TRI-VENT® SERIES P09 INTAKE FILTER

MODEL #	ULTRA 99.97% @ 1-µ (NOM)	HI-FLOW 98% @ 10-µ (NOM)	WIRE MESH, 60% AC FINE	FLANGE SIZE	DIMENSIONS A	DIMENSIONS B	DIMENSIONS C	RATED FLOW SCFM	WGT
P09RG-	E045773	E047933	E049443	3	16	8	20	600	30
P09RH-	E045773	E047933	E049443	4	16	8	20	900	30
P09RR-	E045773	E047933	E049443	5	16	8	20	1100	30
P09RI-	E045773	E047933	E049443	6	16	8	20	1350	30
	E045774	E047934	E049444		26	11	23	2000	50
	E045775	E047935	E049445		27	15	27	2250	60
P09RJ-	E045774	E047934	E049444	8	26	11	23	2500	60
	E045775	E047935	E049445		27	15	27	2900	70
	E045776	E047936	E049446		28	20	32	3300	75
P09RK-	E045774	E047934	E049444	10	26	11	23	3750	70
	E045775	E047935	E049445		27	15	27	4000	75
	E045776	E047936	E049446		28	20	32	4250	80
P09RL-	E045775	E047935	E049445	12	27	15	27	5150	80
	E045776	E047936	E049446		28	20	32	6500	85
	E045777	E047937	E049447		38	26	38	8250	90
P09RM-	E045777	E047937	E049447	14	38	26	38	12000	105
P09RN-	E045777	E047937	E049447	16	38	26	38	15000	115
P09RS-	E045777	E047937	E049447	18	38	26	38	18000	125

OPTIONS: CUSTOM COLORS • MPT/FPT OUTLET • PRESSURE TAPS

FLOW CURVE

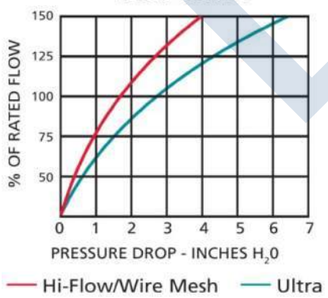

TYPICAL NOISE ATTENUATION

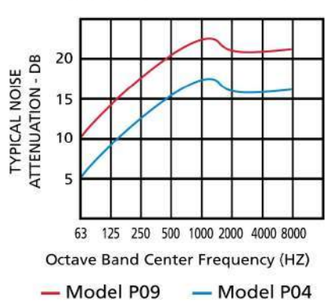

ENDUSTRA FILTER MFG

CUSTOMER: AERZEN USA

CONTACT FACTORY TO VERIFY REVISION

CONFIDENTIAL:

Design and drawing represented herein are the sole property of Endustra Filter Manufacturers. Recipient organization, its employees, representatives, and assigns agree not to share information in any way about the product represented herein with any 3rd parties without express written permission from Endustra Filter Manufacturers. PATENTED.

DRAWING NAME: TRI-VENT® SERIES P09	
ORIGINAL: 11/27/23	DRAWN BY: GHG
REVISION:	APPROVAL: KRW
TOLERANCES: ±1/8	SCALE: NONE
DIMENSIONS: INCHES	SHEET 1 OF 1

DRAFT

SECTION 4

DRAFT

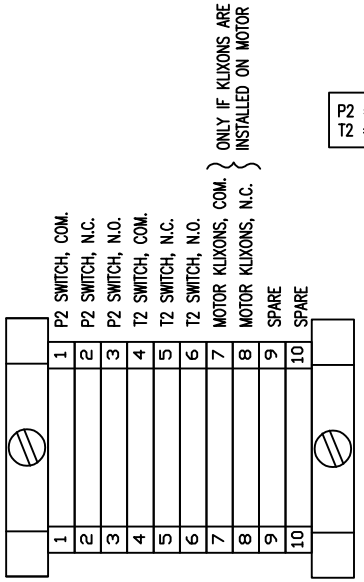

CUSTOMER CONNECTION SIDE

RATED: 30VDC/250VAC @ 2.0A

DETAIL
TERMINAL BLOCK DIAGRAM
FOR JUNCTION BOX

P2 = DISCHARGE PRESSURE
T2 = DISCHARGE TEMPERATURE

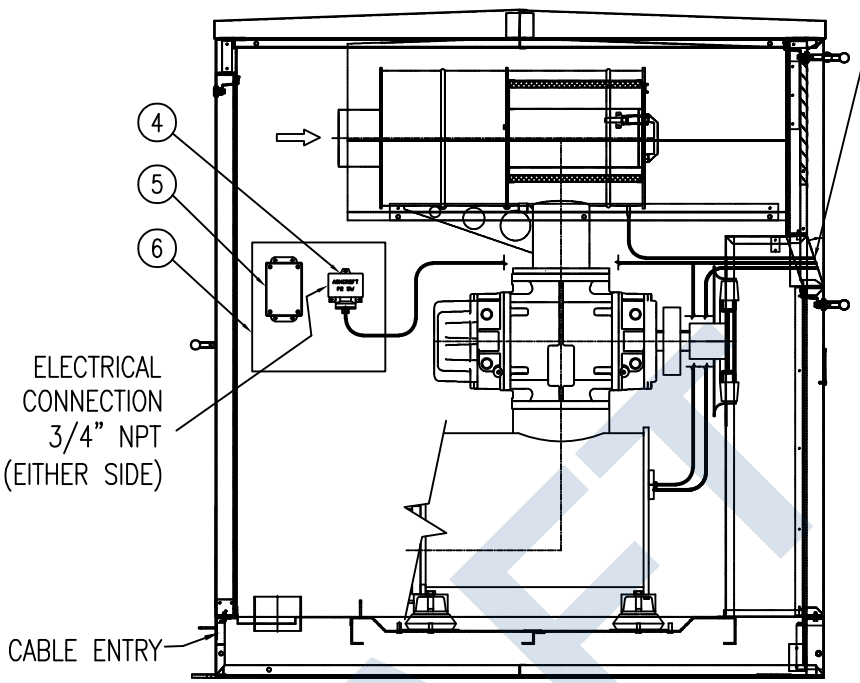

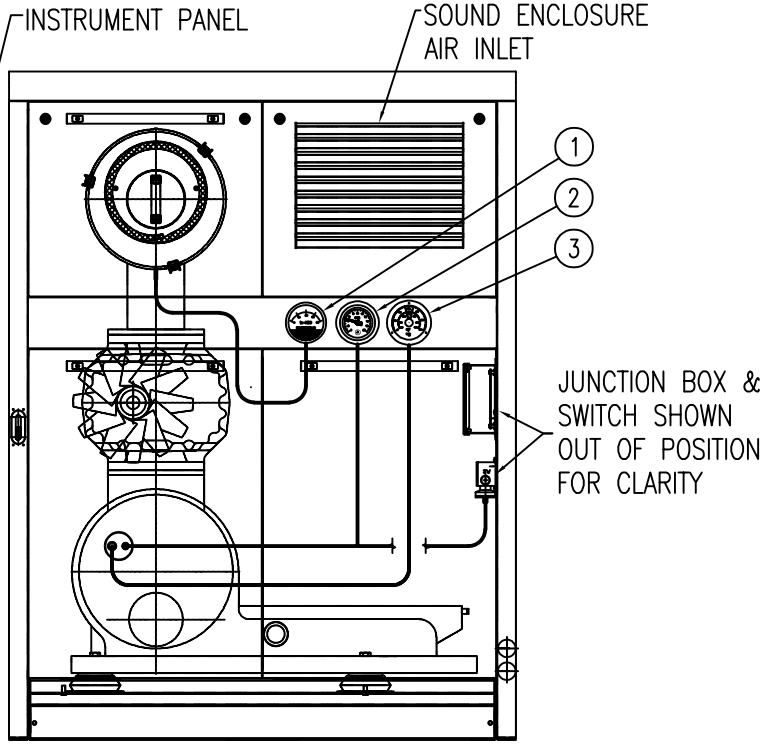

FRONT PANEL

NOTES:
1. ALL PRESSURE GAUGES & SWITCHES ARE INSTALLED WITH PULSATION DAMPERS. (EXCEPT IF GAUGE HAS A LIQUID FILL)
2. INTRUMENTATION SHOWN ON A GM35S, DN150 PACKAGE. E

MAIN COMPONENTS

ITEM	DESCRIPTION	PART NO.	
1	FILTER MAINTENANCE INDICATOR	21-006757	
2	DISCHARGE PRESSURE GAUGE	21-010129	E
3	DISCHARGE TEMPERATURE GAUGE/SWITCH	21-006756	
4	DISCHARGE PRESSURE SWITCH	21-000746-02	
5	JUNCTION BOX	21-000990_06X04_01	
6	PANEL MOUNTING PLATE	21-002532-04	E

NOTICE:
THIS DRAWING AND ALL INFORMATION HEREIN IS THE PROPERTY OF AERZEN USA INC. AND ITS SUBSIDIARIES AND SHALL NOT BE REPRODUCED BY ANY MEANS IN WHOLE OR IN PART OR USED AS THE BASIS FOR MANUFACTURE WITHOUT WRITTEN PERMISSION.

E CLASS I

AERZEN USA CORP.
108 Independence Way, COATESVILLE PA 19320
(610) 380-0244 PH, (610) 380-0278 FX

TITLE
G-5 BLOWER - INSTR. (S.E.)
FILTER MAINTENANCE INDICATOR
DISCHARGE PRESSURE GAUGE & SWITCH
DISCHARGE TEMPERATURE GAUGE/SWITCH

DATE	DRAWN BY:	CHECKED BY:	P.M. APPROVAL :	SCALE:
07/12/2017	RJP	DLM	-	MSPACE 1 :1

DRAWING NO:	REVISION NO:	SHEET:
G5-IM-PS07-4001-00	E	1/1

DRAFT

ALL STAINLESS STEEL LOW PRESSURE GAUGE

REOTEMP's Series PC low pressure gauges offer accurate and reliable measurements of gaseous media. Offered with stainless steel internals, the Series PC is designed to withstand corrosive media and ensure a long-lasting instrument.



PC25S1 PC40S1 PC60S1

Dials Custom Logo Diaphragm Seal Compatible

FEATURES / BENEFITS

- Sensitive Diaphragm/Capsule Mechanism
- All-Welded 316 Stainless Steel Capsule and Socket
- Easy-Access Zero Reset Screw on Dial

ASME B40.100 NACE

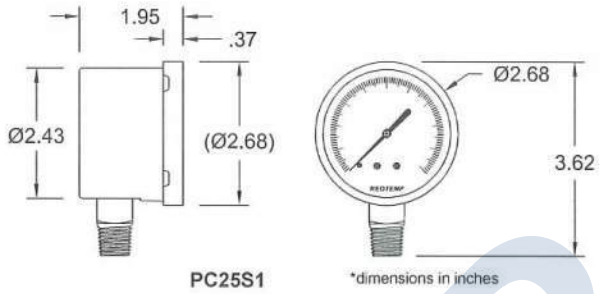

PC25S1 *dimensions in inches

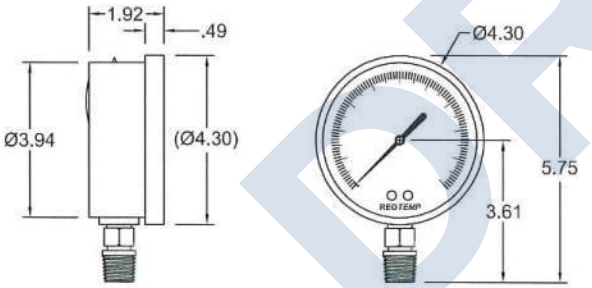

PC40S1 *dimensions in inches

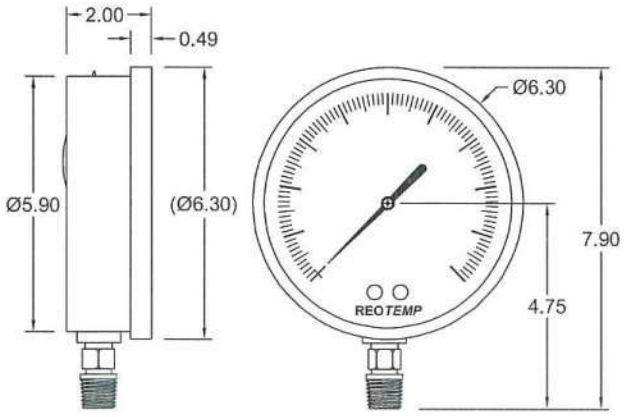

PC60S1 *dimensions in inches

SPECIFICATIONS

Construction Materials:

Non Wetted
- Case: 304SS
- Ring: 304SS, Bayonet Twist-Off
- Dial: White Aluminum, Black Letters

Wetted
- Capsule: 316LSS
- Socket: 316SS

Case-to-Socket
- Screw Connection
- Vented Case

Lens
- Tempered Safety Glass (Standard), Plastic, or Laminated Safety Glass

Temperature Limits:

Ambient
-40°F — 150°F

Process
-40°F — 200°F

Process Temperature Limits When Assembled with a Diaphragm Seal

-60°F — 350°F
Direct Mount

-100°F — 750°F
Remote Mount or Cooling Tower

*Exact temperature limits will depend on diaphragm seal & fill fluid.

Accuracy: 2-1.6-2%
Fillable: No
Restrictor Screw: Yes
Weight: 2.5" = 0.5 lbs
4" = 1.1 lbs
6" = 2.1 lbs
Maximum Working Pressure:
Stable = 100%
Momentary = 130% of scale

DRAFT

ALL STAINLESS STEEL LOW PRESSURE GAUGE

Visit reotemp.com

✓ Check Stock ✓ Get Price
✓ Configure Part # ✓ Download PDF Data Sheets

HOW TO ORDER: Choose options to build a part number. For example: PC40S1A2P52-D-T-HV

PC40	S	1	A	2	P52	-D	-T	-HV
DIAL SIZE	CASE TYPE	CAPSULE & SOCKET	MOUNT TYPE	CONNECTION	RANGE CODE	CASE FILL	LENS	OPTIONS

DIAL SIZE

PC25 = 2.5"
PC40 = 4"
PC60 = 6"

CASE TYPE

S = 304SS Case & Bezel w/ Removable Bayonet, Zero Correction on Dial
C = crimped ring 304SS

CAPSULE & SOCKET

1 = 316SS
2 = copper alloy

MOUNT TYPE

A = Bottom
B = Bottom/Rear Flange
*C = Center Back
*D = Center Back "U" Clamp
*E = Center Back/Front Flange

A = Bottom
B = Bottom/Rear Flange
*C = Lower Back
*E = Lower Back/Front Flange

CONNECTION

4 = 1/4" NPT
2 = 1/2" NPT

RANGE CODE

See Master Range Code Sheet on Page 46

Common Ranges
P50 = 0-10 in H_2O
P51 = 0-15 in H_2O
P52 = 0-30 in H_2O
P53 = 0-60 in H_2O
P54 = 0-100 in H_2O
P55 = 0-160 in H_2O
P56 = 0-200 in H_2O

Available Ranges
- 10" to 300" Water Column
- Gauge Pressure, Vacuum, or Compound

Standard Units
= in H_2O

Available Units
- kPa
- mbar
- psi
- mmH_2O
- inHg
- mmHg
- oz/in^2
- & more

P905 = -40..0 "H20

CASE FILL

Case is Not Fillable
-D = Dry

LENS

-T = Tempered Safety Glass (std)
-P = Plastic
-S = Laminated Safety Glass

OPTIONS

-HV = Hi-Vis™ Dial
-OX = Cleaned for O_2 Service
-C3 = 3 pt. Calibration Certificate
-TS = Stainless Steel Tag
-NC = NACE Compliance Certificate
-PM = Positive Material Identification Certification
-R5 = 1.5% Full Scale Accuracy (Not Available on Compound Ranges)

*Non-standard configuration

DRAFT

Diaphragm Seal Suitability Guide

Low pressure capsule gauges are very sensitive and require diaphragm seals with high fluid displacement. If a diaphragm seal is required to isolate the process fluid from the pressure gauge, the following seal model types are available for the Series PC.

Diaphragm Seal Model

High Displacement



Total Gauge Span* (in H_2O)

	10"	15"	20"	30"	40"	60"	100"	160"	200"	300"
W6	X	X	X	X	X	X	S	S	T	T
W7	X	X	X	S	S	T	T	T		
V5	X	S	S	T	T	T	T	T		
T6	X	X	X	X	X	S	S	S	S	S

*Total gauge span is additive of negative and positive pressures.

Example: -15 - 0 - 30 psi = 45 psi span

- Assembly will function correctly with minimal accuracy degradation.
- T — Assembly will function correctly given stable temperature.
- S — Assembly is highly sensitive to orientation and temperature variance. REOTEMP cannot guarantee a stated accuracy.
- X — Assembly will not work. The diaphragm does not displace enough fill fluid to drive the pressure gauge.

PRESSURE GAUGE RANGES AND CODES

SPECIAL RANGE TYPES

Receiver Ranges		
Code	Element	Dial Range
P60	3-15psi	0-100%
P61	3-15psi	0-10 sq rt
P62	3-15psi	0-100% & 0-10 sq.rt.

Refrigerant Ranges		
Code	Dial Range	Refrigerant
N06	-30inHg to 160psi	Ammonia
R06	-30inHg to 160psi	R134A
R06A	-30inHg to 160psi	R22
R06C	-30inHg to 160psi	R404A
N07	-30inHg to 200psi	Ammonia
N08	-30inHg to 300psi	Ammonia

Tank Level Ranges	
Code	Range
F14	0-24ft H2O
F15	0-30ft H2O
F15C	0-40ft H2O
F16	0-60ft H2O
F165	0-100ft H2O

LOW PRESSURE RANGES (PC SERIES ONLY)

Low Pressure Ranges									
inH_2O		oz/in^2		inH_2O & oz/in^2		mbar		psi	
Code	Range	Code	Range	Code	Range	Code	Range	Code	Range
P50	0-10	Z50	0-6	Q50Z	0-10 inH_2O & 0-6 oz/in^2				
P51	0-15	Z51	0-8			M51	0-40		
P49	0-20	Z49	0-10	Q49C	0-20 inH_2O & 0-12 oz/in^2				
P515	0-25	Z52E	0-15						
P52	0-30			Q52N	0-30 inH_2O & 0-18 oz/in^2	M521	0-70	I52	0-1
P525	0-40	Z52	0-20	Q525W	0-40 inH_2O & 0-24 oz/in^2	M525	0-100		
P53	0-60	Z53	0-30	Q53	0-60 inH_2O & 0-35 oz/in^2	M53F	0-150	I53	0-2
P54	0-100	Z54	0-60	Q54B	0-100 inH_2O & 0-60 oz/in^2	M54	0-250	I54	0-3
P55	0-160					M55	0-400	I55	0-5
P56	0-200	Z56	0-100	Q56C	0-200 inH_2O & 0-115 oz/in^2	M56	0-500	I56	0-7
Vacuum Ranges									
P88	-10-0	Z88	-6-0	Q88	-10/0 inH_2O & -6/0 oz/in^2				
P90	-30-0	Z90	-20-0	Q90	-30/0 inH_2O & -18/0 oz/in^2	M905	-100-0	I90	-1-0
P91	-60-0	Z91	-30-0	Q91	-60/0 inH_2O & -35/0 oz/in^2	M94	-200-0	I91	-2-0
P92	-100-0	Z92	-60-0	Q92	-100/0 inH_2O & -60/0 oz/in^2	M95	-400-0		
Compound Ranges									
P7A	-5/0/5	Z7A	-3/0/3			M71	-20/0/20		
P70	-10/0/10			Q70C	-10/0/10 inH_2O & -6/0/6 $ozin^2$	M72E	-30/0/30		
P71	-15/0/15					M72	-40/0/40		
P72	-20/0/20	Z72	-10/0/10	Q72C	-20/0/20 inH_2O & -12/0/12 oz/in^2			I73	-1-0-1
P73	-30/0/30			Q73C	-30/0/30 inH_2O & -18/0/18 oz/in^2	M735	-100/0/100	I74	-2-0-2
P74	-60/0/60	Z745	-30/0/30					I55U	-3/0/3
P75	-100/0/100			Q75B	-100/0/100 inH_2O & -60/0/60 oz/in^2			P14C	-5/0/5

DIFFERENTIAL PRESSURE RANGES (DP GAUGES ONLY)

psid		inH_2Od		bard		mbard		kPad	
Code	Range	Code	Range	Code	Range	Code	Range	Code	Range
PD1	0-1	ID10	0-10	BD1	0-1	MD40	0-40	AD2.5	0-2.5
PD3	0-3	ID20	0-20	BD1.6	0-1.6	MD60	0-60	AD6	0-6
PD5	0-5	ID30	0-30	BD2.5	0-2.5	MD100	0-100	AD10	0-10
PD10	0-10	ID50	0-50	BD4	0-4	MD160	0-160	AD25	0-25
PD20	0-20	ID100	0-100	BD6	0-6	MD250	0-250	AD40	0-40
PD50	0-50	ID150	0-150	BD7	0-7	MD400	0-400	AD100	0-100
PD100	0-100	ID200	0-200	BD11	0-11	MD600	0-600	AD250	0-250
PD200	0-200	ID400	0-400	BD55	0-55	MD1000	0-1000	AD700	0-700
PD6000	0-6000			BD400	0-400				

DRAFT

PRESSURE GAUGE OPTIONS

		Heavy-Duty Industrial Gauges				Process Gauges			Stainless Steel Case Industrial Gauges			Commercial Gauges		Low Pressure Capsule Gauges			Test Gauges
Part #	Description	PR25	PR35	PR40	PR60	PT45P	PT45T	PI45	PM	PG**C	PG**S	PD15/20/25	PD35/40	PC25N	PC25S	PC40/45/60	PL60/45
CASE FILL OPTIONS																	
-G	Glycerin Filled Case	✓	✓	✓	✓	✓	✓	N/A	✓	✓	✓	N/A	N/A	N/A	N/A	N/A	N/A
-W	Glycerin Water Filled Case (65/35)	✓	✓	✓	✓	✓	✓	N/A	✓	✓	✓	N/A	N/A	N/A	N/A	N/A	N/A
-S	Silicone Filled Case	✓	✓	✓	✓	✓	✓	N/A	✓	N/A	✓	N/A	N/A	N/A	N/A	N/A	N/A
-T	Teflon-coated Movement (No case fill)	✓	✓	✓	✓	✓	✓	✓	N/A	N/A	N/A	N/A	N/A	N/A	✓	✓	✓
LENS OPTIONS																	
-P	Plastic Lens	STD	✓	✓	✓	✓	✓	STD	STD	STD	✓	✓	MQ	✓	✓	✓	✓
-T	Tempered Safety Glass Lens	✓	STD	STD	STD	STD	STD	N/A	N/A	N/A	STD	N/A	N/A	N/A	STD	STD	STD
-S	Laminated Safety Glass Lens	✓	✓	✓	✓	✓	✓	N/A	N/A	N/A	✓	N/A	N/A	N/A	✓	✓	✓
-G	Plain Glass	N/A	N/A	N/A	N/A	N/A	N/A	N/A	MQ	MQ	N/A	MQ	STD	N/A	N/A	N/A	N/A
POINTER OPTIONS																	
-RP	Red Pointer	✓	✓	✓	✓	✓	✓	✓	N/A	N/A	✓	N/A	N/A	N/A	✓	✓	✓
-MP	Min/Max Pointer (Drag Hand)	✓	N/A	✓	✓	✓	✓	N/A	N/A	N/A	✓	N/A	N/A	N/A	N/A	N/A	N/A
-MQ	Min/Max Pointer (Tamper-proof)	✓	N/A	✓	✓	✓	✓	N/A	N/A	N/A	✓	N/A	N/A	N/A	N/A	N/A	N/A
-RH	Red Set Hand (Manual Adjustment)	N/A	N/A	N/A	N/A	✓	N/A	N/A	N/A	N/A	N/A	N/A	N/A	N/A	N/A	N/A	N/A
-EC	Electrical Contacts	N/A	N/A	✓	N/A	✓	N/A	N/A	N/A	N/A	N/A	N/A	N/A	N/A	N/A	N/A	N/A
DIAL OPTIONS																	
-CL	Custom Logo Dial	✓	✓	✓	✓	✓	✓	✓	MQ	MQ	✓	MQ	MQ	MQ	✓	✓	✓
-HV	Hi-Vis Dial	✓	✓	✓	✓	✓	✓	✓	N/A	N/A	✓	N/A	N/A	N/A	✓	✓	N/A
-CB	Color Band	✓	✓	✓	✓	✓	✓	✓	MQ	MQ	✓	MQ	MQ	MQ	✓	✓	N/A
-CP	Color Pie	✓	✓	✓	✓	✓	✓	✓	MQ	MQ	✓	MQ	MQ	MQ	✓	✓	N/A
-DM	Dial Marking	✓	✓	✓	✓	✓	✓	✓	MQ	MQ	✓	MQ	MQ	✓	✓	✓	✓
-LP	Removable Lens Protector	N/A	N/A	N/A	N/A	✓	✓	✓	N/A	N/A	N/A	N/A	N/A	N/A	N/A	N/A	N/A
CALIBRATION OPTIONS																	
-R1	Upgrade to 1% FS Accuracy	✓	✓	STD	STD	N/A	N/A	N/A	N/A	N/A	✓	N/A	N/A	N/A	N/A	N/A	N/A
-R2	Upgrade to 0.5% FS Accuracy	N/A	N/A	✓	✓	STD	STD	STD	N/A	N/A	N/A	N/A	N/A	N/A	N/A	N/A	N/A
-R5	Upgrade to 1.5% FS Accuracy	✓	✓	N/A	N/A	N/A	N/A	N/A	N/A	N/A	N/A	N/A	N/A	N/A	✓	✓	N/A
-C1	1pt. NIST Calibration Cert	✓	✓	✓	✓	✓	✓	✓	✓	✓	✓	✓	✓	✓	✓	✓	N/A
-C3	3pt. NIST Calibration Cert	✓	✓	✓	✓	✓	✓	✓	✓	✓	✓	✓	✓	✓	✓	✓	N/A
-C5	5pt. NIST Calibration Cert	✓	✓	✓	✓	✓	✓	✓	✓	✓	✓	✓	✓	✓	✓	✓	N/A
-CX	10pt. NIST Calibration Cert	✓	✓	✓	✓	✓	✓	✓	✓	✓	✓	✓	✓	✓	✓	✓	STD
-CS	Calibration Sticker (No logged pts.)	✓	✓	✓	✓	✓	✓	✓	✓	✓	✓	✓	✓	✓	✓	✓	N/A
TAG OPTION																	
-TS	Stainless Steel Tag (1-10 Characters)	✓	✓	✓	✓	✓	✓	✓	✓	✓	✓	✓	✓	✓	✓	✓	✓
-TM	Stainless Steel Tag (11-80 characters)	✓	✓	✓	✓	✓	✓	✓	✓	✓	✓	✓	✓	✓	✓	✓	✓
-TP	Paper Tag	✓	✓	✓	✓	✓	✓	✓	✓	✓	✓	✓	✓	✓	✓	✓	✓
CERTIFICATION OPTIONS																	
-CM	General Material Conformance	✓	✓	✓	✓	✓	✓	✓	✓	✓	✓	✓	✓	✓	✓	✓	✓
-NC	Certificate of NACE Compliance	✓	✓	✓	✓	✓	✓	✓	N/A	N/A	N/A	N/A	N/A	N/A	✓	✓	✓
-PM	Positive Material Identifiaction Certificate (PMI)	✓	✓	✓	✓	✓	✓	✓	✓	✓	✓	✓	✓	✓	✓	✓	✓
-HT	Hydrostatic Test per ASME B31.3 (5 min)	✓	✓	✓	✓	✓	✓	✓	✓	✓	✓	✓	✓	✓	✓	✓	✓
-LC	Argon Leak Check Certificate	✓	✓	✓	✓	✓	✓	✓	✓	✓	✓	✓	✓	✓	✓	✓	✓
CLEANING OPTIONS																	
-DG	Degreased - Wiped Clean of Oils, Shipped in Sealed Bag	✓	✓	✓	✓	✓	✓	✓	N/A	N/A	✓	N/A	N/A	✓	✓	✓	✓
-OX	Cleaned for Oxygen Service per ASME B40.1	✓	✓	✓	✓	✓	✓	✓	MQ	MQ	✓	MQ	MQ	✓	✓	✓	✓
-OY	Cleaned for Oxygen Service per MIL-STD-1330D	✓	✓	✓	✓	✓	✓	✓	N/A	N/A	✓	N/A	N/A	✓	✓	✓	✓

✓	Indicates that the option is available with the model.	N/A	Indicates the option is not available with this model.
STD	Indicates standard options with no additional cost.	MQ	Minimum order quantity applies.

DRAFT

INDUSTRIAL STAINLESS/BRASS GAUGE

REOTEMP's Series PG gauges are an economical choice where ambient corrosion and vibration are of concern. The stainless steel case and ring offer excellent corrosion resistance, and is fillable for applications with vibration. It is suitable for all fluids compatible with copper alloys.



PG25C2



PG40C2

Fillable Custom Logo

FEATURES / BENEFITS

- Stainless Steel Case
- Copper Alloy Wetted Parts
- Field Fillable Case
- Convenient Panel Mounting Adapters

ASME B40.100

SPECIFICATIONS

Accuracy	2.5" = 3 - 2 - 3%, ASME Grade B 4" = 2 - 1 - 2%, ASME Grade A
Ambient Limits	-40°F/140°F
Process Limits	-40°F/140°F
Process Limits with Diaphragm Seal	Cannot be mounted to a diaphragm seal.
Wetted Materials	Tube: Copper Alloy Socket: Copper Alloy
Lens	Plastic (Standard) or Glass
Other Materials	Case: 304SS Ring: 304SS Dial: White Aluminum, Black Letters Case-to-Socket: Screw Connection
Fillable	Yes
Restrictor Screw	Built-in, Non-Removable
Maximum Working Pressure	Stable = 100% Momentary = 110% of scale
Environmental Protection	NEMA 4X/IP65
Weight	2.5" = 0.25 lbs (0.4 lbs filled) 4" = 0.6 lbs (1.2 lbs filled)

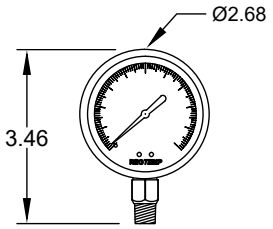

PG25C2

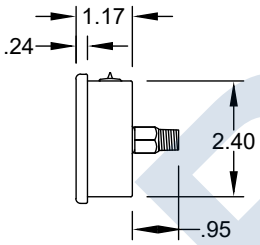

*dimensions in inches

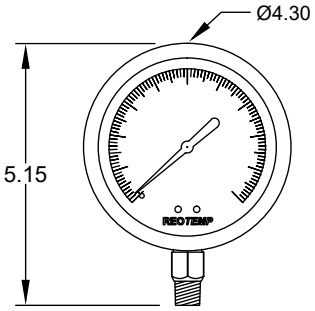

PG40C2

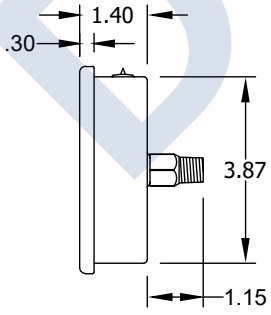

*dimensions in inches

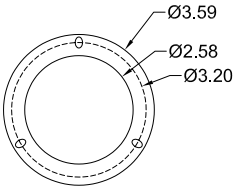

2.5" MOUNTING FLANGE

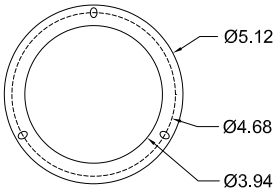

4" MOUNTING FLANGE

DRAFT

INDUSTRIAL STAINLESS/BRASS GAUGE

Visit reotemp.com

- ✓ Check Stock
- ✓ Get Price
- ✓ Configure Part #
- ✓ Download PDF Data Sheets

HOW TO ORDER: Choose options to build a part number. For example: PG25C2A4P18-D-P-TS

PG25 C 2 A 4 P18 -D -P -TS

DIAL SIZE	CASE TYPE	TUBE & SOCKET	MOUNT TYPE	CONNECTION	RANGE CODE	CASE FILL	LENS	OPTIONS
PG25 = 2.5" **PG40** = 4"	**C** = 304SS Crimped Ring	**2** = Copper Alloy	**A** = Bottom **B** = Bottom/Rear Flange **C** = Center Back **D** = Center Back "U" Clamp **E** = Center Back/Front Flange	**4** = 1/4" NPT ***2** = 1/2" NPT	*Common Ranges* **P16** = 0-30 psi **P17** = 0-60 psi **P18** = 0-100 psi **P19** = 0-160 psi **P20** = 0-200 psi **P21** = 0-300 psi **P23** = 0-600 psi **P25** = 0-1,000 psi *Available Ranges* ■ Gauge Pressure, Vacuum, or Compound ■ Vac to 6,000 psi *For Additional Range Codes See Page 45*	**-D** = Dry **-G** = Glycerin **-W** = Glycerin/ Water (65/35) *Note: This model cannot be filled with silicone.*	**-P** = Plastic ***-G** = Glass	**-TS** = Stainless Steel Tag

*Non-standard configuration

DRAFT

Master Range Code Sheet

PRESSURE GAUGE RANGES AND CODES

VACUUM/COMPOUND RANGES

psi		Dual Scale & psi & Metric						Single Scale-Metric					
"Hg/0/psi		psi & bar		psi & kg/cm²		psi & kPa		bar		kg/cm²		kPa	
Code	Range	Code	Range	Code	Range	Code	Range	Code	Range	Code	Range	Code	Range
P01	-30"Hg/0	D01	"Hg & -1/0 bar	G01	"Hg & -1/0 kg/cm²	L01	"Hg & -100/0 kPa	B00	-1/0 bar	K00	-1/0 kg/cm²	A00	-100/0 kPa
P02	-30/0/15	D02	psi & -1/0/1	G02	psi & -1/0/1	L02	psi & -100/0/100	B01	-1/0/1	K01	-1/0/1	A01	-100/0/100
P03	-30/0/30	D03	psi & -1/0/2	G03	psi & -1/0/2	L03	psi & -100/0/200	B02	-1/0/2	K02	-1/0/2	A02	-100/0/200
P04	-30/0/60	D04	psi & -1/0/4	G04	psi & -1/0/4	L04	psi & -100/0/400	B04	-1/0/4	K04	-1/0/4	A04	-100/0/400
P05	-30/0/100	D05	psi & -1/0/7	G05	psi & -1/0/7	L05	psi & -100/0/700	B07	-1/0/7	K07	-1/0/7	A07	-100/0/700
P06	-30/0/160	D06	psi & -1/0/11	G06	psi & -1/0/11	L06	psi & -100/0/1,100	B011	-1/0/11	K011	-1/0/11	A011	-100/0/1,100
P07	-30/0/200	D07	psi & -1/0/14	G07	psi & -1/0/14	L07	psi & -100/0/1,400	B014	-1/0/14	K014	-1/0/14	A014	-100/0/1,400
P08	-30/0/300	D08	psi & -1/0/20	G08	psi & -1/0/20	L08	psi & -100/0/2,000	B020	-1/0/20	K020	-1/0/20	A020	-100/0/2,000

PRESSURE RANGES

psi		Dual Scale & psi & Metric						Single Scale-Metric					
psi		psi & bar		psi & kg/cm²		psi & kPa		bar		kg/cm²		kPa	
Code	Range	Code	Range	Code	Range	Code	Range	Code	Range	Code	Range	Code	Range
P14	0-10 psi	D14	psi & .7 bar	G14	psi & .7 kg/cm²	L14	psi & 70 kPa						
P15	0-15	D15	psi & 0-1	G15	psi & 0-1	L15	psi & 0-100	B1	0-1 bar	K1	0-1 kg/cm²	A1	0-100 kPa
P16	0-30	D16	psi & 0-2	G16	psi & 0-2	L16	psi & 0-200	B2	0-2	K2	0-2	A2	0-200
P17	0-60	D17	psi & 0-4	G17	psi & 0-4	L17	psi & 0-400	B4	0-4	K4	0-4	A4	0-400
P18	0-100	D18	psi & 0-7	G18	psi & 0-7	L18	psi & 0-700	B7	0-7	K7	0-7	A7	0-700
P19	0-160	D19	psi & 0-11	G19	psi & 0-11	L19	psi & 0-1,100	B11	0-11	K11	0-11	A11	0-1,100
P20	0-200	D20	psi & 0-14	G20	psi & 0-14	L20	psi & 0-1,400	B14	0-14	K14	0-14	A14	0-1,400
P21	0-300	D21	psi & 0-20	G21	psi & 0-20	L21	psi & 0-2,000	B20	0-20	K20	0-20	A20	0-2,000
P22	0-400	D22	psi & 0-28	G22	psi & 0-28	L22	psi & 0-2,800	B28	0-28	K28	0-28	A28	0-2,800
P23	0-600	D23	psi & 0-40	G23	psi & 0-40	L23	psi & 0-4,000	B40	0-40	K40	0-40	A40	0-4,000
P24	0-800	D24	psi & 0-55	G24	psi & 0-55	L24	psi & 0-5,500	B55	0-55	K55	0-55	A55	0-5,500
P25	0-1,000	D25	psi & 0-70	G25	psi & 0-70	L25	psi & 0-7,000	B70	0-70	K70	0-70	A70	0-7,000
P30	0-1,500	D30	psi & 0-100	G30	psi & 0-100	L30	psi & 0-10,000	B100	0-100	K100	0-100	A100	0-10,000
P31	0-2,000	D31	psi & 0-140	G31	psi & 0-140	L31	psi & 0-14,000	B140	0-140	K140	0-140	A140	0-14,000
P32	0-3,000	D32	psi & 0-200	G32	psi & 0-200	L32	psi & 0-20,000	B200	0-200	K200	0-200	A200	0-20,000
P33	0-4,000	D33	psi & 0-280	G33	psi & 0-280	L33	psi & 0-28,000	B280	0-280	K280	0-280	A280	0-28,000
P34	0-5,000	D34	psi & 0-350	G34	psi & 0-350	L34	psi & 0-35,000	B350	0-350	K350	0-350	A350	0-35,000
P35	0-6,000	D35	psi & 0-400	G35	psi & 0-400	L35	psi & 0-40,000	B400	0-400	K400	0-400	A400	0-40,000
P36	0-8,000	D36	psi & 0-550	G36	psi & 0-550	L36	psi & 0-55,000	B550	0-550	K550	0-550	A550	0-55,000
P37	0-10,000	D37	psi & 0-700	G37	psi & 0-700	L37	psi & 0-70,000	B700	0-700	K700	0-700	A700	0-70,000
P38	0-15,000	D38	psi & 0-1,000	G38	psi & 0-1,000	L38	psi & 0-100,000	B1K	0-1,000	K1K	0-1,000	A1K	0-100,000
P39	0-20,000	D39	psi & 0-1,400	G39	psi & 0-1,400	L39	psi & 0-140,000						
P40	0-30,000	D40	psi & 0-2,000	G40	psi & 0-2,000	L40	psi & 0-200,000						
P41	0-40,000	D41	psi & 0-2,800	G41	psi & 0-2,800	L41	psi & 0-280,000						
P42	0-50,000	D42	psi & 0-3,500	G42	psi & 0-3,500	L42	psi & 0-350,000						

DRAFT



Don't See The Range You Need? REOTEMP has thousands of specialty dial ranges available and will work with you to create a custom range, just contact REOTEMP customer service.

PRESSURE GAUGE OPTIONS

		Heavy-Duty Industrial Gauges				Process Gauges			Stainless Steel Case Industrial Gauges			Commercial Gauges		Low Pressure Capsule Gauges			Test Gauges
Part #	Description	PR25	PR35	PR40	PR60	PT45P	PT45T	PI45	PM	PG**C	PG**S	PD15/20/25	PD35/40	PC25N	PC25S	PC40/45/60	PL60/45
CASE FILL OPTIONS																	
-G	Glycerin Filled Case	✓	✓	✓	✓	✓	✓	N/A	✓	✓	✓	N/A	N/A	N/A	N/A	N/A	N/A
-W	Glycerin Water Filled Case (65/35)	✓	✓	✓	✓	✓	✓	N/A	✓	✓	✓	N/A	N/A	N/A	N/A	N/A	N/A
-S	Silicone Filled Case	✓	✓	✓	✓	✓	✓	N/A	✓	N/A	✓	N/A	N/A	N/A	N/A	N/A	N/A
-T	Teflon-coated Movement (No case fill)	✓	✓	✓	✓	✓	✓	✓	N/A	N/A	N/A	N/A	N/A	N/A	✓	✓	✓
-I	Inert Case Fill	✓	✓	✓	✓	✓	✓	N/A	N/A	N/A	N/A	N/A	N/A	N/A	N/A	N/A	N/A
LENS OPTIONS																	
-P	Plastic Lens	STD	✓	✓	✓	✓	✓	STD	STD	STD	✓	✓	MQ	✓	✓	✓	✓
-T	Tempered Safety Glass Lens	✓	STD	STD	STD	STD	STD	N/A	N/A	N/A	STD	N/A	N/A	N/A	STD	STD	STD
-S	Laminated Safety Glass Lens	✓	✓	✓	✓	✓	✓	N/A	N/A	N/A	✓	N/A	N/A	N/A	✓	✓	✓
-G	Plain Glass	N/A	N/A	N/A	N/A	N/A	N/A	N/A	MQ	MQ	N/A	MQ	STD	N/A	N/A	N/A	N/A
POINTER OPTIONS																	
-RP	Red Pointer	✓	✓	✓	✓	✓	✓	✓	N/A	N/A	✓	N/A	N/A	N/A	✓	✓	✓
-MP	Min/Max Pointer (Drag Hand)†	✓	N/A	✓	✓	✓	N/A	N/A	N/A	N/A	✓	N/A	N/A	N/A	N/A	N/A	N/A
-MQ	Min/Max Pointer (Tamper-proof)†	✓	N/A	✓	✓	✓	N/A	N/A	N/A	N/A	✓	N/A	N/A	N/A	N/A	N/A	N/A
-RH	Red Set Hand (Manual Adjustment)	N/A	N/A	N/A	N/A	✓	N/A	N/A	N/A	N/A	N/A	N/A	N/A	N/A	N/A	N/A	N/A
-EC	Electrical Contacts	N/A	N/A	✓	N/A	✓	N/A	N/A	N/A	N/A	N/A	N/A	N/A	N/A	N/A	N/A	N/A
DIAL OPTIONS																	
-CL	Custom Logo Dial	✓	✓	✓	✓	✓	✓	✓	MQ	MQ	✓	MQ	MQ	MQ	✓	✓	✓
-HV	Hi-Vis Dial	✓	✓	✓	✓	✓	✓	✓	N/A	N/A	✓	N/A	N/A	N/A	✓	✓	N/A
-CB	Color Band	✓	✓	✓	✓	✓	✓	✓	MQ	MQ	✓	MQ	MQ	MQ	✓	✓	N/A
-CP	Color Pie	✓	✓	✓	✓	✓	✓	✓	MQ	MQ	✓	MQ	MQ	MQ	✓	✓	N/A
-DM	Dial Marking	✓	✓	✓	✓	✓	✓	✓	MQ	MQ	✓	MQ	MQ	✓	✓	✓	✓
-LP	Removable Lens Protector	N/A	N/A	N/A	N/A	✓	✓	✓	N/A	N/A	N/A	N/A	N/A	N/A	N/A	N/A	N/A
CALIBRATION OPTIONS																	
-R1	Upgrade to 1% FS Accuracy	✓	✓	STD	STD	N/A	N/A	N/A	N/A	N/A	✓	N/A	N/A	N/A	N/A	N/A	N/A
-R2	Upgrade to 0.5% FS Accuracy	N/A	N/A	✓	✓	STD	STD	STD	N/A	N/A	N/A	N/A	N/A	N/A	N/A	N/A	N/A
-R5	Upgrade to 1.5% FS Accuracy	✓	✓	N/A	N/A	N/A	N/A	N/A	N/A	N/A	N/A	N/A	N/A	N/A	✓	✓	N/A
-C1	1pt. NIST Calibration Cert	✓	✓	✓	✓	✓	✓	✓	✓	✓	✓	✓	✓	✓	✓	✓	N/A
-C3	3pt. NIST Calibration Cert	✓	✓	✓	✓	✓	✓	✓	✓	✓	✓	✓	✓	✓	✓	✓	N/A
-C5	5pt. NIST Calibration Cert	✓	✓	✓	✓	✓	✓	✓	✓	✓	✓	✓	✓	✓	✓	✓	N/A
-CX	10pt. NIST Calibration Cert	✓	✓	✓	✓	✓	✓	✓	✓	✓	✓	✓	✓	✓	✓	✓	STD
-CS	Calibration Sticker (No logged pts.)	✓	✓	✓	✓	✓	✓	✓	✓	✓	✓	✓	✓	✓	✓	✓	N/A
TAG OPTION																	
-TS	Stainless Steel Tag (1-10 Characters)	✓	✓	✓	✓	✓	✓	✓	✓	✓	✓	✓	✓	✓	✓	✓	✓
-TM	Stainless Steel Tag (11-80 characters)	✓	✓	✓	✓	✓	✓	✓	✓	✓	✓	✓	✓	✓	✓	✓	✓
-TP	Paper Tag	✓	✓	✓	✓	✓	✓	✓	✓	✓	✓	✓	✓	✓	✓	✓	✓
CERTIFICATION OPTIONS																	
-CM	General Material Conformance	✓	✓	✓	✓	✓	✓	✓	✓	✓	✓	✓	✓	✓	✓	✓	✓
-NC	Certificate of NACE Compliance	✓	✓	✓	✓	✓	✓	✓	N/A	N/A	N/A	N/A	N/A	N/A	✓	✓	✓
-PM	Positive Material Identification Certificate (PMI)	✓	✓	✓	✓	✓	✓	✓	✓	✓	✓	✓	✓	✓	✓	✓	✓
-HT	Hydrostatic Test per ASME B31.3 (5 min)	✓	✓	✓	✓	✓	✓	✓	✓	✓	✓	✓	✓	✓	✓	✓	✓
-LC	Argon Leak Check Certificate	✓	✓	✓	✓	✓	✓	✓	✓	✓	✓	✓	✓	✓	✓	✓	✓
CLEANING OPTIONS																	
-DG	Degreased - Wiped Clean of Oils, Shipped in Sealed Bag	✓	✓	✓	✓	✓	✓	✓	N/A	N/A	✓	N/A	N/A	✓	✓	✓	✓
-OX	Cleaned for Oxygen Service per ASME B40.1	✓	✓	✓	✓	✓	✓	✓	MQ	MQ	✓	MQ	MQ	✓	✓	✓	✓
-OY	Cleaned for Oxygen Service per MIL-STD-1330D	✓	✓	✓	✓	✓	✓	✓	N/A	N/A	✓	N/A	N/A	✓	✓	✓	✓
OTHER OPTIONS																	
-NR	No Restrictor Screw	✓	✓	✓	✓	✓	✓	✓	N/A	N/A	N/A	N/A	N/A	N/A	N/A	✓	N/A
-FI	Dry Gauge Shipped with Fill Plug Installed	N/A	N/A	N/A	N/A	✓	N/A	N/A	N/A	N/A	N/A	N/A	N/A	N/A	N/A	N/A	N/A

✓	Indicates that the option is available with the model.	N/A	Indicates the option is not available with this model.
STD	Indicates standard options with no additional cost.	MQ	Minimum order quantity applies.

†This option is only available with a plastic lens.

DRAFT

ASHCROFT®
Trust the shield.™

B-Series Switches – Pressure, Differential Pressure & Hydraulic



FEATURES

B-Series switches have proven reliable in such harsh environments as:

- ***Offshore oil rigs***
- ***Chemical and petrochemical plants***
- ***Pulp and paper mills***
- ***Steel mills***
- ***Power plants***
- ***Water and sewage-treatment plants***
- ***Other corrosive environments***

Ashcroft Inc. supplies highly reliable Ashcroft® switches and controls for industrial and process applications. We begin with rock-solid designs, matching the most appropriate technology with the safety and reliability requirements of the applications. The materials of construction are specified to Ashcroft's exacting standards, and product is built to last in the toughest applications. Our modern, responsive manufacturing facility is supported by an extensive network of stocking distributors and factory sales offices located in virtually every part of the world. Special application assistance is always just a telephone call away.

The Ashcroft B-Series switch line is designed to satisfy most switch requirements. Materials of construction have been selected for long life. A wide variety of precision switch elements are available to meet every application requirement, including hermetically sealed contacts for added reliability and safety. The actuators we use have been proven in more than 20 years of service in the world's plants and mills. Special designs are available for fire safety, NACE, limit control and other more stringent requirements. Simplicity and ease of use are stressed to improve reliability of the installation.

Applications include: pumps, compressors, washers, filters, degreasers, evapora-tors, recovery systems, food processing, ground support equipment, reverse osmosis systems, heat exchangers, hydraulic systems, lubrication systems, marine equipment, textile machinery, heating and air conditioning equipment.

Aerzen USA part no. 21-000746-02
Ashcroft Part No. B4-24-V-XRN-XJK-0/15 PSI

DRAFT

All specifications are subject to change without notice.
All sales subject to standard terms and conditions.
© Ashcroft Inc. 2015 01/15

Ashcroft Inc., 250 East Main Street, Stratford, CT 06614 USA
Tel: 203-378-8281 • Fax: 203-385-0408
email: info@ashcroft.com • www.ashcroft.com

ASHCROFT®
Trust the shield.™

B-Series Switches – Pressure, Differential Pressure & Hydraulic

Pressure & Differential Pressure Switches

B-Series pressure, differential pressure and vacuum switches use two different actuators depending on setpoint requirements. For setpoints between 2 and 3000 psi, the simple, rugged diaphragm-sealed piston actuator is used. This design features high reliability and choice of actuator seal materials for virtually every application. An optional welded design is also available for setpoints up to 1000 psi for maximum reliability. This design is available in 316 SS or Monel. Differential pressure models use a unique, dual diaphragm-sealed piston design that features very high static operating pressures and small size.

For setpoints between 4.5 and 150 inches of H_2O, a large diaphragm is used for increased sensitivity in both pressure and differential pressure designs with good choice of materials of construction.

All standard models feature ±1 percent of range setpoint repeatability and a minimum of 400 percent of range proof pressures.

These standard designs perform well in applications where shock and vibration could be a problem and may be used in conjunction with Ashcroft diaphragm seals in extreme services such as slurries or abrasive process fluids.

PRESSURE/VACUUM SWITCHES

Nominal Range[1]			Overpressure Ratings		Approximate Deadband[2] Switch Element				
			Proof psi	Burst psi	20, 26, 27	21, 24, 31	50	22	32, 42
Vacuum									
–30″ Hg	–760mm Hg	–100 kPa	250	400	0.3-0.7	1.5-3.0	0.5-2.2	0.4-1.5	2.1-4.2
Compound									
–15″ H_2O/ 15″ H_2O	–375mm H_2O/ 375mm H_2O	–3.7 kPa/ 3.7 kPa	20	35	0.15-.75/ 0.15-.75	1.5-2.5/ 1.5-2.5	0.45-2.0/ 0.45-2.0	0.5-1.2/ 0.5-1.2	2.1-3.5/ 2.1-3.5
–30″ H_2O/ 30″ H_2O	–760mm H_2O/ 760mm H_2O	–7.5 kPa/ 7.5 kPa	20	35	0.30-.60/ 0.30-.60	1.5-2.5/ 1.5-2.5	0.45-2.0/ 0.45-2.0	0.5-1.5/ 0.5-1.5	2.1-3.5/ 2.1-3.5
–30″ Hg/ 15 psi	–760mm Hg/ 1.0 kg/cm²	–100 kPa/ 100 kPa	250	400	0.5-1.0/ 0.3-0.7	2.0-3.0/ 0.5-1.5	0.75-2.5/ 0.5-1.0	0.7-1.8/ 0.7-1.4	2.8-4.2/ 0.7-2.1
–30″ Hg/ 30 psi	–760mm Hg/ 2.0 kg/cm²	–100 kPa/ 200 kPa	250	400	1.0-1.5/ 0.3-0.8	3.0-6.0/ 1.0-2.0	1.2-4.5/ 0.7-1.5	1.4-2.4 0.4-1.3	4.2-8.4/ 1.4-2.8
–30″ Hg/ 60 psi	–760mm Hg/ 4.0 kg/cm²	–100 kPa/ 400 kPa	250	400	2.0-3.0/ 0.7-1.5	5.0-9.0/ 3.0-5.0	2.5-7.0/ 1.1-4.0	2.8-4.5 1.0-2.3	7.0-12.0/ 4.2-7.9
Pressure									
10″ H_2O	250mm H_2O	2.5 kPa	20	35	0.2-0.5	1.0-2.0	0.35-1.5	0.4-1.0	1.4-2.8
30″ H_2O	750mm H_2O	7.5 kPa	20	35	0.3-0.6	1.5-2.5	0.45-2.0	0.5-2.0	2.1-3.5
60″ H_2O	1500mm H_2O	15 kPa	20	35	0.5-1.3	1.5-3.5	0.9-2.5	0.7-3.0	2.1-5.0
100″ H_2O	2500mm H_2O	25 kPa	20	35	0.6-1.6	2.5-5.5	1.1-4.0	1.0-4.0	3.5-7.7
150″ H_2O	3750mm H_2O	37 kPa	20	35	1.0-2.5	4.5-8.5	1.7-6.5	2.0-6.0	6.0-12.0
15 psi	1.0 kg/cm²	100 kPa	500	1500	0.1-0.35	0.5-1.5	0.2-1.0	0.4-1.0	0.7-2.1
30 psi	2.0 kg/cm²	200 kPa	500	1500	0.1-0.50	0.5-1.5	0.3-1.0	0.4-1.0	0.7-2.1
60 psi	4.0 kg/cm²	400 kPa	500	1500	0.3-1.0	1.0-3.5	0.7-2.5	0.6-2.0	1.4-5.0
100 psi	7.0 kg/cm²	700 kPa	1000	3000	0.5-1.7	1.5-5.0	1.1-3.5	1.0-4.5	2.1-7.0
200 psi	14 kg/cm²	1400 kPa	1000	3000	1-3	5-13	2-9	3.0-7.5	7.0-18.2
400 psi	28 kg/cm²	2800 kPa	2400	3000	4-7.5	5-24	5.5-15	4.0-11.0	7.0-33.6
600 psi	42 kg/cm²	4200 kPa	2400	3000	4-11	9-30	7-20	5.0-23.0	12.6-42
1000 psi	70 kg/cm²	7000 kPa	12000	18000	7-30	30-110	18-70	15-80	42-154
3000 psi	210 kg/cm²	2100 kPa	12000	18000	15-60	80-235	37-160	30.0-230	112-329

DIFFERENTIAL PRESSURE SWITCHES

Nominal Range[1]			Pressure Ratings		Approximate Deadband[2] Switch Element				
			Static Working Pressure	Proof psi	20, 26, 27	21, 24, 31	50	22	32, 42
30″ H_2O	750mm H_2O	7.5 kPa	5.4	21.6	0.3-0.6	1.5-2.5	0.45-2.0	0.5-2.0	2.1-3.5
60″ H_2O	1500mm H_2O	15 kPa	5.4	21.6	0.5-1.3	1.5-3.5	0.9-2.5	0.7-3.0	2.1-5.0
100″ H_2O	2500mm H_2O	25 kPa	5.4	21.6	0.6-1.6	2.5-5.5	1.1-4.0	1.0-4.0	3.5-7.7
150″ H_2O	3750mm H_2O	37 kPa	5.4	21.6	1.0-2.5	4.5-8.5	1.8-6.5	2.0-6.0	6.3-12.0
15 psid	1.0 kg/cm²	100 kPa	500	2000	0.5-1.0	2.0-5.0	0.7-3.5	0.7-1.4	2.8-7.0
30 psid	2.0 kg/cm²	200 kPa	500	2000	1.0-2.0	2.0-5.0	1.5-3.5	1.4-2.8	2.8-7.0
60 psid	4.0 kg/cm²	400 kPa	500	2000	2.0-4.0	3.0-6.0	3.0-4.5	2.8-5.6	4.2-8.5
100 psid	7.0 kg/cm²	700 kPa	1000	4000	4.0-10.0	11.0-20.0	7.0-15.0	6.0-14.0	16.0-28.0
200 psid	14.0 kg/cm²	1400 kPa	1000	4000	5.0-15.0	12.0-40.0	10.0-26.0	7.0-21.0	17.0-56.0
400 psid	28.0 kg/cm²	2800 kPa	1000	8000	10.0-20.0	20.0-60.0	15.0-40.0	14.0-28.0	28.0-84.0
600 psid	42 0 kg/cm²	4200 kPa	1000	8000	20.0-40.0	80.0-150.0	30.0-115.0	30.0-56.0	112.0-210.0

Values shown are for zero static working pressure.

NOTES:

1 Switches may generally be set between 15% and 100% of nominal range on increasing pressure. Consult factory for applications where setpoints must be lower.

2 All deadbands are given in English units as shown in the nominal range column. Deadbands shown are for switches with Buna N diaphragm. Approximate deadbands for optional diaphragms:

Viton:	Multiply Buna N value by 1.4
Teflon:	Multiply Buna N value by 1.2
Stainless Steel:	Multiply Buna N value by 1.7
Monel:	Multiply Buna N value by 1.7
Dual Switch Element:	Multiply single switch element value by 1.6 for approximate deadband.

DRAFT

B-Series Switches – Pressure, Differential Pressure & Hydraulic

B-SERIES PRESSURE AND DIFFERENTIAL PRESSURE SWITCH MODEL NUMBER:

To specify the exact switch desired, select entries from appropriate tables as shown in example below.

1		2		3	4			5
B	4	2	0	B	X	P	K	600 PSI

1 – ENCLOSURE	
B4	Pressure switch, Type 400, watertight enclosure meets NEMA 3, 4, 4X, 13 and IP66 requirements.
B7	Pressure switch, Type 700, explosion-proof enclosure meets Div. 1 & 2, NEMA 7, 9 and IP66 requirements.
D4	Differential pressure switch, Type 400, water-tight enclosure meets NEMA 3, 4, 4X, 13 and IP66 requirements.
D7	Differential pressure switch, Type 700, explosion-proof enclosure meets Div. 1 & 2, NEMA 7, 9 and IP66 requirements.

3 – ACTUATOR SEAL					
		Range			
Code and Material	**Process Temperature Limits °F(9)**	**Vac. ˝ H_2O**	**0-600 psi**	**1000 psi**	**3000 psi**
B – Buna-N	0 to 150	•	•	•	•
V – Viton	20 to 300	•	•	•	
T – Teflon	0 to 150	•	•	•	•
S – 316L(8)	0 to 300		•	•	
P – Monel(8)	0 to 300		•	•	

4 – OPTIONS	5 – RANGE
Use table from page 5	Select from table on page 2

NOTES:

1 Standard switch.
2 Not available with psid ranges.
3 Dual switches are 2 SPDT snap-action switches, not independently adjustable.
4 Wires cannot be terminated inside B400 switch enclosure.
5 Not available with type 700 enclosure.
6 Estimated dc. rating, 2.5A, 28 Vdc (not UL listed).
7 Estimated dc rating, 0.4A, 120 Vdc (not UL listed).
8 Available on pressure only.
9 Ambient operating temperature limits –20 to 150°F, all styles, setpoint shift of ±1% of range per 50°F temperature change is normal. Switches are calibrated at 70°F reference.

2 – SWITCH ELEMENT SELECTION		
Order Code	**Switch Elements UL/CSA Listed SPDT**	
20(7)	Narrow deadband ac	15A, 125/250 Vac
21	Ammonia service	5A, 125/250 Vac
22(6)	Hermetically sealed switch, narrow deadband	5A, 125/250 Vac
23	Heavy duty ac	22A, 125/250 Vac
24(1)	General purpose	15A, 125/250/480 Vac ½A, 125 Vdc ¼A, 250 Vdc; 6A, 30 Vdc
25(2)	Heavy duty dc	10A, 125 Vac or dc, ⅛ HP, 125 Vac or dc
26(7)	Sealed environment proof	15A, 125/250 Vac
27	High temperature 300°F	15A, 125/250 Vac
28(5)	Manual reset trip on increasing	15A, 125/250 Vac
29(5)	Manual reset trip on decreasing	15A, 125/250 Vac
31	Low level (gold) contacts	1A, 125 Vac
32	Hermetically sealed switch, general purpose	11A, 125/250 Vac 5A, 30 Vdc
42	Hermetically sealed switch, gold contacts	1A, 125 Vac
50	Variable deadband	15A, 125/250 Vac
UL/CSA Listed Dual (2 SPDT)		
61(7)	Dual narrow deadband	15A, 125/250 Vac
62(7)	Dual sealed environment proof	15A, 125/250 Vac
63	Dual high temp. 300°F	15A, 125/250 Vac
64	Dual general purpose	15A, 125/250/480 Vac ½A, 125 Vdc ¼A, 250 Vdc
65	Dual ammonia service	5A, 125/250 Vac
67(4,6)	Dual hermetically sealed switch, narrow deadband	5A, 125/250 Vac
68(4)	Dual hermetically sealed switch, general purpose	11A, 125/250 Vac 5A, 30 Vdc
70	Dual low level gold contacts	1A, 125 Vac
71(4)	Dual hermetically sealed switch, gold contacts	1A, 125 Vac

DRAFT

B-Series Switches – Pressure, Differential Pressure & Hydraulic

OPTIONAL FEATURES AND ACCESSORIES

B-SERIES SWITCH OPTIONS							
		Appicable Switch Series					
		Pressure		Differential Pressure		H	
Code	Description	(psi)	(in. H_2O)	(psi)	(in. H_2O)		Notes
XBP	Wall Mounting Bracket in. H_2O		•		•		
XBX	½″ Male NPT Bushing					•	
XCH	Chained Cover	•	•	•	•	•	
XC8	CSA Approval	•	•	•	•		10
XCN	ATEX Directive 94/9/EC	•	•	•	•		15
XD2	Dual Seal Rating (700 Series only)	•			•		
XFM	FM Approval – Single Element	•	•	•	•		14
	FM Approval – Dual Element	•	•	•	•		14
XFP	Fungus Proofing	•	•	•	•	•	
XFS	Factory Adjusted Setpoint	•	•	•	•	•	2
XG3	Belleville Actuator	•					13,14
XG5	UL Limit Control to 150″ H_2O				•		1, 14
XG6	UL Limit Control to 600 psi	•					1, 14
XG7	Secondary Chamber with Vent	•					11
XG8	Steam Limit Control to 300 psi	•					7
XG9	Fire Safe Welded Actuator	•					7
XHS	High Static Differential Pressure			•			12
XHX	High Pressure, 40 psi, (static) d/p only 160 psi (proof) d/p only 100 psi (proof) pressure only (″ H_2O)		•		•		
XJK	Left Conduit Connection	•	•	•	•	•	8
XJL	¾″ to ½″ Reducing Bushing	•	•	•	•	•	
XJM	Metric Electrical Conduit Connection M20 x 1.5	•	•	•	•	•	
XK3	Terminal Block (700 Series only)	•	•	•	•		6
XLE	6 foot Leads on the Micro Switch	•	•	•	•	•	
XNH	Tagging Stainless Steel	•	•	•	•	•	
XNN	Paper Tag	•	•	•	•	•	
XPK	Pilot Light(s) Top Mounted	•	•	•	•	•	4
XPM	¾″ Sealed Conduit Connection with 16″ Lead Wires	•	•	•	•	•	
XTA	316 Stainless Steel Pressure Connection for in. H_2O Range		•		•		
XTM	2″ Pipe Mounting Bracket	•	•	•	•		
XUD	316 Stainless Steel Pressure Conn.			•			
XUX	IECEx Rating (700 Series only)	•	•	•	•	•	
X06	Pressure Connection: ½ NPT Male, ¼ NPT Female 316 Stainless Steel (Combination)	•	•	•	•		5
X07	½ NPTF Press. Conn., 316 SS	•	•	•	•		9
X6B	Cleaned for Oxygen Service	•	•	•			3
	Diaphragm Seal	•	•	•	•		

NOTES:

1 Buna N and Viton diaphragm.
2 Advise static or working pressure for differential pressure switches.
3 Buna N cannot be cleaned for oxygen service.
4 N/A on 700 Series.
5 Standard with 1000 and 3000 psi ranges. Bottom connection only on DP in H_2O ranges.
6 Terminal Blocks standard with 700 dual switches.
7 Stainless steel diaphragm only.
8 Standard on 700 Series. N/A with DPDT element on 400 Series.
9 N/A with Monel diaphragm.
10 Standard on 400 Series.
11 SS diaphragm required. Teflon diaphragm is the backup. NEMA 7 only.
12 Buna N and Viton diaphragm – 15#D & 30#D only.
13 24, 32, 64 or 68 element only.
14 N/A on all combinations.
15 700 Series only.

Ex II 2GD
Ex d IIC T6 Gb
Ex t IIIC T85° C Db IP 6X
(Ta = –20°C to +60°C)

DRAFT

B-Series Switches – Pressure, Differential Pressure & Hydraulic

Dimensions – 400 Series

Pressure switch – psi ranges

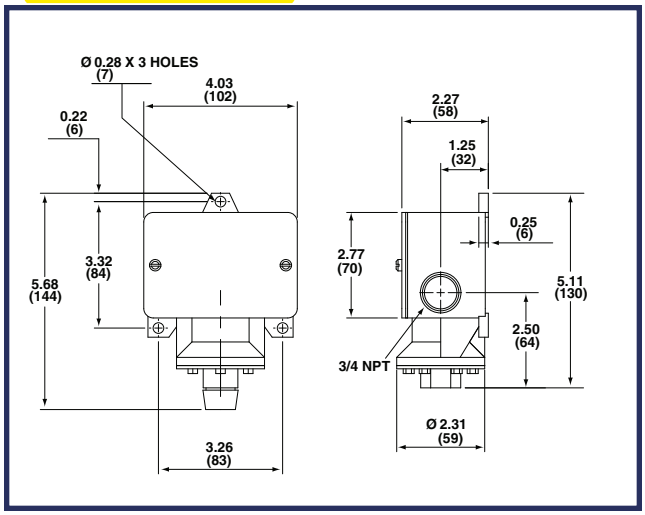

Pressure switch – inches of water ranges

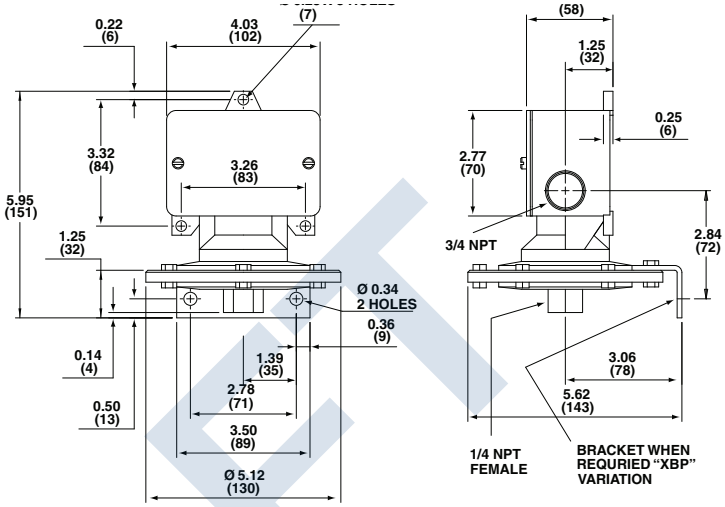

Differential pressure switch – psi differential ranges

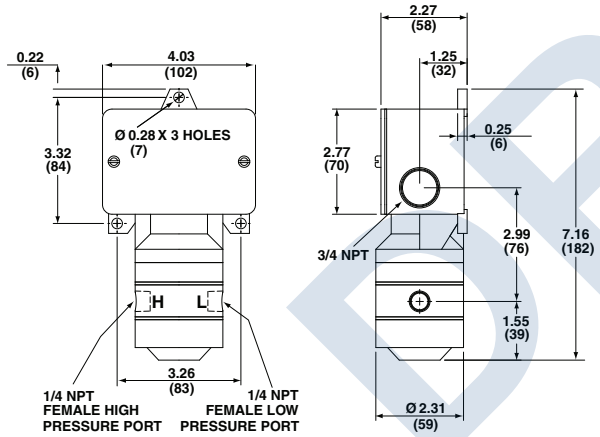

Differential pressure switch – inches of water ranges

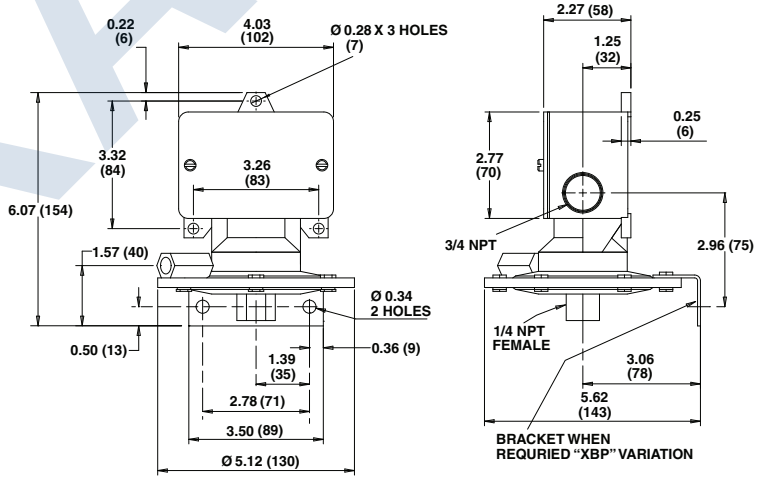

DRAFT

NOTICE:
THIS DRAWING AND ALL INFORMATION HEREIN IS THE PROPERTY OF AERZEN USA CORP. AND ITS SUBSIDIARIES AND SHALL NOT BE REPRODUCED BY ANY MEANS IN WHOLE OR IN PART OR USED AS THE BASIS FOR MANUFACTURE WITHOUT WRITTEN PERMISSION.

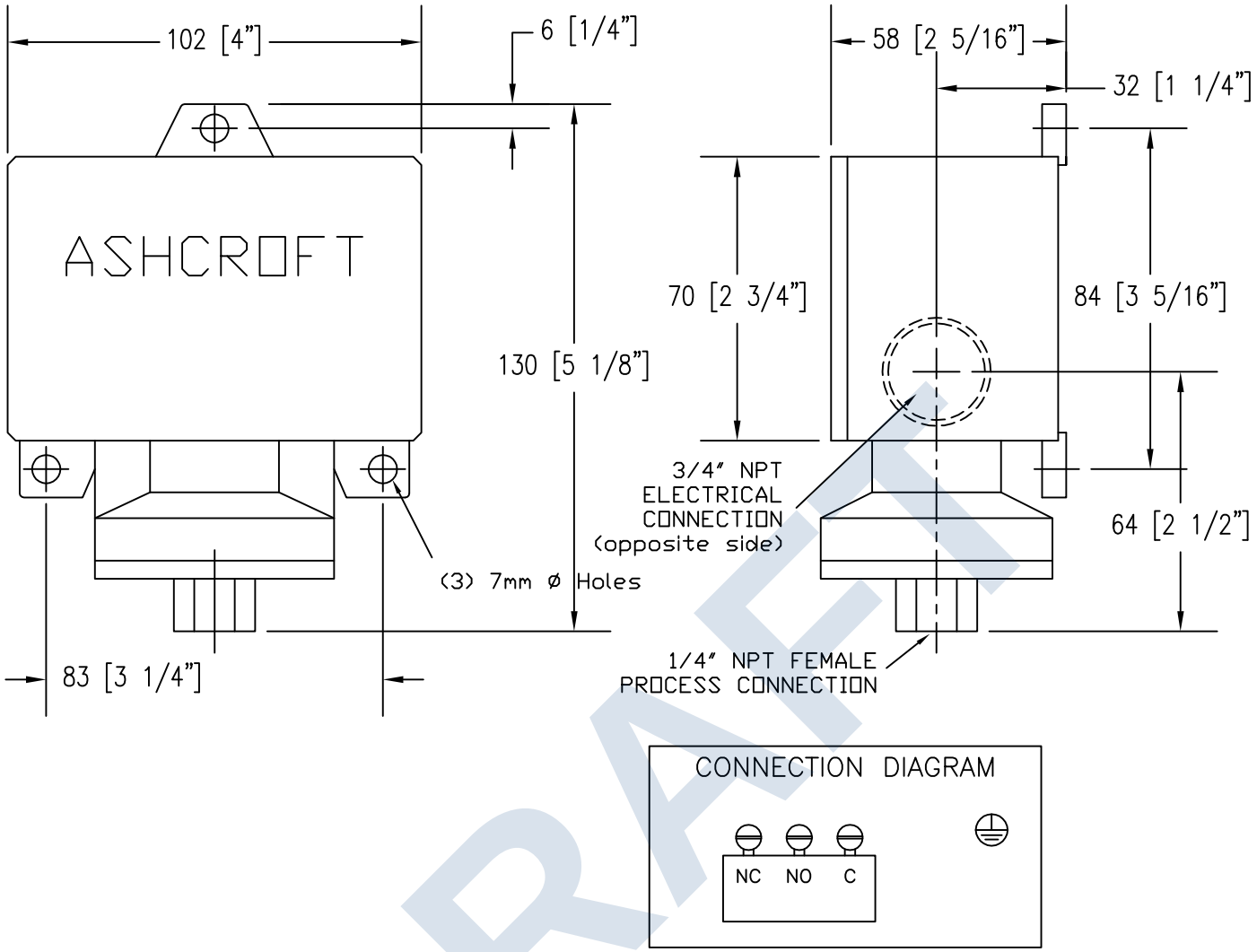

DRAFT

ASHCROFT TYPE B4–24–V–XRN–XJK–15 PSI

B4 = Type 400 Pressure Switch in NEMA 4X enclosure
24 = Single general purpose 15A, 110–480V switch
SPDT snap–acting,
V = Viton Actuator Seal (good for 20 to 300°F)
XRN = Internal Reference Scale
XJK = Left side conduit connection
15 = Operating Range (0 to 15 PSIG)

AERZEN
Aerzen USA Corp.
645 SANDS CT, COATESVILLE PA 19320
(610) 380–0244 PH, (610) 380–0278 FX
www.aerzenusa.com

DISCHARGE PRESSURE SWITCH

Date	Doc #	Page
May 2002	32–0021–02 revision –	1 of 1

Für diese Zeichnung behalten wir uns alle Eigentums- und Urheberrechte vor.
Sie bleibt unser geistiges Eigentum und darf ohne unsere ausdrückliche
vorherige schriftliche Genehmigung weder vervielfältigt, verwendet noch
Dritten zugänglich gemacht werden.

For this drawing we reserve all proprietary rights and copyrights.
It remains our intellectual property and may not be copied, used or disclosed
to third parties without our prior express approval in writing.

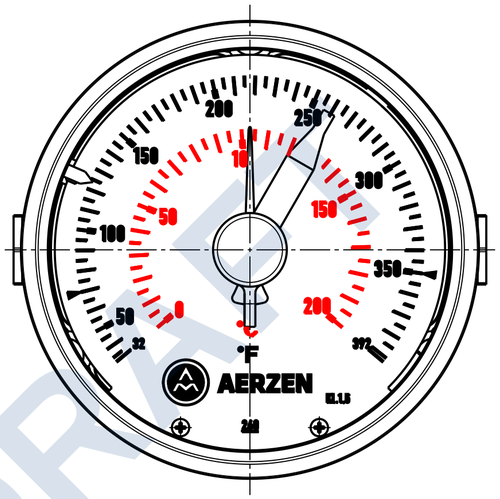

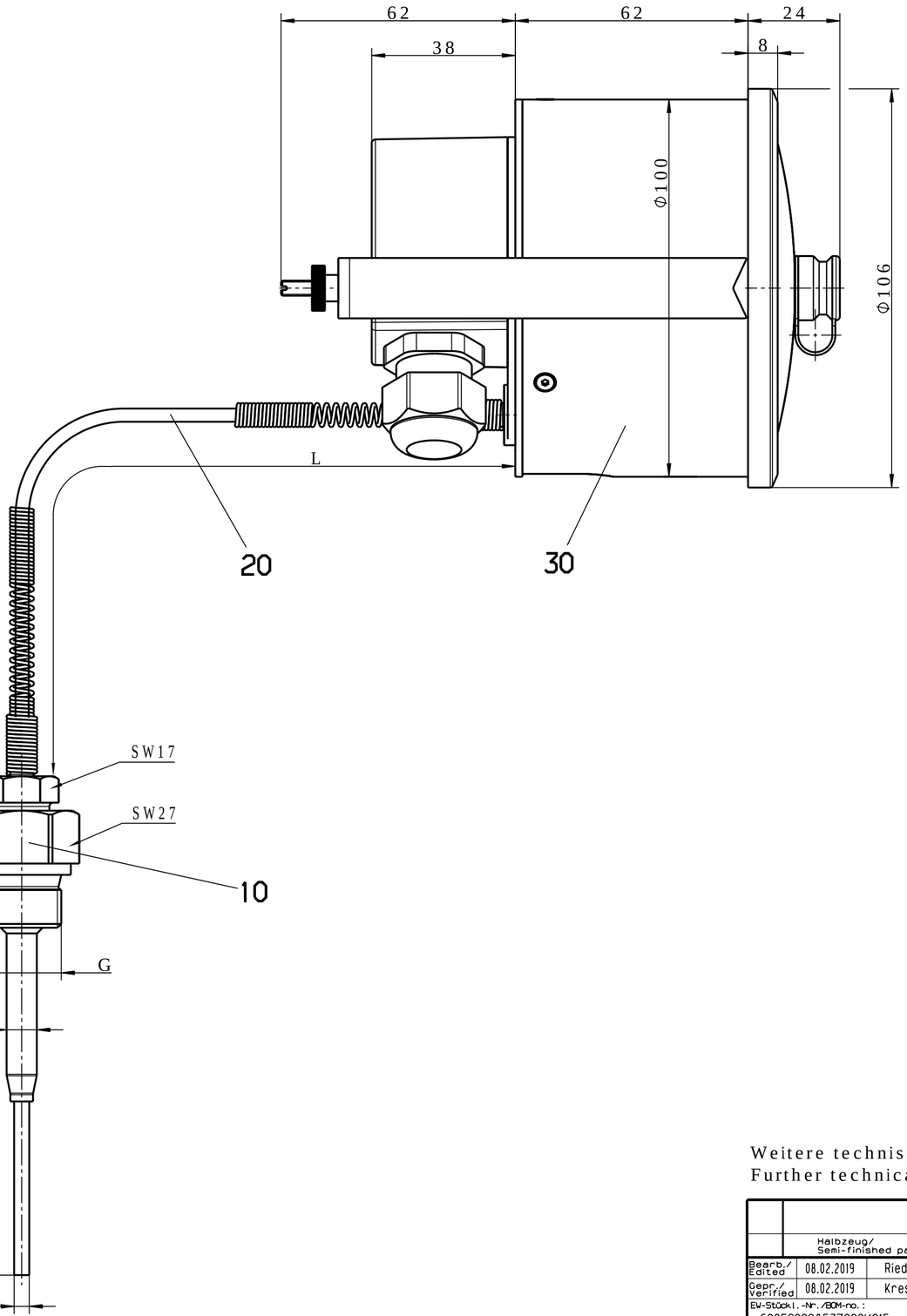

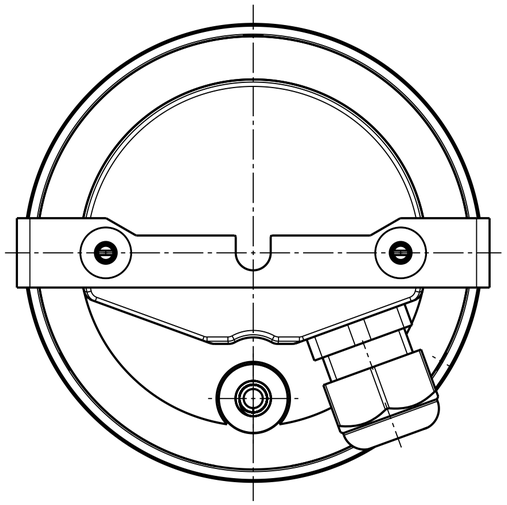

Typenschlüssel/ type code: 608520/2110-832-23-4000-876-8-104-26-46-106-20/426,430,477,522

Pos.	Pos.	001
Typ	type	2110
AB [°C]	display range	0...+200
AB-Einheit	display range oneness	°F/°C
Fl Typ	capillary typ	-
Werkst. Fühler	material bulb	CrNi
L [mm]	L	4000
L_2 [mm]	L_2	-
Anschluß	connection	SH 10
G Gewinde	treath	G1/2
Werkst. Anschluß	material connection	CuZn
d [mm]	d	4
D [mm]	D	8
S [mm]	S	106
Schaltausgang	switching output	SA20
TZ	extra code	426,430,477,522
Laser Nr	laser No.	2463
Weitere Angaben n. Typenblatt	more information at datasheet	60.8520
Bedienungsanleitung	user manual	B60.8520
Grundtyp	type	85.364.00.00
TN	partnumber	00717805

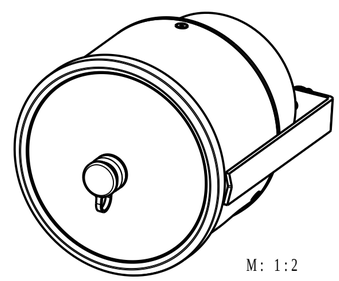

M: 1:2

Weitere technische Daten nach Typenblatt 60.8520
Further technical details as per data sheet 60.8520

Halbzeug/ Semi-finished part	Werkstoff-Nr./ Material-no.	DIN-Kurzbezeichnung/ DIN-code	Oberfläche/ Surface

Bearb./ Edited	08.02.2019	Riedel	
Gepr./ Verified	08.02.2019	Kress	
EW-Stückl.-Nr./BOM-no.: 60852000A53Z000K015 00718107			

Zeigerkontakt-thermometer

60852000A00Z001 K015
Zeichnungs-Nr./Drawing-no.

Vers. Rev.	Änderung/ Modification	Datum/ Date	Name
02	EW-70	21.02.2019	Riedel
01	EW-70	14.02.2019	Riedel
00	EW-70	08.02.2019	Riedel

Ersatz für Nr./ Replace

JUMO GmbH & Co. KG Fulda Germany

Maße ohne Toleranzangabe/ Tol. unless otherwise specified: DIN ISO 2768-m

Maßstab/Scale: 1:1

Teile-Nr./Part-no.

Größe/ Size: A2

Blatt/ Sheet: 01/01

Für diese Zeichnung behalten wir uns alle Eigentums- und Urheberrechte vor.
Sie bleibt unser geistiges Eigentum und darf ohne unsere ausdrückliche
vorherige schriftliche Genehmigung weder vervielfältigt, verwendet noch
Dritten zugänglich gemacht werden.

For this drawing we reserve all proprietary rights and copyrights.
It remains our intellectual property and may not be copied, used or disclosed
to third parties without our prior express approval in writing.

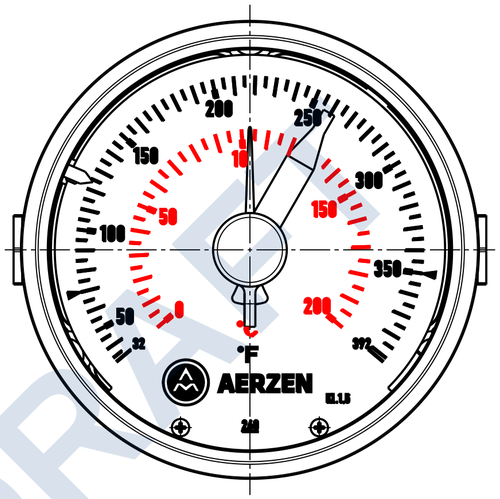

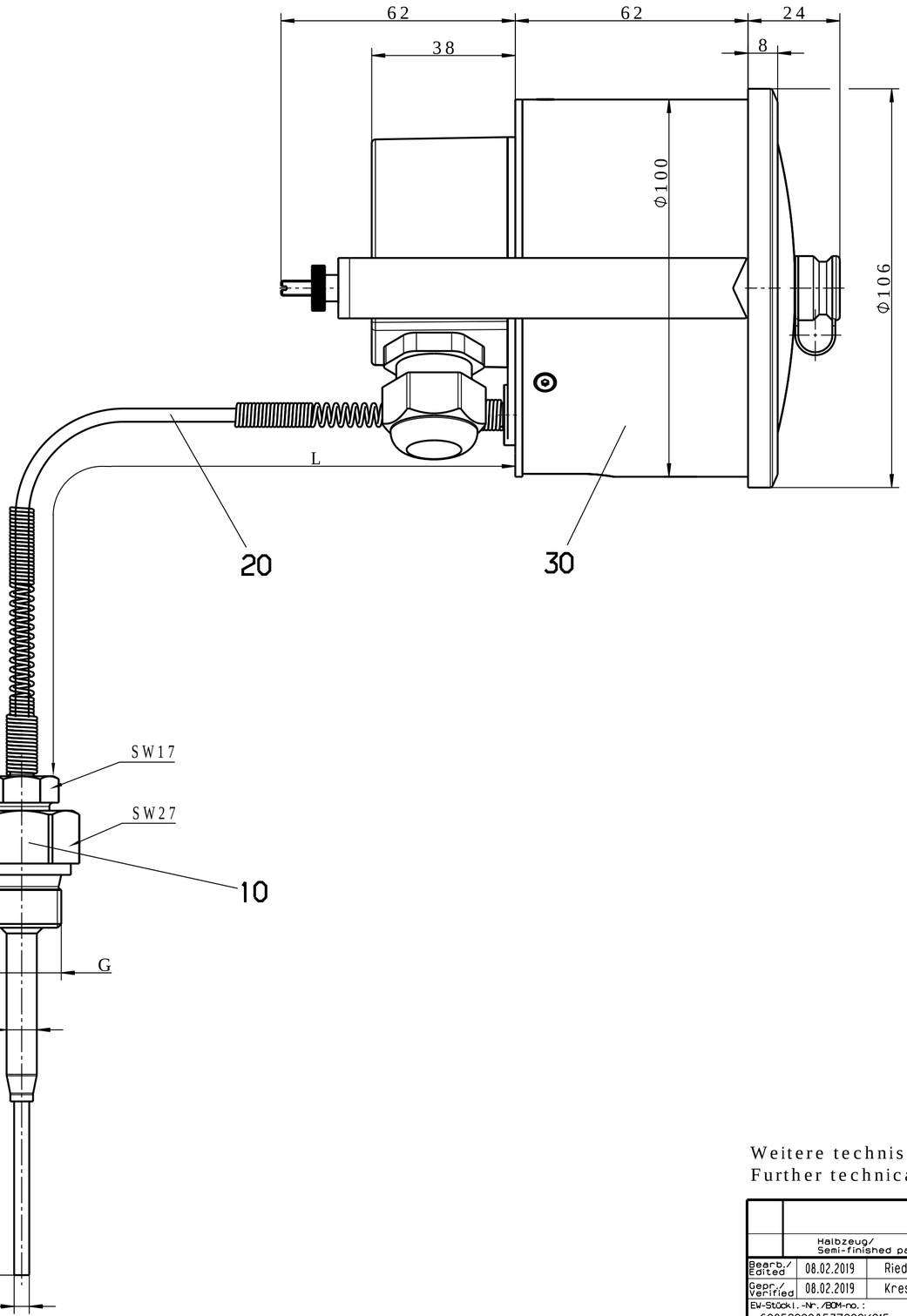

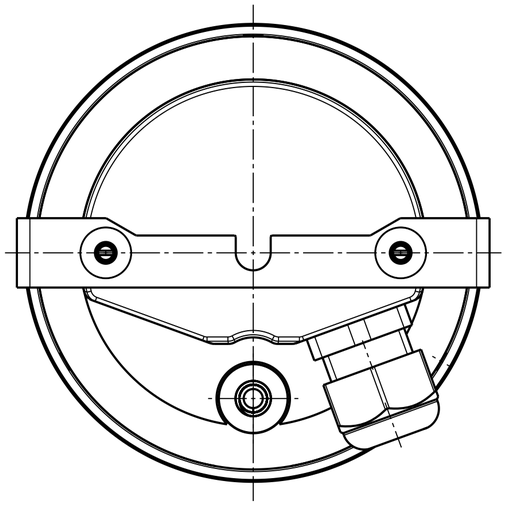

Typenschlüssel/ type code: 608520/2110-832-23-4000-876-8-104-26-46-106-20/426,430,477,522

Pos.	Pos.	001
Typ	type	2110
AB [°C]	display range	0...+200
AB-Einheit	display range oneness	°F/°C
Fl Typ	capillary typ	-
Werkst. Fühler	material bulb	CrNi
L [mm]	L	4000
L_2 [mm]	L_2	-
Anschluß	connection	SH 10
G Gewinde	treath	G1/2
Werkst. Anschluß	material connection	CuZn
d [mm]	d	4
D [mm]	D	8
S [mm]	S	106
Schaltausgang	switching output	SA20
TZ	extra code	426,430,477,522
Laser Nr	laser No.	2463
Weitere Angaben n. Typenblatt	more information at datasheet	60.8520
Bedienungsanleitung	user manual	B60.8520
Grundtyp	type	85.364.00.00
TN	partnumber	00717805

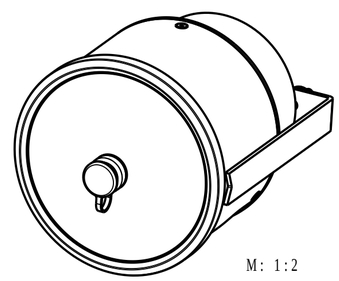

M: 1:2

Weitere technische Daten nach Typenblatt 60.8520
Further technical details as per data sheet 60.8520

Halbzeug/ Semi-finished part	Werkstoff-Nr./ Material-no.	DIN-Kurzbezeichnung/ DIN-code	Oberfläche/ Surface

Bearb./ Edited	08.02.2019	Riedel	
Gepr./ Verified	08.02.2019	Kress	
EW-Stückl.-Nr./BOM-no.: 60852000A53Z000K015 00718107			

Zeigerkontakt-thermometer

60852000A00Z001 K015
Zeichnungs-Nr./Drawing-no.

Vers. Rev.	Änderung/ Modification	Datum/ Date	Name
02	EW-70	21.02.2019	Riedel
01	EW-70	14.02.2019	Riedel
00	EW-70	08.02.2019	Riedel

Ersatz für Nr./ Replace

JUMO GmbH & Co. KG Fulda Germany

Maße ohne Toleranzangabe/ Tol. unless otherwise specified: DIN ISO 2768-m

Maßstab/Scale: 1:1

Teile-Nr./Part-no.

Größe/ Size: A2

Blatt/ Sheet: 01/01

JUMO GmbH & Co. KG
Delivery address: Mackenrodtstraße 14
36039 Fulda, Germany
Postal address: 36035 Fulda, Germany
Phone: +49 661 6003-0
Fax: +49 661 6003-607
E-mail: mail@jumo.net
Internet: www.jumo.net

JUMO Instrument Co. Ltd.
JUMO House
Temple Bank, Riverway
Harlow, Essex CM20 2DY, UK
Phone: +44 1279 635533
Fax: +44 1279 635262
E-mail: sales@jumo.co.uk
Internet: www.jumo.co.uk

JUMO Process Control, Inc.
6733 Myers Road
East Syracuse, NY 13057, USA
Phone: 315-437-5866
1-800-554-5866
Fax: 315-437-5860
E-mail: info.us@jumo.net
Internet: www.jumousa.com

Contact dial thermometer

Particularities

- Temperature controller with actual value display as panel-mounting or add-on device
- Stainless steel case with bayonet lock
- Class 1.5
- Protection class IP 53
- Case sizes ∅: 60 mm, 80 mm and 100 mm
  Front frame: 72x72 mm and 96x96 mm



Type 608520/2380



Type 608550/1080

Brief description

Contact dial thermometer are devices with actual value display for temperature measurement, control and monitoring and can be used universally.

The temperature depending volume change in a measuring system filled with liquid or the temperature depending pressure change in a measuring system filled with gas is converted to a rotational movement of the actual value indicator by a bourdon tube, no transmission gear is required. The microswitch is actuated by the rotational movement of the indicator shaft via a tap system.

DRAFT

Technical Data

Case and front frame	Stainless steel (1.4301)
Cover cap	Plastic (PA6), gray, UV stabilized
Protection type	IP 51 as per DIN EN 60529 (IP 53 with extra code 401)
Front pane	Acryl glass (PMMA)
Chassis	Aluminum (3.2582.05)
Scale	white, labeled in black
Display	Class 1.5 similar to DIN EN 13190
Anti-kink spring	for devices with capillary on the case and the temperature probe
Set point value setting	by set point controller in the front window
Display correction	on the rear
Limit value temperatures	for transport and storage -30°C...+70°C (for display range -40...+40°C up to max. 50°C; -30...+50°C up to max. 60°C)
Rated position	any

JUMO GmbH & Co. KG
Delivery address: Mackenrodtstraße 14
36039 Fulda, Germany
Postal address: 36035 Fulda, Germany
Phone: +49 661 6003-0
Fax: +49 661 6003-607
E-mail: mail@jumo.net
Internet: www.jumo.net

JUMO Instrument Co. Ltd.
JUMO House
Temple Bank, Riverway
Harlow, Essex CM20 2DY, UK
Phone: +44 1279 635533
Fax: +44 1279 635262
E-mail: sales@jumo.co.uk
Internet: www.jumo.co.uk

JUMO Process Control, Inc.
6733 Myers Road
East Syracuse, NY 13057, USA
Phone: 315-437-5866
1-800-554-5866
Fax: 315-437-5860
E-mail: info.us@jumo.net
Internet: www.jumousa.com

Technical Data

Display range (AB)	Display range in °C	Measuring range in °C	Tolerance in °C
469	-40...+40	-30...+30	1.5
643	-20...+120	-20...+120	3.0
807	0...+60	+10...+50	1.5
814	0...+100	+10...+90	1.5
818	0...+120	+20...+100	3.0
832	0...+200	+20...+180	3.0
840	0...+300	+30...+270	6.0
848	0...+400	+50...+350	6.0
854	0...+500	+50...+450	8.0
848	0...+600	+100...+500	10.0

	Liquid filling	**Gas filling**
Measuring system	Display range (AB) ≤ 350°C	Display range (AB) ÷ 400°C
Time behavior	approx. 12 s, measured in water, with a probe Ø of 6 mm made of Cu.	approx. 4 s, measured in oil, with a probe Ø of 10 mm made of stainless steel.
Ambient temperature influence effect	In % of the display range (referring to the deviation from the reference value +23°C)	
on case	0.15% of the display range per K ambient temperature change	0.05% of the display range per K ambient temperature change
on capillary (per m)	0.03% of the display range per K ambient temperature change	no influence
	Higher ambient temperature – higher temperature display – lower switching point	
Anti-kink spring	for devices with capillary on the case and the temperature probe	
Set point value setting	by set point controller in the front window	
Display correction	on the rear	
Limit value temperatures	for transport and storage -30°C...+70°C (for display range -40...+40°C up to max. 50°C; -30...+50°C up to max. 60°C)	
Rated position	any	

	standard	**Extra code (TZ) 650**
Electric contact		
Type of contact	Single-pole microswitch with mechanically actuate change-over contact	
Contact rating	AC 230V, +10/-15%, 48...63Hz, cos φ = 1 (0.6)	
	5 (1.5) A	10 (3) A
Hysteresis	approx. 1.5% of the display range	1.5 to 3% of the display range
Switching point accuracy	± 0.5% of the display range referring to the switch-off point with rising temperature	
Switching reliability	To ensure a high switching reliability, we recommend a minimum voltage of 24 V and a minimum current of 100 mA	

	standard	Design 02 and 22	**Design 10, 23 and TZ 426**	**Case Ø 60 mm**
Electrical connection	Screw-type terminals, connection cross section up to 2.5 mm^2	Connection cable 0.5 m with screw-type terminals	Cover cap with cable screw-connection, suitable for cable Ø from 6.5 to 13 mm	Cover cap with cable screw-connection, suitable for cable Ø from 8 to 10 mm

DRAFT

JUMO GmbH & Co. KG
Delivery address: Mackenrodtstraße 14
36039 Fulda, Germany
Postal address: 36035 Fulda, Germany
Phone: +49 661 6003-0
Fax: +49 661 6003-607
E-mail: mail@jumo.net
Internet: www.jumo.net

JUMO Instrument Co. Ltd.
JUMO House
Temple Bank, Riverway
Harlow, Essex CM20 2DY, UK
Phone: +44 1279 635533
Fax: +44 1279 635262
E-mail: sales@jumo.co.uk
Internet: www.jumo.co.uk

JUMO Process Control, Inc.
6733 Myers Road
East Syracuse, NY 13057, USA
Phone: 315-437-5866
1-800-554-5866
Fax: 315-437-5860
E-mail: info.us@jumo.net
Internet: www.jumousa.com

Note:

Physical and toxic features of the expansion means, which could emerge in the event of a measuring system break.

Control range with scale limit value	Hazardous reactions	Fire and explosion hazard		hazardous to waters	Information about toxicology		
		Ignition temperature	Explosion limit		irritant	dangerous to health	toxic
< +200 °C	no	+ 355 °C	0.6 - 8 V%	yes	yes	[a]	no
≥ 200 °C ≤ +350 °C		+ 490 °C	- -	yes	yes	[a]	
> 350 °C ≤ +500 °C		no	no	no	no	no	

[a] There is currently no statement by the health authority concerning hazards to health in the event of short-term exposure and low concentration, e.g. measuring system break.

DRAFT

JUMO GmbH & Co. KG
Delivery address: Mackenrodtstraße 14
36039 Fulda, Germany
Postal address: 36035 Fulda, Germany
Phone: +49 661 6003-0
Fax: +49 661 6003-607
E-mail: mail@jumo.net
Internet: www.jumo.net

JUMO Instrument Co. Ltd.
JUMO House
Temple Bank, Riverway
Harlow, Essex CM20 2DY, UK
Phone: +44 1279 635533
Fax: +44 1279 635262
E-mail: sales@jumo.co.uk
Internet: www.jumo.co.uk

JUMO Process Control, Inc.
6733 Myers Road
East Syracuse, NY 13057, USA
Phone: 315-437-5866
1-800-554-5866
Fax: 315-437-5860
E-mail: info.us@jumo.net
Internet: www.jumousa.com

Dimensions

Type:
608520/0280

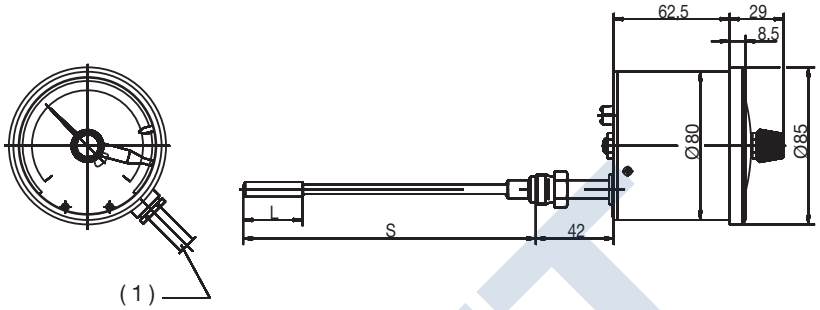

(1) Connection line 0.6 m long with screw terminal

Type:
608520/0210

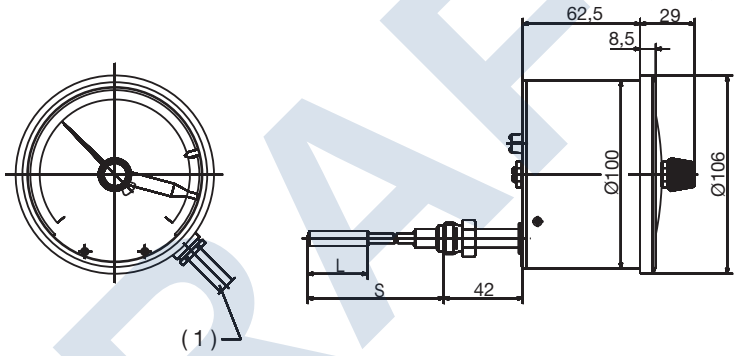

(1) Connection line 0.6 m long with screw terminal

Type:
608520/1080

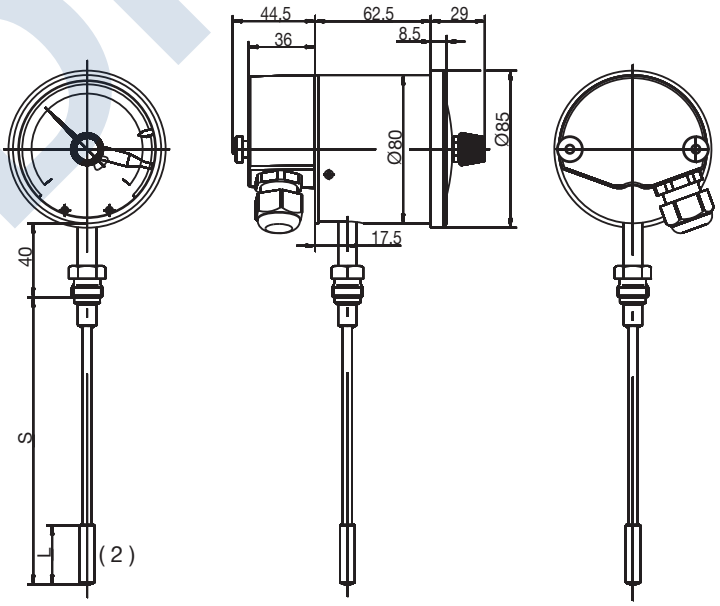

(2) active probe dimension

DRAFT

JUMO GmbH & Co. KG
Delivery address: Mackenrodtstraße 14
36039 Fulda, Germany
Postal address: 36035 Fulda, Germany
Phone: +49 661 6003-0
Fax: +49 661 6003-607
E-mail: mail@jumo.net
Internet: www.jumo.net

JUMO Instrument Co. Ltd.
JUMO House
Temple Bank, Riverway
Harlow, Essex CM20 2DY, UK
Phone: +44 1279 635533
Fax: +44 1279 635262
E-mail: sales@jumo.co.uk
Internet: www.jumo.co.uk

JUMO Process Control, Inc.
6733 Myers Road
East Syracuse, NY 13057, USA
Phone: 315-437-5866
1-800-554-5866
Fax: 315-437-5860
E-mail: info.us@jumo.net
Internet: www.jumousa.com

Type:
608520/1010

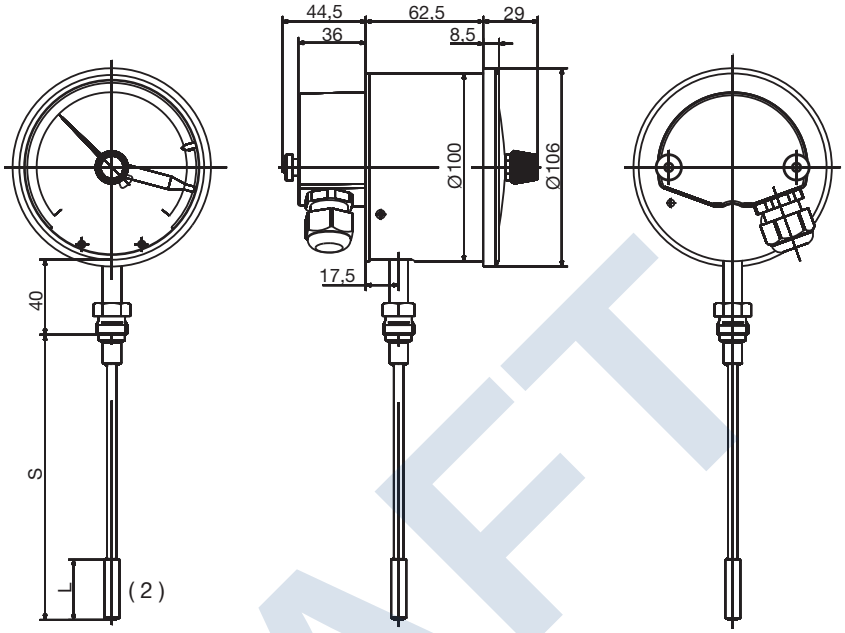

(2) active probe dimension

Type:
608520/2060

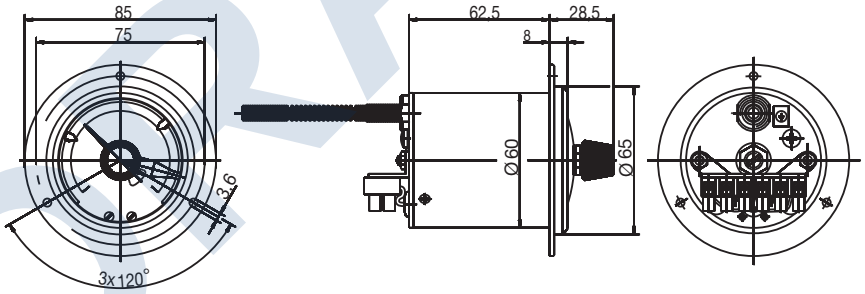

Panel cut-out for case
Ø 60 mm = $62^{+0,5}_{0}$mm

Type:
608520/2080

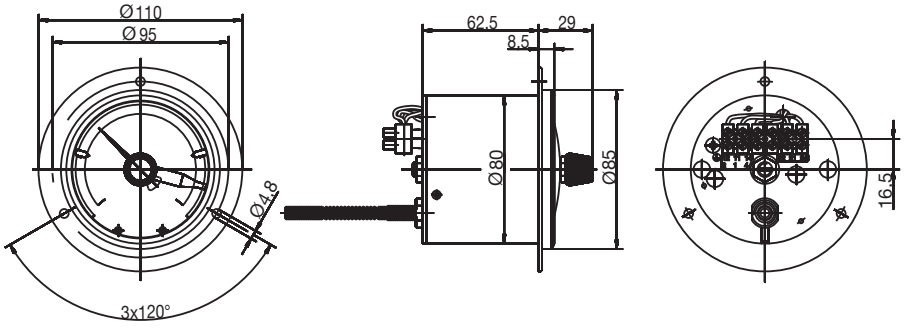

Panel cut-out for case
Ø 80 mm = $62^{+0,5}_{0}$mm

DRAFT

JUMO GmbH & Co. KG
Delivery address: Mackenrodtstraße 14
36039 Fulda, Germany
Postal address: 36035 Fulda, Germany
Phone: +49 661 6003-0
Fax: +49 661 6003-607
E-mail: mail@jumo.net
Internet: www.jumo.net

JUMO Instrument Co. Ltd.
JUMO House
Temple Bank, Riverway
Harlow, Essex CM20 2DY, UK
Phone: +44 1279 635533
Fax: +44 1279 635262
E-mail: sales@jumo.co.uk
Internet: www.jumo.co.uk

JUMO Process Control, Inc.
6733 Myers Road
East Syracuse, NY 13057, USA
Phone: 315-437-5866
1-800-554-5866
Fax: 315-437-5860
E-mail: info.us@jumo.net
Internet: www.jumousa.com

Type:
608520/2010

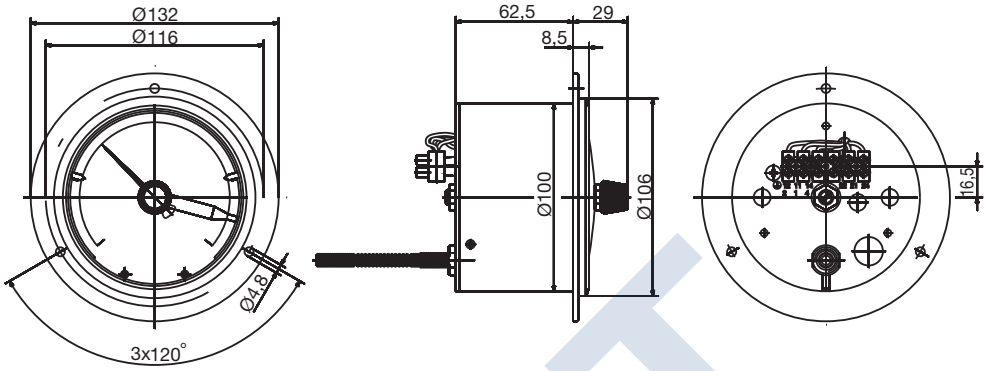

Panel cut-out for case
Ø 100 mm = $100^{+0,5}_{0}$mm

Type:
608520/2160

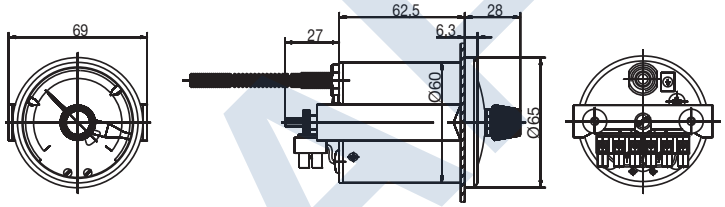

Panel cut-out for case
Ø 60 mm = $62^{+0,5}_{0}$mm

Type:
608520/2180

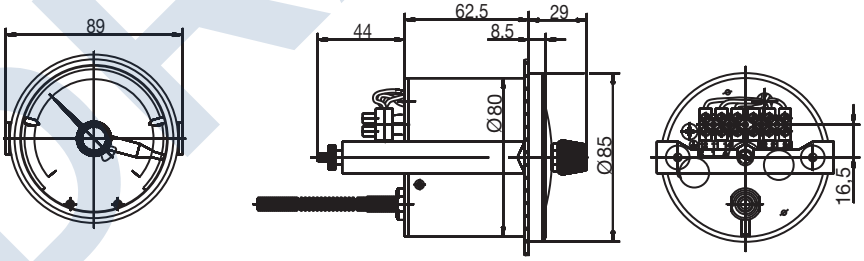

Panel cut-out for case
Ø 80 mm = $62^{+0,5}_{0}$mm

Type:
608520/2110

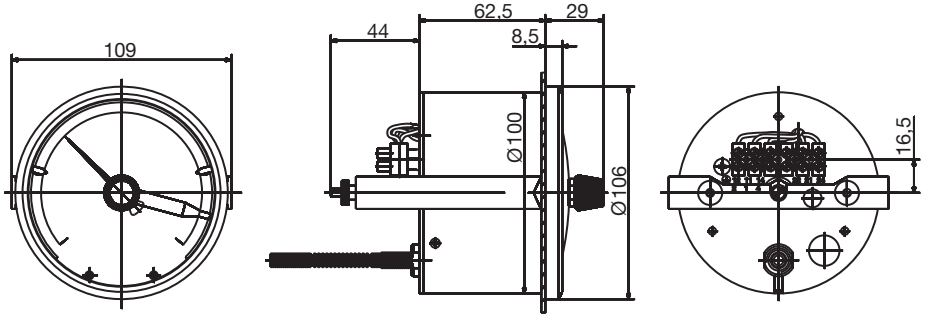

Panel cut-out for case
Ø 100 mm = $100^{+0,5}_{0}$mm

DRAFT

JUMO GmbH & Co. KG
Delivery address: Mackenrodtstraße 14
36039 Fulda, Germany
Postal address: 36035 Fulda, Germany
Phone: +49 661 6003-0
Fax: +49 661 6003-607
E-mail: mail@jumo.net
Internet: www.jumo.net

JUMO Instrument Co. Ltd.
JUMO House
Temple Bank, Riverway
Harlow, Essex CM20 2DY, UK
Phone: +44 1279 635533
Fax: +44 1279 635262
E-mail: sales@jumo.co.uk
Internet: www.jumo.co.uk

JUMO Process Control, Inc.
6733 Myers Road
East Syracuse, NY 13057, USA
Phone: 315-437-5866
1-800-554-5866
Fax: 315-437-5860
E-mail: info.us@jumo.net
Internet: www.jumousa.com

Type:
608520/2280

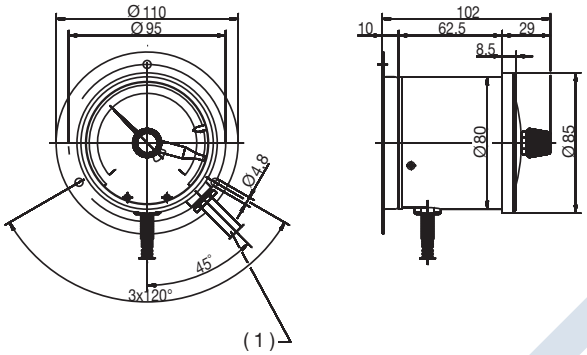

(1) Connection line 0.6 m long with screw terminal

Type:
608520/2210

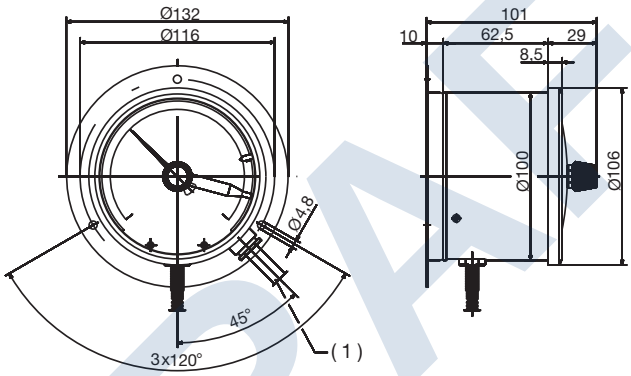

(1) Connection line 0.6 m long with screw terminal

Type:
608520/2380

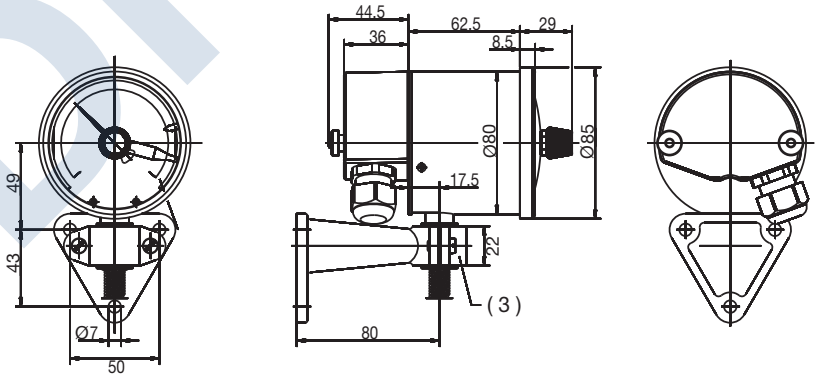

(3) Spigot Ø 20 mm

DRAFT

JUMO GmbH & Co. KG
Delivery address: Mackenrodtstraße 14
36039 Fulda, Germany
Postal address: 36035 Fulda, Germany
Phone: +49 661 6003-0
Fax: +49 661 6003-607
E-mail: mail@jumo.net
Internet: www.jumo.net

JUMO Instrument Co. Ltd.
JUMO House
Temple Bank, Riverway
Harlow, Essex CM20 2DY, UK
Phone: +44 1279 635533
Fax: +44 1279 635262
E-mail: sales@jumo.co.uk
Internet: www.jumo.co.uk

JUMO Process Control, Inc.
6733 Myers Road
East Syracuse, NY 13057, USA
Phone: 315-437-5866
1-800-554-5866
Fax: 315-437-5860
E-mail: info.us@jumo.net
Internet: www.jumousa.com

Type:
608520/2310

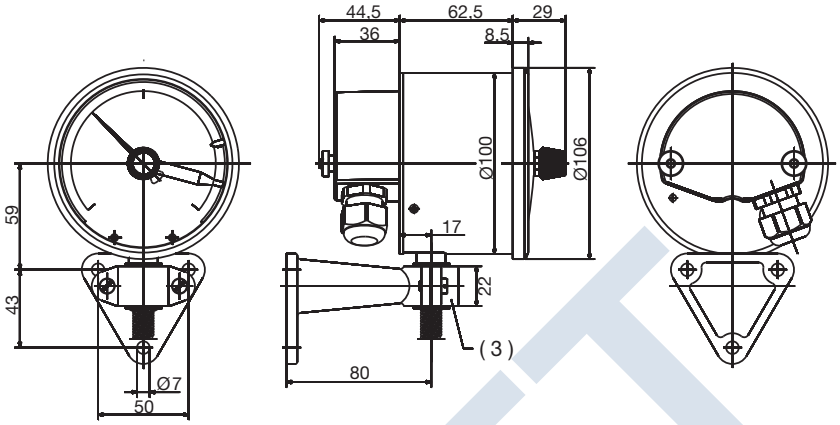

(3) Spigot Ø 20 mm

Type:
608520/2572

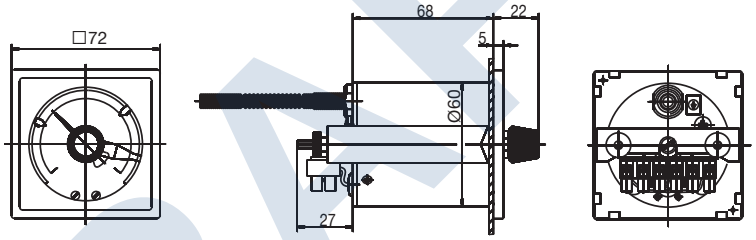

Panel cut-out for front frame
72 x 72 mm = Ø $62^{+0,5}$mm

Type:
608520/2596

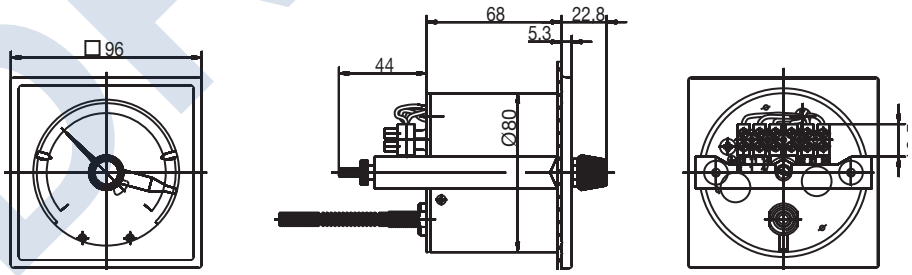

Panel cut-out for front frame
96 x 96 mm = Ø $82^{+0,5}$mm oder
96 x 96 mm = 92 x $92^{+0,5}$mm (TZ 460)

DRAFT

JUMO GmbH & Co. KG
Delivery address: Mackenrodtstraße 14
36039 Fulda, Germany
Postal address: 36035 Fulda, Germany
Phone: +49 661 6003-0
Fax: +49 661 6003-607
E-mail: mail@jumo.net
Internet: www.jumo.net

JUMO Instrument Co. Ltd.
JUMO House
Temple Bank, Riverway
Harlow, Essex CM20 2DY, UK
Phone: +44 1279 635533
Fax: +44 1279 635262
E-mail: sales@jumo.co.uk
Internet: www.jumo.co.uk

JUMO Process Control, Inc.
6733 Myers Road
East Syracuse, NY 13057, USA
Phone: 315-437-5866
1-800-554-5866
Fax: 315-437-5860
E-mail: info.us@jumo.net
Internet: www.jumousa.com

Order details

Order code	(1)	Basic type
608520		Mechanical Contact dial thermometer, class 1.5
608550		Mechanical Contact dial thermometer, class 1.5, Transformer version (only basic type extension 1080)

	(2)	Basic type extensions		Case size Ø
0280		Design 02	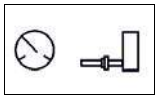	80 mm
0210				100 mm
1080		Design 10	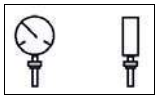	80 mm
1010				100 mm
2060		Design 20	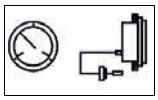	60 mm
2080				80 mm
2010				100 mm
2160		Design 21	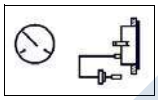	60 mm
2180				80 mm
2110				100 mm
2280		Design 22		80 mm
2210				100 mm
2380		Design 23		80 mm
2310				100 mm
2572		Design 25	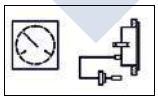	Case size □
2596				72 x 72 mm
				96 x 96 mm

	(3)	Display range in °C
469		-40...+40
643		-20...+120
807		0...+60
814		0...+100
818		0...+120
832		0...+200
840		0...+300
848		0...+400
854		0...+500
858		0...+600

DRAFT

JUMO GmbH & Co. KG
Delivery address: Mackenrodtstraße 14
36039 Fulda, Germany
Postal address: 36035 Fulda, Germany
Phone: +49 661 6003-0
Fax: +49 661 6003-607
E-mail: mail@jumo.net
Internet: www.jumo.net

JUMO Instrument Co. Ltd.
JUMO House
Temple Bank, Riverway
Harlow, Essex CM20 2DY, UK
Phone: +44 1279 635533
Fax: +44 1279 635262
E-mail: sales@jumo.co.uk
Internet: www.jumo.co.uk

JUMO Process Control, Inc.
6733 Myers Road
East Syracuse, NY 13057, USA
Phone: 315-437-5866
1-800-554-5866
Fax: 315-437-5860
E-mail: info.us@jumo.net
Internet: www.jumousa.com

Order code		
	(4)	**Capillary type (FL)** [a]
00		Without (with rigid connection)
02		FL 02 Cu capillary with Cu textile braiding, approx. Ø 2.5 mm (up to AB limit value +300°C)
11		FL 11 Cu capillary with PE jacketing, approx. Ø 3.5 mm (up to AB limit value +120°C)
17		FL 17 Stainless steel capillary, approx. Ø 1.5 mm
21		FL 21 Cu capillary, approx. Ø 1.0 mm (up to AB limit value +300°C)
	(5)	**Capillary** [b]
0		Without (with rigid connection)
1000		1000 mm
2000		2000 mm
3000		3000 mm
4000		4000 mm
5000		5000 mm
. . . .		Special length (specifications in plain text: 1000 mm steps, maximum length 6000 mm), further lengths on request
	(6)	**Process connection (PA)** [a]

750	TF 01	Temperature probe with stepped support tube	
752	TF 11	Temperature probe without support tube	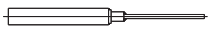
843	TA 02	Immersion tube with union nut and loose screw-connection [b]	
161	TA 03	Immersion tube with loose screw-connection	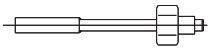
847	TA 06	Immersion tube with displaceable clamping screw-connection on support tube [b]	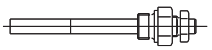
311	TA 20	Immersion tube with loose screw-connection and connection collar [b]	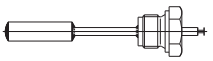
872	TA 21	Immersion tube with loose screw-connection and sealing cone (only G 3/8 possible)	
873	TA 22	Immersion tube with loose pressure screw, sealing cone and loose screw-connection [b]	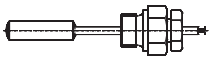
874	TA 24	immersion tube with screw fitting, O ring seal and clamping screw [a] [b]	
401	TA 23	Immersion tube with pressure screw and contact pressure spring (only M 10x1 possible)	
913	SH 07	Screw-in sheath, multi-part, with clamping piece and locking screw (suitable for TF 01 and TF 11)	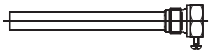
820	SH 09	Weld-in sheath, multi-part, with clamping piece and locking screw [b] (not for FL 21 - welding collar with steel 1.4515)	
876	SH 10	Screw-in sheath, multi-part [b] (suitable for TA 21)	
871	SH 11	Screw-in sheath, multi-part [b] (suitable for TA 23)	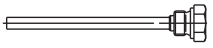

[a] For the description and particularities refer to data sheet 608730.
[b] Screw-in spigot as per DIN 3852, form A.

DRAFT

JUMO GmbH & Co. KG
Delivery address: Mackenrodtstraße 14
36039 Fulda, Germany
Postal address: 36035 Fulda, Germany
Phone: +49 661 6003-0
Fax: +49 661 6003-607
E-mail: mail@jumo.net
Internet: www.jumo.net

JUMO Instrument Co. Ltd.
JUMO House
Temple Bank, Riverway
Harlow, Essex CM20 2DY, UK
Phone: +44 1279 635533
Fax: +44 1279 635262
E-mail: sales@jumo.co.uk
Internet: www.jumo.co.uk

JUMO Process Control, Inc.
6733 Myers Road
East Syracuse, NY 13057, USA
Phone: 315-437-5866
1-800-554-5866
Fax: 315-437-5860
E-mail: info.us@jumo.net
Internet: www.jumousa.com

Order code	(7)	Ø Process connection (PC) [a]
6		6 mm
8		8 mm
10		10 mm
11		11 mm
12		12 mm
	(8)	**Thread type of process connection (PA)** [a]
000		Without thread (for TA 01 and TF 11)
103		Screw connection G 3/8
104		Screw-connection G 1/2
105		Screw-connection G 3/4
114		Screw-connection M 10 x 1 (only for TA 23)
	(9)	Material, probe / support tube [a]
26		Stainless steel (CrNi, 1.4571)
96		Copper (Cu) / Brass (CuZn) (up to 200°C)
95		Stainless steel (CrNi, 1.4571) - probe / Brass (CuZn) - support tube from 250°C)
	(10)	**Material of process connection (PA)** [a]
00		Without (only TF 01 and TF 11)
26		Stainless steel (CrNi, 1.4571)
46		Brass (CuZn)
	(11)	**Fitting length, process connection (PA)** [a] **(dimension "EL“ or "S“)**
0		Minimum fitting length TF 11 (active probe dimension)
50		50 mm
100		100 mm
150		150 mm
200		200 mm
. . .		Special length (specifications in plain text - 50 mm steps)
106		106 mm

For the description and particularities refer to data sheet 608730.

DRAFT

JUMO GmbH & Co. KG
Delivery address: Mackenrodtstraße 14
36039 Fulda, Germany
Postal address: 36035 Fulda, Germany
Phone: +49 661 6003-0
Fax: +49 661 6003-607
E-mail: mail@jumo.net
Internet: www.jumo.net

JUMO Instrument Co. Ltd.
JUMO House
Temple Bank, Riverway
Harlow, Essex CM20 2DY, UK
Phone: +44 1279 635533
Fax: +44 1279 635262
E-mail: sales@jumo.co.uk
Internet: www.jumo.co.uk

JUMO Process Control, Inc.
6733 Myers Road
East Syracuse, NY 13057, USA
Phone: 315-437-5866
1-800-554-5866
Fax: 315-437-5860
E-mail: info.us@jumo.net
Internet: www.jumousa.com

Order code	(12)	Switching output (SA)		
20		SA 20	One contact	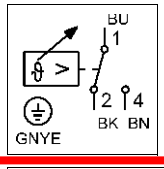
21		SA 21	Two contacts	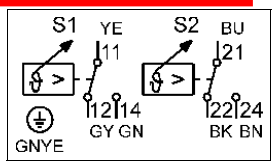
22		SA 22	Two contacts - Sequence switch	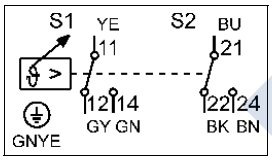

	(13)	Extra codes (TZ)
000		Without extra codes
430		Fly back (includes TZ 477)
426		Cover cap to protect the screw terminals against access and splashing water (standard for design 10 and 23; not for design 22; not in connection with TZ 460)
650		Microswitch 10 (3) A (AC/DC 230 V, +10/-15%, 48...63 Hz, cos φ = 1 (0.6))
518		Stop for Min. — or Max. — set point value limitation, factory set
460		Device centering for panel cut-out 92 x 92 mm (only for basic type extension 2596)
477		Set point adjustment protected by the bolted cover. Adjustment with screwdriver.
401		Protection class IP 53 as per EN 60529, includes TZ 426 and TZ 477 (not for case Ø = 60 mm and front frame 72 x 72 mm; not for design 02 and 22)
522		Customized scale

Special versions on request !

Order code

(1)		(2)		(3)		(4)		(5)		(6)		(7)		(8)		(9)		(10)		(11)		(12)		(13)	
608520	/	. . . .	-	. . .	-	. .	-	. . . .	-	. . .	-	. .	-	. . .	-	. .	-	. .	-	. . .	-	. .	/	. . .	, . . .

Order example

608520 / 2010 - 818 - 21 - 2000 - 104 - 10 - 000 - 26 - 00 - 100 - 20 / 650[a] , . . .

[a] State extra codes one after another, separated by commas.

Stock versions

Part no.	Type	Display range °C	Switching output	Temperature probe, process connection	Immersion tube mm
00455918	608550/0180-643-874-8-106-50-150-20/434-522 with fly back	-20…+120	20 (1 contact)	TF 05 d = 8 mm TA 24, G 1“, CuZn	150
00455919	608550/0180-643-874-8-106-50-150-21/434-522 with fly back		21 (2 contacts)		

Delivery within 3 working days after receipt of order

DRAFT

SECTION 5

DRAFT

Severe Duty is **Standard** with **WEG W22** motors.

You do not need a special motor for severe duty. Severe Duty is standard with WEG W22 motors.



DRAFT

You do not need a special motor for severe duty. Severe Duty is standard with WEG.

Features that make a difference:

- All NEMA Premium ratings have a 1.25 service factor (up to 100 HP) resulting in cooler operation and extended life of the motor
- All Cast Iron Construction, including Terminal Box and Fan Cover (*)
- Solid feet for reduced vibration levels and impact absorption
- Optimized ventilation system for cooler operation and extended life
- High Grade FC200 cast iron provides superior mechanical strength and heat dissipation
- All WEG W22 motors are Totally Enclosed Fan Cooled with a true IP55 rating against dust and moisture. (IPW56, IPW65 and IPW66 available as optional)
- Exclusive W-Seal 364T and larger provides superior bearing protection
- Taconite Labyrinth seal 586 Frame and larger
- Exclusive WEG painting system exceed 200hrs ASTM 117 corrosion test (Exceeds IEEE841 standard)
- Balanced to 0.08 inches per second vibration limits (Meets IEEE841 standard)
- Four Bolt Conduit Cover with glued Neoprene Gasket
- Impregnation Resin and magnet wire are insulation class H
- Stainless Steel Nameplate - Laser edged with high contrast background
- Corrosion Proof Drains
- Inverter Duty per NEMA MG1, Part 31
- Certified Class I Div 2, Groups A, B, C & D; Class II, Div 2, Groups F & G

**cast iron fan cover available as an option on 143-215T frames*

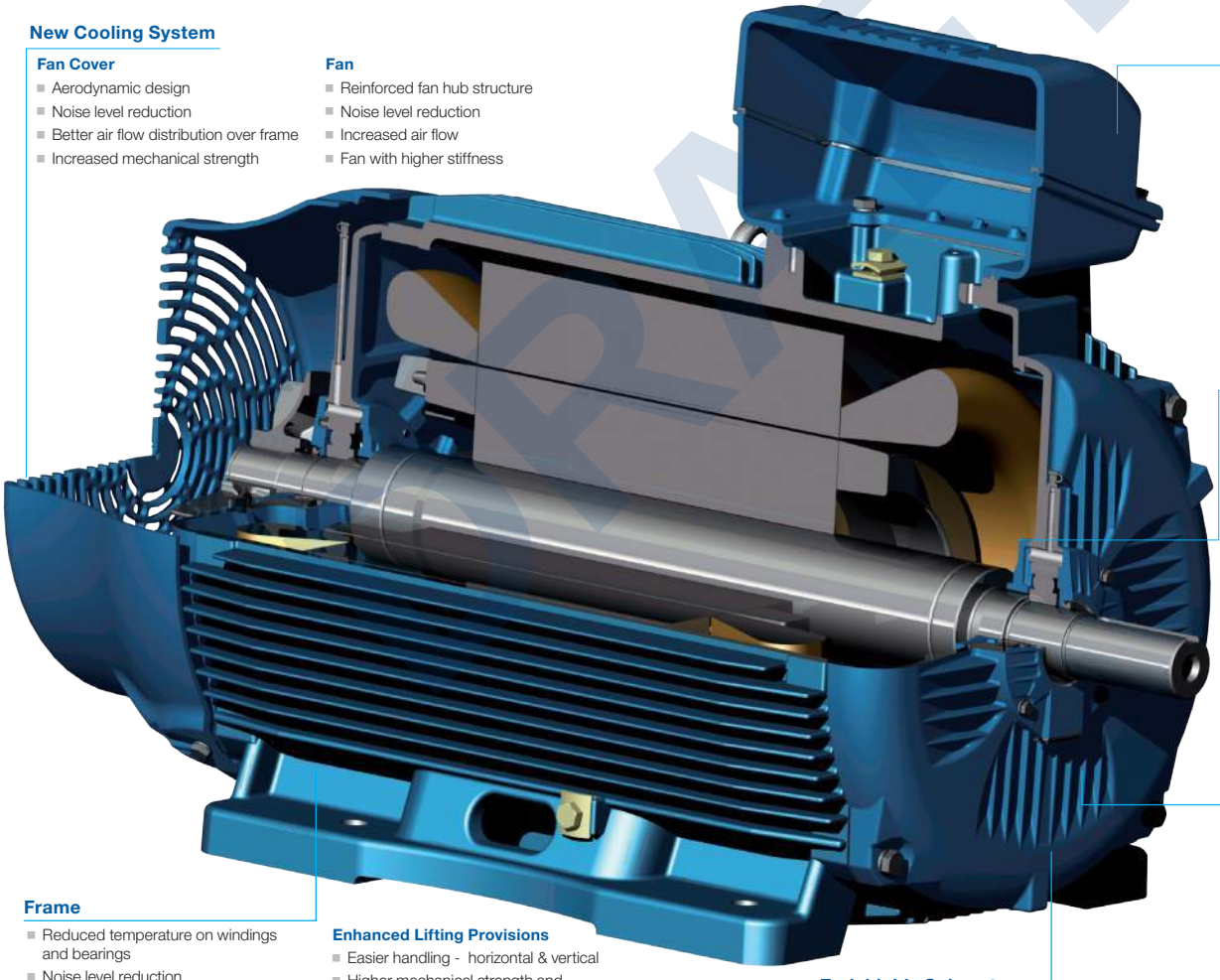

New Cooling System

Fan Cover
- Aerodynamic design
- Noise level reduction
- Better air flow distribution over frame
- Increased mechanical strength

Fan
- Reinforced fan hub structure
- Noise level reduction
- Increased air flow
- Fan with higher stiffness

Terminal Box
- Better connection quality
- Easier cable handling during installation
- More space available for accessory installation
- Easier Maintenance
- Mounting F1/F2/F3
- Rotation on 90° stages

Bearing Caps

External
- Finned surface for improved bearing heat dissipation

Internal
- Change of grease path for positive lubrication
- Bearing lubrication quality improvement
- Reduced bearing temperature

Seal Subsystem
- Increased dust and moisture protection
- Increased protection to high-pressure cleaning

Frame
- Reduced temperature on windings and bearings
- Noise level reduction
- Terminal box position outlet on top

Pad for vibration sensor
- Displaced 90º from each other

Enhanced Lifting Provisions
- Easier handling - horizontal & vertical
- Higher mechanical strength and handling safety

Solid feet
- More impact resistance
- Ideal for high vibration level applications

Endshields Subsystem

DE (Drive Endshield)
- New fin design
- Bearing moved outwards for better load support
- Improved bearing heat dissipation for reduced bearing temperature
- Reinforced endshield structure

NDE (Non-Drive Endshield)
- New design with smooth exterior surface
- Improved air flow
- Noise level reduction
- Improved structural rigidity for low vibration

DRAFT

DATA SHEET

Three Phase Induction Motor - Squirrel Cage

Customer :

Product line : NEMA Premium Efficiency Three-Phase Product code : 11805053

Frame	: 444/5T	Locked rotor time	: 48s (cold) 27s (hot)
Output	: 150 HP (110 kW)	Temperature rise	: 80 K
Poles	: 4	Duty cycle	: Cont.(S1)
Frequency	: 60 Hz	Ambient temperature	: -20°C to +40°C
Rated voltage	: 460 V	Altitude	: 1000 m.a.s.l.
Rated current	: 170 A	Protection degree	: IP55
L. R. Amperes	: 1122 A	Cooling method	: IC411 - TEFC
LRC	: 6.6x(Code G)	Mounting	: F-3
No load current	: 58.0 A	Rotation¹	: Both (CW and CCW)
Rated speed	: 1780 rpm	Noise level²	: 73.0 dB(A)
Slip	: 1.11 %	Starting method	: Direct On Line
Rated torque	: 61.2 kgfm	Approx. weight³	: 816 kg /1799 lbs
Locked rotor torque	: 200 %		
Breakdown torque	: 250 %		
Insulation class	: F		
Service factor	: 1.15		
Moment of inertia (J)	: 2.81 kgm²		
Design	: B		

Output	25%	50%	75%	100%
Efficiency (%)	95.3	95.4	95.8	95.8
Power Factor	0.49	0.74	0.82	0.85

Foundation loads

Max. traction : 1136 kgf

Max. compression : 1952 kgf

		Drive end	Non drive end
Bearing type	:	NU-319 C3	6316 C3
Sealing	:	WSeal	WSeal
Lubrication interval	:	5000 h	10000 h
Lubricant amount	:	45 g	34 g
Lubricant type	:	Mobil Polyrex EM	

Notes

This revision replaces and cancel the previous one, which must be eliminated.
(1) Looking the motor from the shaft end.
(2) Measured at 1m and with tolerance of +3dB(A).
(3) Approximate weight subject to changes after manufacturing process.
(4) At 100% of full load.

These are average values based on tests with sinusoidal power supply, subject to the tolerances stipulated in NEMA MG-1.

Rev.	Changes Summary	Performed	Checked	Date

Performed by				
Checked by			Page	Revision
Date	22/11/2022		1 / 6	

DRAFT

This document is exclusive property of WEG S/A. Reprinting is not allowed without written authorization of WEG S/A.
Subject to change without notice

Customer :

Thermal protection

ID	Application	Type	Quantity	Sensing Temperature
1	Winding	Thermostat - 2 wires	1 x Phase	155 ºC

DRAFT

Rev.	Changes Summary	Performed	Checked	Date

Performed by				
Checked by			Page	Revision
Date	22/11/2022		2 / 6	

This document is exclusive property of WEG S/A. Reprinting is not allowed without written authorization of WEG S/A.
Subject to change without notice

TORQUE AND CURRENT VS SPEED CURVE

Three Phase Induction Motor - Squirrel Cage

Customer :

Product line : NEMA Premium Efficiency Three-Phase Product code : 11805053

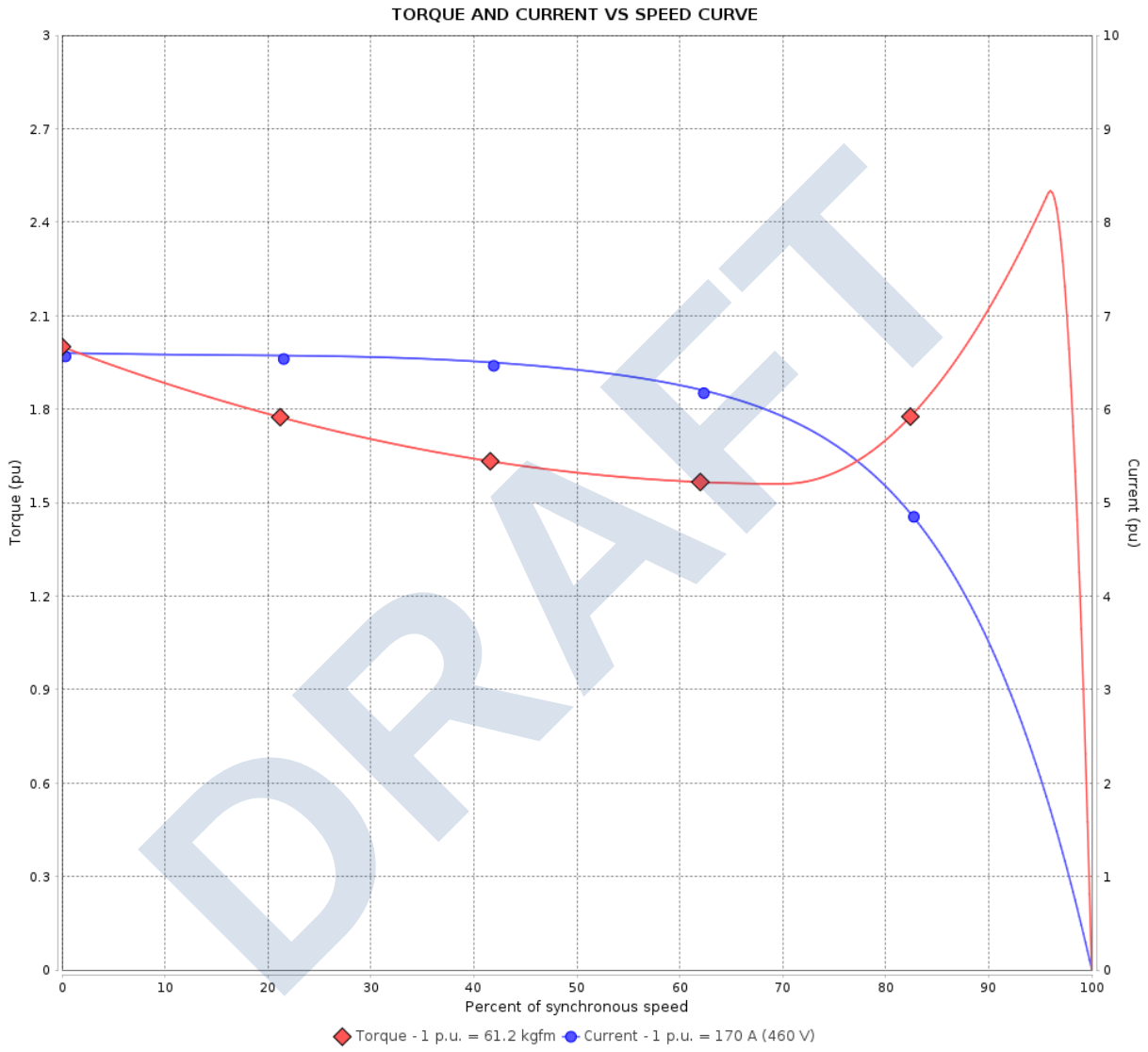

DRAFT

Performance	: 460 V 60 Hz 4P		
Rated current	: 170 A	Moment of inertia (J)	: 2.81 kgm²
LRC	: 6.6	Duty cycle	: Cont.(S1)
Rated torque	: 61.2 kgfm	Insulation class	: F
Locked rotor torque	: 200 %	Service factor	: 1.15
Breakdown torque	: 250 %	Temperature rise	: 80 K
Rated speed	: 1780 rpm	Design	: B

Locked rotor time : 48s (cold) 27s (hot)

Rev.	Changes Summary	Performed	Checked	Date

Performed by				
Checked by			Page	Revision
Date	22/11/2022		3 / 6	

This document is exclusive property of WEG S/A. Reprinting is not allowed without written authorization of WEG S/A.
Subject to change without notice

LOAD PERFORMANCE CURVE

Three Phase Induction Motor - Squirrel Cage

Customer :

Product line : NEMA Premium Efficiency Three-Phase Product code : 11805053

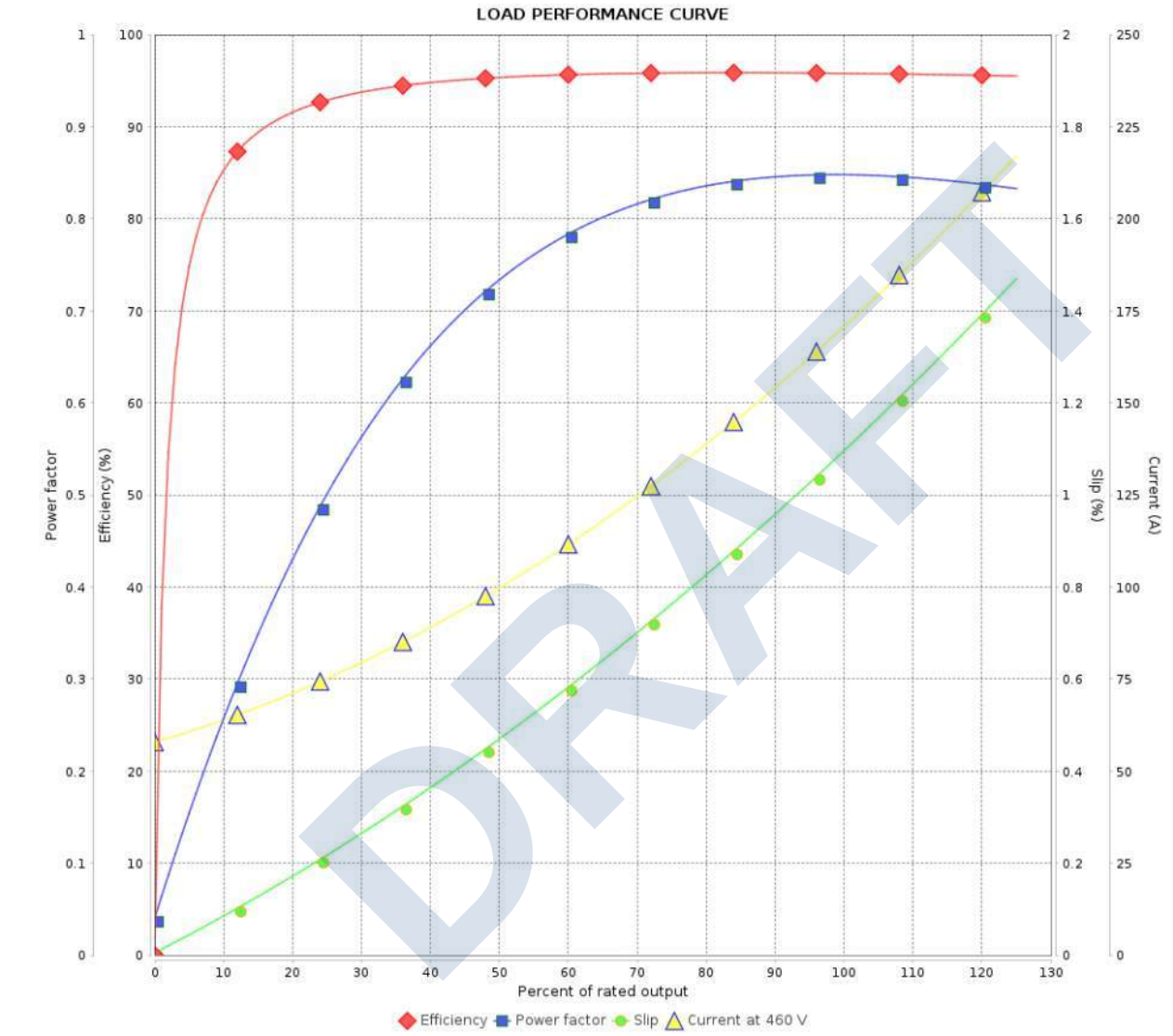

DRAFT

Performance	: 460 V 60 Hz 4P		
Rated current	: 170 A	Moment of inertia (J)	: 2.81 kgm²
LRC	: 6.6	Duty cycle	: Cont.(S1)
Rated torque	: 61.2 kgfm	Insulation class	: F
Locked rotor torque	: 200 %	Service factor	: 1.15
Breakdown torque	: 250 %	Temperature rise	: 80 K
Rated speed	: 1780 rpm	Design	: B

Rev.	Changes Summary	Performed	Checked	Date

Performed by				
Checked by			Page	Revision
Date	22/11/2022		4 / 6	

This document is exclusive property of WEG S/A. Reprinting is not allowed without written authorization of WEG S/A.
Subject to change without notice

THERMAL LIMIT CURVE

Three Phase Induction Motor - Squirrel Cage

Customer :

Product line : NEMA Premium Efficiency Three-Phase Product code : 11805053

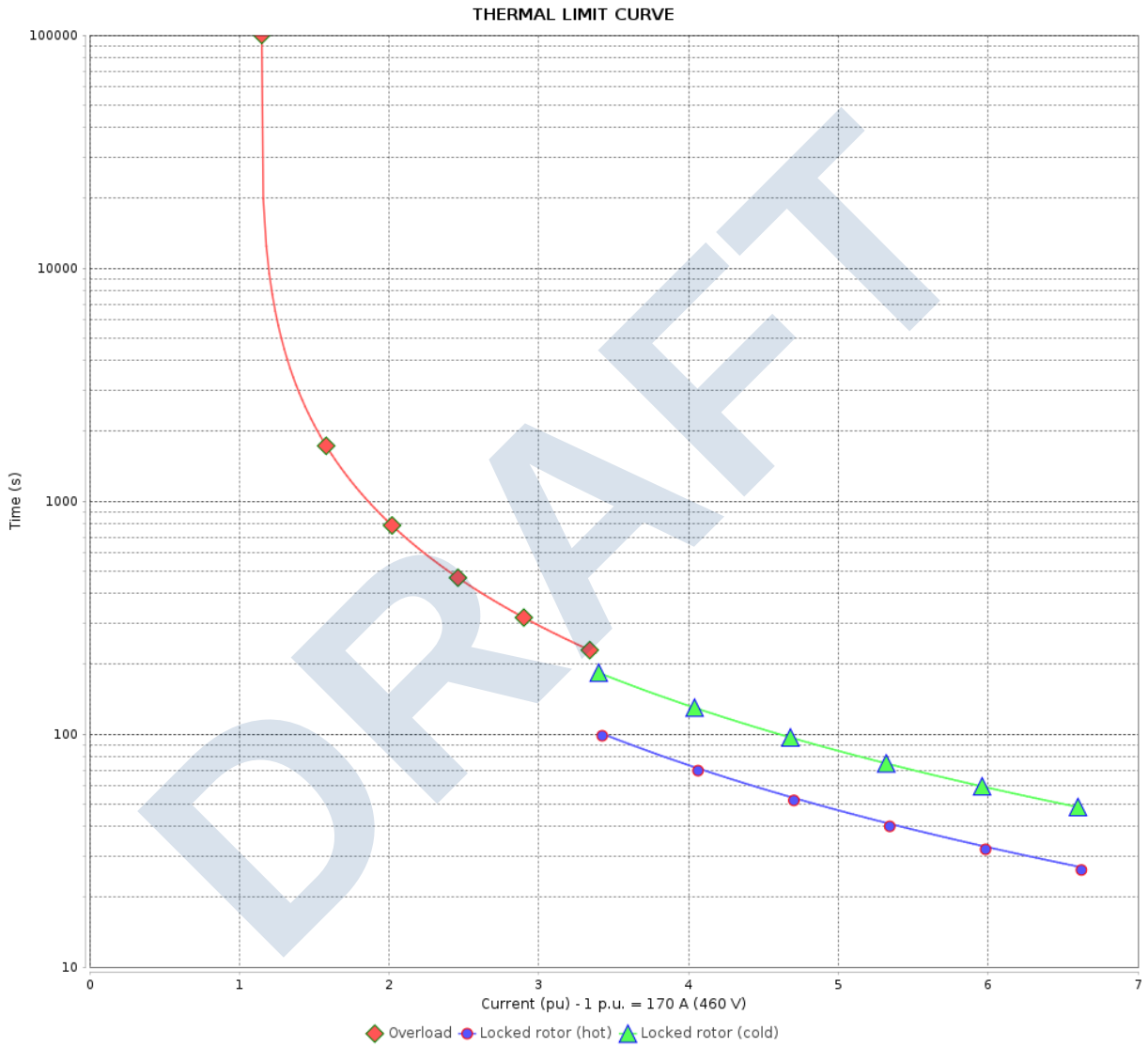

DRAFT

Performance	: 460 V 60 Hz 4P		
Rated current	: 170 A	Moment of inertia (J)	: 2.81 kgm²
LRC	: 6.6	Duty cycle	: Cont.(S1)
Rated torque	: 61.2 kgfm	Insulation class	: F
Locked rotor torque	: 200 %	Service factor	: 1.15
Breakdown torque	: 250 %	Temperature rise	: 80 K
Rated speed	: 1780 rpm	Design	: B
Heating constant			
Cooling constant			

Rev.	Changes Summary	Performed	Checked	Date

Performed by				
Checked by			Page	Revision
Date	22/11/2022		5 / 6	

This document is exclusive property of WEG S/A. Reprinting is not allowed without written authorization of WEG S/A.
Subject to change without notice

VFD OPERATION CURVE

Three Phase Induction Motor - Squirrel Cage

Customer :

Product line : NEMA Premium Efficiency Three-Phase Product code : 11805053

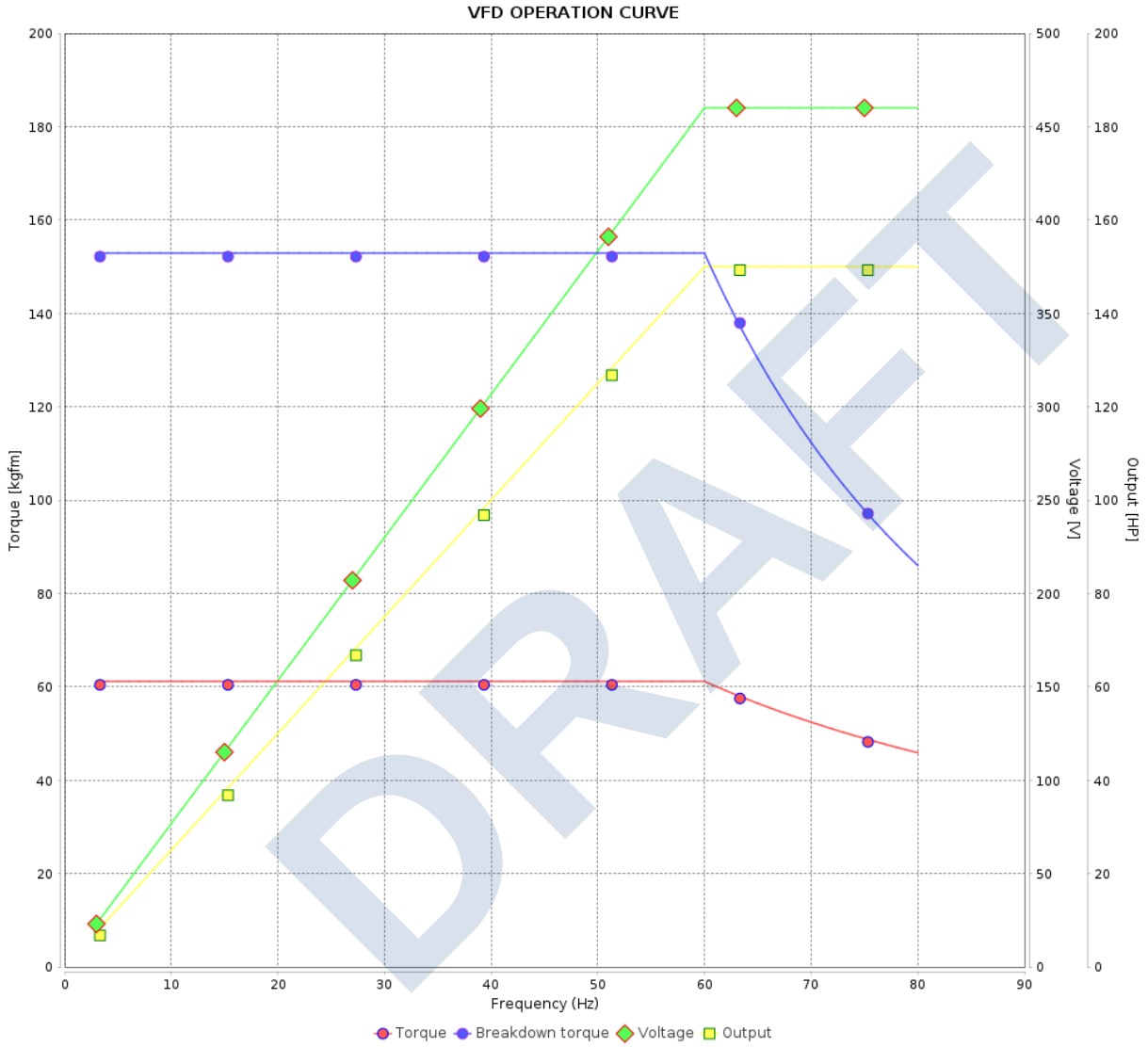

DRAFT

Performance	: 460 V 60 Hz 4P		
Rated current	: 170 A	Moment of inertia (J)	: 2.81 kgm²
LRC	: 6.6	Duty cycle	: Cont.(S1)
Rated torque	: 61.2 kgfm	Insulation class	: F
Locked rotor torque	: 200 %	Service factor	: 1.15
Breakdown torque	: 250 %	Temperature rise	: 80 K
Rated speed	: 1780 rpm	Design	: B

Rev.	Changes Summary	Performed	Checked	Date

Performed by				
Checked by			Page	Revision
Date	22/11/2022		6 / 6	

This document is exclusive property of WEG S/A. Reprinting is not allowed without written authorization of WEG S/A.
Subject to change without notice

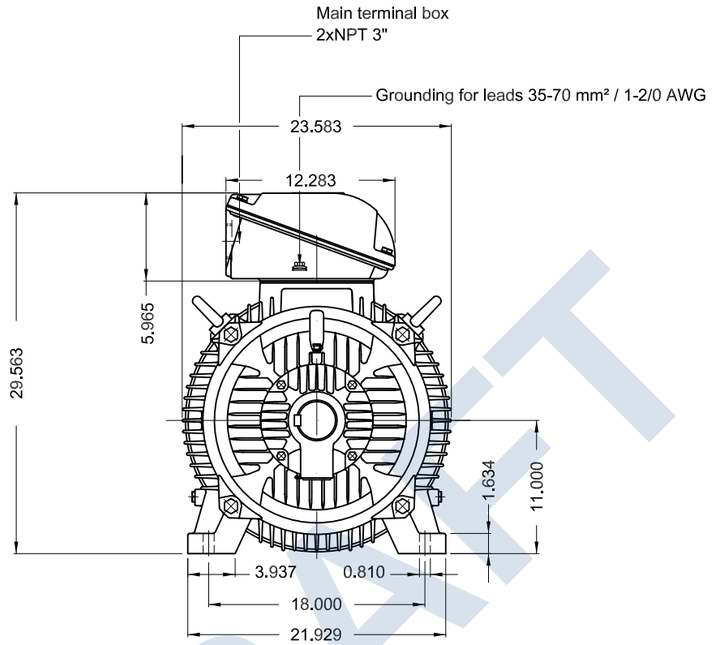

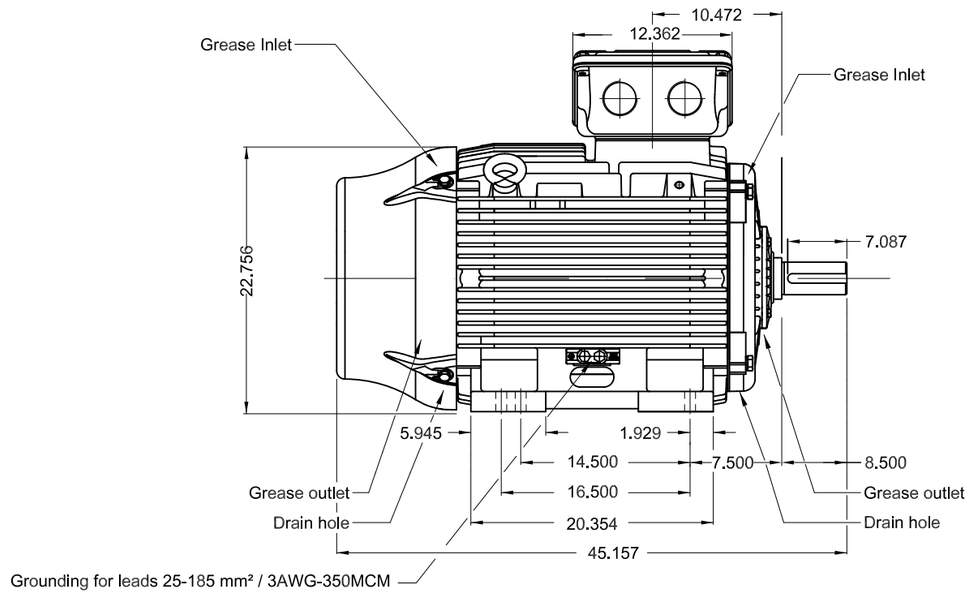

DRAFT

Without vertical jackscrews
DE roller bearing
Thermal protection to switch off - thermostat 155°C
Shaft locking device
Color RAL 5009
Painting plan 203A
Mounting B3T

DE Shaft End

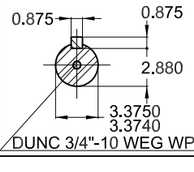

150 HP 04 Poles 60 Hz | A

ECM	LOC	SUMMARY OF MODIFICATIONS	EXECUTED	CHECKED	RELEASED	DATE	VER
			HYBRISUSER				00

EXECUTED	HYBRISUSER	THREE PH. MOTOR W22 NEMA PREM. EFF.	PREVIEW
CHECKED		FRAME 444/5T IP55 TEFC	WDD 00
RELEASED			
REL DT.		WMO Jaragua do Sul Product Engineering	SHEET 1 / 1

Dimensions in inches

XME A3

WEG's property. Forbidden reproduction without previous authorization.

Thermal motor protector
Temperature limiter
Thermal cut-out

F

11
20
21

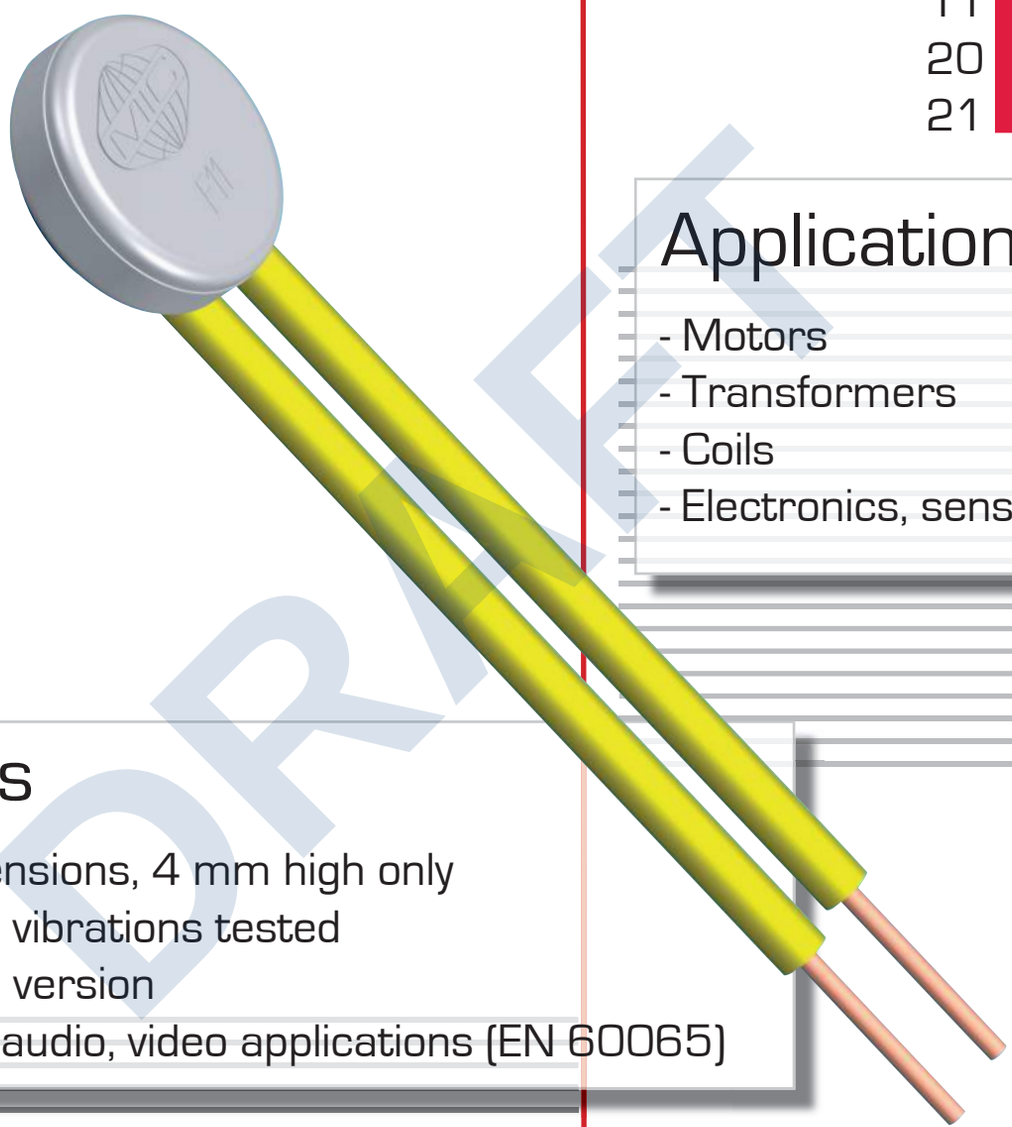

Applications

- Motors
- Transformers
- Coils
- Electronics, sensors

Benefits

- Small dimensions, 4 mm high only
- Shock- and vibrations tested
- Leadframe version
- Tested for audio, video applications (EN 60065)

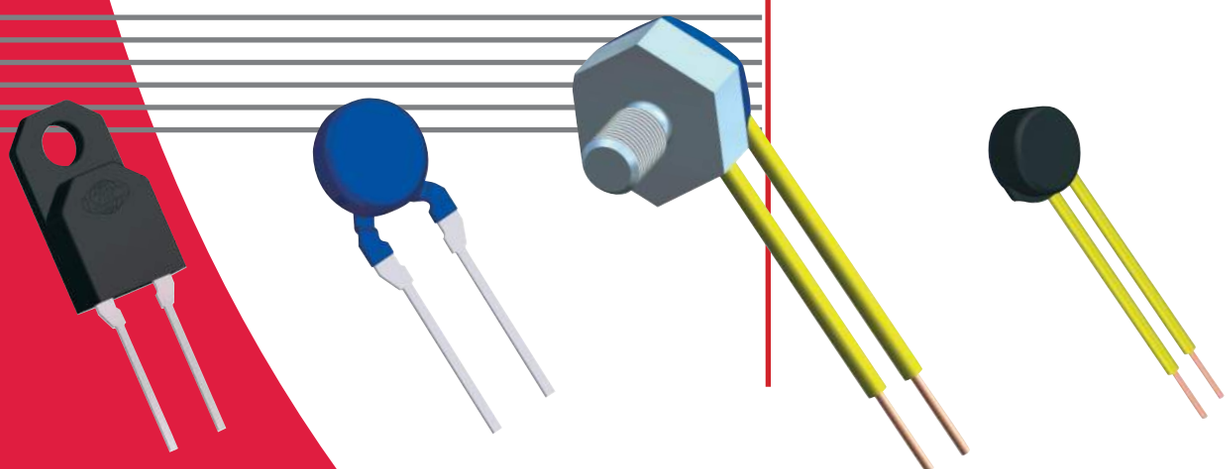

DRAFT

MICROTHERM

MIC®
Microtherm International Cooperation

Technical data

ratings \ control type		F11A / E F20A / E	F20B / G	F21A / E	
version		normally closed	normally open	normally closed	
rated current at 250 V 50/60 Hz (power factor 0.95 / 0.6)		2.0 A / 1.6 A	2.0 A / 1.6 A	3.0 A / 3.0 A	6.3 A / 1.0 A
switching cycles		10,000		10,000	700
max. current at 250 V 50/60 Hz (power factor 0.95)		6.3 A		8.0 A	
switching cycles under max. current		100			
temperature rating Ta (steps in 5 K)		70 °C ... 160 °C	70 °C ... 155 °C	70 °C ... 160 °C	
tolerances		Standard: ± 5 K			
feature of automatic action		1.B, 2.B.M, 1.C, 3.C		2.B, 1.C	
contact resistance (incl. wire of 100 mm)		< 50 mΩ			
hysteresis		30 K ± 15 K			
dielectric strength (standard insulation)		2 kV			
shock- / vibration testing (similar to EN 50155)		400 m/s² sine half wave / 100 m/s² 5 Hz ... 2,000 Hz sine			
resistances to impregnation		tight against ordinary resins and lacquers			
degrees of protection provided by enclosures (EN 60529)		IP00			
suitable for use in protection category		I, II			
approvals	**VDE / ENEC**	EN 60730-1 / -2-2 / -2-3 [1] /-2-9			
	UL	UL 2111 / UL 873			
	CSA	C22.2 No. 77 / C22.2 No. 24 [2]			

[1] different power rating
[2] on demand

DRAFT

Standard wire (length 100 ± 10 mm, stripped 6 ± 1 mm)

lead	code	temperature max.	operating voltage max.	diameter insulation	cross section diameter	UL style
stranded white	L300	150 °C	300 V	1.57 mm	AWG24 / 0.21 mm²	3398
	L310			1.80 mm	AWG20 / 0.48 mm²	
	L330	200 °C	600 V	0.90 mm	AWG24 / 0.24 mm²	3557
solid yellow	L400	150 °C	300 V	1.40 mm	AWG24 / 0.51 mm	3398
	L410			1.65 mm	AWG20 / 0.81 mm	
	L430	200 °C	300 V	1.21 mm	AWG24 / 0.51 mm	1332
	L440			1.71 mm	AWG20 / 0.81 mm	

Standard insulation

control type	nc	no	code	illustration	drawing dimensions (mm)	technical specification	approvals
F11, F21 F20	A A	B	U254		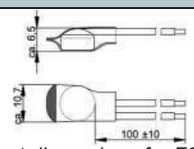 different dimensions for F20, F21	shrink cap potted Ta max. 155°C	VDE, UL
F11	A		U198	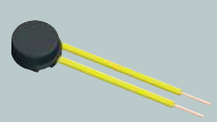	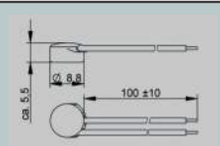 different dimensions for F20, F21	cap of PPS potted	VDE, UL
F20 F21	A A	B	U185				

Specific variations

control type	nc	no	code	illustration	drawing dimensions (mm)	technical specification	approvals
F11	A				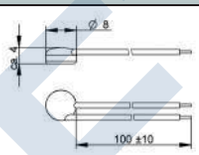	not insulated potted	VDE, UL, CSA
F20 F21	A A	B		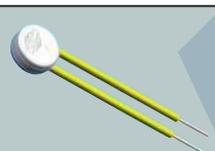	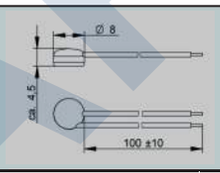	not insulated potted	VDE, UL, CSA
F11, F21 F20	A A	B	U112		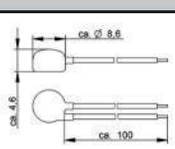 different dimensions for F20, F21	coated	VDE, UL
F20 F21	A A	B	A150 U280	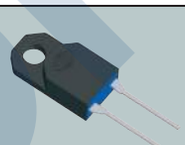	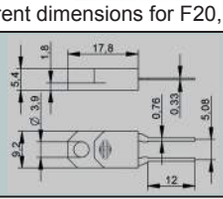	housing of PPS leadframe leads grid dimension 5.08 potted	VDE, UL
F11, F21 F20	A A	B	A800		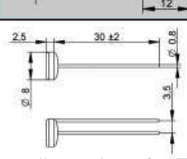 different dimensions for F20, F21	not insulated potted	VDE, UL
F20 F21	E E	G	G700	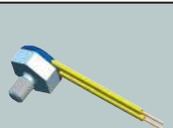	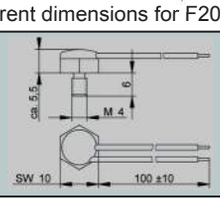	aluminium housing thread M4x6 potted Attention: Ta max. 150 °C	VDE, UL
F11	A		U281	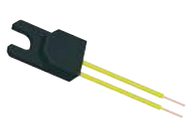	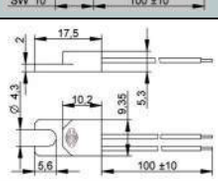	housing of PPS potted	VDE, UL
F11, F21 F20	A A	B	A150 U112	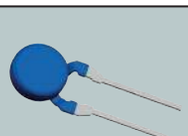	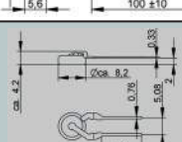 different dimensions for F20, F21	leadframe leads grid dimension 5.08 coated	VDE, UL

DRAFT

Heating by current

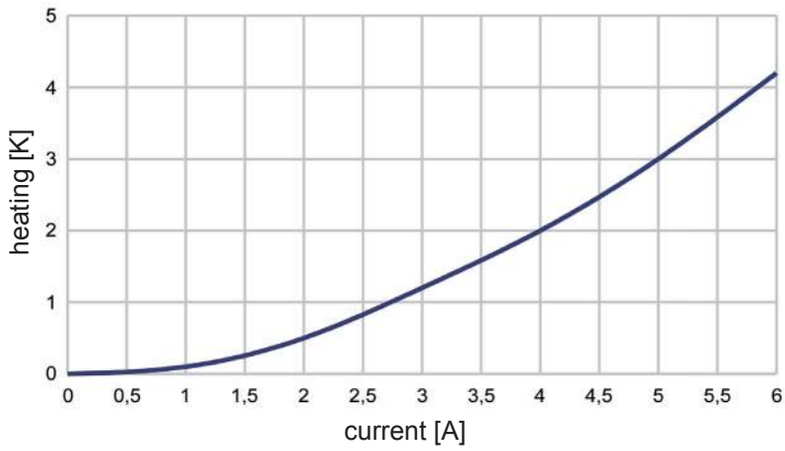

The diagram is measured with a thermal control without any insulation in an oil bath.

Attention:
The heating depends on the thermal conduction of the control to the equipment or part which should be protected.

Ordering and marking example

Ordering example

F11 A 120 05 L310 100 U254

- shrink cap insulation
- length 100 mm
- lead wire white, AWG20
- tolerance
- temperatue
- normally closed
- type

Deviations from standard controls on request.

Marking

F11A type (F11 nc)

12005 response temperature (120°C), tolerance (± 5K)

026D date of manufacture (Feb.2006), country (D=Germany)

DRAFT

Representation office:

Microtherm GmbH
Täschenwaldstraße 3
Postfach 1208
D-75112 Pforzheim

Fon: +49 (0)7231 787-0
Fax: +49 (0)7231 787-155
E-Mail: mic-pforzheim@microtherm.de
Internet: www.microtherm.de

Typical Thermostat Control Schematic

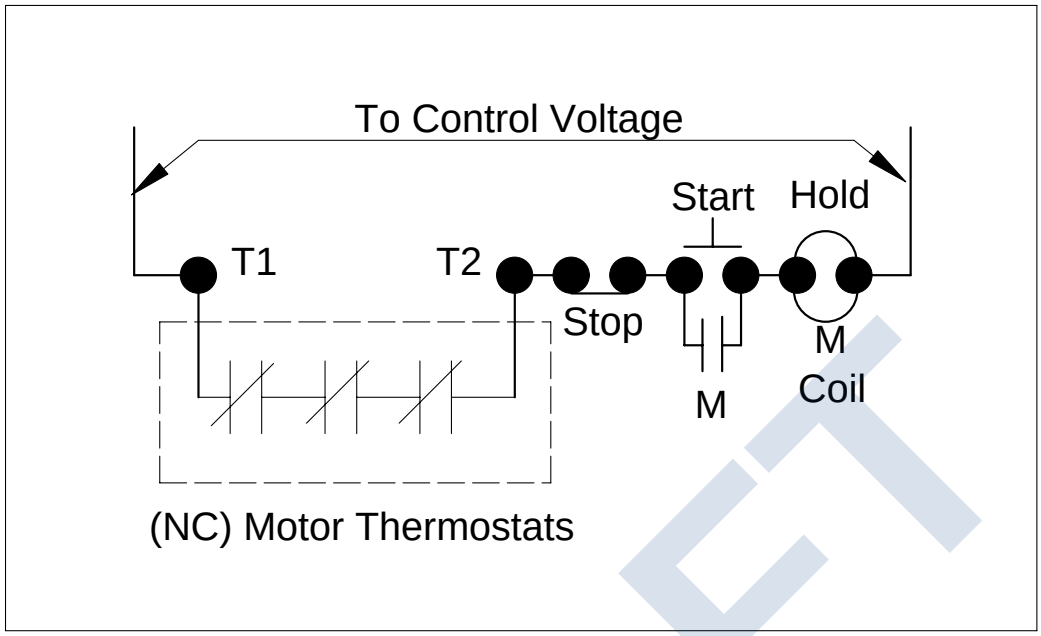

DRAFT

AEGIS SGR™

BEARING PROTECTION RING

Sustainable Technology for True Inverter Duty Motors

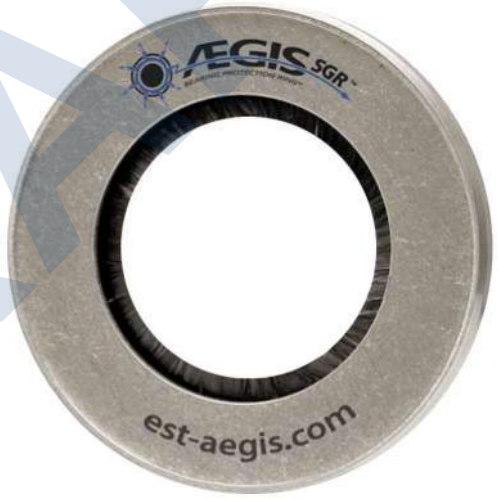

WEG uses the standard SGR from the AEGIS catalog that is sized based on the motor min/max shaft diameter. They use the type with the mounting brackets which are designed to fit over the shaft shoulder on the motor end-shield.

Bearing Protection For Life!

2009






DRAFT

BEARING PROTECTION RING™









"The only bearing protection system guaranteed to eliminate harmful shaft currents preventing premature motor failure - for life."



Guarantee

Electro Static Technology guarantees any new motor up to 100hp/75kW will not fail from electrical bearing fluting damage for the life of the motor when the AEGIS SGR™ Bearing Protection Ring™ is installed in accordance with manufacturer's installation instructions. If electrically induced fluting damage occurs, Electro Static Technology will replace motor bearings. Guarantee is subject to the terms and conditions of the AEGIS SGR™ Guarantee Program.

For program details, visit: www.est-aegis.com

Don't let this happen to your bearings!



TABLE OF CONTENTS

Bearing Protection Guarantee	2
AEGIS Bearing Protection Ring	3
About Shaft Voltages	4
Application Notes	5-6
AEGIS Shaft Voltage Probe	7
Selecting The Right Size	7
AEGIS Installation Options	8
Parts List - Conductive Epoxy	9
Parts List - Standard, Split, Bolt Through	10-11
Parts List - Press Fit Installation	12
Parts List - NEMA-IEC Installation Kits	13
Custom Applications	14
Motor Specification	15

Sustainable Motor Design - Prevent Bearing Failure

AEGIS Bearing Protection Ring™- protects motor bearings for life. Variable frequency drives (VFD) induce electrical voltages onto the shaft of AC and DC motors. With AEGIS SGR Bearing Protection Ring installed on the motor, you benefit from sustainability, system up-time, production improvement, and higher reliability.

PROBLEM:

VFD Induced Shaft Voltages Damage Bearings



Shaft voltage reading with no protection

Variable frequency drives (VFD) on AC and DC motors induce harmful electrical voltages on the motor shaft. Once these voltages exceed the resistance of the bearing lubricant, they discharge through the motor's bearings causing fusion craters, severe pitting, fluting damage, excessive bearing noise and eventually bearing failure.

SOLUTION:

AEGIS SGR™ - Electrical Bearing Damage Protection

The new AEGIS SGR™ Bearing Protection Ring™ prevents electrical bearing damage by safely channeling harmful shaft voltages away from the bearings to ground. Using proprietary Electron Transport Technology™, the conductive micro fibers inside the AEGIS SGR™ provide the path of least resistance and dramatically extend motor life.

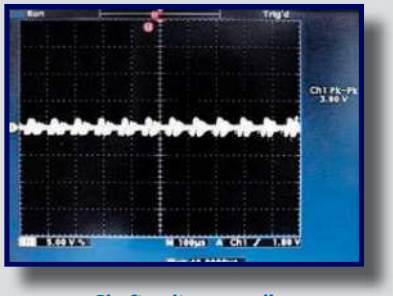

Shaft voltage reading with AEGIS SGR

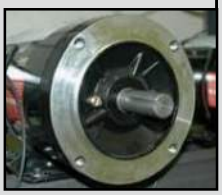

No bearing protection



VFD



AEGIS SGR™ Bearing Protection Ring™

DRAFT

About Shaft Voltages and Bearing Currents

VFD Induced Shaft Voltages - All Motors

Damaging voltages are induced on the shafts of AC and DC motors controlled by variable frequency drives (VFD). The extremely high on/off switching speeds of the pulse width modulation (PWM), generated by the insulated gate bipolar transistors (IGBT), induce damaging voltages onto the motor shaft through parasitic capacitive coupling between the stator and rotor. This common mode shaft voltage seeks a path to ground, usually through the motor's bearings.

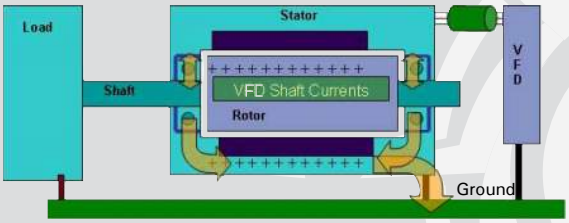

EDM Currents Damage Bearings



Bearing fluting, "washboard" pattern on bearing race

Electrical Damage in the Bearings (EDM) - Pitting, Fluting, Failure

Damaging currents arc through the dielectric oil film between the rolling elements and the bearing race. This is known as electrical discharge machining (EDM) effect. EDM causes fusion craters, severe pitting, and eventually bearing fluting (a washboard-like pattern in the bearing race) which results in premature bearing failure.

High Frequency Circulating Currents in Large AC and DC Motors

In addition to potential bearing failures in motors from VFD induced EDM currents, AC and DC motors above 100 hp (75 kW) may also experience bearing failures caused by high frequency circulating currents. VFD induced high frequency circulating currents are in the kilohertz or even megahertz range and circulate through the motor's bearings because of magnetic flux imbalances in the stator. This type of VFD induced current becomes the more dominant destructive current in higher hp/kW motors.

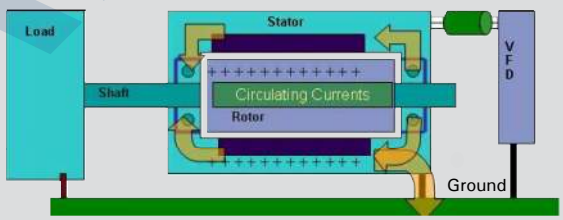

High Frequency Currents Damage Bearings

AEGIS SGR™ Bearing Protection Ring™ is the most effective solution to protect bearings in motors and attached equipment from EDM currents and VFD induced shaft voltages.

Technology Comparison

	AEGIS SGR™	Insulating sleeve	Ceramic/ Hybrid Bearing	Copper or Bronze Metal Brush	Carbon Block Brush	Conductive Grease
Protects Motor and Attached Equipment	Yes	No	No	No	No	No
Long-term Effectiveness	Yes	No	No	No	No	No
Easy to install	Yes	No	No	No	No	No
Contamination Proof	Yes	N/A	N/A	No	No	N/A
Low Lifetime Cost High return on Investment	Yes	No	No	No	No	No
Effective at any RPM	Yes	Yes	Yes	No	No	No
Maintenance Free Operation	Yes	Yes	Yes	No	No	No

DRAFT

Application Notes for AEGIS Bearing Protection Ring™

Improve System Reliability and Production with Sustainable Motor Design

Motors up to 100 HP (75 kW)

Any motor controlled by a variable frequency drive (VFD) requires bearing protection. Motors of 100 hp down to fractional hp motors will experience bearing failures when operated on a PWM drive. AEGIS SGR™ Bearing Protection Ring™ guarantees that bearings will not fail in these motors from fluting damage for the service life of the motor.

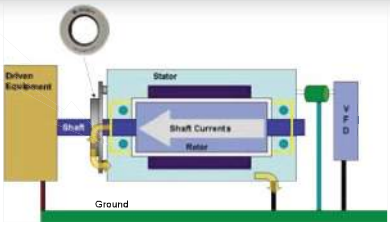



Install one AEGIS SGR™ Bearing Protection Ring™ on either the drive end or the non-drive end of the motor. The simplest installation is to slide the AEGIS SGR™ over the drive end and fasten it to the motor end bell with the easy to install mounting hardware included with each AEGIS SGR™

★ Recommend Colloidal Silver Shaft Coating PN CS015

Motors 100 HP to 1000 HP (75 kW to 750 kW)

Large motors above 100 hp may have VFD induced EDM currents as well as high frequency circulating currents when they are controlled by VFDs. To protect the bearings, insulate the bearing on one end and install an AEGIS SGR™ on the other end.

Insulation on one end (usually NDE) and AEGIS SGR™ on opposite end

- This method offers the most reliable protection
- Motor frame must be well grounded
- Non-Drive End: Bearing journal should be insulated or Insulated/ Ceramic Bearing installed to disrupt circulating currents
- Install AEGIS SGR™ Bearing Protection Ring™ on opposite end of insulation and Insulated/Ceramic Bearing (usually DE)
- Protects bearings in attached equipment (gear box, pillow block, encoder etc.)

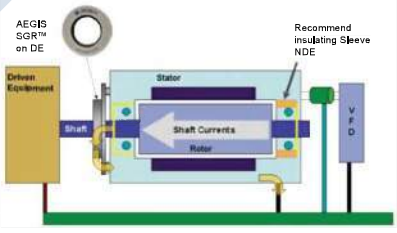

★ Recommend Colloidal Silver Shaft Coating PN CS015

BEARING PROTECTION FACTS:

Bearing protection for motors and attached equipment: Only AEGIS SGR™ will protect both motor bearings and the bearings in attached equipment. VFD induced currents on the shaft can discharge through motor bearings or coupled equipment like gear boxes, pumps, fan bearings, pillow blocks, encoders, brake motors, etc. AEGIS SGR™ addresses the root of the problem and channels harmful currents to ground.

Maintenance free bearing protection for life: Hundreds of thousands of conductive micro fibers have virtually zero wear during operation, even at high RPM and high surface rates. Unlike carbon block brushes, there is no spring pressure on fibers. AEGIS SGR™ Bearing Protection Ring™ will last for the service life of the motor.

AEGIS SGR™ is effective in grease, oil, dirt or dust: Lab and field tested. The conductive micro fibers "sweep" away contaminants from the shaft surface and maintain a conductive path even when oil, grease, dirt or dust get on the shaft.

Operation in harsh environments where fibers are exposed to excessive debris: To prevent particles from damaging the fibers, install a slinger or O-ring against the AEGIS SGR™.

★ COLLOIDAL SILVER SHAFT COATING: NEW TECHNOLOGY



Improving the conductivity of the steel shaft surface enhances the shaft voltage discharge capability in AEGIS shaft grounding applications. Maintaining a highly conductive shaft surface is especially important in critical applications or in applications where the conductive shaft surface of steel could become compromised. Environmental elements could create a potential for decreased conductivity on the shaft of the motor.

Apply AEGIS CS015 Colloidal Silver Shaft Coating to any VFD driven motor shaft prior to installing AEGIS Bearing Protection Ring™.

DRAFT

BEARING PROTECTION FACTS:

AEGIS SGR™ Bearing Protection Ring™ current handling capability: AEGIS SGR™ is rated to discharge high frequency current. Variable frequency drives (VFD) induce high frequency EDM currents of up to 2 amps in 50 billionths of a second. AEGIS SGR™ protects the bearing by safely channeling the energy away from the motor bearings to ground.

AEGIS Bearing Protection Ring™ - the most reliable bearing protection: Production up-time and reliability improve when AEGIS SGR™ is installed. The patented ring of hundreds of thousands of conductive micro fibers provide protection for the service life of the motor. The fibers will always surround the shaft with a conductive path for destructive shaft currents while the motor is running.

Vertical Motors: Insulate top bearing or shaft with non conductive coating. For bottom bearing, coat shaft with Colloidal Silver Shaft Coating and install AEGIS Bearing Protection Ring.

If insulation is not possible, the next best protection is to install AEGIS SGR™ on both ends of the motor

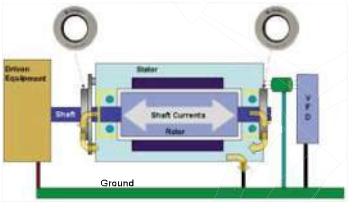

- Motor frame must be well grounded
- Install AEGIS SGR™ Bearing Protection Ring™ on drive and non-drive end to provide path of least resistance for circulating currents and to channel VFD currents to ground.
- Protects bearings in attached equipment
- **NOT SUITABLE FOR CYLINDRICAL ROLLER BEARING**

★ Coat shaft with Colloidal Silver Shaft Coating

Critical Applications: Insulate both ends and add AEGIS SGR™ Bearing Protection Ring™ on both ends

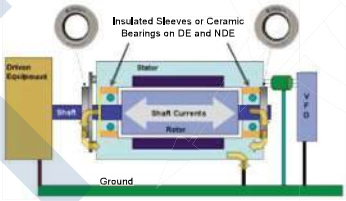

- Motor frame must be well grounded
- Drive and Non-Drive end: Bearing journals should be insulated or Insulated/Ceramic Bearing installed to disrupt circulating currents
- Install AEGIS SGR™ Bearing Protection Ring™ on drive and non-drive end to provide path of least resistance for shaft voltages and to channel VFD induced currents to ground.
- AEGIS SGR™ required to protect bearings in attached equipment (gear box, pillow block, encoder, etc.)

★ Coat shaft with Colloidal Silver Shaft Coating

Medium Voltage Motors
Large Motors and Generators over 1000 HP (750 kW)
Power Generators over 750kW

AEGIS iPRO™ Bearing Protection Ring™

Large motors and generators often have much higher induced shaft voltages and bearing currents which require a high current capable Bearing Protection Ring™. High frequency circulating currents induced by variable frequency drives (VFD) will cause bearing fluting and catastrophic failure in these motors. Generators experience current surges which can cause electrical arcing in bearings and equipment.

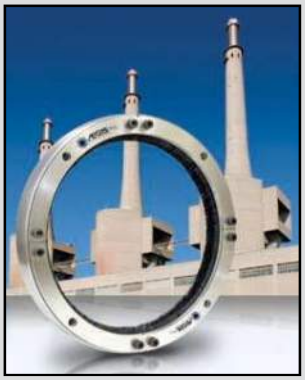

AEGIS iPRO™ High Current Bearing Protection Ring™

- One end of the motor should be insulated. Install AEGIS iPRO™ on opposite end of insulation to protect the non-insulated bearing.
- Install AEGIS iPRO™ on both ends of motor or generator if bearing cannot be insulated.

★ Coat shaft with Colloidal Silver Shaft Coating

MOTORS WITH CERAMIC BEARINGS

Insulating both bearing journals or using ceramic coated bearings in the motor **does not prevent VFD induced currents** from discharging through the bearings on attached equipment and may present a voltage hazard.

Whenever ceramic bearings are used in a motor, *AEGIS SGR™ is required* to protect attached equipment and reduce potentially dangerous shaft voltages.

DRAFT

Purpose of Application Notes: Application notes are intended as general guidance to assist with proper application of AEGIS SGR™ Bearing Protection Ring™ to protect motor bearings. All statements and technical information contained in the application notes are rendered in good faith. User must assume responsibility to determine suitability of the product for its intended use.

AEGIS SVP™ Shaft Voltage Probe

Conductive Microfiber Probe for use with Fluke 199C ScopeMeter



Measuring VFD Induced Shaft Voltages

For the first time you can easily and more accurately measure the voltage on a rotating shaft. The AEGIS SVP™ Shaft Voltage Probe's unique design of high density conductive microfibers ensures continuous contact with the rotating shaft. Used with the Fluke 199C ScopeMeter, you can determine if your motor is subject to potentially damaging bearing currents.

Catalog Number	Includes:
SVP-KIT-F199C	3 SVP tips, probe holder with two piece extension rod (fits 3/8" magnetic base)
SVP-TIP-F199C	3 SVP tips

Selecting The Right Size Bearing Protection Ring For Your Motor



Front View


Side View


Back View

Mounting Options shown on page 8

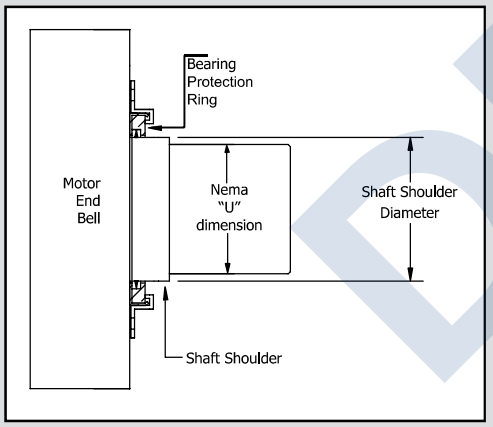

1. Measure shaft diameter at a point 0.125" from motor end bell.
2. Refer to the part lists to locate the correct SGR part number.

Note: If you have a slinger or a shaft shoulder that is less than 0.375", you will need the NEMA/IEC kit. See page 13 for more information.

Example shaft measurement
0.425"

Catalog Number	Min.shaft diameter	Max.shaft diameter	Outside diameter	Thickness Max
SGR-6.9-1	0.311	0.355	1.60	0.295
SGR-8.0-1	0.356	0.395	1.60	0.295
SGR-9.0-1	0.396	0.435	1.60	0.295
SGR-10.1-1	0.436	0.480	1.60	0.295
SGR-11.2-1	0.481	0.520	1.60	0.295

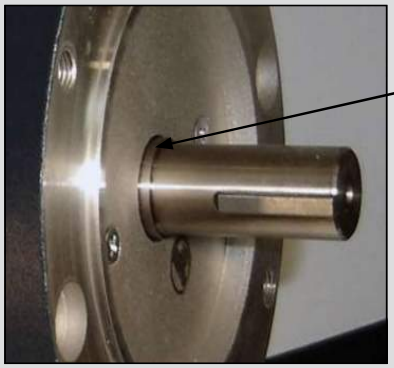

Shaft shoulder: The SGR can be mounted to the shaft shoulder but the shoulder should be at least 0.375" in length so that all of the fibers are in contact with the rotating shaft. Measure the diameter of the shaft shoulder then locate the correct SGR on the part lists.

DRAFT

AEGIS SGR™ Bearing Protection Ring™ Options



pg. 9

NEW PRODUCT!

Conductive Epoxy Mounting

Shaft diameters: 0.311" to 6.02"
Solid and Split Ring
Quick and easy installation to metal motor frame
Conductive Epoxy Included



pg.10-11

Standard Mounting Brackets

Shaft diameters: 0.311" to 6.02"
Ships with mounting brackets, 6-32 screws and washers
Quick and easy installation to most surfaces



pg. 10-11

Split Ring

Shaft diameter: 0.311" to 6.02"
4 to 6 mounting brackets, M3 screws and washers
Installs without decoupling motor



pg. 10-11

Bolt Through Mounting

Shaft diameters: 0.311" to 6.02"
M3 x 14 socket head cap screws and lock washers
2 mounting holes up to shaft size 3.895"
4 mounting holes for larger sizes



pg. 12

Press Fit Mounting

Shaft diameters: 0.311" to 6.02"
Clean dry 0.004" press fit
Custom sizes available



pg. 13

NEMA-IEC Mounting Kits

Shaft diameter: see chart for standard kits
Custom kits available for other shaft diameters
Clears any slinger, shaft shoulder or protrusion



pg. 14

WTG

Long term reliable performance
Maintenance free system
Solid and Split Ring configurations



pg. 14

iPRO

Long term reliable performance
Maintenance free system
Solid and Split Ring configurations
Available in sizes up to 30" shaft diameter

DRAFT

Standard SGR™ - Conductive Epoxy Mounting





NEW PRODUCT!

Dimensions in inches

Solid SGR Catalog Number	Split SGR Catalog Number	Min.shaft diameter	Max.shaft diameter	Outside diameter	Thickness Max
SGR-6.9-0AW	SGR-6.9-0A4W	0.311	0.355	1.60	0.295
SGR-8.0-0AW	SGR-8.0-0A4W	0.356	0.395	1.60	0.295
SGR-9.0-0AW	SGR-9.0-0A4W	0.396	0.435	1.60	0.295
SGR-10.1-0AW	SGR-10.1-0A4W	0.436	0.480	1.60	0.295
SGR-11.2-0AW	SGR-11.2-0A4W	0.481	0.520	1.60	0.295
SGR-12.2-0AW	SGR-12.2-0A4W	0.521	0.560	1.60	0.295
SGR-13.2-0AW	SGR-13.2-0A4W	0.561	0.605	1.60	0.295
SGR-14.4-0AW	SGR-14.4-0A4W	0.606	0.645	1.60	0.295
SGR-15.4-0AW	SGR-15.4-0A4W	0.646	0.685	2.10	0.295
SGR-16.4-0AW	SGR-16.4-0A4W	0.686	0.730	2.10	0.295
SGR-17.6-0AW	SGR-17.6-0A4W	0.731	0.774	2.10	0.295
SGR-18.7-0AW	SGR-18.7-0A4W	0.775	0.815	2.10	0.295
SGR-19.7-0AW	SGR-19.7-0A4W	0.816	0.855	2.10	0.295
SGR-20.7-0AW	SGR-20.7-0A4W	0.856	0.895	2.10	0.295
SGR-21.7-0AW	SGR-21.7-0A4W	0.896	0.935	2.10	0.295
SGR-22.8-0AW	SGR-22.8-0A4W	0.936	0.980	2.10	0.295
SGR-23.9-0AW	SGR-23.9-0A4W	0.981	1.020	2.10	0.295
SGR-24.9-0AW	SGR-24.9-0A4W	1.021	1.060	2.10	0.295
SGR-25.9-0AW	SGR-25.9-0A4W	1.061	1.105	2.10	0.295
SGR-27.1-0AW	SGR-27.1-0A4W	1.106	1.145	2.10	0.295
SGR-28.1-0AW	SGR-28.1-0A4W	1.146	1.185	2.10	0.295
SGR-29.1-0AW	SGR-29.1-0A4W	1.186	1.230	2.10	0.295
SGR-30.3-0AW	SGR-30.3-0A4W	1.231	1.270	2.10	0.295
SGR-31.3-0AW	SGR-31.3-0A4W	1.271	1.310	2.10	0.295
SGR-32.3-0AW	SGR-32.3-0A4W	1.311	1.355	2.10	0.295
SGR-33.4-0AW	SGR-33.4-0A4W	1.356	1.395	2.10	0.295
SGR-34.4-0AW	SGR-34.4-0A4W	1.396	1.435	2.68	0.295
SGR-35.5-0AW	SGR-35.5-0A4W	1.436	1.480	2.68	0.295
SGR-36.6-0AW	SGR-36.6-0A4W	1.481	1.520	2.68	0.295
SGR-37.6-0AW	SGR-37.6-0A4W	1.521	1.560	2.68	0.295
SGR-38.6-0AW	SGR-38.6-0A4W	1.561	1.605	2.68	0.295
SGR-39.8-0AW	SGR-39.8-0A4W	1.606	1.645	2.68	0.295
SGR-40.8-0AW	SGR-40.8-0A4W	1.646	1.685	2.68	0.295
SGR-41.8-0AW	SGR-41.8-0A4W	1.686	1.730	2.68	0.295
SGR-43.0-0AW	SGR-43.0-0A4W	1.731	1.770	2.68	0.295
SGR-44.0-0AW	SGR-44.0-0A4W	1.771	1.810	2.68	0.295
SGR-45.0-0AW	SGR-45.0-0A4W	1.811	1.855	2.68	0.295
SGR-46.1-0AW	SGR-46.1-0A4W	1.856	1.895	2.68	0.295
SGR-47.1-0AW	SGR-47.1-0A4W	1.896	1.935	2.68	0.295
SGR-48.2-0AW	SGR-48.2-0A4W	1.936	1.980	2.68	0.295
SGR-49.3-0AW	SGR-49.3-0A4W	1.981	2.020	2.68	0.295
SGR-50.3-0AW	SGR-50.3-0A4W	2.021	2.060	3.10	0.295
SGR-51.3-0AW	SGR-51.3-0A4W	2.061	2.105	3.10	0.295
SGR-52.5-0AW	SGR-52.5-0A4W	2.106	2.145	3.10	0.295
SGR-53.5-0AW	SGR-53.5-0A4W	2.146	2.185	3.10	0.295
SGR-54.5-0AW	SGR-54.5-0A4W	2.186	2.230	3.10	0.295
SGR-55.7-0AW	SGR-55.7-0A4W	2.231	2.270	3.10	0.295
SGR-56.7-0AW	SGR-56.7-0A4W	2.271	2.310	3.10	0.295
SGR-57.7-0AW	SGR-57.7-0A4W	2.311	2.355	3.10	0.295
SGR-58.8-0AW	SGR-58.8-0A4W	2.356	2.395	3.10	0.295
SGR-59.8-0AW	SGR-59.8-0A4W	2.396	2.435	3.60	0.295
SGR-60.9-0AW	SGR-60.9-0A4W	2.436	2.480	3.60	0.295
SGR-62.0-0AW	SGR-62.0-0A4W	2.481	2.520	3.60	0.295
SGR-63.0-0AW	SGR-63.0-0A4W	2.521	2.560	3.60	0.295
SGR-64.0-0AW	SGR-64.0-0A4W	2.561	2.605	3.60	0.295
SGR-65.2-0AW	SGR-65.2-0A4W	2.606	2.645	3.60	0.295
SGR-66.2-0AW	SGR-66.2-0A4W	2.646	2.685	3.60	0.295
SGR-67.2-0AW	SGR-67.2-0A4W	2.686	2.730	3.60	0.295
SGR-68.4-0AW	SGR-68.4-0A4W	2.731	2.770	3.60	0.295
SGR-69.4-0AW	SGR-69.4-0A4W	2.771	2.810	3.60	0.295
SGR-70.4-0AW	SGR-70.4-0A4W	2.811	2.855	3.60	0.295
SGR-71.5-0AW	SGR-71.5-0A4W	2.856	2.895	3.60	0.295
SGR-72.5-0AW	SGR-72.5-0A4W	2.896	2.935	4.10	0.295
SGR-73.6-0AW	SGR-73.6-0A4W	2.936	2.980	4.10	0.295
SGR-74.7-0AW	SGR-74.7-0A4W	2.981	3.020	4.10	0.295
SGR-75.7-0AW	SGR-75.7-0A4W	3.021	3.060	4.10	0.295
SGR-76.7-0AW	SGR-76.7-0A4W	3.061	3.105	4.10	0.295
SGR-77.9-0AW	SGR-77.9-0A4W	3.106	3.145	4.10	0.295
SGR-78.9-0AW	SGR-78.9-0A4W	3.146	3.185	4.10	0.295
SGR-79.9-0AW	SGR-79.9-0A4W	3.186	3.230	4.10	0.295
SGR-81.1-0AW	SGR-81.1-0A4W	3.231	3.270	4.10	0.295
SGR-82.1-0AW	SGR-82.1-0A4W	3.271	3.310	4.10	0.295
SGR-83.1-0AW	SGR-83.1-0A4W	3.311	3.355	4.10	0.295
SGR-84.2-0AW	SGR-84.2-0A4W	3.356	3.395	4.10	0.295
SGR-85.2-0AW	SGR-85.2-0A4W	3.396	3.435	4.60	0.295
SGR-86.3-0AW	SGR-86.3-0A4W	3.436	3.480	4.60	0.295
SGR-87.4-0AW	SGR-87.4-0A4W	3.481	3.520	4.60	0.295
SGR-88.4-0AW	SGR-88.4-0A4W	3.521	3.560	4.60	0.295
SGR-89.4-0AW	SGR-89.4-0A4W	3.561	3.605	4.60	0.295
SGR-90.6-0AW	SGR-90.6-0A4W	3.606	3.645	4.60	0.295
SGR-91.6-0AW	SGR-91.6-0A4W	3.646	3.685	4.60	0.295
SGR-92.6-0AW	SGR-92.6-0A4W	3.686	3.730	4.60	0.295
SGR-93.8-0AW	SGR-93.8-0A4W	3.731	3.770	4.60	0.295
SGR-94.8-0AW	SGR-94.8-0A4W	3.771	3.810	4.60	0.295
SGR-95.8-0AW	SGR-95.8-0A4W	3.811	3.855	4.60	0.295
SGR-96.9-0AW	SGR-96.9-0A4W	3.856	3.895	4.60	0.295
SGR-97.9-0AW	SGR-97.9-0A4W	3.896	3.935	5.10	0.295
SGR-99.0-0AW	SGR-99.0-0A4W	3.936	3.980	5.10	0.295
SGR-100.1-0AW	SGR-100.1-0A4W	3.981	4.020	5.10	0.295
SGR-101.1-0AW	SGR-101.1-0A4W	4.021	4.060	5.10	0.295
SGR-102.1-0AW	SGR-102.1-0A4W	4.061	4.105	5.10	0.295
SGR-103.3-0AW	SGR-103.3-0A4W	4.106	4.145	5.10	0.295
SGR-104.3-0AW	SGR-104.3-0A4W	4.146	4.185	5.10	0.295
SGR-105.3-0AW	SGR-105.3-0A4W	4.186	4.230	5.10	0.295
SGR-106.5-0AW	SGR-106.5-0A4W	4.231	4.270	5.10	0.295
SGR-107.5-0AW	SGR-107.5-0A4W	4.271	4.310	5.10	0.295
SGR-108.5-0AW	SGR-108.5-0A4W	4.311	4.355	5.10	0.295
SGR-109.6-0AW	SGR-109.6-0A4W	4.356	4.395	5.10	0.295
SGR-110.6-0AW	SGR-110.6-0A4W	4.396	4.435	5.60	0.295
SGR-111.7-0AW	SGR-111.7-0A4W	4.436	4.480	5.60	0.295
SGR-112.8-0AW	SGR-112.8-0A4W	4.481	4.520	5.60	0.295
SGR-113.8-0AW	SGR-113.8-0A4W	4.521	4.560	5.60	0.295
SGR-114.8-0AW	SGR-114.8-0A4W	4.561	4.605	5.60	0.295
SGR-116.0-0AW	SGR-116.0-0A4W	4.606	4.645	5.60	0.295
SGR-117.0-0AW	SGR-117.0-0A4W	4.646	4.685	5.60	0.295
SGR-118.0-0AW	SGR-118.0-0A4W	4.686	4.730	5.60	0.295
SGR-119.2-0AW	SGR-119.2-0A4W	4.731	4.770	5.60	0.295
SGR-120.2-0AW	SGR-120.2-0A4W	4.771	4.810	5.60	0.295
SGR-121.2-0AW	SGR-121.2-0A4W	4.811	4.855	5.60	0.295
SGR-122.3-0AW	SGR-122.3-0A4W	4.856	4.895	5.60	0.295
SGR-123.3-0AW	SGR-123.3-0A4W	4.896	4.935	6.10	0.295
SGR-124.4-0AW	SGR-124.4-0A4W	4.936	4.980	6.10	0.295
SGR-125.5-0AW	SGR-125.5-0A4W	4.981	5.020	6.10	0.295
SGR-126.5-0AW	SGR-126.5-0A4W	5.021	5.060	6.10	0.295
SGR-127.5-0AW	SGR-127.5-0A4W	5.061	5.105	6.10	0.295
SGR-128.7-0AW	SGR-128.7-0A4W	5.106	5.145	6.10	0.295
SGR-129.7-0AW	SGR-129.7-0A4W	5.146	5.185	6.10	0.295
SGR-130.7-0AW	SGR-130.7-0A4W	5.186	5.230	6.10	0.295
SGR-131.9-0AW	SGR-131.9-0A4W	5.231	5.270	6.10	0.295
SGR-132.9-0AW	SGR-132.9-0A4W	5.271	5.310	6.10	0.295
SGR-133.9-0AW	SGR-133.9-0A4W	5.311	5.355	6.10	0.295
SGR-135.0-0AW	SGR-135.0-0A4W	5.356	5.395	6.10	0.295
SGR-136.0-0AW	SGR-136.0-0A4W	5.396	5.435	6.60	0.295
SGR-137.1-0AW	SGR-137.1-0A4W	5.436	5.480	6.60	0.295
SGR-138.2-0AW	SGR-138.2-0A4W	5.481	5.520	6.60	0.295
SGR-139.2-0AW	SGR-139.2-0A4W	5.521	5.560	6.60	0.295
SGR-140.2-0AW	SGR-140.2-0A4W	5.561	5.605	6.60	0.295
SGR-141.4-0AW	SGR-141.4-0A4W	5.606	5.645	6.60	0.295
SGR-142.4-0AW	SGR-142.4-0A4W	5.646	5.685	6.60	0.295
SGR-143.4-0AW	SGR-143.4-0A4W	5.686	5.730	6.60	0.295
SGR-144.6-0AW	SGR-144.6-0A4W	5.731	5.770	6.60	0.295
SGR-145.6-0AW	SGR-145.6-0A4W	5.771	5.810	6.60	0.295
SGR-146.6-0AW	SGR-146.6-0A4W	5.811	5.855	6.60	0.295
SGR-147.7-0AW	SGR-147.7-0A4W	5.856	5.895	6.60	0.295
SGR-148.7-0AW	SGR-148.7-0A4W	5.896	5.935	7.10	0.295
SGR-149.8-0AW	SGR-149.8-0A4W	5.936	5.980	7.10	0.295
SGR-150.9-0AW	SGR-150.9-0A4W	5.981	6.020	7.10	0.295

Conductive Epoxy Included

Parts List





Dimensions in inches

Standard SGR Catalog Number	Split Ring* Catalog Number	Bolt Through* Catalog Number	Min. shaft diameter	Max. shaft diameter	Outside diameter	Thickness Max
SGR-6.9-1	SGR-6.9-2A4	SGR-6.9-3	0.311	0.355	1.60	0.295
SGR-8.0-1	SGR-8.0-2A4	SGR-8.0-3	0.356	0.395	1.60	0.295
SGR-9.0-1	SGR-9.0-2A4	SGR-9.0-3	0.396	0.435	1.60	0.295
SGR-10.1-1	SGR-10.1-2A4	SGR-10.1-3	0.436	0.480	1.60	0.295
SGR-11.2-1	SGR-11.2-2A4	SGR-11.2-3	0.481	0.520	1.60	0.295
SGR-12.2-1	SGR-12.2-2A4	SGR-12.2-3	0.521	0.560	1.60	0.295
SGR-13.2-1	SGR-13.2-2A4	SGR-13.2-3	0.561	0.605	1.60	0.295
SGR-14.4-1	SGR-14.4-2A4	SGR-14.4-3	0.606	0.645	1.60	0.295
SGR-15.4-1	SGR-15.4-2A4	SGR-15.4-3	0.646	0.685	2.10	0.295
SGR-16.4-1	SGR-16.4-2A4	SGR-16.4-3	0.686	0.730	2.10	0.295
SGR-17.6-1	SGR-17.6-2A4	SGR-17.6-3	0.731	0.774	2.10	0.295
SGR-18.7-1	SGR-18.7-2A4	SGR-18.7-3	0.775	0.815	2.10	0.295
SGR-19.7-1	SGR-19.7-2A4	SGR-19.7-3	0.816	0.855	2.10	0.295
SGR-20.7-1	SGR-20.7-2A4	SGR-20.7-3	0.856	0.895	2.10	0.295
SGR-21.7-1	SGR-21.7-2A4	SGR-21.7-3	0.896	0.935	2.10	0.295
SGR-22.8-1	SGR-22.8-2A4	SGR-22.8-3	0.936	0.980	2.10	0.295
SGR-23.9-1	SGR-23.9-2A4	SGR-23.9-3	0.981	1.020	2.10	0.295
SGR-24.9-1	SGR-24.9-2A4	SGR-24.9-3	1.021	1.060	2.10	0.295
SGR-25.9-1	SGR-25.9-2A4	SGR-25.9-3	1.061	1.105	2.10	0.295
SGR-27.1-1	SGR-27.1-2A4	SGR-27.1-3	1.106	1.145	2.10	0.295
SGR-28.1-1	SGR-28.1-2A4	SGR-28.1-3	1.146	1.185	2.10	0.295
SGR-29.1-1	SGR-29.1-2A4	SGR-29.1-3	1.186	1.230	2.10	0.295
SGR-30.3-1	SGR-30.3-2A4	SGR-30.3-3	1.231	1.270	2.10	0.295
SGR-31.3-1	SGR-31.3-2A4	SGR-31.3-3	1.271	1.310	2.10	0.295
SGR-32.3-1	SGR-32.3-2A4	SGR-32.3-3	1.311	1.355	2.10	0.295
SGR-33.4-1	SGR-33.4-2A4	SGR-33.4-3	1.356	1.395	2.10	0.295
SGR-34.4-1	SGR-34.4-2A4	SGR-34.4-3	1.396	1.435	2.68	0.295
SGR-35.5-1	SGR-35.5-2A4	SGR-35.5-3	1.436	1.480	2.68	0.295
SGR-36.6-1	SGR-36.6-2A4	SGR-36.6-3	1.481	1.520	2.68	0.295
SGR-37.6-1	SGR-37.6-2A4	SGR-37.6-3	1.521	1.560	2.68	0.295
SGR-38.6-1	SGR-38.6-2A4	SGR-38.6-3	1.561	1.605	2.68	0.295
SGR-39.8-1	SGR-39.8-2A4	SGR-39.8-3	1.606	1.645	2.68	0.295
SGR-40.8-1	SGR-40.8-2A4	SGR-40.8-3	1.646	1.685	2.68	0.295
SGR-41.8-1	SGR-41.8-2A4	SGR-41.8-3	1.686	1.730	2.68	0.295
SGR-43.0-1	SGR-43.0-2A4	SGR-43.0-3	1.731	1.770	2.68	0.295
SGR-44.0-1	SGR-44.0-2A4	SGR-44.0-3	1.771	1.810	2.68	0.295
SGR-45.0-1	SGR-45.0-2A4	SGR-45.0-3	1.811	1.855	2.68	0.295
SGR-46.1-1	SGR-46.1-2A4	SGR-46.1-3	1.856	1.895	2.68	0.295
SGR-47.1-1	SGR-47.1-2A4	SGR-47.1-3	1.896	1.935	2.68	0.295
SGR-48.2-1	SGR-48.2-2A4	SGR-48.2-3	1.936	1.980	2.68	0.295
SGR-49.3-1	SGR-49.3-2A4	SGR-49.3-3	1.981	2.020	2.68	0.295
SGR-50.3-1	SGR-50.3-2A4	SGR-50.3-3	2.021	2.060	3.10	0.295
SGR-51.3-1	SGR-51.3-2A4	SGR-51.3-3	2.061	2.105	3.10	0.295
SGR-52.5-1	SGR-52.5-2A4	SGR-52.5-3	2.106	2.145	3.10	0.295
SGR-53.5-1	SGR-53.5-2A4	SGR-53.5-3	2.146	2.185	3.10	0.295
SGR-54.5-1	SGR-54.5-2A4	SGR-54.5-3	2.186	2.230	3.10	0.295
SGR-55.7-1	SGR-55.7-2A4	SGR-55.7-3	2.231	2.270	3.10	0.295
SGR-56.7-1	SGR-56.7-2A4	SGR-56.7-3	2.271	2.310	3.10	0.295
SGR-57.7-1	SGR-57.7-2A4	SGR-57.7-3	2.311	2.355	3.10	0.295
SGR-58.8-1	SGR-58.8-2A4	SGR-58.8-3	2.356	2.395	3.10	0.295
SGR-59.8-1	SGR-59.8-2A4	SGR-59.8-3	2.396	2.435	3.60	0.295
SGR-60.9-1	SGR-60.9-2A4	SGR-60.9-3	2.436	2.480	3.60	0.295
SGR-62.0-1	SGR-62.0-2A4	SGR-62.0-3	2.481	2.520	3.60	0.295
SGR-63.0-1	SGR-63.0-2A4	SGR-63.0-3	2.521	2.560	3.60	0.295
SGR-64.0-1	SGR-64.0-2A4	SGR-64.0-3	2.561	2.605	3.60	0.295
SGR-65.2-1	SGR-65.2-2A4	SGR-65.2-3	2.606	2.645	3.60	0.295
SGR-66.2-1	SGR-66.2-2A4	SGR-66.2-3	2.646	2.685	3.60	0.295
SGR-67.2-1	SGR-67.2-2A4	SGR-67.2-3	2.686	2.730	3.60	0.295
SGR-68.4-1	SGR-68.4-2A4	SGR-68.4-3	2.731	2.770	3.60	0.295
SGR-69.4-1	SGR-69.4-2A4	SGR-69.4-3	2.771	2.810	3.60	0.295
SGR-70.4-1	SGR-70.4-2A4	SGR-70.4-3	2.811	2.855	3.60	0.295
SGR-71.5-1	SGR-71.5-2A4	SGR-71.5-3	2.856	2.895	3.60	0.295
SGR-72.5-1	SGR-72.5-2A4	SGR-72.5-3	2.896	2.935	4.10	0.295
SGR-73.6-1	SGR-73.6-2A4	SGR-73.6-3	2.936	2.980	4.10	0.295
SGR-74.7-1	SGR-74.7-2A4	SGR-74.7-3	2.981	3.020	4.10	0.295
SGR-75.7-1	SGR-75.7-2A4	SGR-75.7-3	3.021	3.060	4.10	0.295
SGR-76.7-1	SGR-76.7-2A4	SGR-76.7-3	3.061	3.105	4.10	0.295
SGR-77.9-1	SGR-77.9-2A4	SGR-77.9-3	3.106	3.145	4.10	0.295
SGR-78.9-1	SGR-78.9-2A4	SGR-78.9-3	3.146	3.185	4.10	0.295

*Custom Part - No Returns

DRAFT

Parts List







Dimensions in inches

Standard SGR Catalog Number	Split Ring* Catalog Number	Bolt Through* Catalog Number	Min. shaft diameter	Max. shaft diameter	Outside diameter	Thickness Max
SGR-79.9-1	SGR-79.9-2A4	SGR-79.9-3	3.186	3.230	4.10	0.295
SGR-81.1-1	SGR-81.1-2A4	SGR-81.1-3	3.231	3.270	4.10	0.295
SGR-82.1-1	SGR-82.1-2A4	SGR-82.1-3	3.271	3.310	4.10	0.295
SGR-83.1-1	SGR-83.1-2A4	SGR-83.1-3	3.311	3.355	4.10	0.295
SGR-84.2-1	SGR-84.2-2A4	SGR-84.2-3	3.356	3.395	4.10	0.295
SGR-85.2-1	SGR-85.2-2A4	SGR-85.2-3	3.396	3.435	4.60	0.295
SGR-86.3-1	SGR-86.3-2A4	SGR-86.3-3	3.436	3.480	4.60	0.295
SGR-87.4-1	SGR-87.4-2A4	SGR-87.4-3	3.481	3.520	4.60	0.295
SGR-88.4-1	SGR-88.4-2A4	SGR-88.4-3	3.521	3.560	4.60	0.295
SGR-89.4-1	SGR-89.4-2A4	SGR-89.4-3	3.561	3.605	4.60	0.295
SGR-90.6-1	SGR-90.6-2A4	SGR-90.6-3	3.606	3.645	4.60	0.295
SGR-91.6-1	SGR-91.6-2A4	SGR-91.6-3	3.646	3.685	4.60	0.295
SGR-92.6-1	SGR-92.6-2A4	SGR-92.6-3	3.686	3.730	4.60	0.295
SGR-93.8-1	SGR-93.8-2A4	SGR-93.8-3	3.731	3.770	4.60	0.295
SGR-94.8-1	SGR-94.8-2A4	SGR-94.8-3	3.771	3.810	4.60	0.295
SGR-95.8-1	SGR-95.8-2A4	SGR-95.8-3	3.811	3.855	4.60	0.295
SGR-96.9-1	SGR-96.9-2A4	SGR-96.9-3	3.856	3.895	4.60	0.295
SGR-97.9-1	SGR-97.9-2A4	SGR-97.9-3	3.896	3.935	5.10	0.295
SGR-99.0-1	SGR-99.0-2A4	SGR-99.0-3	3.936	3.980	5.10	0.295
SGR-100.1-1	SGR-100.1-2A4	SGR-100.1-3	3.981	4.020	5.10	0.295
SGR-101.1-1	SGR-101.1-2A4	SGR-101.1-3	4.021	4.060	5.10	0.295
SGR-102.1-1	SGR-102.1-2A4	SGR-102.1-3	4.061	4.105	5.10	0.295
SGR-103.3-1	SGR-103.3-2A4	SGR-103.3-3	4.106	4.145	5.10	0.295
SGR-104.3-1	SGR-104.3-2A4	SGR-104.3-3	4.146	4.185	5.10	0.295
SGR-105.3-1	SGR-105.3-2A4	SGR-105.3-3	4.186	4.230	5.10	0.295
SGR-106.5-1	SGR-106.5-2A4	SGR-106.5-3	4.231	4.270	5.10	0.295
SGR-107.5-1	SGR-107.5-2A4	SGR-107.5-3	4.271	4.310	5.10	0.295
SGR-108.5-1	SGR-108.5-2A4	SGR-108.5-3	4.311	4.355	5.10	0.295
SGR-109.6-1	SGR-109.6-2A4	SGR-109.6-3	4.356	4.395	5.10	0.295
SGR-110.6-1	SGR-110.6-2A4	SGR-110.6-3	4.396	4.435	5.60	0.295
SGR-111.7-1	SGR-111.7-2A4	SGR-111.7-3	4.436	4.480	5.60	0.295
SGR-112.8-1	SGR-112.8-2A4	SGR-112.8-3	4.481	4.520	5.60	0.295
SGR-113.8-1	SGR-113.8-2A4	SGR-113.8-3	4.521	4.560	5.60	0.295
SGR-114.8-1	SGR-114.8-2A4	SGR-114.8-3	4.561	4.605	5.60	0.295
SGR-116.0-1	SGR-116.0-2A4	SGR-116.0-3	4.606	4.645	5.60	0.295
SGR-117.0-1	SGR-117.0-2A4	SGR-117.0-3	4.646	4.685	5.60	0.295
SGR-118.0-1	SGR-118.0-2A4	SGR-118.0-3	4.686	4.730	5.60	0.295
SGR-119.2-1	SGR-119.2-2A4	SGR-119.2-3	4.731	4.770	5.60	0.295
SGR-120.2-1	SGR-120.2-2A4	SGR-120.2-3	4.771	4.810	5.60	0.295
SGR-121.2-1	SGR-121.2-2A4	SGR-121.2-3	4.811	4.855	5.60	0.295
SGR-122.3-1	SGR-122.3-2A4	SGR-122.3-3	4.856	4.895	5.60	0.295
SGR-123.3-1	SGR-123.3-2A4	SGR-123.3-3	4.896	4.935	6.10	0.295
SGR-124.4-1	SGR-124.4-2A4	SGR-124.4-3	4.936	4.980	6.10	0.295
SGR-125.5-1	SGR-125.5-2A4	SGR-125.5-3	4.981	5.020	6.10	0.295
SGR-126.5-1	SGR-126.5-2A4	SGR-126.5-3	5.021	5.060	6.10	0.295
SGR-127.5-1	SGR-127.5-2A4	SGR-127.5-3	5.061	5.105	6.10	0.295
SGR-128.7-1	SGR-128.7-2A4	SGR-128.7-3	5.106	5.145	6.10	0.295
SGR-129.7-1	SGR-129.7-2A4	SGR-129.7-3	5.146	5.185	6.10	0.295
SGR-130.7-1	SGR-130.7-2A4	SGR-130.7-3	5.186	5.230	6.10	0.295
SGR-131.9-1	SGR-131.9-2A4	SGR-131.9-3	5.231	5.270	6.10	0.295
SGR-132.9-1	SGR-132.9-2A4	SGR-132.9-3	5.271	5.310	6.10	0.295
SGR-133.9-1	SGR-133.9-2A4	SGR-133.9-3	5.311	5.355	6.10	0.295
SGR-135.0-1	SGR-135.0-2A4	SGR-135.0-3	5.356	5.395	6.10	0.295
SGR-136.0-1	SGR-136.0-2A4	SGR-136.0-3	5.396	5.435	6.60	0.295
SGR-137.1-1	SGR-137.1-2A4	SGR-137.1-3	5.436	5.480	6.60	0.295
SGR-138.2-1	SGR-138.2-2A4	SGR-138.2-3	5.481	5.520	6.60	0.295
SGR-139.2-1	SGR-139.2-2A4	SGR-139.2-3	5.521	5.560	6.60	0.295
SGR-140.2-1	SGR-140.2-2A4	SGR-140.2-3	5.561	5.605	6.60	0.295
SGR-141.4-1	SGR-141.4-2A4	SGR-141.4-3	5.606	5.645	6.60	0.295
SGR-142.4-1	SGR-142.4-2A4	SGR-142.4-3	5.646	5.685	6.60	0.295
SGR-143.4-1	SGR-143.4-2A4	SGR-143.4-3	5.686	5.730	6.60	0.295
SGR-144.6-1	SGR-144.6-2A4	SGR-144.6-3	5.731	5.770	6.60	0.295
SGR-145.6-1	SGR-145.6-2A4	SGR-145.6-3	5.771	5.810	6.60	0.295
SGR-146.6-1	SGR-146.6-2A4	SGR-146.6-3	5.811	5.855	6.60	0.295
SGR-147.7-1	SGR-147.7-2A4	SGR-147.7-3	5.856	5.895	6.60	0.295
SGR-148.7-1	SGR-148.7-2A4	SGR-148.7-3	5.896	5.935	7.10	0.295
SGR-149.8-1	SGR-149.8-2A4	SGR-149.8-3	5.936	5.980	7.10	0.295
SGR-150.9-1	SGR-150.9-2A4	SGR-150.9-3	5.981	6.020	7.10	0.295

*Custom Part - No Returns

DRAFT

Standard SGR™ - Press Fit Mounting*



Dimensions in inches

Catalog Number	Min.shaft diameter	Max.shaft diameter	SGR OD Tolerance +0/-0.001	Thickness Max	Bore Tolerance +0.001/-0
SGR-6.9-0A6	0.311	0.355	1.580	0.295	1.576
SGR-8.0-0A6	0.356	0.395	1.580	0.295	1.576
SGR-9.0-0A6	0.396	0.435	1.580	0.295	1.576
SGR-10.1-0A6	0.436	0.480	1.580	0.295	1.576
SGR-11.2-0A6	0.481	0.520	1.580	0.295	1.576
SGR-12.2-0A6	0.521	0.560	1.580	0.295	1.576
SGR-13.2-0A6	0.561	0.605	1.580	0.295	1.576
SGR-14.4-0A6	0.606	0.645	1.580	0.295	1.576
SGR-15.4-0A6	0.646	0.685	2.080	0.295	2.076
SGR-16.4-0A6	0.686	0.730	2.080	0.295	2.076
SGR-17.6-0A6	0.731	0.774	2.080	0.295	2.076
SGR-18.7-0A6	0.775	0.815	2.080	0.295	2.076
SGR-19.7-0A6	0.816	0.855	2.080	0.295	2.076
SGR-20.7-0A6	0.856	0.895	2.080	0.295	2.076
SGR-21.7-0A6	0.896	0.935	2.080	0.295	2.076
SGR-22.8-0A6	0.936	0.980	2.080	0.295	2.076
SGR-23.9-0A6	0.981	1.020	2.080	0.295	2.076
SGR-24.9-0A6	1.021	1.060	2.080	0.295	2.076
SGR-25.9-0A6	1.061	1.105	2.080	0.295	2.076
SGR-27.1-0A6	1.106	1.145	2.080	0.295	2.076
SGR-28.1-0A6	1.146	1.185	2.080	0.295	2.076
SGR-29.1-0A6	1.186	1.230	2.080	0.295	2.076
SGR-30.3-0A6	1.231	1.270	2.080	0.295	2.076
SGR-31.3-0A6	1.271	1.310	2.080	0.295	2.076
SGR-32.3-0A6	1.311	1.355	2.080	0.295	2.076
SGR-33.4-0A6	1.356	1.395	2.080	0.295	2.076
SGR-34.4-0A6	1.396	1.435	2.660	0.295	2.656
SGR-35.5-0A6	1.436	1.480	2.660	0.295	2.656
SGR-36.6-0A6	1.481	1.520	2.660	0.295	2.656
SGR-37.6-0A6	1.521	1.560	2.660	0.295	2.656
SGR-38.6-0A6	1.561	1.605	2.660	0.295	2.656
SGR-39.8-0A6	1.606	1.645	2.660	0.295	2.656
SGR-40.8-0A6	1.646	1.685	2.660	0.295	2.656
SGR-41.8-0A6	1.686	1.730	2.660	0.295	2.656
SGR-43.0-0A6	1.731	1.770	2.660	0.295	2.656
SGR-44.0-0A6	1.771	1.810	2.660	0.295	2.656
SGR-45.0-0A6	1.811	1.855	2.660	0.295	2.656
SGR-46.1-0A6	1.856	1.895	2.660	0.295	2.656
SGR-47.1-0A6	1.896	1.935	2.660	0.295	2.656
SGR-48.2-0A6	1.936	1.980	2.660	0.295	2.656
SGR-49.3-0A6	1.981	2.020	2.660	0.295	2.656
SGR-50.3-0A6	2.021	2.060	3.080	0.295	3.076
SGR-51.3-0A6	2.061	2.105	3.080	0.295	3.076
SGR-52.5-0A6	2.106	2.145	3.080	0.295	3.076
SGR-53.5-0A6	2.146	2.185	3.080	0.295	3.076
SGR-54.5-0A6	2.186	2.230	3.080	0.295	3.076
SGR-55.7-0A6	2.231	2.270	3.080	0.295	3.076
SGR-56.7-0A6	2.271	2.310	3.080	0.295	3.076
SGR-57.7-0A6	2.311	2.355	3.080	0.295	3.076
SGR-58.8-0A6	2.356	2.395	3.080	0.295	3.076
SGR-59.8-0A6	2.396	2.435	3.580	0.295	3.576
SGR-60.9-0A6	2.436	2.480	3.580	0.295	3.576
SGR-62.0-0A6	2.481	2.520	3.580	0.295	3.576
SGR-63.0-0A6	2.521	2.560	3.580	0.295	3.576
SGR-64.0-0A6	2.561	2.605	3.580	0.295	3.576
SGR-65.2-0A6	2.606	2.645	3.580	0.295	3.576
SGR-66.2-0A6	2.646	2.685	3.580	0.295	3.576
SGR-67.2-0A6	2.686	2.730	3.580	0.295	3.576
SGR-68.4-0A6	2.731	2.770	3.580	0.295	3.576
SGR-69.4-0A6	2.771	2.810	3.580	0.295	3.576
SGR-70.4-0A6	2.811	2.855	3.580	0.295	3.576
SGR-71.5-0A6	2.856	2.895	3.580	0.295	3.576
SGR-72.5-0A6	2.896	2.935	4.080	0.295	4.076
SGR-73.6-0A6	2.936	2.980	4.080	0.295	4.076
SGR-74.7-0A6	2.981	3.020	4.080	0.295	4.076
SGR-75.7-0A6	3.021	3.060	4.080	0.295	4.076
SGR-76.7-0A6	3.061	3.105	4.080	0.295	4.076
SGR-77.9-0A6	3.106	3.145	4.080	0.295	4.076
SGR-78.9-0A6	3.146	3.185	4.080	0.295	4.076
SGR-79.9-0A6	3.186	3.230	4.080	0.295	4.076
SGR-81.1-0A6	3.231	3.270	4.080	0.295	4.076
SGR-82.1-0A6	3.271	3.310	4.080	0.295	4.076
SGR-83.1-0A6	3.311	3.355	4.080	0.295	4.076
SGR-84.2-0A6	3.356	3.395	4.080	0.295	4.076
SGR-85.2-0A6	3.396	3.435	4.580	0.295	4.576
SGR-86.3-0A6	3.436	3.480	4.580	0.295	4.576
SGR-87.4-0A6	3.481	3.520	4.580	0.295	4.576
SGR-88.4-0A6	3.521	3.560	4.580	0.295	4.576
SGR-89.4-0A6	3.561	3.605	4.580	0.295	4.576
SGR-90.6-0A6	3.606	3.645	4.580	0.295	4.576
SGR-91.6-0A6	3.646	3.685	4.580	0.295	4.576
SGR-92.6-0A6	3.686	3.730	4.580	0.295	4.576
SGR-93.8-0A6	3.731	3.770	4.580	0.295	4.576
SGR-94.8-0A6	3.771	3.810	4.580	0.295	4.576
SGR-95.8-0A6	3.811	3.855	4.580	0.295	4.576
SGR-96.9-0A6	3.856	3.895	4.580	0.295	4.576
SGR-97.9-0A6	3.896	3.935	5.080	0.295	5.076
SGR-99.0-0A6	3.936	3.980	5.080	0.295	5.076
SGR-100.1-0A6	3.981	4.020	5.080	0.295	5.076
SGR-101.1-0A6	4.021	4.060	5.080	0.295	5.076
SGR-102.1-0A6	4.061	4.105	5.080	0.295	5.076
SGR-103.3-0A6	4.106	4.145	5.080	0.295	5.076
SGR-104.3-0A6	4.146	4.185	5.080	0.295	5.076
SGR-105.3-0A6	4.186	4.230	5.080	0.295	5.076
SGR-106.5-0A6	4.231	4.270	5.080	0.295	5.076
SGR-107.5-0A6	4.271	4.310	5.080	0.295	5.076
SGR-108.5-0A6	4.311	4.355	5.080	0.295	5.076
SGR-109.6-0A6	4.356	4.395	5.080	0.295	5.076
SGR-110.6-0A6	4.396	4.435	5.580	0.295	5.576
SGR-111.7-0A6	4.436	4.480	5.580	0.295	5.576
SGR-112.8-0A6	4.481	4.520	5.580	0.295	5.576
SGR-113.8-0A6	4.521	4.560	5.580	0.295	5.576
SGR-114.8-0A6	4.561	4.605	5.580	0.295	5.576
SGR-116.0-0A6	4.606	4.645	5.580	0.295	5.576
SGR-117.0-0A6	4.646	4.685	5.580	0.295	5.576
SGR-118.0-0A6	4.686	4.730	5.580	0.295	5.576
SGR-119.2-0A6	4.731	4.770	5.580	0.295	5.576
SGR-120.2-0A6	4.771	4.810	5.580	0.295	5.576
SGR-121.2-0A6	4.811	4.855	5.580	0.295	5.576
SGR-122.3-0A6	4.856	4.895	5.580	0.295	5.576
SGR-123.3-0A6	4.896	4.935	6.080	0.295	6.076
SGR-124.4-0A6	4.936	4.980	6.080	0.295	6.076
SGR-125.5-0A6	4.981	5.020	6.080	0.295	6.076
SGR-126.5-0A6	5.021	5.060	6.080	0.295	6.076
SGR-127.5-0A6	5.061	5.105	6.080	0.295	6.076
SGR-128.7-0A6	5.106	5.145	6.080	0.295	6.076
SGR-129.7-0A6	5.146	5.185	6.080	0.295	6.076
SGR-130.7-0A6	5.186	5.230	6.080	0.295	6.076
SGR-131.9-0A6	5.231	5.270	6.080	0.295	6.076
SGR-132.9-0A6	5.271	5.310	6.080	0.295	6.076
SGR-133.9-0A6	5.311	5.355	6.080	0.295	6.076
SGR-135.0-0A6	5.356	5.395	6.080	0.295	6.076
SGR-136.0-0A6	5.396	5.435	6.580	0.295	6.576
SGR-137.1-0A6	5.436	5.480	6.580	0.295	6.576
SGR-138.2-0A6	5.481	5.520	6.580	0.295	6.576
SGR-139.2-0A6	5.521	5.560	6.580	0.295	6.576
SGR-140.2-0A6	5.561	5.605	6.580	0.295	6.576
SGR-141.4-0A6	5.606	5.645	6.580	0.295	6.576
SGR-142.4-0A6	5.646	5.685	6.580	0.295	6.576
SGR-143.4-0A6	5.686	5.730	6.580	0.295	6.576
SGR-144.6-0A6	5.731	5.770	6.580	0.295	6.576
SGR-145.6-0A6	5.771	5.810	6.580	0.295	6.576
SGR-146.6-0A6	5.811	5.855	6.580	0.295	6.576
SGR-147.7-0A6	5.856	5.895	6.580	0.295	6.576
SGR-148.7-0A6	5.896	5.935	7.080	0.295	7.076
SGR-149.8-0A6	5.936	5.980	7.080	0.295	7.076
SGR-150.9-0A6	5.981	6.020	7.080	0.295	7.076

*Custom Part - No Returns

Bearing Protection Ring Kit for NEMA & IEC Motors

Kits include AEGIS SGR™ Bearing Protection Ring and all mounting hardware

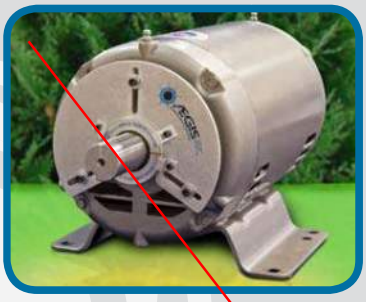

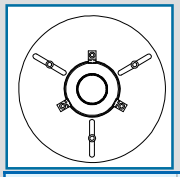

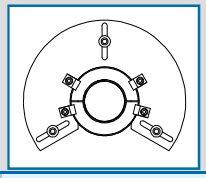

NEMA Motors Solid	NEMA Motors Split			
Catalog Number	**Catalog Number**	Motor shaft diameter "u"	NEMA Frame	Plate OD
SGR-0.625-NEMA	**SGR-0.625-NEMA-1A4**	0.625"	56	3.75"
SGR-0.875-NEMA	**SGR-0.875-NEMA-1A4**	0.875"	143T, 145T	5.60"
SGR-1.125-NEMA	**SGR-1.125-NEMA-1A4**	1.125"	182T, 184T	5.60"
SGR-1.375-NEMA	**SGR-1.375-NEMA-1A4**	1.375"	213T, 215T	5.60"
SGR-1.625-NEMA	**SGR-1.625-NEMA-1A4**	1.625"	254T, 256T	6.30"
SGR-1.875-NEMA	**SGR-1.875-NEMA-1A4**	1.875"	284T, 286T, 324TS, 326TS, 364TS, 365TS	6.30"
SGR-2.125-NEMA	**SGR-2.125-NEMA-1A4**	2.125"	324T, 326T, 404TS, 405TS	6.60"
SGR-2.375-NEMA	**SGR-2.375-NEMA-1A4**	2.375"	364T, 365T, 444TS, 445TS, 447TS, 449TS	6.60"
SGR-2.875-NEMA	**SGR-2.875-NEMA-1A4**	2.875"	404T, 405T,	7.30"
SGR-3.375-NEMA	**SGR-3.375-NEMA-1A4**	3.375"	444T, 445T, 447T, 449T	7.60"

IEC Motors Solid	IEC Motors Split			
Catalog Number	**Catalog Number**	IEC shaft diameter	IEC Frame	Plate OD
SGR-19-IEC	**SGR-19-IEC-2A4**	19mm	IEC 80 (2, 4, 6, 8 pole)	142mm
SGR-24-IEC	**SGR-24-IEC-2A4**	24mm	IEC 90S, 90L (2, 4, 6, 8 pole)	142mm
SGR-28-IEC	**SGR-28-IEC-2A4**	28mm	IEC 100L, 112M (2, 4, 6, 8 pole)	142mm
SGR-38-IEC	**SGR-38-IEC-2A4**	38mm	IEC 132S, 132M (2, 4, 6, 8 pole)	160mm
SGR-42-IEC	**SGR-42-IEC-2A4**	42mm	IEC 160M, 160L (2, 4, 6, 8 pole)	160mm
SGR-48-IEC	**SGR-48-IEC-2A4**	48mm	IEC 180M, 180L (2, 4, 6, 8 pole)	160mm
SGR-55-IEC	**SGR-55-IEC-2A4**	55mm	IEC 200L (2, 4, 6, 8 pole); IEC 225S, 225M (2 pole)	168mm
SGR-60-IEC	**SGR-60-IEC-2A4**	60mm	IEC 225S, 225M (4, 6, 8 pole) ; IEC 250M (2 pole)	168mm
SGR-65-IEC	**SGR-65-IEC-2A4**	65mm	IEC 250M (4, 6, 8 pole); IEC 280M, 280S, 315S, 315M, 315L (2 pole)	185mm
SGR-75-IEC	**SGR-75-IEC-2A4**	75mm	IEC 280S, 280M (4, 6, 8 pole); IEC 355M, 355L (2 pole)	193mm
SGR-80-IEC	**SGR-80-IEC-2A4**	80mm	IEC 315S, 315M, 315L (4, 6, 8 pole)	193mm
SGR-95-IEC	**SGR-95-IEC-2A4**	95mm	IEC 335L, 335M, 355L, 355M (4, 6, 8, 10 pole)	211mm

Custom Kits available for shaft diameters not shown above

NEMA/IEC Bearing Protection Ring™ Kit

SOLID



1 AEGIS SGR™
1 mounting plate
3 screws (inches or metric)
3 washers
3 lock washers
3 spacers*

SPLIT



1 AEGIS Split Ring SGR™
1 split mounting plate
3 screws (inches or metric)
3 washers
3 lock washers
3 spacers*

* each kit includes 3 spacer lengths: 1/4", 1/2", and 1" for NEMA kits and 7mm, 17mm, and 27mm for IEC kits.

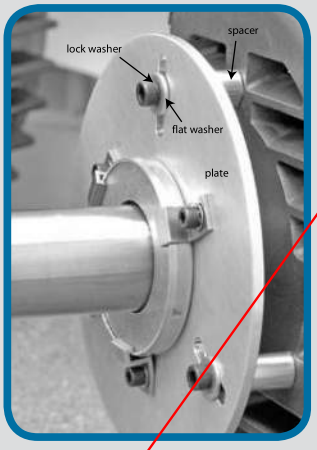

- Easy to order and install for any NEMA or IEC frame size
- Clears any slinger, shaft shoulder or protrusion
- Adjustable slots adapt to most end bells
- Rigid mounting plate ensures alignment
- Split Ring kit allows for installation without decoupling equipment

DRAFT

Custom Applications

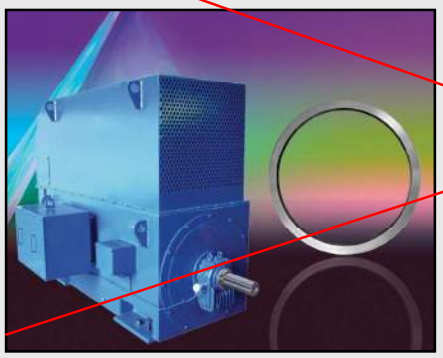

AEGIS SGR™ Bearing Protection Ring™ for Large Shaft Diameters

- For shaft diameters greater than 6" (152.4mm)
- Long term reliable performance
- Maintenance free system
- Available in solid or split ring design

AEGIS WTG™ Wind Turbine Bearing Protection



- 6 rows conductive microfiber
- High current capable
- AEGIS WTG™ shaft current monitoring compatible
- Long term reliable performance
- Maintenance free system
- Up-tower retrofit capable split ring configuration

AEGIS iPRO™ High Current Bearing Protection for Large Motors and Generators

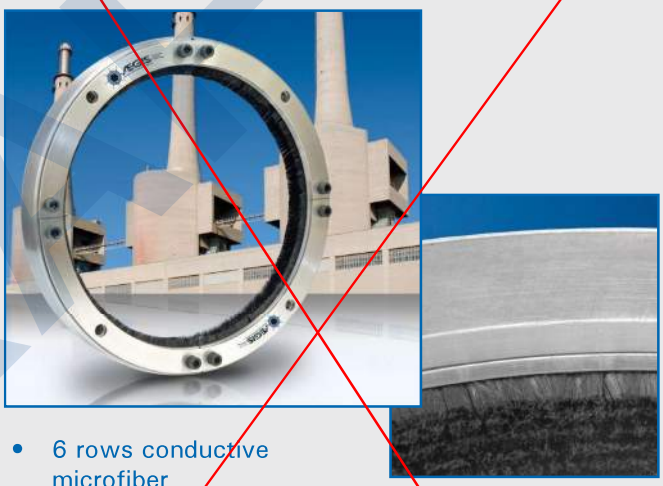

- 6 rows conductive microfiber
- High current capable
- AEGIS iPRO shaft current monitoring compatible
- Long term reliable performance
- Maintenance free system
- Available in sizes up to 30" (762mm) shaft diameter

WARRANTY: Units are guaranteed for one year from date of purchase against defective materials and workmanship. Replacement will be made except for defects caused by abnormal use or mishandling. All statements and technical information contained herein, or presented by the manufacturer or his representative are rendered in good faith. User must assume responsibility to determine suitability of the product for intended use. The manufacturer shall not be liable for any injury, loss or damage, direct or consequential arising out of the use, or attempt to use the product.

Patent Numbers: 7,136,271: 7,193,836: and other patents pending

Engineering Specification:

All motors driven by a variable frequency PWM drive shall include a maintenance free, circumferential, conductive micro fiber shaft grounding ring (AEGIS SGR) to discharge shaft currents to ground.
Recommended part: AEGIS SGR™ Bearing Protection Ring

DRAFT

AEGIS SGR™

BEARING PROTECTION RING™

CONSULTING - SPECIFYING engineer 2009 PRODUCT OF THE YEAR Finalist

Plant Engineering PRODUCT of the YEAR 2007 Winner

2007 FROST & SULLIVAN
North American Motors & Drives Product Value Leadership of the Year Award

2007 design news GOLDEN MOUSETRAP Finalist

CONSULTING - SPECIFYING engineer A Perfect 10 2006 Product of the Year Silver Winner

DRAFT

Catalog No. 2009-1

Electro Static Technology™
An ITW Company

31 Winterbrook Road
Mechanic Falls, Maine 04256 USA
Tel.: 866-738-1857
Fax: 207-998-5143
www.est-aegis.com

Low Voltage Motors - Technical Bulletin - LVTB 04052024-1

Topic:	Insulated Bearings and Brackets
Issue Date:	April 5, 2024
Issued by	Dale Basso
Distribution List:	LV AEs, Inside Sales, Outside sales Service & Warranty

Preface: Shaft currents have become an increasing issue with modern Variable Frequency Drives and Higher switching frequencies? This creates a need to protect bearings from electrical damage.

The Basics:

Practical experience and international standards show that bearing insulation is an effective solution to prevent bearing damages due to electric currents flowing through the bearings. These currents can be caused by electromagnetic unbalances, by electrostatic effects, or by the high frequency common mode voltage from frequency converters. Bearing insulation can be made in different effective ways, as shown in IEC 60034-25 – Clause 8.4.2 (Figure 1), as well as NEMA ICS 7.2-2021 -5.2.10.

There are three components of shaft/bearing currents

- **Stator to Frame capacitive currents**
  - Higher frequencies caused by switching
  - Standard ground is not the desire return path to the drive
  - May take path through bearings, shaft and driven load
  - Best solution excellent low impedance return path back to the VFD (VFD Cable & Ground straps)

- **Stator to Rotor capacitive currents**
  - Created in rotor looking for path to source (VFD)
  - Path of least resistance may be:
    - Through driven equipment bearings
    - Through motor bearings
    - Best solution is motor drive end shaft ground brush plus Excellent Low impedance return path to VFD

- **Motor circulating currents** - Typically motors above 400T Frames (>100HP)
  - Caused by asymmetry in Magnetic field axially along the rotor
  - Typically, low frequencies on Sine wave- Higher frequencies on VFD
  - Best solution – Insulated ODE bearing (or bearing housing) and DE Shaft Ground brush plus Excellent low impedance return path to VFD

What is the difference between an insulated bearing housing and an insulated bearing?

Both provide the same benefit, as referenced in IEC 60034-25 and EASA AR100. That is to provide a layer of insulation to break the High frequency capacitive current across the bearing.

The effectiveness is measured in Ohms at high frequency not DC. According to IEC 60034-25 and EASA AR100 standards; in order to assure effective protection against bearing currents, the bearing impedance should be ≥ 100 Ω at 1 MHz.

DRAFT

- Popular **ceramic coated Insulated bearings** exceed 50-100 Ohms @1MHZ



- **WEG Insulated End Bracket** – 100+ Ohms @1MHZ
  The advantage of the Insulated bearing housing is that it is more effective than the ceramic coated bearings at a comparable cost, and allows future bearing replacements to utilize standard readily available bearings which cost less than the special insulated bearings.

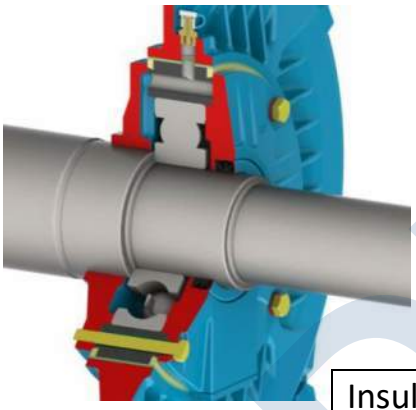

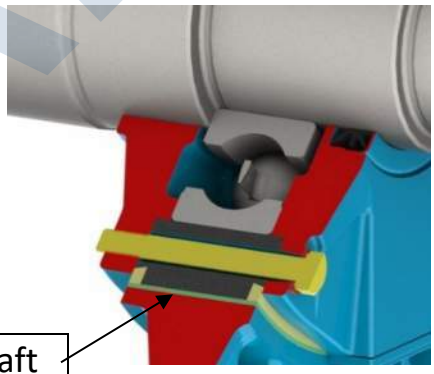

Insulating layer separating shaft and bearing from ground

- **Ceramic Ball bearings** – >200 Ohms @1MHz



DRAFT

BEST PRACTICES FOR VARIABLE FREQUENCY DRIVE (VFD) APPLICATIONS

VFD-induced shaft voltage can exist in every VFD driven motor application. It is not specific to the air movement industry, nor is it specific to any particular manufacturer's motors, drives or equipment. However, shaft voltage only becomes a problem when it leads to bearing current and consequential damage to the motor bearings.

NOTICE!

Risk of serious machine damage!
Appropriate measures must be implemented by the installation contractor to limit the shaft induced voltage to 1V – 2V as per IEEE 112.



Figure 1 Bearing damage caused by EDM

Frequency converters (also known as variable frequency drives or VFD's) can induce a voltage on the shafts of drive motors and stages due to the high switching frequencies used in these drives. Shaft voltage can become a problem when it reaches a high enough level to discharge across the bearings, causing electrical discharge machining (EDM) and creating small grooves called fluting which can lead to premature bearing failure. The potential for this induced shaft voltage exists in every VFD driven motor application and must be addressed on an installation specific basis.

VFD induced voltage is a phenomenon that is somewhat rare and unpredictable. As additional protection, Aerzen USA offers options for mitigating induced shaft currents such as grounding rings and isolated motor non drive end bearings. Even with these options installed, there is no guarantee that this phenomenon will be entirely eliminated. Damage to the motor bearings from shaft / bearing currents is not covered by warranty from Aerzen, the motor manufacturer or VFD manufacturer.

GENERAL RECOMMENDATIONS:

Motors up to and including 100HP (75kW) – Low Voltage

For induction motors either foot mounted, c-face or d-flange mounted motors with single row radial ball bearings on both ends of the motors

- Install one AEGIS SGR Bearing Protection Ring on either the drive end or the non-drive end of the motor to discharge capacitive induced shaft voltage.

Motors Greater than 100HP (75kW)

For horizontally mounted motors with single row radial ball bearings on both ends of the motor:

- Non-Drive End (Opposite Drive End): Bearing housing must be isolated with insulated sleeve or coating or use insulated ceramic or hybrid bearing to disrupt circulating currents.
- Drive End: Install one AEGIS Bearing Protection Ring.

Motors in Hazardous Areas

Grounding rings are permitted. Consult Aerzen USA or your motor supplier for specific recommendations.

DRAFT

SECTION 6

DRAFT

Component Breakdown

Component	Material	Protection Method (Standard)	Quality Document (Standard)	Protection Method (Upgrade)	Quality Document (Upgrade)
Base/Silencer*	Carbon Steel	Painted Externally (Solvent Based)	QH-00408	SikaCor Zinc R	QH-00510
Belt Guard	Galvanized Sheet Metal	N/A	N/A	N/A	N/A
Belt Guard Supports	Galvanized Carbon Steel	N/A	N/A	N/A	N/A
Blower Stage	Cast Carbon Steel	Painted Externally (Water Based)	QH-00408	SikaCor Zinc R	QH-00510
Connecting Housing (DN50)	Cast Aluminum	N/A	N/A	N/A	N/A
Connecting Housing (DN80 - DN250)	Cast Iron	Powder Coated	QH-00552	SikaCor Zinc R	QH-00510
Fasteners - Bolts, Studs, Nuts	Carbon Steel	Zinc Coated	N/A	N/A	N/A
Flex Connector	Silicone	N/A	N/A	N/A	N/A
Hose Clamps	Carbon Steel	Zinc Coated	N/A	N/A	N/A
Inlet Filter/ Silencer Housing	Carbon Steel	Powder Coated	QH-00552	SikaCor Zinc R	A-6-450
Inlet Hose	Reinforced Rubber	N/A	N/A	N/A	N/A
Inlet Silencer	Carbon Steel	Powder Coated	QH-00552	SikaCor Zinc R	A-6-450
Motor Mounting Hardware	Galvanized Carbon Steel	N/A	N/A	N/A	N/A
Piping (Galvanized)	Galvanized Carbon Steel	N/A	N/A	N/A	N/A
Piping (Painted)	Carbon Steel	Painted Externally	QH-00408	SikaCor Zinc R	A-6-450
Pressure Safety/Vacuum Breaker Valves	Carbon Steel (Flange)	Painted Flange	QH-00408	N/A	N/A
Sound Enclosure - Base	Carbon Steel	Powder Coated	QH-00552	SikaCor Zinc R	QH-00510
Sound Enclosure	Galvanized Sheet Metal	Powder Coated	QH-00419	SikaCor Zinc R	QH-00510
Vent Silencer	Carbon Steel	Powder Coated	QH-00552	SikaCor Zinc R	A-6-450

*If made in the USA, Protection Method goes from Painted Externally to Powder Coated (A-6-450)

General Painting Information

The machine castings are fettled, cleaned and primed; the primer used is specially developed for machinery parts and is particularly notable for its excellent bonding characteristic and elasticity. Its base is a quick drying synthetic resin binder possessing a high degree of water resistance. The proportion of pigment to binder is such to ensure the best protection for the machines.
Total dry Film Thickness: 70 µm (2.75 mil)

Surface Preparation	Sand blasting, mechanical cleaning to near white surfaces per SA 2,5 acc. to DIN ISO 8501 or SSPC10	
Primer	Alkyd Resin: RAL 6006	Manufacturer: Relius Coatings
Final Coat	Alkyd Resin: RAL 5001 (Blue)	Manufacturer: Relius Coatings (BASF) or Dr. Demuth GmbH

General Powder Coating Information

SP Polyester Powder Paint, RAL 5001, structure, glossy
Relius No.: I536-5401
Total dry film thickness: 80 - 110µm

General Upgraded Protection Information

Surface Preparation	Sa 2 ½
Priming Coat	SikaCorEG4 (80µm max)
Intermediate Coat	SikaCorEG1 (80µm max)
Finishing Coat	SikaCorEG5 (80µm max)

DRAFT

SECTION 7

DRAFT

Aerzen USA Corporation
108 Independence Way
Coatesville, PA 19320
Ph: (610) 380-0244, Fx: (610) 380-0278
www.aerzen.com/en-us

Pre-Commissioning Checklist

	Document #	A-7-0288 rev "4"

The purpose of this pre-commissioning checklist is to ensure readiness to successfully commission your Aerzen packages. We will need some information from you in order to better prepare for the commissioning. We ask that your on-site representative complete and return this checklist to Aerzen USA at your earliest convenience.

We will also need to know if you have a target date in mind for our service technician to be on-site, and if the plant maintenance personnel will be on-site at that time to receive maintenance training. This training is normally hands-on in nature and should not take more than 1-2 hours. In addition to the pre-commissioning checklist, we will need an on-site contact and phone number for our service technician.

We will make every effort to meet your target date for commissioning. Please keep in mind that our start-up/commissioning schedule can run three to five weeks out. The earlier we know your target date the better chance we have of reserving your request on our schedule.

Please be aware that should the commissioning prerequisites not be completed prior to our arrival, Aerzen USA reserves the right to charge any and all responsible parties for additional time and travel expenses required to complete the commissioning service.

Below is a checklist of items requiring attention prior to our arrival. Please verify your understanding and completion of the prerequisites by initialing the check the boxes corresponding to each requirement. Please send this checklist to the Aerzen Service Coordinator once all the prerequisites have been verified

DRAFT

1	The Aerzen package has not been damaged during shipping and/or while on-site	☐
2	The Aerzen package is installed in permanent position, is level, properly grounded and anchored.	☐
3	The process pipework for the Aerzen package inlet and discharge is connected in its final position and independently supported (temporary supports are not acceptable	☐
4	Electrical connections have been completed for the motor using flexible conduit to allow the motor to be raised into its operational position.	☐
4A	The package safety switches (if applicable) are wired to the PLC or MCC (as applicable).	☐
4B	The Aerzen control panel (if applicable) is wired to the PLC or MCC (as applicable).	☐
4C	The correct voltage is fed to the control panel. Refer to the project specific wiring diagram for the voltage required	☐
4D	If there is a VFD or Soft-Starter and supplied by others, it has been configured with the following motor settings:	☐
4D-1	Horsepower (kilowatt)	☐
4D-2	Voltage	☐
4D-3	Maximum Frequency	☐

4D Continued

4D-4	Minimum Frequency - based on minimum speed of the blower or compressor in conjunction with the sheave combination	☐
4D-5	Full Load Amps	☐
4D-6	Time to Minimum Speed (3-5 seconds)	☐
4D-7	Coast to Stop (do not brake)	☐
4D-8	**CONSTANT TORQUE (VERY IMPORTANT!!!)**	☐
4D-9	Restart - only when the machine has come to a complete stop.	☐

5	Belts or coupling bolts removed for rotation test	☐
6	Verification that machine is filled to proper oil level with correct oil (if delivered without oil)	☐
7	Required personnel scheduled to attend startup (electrician, operators, maintenance personnel, etc)	☐
8	Proper paperwork completed to allow Aerzen technician on site	☐
9	If required, on-site safety training requirements for Aerzen personnel must be scheduled in advance. Please advise type, length and place of training).	☐

Company

Project Name or Number

Number of Packages to be commissioned

Representative completing this check-list

Date Completed

Date reqested for start-up

DRAFT

Aerzen USA Corporation
108 Independence Way
Coatesville, PA 19320
Ph.: (610) 380-0244, Fax: (610) 380-0278
WWW.AERZEN.COM/EN-US

Start-Up Report

Document # BCH-7-0353_02 rev "B"

1.0 Machine data

Date:	
Customer:	
Service Technician:	
Order # / SEO #:	
Serial #:	
Type:	
Package Serial #:	
Oil Type:	
Equipment ID:	
Operating hours total-Start:	
Operating hours total-End:	

2.0 Motor Data

Model #:		Serial #:		Notes:
Motor Manufacturer		Motor Frame		
Motor HP Rating		Full Load Amps		
Motor Voltage Rating		Hertz		
Motor RPM		Service Factor		
Motor cooling		Motor Protection Type	Thermistor / Thermostat	
Motor Protection	NO / NC	Motor Protection Resistance		

3.0 Starter Data

Manufacturer		Notes:
Starter type - Direct/Soft/VFD		
Actual voltage to motor		
Soft Start ramp up time		
VFD Max. Frequency		
VFD Min. Frequency		
VFD Ramp up Speed/Time		
VFD set to constant torque		
VFD Brake Mode = Coast		

4.0 Inspections

	OK	Not OK		OK	Not OK
Sound Enclosure Aesthetics			Motor rotates in proper direction		
Package is level			Verify all oil lines are tight		
Oil drain hose, jack and funnel present			Oil filter		
Unit is properly anchored			Oil demister		
Expansion joints/flex connectors			Oil drain plugs tight		
Verify package is grounded			Cooling fan clearance in shroud		
Process piping is properly supported			Motor conduit conforms to IA-004545 rev "B"		
Anti-vibration feet			Sheaves are properly installed, set screws tightened		
Inlet air filter in place, clean & housing tightened			Enclosure inlet and outlet are free from obstructions		
Blower room ventilation adequate			All fasteners are secure		
Instrument connections tight			Check process piping path to the termination point		
Neutral chamber venting			Validate process piping will not dead head at startup		
Vent all pressure and vacuum gauges			Validate any customer added safety devices		
Motor and machine rotate freely by hand			Discuss application with end user		

4.1 Notes / Not OK, reason why. Correction needed/taken.

DRAFT

	Aerzen USA Corporation 108 Independence Way Coatesville, PA 19320 Ph.: (610) 380-0244, Fax: (610) 380-0278 WWW.AERZEN.COM/EN-US	Start-Up Report Document # BCH-7-0353_02 rev "B"

5.0 Belt Drive Applications

	OK	Not OK	Notes / Not OK, reason why. Correction needed/taken.
Verify motor alignment			
V belt installed and tensioned?			
Verify V belt has the proper length			

6.0 Direct Drive Applications

	OK	Not OK	Notes / Not OK, reason why. Correction needed/taken.
Coupling bolt			
Compression sleeves			
Coupling halves (properly distanced)			
Coupling Alignment			

7.0 Safety Settings and Verification

7.1 Safety chain - Switch Based

Switch	Unit	Switch Point	Gauge Reading	Shutdown Initiated	Notes:

7.2 Safety chain - Controller Based

Controller:	Unit	Alarm	Fault	Functional	Notes:

8.0 Startup

	OK	Not OK	Notes:
Smooth Start Up			
Lubricate drive motor per O&M			

9.0 Functional Testing

	OK	Not OK	Notes:			
Aeromat			Closing time=			
Aeropress			Closing time=			
Aerovac			Closing time=			
Unload/load device are in synch			Closing time=			
Unload/Load Solenoid operational						
All gauges and switches operational						
S.E. fan has correct rotation						
PRV manual release functional			Set point =			
After fault does unit remain off						
Non-return flap (check valve)						
System is leak free-oil						
System is leak free-air						
Smooth running						
Motor cooling properly						

10.0 Post Run Checks

	OK	Not OK	Notes:
Smooth Coast Down			
Oil Level Correct			
Sheave Alignment			
Bolt Tightness			

DRAFT

Aerzen USA Corporation
108 Independence Way
Coatesville, PA 19320
Ph.: (610) 380-0244, Fax: (610) 380-0278
WWW.AERZEN.COM/EN-US

Start-Up Report

Document # BCH-7-0353_02 rev "B"

11.0 Technical data

11.1 Operational Readings

Elapsed Run Time	0:00	0:00	0:00	0:00	0:00		Notes:
Pressures							
Temperatures							
Miscellaneous							

11.2 Motor Operational Readings

Elapsed Run Time	0:00	0:00	0:00	0:00	0:00		Notes:

11.3 Vibration Readings

Elapsed Run Time	0:00	0:00	0:00	0:00	0:00		Notes:	Readings are in:	
Motor Non-Drive Horizontal									
Motor Non-Drive Vertical									
Motor Non-Drive Axial									
Motor Drive Horizontal									
Motor Drive Vertical									
Motor Drive Axial									

12.0 Notes/Summary

DRAFT

	Aerzen USA Corporation 108 Independence Way Coatesville, PA 19320 Ph.: (610) 380-0244, Fax: (610) 380-0278	Inspection Report
	WWW.AERZEN.COM/EN-US	Document # BCH-7-0353_03 rev "C"

1.0 Machine data	
Date:	
Customer:	
Service Technician:	
Order # / SEO #:	
Serial #:	
Type:	
Package Serial #:	
Oil Type:	
Equipment ID:	
Operating hours total-Start:	
Operating hours total-End:	

2.0 Motor Data				
Model #:		Serial #:		Notes:
Motor Manufacturer		Motor Frame		
Motor HP Rating		Full Load Amps		
Motor Voltage Rating		Hertz		
Motor RPM		Service Factor		
Motor cooling		Motor Protection Type	Thermistor / Thermostat	
Motor Protection	NO / NC	Motor Protection Resistance		

3.0 Starter Data		
Manufacturer		Notes:
Starter type - Direct/Soft/VFD		
Actual voltage to motor		
Soft Start ramp up time		
VFD Max. Frequency		
VFD Min. Frequency		
VFD Ramp up Speed/Time		
VFD set to constant torque		
VFD Brake Mode = Coast		

4.0 Inspections

	OK	Not OK		OK	Not OK
Sound Enclosure Aesthetics			Motor rotates in proper direction		
Package is level			Verify all oil lines are tight		
Oil drain hose, jack and funnel present			Oil filter		
Unit is properly anchored			Oil demister		
Expansion joints/flex connectors			Oil drain plugs tight		
Verify package is grounded			Cooling fan clearance in shroud		
Process piping is properly supported			Motor conduit conforms to IA-004545 rev "B"		
Anti-vibration feet			Sheaves are properly installed, set screws tightened		
Inlet air filter in place, clean & housing tightened			Enclosure inlet and outlet are free from obstructions		
Blower room ventilation adequate			All fasteners are secure		
Instrument connections tight			Check process piping path to the termination point		
Neutral chamber venting			Validate process piping will not dead head at startup		
Vent all pressure and vacuum gauges			Validate any customer added safety devices		
Motor and machine rotate freely by hand			Discuss application with end user		

4.1 Notes / Not OK, reason why. Correction needed/taken.

5.0 Maintenance

Item Replaced	Yes	No	Part # and Qty.	Notes:
Oil				
Belts				
Oil Filter				
Air Filter				
Coupling Pins				
Coupling Bushing				
Oil Sample Taken			Tracking #:	

DRAFT

Aerzen USA Corporation
108 Independence Way
Coatesville, PA 19320
Ph.: (610) 380-0244, Fax: (610) 380-0278
WWW.AERZEN.COM/EN-US

Inspection Report

Document # BCH-7-0353_03 rev "C"

6.0 Belt Drive Applications			
	OK	Not OK	Notes / Not OK, reason why. Correction needed/taken.
Verify motor alignment			
V belt installed and tensioned?			
Verify V belt has the proper length			

7.0 Direct Drive Applications			
	OK	Not OK	Notes / Not OK, reason why. Correction needed/taken.
Coupling bolt			
Compression sleeves			
Coupling halves (properly distanced)			
Coupling Alignment			

8.0 Safety Settings and Verification

8.1 Safety chain - Switch Based

Switch	Unit	Switch Point	Gauge Reading	Shutdown Initiated	Notes:

8.2 Safety chain - Controller Based

Controller:	Unit	Alarm	Fault	Functional	Notes:

9.0 Startup			
	OK	Not OK	Notes:
Smooth Start Up			
Lubricate drive motor per O&M			

10.0 Functional Testing						
	OK	Not OK	Notes:			
Aeromat			Closing time=			
Aeropress			Closing time=			
Aerovac			Closing time=			
Unload/load device are in synch			Closing time=			
Unload/Load Solenoid operational						
All gauges and switches operational						
S.E. fan has correct rotation						
PRV manual release functional			Set point =			
After fault does unit remain off						
Non-return flap (check valve)						
System is leak free-oil						
System is leak free-air						
Smooth running						
Motor cooling properly						

11.0 Post Run Checks			
	OK	Not OK	Notes:
Smooth Coast Down			
Oil Level Correct			
Sheave Alignment			
Bolt Tightness			

DRAFT

Aerzen USA Corporation
108 Independence Way
Coatesville, PA 19320
Ph.: (610) 380-0244, Fax: (610) 380-0278
WWW.AERZEN.COM/EN-US

Inspection Report

Document # BCH-7-0353_03 rev "C"

12.0 Technical data

12.1 Operational Readings

Elapsed Run Time	0:00	0:00	0:00	0:00	0:00		Notes:
Pressures							
Temperatures							
Miscellaneous							

12.2 Motor Operational Readings

Elapsed Run Time	0:00	0:00	0:00	0:00	0:00		Notes:

12.3 Vibration Readings

Elapsed Run Time	0:00	0:00	0:00	0:00	0:00		Notes:	Readings are in:	
Motor Non-Drive Horizontal									
Motor Non-Drive Vertical									
Motor Non-Drive Axial									
Motor Drive Horizontal									
Motor Drive Vertical									
Motor Drive Axial									

13.0 Notes/Summary

DRAFT

Aerzen USA Corporation
108 Independence Way
Coatesville, PA 19320
Ph.: (610) 380-0244, Fax: (610) 380-0278
WWW.AERZEN.COM/EN-US

Training Sign In

Document # BCH-7-0353_06 rev "C"

1.0 Customer

Date:	
Customer:	
End User:	
Site Address:	
Service Technician:	
Equipment Type:	
Equipment Serial Number:	
Order # / SEO #:	

2.0 Trainee's Signatures

	Print	Signature	Title
1			
2			
3			
4			
5			
6			
7			
8			
9			
10			

3.0 Training Topics

4.0 Signatures

Date	**Customer Name**	**Customer Signature**
Date	**FST Name**	**FST Signature**

DRAFT

Submittal

San Luiz AZ WWTP
GM90S DN250
Pre-Aeration Blowers ALT-1 PD

DRAFT

Contractor/Purchaser
Kubota Membrane USA Corporation
19910 N Creek Pkwy Suite 100
Bothell, WA 98011

Manufacturer/Service/ Parts
Aerzen USA Corp.
108 Independence Way
Coatesville, PA 19320
800-444-1692 (tel)
610-380-0278 (fax)
www.aerzen.com/en-us



SECTION 1
Aerzen Blower Model GM90S
Performance Data
Bill of Material
General Arrangement Drawing
Performance Curves

SECTION 2
Blower Literature

SECTION 3
Blower Package Accessories

SECTION 4
Instrumentation/Controls

SECTION 5
Motor Spec
Motor Data

SECTION 6
Corrosion Protection/Paint Spec

SECTION 7
Startup Report

Customer:
Kubota Membrane USA Corporation
19910 N Creek Pkwy Suite 100
Bothell, WA 98011

Project:
San Luiz AZ WWTP

DRAFT

SECTION 1

DRAFT

AERZEN	**Aerzen USA Corporation** 108 Independence Way, Coatesville, PA 19320 Tel: (610) 380-0244 Fax: (610) 380-0278 website www.aerzen.com	**Job Specific Data Package**		
		DATE	**Aerzen Job #**	**Page**
		7.11.2025		1 of 3
		Revision Letter		-

CUSTOMER INFORMATION

CUSTOMER	Kubota Membrane USA Corp
CUSTOMER PO #	
PROJECT NAME	San Luiz AZ WWTP

PACKAGE DESCRIPTION

EQUIPMENT IDENTIFICATION	Pre-Aeration Blowers ALT-1 PD		**SERIAL NUMBERS**
BLOWER MODEL #	GM 090S-00	QTY. (3)	
PACKAGE DESCRIPTION	Pressure Unit w/ Enclosure		
DISCHARGE CONNECTION TYPE	150# ANSI (Silicone) Discharge Connec		
INLET CONNECTION TYPE	150# ANSI Inlet Connection		
MOTOR CONDUIT LOCATION	F3 Conduit Box		
TOTAL PACKAGE WEIGHT	7436 lbs		

DOCUMENTATION

GENERAL ARRANGEMENT DRAWING	GB-006959-P2431000
MOTOR CABLE ROUTING	IA-004545
OPERATIONS & MAINTENANCE MANUAL	G4-006
WARRANTY TERMS & CONDITIONS	A2-001-USA

PERFORMANCE DATA

MEDIUM		AIR	
INLET CAPACITY	*ICFM*	2568	846
INLET CAPACITY	*SCFM*	2126	700
INLET PRESSURE	*PSIA*	14.61	14.61
DISCHARGE PRESSURE	*PSI*	10.5	10.5
INLET TEMPERATURE	*°F*	120	120
DISCHARGE TEMPERATURE	*°F*	257	295
NOMINAL BLOWER SPEED	*RPM*	2029	851
POWER @ BLOWER SHAFT	*BHP*	147	58
MOTOR RATING	*HP*	200	200
MOTOR SPEED	*RPM*	1790	751
SOUND PRESSURE LEVEL *	*dB(A)*	78	78
MOTOR/VFD SPEED	*Hz*	60	25

* measured in free field at 3 foot distance from the outline of the unit (tol. +/- 2 dB(A))

Tolerance on Power & Flow is +/- 5%

DRAFT

CRITICAL INFORMATION / NOTES

1 PRIOR TO SHIPMENT - AERZEN DOES THE FOLLOWING
Removes V-Belts from the motor sheave and wraps them around the blower sheave
Locks the motor hinge plate
Always refer to the operations manual for determining the most suitable lubricant.
Operating and ambient conditions may impact which lubricant to use.

2 UPON ARRIVAL
Immediately remove stretch wrap from package when stored outdoors

3 LIFTING PACKAGE
Without Sound Enclosure: lifting eye holes in the corner of the base frame
With Sound Enclosure: lifting through slots in base with fork lift

4 READ OPERATION MANUAL FOR INSTALLATION INSTRUCTIONS
Call Aerzen After-Sales / Service if you have any questions

5 AT COMMISSIONING - CUSTOMER / CONTRACTOR IS TO
Check oil level (refer to operations manual) - and adjust if necessary
Anchor the base or sound enclosure
Make grounding connections
Connect motor cable per Aerzen Drawing IA-004545
Verify correct rotation of motor (counter-clockwise, looking at drive shaft)
Remove locking device from motor pivot plate
Reinstall V-belts
Apply the oil sight glass Sticker

6 **ALL CUSTOMER PIPING TO BE INDEPENDENTLY SUPPORTED**

7 Recommended MINIMUM clearance at front and rear of package for "normal"
(i.e. inspect machine, change oil, replace belts, etc.) maintenance is 32 inches.

DRAFT

Aerzen USA Corporation
108 Independence Way, Coatesville, PA 19320
Tel: (610) 380-0244 Fax: (610) 380-0278
website www.aerzen.com

Job Specific Data Package

Date	Aerzen Job #	Page
7.11.2025		3 of 3
Revision Letter		-

BILL OF MATERIAL for GM 090S DN-250

	QTY	DESCRIPTION		PART #
1	3	Delta Blower Stage		GM 090S-00
2	3	Motor 200 HP, 4-pole, NEMA, TEFC, 460 V / 60 Hz, NEMA Premium Efficiency, 447T, Tstats, Insulated Bearing, Aegis		21-MTR-WG4-200DD357
3	3	Combination Base Frame / Silencer	DN-250	2000012594
4	3	Sound Enclosure (S.E.) w/ Dial Gauges		181573
5	3	Inlet Filter / Silencer Assembly		176294
6	3	Discharge Connection Housing		180295
7	3	Filter Element		2000049289
8	12	Drive Belts		2000073625
9	3	One-way Valve	Silicone Flap	168711
10	3	Discharge Connection	10" 150# ANSI (Silicone)	21-003168-10X10SG
11	3	Inlet Connection	10" 150# ANSI	21-002828-16
12	3	Safety Relief Valve	DN-150, set @ 1050 mbar	171105
13	-	Instrumentation		21-G5-IM-PS07-4001
14	3	Filter Maintenance Indicator		21-006757
15	3	Discharge Pressure Gauge		21-010129
16	3	Discharge Pressure Switch	set @ 12 PSI	21-000746-02
17	3	Discharge Temperture Gauge/Switch	set @ 305° F	21-006756
18	3	S.E. - Ventilation Fan	650-3150 rpm	156853
19	3	Motor Sheave Bushing		165709000
20	3	Motor Sheave	400 mm	162346000
21	3	Blower Sheave Bushing		162579000
22	3	Blower Sheave	355 mm	162345000
23	12	Vibration Isolators		184821
24	3	Safety Relief Valve Hose		166640
25	3	Safety Relief Valve Tube		180301
26	6	Safety Relief Valve Hose Clamps		165903
	3	Oil Drain Valve		185388
	3	Seal Ring	for drain valve	119086
	3	Oil Drain Hose		2000023662
	-	Standard oil (Delta Lube 06)	1 gal.	21-004391
		SPARE PARTS / SHIPS LOOSE		
	3	Filter Element		2000049289
	3	Drive Belts Sets (4 per set)		2000073625
	2	5-GAL Delta Lube Oil		21-004392
	3	Endustra External Intake Silencer 10" 3750 SCFM		21-007893
		ONSITE SERVICES		
		1 trip(s), 3 day(s) total installation, startup, & training		

RECOMMENDED SPARE PARTS
* on hand items
** 2-5 year recommended items

NOTE(S): Always reference the blower s/n & the Aerzen Job # (if known) when ordering spare parts

DRAFT

ITEM	QTY	DESCRIPTION	DESCRIPTION 2
100	1	BLOWER TORSO	GM90S, DN250
110	1	PRESSURE RELIEF VALVE	
200	1	SOUND ENCLOSURE	
300	1	ELECTRIC MOTOR	SHOWN WITH A 440 NEMA MOTOR
310	1	MOTOR MOUNTING	
320	1	BELT DRIVE	
400	1	BELT GUARD	
500	1	COOLING FAN	
600	1	DISCHARGE CONNECTION	10"-150# ANSI
700	1	INLET CONNECTION	10"-150# ANSI
800	1	INSTRUMENTATION	
~~1100~~	~~1~~	~~UNLOADING VALVE~~	(OPTIONAL)

PLAN VIEW

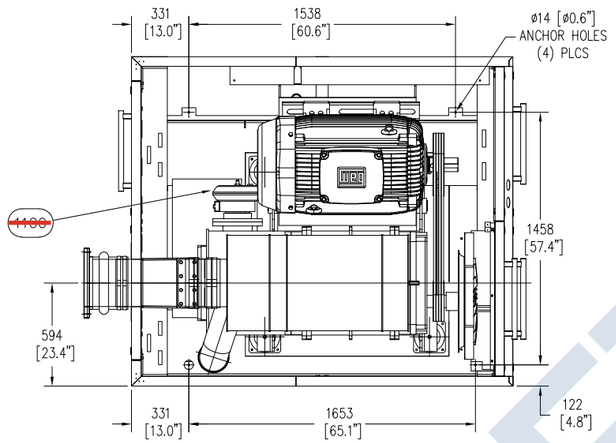

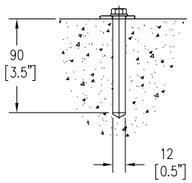

SOUND ENCLOSURE ANCHOR

RECOMMENDATION
SHOW WITH OPTIONAL ANCHOR
AERZEN PART NO. 2000053553
6X SCALE

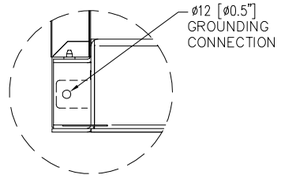

EARTH GROUND

MAT'L: 304 SS
4X SCALE

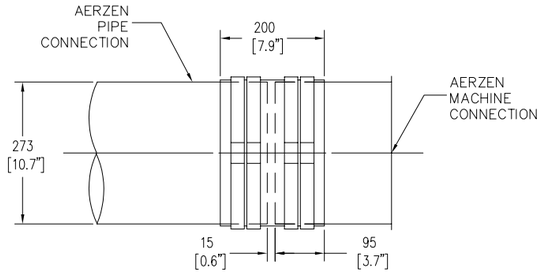

DETAIL Z

SLEEVE CONNECTION
AERZEN PIPE ENGAGEMENT
LEAVES 15 [0.6"] GAP
3X SCALE

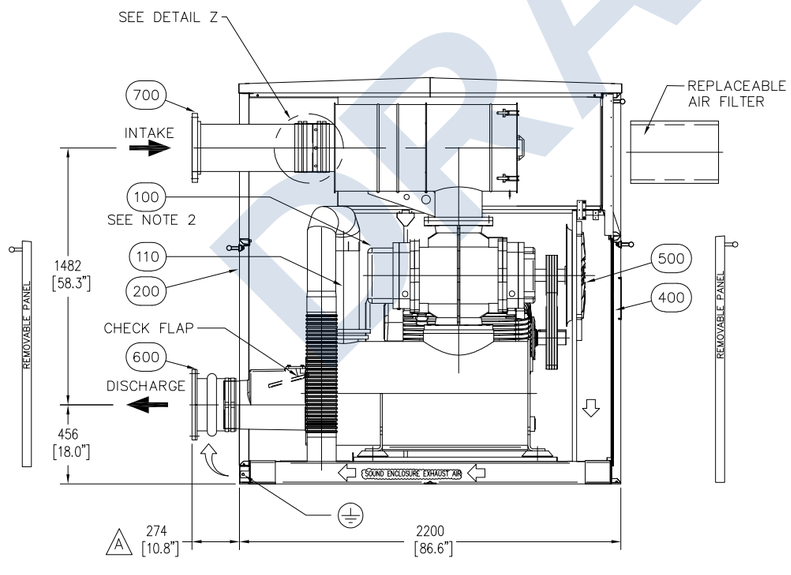

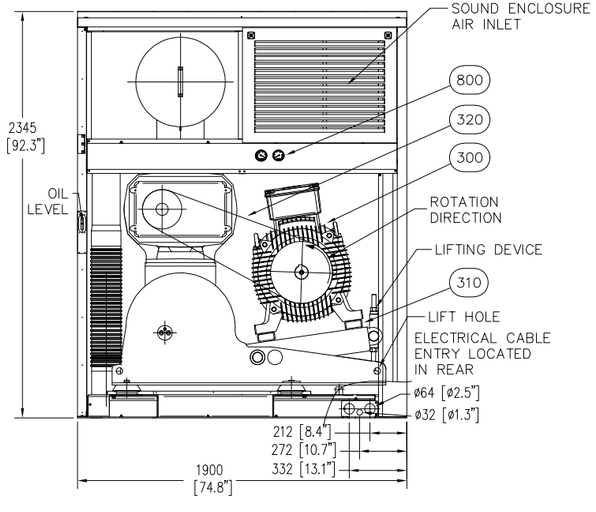

FRONT VIEW

NOTES: A

1. TOLERANCE ON DIMENSIONS = ±12mm [0.5"]
2. ITEM 100 (BLOWER TORSO) INCLUDES BLOWER STAGE, INLET SILENCER, BASE FRAME/DISCHARGE SILENCER, VIBRATION ISOLATORS, & CONNECTION HOUSING WITH CHECK FLAP
3. CUSTOMER PIPING TO BE INDEPENDENTLY SUPPORTED
4. LIFT PACKAGE FROM BLOWER SIDE THROUGH FORK LIFT POCKETS IN BASE
5. SEE JOB DATA SHEETS FOR PERFORMANCE DATA, PART NUMBERS, TOTAL PACKAGE WEIGHT, INSTRUMENTATION, ANY OTHER OPTIONAL EQUIPMENT & OWNERS MANUAL
6. REGARDLESS OF THE OPERATING CONDITION, NO FORCES AND TORQUES MAY ACT ON THE MACHINE THROUGH THE CONNECTED SYSTEM PIPING. ALL CUSTOMER PIPING CONNECTIONS MUST BE DESIGNED AS FIXED POINTS AT THE AERZEN MACHINE LIMIT

WEIGHT

BLOWER PACKAGE (LESS MOTOR)	2340 kg	5148 lbs
ELECTRIC MOTOR (ITEM 300)	-	2288 lbs
TOTAL (WET WEIGHT)		7436 lbs

AERZEN

AERZEN USA *CORPORATION*
108 INDEPENDENCE WAY, COATESVILLE, PA.
PH: (610) 380-0244 FX: (610) 380-0278
WWW.AERZEN.COM

CLASS I

SCALE:- SHEET:1/ 1

	NAME	DATE
DRAWN BY	JRH	4.18.2019
CHECKED BY	RJP	4.18.2019
APPROVED BY	-	-

DRAWING NO.
GB-006959-P2431000
PART NO.
-

TITLE
GA DRAWING
GM90S, DN250, G5
F3 SOUND ENCL.
10"-150# STUB (IN) / 10"-150# ANSI (OUT)
PRESSURE
-

REV.	NAME	DATE
A	JRH	8.26.2020
B	KLS	04.12.2021
C	RCJ	05/03/2023
-	-	-
-	-	-
-	-	-

NOTICE: THIS DRAWING AND ALL INFORMATION HEREIN IS THE PROPERTY OF AERZEN USA INC. AND ITS SUBSIDIARIES AND SHALL NOT BE REPRODUCED BY ANY MEANS IN WHOLE OF IN PART USED AS THE BASIS FOR MANUFACTURE WITHOUT WRITTEN PERMISSION

DRAFT

AERZEN GM 90S DELTA PACKAGE, PRESSURE

INLET FLOW

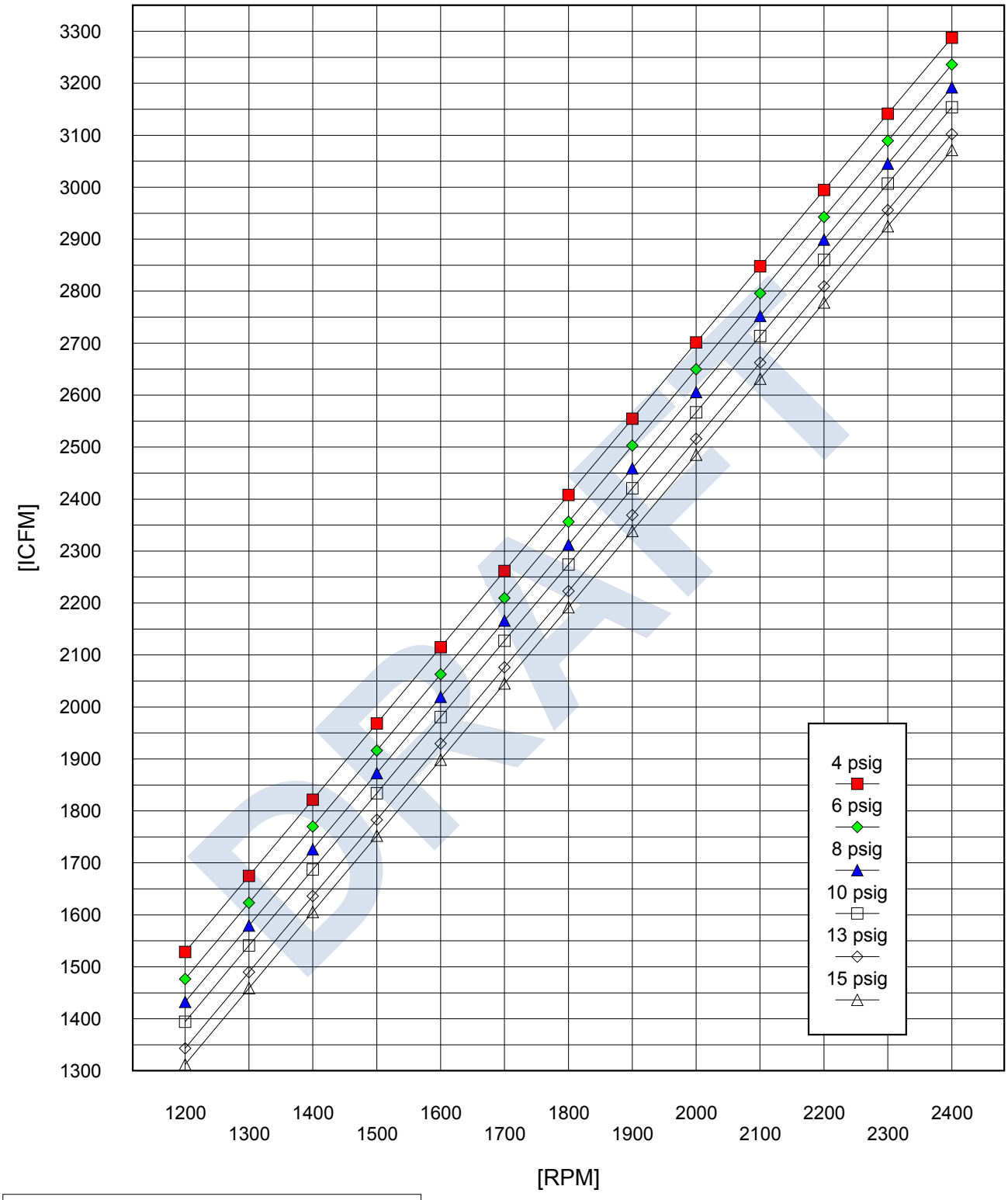

DRAFT

Performance data based on air @ 68 deg.F/ 14.7 psia inlet.

See temperature chart on second sheet for allowable operating range.

AERZEN GM 90S DELTA PACKAGE, PRESSURE

DISCHARGE TEMPERATURE

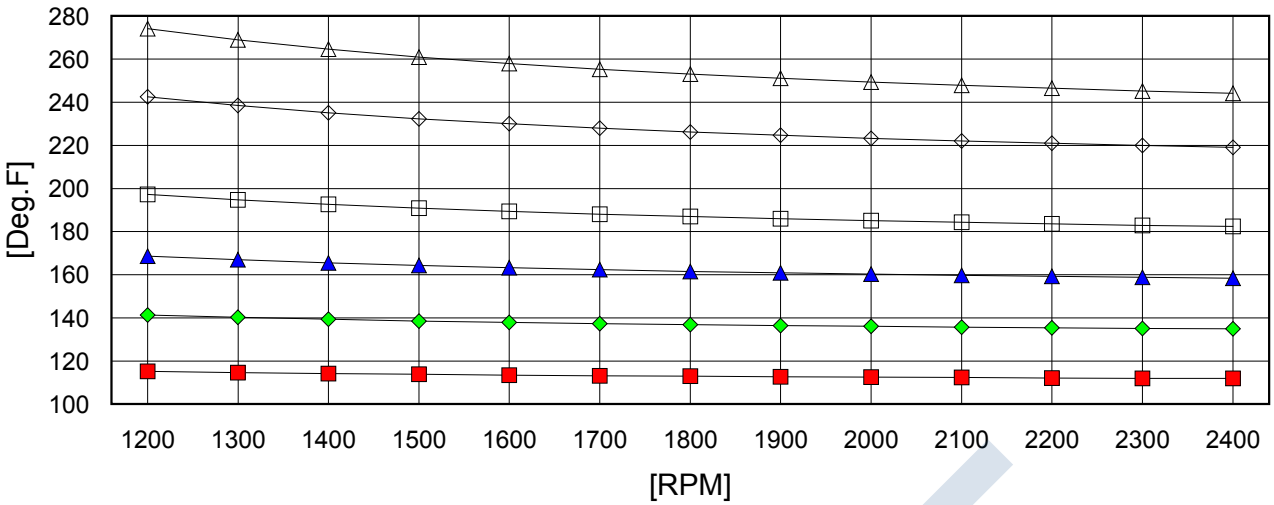

MAXIMUM ALLOWABLE DISCHARGE TEMPERATURE: 285 deg.F
Performance data based on air @ 68 deg.F/ 14.7 psia inlet.

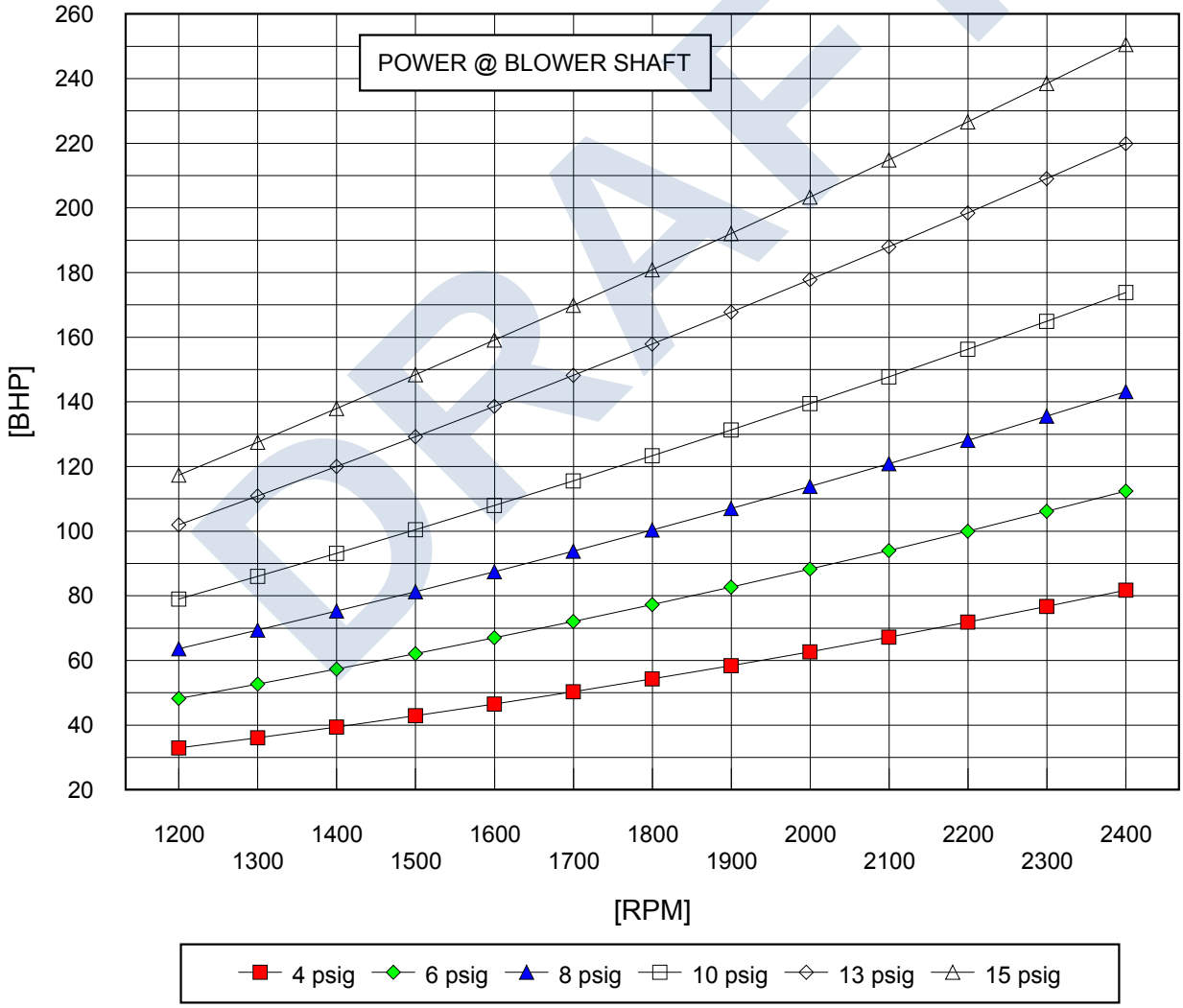

DRAFT

SAMPLE – FOR REFERENCE ONLY

Aerzen USA Corporation
108 Independence Way
Coatesville, PA 19320
(610) 380-0244 ph
(610) 380-0244 fax

Aerzener Machinenfabrik GmbH
Since 1864
Reherweg 28 - D31855 Aerzen
Telefon: 0 51 54 / 810
Telefax: 0 51 54 / 811 91

Certified Test Report

evaluated date: **1-Aug-19**
evaluated by: Rzepka
certified by: Jarrow

Performance & Order Data
Blower Model GM 90S **Serial #** 1619621

			Metric units		US units	
1)	Inlet flow	Q_1	56.19	m^3/min	1984.51	Icfm
2)	differential pressure	Δp	724	mbar	10.5	psig.
3)	Shaft Power	kW	85.15	kW	114.30	Bhp
4)	Blower Speed	rpm	1622	rpm	1622	rpm

Test Result			Metric units		US units	
5)	Volumetric Efficiency	$\eta_{vol, um}$	80%		80%	
6)	Actual Slip	$V_{verl, um}$	13.27	m^3/min	468.49	cfm
7)	Theoretical Volume	$V_{0, UM}$	67.35	m^3/min	2,378.28	cfm
8)	Actual Volume	$V_{1, UM}$	54.15	m^3/min	1,912.39	cfm
9)	Flow Variance	$V_{t, UM}$	-3.62%		-3.62%	
10	Actual Power	$P_{KU, UM}$	85.09	kW	114.10	Bhp
11	Power Variance	$P_{KU, UM}$	-0.08%		-0.08%	

Explanation and Summary
Lines 1), 2), 3). 4) above show required performance data (what was ordered).
Lines 5) through 11) show data that resulted from the performance test on the actual blower.
Line 9) shows a variance of 3.62% in the flow capacity of this unit.
Line 11) shows a variance of 0.08% in the power consumption of this unit.

Standard accepted tolerance is +/- 5%. The unit would be acceptable if the flow was no more than 5% below the expected flow and the power was no more than 5% of expected power.

For this specific case the flow is -3.62% **less than expected.**
For this specific case the power is -0.08% **less than expected.**

Serial number 1619621 **Model number GM 90S** **meets and exceeds the standard tolerance.**

Aerzen USA Corporation
108 Independence Way – Coatesville, PA 19320
Tel: (610) 380-0244 Fax: (610) 380-0278
Service Hotline (800) 444-1692
e-mail:USA-Inquiries@Aerzen.com website www.aerzen.com/en-us

Test Report AMUSA based on AMD Report	
DATE	**Document #**
5-Sep-19	**B-6-0202 rev "F"**

Blower Test Report will be provided in the project O&M Manual.

DRAFT

EC Declaration of Conformity

according to the Machinery Directive 2006/42/EC, Annex II, No.1 A

Company Name : Aerzener Maschinenfabrik GmbH
Reherweg 28
31855 Aerzen
Germany

Product Details :

The Declaration of Conformity for this piston engine is supplemented by the technical details in the chapter entitled "Performance Data".
The details provided therein identify the product and must be applied together with this Declaration of Conformity.

Appointed agent for the compilation of the technical documentation : Mr. Irtel, Managing Director
Aerzener Maschinenfabrik GmbH
Reherweg 28
31855 Aerzen
Germany

We hereby declare that the aforementioned product complies with all relevant provisions of Machinery Directive 2006/42/EC for the conveyance and compression of gaseous media.

The aforementioned product also fulfils all provisions of the following relevant EC-directives:

- EMC / Electromagnetic Compatibility 2004/108/EC
- Pressure Equipment Directive 97/23/EC
- The protection targets of the Low Voltage Directive 2006/95/EC have been fulfilled in accordance with Annex I, No. 1.5.1 of the Machinery Directive.

The following harmonised standards were applied:

• DIN EN ISO 12100	03-2011	Safety of Machines - General Design Principles Risk Assessment and Risk Reduction
• DIN EN 1012-1	02-2011	Compressors and Vacuum Pumps - Safety Requirements - Part 1: Compressors

This Declaration of Conformity applies to the product in its original state as placed on the market by the manufacturer. Any retrospective changes and/or retrospective work undertaken shall void this Declaration of Conformity.

Aerzen, 09-01-2012
Place, Date of issue

Mr. Björn Irtel, Managing Director-
Details of the Undersigned

A3-050 G EN / 01-2012
Document No. / Compiled

DRAFT

SECTION 2

DRAFT

POSITIVE DISPLACEMENT BLOWERS

DELTA BLOWER GENERATION 5

Volume flows from 18 cfm to 8830 cfm

DRAFT



AERZEN

DELTA BLOWER.
A TOUGH ENDURANCE RUNNER IN COUNTLESS COMPRESSION PROCESSES.



DRAFT

Delta Blower Generation 5

Positive displacement blowers of the Delta Blower Generation 5 act as the driving force behind many processes, and are the beating heart of a strong machine combination. This generation of assemblies from AERZEN compresses more than 150 years of experience as a world market leader in blower development. And it is more innovative than ever. AERZEN has introduced many innovations with this young series.

They provide a large volume-flow range from 18 cfm to 8830 cfm. With reduced life-cycle costs and quieter operation. But one thing remains the same: This blower class remains highly robust, thoroughly reliable and has an extremely long service life. No wonder customers choose it for continuous, long-term applications - over years and decades.


AERZEN
Delta Blower



Applications
- Water and Waste water treatment
- Aeration
- Backwash of filters
- Pneumatic conveying of bulk materials
- Gas conveying
- Degassing
- Dedusting
- Generation of negative pressure
- Biogas treatment
- Vehicle operation
- Ship unloading
- Tunnel boring

and much more

Industries
- Wastewater treatment plants
- Chemistry and process engineering
- Power plant
- Cement and lime
- Foodstuff technology
- Paper industry
- Pharmacy and many more

Goods conveyed
- Granules
- Sugar
- Cement
- Cereals
- Carbon

and much more

VERSATILE
FOR EACH APPLICATION.

The versatile compact power packages of the Delta Blower series can be used in all climate zones of the world. Just as safe under the most difficult environmental conditions as in indoor installation. They work stand-alone or in a machine combination.

Versatility in figures.
Delta Blowers are strong all-rounders: The smallest assemblies are mounted on silo trucks. The largest machines operate in lifting systems. They unload transport vessels. With an hourly performance of up to 1,000 tons.

Control range between
25 % and 100 %

Volume flows from
approx. 18 cfm to 8830 cfm

Pressures up to 14.5 Psi
Negative pressures down to
-7.25 Psi

Nominal diameters
DN 50 to DN 400

DRAFT



Indispensable for power plant technology



Conveying of powdery goods



Powerful for ship loading and unloading

MACHINES AND SERVICES FROM AERZEN. IN USE WORLDWIDE AND HIGHLY AVAILABLE.

The extremely high load capacity of Delta Blower packages is legendary. Just like their proverbial reliability, their durability or their intelligent operating and maintenance concept. Why are the services of AERZEN an issue at all? Because service is a must. And because our worldwide wellpositioned service teams are an important decision criterion for plant operators: for blowers made by AERZEN.

It's the inner values that matter: the AERZEN blower stage

Made in Germany



High availability.
The best blower packages are those that you do not notice. Because they are steadfast in their work. For years and decades. The Delta Blowers from AERZEN are such assemblies. AERZEN manufactures all core components itself.

From the assembly to the control system. From the idea to engineering and configuration. And thus ensures the high productivity of its machines. Our value contribution to the quality standard made in Germany.

On site worldwide.

Typical for AERZEN: The reliable availability of its solutions. This refers to our machines. And to our services. The fact that our service teams look after your systems over their entire life cycle protects the value of your investment. The fact that we have a dense network of 50 subsidiaries and agencies in more than 100 countries around the globe guarantees short distances. So we are quickly there for you - in case we are needed.

Safely AERZEN.

- Commissioning by qualified personnel
- Individual training of your specialist personnel
- Customer-specific service and maintenance contracts
- Machine repair also directly on site

Intelligently designed.

What does compact, easy handling or ease of maintenance mean? The value of these promises only becomes apparent in everyday practice. Just like these tangible benefits:

- Small footprint
- Flexible machinery mountings
- Easy to transport with forklift/lift truck
- Space-saving side-by-side installation
- Plug&play installation and commissioning
- Easy access to all wearing parts
- Oil level check from the outside while the machine is running
- Maintenance work such as oil and filter change from the front
- Low sound pressure level
- Belt drive for optimum volume flow design, subsequent power adjustment is quick and easy

Intelligent silencing: the AERZEN discharge silencer without absorption material

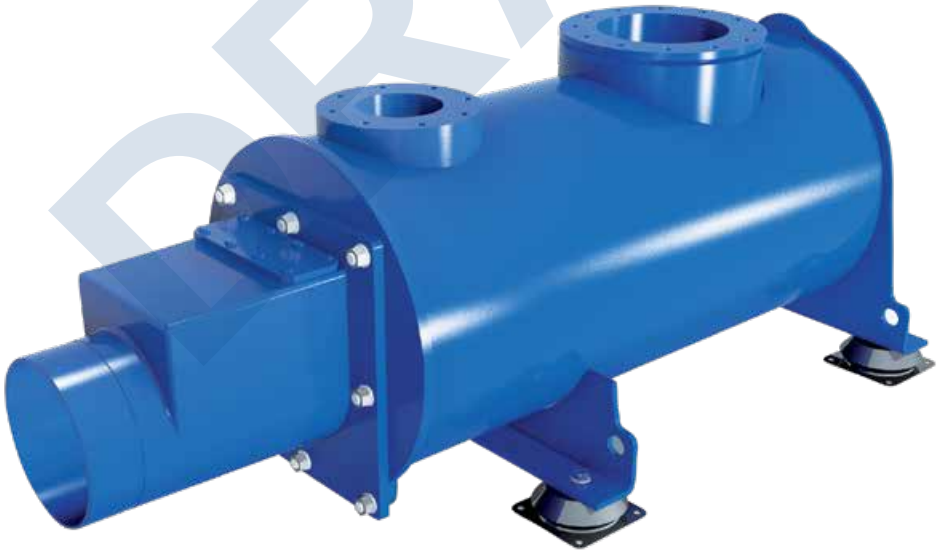

100 % clean.

How do we offer food suitability, avoid expensive cleaning or even production restrictions? We do not use absorption material for sound absorption. “Therefore, AERZEN made the base support a discharge silencer and reduces the noise exclusively by means of air deflections.

100 % free of absorption material, because this could wear out and contaminate the downstream system. By the way, the AERZEN base support is patented and certified as spark arrester for ATEX applications.

DRAFT

ROBUST BLOWER PACKAGE
READY TO PERFORM.

AERZEN belongs to the most innovative companies worldwide in the field of compressor technology. In 1868, we started manufacturing positive displacement blowers. By the way, we were the company that manufactured the first positive displacement blower in Europe. Since then, we have taken the performance features of this technology to the peak with every generation. Let yourself be surprised. Discover these special blowers: Delta Blower Generation 5.

Extremely robust blower package
- For a wide range of applications within a high control range from 25 to 100%
- Various modifications are possible

Compact design
- Space-saving side-by-side installation
- Small dimensioning of machine rooms

Easy operation and low-maintenance design
- Highly available at continuous operation even under toughest environmental conditions
- The front side is used for operation and maintenance

Plug&play Solution
- Completely configured, parameterized and ready for connection
- Integrated service kit with first oil fill

Oil-free as per class 0
- According to ISO 8573-1, certified by the TÜV (German technical inspection association)

Free from absorption material
- Suitability for use with foodstuffs in the pneumatic conveying of bulk materials (no impurities)
- Safety for energy-efficient productivity in the Water treatment (no sedimentation of absorption material in the aeration plates, no clogging of the aeration plugs, no pressure loss)

Integrated power supply panel (optional)
- Frequency converter, star-delta, direct, softstarter
- Intelligent AERZEN AERtronic control system

Smart oil system
- Oil level check while machine is running
- It can be read from the outside
- Oil instead of grease: Oil-lubricated bearings increase the service life



DRAFT



Advantages for the life cycle assessment
- Standard use of premium efficiency motors
- Suction on the cold side of the assembly
- Belt drive for optimal volume flow design
- Subsequent power adaptations are easily and quickly possible

Belt tensioning hinged motor mounting plate
- Fully automatic and maintenance-free belt tension
- Inspection of V-belt tension no longer necessary
- Easy assembly or replacement of V-belts

Multifunctional hoist for hinged motor mounting plate
- Transport safety lock
- Easy and safe installation of V-belts
- Mobile installation of assemblies (e.g. ship installation/earthquake design)
- Hinged motor mounting plate support for heavy motors

Low noise level
- Safe control of the sound values, close to building areas and production areas
- Lowest sound values by optimised acoustic hood
- Integrated method for reducing pulsation (Patented AERZEN blower stage)

PED pressure-vessel guidelines approval (pressure safety valve)
- for overpressure operation

ATEX-compliant
- AERZEN base supports certified as spark suppressor for ATEX applications

TÜV-certified zone separation filter (optional)

DRAFT

INTERESTED IN THE INNER VALUES? CONSTRUCTION AND DESIGN.

It is good to know what is in the assemblies of the Delta Blower line from AERZEN: The wealth of experience of the world market leader. The quality standard of the traditional German family business. The innovation goal "Best solution provider for our customers". In addition first-class material selection. And a principle that has proven itself in tens of thousands of applications: Roots.

Innovation pulsation reduction.
Especially for its Delta Blower stages AERZEN has developed a unique process and integrated it into all sizes: the pulsation reduction. The patented AERZEN process prevents pulsations and noise already at the origin within the blower stage. For this purpose the AERZEN blowers equipped with 3-lobe pistons have two special channels cast in the cylinder. These control the backflow of the medium into the conveying chamber in such a way that the typical backstroke and squeezing pulses (typical for 2-lobe blowers) are eliminated. The end for pulsations due to patented interference method.

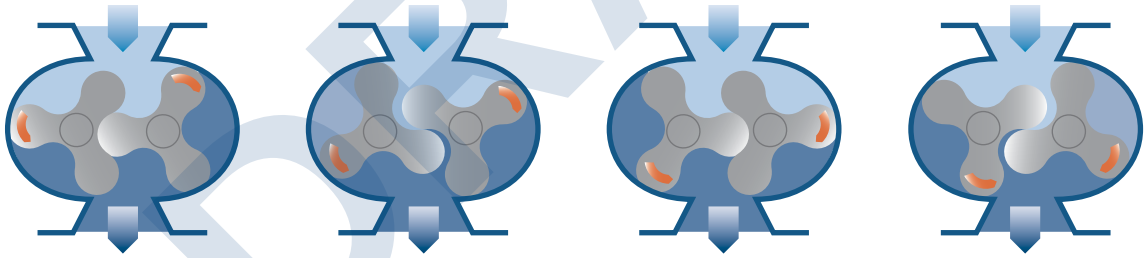

Conveying process in the AERZEN blower

Intelligent technical details ensure that the Delta Blower packages retain their value. One example of many: the patented pulsation reduction, an AERZEN innovation for longer bearing life.

DRAFT

Blower stage
- AERZEN Blowers with 3-lobe pistons and integrated pulsation reduction
- Housing consisting of: Cylinder (with two cylinder with cast-in pre-inlet channels at discharge side to minimise the sound by pulsation reduction), wheel housing, housing cover and side plates
- Material EN-GJL-200
- Ribbed surfaces

Pistons

Sizes GM 3 S to GM 130 L:
- Pistons and shafts in one piece

Sizes GM 150 S to GM 240 S:
- Pistons made of nodular cast iron, shafts made of tempered steel

Drive type
- Overhung via narrow V-belt
- Direct drive

Cooling
- Convection cooling

Lubrication
- Oil splash lubrication for bearings and timing gears

Oil-free conveying
- The oil-free design according to ISO 8573-1 class 0 is guaranteed by the piston ring labyrinth seal, which has proven itself over decades, in combination with neutral chambers (open to the atmosphere)

Timing gears
- Hardened and ground, helically geared and made of case-hardened steel
- They are fitted to the shafts by taper interference fit
- maximum running smoothness and service life

DRAFT

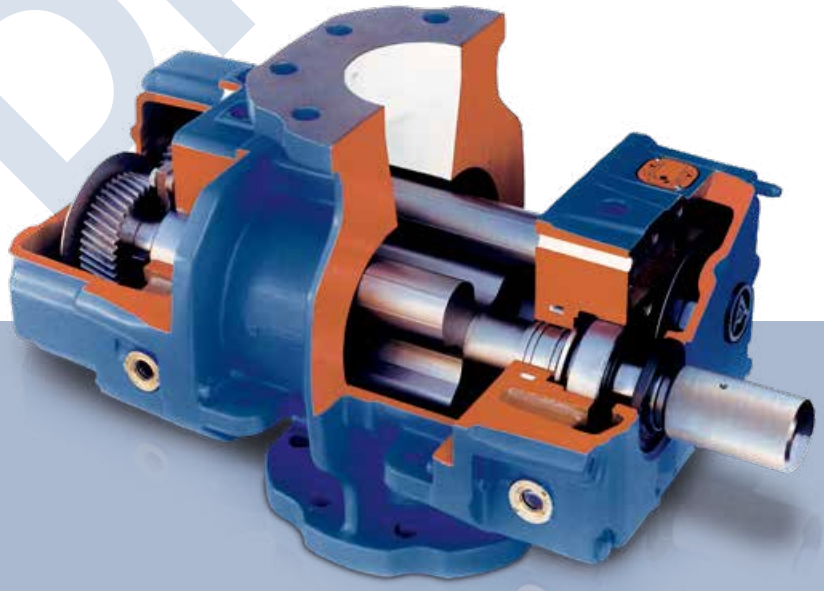

It's the inner values that matter: the AERZEN blower stage

ALREADY IN THE STANDARD VERSION EXTRAORDINARY.

THE DELIVERY CONCEPT OF AERZEN.

Some call it comfortable. The others efficient. We call it all-in: the delivery concept of AERZEN. When the Delta Blower package comes to you, it is already completely configured, parameterized and mounted ready for connection at the factory. Naturally, this is tailored to your processes. Including all standardised accessory components for trouble-free operation at the touch of a button.

All in: The scope of supply in the normal version.

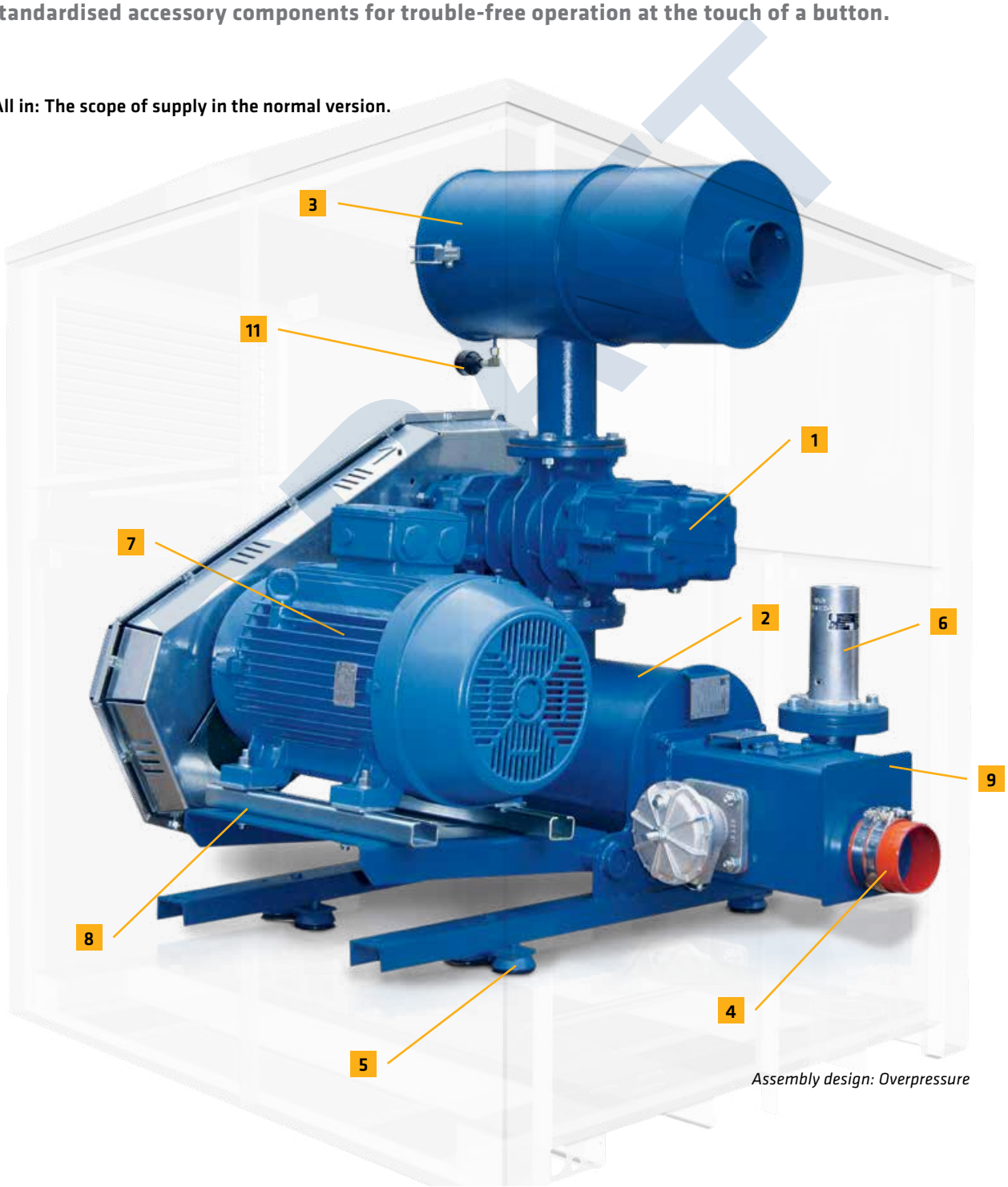

Assembly design: Overpressure

1 **3-lobe blower stage**
- With integrated pulsation reduction (see page 10/11)



2 **Base supports with integrated discharge silencer**
- Certified as spark arrester
- Absorbent-free silencing through patented discharge silencer

3 **Intake silencer with integrated air filter or strainer**
- Standard suction from the atmosphere (overpressure)
- Suction via piping optional (standard for negative pressure)
- Suction via filter element for negative pressure optional



Overpressure



Negative pressure

4 **Flexible rubber sleeve**
- with clamps

5 **Flexible machinery mountings**
- For the decoupling of structure-borne noise

6 **Pressure valve or suction valve**
- For machine protection

7 **Drive**
- Via high-performance narrow V-belt drive by means of three-phase motor
- Standard use of premium efficiency motors (up to motor size 447/9T)

8 **Hinged motor mounting plate**
- Automatic tensioning device for the belt drive
- Multifunctional hoist for hinged motor mounting plate



9 **Connecting housing**
- integrated check valve

10 **Integrated blow-off silencer**
- Horizontal version (up to DN 125)

11 **Standard instrumentation**
- Pressure gauge for indication of the conveying pressure (overpressure)
- Maintenance indicator for monitoring the intake filter (overpressure)
- Vacuum meter for indication of the conveying pressure (negative pressure)



Assembly design: Negative pressure

DRAFT

MODIFICATIONS AND ACCESSORIES.
THE BEST FOR EVERY APPLICATION.

Added value: The accessory components.

- Acoustic hood for indoor and outdoor installation, forced ventilation via mechanical fan
- Start unloading device, required for star-delta starting of the motor (overpressure),
- Vertical blow-off silencer with base plate (negative pressure)
- discharge side expansion joint instead of flexible rubber sleeve
- Power cabinet Star-delta, frequency converter, soft starter
- AERZEN AERtronic blower control
- AERZEN original spare parts
- Other accessories on request



AERZEN Start unloading device

Modifications.

- Special motors
- Special varnish
- ATEX compliant design
- Acoustic hood for desert installation with special sand collector
- Acoustic hood for low temperatures down to negative 104°F with heating and gravity louvers
- Acoustic hood for earthquake resistance and increased wind loads
- Ship installation and vehicle deployment
- Use for special gases through the use of special materials
- Customised documentation
- Compliance with legal requirements for delivery e.g. in Eurasian customs union



Always the safe choice: ATEX compliant design from AERZEN

The new AERtronic - the way into the digital future.
The new edition of the AERtronic control system offers a user-friendly and clear possibility for the analysis and processing of relevant process parameters and thus provides more transparency, safety and efficiency. All measured values converge in the new control system and can be transferred to the production control system via common interfaces in order to always operate the plant at the optimum operating point. The AERtronic is available in three versions:

Basic: As a fully digital display instrument
Advanced: For active process control
Premium: As an intelligent interface with cloud compatibility.



DRAFT

COMPACT DESIGN. CAN BE SET UP SIDE-BY-SIDE, OF COURSE.

Dimensions and weights (subject to technical changes - product is subject to technical change).

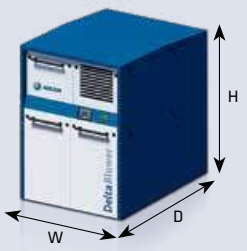

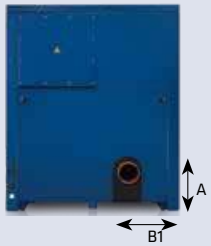

Delta Blower

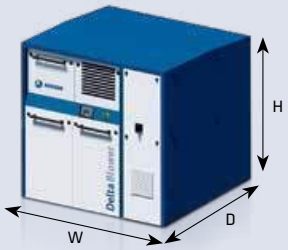

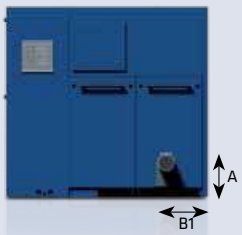

Delta Blower with integrated power supply panel.

Delta Blower.

Type	W in.	mm	D in.	mm	H in.	mm	A in.	mm	B1 in.	mm	Nominal diameter DN	Weight without acoustic hood lbs.	kg	Weight with acoustic hood lbs.	kg
GM 3 S	31	800	31	800	41	1,055	8	228	9	245	50	326	148	467	212
GM 4 S	36	925	44	1,135	50	1,280	10	258	10	258	80	456	207	659	299
GM 7 L	36	925	44	1,135	50	1,280	10	258	10	258	80	467	212	670	304
GM 10 S / DN 80	36	925	44	1,135	50	1,280	10	258	10	258	80	520	236	723	328
GM 10 S / DN 100	49	1,250	53	1,350	59	1,500	11	294	14	375	100	740	336	1093	496
GM 15 L	49	1,250	53	1,350	59	1,500	11	294	14	375	100	773	351	1126	511
GM 25 S	49	1,250	53	1,350	59	1,500	11	294	14	375	125	897	407	1250	567
GM 30 L	59	1,500	70	1,800	74	1,900	14	356	17	435	150	1521	690	2248	1020
GM 35 S	59	1,500	70	1,800	74	1,900	14	356	17	435	150	1719	780	2447	1110
GM 50 L	66	1,700	80	2,055	83	2,111	14	357	20	525	200	1995	905	3251	1475
GM 60 S	66	1,700	80	2,055	83	2,111	14	357	20	525	200	2281	1,035	3,538	1,605
GM 80 L	74	1,900	80	2,200	90	2,308	17	456	23	600	250	3417	1,550	4,850	2,200
GM 90 S	74	1,900	80	2,200	90	2,308	17	456	23	600	250	3571	1,620	5,004	2,270
GM 100 S	74	1,900	80	2,200	90	2,308	17	456	23	600	250	4012	1,820	5,445	2,470
GM 130 L	82	2,100	112	2,850	92	2,345	16	410	25	635	300	5370	2,436	7,517	3,410
GM 150 S	82	2,100	112	2,850	92	2,345	16	410	25	635	300	6164	2,796	8,267	3,750
GM 220 L *	82	2,800	169	4,304	137	3,500	16	410	31	800	400	10981	4,981	18,166	8,240
GM 240 S *	82	2,800	169	4,304	137	3,500	16	410	31	800	400	11841	5,371	19,025	8,630

* Design in Compact IV

Weights without motor and belt drive

Delta Blower with integrated power supply panel.

Type	W in.	mm	D in.	mm	H in.	mm	A in.	mm	B1 in.	mm	Nominal diameter DN	Weight with acoustic hood lbs.	kg
GM 10 S	72	1,850	53	1,350	59	1,500	11	294	14	375	100	1364	619
GM 15 L	72	1,850	53	1,350	59	1,500	11	294	14	375	100	1457	661
GM 25 S	72	1,850	53	1,350	59	1,500	11	294	14	375	125	1580	717
GM 30 L	82	2,100	70	1,800	74	1,900	14	356	17	435	150	2914	1,322
GM 35 S	82	2,100	70	1,800	74	1,900	14	356	17	435	150	3112	1,412
GM 50 L	82	2,300	80	2,055	83	2,111	14	357	20	525	200	4023	1,825
GM 60 S	82	2,300	80	2,055	83	2,111	14	357	20	525	200	4310	1,955

DRAFT

Weights without motor, power electrics and belt drive

DELTA BLOWER IN FIGURES.
SIZES AND PRESSURE RANGES.



Type	Positive displacement blower
Design	Overpressure
Volume flow	17 to 8617 CFM
Overpressure	up to 14.5 Psi
Conveying medium	Air, Neutral gases
Handling	oil-free

Figure:
Delta Blower GM 25 S - Assembly without acoustic hood

Performance data - DELTA BLOWER - overpressure operation

Blower Size	Differential pressure		Volume flow		Motor rating		Sound pressure level
	max. Psi	max. mbar	max. CFM	max. m3/h *	max. hp	max. kW	max. dB(A) **
GM 3 S	14.5	1,000	141	240	15	11	70
GM 4 S	14.5	1,000	196	334	20	15	70
GM 7 L	10	700	287	488	20	15	70
GM 10 S / DN 80	14.5	1,000	353	600	40	30	72
GM 10 S / DN 100	14.5	1,000	402	684	40	30	72
GM 15 L	10	700	36	1,020	40	30	72
GM 25 S	14.5	1,000	851	1446	73	55	73
GM 30 L	10	700	1211	2,058	100	75	75
GM 35 S	14.5	1,000	1,405	2,388	120	90	75
GM 50 L	10	700	1935	3,288	120	90	76
GM 60 S	14.5	1,000	2,076	3,528	177	132	78
GM 80 L	10	700	2924	4,968	214	160	80
GM 90 S	14.5	1,000	3,150	5,352	268	200	81
GM 100 S	14.5	1,000	3,701	6,288	335	250	82
GM 130 L	10	700	4661	7,920	335	250	84
GM 150 S	14.5	1,000	5,297	9,000	476	355	84
GM 220 L	8.7	600	7398	12.570	422	315	84
GM 240 S	11.6	800	8617	14,640	670	500	86

* Volume flow (corresponds to the delivery volume flow measured according to ISO 1217 and converted to the reference suction conditions according to the (informative) Annex F of ISO 1217 [inlet pressure = 1.0 bar / inlet temperature = 20°C, RH = 0%])

** Machine noise at a distance of 1m with acoustic hood and connected, insulated pipe, tolerance ± 2 dB(A)

Further pressure ranges can be requested for the AERZEN spectrum. Extensive performance data charts can be found in our Customer Net.

DRAFT



Type	Positive displacement blower
Design	Negative pressure
Volume flow	17 to 8829 CFM
Overpressure	down to -7.5 Psi
Conveying medium	Air, Neutral gases
Handling	oil-free

Figure:
Delta Blower GM 15 L - Assembly without acoustic hood

Performance data - DELTA BLOWER - negative pressure operation

Blower Size	Differential pressure		Volume flow		Motor rating		Sound pressure level
	max. Psi	max. mbar	max. CFM	max. m3/h *	max. hp	max. kW	dB(A) **
GM 3 S	-7.5	-500	147	250	10	7.5	68
GM 4 S	-7.5	-500	200	340	10	7.5	70
GM 7 L	-7.5	-500	306	520	14 - 25	11 - 18.5	70
GM 10 S / DN 80	-7.5	-500	353	600	20 - 50	15 - 37	70
GM 10 S / DN 100	-7.5	-500	429	730	20 - 50	15 - 37	70
GM 15 L	-7.5	-500	635	1,080	29 - 50	22 - 37	73
GM 25 S	-7.5	-500	888	1,510	40 - 73	30 - 55	73
GM 30 L	-7.5	-500	1247	2,120	60 - 120	45 - 90	75
GM 35 S	-7.5	-500	1424	2,420	73 - 120	55 - 90	75
GM 50 L	-7.5	-500	2030	3,450	100 - 335	75 - 250	78
GM 60 S	-7.5	-500	2142	3,640	100 - 335	75 - 250	78
GM 80 L	-7.5	-500	3031	5.150	147 - 335	110 - 250	80
GM 90 S	-7.5	-500	3296	5,600	147 - 335	110 - 250	80
GM 100 S	-7.5	-500	3884	6,600	147 - 335	110 - 250	80
GM 130 L	-7.5	-500	4750	8,070	536	400	82
GM 150 S	-7.5	-500	5709	9,700	536	400	82
GM 220 L	-7.5	-500	7534	12,800	536	400	82
GM 240 S	-7.5	-500	8829	15,000	536	400	80

* Volume flow (corresponds to the delivery volume flow measured according to ISO 1217 and converted to the reference suction conditions according to the (informative) Annex F of ISO 1217 [inlet pressure = 1.0 bar / inlet temperature = 20°C, RH = 0%])

** Machine noise at a distance of 1m with acoustic hood and connected, insulated pipe, tolerance ± 2 dB(A)

Further pressure ranges can be requested for the AERZEN spectrum. Extensive performance data charts can be found in our Customer Net.

DRAFT

MATURED TO PERFECTION IN 150 YEARS: THE SERVICE WORLD OF AERZEN.

The best kind of service is the kind you don't need. But every technology involves wear and tear. Our machines are designed to do their job for as long and efficiently as possible. If necessary, for decades. The goal of AERZEN Services is to extend service life and availability – simple added value for your investment!

Benefit from AERZEN OEM competence - at any time and anywhere



With your OEM's best recommendations.
We have been manufacturing quality products for over 150 years. At the same time, we also developed a corresponding service world. With tailor-made offers for every phase of your machine's lifespan. With OEM original parts, reliable logistics and excellent service at its core. And with decentralised service centres in your vicinity, which guarantee fast provision of spare parts and competent service - worldwide.

AERZEN on-site service.
Our service teams work where our machines are. All over the world. Onshore or offshore. Often under extreme conditions. How do we do it? With short distances. AERZEN has a dense network of service centres and decentralised parts warehouses around the globe. More than 200 excellently trained service technicians can come to your aid from there. Any time and anywhere you need us.



Contact worldwide

2,500 employees work for AERZEN. On every continent. With six sales offices in Germany alone, we're there for you. And with 50 subsidiaries in over 100 countries around the world. Hence we're never far away – should you ever need us. Give us a call:

+49 5154 81 0

Service-Infoline

Our German Service Centre is available for customers and operators. We are happy to help you. We look forward to your call:

+49 700 49318551

Customer Net

Where you can learn more about the company and the leading compressor technologies from Aerzen? It's simple: In our Customer Net on our website, where we have stored everything that is worth knowing for you:

www.aerzen.com

DRAFT

AERZEN. Compression - the key to our success.

AERZEN was founded in 1864 as Aerzener Maschinenfabrik. In 1868, we built Europe's first positive displacement blower. The first turbo blowers followed in 1911, the first screw compressors in 1943, and in 2010 the world's first rotary lobe compressor package. Innovations "made by AERZEN" keep driving forward the development of compressor technology. Today, AERZEN is among the world's longest established and most significant manufacturers of positive displacement blowers, rotary lobe compressors, screw compressors and turbo blowers. AERZEN is among the undisputed market leaders in many areas of application.

At our 50 subsidiaries around the world, more than 2,500 experienced employees are working hard to shape the future of compressor technology. Their technological expertise, our international network of experts, and the constant feedback we get from our customers provide the basis for our success. AERZEN products and services set the standard in terms of reliability, stability of value and efficiency. Go ahead – challenge us!

DRAFT



FIND YOUR LOCAL CONTACT

www.aerzen.com/worldwide



Aerzen USA
108 Independence Way
Coatesville, PA 19320
Phone: 610-380-0244
Order-USA@aerzen.com
www.aerzen.com

AERZEN
EXPECT PERFORMANCE

Delta Blower (G1-068-10)_Aerzen USA
12|2022

AERZEN DELTA BLOWER GENERATION 5
North American Standard
Positive Pressure

Standard range

Blower sizes: ..... GM 3S to GM 150S

Package nominal sizes: ..... 2” (DN 50) to 12” (DN 300)

Medium: ..... Air

Flow range: ..... 35 to 5297 icfm (1.0 to 150 m^3/min)

Differential pressure: ..... 15 psi (1000 mbar) for “S” and 10 psi (700 mbar) for “L” machines

Maximum operating temperature: 285ºF (140ºC)

Drive: ..... V-belt drive with totally automatic belt tension adjustment

Introduction

The Aerzen Blower is renowned for its performance and its reliability. There is no secret: From the blower-stage through the accessories, Aerzen enhances key features of each component by applying sound engineering, precision machining, and superior workmanship.

The Delta Blower Generation 5 (G5 for short) is the synthesis of four previous Aerzen blower package generations combined with an array of new technical innovations to provide five key advantages to our customers:

- The machinery noise level has been lowered yet another 6-8dBa[1] on average compared to the previous Delta Blower
- The blower package is even more user friendly especially in transport, installation, operation, and maintenance
- The oil level is visible from the outside of the package, so the blower does not need to be shut down
- No absorption material is used in the discharge combination silencer; this eliminates the possibility of foreign objects contaminating the air or gas stream
- Use of a shaft mounted cooling fan, which reduces installation and operating costs by eliminating extra wiring, motor starters, and its interlocking with the main blower motor
- The compact footprint allows units equipped with sound enclosure to be mounted side-by-side since there is only one main maintenance access side

[1] Measured in 1m free-field conditions

DRAFT

Aerzen Delta Blower Generation 5 are pre-engineered modular compact packages, which offer a wide range of options from proven and standardized components at reasonable costs and short delivery times.

Shipped completely assembled, the Aerzen Delta Blower Generation 5 is indoor and outdoor rated. There is no extensive installation work - neither grouting nor special anchoring is required, just simply level it and bolt it to any standard industrial flooring or surface.

Scope of supply: basic configuration

- Aerzen Rotary Lobe Blower stage
- Combination Base Frame / Silencer combined with hinged motor plate for automatic belt tensioning – with 2 ½" diameter discharge pressure gauge
- Making belt changes as easy as possible a motor hinge plate lifting and locking mechanism is included with DN100-300 units and a hydraulic bottle jack is supplied with DN50 and 80 units.
- Set of vibration isolating mounts under the entire blower package
- Inlet silencer – filter with filter maintenance indicator
- Narrow V-belt drive and protection guard
- Pressure safety valve
- Discharge manifold with integral check valve and flexible pipe connector
- Standard paint system
- NEMA electric motor TEFC, Premium efficiency, VFD duty, with conduit box on top
- First oil fill and "Service kit"
- Packaging for domestic trucking
- Standard documentation in electronic format: English language, drawings with US-customary and metric units of measure

Standard options include (not limited to)

- Inlet pipe connection kit
- Sound enclosure with skid / oil-drip pan and forced ventilation
- Start-unloading valve Aeromat, with or without solenoid valve
- Pressure modulating valve Aeropress or Aeropress10S, pilot operated
- Other motors, e.g. misc vendors Premium Efficiency with conduit box on top
- Instrumentation & controls, e.g. AERtronic Aerzen blower controller

DRAFT

Description of the main components

The combination of key components marked with a * in the description below significantly contribute to the reliability and performance of the Aerzen Blower:

At the heart of the package: The Aerzen Rotary Lobe Blower

Low vibration and low pulsations - a key feature:

* Internal pulsation interference channels in conjunction with 3-lobe rotors reduce the pulse in the discharge air stream by as much as 90% or 20 dB at the lobe-passing frequency. This significant attenuation contributes strongly to reducing vibrations in the entire package and lowering the noise emitted by the downstream piping.

Positive displacement characteristic:

- The blower moves a fixed volume of gas with each shaft rotation, nearly independently from the operating pressure.
- At constant differential pressure, the load torque remains constant.
- For a given pressure, the power is directly proportional to the speed.

Flow across the blower stage:

- Vertical from top to bottom

Drive shaft location:

- On the left when facing the blower shaft

Rotation:

- Counterclockwise when facing the blower shaft

Housing:

- The central section, “the cylinder” and the two side-plates house the rotors, while a gear case and a drive end cover contain the lubricating oil for bearings and gears. Individual side plates allow for optimal setting of the radial rotor clearances: a valuable feature on blowers with the gas flowing perpendicular to the rotors.
- Connections: full-size, flat-faced flanges
- * Maintaining internal alignment under all operating conditions is paramount for the reliability of any rotating equipment. The housing is, for this purpose, designed to support the entire blower stage on its outlet flange only; no need to worry about a “soft foot” or uneven base support
- Materials: Gray cast iron EN-GJL-200 equivalent to ASTM A48 Cl.30 AISI A278 Cl. 30

DRAFT

Rotors:

- Up to and including the model GM 80L, rotors and shafts are made of a single, drop forged steel piece made from C45 steel equivalent to AISI Type 1045. Models GM35S, 50L, 90S, and 130L are made from a single piece of EN-GJS-500-7 nodular cast iron equivalent to ASTM A 536. Model GM150S rotors are comprised of a through shaft made from C45 steel equivalent to AISI Type 1045 and a rotor made from EN-GJS-400-15 nodular cast iron equivalent to ASTM A536 Gr. 60-40-18. Solid or dust-tight rotors do not have any open cavities that can trap contaminants. This is particularly important in food applications and applications requiring high purity. Moreover, rotor balance is maintained, and vibration is therefore minimized.
- Stiff rotor design: the rotors' first critical speed is always at least 10% above the maximum operating speed.
- The rotors meet or exceed the ISO 1940 / ANSI S2.19 G6.3 criteria of dynamic balancing

Timing gears:

- Helical gears with hardened and ground teeth to meet AGMA 12 quality standard with an AGMA service factor of 1.70.
- To maintain the advantage of high-quality gears, the gear wheels are secured onto the shafts by means of a tapered interference fit. Optimum concentricity is achieved and neither gear hub nor shaft keys are used. To prevent damaging the seats, gear installation and removal are carried out using hydraulic pressure to expand the gear wheels within their elastic limit.

Bearings:

- The rotors are supported by anti-friction bearings
- The bearings are housed in the side-plates and are sized for an expected 5 years between overhauls.
- The drive-shaft bearing is a cylindrical roller bearing whereas the other bearings are selected to achieve the proper clearances between rotors and housing, axial loads from the helical bearings: smaller machines up to GM 50L feature double angular ball bearings.

Lubrication:

- Oil splash lubrication of all bearings and gears through oil spray disks on both blower ends
- An oil sight glass is provided on each oil sump.
- An oil drain valve is provided on each oil sump (units without sound enclosure). The oil drain valves are directly mounted to the oil sump covers for clean, easy and fast oil change.
- Units with sound enclosure are plumbed together to an oil reservoir that serves as oil fill and drain device, and its oil sight glass is visibly mounted to the maintenance side of the enclosure.
- Aerzen USA provides the first oil fill with a lubricant as recommended in the operating manual as well as a service-kit containing oil fill funnel, and oil drain hose.

Seals at the rotor chamber:

- The rotor chamber is sealed from the oil chambers by four, all metal, non-rubbing seals, each consisting of the following components and in that sequence:
  - Oil slinger ring
  - Two restrictive piston-rings in a labyrinth
  - "Neutral chamber" located between the piston rings used for venting the seal
  - Two restrictive piston-rings in a grooved labyrinth bushing

Seal at the drive shaft:

- Double, permanently lubricated Viton seal ring
- Shaft sleeve: replaceable, hardened steel

DRAFT

Testing

- Each blower stage is subject to a full-load test to verify the volumetric flow and power values.
- Acceptance criteria are +5% on power and –5% on flow for all machine sizes.
- Orifice flow measurement and conversion of results to the operating conditions in accordance with ISO 1217, simplified

The package component Aerzen Rotary Lobe Blower

Intake air silencer & filter

- Absorption-type silencer upstream of the air filter element. For reasons of cleanliness, there is no silencing material between the filter and the inlet blower flange.
- The carbon steel housing is powder coated. Quick-release latches for quick access to the filter element
- Filter performance: G4 per EN 779 (greater than 90% of synthetic dust particles), equivalent to ASHRAE 52.2 MERV 7 (50-70% @3-10 microns)
- Progressively compressed, thermally bound polyester fibers, free of PVC, smoothened and compressed on the clean airside for highest dust separation and retention capacity. The filter media is made of a single, 30 mm thick continuous mat that is white in color and is food safe. Filter element mounts with a quick release turn and lock arrangement.
- Included is a filter maintenance indicator. If the sound enclosure option is selected, the filter maintenance indicator is mounted to the enclosure wall.

Base with integral discharge silencer:

- In addition to the blower's internal pulsation cancellation feature, the combination discharge, three-chamber reactive silencer is used to further reduce the noise and residual pulsation in the air stream across a wide range of operating speeds. The residual pulsation downstream of the silencer meets or exceeds the API 619 recommended 2% peak-to-peak of the absolute line pressure.
- The discharge silencer is combined with the support base into one compact rugged unit. It is made from pressure vessel steel it forms a torsion resistant cylindrical vessel supporting the blower stage and other components.
- The mounting surface for the blower is a full-size steel flange machined and continuously welded to the base with the full number of tapped holes for the studs to fasten the blower to the base - no need to align blower feet or to worry about a soft-foot condition. A surface sealant is used instead of a gasket.
- Maximum operating pressure: 1.1 bar gauge (16 psig) and 150ºC (300ºF), built and certified to the latest European Pressure Vessel Code, PED. Test pressure: 1.9 bar g. (27.6 psig)
- The base is mounted on a set of vibration-isolating mounts

DRAFT

Belt drive

- Narrow, anti-static V-belts
- Selected for a minimum service factor of 1.4 times operating power (BHP), or 1.1 times the motor nominal power (nameplate HP), whichever is greater.[2]
- * The Aerzen Delta Blower Generation 5 package provides entirely automatic tensioning of the belts. Thanks to the package configuration, the drive geometry is such that the motor hinges parallel to the motor shaft centerline, using only the motor mass to maintain this tension without need for adjustments or springs. This not only reduces maintenance; it also reduces the potential for operating with too little (slipping belts) or excessive belt tension (excessive bearing and shaft load).
- DN100-300 blower packages feature a multipurpose lifting device for the motor swing plate. In its most basic function, it serves as shipping locking device preventing the motor from unwanted movement. It also serves as the lifting mechanism for changing out the drive belts. Another additional purpose is limiting the belt tension when oversized motors are used. Finally, the device can be configured to aid limited movement for seismic or mobile blower package service. The maintenance kit provided by Aerzen USA also includes a ratchet wrench used for lifting the motor to change V belts.
- DN50 & DN80 blower packages have a simple to use bracket and hydraulic jack included in the maintenance kit to lift the motor and change or install the belts.
- Sheaves and bushings are dynamically balanced to ISO 1940 / ANSI S2.19 G6.3. For linear tip speeds > 6500 ft/min (33 m/s), nodular cast-iron, ventilated sheaves are used.

Belt guard

- OSHA compliant personnel guard, made of galvanized steel: either perforated steel or solid sheets with vents, depending upon the model.
- Units with sound enclosure feature hand protection fan and belt guards, and the enclosure itself serves as the ultimate protection device. The removable maintenance panels comprise lockable latches that help facilitate OSHA prescribed tag-out-lock-out procedures.

Vibration isolating mounts

- A set of vibration isolating mounts are located under the blower package to hinder the transmission of structure borne noise from the blower and the discharge silencer into any structure the package is installed on, such as a mounting skid if supplied with acoustic enclosure.

Discharge manifold

- Flange-mounted to the discharge silencer, the discharge manifold serves for mounting the pressure safety valve, an optional start-unloading valve and for connecting the blower package to the discharge piping.
- Materials of construction: Gray Cast Iron EN-GJL-250 equivalent to ASTM A48 (Aluminum stub pipe for DN50)
- The discharge manifold houses the discharge check-valve

Pressure safety valve

- DN100-300 blower packages have a vertically mounted, spring loaded, safety pressure valve sized for the full flow of the blower. DN50 and DN80 blower packages feature horizontally mounted safety relief valves.

[2] Higher values are not necessarily better as they could lead to belt slippage due to excessive stiffness, and also shaft damage (deflection) caused by higher tension values required by over sized v-belt drives.

DRAFT

- The valve's characteristic is nearly proportional. It not only opens, but also closes at the set pressure
- The valve has a built-in dampener that allows the valve to actuate smoothly, which prevents the "pop-off" effect commercially available valves exhibit.
- Pressure rise up to 10% at full flow. Certification of conformity to PED
- Being an all-metal valve, it is not suitable as a pressure modulating valve. If this function is needed use an Aerzen pilot operated Aeropress or Aeropress10S pressure modulating valve.
- Materials: seat of gray cast iron and, depending on the size, a brass or anodized aluminum bell and piston, galvanized spring, steel spring rod, and an aluminum or fabricated external steel cylinder.
- Standard set points are 15.2 psig (1050 mbar) for "S" model blowers operating above 10 psi (700 mbar), and 10.9 psig (750 mbar) for all machines operating under 10 psi (700 mbar), including all "L" model blowers[3].
- The valve protects the blower stage against line surges, and spikes. It does not protect against prolonged overloads or excessive discharge temperature. Therefore, it is not an absolute protection device, nor is it "bubble tight".

Discharge check valve

- A full-bore check valve that can be easily removed for inspection and maintenance without disconnecting the discharge piping[4]
- With its horizontal top-located steel shaft[5], the check valve naturally closes by gravity at no-flow.
- Without any springs, the check valve will not chatter, even at low flow conditions (for example in adjustable speed applications)
- Flap material: EPDM on steel for operating temperatures up to the blower limit
- Optional check valve flap material: Silicone rubber

Discharge flexible connector

- A reinforced silicone-rubber discharge flexible connector with heavy-duty clamps connects to the discharge piping.
- It prevents the transmission of structure-borne noise from the blower and its discharge silencer to the discharge piping.
- Located downstream of the silencer and with only a small gap (~1/2") between the package and the pipe, the noise sent to the outside is maintained at a minimum.
- The sleeves are sized for standard, schedule 40 pipe diameters.

Discharge pressure gauge

- Liquid filled, 2 ½ "dial. Units: mbar and psi
- If the sound enclosure option is selected, the discharge pressure gauge is mounted to the sound enclosure wall.

DRAFT

[3] The valves are adjustable, and different springs are available for other set points depending upon operating conditions, motor limitations, or customer's requests.

[4] Except DN50

[5] Except DN50

Optional sound enclosure

- — Covering the entire blower package with the drive motor, the enclosure provides suitable protection for outdoor installation up to 50 mph winds and 25 lb/ft^2 snow load and rain at a 45º angle
- * — The enclosure and the blower package are both mounted on a skid / oil-drip pan, designed for meeting environmental protection standards as well as for easy transportation and installation.
- * — The unique Aerzen package design makes it possible to mount multiple blowers side-by-side without hindering access to the maintenance side (front). All pipe and wiring connections are made from the backside. This offers the best use of available floor space.
- * — All maintenance activities can be carried out from the front of the package, e.g. air filter, belts, and oil maintenance. The oil level is visible from the outside and eliminates any guesswork. Oil can be filled and drained from a common reservoir that also houses the oil level gauge.[6] The oil level check can be done with the blower in operation.
- — The enclosure reduces the package noise level to less than 80 dB(A) – 75dB(A) in most cases- at 1 m, free field, per DIN 45635.
- — Quick release panels, each less than 50 lb (as mandated by MSHA) provide quick and easy access to the blower and the package components for routine maintenance.
- * — Blower packages are fitted with a shaft-mounted cooling fan for sufficient heat removal. There is no need for a separate electric driven fan and required interlock and controls.
- — Aerzen mounts the blower package in the sound enclosure at our factory prior to shipment.
- * — Panels are made of galvanized steel sheet, with self-extinguishing, non-dripping high-density polyester foam as absorption material.
- — The enclosure is powder coated in a UV resistant Aerzen Royal Blue color, accented with light gray maintenance panels

DRAFT

[6] Except DN50

Hebevorrichtung für Motorwippe

Lifting device for motor base

Dispositif de levage pour moto-interrupteur à bascule

Hijsinrichting voor motorwip

Mecanismo de elevación para base de motor

Dispositivo di sollevamento per basamento oscillante del motore

DRAFT

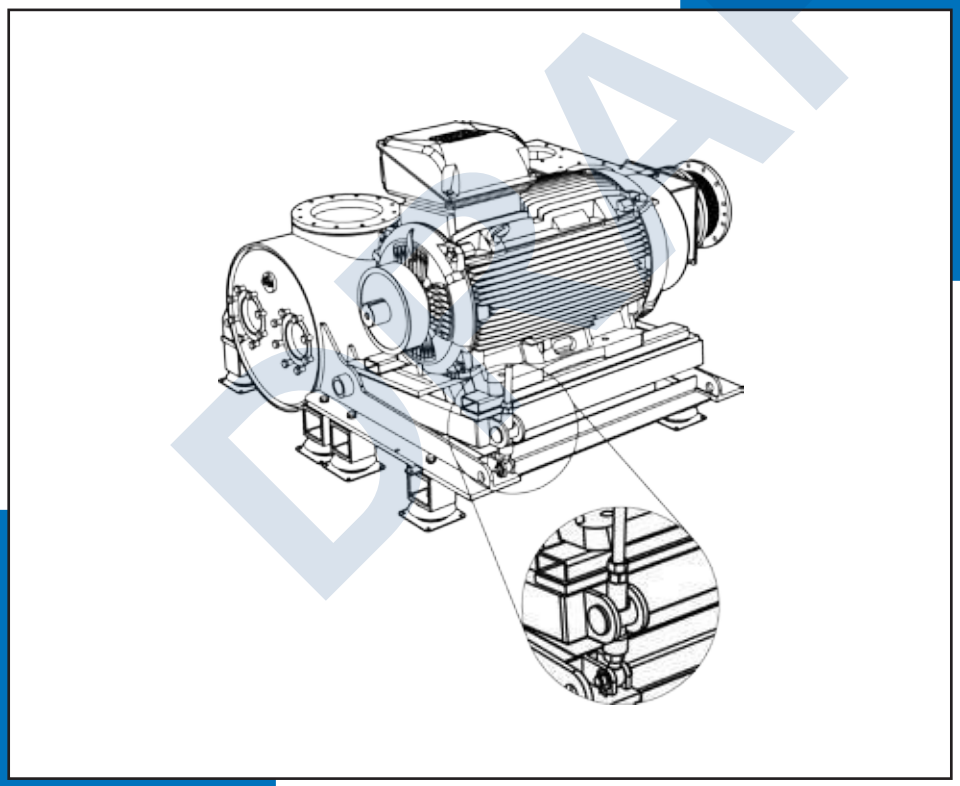

DEUTSCH
ENGLISH
FRANÇAIS
NEDERLANDS
ESPAÑOL
ITALIANO

AERZEN

AERZENER MASCHINENFABRIK GMBH

G4-079 B XT	
... ...	03-2014

Typ / *type*

Delta Hybrid
Delta Blower Generation 5
Delta Screw Generation 5

1. General notes

- This description serves as guide for the operation of the hinged motor lifting device.
- Usage requires special knowledge in using and handling this kind of machine.
- For correct operation of the hinged motor in the Delta unit, qualified and trained specialists are required.
- Only use envisaged and suitable tools for adjusting the hinged motor.

Every person involved in the adjustment of the hinged motor should read and understand this description and the corresponding operating instructions and especially the safety instructions!

WARNING!
Danger of injury if insufficiently qualified!
Incorrect use can lead to considerable personal injury and property damage.

- All actions should therefore only be carried out by adequately qualified specialists.

Specialists
are due to their technical training, knowledge and experience as well as knowledge of the relevant provisions able to carry out all work assigned to them and to recognise and avoid possible dangers.

Only personnel are allowed to work whom it can be expected to carry out the work in a reliable manner.

Persons whose responsiveness is influenced due to drugs, alcohol or medication are not allowed.

Age and job-specific regulations should be taken into consideration with the choice of personnel.

DRAFT



Typ / *type*		
Delta Hybrid Delta Blower Generation 5 Delta Screw Generation 5		

2. Safety information

The hinged motor should only be set or adjusted when the machine is not in operation and secured against reactivation!

Securing against reactivation

The machine should be secured against reactivation for all actions that require the machine to be in a non moving condition (e.g. work or fault rectification).

WARNING!
Lethal danger due to unauthorised, uncontrolled or impermissible reactivation!
Unauthorised or uncontrolled reactivation of the machine can lead to serious injuries or death!
Persons could be in the hazardous area.

Applying power can lethally injure these persons.
- Secure the main switch and lock.
- Signs should be placed on the main switch and users informed of the possible dangers.
- Before reactivation ensure that all safety equipment is assembled and fully functional and that there are no dangers existing to persons.
- Always adhere to the following procedure for securing against reactivation.

1. Switch off energy supply.
2. Secure the main switch using a lock which should be locked and a relevant sign should be placed on the main switch.
3. The key should be kept safe with a responsible person.
4. If the main switch cannot be secured, relevant signs should be placed indicating the dangers.
5. After all work is completed check that there are no persons in the hazardous area.
6. Make sure that all protection devices are installed and fully functional.
7. Unlock the main switch and remove the signs.

DRAFT



Typ / *type*

Delta Hybrid
Delta Blower Generation 5
Delta Screw Generation 5



CAUTION!
Danger of injury due to sharp edges and pointed corners!
Sharp edges and pointed corners can cause abrasions and cuts to the skin.
- Proceed carefully when working near sharp edges and pointed corners.
- If in doubt wear protection gloves.



WARNING!
Danger of injury due to moving and rotating components!
Moving and rotating components can cause serious injuries.
- Correctly take the machine out of operation and secure against reactivation before adjusting the hinged motor.
- During the adjustment of the hinged motor do not touch or grasp any moving components.
- Wear close fitting protective clothing with a low tear resistance when in the hazardous area.



WARNING!
Shear and crushing danger due to moving parts!
Moving components can cause shear and crushing injuries.
- Do not grasp between any moving components when working on the hinged motor.
- Never enter the swivel range of the hinged motor.

DRAFT



- Only use the ratchet spanner and the original mounting material that were delivered to adjust the hinged motor!

- The hinged motor should not rest on the guide bushing when in the operating position.
  Exception: Hinged motor support for motors with increased weight.

  Otherwise the belts slip and wear out sooner.
  Danger of property damage!

  The hinged motor should also have sufficient space to place the guide bushing after the belt has stretched.

Design with acoustic hood

- After adjusting the hinged motor correctly close the acoustic hood.

DRAFT

3. Delivery condition

Factory delivery condition / without drive belts.



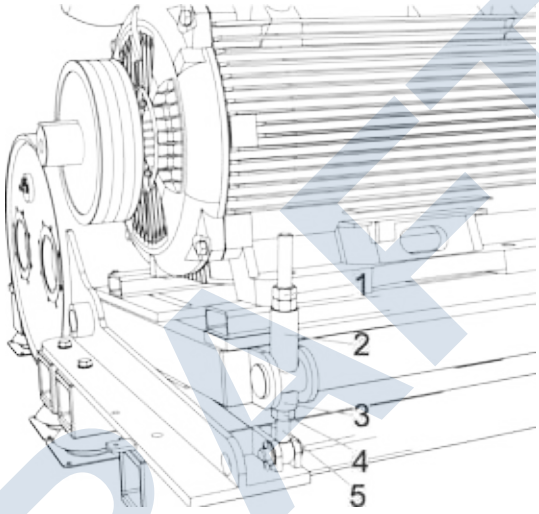

Fixed hinged motor / transportation lock

4. Assembly overview

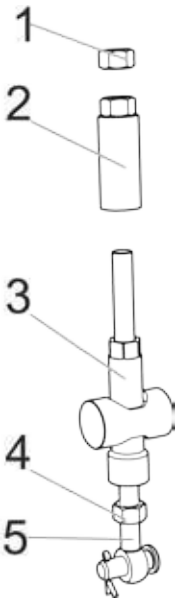

Pos.	designation
1	Locking nut 1
2	Locking sleeve
3	Guide bushing
4	Locking nut 2
5	Eyebolt

DRAFT

5. Adjusting the hinged motor before commissioning

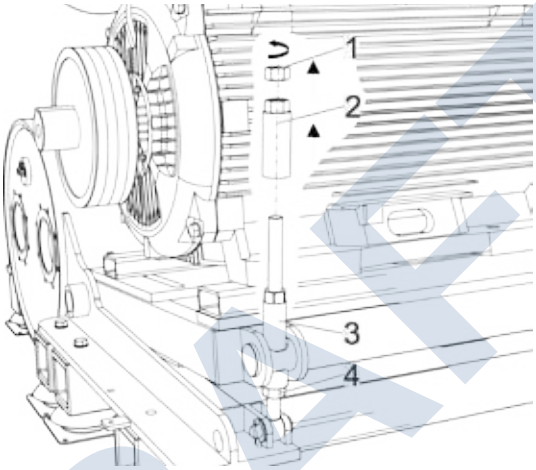

- Disassemble locking nut (1) and locking sleeve (2).

Check to direction of rotation
Observe the red direction of rotation label on the unit.
Briefly start the drive motor. (approx. 1 - 2 seconds)

Important: WITHOUT belt on the motor disc!

Incorrect direction will destroy the unit!
Direction of the drive motor and the unit must be the same.

- Mount the belt.

DRAFT

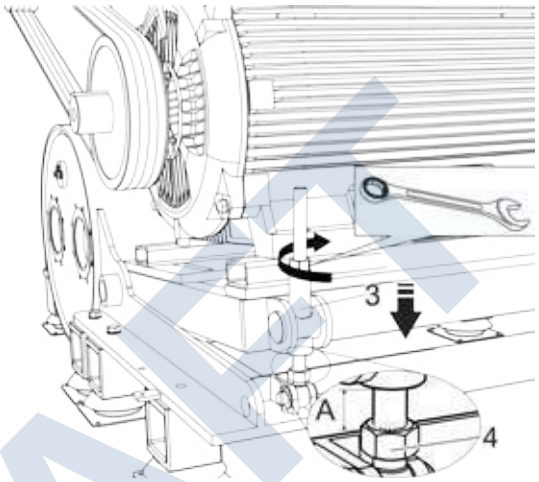

Pre tension the belt

- Screw down the guide bushing (3) with the ratchet spanner.
- The hinged motor is still slightly on the guide bushing (3).

Adjust dimension A

- Adjust the locking nut (4) to dimension A.
- Turn the guide bushing (3) onto the locking nut (4) with the ratchet spanner.

Delta Blower

DN	dimension A in mm
80	20
100	25
125	30
150	35
200	40
250	45
300	50

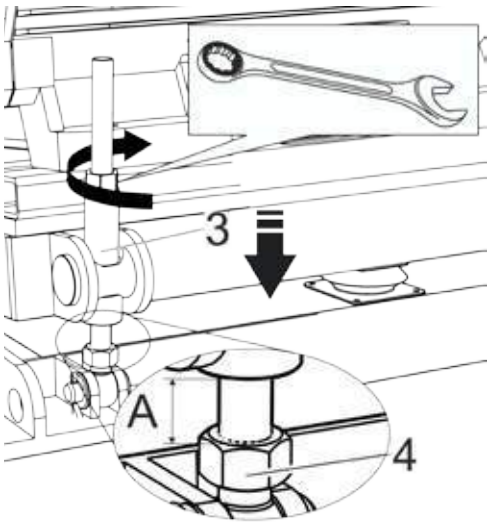

Delta Hybrid

DN	dimensions A in mm
100	25
125	25
150	30
200	35
250	40
300	45

DRAFT

- Lock the guide bushing (3) against the locking nut (4).
- The hinged motor is completely held into place by the belt drive.

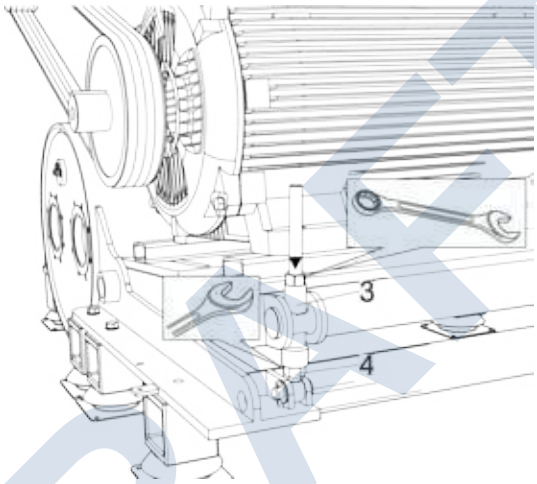

6. Operating condition, normal use

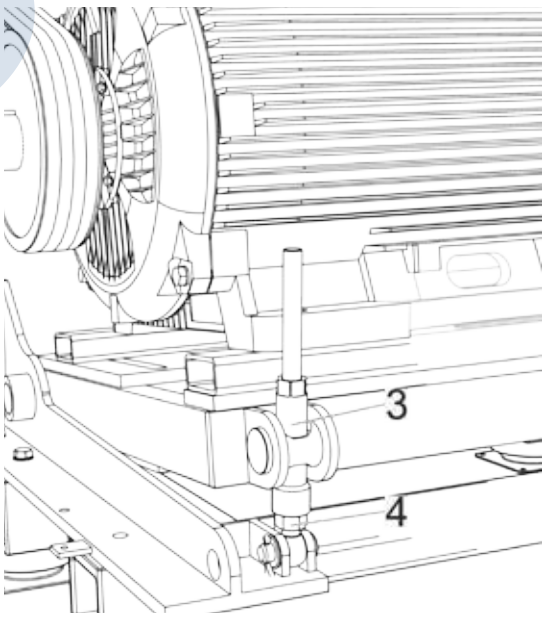

DRAFT

7. Adjustment of the hinged motor for truck, ship and earthquake preparation

Prepare the lifting device as with the standard application and set dimension A.

Rocker limit set to the upper position.

- Screw and tighten the locking sleeve (2) completely onto the eyebolt (5),
- Adjust the locking nut (1) to dimension B.

Delta Blower

DN	Size B in mm
80	5
100	5
125	5
150	10
200	10
250	10
300	10

Delta Hybrid

DN	Size B in mm
100	**5**
125	**5**
150	**5**
200	**5**
250	**5**
300	**5**

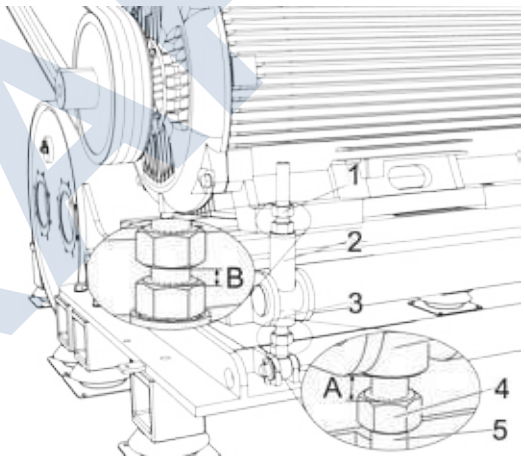

- Loosen the locking sleeve (2) turn upwards and lock with the locking nut (1).

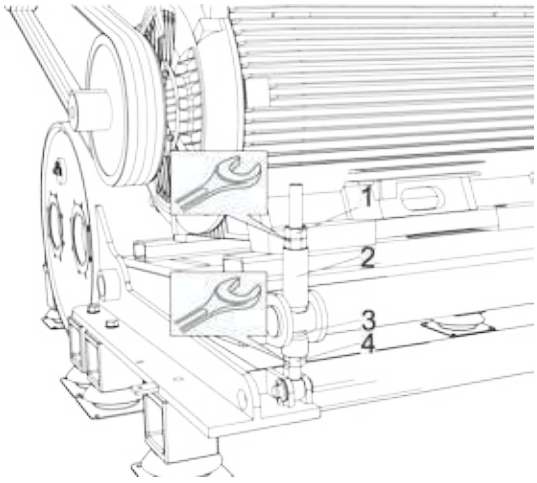

DRAFT

8. Operating condition
Truck, ship and earthquake preparation

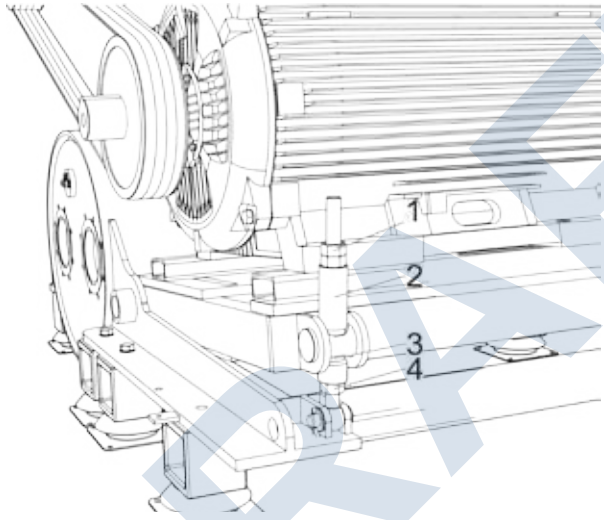

DRAFT

9. Adjustment of the hinged motor for rocker support

Prepare the lifting device as with normal use.

Lower the hinged motor until the belt is tensioned.

- Check the belt tension.
- If the belt tension is incorrect, lock the guide bushing (3) and the locking nut (2).
- Check the belt tension after the following intervals and adjust if necessary:
  after 24 op. hrs. after 500 op. hrs after 4000 opt. hrs

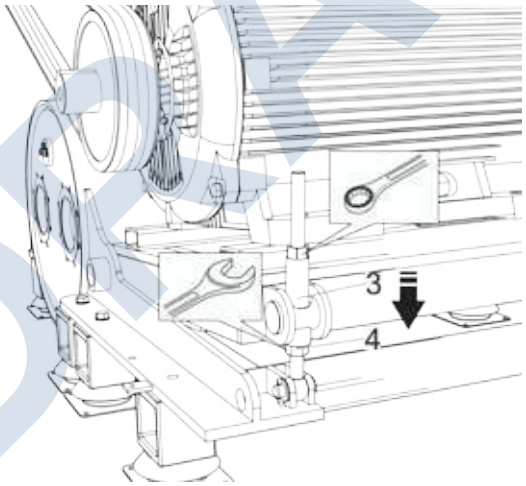

DRAFT

Belt tensioning

1. Set the testing force via the profile type.
2. Determine the disc diameter **dk** on the drive and derive from this the indentation depth **E.**
3. Calculate the indentation depth**Ea** with the existing axial distance **e.**
4. The testing force **f** is to be asserted in the middle of the axial distance **e** on the drive belt. The testing force should be exerted vertically on the strand! Pretension the drive to the calculated indentation depth **Ea.**

Pretension example: **Profile** = SPZ; **dk** = 100 mm; **e** = 380 mm; **f** = 2.5 daN; **E** = 2.00 mm; **Ea** = 7.6 mm

The drive belts should be re-tensioned after 30 min. of operation and be checked if possible after 24 hours.

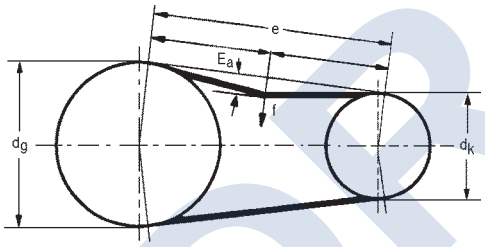

e = axial distance
E = indentation depth every 100 mm axial distance
E_a = indentation depth of the strand
f = testing force

$$E_a = \frac{E \cdot e}{100}$$

Profile	Testing force f for each drive belt (daN)	Diameter d_k (mm)	indentation depth E (mm) each 100 mm Strand length with initial assembly	indentation depth E (mm) each 100 mm Strand length in operation after running in.
SPZ/3V XPZ/3VX	2.5	≥ 56 - 71 > 71 - 90 > 90 - 125 > 125	2.20 1.95 1.50 1.20	2.45 2.20 2.00 1.70
SPA XPA	5.0	≥ 71 - 100 > 100 - 140 > 140 - 200 > 200	2.80 2.50 2.20 2.15	3.20 2.85 2.55 2.40
SPB/5V XPB/5VX	7.5	≥ 112 - 160 > 160 - 224 > 224 - 355 > 355	2.40 2.10 1.70 1.40	3.00 2.65 2.22 1.90
SPC XPC	12.5	≥ 180 - 250 > 250 - 355 > 355 - 560 > 560	2.30 1.90 1.65 1.60	2.65 2.30 1.90 1.70

DRAFT

Technische Dokumentation



Technical Documentation

DRAFT

Aerzener Maschinenfabrik GmbH
Reherweg 28 31855 Aerzen

Postfach 1163 31849 Aerzen
Telefax 0 51 54 / 81-191
e-mail info@aerzener.de

Kundenservice
0 51 54 / 81-7529

Aerzener International Rental B.V.
www.airental.nl
phone +31 (0) 26 44 64 723
Telefax +31 (0) 26 44 63 570
e-mail info@airental.nl

Aerzen im Internet
www.aerzener.com

SECTION 3

DRAFT

G-5 Combination Base - Discharge Silencer

Description: Combination base - discharge silencer

Base/discharge silencer includes three-chamber reactive silencer built as a pressure vessel, blower mounting-flange with studs, discharge connection with integrated check valve, hinged motor plate, entirely supported on vibration isolating feet.

Materials of construction:

Silencer: Pressure vessel quality carbon steel S 235 JR (St 37-2) equivalent to ASTM A 283 Grade B

Pressure vessel code: PED (European directive) PED – AD 2000, DGRL 97/23/EG with consideration given to static and dynamic stress (fatigue resistance)

Maximum operating data: 150 ºC (300 ºF) and 1.1 bar gauge (16 psig)

Test pressure: 1.9 bar gauge (27.5 psig)

Shell wall thickness: depending on size: 6mm (1/4") for DN-50 → 15mm (5/8") for DN-300

Performance:

Pulsations in the air stream are reduced below the API 619 standard of 2% peak-to-peak of the mean line pressure.

Pressure drop of the entire Base-Silencer with connecting housing and check valve, at the maximum allowable flow: 35 mbar (0.5 psi); included in the power calculations of the Delta Blower package

Combination Base - Discharge Silencer DN50

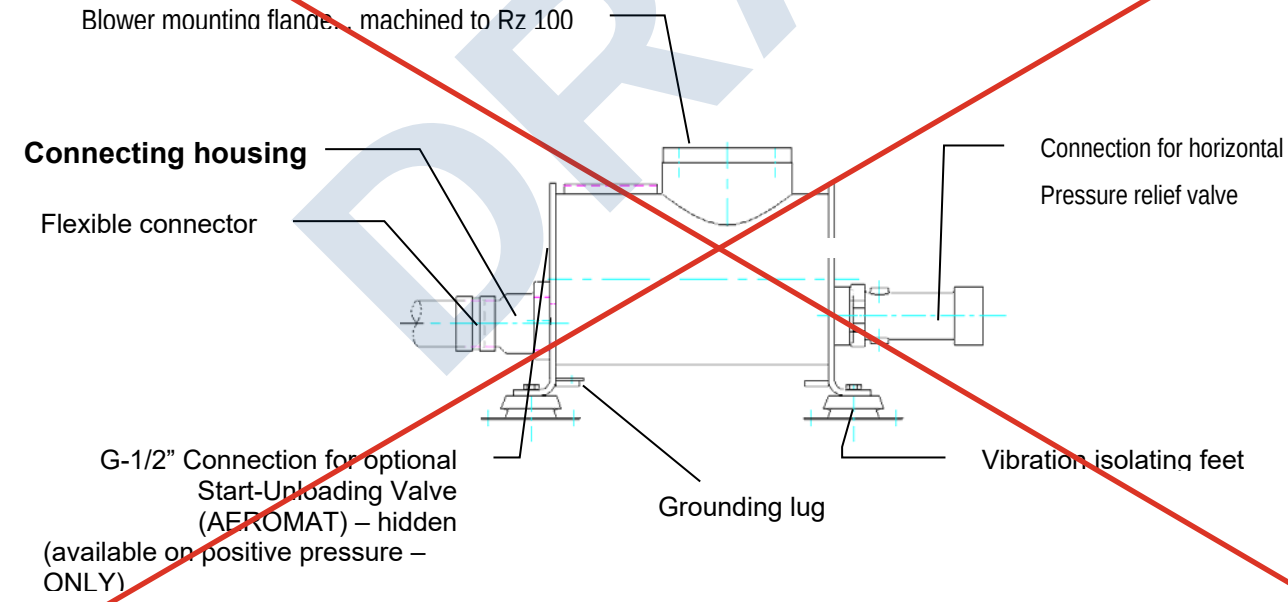

DRAFT

Combination Base - Discharge Silencer DN80

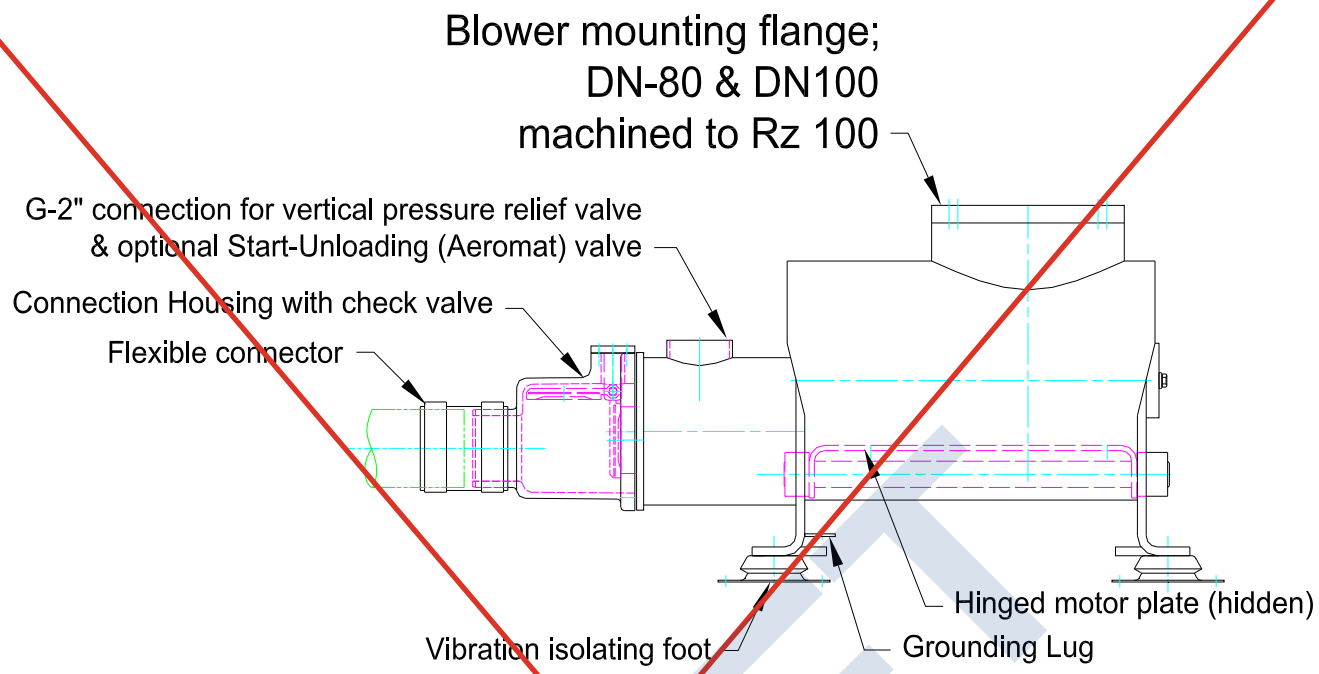

Combination Base - Discharge Silencer DN100/125

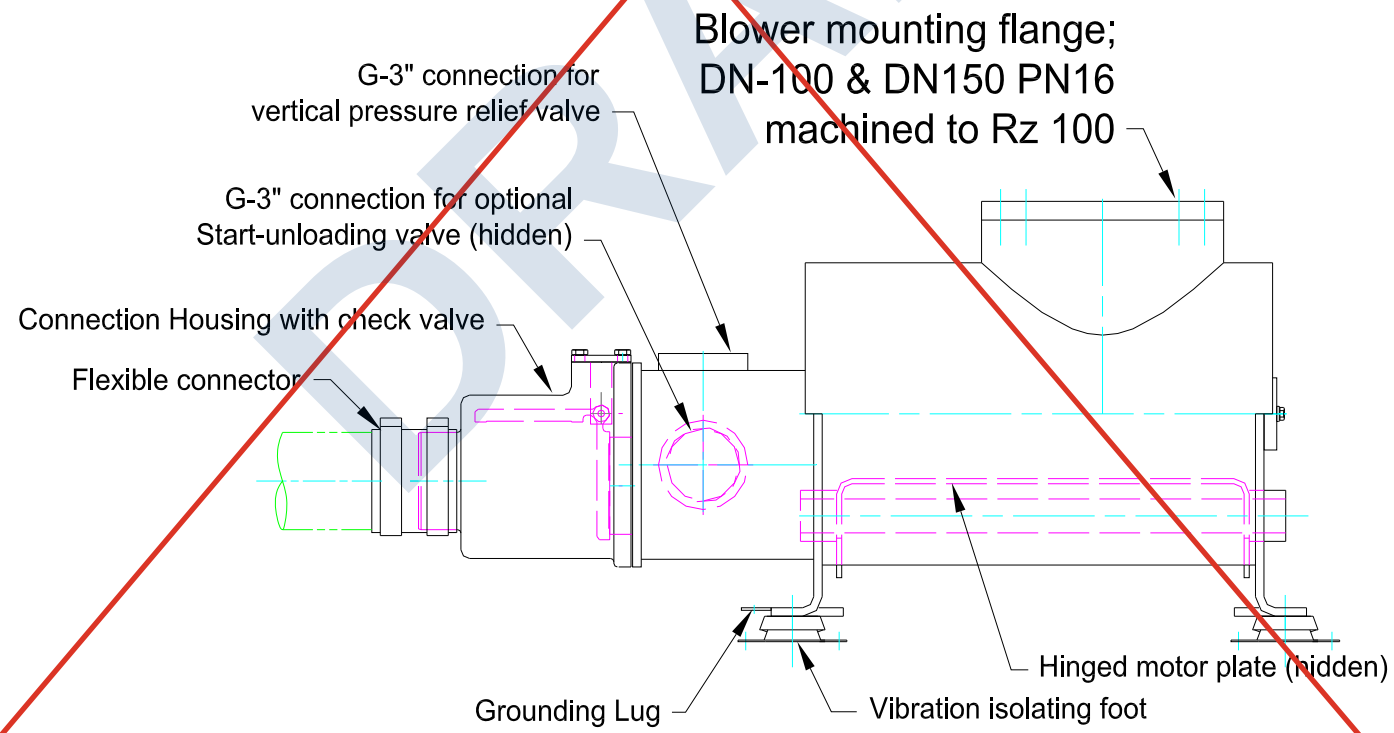

DRAFT

Combination Base - Discharge Silencer DN150 & DN-200

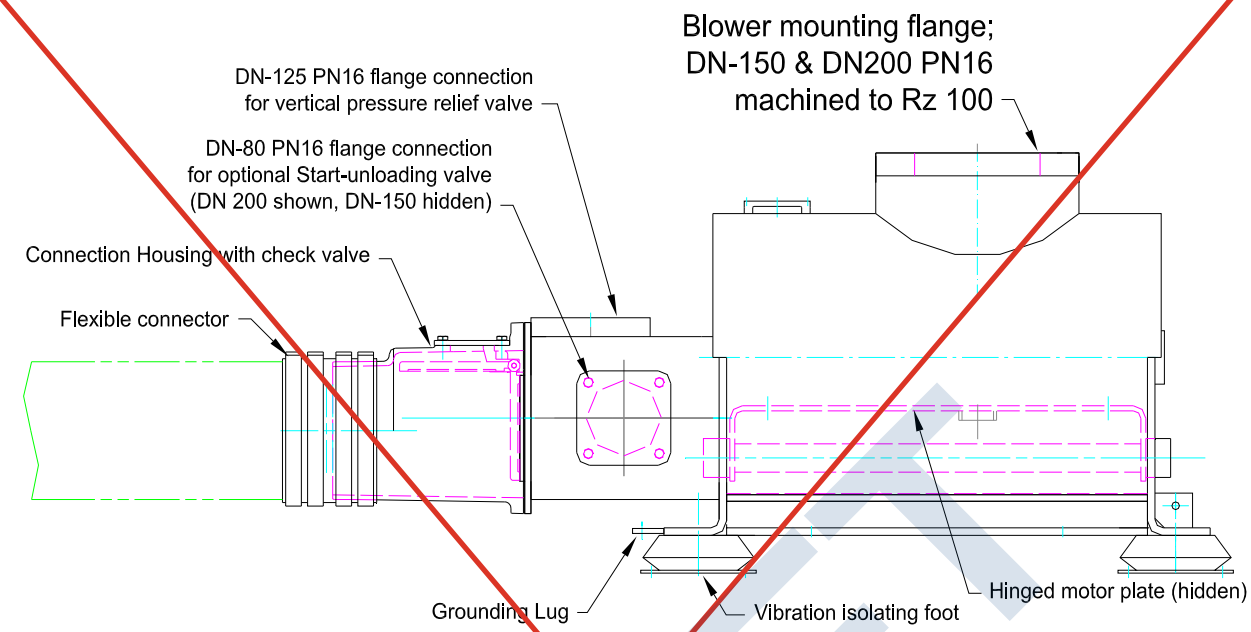

DRAFT

AERZEN

Aerzen USA Corporation
108 Independence Way – Coatesville, PA 19320
Tel: (610) 380-0244 Fax: (610) 380-0278
www.aerzen.com/en-us

Combination Base Frame – Silencer
Delta Blower Generation 5

Date	Doc #	Page
09/05/2019	B-6-0199 revision "G"	3 of 5

Combination Base-Discharge Silencer DN-250

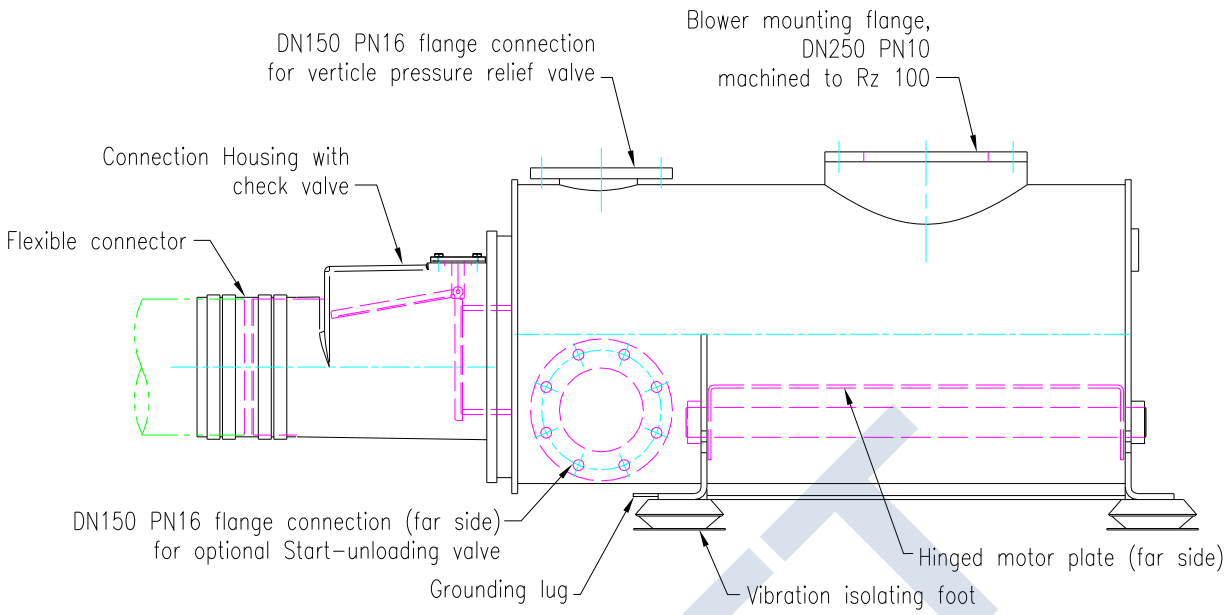

Combination Base-Discharge Silencer DN-300

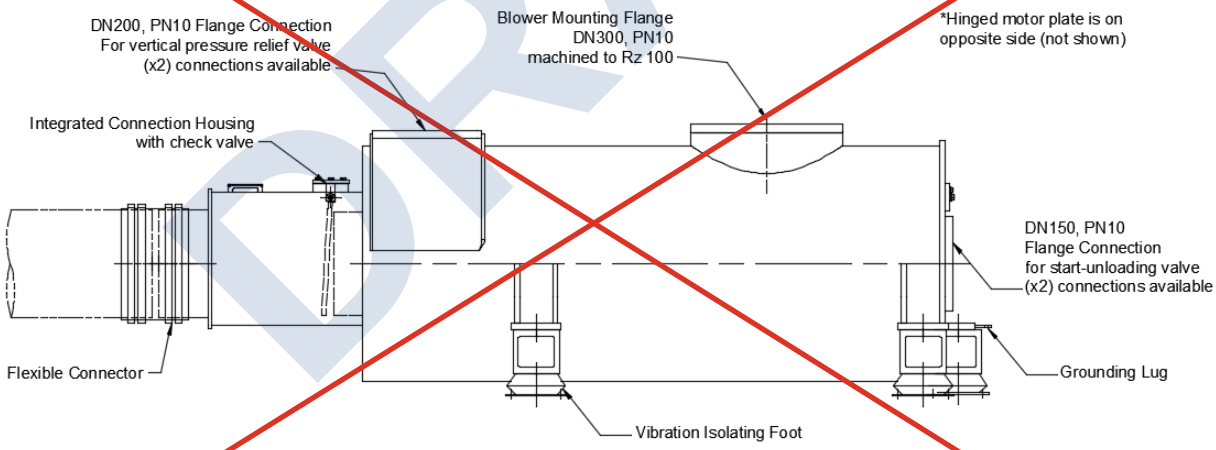

DRAFT

Combination Base - Discharge Silencer

Hinged Motor Plate DN50 –DN80

The hinged motor plate of the base frame in sizes DN50 and DN80 allows the motor mass to properly tension the drive belts during normal operation. The motor is mounted and aligned before leaving the factory. The hinged motor plate is then locked in place for shipment. (see photo on the left below) Remove the red locking bar and use the Aerzen supplied bracket and hydraulic jack to raise the hinged motor plate for installation or maintenance of the drive belts. (see photo on the right below) Refer to the Operations Manual for commissioning and maintenance of the blower.

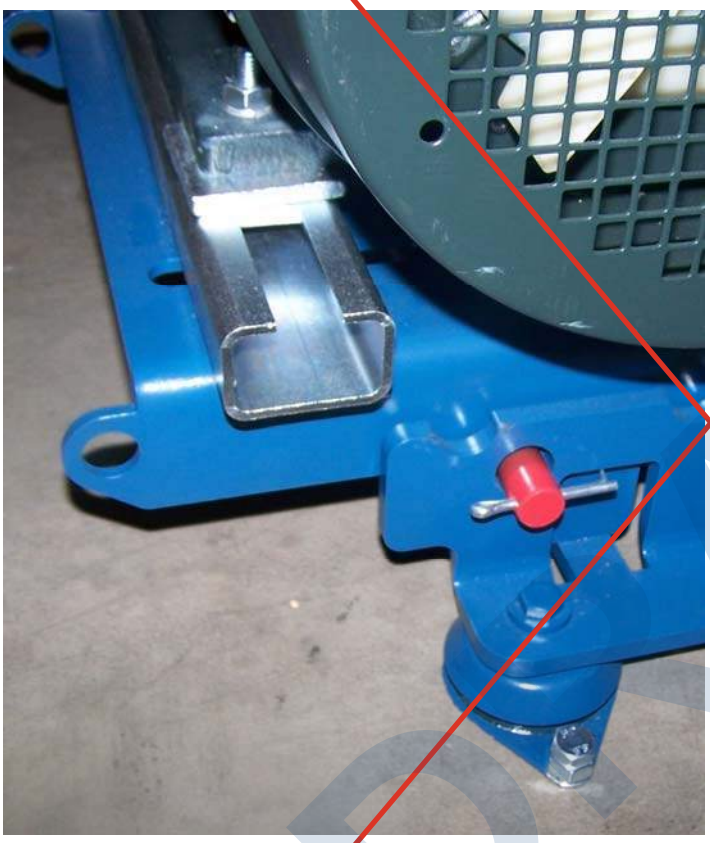

Hinge Plate with Locking Pin on Arrival

The red locking pin serves to keep the motor swing plate stable during shipping. Remove before attempting to raise the motor hinge plate.



Raising the Hinged Motor Plate

Use the Aerzen supplied bracket and jack to raise the hinged motor plate when installing or maintaining the belts.

Combination Base - Discharge Silencer

Hinged Motor Plate DN50 –DN300

The hinged motor plate for sizes DN100 through DN250 features a multipurpose lifting device. In its most basic function it serves as shipping locking device (red part) preventing the motor from unwanted movement. It also serves as the lifting mechanism (black part) for changing the drive belts. During normal operation the motor mass tensions the drive belts in the tried and true Aerzen way. The motor swing plate does not rest on the lifting mechanism (see photo on the right below). No speciaı adjustments are necessary during normal operation of the blower package. Another additional purpose is limiting the belt tension when oversized motors are used. Finally, the device can be configured to aid limited movement for seismic or mobile blower package service. Refer to G4-079 B XT for operation of Multipurpose Lifting Device. Depending on motor weight, DN300 units can have (1) or (2) lifting devices.

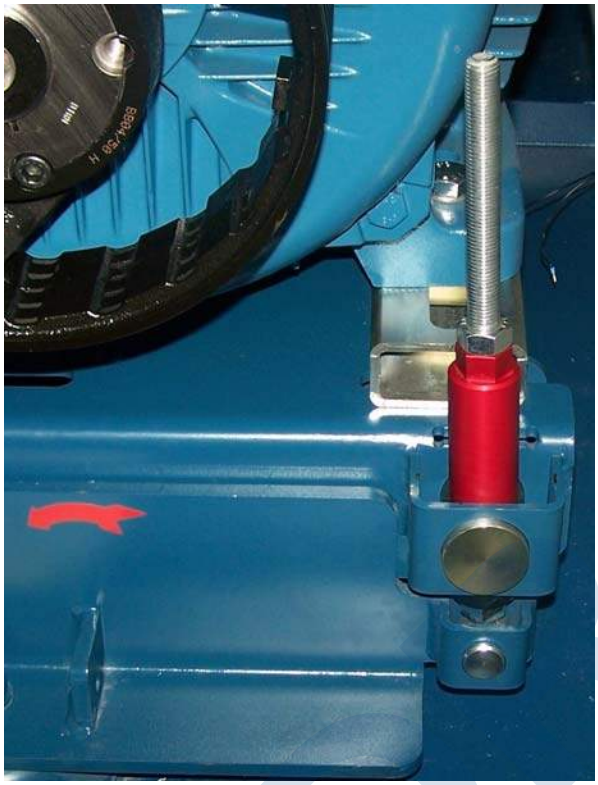

Lifting Device on Arrival

The red locking sleeve serves to keep the motor swing plate stable during shipping. It may also be used in seismic and mobile applications as a motor swing stop



Lifting Device in Normal Operation

The black guide bushing serves as a belt installation aid. Using an Aerzen supplied ratchet wrench, it helps lift the motor swing plate during belt installation and maintenance. Once new belts are installed it is backed down to the lock nut. **The motor hinge plate does not rest on the guide bushing during normal operation**. The guide bushing may also be used as tension limiter for use with overweight motors.

DRAFT

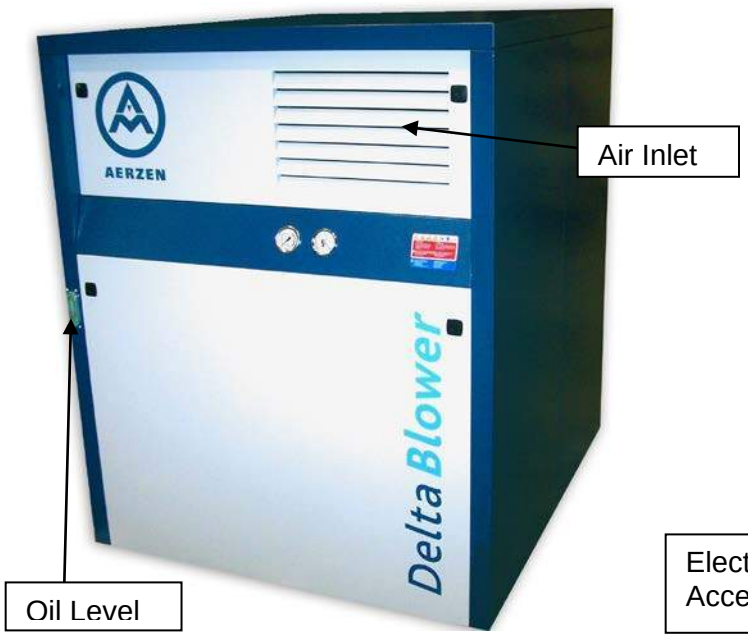

Shown is a DN-125 Sound Enclosure

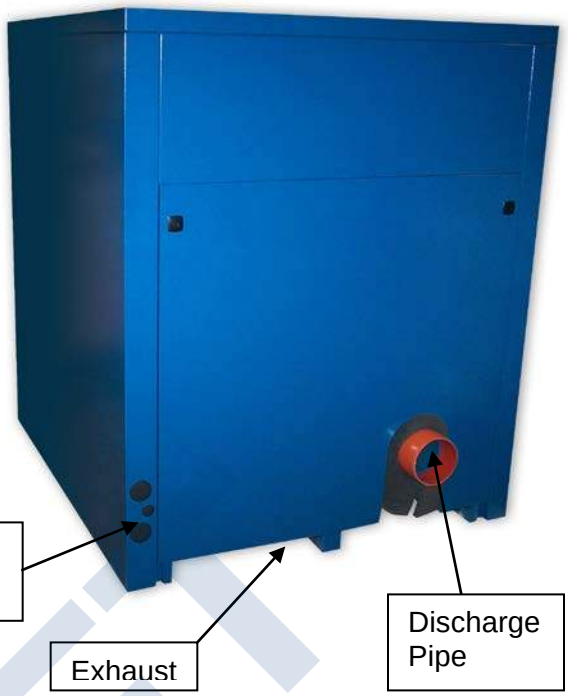

Rear View of the Enclosure

DRAFT

Description: The sound enclosure surrounds the entire blower package to reduce noise and protect the machine from the weather while allowing easy access for maintenance. The base of the enclosure supports the entire blower package and contains an oil drip pan for environmental protection. Aerzen mounts the entire blower package within the sound enclosure at the factory prior to shipment. Transportation and installation are simplified by having the entire package supported and contained within the enclosure. The unit may be moved with a pallet jack or forklift.

The sound enclosure is designed with strategic consideration for airflow through the unit. A fan is mounted on the end of the blower shaft, so there is no need for a separate electric motor driven fan. From the cool, front side of the blower, air is drawn in through a sound trap. The air then passes over the motor and blower housings and finally is exhausted through the floor at the rear of the unit.

Quick release panels, each less than 45 lbs., provide access for routine maintenance of the blower and the package components. All maintenance and connections are located in the front and rear, allowing multiple machines to be placed side-by-side.

The oil level gauge is visible from the outside of the sound enclosure in sizes GM 4S DN-80 through GM 150 S DN-300 with the oil fill port and drain mounted to the enclosure just inside a removable panel.







The smallest size, GM 3S DN-50, has an easily removable roof to facilitate maintenance.

Materials:

Base pan – Polyester based powder coated steel weldment, 3 to 5 mm thick

Exterior panels - Polyester based powder coated galvanized steel

Sound insulation -Self-extinguishing, non-dripping high-density polyester foam

Technical:

Package noise level reduced to 80 dB, or less, at 1 m, free field, per DIN 45635.

Snow Load – 122 kg / m^2 (25 lbs / ft^2)

Wind Load – 80.4 km / hr (50 mph)

Suitable for indoor or outdoor installation

Part Numbers:

Size	Part No.
DN-050	180723
DN-080	180724
DN-100	180725
DN-125	
DN-150	180740
DN-200	180741
DN-250	181753
DN-300	184737

DRAFT

G5 Pressure Inlet Filter/ Silencer
DN 50 - DN 300

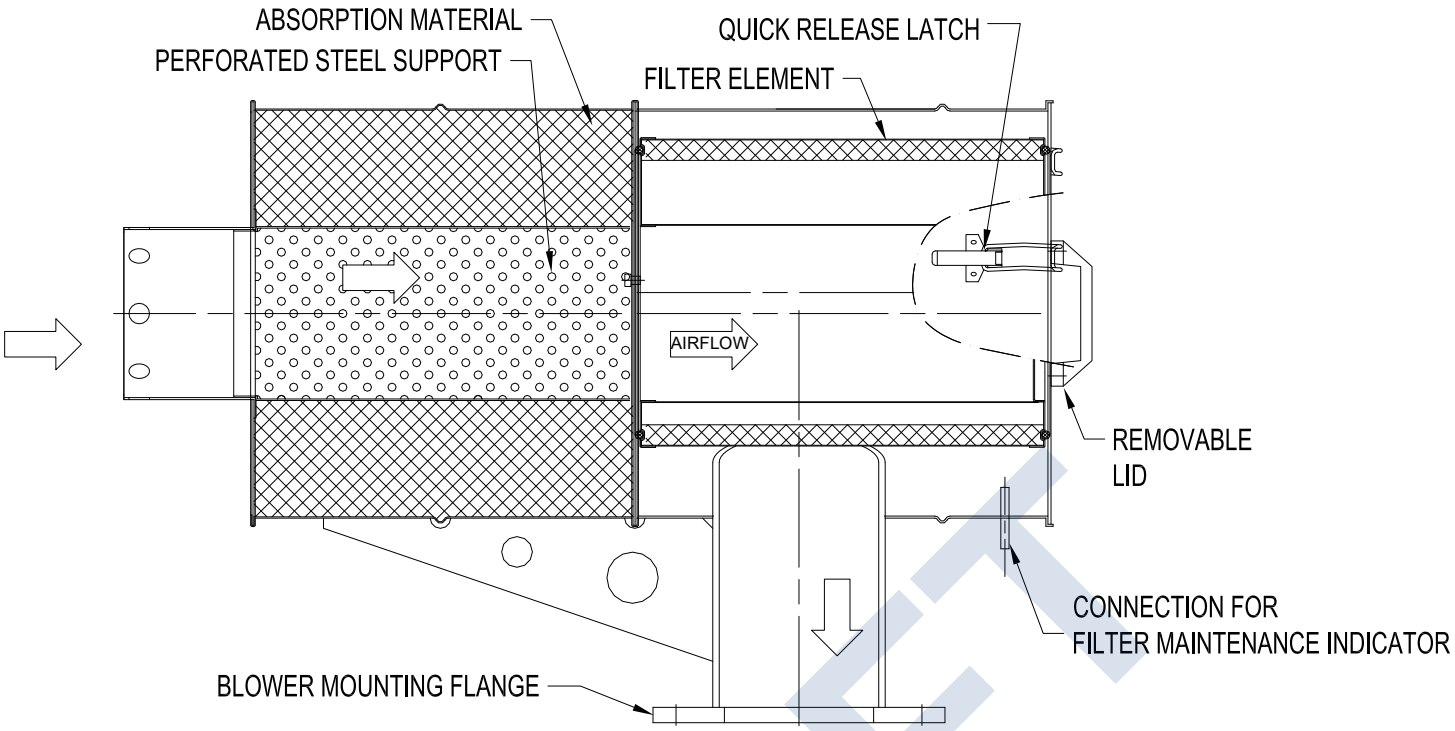

Description: Combination dry air intake filter and absorption type silencer with filter (or strainer) element located downstream from the silencer chamber

Materials of construction:

Casing:	Powder coated (RAL# 5001) Carbon Steel
	Maximum operating data: 60 °C (140 °F) and – 70 mbar (-2.07"Hg)
	Removable maintenance lid is held in place with quick release clamps
Absorption material:	Flame retardant, polyester based urethane foam, grey in color,
	secured in place with perforated steel
Filter element:	Thermally bound, food safe, polyester fibers, free of PVC, white in color
	Filter element mounts with a quick release turn and lock arrangement.

Performance:

Filtration class: G4 per EN 779 (greater than 90% of synthetic dust particles),
equivalent to ASHRAE 52.2 MERV 7 (50-70% @3-10 microns)
Pressure-drop of the entire silencer and clean filter at the maximum allowable flow: 10 mbar (0.15 psi)
Pressure drop filter element: 5 mbar (2" WC) clean, or replace at 45 mbar max. (18" WC)
Noise reduction: 10-15 dB mean noise reduction across audible octave bands

DRAFT

G5 Vacuum Inlet Silencer w/ Internal Strainer (No Filter)
DN 80 - DN 200

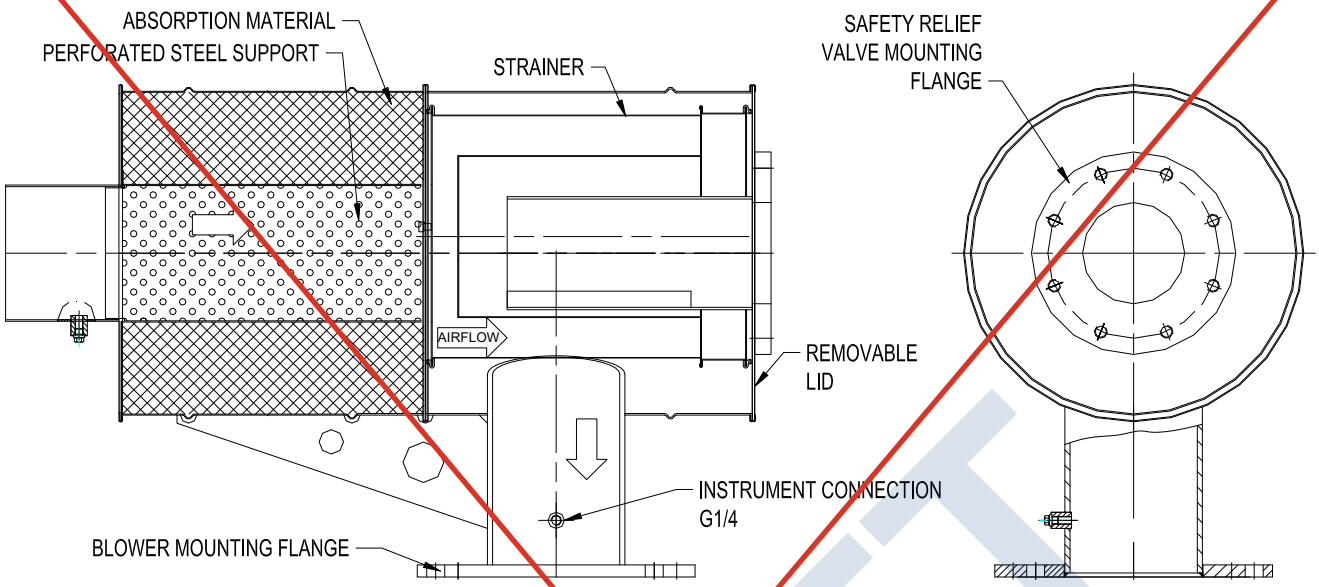

G5 Vacuum Inlet Filter/ Silencer
DN 80 - DN 200

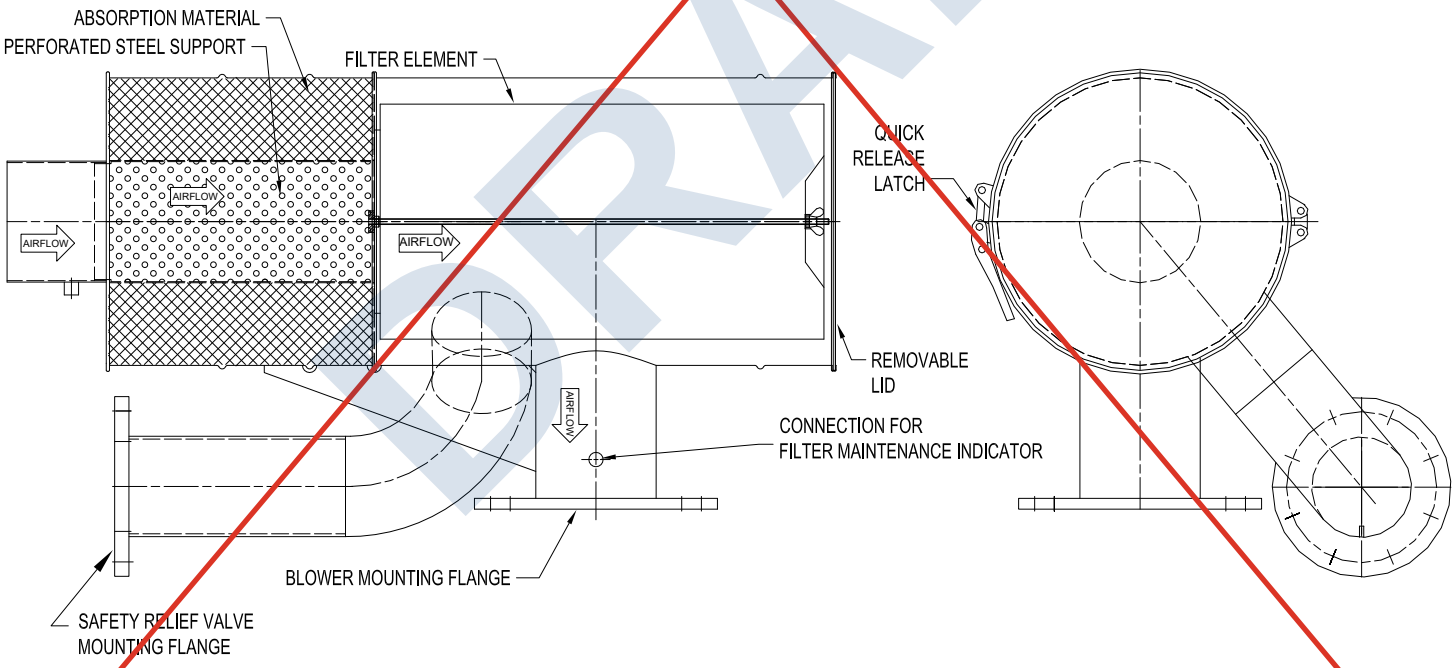

DRAFT

Aerzen USA Corporation
108 Independence Way – Coatesville, PA 19320
Tel: (610) 380-0244 Fax: (610) 380-0278
www.aerzen.com/en-us

Delta Blower Generation 5
Inlet Silencer DN-50 to DN-300

G5-WA Inlet Silencer Part Numbers

Filter nominal size	DN-50	DN-80		DN-100	DN-125	DN-150		DN-200	DN-250	DN-300
Blower size	**GM 3S**	**GM 4S GM 7L**	**GM 10S**	**GM 10S GM 15L**	**GM 25S**	**GM 30L GM 35S**	**GM 50L**	**GM 50L GM 60S**	**GM 80L GM 90S GM 100S**	**GM 130L/ GM 150S**
Pressure Filter / Silencer Assembly	182111	182112	182113	182114	182115	182116	182117		183114	184444/ 184443
Pressure Replacement Filter Element	2000049284	2000049285		2000049286		2000049287	2000049288		2000049289	2000049289 (x2)
Vacuum Inlet Silencer Assembly (No Filter)	182119	182120	182121	182122	182123	182124		182125	N/A	
Vacuum Filter / Silencer Assembly	N/A	184238001	184239001	184234001	184235001	186234000		184252001	N/A	
Vacuum Replacement Filter Element	N/A	2000008104		2000008109		185662		2000008113	N/A	

G5 (Original) Inlet Silencer Part Numbers

Filter nominal size	DN-50	DN-80		DN-100	DN-125	DN-150		DN-200	DN-250	DN-300
Blower size	**GM 3S**	**GM 4S GM 7L**	**GM 10S**	**GM 10S GM 15L**	**GM 25S**	**GM 30L GM 35S**	**GM 50L**	**GM 50L GM 60S**	**GM 80L GM 90S GM 100S**	**GM 130L GM 150S**
Filter / Silencer Assembly	175018	178810	173924	173882	173883	174143	173925		176294	N/A
Replacement Filter Element	2000049284	2000049285		2000049286		2000049287	2000049288		2000049289	2000049289 (x2)

DRAFT

Aerzen Delta Blower + G5

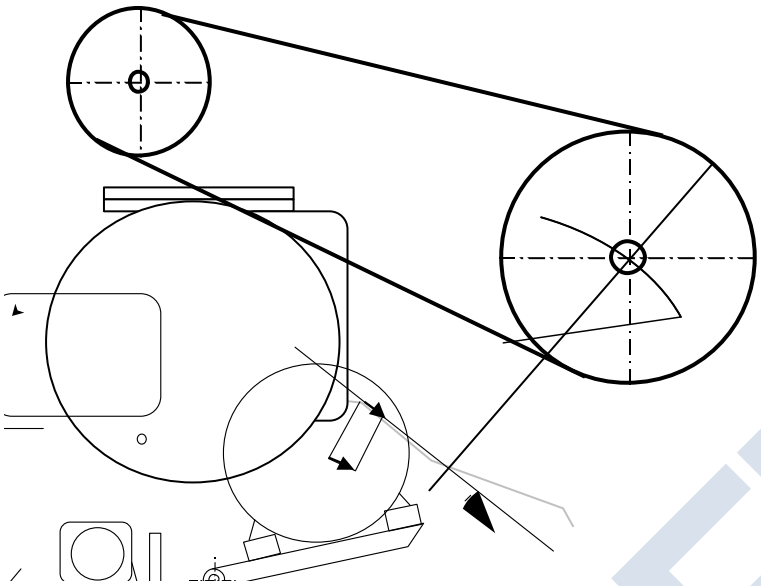

The drive configuration of the Aerzen Delta Blower is such that any change in the belt length (due to belt stretching) results in a nearly proportional displacement of the motor. Therefore, the motor weight alone can be used reliably for automatic belt tension adjustment.

This, however, is not achievable with a different geometry, such as shown below: In such cases, a slight change in the belt length requires a much greater displacement of the motor making a manual adjustment necessary. Improper adjustment leads to belt failure and other, more significant damages can follow.

Our belt tensioning principle offer two more benefits to the user, which are superior to any other system offered: We do not need any other tensioning mechanisms to tension the belts. This eliminates further wear and tear items that the user does not have to maintain or even check up on. Secondly, we have eliminated the need for re-aligning the motor upon changing belts. The motor stays put and is merely pivoted up and down during a belt change.

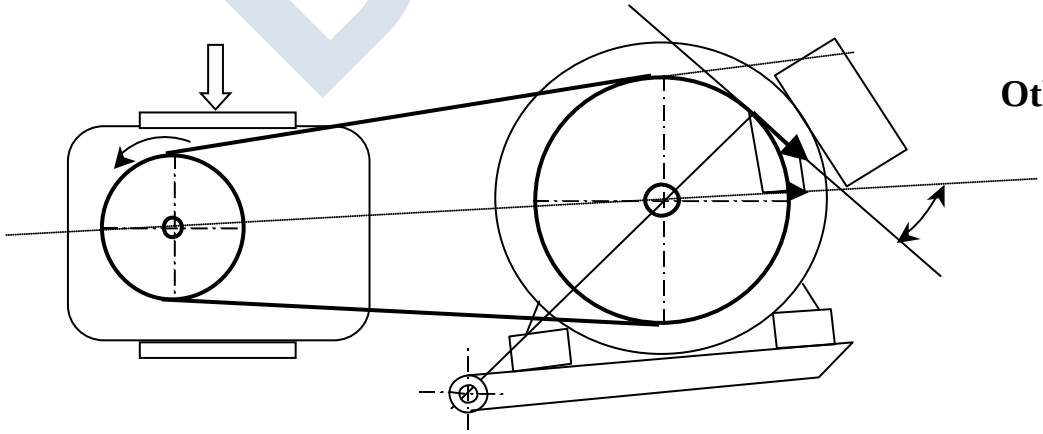

Others

DRAFT

DN-50 Check Valve

Description: The DN-50 check valve is a full-bore, cast aluminum housing with an embedded Viton flap sandwiched between the connection housing and the baseframe. The hinge is integrated to the rubber and closes naturally by gravity without use of a spring. Operating range is up to 150°C or 302°F.

Check Valve Assembly w/ Viton flap P/N: **146756**

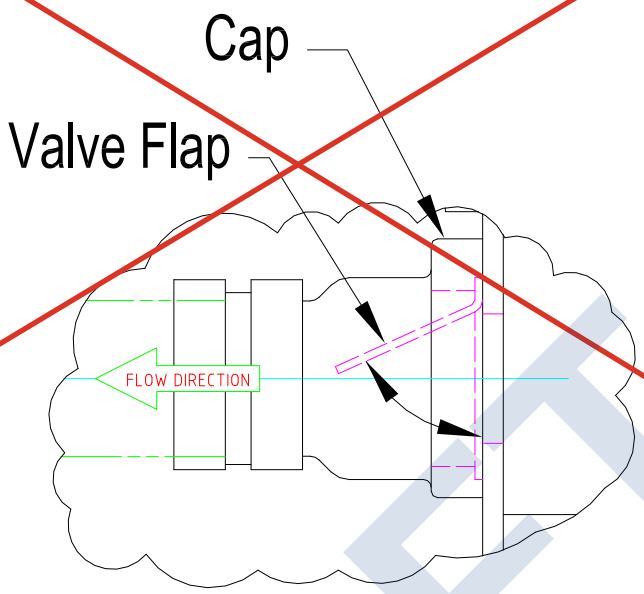

Check Valve – DN-80 Through DN-300

Description: Housed in the connecting housing is a full-bore, steel embedded in rubber check-valve that closes naturally by gravity without use of spring. The check-valve flap can easily be pulled out for inspection, maintenance or replacement without disconnecting the piping: removing the bolts and lifting the cap.

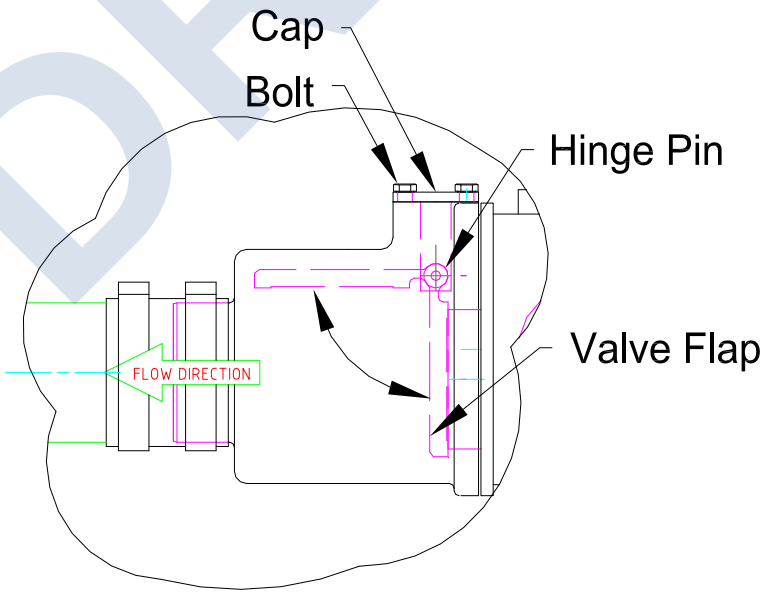

DRAFT

Materials of construction:

Discharge Temperature	Flap Sealing Material
~~Up to 285 °F (140 °C)~~	~~EPDM (standard)*~~
286 °F (141 °C) and above	Silicone*

*DN-250 & DN-300 units: Stainless steel plate with outer ring made of the sealing material

**DN-200 and smaller units: Steel plate fully embedded in the sealing material

Part Numbers:

Size DN	~~EPDM Check Valve Assembly P/N~~	~~EPDM Flap Only P/N~~	Silicone Check Valve Assembly P/N	Silicone Flap Only P/N
80	~~178653~~	~~178647~~	180877	N/A
100	~~178654~~	~~178648~~	180878	178651
125	~~178654~~	~~178648~~	180878	178651
150	~~178655~~	~~178649~~	180879	178652
200	~~178655~~	~~178649~~	180879	178652
250	168705	N/A	168711	N/A
300	158608	N/A	178266	N/A

DRAFT

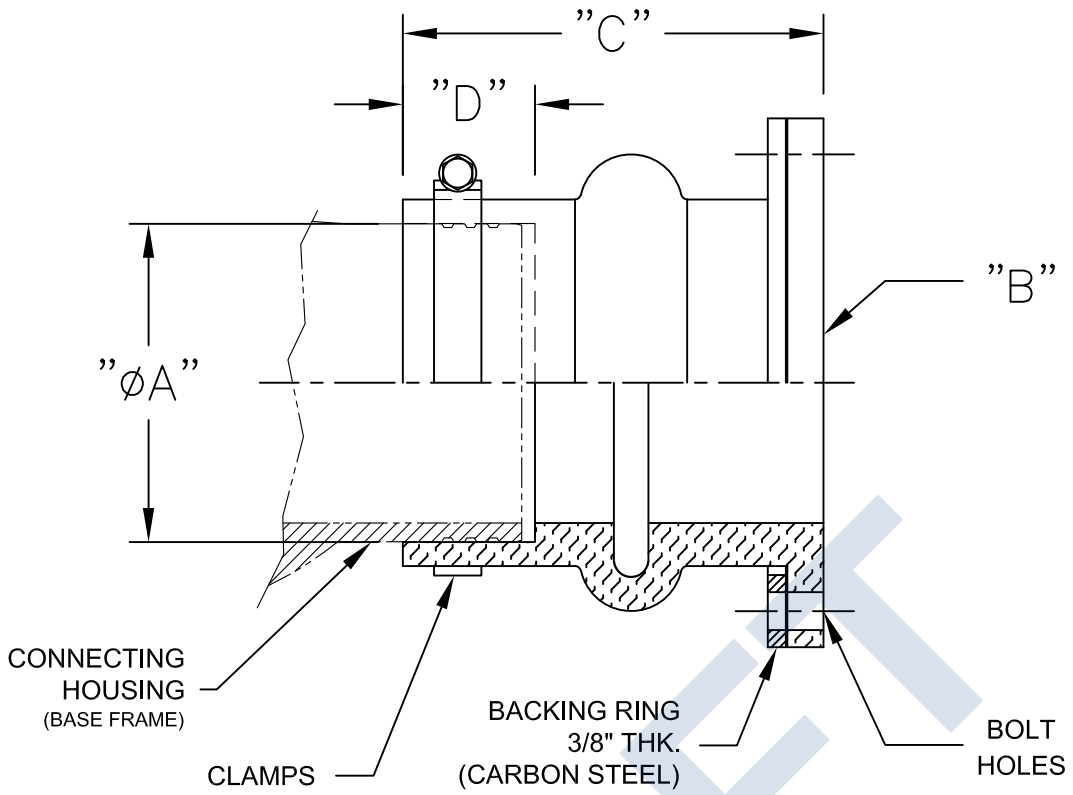

MEDIA BEING CONVEYED = AIR OR NITROGEN

BACKING RING INCLUDED WITH JOINT

MATERIALS OF CONSTRUCTION:
SILICONE WITH ARAMID KEVLAR REINFORCEMENT

MATERIAL	MAX. TEMP.	DESIGN PRESSURE
SILICONE	392°F	-15"Hg to 25 psig

PACKAGE SIZE	Ø A (Sleeve ID)	B (150# ANSI Flange size)	C (Length)	D (Pipe Engagement)	PART No. 21-003168-____ MATERIAL SILICONE	EXPANSION JOINT SPECIFICATIONS AXIAL COMPRESSION	AXIAL EXTENSION	LATERAL OFFSET	ANGULAR ROTATION	CLAMPS QTY	CLAMPS PART No. 21-000910-____
DN-050	2 3/8	2	8.00	2.31	-02x02SG	0.50	0.25	0.50	2°	1	_079-085
DN-080	3 1/2	3	8.00	2.31	H -03x03SG	0.50	0.25	0.50	2°	1	_104-112
DN-080	3 1/2	4	8.00	2.31	-03X04SG	0.50	0.25	0.50	2°	1	_104-112
DN-100	4 1/2	4	8.00	2.31	-04x04SG	0.50	0.25	0.50	2°	1	_130-140
DN-125	5 9/16	5	9.00	2.5	-05x05SG	0.50	0.25	0.50	2°	2	_150-162
DN-125	5 1/2	5	9.00	2.5	-05x05SG-A1	0.50	0.25	0.50	2°	2	_150-162
DN-125	5 9/16	6	9.00	2.5	-05x06SG	0.50	0.25	0.50	2°	2	_150-162
DN-125	5 1/2	6	9.00	2.5	-05x06SG-A1	0.50	0.25	0.50	2°	2	_150-162
DN-150	6 5/8	6	9.00	2.5	-06x06SG	0.50	0.25	0.50	2°	2	_187-200
DN-150	6 5/8	8	9.00	2.5	-06x08SG	0.50	0.25	0.50	2°	2	_187-200
DN-200	8 5/8	8	10.00	2.75	-08x08SG	0.75	0.25	0.50	2°	2	117191 (AMD)
DN-200	8 5/8	10	10.00	2.75	-08x10SG	0.75	0.25	0.50	2°	2	117191 (AMD)
DN-250	10 3/4	10	10.00	2.75	-10x10SG	0.75	0.25	0.50	2°	2	_290-305
DN-250	10 3/4	12	10.00	2.75	-10x12SG	0.75	0.25	0.50	2°	2	_290-305
DN-300	12 3/4	12	10.00	2.75	-12x12SG	0.75	0.25	0.50	2°	2	160404000

* Dimension in INCHES

DRAFT

AERZEN

Aerzen USA Corp.
108 Independance Way, Coatesville PA, 19320
(610) 380-0244 PH, (610) 380-0278 FX
www.aerzenusa.com

SILICONE EXPANSION JOINT WITH CLAMPS
PIPE SLEEVE TO ANSI FLANGE

DATE	DOCUMENT NO.	REVISION	SHEET
1/19/2021	XA-005207_SG	H	1 of 1

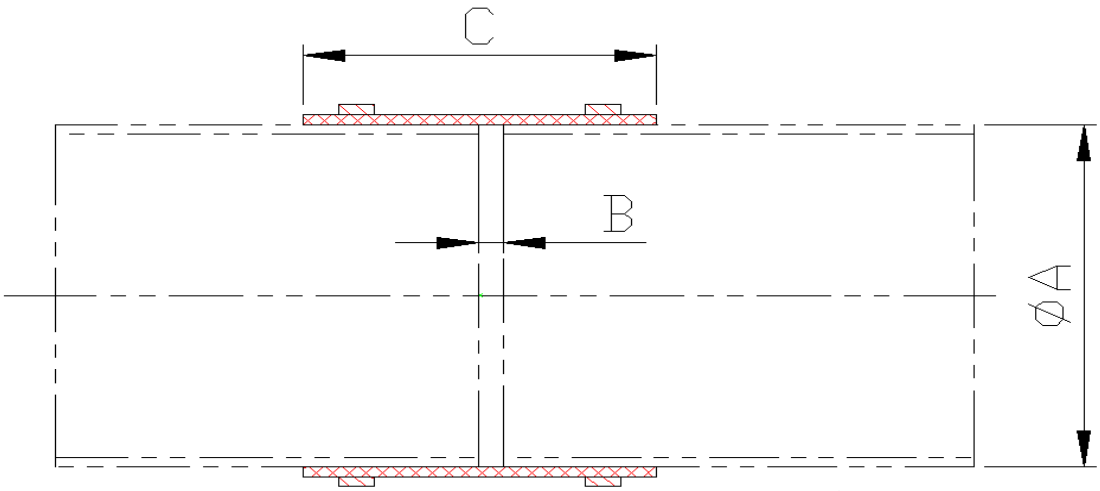

Nominal Pipe		Sleeve	Pipe O.D A		End Clearance B		Maximum Misalignment		Sleeve Length C		# of clamps	Clamp P/N
DN	USA	P/N	mm	in.	mm	in.	mm	in.	mm	in.		
50	2”	159127	60.3	2-3/8	10	3/8	3	.12	50	2	2	168036
80	3”	159128	88.9	3-1/2	10	3/8	3	.12	100	4	2	163238
100	4”	159129	114.3	4-1/2	10	3/8	3	.12	100	4	2	169603
125	5”	162677	139.7	5-1/2	10	3/8	5	.20	150	6	2	162923
150	6”	159131	168.3	6-5/8	10	3/8	5	.20	150	6	4	165903
200	8”	159132	219.1	8-5/8	10	3/8	5	.20	150	6	4	168658
250	10”	159134	273	10-3/4	15	5/8	7	.28	200	8	4	159353
300	12”	159135	323.9	12-3/4	20	3/4	11	.43	200	8	4	160404
400	16	157607	406.3	16	20	3/4	15	.59	300	12	4	157608

DRAFT

Technical Data

Maximum operating pressure: 1.2 bar g (17.4 psig)

Test pressure: 2.4 bar (34.8 psig)

Operating temperature –40 to 180° C (-40 to 356° F)

Materials

Silicone Rubber with embedded woven fiber reinforcement up to DN-300

Perbunan rubber in DN-400

60 +/- 5 Shore A

Shelf-life: up to 20 years, under clean, cool & dry conditions

CAUTION:

- Pipe misalignment could cause leaks and premature failure of the sleeve.
- It is imperative to maintain the recommended pipe-end clearance for the pipe connection to retain its flexibility and reduce the transmission of noise and vibrations from the blower package to the process piping.

Description:

The Pressure Relief Valve is designed for use with air or inert gases to protect the blower and its accessories from damage in the event of excessive pressure. It is not to be used as a pressure regulating device. It contains a spring-loaded valve guided by a spindle and surrounded by a protective sheath that is capable of venting the entire volume flow of the blower. In positive pressure machines, it is installed downstream from the positive displacement blower and before the check valve or any shut-off valve. In vacuum applications, it is installed on the intake side of the blower.

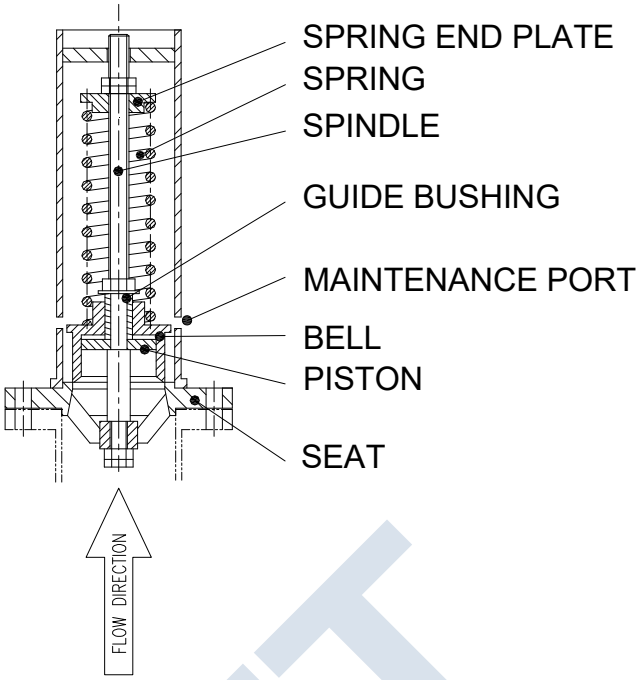

QTY	DESCRIPTION	MATERIAL
1	Connection Flange or Thread with Valve Seat	Grey Cast Iron
1	Valve Spindle	Carbon Steel
1	Bell	Brass
1	Spring End Plate	Carbon Steel
2	Hex Nut	Carbon Steel

QTY	DESCRIPTION	MATERIAL
2	Guide Nut	Carbon Steel
1	Spring	Spring Steel
1	Valve Disc / Piston	Brass
1	Valve Guide / Bushing	Brass
1	Cover	Aluminum

Technical Data:

Maximum Temperature: 200°C (392°F)	Valve Characteristic: Proportional
Conforms to PED 97 / 23 / EG	Pressure Rise: 10%
Maximum Pressure: 1.1 Bar (15.9 PSIG)	

Maintenance:

Periodically inspect for free movement of the valve. While the machine is stopped and the motor locked out, insert flat blade screwdrivers into both maintenance ports and lift the valve. Remove the screwdrivers and visibly ensure the valve is properly seated. When operated in clean environments, inspect valve either every six months or 1000 run hours, whichever occurs sooner. In dusty conditions, inspect every month. Refer to document G4-002 for complete operating instructions.

DRAFT

G5 Blower Pressure Relief Valves

Nominal Package Size	Blower Designation	Valve Size	Positive Pressure Valve Connection	Vacuum Valve Connection	Hose Kit Part Numbers
DN-50	GM 3S	DN -50	G-2” External	DN-50 PN 16 Flange	N/A
DN-80	GM 4S				734947000
	GM 7L				
	GM 10S				
DN-100	GM 10S	DN-80	G-3” External	DN-80 PN 16 Flange	734950000
	GM 15L				
DN-125	GM 25S				
DN-150	GM 30L	DN-125	DN-125, PN16 Flange	DN-125, PN16 Flange	734602000
	GM 35S				
	GM 50L				
DN-200	GM 50L				
	GM 60S				
DN-250	GM 80L	DN-150	DN-150, PN16 Flange	DN-150, PN16 Flange	733350000
	GM 90S				
	GM100S				
DN-300	GM 130L	DN-150	DN-150, PN16 Flange	DN-150, PN16 Flange	734372000 for 1 valve; 734373000 for 2 valves
	GM 150S				

DRAFT

NOTICE:
THIS DRAWING AND ALL INFORMATION HEREIN IS THE PROPERTY OF AERZEN USA INC. AND ITS SUBSIDIARIES AND SHALL NOT BE REPRODUCED BY ANY MEANS IN WHOLE OR IN PART OR USED AS THE BASIS FOR MANUFACTURE WITHOUT WRITTEN PERMISSION.

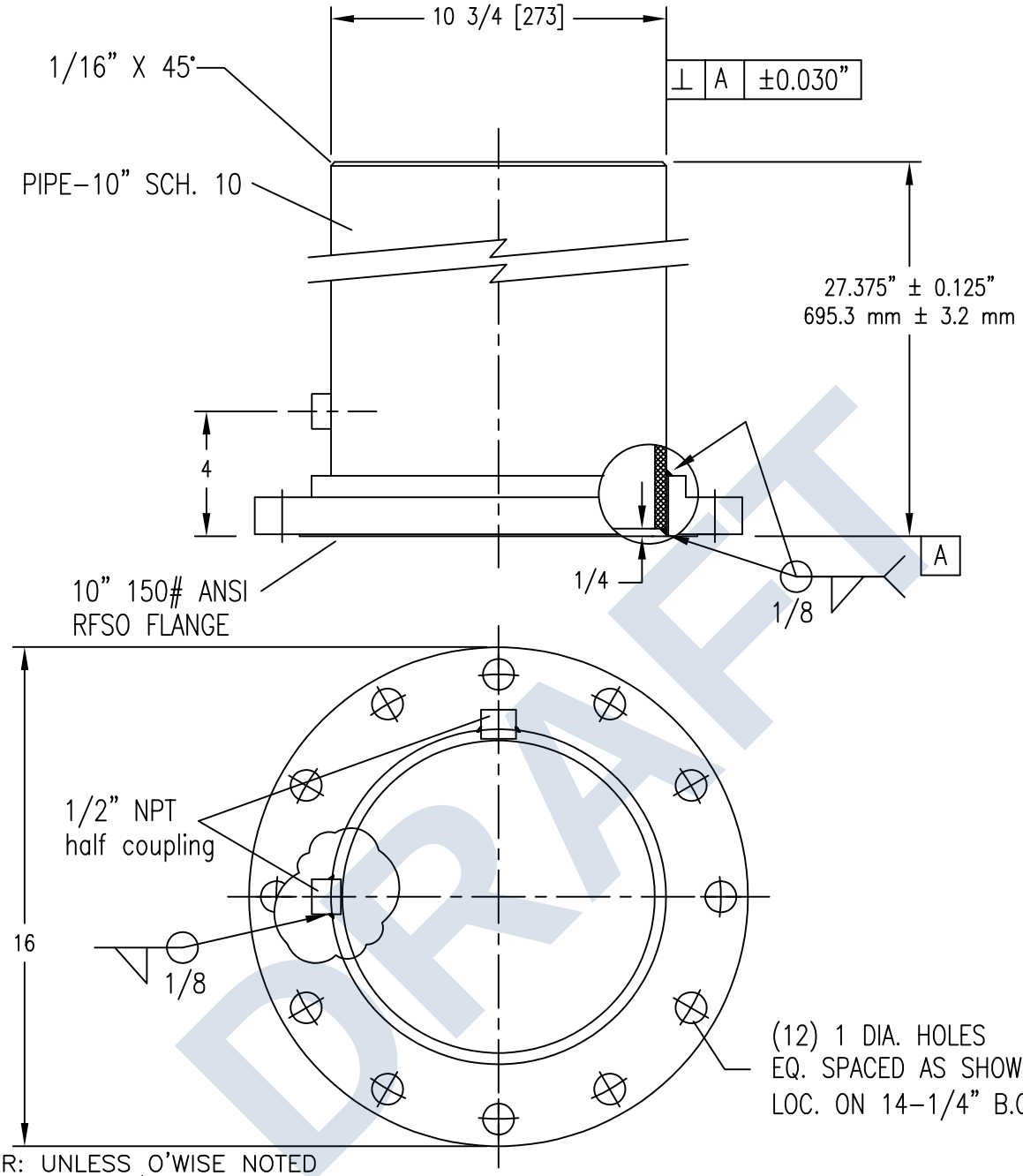

DRAFT

NOTES

1. STD TOLER: UNLESS O'WISE NOTED
   FRACTIONAL = ±1/32
   .X=±0.03 .XX=±0.01 .XXX=±0.005
   ANGULAR = ±1/4° (INCL IMPLIED 90°)
   WELDMENTS = ±1/16
2. BREAK ALL SHARP EDGES
3. AIR TIGHT ASSEMBLY
4. POWDER COATED RIVER ROCK BLUE
5. DO NOT PAINT INSIDE OF PIPE (B)
6. DO NOT PAINT FLANGE RAISED FACE

NONE = without coupling
–01 = with coupling
–02 = with (2) couplings

NAVISION #:	21–002828–16 & 21–002828–16–XX
DRAWING NO.	PA–005100–10–16 REV "B"

AERZEN USA CORP.
108 Independence Way, COATESVILLE PA 19320
(610) 380–0244 PH, (610) 380–0278 FX

TITLE
STUB PIPE – CARBON STEEL
10" PIPE X 10" FLANGE X 27.375" LONG

SCALE	DATE	DRAWN BY	CHECKED BY
MODEL SPACE 1:1	5/17/2016	SRM	

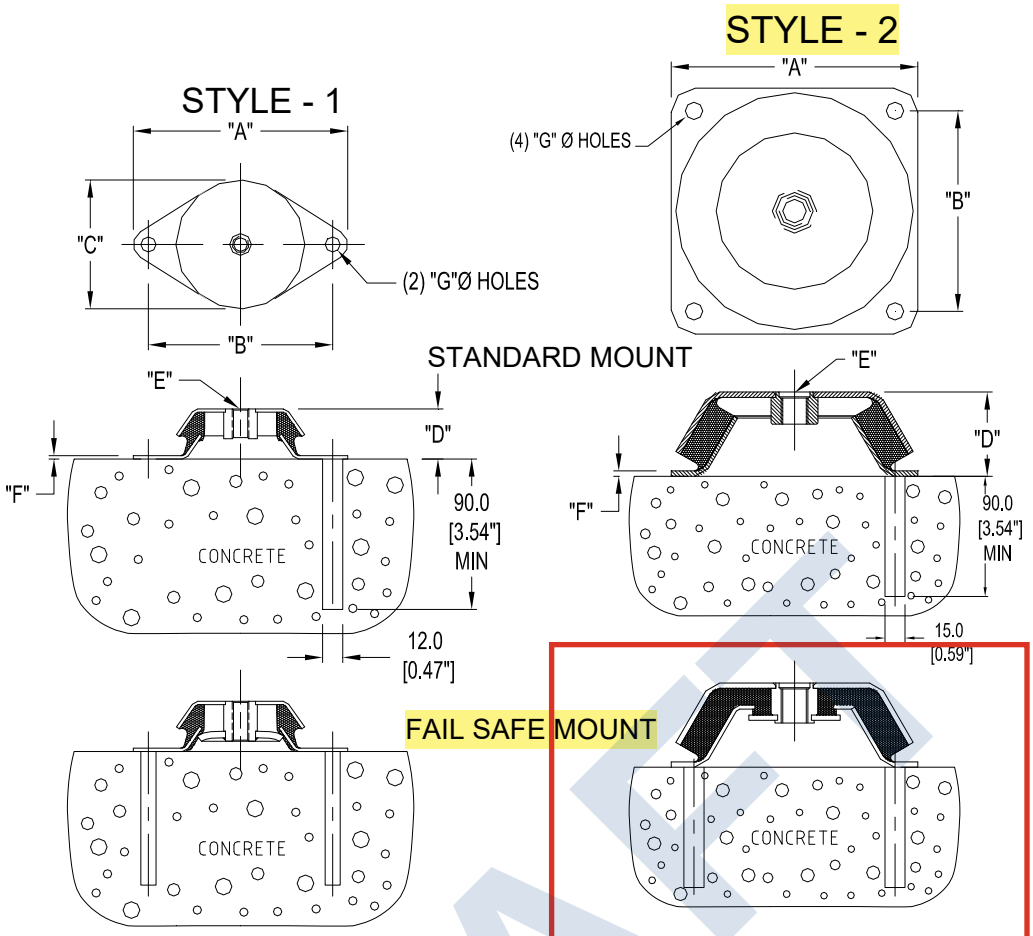

Only (1) anchor per foot is required for Standard mounts, anchor each hole ("G") for Fail-safe mounts.

Standard mounts are not recommended for use where negative loads occur, (marine or earthquake zones) use Fail-safe mounts or contact Aerzen for alternates.

All vibrations isolators have a natural frequency that will not interfere with the fundamental blower package frequencies.

Baseframe	Standard P/N	Fail Safe P/N	Style	A (mm)	B (mm)	C (mm)	D (mm)	E	F (mm)	G (mm)	Maximum Load Per Foot		Recommended Anchor
											KN	Lbf	Aerzen P/N
DN-50	184818	184818	1	127	110	77	30	M10	2	9	1,4	315	200053552
DN-80	176394	184819	1	127	110	77	30	M10	2	9	2	450	200053552
DN-100													
DN-125													
DN-150	177128	184820	2	168	132	-	50	M16	4	13	4	899	120835000
DN-200	184821	184821	2	184	150	-	60	M20	4.5	13	9	2023	120835000
DN-250													
DN-300													

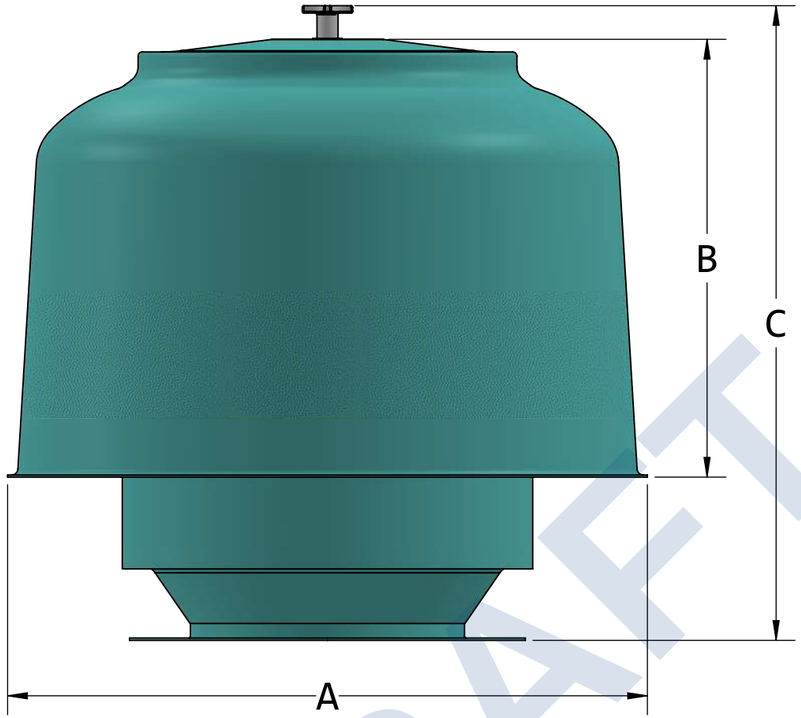

TRI-VENT® SERIES P09 INTAKE FILTER

MODEL #	ULTRA 99.97% @ 1-µ (NOM)	HI-FLOW 98% @ 10-µ (NOM)	WIRE MESH, 60% AC FINE	FLANGE SIZE	DIMENSIONS A	DIMENSIONS B	DIMENSIONS C	RATED FLOW SCFM	WGT
P09RG-	E045773	E047933	E049443	3	16	8	20	600	30
P09RH-	E045773	E047933	E049443	4	16	8	20	900	30
P09RR-	E045773	E047933	E049443	5	16	8	20	1100	30
P09RI-	E045773	E047933	E049443	6	16	8	20	1350	30
	E045774	E047934	E049444		26	11	23	2000	50
	E045775	E047935	E049445		27	15	27	2250	60
P09RJ-	E045774	E047934	E049444	8	26	11	23	2500	60
	E045775	E047935	E049445		27	15	27	2900	70
	E045776	E047936	E049446		28	20	32	3300	75
P09RK-	E045774	E047934	E049444	10	26	11	23	3750	70
	E045775	E047935	E049445		27	15	27	4000	75
	E045776	E047936	E049446		28	20	32	4250	80
P09RL-	E045775	E047935	E049445	12	27	15	27	5150	80
	E045776	E047936	E049446		28	20	32	6500	85
	E045777	E047937	E049447		38	26	38	8250	90
P09RM-	E045777	E047937	E049447	14	38	26	38	12000	105
P09RN-	E045777	E047937	E049447	16	38	26	38	15000	115
P09RS-	E045777	E047937	E049447	18	38	26	38	18000	125

OPTIONS: CUSTOM COLORS • MPT/FPT OUTLET • PRESSURE TAPS

FLOW CURVE

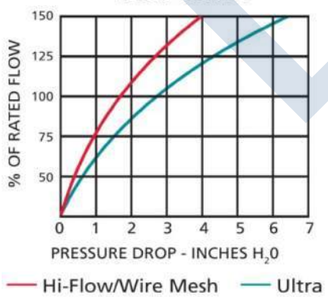

TYPICAL NOISE ATTENUATION

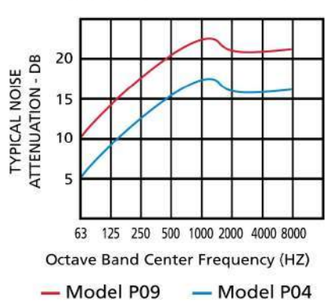

ENDUSTRA FILTER MFG

CUSTOMER: AERZEN USA

CONTACT FACTORY TO VERIFY REVISION

CONFIDENTIAL:

Design and drawing represented herein are the sole property of Endustra Filter Manufacturers. Recipient organization, its employees, representatives, and assigns agree not to share information in any way about the product represented herein with any 3rd parties without express written permission from Endustra Filter Manufacturers. PATENTED.

DRAWING NAME: TRI-VENT® SERIES P09	
ORIGINAL: 11/27/23	DRAWN BY: GHG
REVISION:	APPROVAL: KRW
TOLERANCES: ±1/8	SCALE: NONE
DIMENSIONS: INCHES	SHEET 1 OF 1

DRAFT

SECTION 4

DRAFT

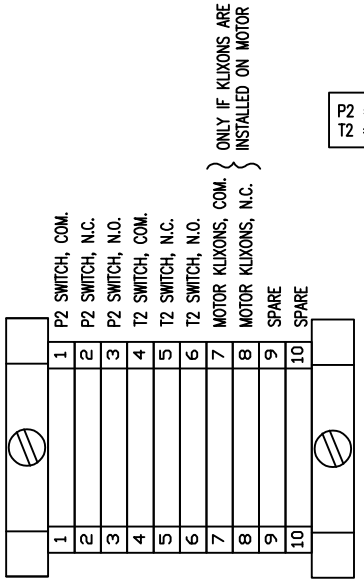

CUSTOMER CONNECTION SIDE

RATED: 30VDC/250VAC @ 2.0A

DETAIL
TERMINAL BLOCK DIAGRAM
FOR JUNCTION BOX

P2 = DISCHARGE PRESSURE
T2 = DISCHARGE TEMPERATURE

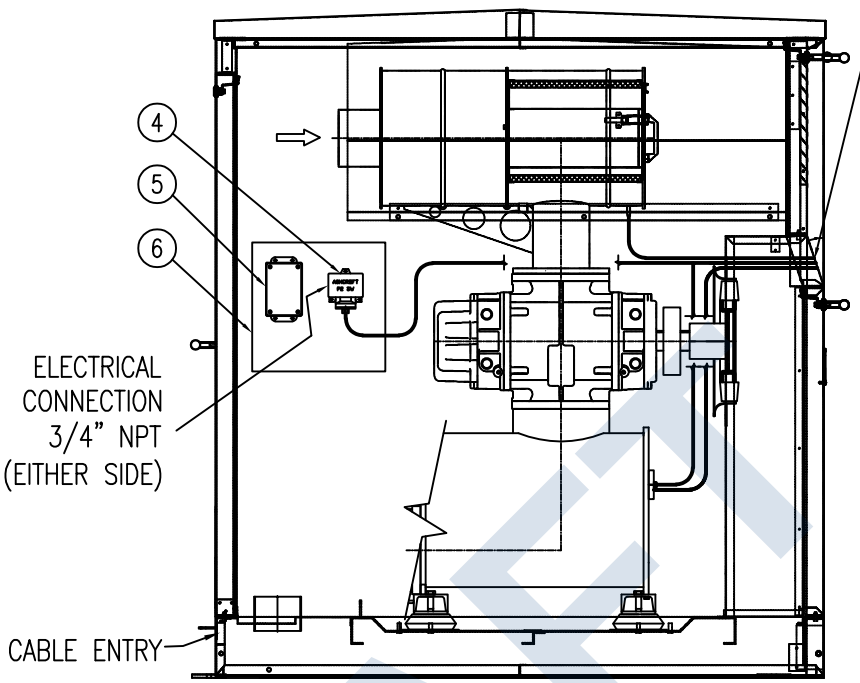

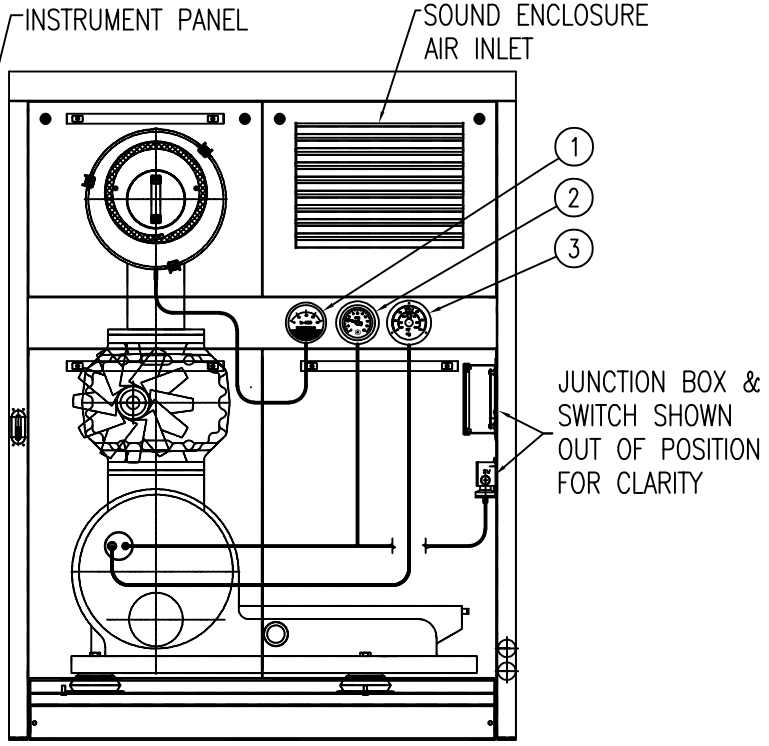

FRONT PANEL

NOTES:
1. ALL PRESSURE GAUGES & SWITCHES ARE INSTALLED WITH PULSATION DAMPERS. (EXCEPT IF GAUGE HAS A LIQUID FILL)
2. INTRUMENTATION SHOWN ON A GM35S, DN150 PACKAGE. E

MAIN COMPONENTS

ITEM	DESCRIPTION	PART NO.	
1	FILTER MAINTENANCE INDICATOR	21-006757	
2	DISCHARGE PRESSURE GAUGE	21-010129	E
3	DISCHARGE TEMPERATURE GAUGE/SWITCH	21-006756	
4	DISCHARGE PRESSURE SWITCH	21-000746-02	
5	JUNCTION BOX	21-000990_06X04_01	
6	PANEL MOUNTING PLATE	21-002532-04	E

NOTICE:
THIS DRAWING AND ALL INFORMATION HEREIN IS THE PROPERTY OF AERZEN USA INC. AND ITS SUBSIDIARIES AND SHALL NOT BE REPRODUCED BY ANY MEANS IN WHOLE OR IN PART OR USED AS THE BASIS FOR MANUFACTURE WITHOUT WRITTEN PERMISSION.

E CLASS I

AERZEN USA CORP.
108 Independence Way, COATESVILLE PA 19320
(610) 380-0244 PH, (610) 380-0278 FX

TITLE
G-5 BLOWER - INSTR. (S.E.)
FILTER MAINTENANCE INDICATOR
DISCHARGE PRESSURE GAUGE & SWITCH
DISCHARGE TEMPERATURE GAUGE/SWITCH

DATE	DRAWN BY:	CHECKED BY:	P.M. APPROVAL :	SCALE:
07/12/2017	RJP	DLM	-	MSPACE 1 :1

DRAWING NO:	REVISION NO:	SHEET:
G5-IM-PS07-4001-00	E	1/1

DRAFT

ALL STAINLESS STEEL LOW PRESSURE GAUGE

REOTEMP's Series PC low pressure gauges offer accurate and reliable measurements of gaseous media. Offered with stainless steel internals, the Series PC is designed to withstand corrosive media and ensure a long-lasting instrument.



PC25S1 PC40S1 PC60S1

Dials Custom Logo Diaphragm Seal Compatible

FEATURES / BENEFITS

- Sensitive Diaphragm/Capsule Mechanism
- All-Welded 316 Stainless Steel Capsule and Socket
- Easy-Access Zero Reset Screw on Dial

ASME B40.100 NACE

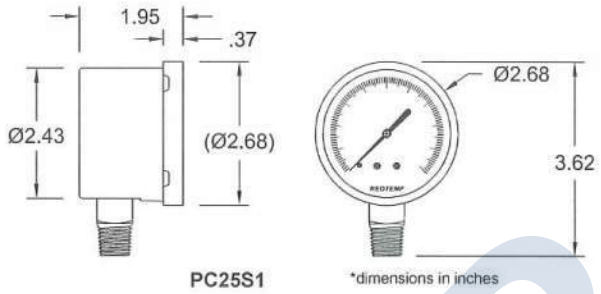

PC25S1 *dimensions in inches

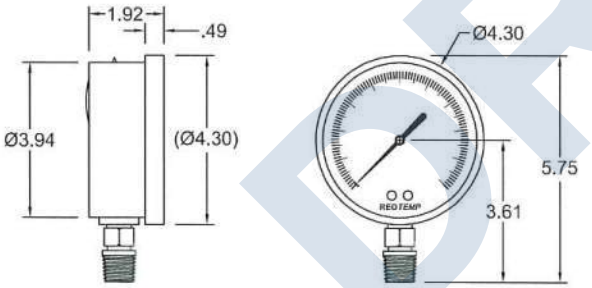

PC40S1 *dimensions in inches

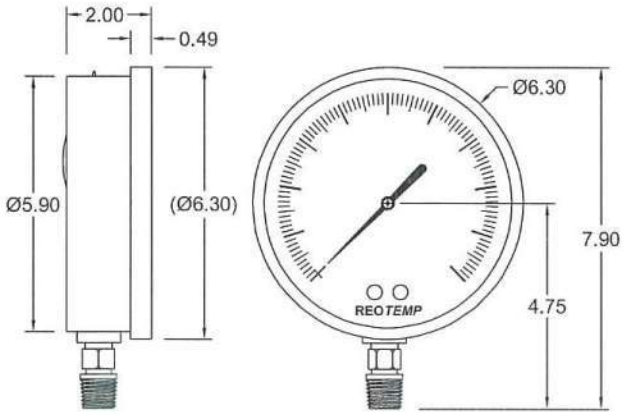

PC60S1 *dimensions in inches

SPECIFICATIONS

Construction Materials:

Non Wetted
- Case: 304SS
- Ring: 304SS, Bayonet Twist-Off
- Dial: White Aluminum, Black Letters

Wetted
- Capsule: 316LSS
- Socket: 316SS

Case-to-Socket
- Screw Connection
- Vented Case

Lens
- Tempered Safety Glass (Standard), Plastic, or Laminated Safety Glass

Temperature Limits:

Ambient
-40°F — 150°F

Process
-40°F — 200°F

Process Temperature Limits When Assembled with a Diaphragm Seal

-60°F — 350°F
Direct Mount

-100°F — 750°F
Remote Mount or Cooling Tower

*Exact temperature limits will depend on diaphragm seal & fill fluid.

Accuracy: 2-1.6-2%
Fillable: No
Restrictor Screw: Yes
Weight: 2.5" = 0.5 lbs
4" = 1.1 lbs
6" = 2.1 lbs
Maximum Working Pressure:
Stable = 100%
Momentary = 130% of scale

DRAFT

ALL STAINLESS STEEL LOW PRESSURE GAUGE

Visit reotemp.com

✓ Check Stock ✓ Get Price
✓ Configure Part # ✓ Download PDF Data Sheets

HOW TO ORDER: Choose options to build a part number. For example: PC40S1A2P52-D-T-HV

PC40	S	1	A	2	P52	-D	-T	-HV
DIAL SIZE	CASE TYPE	CAPSULE & SOCKET	MOUNT TYPE	CONNECTION	RANGE CODE	CASE FILL	LENS	OPTIONS

DIAL SIZE

PC25 = 2.5"
PC40 = 4"
PC60 = 6"

CASE TYPE

S = 304SS Case & Bezel w/ Removable Bayonet, Zero Correction on Dial
C = crimped ring 304SS

CAPSULE & SOCKET

1 = 316SS
2 = copper alloy

MOUNT TYPE

A = Bottom
B = Bottom/Rear Flange
*C = Center Back
*D = Center Back "U" Clamp
*E = Center Back/Front Flange

A = Bottom
B = Bottom/Rear Flange
*C = Lower Back
*E = Lower Back/Front Flange

CONNECTION

4 = 1/4" NPT
2 = 1/2" NPT

RANGE CODE

See Master Range Code Sheet on Page 46

Common Ranges
P50 = 0-10 in H_2O
P51 = 0-15 in H_2O
P52 = 0-30 in H_2O
P53 = 0-60 in H_2O
P54 = 0-100 in H_2O
P55 = 0-160 in H_2O
P56 = 0-200 in H_2O

Available Ranges
- 10" to 300" Water Column
- Gauge Pressure, Vacuum, or Compound

Standard Units
= in H_2O

Available Units
- kPa
- mbar
- psi
- mmH_2O
- inHg
- mmHg
- oz/in^2
- & more

P905 = -40..0 "H20

CASE FILL

Case is Not Fillable
-D = Dry

LENS

-T = Tempered Safety Glass (std)
-P = Plastic
-S = Laminated Safety Glass

OPTIONS

-HV = Hi-Vis™ Dial
-OX = Cleaned for O_2 Service
-C3 = 3 pt. Calibration Certificate
-TS = Stainless Steel Tag
-NC = NACE Compliance Certificate
-PM = Positive Material Identification Certification
-R5 = 1.5% Full Scale Accuracy (Not Available on Compound Ranges)

*Non-standard configuration

DRAFT

Diaphragm Seal Suitability Guide

Low pressure capsule gauges are very sensitive and require diaphragm seals with high fluid displacement. If a diaphragm seal is required to isolate the process fluid from the pressure gauge, the following seal model types are available for the Series PC.

Diaphragm Seal Model

High Displacement



Total Gauge Span* (in H_2O)

	10"	15"	20"	30"	40"	60"	100"	160"	200"	300"
W6	X	X	X	X	X	X	S	S	T	T
W7	X	X	X	S	S	T	T	T		
V5	X	S	S	T	T	T	T	T		
T6	X	X	X	X	X	S	S	S	S	S

*Total gauge span is additive of negative and positive pressures.

Example: -15 - 0 - 30 psi = 45 psi span

- Assembly will function correctly with minimal accuracy degradation.
- T — Assembly will function correctly given stable temperature.
- S — Assembly is highly sensitive to orientation and temperature variance. REOTEMP cannot guarantee a stated accuracy.
- X — Assembly will not work. The diaphragm does not displace enough fill fluid to drive the pressure gauge.

PRESSURE GAUGE RANGES AND CODES

SPECIAL RANGE TYPES

Receiver Ranges		
Code	Element	Dial Range
P60	3-15psi	0-100%
P61	3-15psi	0-10 sq rt
P62	3-15psi	0-100% & 0-10 sq.rt.

Refrigerant Ranges		
Code	Dial Range	Refrigerant
N06	-30inHg to 160psi	Ammonia
R06	-30inHg to 160psi	R134A
R06A	-30inHg to 160psi	R22
R06C	-30inHg to 160psi	R404A
N07	-30inHg to 200psi	Ammonia
N08	-30inHg to 300psi	Ammonia

Tank Level Ranges	
Code	Range
F14	0-24ft H2O
F15	0-30ft H2O
F15C	0-40ft H2O
F16	0-60ft H2O
F165	0-100ft H2O

LOW PRESSURE RANGES (PC SERIES ONLY)

Low Pressure Ranges									
inH_2O		oz/in^2		inH_2O & oz/in^2		mbar		psi	
Code	Range	Code	Range	Code	Range	Code	Range	Code	Range
P50	0-10	Z50	0-6	Q50Z	0-10 inH_2O & 0-6 oz/in^2				
P51	0-15	Z51	0-8			M51	0-40		
P49	0-20	Z49	0-10	Q49C	0-20 inH_2O & 0-12 oz/in^2				
P515	0-25	Z52E	0-15						
P52	0-30			Q52N	0-30 inH_2O & 0-18 oz/in^2	M521	0-70	I52	0-1
P525	0-40	Z52	0-20	Q525W	0-40 inH_2O & 0-24 oz/in^2	M525	0-100		
P53	0-60	Z53	0-30	Q53	0-60 inH_2O & 0-35 oz/in^2	M53F	0-150	I53	0-2
P54	0-100	Z54	0-60	Q54B	0-100 inH_2O & 0-60 oz/in^2	M54	0-250	I54	0-3
P55	0-160					M55	0-400	I55	0-5
P56	0-200	Z56	0-100	Q56C	0-200 inH_2O & 0-115 oz/in^2	M56	0-500	I56	0-7
Vacuum Ranges									
P88	-10-0	Z88	-6-0	Q88	-10/0 inH_2O & -6/0 oz/in^2				
P90	-30-0	Z90	-20-0	Q90	-30/0 inH_2O & -18/0 oz/in^2	M905	-100-0	I90	-1-0
P91	-60-0	Z91	-30-0	Q91	-60/0 inH_2O & -35/0 oz/in^2	M94	-200-0	I91	-2-0
P92	-100-0	Z92	-60-0	Q92	-100/0 inH_2O & -60/0 oz/in^2	M95	-400-0		
Compound Ranges									
P7A	-5/0/5	Z7A	-3/0/3			M71	-20/0/20		
P70	-10/0/10			Q70C	-10/0/10 inH_2O & -6/0/6 $ozin^2$	M72E	-30/0/30		
P71	-15/0/15					M72	-40/0/40		
P72	-20/0/20	Z72	-10/0/10	Q72C	-20/0/20 inH_2O & -12/0/12 oz/in^2			I73	-1-0-1
P73	-30/0/30			Q73C	-30/0/30 inH_2O & -18/0/18 oz/in^2	M735	-100/0/100	I74	-2-0-2
P74	-60/0/60	Z745	-30/0/30					I55U	-3/0/3
P75	-100/0/100			Q75B	-100/0/100 inH_2O & -60/0/60 oz/in^2			P14C	-5/0/5

DIFFERENTIAL PRESSURE RANGES (DP GAUGES ONLY)

psid		inH_2Od		bard		mbard		kPad	
Code	Range	Code	Range	Code	Range	Code	Range	Code	Range
PD1	0-1	ID10	0-10	BD1	0-1	MD40	0-40	AD2.5	0-2.5
PD3	0-3	ID20	0-20	BD1.6	0-1.6	MD60	0-60	AD6	0-6
PD5	0-5	ID30	0-30	BD2.5	0-2.5	MD100	0-100	AD10	0-10
PD10	0-10	ID50	0-50	BD4	0-4	MD160	0-160	AD25	0-25
PD20	0-20	ID100	0-100	BD6	0-6	MD250	0-250	AD40	0-40
PD50	0-50	ID150	0-150	BD7	0-7	MD400	0-400	AD100	0-100
PD100	0-100	ID200	0-200	BD11	0-11	MD600	0-600	AD250	0-250
PD200	0-200	ID400	0-400	BD55	0-55	MD1000	0-1000	AD700	0-700
PD6000	0-6000			BD400	0-400				

DRAFT

PRESSURE GAUGE OPTIONS

		Heavy-Duty Industrial Gauges				Process Gauges			Stainless Steel Case Industrial Gauges			Commercial Gauges		Low Pressure Capsule Gauges			Test Gauges
Part #	Description	PR25	PR35	PR40	PR60	PT45P	PT45T	PI45	PM	PG**C	PG**S	PD15/20/25	PD35/40	PC25N	PC25S	PC40/45/60	PL60/45
CASE FILL OPTIONS																	
-G	Glycerin Filled Case	✓	✓	✓	✓	✓	✓	N/A	✓	✓	✓	N/A	N/A	N/A	N/A	N/A	N/A
-W	Glycerin Water Filled Case (65/35)	✓	✓	✓	✓	✓	✓	N/A	✓	✓	✓	N/A	N/A	N/A	N/A	N/A	N/A
-S	Silicone Filled Case	✓	✓	✓	✓	✓	✓	N/A	✓	N/A	✓	N/A	N/A	N/A	N/A	N/A	N/A
-T	Teflon-coated Movement (No case fill)	✓	✓	✓	✓	✓	✓	✓	N/A	N/A	N/A	N/A	N/A	N/A	✓	✓	✓
LENS OPTIONS																	
-P	Plastic Lens	STD	✓	✓	✓	✓	✓	STD	STD	STD	✓	✓	MQ	✓	✓	✓	✓
-T	Tempered Safety Glass Lens	✓	STD	STD	STD	STD	STD	N/A	N/A	N/A	STD	N/A	N/A	N/A	STD	STD	STD
-S	Laminated Safety Glass Lens	✓	✓	✓	✓	✓	✓	N/A	N/A	N/A	✓	N/A	N/A	N/A	✓	✓	✓
-G	Plain Glass	N/A	N/A	N/A	N/A	N/A	N/A	N/A	MQ	MQ	N/A	MQ	STD	N/A	N/A	N/A	N/A
POINTER OPTIONS																	
-RP	Red Pointer	✓	✓	✓	✓	✓	✓	✓	N/A	N/A	✓	N/A	N/A	N/A	✓	✓	✓
-MP	Min/Max Pointer (Drag Hand)	✓	N/A	✓	✓	✓	✓	N/A	N/A	N/A	✓	N/A	N/A	N/A	N/A	N/A	N/A
-MQ	Min/Max Pointer (Tamper-proof)	✓	N/A	✓	✓	✓	✓	N/A	N/A	N/A	✓	N/A	N/A	N/A	N/A	N/A	N/A
-RH	Red Set Hand (Manual Adjustment)	N/A	N/A	N/A	N/A	✓	N/A	N/A	N/A	N/A	N/A	N/A	N/A	N/A	N/A	N/A	N/A
-EC	Electrical Contacts	N/A	N/A	✓	N/A	✓	N/A	N/A	N/A	N/A	N/A	N/A	N/A	N/A	N/A	N/A	N/A
DIAL OPTIONS																	
-CL	Custom Logo Dial	✓	✓	✓	✓	✓	✓	✓	MQ	MQ	✓	MQ	MQ	MQ	✓	✓	✓
-HV	Hi-Vis Dial	✓	✓	✓	✓	✓	✓	✓	N/A	N/A	✓	N/A	N/A	N/A	✓	✓	N/A
-CB	Color Band	✓	✓	✓	✓	✓	✓	✓	MQ	MQ	✓	MQ	MQ	MQ	✓	✓	N/A
-CP	Color Pie	✓	✓	✓	✓	✓	✓	✓	MQ	MQ	✓	MQ	MQ	MQ	✓	✓	N/A
-DM	Dial Marking	✓	✓	✓	✓	✓	✓	✓	MQ	MQ	✓	MQ	MQ	✓	✓	✓	✓
-LP	Removable Lens Protector	N/A	N/A	N/A	N/A	✓	✓	✓	N/A	N/A	N/A	N/A	N/A	N/A	N/A	N/A	N/A
CALIBRATION OPTIONS																	
-R1	Upgrade to 1% FS Accuracy	✓	✓	STD	STD	N/A	N/A	N/A	N/A	N/A	✓	N/A	N/A	N/A	N/A	N/A	N/A
-R2	Upgrade to 0.5% FS Accuracy	N/A	N/A	✓	✓	STD	STD	STD	N/A	N/A	N/A	N/A	N/A	N/A	N/A	N/A	N/A
-R5	Upgrade to 1.5% FS Accuracy	✓	✓	N/A	N/A	N/A	N/A	N/A	N/A	N/A	N/A	N/A	N/A	N/A	✓	✓	N/A
-C1	1pt. NIST Calibration Cert	✓	✓	✓	✓	✓	✓	✓	✓	✓	✓	✓	✓	✓	✓	✓	N/A
-C3	3pt. NIST Calibration Cert	✓	✓	✓	✓	✓	✓	✓	✓	✓	✓	✓	✓	✓	✓	✓	N/A
-C5	5pt. NIST Calibration Cert	✓	✓	✓	✓	✓	✓	✓	✓	✓	✓	✓	✓	✓	✓	✓	N/A
-CX	10pt. NIST Calibration Cert	✓	✓	✓	✓	✓	✓	✓	✓	✓	✓	✓	✓	✓	✓	✓	STD
-CS	Calibration Sticker (No logged pts.)	✓	✓	✓	✓	✓	✓	✓	✓	✓	✓	✓	✓	✓	✓	✓	N/A
TAG OPTION																	
-TS	Stainless Steel Tag (1-10 Characters)	✓	✓	✓	✓	✓	✓	✓	✓	✓	✓	✓	✓	✓	✓	✓	✓
-TM	Stainless Steel Tag (11-80 characters)	✓	✓	✓	✓	✓	✓	✓	✓	✓	✓	✓	✓	✓	✓	✓	✓
-TP	Paper Tag	✓	✓	✓	✓	✓	✓	✓	✓	✓	✓	✓	✓	✓	✓	✓	✓
CERTIFICATION OPTIONS																	
-CM	General Material Conformance	✓	✓	✓	✓	✓	✓	✓	✓	✓	✓	✓	✓	✓	✓	✓	✓
-NC	Certificate of NACE Compliance	✓	✓	✓	✓	✓	✓	✓	N/A	N/A	N/A	N/A	N/A	N/A	✓	✓	✓
-PM	Positive Material Identifiaction Certificate (PMI)	✓	✓	✓	✓	✓	✓	✓	✓	✓	✓	✓	✓	✓	✓	✓	✓
-HT	Hydrostatic Test per ASME B31.3 (5 min)	✓	✓	✓	✓	✓	✓	✓	✓	✓	✓	✓	✓	✓	✓	✓	✓
-LC	Argon Leak Check Certificate	✓	✓	✓	✓	✓	✓	✓	✓	✓	✓	✓	✓	✓	✓	✓	✓
CLEANING OPTIONS																	
-DG	Degreased - Wiped Clean of Oils, Shipped in Sealed Bag	✓	✓	✓	✓	✓	✓	✓	N/A	N/A	✓	N/A	N/A	✓	✓	✓	✓
-OX	Cleaned for Oxygen Service per ASME B40.1	✓	✓	✓	✓	✓	✓	✓	MQ	MQ	✓	MQ	MQ	✓	✓	✓	✓
-OY	Cleaned for Oxygen Service per MIL-STD-1330D	✓	✓	✓	✓	✓	✓	✓	N/A	N/A	✓	N/A	N/A	✓	✓	✓	✓

✓	Indicates that the option is available with the model.	N/A	Indicates the option is not available with this model.
STD	Indicates standard options with no additional cost.	MQ	Minimum order quantity applies.

DRAFT

INDUSTRIAL STAINLESS/BRASS GAUGE

REOTEMP's Series PG gauges are an economical choice where ambient corrosion and vibration are of concern. The stainless steel case and ring offer excellent corrosion resistance, and is fillable for applications with vibration. It is suitable for all fluids compatible with copper alloys.



PG25C2



PG40C2

Fillable Custom Logo

FEATURES / BENEFITS

- Stainless Steel Case
- Copper Alloy Wetted Parts
- Field Fillable Case
- Convenient Panel Mounting Adapters

ASME B40.100

SPECIFICATIONS

Accuracy	2.5" = 3 - 2 - 3%, ASME Grade B 4" = 2 - 1 - 2%, ASME Grade A
Ambient Limits	-40°F/140°F
Process Limits	-40°F/140°F
Process Limits with Diaphragm Seal	Cannot be mounted to a diaphragm seal.
Wetted Materials	Tube: Copper Alloy Socket: Copper Alloy
Lens	Plastic (Standard) or Glass
Other Materials	Case: 304SS Ring: 304SS Dial: White Aluminum, Black Letters Case-to-Socket: Screw Connection
Fillable	Yes
Restrictor Screw	Built-in, Non-Removable
Maximum Working Pressure	Stable = 100% Momentary = 110% of scale
Environmental Protection	NEMA 4X/IP65
Weight	2.5" = 0.25 lbs (0.4 lbs filled) 4" = 0.6 lbs (1.2 lbs filled)

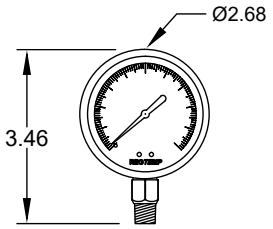

PG25C2

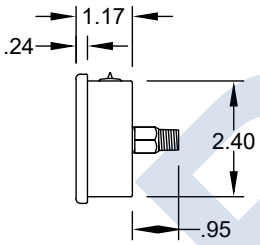

*dimensions in inches

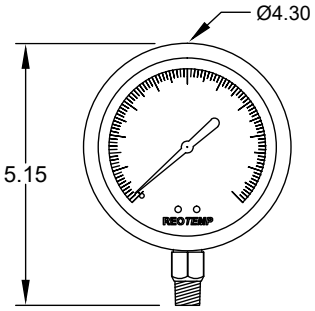

PG40C2

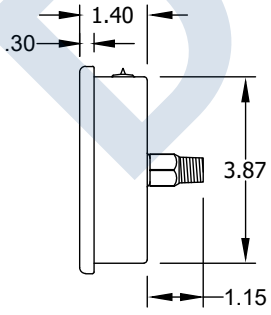

*dimensions in inches

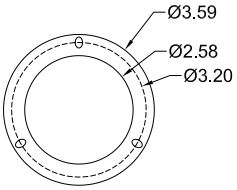

2.5" MOUNTING FLANGE

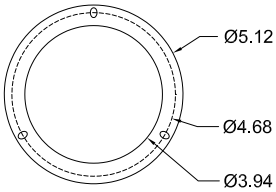

4" MOUNTING FLANGE

DRAFT

INDUSTRIAL STAINLESS/BRASS GAUGE

Visit reotemp.com

- ✓ Check Stock
- ✓ Get Price
- ✓ Configure Part #
- ✓ Download PDF Data Sheets

HOW TO ORDER: Choose options to build a part number. For example: PG25C2A4P18-D-P-TS

PG25 C 2 A 4 P18 -D -P -TS

DIAL SIZE	CASE TYPE	TUBE & SOCKET	MOUNT TYPE	CONNECTION	RANGE CODE	CASE FILL	LENS	OPTIONS
PG25 = 2.5" **PG40** = 4"	**C** = 304SS Crimped Ring	**2** = Copper Alloy	**A** = Bottom **B** = Bottom/Rear Flange **C** = Center Back **D** = Center Back "U" Clamp **E** = Center Back/Front Flange	**4** = 1/4" NPT ***2** = 1/2" NPT	*Common Ranges* **P16** = 0-30 psi **P17** = 0-60 psi **P18** = 0-100 psi **P19** = 0-160 psi **P20** = 0-200 psi **P21** = 0-300 psi **P23** = 0-600 psi **P25** = 0-1,000 psi *Available Ranges* ■ Gauge Pressure, Vacuum, or Compound ■ Vac to 6,000 psi *For Additional Range Codes See Page 45*	**-D** = Dry **-G** = Glycerin **-W** = Glycerin/ Water (65/35) *Note: This model cannot be filled with silicone.*	**-P** = Plastic ***-G** = Glass	**-TS** = Stainless Steel Tag

*Non-standard configuration

DRAFT

Master Range Code Sheet

PRESSURE GAUGE RANGES AND CODES

VACUUM/COMPOUND RANGES

psi		Dual Scale & psi & Metric						Single Scale-Metric					
"Hg/0/psi		psi & bar		psi & kg/cm²		psi & kPa		bar		kg/cm²		kPa	
Code	Range	Code	Range	Code	Range	Code	Range	Code	Range	Code	Range	Code	Range
P01	-30"Hg/0	D01	"Hg & -1/0 bar	G01	"Hg & -1/0 kg/cm²	L01	"Hg & -100/0 kPa	B00	-1/0 bar	K00	-1/0 kg/cm²	A00	-100/0 kPa
P02	-30/0/15	D02	psi & -1/0/1	G02	psi & -1/0/1	L02	psi & -100/0/100	B01	-1/0/1	K01	-1/0/1	A01	-100/0/100
P03	-30/0/30	D03	psi & -1/0/2	G03	psi & -1/0/2	L03	psi & -100/0/200	B02	-1/0/2	K02	-1/0/2	A02	-100/0/200
P04	-30/0/60	D04	psi & -1/0/4	G04	psi & -1/0/4	L04	psi & -100/0/400	B04	-1/0/4	K04	-1/0/4	A04	-100/0/400
P05	-30/0/100	D05	psi & -1/0/7	G05	psi & -1/0/7	L05	psi & -100/0/700	B07	-1/0/7	K07	-1/0/7	A07	-100/0/700
P06	-30/0/160	D06	psi & -1/0/11	G06	psi & -1/0/11	L06	psi & -100/0/1,100	B011	-1/0/11	K011	-1/0/11	A011	-100/0/1,100
P07	-30/0/200	D07	psi & -1/0/14	G07	psi & -1/0/14	L07	psi & -100/0/1,400	B014	-1/0/14	K014	-1/0/14	A014	-100/0/1,400
P08	-30/0/300	D08	psi & -1/0/20	G08	psi & -1/0/20	L08	psi & -100/0/2,000	B020	-1/0/20	K020	-1/0/20	A020	-100/0/2,000

PRESSURE RANGES

psi		Dual Scale & psi & Metric						Single Scale-Metric					
psi		psi & bar		psi & kg/cm²		psi & kPa		bar		kg/cm²		kPa	
Code	Range	Code	Range	Code	Range	Code	Range	Code	Range	Code	Range	Code	Range
P14	0-10 psi	D14	psi & .7 bar	G14	psi & .7 kg/cm²	L14	psi & 70 kPa						
P15	0-15	D15	psi & 0-1	G15	psi & 0-1	L15	psi & 0-100	B1	0-1 bar	K1	0-1 kg/cm²	A1	0-100 kPa
P16	0-30	D16	psi & 0-2	G16	psi & 0-2	L16	psi & 0-200	B2	0-2	K2	0-2	A2	0-200
P17	0-60	D17	psi & 0-4	G17	psi & 0-4	L17	psi & 0-400	B4	0-4	K4	0-4	A4	0-400
P18	0-100	D18	psi & 0-7	G18	psi & 0-7	L18	psi & 0-700	B7	0-7	K7	0-7	A7	0-700
P19	0-160	D19	psi & 0-11	G19	psi & 0-11	L19	psi & 0-1,100	B11	0-11	K11	0-11	A11	0-1,100
P20	0-200	D20	psi & 0-14	G20	psi & 0-14	L20	psi & 0-1,400	B14	0-14	K14	0-14	A14	0-1,400
P21	0-300	D21	psi & 0-20	G21	psi & 0-20	L21	psi & 0-2,000	B20	0-20	K20	0-20	A20	0-2,000
P22	0-400	D22	psi & 0-28	G22	psi & 0-28	L22	psi & 0-2,800	B28	0-28	K28	0-28	A28	0-2,800
P23	0-600	D23	psi & 0-40	G23	psi & 0-40	L23	psi & 0-4,000	B40	0-40	K40	0-40	A40	0-4,000
P24	0-800	D24	psi & 0-55	G24	psi & 0-55	L24	psi & 0-5,500	B55	0-55	K55	0-55	A55	0-5,500
P25	0-1,000	D25	psi & 0-70	G25	psi & 0-70	L25	psi & 0-7,000	B70	0-70	K70	0-70	A70	0-7,000
P30	0-1,500	D30	psi & 0-100	G30	psi & 0-100	L30	psi & 0-10,000	B100	0-100	K100	0-100	A100	0-10,000
P31	0-2,000	D31	psi & 0-140	G31	psi & 0-140	L31	psi & 0-14,000	B140	0-140	K140	0-140	A140	0-14,000
P32	0-3,000	D32	psi & 0-200	G32	psi & 0-200	L32	psi & 0-20,000	B200	0-200	K200	0-200	A200	0-20,000
P33	0-4,000	D33	psi & 0-280	G33	psi & 0-280	L33	psi & 0-28,000	B280	0-280	K280	0-280	A280	0-28,000
P34	0-5,000	D34	psi & 0-350	G34	psi & 0-350	L34	psi & 0-35,000	B350	0-350	K350	0-350	A350	0-35,000
P35	0-6,000	D35	psi & 0-400	G35	psi & 0-400	L35	psi & 0-40,000	B400	0-400	K400	0-400	A400	0-40,000
P36	0-8,000	D36	psi & 0-550	G36	psi & 0-550	L36	psi & 0-55,000	B550	0-550	K550	0-550	A550	0-55,000
P37	0-10,000	D37	psi & 0-700	G37	psi & 0-700	L37	psi & 0-70,000	B700	0-700	K700	0-700	A700	0-70,000
P38	0-15,000	D38	psi & 0-1,000	G38	psi & 0-1,000	L38	psi & 0-100,000	B1K	0-1,000	K1K	0-1,000	A1K	0-100,000
P39	0-20,000	D39	psi & 0-1,400	G39	psi & 0-1,400	L39	psi & 0-140,000						
P40	0-30,000	D40	psi & 0-2,000	G40	psi & 0-2,000	L40	psi & 0-200,000						
P41	0-40,000	D41	psi & 0-2,800	G41	psi & 0-2,800	L41	psi & 0-280,000						
P42	0-50,000	D42	psi & 0-3,500	G42	psi & 0-3,500	L42	psi & 0-350,000						

DRAFT



Don't See The Range You Need? REOTEMP has thousands of specialty dial ranges available and will work with you to create a custom range, just contact REOTEMP customer service.

PRESSURE GAUGE OPTIONS

		Heavy-Duty Industrial Gauges				Process Gauges			Stainless Steel Case Industrial Gauges			Commercial Gauges		Low Pressure Capsule Gauges			Test Gauges
Part #	Description	PR25	PR35	PR40	PR60	PT45P	PT45T	PI45	PM	PG**C	PG**S	PD15/20/25	PD35/40	PC25N	PC25S	PC40/45/60	PL60/45
CASE FILL OPTIONS																	
-G	Glycerin Filled Case	✓	✓	✓	✓	✓	✓	N/A	✓	✓	✓	N/A	N/A	N/A	N/A	N/A	N/A
-W	Glycerin Water Filled Case (65/35)	✓	✓	✓	✓	✓	✓	N/A	✓	✓	✓	N/A	N/A	N/A	N/A	N/A	N/A
-S	Silicone Filled Case	✓	✓	✓	✓	✓	✓	N/A	✓	N/A	✓	N/A	N/A	N/A	N/A	N/A	N/A
-T	Teflon-coated Movement (No case fill)	✓	✓	✓	✓	✓	✓	✓	N/A	N/A	N/A	N/A	N/A	N/A	✓	✓	✓
-I	Inert Case Fill	✓	✓	✓	✓	✓	✓	N/A	N/A	N/A	N/A	N/A	N/A	N/A	N/A	N/A	N/A
LENS OPTIONS																	
-P	Plastic Lens	STD	✓	✓	✓	✓	✓	STD	STD	STD	✓	✓	MQ	✓	✓	✓	✓
-T	Tempered Safety Glass Lens	✓	STD	STD	STD	STD	STD	N/A	N/A	N/A	STD	N/A	N/A	N/A	STD	STD	STD
-S	Laminated Safety Glass Lens	✓	✓	✓	✓	✓	✓	N/A	N/A	N/A	✓	N/A	N/A	N/A	✓	✓	✓
-G	Plain Glass	N/A	N/A	N/A	N/A	N/A	N/A	N/A	MQ	MQ	N/A	MQ	STD	N/A	N/A	N/A	N/A
POINTER OPTIONS																	
-RP	Red Pointer	✓	✓	✓	✓	✓	✓	✓	N/A	N/A	✓	N/A	N/A	N/A	✓	✓	✓
-MP	Min/Max Pointer (Drag Hand)†	✓	N/A	✓	✓	✓	N/A	N/A	N/A	N/A	✓	N/A	N/A	N/A	N/A	N/A	N/A
-MQ	Min/Max Pointer (Tamper-proof)†	✓	N/A	✓	✓	✓	N/A	N/A	N/A	N/A	✓	N/A	N/A	N/A	N/A	N/A	N/A
-RH	Red Set Hand (Manual Adjustment)	N/A	N/A	N/A	N/A	✓	N/A	N/A	N/A	N/A	N/A	N/A	N/A	N/A	N/A	N/A	N/A
-EC	Electrical Contacts	N/A	N/A	✓	N/A	✓	N/A	N/A	N/A	N/A	N/A	N/A	N/A	N/A	N/A	N/A	N/A
DIAL OPTIONS																	
-CL	Custom Logo Dial	✓	✓	✓	✓	✓	✓	✓	MQ	MQ	✓	MQ	MQ	MQ	✓	✓	✓
-HV	Hi-Vis Dial	✓	✓	✓	✓	✓	✓	✓	N/A	N/A	✓	N/A	N/A	N/A	✓	✓	N/A
-CB	Color Band	✓	✓	✓	✓	✓	✓	✓	MQ	MQ	✓	MQ	MQ	MQ	✓	✓	N/A
-CP	Color Pie	✓	✓	✓	✓	✓	✓	✓	MQ	MQ	✓	MQ	MQ	MQ	✓	✓	N/A
-DM	Dial Marking	✓	✓	✓	✓	✓	✓	✓	MQ	MQ	✓	MQ	MQ	✓	✓	✓	✓
-LP	Removable Lens Protector	N/A	N/A	N/A	N/A	✓	✓	✓	N/A	N/A	N/A	N/A	N/A	N/A	N/A	N/A	N/A
CALIBRATION OPTIONS																	
-R1	Upgrade to 1% FS Accuracy	✓	✓	STD	STD	N/A	N/A	N/A	N/A	N/A	✓	N/A	N/A	N/A	N/A	N/A	N/A
-R2	Upgrade to 0.5% FS Accuracy	N/A	N/A	✓	✓	STD	STD	STD	N/A	N/A	N/A	N/A	N/A	N/A	N/A	N/A	N/A
-R5	Upgrade to 1.5% FS Accuracy	✓	✓	N/A	N/A	N/A	N/A	N/A	N/A	N/A	N/A	N/A	N/A	N/A	✓	✓	N/A
-C1	1pt. NIST Calibration Cert	✓	✓	✓	✓	✓	✓	✓	✓	✓	✓	✓	✓	✓	✓	✓	N/A
-C3	3pt. NIST Calibration Cert	✓	✓	✓	✓	✓	✓	✓	✓	✓	✓	✓	✓	✓	✓	✓	N/A
-C5	5pt. NIST Calibration Cert	✓	✓	✓	✓	✓	✓	✓	✓	✓	✓	✓	✓	✓	✓	✓	N/A
-CX	10pt. NIST Calibration Cert	✓	✓	✓	✓	✓	✓	✓	✓	✓	✓	✓	✓	✓	✓	✓	STD
-CS	Calibration Sticker (No logged pts.)	✓	✓	✓	✓	✓	✓	✓	✓	✓	✓	✓	✓	✓	✓	✓	N/A
TAG OPTION																	
-TS	Stainless Steel Tag (1-10 Characters)	✓	✓	✓	✓	✓	✓	✓	✓	✓	✓	✓	✓	✓	✓	✓	✓
-TM	Stainless Steel Tag (11-80 characters)	✓	✓	✓	✓	✓	✓	✓	✓	✓	✓	✓	✓	✓	✓	✓	✓
-TP	Paper Tag	✓	✓	✓	✓	✓	✓	✓	✓	✓	✓	✓	✓	✓	✓	✓	✓
CERTIFICATION OPTIONS																	
-CM	General Material Conformance	✓	✓	✓	✓	✓	✓	✓	✓	✓	✓	✓	✓	✓	✓	✓	✓
-NC	Certificate of NACE Compliance	✓	✓	✓	✓	✓	✓	✓	N/A	N/A	N/A	N/A	N/A	N/A	✓	✓	✓
-PM	Positive Material Identification Certificate (PMI)	✓	✓	✓	✓	✓	✓	✓	✓	✓	✓	✓	✓	✓	✓	✓	✓
-HT	Hydrostatic Test per ASME B31.3 (5 min)	✓	✓	✓	✓	✓	✓	✓	✓	✓	✓	✓	✓	✓	✓	✓	✓
-LC	Argon Leak Check Certificate	✓	✓	✓	✓	✓	✓	✓	✓	✓	✓	✓	✓	✓	✓	✓	✓
CLEANING OPTIONS																	
-DG	Degreased - Wiped Clean of Oils, Shipped in Sealed Bag	✓	✓	✓	✓	✓	✓	✓	N/A	N/A	✓	N/A	N/A	✓	✓	✓	✓
-OX	Cleaned for Oxygen Service per ASME B40.1	✓	✓	✓	✓	✓	✓	✓	MQ	MQ	✓	MQ	MQ	✓	✓	✓	✓
-OY	Cleaned for Oxygen Service per MIL-STD-1330D	✓	✓	✓	✓	✓	✓	✓	N/A	N/A	✓	N/A	N/A	✓	✓	✓	✓
OTHER OPTIONS																	
-NR	No Restrictor Screw	✓	✓	✓	✓	✓	✓	✓	N/A	N/A	N/A	N/A	N/A	N/A	N/A	✓	N/A
-FI	Dry Gauge Shipped with Fill Plug Installed	N/A	N/A	N/A	N/A	✓	N/A	N/A	N/A	N/A	N/A	N/A	N/A	N/A	N/A	N/A	N/A

✓	Indicates that the option is available with the model.	N/A	Indicates the option is not available with this model.
STD	Indicates standard options with no additional cost.	MQ	Minimum order quantity applies.

†This option is only available with a plastic lens.

DRAFT

ASHCROFT®
Trust the shield.™

B-Series Switches – Pressure, Differential Pressure & Hydraulic



FEATURES

B-Series switches have proven reliable in such harsh environments as:

- ***Offshore oil rigs***
- ***Chemical and petrochemical plants***
- ***Pulp and paper mills***
- ***Steel mills***
- ***Power plants***
- ***Water and sewage-treatment plants***
- ***Other corrosive environments***

Ashcroft Inc. supplies highly reliable Ashcroft® switches and controls for industrial and process applications. We begin with rock-solid designs, matching the most appropriate technology with the safety and reliability requirements of the applications. The materials of construction are specified to Ashcroft's exacting standards, and product is built to last in the toughest applications. Our modern, responsive manufacturing facility is supported by an extensive network of stocking distributors and factory sales offices located in virtually every part of the world. Special application assistance is always just a telephone call away.

The Ashcroft B-Series switch line is designed to satisfy most switch requirements. Materials of construction have been selected for long life. A wide variety of precision switch elements are available to meet every application requirement, including hermetically sealed contacts for added reliability and safety. The actuators we use have been proven in more than 20 years of service in the world's plants and mills. Special designs are available for fire safety, NACE, limit control and other more stringent requirements. Simplicity and ease of use are stressed to improve reliability of the installation.

Applications include: pumps, compressors, washers, filters, degreasers, evapora-tors, recovery systems, food processing, ground support equipment, reverse osmosis systems, heat exchangers, hydraulic systems, lubrication systems, marine equipment, textile machinery, heating and air conditioning equipment.

Aerzen USA part no. 21-000746-02
Ashcroft Part No. B4-24-V-XRN-XJK-0/15 PSI

DRAFT

All specifications are subject to change without notice.
All sales subject to standard terms and conditions.
© Ashcroft Inc. 2015 01/15

Ashcroft Inc., 250 East Main Street, Stratford, CT 06614 USA
Tel: 203-378-8281 • Fax: 203-385-0408
email: info@ashcroft.com • www.ashcroft.com

ASHCROFT®
Trust the shield.™

B-Series Switches – Pressure, Differential Pressure & Hydraulic

Pressure & Differential Pressure Switches

B-Series pressure, differential pressure and vacuum switches use two different actuators depending on setpoint requirements. For setpoints between 2 and 3000 psi, the simple, rugged diaphragm-sealed piston actuator is used. This design features high reliability and choice of actuator seal materials for virtually every application. An optional welded design is also available for setpoints up to 1000 psi for maximum reliability. This design is available in 316 SS or Monel. Differential pressure models use a unique, dual diaphragm-sealed piston design that features very high static operating pressures and small size.

For setpoints between 4.5 and 150 inches of H_2O, a large diaphragm is used for increased sensitivity in both pressure and differential pressure designs with good choice of materials of construction.

All standard models feature ±1 percent of range setpoint repeatability and a minimum of 400 percent of range proof pressures.

These standard designs perform well in applications where shock and vibration could be a problem and may be used in conjunction with Ashcroft diaphragm seals in extreme services such as slurries or abrasive process fluids.

PRESSURE/VACUUM SWITCHES

Nominal Range[1]			Overpressure Ratings		Approximate Deadband[2] Switch Element				
			Proof psi	Burst psi	20, 26, 27	21, 24, 31	50	22	32, 42
Vacuum									
–30″ Hg	–760mm Hg	–100 kPa	250	400	0.3-0.7	1.5-3.0	0.5-2.2	0.4-1.5	2.1-4.2
Compound									
–15″ H_2O/ 15″ H_2O	–375mm H_2O/ 375mm H_2O	–3.7 kPa/ 3.7 kPa	20	35	0.15-.75/ 0.15-.75	1.5-2.5/ 1.5-2.5	0.45-2.0/ 0.45-2.0	0.5-1.2/ 0.5-1.2	2.1-3.5/ 2.1-3.5
–30″ H_2O/ 30″ H_2O	–760mm H_2O/ 760mm H_2O	–7.5 kPa/ 7.5 kPa	20	35	0.30-.60/ 0.30-.60	1.5-2.5/ 1.5-2.5	0.45-2.0/ 0.45-2.0	0.5-1.5/ 0.5-1.5	2.1-3.5/ 2.1-3.5
–30″ Hg/ 15 psi	–760mm Hg/ 1.0 kg/cm²	–100 kPa/ 100 kPa	250	400	0.5-1.0/ 0.3-0.7	2.0-3.0/ 0.5-1.5	0.75-2.5/ 0.5-1.0	0.7-1.8/ 0.7-1.4	2.8-4.2/ 0.7-2.1
–30″ Hg/ 30 psi	–760mm Hg/ 2.0 kg/cm²	–100 kPa/ 200 kPa	250	400	1.0-1.5/ 0.3-0.8	3.0-6.0/ 1.0-2.0	1.2-4.5/ 0.7-1.5	1.4-2.4 0.4-1.3	4.2-8.4/ 1.4-2.8
–30″ Hg/ 60 psi	–760mm Hg/ 4.0 kg/cm²	–100 kPa/ 400 kPa	250	400	2.0-3.0/ 0.7-1.5	5.0-9.0/ 3.0-5.0	2.5-7.0/ 1.1-4.0	2.8-4.5 1.0-2.3	7.0-12.0/ 4.2-7.9
Pressure									
10″ H_2O	250mm H_2O	2.5 kPa	20	35	0.2-0.5	1.0-2.0	0.35-1.5	0.4-1.0	1.4-2.8
30″ H_2O	750mm H_2O	7.5 kPa	20	35	0.3-0.6	1.5-2.5	0.45-2.0	0.5-2.0	2.1-3.5
60″ H_2O	1500mm H_2O	15 kPa	20	35	0.5-1.3	1.5-3.5	0.9-2.5	0.7-3.0	2.1-5.0
100″ H_2O	2500mm H_2O	25 kPa	20	35	0.6-1.6	2.5-5.5	1.1-4.0	1.0-4.0	3.5-7.7
150″ H_2O	3750mm H_2O	37 kPa	20	35	1.0-2.5	4.5-8.5	1.7-6.5	2.0-6.0	6.0-12.0
15 psi	1.0 kg/cm²	100 kPa	500	1500	0.1-0.35	0.5-1.5	0.2-1.0	0.4-1.0	0.7-2.1
30 psi	2.0 kg/cm²	200 kPa	500	1500	0.1-0.50	0.5-1.5	0.3-1.0	0.4-1.0	0.7-2.1
60 psi	4.0 kg/cm²	400 kPa	500	1500	0.3-1.0	1.0-3.5	0.7-2.5	0.6-2.0	1.4-5.0
100 psi	7.0 kg/cm²	700 kPa	1000	3000	0.5-1.7	1.5-5.0	1.1-3.5	1.0-4.5	2.1-7.0
200 psi	14 kg/cm²	1400 kPa	1000	3000	1-3	5-13	2-9	3.0-7.5	7.0-18.2
400 psi	28 kg/cm²	2800 kPa	2400	3000	4-7.5	5-24	5.5-15	4.0-11.0	7.0-33.6
600 psi	42 kg/cm²	4200 kPa	2400	3000	4-11	9-30	7-20	5.0-23.0	12.6-42
1000 psi	70 kg/cm²	7000 kPa	12000	18000	7-30	30-110	18-70	15-80	42-154
3000 psi	210 kg/cm²	2100 kPa	12000	18000	15-60	80-235	37-160	30.0-230	112-329

DIFFERENTIAL PRESSURE SWITCHES

Nominal Range[1]			Pressure Ratings		Approximate Deadband[2] Switch Element				
			Static Working Pressure	Proof psi	20, 26, 27	21, 24, 31	50	22	32, 42
30″ H_2O	750mm H_2O	7.5 kPa	5.4	21.6	0.3-0.6	1.5-2.5	0.45-2.0	0.5-2.0	2.1-3.5
60″ H_2O	1500mm H_2O	15 kPa	5.4	21.6	0.5-1.3	1.5-3.5	0.9-2.5	0.7-3.0	2.1-5.0
100″ H_2O	2500mm H_2O	25 kPa	5.4	21.6	0.6-1.6	2.5-5.5	1.1-4.0	1.0-4.0	3.5-7.7
150″ H_2O	3750mm H_2O	37 kPa	5.4	21.6	1.0-2.5	4.5-8.5	1.8-6.5	2.0-6.0	6.3-12.0
15 psid	1.0 kg/cm²	100 kPa	500	2000	0.5-1.0	2.0-5.0	0.7-3.5	0.7-1.4	2.8-7.0
30 psid	2.0 kg/cm²	200 kPa	500	2000	1.0-2.0	2.0-5.0	1.5-3.5	1.4-2.8	2.8-7.0
60 psid	4.0 kg/cm²	400 kPa	500	2000	2.0-4.0	3.0-6.0	3.0-4.5	2.8-5.6	4.2-8.5
100 psid	7.0 kg/cm²	700 kPa	1000	4000	4.0-10.0	11.0-20.0	7.0-15.0	6.0-14.0	16.0-28.0
200 psid	14.0 kg/cm²	1400 kPa	1000	4000	5.0-15.0	12.0-40.0	10.0-26.0	7.0-21.0	17.0-56.0
400 psid	28.0 kg/cm²	2800 kPa	1000	8000	10.0-20.0	20.0-60.0	15.0-40.0	14.0-28.0	28.0-84.0
600 psid	42 0 kg/cm²	4200 kPa	1000	8000	20.0-40.0	80.0-150.0	30.0-115.0	30.0-56.0	112.0-210.0

Values shown are for zero static working pressure.

NOTES:

1 Switches may generally be set between 15% and 100% of nominal range on increasing pressure. Consult factory for applications where setpoints must be lower.

2 All deadbands are given in English units as shown in the nominal range column. Deadbands shown are for switches with Buna N diaphragm. Approximate deadbands for optional diaphragms:

Viton:	Multiply Buna N value by 1.4
Teflon:	Multiply Buna N value by 1.2
Stainless Steel:	Multiply Buna N value by 1.7
Monel:	Multiply Buna N value by 1.7
Dual Switch Element:	Multiply single switch element value by 1.6 for approximate deadband.

DRAFT

B-Series Switches – Pressure, Differential Pressure & Hydraulic

B-SERIES PRESSURE AND DIFFERENTIAL PRESSURE SWITCH MODEL NUMBER:

To specify the exact switch desired, select entries from appropriate tables as shown in example below.

1		2		3	4			5
B	4	2	0	B	X	P	K	600 PSI

1 – ENCLOSURE	
B4	Pressure switch, Type 400, watertight enclosure meets NEMA 3, 4, 4X, 13 and IP66 requirements.
B7	Pressure switch, Type 700, explosion-proof enclosure meets Div. 1 & 2, NEMA 7, 9 and IP66 requirements.
D4	Differential pressure switch, Type 400, water-tight enclosure meets NEMA 3, 4, 4X, 13 and IP66 requirements.
D7	Differential pressure switch, Type 700, explosion-proof enclosure meets Div. 1 & 2, NEMA 7, 9 and IP66 requirements.

3 – ACTUATOR SEAL					
		Range			
Code and Material	**Process Temperature Limits °F(9)**	**Vac. ˝ H_2O**	**0-600 psi**	**1000 psi**	**3000 psi**
B – Buna-N	0 to 150	•	•	•	•
V – Viton	20 to 300	•	•	•	
T – Teflon	0 to 150	•	•	•	•
S – 316L(8)	0 to 300		•	•	
P – Monel(8)	0 to 300		•	•	

4 – OPTIONS	5 – RANGE
Use table from page 5	Select from table on page 2

NOTES:

1 Standard switch.
2 Not available with psid ranges.
3 Dual switches are 2 SPDT snap-action switches, not independently adjustable.
4 Wires cannot be terminated inside B400 switch enclosure.
5 Not available with type 700 enclosure.
6 Estimated dc. rating, 2.5A, 28 Vdc (not UL listed).
7 Estimated dc rating, 0.4A, 120 Vdc (not UL listed).
8 Available on pressure only.
9 Ambient operating temperature limits –20 to 150°F, all styles, setpoint shift of ±1% of range per 50°F temperature change is normal. Switches are calibrated at 70°F reference.

2 – SWITCH ELEMENT SELECTION		
Order Code	**Switch Elements UL/CSA Listed SPDT**	
20(7)	Narrow deadband ac	15A, 125/250 Vac
21	Ammonia service	5A, 125/250 Vac
22(6)	Hermetically sealed switch, narrow deadband	5A, 125/250 Vac
23	Heavy duty ac	22A, 125/250 Vac
24(1)	General purpose	15A, 125/250/480 Vac ½A, 125 Vdc ¼A, 250 Vdc; 6A, 30 Vdc
25(2)	Heavy duty dc	10A, 125 Vac or dc, ⅛ HP, 125 Vac or dc
26(7)	Sealed environment proof	15A, 125/250 Vac
27	High temperature 300°F	15A, 125/250 Vac
28(5)	Manual reset trip on increasing	15A, 125/250 Vac
29(5)	Manual reset trip on decreasing	15A, 125/250 Vac
31	Low level (gold) contacts	1A, 125 Vac
32	Hermetically sealed switch, general purpose	11A, 125/250 Vac 5A, 30 Vdc
42	Hermetically sealed switch, gold contacts	1A, 125 Vac
50	Variable deadband	15A, 125/250 Vac
UL/CSA Listed Dual (2 SPDT)		
61(7)	Dual narrow deadband	15A, 125/250 Vac
62(7)	Dual sealed environment proof	15A, 125/250 Vac
63	Dual high temp. 300°F	15A, 125/250 Vac
64	Dual general purpose	15A, 125/250/480 Vac ½A, 125 Vdc ¼A, 250 Vdc
65	Dual ammonia service	5A, 125/250 Vac
67(4,6)	Dual hermetically sealed switch, narrow deadband	5A, 125/250 Vac
68(4)	Dual hermetically sealed switch, general purpose	11A, 125/250 Vac 5A, 30 Vdc
70	Dual low level gold contacts	1A, 125 Vac
71(4)	Dual hermetically sealed switch, gold contacts	1A, 125 Vac

DRAFT

B-Series Switches – Pressure, Differential Pressure & Hydraulic

OPTIONAL FEATURES AND ACCESSORIES

B-SERIES SWITCH OPTIONS							
		Appicable Switch Series					
		Pressure		Differential Pressure		H	
Code	Description	(psi)	(in. H_2O)	(psi)	(in. H_2O)		Notes
XBP	Wall Mounting Bracket in. H_2O		•		•		
XBX	½″ Male NPT Bushing					•	
XCH	Chained Cover	•	•	•	•	•	
XC8	CSA Approval	•	•	•	•		10
XCN	ATEX Directive 94/9/EC	•	•	•	•		15
XD2	Dual Seal Rating (700 Series only)	•			•		
XFM	FM Approval – Single Element	•	•	•	•		14
	FM Approval – Dual Element	•	•	•	•		14
XFP	Fungus Proofing	•	•	•	•	•	
XFS	Factory Adjusted Setpoint	•	•	•	•	•	2
XG3	Belleville Actuator	•					13,14
XG5	UL Limit Control to 150″ H_2O				•		1, 14
XG6	UL Limit Control to 600 psi	•					1, 14
XG7	Secondary Chamber with Vent	•					11
XG8	Steam Limit Control to 300 psi	•					7
XG9	Fire Safe Welded Actuator	•					7
XHS	High Static Differential Pressure			•			12
XHX	High Pressure, 40 psi, (static) d/p only 160 psi (proof) d/p only 100 psi (proof) pressure only (″ H_2O)		•		•		
XJK	Left Conduit Connection	•	•	•	•	•	8
XJL	¾″ to ½″ Reducing Bushing	•	•	•	•	•	
XJM	Metric Electrical Conduit Connection M20 x 1.5	•	•	•	•	•	
XK3	Terminal Block (700 Series only)	•	•	•	•		6
XLE	6 foot Leads on the Micro Switch	•	•	•	•	•	
XNH	Tagging Stainless Steel	•	•	•	•	•	
XNN	Paper Tag	•	•	•	•	•	
XPK	Pilot Light(s) Top Mounted	•	•	•	•	•	4
XPM	¾″ Sealed Conduit Connection with 16″ Lead Wires	•	•	•	•	•	
XTA	316 Stainless Steel Pressure Connection for in. H_2O Range		•		•		
XTM	2″ Pipe Mounting Bracket	•	•	•	•		
XUD	316 Stainless Steel Pressure Conn.			•			
XUX	IECEx Rating (700 Series only)	•	•	•	•	•	
X06	Pressure Connection: ½ NPT Male, ¼ NPT Female 316 Stainless Steel (Combination)	•	•	•	•		5
X07	½ NPTF Press. Conn., 316 SS	•	•	•	•		9
X6B	Cleaned for Oxygen Service	•	•	•			3
	Diaphragm Seal	•	•	•	•		

NOTES:

1 Buna N and Viton diaphragm.
2 Advise static or working pressure for differential pressure switches.
3 Buna N cannot be cleaned for oxygen service.
4 N/A on 700 Series.
5 Standard with 1000 and 3000 psi ranges. Bottom connection only on DP in H_2O ranges.
6 Terminal Blocks standard with 700 dual switches.
7 Stainless steel diaphragm only.
8 Standard on 700 Series. N/A with DPDT element on 400 Series.
9 N/A with Monel diaphragm.
10 Standard on 400 Series.
11 SS diaphragm required. Teflon diaphragm is the backup. NEMA 7 only.
12 Buna N and Viton diaphragm – 15#D & 30#D only.
13 24, 32, 64 or 68 element only.
14 N/A on all combinations.
15 700 Series only.

Ex II 2GD
Ex d IIC T6 Gb
Ex t IIIC T85° C Db IP 6X
(Ta = –20°C to +60°C)

DRAFT

B-Series Switches – Pressure, Differential Pressure & Hydraulic

Dimensions – 400 Series

Pressure switch – psi ranges

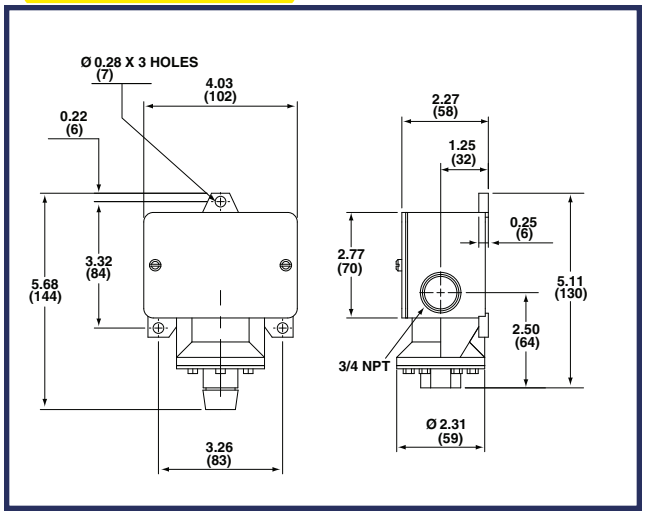

Pressure switch – inches of water ranges

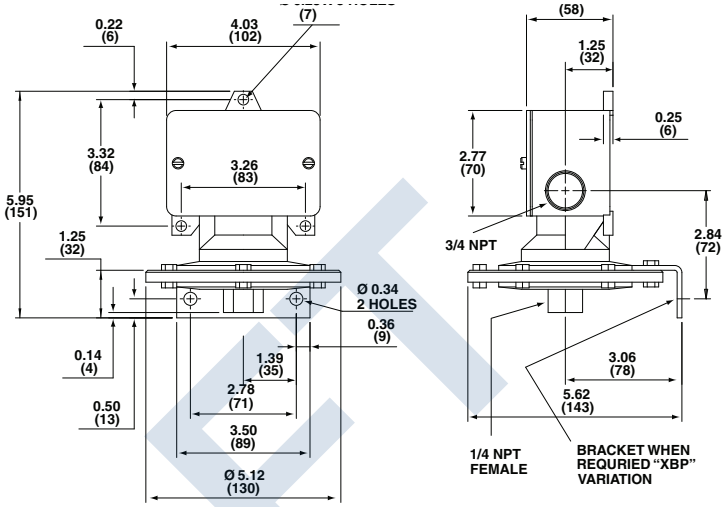

Differential pressure switch – psi differential ranges

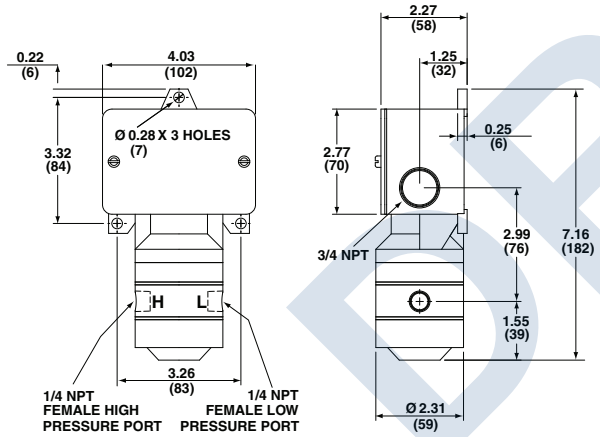

Differential pressure switch – inches of water ranges

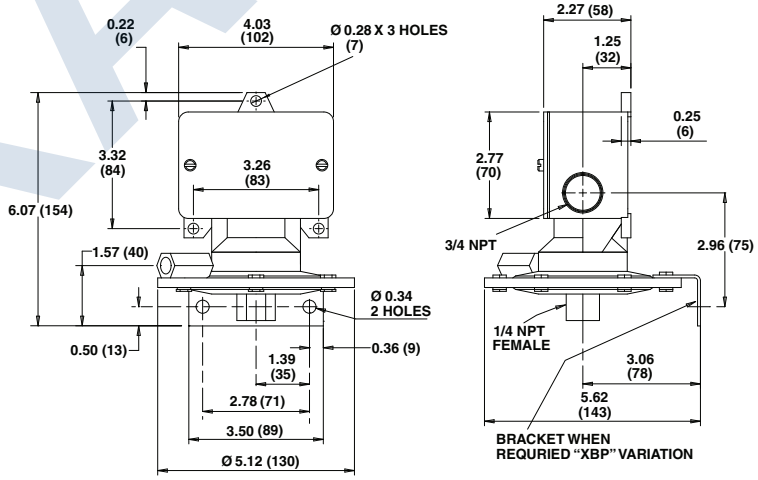

DRAFT

NOTICE:
THIS DRAWING AND ALL INFORMATION HEREIN IS THE PROPERTY OF AERZEN USA CORP. AND ITS SUBSIDIARIES AND SHALL NOT BE REPRODUCED BY ANY MEANS IN WHOLE OR IN PART OR USED AS THE BASIS FOR MANUFACTURE WITHOUT WRITTEN PERMISSION.

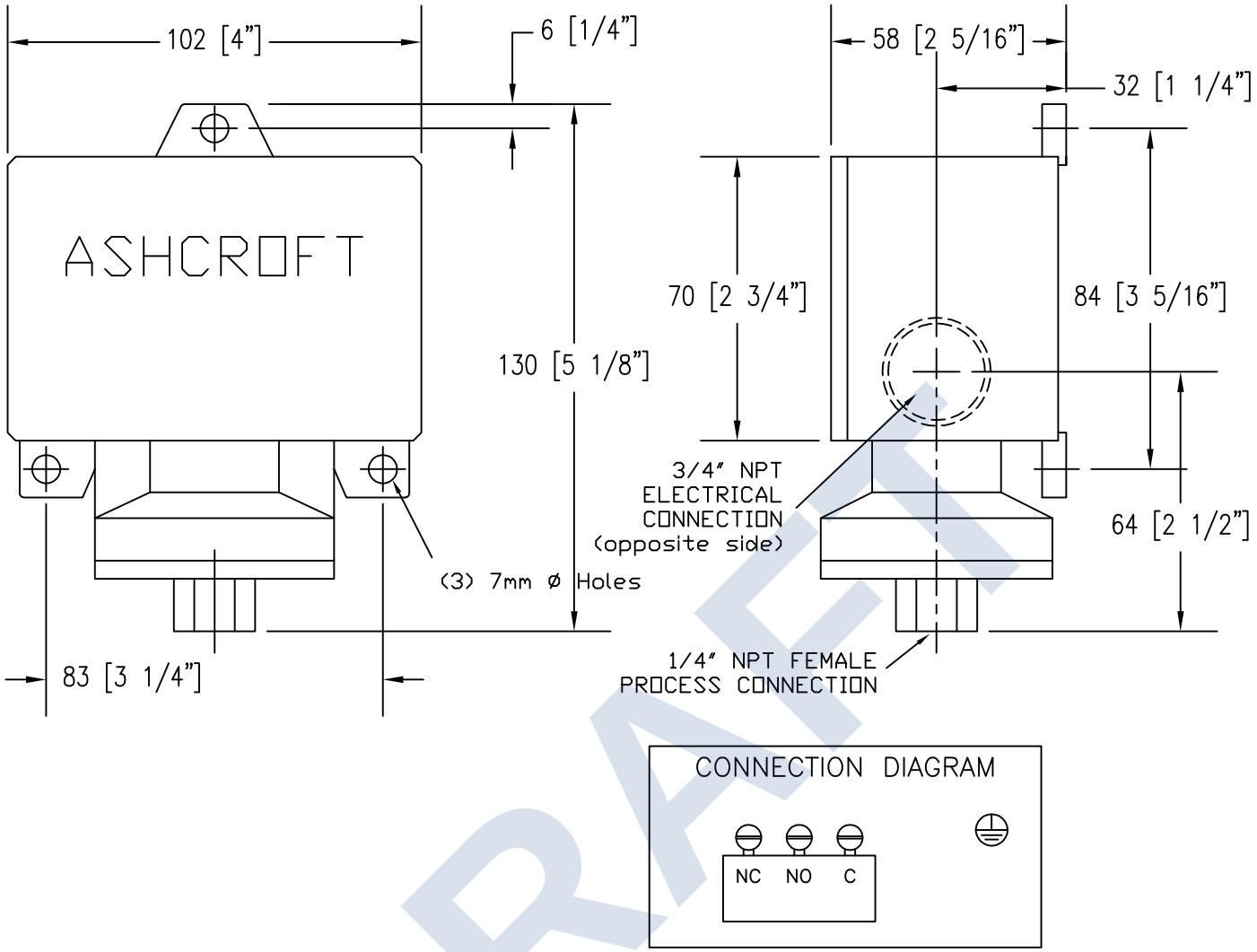

DRAFT

ASHCROFT TYPE B4–24–V–XRN–XJK–15 PSI

B4 = Type 400 Pressure Switch in NEMA 4X enclosure
24 = Single general purpose 15A, 110–480V switch
SPDT snap–acting,
V = Viton Actuator Seal (good for 20 to 300°F)
XRN = Internal Reference Scale
XJK = Left side conduit connection
15 = Operating Range (0 to 15 PSIG)

AERZEN
Aerzen USA Corp.
645 SANDS CT, COATESVILLE PA 19320
(610) 380–0244 PH, (610) 380–0278 FX
www.aerzenusa.com

DISCHARGE PRESSURE SWITCH

Date	Doc #	Page
May 2002	32–0021–02 revision –	1 of 1

Für diese Zeichnung behalten wir uns alle Eigentums- und Urheberrechte vor.
Sie bleibt unser geistiges Eigentum und darf ohne unsere ausdrückliche
vorherige schriftliche Genehmigung weder vervielfältigt, verwendet noch
Dritten zugänglich gemacht werden.

For this drawing we reserve all proprietary rights and copyrights.
It remains our intellectual property and may not be copied, used or disclosed
to third parties without our prior express approval in writing.

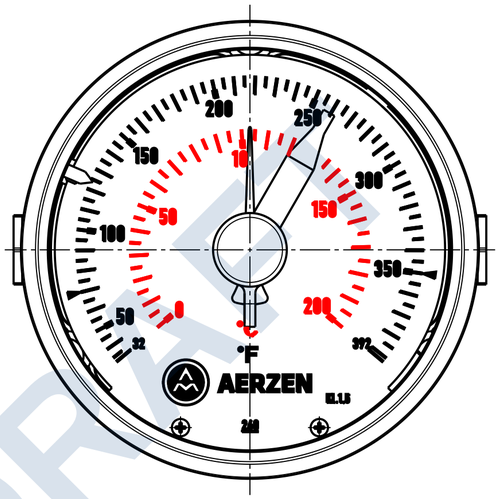

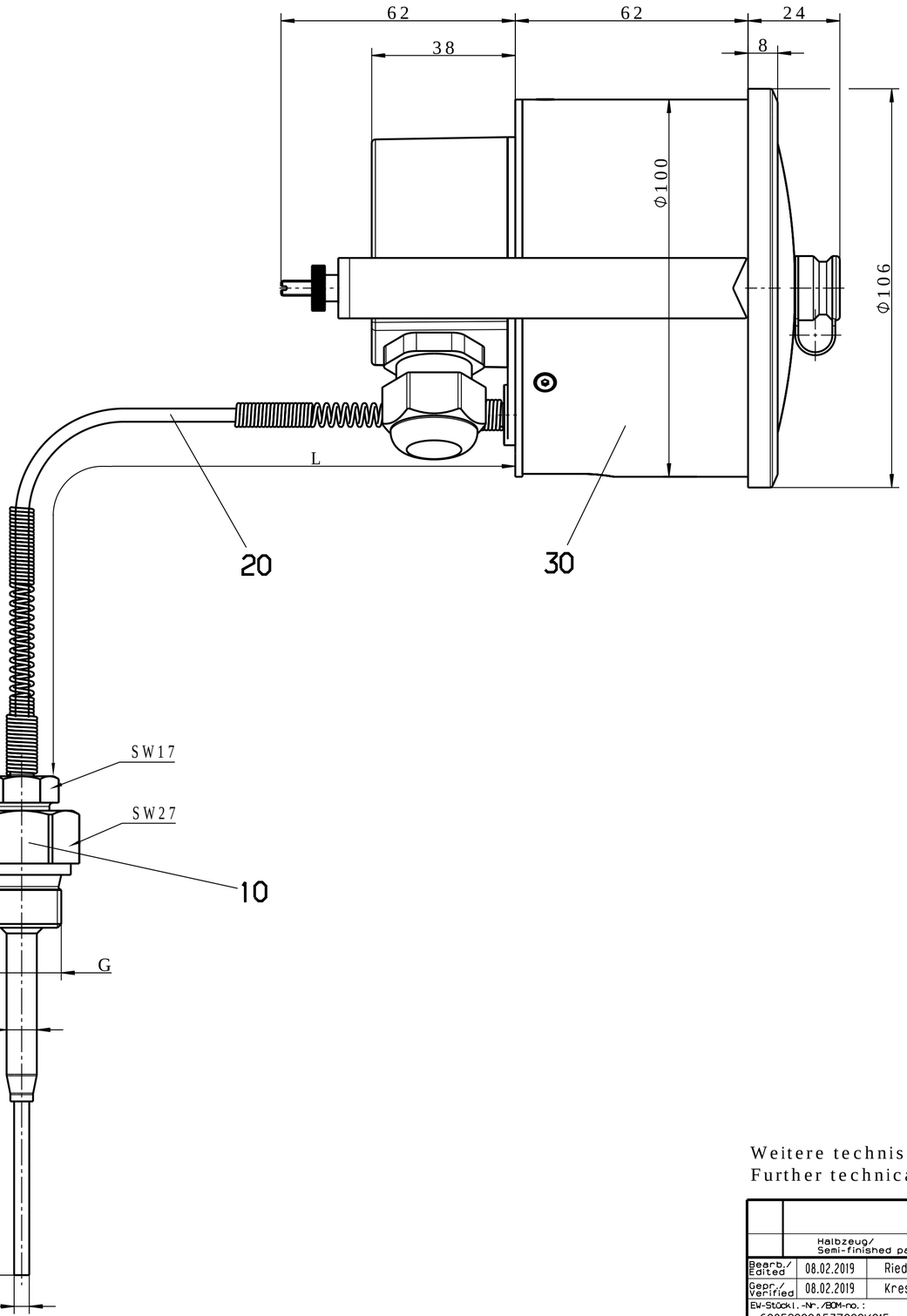

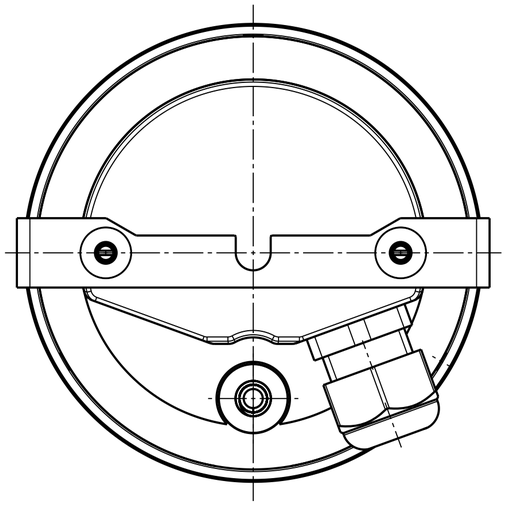

Typenschlüssel/ type code: 608520/2110-832-23-4000-876-8-104-26-46-106-20/426,430,477,522

Pos.	Pos.	001
Typ	type	2110
AB [°C]	display range	0...+200
AB-Einheit	display range oneness	°F/°C
Fl Typ	capillary typ	-
Werkst. Fühler	material bulb	CrNi
L [mm]	L	4000
L_2 [mm]	L_2	-
Anschluß	connection	SH 10
G Gewinde	treath	G1/2
Werkst. Anschluß	material connection	CuZn
d [mm]	d	4
D [mm]	D	8
S [mm]	S	106
Schaltausgang	switching output	SA20
TZ	extra code	426,430,477,522
Laser Nr	laser No.	2463
Weitere Angaben n. Typenblatt	more information at datasheet	60.8520
Bedienungsanleitung	user manual	B60.8520
Grundtyp	type	85.364.00.00
TN	partnumber	00717805

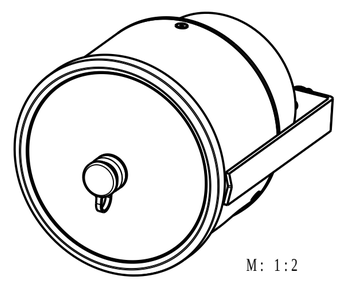

M: 1:2

Weitere technische Daten nach Typenblatt 60.8520
Further technical details as per data sheet 60.8520

Halbzeug/ Semi-finished part	Werkstoff-Nr./ Material-no.	DIN-Kurzbezeichnung/ DIN-code	Oberfläche/ Surface

Bearb./ Edited	08.02.2019	Riedel	
Gepr./ Verified	08.02.2019	Kress	
EW-Stückl.-Nr./BOM-no.: 60852000A53Z000K015 00718107			

Zeigerkontakt-thermometer

60852000A00Z001 K015
Zeichnungs-Nr./Drawing-no.

Vers. Rev.	Änderung/ Modification	Datum/ Date	Name
02	EW-70	21.02.2019	Riedel
01	EW-70	14.02.2019	Riedel
00	EW-70	08.02.2019	Riedel

Ersatz für Nr./ Replace

JUMO GmbH & Co. KG Fulda Germany

Maße ohne Toleranzangabe/ Tol. unless otherwise specified: DIN ISO 2768-m

Maßstab/Scale: 1:1

Teile-Nr./Part-no.

Größe/ Size: A2

Blatt/ Sheet: 01/01

Für diese Zeichnung behalten wir uns alle Eigentums- und Urheberrechte vor.
Sie bleibt unser geistiges Eigentum und darf ohne unsere ausdrückliche
vorherige schriftliche Genehmigung weder vervielfältigt, verwendet noch
Dritten zugänglich gemacht werden.

For this drawing we reserve all proprietary rights and copyrights.
It remains our intellectual property and may not be copied, used or disclosed
to third parties without our prior express approval in writing.

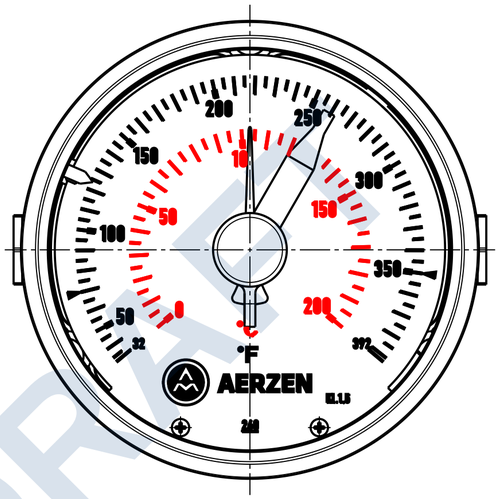

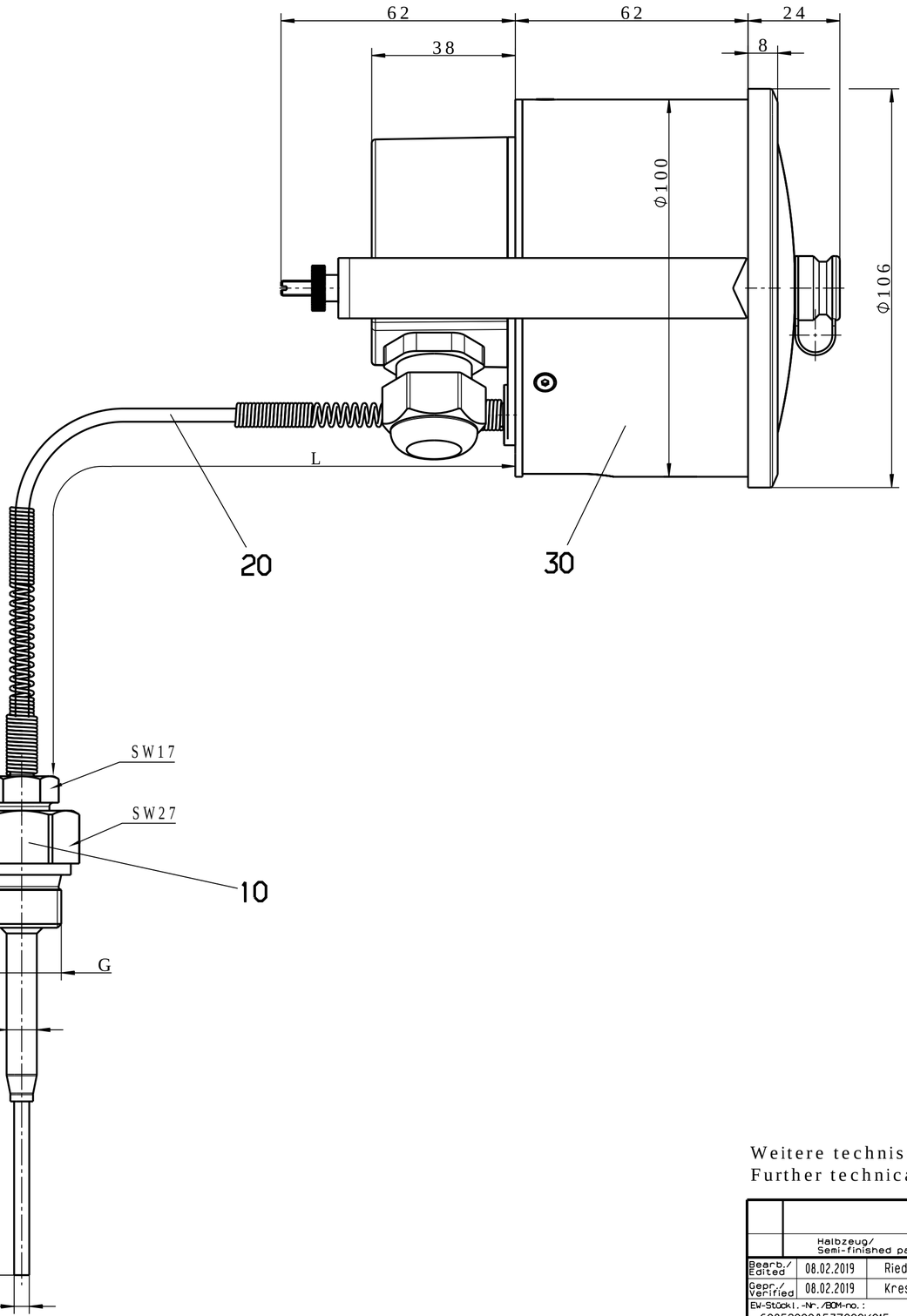

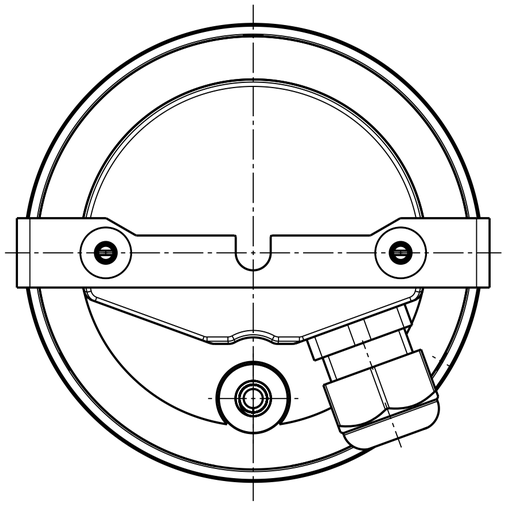

Typenschlüssel/ type code: 608520/2110-832-23-4000-876-8-104-26-46-106-20/426,430,477,522

Pos.	Pos.	001
Typ	type	2110
AB [°C]	display range	0...+200
AB-Einheit	display range oneness	°F/°C
Fl Typ	capillary typ	-
Werkst. Fühler	material bulb	CrNi
L [mm]	L	4000
L_2 [mm]	L_2	-
Anschluß	connection	SH 10
G Gewinde	treath	G1/2
Werkst. Anschluß	material connection	CuZn
d [mm]	d	4
D [mm]	D	8
S [mm]	S	106
Schaltausgang	switching output	SA20
TZ	extra code	426,430,477,522
Laser Nr	laser No.	2463
Weitere Angaben n. Typenblatt	more information at datasheet	60.8520
Bedienungsanleitung	user manual	B60.8520
Grundtyp	type	85.364.00.00
TN	partnumber	00717805

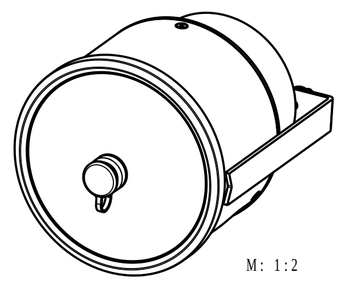

M: 1:2

Weitere technische Daten nach Typenblatt 60.8520
Further technical details as per data sheet 60.8520

Halbzeug/ Semi-finished part	Werkstoff-Nr./ Material-no.	DIN-Kurzbezeichnung/ DIN-code	Oberfläche/ Surface

Bearb./ Edited	08.02.2019	Riedel	
Gepr./ Verified	08.02.2019	Kress	
EW-Stückl.-Nr./BOM-no.: 60852000A53Z000K015 00718107			

Zeigerkontakt-thermometer

60852000A00Z001 K015
Zeichnungs-Nr./Drawing-no.

Vers. Rev.	Änderung/ Modification	Datum/ Date	Name
02	EW-70	21.02.2019	Riedel
01	EW-70	14.02.2019	Riedel
00	EW-70	08.02.2019	Riedel

Ersatz für Nr./ Replace

JUMO GmbH & Co. KG Fulda Germany

Maße ohne Toleranzangabe/ Tol. unless otherwise specified: DIN ISO 2768-m

Maßstab/Scale: 1:1

Teile-Nr./Part-no.

Größe/ Size: A2

Blatt/ Sheet: 01/01

JUMO GmbH & Co. KG
Delivery address: Mackenrodtstraße 14
36039 Fulda, Germany
Postal address: 36035 Fulda, Germany
Phone: +49 661 6003-0
Fax: +49 661 6003-607
E-mail: mail@jumo.net
Internet: www.jumo.net

JUMO Instrument Co. Ltd.
JUMO House
Temple Bank, Riverway
Harlow, Essex CM20 2DY, UK
Phone: +44 1279 635533
Fax: +44 1279 635262
E-mail: sales@jumo.co.uk
Internet: www.jumo.co.uk

JUMO Process Control, Inc.
6733 Myers Road
East Syracuse, NY 13057, USA
Phone: 315-437-5866
1-800-554-5866
Fax: 315-437-5860
E-mail: info.us@jumo.net
Internet: www.jumousa.com

Contact dial thermometer

Particularities

- Temperature controller with actual value display as panel-mounting or add-on device
- Stainless steel case with bayonet lock
- Class 1.5
- Protection class IP 53
- Case sizes ∅: 60 mm, 80 mm and 100 mm
  Front frame: 72x72 mm and 96x96 mm



Type 608520/2380



Type 608550/1080

Brief description

Contact dial thermometer are devices with actual value display for temperature measurement, control and monitoring and can be used universally.

The temperature depending volume change in a measuring system filled with liquid or the temperature depending pressure change in a measuring system filled with gas is converted to a rotational movement of the actual value indicator by a bourdon tube, no transmission gear is required. The microswitch is actuated by the rotational movement of the indicator shaft via a tap system.

DRAFT

Technical Data

Case and front frame	Stainless steel (1.4301)
Cover cap	Plastic (PA6), gray, UV stabilized
Protection type	IP 51 as per DIN EN 60529 (IP 53 with extra code 401)
Front pane	Acryl glass (PMMA)
Chassis	Aluminum (3.2582.05)
Scale	white, labeled in black
Display	Class 1.5 similar to DIN EN 13190
Anti-kink spring	for devices with capillary on the case and the temperature probe
Set point value setting	by set point controller in the front window
Display correction	on the rear
Limit value temperatures	for transport and storage -30°C...+70°C (for display range -40...+40°C up to max. 50°C; -30...+50°C up to max. 60°C)
Rated position	any

JUMO GmbH & Co. KG
Delivery address: Mackenrodtstraße 14
36039 Fulda, Germany
Postal address: 36035 Fulda, Germany
Phone: +49 661 6003-0
Fax: +49 661 6003-607
E-mail: mail@jumo.net
Internet: www.jumo.net

JUMO Instrument Co. Ltd.
JUMO House
Temple Bank, Riverway
Harlow, Essex CM20 2DY, UK
Phone: +44 1279 635533
Fax: +44 1279 635262
E-mail: sales@jumo.co.uk
Internet: www.jumo.co.uk

JUMO Process Control, Inc.
6733 Myers Road
East Syracuse, NY 13057, USA
Phone: 315-437-5866
1-800-554-5866
Fax: 315-437-5860
E-mail: info.us@jumo.net
Internet: www.jumousa.com

Technical Data

Display range (AB)	Display range in °C	Measuring range in °C	Tolerance in °C
469	-40...+40	-30...+30	1.5
643	-20...+120	-20...+120	3.0
807	0...+60	+10...+50	1.5
814	0...+100	+10...+90	1.5
818	0...+120	+20...+100	3.0
832	0...+200	+20...+180	3.0
840	0...+300	+30...+270	6.0
848	0...+400	+50...+350	6.0
854	0...+500	+50...+450	8.0
848	0...+600	+100...+500	10.0

	Liquid filling	**Gas filling**
Measuring system	Display range (AB) ≤ 350°C	Display range (AB) ÷ 400°C
Time behavior	approx. 12 s, measured in water, with a probe Ø of 6 mm made of Cu.	approx. 4 s, measured in oil, with a probe Ø of 10 mm made of stainless steel.
Ambient temperature influence effect	In % of the display range (referring to the deviation from the reference value +23°C)	
on case	0.15% of the display range per K ambient temperature change	0.05% of the display range per K ambient temperature change
on capillary (per m)	0.03% of the display range per K ambient temperature change	no influence
	Higher ambient temperature – higher temperature display – lower switching point	
Anti-kink spring	for devices with capillary on the case and the temperature probe	
Set point value setting	by set point controller in the front window	
Display correction	on the rear	
Limit value temperatures	for transport and storage -30°C...+70°C (for display range -40...+40°C up to max. 50°C; -30...+50°C up to max. 60°C)	
Rated position	any	

	standard	**Extra code (TZ) 650**
Electric contact		
Type of contact	Single-pole microswitch with mechanically actuate change-over contact	
Contact rating	AC 230V, +10/-15%, 48...63Hz, cos φ = 1 (0.6)	
	5 (1.5) A	10 (3) A
Hysteresis	approx. 1.5% of the display range	1.5 to 3% of the display range
Switching point accuracy	± 0.5% of the display range referring to the switch-off point with rising temperature	
Switching reliability	To ensure a high switching reliability, we recommend a minimum voltage of 24 V and a minimum current of 100 mA	

	standard	Design 02 and 22	**Design 10, 23 and TZ 426**	**Case Ø 60 mm**
Electrical connection	Screw-type terminals, connection cross section up to 2.5 mm^2	Connection cable 0.5 m with screw-type terminals	Cover cap with cable screw-connection, suitable for cable Ø from 6.5 to 13 mm	Cover cap with cable screw-connection, suitable for cable Ø from 8 to 10 mm

DRAFT

JUMO GmbH & Co. KG
Delivery address: Mackenrodtstraße 14
36039 Fulda, Germany
Postal address: 36035 Fulda, Germany
Phone: +49 661 6003-0
Fax: +49 661 6003-607
E-mail: mail@jumo.net
Internet: www.jumo.net

JUMO Instrument Co. Ltd.
JUMO House
Temple Bank, Riverway
Harlow, Essex CM20 2DY, UK
Phone: +44 1279 635533
Fax: +44 1279 635262
E-mail: sales@jumo.co.uk
Internet: www.jumo.co.uk

JUMO Process Control, Inc.
6733 Myers Road
East Syracuse, NY 13057, USA
Phone: 315-437-5866
1-800-554-5866
Fax: 315-437-5860
E-mail: info.us@jumo.net
Internet: www.jumousa.com

Note:

Physical and toxic features of the expansion means, which could emerge in the event of a measuring system break.

Control range with scale limit value	Hazardous reactions	Fire and explosion hazard		hazardous to waters	Information about toxicology		
		Ignition temperature	Explosion limit		irritant	dangerous to health	toxic
< +200 °C	no	+ 355 °C	0.6 - 8 V%	yes	yes	[a]	no
≥ 200 °C ≤ +350 °C		+ 490 °C	- -	yes	yes	[a]	
> 350 °C ≤ +500 °C		no	no	no	no	no	

[a] There is currently no statement by the health authority concerning hazards to health in the event of short-term exposure and low concentration, e.g. measuring system break.

DRAFT

JUMO GmbH & Co. KG
Delivery address: Mackenrodtstraße 14
36039 Fulda, Germany
Postal address: 36035 Fulda, Germany
Phone: +49 661 6003-0
Fax: +49 661 6003-607
E-mail: mail@jumo.net
Internet: www.jumo.net

JUMO Instrument Co. Ltd.
JUMO House
Temple Bank, Riverway
Harlow, Essex CM20 2DY, UK
Phone: +44 1279 635533
Fax: +44 1279 635262
E-mail: sales@jumo.co.uk
Internet: www.jumo.co.uk

JUMO Process Control, Inc.
6733 Myers Road
East Syracuse, NY 13057, USA
Phone: 315-437-5866
1-800-554-5866
Fax: 315-437-5860
E-mail: info.us@jumo.net
Internet: www.jumousa.com

Dimensions

Type:
608520/0280

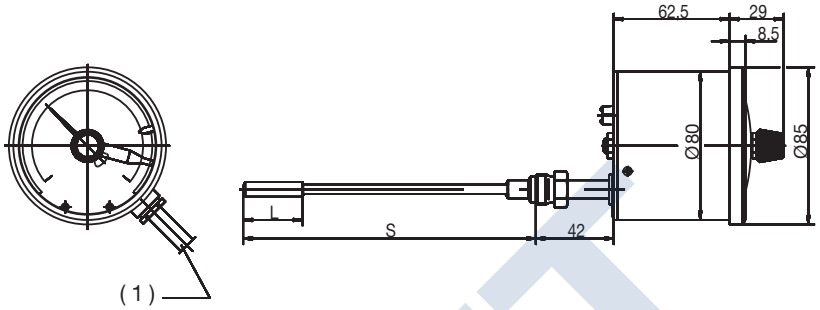

(1) Connection line 0.6 m long with screw terminal

Type:
608520/0210

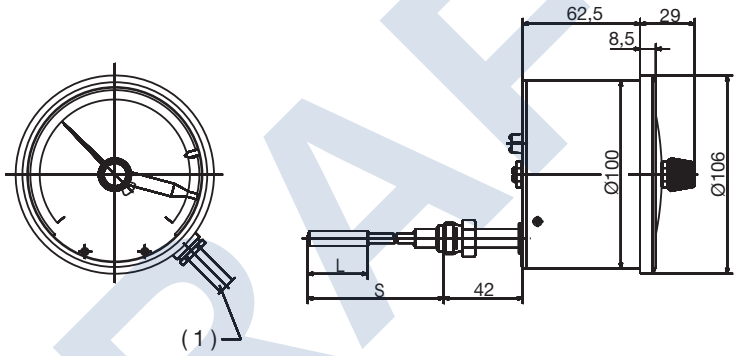

(1) Connection line 0.6 m long with screw terminal

Type:
608520/1080

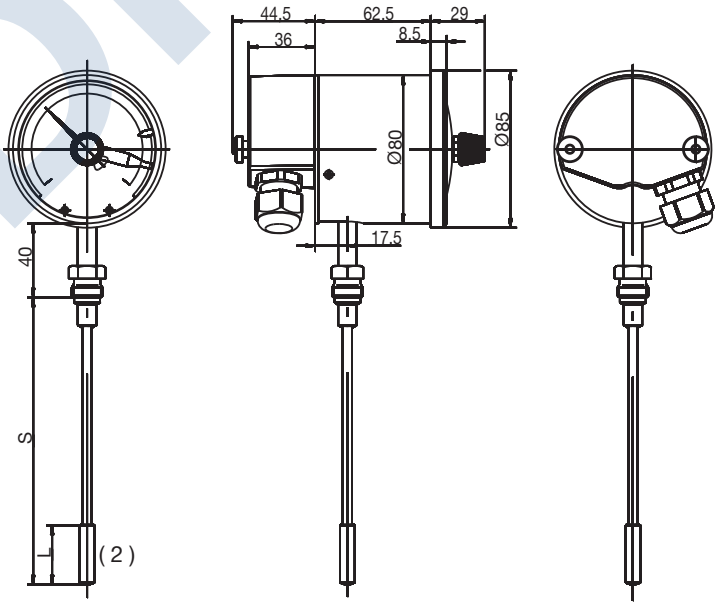

(2) active probe dimension

DRAFT

JUMO GmbH & Co. KG
Delivery address: Mackenrodtstraße 14
36039 Fulda, Germany
Postal address: 36035 Fulda, Germany
Phone: +49 661 6003-0
Fax: +49 661 6003-607
E-mail: mail@jumo.net
Internet: www.jumo.net

JUMO Instrument Co. Ltd.
JUMO House
Temple Bank, Riverway
Harlow, Essex CM20 2DY, UK
Phone: +44 1279 635533
Fax: +44 1279 635262
E-mail: sales@jumo.co.uk
Internet: www.jumo.co.uk

JUMO Process Control, Inc.
6733 Myers Road
East Syracuse, NY 13057, USA
Phone: 315-437-5866
1-800-554-5866
Fax: 315-437-5860
E-mail: info.us@jumo.net
Internet: www.jumousa.com

Type:
608520/1010

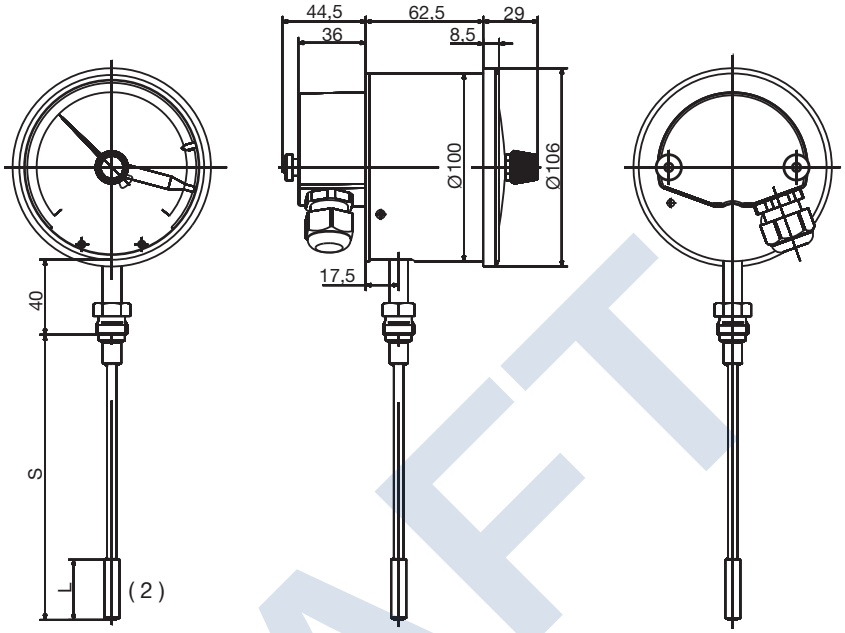

(2) active probe dimension

Type:
608520/2060

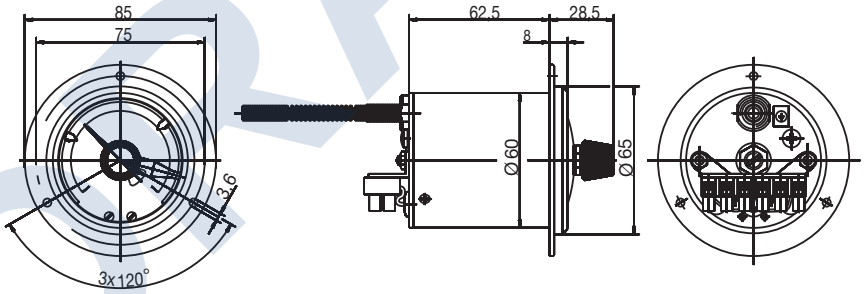

Panel cut-out for case
Ø 60 mm = $62^{+0,5}_{0}$mm

Type:
608520/2080

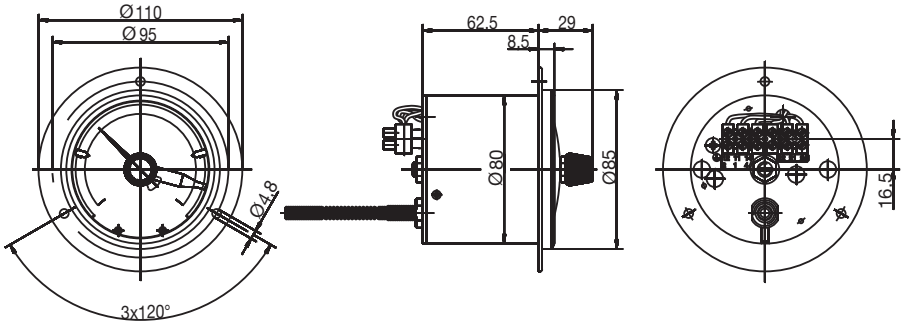

Panel cut-out for case
Ø 80 mm = $62^{+0,5}_{0}$mm

DRAFT

JUMO GmbH & Co. KG
Delivery address: Mackenrodtstraße 14
36039 Fulda, Germany
Postal address: 36035 Fulda, Germany
Phone: +49 661 6003-0
Fax: +49 661 6003-607
E-mail: mail@jumo.net
Internet: www.jumo.net

JUMO Instrument Co. Ltd.
JUMO House
Temple Bank, Riverway
Harlow, Essex CM20 2DY, UK
Phone: +44 1279 635533
Fax: +44 1279 635262
E-mail: sales@jumo.co.uk
Internet: www.jumo.co.uk

JUMO Process Control, Inc.
6733 Myers Road
East Syracuse, NY 13057, USA
Phone: 315-437-5866
1-800-554-5866
Fax: 315-437-5860
E-mail: info.us@jumo.net
Internet: www.jumousa.com

Type:
608520/2010

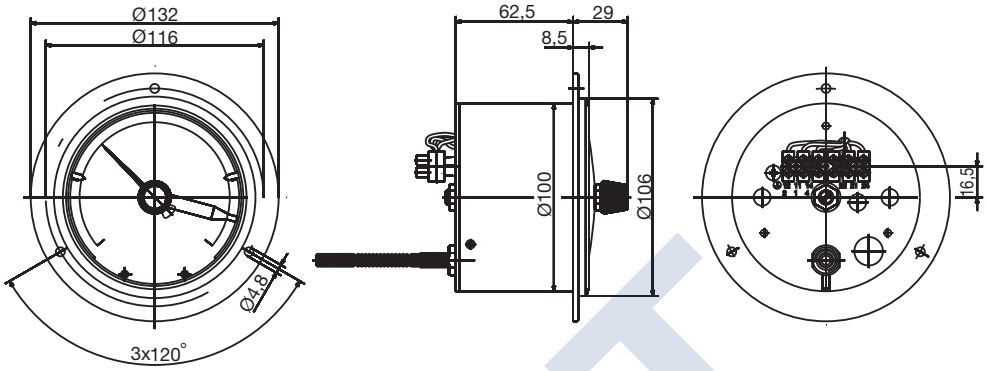

Panel cut-out for case
Ø 100 mm = $100^{+0,5}_{0}$mm

Type:
608520/2160

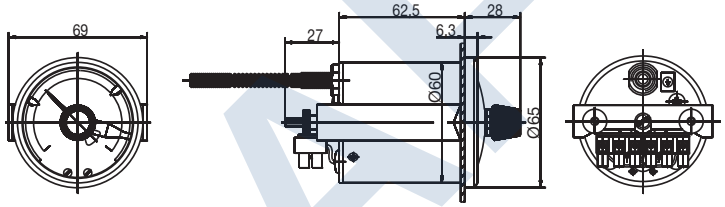

Panel cut-out for case
Ø 60 mm = $62^{+0,5}_{0}$mm

Type:
608520/2180

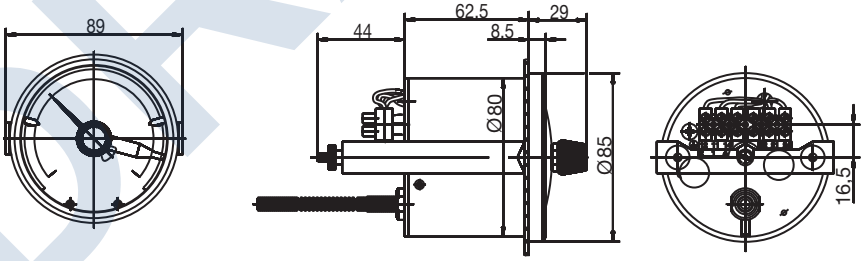

Panel cut-out for case
Ø 80 mm = $62^{+0,5}_{0}$mm

Type:
608520/2110

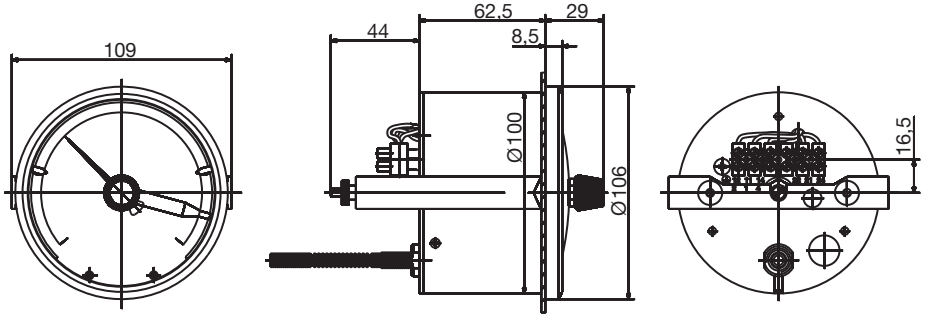

Panel cut-out for case
Ø 100 mm = $100^{+0,5}_{0}$mm

DRAFT

JUMO GmbH & Co. KG
Delivery address: Mackenrodtstraße 14
36039 Fulda, Germany
Postal address: 36035 Fulda, Germany
Phone: +49 661 6003-0
Fax: +49 661 6003-607
E-mail: mail@jumo.net
Internet: www.jumo.net

JUMO Instrument Co. Ltd.
JUMO House
Temple Bank, Riverway
Harlow, Essex CM20 2DY, UK
Phone: +44 1279 635533
Fax: +44 1279 635262
E-mail: sales@jumo.co.uk
Internet: www.jumo.co.uk

JUMO Process Control, Inc.
6733 Myers Road
East Syracuse, NY 13057, USA
Phone: 315-437-5866
1-800-554-5866
Fax: 315-437-5860
E-mail: info.us@jumo.net
Internet: www.jumousa.com

Type:
608520/2280

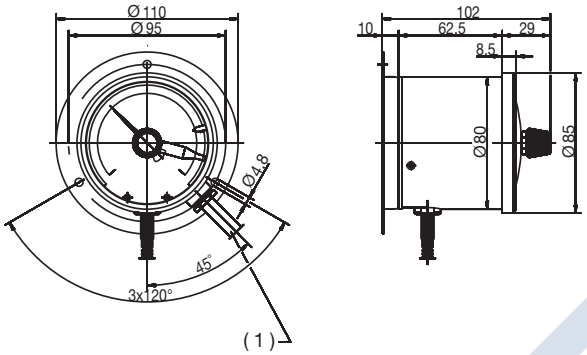

(1) Connection line 0.6 m long with screw terminal

Type:
608520/2210

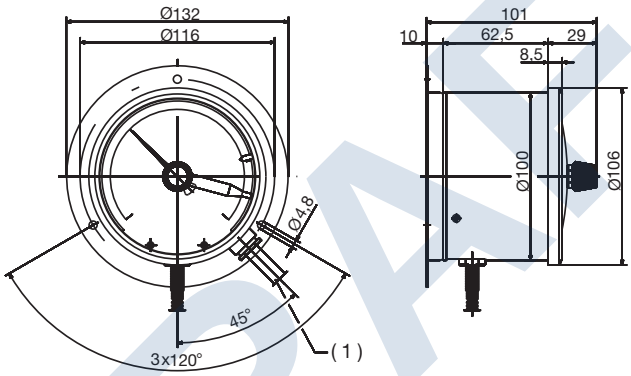

(1) Connection line 0.6 m long with screw terminal

Type:
608520/2380

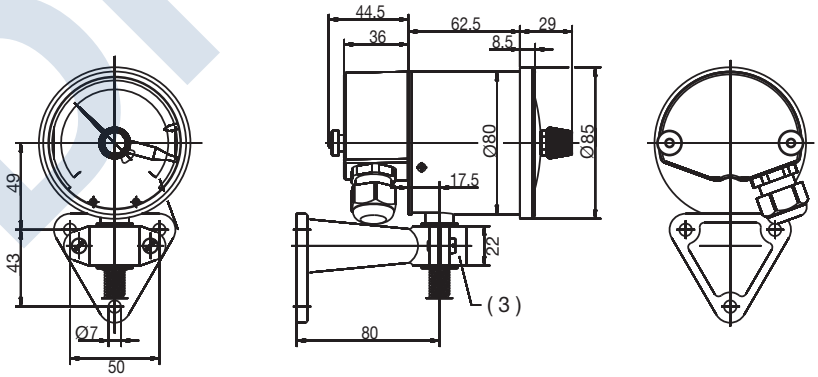

(3) Spigot Ø 20 mm

DRAFT

JUMO GmbH & Co. KG
Delivery address: Mackenrodtstraße 14
36039 Fulda, Germany
Postal address: 36035 Fulda, Germany
Phone: +49 661 6003-0
Fax: +49 661 6003-607
E-mail: mail@jumo.net
Internet: www.jumo.net

JUMO Instrument Co. Ltd.
JUMO House
Temple Bank, Riverway
Harlow, Essex CM20 2DY, UK
Phone: +44 1279 635533
Fax: +44 1279 635262
E-mail: sales@jumo.co.uk
Internet: www.jumo.co.uk

JUMO Process Control, Inc.
6733 Myers Road
East Syracuse, NY 13057, USA
Phone: 315-437-5866
1-800-554-5866
Fax: 315-437-5860
E-mail: info.us@jumo.net
Internet: www.jumousa.com

Type:
608520/2310

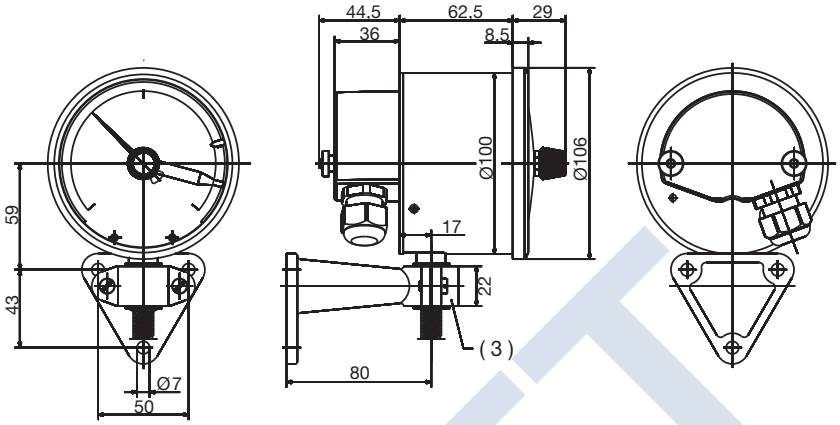

(3) Spigot Ø 20 mm

Type:
608520/2572

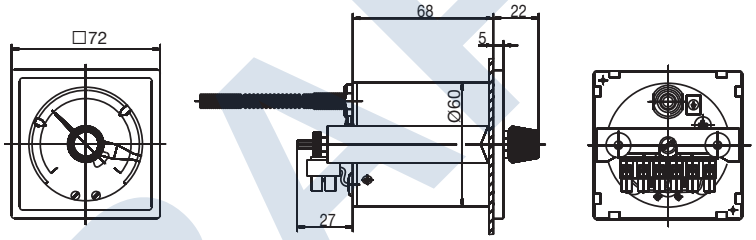

Panel cut-out for front frame
72 x 72 mm = Ø $62^{+0,5}$mm

Type:
608520/2596

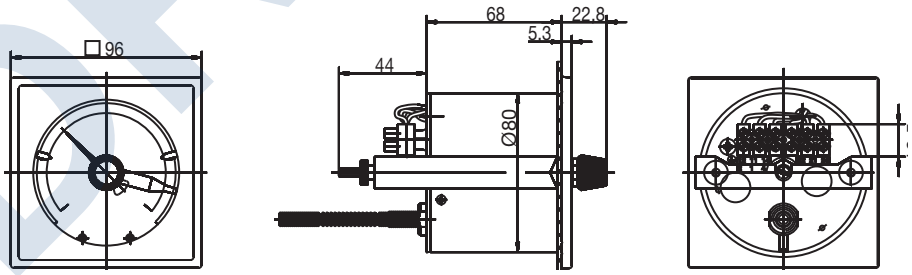

Panel cut-out for front frame
96 x 96 mm = Ø $82^{+0,5}$mm oder
96 x 96 mm = 92 x $92^{+0,5}$mm (TZ 460)

DRAFT

JUMO GmbH & Co. KG
Delivery address: Mackenrodtstraße 14
36039 Fulda, Germany
Postal address: 36035 Fulda, Germany
Phone: +49 661 6003-0
Fax: +49 661 6003-607
E-mail: mail@jumo.net
Internet: www.jumo.net

JUMO Instrument Co. Ltd.
JUMO House
Temple Bank, Riverway
Harlow, Essex CM20 2DY, UK
Phone: +44 1279 635533
Fax: +44 1279 635262
E-mail: sales@jumo.co.uk
Internet: www.jumo.co.uk

JUMO Process Control, Inc.
6733 Myers Road
East Syracuse, NY 13057, USA
Phone: 315-437-5866
1-800-554-5866
Fax: 315-437-5860
E-mail: info.us@jumo.net
Internet: www.jumousa.com

Order details

Order code	(1)	Basic type
608520		Mechanical Contact dial thermometer, class 1.5
608550		Mechanical Contact dial thermometer, class 1.5, Transformer version (only basic type extension 1080)

	(2)	Basic type extensions		Case size Ø
0280		Design 02	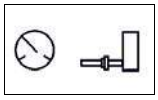	80 mm
0210				100 mm
1080		Design 10	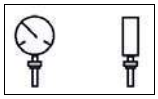	80 mm
1010				100 mm
2060		Design 20	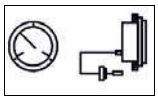	60 mm
2080				80 mm
2010				100 mm
2160		Design 21	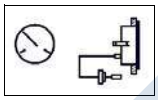	60 mm
2180				80 mm
2110				100 mm
2280		Design 22		80 mm
2210				100 mm
2380		Design 23		80 mm
2310				100 mm
2572		Design 25	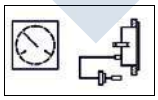	Case size □
2596				72 x 72 mm
				96 x 96 mm

	(3)	Display range in °C
469		-40...+40
643		-20...+120
807		0...+60
814		0...+100
818		0...+120
832		0...+200
840		0...+300
848		0...+400
854		0...+500
858		0...+600

DRAFT

JUMO GmbH & Co. KG
Delivery address: Mackenrodtstraße 14
36039 Fulda, Germany
Postal address: 36035 Fulda, Germany
Phone: +49 661 6003-0
Fax: +49 661 6003-607
E-mail: mail@jumo.net
Internet: www.jumo.net

JUMO Instrument Co. Ltd.
JUMO House
Temple Bank, Riverway
Harlow, Essex CM20 2DY, UK
Phone: +44 1279 635533
Fax: +44 1279 635262
E-mail: sales@jumo.co.uk
Internet: www.jumo.co.uk

JUMO Process Control, Inc.
6733 Myers Road
East Syracuse, NY 13057, USA
Phone: 315-437-5866
1-800-554-5866
Fax: 315-437-5860
E-mail: info.us@jumo.net
Internet: www.jumousa.com

Order code		
	(4)	**Capillary type (FL)** [a]
00		Without (with rigid connection)
02		FL 02 Cu capillary with Cu textile braiding, approx. Ø 2.5 mm (up to AB limit value +300°C)
11		FL 11 Cu capillary with PE jacketing, approx. Ø 3.5 mm (up to AB limit value +120°C)
17		FL 17 Stainless steel capillary, approx. Ø 1.5 mm
21		FL 21 Cu capillary, approx. Ø 1.0 mm (up to AB limit value +300°C)
	(5)	**Capillary** [b]
0		Without (with rigid connection)
1000		1000 mm
2000		2000 mm
3000		3000 mm
4000		4000 mm
5000		5000 mm
. . . .		Special length (specifications in plain text: 1000 mm steps, maximum length 6000 mm), further lengths on request
	(6)	**Process connection (PA)** [a]

750	TF 01	Temperature probe with stepped support tube	
752	TF 11	Temperature probe without support tube	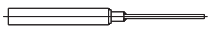
843	TA 02	Immersion tube with union nut and loose screw-connection [b]	
161	TA 03	Immersion tube with loose screw-connection	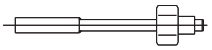
847	TA 06	Immersion tube with displaceable clamping screw-connection on support tube [b]	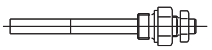
311	TA 20	Immersion tube with loose screw-connection and connection collar [b]	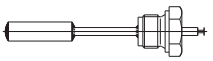
872	TA 21	Immersion tube with loose screw-connection and sealing cone (only G 3/8 possible)	
873	TA 22	Immersion tube with loose pressure screw, sealing cone and loose screw-connection [b]	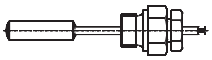
874	TA 24	immersion tube with screw fitting, O ring seal and clamping screw [a] [b]	
401	TA 23	Immersion tube with pressure screw and contact pressure spring (only M 10x1 possible)	
913	SH 07	Screw-in sheath, multi-part, with clamping piece and locking screw (suitable for TF 01 and TF 11)	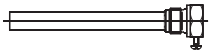
820	SH 09	Weld-in sheath, multi-part, with clamping piece and locking screw [b] (not for FL 21 - welding collar with steel 1.4515)	
876	SH 10	Screw-in sheath, multi-part [b] (suitable for TA 21)	
871	SH 11	Screw-in sheath, multi-part [b] (suitable for TA 23)	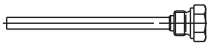

[a] For the description and particularities refer to data sheet 608730.
[b] Screw-in spigot as per DIN 3852, form A.

DRAFT

JUMO GmbH & Co. KG
Delivery address: Mackenrodtstraße 14
36039 Fulda, Germany
Postal address: 36035 Fulda, Germany
Phone: +49 661 6003-0
Fax: +49 661 6003-607
E-mail: mail@jumo.net
Internet: www.jumo.net

JUMO Instrument Co. Ltd.
JUMO House
Temple Bank, Riverway
Harlow, Essex CM20 2DY, UK
Phone: +44 1279 635533
Fax: +44 1279 635262
E-mail: sales@jumo.co.uk
Internet: www.jumo.co.uk

JUMO Process Control, Inc.
6733 Myers Road
East Syracuse, NY 13057, USA
Phone: 315-437-5866
1-800-554-5866
Fax: 315-437-5860
E-mail: info.us@jumo.net
Internet: www.jumousa.com

Order code	(7)	Ø Process connection (PC) [a]
6		6 mm
8		8 mm
10		10 mm
11		11 mm
12		12 mm
	(8)	**Thread type of process connection (PA)** [a]
000		Without thread (for TA 01 and TF 11)
103		Screw connection G 3/8
104		Screw-connection G 1/2
105		Screw-connection G 3/4
114		Screw-connection M 10 x 1 (only for TA 23)
	(9)	Material, probe / support tube [a]
26		Stainless steel (CrNi, 1.4571)
96		Copper (Cu) / Brass (CuZn) (up to 200°C)
95		Stainless steel (CrNi, 1.4571) - probe / Brass (CuZn) - support tube from 250°C)
	(10)	**Material of process connection (PA)** [a]
00		Without (only TF 01 and TF 11)
26		Stainless steel (CrNi, 1.4571)
46		Brass (CuZn)
	(11)	**Fitting length, process connection (PA)** [a] **(dimension "EL“ or "S“)**
0		Minimum fitting length TF 11 (active probe dimension)
50		50 mm
100		100 mm
150		150 mm
200		200 mm
. . .		Special length (specifications in plain text - 50 mm steps)
106		106 mm

For the description and particularities refer to data sheet 608730.

DRAFT

JUMO GmbH & Co. KG
Delivery address: Mackenrodtstraße 14
36039 Fulda, Germany
Postal address: 36035 Fulda, Germany
Phone: +49 661 6003-0
Fax: +49 661 6003-607
E-mail: mail@jumo.net
Internet: www.jumo.net

JUMO Instrument Co. Ltd.
JUMO House
Temple Bank, Riverway
Harlow, Essex CM20 2DY, UK
Phone: +44 1279 635533
Fax: +44 1279 635262
E-mail: sales@jumo.co.uk
Internet: www.jumo.co.uk

JUMO Process Control, Inc.
6733 Myers Road
East Syracuse, NY 13057, USA
Phone: 315-437-5866
1-800-554-5866
Fax: 315-437-5860
E-mail: info.us@jumo.net
Internet: www.jumousa.com

Order code	(12)	Switching output (SA)		
20		SA 20	One contact	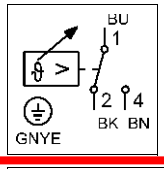
21		SA 21	Two contacts	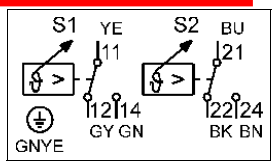
22		SA 22	Two contacts - Sequence switch	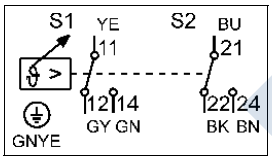

	(13)	Extra codes (TZ)
000		Without extra codes
430		Fly back (includes TZ 477)
426		Cover cap to protect the screw terminals against access and splashing water (standard for design 10 and 23; not for design 22; not in connection with TZ 460)
650		Microswitch 10 (3) A (AC/DC 230 V, +10/-15%, 48...63 Hz, cos φ = 1 (0.6))
518		Stop for Min. — or Max. — set point value limitation, factory set
460		Device centering for panel cut-out 92 x 92 mm (only for basic type extension 2596)
477		Set point adjustment protected by the bolted cover. Adjustment with screwdriver.
401		Protection class IP 53 as per EN 60529, includes TZ 426 and TZ 477 (not for case Ø = 60 mm and front frame 72 x 72 mm; not for design 02 and 22)
522		Customized scale

Special versions on request !

Order code

(1)		(2)		(3)		(4)		(5)		(6)		(7)		(8)		(9)		(10)		(11)		(12)		(13)	
608520	/	. . . .	-	. . .	-	. .	-	. . . .	-	. . .	-	. .	-	. . .	-	. .	-	. .	-	. . .	-	. .	/	. . .	, . . .

Order example

608520 / 2010 - 818 - 21 - 2000 - 104 - 10 - 000 - 26 - 00 - 100 - 20 / 650[a] , . . .

[a] State extra codes one after another, separated by commas.

Stock versions

Part no.	Type	Display range °C	Switching output	Temperature probe, process connection	Immersion tube mm
00455918	608550/0180-643-874-8-106-50-150-20/434-522 with fly back	-20…+120	20 (1 contact)	TF 05 d = 8 mm TA 24, G 1“, CuZn	150
00455919	608550/0180-643-874-8-106-50-150-21/434-522 with fly back		21 (2 contacts)		

Delivery within 3 working days after receipt of order

DRAFT

SECTION 5

DRAFT

Severe Duty is **Standard** with **WEG W22** motors.

You do not need a special motor for severe duty. Severe Duty is standard with WEG W22 motors.



DRAFT

You do not need a special motor for severe duty. Severe Duty is standard with WEG.

Features that make a difference:

- All NEMA Premium ratings have a 1.25 service factor (up to 100 HP) resulting in cooler operation and extended life of the motor
- All Cast Iron Construction, including Terminal Box and Fan Cover (*)
- Solid feet for reduced vibration levels and impact absorption
- Optimized ventilation system for cooler operation and extended life
- High Grade FC200 cast iron provides superior mechanical strength and heat dissipation
- All WEG W22 motors are Totally Enclosed Fan Cooled with a true IP55 rating against dust and moisture. (IPW56, IPW65 and IPW66 available as optional)
- Exclusive W-Seal 364T and larger provides superior bearing protection
- Taconite Labyrinth seal 586 Frame and larger
- Exclusive WEG painting system exceed 200hrs ASTM 117 corrosion test (Exceeds IEEE841 standard)
- Balanced to 0.08 inches per second vibration limits (Meets IEEE841 standard)
- Four Bolt Conduit Cover with glued Neoprene Gasket
- Impregnation Resin and magnet wire are insulation class H
- Stainless Steel Nameplate - Laser edged with high contrast background
- Corrosion Proof Drains
- Inverter Duty per NEMA MG1, Part 31
- Certified Class I Div 2, Groups A, B, C & D; Class II, Div 2, Groups F & G

**cast iron fan cover available as an option on 143-215T frames*

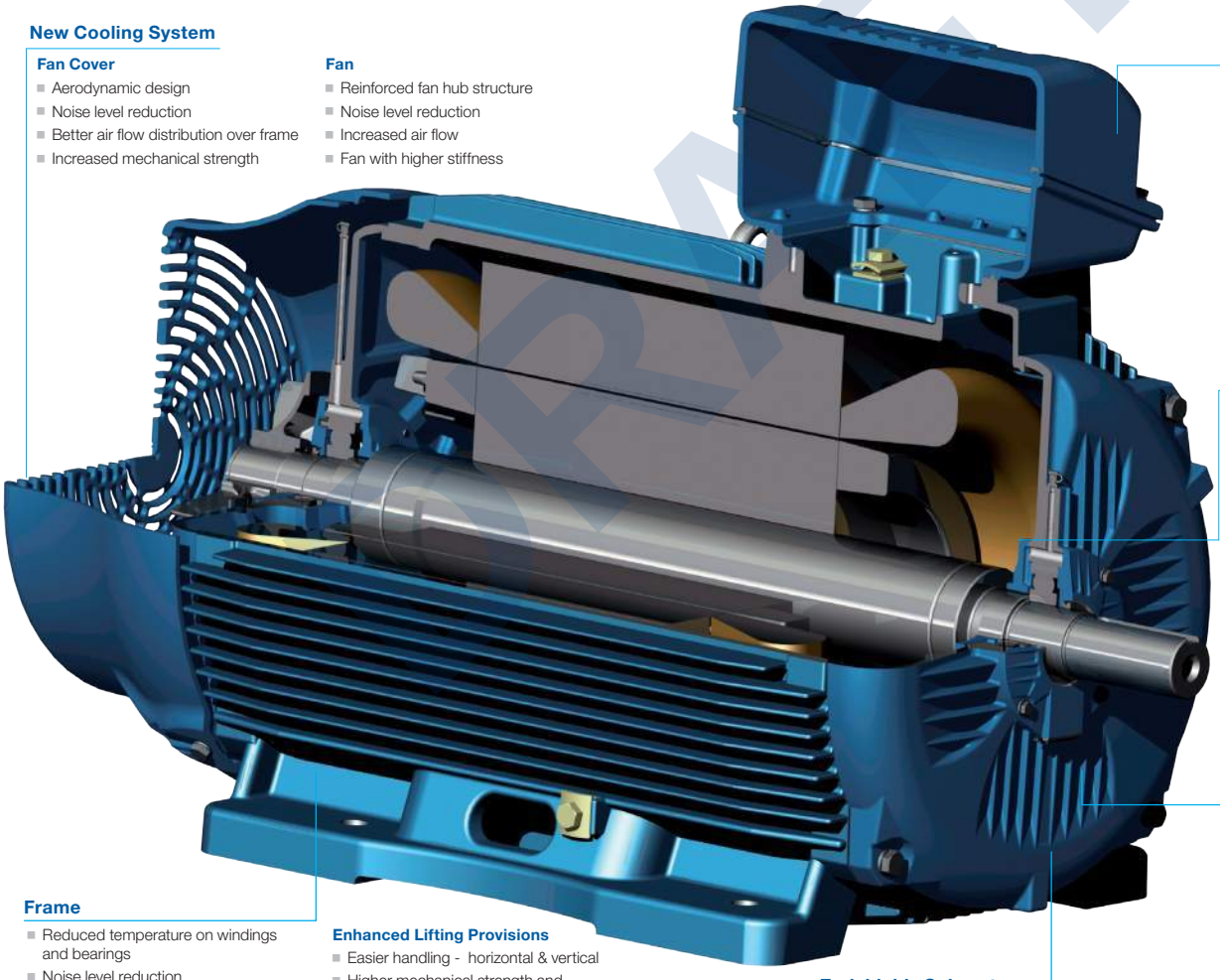

New Cooling System

Fan Cover
- Aerodynamic design
- Noise level reduction
- Better air flow distribution over frame
- Increased mechanical strength

Fan
- Reinforced fan hub structure
- Noise level reduction
- Increased air flow
- Fan with higher stiffness

Terminal Box
- Better connection quality
- Easier cable handling during installation
- More space available for accessory installation
- Easier Maintenance
- Mounting F1/F2/F3
- Rotation on 90° stages

Bearing Caps

External
- Finned surface for improved bearing heat dissipation

Internal
- Change of grease path for positive lubrication
- Bearing lubrication quality improvement
- Reduced bearing temperature

Seal Subsystem
- Increased dust and moisture protection
- Increased protection to high-pressure cleaning

Frame
- Reduced temperature on windings and bearings
- Noise level reduction
- Terminal box position outlet on top

Pad for vibration sensor
- Displaced 90º from each other

Enhanced Lifting Provisions
- Easier handling - horizontal & vertical
- Higher mechanical strength and handling safety

Solid feet
- More impact resistance
- Ideal for high vibration level applications

Endshields Subsystem

DE (Drive Endshield)
- New fin design
- Bearing moved outwards for better load support
- Improved bearing heat dissipation for reduced bearing temperature
- Reinforced endshield structure

NDE (Non-Drive Endshield)
- New design with smooth exterior surface
- Improved air flow
- Noise level reduction
- Improved structural rigidity for low vibration

DRAFT

DATA SHEET

Three Phase Induction Motor - Squirrel Cage

Customer	:

Product line	: W22 NEMA Premium Efficiency Three-Phase	Product code :	11431291
		Catalog # :	20018ET3G447T-W22

Frame	: 445/7T	Locked rotor time	: 28s (cold) 16s (hot)
Output	: 200 HP (150 kW)	Temperature rise	: 80 K
Poles	: 4	Duty cycle	: Cont.(S1)
Frequency	: 60 Hz	Ambient temperature	: -20°C to +40°C
Rated voltage	: 460 V	Altitude	: 1000 m.a.s.l.
Rated current	: 230 A	Protection degree	: IP55
L. R. Amperes	: 1564 A	Cooling method	: IC411 - TEFC
LRC	: 6.8x(Code G)	Mounting	: F-3
No load current	: 70.0 A	Rotation[1]	: Both (CW and CCW)
Rated speed	: 1785 rpm	Noise level[2]	: 73.0 dB(A)
Slip	: 0.83 %	Starting method	: ~~Direct On Line~~
Rated torque	: 81.3 kgfm	Approx. weight[3]	: 1038 kg /2288 lbs
Locked rotor torque	: 229 %		
Breakdown torque	: 250 %		
Insulation class	: F		
Service factor	: 1.15		
Moment of inertia (J)	: 3.21 kgm²		
Design	: B		

Output	25%	50%	75%	100%
Efficiency (%)	95.7	95.8	96.2	96.2
Power Factor	0.50	0.73	0.82	0.85

Foundation loads	
Max. traction	: 1540 kgf
Max. compression	: 2578 kgf

		Drive end	Non drive end
Bearing type	:	6319 C3	6316 C3
Sealing	:	WSeal	WSeal
Lubrication interval	:	8000 h	10000 h
Lubricant amount	:	45 g	34 g
Lubricant type	:	Mobil Polyrex EM	

Notes

This revision replaces and cancel the previous one, which must be eliminated.
(1) Looking the motor from the shaft end.
(2) Measured at 1m and with tolerance of +3dB(A).
(3) Approximate weight subject to changes after manufacturing process.
(4) At 100% of full load.

These are average values based on tests with sinusoidal power supply, subject to the tolerances stipulated in NEMA MG-1.

Rev.	Changes Summary	Performed	Checked	Date

Performed by				
Checked by			Page	Revision
Date	09/06/2021		1 / 3	

This document is exclusive property of WEG S/A. Reprinting is not allowed without written authorization of WEG S/A.
Subject to change without notice

TORQUE AND CURRENT VS SPEED CURVE

Three Phase Induction Motor - Squirrel Cage

Customer	:

Product line	: W22 NEMA Premium Efficiency Three-Phase	Product code :	11431291
		Catalog # :	20018ET3G447T-W22

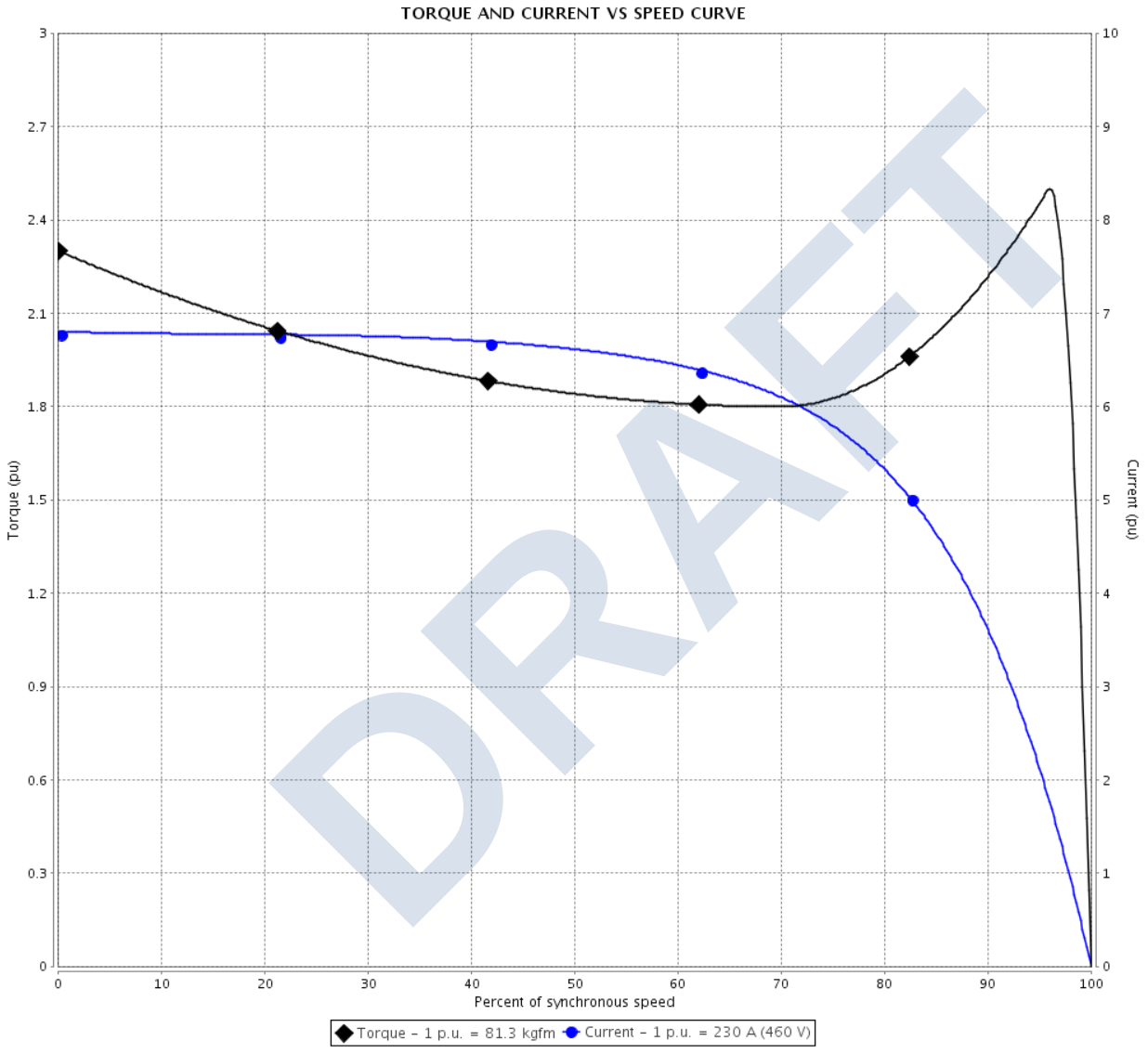

DRAFT

Performance	: 460 V 60 Hz 4P

Rated current	: 230 A	Moment of inertia (J)	: 3.21 kgm²
LRC	: 6.8	Duty cycle	: Cont.(S1)
Rated torque	: 81.3 kgfm	Insulation class	: F
Locked rotor torque	: 229 %	Service factor	: 1.15
Breakdown torque	: 250 %	Temperature rise	: 80 K
Rated speed	: 1785 rpm	Design	: B

Locked rotor time	: 28s (cold) 16s (hot)

Rev.	Changes Summary	Performed	Checked	Date

Performed by				
Checked by			Page	Revision
Date	09/06/2021		2 / 3	

This document is exclusive property of WEG S/A. Reprinting is not allowed without written authorization of WEG S/A.
Subject to change without notice

LOAD PERFORMANCE CURVE

Three Phase Induction Motor - Squirrel Cage

Customer	:

Product line	: W22 NEMA Premium Efficiency Three-Phase	Product code :	11431291
		Catalog # :	20018ET3G447T-W22

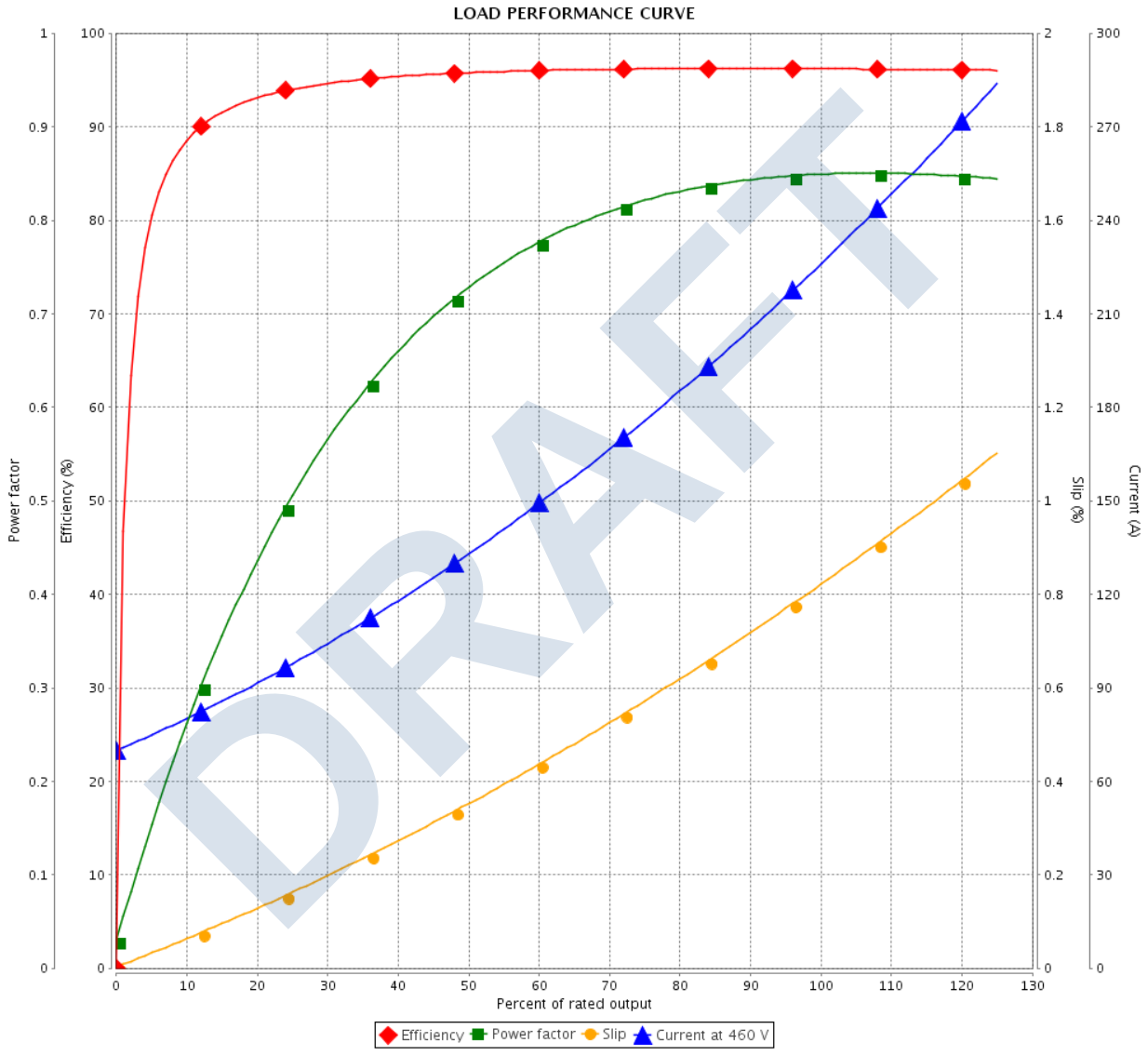

DRAFT

Performance	: 460 V 60 Hz 4P

Rated current	: 230 A	Moment of inertia (J)	: 3.21 kgm²
LRC	: 6.8	Duty cycle	: Cont.(S1)
Rated torque	: 81.3 kgfm	Insulation class	: F
Locked rotor torque	: 229 %	Service factor	: 1.15
Breakdown torque	: 250 %	Temperature rise	: 80 K
Rated speed	: 1785 rpm	Design	: B

Rev.	Changes Summary	Performed	Checked	Date

Performed by				
Checked by			Page	Revision
Date	09/06/2021		3 / 3	

This document is exclusive property of WEG S/A. Reprinting is not allowed without written authorization of WEG S/A.
Subject to change without notice

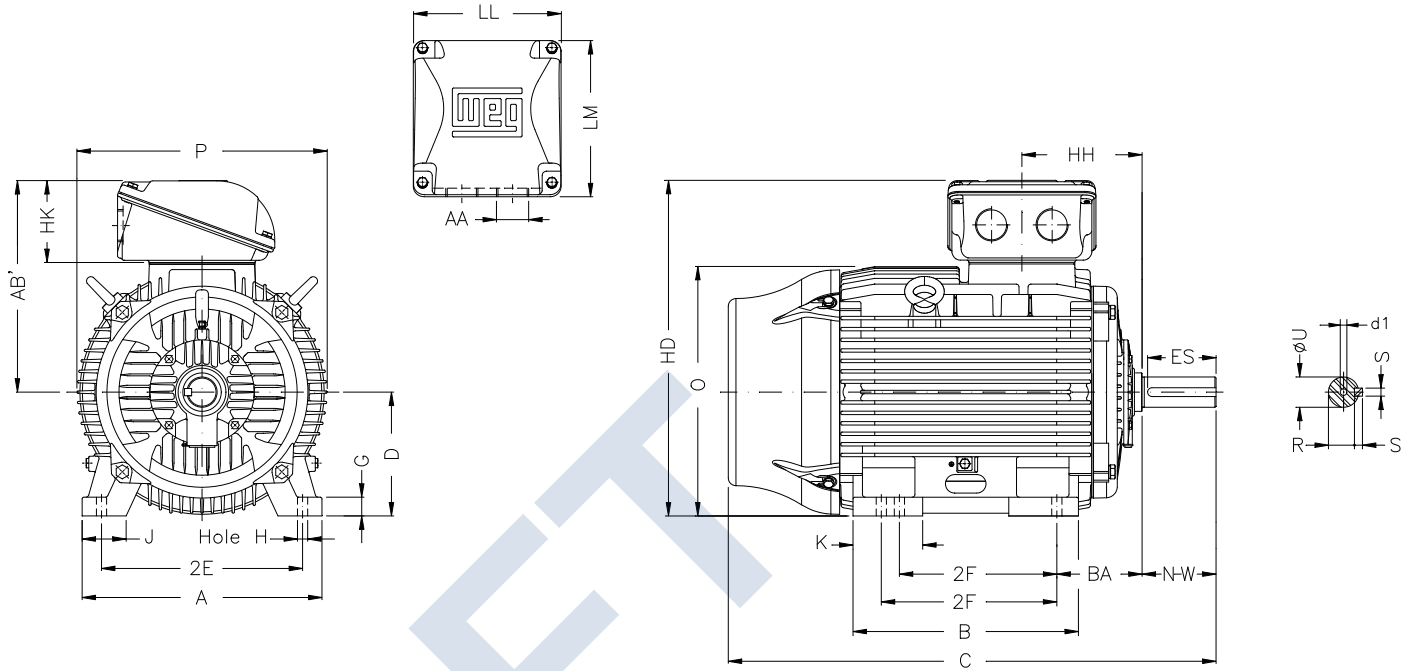

DRAFT

2E 18.000	J 3.937	A 21.929	P 23.583	AB' 19.685
2F 16.500/20,000	K 7.244	B 23.898	BA 7.500	U 3.375
N-W 8.500	ES 7.087	S 0.875	R 2.880	depth 0.875
D 11.000	G 1.654	HB 12.480	O 22.795	HD 27.527
HF 20.728	HG 26.831	HH 11.811	HK 6.929	EV 1.929
H 0.810	C 48.779	LL 14.921	LM 15.039	AA 2xNPT 3"
d1 DUNC 3/4"-10				

Notes:

Performed by:

Checked:

Customer:

W22 NEMA Premium - Ball Bearings

Three-phase induction motor

Frame 445/7T - IP55

09-JUN-2021

W22 NEMA Premium

3PT9 LISTED C US

FOR SAFE AREA
Mod.TE1BF0XON
CC029A

C US Energy Verified

Class I, Div 2, Gr A, B, C and D – T3
Class I, Zone 2, IIC – T3
Class II, Div 2, Gr F and G – T3C
For use on PWM: Gr. A, B, C, D and F,
VT 1000:1, CT 20:1, 1.00SF – T3

MODEL 20018ET3G447T-W22

Inverter Duty Motor
Severe Duty

MADE IN BRAZIL
11431291

PH3 60Hz Fr. 445/7T 1000m.a.s.l.		IP55 TEFC 2289lb	
V 460		A 230	
HP 200		kW 150	
SF 1.15		SFA 265	
RPM 1785		PF 0.85	
AMB 40°C	INS cl. F DT80K	NEMA NOM EFF	96.2%
DUTY CONT.	DES B Code G		

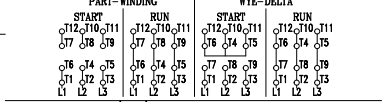



MOBIL POLYREX EM (8000h)

Thermal motor protector
Temperature limiter
Thermal cut-out

F

11
20
21

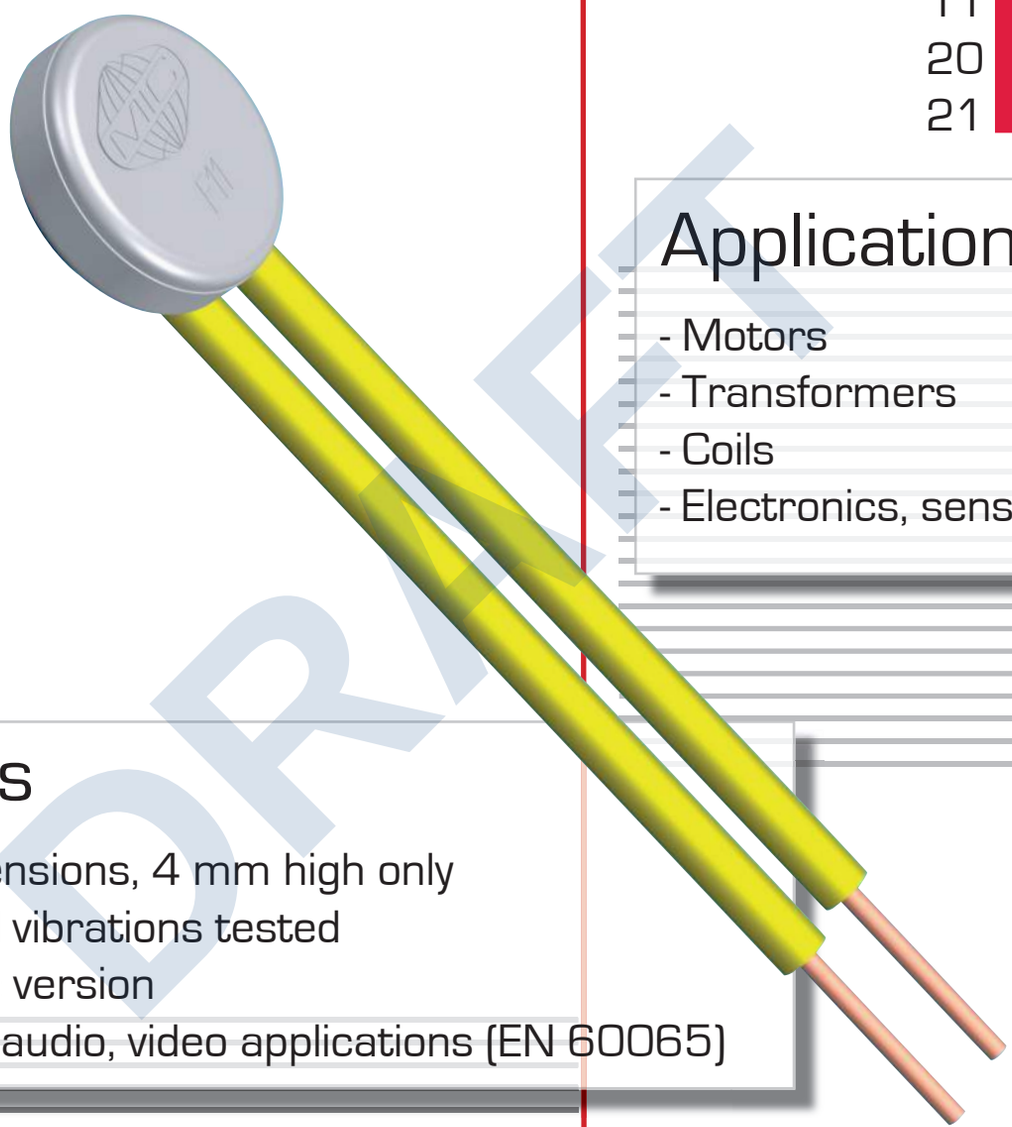

Applications

- Motors
- Transformers
- Coils
- Electronics, sensors

Benefits

- Small dimensions, 4 mm high only
- Shock- and vibrations tested
- Leadframe version
- Tested for audio, video applications (EN 60065)

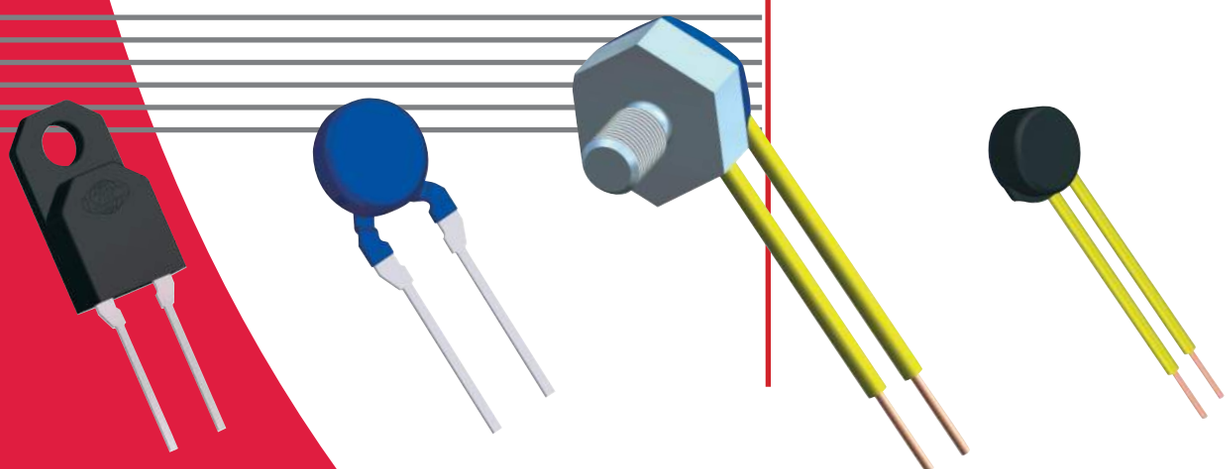

DRAFT

MICROTHERM

MIC®
Microtherm International Cooperation

Technical data

ratings \ control type		F11A / E F20A / E	F20B / G	F21A / E	
version		normally closed	normally open	normally closed	
rated current at 250 V 50/60 Hz (power factor 0.95 / 0.6)		2.0 A / 1.6 A	2.0 A / 1.6 A	3.0 A / 3.0 A	6.3 A / 1.0 A
switching cycles		10,000		10,000	700
max. current at 250 V 50/60 Hz (power factor 0.95)		6.3 A		8.0 A	
switching cycles under max. current		100			
temperature rating Ta (steps in 5 K)		70 °C ... 160 °C	70 °C ... 155 °C	70 °C ... 160 °C	
tolerances		Standard: ± 5 K			
feature of automatic action		1.B, 2.B.M, 1.C, 3.C		2.B, 1.C	
contact resistance (incl. wire of 100 mm)		< 50 mΩ			
hysteresis		30 K ± 15 K			
dielectric strength (standard insulation)		2 kV			
shock- / vibration testing (similar to EN 50155)		400 m/s² sine half wave / 100 m/s² 5 Hz ... 2,000 Hz sine			
resistances to impregnation		tight against ordinary resins and lacquers			
degrees of protection provided by enclosures (EN 60529)		IP00			
suitable for use in protection category		I, II			
approvals	**VDE / ENEC**	EN 60730-1 / -2-2 / -2-3 [1] /-2-9			
	UL	UL 2111 / UL 873			
	CSA	C22.2 No. 77 / C22.2 No. 24 [2]			

[1] different power rating
[2] on demand

DRAFT

Standard wire (length 100 ± 10 mm, stripped 6 ± 1 mm)

lead	code	temperature max.	operating voltage max.	diameter insulation	cross section diameter	UL style
stranded white	L300	150 °C	300 V	1.57 mm	AWG24 / 0.21 mm²	3398
	L310			1.80 mm	AWG20 / 0.48 mm²	
	L330	200 °C	600 V	0.90 mm	AWG24 / 0.24 mm²	3557
solid yellow	L400	150 °C	300 V	1.40 mm	AWG24 / 0.51 mm	3398
	L410			1.65 mm	AWG20 / 0.81 mm	
	L430	200 °C	300 V	1.21 mm	AWG24 / 0.51 mm	1332
	L440			1.71 mm	AWG20 / 0.81 mm	

Standard insulation

control type	nc	no	code	illustration	drawing dimensions (mm)	technical specification	approvals
F11, F21 F20	A A	B	U254		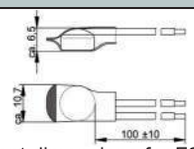 different dimensions for F20, F21	shrink cap potted Ta max. 155°C	VDE, UL
F11	A		U198	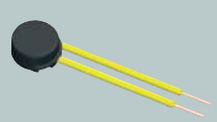	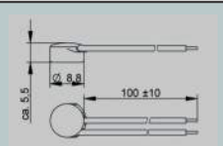 different dimensions for F20, F21	cap of PPS potted	VDE, UL
F20 F21	A A	B	U185				

Specific variations

control type	nc	no	code	illustration	drawing dimensions (mm)	technical specification	approvals
F11	A			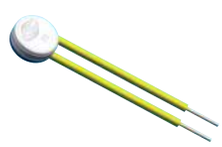	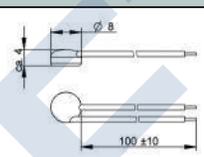	not insulated potted	VDE, UL, CSA
F20 F21	A A	B		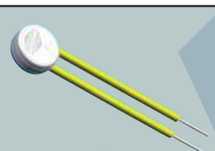	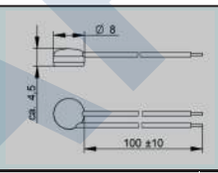	not insulated potted	VDE, UL, CSA
F11, F21 F20	A A	B	U112		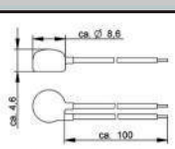 different dimensions for F20, F21	coated	VDE, UL
F20 F21	A A	B	A150 U280	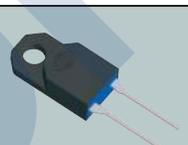	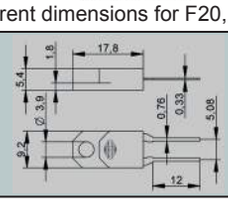	housing of PPS leadframe leads grid dimension 5.08 potted	VDE, UL
F11, F21 F20	A A	B	A800		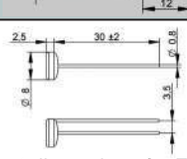 different dimensions for F20, F21	not insulated potted	VDE, UL
F20 F21	E E	G	G700	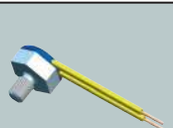	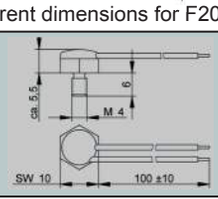	aluminium housing thread M4x6 potted Attention: Ta max. 150 °C	VDE, UL
F11	A		U281	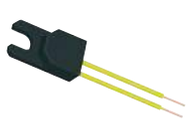	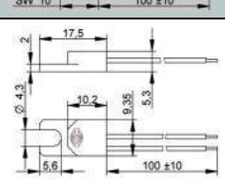	housing of PPS potted	VDE, UL
F11, F21 F20	A A	B	A150 U112	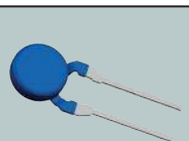	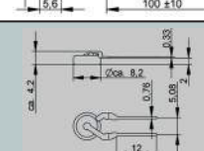 different dimensions for F20, F21	leadframe leads grid dimension 5.08 coated	VDE, UL

DRAFT

Heating by current

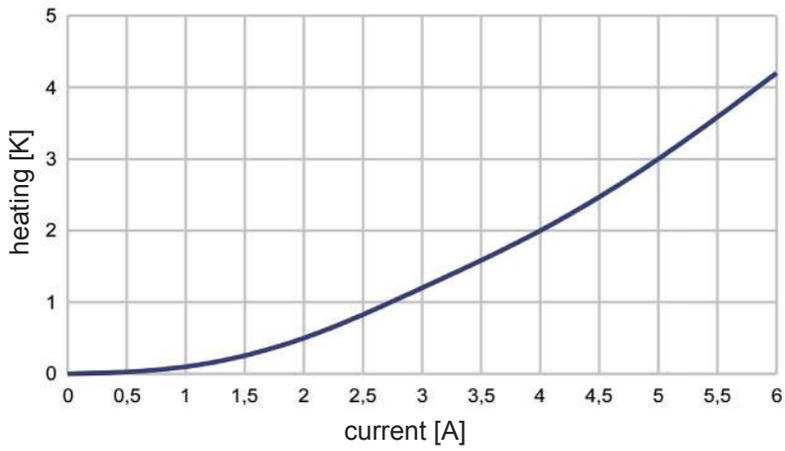

The diagram is measured with a thermal control without any insulation in an oil bath.

Attention:
The heating depends on the thermal conduction of the control to the equipment or part which should be protected.

Ordering and marking example

Ordering example

F11 A 120 05 L310 100 U254

- shrink cap insulation
- length 100 mm
- lead wire white, AWG20
- tolerance
- temperatue
- normally closed
- type

Deviations from standard controls on request.

Marking

F11A type (F11 nc)

12005 response temperature (120°C), tolerance (± 5K)

026D date of manufacture (Feb.2006), country (D=Germany)

DRAFT

Representation office:

Microtherm GmbH
Täschenwaldstraße 3
Postfach 1208
D-75112 Pforzheim

Fon: +49 (0)7231 787-0
Fax: +49 (0)7231 787-155
E-Mail: mic-pforzheim@microtherm.de
Internet: www.microtherm.de

Typical Thermostat Control Schematic

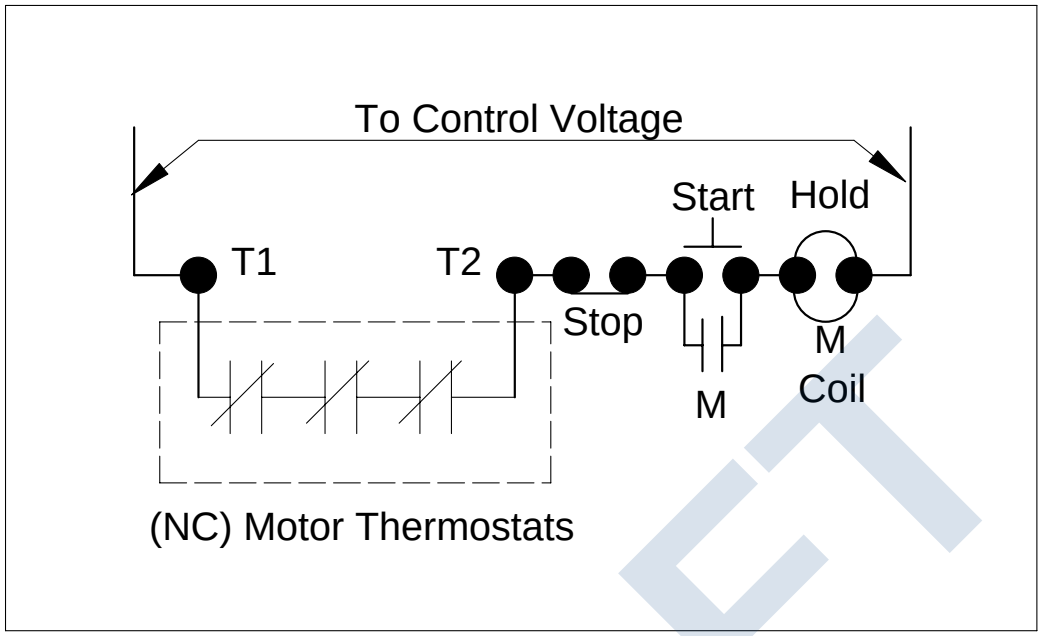

DRAFT

AEGIS SGR™

BEARING PROTECTION RING

Sustainable Technology for True Inverter Duty Motors

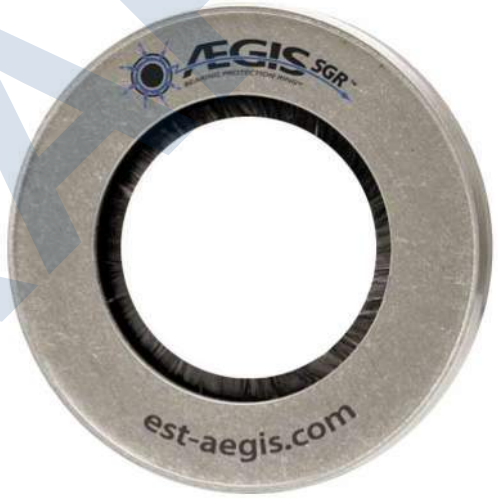

WEG uses the standard SGR from the AEGIS catalog that is sized based on the motor min/max shaft diameter. They use the type with the mounting brackets which are designed to fit over the shaft shoulder on the motor end-shield.

Bearing Protection For Life!

2009






DRAFT

BEARING PROTECTION RING™









"The only bearing protection system guaranteed to eliminate harmful shaft currents preventing premature motor failure - for life."



Guarantee

Electro Static Technology guarantees any new motor up to 100hp/75kW will not fail from electrical bearing fluting damage for the life of the motor when the AEGIS SGR™ Bearing Protection Ring™ is installed in accordance with manufacturer's installation instructions. If electrically induced fluting damage occurs, Electro Static Technology will replace motor bearings. Guarantee is subject to the terms and conditions of the AEGIS SGR™ Guarantee Program.

For program details, visit: www.est-aegis.com

Don't let this happen to your bearings!



TABLE OF CONTENTS

Bearing Protection Guarantee	2
AEGIS Bearing Protection Ring	3
About Shaft Voltages	4
Application Notes	5-6
AEGIS Shaft Voltage Probe	7
Selecting The Right Size	7
AEGIS Installation Options	8
Parts List - Conductive Epoxy	9
Parts List - Standard, Split, Bolt Through	10-11
Parts List - Press Fit Installation	12
Parts List - NEMA-IEC Installation Kits	13
Custom Applications	14
Motor Specification	15

Sustainable Motor Design - Prevent Bearing Failure

AEGIS Bearing Protection Ring™- protects motor bearings for life. Variable frequency drives (VFD) induce electrical voltages onto the shaft of AC and DC motors. With AEGIS SGR Bearing Protection Ring installed on the motor, you benefit from sustainability, system up-time, production improvement, and higher reliability.

PROBLEM:

VFD Induced Shaft Voltages Damage Bearings



Shaft voltage reading with no protection

Variable frequency drives (VFD) on AC and DC motors induce harmful electrical voltages on the motor shaft. Once these voltages exceed the resistance of the bearing lubricant, they discharge through the motor's bearings causing fusion craters, severe pitting, fluting damage, excessive bearing noise and eventually bearing failure.

SOLUTION:

AEGIS SGR™ - Electrical Bearing Damage Protection

The new AEGIS SGR™ Bearing Protection Ring™ prevents electrical bearing damage by safely channeling harmful shaft voltages away from the bearings to ground. Using proprietary Electron Transport Technology™, the conductive micro fibers inside the AEGIS SGR™ provide the path of least resistance and dramatically extend motor life.

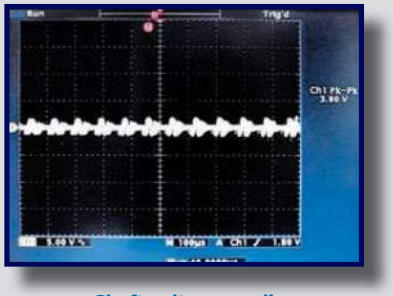

Shaft voltage reading with AEGIS SGR

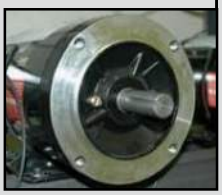

No bearing protection



VFD



AEGIS SGR™ Bearing Protection Ring™

DRAFT

About Shaft Voltages and Bearing Currents

VFD Induced Shaft Voltages - All Motors

Damaging voltages are induced on the shafts of AC and DC motors controlled by variable frequency drives (VFD). The extremely high on/off switching speeds of the pulse width modulation (PWM), generated by the insulated gate bipolar transistors (IGBT), induce damaging voltages onto the motor shaft through parasitic capacitive coupling between the stator and rotor. This common mode shaft voltage seeks a path to ground, usually through the motor's bearings.

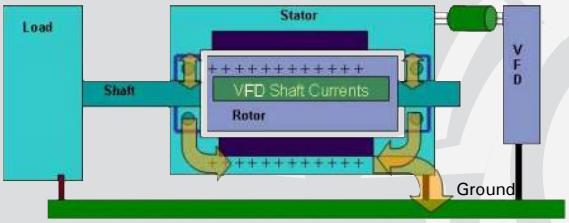

EDM Currents Damage Bearings



Bearing fluting, "washboard" pattern on bearing race

Electrical Damage in the Bearings (EDM) - Pitting, Fluting, Failure

Damaging currents arc through the dielectric oil film between the rolling elements and the bearing race. This is known as electrical discharge machining (EDM) effect. EDM causes fusion craters, severe pitting, and eventually bearing fluting (a washboard-like pattern in the bearing race) which results in premature bearing failure.

High Frequency Circulating Currents in Large AC and DC Motors

In addition to potential bearing failures in motors from VFD induced EDM currents, AC and DC motors above 100 hp (75 kW) may also experience bearing failures caused by high frequency circulating currents. VFD induced high frequency circulating currents are in the kilohertz or even megahertz range and circulate through the motor's bearings because of magnetic flux imbalances in the stator. This type of VFD induced current becomes the more dominant destructive current in higher hp/kW motors.

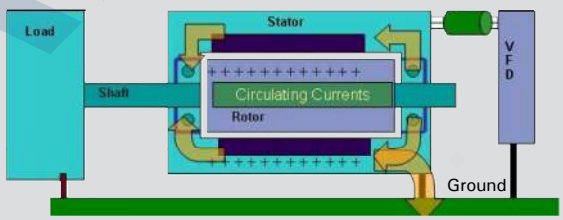

High Frequency Currents Damage Bearings

AEGIS SGR™ Bearing Protection Ring™ is the most effective solution to protect bearings in motors and attached equipment from EDM currents and VFD induced shaft voltages.

Technology Comparison

	AEGIS SGR™	Insulating sleeve	Ceramic/ Hybrid Bearing	Copper or Bronze Metal Brush	Carbon Block Brush	Conductive Grease
Protects Motor and Attached Equipment	Yes	No	No	No	No	No
Long-term Effectiveness	Yes	No	No	No	No	No
Easy to install	Yes	No	No	No	No	No
Contamination Proof	Yes	N/A	N/A	No	No	N/A
Low Lifetime Cost High return on Investment	Yes	No	No	No	No	No
Effective at any RPM	Yes	Yes	Yes	No	No	No
Maintenance Free Operation	Yes	Yes	Yes	No	No	No

DRAFT

Application Notes for AEGIS Bearing Protection Ring™

Improve System Reliability and Production with Sustainable Motor Design

Motors up to 100 HP (75 kW)

Any motor controlled by a variable frequency drive (VFD) requires bearing protection. Motors of 100 hp down to fractional hp motors will experience bearing failures when operated on a PWM drive. AEGIS SGR™ Bearing Protection Ring™ guarantees that bearings will not fail in these motors from fluting damage for the service life of the motor.

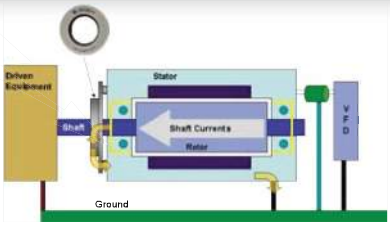



Install one AEGIS SGR™ Bearing Protection Ring™ on either the drive end or the non-drive end of the motor. The simplest installation is to slide the AEGIS SGR™ over the drive end and fasten it to the motor end bell with the easy to install mounting hardware included with each AEGIS SGR™

★ Recommend Colloidal Silver Shaft Coating PN CS015

Motors 100 HP to 1000 HP (75 kW to 750 kW)

Large motors above 100 hp may have VFD induced EDM currents as well as high frequency circulating currents when they are controlled by VFDs. To protect the bearings, insulate the bearing on one end and install an AEGIS SGR™ on the other end.

Insulation on one end (usually NDE) and AEGIS SGR™ on opposite end

- This method offers the most reliable protection
- Motor frame must be well grounded
- Non-Drive End: Bearing journal should be insulated or Insulated/ Ceramic Bearing installed to disrupt circulating currents
- Install AEGIS SGR™ Bearing Protection Ring™ on opposite end of insulation and Insulated/Ceramic Bearing (usually DE)
- Protects bearings in attached equipment (gear box, pillow block, encoder etc.)

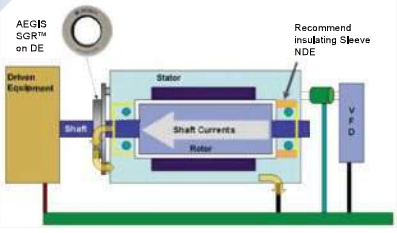

★ Recommend Colloidal Silver Shaft Coating PN CS015

BEARING PROTECTION FACTS:

Bearing protection for motors and attached equipment: Only AEGIS SGR™ will protect both motor bearings and the bearings in attached equipment. VFD induced currents on the shaft can discharge through motor bearings or coupled equipment like gear boxes, pumps, fan bearings, pillow blocks, encoders, brake motors, etc. AEGIS SGR™ addresses the root of the problem and channels harmful currents to ground.

Maintenance free bearing protection for life: Hundreds of thousands of conductive micro fibers have virtually zero wear during operation, even at high RPM and high surface rates. Unlike carbon block brushes, there is no spring pressure on fibers. AEGIS SGR™ Bearing Protection Ring™ will last for the service life of the motor.

AEGIS SGR™ is effective in grease, oil, dirt or dust: Lab and field tested. The conductive micro fibers "sweep" away contaminants from the shaft surface and maintain a conductive path even when oil, grease, dirt or dust get on the shaft.

Operation in harsh environments where fibers are exposed to excessive debris: To prevent particles from damaging the fibers, install a slinger or O-ring against the AEGIS SGR™.

★ COLLOIDAL SILVER SHAFT COATING: NEW TECHNOLOGY



Improving the conductivity of the steel shaft surface enhances the shaft voltage discharge capability in AEGIS shaft grounding applications. Maintaining a highly conductive shaft surface is especially important in critical applications or in applications where the conductive shaft surface of steel could become compromised. Environmental elements could create a potential for decreased conductivity on the shaft of the motor.

Apply AEGIS CS015 Colloidal Silver Shaft Coating to any VFD driven motor shaft prior to installing AEGIS Bearing Protection Ring™.

DRAFT

BEARING PROTECTION FACTS:

AEGIS SGR™ Bearing Protection Ring™ current handling capability: AEGIS SGR™ is rated to discharge high frequency current. Variable frequency drives (VFD) induce high frequency EDM currents of up to 2 amps in 50 billionths of a second. AEGIS SGR™ protects the bearing by safely channeling the energy away from the motor bearings to ground.

AEGIS Bearing Protection Ring™ - the most reliable bearing protection: Production up-time and reliability improve when AEGIS SGR™ is installed. The patented ring of hundreds of thousands of conductive micro fibers provide protection for the service life of the motor. The fibers will always surround the shaft with a conductive path for destructive shaft currents while the motor is running.

Vertical Motors: Insulate top bearing or shaft with non conductive coating. For bottom bearing, coat shaft with Colloidal Silver Shaft Coating and install AEGIS Bearing Protection Ring.

If insulation is not possible, the next best protection is to install AEGIS SGR™ on both ends of the motor

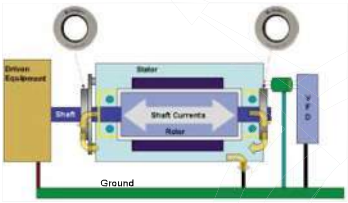

- Motor frame must be well grounded
- Install AEGIS SGR™ Bearing Protection Ring™ on drive and non-drive end to provide path of least resistance for circulating currents and to channel VFD currents to ground.
- Protects bearings in attached equipment
- **NOT SUITABLE FOR CYLINDRICAL ROLLER BEARING**

★ Coat shaft with Colloidal Silver Shaft Coating

Critical Applications: Insulate both ends and add AEGIS SGR™ Bearing Protection Ring™ on both ends

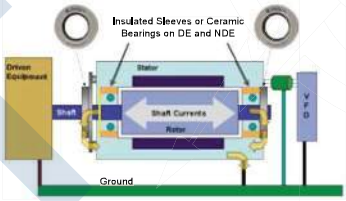

- Motor frame must be well grounded
- Drive and Non-Drive end: Bearing journals should be insulated or Insulated/Ceramic Bearing installed to disrupt circulating currents
- Install AEGIS SGR™ Bearing Protection Ring™ on drive and non-drive end to provide path of least resistance for shaft voltages and to channel VFD induced currents to ground.
- AEGIS SGR™ required to protect bearings in attached equipment (gear box, pillow block, encoder, etc.)

★ Coat shaft with Colloidal Silver Shaft Coating

Medium Voltage Motors
Large Motors and Generators over 1000 HP (750 kW)
Power Generators over 750kW

AEGIS iPRO™ Bearing Protection Ring™

Large motors and generators often have much higher induced shaft voltages and bearing currents which require a high current capable Bearing Protection Ring™. High frequency circulating currents induced by variable frequency drives (VFD) will cause bearing fluting and catastrophic failure in these motors. Generators experience current surges which can cause electrical arcing in bearings and equipment.

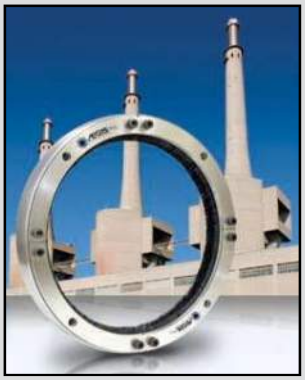

AEGIS iPRO™ High Current Bearing Protection Ring™

- One end of the motor should be insulated. Install AEGIS iPRO™ on opposite end of insulation to protect the non-insulated bearing.
- Install AEGIS iPRO™ on both ends of motor or generator if bearing cannot be insulated.

★ Coat shaft with Colloidal Silver Shaft Coating

MOTORS WITH CERAMIC BEARINGS

Insulating both bearing journals or using ceramic coated bearings in the motor **does not prevent VFD induced currents** from discharging through the bearings on attached equipment and may present a voltage hazard.

Whenever ceramic bearings are used in a motor, *AEGIS SGR™ is required* to protect attached equipment and reduce potentially dangerous shaft voltages.

DRAFT

Purpose of Application Notes: Application notes are intended as general guidance to assist with proper application of AEGIS SGR™ Bearing Protection Ring™ to protect motor bearings. All statements and technical information contained in the application notes are rendered in good faith. User must assume responsibility to determine suitability of the product for its intended use.

AEGIS SVP™ Shaft Voltage Probe

Conductive Microfiber Probe for use with Fluke 199C ScopeMeter



Measuring VFD Induced Shaft Voltages

For the first time you can easily and more accurately measure the voltage on a rotating shaft. The AEGIS SVP™ Shaft Voltage Probe's unique design of high density conductive microfibers ensures continuous contact with the rotating shaft. Used with the Fluke 199C ScopeMeter, you can determine if your motor is subject to potentially damaging bearing currents.

Catalog Number	Includes:
SVP-KIT-F199C	3 SVP tips, probe holder with two piece extension rod (fits 3/8" magnetic base)
SVP-TIP-F199C	3 SVP tips

Selecting The Right Size Bearing Protection Ring For Your Motor



Front View


Side View


Back View

Mounting Options shown on page 8

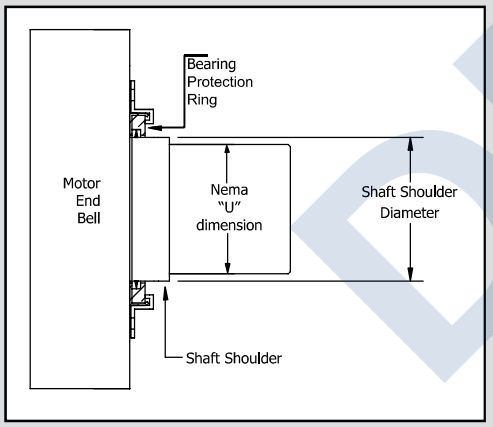

1. Measure shaft diameter at a point 0.125" from motor end bell.
2. Refer to the part lists to locate the correct SGR part number.

Note: If you have a slinger or a shaft shoulder that is less than 0.375", you will need the NEMA/IEC kit. See page 13 for more information.

Example shaft measurement
0.425"

Catalog Number	Min.shaft diameter	Max.shaft diameter	Outside diameter	Thickness Max
SGR-6.9-1	0.311	0.355	1.60	0.295
SGR-8.0-1	0.356	0.395	1.60	0.295
SGR-9.0-1	0.396	0.435	1.60	0.295
SGR-10.1-1	0.436	0.480	1.60	0.295
SGR-11.2-1	0.481	0.520	1.60	0.295

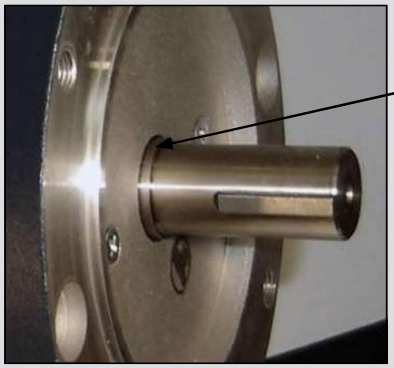

Shaft shoulder: The SGR can be mounted to the shaft shoulder but the shoulder should be at least 0.375" in length so that all of the fibers are in contact with the rotating shaft. Measure the diameter of the shaft shoulder then locate the correct SGR on the part lists.

DRAFT

AEGIS SGR™ Bearing Protection Ring™ Options



pg. 9

NEW PRODUCT!

Conductive Epoxy Mounting

Shaft diameters: 0.311" to 6.02"
Solid and Split Ring
Quick and easy installation to metal motor frame
Conductive Epoxy Included



pg.10-11

Standard Mounting Brackets

Shaft diameters: 0.311" to 6.02"
Ships with mounting brackets, 6-32 screws and washers
Quick and easy installation to most surfaces



pg. 10-11

Split Ring

Shaft diameter: 0.311" to 6.02"
4 to 6 mounting brackets, M3 screws and washers
Installs without decoupling motor



pg. 10-11

Bolt Through Mounting

Shaft diameters: 0.311" to 6.02"
M3 x 14 socket head cap screws and lock washers
2 mounting holes up to shaft size 3.895"
4 mounting holes for larger sizes



pg. 12

Press Fit Mounting

Shaft diameters: 0.311" to 6.02"
Clean dry 0.004" press fit
Custom sizes available



pg. 13

NEMA-IEC Mounting Kits

Shaft diameter: see chart for standard kits
Custom kits available for other shaft diameters
Clears any slinger, shaft shoulder or protrusion



pg. 14

WTG

Long term reliable performance
Maintenance free system
Solid and Split Ring configurations



pg. 14

iPRO

Long term reliable performance
Maintenance free system
Solid and Split Ring configurations
Available in sizes up to 30" shaft diameter

DRAFT

Standard SGR™ - Conductive Epoxy Mounting





NEW PRODUCT!

Dimensions in inches

Solid SGR Catalog Number	Split SGR Catalog Number	Min.shaft diameter	Max.shaft diameter	Outside diameter	Thickness Max
SGR-6.9-0AW	SGR-6.9-0A4W	0.311	0.355	1.60	0.295
SGR-8.0-0AW	SGR-8.0-0A4W	0.356	0.395	1.60	0.295
SGR-9.0-0AW	SGR-9.0-0A4W	0.396	0.435	1.60	0.295
SGR-10.1-0AW	SGR-10.1-0A4W	0.436	0.480	1.60	0.295
SGR-11.2-0AW	SGR-11.2-0A4W	0.481	0.520	1.60	0.295
SGR-12.2-0AW	SGR-12.2-0A4W	0.521	0.560	1.60	0.295
SGR-13.2-0AW	SGR-13.2-0A4W	0.561	0.605	1.60	0.295
SGR-14.4-0AW	SGR-14.4-0A4W	0.606	0.645	1.60	0.295
SGR-15.4-0AW	SGR-15.4-0A4W	0.646	0.685	2.10	0.295
SGR-16.4-0AW	SGR-16.4-0A4W	0.686	0.730	2.10	0.295
SGR-17.6-0AW	SGR-17.6-0A4W	0.731	0.774	2.10	0.295
SGR-18.7-0AW	SGR-18.7-0A4W	0.775	0.815	2.10	0.295
SGR-19.7-0AW	SGR-19.7-0A4W	0.816	0.855	2.10	0.295
SGR-20.7-0AW	SGR-20.7-0A4W	0.856	0.895	2.10	0.295
SGR-21.7-0AW	SGR-21.7-0A4W	0.896	0.935	2.10	0.295
SGR-22.8-0AW	SGR-22.8-0A4W	0.936	0.980	2.10	0.295
SGR-23.9-0AW	SGR-23.9-0A4W	0.981	1.020	2.10	0.295
SGR-24.9-0AW	SGR-24.9-0A4W	1.021	1.060	2.10	0.295
SGR-25.9-0AW	SGR-25.9-0A4W	1.061	1.105	2.10	0.295
SGR-27.1-0AW	SGR-27.1-0A4W	1.106	1.145	2.10	0.295
SGR-28.1-0AW	SGR-28.1-0A4W	1.146	1.185	2.10	0.295
SGR-29.1-0AW	SGR-29.1-0A4W	1.186	1.230	2.10	0.295
SGR-30.3-0AW	SGR-30.3-0A4W	1.231	1.270	2.10	0.295
SGR-31.3-0AW	SGR-31.3-0A4W	1.271	1.310	2.10	0.295
SGR-32.3-0AW	SGR-32.3-0A4W	1.311	1.355	2.10	0.295
SGR-33.4-0AW	SGR-33.4-0A4W	1.356	1.395	2.10	0.295
SGR-34.4-0AW	SGR-34.4-0A4W	1.396	1.435	2.68	0.295
SGR-35.5-0AW	SGR-35.5-0A4W	1.436	1.480	2.68	0.295
SGR-36.6-0AW	SGR-36.6-0A4W	1.481	1.520	2.68	0.295
SGR-37.6-0AW	SGR-37.6-0A4W	1.521	1.560	2.68	0.295
SGR-38.6-0AW	SGR-38.6-0A4W	1.561	1.605	2.68	0.295
SGR-39.8-0AW	SGR-39.8-0A4W	1.606	1.645	2.68	0.295
SGR-40.8-0AW	SGR-40.8-0A4W	1.646	1.685	2.68	0.295
SGR-41.8-0AW	SGR-41.8-0A4W	1.686	1.730	2.68	0.295
SGR-43.0-0AW	SGR-43.0-0A4W	1.731	1.770	2.68	0.295
SGR-44.0-0AW	SGR-44.0-0A4W	1.771	1.810	2.68	0.295
SGR-45.0-0AW	SGR-45.0-0A4W	1.811	1.855	2.68	0.295
SGR-46.1-0AW	SGR-46.1-0A4W	1.856	1.895	2.68	0.295
SGR-47.1-0AW	SGR-47.1-0A4W	1.896	1.935	2.68	0.295
SGR-48.2-0AW	SGR-48.2-0A4W	1.936	1.980	2.68	0.295
SGR-49.3-0AW	SGR-49.3-0A4W	1.981	2.020	2.68	0.295
SGR-50.3-0AW	SGR-50.3-0A4W	2.021	2.060	3.10	0.295
SGR-51.3-0AW	SGR-51.3-0A4W	2.061	2.105	3.10	0.295
SGR-52.5-0AW	SGR-52.5-0A4W	2.106	2.145	3.10	0.295
SGR-53.5-0AW	SGR-53.5-0A4W	2.146	2.185	3.10	0.295
SGR-54.5-0AW	SGR-54.5-0A4W	2.186	2.230	3.10	0.295
SGR-55.7-0AW	SGR-55.7-0A4W	2.231	2.270	3.10	0.295
SGR-56.7-0AW	SGR-56.7-0A4W	2.271	2.310	3.10	0.295
SGR-57.7-0AW	SGR-57.7-0A4W	2.311	2.355	3.10	0.295
SGR-58.8-0AW	SGR-58.8-0A4W	2.356	2.395	3.10	0.295
SGR-59.8-0AW	SGR-59.8-0A4W	2.396	2.435	3.60	0.295
SGR-60.9-0AW	SGR-60.9-0A4W	2.436	2.480	3.60	0.295
SGR-62.0-0AW	SGR-62.0-0A4W	2.481	2.520	3.60	0.295
SGR-63.0-0AW	SGR-63.0-0A4W	2.521	2.560	3.60	0.295
SGR-64.0-0AW	SGR-64.0-0A4W	2.561	2.605	3.60	0.295
SGR-65.2-0AW	SGR-65.2-0A4W	2.606	2.645	3.60	0.295
SGR-66.2-0AW	SGR-66.2-0A4W	2.646	2.685	3.60	0.295
SGR-67.2-0AW	SGR-67.2-0A4W	2.686	2.730	3.60	0.295
SGR-68.4-0AW	SGR-68.4-0A4W	2.731	2.770	3.60	0.295
SGR-69.4-0AW	SGR-69.4-0A4W	2.771	2.810	3.60	0.295
SGR-70.4-0AW	SGR-70.4-0A4W	2.811	2.855	3.60	0.295
SGR-71.5-0AW	SGR-71.5-0A4W	2.856	2.895	3.60	0.295
SGR-72.5-0AW	SGR-72.5-0A4W	2.896	2.935	4.10	0.295
SGR-73.6-0AW	SGR-73.6-0A4W	2.936	2.980	4.10	0.295
SGR-74.7-0AW	SGR-74.7-0A4W	2.981	3.020	4.10	0.295
SGR-75.7-0AW	SGR-75.7-0A4W	3.021	3.060	4.10	0.295
SGR-76.7-0AW	SGR-76.7-0A4W	3.061	3.105	4.10	0.295
SGR-77.9-0AW	SGR-77.9-0A4W	3.106	3.145	4.10	0.295
SGR-78.9-0AW	SGR-78.9-0A4W	3.146	3.185	4.10	0.295
SGR-79.9-0AW	SGR-79.9-0A4W	3.186	3.230	4.10	0.295
SGR-81.1-0AW	SGR-81.1-0A4W	3.231	3.270	4.10	0.295
SGR-82.1-0AW	SGR-82.1-0A4W	3.271	3.310	4.10	0.295
SGR-83.1-0AW	SGR-83.1-0A4W	3.311	3.355	4.10	0.295
SGR-84.2-0AW	SGR-84.2-0A4W	3.356	3.395	4.10	0.295
SGR-85.2-0AW	SGR-85.2-0A4W	3.396	3.435	4.60	0.295
SGR-86.3-0AW	SGR-86.3-0A4W	3.436	3.480	4.60	0.295
SGR-87.4-0AW	SGR-87.4-0A4W	3.481	3.520	4.60	0.295
SGR-88.4-0AW	SGR-88.4-0A4W	3.521	3.560	4.60	0.295
SGR-89.4-0AW	SGR-89.4-0A4W	3.561	3.605	4.60	0.295
SGR-90.6-0AW	SGR-90.6-0A4W	3.606	3.645	4.60	0.295
SGR-91.6-0AW	SGR-91.6-0A4W	3.646	3.685	4.60	0.295
SGR-92.6-0AW	SGR-92.6-0A4W	3.686	3.730	4.60	0.295
SGR-93.8-0AW	SGR-93.8-0A4W	3.731	3.770	4.60	0.295
SGR-94.8-0AW	SGR-94.8-0A4W	3.771	3.810	4.60	0.295
SGR-95.8-0AW	SGR-95.8-0A4W	3.811	3.855	4.60	0.295
SGR-96.9-0AW	SGR-96.9-0A4W	3.856	3.895	4.60	0.295
SGR-97.9-0AW	SGR-97.9-0A4W	3.896	3.935	5.10	0.295
SGR-99.0-0AW	SGR-99.0-0A4W	3.936	3.980	5.10	0.295
SGR-100.1-0AW	SGR-100.1-0A4W	3.981	4.020	5.10	0.295
SGR-101.1-0AW	SGR-101.1-0A4W	4.021	4.060	5.10	0.295
SGR-102.1-0AW	SGR-102.1-0A4W	4.061	4.105	5.10	0.295
SGR-103.3-0AW	SGR-103.3-0A4W	4.106	4.145	5.10	0.295
SGR-104.3-0AW	SGR-104.3-0A4W	4.146	4.185	5.10	0.295
SGR-105.3-0AW	SGR-105.3-0A4W	4.186	4.230	5.10	0.295
SGR-106.5-0AW	SGR-106.5-0A4W	4.231	4.270	5.10	0.295
SGR-107.5-0AW	SGR-107.5-0A4W	4.271	4.310	5.10	0.295
SGR-108.5-0AW	SGR-108.5-0A4W	4.311	4.355	5.10	0.295
SGR-109.6-0AW	SGR-109.6-0A4W	4.356	4.395	5.10	0.295
SGR-110.6-0AW	SGR-110.6-0A4W	4.396	4.435	5.60	0.295
SGR-111.7-0AW	SGR-111.7-0A4W	4.436	4.480	5.60	0.295
SGR-112.8-0AW	SGR-112.8-0A4W	4.481	4.520	5.60	0.295
SGR-113.8-0AW	SGR-113.8-0A4W	4.521	4.560	5.60	0.295
SGR-114.8-0AW	SGR-114.8-0A4W	4.561	4.605	5.60	0.295
SGR-116.0-0AW	SGR-116.0-0A4W	4.606	4.645	5.60	0.295
SGR-117.0-0AW	SGR-117.0-0A4W	4.646	4.685	5.60	0.295
SGR-118.0-0AW	SGR-118.0-0A4W	4.686	4.730	5.60	0.295
SGR-119.2-0AW	SGR-119.2-0A4W	4.731	4.770	5.60	0.295
SGR-120.2-0AW	SGR-120.2-0A4W	4.771	4.810	5.60	0.295
SGR-121.2-0AW	SGR-121.2-0A4W	4.811	4.855	5.60	0.295
SGR-122.3-0AW	SGR-122.3-0A4W	4.856	4.895	5.60	0.295
SGR-123.3-0AW	SGR-123.3-0A4W	4.896	4.935	6.10	0.295
SGR-124.4-0AW	SGR-124.4-0A4W	4.936	4.980	6.10	0.295
SGR-125.5-0AW	SGR-125.5-0A4W	4.981	5.020	6.10	0.295
SGR-126.5-0AW	SGR-126.5-0A4W	5.021	5.060	6.10	0.295
SGR-127.5-0AW	SGR-127.5-0A4W	5.061	5.105	6.10	0.295
SGR-128.7-0AW	SGR-128.7-0A4W	5.106	5.145	6.10	0.295
SGR-129.7-0AW	SGR-129.7-0A4W	5.146	5.185	6.10	0.295
SGR-130.7-0AW	SGR-130.7-0A4W	5.186	5.230	6.10	0.295
SGR-131.9-0AW	SGR-131.9-0A4W	5.231	5.270	6.10	0.295
SGR-132.9-0AW	SGR-132.9-0A4W	5.271	5.310	6.10	0.295
SGR-133.9-0AW	SGR-133.9-0A4W	5.311	5.355	6.10	0.295
SGR-135.0-0AW	SGR-135.0-0A4W	5.356	5.395	6.10	0.295
SGR-136.0-0AW	SGR-136.0-0A4W	5.396	5.435	6.60	0.295
SGR-137.1-0AW	SGR-137.1-0A4W	5.436	5.480	6.60	0.295
SGR-138.2-0AW	SGR-138.2-0A4W	5.481	5.520	6.60	0.295
SGR-139.2-0AW	SGR-139.2-0A4W	5.521	5.560	6.60	0.295
SGR-140.2-0AW	SGR-140.2-0A4W	5.561	5.605	6.60	0.295
SGR-141.4-0AW	SGR-141.4-0A4W	5.606	5.645	6.60	0.295
SGR-142.4-0AW	SGR-142.4-0A4W	5.646	5.685	6.60	0.295
SGR-143.4-0AW	SGR-143.4-0A4W	5.686	5.730	6.60	0.295
SGR-144.6-0AW	SGR-144.6-0A4W	5.731	5.770	6.60	0.295
SGR-145.6-0AW	SGR-145.6-0A4W	5.771	5.810	6.60	0.295
SGR-146.6-0AW	SGR-146.6-0A4W	5.811	5.855	6.60	0.295
SGR-147.7-0AW	SGR-147.7-0A4W	5.856	5.895	6.60	0.295
SGR-148.7-0AW	SGR-148.7-0A4W	5.896	5.935	7.10	0.295
SGR-149.8-0AW	SGR-149.8-0A4W	5.936	5.980	7.10	0.295
SGR-150.9-0AW	SGR-150.9-0A4W	5.981	6.020	7.10	0.295

Conductive Epoxy Included

Parts List





Dimensions in inches

Standard SGR Catalog Number	Split Ring* Catalog Number	Bolt Through* Catalog Number	Min. shaft diameter	Max. shaft diameter	Outside diameter	Thickness Max
SGR-6.9-1	SGR-6.9-2A4	SGR-6.9-3	0.311	0.355	1.60	0.295
SGR-8.0-1	SGR-8.0-2A4	SGR-8.0-3	0.356	0.395	1.60	0.295
SGR-9.0-1	SGR-9.0-2A4	SGR-9.0-3	0.396	0.435	1.60	0.295
SGR-10.1-1	SGR-10.1-2A4	SGR-10.1-3	0.436	0.480	1.60	0.295
SGR-11.2-1	SGR-11.2-2A4	SGR-11.2-3	0.481	0.520	1.60	0.295
SGR-12.2-1	SGR-12.2-2A4	SGR-12.2-3	0.521	0.560	1.60	0.295
SGR-13.2-1	SGR-13.2-2A4	SGR-13.2-3	0.561	0.605	1.60	0.295
SGR-14.4-1	SGR-14.4-2A4	SGR-14.4-3	0.606	0.645	1.60	0.295
SGR-15.4-1	SGR-15.4-2A4	SGR-15.4-3	0.646	0.685	2.10	0.295
SGR-16.4-1	SGR-16.4-2A4	SGR-16.4-3	0.686	0.730	2.10	0.295
SGR-17.6-1	SGR-17.6-2A4	SGR-17.6-3	0.731	0.774	2.10	0.295
SGR-18.7-1	SGR-18.7-2A4	SGR-18.7-3	0.775	0.815	2.10	0.295
SGR-19.7-1	SGR-19.7-2A4	SGR-19.7-3	0.816	0.855	2.10	0.295
SGR-20.7-1	SGR-20.7-2A4	SGR-20.7-3	0.856	0.895	2.10	0.295
SGR-21.7-1	SGR-21.7-2A4	SGR-21.7-3	0.896	0.935	2.10	0.295
SGR-22.8-1	SGR-22.8-2A4	SGR-22.8-3	0.936	0.980	2.10	0.295
SGR-23.9-1	SGR-23.9-2A4	SGR-23.9-3	0.981	1.020	2.10	0.295
SGR-24.9-1	SGR-24.9-2A4	SGR-24.9-3	1.021	1.060	2.10	0.295
SGR-25.9-1	SGR-25.9-2A4	SGR-25.9-3	1.061	1.105	2.10	0.295
SGR-27.1-1	SGR-27.1-2A4	SGR-27.1-3	1.106	1.145	2.10	0.295
SGR-28.1-1	SGR-28.1-2A4	SGR-28.1-3	1.146	1.185	2.10	0.295
SGR-29.1-1	SGR-29.1-2A4	SGR-29.1-3	1.186	1.230	2.10	0.295
SGR-30.3-1	SGR-30.3-2A4	SGR-30.3-3	1.231	1.270	2.10	0.295
SGR-31.3-1	SGR-31.3-2A4	SGR-31.3-3	1.271	1.310	2.10	0.295
SGR-32.3-1	SGR-32.3-2A4	SGR-32.3-3	1.311	1.355	2.10	0.295
SGR-33.4-1	SGR-33.4-2A4	SGR-33.4-3	1.356	1.395	2.10	0.295
SGR-34.4-1	SGR-34.4-2A4	SGR-34.4-3	1.396	1.435	2.68	0.295
SGR-35.5-1	SGR-35.5-2A4	SGR-35.5-3	1.436	1.480	2.68	0.295
SGR-36.6-1	SGR-36.6-2A4	SGR-36.6-3	1.481	1.520	2.68	0.295
SGR-37.6-1	SGR-37.6-2A4	SGR-37.6-3	1.521	1.560	2.68	0.295
SGR-38.6-1	SGR-38.6-2A4	SGR-38.6-3	1.561	1.605	2.68	0.295
SGR-39.8-1	SGR-39.8-2A4	SGR-39.8-3	1.606	1.645	2.68	0.295
SGR-40.8-1	SGR-40.8-2A4	SGR-40.8-3	1.646	1.685	2.68	0.295
SGR-41.8-1	SGR-41.8-2A4	SGR-41.8-3	1.686	1.730	2.68	0.295
SGR-43.0-1	SGR-43.0-2A4	SGR-43.0-3	1.731	1.770	2.68	0.295
SGR-44.0-1	SGR-44.0-2A4	SGR-44.0-3	1.771	1.810	2.68	0.295
SGR-45.0-1	SGR-45.0-2A4	SGR-45.0-3	1.811	1.855	2.68	0.295
SGR-46.1-1	SGR-46.1-2A4	SGR-46.1-3	1.856	1.895	2.68	0.295
SGR-47.1-1	SGR-47.1-2A4	SGR-47.1-3	1.896	1.935	2.68	0.295
SGR-48.2-1	SGR-48.2-2A4	SGR-48.2-3	1.936	1.980	2.68	0.295
SGR-49.3-1	SGR-49.3-2A4	SGR-49.3-3	1.981	2.020	2.68	0.295
SGR-50.3-1	SGR-50.3-2A4	SGR-50.3-3	2.021	2.060	3.10	0.295
SGR-51.3-1	SGR-51.3-2A4	SGR-51.3-3	2.061	2.105	3.10	0.295
SGR-52.5-1	SGR-52.5-2A4	SGR-52.5-3	2.106	2.145	3.10	0.295
SGR-53.5-1	SGR-53.5-2A4	SGR-53.5-3	2.146	2.185	3.10	0.295
SGR-54.5-1	SGR-54.5-2A4	SGR-54.5-3	2.186	2.230	3.10	0.295
SGR-55.7-1	SGR-55.7-2A4	SGR-55.7-3	2.231	2.270	3.10	0.295
SGR-56.7-1	SGR-56.7-2A4	SGR-56.7-3	2.271	2.310	3.10	0.295
SGR-57.7-1	SGR-57.7-2A4	SGR-57.7-3	2.311	2.355	3.10	0.295
SGR-58.8-1	SGR-58.8-2A4	SGR-58.8-3	2.356	2.395	3.10	0.295
SGR-59.8-1	SGR-59.8-2A4	SGR-59.8-3	2.396	2.435	3.60	0.295
SGR-60.9-1	SGR-60.9-2A4	SGR-60.9-3	2.436	2.480	3.60	0.295
SGR-62.0-1	SGR-62.0-2A4	SGR-62.0-3	2.481	2.520	3.60	0.295
SGR-63.0-1	SGR-63.0-2A4	SGR-63.0-3	2.521	2.560	3.60	0.295
SGR-64.0-1	SGR-64.0-2A4	SGR-64.0-3	2.561	2.605	3.60	0.295
SGR-65.2-1	SGR-65.2-2A4	SGR-65.2-3	2.606	2.645	3.60	0.295
SGR-66.2-1	SGR-66.2-2A4	SGR-66.2-3	2.646	2.685	3.60	0.295
SGR-67.2-1	SGR-67.2-2A4	SGR-67.2-3	2.686	2.730	3.60	0.295
SGR-68.4-1	SGR-68.4-2A4	SGR-68.4-3	2.731	2.770	3.60	0.295
SGR-69.4-1	SGR-69.4-2A4	SGR-69.4-3	2.771	2.810	3.60	0.295
SGR-70.4-1	SGR-70.4-2A4	SGR-70.4-3	2.811	2.855	3.60	0.295
SGR-71.5-1	SGR-71.5-2A4	SGR-71.5-3	2.856	2.895	3.60	0.295
SGR-72.5-1	SGR-72.5-2A4	SGR-72.5-3	2.896	2.935	4.10	0.295
SGR-73.6-1	SGR-73.6-2A4	SGR-73.6-3	2.936	2.980	4.10	0.295
SGR-74.7-1	SGR-74.7-2A4	SGR-74.7-3	2.981	3.020	4.10	0.295
SGR-75.7-1	SGR-75.7-2A4	SGR-75.7-3	3.021	3.060	4.10	0.295
SGR-76.7-1	SGR-76.7-2A4	SGR-76.7-3	3.061	3.105	4.10	0.295
SGR-77.9-1	SGR-77.9-2A4	SGR-77.9-3	3.106	3.145	4.10	0.295
SGR-78.9-1	SGR-78.9-2A4	SGR-78.9-3	3.146	3.185	4.10	0.295

*Custom Part - No Returns

DRAFT

Parts List







Dimensions in inches

Standard SGR Catalog Number	Split Ring* Catalog Number	Bolt Through* Catalog Number	Min. shaft diameter	Max. shaft diameter	Outside diameter	Thickness Max
SGR-79.9-1	SGR-79.9-2A4	SGR-79.9-3	3.186	3.230	4.10	0.295
SGR-81.1-1	SGR-81.1-2A4	SGR-81.1-3	3.231	3.270	4.10	0.295
SGR-82.1-1	SGR-82.1-2A4	SGR-82.1-3	3.271	3.310	4.10	0.295
SGR-83.1-1	SGR-83.1-2A4	SGR-83.1-3	3.311	3.355	4.10	0.295
SGR-84.2-1	SGR-84.2-2A4	SGR-84.2-3	3.356	3.395	4.10	0.295
SGR-85.2-1	SGR-85.2-2A4	SGR-85.2-3	3.396	3.435	4.60	0.295
SGR-86.3-1	SGR-86.3-2A4	SGR-86.3-3	3.436	3.480	4.60	0.295
SGR-87.4-1	SGR-87.4-2A4	SGR-87.4-3	3.481	3.520	4.60	0.295
SGR-88.4-1	SGR-88.4-2A4	SGR-88.4-3	3.521	3.560	4.60	0.295
SGR-89.4-1	SGR-89.4-2A4	SGR-89.4-3	3.561	3.605	4.60	0.295
SGR-90.6-1	SGR-90.6-2A4	SGR-90.6-3	3.606	3.645	4.60	0.295
SGR-91.6-1	SGR-91.6-2A4	SGR-91.6-3	3.646	3.685	4.60	0.295
SGR-92.6-1	SGR-92.6-2A4	SGR-92.6-3	3.686	3.730	4.60	0.295
SGR-93.8-1	SGR-93.8-2A4	SGR-93.8-3	3.731	3.770	4.60	0.295
SGR-94.8-1	SGR-94.8-2A4	SGR-94.8-3	3.771	3.810	4.60	0.295
SGR-95.8-1	SGR-95.8-2A4	SGR-95.8-3	3.811	3.855	4.60	0.295
SGR-96.9-1	SGR-96.9-2A4	SGR-96.9-3	3.856	3.895	4.60	0.295
SGR-97.9-1	SGR-97.9-2A4	SGR-97.9-3	3.896	3.935	5.10	0.295
SGR-99.0-1	SGR-99.0-2A4	SGR-99.0-3	3.936	3.980	5.10	0.295
SGR-100.1-1	SGR-100.1-2A4	SGR-100.1-3	3.981	4.020	5.10	0.295
SGR-101.1-1	SGR-101.1-2A4	SGR-101.1-3	4.021	4.060	5.10	0.295
SGR-102.1-1	SGR-102.1-2A4	SGR-102.1-3	4.061	4.105	5.10	0.295
SGR-103.3-1	SGR-103.3-2A4	SGR-103.3-3	4.106	4.145	5.10	0.295
SGR-104.3-1	SGR-104.3-2A4	SGR-104.3-3	4.146	4.185	5.10	0.295
SGR-105.3-1	SGR-105.3-2A4	SGR-105.3-3	4.186	4.230	5.10	0.295
SGR-106.5-1	SGR-106.5-2A4	SGR-106.5-3	4.231	4.270	5.10	0.295
SGR-107.5-1	SGR-107.5-2A4	SGR-107.5-3	4.271	4.310	5.10	0.295
SGR-108.5-1	SGR-108.5-2A4	SGR-108.5-3	4.311	4.355	5.10	0.295
SGR-109.6-1	SGR-109.6-2A4	SGR-109.6-3	4.356	4.395	5.10	0.295
SGR-110.6-1	SGR-110.6-2A4	SGR-110.6-3	4.396	4.435	5.60	0.295
SGR-111.7-1	SGR-111.7-2A4	SGR-111.7-3	4.436	4.480	5.60	0.295
SGR-112.8-1	SGR-112.8-2A4	SGR-112.8-3	4.481	4.520	5.60	0.295
SGR-113.8-1	SGR-113.8-2A4	SGR-113.8-3	4.521	4.560	5.60	0.295
SGR-114.8-1	SGR-114.8-2A4	SGR-114.8-3	4.561	4.605	5.60	0.295
SGR-116.0-1	SGR-116.0-2A4	SGR-116.0-3	4.606	4.645	5.60	0.295
SGR-117.0-1	SGR-117.0-2A4	SGR-117.0-3	4.646	4.685	5.60	0.295
SGR-118.0-1	SGR-118.0-2A4	SGR-118.0-3	4.686	4.730	5.60	0.295
SGR-119.2-1	SGR-119.2-2A4	SGR-119.2-3	4.731	4.770	5.60	0.295
SGR-120.2-1	SGR-120.2-2A4	SGR-120.2-3	4.771	4.810	5.60	0.295
SGR-121.2-1	SGR-121.2-2A4	SGR-121.2-3	4.811	4.855	5.60	0.295
SGR-122.3-1	SGR-122.3-2A4	SGR-122.3-3	4.856	4.895	5.60	0.295
SGR-123.3-1	SGR-123.3-2A4	SGR-123.3-3	4.896	4.935	6.10	0.295
SGR-124.4-1	SGR-124.4-2A4	SGR-124.4-3	4.936	4.980	6.10	0.295
SGR-125.5-1	SGR-125.5-2A4	SGR-125.5-3	4.981	5.020	6.10	0.295
SGR-126.5-1	SGR-126.5-2A4	SGR-126.5-3	5.021	5.060	6.10	0.295
SGR-127.5-1	SGR-127.5-2A4	SGR-127.5-3	5.061	5.105	6.10	0.295
SGR-128.7-1	SGR-128.7-2A4	SGR-128.7-3	5.106	5.145	6.10	0.295
SGR-129.7-1	SGR-129.7-2A4	SGR-129.7-3	5.146	5.185	6.10	0.295
SGR-130.7-1	SGR-130.7-2A4	SGR-130.7-3	5.186	5.230	6.10	0.295
SGR-131.9-1	SGR-131.9-2A4	SGR-131.9-3	5.231	5.270	6.10	0.295
SGR-132.9-1	SGR-132.9-2A4	SGR-132.9-3	5.271	5.310	6.10	0.295
SGR-133.9-1	SGR-133.9-2A4	SGR-133.9-3	5.311	5.355	6.10	0.295
SGR-135.0-1	SGR-135.0-2A4	SGR-135.0-3	5.356	5.395	6.10	0.295
SGR-136.0-1	SGR-136.0-2A4	SGR-136.0-3	5.396	5.435	6.60	0.295
SGR-137.1-1	SGR-137.1-2A4	SGR-137.1-3	5.436	5.480	6.60	0.295
SGR-138.2-1	SGR-138.2-2A4	SGR-138.2-3	5.481	5.520	6.60	0.295
SGR-139.2-1	SGR-139.2-2A4	SGR-139.2-3	5.521	5.560	6.60	0.295
SGR-140.2-1	SGR-140.2-2A4	SGR-140.2-3	5.561	5.605	6.60	0.295
SGR-141.4-1	SGR-141.4-2A4	SGR-141.4-3	5.606	5.645	6.60	0.295
SGR-142.4-1	SGR-142.4-2A4	SGR-142.4-3	5.646	5.685	6.60	0.295
SGR-143.4-1	SGR-143.4-2A4	SGR-143.4-3	5.686	5.730	6.60	0.295
SGR-144.6-1	SGR-144.6-2A4	SGR-144.6-3	5.731	5.770	6.60	0.295
SGR-145.6-1	SGR-145.6-2A4	SGR-145.6-3	5.771	5.810	6.60	0.295
SGR-146.6-1	SGR-146.6-2A4	SGR-146.6-3	5.811	5.855	6.60	0.295
SGR-147.7-1	SGR-147.7-2A4	SGR-147.7-3	5.856	5.895	6.60	0.295
SGR-148.7-1	SGR-148.7-2A4	SGR-148.7-3	5.896	5.935	7.10	0.295
SGR-149.8-1	SGR-149.8-2A4	SGR-149.8-3	5.936	5.980	7.10	0.295
SGR-150.9-1	SGR-150.9-2A4	SGR-150.9-3	5.981	6.020	7.10	0.295

*Custom Part - No Returns

DRAFT

Standard SGR™ - Press Fit Mounting*



Dimensions in inches

Catalog Number	Min.shaft diameter	Max.shaft diameter	SGR OD Tolerance +0/-0.001	Thickness Max	Bore Tolerance +0.001/-0
SGR-6.9-0A6	0.311	0.355	1.580	0.295	1.576
SGR-8.0-0A6	0.356	0.395	1.580	0.295	1.576
SGR-9.0-0A6	0.396	0.435	1.580	0.295	1.576
SGR-10.1-0A6	0.436	0.480	1.580	0.295	1.576
SGR-11.2-0A6	0.481	0.520	1.580	0.295	1.576
SGR-12.2-0A6	0.521	0.560	1.580	0.295	1.576
SGR-13.2-0A6	0.561	0.605	1.580	0.295	1.576
SGR-14.4-0A6	0.606	0.645	1.580	0.295	1.576
SGR-15.4-0A6	0.646	0.685	2.080	0.295	2.076
SGR-16.4-0A6	0.686	0.730	2.080	0.295	2.076
SGR-17.6-0A6	0.731	0.774	2.080	0.295	2.076
SGR-18.7-0A6	0.775	0.815	2.080	0.295	2.076
SGR-19.7-0A6	0.816	0.855	2.080	0.295	2.076
SGR-20.7-0A6	0.856	0.895	2.080	0.295	2.076
SGR-21.7-0A6	0.896	0.935	2.080	0.295	2.076
SGR-22.8-0A6	0.936	0.980	2.080	0.295	2.076
SGR-23.9-0A6	0.981	1.020	2.080	0.295	2.076
SGR-24.9-0A6	1.021	1.060	2.080	0.295	2.076
SGR-25.9-0A6	1.061	1.105	2.080	0.295	2.076
SGR-27.1-0A6	1.106	1.145	2.080	0.295	2.076
SGR-28.1-0A6	1.146	1.185	2.080	0.295	2.076
SGR-29.1-0A6	1.186	1.230	2.080	0.295	2.076
SGR-30.3-0A6	1.231	1.270	2.080	0.295	2.076
SGR-31.3-0A6	1.271	1.310	2.080	0.295	2.076
SGR-32.3-0A6	1.311	1.355	2.080	0.295	2.076
SGR-33.4-0A6	1.356	1.395	2.080	0.295	2.076
SGR-34.4-0A6	1.396	1.435	2.660	0.295	2.656
SGR-35.5-0A6	1.436	1.480	2.660	0.295	2.656
SGR-36.6-0A6	1.481	1.520	2.660	0.295	2.656
SGR-37.6-0A6	1.521	1.560	2.660	0.295	2.656
SGR-38.6-0A6	1.561	1.605	2.660	0.295	2.656
SGR-39.8-0A6	1.606	1.645	2.660	0.295	2.656
SGR-40.8-0A6	1.646	1.685	2.660	0.295	2.656
SGR-41.8-0A6	1.686	1.730	2.660	0.295	2.656
SGR-43.0-0A6	1.731	1.770	2.660	0.295	2.656
SGR-44.0-0A6	1.771	1.810	2.660	0.295	2.656
SGR-45.0-0A6	1.811	1.855	2.660	0.295	2.656
SGR-46.1-0A6	1.856	1.895	2.660	0.295	2.656
SGR-47.1-0A6	1.896	1.935	2.660	0.295	2.656
SGR-48.2-0A6	1.936	1.980	2.660	0.295	2.656
SGR-49.3-0A6	1.981	2.020	2.660	0.295	2.656
SGR-50.3-0A6	2.021	2.060	3.080	0.295	3.076
SGR-51.3-0A6	2.061	2.105	3.080	0.295	3.076
SGR-52.5-0A6	2.106	2.145	3.080	0.295	3.076
SGR-53.5-0A6	2.146	2.185	3.080	0.295	3.076
SGR-54.5-0A6	2.186	2.230	3.080	0.295	3.076
SGR-55.7-0A6	2.231	2.270	3.080	0.295	3.076
SGR-56.7-0A6	2.271	2.310	3.080	0.295	3.076
SGR-57.7-0A6	2.311	2.355	3.080	0.295	3.076
SGR-58.8-0A6	2.356	2.395	3.080	0.295	3.076
SGR-59.8-0A6	2.396	2.435	3.580	0.295	3.576
SGR-60.9-0A6	2.436	2.480	3.580	0.295	3.576
SGR-62.0-0A6	2.481	2.520	3.580	0.295	3.576
SGR-63.0-0A6	2.521	2.560	3.580	0.295	3.576
SGR-64.0-0A6	2.561	2.605	3.580	0.295	3.576
SGR-65.2-0A6	2.606	2.645	3.580	0.295	3.576
SGR-66.2-0A6	2.646	2.685	3.580	0.295	3.576
SGR-67.2-0A6	2.686	2.730	3.580	0.295	3.576
SGR-68.4-0A6	2.731	2.770	3.580	0.295	3.576
SGR-69.4-0A6	2.771	2.810	3.580	0.295	3.576
SGR-70.4-0A6	2.811	2.855	3.580	0.295	3.576
SGR-71.5-0A6	2.856	2.895	3.580	0.295	3.576
SGR-72.5-0A6	2.896	2.935	4.080	0.295	4.076
SGR-73.6-0A6	2.936	2.980	4.080	0.295	4.076
SGR-74.7-0A6	2.981	3.020	4.080	0.295	4.076
SGR-75.7-0A6	3.021	3.060	4.080	0.295	4.076
SGR-76.7-0A6	3.061	3.105	4.080	0.295	4.076
SGR-77.9-0A6	3.106	3.145	4.080	0.295	4.076
SGR-78.9-0A6	3.146	3.185	4.080	0.295	4.076
SGR-79.9-0A6	3.186	3.230	4.080	0.295	4.076
SGR-81.1-0A6	3.231	3.270	4.080	0.295	4.076
SGR-82.1-0A6	3.271	3.310	4.080	0.295	4.076
SGR-83.1-0A6	3.311	3.355	4.080	0.295	4.076
SGR-84.2-0A6	3.356	3.395	4.080	0.295	4.076
SGR-85.2-0A6	3.396	3.435	4.580	0.295	4.576
SGR-86.3-0A6	3.436	3.480	4.580	0.295	4.576
SGR-87.4-0A6	3.481	3.520	4.580	0.295	4.576
SGR-88.4-0A6	3.521	3.560	4.580	0.295	4.576
SGR-89.4-0A6	3.561	3.605	4.580	0.295	4.576
SGR-90.6-0A6	3.606	3.645	4.580	0.295	4.576
SGR-91.6-0A6	3.646	3.685	4.580	0.295	4.576
SGR-92.6-0A6	3.686	3.730	4.580	0.295	4.576
SGR-93.8-0A6	3.731	3.770	4.580	0.295	4.576
SGR-94.8-0A6	3.771	3.810	4.580	0.295	4.576
SGR-95.8-0A6	3.811	3.855	4.580	0.295	4.576
SGR-96.9-0A6	3.856	3.895	4.580	0.295	4.576
SGR-97.9-0A6	3.896	3.935	5.080	0.295	5.076
SGR-99.0-0A6	3.936	3.980	5.080	0.295	5.076
SGR-100.1-0A6	3.981	4.020	5.080	0.295	5.076
SGR-101.1-0A6	4.021	4.060	5.080	0.295	5.076
SGR-102.1-0A6	4.061	4.105	5.080	0.295	5.076
SGR-103.3-0A6	4.106	4.145	5.080	0.295	5.076
SGR-104.3-0A6	4.146	4.185	5.080	0.295	5.076
SGR-105.3-0A6	4.186	4.230	5.080	0.295	5.076
SGR-106.5-0A6	4.231	4.270	5.080	0.295	5.076
SGR-107.5-0A6	4.271	4.310	5.080	0.295	5.076
SGR-108.5-0A6	4.311	4.355	5.080	0.295	5.076
SGR-109.6-0A6	4.356	4.395	5.080	0.295	5.076
SGR-110.6-0A6	4.396	4.435	5.580	0.295	5.576
SGR-111.7-0A6	4.436	4.480	5.580	0.295	5.576
SGR-112.8-0A6	4.481	4.520	5.580	0.295	5.576
SGR-113.8-0A6	4.521	4.560	5.580	0.295	5.576
SGR-114.8-0A6	4.561	4.605	5.580	0.295	5.576
SGR-116.0-0A6	4.606	4.645	5.580	0.295	5.576
SGR-117.0-0A6	4.646	4.685	5.580	0.295	5.576
SGR-118.0-0A6	4.686	4.730	5.580	0.295	5.576
SGR-119.2-0A6	4.731	4.770	5.580	0.295	5.576
SGR-120.2-0A6	4.771	4.810	5.580	0.295	5.576
SGR-121.2-0A6	4.811	4.855	5.580	0.295	5.576
SGR-122.3-0A6	4.856	4.895	5.580	0.295	5.576
SGR-123.3-0A6	4.896	4.935	6.080	0.295	6.076
SGR-124.4-0A6	4.936	4.980	6.080	0.295	6.076
SGR-125.5-0A6	4.981	5.020	6.080	0.295	6.076
SGR-126.5-0A6	5.021	5.060	6.080	0.295	6.076
SGR-127.5-0A6	5.061	5.105	6.080	0.295	6.076
SGR-128.7-0A6	5.106	5.145	6.080	0.295	6.076
SGR-129.7-0A6	5.146	5.185	6.080	0.295	6.076
SGR-130.7-0A6	5.186	5.230	6.080	0.295	6.076
SGR-131.9-0A6	5.231	5.270	6.080	0.295	6.076
SGR-132.9-0A6	5.271	5.310	6.080	0.295	6.076
SGR-133.9-0A6	5.311	5.355	6.080	0.295	6.076
SGR-135.0-0A6	5.356	5.395	6.080	0.295	6.076
SGR-136.0-0A6	5.396	5.435	6.580	0.295	6.576
SGR-137.1-0A6	5.436	5.480	6.580	0.295	6.576
SGR-138.2-0A6	5.481	5.520	6.580	0.295	6.576
SGR-139.2-0A6	5.521	5.560	6.580	0.295	6.576
SGR-140.2-0A6	5.561	5.605	6.580	0.295	6.576
SGR-141.4-0A6	5.606	5.645	6.580	0.295	6.576
SGR-142.4-0A6	5.646	5.685	6.580	0.295	6.576
SGR-143.4-0A6	5.686	5.730	6.580	0.295	6.576
SGR-144.6-0A6	5.731	5.770	6.580	0.295	6.576
SGR-145.6-0A6	5.771	5.810	6.580	0.295	6.576
SGR-146.6-0A6	5.811	5.855	6.580	0.295	6.576
SGR-147.7-0A6	5.856	5.895	6.580	0.295	6.576
SGR-148.7-0A6	5.896	5.935	7.080	0.295	7.076
SGR-149.8-0A6	5.936	5.980	7.080	0.295	7.076
SGR-150.9-0A6	5.981	6.020	7.080	0.295	7.076

*Custom Part - No Returns

Bearing Protection Ring Kit for NEMA & IEC Motors

Kits include AEGIS SGR™ Bearing Protection Ring and all mounting hardware

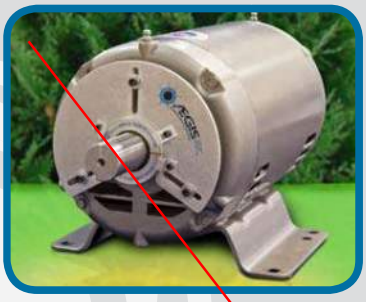

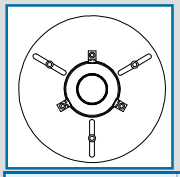

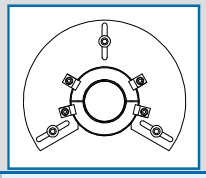

NEMA Motors Solid	NEMA Motors Split			
Catalog Number	**Catalog Number**	Motor shaft diameter "u"	NEMA Frame	Plate OD
SGR-0.625-NEMA	**SGR-0.625-NEMA-1A4**	0.625"	56	3.75"
SGR-0.875-NEMA	**SGR-0.875-NEMA-1A4**	0.875"	143T, 145T	5.60"
SGR-1.125-NEMA	**SGR-1.125-NEMA-1A4**	1.125"	182T, 184T	5.60"
SGR-1.375-NEMA	**SGR-1.375-NEMA-1A4**	1.375"	213T, 215T	5.60"
SGR-1.625-NEMA	**SGR-1.625-NEMA-1A4**	1.625"	254T, 256T	6.30"
SGR-1.875-NEMA	**SGR-1.875-NEMA-1A4**	1.875"	284T, 286T, 324TS, 326TS, 364TS, 365TS	6.30"
SGR-2.125-NEMA	**SGR-2.125-NEMA-1A4**	2.125"	324T, 326T, 404TS, 405TS	6.60"
SGR-2.375-NEMA	**SGR-2.375-NEMA-1A4**	2.375"	364T, 365T, 444TS, 445TS, 447TS, 449TS	6.60"
SGR-2.875-NEMA	**SGR-2.875-NEMA-1A4**	2.875"	404T, 405T,	7.30"
SGR-3.375-NEMA	**SGR-3.375-NEMA-1A4**	3.375"	444T, 445T, 447T, 449T	7.60"

IEC Motors Solid	IEC Motors Split			
Catalog Number	**Catalog Number**	IEC shaft diameter	IEC Frame	Plate OD
SGR-19-IEC	**SGR-19-IEC-2A4**	19mm	IEC 80 (2, 4, 6, 8 pole)	142mm
SGR-24-IEC	**SGR-24-IEC-2A4**	24mm	IEC 90S, 90L (2, 4, 6, 8 pole)	142mm
SGR-28-IEC	**SGR-28-IEC-2A4**	28mm	IEC 100L, 112M (2, 4, 6, 8 pole)	142mm
SGR-38-IEC	**SGR-38-IEC-2A4**	38mm	IEC 132S, 132M (2, 4, 6, 8 pole)	160mm
SGR-42-IEC	**SGR-42-IEC-2A4**	42mm	IEC 160M, 160L (2, 4, 6, 8 pole)	160mm
SGR-48-IEC	**SGR-48-IEC-2A4**	48mm	IEC 180M, 180L (2, 4, 6, 8 pole)	160mm
SGR-55-IEC	**SGR-55-IEC-2A4**	55mm	IEC 200L (2, 4, 6, 8 pole); IEC 225S, 225M (2 pole)	168mm
SGR-60-IEC	**SGR-60-IEC-2A4**	60mm	IEC 225S, 225M (4, 6, 8 pole) ; IEC 250M (2 pole)	168mm
SGR-65-IEC	**SGR-65-IEC-2A4**	65mm	IEC 250M (4, 6, 8 pole); IEC 280M, 280S, 315S, 315M, 315L (2 pole)	185mm
SGR-75-IEC	**SGR-75-IEC-2A4**	75mm	IEC 280S, 280M (4, 6, 8 pole); IEC 355M, 355L (2 pole)	193mm
SGR-80-IEC	**SGR-80-IEC-2A4**	80mm	IEC 315S, 315M, 315L (4, 6, 8 pole)	193mm
SGR-95-IEC	**SGR-95-IEC-2A4**	95mm	IEC 335L, 335M, 355L, 355M (4, 6, 8, 10 pole)	211mm

Custom Kits available for shaft diameters not shown above

NEMA/IEC Bearing Protection Ring™ Kit

SOLID



1 AEGIS SGR™
1 mounting plate
3 screws (inches or metric)
3 washers
3 lock washers
3 spacers*

SPLIT



1 AEGIS Split Ring SGR™
1 split mounting plate
3 screws (inches or metric)
3 washers
3 lock washers
3 spacers*

* each kit includes 3 spacer lengths: 1/4", 1/2", and 1" for NEMA kits and 7mm, 17mm, and 27mm for IEC kits.

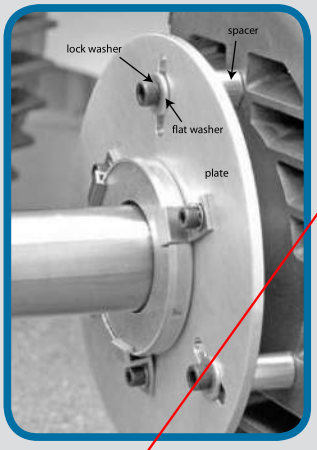

- Easy to order and install for any NEMA or IEC frame size
- Clears any slinger, shaft shoulder or protrusion
- Adjustable slots adapt to most end bells
- Rigid mounting plate ensures alignment
- Split Ring kit allows for installation without decoupling equipment

DRAFT

Custom Applications

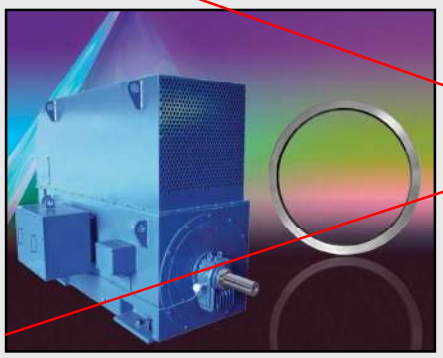

AEGIS SGR™ Bearing Protection Ring™ for Large Shaft Diameters

- For shaft diameters greater than 6" (152.4mm)
- Long term reliable performance
- Maintenance free system
- Available in solid or split ring design

AEGIS WTG™ Wind Turbine Bearing Protection



- 6 rows conductive microfiber
- High current capable
- AEGIS WTG™ shaft current monitoring compatible
- Long term reliable performance
- Maintenance free system
- Up-tower retrofit capable split ring configuration

AEGIS iPRO™ High Current Bearing Protection for Large Motors and Generators

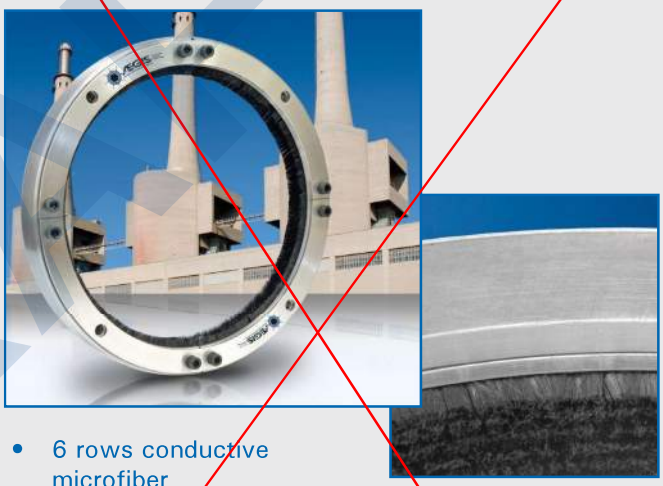

- 6 rows conductive microfiber
- High current capable
- AEGIS iPRO shaft current monitoring compatible
- Long term reliable performance
- Maintenance free system
- Available in sizes up to 30" (762mm) shaft diameter

WARRANTY: Units are guaranteed for one year from date of purchase against defective materials and workmanship. Replacement will be made except for defects caused by abnormal use or mishandling. All statements and technical information contained herein, or presented by the manufacturer or his representative are rendered in good faith. User must assume responsibility to determine suitability of the product for intended use. The manufacturer shall not be liable for any injury, loss or damage, direct or consequential arising out of the use, or attempt to use the product.

Patent Numbers: 7,136,271: 7,193,836: and other patents pending

Engineering Specification:

All motors driven by a variable frequency PWM drive shall include a maintenance free, circumferential, conductive micro fiber shaft grounding ring (AEGIS SGR) to discharge shaft currents to ground.
Recommended part: AEGIS SGR™ Bearing Protection Ring

DRAFT

AEGIS SGR™

BEARING PROTECTION RING™

CONSULTING - SPECIFYING engineer 2009 PRODUCT OF THE YEAR Finalist

Plant Engineering PRODUCT of the YEAR 2007 Winner

2007 FROST & SULLIVAN
North American Motors & Drives Product Value Leadership of the Year Award

2007 design news GOLDEN MOUSETRAP Finalist

CONSULTING - SPECIFYING engineer A Perfect 10 2006 Product of the Year Silver Winner

DRAFT

Catalog No. 2009-1

Electro Static Technology™
An ITW Company

31 Winterbrook Road
Mechanic Falls, Maine 04256 USA
Tel.: 866-738-1857
Fax: 207-998-5143
www.est-aegis.com

Low Voltage Motors - Technical Bulletin - LVTB 04052024-1

Topic:	Insulated Bearings and Brackets
Issue Date:	April 5, 2024
Issued by	Dale Basso
Distribution List:	LV AEs, Inside Sales, Outside sales Service & Warranty

Preface: Shaft currents have become an increasing issue with modern Variable Frequency Drives and Higher switching frequencies? This creates a need to protect bearings from electrical damage.

The Basics:

Practical experience and international standards show that bearing insulation is an effective solution to prevent bearing damages due to electric currents flowing through the bearings. These currents can be caused by electromagnetic unbalances, by electrostatic effects, or by the high frequency common mode voltage from frequency converters. Bearing insulation can be made in different effective ways, as shown in IEC 60034-25 – Clause 8.4.2 (Figure 1), as well as NEMA ICS 7.2-2021 -5.2.10.

There are three components of shaft/bearing currents

- **Stator to Frame capacitive currents**
  - Higher frequencies caused by switching
  - Standard ground is not the desire return path to the drive
  - May take path through bearings, shaft and driven load
  - Best solution excellent low impedance return path back to the VFD (VFD Cable & Ground straps)

- **Stator to Rotor capacitive currents**
  - Created in rotor looking for path to source (VFD)
  - Path of least resistance may be:
    - Through driven equipment bearings
    - Through motor bearings
    - Best solution is motor drive end shaft ground brush plus Excellent Low impedance return path to VFD

- **Motor circulating currents** - Typically motors above 400T Frames (>100HP)
  - Caused by asymmetry in Magnetic field axially along the rotor
  - Typically, low frequencies on Sine wave- Higher frequencies on VFD
  - Best solution – Insulated ODE bearing (or bearing housing) and DE Shaft Ground brush plus Excellent low impedance return path to VFD

What is the difference between an insulated bearing housing and an insulated bearing?

Both provide the same benefit, as referenced in IEC 60034-25 and EASA AR100. That is to provide a layer of insulation to break the High frequency capacitive current across the bearing.

The effectiveness is measured in Ohms at high frequency not DC. According to IEC 60034-25 and EASA AR100 standards; in order to assure effective protection against bearing currents, the bearing impedance should be ≥ 100 Ω at 1 MHz.

DRAFT

- Popular **ceramic coated Insulated bearings** exceed 50-100 Ohms @1MHZ



- **WEG Insulated End Bracket** – 100+ Ohms @1MHZ
  The advantage of the Insulated bearing housing is that it is more effective than the ceramic coated bearings at a comparable cost, and allows future bearing replacements to utilize standard readily available bearings which cost less than the special insulated bearings.

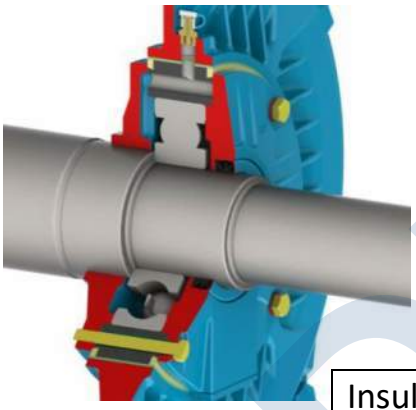

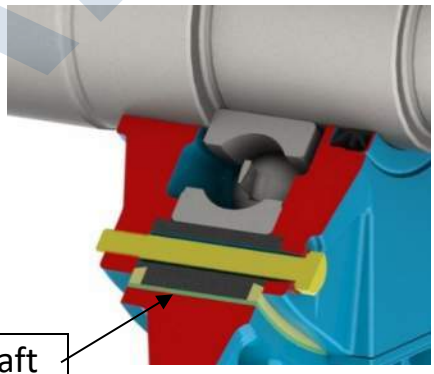

Insulating layer separating shaft and bearing from ground

- **Ceramic Ball bearings** – >200 Ohms @1MHz



DRAFT

BEST PRACTICES FOR VARIABLE FREQUENCY DRIVE (VFD) APPLICATIONS

VFD-induced shaft voltage can exist in every VFD driven motor application. It is not specific to the air movement industry, nor is it specific to any particular manufacturer's motors, drives or equipment. However, shaft voltage only becomes a problem when it leads to bearing current and consequential damage to the motor bearings.

NOTICE!

Risk of serious machine damage!
Appropriate measures must be implemented by the installation contractor to limit the shaft induced voltage to 1V – 2V as per IEEE 112.



Figure 1 Bearing damage caused by EDM

Frequency converters (also known as variable frequency drives or VFD's) can induce a voltage on the shafts of drive motors and stages due to the high switching frequencies used in these drives. Shaft voltage can become a problem when it reaches a high enough level to discharge across the bearings, causing electrical discharge machining (EDM) and creating small grooves called fluting which can lead to premature bearing failure. The potential for this induced shaft voltage exists in every VFD driven motor application and must be addressed on an installation specific basis.

VFD induced voltage is a phenomenon that is somewhat rare and unpredictable. As additional protection, Aerzen USA offers options for mitigating induced shaft currents such as grounding rings and isolated motor non drive end bearings. Even with these options installed, there is no guarantee that this phenomenon will be entirely eliminated. Damage to the motor bearings from shaft / bearing currents is not covered by warranty from Aerzen, the motor manufacturer or VFD manufacturer.

GENERAL RECOMMENDATIONS:

Motors up to and including 100HP (75kW) – Low Voltage

For induction motors either foot mounted, c-face or d-flange mounted motors with single row radial ball bearings on both ends of the motors

- Install one AEGIS SGR Bearing Protection Ring on either the drive end or the non-drive end of the motor to discharge capacitive induced shaft voltage.

Motors Greater than 100HP (75kW)

For horizontally mounted motors with single row radial ball bearings on both ends of the motor:

- Non-Drive End (Opposite Drive End): Bearing housing must be isolated with insulated sleeve or coating or use insulated ceramic or hybrid bearing to disrupt circulating currents.
- Drive End: Install one AEGIS Bearing Protection Ring.

Motors in Hazardous Areas

Grounding rings are permitted. Consult Aerzen USA or your motor supplier for specific recommendations.

DRAFT

SECTION 6

DRAFT

Component Breakdown

Component	Material	Protection Method (Standard)	Quality Document (Standard)	Protection Method (Upgrade)	Quality Document (Upgrade)
Base/Silencer*	Carbon Steel	Painted Externally (Solvent Based)	QH-00408	SikaCor Zinc R	QH-00510
Belt Guard	Galvanized Sheet Metal	N/A	N/A	N/A	N/A
Belt Guard Supports	Galvanized Carbon Steel	N/A	N/A	N/A	N/A
Blower Stage	Cast Carbon Steel	Painted Externally (Water Based)	QH-00408	SikaCor Zinc R	QH-00510
Connecting Housing (DN50)	Cast Aluminum	N/A	N/A	N/A	N/A
Connecting Housing (DN80 - DN250)	Cast Iron	Powder Coated	QH-00552	SikaCor Zinc R	QH-00510
Fasteners - Bolts, Studs, Nuts	Carbon Steel	Zinc Coated	N/A	N/A	N/A
Flex Connector	Silicone	N/A	N/A	N/A	N/A
Hose Clamps	Carbon Steel	Zinc Coated	N/A	N/A	N/A
Inlet Filter/ Silencer Housing	Carbon Steel	Powder Coated	QH-00552	SikaCor Zinc R	A-6-450
Inlet Hose	Reinforced Rubber	N/A	N/A	N/A	N/A
Inlet Silencer	Carbon Steel	Powder Coated	QH-00552	SikaCor Zinc R	A-6-450
Motor Mounting Hardware	Galvanized Carbon Steel	N/A	N/A	N/A	N/A
Piping (Galvanized)	Galvanized Carbon Steel	N/A	N/A	N/A	N/A
Piping (Painted)	Carbon Steel	Painted Externally	QH-00408	SikaCor Zinc R	A-6-450
Pressure Safety/Vacuum Breaker Valves	Carbon Steel (Flange)	Painted Flange	QH-00408	N/A	N/A
Sound Enclosure - Base	Carbon Steel	Powder Coated	QH-00552	SikaCor Zinc R	QH-00510
Sound Enclosure	Galvanized Sheet Metal	Powder Coated	QH-00419	SikaCor Zinc R	QH-00510
Vent Silencer	Carbon Steel	Powder Coated	QH-00552	SikaCor Zinc R	A-6-450

*If made in the USA, Protection Method goes from Painted Externally to Powder Coated (A-6-450)

General Painting Information

The machine castings are fettled, cleaned and primed; the primer used is specially developed for machinery parts and is particularly notable for its excellent bonding characteristic and elasticity. Its base is a quick drying synthetic resin binder possessing a high degree of water resistance. The proportion of pigment to binder is such to ensure the best protection for the machines.
Total dry Film Thickness: 70 µm (2.75 mil)

Surface Preparation	Sand blasting, mechanical cleaning to near white surfaces per SA 2,5 acc. to DIN ISO 8501 or SSPC10	
Primer	Alkyd Resin: RAL 6006	Manufacturer: Relius Coatings
Final Coat	Alkyd Resin: RAL 5001 (Blue)	Manufacturer: Relius Coatings (BASF) or Dr. Demuth GmbH

General Powder Coating Information

SP Polyester Powder Paint, RAL 5001, structure, glossy
Relius No.: I536-5401
Total dry film thickness: 80 - 110µm

General Upgraded Protection Information

Surface Preparation	Sa 2 ½
Priming Coat	SikaCorEG4 (80µm max)
Intermediate Coat	SikaCorEG1 (80µm max)
Finishing Coat	SikaCorEG5 (80µm max)

DRAFT

SECTION 7

DRAFT

Aerzen USA Corporation
108 Independence Way
Coatesville, PA 19320
Ph: (610) 380-0244, Fx: (610) 380-0278
www.aerzen.com/en-us

Pre-Commissioning Checklist

	Document #	A-7-0288 rev "4"

The purpose of this pre-commissioning checklist is to ensure readiness to successfully commission your Aerzen packages. We will need some information from you in order to better prepare for the commissioning. We ask that your on-site representative complete and return this checklist to Aerzen USA at your earliest convenience.

We will also need to know if you have a target date in mind for our service technician to be on-site, and if the plant maintenance personnel will be on-site at that time to receive maintenance training. This training is normally hands-on in nature and should not take more than 1-2 hours. In addition to the pre-commissioning checklist, we will need an on-site contact and phone number for our service technician.

We will make every effort to meet your target date for commissioning. Please keep in mind that our start-up/commissioning schedule can run three to five weeks out. The earlier we know your target date the better chance we have of reserving your request on our schedule.

Please be aware that should the commissioning prerequisites not be completed prior to our arrival, Aerzen USA reserves the right to charge any and all responsible parties for additional time and travel expenses required to complete the commissioning service.

Below is a checklist of items requiring attention prior to our arrival. Please verify your understanding and completion of the prerequisites by initialing the check the boxes corresponding to each requirement. Please send this checklist to the Aerzen Service Coordinator once all the prerequisites have been verified

DRAFT

1	The Aerzen package has not been damaged during shipping and/or while on-site	☐
2	The Aerzen package is installed in permanent position, is level, properly grounded and anchored.	☐
3	The process pipework for the Aerzen package inlet and discharge is connected in its final position and independently supported (temporary supports are not acceptable	☐
4	Electrical connections have been completed for the motor using flexible conduit to allow the motor to be raised into its operational position.	☐
4A	The package safety switches (if applicable) are wired to the PLC or MCC (as applicable).	☐
4B	The Aerzen control panel (if applicable) is wired to the PLC or MCC (as applicable).	☐
4C	The correct voltage is fed to the control panel. Refer to the project specific wiring diagram for the voltage required	☐
4D	If there is a VFD or Soft-Starter and supplied by others, it has been configured with the following motor settings:	☐
4D-1	Horsepower (kilowatt)	☐
4D-2	Voltage	☐
4D-3	Maximum Frequency	☐

4D Continued

4D-4	Minimum Frequency - based on minimum speed of the blower or compressor in conjunction with the sheave combination	☐
4D-5	Full Load Amps	☐
4D-6	Time to Minimum Speed (3-5 seconds)	☐
4D-7	Coast to Stop (do not brake)	☐
4D-8	**CONSTANT TORQUE (VERY IMPORTANT!!!)**	☐
4D-9	Restart - only when the machine has come to a complete stop.	☐

5	Belts or coupling bolts removed for rotation test	☐
6	Verification that machine is filled to proper oil level with correct oil (if delivered without oil)	☐
7	Required personnel scheduled to attend startup (electrician, operators, maintenance personnel, etc)	☐
8	Proper paperwork completed to allow Aerzen technician on site	☐
9	If required, on-site safety training requirements for Aerzen personnel must be scheduled in advance. Please advise type, length and place of training).	☐

Company

Project Name or Number

Number of Packages to be commissioned

Representative completing this check-list

Date Completed

Date reqested for start-up

DRAFT

Aerzen USA Corporation
108 Independence Way
Coatesville, PA 19320
Ph.: (610) 380-0244, Fax: (610) 380-0278
WWW.AERZEN.COM/EN-US

Start-Up Report

Document # BCH-7-0353_02 rev "B"

1.0 Machine data

Date:	
Customer:	
Service Technician:	
Order # / SEO #:	
Serial #:	
Type:	
Package Serial #:	
Oil Type:	
Equipment ID:	
Operating hours total-Start:	
Operating hours total-End:	

2.0 Motor Data

Model #:		Serial #:		Notes:
Motor Manufacturer		Motor Frame		
Motor HP Rating		Full Load Amps		
Motor Voltage Rating		Hertz		
Motor RPM		Service Factor		
Motor cooling		Motor Protection Type	Thermistor / Thermostat	
Motor Protection	NO / NC	Motor Protection Resistance		

3.0 Starter Data

Manufacturer		Notes:
Starter type - Direct/Soft/VFD		
Actual voltage to motor		
Soft Start ramp up time		
VFD Max. Frequency		
VFD Min. Frequency		
VFD Ramp up Speed/Time		
VFD set to constant torque		
VFD Brake Mode = Coast		

4.0 Inspections

	OK	Not OK		OK	Not OK
Sound Enclosure Aesthetics			Motor rotates in proper direction		
Package is level			Verify all oil lines are tight		
Oil drain hose, jack and funnel present			Oil filter		
Unit is properly anchored			Oil demister		
Expansion joints/flex connectors			Oil drain plugs tight		
Verify package is grounded			Cooling fan clearance in shroud		
Process piping is properly supported			Motor conduit conforms to IA-004545 rev "B"		
Anti-vibration feet			Sheaves are properly installed, set screws tightened		
Inlet air filter in place, clean & housing tightened			Enclosure inlet and outlet are free from obstructions		
Blower room ventilation adequate			All fasteners are secure		
Instrument connections tight			Check process piping path to the termination point		
Neutral chamber venting			Validate process piping will not dead head at startup		
Vent all pressure and vacuum gauges			Validate any customer added safety devices		
Motor and machine rotate freely by hand			Discuss application with end user		

4.1 Notes / Not OK, reason why. Correction needed/taken.

DRAFT

	Aerzen USA Corporation 108 Independence Way Coatesville, PA 19320 Ph.: (610) 380-0244, Fax: (610) 380-0278 WWW.AERZEN.COM/EN-US	Start-Up Report Document # BCH-7-0353_02 rev "B"

5.0 Belt Drive Applications

	OK	Not OK	Notes / Not OK, reason why. Correction needed/taken.
Verify motor alignment			
V belt installed and tensioned?			
Verify V belt has the proper length			

6.0 Direct Drive Applications

	OK	Not OK	Notes / Not OK, reason why. Correction needed/taken.
Coupling bolt			
Compression sleeves			
Coupling halves (properly distanced)			
Coupling Alignment			

7.0 Safety Settings and Verification

7.1 Safety chain - Switch Based

Switch	Unit	Switch Point	Gauge Reading	Shutdown Initiated	Notes:

7.2 Safety chain - Controller Based

Controller:	Unit	Alarm	Fault	Functional	Notes:

8.0 Startup

	OK	Not OK	Notes:
Smooth Start Up			
Lubricate drive motor per O&M			

9.0 Functional Testing

	OK	Not OK	Notes:			
Aeromat			Closing time=			
Aeropress			Closing time=			
Aerovac			Closing time=			
Unload/load device are in synch			Closing time=			
Unload/Load Solenoid operational						
All gauges and switches operational						
S.E. fan has correct rotation						
PRV manual release functional			Set point =			
After fault does unit remain off						
Non-return flap (check valve)						
System is leak free-oil						
System is leak free-air						
Smooth running						
Motor cooling properly						

10.0 Post Run Checks

	OK	Not OK	Notes:
Smooth Coast Down			
Oil Level Correct			
Sheave Alignment			
Bolt Tightness			

DRAFT

Aerzen USA Corporation
108 Independence Way
Coatesville, PA 19320
Ph.: (610) 380-0244, Fax: (610) 380-0278
WWW.AERZEN.COM/EN-US

Start-Up Report

Document # BCH-7-0353_02 rev "B"

11.0 Technical data

11.1 Operational Readings

Elapsed Run Time	0:00	0:00	0:00	0:00	0:00		Notes:
Pressures							
Temperatures							
Miscellaneous							

11.2 Motor Operational Readings

Elapsed Run Time	0:00	0:00	0:00	0:00	0:00		Notes:

11.3 Vibration Readings

Elapsed Run Time	0:00	0:00	0:00	0:00	0:00		Notes:	Readings are in:	
Motor Non-Drive Horizontal									
Motor Non-Drive Vertical									
Motor Non-Drive Axial									
Motor Drive Horizontal									
Motor Drive Vertical									
Motor Drive Axial									

12.0 Notes/Summary

DRAFT

	Aerzen USA Corporation 108 Independence Way Coatesville, PA 19320 Ph.: (610) 380-0244, Fax: (610) 380-0278	Inspection Report
	WWW.AERZEN.COM/EN-US	Document # BCH-7-0353_03 rev "C"

1.0 Machine data	
Date:	
Customer:	
Service Technician:	
Order # / SEO #:	
Serial #:	
Type:	
Package Serial #:	
Oil Type:	
Equipment ID:	
Operating hours total-Start:	
Operating hours total-End:	

2.0 Motor Data				
Model #:		Serial #:		Notes:
Motor Manufacturer		Motor Frame		
Motor HP Rating		Full Load Amps		
Motor Voltage Rating		Hertz		
Motor RPM		Service Factor		
Motor cooling		Motor Protection Type	Thermistor / Thermostat	
Motor Protection	NO / NC	Motor Protection Resistance		

3.0 Starter Data		
Manufacturer		Notes:
Starter type - Direct/Soft/VFD		
Actual voltage to motor		
Soft Start ramp up time		
VFD Max. Frequency		
VFD Min. Frequency		
VFD Ramp up Speed/Time		
VFD set to constant torque		
VFD Brake Mode = Coast		

4.0 Inspections

	OK	Not OK		OK	Not OK
Sound Enclosure Aesthetics			Motor rotates in proper direction		
Package is level			Verify all oil lines are tight		
Oil drain hose, jack and funnel present			Oil filter		
Unit is properly anchored			Oil demister		
Expansion joints/flex connectors			Oil drain plugs tight		
Verify package is grounded			Cooling fan clearance in shroud		
Process piping is properly supported			Motor conduit conforms to IA-004545 rev "B"		
Anti-vibration feet			Sheaves are properly installed, set screws tightened		
Inlet air filter in place, clean & housing tightened			Enclosure inlet and outlet are free from obstructions		
Blower room ventilation adequate			All fasteners are secure		
Instrument connections tight			Check process piping path to the termination point		
Neutral chamber venting			Validate process piping will not dead head at startup		
Vent all pressure and vacuum gauges			Validate any customer added safety devices		
Motor and machine rotate freely by hand			Discuss application with end user		

4.1 Notes / Not OK, reason why. Correction needed/taken.

5.0 Maintenance

Item Replaced	Yes	No	Part # and Qty.	Notes:
Oil				
Belts				
Oil Filter				
Air Filter				
Coupling Pins				
Coupling Bushing				
Oil Sample Taken			Tracking #:	

DRAFT

Aerzen USA Corporation
108 Independence Way
Coatesville, PA 19320
Ph.: (610) 380-0244, Fax: (610) 380-0278
WWW.AERZEN.COM/EN-US

Inspection Report

Document # BCH-7-0353_03 rev "C"

6.0 Belt Drive Applications			
	OK	Not OK	Notes / Not OK, reason why. Correction needed/taken.
Verify motor alignment			
V belt installed and tensioned?			
Verify V belt has the proper length			

7.0 Direct Drive Applications			
	OK	Not OK	Notes / Not OK, reason why. Correction needed/taken.
Coupling bolt			
Compression sleeves			
Coupling halves (properly distanced)			
Coupling Alignment			

8.0 Safety Settings and Verification

8.1 Safety chain - Switch Based

Switch	Unit	Switch Point	Gauge Reading	Shutdown Initiated	Notes:

8.2 Safety chain - Controller Based

Controller:	Unit	Alarm	Fault	Functional	Notes:

9.0 Startup			
	OK	Not OK	Notes:
Smooth Start Up			
Lubricate drive motor per O&M			

10.0 Functional Testing						
	OK	Not OK	Notes:			
Aeromat			Closing time=			
Aeropress			Closing time=			
Aerovac			Closing time=			
Unload/load device are in synch			Closing time=			
Unload/Load Solenoid operational						
All gauges and switches operational						
S.E. fan has correct rotation						
PRV manual release functional			Set point =			
After fault does unit remain off						
Non-return flap (check valve)						
System is leak free-oil						
System is leak free-air						
Smooth running						
Motor cooling properly						

11.0 Post Run Checks			
	OK	Not OK	Notes:
Smooth Coast Down			
Oil Level Correct			
Sheave Alignment			
Bolt Tightness			

DRAFT

Aerzen USA Corporation
108 Independence Way
Coatesville, PA 19320
Ph.: (610) 380-0244, Fax: (610) 380-0278
WWW.AERZEN.COM/EN-US

Inspection Report

Document # BCH-7-0353_03 rev "C"

12.0 Technical data

12.1 Operational Readings

Elapsed Run Time	0:00	0:00	0:00	0:00	0:00		Notes:
Pressures							
Temperatures							
Miscellaneous							

12.2 Motor Operational Readings

Elapsed Run Time	0:00	0:00	0:00	0:00	0:00		Notes:

12.3 Vibration Readings

Elapsed Run Time	0:00	0:00	0:00	0:00	0:00		Notes:	Readings are in:	
Motor Non-Drive Horizontal									
Motor Non-Drive Vertical									
Motor Non-Drive Axial									
Motor Drive Horizontal									
Motor Drive Vertical									
Motor Drive Axial									

13.0 Notes/Summary

DRAFT

Aerzen USA Corporation
108 Independence Way
Coatesville, PA 19320
Ph.: (610) 380-0244, Fax: (610) 380-0278
WWW.AERZEN.COM/EN-US

Training Sign In

Document # BCH-7-0353_06 rev "C"

1.0 Customer

Date:	
Customer:	
End User:	
Site Address:	
Service Technician:	
Equipment Type:	
Equipment Serial Number:	
Order # / SEO #:	

2.0 Trainee's Signatures

	Print	Signature	Title
1			
2			
3			
4			
5			
6			
7			
8			
9			
10			

3.0 Training Topics

4.0 Signatures

Date	**Customer Name**	**Customer Signature**
Date	**FST Name**	**FST Signature**

DRAFT

SHOP DRAWING REVIEW

Project: **San Luis West WWTP Improvements**

Submittal No. **#O1-06_R1 Mixer and Pumps**

Vendor No. **B2-001_R1**

Date Received: **09/10/2025**

Job #: **B777**

Comments:

No Exceptions Taken..... ☐
Submit Specific Item ..... ☐
Accepted with Corrections Noted..... ☒
Revise and Resubmit..... ☐
Rejected ..... ☐

Note:
Review is only for general conformance with the design concept of the project and general compliance with the information included in the Contract Documents. Any action shown is subjected to the requirements of the drawings and the specifications. Contractor is responsible for correlating and confirming dimensions at the job site, choice of fabrication processes and techniques of construction: coordination of his work with that of other trades; and performing the work in a safe satisfactory manner.

DATE: 10/23/2025 BY: DD / NT

Submittal Comments:

1. **Flygt Internal Recycle Propeller Pump – PP 4640.492 (not part of Kubota's original MBR Scope)**
   - **a.** Pump is to be provided with 16" pipe flange mounting adapter.
   - **b.** Provide intermediate guide rail brackets due to installation depth or verify they are not needed in this application.
   - **c.** Please include miniCAS in Kubota provided MBR PLC, see PACE P&IDs provided 7/29/2025.

DRAFT

8723 E. Via de Commercio, #A-204 | Scottsdale, AZ 85258
P: (480) 991-3595 F: (480) 751-1810 | www.pacewater.com

DRAFT

ALARM PRIORITY NO.
NOTIFICATION

PRIORITY NO. ALARM
NOTIFICATION

SCADA

PROCESS
HMI (MBR) K

PROCESS
PLC (MBR) K

PROCESS PLC
(MBR) RIO

ELECTRICAL

FIELD DEVICES

ANOXIC MIXER — FAIL ALARM YA 02110; HIGH TEMP TAH 02110; RUN YC 02110; REMOTE YI 02110; RUNNING YI 02110; TEMP TI 02110

ANALYSIS INSTRUMENTS — HIGH PH AAH 02160 A; LOW PH AAL 02160 A; LOW DO AAL 02160 B; pH AIR 02160 A; DO AIR 02160 B; TEMP. TIR 02160 C

LEVEL SWITCHES — HIGH ALARM LAH 02130 A; LOW ALARM LAL 02130 B; HIGH LEVEL LI 02130 A; LOW LEVEL LI 02130 B

LEVEL — HIGH ALARM LAH 02131; LOW ALARM LAL 02131; LEVEL LIR 02131 FT

INTERNAL RECYCLE PUMP — FAIL ALARM ZA 02101; HIGH TEMP TAH 02101; RUN YC 02101; RUNNING YI 02101; SPEED SC 02101; REMOTE YI 02101; TEMP TI 02101

COM E-NET; COM E-NET F/O PATCH; COM E-NET F/O PATCH

RUN YC 02110; REMOTE YI 02110; RUNNING YI 02110; TEMP TI 02110

MINICAS — MSH 02110; TSH 02110

DO; DI; DI; DI

(480 VAC) CB — HS 02110; MS 02110; HOA; I

pH AIR 02160 A; DO AIR 02160 B; TEMP AIR 02160 C

HIGH LEVEL LI 02130 A; LOW LEVEL LI 02130 B; LEVEL LI 02131 FT

RUN YC 02101; RUNNING YI 02101; SPEED SC 02101; REMOTE YI 02101; TEMP/SEAL TI 02101

(120 VAC) CB — AI; AI; AI; DI; DI; AI

DO; DI; AO; DI; DI

(480 VAC) CB

BY CONTRACTOR ← BY KUBOTA

A PROCESS AIR FROM DUTY BLOWERS REF. SHT I5.2 — 16"-PA-405

A INFLUENT FROM RAS CHANNEL REF. SHT I2.0 — WEG-02120A; WEG-02120B

MOT 02110; TE 02110; ME 02110; M; K — MXR-02110

8"-PA-406

AIT 02160 K

AE 02160A pH K; AE 02160B DO K

LSH 02130A K; LSL 02130B K

LT 02131; LE 02131 K

WEG-02121

TE 02101; ME 02101; HS 02101 HOA; VFD 02101; M — PMP-02101

FBD-02180 K

16"-RECYC-205

24"-RAS-801 — A RAS TO FEED FORWARD CHANNEL REF. SHT I2.5

6"-WAS-903 — B SECONDARY PROCESS DRAIN TO DRYING BEDS REF. SHT I2.2

PV-02122

ANOXIC ZONE

PRE-AERATION ZONE

SECONDARY PROCESS BASIN 1

W:\B777\Engineering\B777 - 3MGD Exp\3MGD FINAL DSN\sheets\B777-I2.X SECONDARY PROCESS.dwg - Tab: I2.1 - by swright on 09/04/25 at 2:43:10 PM

NO	BY	DATE	REVISIONS	DATE	APP.

Registered Professional Engineer (Civil) — DUONG T. DO — 40050 — Date Signed 9-4-25 — ARIZONA, U.S.A. — Expires 12/31/27

PREPARED BY: DUONG DO
PROJECT ENGINEER #40050
R.C.E. NO. 1—
EXP. DATE
SCALE
DRAWN WW, MSA
DESIGNED NT, NE
CHECKED DD
DATE SEPT 2025

THESE DRAWINGS ARE THE PROPERTY OF P.A.C.E. AND SHALL NOT BE REPRODUCED IN ANY MANNER NOR BE USED FOR CONSTRUCTION UNLESS STAMPED "ISSUED FOR CONSTRUCTION".

TITLE: PROCESS BASIN #1

JOB: CITY OF SAN LUIS WEST WWTP
3.0 MGD MBR UPGRADES
AZ. SAN LUIS

PACE
Advanced Water Engineering
8723 E. VIA de COMMERCIO, SUITE A- 204 | SCOTTSDALE, CA 85258
P: (408) 991-3595 | www.pacewater.com

100% ISSUED FOR REVIEW

SHEET I2.1
180 OF 205 SHEETS

JOB NO. B777

Submittal Transmittal

B-2_2 Internal Recycle Pumps

Project Name	San Luis, AZ West WWTP Phase 1 MBR Upgrades
Project Site	San Luis, AZ West WWTP
Engineer	PACIFIC ADVANCED CIVIL ENGINEERING (PACE) 8723 E. VIA de COMMERICO, SUITE A-204 SCOTTSDALE, AZ 85258
Submit to	Duong Do, PE PACE
Prepared by	Brian Travis KUBOTA Water and Environment USA Corporation 19910 North Creek Parkway Suite 100, Bothell WA 98011, USA
KMU Project #	OPID65
Issued Date	September 10, 2025
Package #	B-2_2
Item	(1) Internal Recycle Pumps

DRAFT

WECI
Whitney Equipment Company, Inc

16120 Woodinville-Redmond Rd NE Ste 3, Woodinville, WA 98072 www.weci.com 425-486-9499

SUBMITTAL

KUBOTA USA

SAN LUIS, AZ

DRAFT

Submersible Propeller Pumps
IR Pumps

Customer: Kubota USA
Date Submitted: 7/21/25

BILL OF MATERIALS

SCOPE OF SUPPLY

IR PUMPS
(2700GPM @ 2' TDH)

High Volume Low Head Pumps (3 Installed)

3ea **FLYGT** PP 4640.492, 4 HP FM Rated 304SS Submersible Propeller Pumps w/
3ea 4 HP, 460 Volt, 3 Phase Motors
3ea CABLE,SUBCAB CABLE,SUBCAB 14AWG/3-2-G-1 19MM – 50' per pump
3ea ANSI Pipe Disc Flange Adapter
3ea **Flygt** Mini-Cas 120 Relay Units and Bases
1ea **Flygt** Grip Eye Lifting Device
3ea **Flygt** SS Safety Hooks

Non-Flygt Accessories and Startup

3ea Strain Relief Cable Grips
3ea 20' SS Lifting Cable/Chains and Bow Shackles
3ea 2" 316 Upper Guide Bar Brackets
3ea Sets of 2" 316 Stainless Steel Guide Rails
1ea Day of Manufacturer's Startup and Training Services

DRAFT

WHITNEY EQUIPMENT COMPANY, INC.
16120 Woodinville-Redmond Road Woodinville, WA. 98072
Phone: (425) 486-9499 Fax: (425) 485-7409

FLYGT SUBMERSIBLE AXIAL FLOW PUMP

Specification Data Sheet For: **Xylem/Flygt Model:** **PP-4640.492**

DATE	7/1/25	**CONTRACTOR**	Kubota USA
SECTION		**OWNER**	Kubota USA
		JOB NAME	Kubota San Luis
WECI S/O		**EQUIPMENT**	IR Pumps

REVISION	BY	DATE	DESCRIPTION	NOTES
0	CPT	7/1/25	Original Submittal	Submersible Propeller Pumps

A	GENERAL SPECIFICATIONS		C	BASIC EQUIPMENT FEATURES	
1	QUANTITY	3	20	O-RINGS (ELASTOMERS)	NITRILE RUBBER
2	TAG NUMBERS	NA	21	IMPELLER CONSTRUCTION	304 STAINLESS STEEL
3	MIXER MODEL	PP 4640.492	22	PROPELLER SIZE	14-7/16" DIA.
4	MOTOR HORSEPOWER	4 HP	23	CABLE SEAL	GROMETTED ENTRY
5	MOTOR ELECTRICALS	460V, 3PH, 60 HZ	24	BEARINGS RATING	100,000 HOURS
6	CABLE SIZE (50 FT)	14AWG/3-2-G-1 19MM	25	BEARING TYPE	PRE-LOADED ROLLER & ANGULAR
7	DESIGN FLOWRATE	2700 GPM	26	THERMAL SENSORS	YES
8	DESIGN HEAD	2' TDH	27	LIFTING SYSTEM	FLYGT GRIP EYE
9	MOTOR RATING	FM EX, SUBMERSIBLE	28	OIL HOUSING	TWO COMPARTMENT - 4 PORT
10	DISCHARGE SIZE	15"	29	MECHANICAL SEAL INNER	TUNGSTEN-CARBIDE
11	MOUNTING SYSTEM	PIPE FLANGE MOUNT	30	MECHANICAL SEAL OUTER	TUNGSTEN-CARBIDE
12			31	OIL	FDA APPROVED
13	MOTOR CASING	304 SS	32	WEIGHT	210
14	PROP SPEED	875 RPM	33	PUMP SHAFT	AISI 431 STAINLESS STEEL
15	INSULATION	CLASS H	34	TEMPERATURE LIMIT	104°F
16	SERVICE FACTOR	1.10	35	GUIDE RAILS	2" 316 STAINLESS STEEL

B	Options Included	D	Options Included
17	20' SS LIFTING CABLE	36	16" PIPE FLANGE MOUNTED ADAPTOR
18	2" 316 UPPER GUIDE BAR BRACKETS	37	LIFTING BAIL
19	2" 316 GUIDE RAILS	38	MINI-CAS 120 RELAY

Drawing Number	Showing	Notes
14-68 22 39 - PP4640	DIMENSIONS	MANUFACTURERS START-UP & TRAINING

DRAFT

FLYGT SUBMERSIBLE AXIAL FLOW PUMP PP-4640

Performance Specification

SCOPE
Furnish and install 3 submersible horizontal propeller pump(s). Each pump shall be equipped with 4.0 HP, submersible electric motor connected for operation on a 460Volt, 3 Phase, 60 Hertz, service, with 50 Ft. of 7 conductor with #14 AWG size Subcab cable. All cables shall be neoprene or CPE jacketed.

MANUFACTURER REQUIREMENTS
The pumping equipment specified herein shall be the design and fabrication of a single manufacturer which shall have sole source responsibility for said equipment.

PUMP DESIGN
The pump(s) shall be capable of handling raw, screened sewage. The pump, with its appurtenances and cable, shall be capable of continuous submergence under water without loss of watertight integrity to a depth of 100 Ft.

PUMP CONSTRUCTION
Each pump shall be of the integral design, close coupled, submersible type. All components of the pump, including motor shall be capable of continuous underwater operation. In addition, all components of the pump shall be capable of continuous operation completely un-submerged, for two (2) hours.

Motor casing shall be 304SS construction. Other major pump components shall be epoxy coated steel. The oil housing cover plate shall be of corrosion resistant plastic. All exposed nuts and bolts shall be of stainless steel.

MOTOR
The multi-pole motor shall be directly connected to the propeller (gearbox designs are not acceptable) to produce a propeller speed of 875 RPM. The pump motor shall be squirrel cage, induction, shell type design, housed in an air filled, watertight chamber. The stator winding shall be insulated with moisture resistant Class F insulation which will resist a temperature of 155°C (311°F). The stator shall be dipped and baked three times in Class F varnish. The motor shall be designed for continuous duty, capable of sustaining a maximum of at least thirty (30) evenly spaced starts per hour. The rotor bars and short circuit rings shall be made of aluminum.

ELASTOMERS
All mating surfaces where watertight sealing is required shall be machined and fitted with Nitrile rubber O-rings. Fitting shall be such that sealing is accomplished by metal-to-metal contact between machined surfaces. This will result in controlled compression of the O-rings without requiring a specific torque limit. No secondary sealing compounds, rectangular gaskets, elliptical O-rings, grease or other devices shall be used.

PROPELLER
The propeller shall be of 316 stainless steel dynamically balanced, non-clogging backward curved design. Each blade shall be laser cut and welded to the hub and tested to ensure that the propeller is properly balanced. The propeller shall be capable of handling solids, fibrous materials, heavy sludge and other matter found in normal sewage applications. The propeller shall be 14-7/16 inches in diameter and have three blades, each at a blade angle of 9 degrees.

CABLE ENTRY
The cable entry housing shall be an integral part of the back plate. The cable entry shall have a double set of elastomer grommets in order to ensure a redundant system in the event of a cable entry seal failure. Single sealing systems will not be deemed acceptable. The cable entry shall be comprised of two

DRAFT

cylindrical elastomer grommets, each flanked by washers and a ferrule designed with close tolerance fit against the cable outside diameter and the entry inside diameter. This will provide a leak proof, torque-free seal at the cable entrance. The assembly shall bear against a shoulder in the stator casing opening and be compressed by a gland nut threaded into it. Interaction between the gland nut and the ferrule should move the grommet along the cable axially instead of with a rotary motion. The junction chamber and motor compartment shall be separated by a terminal board which shall protect the motor interior from foreign material gaining access into the pump top. Connection between the threaded compressed type binding posts permanently affixed to the terminal board and thus perfectly leak proof. Epoxies, silicones, or other secondary sealing systems shall not be considered acceptable.

BEARINGS
All bearings shall have a minimum rated life of 100,000 Hrs. The outboard propeller bearing shall be an angular contact bearing. The motor shaft end shall be supported by two bearings. A roller bearing shall take up the radial loads while an angular contact bearing shall take up the axial loads. The bearings shall be pre-loaded by a bearing loading nut located on the motor end of the shaft in order to reduce shaft deflection and increase bearing life and seal life. Pumps without pre-loaded bearings will not be considered acceptable or equal.

THERMAL SENSORS
Thermal sensors shall be used to monitor stator temperatures. The stator shall be equipped with three (3) thermal switches embedded in the end coils of the stator winding. These shall be used in conjunction with, and supplemental to, external motor overload protection, and wired to the control panel.

SHROUD ASSEMBLY
The pump assembly shall incorporate a shroud a full 360 degrees around the propeller.

OIL HOUSING
The oil housing shall contain two compartments consisting of an inner and an outer section with four ports to connect and facilitate oil flow. In the event that the mixed media bypasses the outer seal, this design will allow the outer compartment to collect the heavier (denser) fluids by means of the simple process of gravity.

MECHANICAL SEALS
Each pump shall be provided with two sets of lapped and face type mechanical seals running in oil reservoirs for cooling and lubrication. The mechanical seals shall contain both stationary and positively driven rotary tungsten carbide face rings unless otherwise specified. In order to avoid seal failure from sticking, clogging, and misalignment from elements contained in the mixed media. Only the seal faces of the outer seal assembly and its retaining clips shall be exposed to the mixed media. All other components shall be contained in the oil housing. All seal faces must also be capable of being relapped.

The seals shall require neither maintenance nor adjustment, but shall be easy to check and replace. Shaft seals without positively driven rotating members shall not be considered acceptable or equal.

LUBRICANT
Seal lubricant shall be FDA approved, non toxic.

DRAFT

xylem
Let's Solve Water

Technical Specification

882808_3.0



DRAFT

Flygt PP 4630-4680

60 Hz

FLYGT
a xylem brand

DRAFT

1 Technical specification

1.1 Product Description

Usage

The PP pump is mainly used in recirculation in Biological Nutrient Removal processes in treatment plants. Other areas of use:

- Emptying of rainwater retention basins
- Creating streams, for example for boat rides
- Pumping sea water to fish, shrimp, and oyster farms
- Pumping water to irrigation ditches
- Pumping cooling water to power plants

Denomination

Standard version	Explosion proof version
4630.412	4630.492
4640.412	4640.492
4650.412	4650.492
4660.412	4660.492
4670.412	4670.492
4680.412	4680.492

Installation

Guide bars, diameter 2 inches (50.8 mm).

Application limits

Feature	Description
Liquid temperature	• Maximum 40°C (104°F) • Warm-liquid version 60°C (140°F), or 90°C (194°F)
Liquid viscosity	Maximum 5000 cp
pH	1 – 12
Depth of immersion	Maximum 20 m (65 ft)

Motor data

Feature	Description
Motor type	Squirrel-cage induction motor
Frequency	60 Hz
Supply	3–phase
Starting method	• Direct on-line • Variable Frequency Drive (VFD)
Maximum starts per hour	30 evenly-spaced starts per hour
Voltage variation	• Continuously running: Maximum ±5% • Intermittently running: Maximum ±10%
Voltage imbalance between the phases	Maximum 2%

DRAFT

Cables

- SUBCAB® heavy-duty submersible cable
- SUBCAB® screened heavy-duty submersible cable
- HCR, heavy-duty heat and chemical resistant submersible cable

Monitoring equipment

- Thermal contacts opening at 140°C, (285°F)
- Leakage sensor in stator housing (FLS), optional

Dimensions and weight

See the dimensional drawing.

Installation equipment

The available installation equipment depends on product version and type of installation.

- Discharge connection
- Lifting equipment

Accessories

- Electrical equipment: ~~Starter~~, monitoring relay, ~~controller, variable frequency drive, and control panel~~
- ~~Zinc anodes~~
- ~~Cable protection hose~~

Materials

Item	Material
Motor casing	Stainless steel ASTM 316L
Stator housing	Cast iron
Shaft	Stainless steel, ASTM/AISI 431
Oil housing	Vinyl ester based SMC
Lifting device	Stainless steel ASTM 316L
Inlet cone	Stainless steel ASTM 304, optional: ASTM 316L
Fixing plate	Stainless steel ASTM 304, optional: ASTM 316L
Oil	Paraffin oil ISO VG32

Surface treatment

Stainless steel parts are blasted to a dull grey surface.

O-rings

Nitrile rubber as standard, fluorinated rubber for warm liquid versions.

Hydraulic unit

Three-blade high efficiency clog-free propeller, stainless steel ASTM 316L.

Propeller diameter	• 4630–4640: 368 mm (14.5 in) • 4650–4660: 580 mm (22.8 in) • 4670–4680: 766 mm (30.2 in)

Mechanical face seals

The inner seal uses the patented Active Seal™ technology, which is a zero leakage seal, allowing no liquid to penetrate from the buffer fluid compartment to the stator housing.

	Inner seal	Outer seal
Standard, 4630–4640	Corrosion resistant cemented carbide (WCCR) / Aluminum oxide (Al_2O_3)	WCCR / WCCR

DRAFT

	Inner seal	Outer seal
Standard, 4650–4680	Corrosion resistant cemented carbide (WCCR) / WCCR	WCCR / WCCR
Optional, 4630–4640	WCCR / Al_2O_3	Silicon carbide (RSiC) / RSiC
Optional, 4650–4680	WCCR / WCCR	Silicon carbide (RSiC) / RSiC

1.2 Motor ratings and performance curves

Motor ratings

Table 1: 460V, 60 Hz, 3-phase

Product	Rotations per minute, rpm	Poles	Rated Power, kW	Rated hp	Rated Current, A	Starting Current, A	Power factor cosφ
4630	855	8	1.9	2.5	4.2	14	0.73
4640	855	8	3.0	4.0	6.7	23	0.73
4650	585	12	4.5	6.0	14	51	0.53
4650	575	12	6.2	8.3	18	56	0.59
4660	585	12	8.2	11.0	24	87	0.54
4660	575	12	11.2	15	28	87	0.63
4670	440	16	14.9	20	48	137	0.51
4680	440	16	22	30	76	261	0.46
4680	440	16	30	40	87	261	0.53

Performance curves

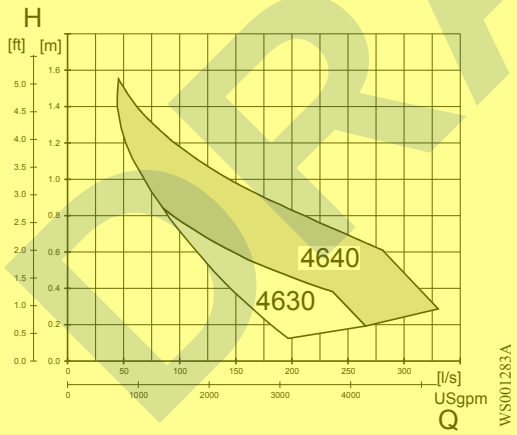

Figure 1: 4630, 4640

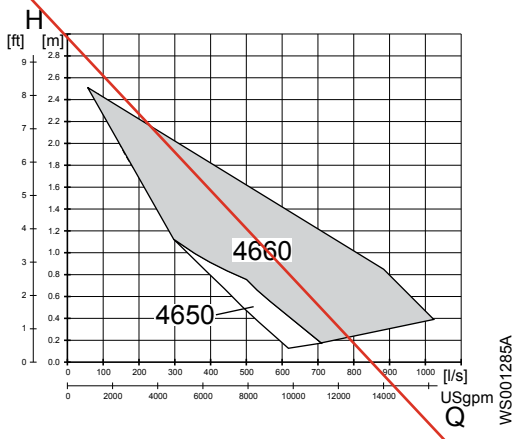

Figure 2: 4650, 4660

DRAFT

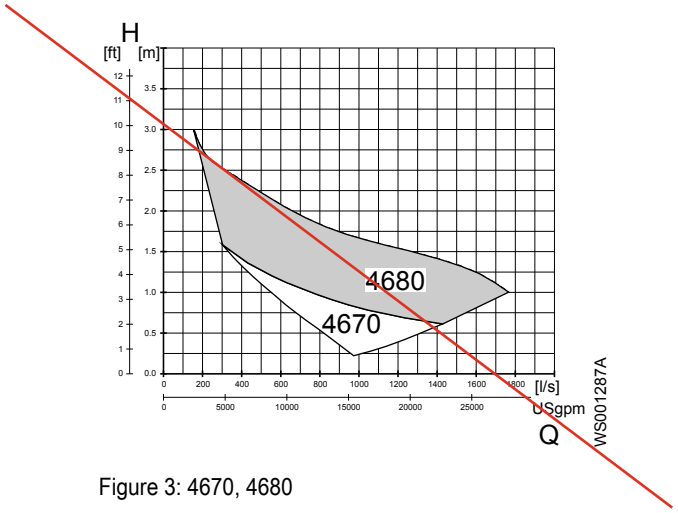

Figure 3: 4670, 4680

DRAFT

DRAFT

Xylem |’zīləm|

1) The tissue in plants that brings water upward from the roots;
2) a leading global water technology company.

We’re a global team unified in a common purpose: creating advanced technology solutions to the world’s water challenges. Developing new technologies that will improve the way water is used, conserved, and re-used in the future is central to our work. Our products and services move, treat, analyze, monitor and return water to the environment, in public utility, industrial, residential and commercial building services settings. Xylem also provides a leading portfolio of smart metering, network technologies and advanced analytics solutions for water, electric and gas utilities. In more than 150 countries, we have strong, long-standing relationships with customers who know us for our powerful combination of leading product brands and applications expertise with a strong focus on developing comprehensive, sustainable solutions.

For more information on how Xylem can help you, go to www.xylem.com

DRAFT

xylem
Let’s Solve Water

Xylem Water Solutions Global Services AB 556782-9253
361 80 Emmaboda
Sweden
Tel: +46-471-24 70 00
Fax: +46-471-24 74 01
https://xapps.xyleminc.com/tpi
www.xylemwatersolutions.com/contacts/

Visit our Web site for the latest version of this document and more information

The original instruction is in English. All non-English instructions are translations of the original instruction.

© 2011 Xylem Inc.

882808_3.0_en-US_2022-11_TS_Flygt PP 4630-4680

xylem
Let's Solve Water

DRAFT

PP 4640 3~ 837

Created On: 6/9/25

PP 4640 3~ 837 | Configuration Summary



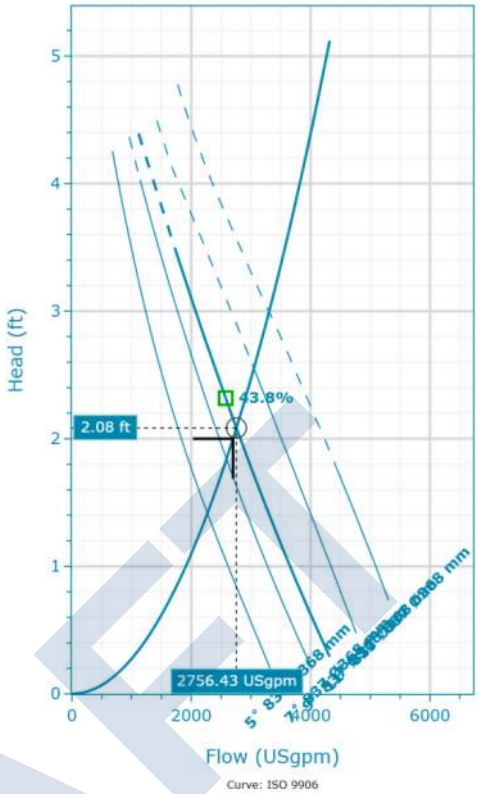

Horizontal flow propeller pumps with fixed pitch blades for high capacity low head pumping of clean or slightly contaminated liquids. The pumps are extremely compact, using multipole motors instead of mechanical gearing.

Nominal (mean) data shown. Under- and over-performance from this data should be expected due to standard manufacturing tolerances. Please consult your local Flygt representative for performance guarantees.

Installation

Installation Type
P - Semi-Permanent, Wet

Materials

Impeller Material
Stainless Steel

Motor

Rated Voltage
460 V

Coupling
Y

Motor Efficiency Class
Standard

Rated Power
4 Hp

Performance

Explosion Proof
Yes

Approval
FM

Max. Pumped Media Temp.
104 °F

Blade Angle
9

Propeller Diameter
368 mm

DRAFT

PP 4640 3~ 837 | Product Details

Description

P 4640

Ultra-Low-Head High-Flow Wastewater Pump

Flygt ultra-low-head high-flow wastewater pumps are engineered for versatility and lean installation, and offer highly efficient and reliable pumping of highly contaminated fluids. Few components, straightforward service routines and simple installation make Flygt ultra-low-head pumps an economical choice for a wide range of applications, including activated sludge treatment, stormwater and other low-head high-flow duties. Pumping efficiency is kept sustained high with backswept propeller blades and wide-hub propeller design.

Flexible and Modular Design

All external parts manufactured for excellent corrosion-resistance. Major parts in stainless steel.

- High efficiency stainless steel propeller with backswept propeller blades for high clog resistance.
- Optional Hard-Iron impeller for abrasive applications.
- Short shaft overhang – reduces shaft deflection and increases seal and bearing life.
- Motor designed for submersible use – heat is concentrated to the stator core for improved cooling properties.
- High performance motor with Class H motor insulation provides thermal overload protection and extra long service life.
- Double mechanical seal system – Two sets of mechanical shaft seals work independently to provide double security. Available in Tungsten carbide (WCCR) or Silicone carbide (SiC) depending on pumped media.
- Plug-in seal with the Active Seal system, offering increased sealing reliability and zero leakage into the motor, thereby reducing the risk of bearing and stator failures.
- Motor cable SUBCAB® - specially developed for submersible use.
- Cable entry with double elastomer seal grommets – for double security.

Product Features

- State of the art ultra-low-head high-flow wastewater pump
- Robust and reliable direct drive
- Sustained high efficiency with fiber-handling hydraulics
- High reliability with Class H insulated motor and Active Seal system Plug-in seal

Construction Materials

Impeller Material	Volute Material	Stator Cover Material
Stainless Steel	-	-

Motor

Rated Power 4 Hp	Number Of Phases 3	Start Current Ratio 3.66	Motor Issue 13
Motor Denomination 18-12-8AA	Rated Motor Speed 875 RPM	Insulation Class H	Locked Rotor Code E
Motor Efficiency Class Standard	Rated Voltage 460 V	Approval FM	Max starts per hour 30
Version Code 492	Rated Current 6 A	Total moment of inertia 0.4747 ft²lbf	Power Factor 100% 0.76
Frequency 60 Hz	Start Current 23 A	Type of duty S1	Power Factor 75% 0.69
Max P2 (1x) 4.56 Hp	Starting Current, Direct Starting 23 A	Stator Variant 31	Power Factor 50% 0.57
Number Of Poles 8	Starting Current, Star Delta 7.67 A	Motor Module 152	Efficiency 100% 77.5 %
			Efficiency 75% 78.9 %
			Efficiency 50% 76.9 %

DRAFT

PP 4640 3~ 837 | Hydraulic Data & Performance Curve

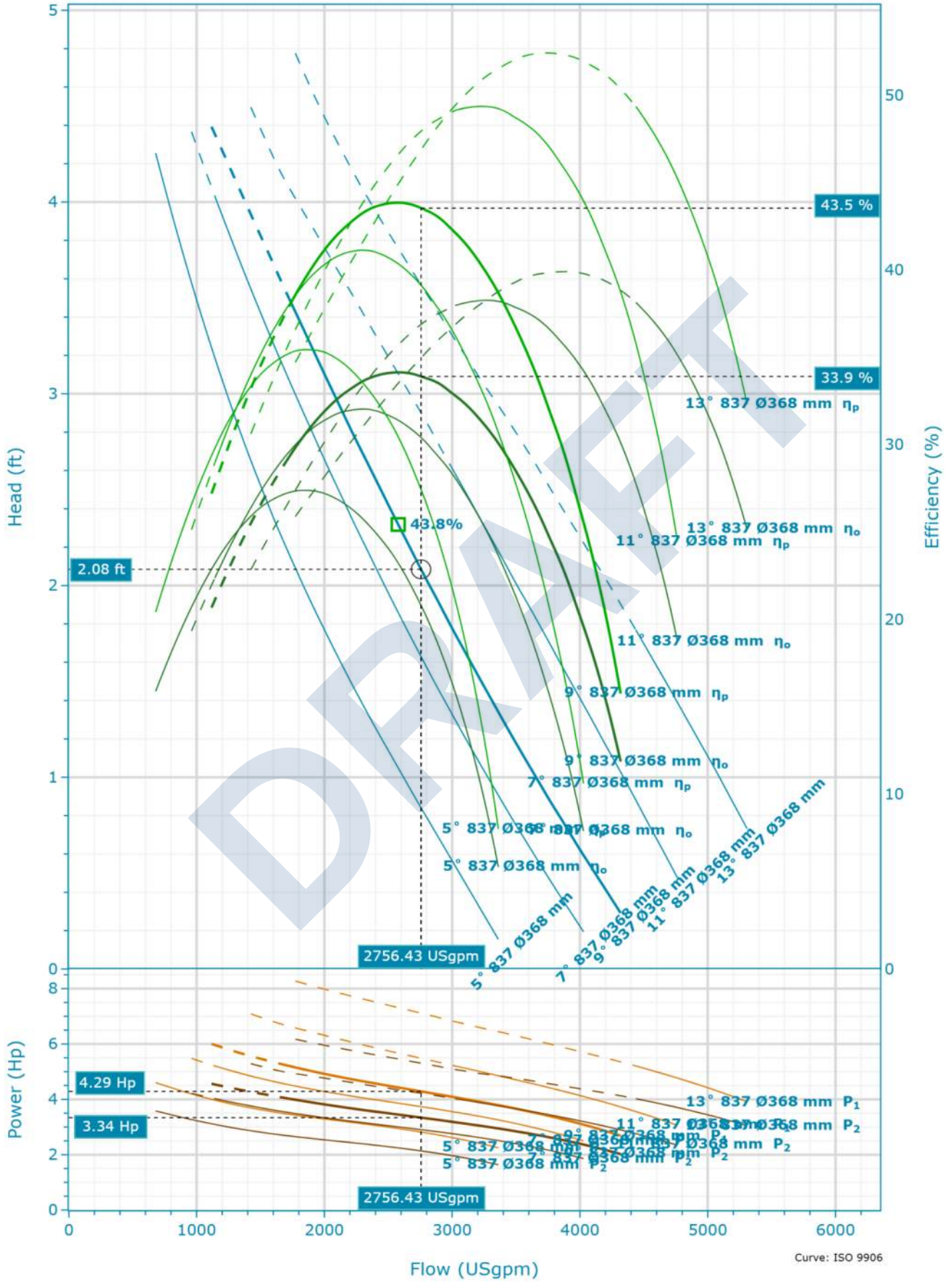

DRAFT

Nominal (mean) data shown. Under- and over-performance from this data should be expected due to standard manufacturing tolerances. Please consult your local Flygt representative for performance guarantees.

Project:	Created By:	Created On:	Last Update:
PP 4640 3~ 837	Scott Vande Vusse	6/9/25	-

Selection

Series PP 4600	System Type Single Pump
Name PP 4640 3~ 837	Operating Pumps 1
Frequency 60 Hz	Standby Pumps No Standby Pump
Total Flow 2,700.00 USgpm	Curve Code 837
Total Head 2.00 ft	Propeller Diameter 368 mm
Pump Flow 2,700.00 USgpm	Inlet Diameter 375 mm
Pump Head 2.00 ft	Outlet Diameter 15 in
	Number Of Vanes 3

Fluid

Fluid Type Water	Density 62.428 lb/ft³
Fluid Temperature 39.2 °F	Dynamic Viscosity 1.567212 cP
Specific Gravity 1	Fluid Vapor Pressure 0.118 psi

confirm the provided flange adapter is 16"

Design Point

Flow 2,756.43 USgpm	Shaft power (P2) 3.34 Hp
Head 2.08 ft	Flow To BEP Ratio 106.9 %
Overall Efficiency (ηo) 33.91 %	
Pump Efficiency (ηp) 43.54 %	
Input Power (P1) 4.29 Hp	

Design

Rated S 60 Hz	P Flow 2,577.77 USgpm
Max Flow 4,318.26 USgpm	BEP Head 2.32 ft
H@QMin 4.39 ft	Max P2 4.56 Hp
H@QMax 0.29 ft	Specific Energy 0.000019 kWh/USgal
BEP 43.8 %	

DRAFT

PP 4640 3~ 837 | Duty Analysis

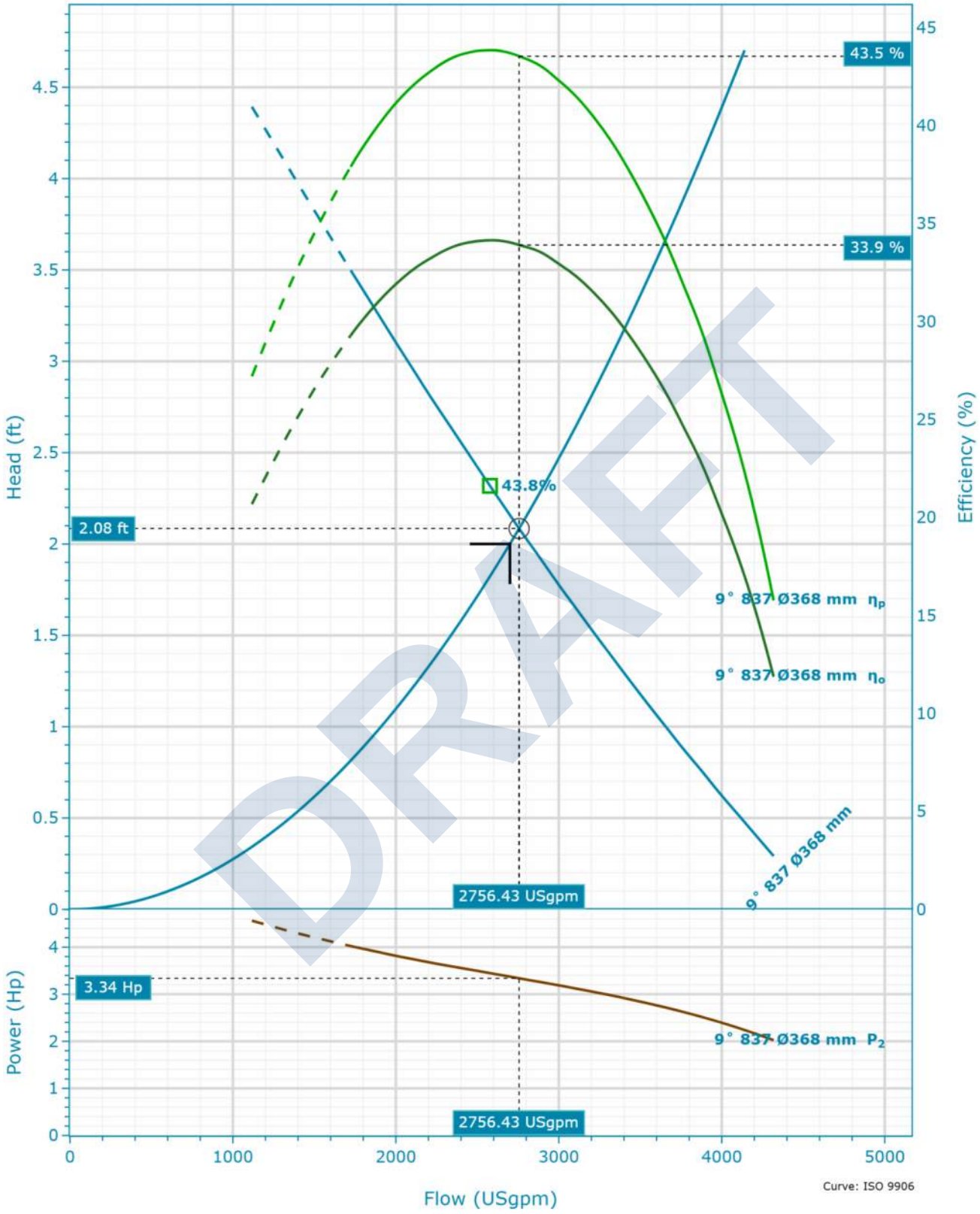

Nominal (mean) data shown. Under- and over-performance from this data should be expected due to standard manufacturing tolerances. Please consult your local Flygt representative for performance guarantees.

Name	Q (1x) [USgpm]	H (1x) [ft]	P2 (1x) [Hp]	Q [USgpm]	H [ft]	P2 [Hp]	ηp [%]	SE [kWh/USgal]	NPSHr [ft]
Design @ 1x	2,756.43	2.08	3.34	2,756.43	2.08	3.34	43.54	0	0

Project:	Created By:	Created On:	Last Update:
PP 4640 3~ 837	Scott Vande Vusse	6/9/25	-

PP 4640 3~ 837 | Variable Speed Curve

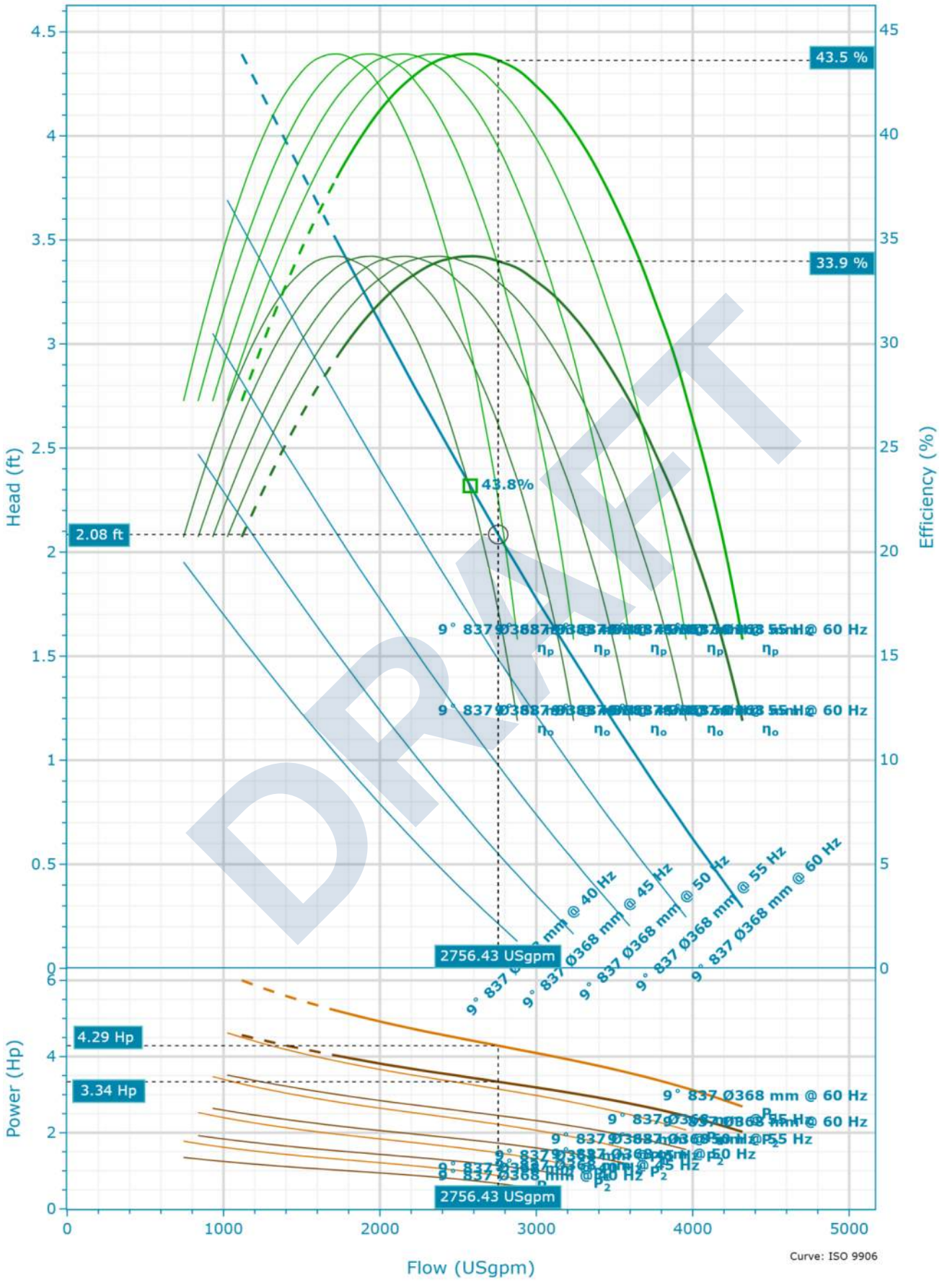

Nominal (mean) data shown. Under- and over-performance from this data should be expected due to standard manufacturing tolerances. Please consult your local Flygt representative for performance guarantees.

Project:	Created By:	Created On:	Last Update:
PP 4640 3~ 837	Scott Vande Vusse	6/9/25	-

PP 4640 3~ 837 | Variable Speed Analysis

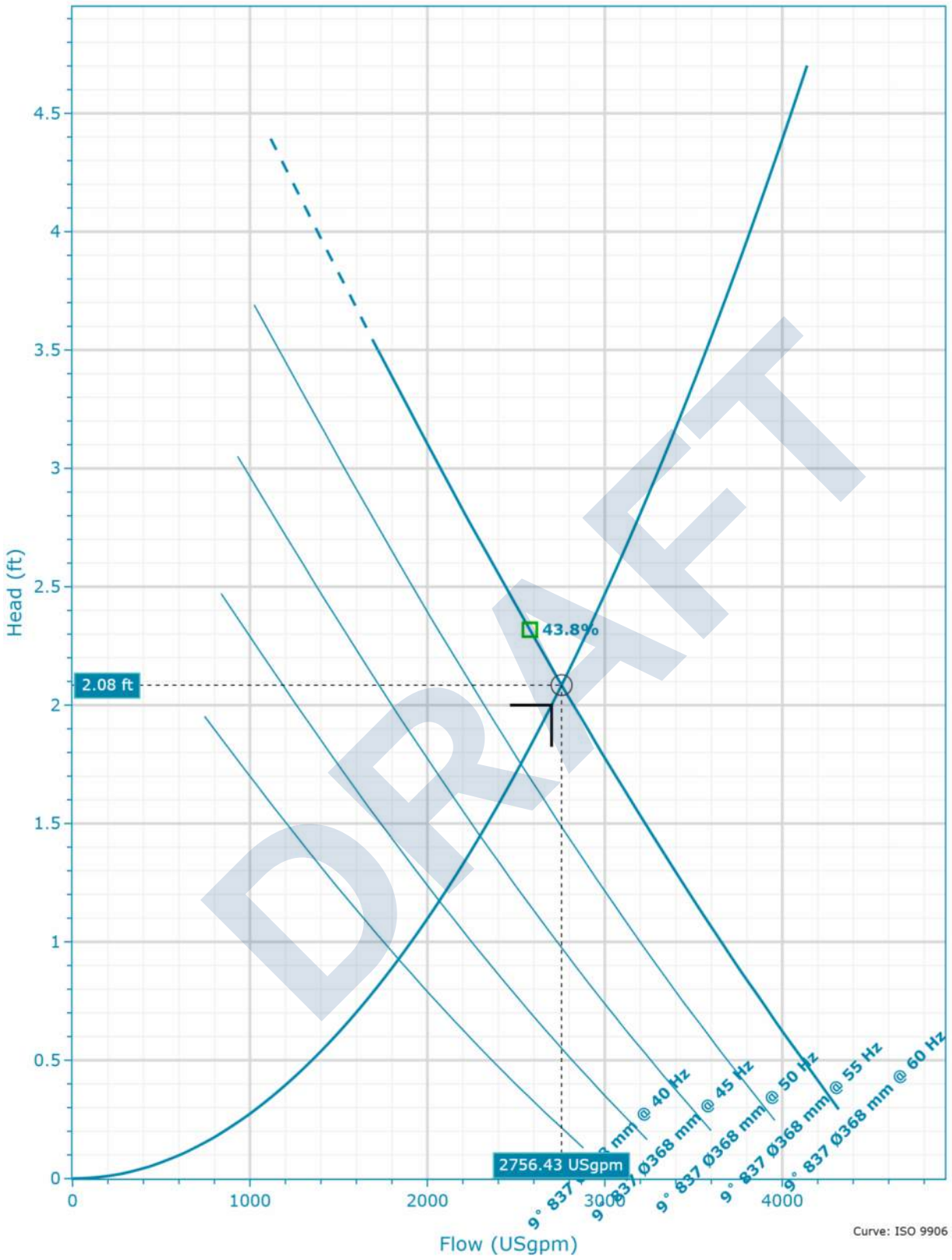

Nominal (mean) data shown. Under- and over-performance from this data should be expected due to standard manufacturing tolerances. Please consult your local Flygt representative for performance guarantees.

Name	Speed	Q (1x) [USgpm]	H (1x) [ft]	P2 (1x) [Hp]	Q [USgpm]	H [ft]	P2 [Hp]	ηp [%]	SE [kWh/USgal]	NPSHr [ft]
Design @ 1x	40 Hz	1,837.62	0.93	0.99	1,837.62	0.93	0.99	43.54	0	0
Design @ 1x	45 Hz	2,067.33	1.17	1.41	2,067.33	1.17	1.41	43.54	0	0

Project:	Created By:	Created On:	Last Update:
PP 4640 3~ 837	Scott Vande Vusse	6/9/25	-

Design @ 1x	50 Hz	2,297.03	1.45	1.93	2,297.03	1.45	1.93	43.54	0	0
Design @ 1x	55 Hz	2,526.73	1.75	2.57	2,526.73	1.75	2.57	43.54	0	0
Design @ 1x	60 Hz	2,756.43	2.08	3.34	2,756.43	2.08	3.34	43.54	0	0

DRAFT

PP 4640 3~ 837 | Dimensional Data & Drawing

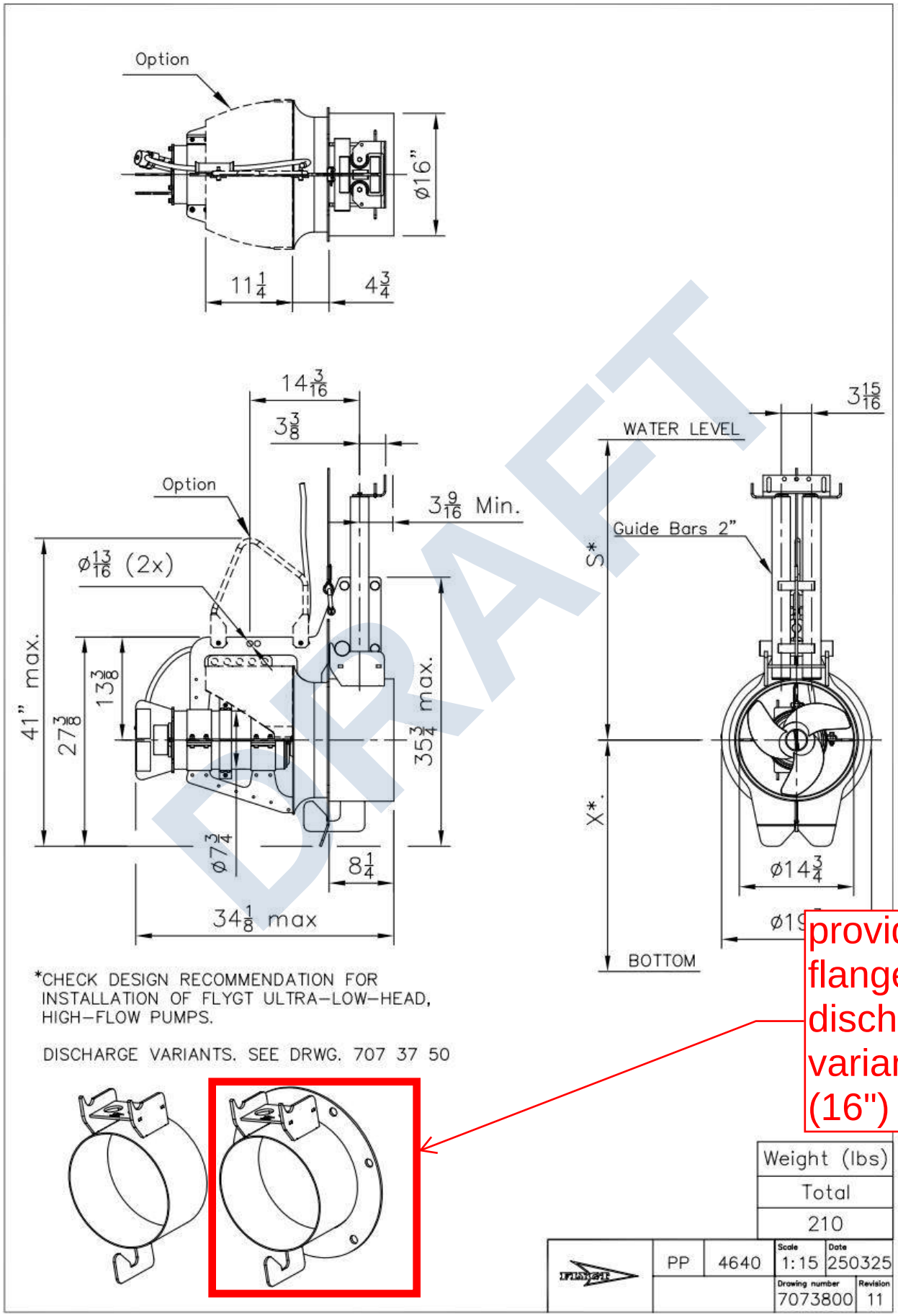

DRAFT

provide with flanged discharge variant (16")

DRAFT

Company	Whitney Equipment
Contact	Scott Vande Vusse
Phone No.	4254869499
Email	svandevusse@weci.com

xylem
Let's Solve Water

OS TYPE – OFFSET EYE CABLE GRIP



Similar to the SE Type single eye cable grip, but for when offset positioning is required. Excellent for pulling slack out of lines that have been pulled. May also be used for removing underground cables when end of cable is available.

Slingco Part No	Range		Lattice Weave	Lattice Length		Overall Length		Approx. Break Load	
	in	mm		in	mm	in	mm	lb	kg
OFFSET EYE STANDARD GRIP - GALVANIZED									
ZCS1860	0.25 - 0.50	6-13	Single	9	230	12	305	1,680	760
ZCS1861	0.50 - 0.75	13-19	Single	14	355	17	430	2,240	1,015
ZCS1862	0.75 - 1.00	19-25	Single	16	405	20	510	5,600	2,540
ZCS1863	1.00 - 1.50	25-38	Single	18	455	24	610	7,840	3,555
ZCS1864	1.50 - 2.00	38-50	Double	21	535	29	735	11,200	5,080
ZCS1865	2.00 - 2.50	50-63	Double	24	610	34	865	11,200	5,080
ZCS1866	2.50 - 3.50	63-89	Double	27	685	39	990	13,440	6,095
ZCS1867	3.50 - 4.50	89-115	Double	27	685	39	990	15,680	7,110
ZCS1974	4.50 - 5.50	115-140	Double	27	685	39	990	15,680	7,110
OFFSET EYE STANDARD GRIP - 316 STAINLESS STEEL									
ZCS1986	0.25 - 0.50	6-13	Single	9	230	12	305	1,344	610
ZCS1987	0.50 - 0.75	13-19	Single	14	355	17	430	1,792	810
ZCS1988	0.75 - 1.00	19-25	Single	16	405	20	510	4,480	2,030
ZCS1989	1.00 - 1.50	25-38	Single	18	455	24	610	6,272	2,845
ZCS1990	1.50 - 2.00	38-50	Double	21	535	29	735	8,960	4,065
ZCS1991	2.00 - 2.50	50-63	Double	24	610	34	865	8,960	4,065
ZCS1992	2.50 - 3.50	63-89	Double	27	685	39	990	10,752	4,875
ZCS1993	3.50 - 4.50	89-115	Double	27	685	39	990	12,544	5,690
ZCS1994	4.50 - 5.50	115-140	Double	27	685	39	990	12,544	5,690
ZCS3994	5.50 - 7.00	140-180	Double	24	610	39	990	4,500	2,009
ZCS4069	8.0 - 9.0	203-229	Double	59	1,500	74	1,880	20,000	8,928

DRAFT

PP-4600 Upper Guide Bar Bracket

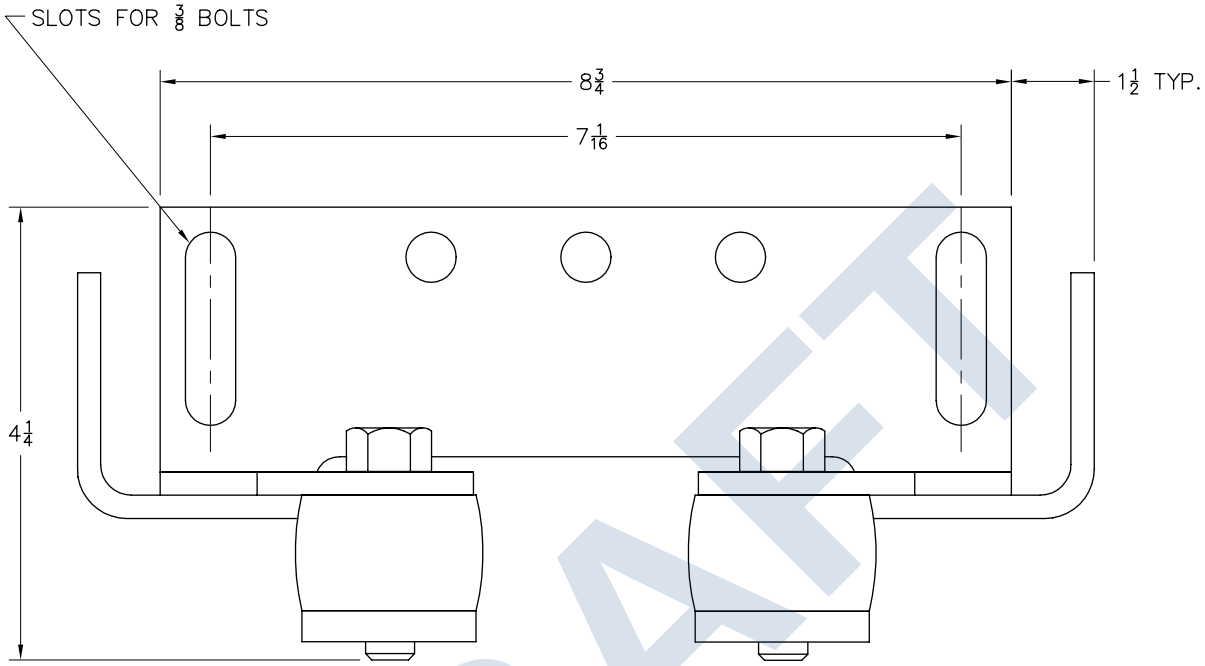

MODEL	MATERIAL	PART NUMBER
PP–4630 THRU PP 4680	316 STAINLESS STEEL	613 68 04

681816

DRAFT

Safety Hooks

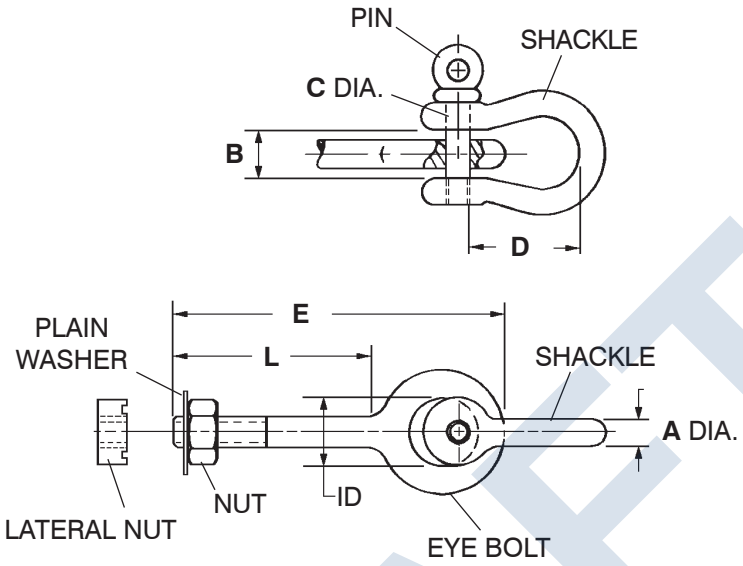

DRAFT

PUMP MODELS	KIT No.	MATERIAL	A	B	C	D	E	L	ID	LATERAL NUT	EYE BOLT	SHACKLE
3045 thru 3202												
5520 and 5530	14 58 91 05	Galvanized Steel	5/16"	9/16"	3/8"	1-1/4"	4"	2-1/2"	3/4"	3/8-16 UNC	3/8-16 UNC	5/16"
	14 58 91 06	Stainless Steel	3/8"	11/16"	7/16"	1-7/16"	4"	2-1/2"	3/4"	3/8-16 UNC	3/8-16 UNC	3/8"
6020												
8050 thru 8058												
3231 thru 3602	14 58 91 10	Galvanized Steel	5/8"	1-1/16"	3/4"	2-1/2"	6-1/2"	4"	1-1/4"	5/8-11 UNC	5/8-11 UNC	5/8"
	14 58 91 11	Stainless Steel	5/8"	1-1/16"	3/4"	2-7/16"	6-1/2"	4"	1-1/4"	5/8-11 UNC	5/8-11 UNC	5/8"
5570												

Flygt Pump Lift™

Pump Lifting System

The normal method of lowering and raising a NP/CP pump in and out of a lift station is by use of a chain or cable attached to the pump. The length of the chain or cable is dependent on the depth of the station. The average length would probably be between 18 to 20 ft. and in certain cases may be much longer. In many cases, depending on the lifting device (usually a hoist), the operator may have to take a second or third bite on the pump chain in order to lift the pump clear of the station.

An added accessory to the Flygt line is the patented **Flygt Pump Lift™** System which consists of a Nylon or stainless steel guide rope, a short length of high tensile strength carbon steel or stainless steel chain and a forged "Grip-Eye" of wrought alloy steel.

The pump raising operation using this positive recovery system is accomplished as follows:

1. Connect the small eye of the Grip-Eye to the end of the hoist cable.
2. Slip the top end of the guide rope through the large eye of the Grip-Eye. The guide rope simply acts as a guide for the Grip-Eye on its way down to the short length of the pump lifting chain.
3. While keeping the guide rope taut, proceed to lower the Grip-Eye until it is well positioned over the pump lifting chain.
4. Release the tension on the guide rope. The lifting chain will now take a position to become engaged in the Grip-Eye.
5. Gradually take up tension on the hoist cable and the Grip-Eye will make a positive grip on the pump lifting chain. Continue hoisting until the pump is clear of the station.



Guiding the Grip-Eye to the chain



Hoisting

Caution: The Grip-Eyes may only be used with the corresponding special Flygt Chain Sling Units.

Grip-Eyes are not covered under warranty if other chains are used.

Guide Ropes are not to be used for lifting the pump.

Refer to the following pages for pump models and correct assembly.

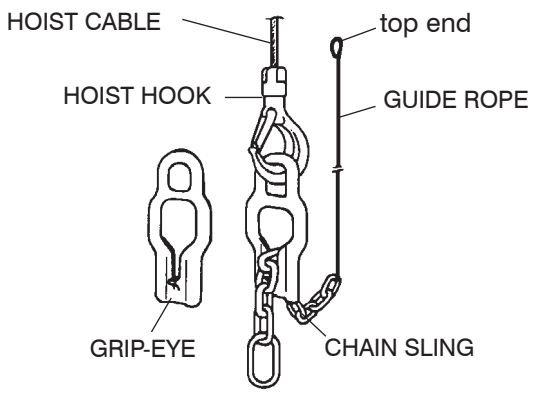

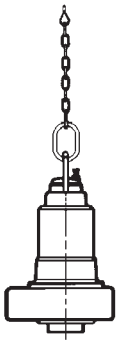

FIG. 1

(Standard) The end ring of the Chain Sling is slipped over the pump lifting handle.

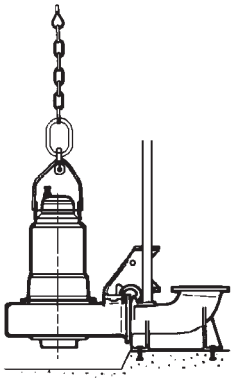

FIG. 2

(Customer to supply extra shackle) A shackle of capable strength can be used in conjunction with the standard ring should customer choose not to remove and replace pump handle.

DRAFT

NOVABRAID™

PERFORMANCE BY DESIGN



SPECTEC-12™



SPECTEC-12™ is a hollow braided 12-strand rope using 100% Spectra fiber. It is designed with single ply construction up to 1" nominal size and two ply up to 2". Spectec-12 yields one of the highest strength to weight ratios available in a synthetic rope. It comes standard with a urethane coating that provides additional abrasion resistance while remaining easy to handle and splice.

Size			Approx. Weight		Approx. Average Tensile Strength	
Dia. In	Dia. MM	Circ. Inch	Lbs./100 ft.	Kg/100 M	Lbs.	Kg.
1/8"	3	3/8"	0.53	0.8	1,600	726
3/16"	5	9/16"	1.04	1.5	3,200	1,453
1/4"	6	3/4"	1.7	2.5	6,500	2,951
5/16"	8	1"	2.9	4.3	9,500	4,313
3/8"	10	1 1/8"	3.8	5.7	14,200	6,447
7/16"	11	1 1/4"	4.3	6.4	16,500	7,491
1/2"	12	1 1/2"	6.4	9.5	24,000	10,896
9/16"	14	1 3/4"	7.5	11.2	28,000	12,712
5/8"	16	2"	10.6	15.8	41,000	18,614
3/4"	18	2 1/4"	13.2	19.7	49,000	22,246
7/8"	22	2 3/4"	19.5	29.0	68,000	30,872
1"	24	3"	23.3	34.7	79,000	35,866
1 1/8"	28	3 1/2"	32.0	47.7	100,000	45,400
1 1/4"	30	3 3/4"	36.1	53.8	110,000	49,940

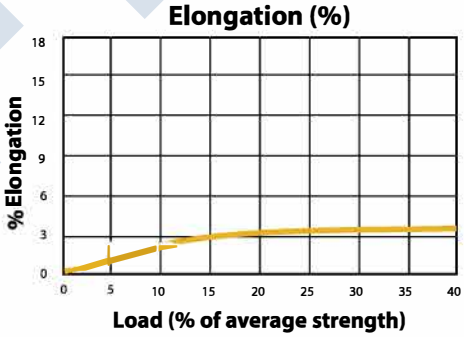

Features:

- Specific Gravity of 0.98
- Very High Strength
- Low Elongation
- Easy Handling
- Fully Spliceable

Suggested Uses:

- Wire Rope Replacement
- Mooring Lines
- Winch Lines
- Pulling Lines
- Rigging Lines

DRAFT

Manufactured by Novatec Braids Ltd.
234 Water Street, Yarmouth
Nova Scotia, Canada B5A 4P8

www.novabraid.com
1-800-565-4212

FLYGT
a xylem brand

Issued: 1/14 Supersedes: 8/00

Flygt Pump Lift™

Pump Lifting System

Chain Sling

Fig. 1

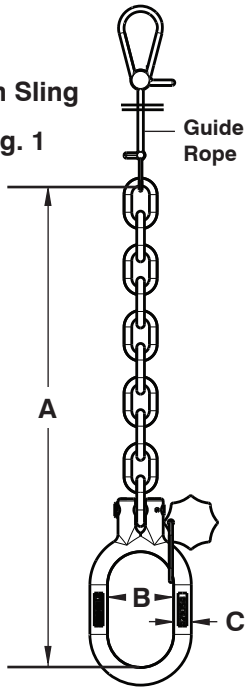

Chain Sling

Fig. 2

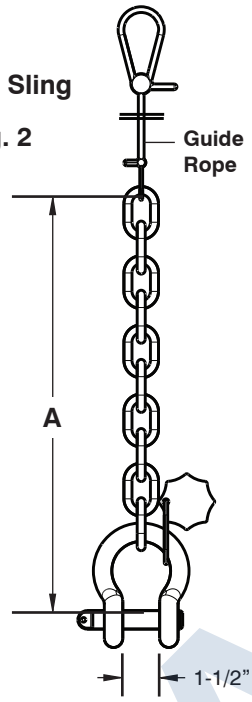

Grip-Eye

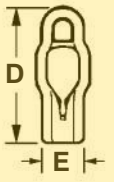

620 09 00

Grip-Eye

Material:
forged wrought alloy steel

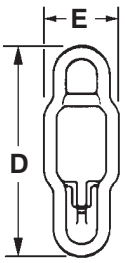

620 09 01

Chain Sling Ass'y	Fig.	Chain Sling Dimensions (in)			Grip-Eye	Grip-Eye Dimensions (in)		Guide Rope (ft)	Max. Load (lbs)
		A	B	C		D	E		
442 18 00* ^	1	13-1/2	2-3/8	5/8	620 09 00	7-7/8	2-3/8	33	2,645
442 18 02* ^	2	21-7/8	--	--	620 09 01	13-3/4	4-3/4	49	9,260
442 18 05** ^	1	27-1/2	2-3/8	7/8	620 09 01	13-3/4	4-3/4	33	4,410
442 18 06** ^	1	16	2-3/8	1/2	620 09 00	7-7/8	2-3/8	33	1,190
442 18 16**†	1	16	2-3/8	1/2	620 09 00	7-7/8	2-3/8	33	1,190
442 18 17**†	1	16	2-3/8	1/2	620 09 00	7-7/8	2-3/8	25	1,190
442 18 18**†	1	16	2-3/8	1/2	620 09 00	7-7/8	2-3/8	20	1,190
442 18 19**†	1	16	2-3/8	1/2	620 09 00	7-7/8	2-3/8	15	1,190
14-587035**††	1	16	2-3/8	1/2	620 09 00	7-7/8	2-3/8	30	1,190

*Carbon Steel **AISI 316 Stainless Steel ^ with Nylon guide rope † with 1/4"ø AISI 316 Stainless Steel guide rope †† with 3/32"ø AISI 316 Stainless Steel guide rope

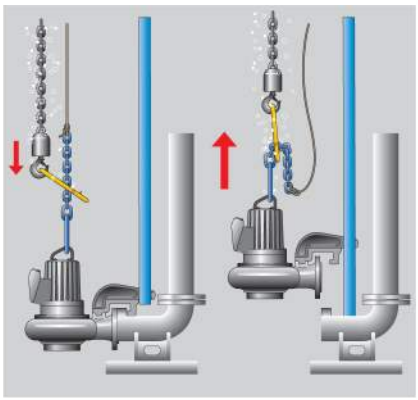

Lifting the pump

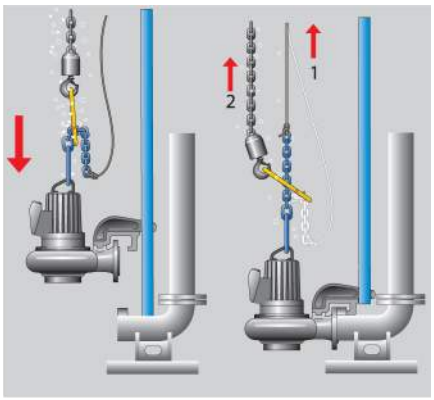

Lowering the pump

DRAFT

August 24, 2020

Mini-CAS Wiring Memo

Background:

Xylem-Flygt has utilized a Mini-CAS (Control And Status) relay for many years to monitor multiple sensors within Flygt pumps. This relay allows for multiple sensors to be wired together and monitored through two sensor wires. The most common sensor scheme is a single FLS (Fluid Leakage Sensor) used for liquid detection in the normally dry motor housing, and a set of three Thermal Sensors, one imbedded within each phase of the motor windings, to monitor when the temperature of the motor winding(s) exceed 284°F .

Requirements:

Xylem Flygt – The use of this relay is required for warranty purposes. It is required that an over temperature alarm disables the motor upon activation and prohibits the motor's operation until the alarm is reset. While not required to disable, it is required that a leakage alarm is annunciated and addressed in a reasonable amount of time to minimize further damage.

NFPA/NEC – The use of this relay is required to meet the pumps explosion-proof certification as defined by FM (Factory Mutual). FM has determined it is necessary to immediately shut down the pump in the event of a motor temperature alarm as the motor skin could exceed the temperature limitation for Class 1, Division 1 locations and could ignite any explosive gasses which can be found in wastewater wet wells.

Interpretation of NFPA/NEC Code:

It is both Xylem-Flygt and Whitney Equipment's interpretation of the code that the over temperature monitoring system is utilized in every circumstance/event. Meaning that in all auto, manual, and emergency operation modes the motor temperature alarm disables the motor's ability to operate.

The disabling of the motor starting equipment is most reliably done by utilizing the "Temperature Interlock" (Normally-Open circuit, terminals 1 & 3). When powered up and the motor temperature in the normal state, this circuit will close providing a run enable signal to a supervisor controller or other motor run circuits. In the event the alarm opens, due to a temperature alarm, Mini-CAS failure, Mini-CAS power failure, or the removal of the Mini-CAS, the control system should not allow the motor to operate.

Ultimately, it is up to the project's engineer, control panel manufacturer, and the electrician to ensure all local and national codes are met.

DRAFT

Warranty:

Whitney Equipment will test this circuit to ensure proper operation for warranty purposes and will confirm if the motor can operate in any mode. We understand the critical nature of this equipment, but require for warranty purposes that the motor is never run with the motor in over-temperature alarm. If the owner of this equipment chooses to have by-pass ability, warranty may not apply to a motor failure caused by excessive heat. Although this failure is uncommon using today's modern motor protection devices, it is easy to identify when these safety features have been by-passed.

If you have any questions or concerns about the sensors, Mini-CAS relay, or how to apply them to your project, please contact our team at (425) 486-9499.

DRAFT

FLYGT
a xylem brand

Issued: 6/13 Supersedes: 4/12

MiniCAS

Features

- 120 VAC, 24 VAC, or 24 VDC Powered
- Durable Plastic Enclosure with Flange for Mounting
- Leakage & Temperature Alarm Indication
- Power Applied Indication
- Temperature Alarm Reset Mode Select Switch
- Temperature Alarm Reset Push-button
- Sensor Input Transient & Short Circuit Protection

c UL us

UL FILE # 222351



MADE IN THE U.S.A.

Operation

The MiniCAS provides Motor Over Temperature and Seal Leakage protection for Flygt Submersible Pumps equipped with FLS or CLS sensors. The unit supplies 12 VDC to the sensor and measures the current through the sensor using protected, noise-filtered electronic circuitry. When sensor current is in the normal range, the Temperature Alarm Relay is activated to allow normal pump operation.

High Temperature Condition

In a motor High Temperature condition, the pump thermal contacts open and the current becomes zero. The Overtemp Indication is turned on and the Temperature Alarm Relay is deactivated, preventing pump operation. When the motor High Temperature condition has cleared, the unit will reset based on the position of the Alarm Reset Mode Select Switch (Auto or Manual). In the Auto position, the Overtemp Alarm resets automatically. In the Manual position, the Overtemp Reset Push-button must be pushed to clear the alarm.

Seal Leakage Condition

In a Seal Leakage condition, the Flygt FLS or CLS sensor decreases its internal resistance. The increased current is sensed, the Leakage Indication is turned on, and the Leakage Alarm Relay is activated.

Shorted Sensor Condition

If the sensor wires are shorted, a Shorted Sensor condition is indicated by activating the Leakage Alarm Relay and alternately flashing both the Leakage and Overtemp LED together with the Power LED. If the short is removed, the fault will automatically reset within 30 seconds.

Cleared Fault Indication

For both Overtemp and Seal Leakage conditions, a cleared fault indication is provided. If either condition has occurred, but has been automatically cleared, then the corresponding Indication will slowly flash. The flashing indication may be manually removed by pressing the Overtemp Reset Push-button.

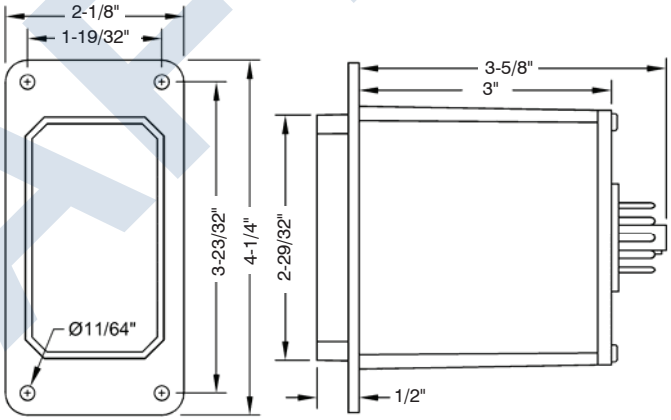

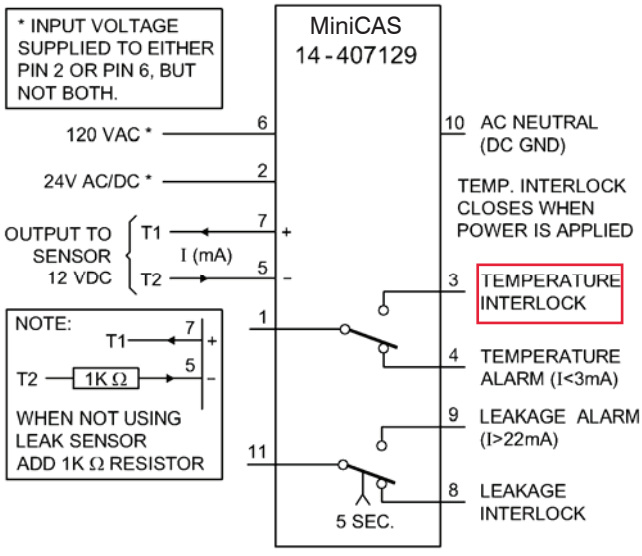

Specifications

Input Power:	120 VAC ± 10% 3.5 VA max. 24 VAC ± 10% 3.5 VA max. 24 VDC ± 10% 125 mA max.
Output Rating:	NEMA B300 Pilot Duty, 1/6th HP, 3A @ 240 VAC Form C
Operating Temp:	-20°C to 60°C
Storage Temp:	-40°C to 80°C
Sensor Voltage:	12 VDC ± 10%
Temp. Alarm Trip Point:	<3.0 mA ± 5%
Leak Alarm Trip Point:	>22 mA ± 5%
Shorted Sensor Trip Point:	>64 mA ± 5%
Enclosure:	Lexan
Base:	Phenolic

ORDERING INFORMATION

Part Number – **14-407129**

DRAFT

WARRANTY
Xylem Water Solutions USA, Inc.

For the period defined, Xylem Water Solutions USA, Inc. offers a commercial warranty to the original End Purchaser against defects in workmanship and material on Flygt Products. Warranty covers Flygt parts and labor as outlined in **ADDENDUM – A**.

COVERAGE:
Xylem Water Solutions USA, Inc. will pay the cost of parts and labor during the warranty period, provided that the Flygt product, with cable attached, is returned prepaid to a Xylem Water Solutions USA, Inc. Authorized Service Facility for Flygt Product repairs. Coverage for Flygt parts and labor will be provided for the period shown in **ADDENDUM - A.** The warranty period will begin from date of shipment or date of a valid Start-up (For permanently installed pumps only). In cases where the Start-up date is used as the beginning of the warranty on a permanently installed Flygt pump, a Start-up Report completed by an approved service technician from a Xylem Water Solutions USA, Inc. Authorized Service Facility for Flygt products must be received by the Xylem Water Solutions USA, Inc. Area Service Manager for Flygt Products within thirty (30) days of the initial onset of the unit placed into service. If not received, the beginning of the warranty coverage will default to the Flygt product ship date. A Start-up for a permanently installed Flygt pump must occur within one (1) year from the date of shipment from a Xylem Water Solutions USA, Inc. authorized facility for Flygt Products or warranty will automatically default to ship date as start of warranty. (See **STORAGE** section) When using the start-up date as the beginning of the warranty, a copy of the Start-up Report will be required to support any Warranty Claims. Warranty on Flygt Dewatering pumps will begin with ship date only. No other date on Flygt Dewatering pumps will be considered.

Xylem Water Solutions USA, Inc.'s sole obligation under this Warranty for Flygt Products shall be to replace, repair or grant credit for Flygt Products upon Xylem Water Solutions USA, Inc.'s exclusive determination that the Flygt Product does not conform to the above warranty. In the event that the Flygt product is replaced, warranty on the replacement product will be equal to the balance remaining on the original product or ninety (90) days, whichever is greater.

MISUSE:
This Warranty shall not apply to any Flygt product or part of Flygt product which (i) has been subjected to misuse, misapplication, accident, alteration, neglect, or physical damage (ii) has been installed, operated, used and/or maintained in a manner which is in an application that is contrary to Xylem Water Solutions USA, Inc.'s printed instructions as it pertains to installation, operation and maintenance of Flygt Products, including but without limitation to (iii) operation of equipment without being connected to monitoring devices supplied with specific products for protection; or (iv) damaged due to a defective power supply, improper electrical protection, faulty installation or repair, ordinary wear and tear, corrosion or chemical attack, an act of God, an act of war or by an act of terrorism; or (v) has been damaged resulting from the use of accessory equipment not sold by Xylem Water Solutions USA, Inc. or not approved by Xylem Water Solutions USA, Inc. in connection with Flygt products.

WEAR PARTS:
This warranty does not cover costs for standard and/or scheduled maintenance performed, nor does it cover Flygt parts that, by virtue of their operation, require replacement through normal wear (aka: Wear Parts), unless a defect in material or workmanship can be determined by Xylem Water Solutions USA, Inc.. Wear Parts are defined as Cutters, Cutting Plates, Impellers, Agitators, Diffusers, Wear Rings (Stationary or Rotating), Volutes (when used in an abrasive environment), oil, grease, cooling fluids and/or any items deemed necessary to perform and meet the requirements of normal maintenance on all Flygt equipment.

DRAFT

WARRANTY
Xylem Water Solutions USA, Inc.

DISCLAIMERS:
(i) Xylem Water Solutions USA, Inc.'s warranties are null and void when Flygt Products are exported outside of the United States of America without the knowledge and written consent of Xylem Water Solutions USA, Inc.; (ii) Xylem Water Solutions USA, Inc. makes no independent warranty or representation with respect to parts or products manufactured by others and provided by Xylem Water Solutions USA, Inc. (however, Xylem Water Solutions USA, Inc. will extend to the Purchaser any warranty received from Xylem Water Solutions USA, Inc.'s supplier for such parts or products).

LIMITATIONS:
XYLEM WATER SOLUTIONS USA, INC. NEITHER ASSUMES, NOR AUTHORIZES ANY PERSON OR COMPANY TO ASSUME FOR XYLEM WATER SOLUTIONS USA, INC., ANY OTHER OBLIGATION IN CONNECTION WITH THE SALE OF ITS FLYGT EQUIPMENT. ANY ENLARGEMENT OR MODIFICATION OF THIS WARRANTY BY A FLYGT PRODUCT DISTRIBUTOR, OR OTHER SELLING AGENT SHALL BECOME THE EXCLUSIVE RESPONSIBILITY OF SUCH ENTITY.

THE FOREGOING WARRANTY IS EXCLUSIVE AND IN LIEU OF ANY AND ALL OTHER EXPRESS OR IMPLIED WARRANTIES, GUARANTEES, CONDITIONS OR TERMS OF WHATEVER NATURE RELATING TO FLYGT PRODUCT(S), INCLUDING AND WITHOUT LIMITATION ANY IMPLIED WARRANTIES OF MERCHANTABILITY AND FITNESS FOR A PARTICULAR PURPOSE WHICH ARE HEREBY EXPRESSLY DISCLAIMED AND EXCLUDED. PURCHASER'S EXCLUSIVE REMEDY AND XYLEM WATER SOLUTIONS USA, INC.'S AGGREGATE LIABILITY FOR BREACH OF ANY OF THE FOREGOING WARRANTIES IS LIMITED TO REPAIRING OR REPLACING FLYGT PRODUCTS AND SHALL IN ALL CASES BE LIMITED TO THE AMOUNT PAID BY THE PURCHASER HEREUNDER. IN NO EVENT IS XYLEM WATER SOLUTIONS USA, INC. LIABLE FOR ANY OTHER FORM OF DAMAGES, WHETHER DIRECT, INDIRECT, LIQUIDATED, INCIDENTAL, CONSEQUENTIAL, PUNITIVE, EXEMPLARY OR SPECIAL DAMAGES, INCLUDING BUT NOT LIMITED TO LOSS OF USE, LOSS OF PROFIT, LOSS OF ANTICIPATED SAVINGS OR REVENUE, LOSS OF INCOME, LOSS OF BUSINESS, LOSS OF PRODUCTION, LOSS OF OPPORTUNITY OR LOSS OF REPUTATION.

XYLEM WATER SOLUTIONS USA, INC. WILL NOT BE HELD RESPONSIBLE FOR TRAVEL EXPENSES, RENTED EQUIPMENT, OUTSIDE CONTRACTOR'S FEES, OR ANY EXPENSES ASSOCIATED WITH A FLYGT PRODUCT REPAIR SHOP NOT AUTHORIZED BY XYLEM WATER SOLUTIONS USA, INC. U.S.A., INC. REIMBURSEMENT COSTS FOR CRANES AND/OR ANY SPECIAL EQUIPMENT USED IN CONJUNCTION FOR THE REMOVAL AND/OR REINSTALLATION OF ANY FLYGT EQUIPMENT IS NOT COVERED UNDER THIS WARRANTY.

ANY UNAUTHORIZED ALTERATIONS TO SUPPLIED FLYGT EQUIPMENT USED WITHOUT XYLEM WATER SOLUTIONS USA, INC. SUPPLIED FLYGT BRAND CABLE OR CONTROLS WILL NOT BE COVERED UNDER THIS WARRANTY, UNLESS IT CAN BE PROVEN SUCH ANCILLARY EQUIPMENT IS SUITABLE FOR THE PURPOSE AND EQUAL TO XYLEM WATER SOLUTIONS USA, INC. SUPPLIED FLYGT BRAND CABLES OR CONTROLS THAT WOULD ORIGINALLY HAVE BEEN SUPPLIED WITH THE TYPE OF EQUIPMENT IN USE.

REQUIREMENTS:
A copy of Electrical System Schematics of the Control used (including a Control's Bill of Material) could be required to support a Warranty Claim when a non Flygt Brand Control is used. In addition, a written record, hereby known as "the log", will be associated with each unit serial number and must be maintained by the organization having product maintenance responsibility. The log must record each preventative maintenance activity and any repair activity during the life of the warranty or verification that a Xylem Water Solutions USA, Inc. authorized Service Contract for Flygt Products is in force and must be available for review and/or auditing. Failure to meet these conditions could render this warrant null and void. Such logs could be required to determine warranty coverage.

DRAFT

WARRANTY
Xylem Water Solutions USA, Inc.

STORAGE:
Should a delay occur between ship date and the date of start-up, maintenance as outlined in Xylem Water Solutions USA, Inc.'s Care & Maintenance Manual for Flygt Products must be performed by the "CONTRACTOR" and/or "OWNER" during any such period of storage. Documentation providing proof and outlining what maintenance was performed must be provided to Xylem Water Solutions USA, Inc. or its Flygt Products representative within thirty (30) days of said maintenance, or the Xylem Water Solutions USA, Inc. warranty for Flygt Products could be considered void.

CONTROLS:
Warranty coverage for permanently installed controls will start for the end purchaser on the date of shipment. This warranty does not apply to controls that have been damaged due to a defective and/or improper input power supply, improper electrical protection, accidental damage, improper or unauthorized installation and/or repair, unauthorized alteration, negligence, environmental corrosion or chemical attack, improper maintenance or storage of control, any act of God, an act of war, an act of terrorism or damage resulting from the use of accessory equipment not approved by Xylem Water Solutions USA, Inc.. Further, this warranty does not apply in the event an adjustment is found to correct the alleged defect.

Solid state devices will be covered for a period of one (1) year. Electrical control panels containing controllers, PLC's, drives, soft starts, and other computerized equipment will require Transient Voltage Surge Suppression (TVSS) protection in order to satisfy the requirements of this warranty. The protection equipment associated with the control must be kept in working condition during the life of the warranty. Auxiliary equipment supplied with the control (air-conditioners etc.) is limited by the respective original equipment manufacturer's warranty offered. Consumable items such as: light bulbs, fuses, and relays are covered under normal operating conditions. Electrical surges experienced during startups and/or during normal operating use of the control panel will cause the consumable items not to be covered under this warranty policy. Components not supplied by Xylem Water Solutions USA, Inc. will not covered by this warranty.

TOP (The Optimum Pump Station)
Xylem Water Solutions USA, Inc. will warrant the Flygt TOP pre-engineered fiberglass pump station components against defects in material and workmanship for a period of one (1) year from date of start-up or eighteen (18) months from date of shipment and is valid only to the original owner of the station. Warranty shall cover the cost of labor and materials required to correct any warrantable defect, excluding any removal and reinstallation costs, FOB Xylem Water Solutions USA, Inc.'s authorized warranty service location for Flygt's TOP.

Flygt Products contained within a TOP pre-engineered fiberglass pump station will carry the standard Xylem Water Solutions USA, Inc. warranty for Flygt products and/or accessories installed in the TOP pre-engineered fiberglass pump station.

All Flygt Product restrictions and/or limitations as outlined and described within the context of this warranty are germane to all sections of this Xylem Water Solutions USA, Inc. Warranty document.

Xylem Water Solutions USA, Inc.
National Quality Assurance - US Corporate

DRAFT

FLYGT
a xylem brand

WARRANTY
Xylem Water Solutions USA, Inc.

ADDENDUM – WARRANTY COVERAGE BY PRODUCT

PRODUCT	PRODUCT SERIES AND CONFIGURATION	MONTHS 1-12	MONTHS 13-18	MONTHS 19-24	MONTHS 25-36	MONTHS 37-39	MONTHS 40-60	MONTHS 61-72	MONTHS 73-84
Axial Flow / Mixed Flow / Centrifugal Pumps & Mixers	3000 Series (CP, NP, DP, CT, NT, CZ, NZ, LL) 4000 Series (SR, PP) 7000 Series (PL)	100%		50%			25%		
Concertor Pumping System	6000 Series (DP)	100%		50%			25%		
	6000 Series (iPS)	100%			50% 25-48 MONTHS			25% 49-84 MONTHS	
ETO Electrical Control Panels	Engineered to Order, Xylem Manufactured Control Panels (permanently installed) - 3 Years	100% 1 YR	LIMITED – 2 YEAR						
Grinder Pumps	3000 Series (MP, MF, MH)	100% - 2 YEAR (From Ship Date)			3 YR (From DOM)	DOM= Date of Manufacture			
Abrasion/Corrosion Resistant & Chopper Pumps	3000 Series (FP, FS, FT, HP, HS) 5000 Series (HP, HS) 8000.280 Series (DP, DZ, DT, DS, DF)	100%							
Centrifugal Pumps	1300 Series	100% (From Ship Date)							
Dewatering Pumps	2000 Series (BS, KS) 3000 Series (CS, NS, DS) 8000.280 Series (DS, DF)	100% (From Ship Date)							
TOPS	Fiberglass Pump Station	100% (From Ship Date)							
Accessories	Permanent / Portable	100% (From Ship Date)							
Hydroejectors/Aerators	HE, JA	100%							
Portable Pump Controls TOPS Control Panels	Control Boxes (Nolta, MSHA etc.) TOPS control panels (permanently installed)	100% (From Ship Date)							
Small Pumps	3045, 3057, SX	100% (From Ship Date)							
Parts - *	All new Flygt parts (mechanical & electrical)	100% (From Ship Date)							

* - Parts that fail where used in a repair are warranted for one (1) year from the date of the repair for the failed part only – no labor; This Includes Flygt pump controllers, Flygt supervision equipment, Flygt submersible level transducers, etc.

DRAFT

SHOP DRAWING REVIEW

Project: **San Luis West WWTP 3.0 MGD MBR Upgrades**

Submittal No. **#C-03 Flygt Feed Forward Pump Tube**

Vendor No. **#B2-002 Flygt Pump Tubes**

Date Received: **08/19/2025**

Job #: **B777**

Comments:

No Exceptions Taken..... ☐
Submit Specific Item ..... ☐
Accepted with Corrections Noted..... ☒
Revise and Resubmit..... ☐
Rejected ..... ☐

Note:
Review is only for general conformance with the design concept of the project and general compliance with the information included in the Contract Documents. Any action shown is subjected to the requirements of the drawings and the specifications. Contractor is responsible for correlating and confirming dimensions at the job site, choice of fabrication processes and techniques of construction: coordination of his work with that of other trades; and performing the work in a safe satisfactory manner.

DATE: 9/24/2025 BY: NT/DDO

Submittal Comments:

Accepted with Corrections:

1. Per discussion on 2025/08/28, all ¾" weep holes noted on mechanical Sheet 2 of 4 are to be removed.
2. Vendor to provide installation requirements for stiffener shown on mechanical sheet 1 of 4.
3. Vendor to provide installation requirements for the tube supports shown on mechanical sheet 4 of 4.
4. Vendor is responsible for ensuring compatibility with selected Feed Forward Can Pump.

DRAFT

Submittal Transmittal

B-2 Flygt Pump Tubes

Project Name	San Luis, AZ West WWTP Phase 1 MBR Upgrades
Project Site	San Luis, AZ West WWTP
Engineer	PACIFIC ADVANCED CIVIL ENGINEERING (PACE) 8723 E. VIA de COMMERICO, SUITE A-204 SCOTTSDALE, AZ 85258
Submit to	Duong Do, PE PACE
Prepared by	Brian Travis KUBOTA Water and Environment USA Corporation 19910 North Creek Parkway Suite 100, Bothell WA 98011, USA
KMU Project #	OPID65
Issued Date	August 19, 2025
Package #	B-2
Item	(1) Flygt Column Pump Tubes

DRAFT

WECI
Whitney Equipment Company, Inc

16120 Woodinville-Redmond Rd NE Ste 3, Woodinville, WA 98072 www.weci.com 425-486-9499

SUBMITTAL

KUBOTA USA

SAN LUIS, AZ

DRAFT

High Flow Column Pump Cans

Customer: Kubota USA
Date Submitted: 8/14/25

SCOPE OF SUPPLY

HIGH FLOW COLUMN PUMP TUBES

Pump Tubes

4ea 304SS Pump Tube for use with PL7030
1/4" Wall x 20" ID x 26'-0" Long

Cover Plate With Lift Lugs	5/8" x 27.5" OD
Cover Bolts	Yes, 304SS
Cable Entry Frame To Accept Rox System	Slim Line Rox System With Side Pockets
Anti-Swirl Plate W / Cone	None
Cover Gasket	Yes
Top Flange	1/2" x 27.5" OD
Tube Support Plate & Gussets	Yes
Anchor Bolts	No
Branch (Straight tee, one near top for discharge)	20" OD x approx 16" Long, ends before wall
Branch (Straight tee, one near bottom with extra flange connection below pump)	20" OD x approx 16" Long, ends before wall
Branch Flange	20" AWWA Class D
Branch Flange Bolts	No
Bottom Flange & Gussets	1/2" x 16.44" ID
Intermediate Tube Supports	Yes (2) per tube
Sand Blast and Paint	No

DRAFT

contracto
provide
flanged s
pieces to
penetrate
through w

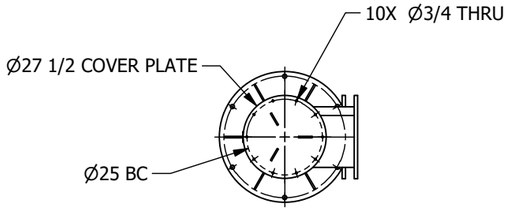

NOTES:
1. MATERIAL: 304 SS, DOMESTIC,ROLLED IN USA. NO RESTRICTIONS ON FLANGES & HARDWARE..
2. ALL DIMENSIONS ARE IN INCHES UNLESS OTHERWISE SPECIFIED.
3. AWS WELDING CERTIFICATIONS: NONE REQUIRED.
4. AWS NON DESTRUCTIVE TESTING: NONE REQUIRED
5. LEAK TESTING: FLUORESCENT PENETRANT LEAK TESTING WILL BE PERFORMED AS AN IN PROCESS INSPECTION BY ARNTZEN.
6. A 1/8 in EPDM GASKET WILL BE PROVIDED FOR THE PUMP TUBE AND COVER PLATE.
7. A 1/8 in EPDM GASKET WILL BE PROVIDED FOR THE PUMP TUBE AND INTAKE TEE
8. Ø5/8-11 x 3 1/2 in. 304 SS BOLTS, WASHERS, AND NUTS PROVIDED FOR PUMP TUBE AND COVER PLATE.
9. Ø5/8-11 x 3 1/2 in. <Bolt Mat'l> BOLTS, WASHERS, AND NUTS PROVIDED FOR PUMP TUBE AND INTAKE TEE.
10. ANCHORS ARE NOT PROVIDED.
11. JOBSITE: KUBOTA, SAN LUIS,AZ.
12. QUANTITY REQUIRED: 4

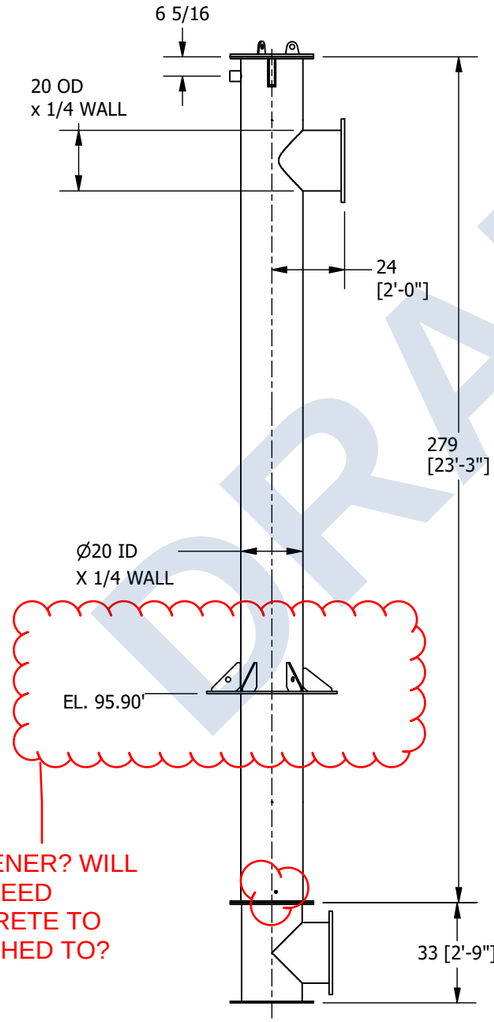

STIFFENER? WILL THIS NEED CONCRETE TO ATTACHED TO?

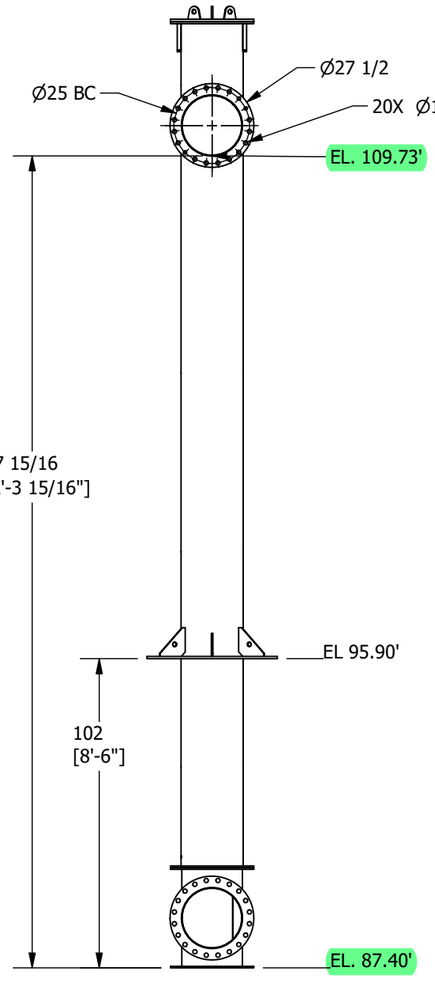

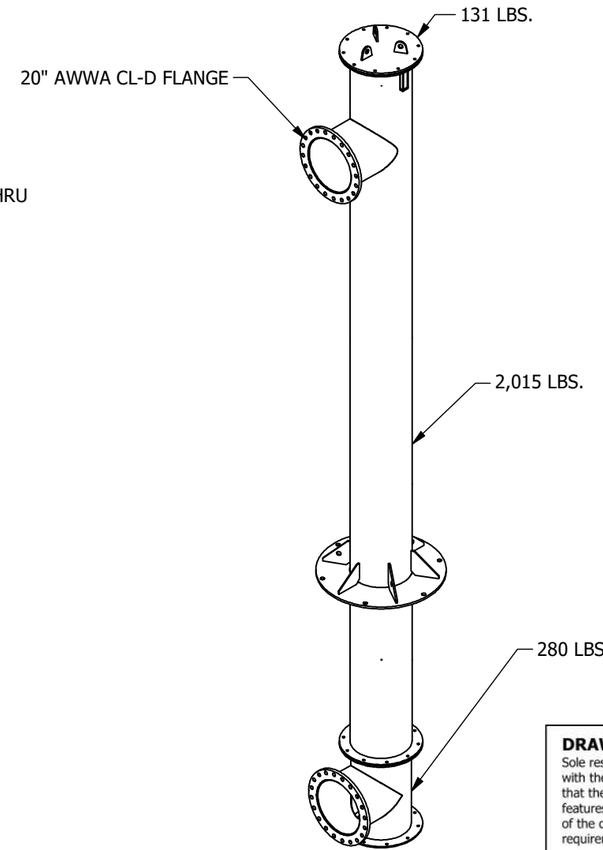

DRAWING APPROVAL:
Sole responsibility for the correctness of this drawing remains with the contractor. The approval signature below guarantees that the material types, manufacturing processes, coatings, features and dimensions contained here meet all requirements of the contract drawings, contract specifications and as built site requirements.

Company_____

Print Name_____

Signature_____ Date_____

PROPRIETARY AND CONFIDENTIAL

THIS DOCUMENT IS THE PROPRIETARY PROPERTY OF ARNTZEN CORPORATION. IT HAS BEEN FURNISHED UPON THE CONDITION THAT IT SHALL NOT BE RELEASED, DUPLICATED, USED, OR DISCLOSED IN WHOLE OR IN PART FOR ANY PURPOSE, EXCEPT FOR THE PREPRODUCTION REVIEW AND APPROVAL PROCESS, WITHOUT THE EXPRESS WRITTEN PERMISSION OF ARNTZEN CORPORATION. THIS INFORMATION IS CONSIDERED CONFIDENTIAL.

	NAME	DATE
DRAWN	DV	8/14/2025
REV. A.		
REV. B.		
REV. C.		
REV. D.		
REV. E.		
REV. F.		

JOB NO. K3549

CUSTOMER WHITNEY EQUIP. CO.

ARNTZEN CORPORATION

TITLE KUBOTA,SAN LUIS,AZ

SHEET 1 of 4

FILE NO. PUMP TUBE ELEVATIONS

CUSTOMER P/N PL-7030

REV

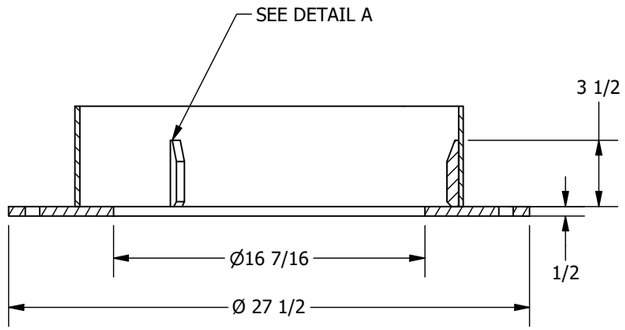

SECTION C-C

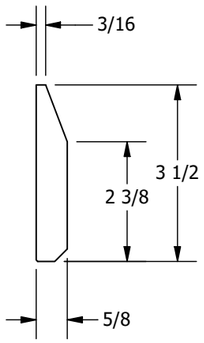

DETAIL A
3 GUSSETS REQ'D

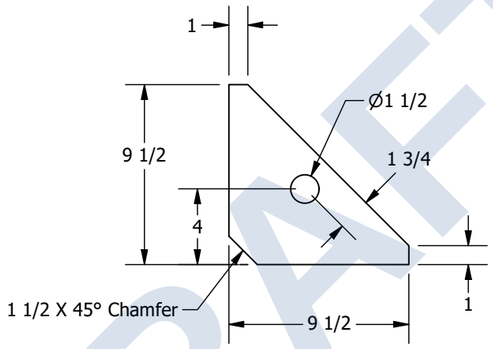

DETAIL E
(3) WITH HOLE
(3) WITHOUT HOLE

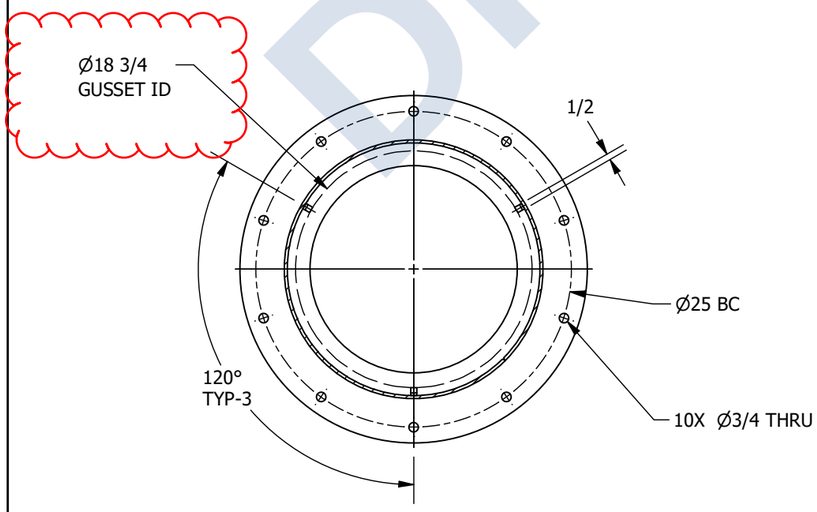

SECTION B-B

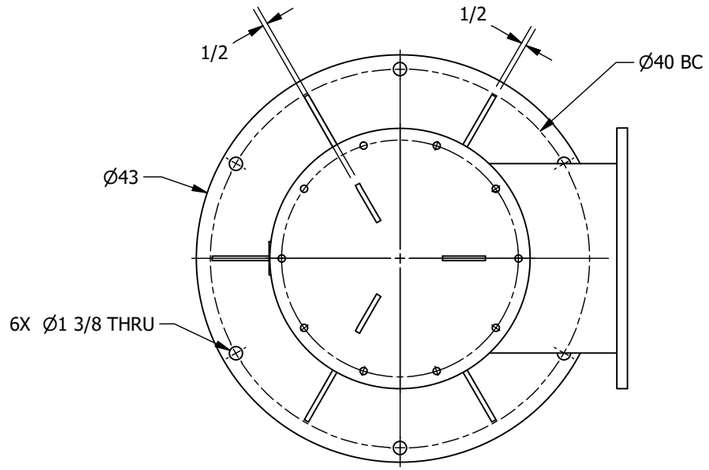

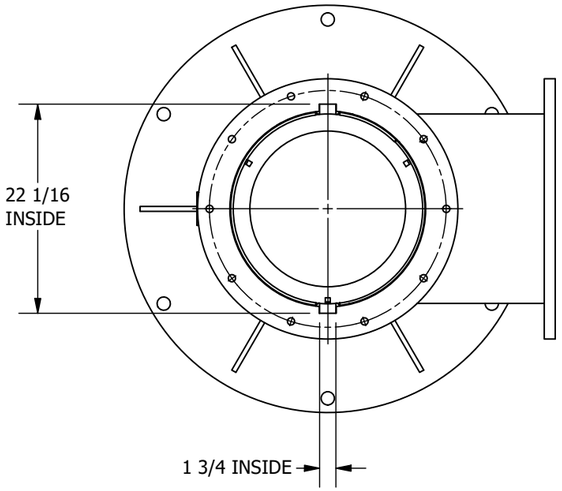

SECTION D-D

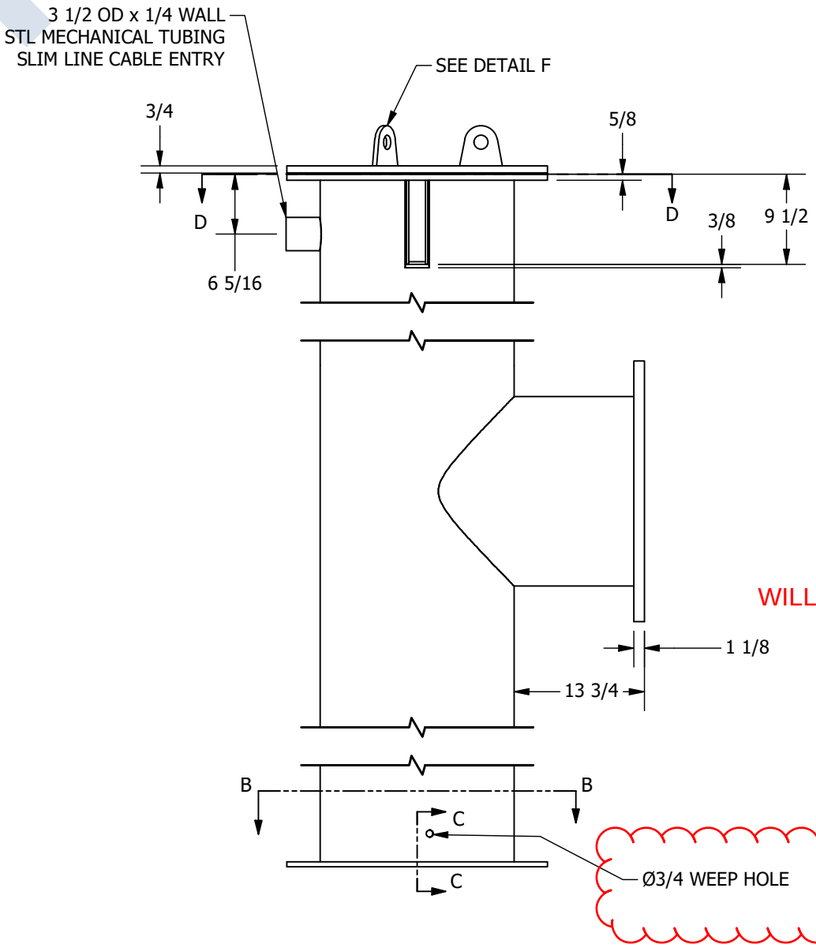

WILL LEAK???

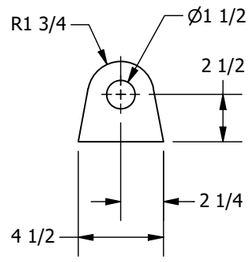

DETAIL F

DRAWING APPROVAL:
Sole responsibility for the correctness of this drawing remains with the contractor. The approval signature below guarantees that the material types, manufacturing processes, coatings, features and dimensions contained here meet all requirements of the contract drawings, contract specifications and as built site requirements.

Company_____

Print Name_____

Signature_____ Date_____

PROPRIETARY AND CONFIDENTIAL
THIS DOCUMENT IS THE PROPRIETARY PROPERTY OF ARNTZEN CORPORATION. IT HAS BEEN FURNISHED UPON THE CONDITION THAT IT SHALL NOT BE RELEASED, DUPLICATED, USED, OR DISCLOSED IN WHOLE OR IN PART FOR ANY PURPOSE, EXCEPT FOR THE PREPRODUCTION REVIEW AND APPROVAL PROCESS, WITHOUT THE EXPRESS WRITTEN PERMISSION OF ARNTZEN CORPORATION. THIS INFORMATION IS CONSIDERED CONFIDENTIAL.

	NAME	DATE
DRAWN	DV	8/14/2025
REV. A.		
REV. B.		
REV. C.		
REV. D.		
REV. E.		
REV. F.		

JOB NO. K3549

CUSTOMER WHITNEY EQUIP. CO.

ARNTZEN CORPORATION

TITLE KUBOTA,SAN LUIS,AZ

SHEET 2 of 4

FILE NO. PUMP TUBE DETAILS

CUSTOMER P/N PL-7030

REV

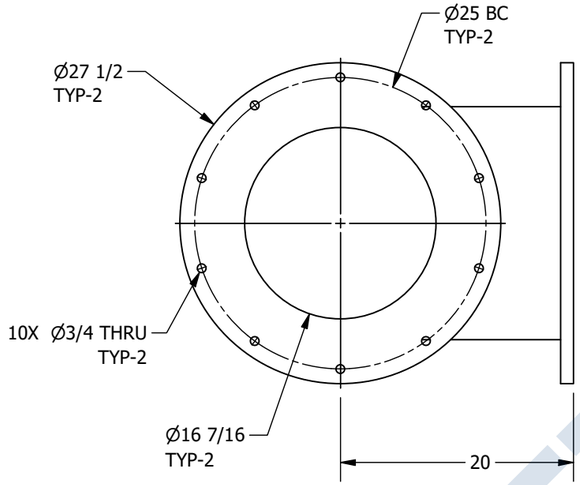

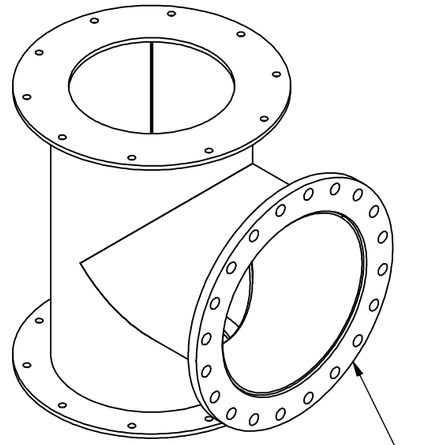

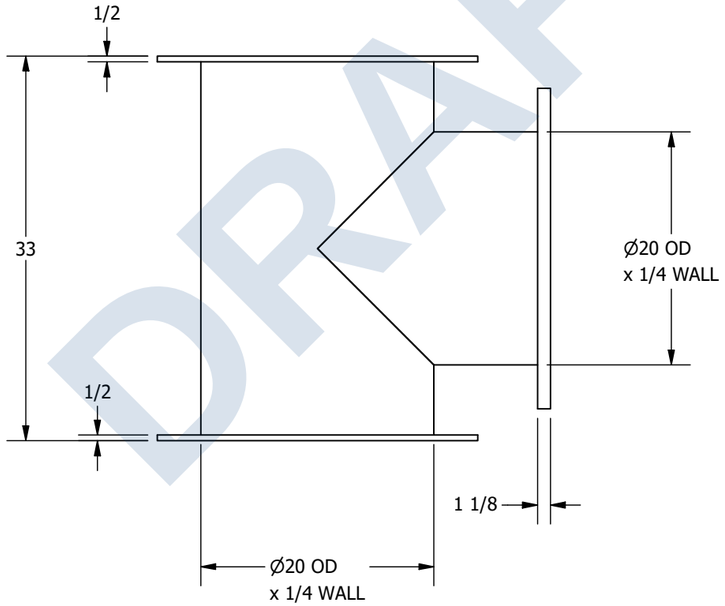

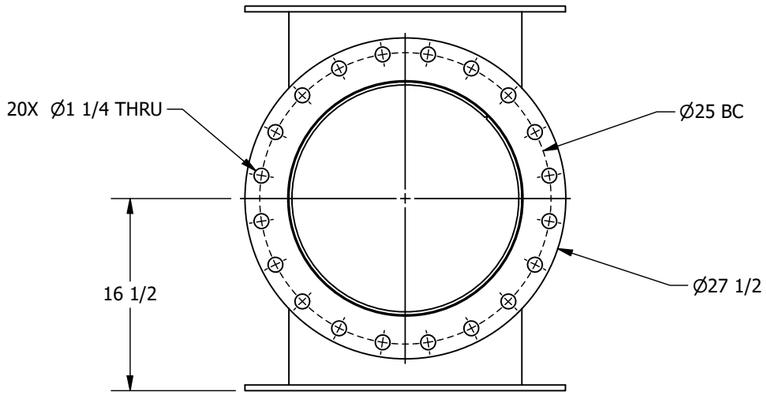

DRAWING APPROVAL:
Sole responsibility for the correctness of this drawing remains with the contractor. The approval signature below guarantees that the material types, manufacturing processes, coatings, features and dimensions contained here meet all requirements of the contract drawings, contract specifications and as built site requirements.

Company_____

Print Name_____

Signature_____ Date_____

NOTES:
1. MATERIAL: 304 SS, DOMESTIC,ROLLED IN USA. NO RESTRICTIONS ON FLANGES & HARDWARE.
2. ALL DIMENSIONS ARE IN INCHES UNLESS OTHERWISE SPECIFIED.
3. ANCHORS ARE NOT INCLUDED.
4. JOBSITE: KUBOTA, SAN LUIS,AZ.
5. QUANTITY REQUIRED: 4

PROPRIETARY AND CONFIDENTIAL

THIS DOCUMENT IS THE PROPRIETARY PROPERTY OF ARNTZEN CORPORATION. IT HAS BEEN FURNISHED UPON THE CONDITION THAT IT SHALL NOT BE RELEASED, DUPLICATED, USED, OR DISCLOSED IN WHOLE OR IN PART FOR ANY PURPOSE, EXCEPT FOR THE PREPRODUCTION REVIEW AND APPROVAL PROCESS, WITHOUT THE EXPRESS WRITTEN PERMISSION OF ARNTZEN CORPORATION. THIS INFORMATION IS CONSIDERED CONFIDENTIAL.

	NAME	DATE
DRAWN	DV	8/14/2025
REV. A.		
REV. B.		
REV. C.		
REV. D.		
REV. E.		
REV. F.		

JOB NO. K3549

CUSTOMER WHITNEY EQUIP. CO.

ARNTZEN CORPORATION

TITLE KUBOTA,SAN LUIS,AZ

SHEET 3 of 4

FILE NO. FORMED SUCTION INTAKE

CUSTOMER P/N PL-7030

REV

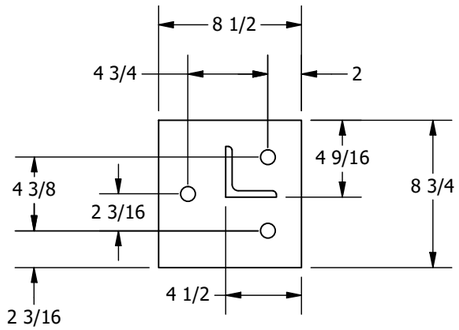

SECTION H-H

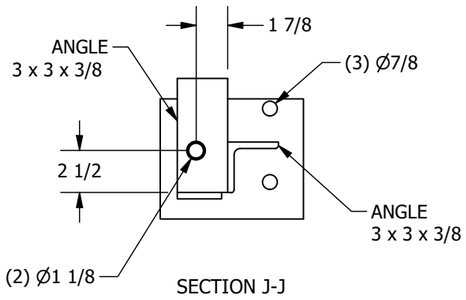

SECTION J-J

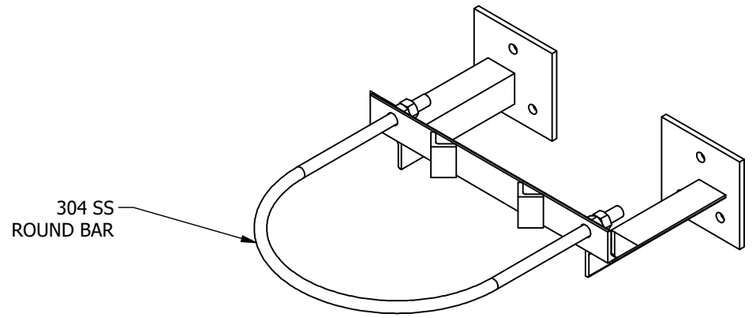

74 lbs.

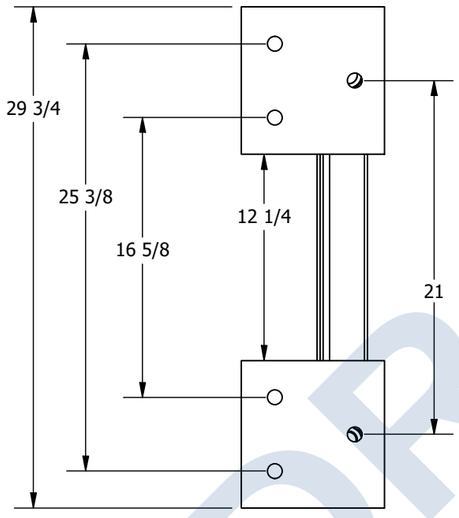

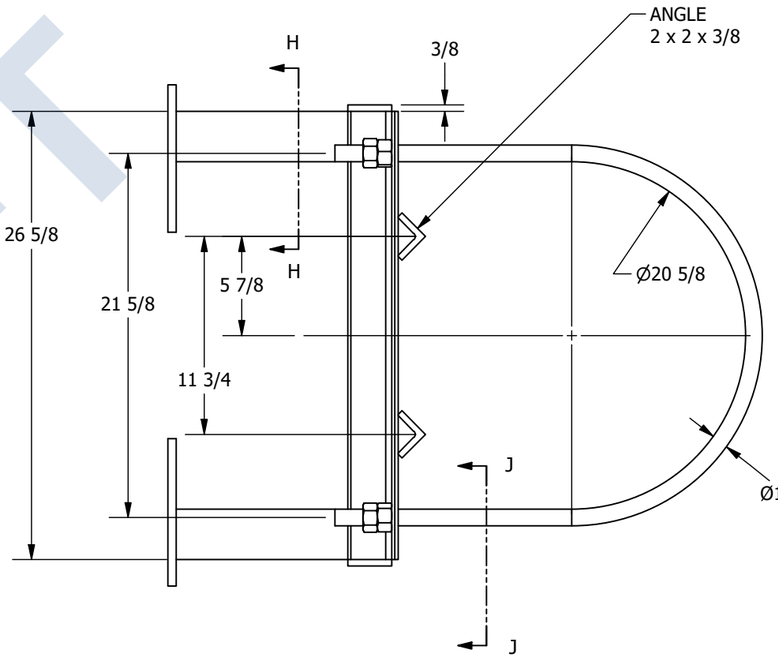

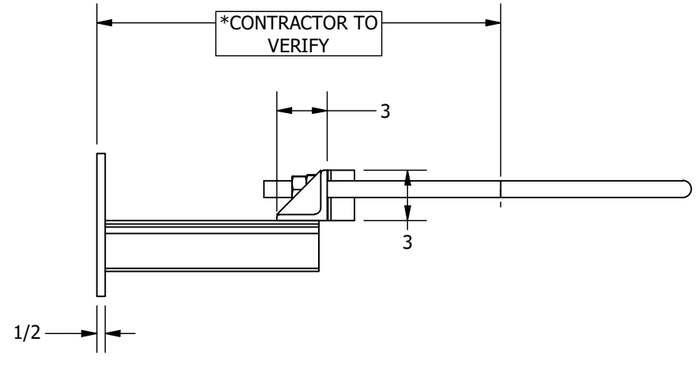

NOTES:
1. MATERIAL: 304 SS, UNLESS OTHERWISE SPECIFIED.
2. ALL DIMENSIONS ARE IN INCHES UNLESS OTHERWISE SPECIFIED.
3. QUANTITY REQUIRED: 8 TOTAL, 2 PER PUMP.

DRAWING APPROVAL:
Sole responsibility for the correctness of this drawing remains with the contractor. The approval signature below guarantees that the material types, manufacturing processes, coatings, features and dimensions contained here meet all requirements of the contract drawings, contract specifications and as built site requirements.

Company_____

Print Name_____

Signature_____ Date_____

PROPRIETARY AND CONFIDENTIAL

THIS DOCUMENT IS THE PROPRIETARY PROPERTY OF ARNTZEN CORPORATION. IT HAS BEEN FURNISHED UPON THE CONDITION THAT IT SHALL NOT BE RELEASED, DUPLICATED, USED, OR DISCLOSED IN WHOLE OR IN PART FOR ANY PURPOSE, EXCEPT FOR THE PREPRODUCTION REVIEW AND APPROVAL PROCESS, WITHOUT THE EXPRESS WRITTEN PERMISSION OF ARNTZEN CORPORATION. THIS INFORMATION IS CONSIDERED CONFIDENTIAL.

	NAME	DATE
DRAWN	DV	8/14/2025
REV. A.		
REV. B.		
REV. C.		
REV. D.		
REV. E.		
REV. F.		

JOB NO. K3549

CUSTOMER WHITNEY EQUIP. CO.

ARNTZEN CORPORATION

TITLE KUBOTA,SAN LUIS,AZ

SHEET 4 of 4

FILE NO. TUBE SUPPORT

CUSTOMER P/N PL-7030

REV

SHOP DRAWING REVIEW

Project: **San Luis West WWTP Improvements**

Submittal No. **#O1-07 Actuated Valves**

Vendor No. **D1-001**

Date Received: **06/16/2025**

Job #: **B777**

Comments:

No Exceptions Taken..... ☐
Submit Specific Item ..... ☒
Accepted with Corrections Noted..... ☐
Revise and Resubmit..... ☒
Rejected ..... ☐

Note:
Review is only for general conformance with the design concept of the project and general compliance with the information included in the Contract Documents. Any action shown is subjected to the requirements of the drawings and the specifications. Contractor is responsible for correlating and confirming dimensions at the job site, choice of fabrication processes and techniques of construction: coordination of his work with that of other trades; and performing the work in a safe satisfactory manner.

DATE: 7/29/2025 BY: DD / NE

Contractor to Note:

Submittal Comments:

1. Please confirm that the actuator can be installed 180° from the vertical position. Please submit any necessary support details required for this configuration.
2. Please list the quantity of each type of valve and actuator being provided on the cover sheet.
3. Please submit cut sheets for two 6” WAS plug valves and electric actuator.
4. Please call out the 12” permeate valves to be stainless steel.
5. Please change the electric actuator power supply to be 120V/1 phase.

DRAFT

Submittal Transmittal

D-1 Electric Actuated Valves

Project Name	San Luis, AZ West WWTP Phase 1 MBR Upgrades
Project Site	San Luis, AZ West WWTP
Engineer	PACIFIC ADVANCED CIVIL ENGINEERING (PACE) 8723 E. VIA de COMMERICO, SUITE A-204 Scottsdale, AZ 85258
Submit to	Duong Do, PE PACE
Prepared by	Scott Jungwirth, PE KUBOTA Water and Environment USA Corporation 19910 North Creek Parkway Suite 100, Bothell WA 98011, USA
KMU Project #	OPID65
Issued Date	June 16, 2025
Package #	D-1 Electric Actuated Valves
Item	(1) Beck 11-369 Electric Actuators (2) M&H 4700 Butterfly Valves

DRAFT

Table of Contents

1. Beck Actuator Wiring Diagram: 17-7000-35
2. Beck Actuator Outline Drawing: 18-0360-02
3. Valve Drawing: BF-DD0007-B
4. Beck Actuator/Valve Mounting Specification: 20-166-53
5. Beck Actuator Instruction Manual
6. Valve Instruction Manual

DRAFT

BECK ELECTRIC ACTUATORS

Actuator Specifications

Ref: MSB-25-162918

Line	Qty	Model	Application Description
1	3	11-369	Valve/ Air Scour BABA Compliant Actuator NON-AIS 10" M&H 4700 AWWA flanged butterfly valve supplied as unitized assembly. Power: 480/3/60 Control: 4-20 mA

Actuator Features & Specifications

change to 120V/1 phase

Voltage/Phase / Freq:	480/3/60
Torque (lb-ft):	400
Stroke Timing (seconds):	54
Travel (degrees):	90
Auxiliary Limit Switches:	4X SPDT
Communications Protocol:	HART communications / Local pushbutton interface
Control Signal:	4-20 MA
Feedback Signal:	4-20 mA
Loss of Control Signal Action:	Stay In Place
Loss of Power Action:	Stay in Place
Enclosure Rating:	TYPE 4X, IP66/IP68 (3m / 48 hrs)
Corrosion Protection:	Standard
Position Sensing Device:	Contactless Position Sensor (CPS)
Control Board:	Digital Control Module (DCM)
Wiring Diagram:	17-7000-35

Integral Features:
- Self-Locking, Self-Releasing Gear Train
- Handwheel (manual operation without power)
- Non-coasting Beck control motor with instant magnetic braking
- Dust-Tight Construction
- Over-Travel Limit Switches
- Cast Mechanical Stops
- 5-Position Handswitch (electrical manual operation)
- Temperature Sensing Technology
- Stall Protection Circuitry

Additional Features: Certificate of Inspection
Auxiliary handswitch contact closed in AUTO
Motor Handwheel Label (OPEN direction)
Handswitch Inlay (OPEN / CLOSE)

Valve Info: Beck Mounting with Beck Supplied Mounting Hardware
NON-AIS 10" M&H 4700 AWWA flanged butterfly valve

Valve/Damper Supplier By: BECK

Mounting Type: Direct Couple

DRAFT

Harold Beck & Sons
11 Terry Drive ~ Newtown, PA 18940 ~ USA
Phone: 215-968-4600 Fax: 215-860-6383

www.haroldbeck.com

BECK ELECTRIC ACTUATORS

Actuator Specifications

Ref: MSB-25-162918

Line	Qty	Model	Application Description
2	3	11-369	Permeate Flow Control BABA Compliant Actuator NON-AIS 12" M&H 4700 AWWA flanged butterfly valve supplied as unitized asesembly. Power: 480/3/60 Control: 4-20 mA

Actuator Features & Specifications

Voltage/Phase / Freq:	480/3/60
Torque (lb-ft):	650
Stroke Timing (seconds):	54
Travel (degrees):	90
Auxiliary Limit Switches:	4X SPDT
Communications Protocol:	HART communications / Local pushbutton interface
Control Signal:	4-20 MA
Feedback Signal:	4-20 mA
Loss of Control Signal Action:	Stay In Place
Loss of Power Action:	Stay in Place
Enclosure Rating:	TYPE 4X, IP66/IP68 (3m / 48 hrs)
Corrosion Protection:	Standard
Position Sensing Device:	Contactless Position Sensor (CPS)
Control Board:	Digital Control Module (DCM)
Wiring Diagram:	17-7000-35

change to 120V/1 phase

Integral Features:
- Self-Locking, Self-Releasing Gear Train
- Handwheel (manual operation without power)
- Non-coasting Beck control motor with instant magnetic braking
- Dust-Tight Construction
- Over-Travel Limit Switches
- Cast Mechanical Stops
- 5-Position Handswitch (electrical manual operation)
- Temperature Sensing Technology
- Stall Protection Circuitry

Additional Features: Certificate of Inspection
Auxiliary handswitch contact closed in AUTO
Motor Handwheel Label (OPEN direction)
Handswitch Inlay (OPEN / CLOSE)

Valve Info: Beck Mounting with Beck Supplied Mounting Hardware
NON-AIS 12" M&H 4700 AWWA flanged butterfly valve

Valve/Damper Supplier By: BECK

Mounting Type: Direct Couple

stainless steel

DRAFT

Harold Beck & Sons
11 Terry Drive ~ Newtown, PA 18940 ~ USA
Phone: 215-968-4600 Fax: 215-860-6383

www.haroldbeck.com

BECK ELECTRIC ACTUATORS

Actuator Specifications

Ref: MSB-25-162918

Line	Qty	Model	Application Description
3	3	11-369	Valve/ Air Diffuser BABA Compliant Actuator and NON-AIS 12" M&H 4700 AWWA flanged butterfly valve supplied as unitized asesembly. Power: 480/3/60 Control: 4-20 mA

Actuator Features & Specifications

change to 120V/1 phase

Voltage/Phase / Freq:	480/3/60
Torque (lb-ft):	650
Stroke Timing (seconds):	54
Travel (degrees):	90
Auxiliary Limit Switches:	4X SPDT
Communications Protocol:	HART communications / Local pushbutton interface
Control Signal:	4-20 MA
Feedback Signal:	4-20 mA
Loss of Control Signal Action:	Stay In Place
Loss of Power Action:	Stay in Place
Enclosure Rating:	TYPE 4X, IP66/IP68 (3m / 48 hrs)
Corrosion Protection:	Standard
Position Sensing Device:	Contactless Position Sensor (CPS)
Control Board:	Digital Control Module (DCM)
Wiring Diagram:	17-7000-35

Integral Features:
- Self-Locking, Self-Releasing Gear Train
- Handwheel (manual operation without power)
- Non-coasting Beck control motor with instant magnetic braking
- Dust-Tight Construction
- Over-Travel Limit Switches
- Cast Mechanical Stops
- 5-Position Handswitch (electrical manual operation)
- Temperature Sensing Technology
- Stall Protection Circuitry

Additional Features: Certificate of Inspection
Auxiliary handswitch contact closed in AUTO
Motor Handwheel Label (OPEN direction)
Handswitch Inlay (OPEN / CLOSE)

Valve Info: Beck Mounting with Beck Supplied Mounting Hardware
NON-AIS 12" M&H 4700 AWWA flanged butterfly valve

Valve/Damper Supplier By: BECK

Mounting Type: Direct Couple

Missing two (2) 6" plug valves with electric actuator

DRAFT

Harold Beck & Sons
11 Terry Drive ~ Newtown, PA 18940 ~ USA
Phone: 215-968-4600 Fax: 215-860-6383

www.haroldbeck.com

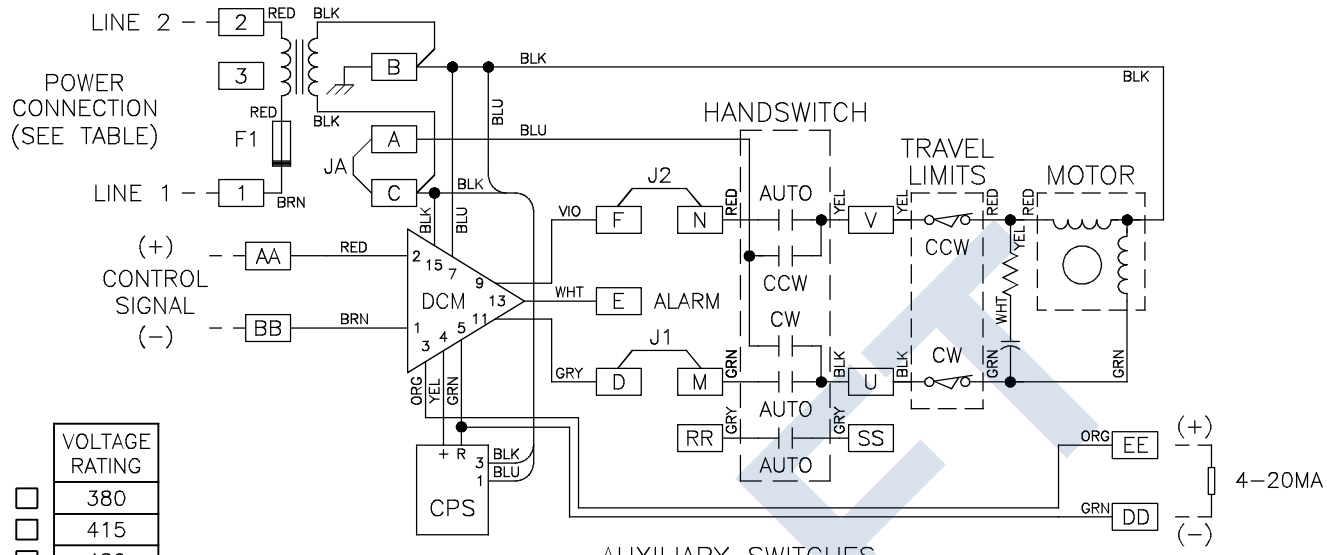

VOLTAGE RATING	
☐	380
☐	415
☒	480
☐	575

AUXILIARY SWITCHES

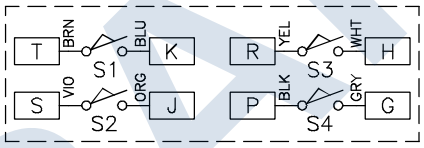

UNUSED

CC	FF	GG
HH	JJ	KK
MM	NN	PP

AUXILIARY SWITCH CONFIGURATION

	FORM A	FORM B
S1	☐	☐
S2	☐	☐
S3	☐	☐
S4	☐	☐

NOTES:
1. REMOVE JUMPER JA TO PREVENT HANDSWITCH INITIATED MOTION
2. J1 AND J2 ARE REQUIRED AS SHOWN
3. 120VAC ALARM AVAILABLE BETWEEN TERMINALS B AND E.
4. CONNECTING LINE 3 OF 3 PHASE POWER TO TERMINAL 3 IS PERMISSIBLE, BUT NOT REQUIRED.

17−7000−35o A

DRAFT

SIZE: A

THIS DOCUMENT IS A COPY AND IS NOT THE SOURCE DOCUMENT. INFORMATION IS SUBJECT TO CHANGE WITHOUT NOTICE. THE INFORMATION CONTAINED HEREIN IS COPYRIGHTED BY HAROLD BECK AND SONS, INC. CHANGES TO THE DOCUMENT ARE PROHIBITED. CONTACT A BECK SALES ENGINEER IF A CERTIFIED DRAWING IS REQUIRED.

HAROLD BECK & SONS INC
NEWTOWN INDUSTRIAL COMMONS NEWTOWN, PENNSYLVANIA 18940 USA

TITLE:
WIRING DIAGRAM GROUP 11-2X9/3X9/409/419/469
380/415/480/575 VOLT 4 AUX SWITCHES INT CPS
W/ H/S AUX CLSD IN AUTO W/ HART/LOCAL DCM

DRAWN: CHH 5-27-09	SCALE: NONE	DRAWING NO: 17-7000-35o	REV: A
CHECKED: GMD 6-11-09			
APPROVED: JHM 6/16/09		SHEET NO. 1 OF 1	

THIS DOCUMENT IS A COPY AND IS NOT THE SOURCE DOCUMENT. INFORMATION IS SUBJECT TO CHANGE WITHOUT NOTICE. THE INFORMATION CONTAINED HEREIN IS COPYRIGHTED BY HAROLD BECK AND SONS, INC. CHANGES TO THE DOCUMENT ARE PROHIBITED. CONTACT A BECK SALES ENGINEER IF A CERTIFIED DRAWING IS REQUIRED.

DRAFT

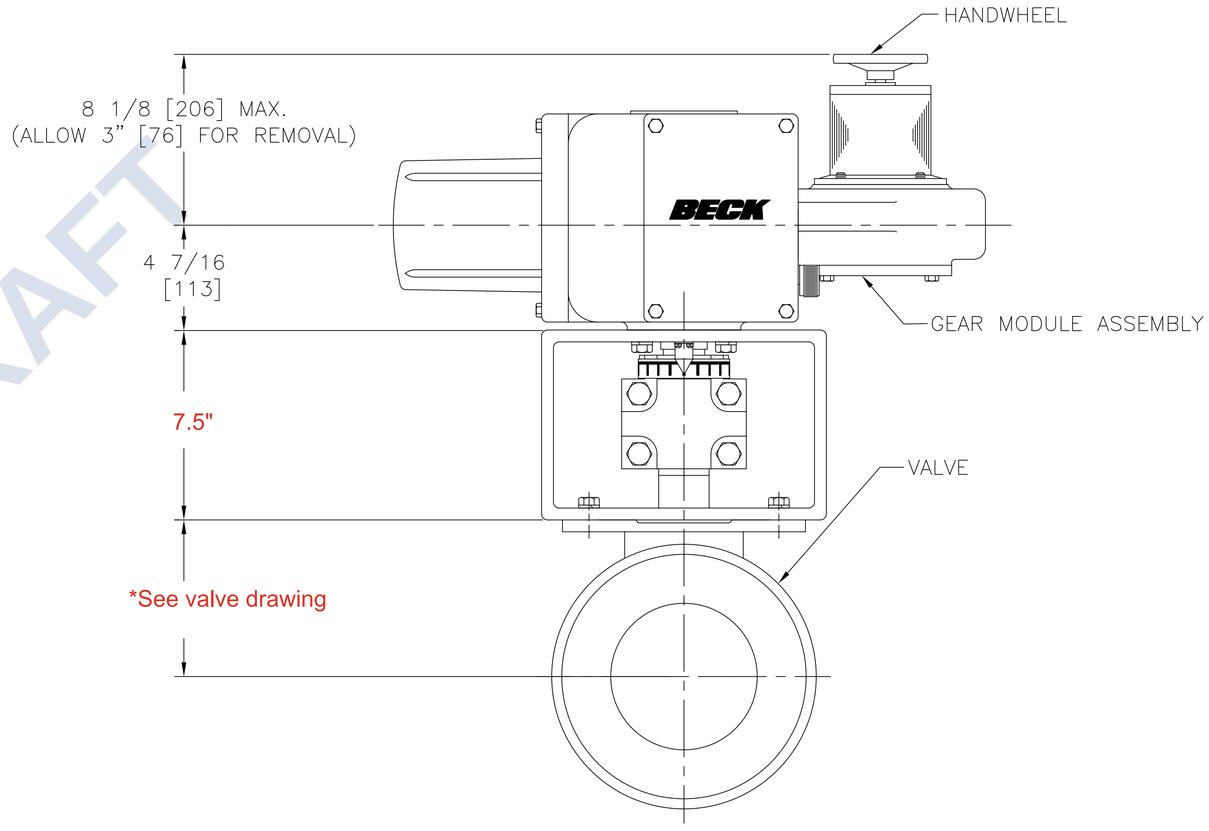

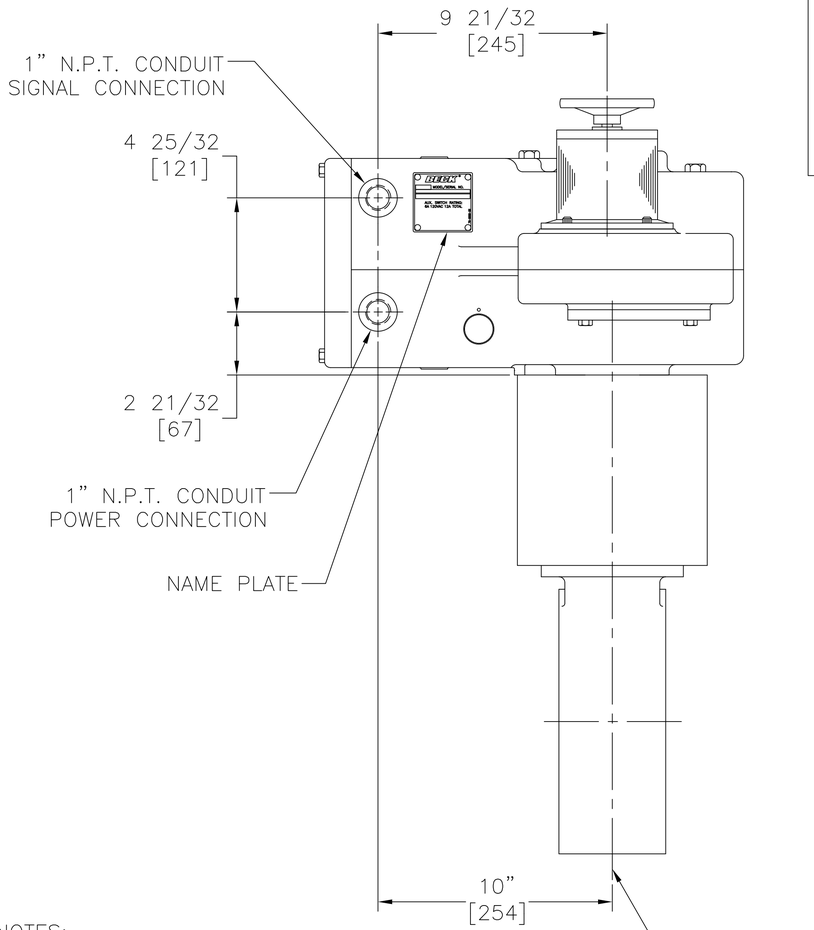

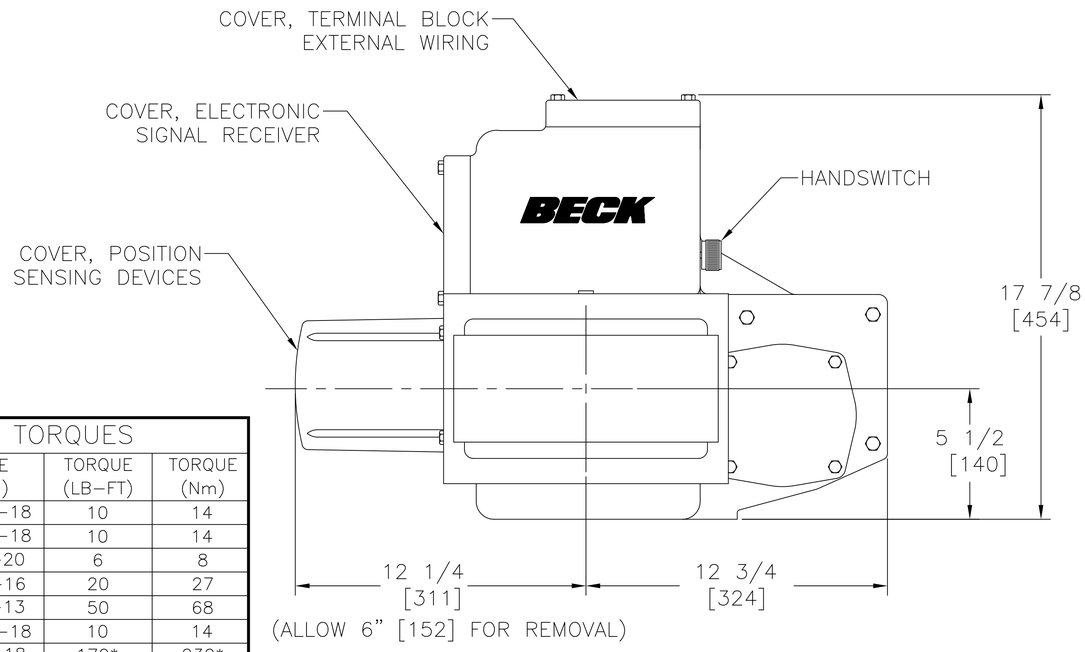

NOTES:

ALL DIMENSIONS ARE TYPICAL TOLERANCES: ±1/4 [±6].

IF SPECIFIC DIMENSIONS ARE REQUIRED, PLEASE CONTACT A FACTORY REPRESENTATIVE.

∗SCREW TORQUES FOR MOUNTING HARDWARE WILL BE SUPPLIED WITH SPECIFIC VMS.

DRIVE MAY BE ROTATED AROUND THE VALVE IN 90° INCREMENTS.

ALL DIMENSIONS ARE IN INCHES AND [MM] UNLESS OTHERWISE SPECIFIED.
THREADS AND TAPPED HOLES ARE SPECIFIED AS UNIFIED THREAD SIZES ONLY.
CONDUIT PIPE THREADS PER AMERICAN NATIONAL STANDARD TAPER PIPE THREADS (N.P.T.)

RECOMMENDED SCREW TORQUES

	SIZE (IN.)	TORQUE (LB–FT)	TORQUE (Nm)
COVER SCREWS	5/16–18	10	14
GEAR MODULE SCREWS	5/16–18	10	14
MOTOR SCREWS	1/4–20	6	8
BODY SCREWS	3/8–16	20	27
BODY SCREWS	1/2–13	50	68
CONTROL END COVER SCREWS	5/16–18	10	14
COUPLING SCREWS	5/8–18	170*	230*
MOUNTING BRACKET SCREWS	1/2–13	50	68

THIRD ANGLE PROJECTION

SIZE: D

HAROLD BECK & SONS INC
NEWTOWN INDUSTRIAL COMMONS NEWTOWN, PENNSYLVANIA 18940 USA

TITLE: OUTLINE DIMENSIONS FOR UNITIZED ASSEMBLIES OF A BECK 11-360 DRIVE AND A TYPICAL VALVE

DRAWN:	SCALE:	DRAWING NO:	REV:
DWK 11-8-07	NONE	18-0360-02o	L
CHECKED: DMS 11-9-07			
APPROVED: JHM 11-12-07		SHEET NO. 1 OF 1	

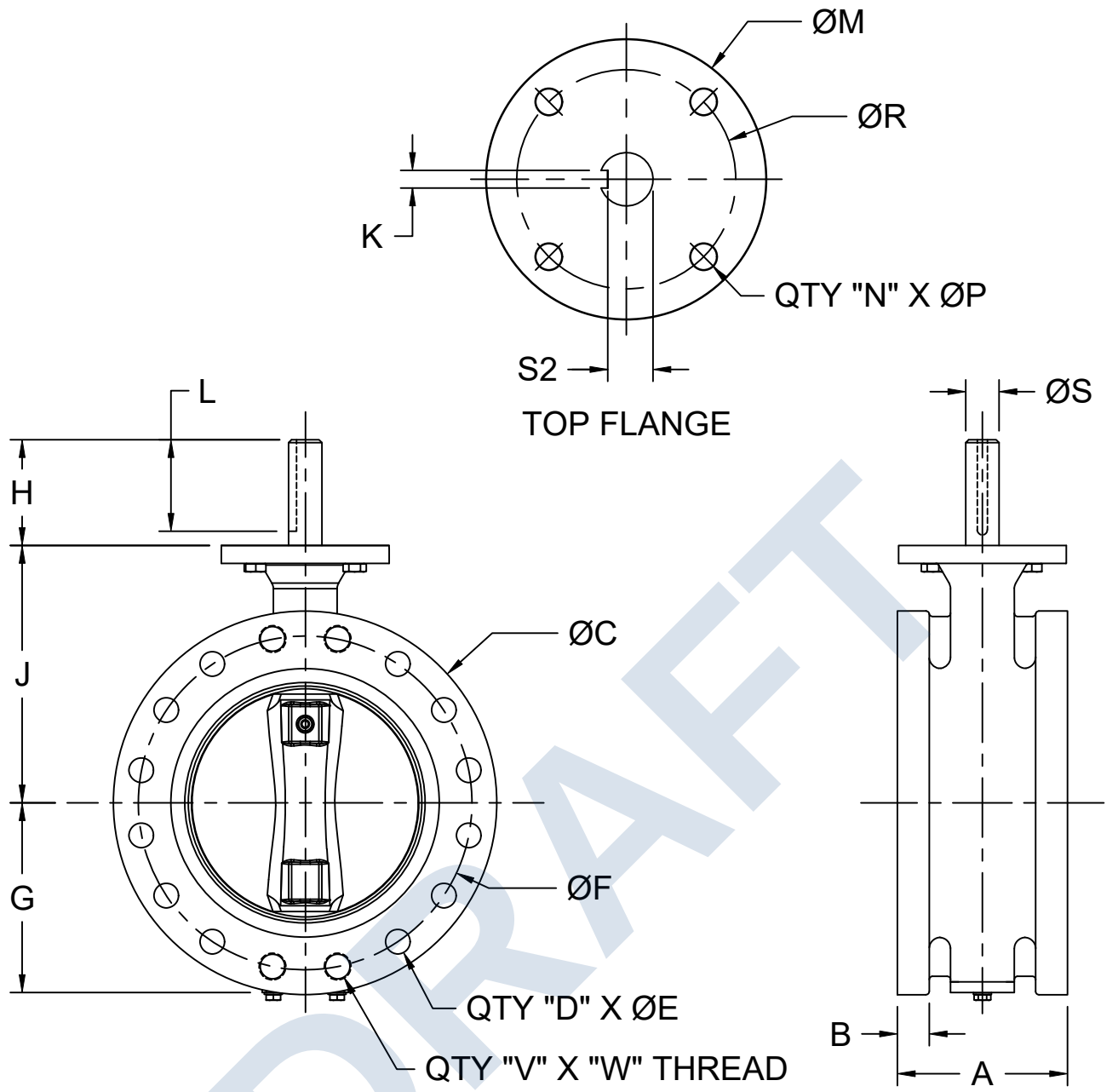

DRAFT

DIMENSIONS (Inches)																				
SIZE	A	B	C	D	E	F	G	H	J	K	L	M	N	P	R	S	S2	V	W	WT (lbs)
3	5.00	0.75	7.50	4	0.75	6.00	3.75	3.50	5.50	0.187	2.60	6.00	4	0.50	4.92	0.625	0.517	-	-	23
4	5.00	0.94	9.00	8	0.75	7.50	4.50	3.50	6.30	0.187	2.60	6.00	4	0.50	4.92	0.625	0.517	-	-	37
6	5.00	1.00	11.00	8	0.88	9.50	5.50	3.33	8.00	0.250	2.64	6.00	4	0.50	4.92	1.000	0.859	-	-	54
8	6.00	1.12	13.50	8	0.88	11.75	6.90	3.45	8.70	0.250	2.64	6.00	4	0.50	4.92	1.125	0.986	-	-	85
10	8.00	1.19	16.00	12	1.00	14.25	8.00	3.56	10.40	0.313	2.66	6.00	4	0.50	4.92	1.500	1.289	-	-	133
12	8.00	1.25	19.00	12	1.00	17.00	9.50	3.56	11.60	0.313	2.66	6.00	4	0.50	4.92	1.500	1.289	-	-	186
14	8.00	1.38	21.00	12	1.13	18.75	12.00	5.45	13.40	0.500	5.00	8.27	4	0.88	6.50	2.000	1.718	-	-	286
16	8.00	1.44	23.50	16	1.13	21.25	13.00	5.45	14.60	0.500	5.00	8.27	4	0.88	6.50	2.000	1.718	-	-	330
18	8.00	1.56	25.00	12	1.25	22.75	14.20	5.63	16.00	0.500	5.00	8.27	4	0.88	6.50	2.000	1.718	4	1 1/8"-7 ↧1.56	372
20	8.00	1.69	27.50	16	1.25	25.00	15.40	5.63	16.50	0.500	5.00	8.27	4	0.88	6.50	2.000	1.718	4	1 1/8"-7 ↧1.69	487
24	8.00	1.87	32.00	16	1.38	29.50	16.50	5.25	18.50	0.750	4.76	11.81	8	0.75	10.00	3.000	2.577	4	1 1/4"-7 ↧1.96	689
30	12.00	2.12	38.75	24	1.38	36.00	21.65	4.40	22.44	0.787	3.94	11.81	8	0.69	10.00	2.756	2.459	4	1 1/4"-7 ↧2.36	1,306
36	12.00	2.38	46.00	28	1.63	42.75	26.53	4.33	26.80	0.875	3.74	11.81	8	0.69	10.00	3.500	3.007	4	1 1/2"-6 ↧2.95	1,846

NOTE:
1. FLANGES CONFORM TO ANSI B16.1 CLASS 125

DESCRIPTION:	DATE:	DRAWING:
3"-36" AWWA 150B/250B - 125# Flanged Bare Stem Butterfly Valve (Seat on Body)	10/22/2024	BF-DD0007-B

MCWANE PLANT & INDUSTRIAL
McWane Plant & Industrial
1201 Vanderbilt Road
Birmingham, AL 35234

CLOW VALVE CO.
KENNEDY VALVE
M&H VALVE COMPANY

BECK ELECTRIC ACTUATORS

VALVE MOUNTING SPECIFICATION

Made in USA Since 1936

VMS Information

VMS: 20-0166-53 VMSDU-002 M&H / MPI / MCWANE BUTTERFLY 10.00" 12.00" MODEL 4500/4600/4700 (1.500 X 3.38 TO 3.56 LG STEM AND 4.92 TO 5.00 DIA BC MTG PATTERN) TO 11-360

REV: C

Mounting Hardware

Qty	PartNum	Description
1	20-0950-18	BRACKET MOUNTING "U" 1.55 CLEARANCE ID AND 4.95 DIA BC F12 / FA12 MTG PATTERN 0.53 DIA HOLES TO 11-260/360 (7 1/2" OAL)
1	20-4203-20	COUPLING VALVE 1.750 DIA. TO 1.500 DIA. 11-360
1	20-4090-21	POINTER INDEX COUPLING 3.38 LG.
1	10-7261-20	INDEX COUPLING CW/CCW 90 DEG. FOR 5.00 DIA. 0.50 WIDE
4	30-0332-91	SCREW 1/2-13 X 1.250 FLAT HEAD SOCKET ALLOY STEEL PER ASTM F835 ZINC PLATED DIMENSIONS PER ASME B18.3 THREAD CLASS 2A OR 3A
4	30-0332-32	CAP SCREW HEX HEAD 0.750 (3/4-16) x 02.750 STEEL ZINC PLATE GRADE 8 PER SAE J429 AND ASME B18.2.1 WITH YELLOW DICHROMATE
4	30-0323-67	WASHER FLAT 0.750 (3/4) 0.812 ID 1.468 OD 0.122-0.177 THK TYPE 1 CIRCULAR HARDENED STEEL ZINC PLATE PER ASTM F436
2	30-0310-01	SCREW #8-32 X 0.500 FILLISTER HEAD STAINLESS STEEL
2	30-0313-16	WASHER LOCK #8 MED SPLIT STAINLESS STEEL
1	30-0310-00	SCREW 8-32 X 1.000 FILLISTER HEAD STAINLESS STEEL
1	30-0309-01	NUT HEX #8-32 STAINLESS STEEL
4	30-0365-21	CAP SCREW HEX HEAD 0.437 (7/16-14) x 02.000 STEEL ZINC PLATE GRADE 5 MIN PER SAE J429 AND ASME B18.2.1
8	30-0327-99	WASHER FLAT 0.438 (7/16) 0.469 ID 0.922 OD 0.065 THK STEEL ZINC PLATE TYPE A PER ASME B18.21.1
4	30-0313-13	WASHER LOCK 0.437 (7/16) MED SPLIT STEEL ZINC PLATE
4	30-0380-07	NUT HEX 0.437-14 (7/16-14) STEEL ZINC PLATE GRADE 5

Torque Requirements

PLEASE REFER TO MOUNTING LAYOUT DRAWING FOR REQUIRED FASTENER TORQUE SPECIFICATIONS

ADDITONAL FASTENER TORQUE RECOMMENDATIONS:
www.haroldbeck.com/fastenertorque

Special Instructions

1. This design does not require the valve stem key.

DRAFT

VALVE MOUNTING SPECIFICATION

Made in USA Since 1936

Installation Instructions

1. Identify the mounting hardware supplied with the Beck actuator. See the parts list, installation instructions, and special instructions specific to your mounting, fastener torques, and layout drawing. Note that the special instructions may override the generic installation instructions listed below.
2. Set the valve to its fully closed position.
3. Attach the "U" mounting bracket or base to the valve.
   a. For designs using a U-bracket, hand tighten the fasteners.
   b. For designs using a Yoke and Base, tighten the fasteners to the required torque.
4. One end of the coupling has been designed to fit the valve stem. Loosely assemble the coupling halves and place this end of the coupling over the valve stem.
5. To achieve proper actuator orientation with respect to the valve, the Beck actuator can be attached to the yoke, "U" mounting bracket, or adapter plate in multiple positions.
   a. For designs using a U-bracket, position the actuator as desired and attach it to the bracket, inserting the actuator output shaft into the coupling. Tighten the fasteners to the required torque.
   b. For designs using a Yoke and Base, position the yoke as desired and attach it to the actuator and tighten the fasteners to the recommended torque. Attach the Beck actuator and yoke assembly to the base, inserting the actuator output shaft into the coupling. Hand tighten the fasteners.
   c. For G31 actuator installations, rotate the actuator handwheel until the mechanical stop pin is aligned with the slot in the adapter plate or mounting bracket. Refer to the Group 31 Actuator Instruction Manual Start-up instructions to reset the limit switches to the mechanical stop.
6. Connect power to the actuator per Beck Instruction manual. With the coupling still loose, rotate the Beck actuator output shaft to the closed position.
7. Without rotating the actuator output shaft or the valve stem, position the coupling to ensure that both the actuator shaft and the valve stem are as equally engaged as possible into the coupling. Hand tighten the coupling fasteners.
8. Ensure the actuator shaft and valve shaft are aligned so the coupling will engage both properly, then snug the coupling fasteners. Continue to tighten the coupling fasteners in a crisscross sequence, approximately 1/8 turn per fastener, until the required torque is reached.
9. Tighten all remaining fasteners to the required torque.
10. Place the index around the coupling. Do not tighten index fasteners.
11. Attach the pointer and pointer spacer (if included) or pointer pin to the yoke or "U" mounting bracket, and tighten the fasteners (if included).
12. Rotate the index to align the closed position on the index with the pointer, and tighten the index fasteners.
13. Affix tape to the valve stem and coupling on the side opposite the pointer for use as a match mark.

Threaded Fastener Components Function and Conditions	Product to be Applied
Carbon steel (including SZP) providing clamping for the transmission of torque through friction (caps of crank arms, lever arms, and couplings)	None.
Fasteners through which operating loads are transmitted from operational equipment (actuator, valve, bearing support, etc.) to support structures (bracket, pedestal, support plate, etc.).	Thread Locker, Medium Strength (Loctite 242 or similar)
Threaded connections which are subject to time lapse between initial assembly and the adjustment to the final depth of engagement (linkage assemblies, etc.):	Thread Locker, Med Strength - Wicking (Loctite 290 or similar)
Threaded connections which support accessories that do not transmit operating loads (tag, index, pointer, etc.), especially those with provision for a screw driver rather than a wrench	Thread Locker, Low Strength (Loctite 222 or similar)
Threaded connections in which both the internally AND the externally threaded components are both stainless steel ***and*** • Of nominal diameter larger than 0.25, ***OR*** • Tightened to torque value higher than the SAE Grade 2 seating torque	Anti-Galling Compound (Loctite LB 8150 Anti-seize or similar)

DRAFT

BECK®

REVISIONS			
REV	DESCRIPTION	DATE	APPROVED
C	E.R. 22728	SC 1/13/2025	DLR DWR

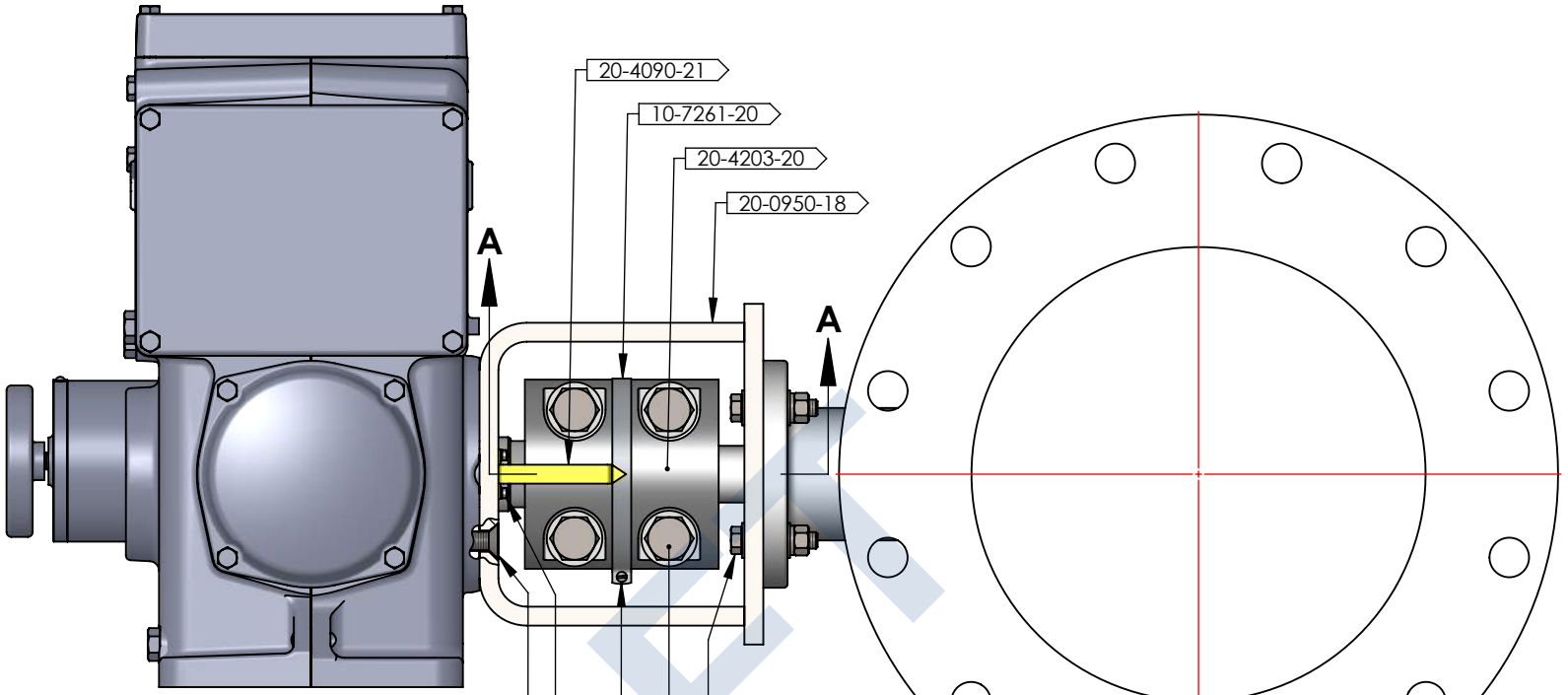

TORQUE TO 50 LB.-FT. 4X 30-0332-91

TORQUE TO 19 LB.-IN. 2X 30-0310-33
2X 30-0313-16

TORQUE TO 19 LB.-IN. 30-0310-00
30-0309-01

30-0365-21 4X TORQUE TO 50 LB.-FT.
30-0327-99 8X
30-0313-13 4X
30-0380-07 4X

30-0332-32 4X TORQUE TO 420 LB.-FT.
30-0323-67 4X

APPROXIMATE
STEM ENGAGEMENT:
2 5/16"

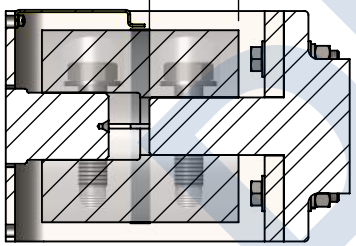

SECTION A-A

DRAFT

SIZE: A

HAROLD BECK & SONS INC.
NEWTOWN INDUSTRIAL COMMONS NEWTOWN, PENNSYLVANIA 18940 USA

TITLE: VMSDU-002 M&H / MPI / MCWANE BUTTERFLY 10.00" 12.00"
MODEL 4500/4600/4700 (1.500 X 3.38 TO 3.56 LG STEM
AND 4.92 TO 5.00 DIA BC MTG PATTERN) TO 11-360

VMS DESIGN LAYOUT

DRAWN:	SCALE:	DRAWING NO:	REV:
SC 08/16/22	1:5	20-0166-53	C
CHECKED: BEH 08/18/22			
APPROVED: WWD 08/18/22		SHEET NO. 1 OF 2	

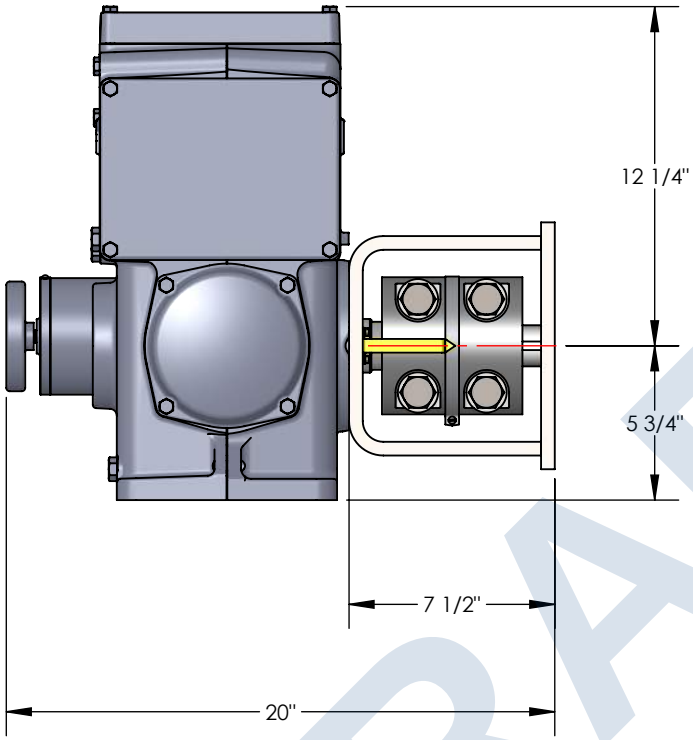

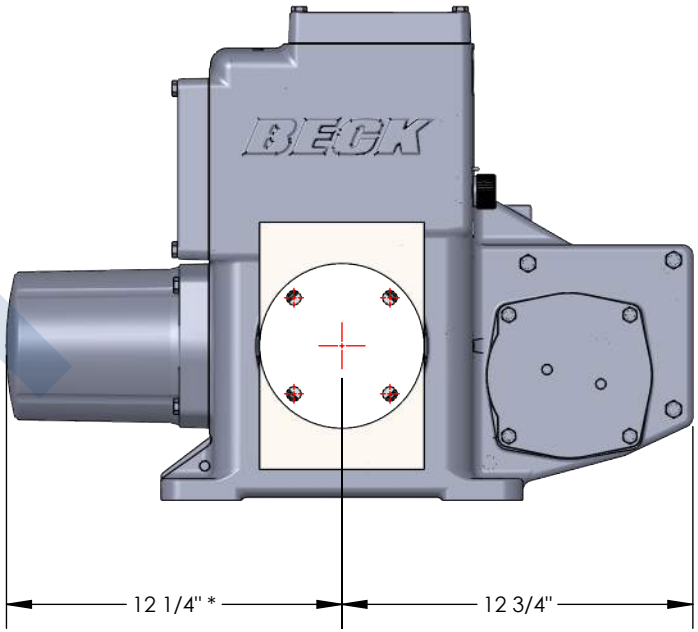

DRAFT

* Add 3-1/16" (78mm) to length when a hazardous location control end assembly is used.

SIZE: A

HAROLD BECK & SONS INC.
NEWTOWN INDUSTRIAL COMMONS NEWTOWN, PENNSYLVANIA 18940 USA

TITLE: VMSDU-002 M&H / MPI / MCWANE BUTTERFLY 10.00" 12.00"
MODEL 4500/4600/4700 (1.500 X 3.38 TO 3.56 LG STEM
AND 4.92 TO 5.00 DIA BC MTG PATTERN) TO 11-360

VMS DESIGN LAYOUT

DRAWN: SC 08/16/22
CHECKED: BEH 08/18/22
APPROVED: WWD 08/18/22
SCALE: 1:7
DRAWING NO: 20-0166-53
REV: C
SHEET NO. 2 OF 2

80-1103-00
Rev. 11.1

MODELS 11-1_9
11-2_9
11-3_9
11-4_9

INSTRUCTION MANUAL

For actuators manufactured after March 2019

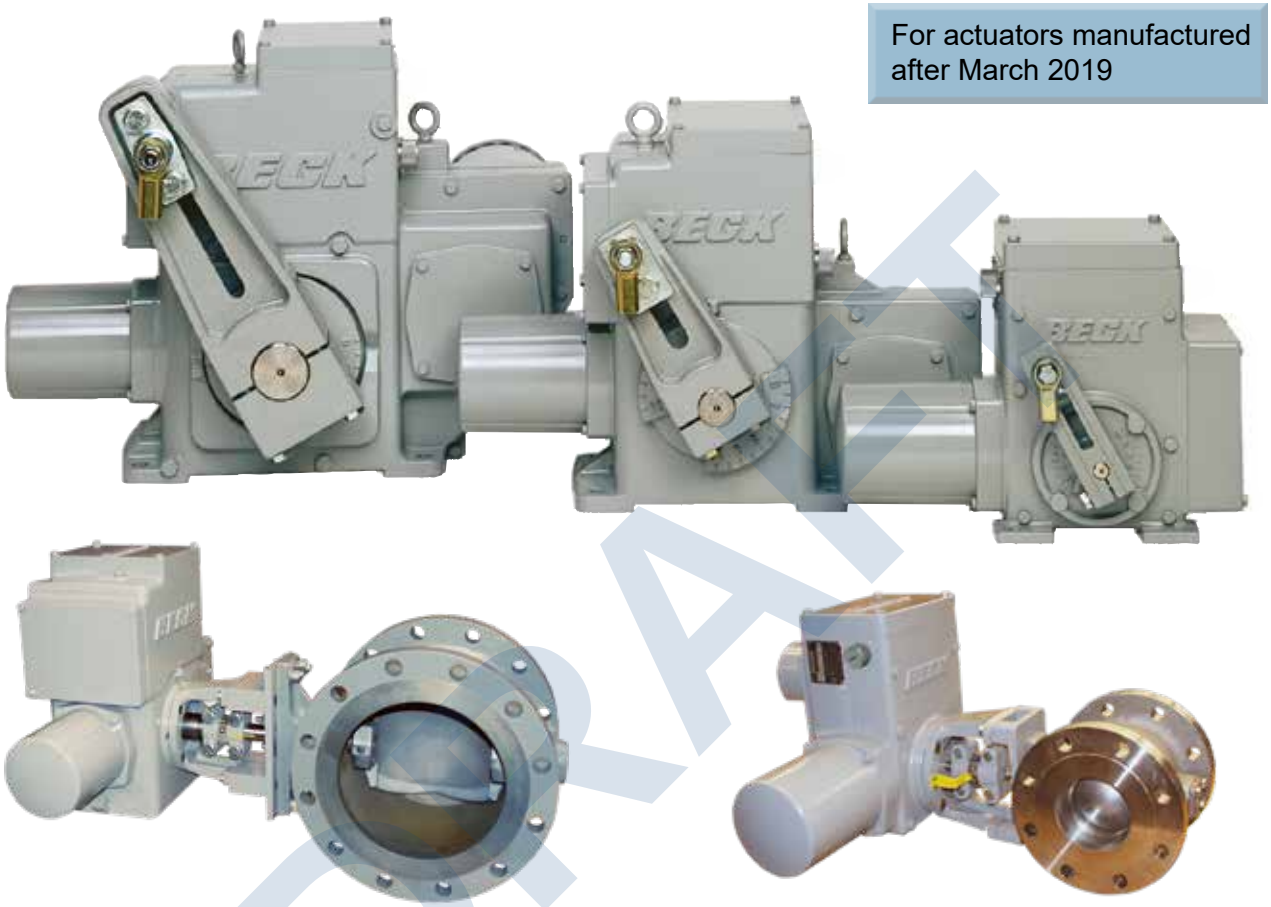

DRAFT

This manual supports Group 11 actuators using DCM-3 part numbers:

22-5014-58, 22-5014-59

22-5014-78, 22-5014-79

22-5018-59



ELECTRIC ACTUATORS FOR INDUSTRIAL PROCESS CONTROL

INTRODUCTION

This manual contains the information needed to install, operate, and maintain Beck Group 11 actuators equipped with the Digital Control Module (DCM-3), manufactured by Harold Beck & Sons, Inc. of Newtown, Pennsylvania.

The Group 11 actuator is a powerful control package designed to provide precise position control of dampers, valves, fluid couplings and other devices requiring up to 1,800 lb-ft (2 440 N•m) of actuator torque.





IMPORTANT: This manual contains information that will make installation simple, efficient, and trouble-free. Please read and understand the appropriate sections in this manual before attempting to install or operate your actuator.

This manual, along with Beck Manual Supplement 80-1100-14, is provided with applicable Group 11 & Group 11E hazardous location actuators.

The Beck Group 11 is an electric actuator for industrial process control. Exceptionally stable and trouble-free, these rotary actuators are in use throughout the world in valve and damper applications.



Group 75 compact rotary actuators ...
incorporate a very compact design with high temperature resistance and great mounting flexibility; making these actuators ideal for boiler windbox applications as well as all types of rotary valve applications in tight spaces.



Group 42 linear actuators ...
incorporate a long stroke design providing up to 1,000 lbs. (4450 N) of thrust. These actuators are ideally suited for burner air register type applications.



Group 22 digital control actuators ...
are designed for accurate, reliable, modulating digital control of high torque applications. The actuator is ideal for use in large boiler applications, such as ID/FD fan dampers.



Group 29 linear valve actuators ...
are ideally suited for globe valves from 1" to 8" (25 mm to 203 mm) diameter. Beck's unique Tight-Seater™ coupling provides positive seating of valves.



Group 14 linear actuators ...
are ideally suited for globe valves from 1" to 8" (25 to 203 mm) diameter. Beck's unique Tight-Seater™ coupling provides positive seating of valves.



Group 31 compact rotary actuators ...
are particularly suited for coupling to ball, plug, and butterfly valves up to 4" (102 mm) diameter, and small dampers.

DRAFT

TABLE OF CONTENTS

Introduction 2

General Specifications 4

Outline Dimension Drawings 6

Precautionary Information 12

General Operation Information 13

Installation 14
- Mechanical 14
- Electrical 19
- Wiring 20

Start-up Checklist 21

Electronics 22

Configuration/Calibration 26

Maintenance 42

Troubleshooting 56

Appendices 61
- HART® Communication 61
- HART® Messages 67
- Serial Communication 70
- Serial Commands 71
- Optional DCM-3 w/ Feedback Display 78

Index 82

Services 83

DRAFT

GENERAL SPECIFICATIONS

Actuator Power	120 V ac, single-phase, 60 Hz (Standard), 50 Hz (Optional) 208, 240, 380, 415, 480 & 575 V ac, 50 or 60 Hz (Optional)	Allowable Tolerance	+10% -15%

Maximum Current (Amps) by Supply Voltage

		Voltage (V ac)						
Model	**Maximum Power (VA)**	**120**	**208**	**240**	**380**	**415**	**480**	**575**
11-159 / 11-169	55	.45	.26	.23	.14	.13	.11	.09
11-209 / 11-269 11-309 / 11-369	110	.88	.51	.44	.28	.25	.22	.18
11-409 / 11-469	400	3.1	1.8	1.6	.98	.89	.78	.65

Operating Conditions	-40° to 85°C (-40° to 185°F) ***NOTE: Actuators should be stored between -40° to 85°C (-40° to 185°F)*** 0 to 100% relative humidity, non-condensing
Communication Interface	HART protocol (Rev. 5 -- burst mode is not supported) Pushbutton / LEDs, DB9 Serial commands
Demand Input Signal Options	4–20 mA (1–5 V dc input is possible with the removal of the "R11" resistor located on the DCM-3 board—see page 48)
Adjustability for Split Range Operation	0%: 0.1 V to 4 V dc 100%: 0% + 1 V min. to 5 V max.
Minimum Step Size	0.1% (0.15% typical, configurable from 0.1 to 2.5%)
Linearity	±1% of span, max. independent error
Hysteresis	0.25% of span at any point
Demand input Signal Characterization	**Linear:** Actuator output shaft moves proportionally to the input signal **Square:** Actuator output shaft moves proportionally to the square of the input signal **Square Root:** Actuator output shaft moves proportionally to the square root of the input signal **Custom:** Actuator output shaft moves according to the configurable 20-segment (maximum) response curve. (Not available with all DCM versions)
Position Feedback Signal	4–20 mA
Isolation	Demand input and position Feedback signals are isolated from ground and the AC power line. Signal buffering provides 24 V dc isolation between the Demand and Feedback signals.
Action on Loss of Power	Stays in place
Action on Loss of Input Signal	Stays in place or drives to any preset position (configurable)

DRAFT

Stall Protection	If the motor tries to run in one direction for more than 300 seconds (configurable from 30 to 450 seconds), the DCM-3 will shut off power to the motor (feature can be enabled/disabled) - factory default is enabled.
Overtorque Protection (Optional)	The DCM-3 shuts off power to the motor if the measured output torque of the actuator exceeds 150% (adjustable from 25% to 150%) of the actuator rating (feature can be enabled/disabled)—disabled is the factory default.
Alarm Annunciation	Available at terminal E. Depending on actuator power, the voltage is either 120 V ac (80 mA max.) or 240 V ac (40 mA max.).
Temperature Indication	Measures the internal temperature of the actuator and triggers an alarm when the temperature exceeds the rating.
Over-travel Limit Switches	Two SPDT switches (CW and CCW) provide over-travel protection.
Auxiliary Switches	Up to four 6 A, 120 V ac (0.5 A, 125 V dc) cam-operated switches (S1-S4) are available. An additional two switches may be ordered (S5-S6) with models 11-209, 11-309, and 11-409. Factory default switch settings: S1, S4 and S5 are set to operate just before reaching the CCW travel limit. S2, S3 and S6 are set to operate just before reaching the CW travel limit. See the diagram on page 27.
Handswitch	Permits local electrical operation, independent of controller signal. Standard on all units. An auxiliary contact is available as an option for remote auto indication (rated 2.5 A at 120 V ac).
Handwheel	Provides manual operation without electrical power.
Motor Assembly	120 V ac, single-phase, no-burnout, non-coasting motor has instant magnetic braking. Requires no contacts or moving parts.
Gear Train	High-efficiency, precision-cut, heat-treated alloy steel and ductile iron spur gears. Interchangeable gear modules permit field change of torque/timing.
Mechanical Stops	Prevent overtravel during automatic or manual operation.
Enclosure	Precision-machined, aluminum alloy castings painted with corrosion-resistant polyurethane paint provide a rugged, dust-tight, weatherproof enclosure. Actuators designed for hazardous classified locations are also available. Type 4X; IP68, 3 meters/48 hours*. *NOTE: Internal water damage is not covered by warranty.
Maximum Output Shaft Rotation	100 degrees (Models 11-159, 11-209, 11-309, 11-409) 90 degrees (Models 11-169, 11-269, 11-369, 11-469)
Mounting Orientation	Any orientation—no limitations.
Standards**	CSA Labeled (US & Canada); CE Compliant; UKCA Compliant

**NOTE: May not be available with all options and models. For more information, please call Beck at 215-968-4600.

DRAFT

OUTLINE DIMENSION DRAWINGS

MODEL 11-159 SPECIFICATIONS

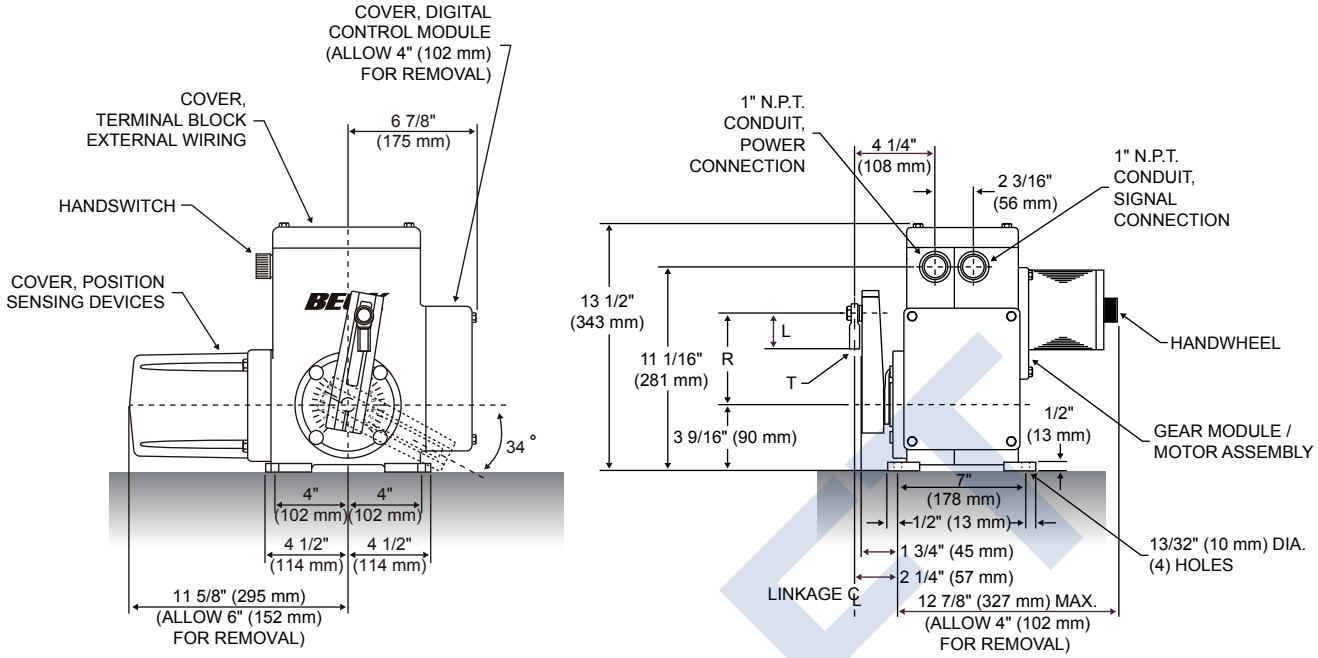

Crank Arm

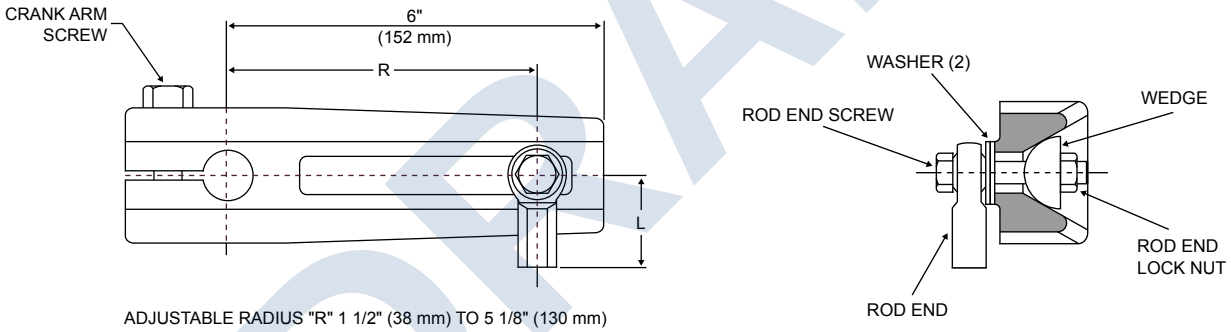

Recommended Screw Torques

			Torque	
	Screw Size (in.)	***Wrench Size (in.)***	***lb-ft***	***N•m***
Crank Arm Screw	1/2-13	3/4	75	102
Rod End Screw	1/2-13	3/4	35*	47*
Rod End Lock Nut	1/2-13	3/4	35*	47*
Body Screw	5/16-18	1/2	10	14
Body Screw	3/8-16	9/16	20	27
Cover Screw	5/16-18	1/2	10	14
Motor / Gear Module Screw	1/4-20	7/16	6	8

*Apply 90% of specified torque when optional Stainless Steel fasteners are used.

Model 11-159 Crank Arm Part Numbers & Model Information

Crank Arm Assembly	10-3491-05
Crank Arm	10-3491-02
Crank Arm Screw (1)	30-0306-56
Washer (2)	30-0313-03
Wedge	11-8060-02
Rod End Screw	30-0306-56
Rod End Lock Nut	30-0309-11
Rod End	12-2840-02
Dim. "L" (Length)	2 1/8" (54 mm)
Dim. "T" (Thread)	1/2-20 x 1-3/16" (30 mm)
Output Shaft Diameter	3/4" (19 mm)
Approximate Weight	50 lbs (23 kgs)
Max. Overhung Load	750 lbs (340 kgs)

DRAFT

MODEL 11-169 SPECIFICATIONS

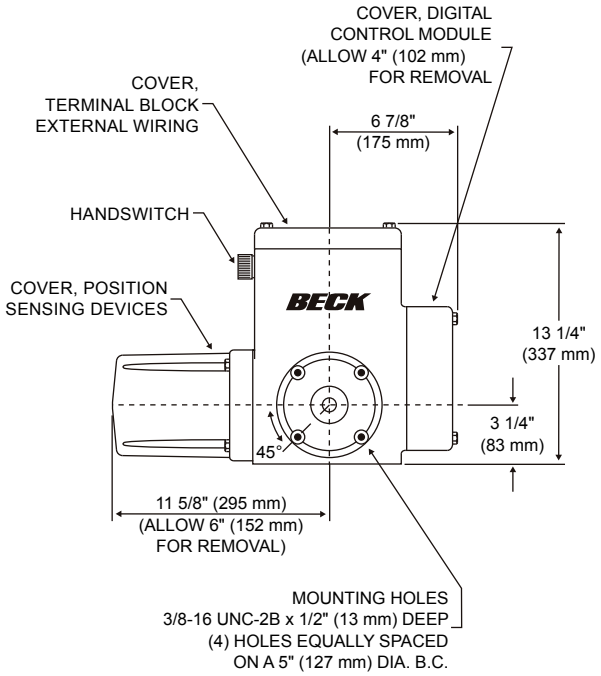

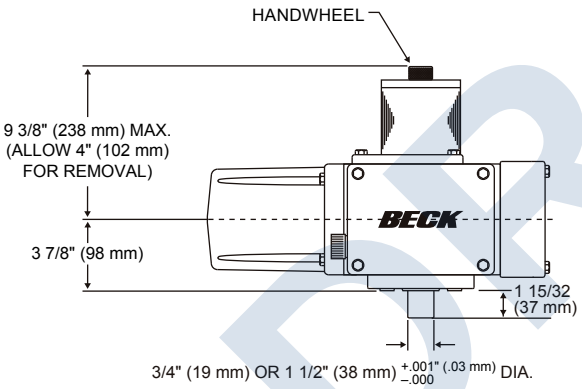

TYPICAL VALVE MOUNTING

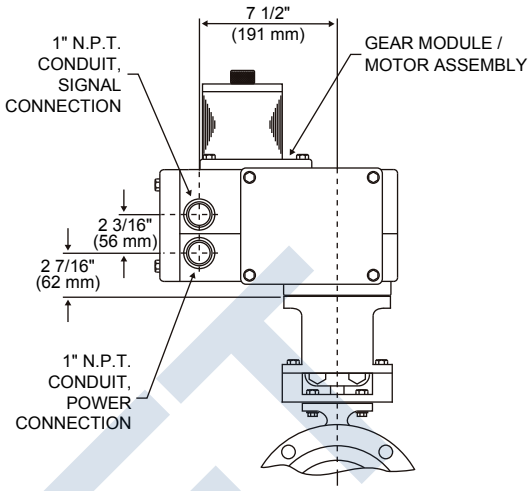

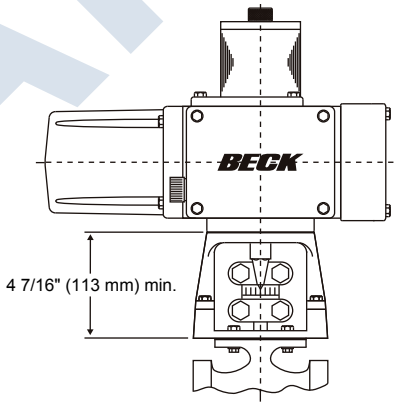

DRAFT

Model 11-169 Information

Approximate Weight	56 lbs. (25 kg)
Maximum Overhung Load	750 lbs. (340 kg)

Recommended Screw Torques

	Screw Size (in.)	*Wrench Size (in.)*	*Torque*	
			lb-ft	*N•m*
Coupling Screw	-	-	*	*
Mounting Bracket Screw (Flat Head)	3/8-16	-	25	34
Body Screw	5/16-18	1/2	10	14
Body Screw	3/8-16	9/16	20	27
Cover Screw	5/16-18	1/2	10	14
Motor / Gear Module Screw	1/4-20	7/16	6	8

*Varies per application. Refer to valve mounting specification sheet shipped with your actuator.

OUTLINE DIMENSION DRAWINGS

MODEL 11-209 & 11-309 SPECIFICATIONS

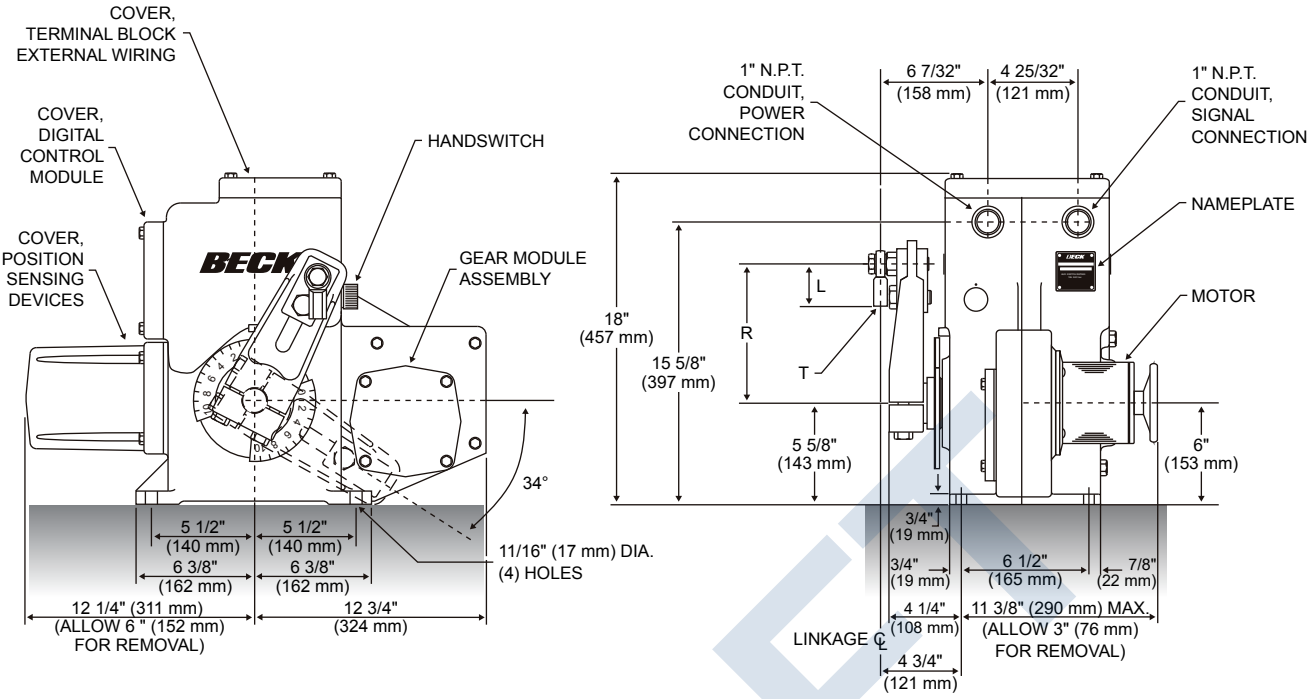

Crank Arm

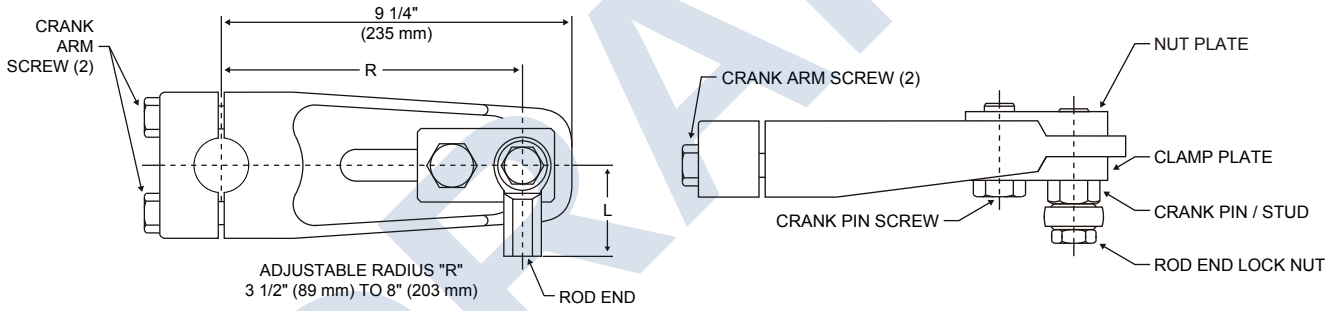

Recommended Screw Torques

	Screw Size (in.)	Wrench Size (in.)	Torque lb-ft	Torque N•m
Crank Arm Screw	5/8-18	15/16	240*	325*
Crank Pin / Stud	3/4-16	1-1/8	300*	407*
Crank Pin Screw	3/4-16	1-1/8	300*	407*
Rod End Lock Nut				
(11-209)	1/2-20	3/4	35*	47*
(11-309)	5/8-18	15/16	65*	88*
Body Screw	3/8-16	9/16	20	27
Body Screw	1/2-13	3/4	50	68
Cover Screw	5/16-18	1/2	10	14
Motor Screw (Hex Wrench)	1/4-20	3/16	6	8
Gear Module Screw	5/16-18	1/2	10	14

*Apply 90% of specified torque when optional Stainless Steel fasteners are used.

Model 11-209 / 11-309 Crank Arm Part Numbers & Model Information

	11-209	11-309
Crank Arm Assembly	14-7330-40	14-8010-34
Crank Arm	14-8008-05	14-8008-01
Crank Arm Screw (2)	30-0308-75	30-0308-75
Clamp Plate	14-9883-01	14-9883-01
Crank Pin / Stud	14-9920-06	14-9920-07
Crank Pin Screw	30-0308-61	30-0308-61
Nut Plate	14-9883-02	14-9883-02
Rod End Lock Nut	30-0309-19	30-0309-23
Rod End	12-2840-02	12-2840-03
Dim. "L" (Length)	2 1/8" (54 mm)	2 1/2" (64 mm)
Dim. "T" (Thread)	1/2-20 x 1-3/16" (30 mm)	5/8-18 x 1-1/2" (38 mm)
Output Shaft Diameter	1 1/2" (38 mm)	1 3/4" (44 mm)
Approximate Weight	120 lbs (54 kgs)	125 lbs (57 kgs)
Max. Overhung Load	3,000 lbs (1,361 kgs)	4,500 lbs (2,041 kgs)

DRAFT

MODEL 11-269 & 11-369 SPECIFICATIONS

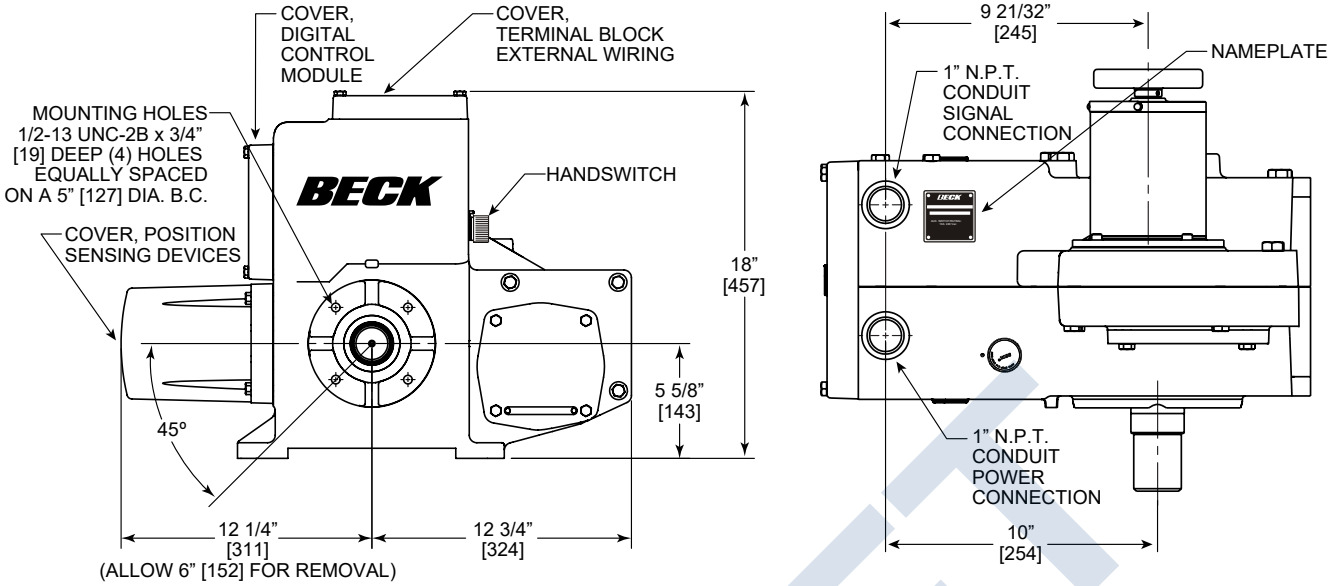

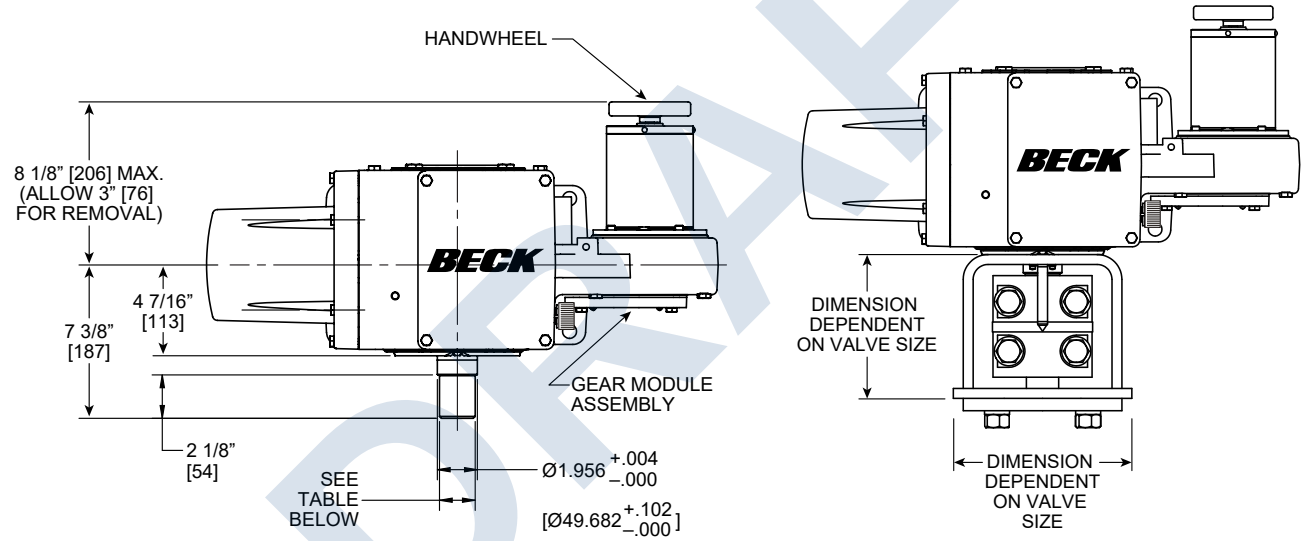

DRAFT

Model Information

Model No.	Torque Range	Approx. Weight	Maximum Overhung Load	Output Shaft Diameter
11-269	125–250 (lb-ft)	115 lbs.	3,000 lbs.	1.500 in. (+.001/-.000)
	169–339 (N•m)	54 kgs.	1361 kgs.	38.100 mm. (+.025/-.000)
11-369	300–650 (lb-ft)	115 lbs.	4,500 lbs.	1.750 in. (+.001/-.000)
	407–881 (N•m)	54 kgs.	2041 kgs.	44.450 mm. (+.025/-.000)

Recommended Screw Torques

	Screw Size (in.)	Wrench Size (in.)	Torque lb-ft	Torque N•m
Coupling Screw	5/8-18	15/16	*	*
Mounting Bracket Screw (Flat Head)	1/2-13	-	50	68
Body Screw	1/2-13	3/4	50	68
Body Screw	3/8-16	9/16	20	27
Cover Screw	5/16-18	1/2	10	14
Motor Screw (Hex Wrench)	1/4-20	3/16	6	8
Gear Module Screw	5/16-18	1/2	10	14

*Varies per application. Refer to the valve mounting specification sheet shipped with your actuator.

OUTLINE DIMENSION DRAWINGS

MODEL 11-409 SPECIFICATIONS

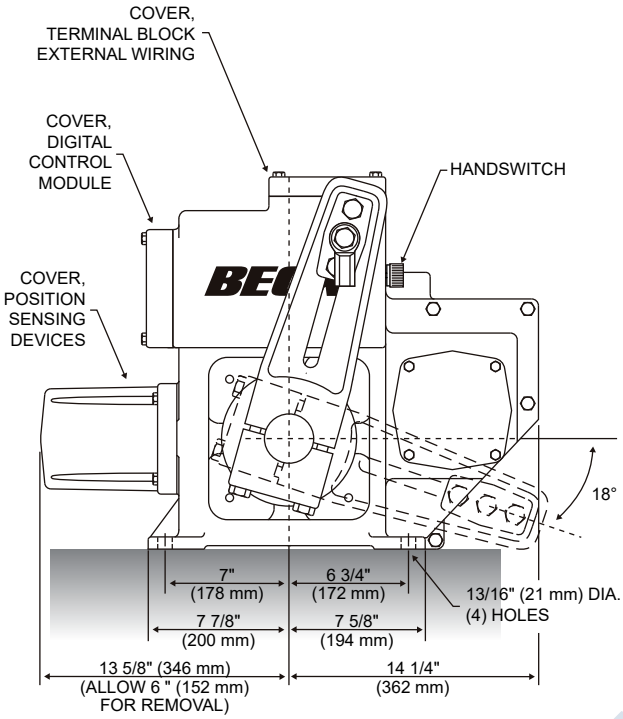

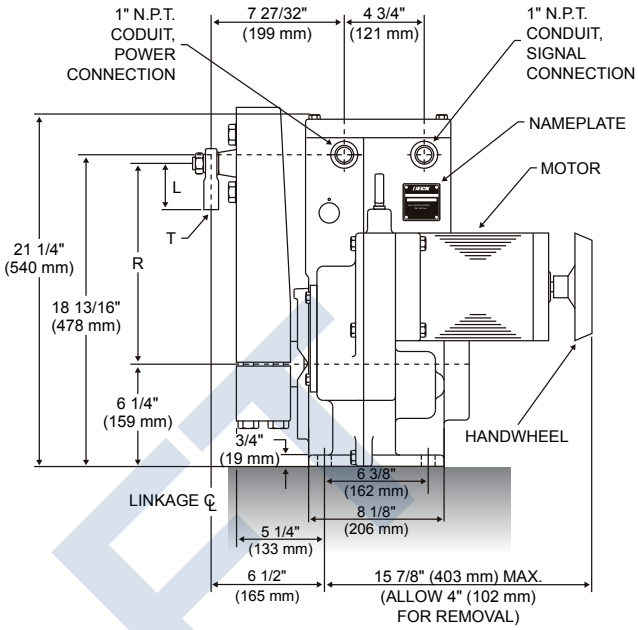

Crank Arm

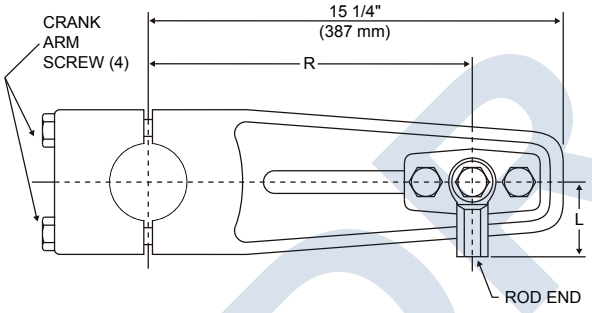

ADJUSTABLE RADIUS "R" 6" (152 mm) TO 12" (305 mm)

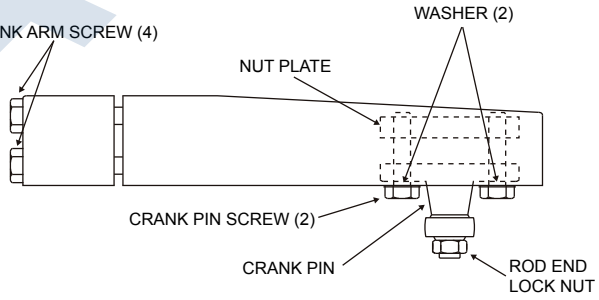

Recommended Screw Torques

	Screw Size (in.)	*Wrench Size (in.)*	*Torque*	
			lb-ft	*N•m*
Crank Arm Screw	5/8-18	15/16	170	230
Crank Pin Screw	3/4-16	1-1/8	300*	407*
Rod End Lock Nut	3/4-16	1-1/8	120*	163*
Body Screw	3/8-16	9/16	20	27
Body Screw	1/2-13	3/4	50	68
Cover Screw	5/16-18	1/2	10	14
Motor Screw	3/8-16	9/16	16	22
Gear Module Screws	5/16-18	1/2	10	14

*Apply 90% of specified torque when optional Stainless Steel fasteners are used.

Model 11-409 Crank Arm Part Numbers & Model Information

	11-409
Crank Arm Assembly	14-8018-02
Crank Arm	14-8018-01
Crank Arm Screw (4)	30-0328-43
Washer (2)	30-0313-27
Crank Pin	14-9882-01
Crank Pin Nut Plate	20-2641-01
Crank Pin Screw (2)	30-0308-03
Rod End Lock Nut	30-0309-24
Rod End	12-2840-04
Dim. "L" (Length)	2 7/8" (73 mm)
Dim. "T" (Thread)	3/4-16 x 1-3/4" (44 mm)
Output Shaft Diameter	2 3/4" (70 mm)
Approximate Weight	270 lbs (122 kgs)
Max. Overhung Load	9,000 lbs (4 082 kgs)

DRAFT

MODEL 11-469 SPECIFICATIONS

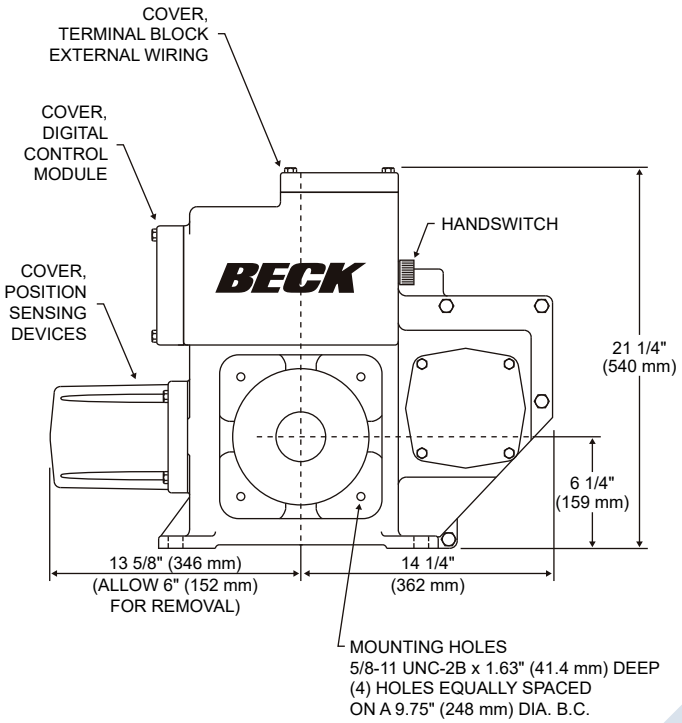

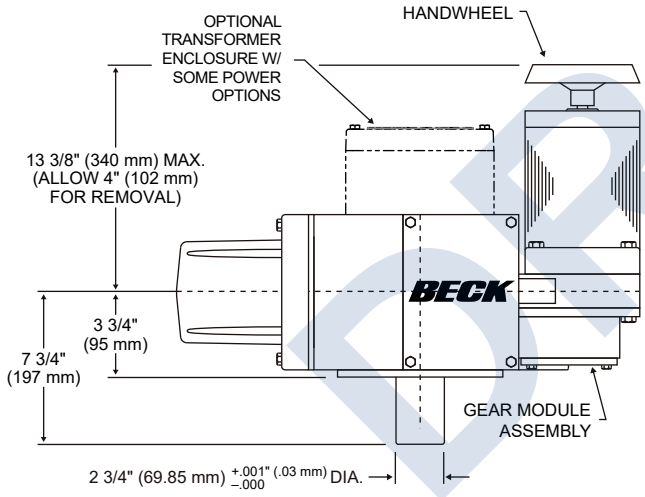

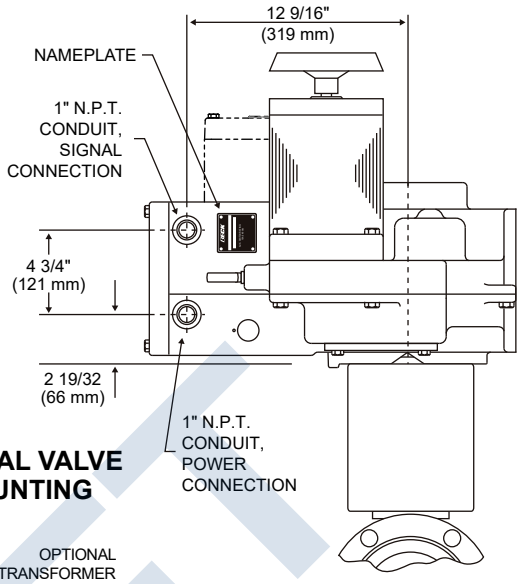

TYPICAL VALVE MOUNTING

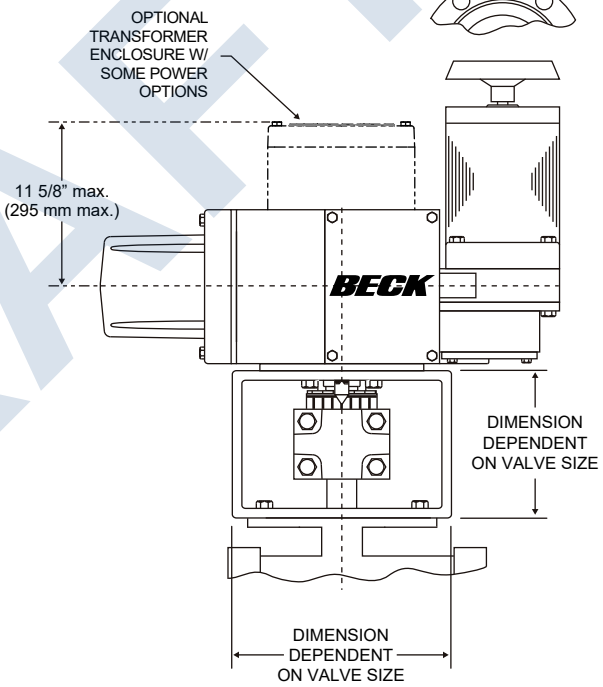

Model 11-469 Information

Approximate Weight	216 lbs. (98 kg)
Maximum Overhung Load	9,000 lbs. (4 082 kg)

Recommended Screw Torques

	Screw Size (in.)	*Wrench Size (in.)*	*Torque*	
			lb-ft	*N•m*
Coupling Screw	-	-	*	*
Mounting Bracket Screw	5/8-11	15-16	100	135
Body Screw	1/2-13	3/4	50	68
Body Screw	3/8-16	9/16	20	27
Cover Screw	5/16-18	1/2	10	14
Motor Screw	3/8-16	9/16	16	22
Gear Module Screw	5/16-18	1/2	10	14

*Varies per application. Refer to valve mounting specification sheet shipped with your actuator.

DRAFT

PRECAUTIONARY INFORMATION

SAFETY PRECAUTIONS



WARNING

Installation and service instructions are for use by qualified personnel only. To avoid injury and electric shock, do not perform any servicing other than that contained in this manual. Please read and understand the appropriate sections in this manual before attempting to install or operate your drive.

STORAGE INFORMATION

Beck actuators should be stored in a clean, dry area where the temperature is between -40° and 85°C (-40° to 185°F).

Damage due to moisture while in storage is not covered by warranty.

INSTALLATION—MECHANICAL

There are many considerations regarding proper mechanical installation—see the instructions beginning on page 14 for details. Refer to the outline dimension drawings for physical dimensions and required clearances.

VALVE ACTUATOR INSTALLATIONS



CAUTION

Working with valves installed in a pipeline can be dangerous. Take appropriate precautions when mounting to installed valves.

INSTALLATION—ELECTRICAL

See the instructions beginning on page 18 for details regarding electrical installation.



CAUTION

For maximum safety, the Beck actuator body should be grounded. Use the green grounding screw in the wiring compartment of the actuator.



CAUTION

Always close covers immediately after installation or service to prevent moisture or other foreign matter from entering the actuator.

CONDUIT ENTRIES

Conduits are provided for power and signal wiring. Temporary plugs are installed in the conduit entrances at the factory for shipping only and are not intended for permanent use. Prior to actuator operation, all conduit entrances must be properly sealed in accordance with National Standards or Regulatory Authorities.

DRAFT

GENERAL OPERATION INFORMATION

MODES OF OPERATION

There are three basic modes of operation:

- **Handwheel—**local mechanical control
- **Handswitch—**local electrical control
- **Automatic—**remote electrical control

Any or all of these modes can be used to test basic operation of your actuator during start-up.

HANDWHEEL

The Handwheel permits manual operation of the actuator without power. The Handwheel is coupled directly to the motor shaft at the rear of the motor housing and it rotates when the motor runs.

The Handwheel is particularly useful during initial installation or when power is not available. If power is available, the Handswitch must be moved to the STOP position before manually operating the Handwheel.

HANDWHEELS



11-1_9 **11-2_9/-3_9** **11-4_9**

HANDSWITCH

A Handswitch allows local electric control at the actuator. In either of the STOP positions, the motor is blocked from running. In the CW or CCW positions, the motor runs to move the output shaft in the corresponding direction. When moving the output shaft using the Handswitch, the motor will stop when the over-travel limit switches are reached.



The Demand signal can position the actuator only when the Handswitch is in the AUTO position.

AUTOMATIC MODE

When the Handswitch is placed in the AUTO position, the actuator is in automatic mode and responds to a Demand signal (also called the setpoint). The Digital Control Module (DCM-3) compares the Demand signal with the output shaft position. When the DCM-3 detects a difference between Demand and Position (called error), the motor will rotate the output shaft until the Position matches the Demand.

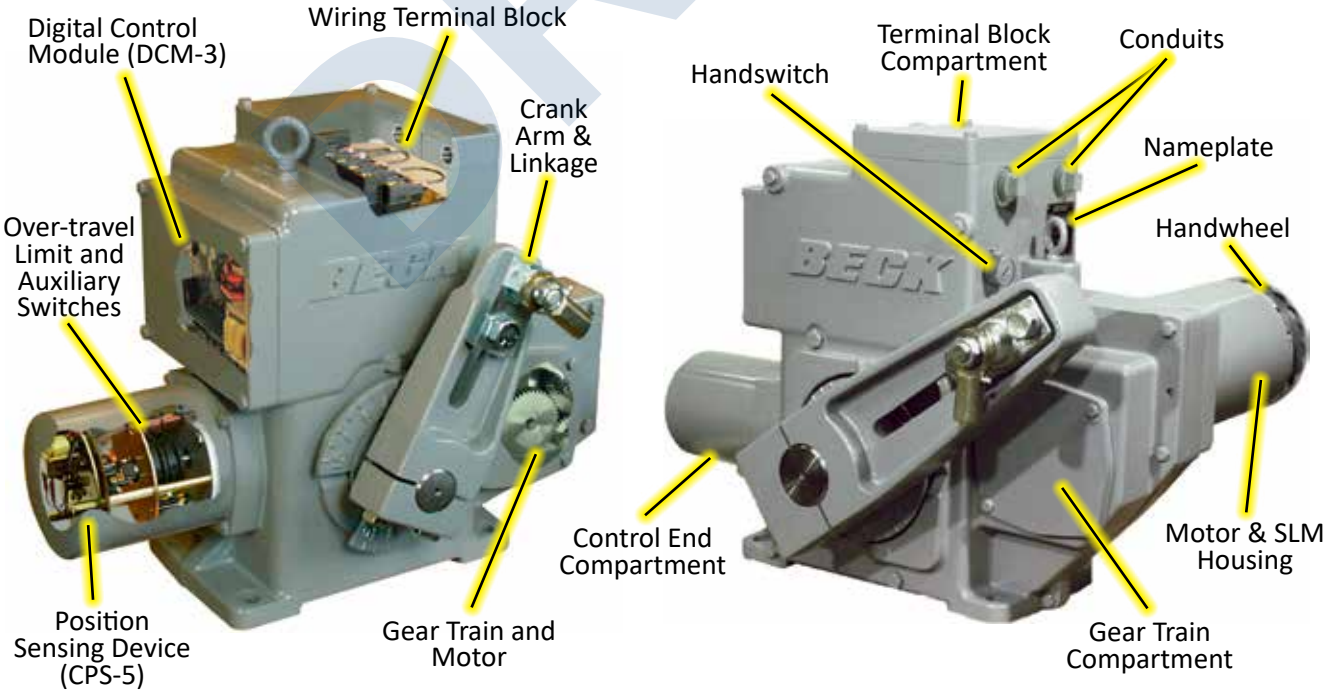

MODEL GROUP 11 COMPONENTS

DRAFT

INSTALLATION—MECHANICAL

Beck Group 11 actuators may be installed in any convenient orientation, because the gearing does not require an oil bath. Refer to the outline dimension drawings for physical dimensions and required clearances.

VALVE ACTUATOR INSTALLATIONS

CAUTION

Working with valves installed in a pipeline can be dangerous. Take appropriate precautions when mounting to installed valves.

Whenever an actuator is being mounted on a valve, refer to the valve manufacturer's maintenance manual for specific valve-related instructions. Consult the Beck Valve Mounting Specification sheet shipped with the actuator for specific instructions on assembly of the Beck actuator and mounting hardware to the valve. It is good practice to remove the valve from service if possible.

UNITIZED VALVE/ACTUATOR ASSEMBLY INSTALLATION

Inspect the valve and pipe flanges to ensure they are clean. Be certain that other pipelines in the area are free from pipe scale or welding slag that could damage the gasket surfaces.

Carefully lift the assembly and position the valve in the pipeline. Install and tighten the flange bolts according to the valve and/or gasket manufacturer's instructions.

NOTE: The valve may have undergone temperature variations in shipment. This could result in seepage past the stem seals. Refer to the valve manufacturer's maintenance instructions for packing adjustments, if required.

FOOT MOUNTED ACTUATOR INSTALLATIONS

Actuators may be mounted in any orientation. If mounting near obstructions such as pipes or beams, take into consideration access to the field wiring terminals, enclosure cover clearances, and the output shaft. Refer to the outline dimension drawings for the clearance necessary to remove covers.

Before the actuator is bolted into place, the mounting surface must be shimmed for flatness to within 0.020 inches. Each shim must support at least 75% of the mounting foot surface area (recommended shim size is 4 square inches or larger). Improper shimming or mounting can damage the actuator mounting feet.

If the actuator is to be bolted to a mounting plate, the plate must be rigid and must not yield to the stresses created from operating the actuator. If the mounting plate is not rigid or the mounting bolts are not sufficiently tightened, damage to the actuator housing could result. A rigid, vibration-free surface will generally prolong the life of the actuator's components. The mounting plate should be at least as thick as the diameter of the mounting bolts.

Mounting bolts should be hex head steel, zinc plated (HHSZP) Grade 2 or better and sized as shown in the table below. The bolts should be torqued appropriately for the application.

Actuator Model	Bolt Size	Bolt Torque
11-159	3/8"	20 lb-ft (27 N•m)
11-209 / 11-309	5/8"	100 lb-ft (135 N•m)
11-409	3/4"	175 lb-ft (237 N•m)

MOUNTING PEDESTALS

Standard and custom retrofit Beck pedestals are available, including designs for a number of common pneumatic actuators such as the Bailey AC and UP series and Hagan cylinders. A typical generic pedestal is shown here.



DRAFT

LINKAGE REQUIREMENTS

(IF APPLICABLE)

For best results, the linkage should be designed in advance. In most applications, the best control will result when the linkage is adjusted so that the full 100° travel of the Beck actuator shaft is used, even though the driven lever may travel less than 100°. The general requirements for a good linkage are:

1. It must be rigid enough to carry the link thrust without bending or deforming.
2. It must have a built-in means of adjustment so that the length of the connecting link can be changed a small amount.
3. Rod end bearings, similar to those furnished on the Beck crank arm, should be used at both ends of the connecting link. This type of device permits small angular misalignments and helps prevent binding of the linkage.
4. The Beck crank arm radius must be calculated so that the arm will move through a 100° arc and the driven lever will move through its correct arc.
5. The actuator and driven shafts must be parallel and the linkage should be in a plane perpendicular to the shafts. See the example of a parallel linkage arrangement at right. Z-Linkage arrangements (where linkage ends are on opposite sides of the parallel between the driven shaft and actuator output shaft) are ***not*** recommended.

LINK-ASSIST™ REPORT

The Beck Link-Assist™ computer program optimizes the linkage configuration for the application load. It ensures proper setup and operation of the actuator. Contact your Beck Sales Engineer to take advantage of Beck's Link-Assist™ program. Additional Link-Assist™ information is available on the Beck website: *www.haroldbeck.com*.

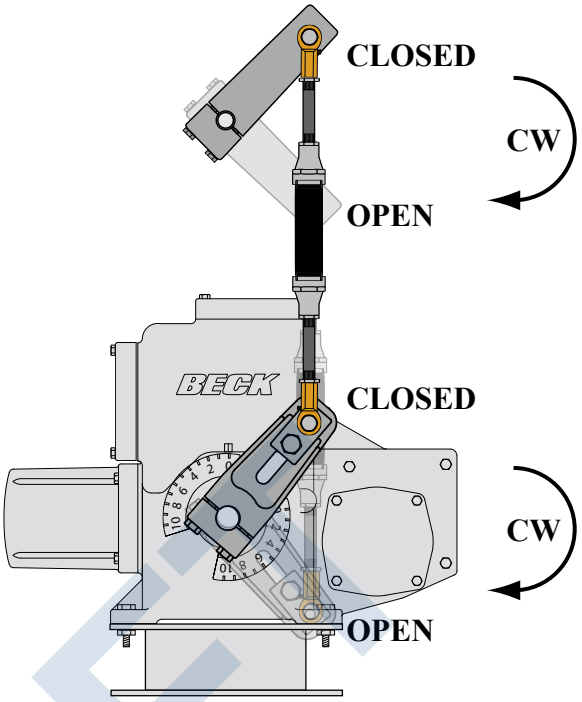

Parallel Linkage Design Example
(Recommended)

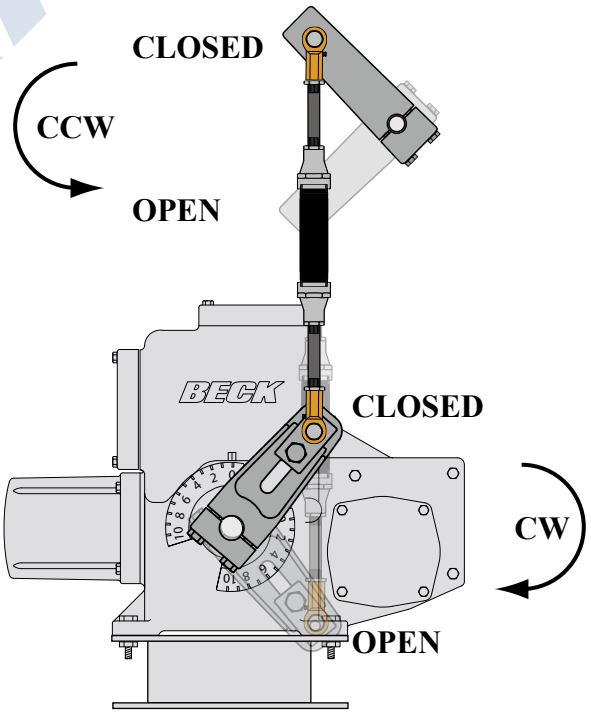

Z- Linkage Design Example
(Not Recommended)

DRAFT

LINKAGE KITS AVAILABLE

Beck linkage kits are made to accommodate a wide variation in linkage lengths without requiring modification of end fittings. Linkage kits are also available in stainless steel for use in corrosive environments.

Hex Linkage kits are available for applications with linkage length requirements between 9" (229 mm) and 33" (838 mm). Each hex linkage kit comes complete with a rod end, studs, threaded hex bar, and jam nut hardware.

To order hex linkage kits, first obtain the approximate overall linkage length “A” in the hex linkage figure on page 17. Select the kit part number from the corresponding table. For lengths beyond those listed in the table, contact your Beck sales engineer.

Pipe linkage kits are available for longer linkage length requirements and include the essential linkage end connections, rod end, studs, and jam nut hardware. Schedule 40 pipe is not included and must be cut to length and threaded in the field (see the table on page 17 for instructions to calculate pipe length). To simplify installation of the pipe link, the kit accepts NPT right-hand threads on both ends of the pipe. Left-hand threads are internal to the linkage kit assembly, making final length adjustments quick and easy.

To order pipe linkage kits, first obtain the approximate overall linkage length “A” in the figure on page 17. Select the kit part number from the corresponding table. For lengths beyond those listed in the table, contact your Beck sales engineer.



Pipe Linkage



Hex Linkage
(Stainless Steel Option)

DRAFT

PIPE LINKAGE KITS

Beck Actuator Model No.	Linkage Length	Linkage Kit Part No.	Stainless Steel Linkage Kit Part No.	Pipe Size	Rod End Thread	Length of 2 Linkage Ends (+/- 1.5" (38 mm))
11-159	22-84" (559-2 134 mm)	20-1730-05	20-1730-15	1" (25 mm)	1/2-20 UNF	20 1/2" (521 mm)
	31-120" (787-3 048 mm)	20-1740-06	20-1740-16	1.5" (38 mm)		29 1/4" (743 mm)
11-209	22-45" (559-1 143 mm)	20-1730-05	20-1730-15	1" (25 mm)	1/2-20 UNF	20 1/2" (521 mm)
	31-84" (787-2 134 mm)	20-1740-06	20-1740-16	1.5" (38 mm)		29 1/4" (743 mm)
	33 1/4-120" (845-3 048 mm)	20-1750-05	20-1750-15	2" (51 mm)		31 1/4" (794 mm)
	37-120" (940-3 048 mm)	20-1760-05	20-1760-16	2.5" (64 mm)		34 1/2" (876 mm)
11-309	22 1/2-36" (572-914 mm)	20-1730-06	20-1730-16	1" (25 mm)	5/8-18 UNF	21" (533 mm)
	31 1/2-72" (800-1 829 mm)	20-1740-07	20-1740-17	1.5" (38 mm)		29 3/4" (756 mm)
	33 3/4-96" (857-1 219 mm)	20-1750-06	20-1750-16	2" (51 mm)		31 3/4" (806 mm)
	37 1/2-120" (953-3 048 mm)	20-1760-06	20-1760-16	2.5" (64 mm)		35" (889 mm)
11-409	23 1/4-34" (590-864 mm)	20-1730-07	20-1730-17	1" (25 mm)	3/4-16 UNF	21 3/4" (552 mm)
	32 1/4-48" (819-1 219 mm)	20-1740-08	20-1740-18	1.5" (38 mm)		30 1/2" (775 mm)
	34 1/2-72" (876-1 829 mm)	20-1750-07	20-1750-17	2" (51 mm)		32 1/2" (826 mm)
	38 1/4-120" (972-3 048 mm)	20-1760-07	20-1760-17	2.5" (64 mm)		35 3/4" (908 mm)

*NOTE: To calculate length of pipe required, subtract "Length of 2 Linkage Ends" (shown in table above) from Linkage Length "A" (shown in diagram below).

Pipe Linkage

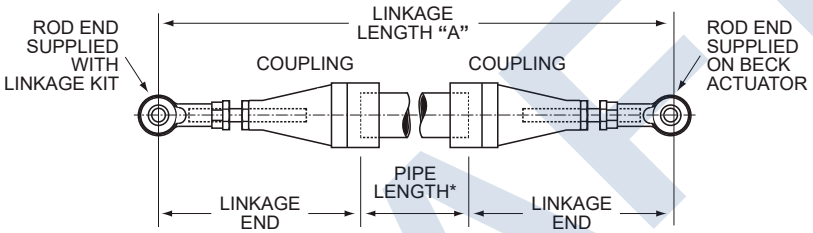

HEX LINKAGE KITS

Beck Actuator Model No.	Linkage Length	Linkage Kit Part No.	Stainless Steel Linkage Kit Part No.	Hex Size	Rod End Thread
11-159	9-11.5" (229-292 mm)	14-8300-22	14-8300-64	5/8" [15.88]	1/2-20 UNF
	10.5-14.5" (269-371 mm)	14-8300-32	14-8300-72		
	14.5-18.5" (368-470 mm)	14-8300-04	14-8300-48		
	18-22" (457-559 mm)	14-8300-06	14-8300-50		
	22-26" (559-660 mm)	14-8300-16	14-8300-58		
11-209	9-11.5" (229-292 mm)	14-8300-22	14-8300-64	5/8" [15.88]	1/2-20 UNF
	10.5-14.5" (269-371 mm)	14-8300-32	14-8300-72		
	14.5-18.5" (368-470 mm)	14-8300-04	14-8300-48		
	18-22" (457-559 mm)	14-8300-06	14-8300-50		
	22-26" (559-660 mm)	14-8300-16	14-8300-58		
11-309	13.5-18" (343-457 mm)	14-8860-24	14-8860-62	1" [25.40]	5/8-18 UNF
	17.5-22" (445-559 mm)	14-8860-08	14-8860-48		
	22-26.5" (559-673 mm)	14-8860-02	14-8860-42		
	26.5-31" (673-787 mm)	14-8860-04	14-8860-44		
11-409	13.5-17.5" (343-445 mm)	15-0110-26	15-0110-68	1" [25.40]	3/4-16 UNF
	18-22" (457-559 mm)	15-0110-20	15-0110-62		
	22-26" (559-660 mm)	15-0110-03	15-0110-46		
	26-30" (660-762 mm)	15-0110-22	15-0110-64		
	29-33" (737-838 mm)	15-0110-02	15-0110-44		

Hex Linkage

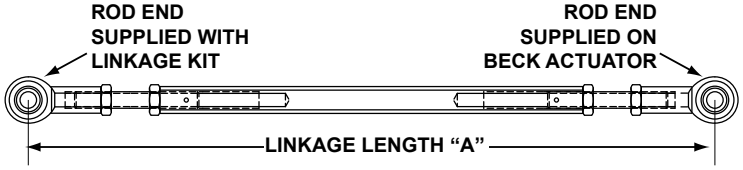

DRAFT

INSTALLATION Mechanical

LINKAGE INSTALLATION

The following procedure is recommended to couple the linkage between the Group 11 actuator and the driven shaft:

1. Position the driven shaft ① to the fully closed position.
2. Set the driven shaft lever to its required starting angle ② (predetermined with Link-Assist™).
3. Remove the rod end ③ from the Beck crank arm. Attach to the connecting link.
4. Adjust the connecting link ④ to the predetermined length.
5. Connect the connecting link to the driven lever at the predetermined radius ⑤.
6. Set the crank pin ⑥(or rod end screw on 11-159, see appropriate outline dimension drawing) on the Beck crank arm to the predetermined radius. This is done by loosening the crank pin screws ⑦ and sliding the crank pin to the predetermined position (none on 11-159). Tighten the crank pin screws to the appropriate torque.
7. Loosen the crank arm clamping screws ⑧.

CAUTION

The crank arm will pop free, allowing adjustment for 360° around the shaft.

8. Position the actuator's output shaft ⑨ to its fully closed limit.
9. Swing the crank arm into position and assemble the connecting link to the crank arm crank pin. Tighten the rod end nut ⑥ to the appropriate torque (see outline dimension tables beginning on page 6).
10. Tighten the crank arm screws ⑧ evenly, in a cross-pattern (if applicable), to the torque shown in the tables beginning on page 6).
11. Lubricate the rod end bearings.

Carefully move the actuator's output shaft to the fully open (maximum input signal) position. Check that no binding occurs between the linkage, crank arm, driven shaft lever, and surrounding obstructions. Also observe that the driven shaft rotates the proper amount. Ensure that the actuator reaches the proper limit and shuts off.

If binding in the linkage occurs due to too much travel of the driven lever, travel can be reduced by shortening the Beck actuator crank arm radius. Return the actuator to the fully closed position. Loosen the crank arm crank pin screws, and the linkage stud-coupling lock nuts. To make fine length adjustments, while rotating the linkage move the crank pin to a shorter radius position.

LINKAGE INSTALLATION

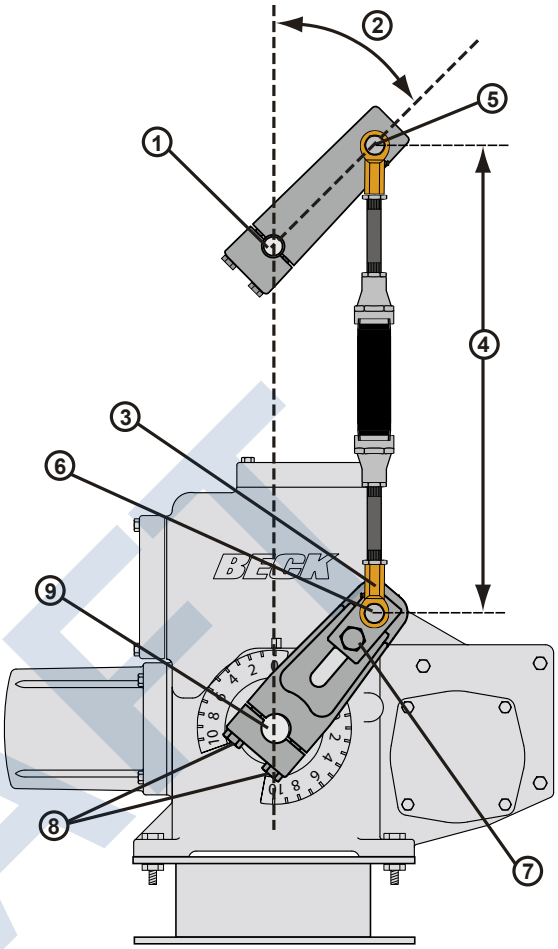

To adjust the linkage length, it is preferable to use the stud couplings. The couplings have right-hand and left-hand threads, so it is not necessary to disconnect the ends to make a length adjustment. Be careful not to expose more than 7" (178 mm) of stud between the rod end and coupling.

CAUTION

The thread engagement depth in the couplings and rod ends must be greater than 1.25 x the thread diameter.

Tighten crank pin screws and linkage lock nuts, and once again, check operation to confirm that no binding occurs between the linkage and crank arm, driven lever arm, or surrounding obstructions. Further travel adjustments can be made by repeating the above steps.

Tighten all lock nuts and screws to the specified torque value (see outline dimension tables).

Do not change limit switch settings to obtain desired valve or damper travel; this will adversely affect actuator operation.

DRAFT

INSTALLATION Electrical

POWER QUALITY

Power quality disturbances such as power outages, transient voltages, harmonic distortions, and electrical noise will adversely affect your actuator performance. Protecting your actuator from these conditions can reduce downtime and promote longer life for the equipment. Following the industry accepted standards below will help protect your actuator.

- Select wiring materials according to the correct ampacity ratings dictated by national and local regulations.
- Shielded, twisted pair cables can be used for signal connections to avoid being affected by electrical noise. These signal wires, based on Noise Susceptibility Level (NSL) per IEEE-518, fall into the level 1 classification. A braided shield will be more effective than a wrapped foil shield. Signal wire shields should be connected to the actuator casting grounding screw. If grounding at the signal source is required, then the shield should not be grounded at the actuator.
- Raceways such as conduits and trays must be grounded at both ends to properly meet immunity requirements.
- An AC power ground connection should be made between the power source and the Beck actuator. Grounding connections including wire and metal conduit are permitted, but the actuator-grounding conductor may not be connected to a structured metal frame of a building.
- Surge suppression equipment that meets Underwriters Laboratory (UL) Standard 1449 may be used to protect against transient voltage conditions.
- Power Conditioners may be used to regulate the supply voltage and maintain a constant voltage level. They are helpful in protection against voltage sags and swells, as well as some measure of electrical noise protection.
- Harmonic filters may be used to minimize the effects of supply voltage waveform distortions and are used in applications that incur a large amount of high-frequency electronic noise.



CAUTION

Always close covers immediately after installation or service to prevent moisture or other foreign matter from entering the actuator.

ELECTRICAL INSTALLATION

Two 1" N.P.T. conduit connections are provided for power and signal wiring to the actuator. Conduits should be routed from below the actuator so that condensation and other contaminants flow away from the conduit. All conduit entrances must be properly sealed in accordance with National Standards or Regulatory Authorities.

Power and signal wires should be routed to the actuator separately and be either shielded cables or installed in conductive conduit and/or cable trays.

Refer to the wiring diagram furnished with your Beck actuator for proper AC power and signal connections. The customer must supply 120 V ac to power the actuator (standard configuration). The 120 V ac line connects to terminal C and neutral to terminal B. Other available power options include 208, 240, 380, 415, 480 & 575 V ac.

It is advisable to provide normal short circuit protection on the AC power line. A copy of the wiring diagram is shipped with each actuator and is fastened to the inside of the terminal block cover. If there is no wiring diagram available, you may obtain a copy from Beck by providing the serial number of your actuator.

Connection of a 4-20 mA Demand signal should be made to terminals AA (+) and BB (–).

For maximum safety, the Beck actuator body should be grounded. Use the green grounding screw in the wiring compartment of the actuator.

TERMINAL SCREW TORQUES

Each terminal screw should be torqued to the proper specification upon landing the wire.

		Torque	
Models	**Terminals**	**(lb-in)**	**(N•m)**
All Models	A–V	16	1.8
	AA–EE	12	1.4
11-159, 11-169	FF–KK*	9	1.0
	1–3*	9	1.0
11-209, 11-269, 11-309, 11-369, 11-409, 11-469	FF–SS*	9	1.0
	1–3*	20	2.3

* Terminals included only with certain optional features.

DRAFT

INSTALLATION Wiring

TERMINAL CONNECTIONS

The terminal block is located in a separate, gasketed compartment at the top of the actuator. Line voltage connections are made on terminal designations A through V and are oriented at a right angle from the low voltage signaling terminals designated AA through EE.

Actuators equipped with optional transformers to accommodate popular voltages include an additional terminal strip and fuse for power wiring (with the exception of the 240 volt option). See optional transformer wiring connections below.

Terminal screws will accept standard spade or ring terminals. Terminals A through V are size #8, and terminals AA through EE are size #6. Optional transformer terminal screws (designated 1, 2, & 3) are size #10 for all models except 11-159/169 which are #6. For wiring versatility, the screw-down clamp design will also accept unterminated wire. All terminals on all actuators will accept up to #12 AWG (3.31 mm^2) with one exception. Actuator models 11-209, 11-269, 11-309, 11-369, 11-409, and 11-469 may use up to #10 AWG wire on the optional transformer terminals (1-3).

Typical wiring connections are shown below. Each actuator can be ordered with up to four optional auxiliary switches (wiring connections are described in the Configuration/Calibration section). Up to six optional auxiliary switches are available with the 11-209, 11-309, and 11-409.



To prevent Handswitch initiated motion, remove jumper (JA) from between terminals A and C.

CAUTION

AC power to the actuator must be turned off before removing the jumper (JA).

Three additional terminals and fuse (F1) are provided with 3-phase power options.



TYPICAL WIRING CONNECTIONS

(Each actuator has a specific wiring diagram on the inside of the terminal compartment cover)

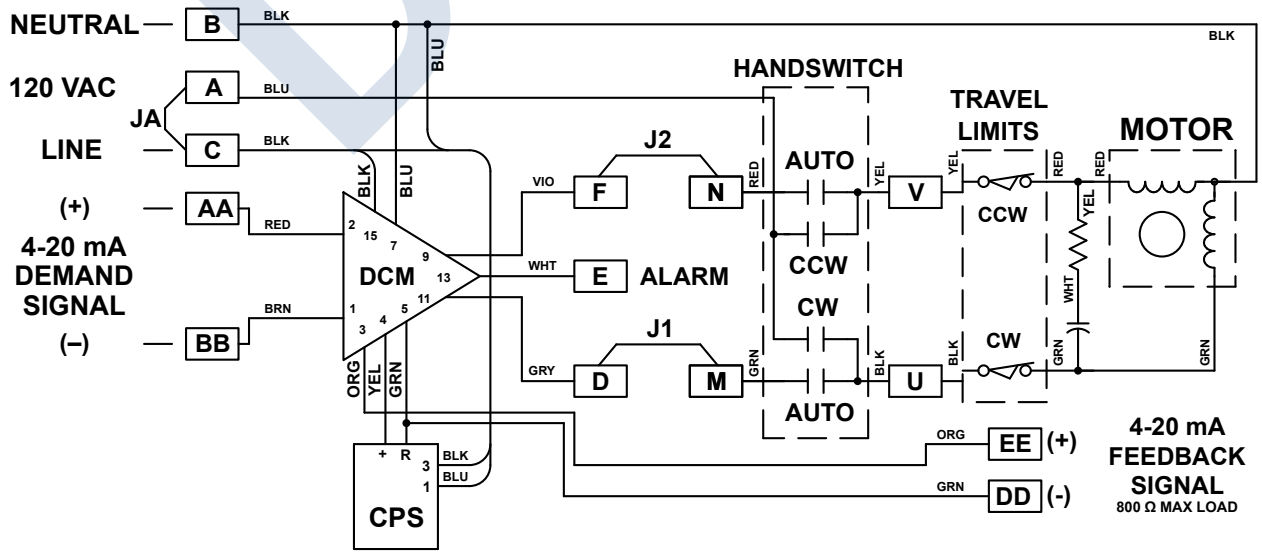

DRAFT

POWER CONNECTIONS FOR ALTERNATE POWER OPTIONS

Optional Transformer for 380, 415, 480 & 575 Volts

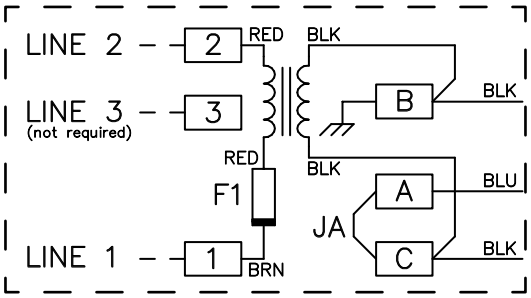

Optional Transformer for 208 Volts

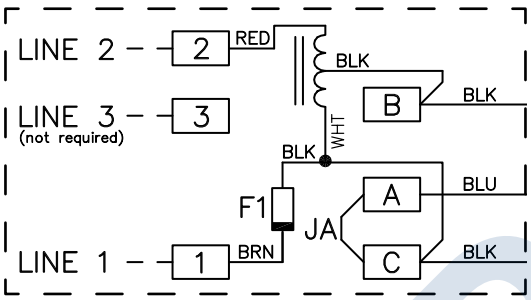

Optional Transformer for 240 Volts

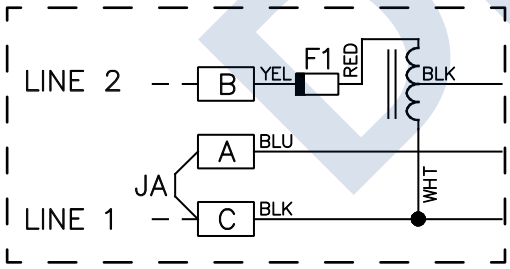

START-UP

NOTE: All Beck actuators are shipped from the factory ready for installation. Each actuator is set-up and calibrated to the customer's specifications that were written into the equipment order. Electrical adjustments are generally not required before placing the actuator in operation.

START-UP CHECKLIST

The following list provides some basic checks that should be performed before placing your actuator into operation.

- ☐ Inspect the location and the mounting bolts. Be sure the actuator is securely fastened to its mounting base.
- ☐ On the first start-up, place the Handswitch in a STOP position to ensure that the output shaft will not move and possibly cause personal injury.
- ☐ Confirm the actuator is receiving the appropriate operating voltage as shown on the nameplate.
- ☐ Check the DCM-3 Power LED. It should be pulsing (Dim/Bright) to indicate the board is active.
- ☐ Using the Handswitch, confirm the actuator moves fully to both the CW and CCW ends of travel.
- ☐ Confirm the actuator has a 4–20 mA Demand signal attached to terminals AA (+) and BB (–).
- ☐ Place the Handswitch in AUTO and vary your Demand signal from 0% to 100%.
- ☐ Check for the Status alarm LED on the DCM-3. If it is lit, refer to the Troubleshooting section of this manual.
- ☐ Verify that the output shaft is moving to the desired 0% position with a 0% Demand signal and moving to the 100% position with a 100% Demand signal. If they are reversed, see the Configuration/Calibration section of this manual for instructions on how to change the direction of output shaft rotation.

DRAFT

ELECTRONICS

CONTROL END & CONTACTLESS POSITION SENSOR (CPS-5)

The actuator “control end” houses the limit switch assemblies and the Contactless Position Sensor (CPS-5). The CPS-5 is the electro-mechanical device that provides the DCM-3 with a continuous feedback signal proportional to the position of the actuator’s output shaft.

The control end includes a control shaft, which is geared directly to the output shaft of the actuator. Rotation of the output shaft causes rotation of the control shaft, which in turn moves the limit switch cams and the CPS-5 ferrite rotor. A ferrite magnetic sensing element generates a voltage as the rotor turns. The voltage is translated into a position signal voltage used by the DCM-3 to control the actuator.

The typical position signal voltage of the CPS-5 ranges from 1.0 V dc at the CCW end of travel, to 5.0 V dc at the CW end of travel. The DCM-3 can be calibrated to interpret CPS-5 position signals between 0.3 V dc and 5.3 V dc. Position signal voltages can be measured on the yellow (+) and green (R) position signal wires located on the CPS-5. The CPS-5 power is derived from the blue and black wires on the primary side of the transformer. 120 V ac can be measured across the transformer tabs (blue and black wires).

There are two SPDT over-travel limit switch assemblies (labeled “CW” and “CCW”) and up to four auxiliary switch assemblies (labeled “S1” through “S4”). Up to six optional auxiliary switches are available with models 11-209, 11-309, and 11-409.

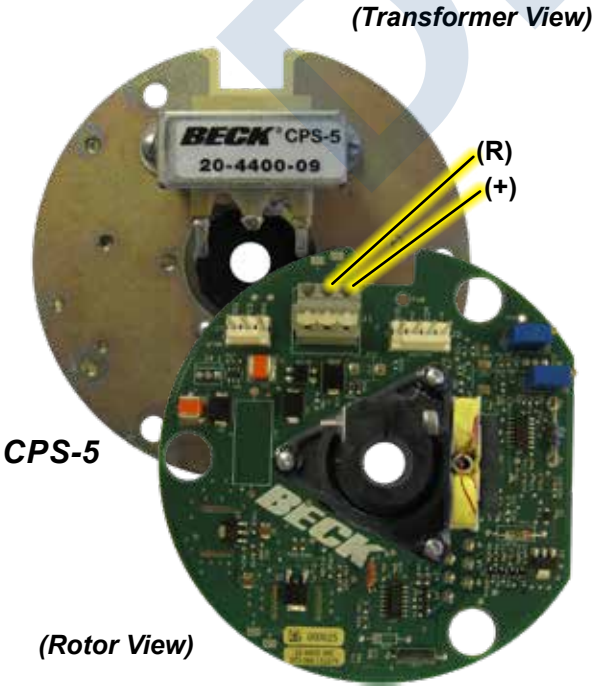

CPS-5

DIGITAL CONTROL MODULE (DCM-3)

The DCM-3 is a micro-processor based circuit board assembly that serves as the actuator’s control center.

The main function of the DCM-3 is to position the actuator’s output shaft. The DCM-3 compares the 4–20 mA Demand signal received at the actuator terminals AA(+) and BB (–) to the actuator position signal, generated from the Contactless Position Sensor (CPS-5). If a difference exists (called error) between the Demand and position signals, the DCM-3 activates triacs that operate the motor. The motor drives the gear train and positions the output shaft until the difference is eliminated.

The DCM-3 layout is illustrated on page 23 and shows the fuse and test point locations. The typical position signal voltage from the CPS-5 (measured from TP1(–) and TP4(+)) ranges from 1.0 V dc at the CCW end of output shaft travel, to 5.0 V dc at the CW end of output shaft travel. Test point voltage levels between TP2(+) and TP3(–) across the input resistor R11 should read between 1 V dc and 5 V dc proportional to the 4–20 mA Demand signal.



DCM-3

DRAFT

INTERFACES

The DCM-3 has three configuration interfaces: Pushbutton, HART, and Serial Port.

PUSHBUTTON

The DCM-3 board is equipped with pushbuttons that can be used to calibrate the Demand signal and configure 0% and 100% positions. It may also be used to configure the direction of output shaft rotation for increasing Demand. These configurations and calibrations do not require any external equipment to perform.

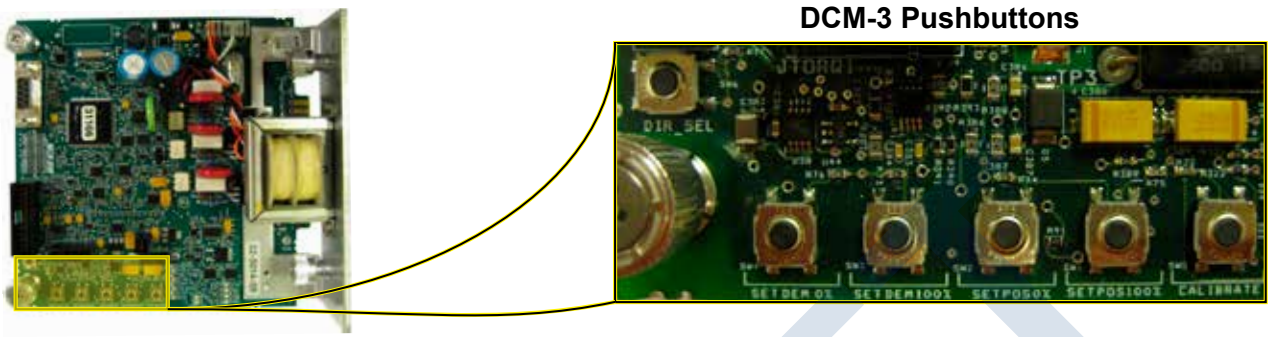

HART

The HART interface is accessible by connecting a HART capable communication device (such as a handheld communicator) to terminals AA (+) and BB (–) of the terminal block area. A HART-capable, analog output can be used for the Demand signal as well. All electronic calibration and configuration can be accomplished through the HART interface. NOTE: The appropriate HART device descriptions are required.

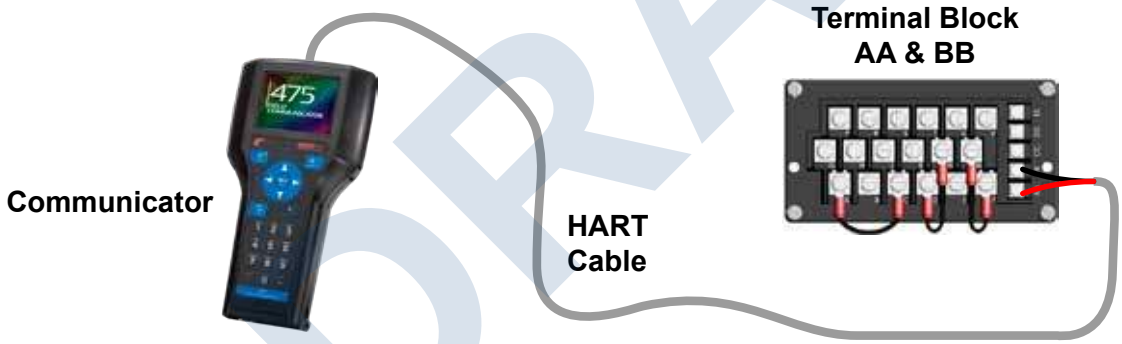

SERIAL PORT

The Serial port interface is accessible by connecting a computer to the DCM-3 using the DB9 connector. See the Serial Communications appendix for details on connecting via the Serial port. All electronic calibration and configuration can be accomplished through the Serial port interface.



DRAFT

ELECTRONICS

DCM-3 LAYOUT*

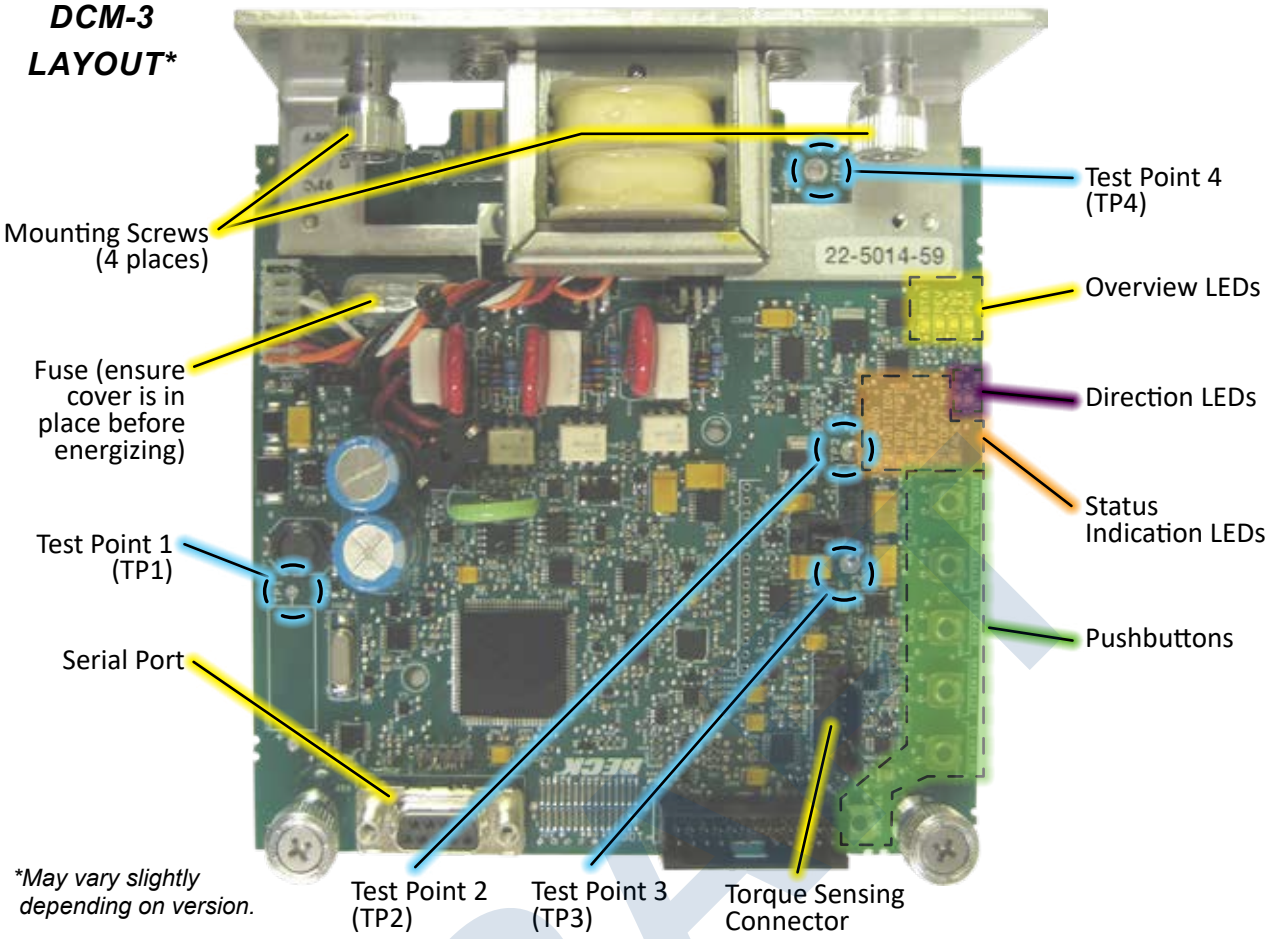

**May vary slightly depending on version.*

OVERVIEW LEDs

Located on the DCM-3 board (pictured above), these LEDs indicate the basic, real-time state of the actuator. A description of each LED follows.

STAT
This red LED illuminates during a system alarm. Explanation of the specific alarm is available through the Fieldbus or Serial interface. See the Troubleshooting section for additional information.

REV
This green LED illuminates when the actuator is receiving a Demand signal less than its position.

FWD
This green LED illuminates when the actuator is receiving a Demand signal greater than its position.

PWR
This green LED illuminates when power is applied to the actuator. This LED pulses from bright to dim indicating the DCM-3 is operational.

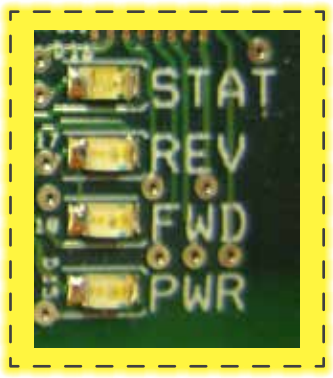

OVERVIEW LEDs

DIRECTION LEDs

These green LEDs indicate the direction of travel resulting from an increasing Demand signal.

DIRECTION LEDs

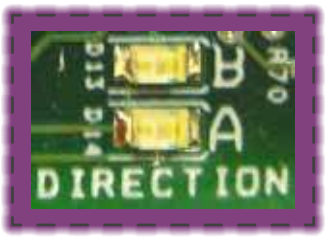

A = CCW **B** = CW

DRAFT

STATUS INDICATION LEDs

When the "STAT" LED is lit, the applicable red indication LED(s) will light to reveal the actuator condition(s). An alarm is also available at terminal E. When the condition is corrected, the status will automatically reset.

DEMAND
Loss of the Demand input signal.

POSITION
The Position signal to the DCM-3 is out of the calibrated range limits. The lower limit is –5% and the upper limit is 105% of the calibrated range. May also indicate a film potentiometer or internal wiring failure.

TRQ/THRST (optional)
This LED indicates that excessive torque is present (over 105% of the actuator rating).

STALL
The actuator is in a stall condition and stall protection has been activated.

TEMP °F.
Drive's internal temperature is outside of rating.

FB OPEN
External position Feedback signal is enabled, but not wired to an external load or the wiring has failed between the actuator and the monitoring device.

STOP/LIMIT
Handswitch is in "STOP" position or the actuator is at a limit and is not in balance.

ACK
Acknowledges when a calibration procedure has been completed.

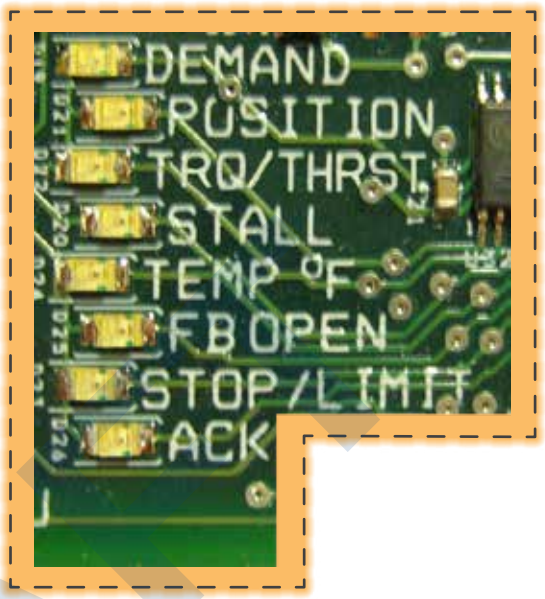

STATUS INDICATION LEDs

PUSHBUTTON CONTROLS

The six pushbuttons (pictured below) on the DCM-3 customer interface panel are used for calibration. When pressing a pushbutton, pressure should be maintained until the "ACK" LED is lit; this confirms receipt of the pushbutton command. See the Configuration/Calibration section of this manual for further explanation of calibration procedures.

CALIBRATE
This button must be pressed and held simultaneously with another pushbutton to perform a calibration.

CAUTION
Pressing the following buttons may change calibration and cause the actuator to reposition.

SET POS 100%
Press to designate the current position of the output shaft as the 100% position for actuator movement (this will correspond to a 100% Demand signal).

SET POS 0%
Press to designate the current position of the output shaft as the 0% position for actuator movement (this will correspond to a 0% Demand signal).

SET DEM 100%
Press to designate the current Demand input signal as 100% Demand.

SET DEM 0%
Press to designate the current Demand input signal as 0% Demand.

DIR SEL
Press to change the direction in which the output shaft will rotate in response to an increasing Demand signal. The opposite direction LED will light (see p.24) when the pushbutton command is confirmed.

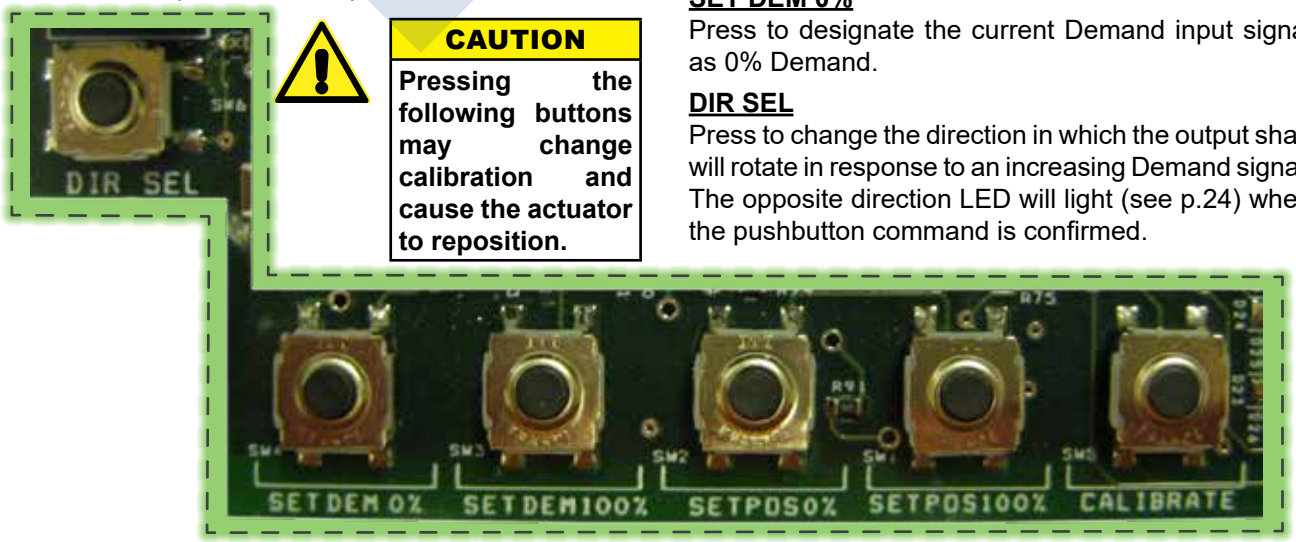

PUSHBUTTON CONTROLS

CONFIGURATION/CALIBRATION

NOTE: Your Beck actuator was shipped from the factory ready for installation; no electrical adjustments are required before placing it in operation. Each actuator is set up and calibrated to the specifications that were written into the equipment order.

Under normal operating conditions there is no need to recalibrate the actuator. However, if the application requirements change—or are different than specified on the equipment order—the actuator should be recalibrated according to the following procedures.

LIMIT SWITCHES

Actuators are shipped with over-travel limit switches factory-set for either 101° (11-159, -209, -309, -409) or 91° (11-169, -269, -369, -469) of travel unless otherwise specified at time of order. Limit switches must be set inside the range of the built-in, non-adjustable mechanical stops to prevent the possibility of stalling when operating the actuator with the Handswitch. Limit switches can be reset to limit over-travel of the output shaft when the actuator position calibration has been reduced (60º minimum). See the calibration procedure on page 30. Auxiliary switches are set as shown on the Standard Over-travel Limit and Auxiliary Switch Settings diagram on page 27 unless otherwise specified at time of order.

NOTE: The over-travel limit switches are the switches closest to the actuator body. To adjust the over-travel limit switches, it is necessary to remove the control end cover.

Switches are operated by cams which are clamped onto the control shaft. Setting a switch involves loosening the cam, moving the output shaft to the desired position, and positioning the cam so that it just operates the switch at that point. In the following procedure, the use of a continuity meter is recommended to determine when the switch opens or closes. If such a meter is not available, it is possible to hear the switch click as the contacts open and close.



CAUTION

Do not attach the meter or attempt to move the switch cams until the actuator is disconnected from the line voltage and auxiliary switches are disconnected from external power sources.

SETTING OVER-TRAVEL LIMIT SWITCHES CW AND CCW

This procedure should be used if the factory over-travel limit switch settings must be changed in the field. It is advisable to operate the actuator fully in each direction, using the electric Handswitch to check switch settings before attempting to change them. Follow these instructions if they require adjustment:

1. Remove the control end cover and terminal block cover (1/2” wrench).
2. Use the electric Handswitch to drive the control shaft so that the CW switch cam screw is accessible. Using a 7/64” hex wrench, loosen the screw so that the cam is just snug on the shaft (see photo, page 27).
3. Move the output shaft to the desired CW limit.
4. Turn the Handswitch to the “STOP” position.
5. ***Disconnect power from the actuator.***
6. Connect a continuity meter across terminals B and U. Rotate the cam until the meter shows no continuity (switch contacts open, switch clicks).
7. Tighten the cam locking screw to 5 lb-in (0.56 N•m) torque.
8. Disconnect meter and ensure the Handswitch is in the “STOP” position.
9. Reconnect actuator power.
10. Rotate the actuator’s output shaft in the CCW direction away from the CW travel limit. Note the direction of rotation on the lobe of the cam. The correct cam lobe motion is away from the switch lever with the switch lever on the lower part of the cam. If not correct, return to step 2 and reset the cam to the proper orientation.
11. Rotate the output shaft again to the desired CW travel limit. If the stopping point is reached, the switch is properly set.
12. Repeat instructions 2–11 for setting the CCW travel limit switch (noting that referenced directions of rotation should be opposite of those used for CW switch setting). Connect continuity meter across terminals B and V.
13. Replace covers and tighten cover bolts to 10 lb-ft (14 N•m) torque.
14. Rotate index (or index pointer on models 11-159 or -169) to correspond with output shaft rotation.

DRAFT

SETTING AUXILIARY LIMIT SWITCHES

Standard switch settings for actuators with 2 or 4 auxiliary switches are shown on the following diagram “Standard Over-travel Limit and Auxiliary Switch Settings”. The heavy line indicates a closed circuit. Follow these instructions to change the operating point of auxiliary switches:

NOTE: When 4 auxiliary switches are installed, it may be necessary to change from normally open to normally closed by moving the wire lead to alternate switch terminals. Be sure to disconnect power from the switch terminals first.

1. Remove the control end cover and the terminal block cover (1/2” wrench).
2. Use the electric Handswitch to drive the shaft so that the switch cam is accessible. Using a 7/64” hex wrench, loosen the screw so that the cam is just snug on the shaft.
3. Move the output shaft to the desired switch trip position.
4. Turn the Handswitch to the “STOP” position.
5. ***Disconnect power from the actuator and switch terminals.***
6. Connect the continuity meter across the appropriate terminals. See the actuator wiring diagram under the terminal block cover (or the diagram at right). Rotate the cam to operate the switch.
7. Tighten the cam locking screw to 5 lb-in (0.56 N•m) torque.
8. Disconnect the meter and reconnect power.
9. Move the actuator’s output shaft in the desired direction to verify that the cam lobe moves away from the switch lever. If not correct, return to step 2 and reset the cam to the proper orientation.
10. Replace covers and tighten cover bolts to 10 lb-ft (14 N•m) torque.

SWITCH CAM ADJUSTMENT

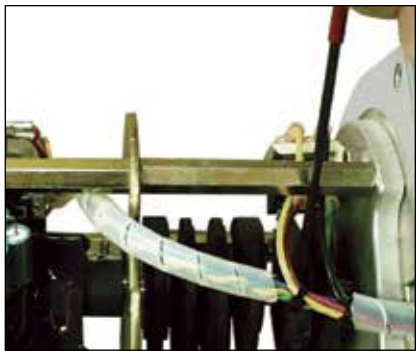

STANDARD LIMIT AND AUXILIARY SWITCH SETTINGS

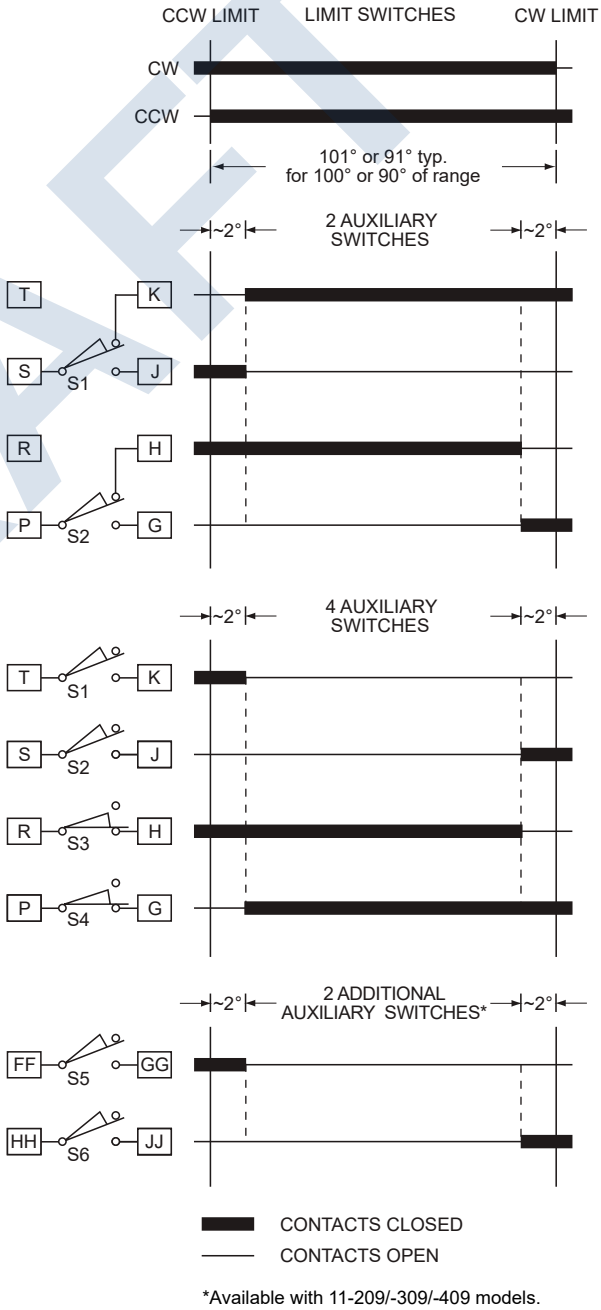

*Available with 11-209/-309/-409 models.

DRAFT

CONFIGURATION/CALIBRATION

DIRECTION OF OUTPUT SHAFT ROTATION

Rotation direction refers to the direction the output shaft of the actuator rotates in response to an increasing Demand input signal. The rotation is either clockwise (CW) or counterclockwise (CCW) as shown in the figure below. The rotation of the driven load (e.g., damper lever arm) determines the actuator rotation suitable for an application.

Unless otherwise specified at the time of order, the output shaft is factory set to rotate clockwise in response to an increasing Demand signal. The direction of rotation can be changed using one of the following three methods. NOTE: After changing the output shaft rotation, adjust the output shaft travel index to reflect the correct 0% and 100% positions.

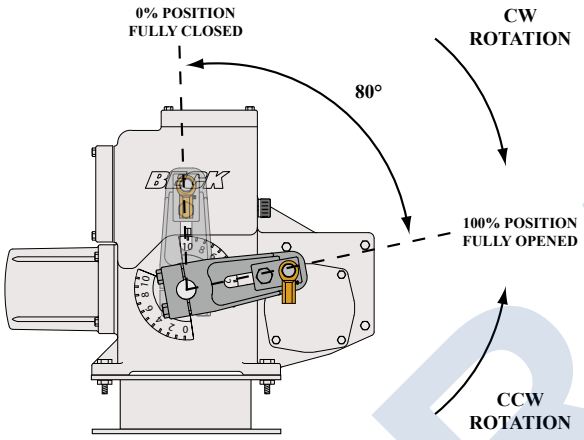

NOTE: The crank arm in the figure above may be adjusted to any start angle. The orientation and rotation shown here has been randomly selected for the purpose of this example.

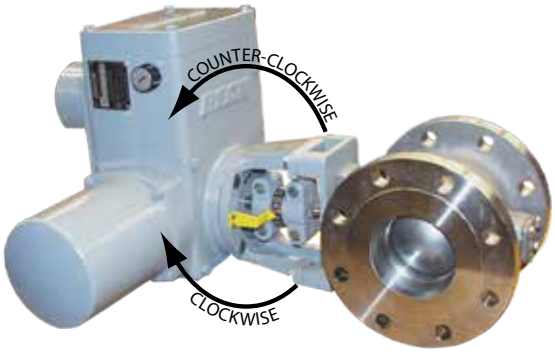

Pushbutton method

1. Remove the DCM-3 cover (1/2" bolt heads).
2. Press and hold the "CALIBRATE" pushbutton, then press the "DIR SEL" pushbutton until the (opposite) "DIRECTION" LED is lit.

—OR—

2. Position the actuator at the current 0% position.
3. Press and hold the "CALIBRATE" pushbutton, then press the "SET POS 100%" pushbutton until the "ACKNOWLEDGE" LED is lit.*

—OR—

2. Position the actuator at the current 100% position.
3. Press and hold the "CALIBRATE" pushbutton, then press the "SET POS 0%" pushbutton until the "ACKNOWLEDGE" LED is lit.*
4. Ensure the actuator operates as desired.
5. Replace the DCM-3 cover and tighten the cover bolts to 10 lb-ft (14 N•m) torque. Reset travel index.

* If the "ACKNOWLEDGE" LED does not light, but the "POSITION" LED does light, the change was not accepted by the DCM-3.

NOTE: When any of the above procedures is performed, both the 0% and 100% positions are automatically set.

HART method

Command: Drive Dir

DD Menu Location: MENU 4B
Functions>Configuration>General Setup

Selections:
CW Incr - select if the desired output shaft rotation is clockwise on increasing Demand signal.
CCW Incr - select if the desired output shaft rotation is counter-clockwise on increasing Demand signal.

Serial command method

Command: drvdir *n*

Arguments: *n*
0: CW - select if the desired output shaft rotation is clockwise on increasing Demand signal.
1: CCW - select if the desired output shaft rotation is counter-clockwise on increasing Demand signal.

DRAFT

STEP SIZE

Step size represents the minimum amount that the Demand signal must change to initiate a change in actuator position.

When the actuator is in AUTO mode, the DCM-3 runs the motor until the output shaft position matches the percentage of Demand signal. When they match, power is removed from the motor. The Demand signal must change by the step size before power is returned to the motor.

The step size is factory set to 0.15% of full travel span, unless otherwise specified at the time of order. The step size is adjustable from 0.1% to 2.5% when the actuator is configured for 100 degrees of travel. Adjustment is typically not required. The minimum step size regardless of travel is 0.1°.

It may be advantageous in certain applications, where noise or other problems exist, to increase the step size slightly to prevent excessive modulation.

The step size can be changed using the following methods.

NOTE: Changing this parameter online could cause the actuator to reposition.

HART method

Command: StepSize

DD Menu Location: MENU 4B
Functions>Configuration>General Setup>

Enter the desired step size between "0.10%" and "2.50%".

Serial command method

Command: stepsize #.##

Arguments: #.## Desired step size (in degrees) of one incremental movement of output shaft travel. Acceptable range is between "0.10" and "2.50".

RESTORE FACTORY SETTINGS

All DCM-3's are shipped from the factory configured per the customer instructions at the time of order. A complete copy of the factory configuration is stored on the DCM-3. You can revert to the factory settings at any time using one of the following methods.

NOTE: When the factory settings are restored, the Operation Mode (HART DD menu location 3E or Serial command "opmode") will not be changed for safety reasons. The operation mode should be set to "Follow" for normal automatic operation.

HART method

Command: Restore to Factory
Running this function will restore all configurable parameters to the original factory settings.

DD Menu Location: MENU 3C
Functions> Configuration

Serial command method

Command: restoremodes *n*

Arguments: *n*

1: Used as a safety measure, the number one must be entered as an argument to prevent someone from running the restoremodes command errantly.

DRAFT

CONFIGURATION/CALIBRATION

TRAVEL (DEGREES ROTATION)

Travel is defined as the number of degrees of rotation by the output shaft between the 0% and 100% positions.

Unless otherwise specified, all models are factory configured for the maximum travel allowable. Linkage-connected actuators (Models 11-159, -209, -309, and -409) have a maximum travel of 100 degrees of output shaft rotation. Direct-coupled actuators (Models 11-169, -269, -369, and -469) have a maximum travel of 90 degrees rotation.

It is recommended that the maximum travel be utilized to obtain full output torque of the actuator and maximum resolution of movement. On linkage-connected actuators it is possible to utilize the maximum travel of the actuator when the driven load rotation is less than 100 degrees; for example 90 degrees of damper or valve travel. A free Link-Assist analysis can be provided by a Beck sales or application engineer. Link-Assist Service information is available for review on the *haroldbeck.com* website.

Some exceptional applications may require less actuator travel. Travel calibration can be performed to reduce actuator travel. Travel less than 60 degrees is not recommended.

On all models, the output shaft is limited by mechanical stops located between 106° and 108° of rotation, except the 11-169 which is limited to 98° of rotation.

It is possible to change the full travel of the actuator output shaft if necessary. To change the Beck output shaft full range of rotation, electronic calibration changes can be made by using one of the two procedures below. These procedures can be performed by using the methods that follow.

1. **0% and 100% Position Calibration**: Physically drive the actuator to the new 0% and 100% positions. Use the Pushbutton or HART method to set the new end points.
2. **Changing Travel in Degrees**: This allows the calibration to be changed without moving the actuator output shaft. Use the HART or Serial command method to set the desired full travel rotation in degrees (see page 28). The 0% position will remain the same, but the 100% position will change to accommodate the new travel setting.

NOTE: In addition to recalibrating the electronics, the CW / CCW over-travel switches should also be adjusted to open just beyond the new electronic limits; this ensures that manual operation with the Handswitch will not cause over-travel or create a stall condition.

DRAFT

Calibrate the 0% and 100% positions:

Pushbutton method

1. Move the output shaft to the desired 0% position.
2. Press and hold the “CALIBRATE” pushbutton then press the “SET POS 0%” pushbutton until the “ACKNOWLEDGE” LED is lit.
3. Move the output shaft to the desired 100% position.
4. Press and hold the “CALIBRATE” pushbutton then press the “SET POS 100%” pushbutton until the “ACKNOWLEDGE” LED is lit.
5. Adjust over-travel limit switches as necessary to accommodate the new rotation.

SET 0% POSITION

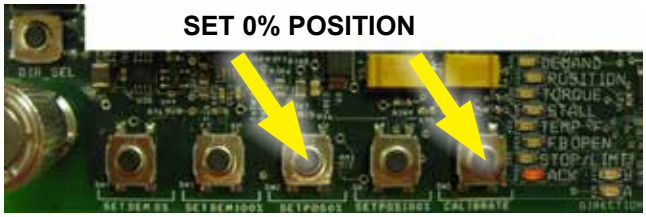

SET 100% POSITION

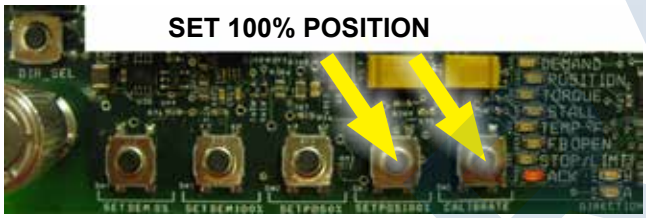

HART method

Command: Set Pos 0%
Select when the output shaft is at the desired 0% position.

Command: Set Pos 100%
Select when the output shaft is at the desired 100% position.

DD Menu Location: MENU 4C
Functions>Configuration>PositionSensrSetup>

Change Travel Degrees:

HART method

Command: Travel
Enter the desired full stroke rotation in degrees.

HART DD Menu Location: MENU 4B
Functions>Configuration>General Setup>

Serial command method

Command: travel ###

Arguments: ### The desired full-stroke rotation in degrees.

DRAFT

CONFIGURATION/CALIBRATION

DEMAND CALIBRATION

DCM-3 boards are designed to accept a 4–20 mA (or 1–5 V dc) analog Demand signal. The input comes calibrated from the factory for the full range unless otherwise specified by the customer. It is not necessary to calibrate the Demand input when the actuator is installed; however, if the Demand needs to be calibrated to accommodate unusual operating conditions, two guidelines must be followed: First, the value for 0% must be greater than 0.5 mA and the value for 100% must be less than 21 mA. Second, the difference between 0% and 100% (minimum span) must be at least 4 mA. Use any of the following methods to calibrate Demand. Actuators may also be configured for split-range operation—contact the factory for details.

Calibrate the 0% and 100% Demand signal:

Pushbutton method

1. Ensure the Handswitch is in the “STOP” position. This will prevent the actuator from repositioning during this procedure.
2. Apply the desired 0% Demand input signal to the actuator (e.g., 4 mA for 4–20 mA signal).
3. Press and hold the “CALIBRATE” pushbutton, then press the “SET DEM 0%” pushbutton until the “ACKNOWLEDGE” LED is lit.*
4. Apply the desired 100% Demand input signal to the actuator (e.g., 20 mA for 4–20 mA signal).
5. Press and hold the “CALIBRATE” pushbutton, then press the “SET DEM 100%” pushbutton until the “ACKNOWLEDGE” LED is lit.*
6. Turn the Handswitch to the “AUTO” position. NOTE: The actuator may reposition.
7. Run the actuator through its full operational range to ensure proper response to the Demand input signal.
8. Replace the compartment covers and tighten the cover bolts to 10 lb-ft (14 N•m) torque.

*If the “ACKNOWLEDGE” LED does not light, but the “Demand” LED does light, the calibration is out of acceptable range and was not accepted by the DCM-3. This is typically caused by trying to set 0% and 100% values too close together (i.e., less than 4 mA difference).

SET 0% DEMAND



SET 100% DEMAND

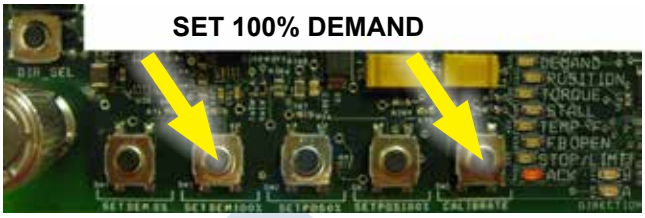

HART method

Command: DemRngLwr
Enter the desired 0% Demand signal ("4.00" to "16.00" mA).

Command: DemRngUpr
Enter the desired 100% Demand signal ("8.00" to "20.00" mA).

DD Menu Location: MENU 4D Functions>Configuration>Demand Setup>

Serial command method

Command: dem0pctma **#.##**

Arguments: #.## Desired 0% Demand signal ("4.00" to "16.00" mA).

Command: dem100pctma #.##

Arguments: #.## Desired 100% Demand signal ("8.00" to "20.00" mA).

DRAFT

LOSS OF DEMAND SIGNAL (LOS)

The DCM-3 is capable of determining if the Demand input signal to the actuator is outside of an acceptable range. The DCM-3 uses a configurable loss of signal (LOS) threshold to determine if the Demand signal falls below a minimum value. Unless otherwise specified in the original order, the factory-set threshold is 3.2 mA. When the DCM-3 senses an LOS condition, an alarm condition will result, illuminating the "Demand" status indication LED. The actuator then responds according to the LOS setting. The DCM-3 can be configured for one of two LOS actions:

1. **Stay in Place**—the actuator output shaft stays in place until the Demand signal returns to the acceptable range. This is the factory default.
2. **Go-to-Position**—the actuator output shaft will move to a preset position, designated in percentage of travel. For example, if the LOS action is set for 50%, the actuator output shaft will drive to the 12 mA position (based on a 4-20 mA span).

The LOS parameters can be configured using HART or Serial commands.



CAUTION

The following procedures could cause the actuator to reposition, which can adversely affect the process and cause potentially dangerous conditions.

Configure the LOS threshold:

HART method

Command: DemLimLwr
Enter "0.00" to "12.00" mA. Decimal value of the lower threshold for detecting LOS. (e.g., the typical value for a 4–20 mA system is "3.20").

DD Menu Location: MENU 4D
Functions>Configuration>Demand Setup>

Serial command method

Command: demlos ###

Arguments: ### Enter the desired Demand signal in mA below which LOS occurs (e.g., the typical value for a 4–20 mA system is "3.20").

Configure the LOS mode:

HART method

Command: LOS Mode

DD Menu Location: MENU 4D
Functions>Configuration>Demand Setup>

Selections:

Stay - select if the actuator should hold output shaft position when a loss of signal occurs.

Go-to-Pos - select if the output shaft should go to a specific position when a loss of signal condition occurs. Configure the position with LOS Pos.

Serial command method

Command: demlos *n*

Arguments: *n* Enter the desired mode

sip: (actuator will stay in place).

gtp: (actuator will go to position set in "demlosgtp" command)

pat: (same as "sip", but suppresses the alarm).

Configure the LOS position when Go-to-Pos is selected:

HART method

Command: LOS Pos
Enter "-5.00%" to "105.00%". The percentage of full travel the actuator will move upon LOS.

DD Menu Location: MENU 4D
Functions>Configuration>Demand Setup>

Serial command method

Command: demlosgtp ##.##

Arguments: ##.## Desired position of actuator if "gtp" is selected in "demlos". Position is expressed as a percentage of actuator travel in decimal form (e.g., 50% = "50.00").

Command: demlosgtp delay *n*

Arguments: *n* Time delay in seconds before the actuator will move to the position set in "demlosgtp" (0 to 25.5 seconds). Default is "0".

Entering this command without an argument will return the present GTP and delay settings.

DRAFT

CONFIGURATION/CALIBRATION

DEMAND CHARACTERIZATION CURVES

The DCM-3 can be configured to interpret the applied Demand signal for linear or non-linear output shaft position response. Three predefined Demand signal response curves are available for use including: Linear, Square, and Square Root. A chart of each of these predefined responses is provided for your reference.

In addition to the three predefined characterizer curves, the DCM-3 also allows a custom user-defined curve to be configured. This option is called "Dem Curve Spcl".

The Demand characterization curve type can be configured with the following methods.

Change the Demand characterization curve:

HART method

Command: Dem Curve

DD Menu Location: MENU 4D
Functions>Configuration>Demand Setup

Selections:
Linear - select if the actual position % should match the applied Demand %.

Square Root - select if the actual position % should match the square root of the applied Demand %.*

Dem Curve Spcl - select if a user-defined response is desired (see characterization on the following page to define the desired response curve).

Square - select if the actual position % should match the square of the applied Demand %.

Serial command method

Command: demfunc *n*

Arguments: ***n*** Enter the integer that represents the desired Demand signal response as follows:

0: Linear - select if the actual position % should match the applied Demand %.

1: Square Root - select if the actual position % should match the square root of the applied Demand %.

4: Special Curve - select if a user-defined response is desired (see characterization on the following page to set the desired response curve).

5: Square - select if the actual position % should match the square of the applied Demand % (e.g., "demfunc 0" sets the actuator to a linear Demand response).

DEMAND SIGNAL RESPONSE CURVES

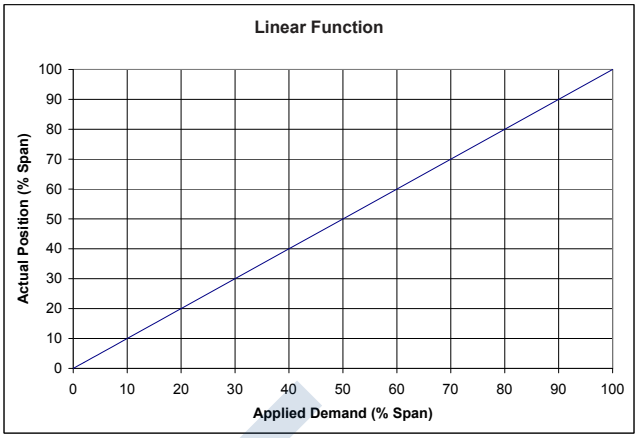

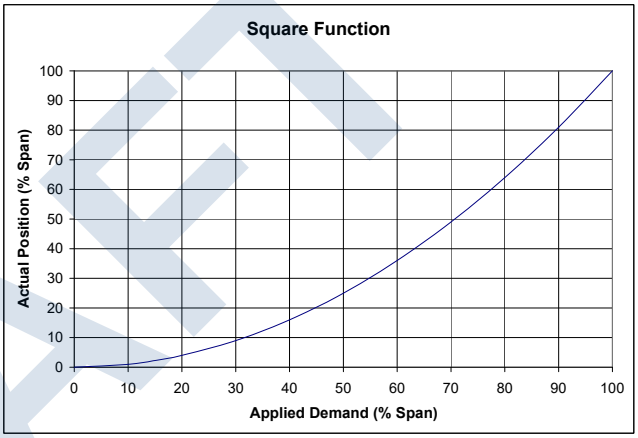

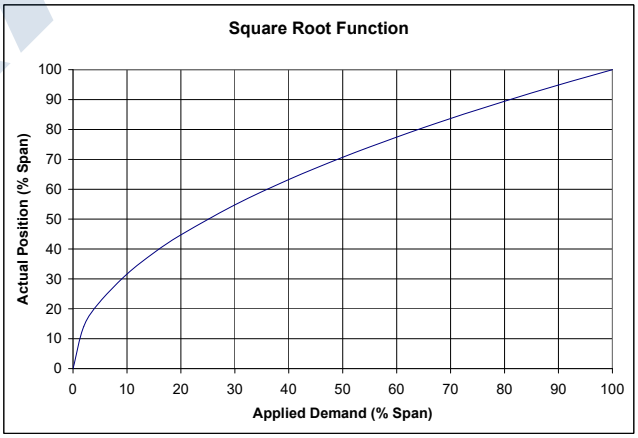

***NOTE**

Implementing a square root characterization creates extremely high gain when the Demand signal is below 10%; this causes instability and is unsuitable for control at this level. Do not apply this curve if the control loop may need to modulate at the lower range of travel.

DRAFT

USER-DEFINED CHARACTERIZATION

Not available with all DCM versions. Special curves may be created from up to 20 segments, each of which has a node for a starting point and a node for an ending point. All 20 segments do not have to be used, but the used segments must be grouped together starting with segment 1. Segments cannot be skipped.

A node is a coordinate comprised of an X,Y point. When defining nodes, X-values and Y-values must increase as the node number increases. For example, the X-value and Y-value of node 2 must be higher than the X-value and Y-value of node 1. Nodes cannot be skipped. Always start at node 1.

Unless otherwise specified, the Special curve ships from the factory defined as a linear function (i.e., one segment beginning with node 1 at X = 0%, Y = 0% and ending with node 2 at X = 100%, Y = 100%). X-values are typically chosen to give a reasonable spacing in Y-values.

The customer may specify a custom characterization by entering X- and Y-value pairs to define line segments between 0% and 100%.

For example, the table at right uses 5 segments to approximate the square function curve (i.e., $y=x^2$). Segments 1 through 5 are needed, so nodes 1 through 6 are used.

The following methods can be used to configure a user-defined characterization curve.

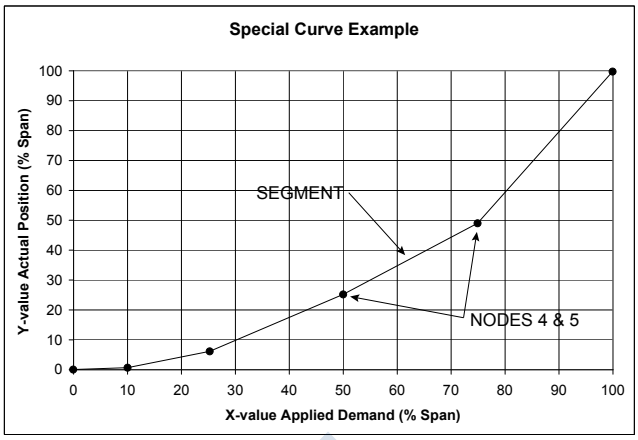

NODE	X-VALUE (DEMAND) % SPAN	Y-VALUE (POSITION) % SPAN
1	0%	0%
2	10%	1%
3	25%	6%
4	50%	25%
5	75%	49%
6	100%	100%

Change the user-defined characterization:

HART method

Command: DemNode1X
Enter desired X-value as a percentage for node 1

Command: DemNode1Y
Enter desired Y-value as a percentage for node 1

Repeat above procedures for each node required.

DD Menu Location: MENU 5A
Functions>Configuration>Demand Setup>Dem Curve Spcl

Serial command method

Change the user-defined characterization:

Command: charset *n1, n2, n3*

Arguments: *n1, n2, n3*
Where:
n1 = node number.
n2 = X-value as a percentage.
n3 = Y-value as a percentage.
Values must be separated by commas as shown.
Repeat procedure for each node required.

View the user-defined characterization:

Command: charlist ###

Arguments: ### Enter node number between 1 and 21 or "all".
Displays defined nodes.

Clear the user-defined characterization:

Command: charclear ###

Arguments: ### Enter node number between 1 and 21.
Clears a defined node by setting it to unused.
Will also clear any node numerically higher.

DRAFT

CONFIGURATION/CALIBRATION

POSITION FEEDBACK SIGNAL

DCM-3 control electronics provide a 4–20 mA analog output signal that represents the actuator output shaft position. The DCM-3 monitors an internal position voltage from the CPS-5, controls the actuator position, and sources a 4–20 mA signal to terminals DD (–) and EE (+). The Feedback will correspond with the 0% and 100% output shaft positions, as determined by the position calibration (page 31). **There is no need for separate Feedback calibration.**

The user has the option of enabling or disabling the position Feedback signal. The factory default configuration will have the Feedback enabled. When the Feedback is enabled, but not in use (i.e., not wired to a load) the "STAT" and "FB OPEN" LEDs will illuminate. This status alarm is helpful in alerting the user to open Feedback wiring, but can be a nuisance when the Feedback is purposely disconnected or unused. Disabling the Feedback signal turns off the output and eliminates the status alarm. If HART or Serial communications are not immediately available to disable the Feedback signal, you can apply a 250 ohm load resistor across the Feedback terminals DD (–) and EE (+) to simulate a Feedback loop and eliminate the alarm.

Use the HART or Serial Commands (detailed on the next page) to set the Feedback signals and corresponding output shaft positions as detailed below.

If desired, the milliamp position Feedback values for 0% and 100% positions can be configured differently than the respective standard factory calibration of 4 mA and 20 mA. A valid 0% position Feedback signal value can be configured anywhere in a 3–16 mA range, while a 100% signal value can be configured from 7–21 mA. The 100% milliamp value must exceed the 0% value by at least 4 mA.

Also, reversed (decreasing direction) Feedback may be selected so that the position resulting from a 4 mA Feedback signal corresponds to the position typically resulting from a 20 mA signal; e.g., 4 mA = 100% position and 20 mA = 0% position. Setting the 0% position to 20 mA will automatically set the 100% position to 4 mA (and vice-versa), and will activate the reverse (decreasing) Feedback function. After accepted, these settings may then be changed as detailed in the paragraph above, only opposite; i.e., a valid 0% position Feedback value is 7–21 mA, while a 100% position may be set at 3–16 mA. The difference between the values can be no less than 4 mA and no greater than 18 mA.

The factory calibrated relationship between the position Feedback signal and the output shaft position is linear (i.e., 0% to 100% Feedback signal corresponds directly with 0% to 100% shaft position). This relationship is suitable for most applications; however, the Feedback to Demand relationship can be changed to compensate for characterized Demand signals. This relationship is called “Inverse Demand”. Configuring this option allows the position Feedback signal to match the uncharacterized Demand signal rather than true output shaft position.

The following example assumes 4–20 mA Demand and position signals. If the Demand is set to a square characterization, then a 12 mA Demand corresponds to 25% position. If the position Feedback curve is set to linear, then Feedback at 25% is 8 mA. For some control systems, having the Demand at 12 mA and the Feedback at 8 mA may cause a deviation alarm. The Feedback curve can be set to "Inverse Demand" so the Demand and Feedback match when the actuator is balanced. In this example, with Feedback set to "Inverse Demand" and the output shaft position at 25%, the Feedback signal would be 12 mA.

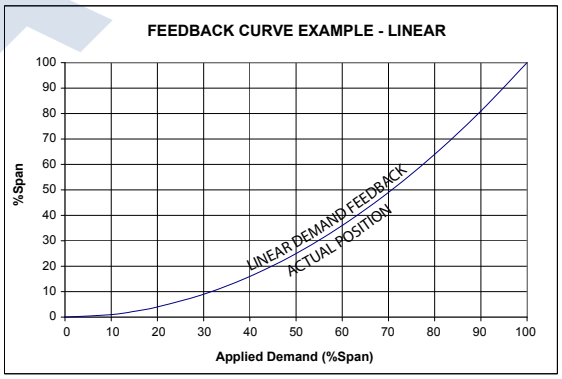

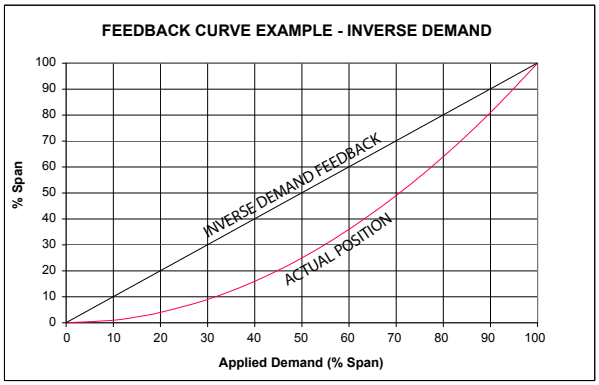

DRAFT

The following methods describe how to enable or disable position Feedback, set the 0% and 100% milliamp values and select the desired Feedback response.

Enable/disable the position feedback:

HART method

Command: Feedback

DD Menu Location: MENU 4E
Functions>Configuration>Feedback Setup>

Selections:

Enabled - to enable position Feedback.

Disabled - to disable position Feedback.

Serial command method

Command: iomode *n*

Arguments: *n*

0: Feedback disabled.

1: Feedback enabled.

Set the feedback range lower and upper values:

HART method

Command: FB RngLwr
Enter the milliamp value that corresponds with 0% position. Acceptable range "3.00"–"16.00" (typically, "4.00"). If reversed, the acceptable range is “7.00”–”21.00” (typically, “20.00”).

Command: FB RngUpr
Enter the milliamp value that corresponds with 100% position. Acceptable range "7.00"–"21.00" (typically, "20.00"). If reversed, the acceptable range is “3.00”–”16.00” (typically, “4.00”).

DD Menu Location: MENU 4E
Functions>Configuration>Feedback Setup>

Serial command method

Command: fdbk0pctma #.##

Arguments: #.## Desired Feedback signal in mA at 0% output shaft position. The value limit may be no less than "3.00" or, if reversed (decreasing direction), no greater than “21.00”.

Command: fdbk100pctma #.##

Arguments: #.## Desired Feedback signal in mA at 100% output shaft position. The value limit may be no greater than "21.00" or, if reversed (decreasing direction), no less than “3.00”.

Set the feedback characterization curve:

HART method

Command: FB Curve

DD Menu Location: MENU 4E
Functions>Configuration>Feedback Setup>

Selections:

Linear - to enable a linear feedback signal

InvDem - to enable an inverted Demand feedback signal.

Serial command method

Command: fdbkfunc *n*

Arguments: *n*

0: Linear Feedback signal.

1: Inverse Demand Feedback signal.

DRAFT

CONFIGURATION/CALIBRATION

TORQUE SENSING (Optional)

Torque sensing is an optional feature that measures the output torque of the actuator as a percentage of its rated torque capability. It provides a number of configurable features including live torque measurement, historical peak torque data, overtorque alarm and overtorque protection. Torque sensing cannot be retrofitted into existing actuators.

Actuators equipped with optional torque sensing are calibrated at the factory. There should never be a need to calibrate the torque measurement; however, if the DCM-3 is ever replaced, the torque sensing calibration constants will need to be set. There are two calibration constants consisting of a torque signal null (zero) and a torque signal span. These constants are unique to the actuator and are printed on a label inside the DCM compartment. If these values are no longer legible, contact the factory with the actuator serial number and the constants can be provided.

Although actuators are shipped from the factory with torque sensing enabled, the overtorque protection feature is disabled. Torque sensing and overtorque protection can be either enabled or disabled, as desired. In addition, the torque alarm threshold value can be changed, as can the overtorque protection threshold.

The following methods allow the user to enable/disable torque sensing, set the torque null, and set the torque constant. Methods for using and configuring the other torque features also follow:

Enable / disable torque sensing:

HART method

Command: Trq/Thrust

DD Menu Location:MENU 4F
Functions>Configuration>Torque Setup>

Selections:

Enabled - to enable torque sensing.

Disabled - to disable torque sensing.

Serial command method

Command: torqenable *n*

Arguments: ***n***

0: disables torque sensing and torque alarm.

1: enables torque sensing and torque alarm.

Set the torque null and constant values:

HART method

Command: Trq Null
Number representing 0% torque. Enter the torque null value that is affixed to the actuator body inside the terminal compartment.

Command: Trq Const
Number representing the torque span value. Enter the torque constant value that is affixed to the actuator body inside the terminal compartment.

DD Menu Location:MENU 4F
Functions>Configuration>Torque Setup>

Serial command method

Command: torq0k ###

Arguments: ### Number representing 0% torque. Enter the torque null value that is affixed to the actuator body inside the terminal compartment.

Command: torqconst **###**

Arguments: ### Number representing the torque span value. Enter the torque constant value that is affixed to the actuator body inside the terminal compartment.

LIVE / HISTORICAL TORQUE

The live torque measurement can be accessed through the HART or serial port interface. Historical peak measurements are recorded for 10 equal segments of travel in both the CW and CCW travel directions. Historic data is also available through the HART or serial port interface.

View the live torque measurement:

HART method

Command: Trq/Thrust
Displays the present torque reading as a percentage of the actuator's rated torque.

DD Menu Location: MENU 1

Serial command method

Command: torq
Displays the torque on the output shaft measurement as a percentage of actuator rating.

Arguments: No argument required.

DRAFT

View historical peak torque values:

HART method

Command: Segment 1 through 10
Displays the historical peak torque values. Values are displayed for every 10% segment of full actuator travel and also for both the CW and CCW directions of travel.

DD Menu Location: MENU 4J
Functions>Diagnostics>CW Torque

DD Menu Location: MENU 4K
Functions>Diagnostics>CCW Torque

Serial command method

Command: torqprof

Displays a three table column:
1. Travel divided into 10 segments
2. peak torque measured in each segment with motor running CW
3. peak torque measured in each segment with motor running CCW

Arguments: No argument required.

OVERTORQUE PROTECTION
(Requires Optional Torque Sensing)

Overtorque protection protects both the actuator and driven equipment from damage when the torque exceeds the set threshold (configurable). Actuators normally ship from the factory with this feature disabled, but it can be enabled in the field using either HART or the serial interface. The factory configured threshold is 150% of rated actuator torque, and can be configured as low as 25%.

The following methods show how to enable/disable the overtorque protection and how to set the threshold.

Enable / disable overtorque protection:

HART method

Command: Ovt Prot

DD Menu Location:MENU 4F
Functions>Configuration>Torque Setup>

Selections:

Enabled - to enable overtorque protection.

Disabled - to disable overtorque protection.

Serial command method

Command: ovtstop *n*

Arguments: *n*

0: disables overtorque protection.

1: enables overtorque protection.

Set the overtorque protection threshold:

HART method

Command: ShutDwnTrq
Enter the overtorque protection threshold as a percentage of rated torque (25%–150%).

DD Menu Location:MENU 4F
Functions>Configuration>Torque Setup>

Serial command method

Command: ovtstoplevel ###

Arguments: ### the overtorque protection threshold as a percentage of rated torque (25% to 150%).

OVERTORQUE ALARM
(Requires Optional Torque Sensing)

When the torque reaches an alarm threshold (factory configured for 105% of rated torque), a status alarm will be initiated causing the STAT LED to illuminate. Disabling the torque sensor also disables the torque alarm. When the measured torque drops below the threshold the status alarm is automatically reset.

The following method allows the user to set the torque alarm threshold between 61% and 105%.

Set the torque alarm threshold:

HART method

Command: AlarmLevel
Enter the alarm level as a percentage of torque (61%–105%).

DD Menu Location:MENU 4F
Functions>Configuration>Torque Setup>

Serial command method

Command: torqalarm **###**

Arguments: ### Alarm level as a percentage of torque (61%–105%).

DRAFT

TEMPERATURE SENSING

DCM-3s are equipped with an internal temperature sensing circuit. The real-time temperature and the historical temperature extremes (low and high) are available.

Temperature units can be selected to show either Fahrenheit or Celsius.

An alarm condition initiates if the actuator's real-time temperature falls outside the actuator rating (see "General Specifications", page 4). The STAT LED and the TEMP F LED will light, and will automatically reset when the temperature is once again within the actuator rating.

View real-time temperature & historical extremes:

HART method

Command: Temp
Displays the real-time temperature as read by the DCM-3.

DD Menu Location: MENU 1

Command: High Temp
Displays the historical high temperature.

Command: Low Temp
Displays the historical low temperature.

DD Menu Location: MENU 3D
Functions>Statistics

Serial command method

Command: temperature

Arguments:

When entered with no argument, the command returns the real-time temperature as well as the historical high and low temperatures.

Set temperature units:

HART method

Command: Temperature Unit

DD Menu Location: MENU 4B
Functions>Configuration>General Setup

Selections:

degF - Set the temp. units to degrees Fahrenheit.

degC - Set the temp. units to degrees Celsius.

Serial command method

Command: temperature *n*

Arguments: *n*

F: Set the temp. units to degrees Fahrenheit.

C: Set the temp. units to degrees Celsius.

DRAFT

STALL PROTECTION

The DCM-3 board provides protection for the actuator in the event of a stall. Stall protection is activated when the actuator is unable to achieve the proper position within a defined stall time due to a mechanical impediment or excessive load.

The DCM-3 senses when the motor moves the output shaft in one direction longer than the configured “stall time”. The DCM-3 then shuts off power to the motor, preventing further actuator movement. When the stall condition occurs, the STAT LED will illuminate.

Resetting due to a stall condition is achieved by reversing the Demand signal, cycling the actuator power, or submitting a reset command via HART or Serial port.

The stall protection feature can be enabled or disabled and the stall time may be configured between 30 and 450 seconds. This feature is factory enabled and the default setting is 300 seconds. If reconfiguring, it is advisable to configure the stall time with a value greater than the maximum stroke time to avoid false stall protection events and alarms.

Enable / disable stall protection:

HART method

Command: StallProt

DD Menu Location: MENU 4B
Functions>Configuration>General Setup>

Selections:

Enabled - to enable stall protection.

Disabled - to disable stall protection.

Serial command method

Command: stallprot *n*

Arguments: *n*

0: stall protection disabled.

1: stall protection enabled.

Configure the stall time:

HART method

Command: Stall Time
Enter the stall time in seconds. Valid stall times are 30 to 450 seconds.

DD Menu Location: MENU 4B
Functions>Configuration>General Setup>

Serial command method

Command: stalltime ###

Arguments: ### Enter the stall time in seconds. Valid stall times are "30" to "450".

Reset a stall condition:

HART method

Command: Reset Stall
Select to reset a stall condition.

DD Menu Location: MENU 3E
Functions>Manual Operation>

Serial command method

Command: unstall
Enter to reset a stall condition.

DRAFT

MOTOR ASSEMBLY

The control motor is not field-repairable. **Do not disassemble the motor.** Disassembly of the motor will result in a loss of torque that can only be restored by returning the motor to the factory for re-magnetizing.

Motor assembly replacement instructions follow:



WARNING

Disconnect power before proceeding.

Before removing the motor assembly, block the crank arm (if applicable) to prevent the crank arm and gear train from moving when the motor is removed.

REMOVE THE MOTOR ASSEMBLY:

Disconnect the motor wires in the terminal compartment of the actuator. The terminal block, along with the barrier plate or chassis (depending upon the model), should be removed as an assembly from the actuator body to access the wires beneath.

After lifting the chassis or barrier plate assembly, the three motor wires may now be disconnected. Remove the black motor wire from the terminal "B" post, cut the red motor wire near the red-yellow-red butt joint and disconnect the green wire from the motor capacitor. Remove the mounting screws and then carefully slide the motor assembly out of the actuator body.

INSTALL THE NEW MOTOR ASSEMBLY:

First, insert the three-wire sleeve through the wire hole in the motor mount and into the terminal compartment. Carefully slide the motor into the actuator body. Rotate the motor shaft, if necessary, to engage the pinion with the first combination gear. Install new motor assembly mounting screws (provided) and torque to recommended values (shown in torque tables pages 6-11). Reconnect the motor wires per your actuator specific wiring diagram (under terminal compartment cover).

Inspect the barrier plate gasket (if applicable) and replace if necessary (see GASKETS in this section). To ensure a watertight seal between the plate and gasket, coat the gasket with a thin film of grease before replacing the terminal plate. Torque the screws to 3 lb-ft (4 N•m).

MOTOR RESISTOR AND CAPACITOR NETWORK

There is no recommended replacement interval for the R-C) components. Nonetheless, it may be advisable to replace these parts as a preventative measure when motors are replaced on older actuators; this is why they are recommended spare parts.

The R-C values and part numbers for each motor assembly are shown in the "Gaskets, Motors, Resistors & Capacitors" table on page 54. The resistor and capacitor are located in the wiring compartment below the terminal block.

To replace a resistor or capacitor, first remove the terminal cover, then follow the model specific directions below.



WARNING

Electrical shock hazard. Disconnect power before proceeding.

11-1_9:

Remove the terminal block and chassis assembly. The capacitor is fastened to the underside of the chassis with a panduit strap next to the resistor, which is fastened to the chassis with screws. Remove the panduit strap or screws securing the existing part. Transfer the wires one at a time from the existing part to the new replacement part. Fasten the new part with a new panduit strap or screws.

11-2_9, 11-3_9, 11-4_9:

Remove the terminal block and barrier plate as an assembly to access the resistor and capacitor components. The capacitor(s) is fastened to the actuator body wall with a bracket and screws. The resistor assembly plate is also fastened to the body wall with screws. After removing the mounting screws (and bracket, if necessary), remove the existing part and transfer the wires one at a time from the existing part to the new replacement part (in some configurations, access to the screws may require removal of the DCM-3 compartment cover). Fasten the new parts in the same manner as the replaced parts.

Inspect the terminal plate gasket and replace if necessary (see GASKETS in this section). To ensure a watertight seal between the plate and gasket, coat the gasket with a thin film of grease before replacing the terminal plate. Torque the screws to 3 lb-ft (4 N•m).

DRAFT

FUSE (F1) REPLACEMENT (FOR ACTUATORS EQUIPPED WITH OPTIONAL 208V OR HIGHER POWER SUPPLY)

If it is necessary to replace the power fuse (F1), use the following procedure:

WARNING

Electrical shock hazard. Disconnect power before proceeding.

Remove the terminal block cover. Locate the fuse holder (similar to the illustration below).

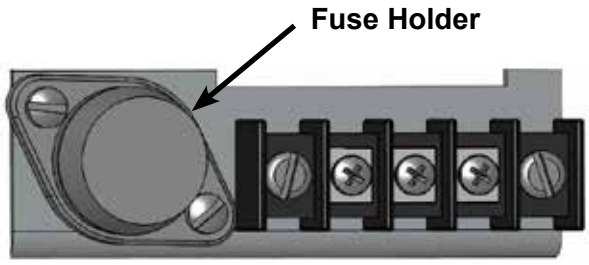

Turn the fuse holder CCW while pressing down. The fuse holder should spring loose when free. Remove the fuse holder from the actuator. Pull the fuse free from the holder. Replace the fuse with the same type (see table below) by pushing it into place.

Reinsert the fuse holder into the actuator. Turn the fuse holder CW while pressing down to tighten. Replace the terminal block cover. Tighten the cover screws to 6 lb-ft (8 N•m) torque.

REPLACEMENT FUSES (F1)

Actuator	Input Voltage	Amps	Volts	Type	Part No.
11-150 -160	208	0.75	250	Time Delay	11-1370-23
	240	0.75	250	Time Delay	11-1370-23
	380	0.4	600	Time Delay	11-1372-18
	415	0.3	600	Time Delay	11-1372-17
	480	0.3	600	Time Delay	11-1372-17
	575	0.25	600	Time Delay	11-1372-28
11-200 -260 -300 -360	208	1.0	250	Time Delay	11-1370-24
	240	1.0	250	Time Delay	11-1370-24
	380	0.6	600	Time Delay	11-1372-14
	415	0.5	600	Time Delay	11-1372-27
	480	0.5	600	Time Delay	11-1372-27
	575	0.4	600	Time Delay	11-1372-18
11-400 -460	208	3.2	250	Time Delay	11-1370-25
	240	3.2	250	Time Delay	11-1370-25
	380	1.8	600	Time Delay	11-1372-32
	415	1.6	600	Time Delay	11-1372-31
	480	1.4	600	Time Delay	11-1372-30
	575	1.25	600	Time Delay	11-1372-29

LUBRICATION / GEARING

Periodic lubrication is not required on Beck actuators. However, if your actuator has a linkage with rod ends supplied by Beck, the rod ends should be included in your scheduled lubrication program.

During major maintenance outages, it is recommended that older actuators should be inspected to ensure that the gearing is not worn or damaged.

To inspect the gears, remove the gear module assembly on the 11-209/-269, -309/-369 and -409/-469. On Model 11-159/-169, the motor must be removed to access the gears. Clean the gears, removing as much old lubrication as possible.

Examine the gear teeth, shaft bore, and gear shafts for signs of excessive wear, scoring, or other damage. If there is no evidence of damage to the gearing, recoat the teeth and shaft bores of all gears with a heavy layer of Fiske Lubriplate GR-132 or equivalent (GR-132 is an extreme pressure grease with polymer additives). The ball bearing on the output shaft and crown gear shaft have double grease seals and require no maintenance for the life of the bearings. Inspect all other grease seals and replace any that show wear. Reassemble the actuator, referencing the outline dimension drawings beginning on page 6 for appropriate bolt torques.

If it should ever be necessary to replace the output shaft assembly, 3rd combination gear, or output shaft bearings, a major overhaul is required and the actuator must be returned to the factory for a repair evaluation.

CAUTION

Before removing the gear module assembly from the actuator body, secure the output shaft to prevent movement.



11-409 Gear Module

DRAFT

MAINTENANCE

SELF LOCKING MECHANISM (SLM)

The Self Locking Mechanism (SLM) is assembled to the front of the motor and couples the motor to the gear train. The primary function of the SLM is to lock the gear train in place when the motor is de-energized. When the motor is energized, the SLM releases and allows the motor to drive the gearing.

There is no recommended maintenance interval for the SLM. The SLM can last for many years in normal service. SLM wear is a function of loading and the number of starts/stops the motor experiences over time. Overloading or stalling the actuator will accelerate SLM wear.

Signs of wear include the inability of the actuator to hold position when the motor is de-energized. This could result in persistent on-off oscillation. Severe SLM wear or damage may result in a loss of torque at the output shaft.

It is often possible to confirm SLM wear or damage by checking motor operation with the Handwheel. Place the Handswitch in the STOP position, and rotate the motor Handwheel back and forth. There should be free play before the motor pinion/gearing turns (up to one tenth of a full Handwheel rotation). Lack of free play or rough motor movement may indicate the need for SLM reconditioning.

Disassembly and close inspection of the SLM components is required to fully evaluate its condition.



WARNING

Electrical shock hazard. Disconnect power before proceeding.

Support the load before removing the motor/SLM from the actuator.

SLM REBUILD KIT MAJOR COMPONENTS
(Descriptions & Part Numbers)

Model Number	11-1_9			11-2_9 / 11-3_9		11-4_9	
Motor Assembly	20-2204-20, 20-2204-21	20-2700-20	20-2701-20, 20-2701-51	20-2704-21	20-2705-21, 20-2705-51	20-2201-31, 20-2201-32, 20-2201-33	20-2201-35
Rebuild Kit (NF-119)	N/A	12-8060-15	12-8060-16	N/A	N/A	N/A	N/A
Rebuild Kit (GL181-134)	12-8066-38	N/A	N/A	12-8066-39	12-8066-40	12-8067-13	12-8067-14
Spring	14-9980-01	14-9980-10	14-9980-12	14-9980-01	14-9980-06	14-9980-26	
Friction Material (NF-119)	N/A	13-0080-04		N/A		N/A	
Friction Material (GL181-134)	14-9409-58	N/A		14-9409-58		14-9409-52	
Spring Pin	10-7111-03	10-7111-06		10-7111-03		10-7111-05	
Stop Collar	14-9380-10	14-9380-09		14-9380-08		N/A	
Thrust Washer/ Bearing	14-9400-21	14-9400-16		13-0350-01		14-9400-02	
Pinion	14-9940-44	14-9940-10		14-9940-06		14-9940-17	14-9701-12
Steel Ball	14-9420-01 (8)	14-9420-02 (6)		14-9420-01 (8)		14-9420-03 (8)	
Locking Disc	14-9330-05	14-9330-15		14-9330-05		14-9330-19	
Steel Shim	30-0315-23			30-0315-45 (2)		N/A	
Steel Shim	30-0315-24			30-0315-46 (2)		N/A	
Motor Gasket	20-0660-15			20-0660-27		20-0660-08	
Instruction Sheet	80-0016-16	80-0016-05		80-0016-07		80-0016-02	
Terminal Joint	20-0032-01 (3)						
Slip-on Terminal	20-0030-01						
Spacer	N/A					20-2090-03	20-2311-07
O-ring	N/A					14-9840-16	
Motor Screw	30-0307-35 (4)			30-0311-86 (4)		30-0306-40 (4)	

DRAFT

DISASSEMBLY AND CLEANING

When wear or damage is suspected, disassembly and cleaning may be required to determine the extent of needed repairs. Individual parts may be replaced, with the exception of the drive collar, which is not field replaceable. Refer to the illustration at right.

For SLM disassembly and inspection:

1. Disconnect power from the actuator.
2. Secure the actuator load, and remove the motor assembly (see page 42). Handle the motor with care so as not to damage the rotor shaft.
3. Pushing down firmly on the pinion, measure the gap between the stop collar and the thrust washer. This distance should measure 0.015 ± 0.005" for motors on models 11-1_9, 11-2_9, and 11-3_9. This distance should measure 0.025 ± .005" for motors on models 11-4_9. An excessive gap indicates worn SLM components.
4. Use a felt tip pen to mark the location of the stop collar (or castle nut) on the shaft. Support the end of the rotor shaft to prevent it from bending, and drive the 1/8" spring pin out. Carefully (the spring assembly is spring-loaded), remove the stop collar (or unthread the castle nut), thrust washer/bearing, spacer (models 11-4_9 only), pinion, spring, and steel balls. On 11-4_9 models, remove the (4) 1/4-20 screws and the front motor end (see the 11-4_9 SLM Components figure on page 45). DO NOT remove the front motor shield or the rotor from the stator on any model.

CAUTION

Do not disassemble the motor any further, as it has no other user serviceable parts. Further disassembly will result in demagnetization of the motor and loss of the required torque.

5. Clean grease from the pinion and locking disc for inspection. A small amount of dust residue from the friction material is normal. Clean the drive collar detents with a rag and inspect for wear. Inspect the friction material for excessive wear or damage. If the friction material does not appear to be damaged, clean with alcohol to remove any contaminants.
6. Identify worn parts and replace as needed. Note, wear on the pinion teeth may indicate wear on the meshing gear. Further inspection of the gear module assembly is recommended. Drive collar detent wear will require factory repair of the motor.

REPLACEMENT AND REBUILD INSTRUCTIONS

1. If the friction material requires replacement, scrape off the old friction material and thoroughly clean the bonding surface to ensure flatness for the new friction material. Glue the new friction material in place with Loctite 454 Instant Adhesive or equivalent, taking care to keep the material flat and clean.
2. Apply a film of grease (Fiske Lubriplate GR-132 or equivalent) to the surface of the ball detents (12 or 16 places depending on the model). Apply a *thin* film of grease to the inner diameter of the locking disc bore. Do not let the grease contact any friction surfaces. Excess grease can contaminate the friction surface and reduce SLM effectiveness.
3. With the motor shaft pointed up, place a steel ball into each of the drive collar detents. Install the locking disc and place a steel ball into each of the detents on the top of the locking disc.

Continue with the appropriate steps for your model number on the next page.

Continued

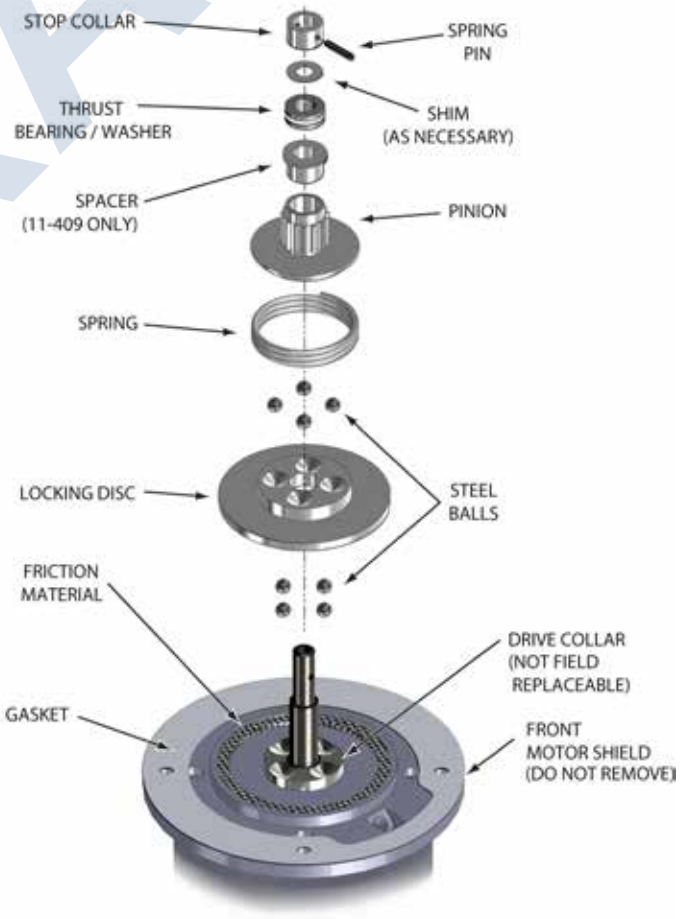

11-1/2/3__ SLM COMPONENTS

DRAFT

Replacement & Rebuild (cont'd)

Models 11-1_9, 11-2_9 & 11-3_9

4. Install the pinion, thrust bearing/washer, and stop collar as follows: On model 11-1_9 actuators, the white side of the thrust washer should face the pinion. Make sure all steel balls are properly seated in the detents of the drive collar, locking disc, and pinion. Align the stop collar with the shaft marks made during disassembly and insert a 1/8" pilot punch through the stop collar hole and into the motor shaft to hold it in place.
5. Pushing down firmly on the pinion, measure the gap between the stop collar and the thrust bearing/washer. This distance should measure 0.015 ± .005". This space is necessary to ensure proper operation. Add/remove shims as necessary. Install the new 1/8" spring pin while supporting the shaft.
6. Install the spring by slipping it over the pinion flange and twisting it into place.
7. On model 11-1_9 actuators, reassemble combination gears onto the motor end. On all models, recoat the gear teeth and components above the pinion liberally with a layer of Fiske Lubriplate GR-132 or equivalent.

Models 11-4_9

4. Install the spring on top of the locking disc. Compress the spring by pushing down with the pinion. While holding the pinion in place, install the spacer, thrust bearing, and castle nut (stop collar). Note: The grooved washers on each end of the thrust bearing have differently sized holes; the end with the washer having the smallest hole should be installed next to the castle nut. Thread the castle nut onto the shaft to hold the spring in compression.
5. Replace the front motor end O-ring (see figure below) and install the front motor end with the (4) 1/4-20 screws in a crisscross pattern, torquing to 6 lb-ft (8 N•m). Place RTV around the wire entry into the motor.
6. Pushing down firmly on the pinion, measure the gap between the castle nut and the thrust bearing. This distance should measure 0.025 ± .005". This space is necessary to ensure proper operation. Tighten or loosen the castle nut as necessary to achieve the proper gap and simultaneously align one of the slots with the hole in the motor shaft. One complete slot rotation will change the gap by 0.009". Install the new 1/8" spring pin while supporting the shaft.
7. Recoat the gear teeth and components above the pinion liberally with a layer of Fiske Lubriplate GR-132 or equivalent.

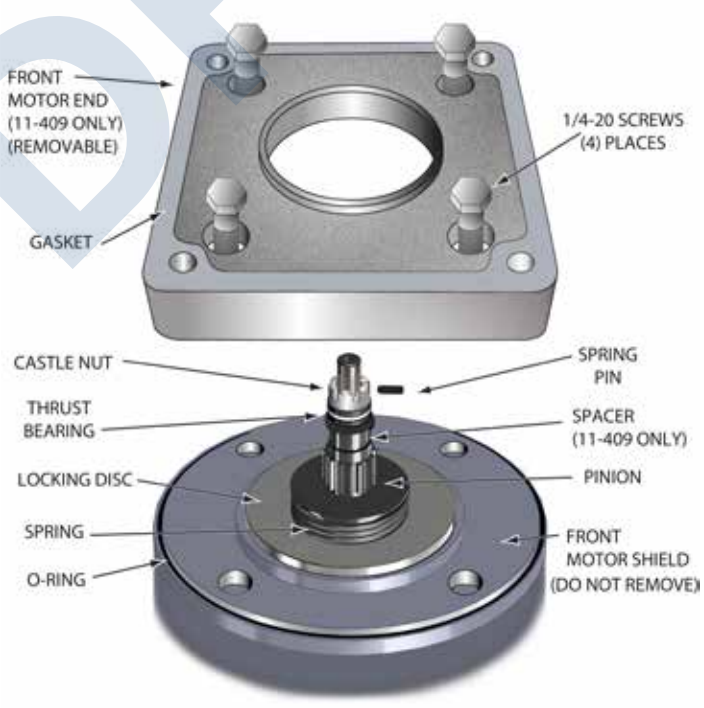

11-4_9 SLM COMPONENTS

DRAFT

OVER-TRAVEL LIMIT AND AUXILIARY SWITCHES

Complete switch assemblies may be replaced. It is not possible to replace individual switches. To replace switch assemblies, follow the instructions below.

WARNING

Electrical shock hazard. Disconnect power before proceeding.

Remove the control end cover by loosening the four captive, socket head cap screws (1/2" wrench). Remove the screws holding the switch assembly to the switch plate and slide it out to the side.

Transfer the wires to the terminals of the replacement assembly, ensuring the correct wire is transferred to the correct replacement assembly terminal (wires have push-on lugs). Install the replacement assembly and note that it rotates around one screw to permit an adjustment of the cam-to-switch lever spacing and switch operating point. To set the switch, place a .030" (.75 mm) shim between the cam and switch lever (see photo to right). The switch lever should be on the low or minimum radius portion of the cam when setting the switches. Position the switch assembly so that the switch is just actuated. DO NOT overstress the switch lever. Tighten both screws to 10 lb-ft (14 N•m) torque and remove the shim.

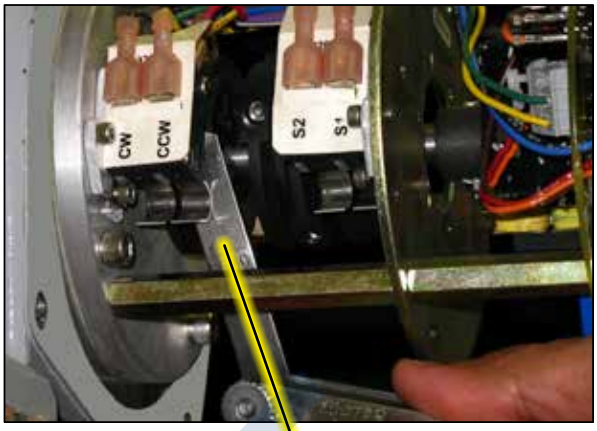

.030" (.75 MM) SHIM SHOULD BE INSERTED BETWEEN ALL LEVERS AND CAMS WHEN SETTING SWITCHES.

ADDING AUXILIARY SWITCHES

It is sometimes possible to add auxiliary switches in the field. If the actuator was built with two or less auxiliary switches, they may be added in multiples of two, for a total of up to four auxiliary switches. See the table at right for part numbers.

Install wiring onto the switch push-on lugs and route the wires into the actuator terminal area. Remove the terminal compartment cover and solder wires to the underside of the terminal board according to the wiring diagram included with the new switch assembly. Install the new switch assembly and adjust according to the preceding instructions.

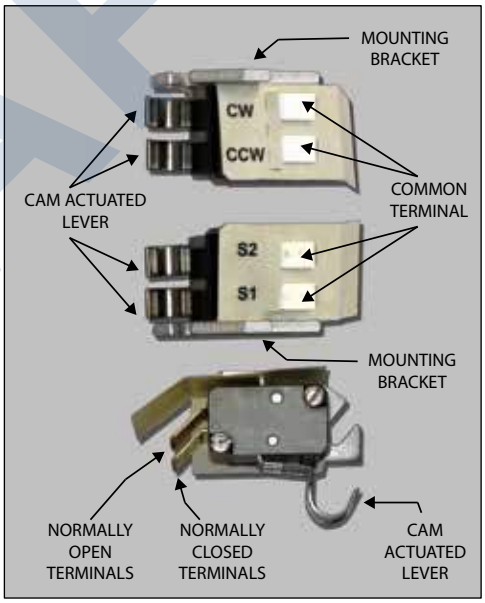

SWITCH PARTS

Description	*Part Number*
Over-travel limit switch assembly (CW/CCW)	20-3202-10
Auxiliary limit switch assembly, (2) switches (S1/S2)	20-3202-11
Auxiliary limit switch assembly, (4) switches (S1/S2/S3/S4)	20-3202-12
Limit switch cam assembly	11-0931-02

DRAFT

DCM-3 BOARD

Field repair of the DCM-3 board is not recommended.

WARNING

Electrical shock hazard. Disconnect power before proceeding.



To replace the DCM-3 board, remove the Digital Control Module compartment cover (four captive, 5/16” hex head screws (1/2" hex wrench)). Loosen the four captive screws holding the board to its mounting pads. Note the “L” shaped mounting bracket on the end of the board. To remove the board, pull the mounting bracket away from its mating surface and connector receptacle.

To install a DCM-3 board, lightly press the board connector into its receptacle until the mounting bracket is flush with its mating surface. Tighten the four captive screws to 8 lb-in (0.9 N•m). Replace the DCM-3 compartment cover and tighten the cover screws to 10 lb-ft (14 N•m) of torque.

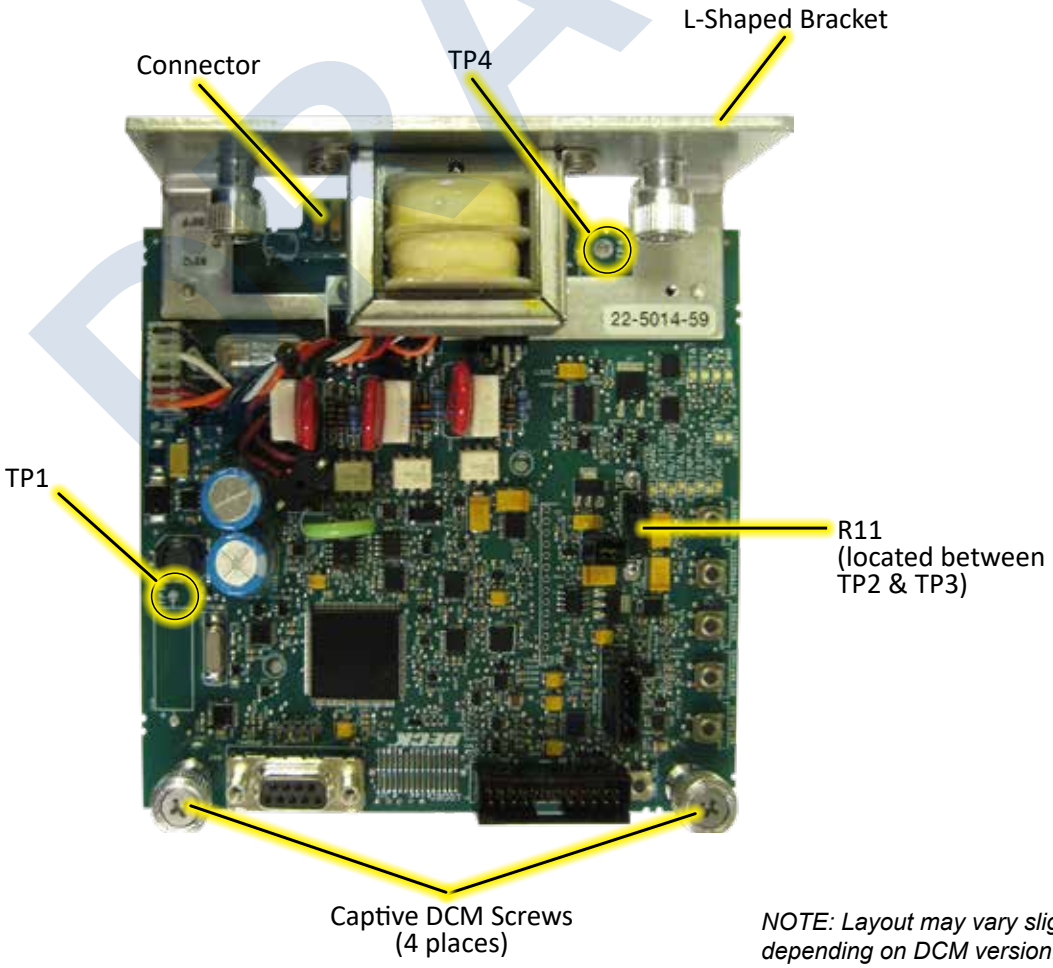

NOTE: Layout may vary slightly depending on DCM version.

DRAFT

CPS-5

Field repair of the CPS-5 is not recommended.

WARNING

Electrical shock hazard. Disconnect power before replacing the CPS-5.

To replace the CPS-5, both the rotor and stator/circuit board assembly should be replaced. When returning the CPS-5 to the factory for service, do not separate the rotor and stator/circuit board assemblies from their mounting plates. The rotor should be held inside the stator with rubber bands when shipping.

The CPS-5 is configured to produce a position signal voltage between 1 and 5 volts over 100 degrees of travel; units configured for 90 degrees of travel will produce a position voltage between 1.2 and 4.8 volts. Configured properly, the CPS-5 raw position signal (measured at TP1 & TP4) increases as the output shaft rotates clockwise.

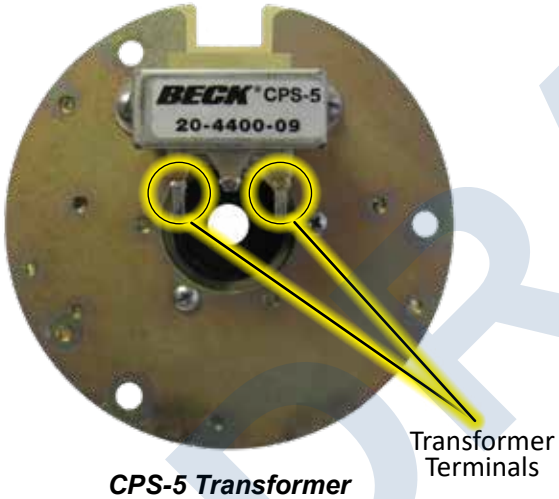

CPS-5 Transformer

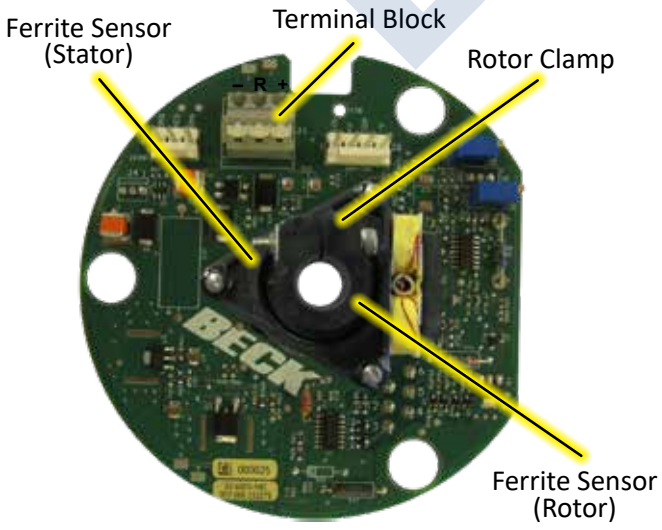

CPS-5 Transducer Board

REMOVE THE EXISTING CPS-5 ASSEMBLY:

1. Run the actuator to its midpoint of travel with the local Handswitch.
2. Disconnect 120 V ac power to the drive. Remove the terminal, DCM-3 compartment and control end covers (1/2" wrench).
3. Record the wire colors on the terminal block of the CPS-5 (see illustration, this page), then disconnect the wires. The terminals are spring-loaded. To remove a wire, press the tip of a small screwdriver into the slot at the top of the small lever. Push down to open the spring-loaded contact and release the wire.
4. Pull the wires from the transformer (see illustration, this page) back through the wire hole in the CPS-5.
5. Loosen and remove the 3 hex studs that clamp the CPS-5 in place. Ensure that the inboard hex stud is not loosened as the outboard stud is loosened.
6. Slide the CPS-5 stator assembly off the three mounting bolts.
7. Note the position of the rotor clamp, then loosen the rotor clamp screw and remove the rotor from the shaft.

INSTALL THE NEW CPS-5 ASSEMBLY:

8. Remove the rotor from the replacement CPS-5 assembly. Slide the rotor, clamp end first, onto the control shaft as close to the mounting plate as possible. Leave the clamp loose. Position the clamp in the same general location as the one removed previously.
9. Slide the new CPS-5 assembly over the studs and rotor. Replace the hex nuts but do not tighten. Carefully slide the rotor back into the CPS-5 assembly. Twist the rotor while sliding to prevent damage to the assembly. Tighten hex nuts to 5 lb-ft (7 N•m).
10. Thread the wires through the wire holes in the CPS-5 and reconnect them to the transformer and terminal block.
11. Restore 120 V ac power to the actuator and connect a meter to the output.
12. Insert a 0.031" (.80 mm) feeler gauge between the rotor clamp and stator. Position the clamp 0.031" (.80 mm) from the stator.
13. Rotate the rotor (only a minor adjustment should be necessary) on the control shaft until the output voltage measured across TP4 and TP1 (see illustration at right) reads 50% (approx. 3 volts) of the signal span. Tighten clamp to 5 lb-in (.6 N•m) torque.
14. Perform a position calibration procedure (p. 31).

DRAFT

MAINTENANCE

HANDSWITCH

WARNING

Electrical shock hazard. Disconnect power before proceeding.

REMOVE THE EXISTING HANDSWITCH:

1. Remove power from the actuator.
2. Remove the terminal cover (1/2” wrench).
3. To access the Handswitch, the terminal barrier plate must be removed on all models except the 11-1_9.
4. Clip the five wires from the old Handswitch (removing any tie wraps or sleeving that may interfere).
5. Remove the Handswitch knob by loosening the two inset screws (5/64" hex wrench).
6. Remove the threaded bushing behind the Handswitch knob. The remaining Handswitch assembly components may now be removed from the terminal compartment.

INSTALL THE NEW HANDSWITCH:

7. Insert the new threaded bushing through the actuator onto the shaft, then attach the components leading to the switch as shown in the illustration below.
8. Place the seal in the bushing, then insert the knob over the bushing. Tighten the two inset screws to 3 lb-ft (4 N•m).
9. Splice the wires from the new Handswitch assembly to the wires from the actuator, color to color. Ensure the wiring is not exposed after splicing.
10. Replace the terminal cover, tightening the captive screws to 10 lb-ft (14 N•m).

NOTE: When the Handswitch is turned fully clockwise, “AUTO” should be indicated. Be sure to place the tab on the tabbed washer into the slot in the actuator body to secure the Handswitch in place.

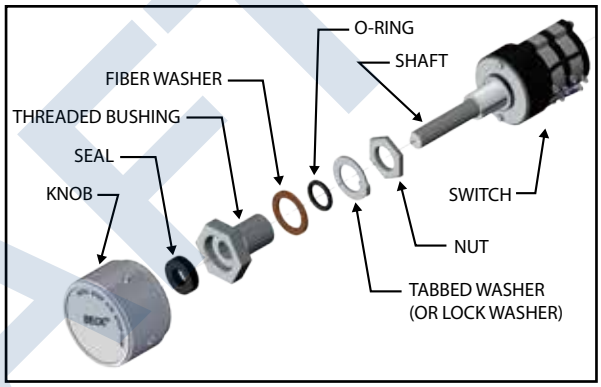

HANDSWITCH COMPONENTS

GASKETS

During routine service, inspect removed cover gaskets for wear or damage. In order to protect internal components, worn or damaged gaskets and O-rings should be replaced.

To remove, scrape all of the old adhesive and gasket material from the body housing and cover, if necessary. Replacement gaskets are self-adhering, silicone rubber. Peel the backing off the replacement gasket and carefully apply to the actuator body.

DRAFT

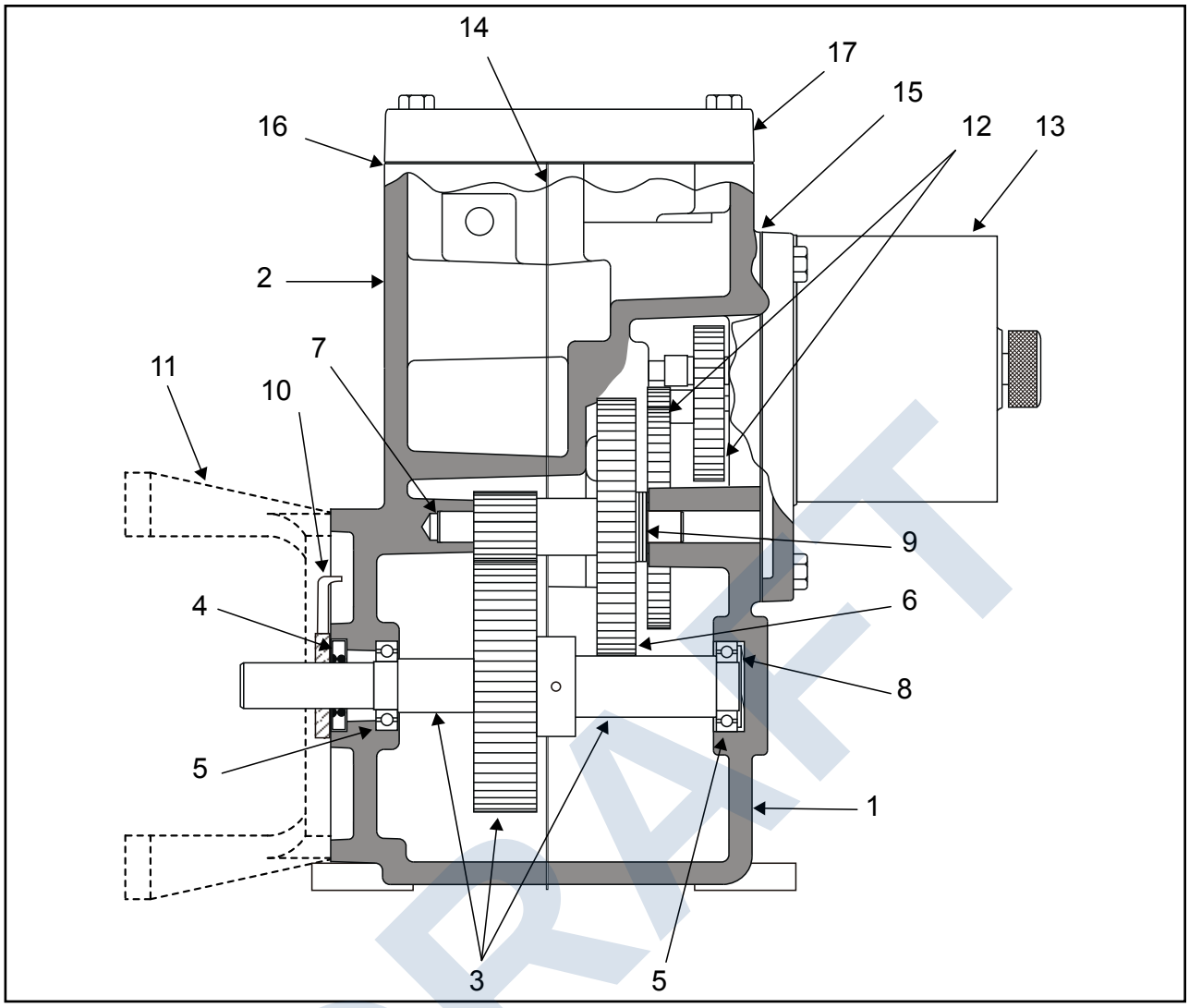

TYPICAL ACTUATOR COMPONENTS FOR MODELS 11-159 / -169*

Item Number	*Description*	*Part Number*	*Item Number*	*Description*	*Part Number*
1	Body, rear	Field Replacement is not recommended Contact Beck with actuator serial number for additional information	12	Gear module assembly	(see torque & timing table, page 55)
2	Body, front		13	Motor Assembly	
3	Output shaft assembly		14	Gasket, body	20-0660-83
4	Seal, output shaft		15	Gasket, motor assembly	20-0660-15
5	Ball bearing, output shaft (2)		16	Gasket, terminal cover	20-0660-16
6	Gear, 3rd combination		17	Terminal compartment cover	14-9744-20
7	Pin, 3rd combination gear		18	Terminal Block assembly** (23 terminals)	20-1541-01
8	Spring washer		19	Control end compartment cover**	11-0990-20
9	Thrust washer		20	Gasket, control end cover**	10-8080-02
10	Index pointer (model 11-159 only)	10-4620-01	21	Gasket, DCM cover**	20-0660-17
11	Bracket (model 11-169 only) (Note: check valve mounting specification for part number)	see note	22	DCM compartment cover**	13-2341-01

*Note: To ensure exact replacement parts, contact Beck with the model /serial number found on your actuator nameplate.

** Not shown in this view.

DRAFT

MAINTENANCE

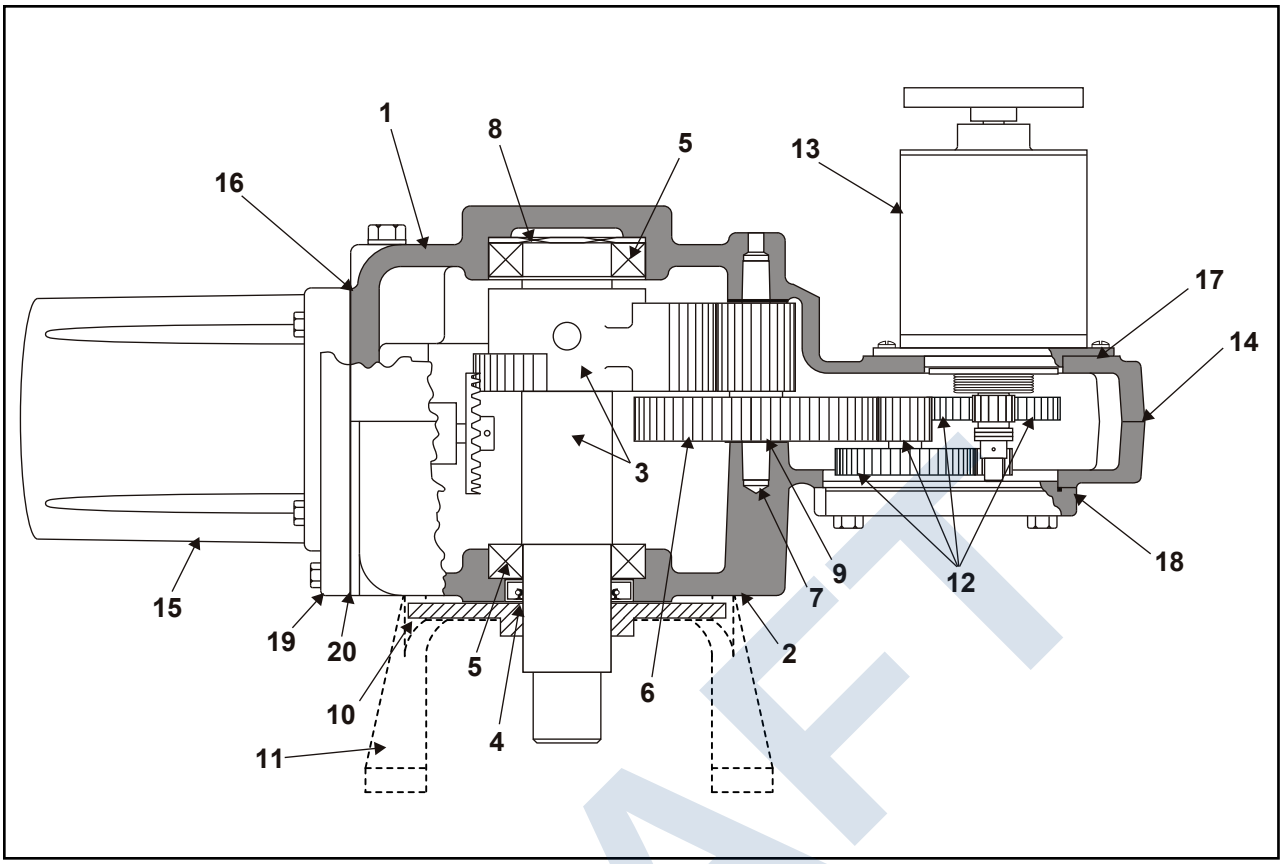

*TYPICAL ACTUATOR COMPONENTS FOR MODELS 11-209 / -269 / -309 / -369**

Item Number	*Description*	*Part Number*	*Item Number*	*Description*	*Part Number*
1	Body, rear	Field Replacement is not recommended Contact Beck with actuator serial number for additional information	12	Gear module assembly	(see torque & timing table, page 55)
2	Body, front		13	Motor Assembly	
3	Output shaft assembly (11-209 / 11-269)		14	Gasket, body	20-0660-06
	Output shaft assembly (11-309 / 11-369)		15	Control end compartment cover	11-0990-20
4	Seal, output shaft		16	Gasket, control end cover	10-8080-02
5	Ball bearing, output shaft (2)		17	Gasket, motor assembly	20-0660-27
6	Gear, 3rd combination		18	Gasket, gear module assembly	20-0660-26
7	Pin, 3rd combination gear		19	Terminal & DCM compartment cover	14-9741-03
8	Spring washer		20	Gasket, DCM & terminal cover	20-0660-03
9	Thrust washer		21	Terminal Block assembly** (23 terminals)	20-1541-01
10	Index (model 11-209 / 11-309 only)	14-9900-01	22	Barrier Plate**	20-2960-08
11	Bracket (model 11-269 / 11-369 only) (Note: check valve mounting specification for part number)	see note	23	Gasket, barrier plate**	20-0660-22

*Note: To ensure exact replacement parts, contact Beck with the model /serial number found on your actuator nameplate.

** Not shown in this view.

DRAFT

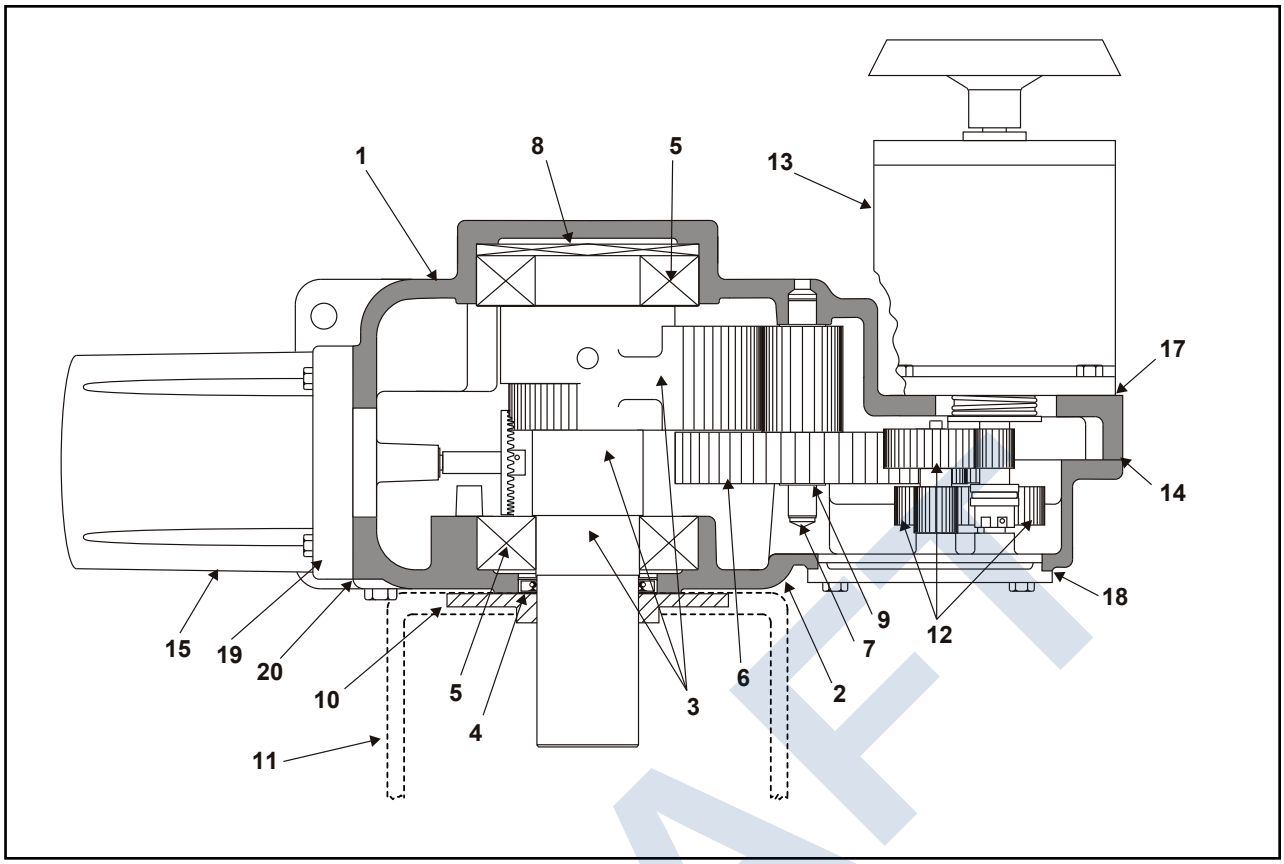

*TYPICAL ACTUATOR COMPONENTS FOR MODELS 11-409 / -469**

Item Number	*Description*	*Part Number*	*Item Number*	*Description*	*Part Number*
1	Body, rear	Field Replacement is not recommended Contact Beck with actuator serial number for additional information	12	Gear module assembly	(see torque & timing table, page 55)
2	Body, front		13	Motor Assembly	
3	Output shaft assembly (11-409 / 11-469)		14	Gasket, body	20-0660-09
			15	Control end compartment cover	11-0990-20
4	Seal, output shaft		16	Gasket, control end cover**	10-8080-02
5	Ball bearing, output shaft (2)		17	Gasket, motor assembly	20-0660-08
6	Gear, 3rd combination		18	Gasket, gear module assembly	20-0660-07
7	Pin, 3rd combination gear		19	Terminal & DCM compartment cover	14-9741-03
8	Spring washer		20	Gasket, DCM & terminal cover	20-0660-03
9	Thrust washer		21	Terminal Block assembly** (23 terminals)	20-1541-01
10	Index (model 11-409 only)	14-9901-02	22	Barrier Plate**	20-2960-08
11	Bracket (model 11-469 only) (Note: check valve mounting specification for part number)	see note	23	Gasket, barrier plate**	20-0660-22

*Note: To ensure exact replacement parts, contact Beck with the model /serial number found on your actuator nameplate.

** Not shown in this view.

DRAFT

MAINTENANCE

RECOMMENDED SPARE PARTS

The table to the right indicates the common recommended spare parts that may be utilized across many Group 11 actuator models.

The Beck website (www.haroldbeck.com) provides an actuator serial number lookup tool. The tool will display the actuator torque and timing which can be cross-referenced to a motor part number on the “Torque & Timing” table (page 55) if the part numbers are not known.

***Note that motor replacement part numbers will include the suffix “KIT”; e.g., 20-2700-20-KIT.**

COMMON RECOMMENDED SPARE PARTS

Description	*Part Number*
DCM-3 board	22-5014-59
Fuse, 7A, 125V (For use on DCM-3)	11-1372-26
CPS-5 assy.	20-4400-09

Description	*Part Number*
Fuse (F1) w/ operating voltage >120 V	See page 43
Overtravel limit switch assy. (CW / CCW)	20-3202-10
Auxiliary switch assy.	
2 switches (S1–S2)	20-3202-11
4 switches (S1–S4)	20-3202-12
Gasket kit, Motor assy., Capacitor, Resistor	See Below

GASKETS, MOTORS[a], RESISTORS, & CAPACITORS

Actuator Model Number	Gasket Kit Part Number	Motor					Capacitor		Resistor	
		Part Number*	Current (A at 120 Vac, 60 Hz[c])	Torque (N•m)	RPM	Freq. (Hertz)	Part Number	Value (µf)	Part Number	Value (Ω)
11-1_9	20-3110-01	20-2700-20	.17	0.5	72	60	14-2840-02	2	11-5802-03	500
						50	14-2840-13	3	11-5802-03	500
		20-2701-20	.31	1.0	72	60	14-2840-11	4	11-5802-02	475
						50	14-2840-31	6	11-5802-06 (2 req'd)	180 ea.
		20-2204-20	.44	1.5	72	60	14-2840-16	5	11-5801-12[d]	220
						50	14-2840-19	7	11-5801-12[d]	220
		20-2204-21	.44	1.5	72	60	14-2840-16	5	11-5801-12[d]	220
						50	14-2840-19	7	11-5801-12[d]	220
		20-2701-51	.32	1.0	120	60	14-2840-16	5	11-5801-12[d]	220
						50	14-2840-31	6	11-5801-12[d]	220
11-2_9 & 11-3_9	20-3110-02	20-2704-21	.43	1.5	72	60	14-2840-16	5	20-1971-13	220[b]
						50	14-2840-19	7	20-1971-13	220[b]
		20-2705-21	.71	3.0	72	60	14-2840-05	8	20-1971-12	110[b]
						50	14-2840-30	13	20-1971-12	110[b]
		20-2705-51	.74	3.3	120	60	14-2840-29	9	20-1971-14	68[b]
						50	14-2840-30	13	20-1971-15	72[b]
11-4_9	20-3110-03	20-2201-31	1.3	7.0	72	60	14-2840-17	15	20-1971-03	75[b]
						50	14-2840-16 14-2840-17	5 15	20-1971-03	75[b]
		20-2201-32	2.3	14.0	72	60	14-2840-15	25	20-1971-04	37.5[b]
						50	14-2840-05 14-2840-15	8 25	20-1971-04	37.5[b]
		20-2201-33	3.0	14.0	120	60	14-2840-15 14-2840-09	25 6	20-1971-06	18[b]
						50	14-2840-15 14-2840-05 14-2840-09	25 8 6	20-1971-10	24[b]

[a] All motors listed are rated 120 V ac regardless of operating voltages using optional transformers.
[b] This is a resistor assembly.
[c] 50 Hz currents do not exceed 120% of the 60 Hz levels.
[d] Alternate power options (other than 120 or 240 V ac) require (2) 110Ω resistors, part no. 11-5802-05, in lieu of resistor shown.

DRAFT

TORQUE & TIMING LISTED BY MOTOR AND GEAR MODULE ASSEMBLY

Actuator Model No.	Motor Part No.	Motor Current (Amps at 120 Vac, 60 Hz[1])	Gear Module Assy. No.*	Torque (lb-ft)	Timing @ 60 hz[2]	
					Models 11-159, -209, -309, -409 (sec./100°)	Models 11-169, -269, -369, -469 (sec./90°)
11-1_9	20-2700-20	.17	14-9733-04	20 (27 N•m)	20	18
			14-9733-03	40 (54 N•m)	40	36
			14-9733-02	60 (81 N•m)	60	54
			14-9733-01	80 (108 N•m)	90	81
	20-2701-20	.31	14-9733-05	15 (20 N•m)	11	10
			14-9733-04	40 (54 N•m)	20	18
			14-9733-03	80 (108 N•m)	40	36
	20-2701-51	.32	14-9733-04	40 (54 N•m)	12	11
	20-2204-20	.44	14-9733-03	120 (163 N•m)	40	36
	20-2204-21	.44	14-9733-07**	80 (108 N•m)	24	22
11-2_9	20-2704-21	.43	14-9730-04	125 (169 N•m)	40	36
			14-9730-05	175 (237 N•m)	60	54
			14-9730-08	250 (339 N•m)	75	68
	20-2705-21	.71	14-9730-02	125 (169 N•m)	20	18
			14-9730-04	250 (339 N•m)	40	36
	20-2705-51	.74	14-9730-04	250 (339 N•m)	24	22
11-3_9	20-2704-21	.43	14-9730-09	300 (407 N•m)	100	90
	20-2705-21	.71	14-9730-04	300 (407 N•m)	40	36
			14-9730-05	400 (542 N•m)	60	54
			14-9730-08	550 (746 N•m)	75	68
			14-9730-09	650 (881 N•m)	100	90
	20-2705-51	.74	14-9730-04	300 (407 N•m)	24	22
			14-9730-05	400 (542 N•m)	36	32
			14-9730-08	550 (746 N•m)	45	41
			14-9730-09	650 (881 N•m)	60	54
11-4_9	20-2201-31	1.3	14-9732-05	350 (475 N•m)	24	22
			14-9732-07	550 (746 N•m)	40	36
			14-9732-02	800 (1085 N•m)	60	54
			14-9732-04	1,000 (1356 N•m)	75	68
			14-9732-03	1,500 (2034 N•m)	100	90
	20-2201-32	2.3	14-9732-05	650 (881 N•m)	24	22
			14-9732-07	1,000 (1356 N•m)	40	36
			14-9732-02	1,800 (2440 N•m)	60	54
	20-2201-33	3.0	14-9732-07	1,000 (1356 N•m)	24	22
			14-9732-02	1,800 (2440 N•m)	36	32

CAUTION: Use only the motor and gear module combinations listed above; other combinations may cause internal damage to the actuator and/or damage to the external equipment.

[1] 50 Hz currents do not exceed 120% of 60 Hz levels.

[2] 50 Hz timing = 1.2 x 60 Hz timing.

* Note that gear module replacement part numbers will include the suffix "KIT"; e.g., 14-9733-04-KIT.

** This gear module assembly is integral to the motor -- field replacement is not recommended.

DRAFT

TROUBLESHOOTING

The DCM-3 features diagnostics to help troubleshoot problems.

The following list provides a systematic method for isolating any actuator problems.

1. Operating Voltage
2. Handswitch Operation
3. DCM-3 Status Indication LEDs
4. DCM-3 Testpoints
5. DCM-3 Configuration
6. Shaft Position
7. Inhibitors / Statistics

VERIFY OPERATING VOLTAGE

To check the input power supply, view the Overview LEDs on the DCM-3 board (see illustration on page 24). This requires removing the DCM compartment cover (see page 13 for location).

The PWR LED should pulse from dim to bright, which indicates that power is applied to the actuator and the DCM-3 is successfully completing (continuous) self-tests. If the PWR LED is not lit or pulsing, there may be a problem with the AC power supply to the actuator.

Ensure the actuator is receiving the proper operating voltage (listed on the actuator nameplate). To check the voltage, locate the power terminals on the terminal block (see wiring diagram on the underside of the terminal compartment cover). Using a voltmeter, measure the voltage applied to those terminals. If the voltage is correct, continue troubleshooting; if the voltage is not correct, apply the proper power.

CHECK HANDSWITCH OPERATION

Verify proper operation of the Handswitch, which bypasses the actuator control electronics and switches power directly to the motor windings. Operate the actuator in both directions of travel using the Handswitch. If the actuator responds as expected, electro-mechanical problems with the motor and gearing may be eliminated. The trouble may lie with the electronics.

CHECK DCM-3 STATUS INDICATION LEDS

The DCM-3 has seven Status Indication LEDs that provide specific information about the actuator's state (page 25). A lit LED indicates that a condition exists.

CHECK DCM-3 TESTPOINTS

The DCM-3 controls actuator output position by comparing the actuator's Demand input signal with the internal Position feedback signal generated by the actuator's position sensor (CPS-5). The integrity of these signals is critical to actuator performance. The signals should be verified whenever there are actuator problems. There are four test points provided on the DCM-3 board (see illustration on page 24 for locations) that are used to measure the Demand input and internal Position signals directly at the DCM-3.

Measure the Demand signal voltage across TP2(+) and TP3(–) (see page 24 for location). A typical 4–20 mA input signal will measure a proportional 1–5 V dc across the test points. It is important to verify that the measured voltage corresponds correctly to the signal that is being applied. If there is a mismatch, further troubleshooting is required.

The Position signal to the DCM-3 is generated by the actuator's CPS-5. The CPS-5 is designed to provide a 1–5 V dc signal to the DCM-3 corresponding to 100 degrees of actuator output shaft rotation (for 90° rotation, the signal is 1.2–4.8 V dc). The Position signal can be determined at the DCM-3 by measuring the voltage across TP4(+) and TP1(–) (see page 24). Verify that this signal matches Demand and the position of the output shaft (see chart below).

Both the Demand and Position signals can also be checked at the appropriate terminals in the terminal block, via HART communications or through the Serial port. All values should agree with test point values. Any differences will require further troubleshooting.

CPS-5 POSITION SIGNAL VOLTAGES

Shaft Position	100° Rotation		90° Rotation	
	CW	CCW	CW	CCW
0%	1.0	5.0	1.2	4.8
25%	2.0	4.0	2.1	3.9
50%	3.0	3.0	3.0	3.0
75%	4.0	2.0	3.9	2.1
100%	5.0	1.0	4.8	1.2

CHECK DCM-3 OPERATION MODE SETTING

The DCM-3 can be configured for several operational modes as shown in HART menu 3E (page 66) or Serial command "opmode" (page 74).

The factory configuration is the "Follow" mode. In this mode, the actuator is positioned by the 4–20 mA Demand signal when the Handswitch is set to AUTO.

The “Hold” mode causes positioning according to the HART Interface Demand Value (HART menu 3E).

DRAFT

The “Stay" mode causes the output shaft to remain stationary and maintain its present position. In "Stay" mode, the Handwheel cannot be freely turned as it will move back to the position where the "Stay" mode was activated.

The "Stop" mode removes power from the motor. In "Stop" mode the Handwheel can be freely turned. All operating modes can be overridden by the actuator Handswitch. If the operation mode is (inadvertently) switched to a mode other than "Follow" there will not be an outward indicator. ***Note that resetting the DCM-3 to factory settings does <u>not</u> change the operational mode back to "Follow" for safety purposes.***

CHECK SHAFT POSITION

The output shaft position (%) can be viewed in HART (menu 1) or by running the Serial command "stat".

If the Position value (%) does not appear to match the physical output shaft position, a CPS-5 rotor adjustment may be required. Follow these directions to correct positioning (see page 49 for component identification):

1. Rotate the rotor on the control end shaft until the dc voltage measured across terminals + and R reads 50% of the signal span (approx. 3 volts). Tighten clamp to 5 lb-in (0.6 N•m) torque.
2. Using the Handswitch, rotate the output shaft of the actuator in the clockwise direction. The dc voltage measurement across the + and R (–) terminals should increase, in which case the rotor adjustment is complete. If the voltage decreases, however, the rotor is out of phase with the actuator travel and will require adjustment, continue to step 3.
3. Position the actuator with the Handswitch until the voltage reading across terminals + and R (–) is approximately 3 volts.
4. Loosen the rotor clamp screw and rotate the rotor 180 degrees. Verify the voltage is 3.0 volts and tighten the rotor clamp screw. Repeat step 2.

Note: The position signal can also be measured across DCM-3 test points TP4 (+) and TP1 (–) rather than CPS-5 terminals (+) and R (–).

CHECK DCM-3 INHIBITORS / STATISTICS

Conditions that prevent the DCM-3 from positioning the actuator are called inhibitors. HART MENUS 5F and 5G list the CW and CCW inhibitors respectively. Inhibitors may also be reviewed by running the Serial command "stat" (see page 75). The following list indicates why the inhibitor would be in the “ON” state. Note that not all conditions are present in all DCM versions.

<u>Balance</u>
Demand and position are balanced.

<u>Supervisory</u>
DCM-3 is initializing.

<u>Stall</u>
A stall condition has been detected.

<u>OverTrq/Thr</u>
Excessive torque load on output shaft.

<u>Switch Block</u>
Not applicable for Group 11 actuators.

<u>Bad Pos Sig</u>
The position signal is out of range.

<u>Bad Dem Sig</u>
The Demand signal is out of range.

<u>Local Cal</u>
The calibrate button is being pressed on the pushbutton panel.

The factory can assist with troubleshooting—please provide the results of the above review to expedite assistance.

DRAFT

TROUBLESHOOTING

CONDITIONS	POSSIBLE CAUSES	CORRECTIONS
1. No DCM-3 LEDs are illuminated.	a. No power is applied to the actuator. b. Incorrect power is applied to the actuator. c. Main power fuse/breaker is blown. d. DCM-3 malfunction.	a. Apply operating voltage to the operating voltage terminals. b. Verify correct voltage on actuator nameplate and ensure that it is applied at the operating voltage terminals. c. Verify fuse/breaker integrity. Replace/reset if blown. Find cause of short circuit. d. Replace DCM-3.
2. STAT LED is illuminated.	a. A status alarm is active.	a. Check the status indication LEDs on the DCM-3. Continue troubleshooting based on the LEDs that are illuminated.
3. Demand LED is illuminated.	a. No Demand signal. b. Applied Demand signal is outside of configured range. c. Polarity of applied signal wires is reversed.	a. Apply a Demand signal to terminals AA (+) & BB (–). b. Confirm Demand signal value via HART or by measuring DC voltage across DCM-3 test points TP3(+) & TP2(–). Should be 1–5 volts for 4–20 mA applied signal. c. Correct the polarity of the applied control signal wires on terminals AA (+) & BB (–).
4. POSITION LED is illuminated.	a. Position signal voltage generated by CPS-5 read by the DCM-3 is outside of the configured range. b. CPS-5 malfunction. c. DCM-3 malfunction.	a. Using the HART communicator check the Position Sensor Setup menu to verify the Present CPS voltage falls within the configured CPS Zero% and Span (typical range 1–5 volts); OR measure DC voltage between DCM-3 test points TP4 (+) and TP1 (–) to verify Present CPS voltage. If the voltage is outside of 1–5 volts, recalibrate or replace the CPS-5. b. Replace CPS-5. c. Replace DCM-3.
5. TORQUE LED is illuminated (applicable only to actuators equipped with optional torque sensing).	a. Torque exceeding configured limit (typically over 150% of rated torque) is being applied to the output shaft. b. Torque Null and Torque Constant values are not set correctly. c. Torque cable is not connected to DCM-3.	a. Eliminate cause of excessive torque (i.e., binding damper, improper linkage, etc.). b. Locate Torque Null and Constant values inside DCM compartment and set via HART or Serial port. c. Reconnect torque cable to DCM-3.
6. STALL LED is illuminated.	a. Actuator has stalled—unable to achieve desired position within the configured “STALL TIME”. b. The configured stall time is less than the configured Max Travel Time.	a. Eliminate the obstruction and reset the stall by reversing direction on your Demand signal, cycling the power, or issuing the stall reset from HART or Serial command. b. Configure the stall time to exceed the Max Travel Time via HART or Serial command.
7. TEMP F LED is illuminated.	a. The measured temperature at the DCM-3 is outside of the normal operating range of -40° to 185° F.	a. Protect the actuator from the extreme temperatures below or above the operating range to eliminate the alarm.
8. FB OPEN LED is illuminated.	a. The position Feedback circuit current loop is not complete. b. The position Feedback is enabled, but not in use.	a. Ensure the device measuring the 4–20 mA Feedback is properly terminated on terminals DD (–) and EE (+) and is applying a 0–800 ohm load resistance. b. Disable Feedback via HART or Serial command; OR terminate the Feedback loop by applying a 0–800 ohm load resistance across terminals DD and EE.

DRAFT

CONDITIONS	POSSIBLE CAUSES	CORRECTIONS
9. STOP/LIMIT LED is illuminated.	a. The applied power is below the tolerance (-15%) of the nameplate operating voltage. b. A DCM-3 fuse is open. c. A component failure has occurred on the DCM-3. d. The Handswitch is in STOP. e. The actuator has traveled to an over-travel limit switch. f. The actuator is not at an over-travel limit switch, but the limit switch is open.	a. Apply the correct operating voltage to the actuator per the voltage stamped on the nameplate. b. Replace the open fuse. c. Replace the DCM-3. d. Place the Handswitch in AUTO. e. Verify if the limit switch is set outside of the electrically calibrated limits. Readjust, if necessary, or replace. f. Replace the over-travel limit switch (CW/CCW) assembly.
10. Power LED is pulsing bright to dim.	a. This indicates normal function.	a. No action required.
11. All LEDs are illuminated or flashing.	a. A component failure has occurred on the DCM-3.	a. Replace the DCM-3.
12. REV LED is illuminated, actuator is not moving, and there are no other status alarms.	a. Operation mode is set to “STOP”.	a. Using HART (operation mode menu) OR using Serial command “opmode”, change operation mode to “Follow”.
13. Actuator will not hold position with Handswitch in STOP.	a. Self Locking Mechanism (SLM) is worn or damaged.	a. Rebuild the SLM assembly.
14. Motor runs, but the output shaft does not move in one or both directions.	a. Self Locking Mechanism (SLM) has failed.	a. Rebuild the SLM assembly.
15. PWR LED is flashing, no status LED’s are lit and does not respond to Demand signal or Handswitch.	a. The Handswitch is damaged. b. The Handswitch jumper between terminal A and C is missing or faulty.	a. Check continuity from terminals N to V and M to U with Handswitch in AUTO position. If either does not show continuity, replace Handswitch. b. Install a wire jumper between terminals A and C.
16. PWR LED is flashing, no status LED’s are lit, actuator functions with the Handswitch, but does not respond to Demand signal.	a. A plug-in jumper has been installed in the 24-pin connector (J2) of the DCM-3 board.	a. Remove any jumpers from the J2 connector on the DCM-3.
17. HART communications cannot be established with the DCM-3.	a. The device description (DD) file is not installed. b. The HART communicator is not compatible with Beck equipment. c. The HART communications circuit on the DCM-3 is damaged.	a. Install the Beck MK-2 DD on your HART device. b. Utilize a compatible HART communicator or configure the actuator through the Serial port. c. Replace the DCM-3.
18. Position voltage on DCM-3 testpoints TP4 and TP1 is within 1–5 volts DC following the actuator position, but the position Feedback signal at terminals DD and EE remains constant or is erratic.	a. The position Feedback circuit on the DCM-3 is damaged.	a. Replace the DCM-3.

DRAFT

TROUBLESHOOTING

CONDITIONS	POSSIBLE CAUSES	CORRECTIONS
19. Output shaft rotates opposite of desired direction when applying a 4–20 mA Demand signal.	a. The rotation direction is incorrectly configured.	a. Configure the rotation direction using pushbutton, HART, or Serial method.
20. Motor erratic or runs in wrong direction in AUTO or using Handswitch.	a. Motor winding is open. b. Motor capacitor is shorted or open. c. Motor resistor is open.	a. Replace motor assembly. b. Replace capacitor. c. Replace resistor assembly.
21. Actuator does not follow input signal until maximum or minimum is reached, then drives uncontrollably to limit.	a. Wire jumpers on terminals M and N are reversed. b. CPS-5 is not calibrated.	a. Connect terminal jumpers from M to D and from N to F. b. Recalibrate the CPS-5.
22. Actuator oscillates in AUTO mode.	a. Excessive noise on the input signal. b. Physical obstruction causing a stall condition (e.g., valve jammed or load greatly exceeds actuator rating.) c. The DCM-3 is malfunctioning. d. Excessive wear in the gear train or bearings. e. CPS-5 Failure. f. Self Locking Mechanism (SLM) is worn or damaged.	a. Eliminate noise or increase actuator step size. b. Check operation with Handswitch and remove obstruction if present. Handswitch bypasses the DCM-3 board. c. Replace the DCM-3 board. d. Replace worn actuator parts. e. Replace the CPS-5 board. f. Rebuild the SLM.
23. Actuator will not run in either direction or one direction in AUTO or using Handswitch.	a. Over-travel limit switch failure. b. Handswitch failure.	a. Replace over-travel limit switch assembly (CW/CCW). b. Replace Handswitch assembly.
24. Actuator does not stop at normal or desired limit of shaft travel.	a. DCM-3 position calibrated incorrectly. b. Limit switches set incorrectly. c. Over-travel limit switch failure.	a. Calibrate DCM-3 0% and 100% positions. b. Readjust the limit switches. c. Replace the over-travel limit switch assembly (CW/CCW).
25. Position Feedback signal does not reach maximum signal, but low end calibration is correct.	a. Feedback loop is overloaded.	a. Make sure that the load resistance is between 0 and 800 ohms total across terminals DD and EE.
26. Actuator runs uncontrolled to one end of travel.	a. Handswitch Failure. b. The DCM-3 is malfunctioning. c. The CPS-5 is malfunctioning. d. Terminal block jumpers F to N and D to M not connected. e. The actuator has detected a loss of Demand signal (LOS) and is configured for GTP 0% or 100%. f. Handswitch in CW or CCW position.	a. Check continuity from terminals A–V and A–U with Handswitch in AUTO and actuator power disconnected. If either shows continuity, replace Handswitch. b. Verify CPS-5 voltage signal at DCM-3 test points TP4 and TP1 for 1–5 volts DC corresponding with output shaft position. If signal is valid, replace DCM-3. c. Verify CPS-5 wire connections, check voltage at DCM-3 test points TP4 and TP1 for 1–5 volts DC corresponding with output shaft position. Replace CPS-5 if voltage does not change with position. d. Install jumpers. e. See troubleshooting condition no. 3 (Demand LED is illuminated). f. Return Handswitch to AUTO position.

DRAFT

APPENDIX HART® Communication

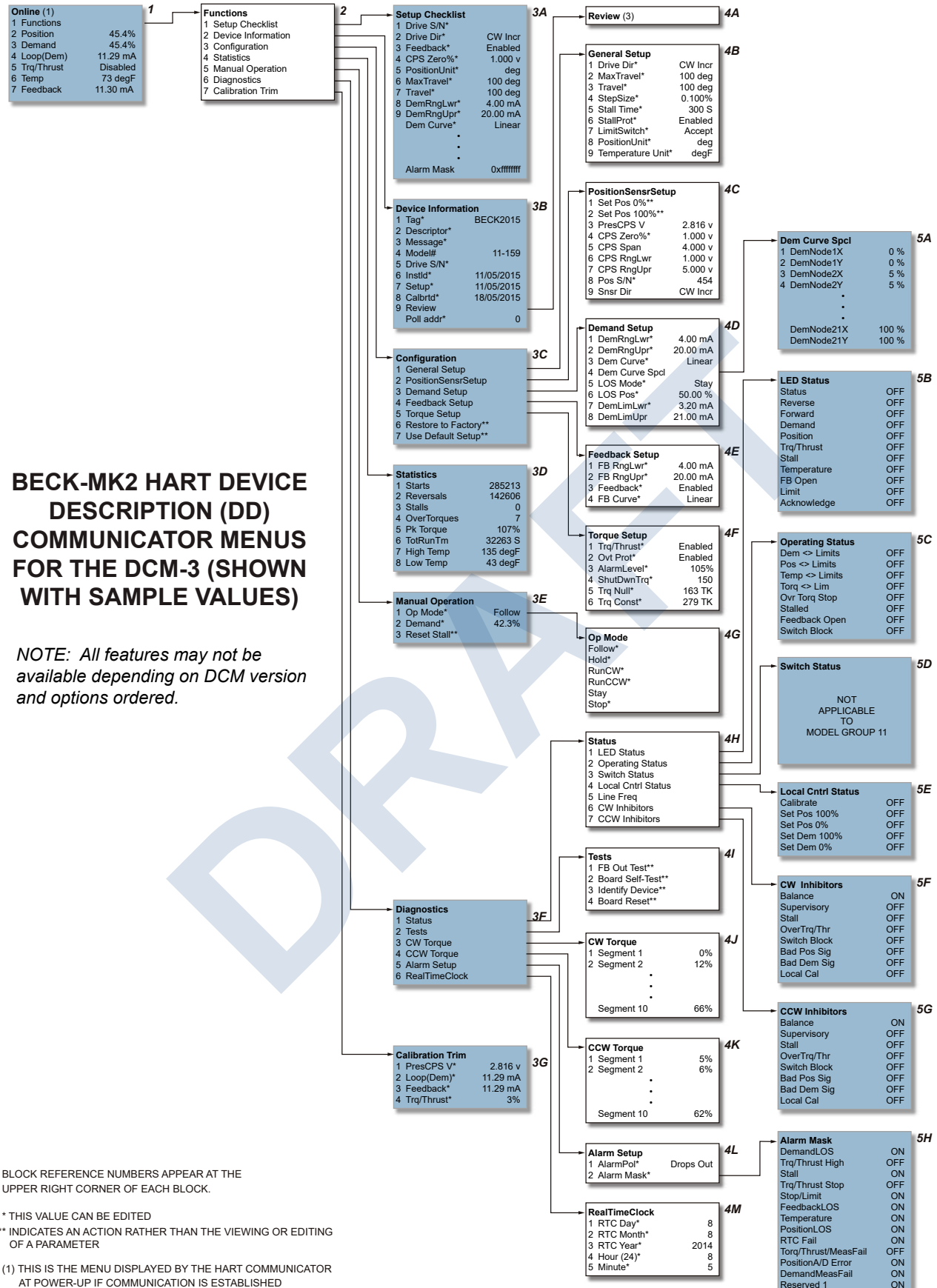

BECK-MK2 HART DEVICE DESCRIPTION (DD) COMMUNICATOR MENUS FOR THE DCM-3 (SHOWN WITH SAMPLE VALUES)

NOTE: All features may not be available depending on DCM version and options ordered.

DRAFT

BLOCK REFERENCE NUMBERS APPEAR AT THE UPPER RIGHT CORNER OF EACH BLOCK.

* THIS VALUE CAN BE EDITED

** INDICATES AN ACTION RATHER THAN THE VIEWING OR EDITING OF A PARAMETER

(1) THIS IS THE MENU DISPLAYED BY THE HART COMMUNICATOR AT POWER-UP IF COMMUNICATION IS ESTABLISHED

(2) THIS AND OTHER OFFLINE MENUS ARE COMMON TO ALL HART COMMUNICATOR APPLICATIONS - MANY SUBMENUS EXIST

(3) PROVIDES AN EXTENDED LIST OF DRIVE PARAMETERS

The DCM-3 board is the control center of the actuator—configuration and calibration are accessed and set through the DCM-3 board. Using the HART interface requires a HART compatible communicator or any device, computer or controller capable of communicating with HART devices and supporting the Beck DCM-3 device description. This instruction supports actuators equipped with a DCM-3 (p/n 22-5014-59). This DCM-3 interfaces with the BECK-MK2 Device Description.

HART® INTERFACE

The interface menu tree for communicating with a DCM-3 using the BECK-MK2 Device Description is located on the previous page. This menu tree summarizes possible setup options, features and available information.

HART® COMMUNICATORS FOR BECK-MK2

The BECK-MK2 Device Description requires a HART Communicator that is HART 5 capable and has the ability to import Device Description Language Files (DDL) that are certified by the HART Communications Foundation.

USING THE 275, 375 OR 475 HART® COMMUNICATOR

The HART Communicator leads should be connected in parallel with the analog Demand signal wiring. This allows the communicator to simultaneously communicate over the analog input wires. This does not disturb the analog Demand signal, or disrupt the DCM-3 functions. However, any program changes to the DCM-3 will momentarily suspend the operation of the board (maintains last state) while the change is implemented. Typically, this is only for a second or two.

With the communicator connected in parallel anywhere across the analog Demand wires (see illustration below), it is ready to communicate. Turn on the communicator and wait for communications to be established. When communications are established, the “Online” display will appear. If the actuator is multidropped with other devices on a HART network, the first display screen will list all devices and require a selection before the “Online” display is shown. Follow the HART DD menu on the previous page to navigate.

NOTE: If the communicator is unable to communicate with the DCM-3, it displays the message, “No Device Found”. If this occurs, check to make sure the leads are securely connected to the Demand wiring and retry. If communications still do not occur, the communicator polling setup may be improperly set. Check the “utility” menu and make sure communications polling is set to “always poll”.

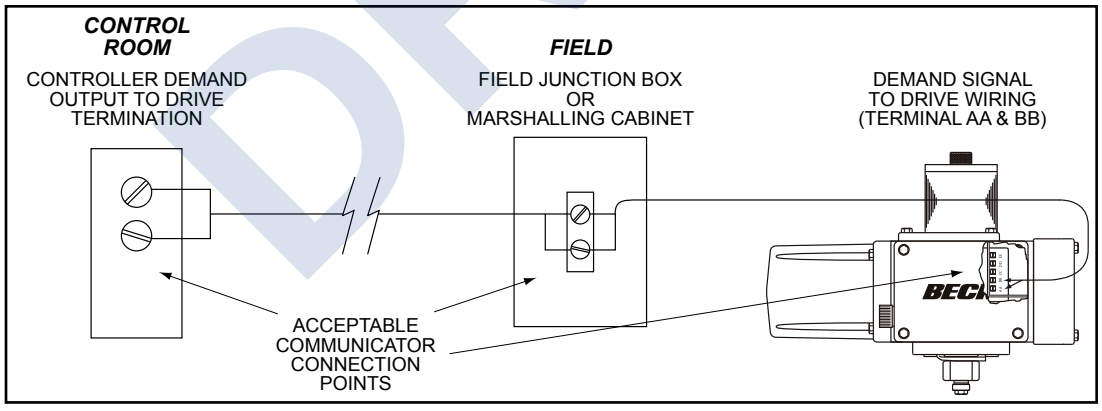

MENU DESCRIPTIONS

(See HART Communicator Menu on page 60)

MENU 1 -- Online

When communications are established with the communicator, the Online menu is displayed.

1 **Functions**: The link to the menu tree.

2 **Position**: The output shaft position displayed as a percent of range.

3 **Demand**: The Demand signal displayed as a percent of range.

4 **Loop (Dem)**: The Demand signal measured in mA.

5 **Trq/Thrust**: The present torque value as applied to the output shaft (optional).

6 **Temp**: The ambient temperature of the DCM-3.

7 **Feedback**: The milliamp output signal representing the present position of the output shaft.

DRAFT

MENU 2 -- Functions

From the Functions menu, any of the DCM-3 functional menus can be selected and accessed. There are seven functional areas: Setup Checklist, Device Information, Configuration, Statistics, Manual Operation, Diagnostics, and Calibration Trim.

MENU 3A -- Setup Checklist

The Setup Checklist provides a quick way for the user to setup the most important items necessary for basic actuator operation without having to move through multiple sub-menus. These items are defined on the following pages in their specific menu locations.

MENU 3B -- Device Information

The Device Information menu provides information about the actuator. There are ten useful information entries that may be viewed and/or edited.

1 **Tag**: An 8 character entry that can be used to identify a specific field device label.

2 **Descriptor**: A 16 character field that can be used to provide any description desired.

3 **Message**: A 32 character field that can be used to provide any message desired.

4 **Model#**: Displays the model number of the actuator in which the DCM-3 is installed. This field may be edited. Note that changing this field may cause the “Use Default Setup” command to not function.

5 **Drive S/N**: The Serial number as shown on the actuator nameplate.

6 **InstId**: Installation date of the actuator or DCM-3.

7 **Setup**: The setup date has no affect on actuator operation.

8 **Calbrtd**: The calibration date has no affect on actuator operation.

9 **Review**: Link to the Review menu.

10 **Poll addr**: Used to find the actuator. Most configurations should use "0".

MENU 3C -- Configuration

The Configuration menu serves as the gateway to all of the actuator operating parameters that can be used to configure the actuator based on the desired operation.

1 **General Setup:** Link to General Setup menu.

2 **PositionSensrSetup:** Link to PositionSensrSetup menu.

3 **Demand Setup**: Link to Demand Setup menu.

4 **Feedback Setup**: Link to Feedback Setup menu.

5 **Torque Setup (optional)**: Link to Torque Setup menu.

6 **Restore to Factory**: Restores field-configurable parameters back to the settings in effect when the DCM-3 was shipped from the factory.

7 **Use Default Setup**: Changes the DCM-3 position sensing voltage ranges to the proper ranges for the actuator model.

MENU 4B -- General Setup

This menu sets actuator operating parameters. The nine parameter entries are as follows:

1 **Drive Dir**: The direction the output shaft rotates (looking into the output shaft) in response to an increasing Demand signal.

2 **MaxTravel**: The maximum available travel distance of the output shaft in degrees. This number corresponds to the actuator design—if the correct Serial Number is entered, this parameter should not be changed.

3 **Travel**: The number of degrees of output shaft travel for 100% span.

4 **StepSize**: The smallest Demand change that will cause an output shaft movement.

5 **Stall Time**: The amount of time the motor will run before Stall Protection is initiated.

6 **StallProt**: This entry is set as either “Enabled” or “Disabled”.

7 **LimitSwitch**: This entry is set as either “Accept” or “Alert” and defines whether or not contacting an overtravel limit switch outside of the normal 0% to 100% travel range will cause an alarm condition.

8 **PositionUnit**: The numeric unit of measure for the output shaft position in angular degrees.

9 **Temperature Unit**: The unit of measure for temperature sensing. May be “degF” (fahrenheit) or “degC” (celsius).

MENU 4C -- PositionSensrSetup

This menu contains parameters that determine how the DCM-3 interprets the output shaft position signal from the CPS-5.

1 **Set Pos 0%**: Sets the 0% position to match the present output shaft position. This does not change the 100% position.

2 **Set Pos 100% Span**: Sets the 100% position

DRAFT

to match the present output shaft position. Also instructs the DCM-3 to change "Travel" span based on the 0% position. This does not change the 0% position.

3 **PresCPS V**: Displays the CPS-5 signal voltage at the present output shaft position. Not editable.

4 **CPS Zero%**: Displays the CPS-5 voltage at the 0% output shaft position. May be edited to define the voltage at the lowest operating point of travel.

5 **CPS Span**: Displays the voltage signal span from the CPS-5 for maximum possible rotation of the output shaft. This is the upper range voltage minus the lower range voltage. Not editable.

6 **CPS RngLwr**: Displays the CPS-5 voltage signal at the lowest possible point of travel. Not editable.

7 **CPS RngUpr**: Displays the CPS-5 voltage signal at the highest possible point of travel. Not editable.

8 **Pos S/N**: Displays the Serial number of the CPS-5 and has no effect on actuator function.

9 **Snsr Dir**: The direction of output shaft rotation that causes the CPS-5 signal to increase. This direction is typically CW and is not editable.

MENU 4D -- Demand Setup

The parameters on this menu determine the range and characterization of the Demand signal. It also includes parameters that determine behavior when the Demand signal is absent.

1 **DemRngLwr**: Sets and displays the signal value in mA that represents 0% Demand (default is 4.00 mA, minimum is 0.5 mA). This value should be set above "DemLimLwr".

2 **DemRngUpr**: Sets and displays the signal value in mA that represents 100% Demand (default is 20.00 mA, maximum is 21.00 mA). This value should be set below "DemLimUpr".

3 **Dem Curve**: Determines the relationship between the Demand signal and the position of the output shaft. Typically set to Linear, but may also be set to Square, Square Root or customized Special Curve.

4 **Dem Curve Spcl**: Link to the "Dem Curve Spcl" menu. (Not available with all DCM versions).

5 **LOS Mode**: Action on loss of Demand signal.

6 **LOS Pos**: If the "LOS Mode" has been set to "Go-to-Pos", this defines where the output shaft will move (in percent of travel) during loss of Demand signal conditions.

7 **DemLimLwr**: Sets the threshold (in mA) below which the Demand signal is considered lost. This value should be set below "DemRngLwr".

8 **DemLimUpr**: Sets the threshold (in mA) above which the Demand signal is considered invalid. The Demand alarm will activate until the signal is brought below this level. This value should be set above "DemRngUpr".

MENU 5A -- Dem Curve Spcl

This menu allows setting the Demand signal characterization curve.

MENU 4E -- Feedback Setup

This menu is where all the Feedback signal related actuator parameters are set.

1 **FBRngLwr**: The value of the Feedback signal (in mA) that corresponds to a 0% output shaft position. This value can range between 3.00 mA and 16.00 mA (default = 4.00 mA).

2 **FBRngUpr**: The value of the Feedback signal (in mA) that corresponds to a 100% output shaft position. This value can range between 7.00 mA and 21.00 mA (default = 20.00 mA).

3 **Feedback**: Enables or Disables the Feedback signal.

4 **FB Curve**: Allows a choice between a Feedback signal that linearly represents true shaft position or a characterized Feedback signal that inverts the effect of a characterized Demand signal.

MENU 4F -- Torque Setup (optional)

This menu is where all Torque related actuator parameters are set. NOTE: Torque features require torque sensing hardware. This is an extra-cost option that must be specified at time of order.

1 **Trq/Thrust**: Enables or disables torque sensing.

2 **Ovt Prot**: Enables or disables overtorque protection which will remove power from the motor if excessive torque is detected.

3 **AlarmLevel**: Sets the value that, if exceeded, will cause the Torque Alarm to activate.

4 **ShutDwnTrq**: Sets the output shaft torque in percentage of actuator rating that, if exceeded, removes power from the motor.

5 **Trq Null**: The torque sensor value that represents 0% output shaft torque.

6 **Trq Const**: The internal DCM-3 signal span associated with the output shaft torque. This value is determined during manufacture and is noted on a label inside the DCM-3 cover.

DRAFT

MENU 3D -- Statistics

This menu is where all the actuator's stored operating statistics are available.

1 Starts: The total number of motor starts.

2 Reversals: The total number of times the motor has started in the direction opposite to the previous start.

3 Stalls: The total number of times the stall time has been exceeded.

4 OverTorques (optional): The total number of times that excessive torque was detected at the output shaft.

5 Pk Torque (optional): The highest recorded torque on the output shaft.

6 TotRunTm: Total amount of time the motor has been powered (in seconds).

7 High Temp: Highest temperature recorded in the DCM-3 compartment (in degrees fahrenheit).

8 Low Temp: Lowest temperature recorded in the DCM-3 compartment (in degrees fahrenheit).

MENU 3E -- Manual Operation

This menu is used to allow manual operation using HART® communications. There are three manual operation procedures available:

1 Op mode (Menu 4G): Selects the operating mode of the DCM-3. There are six possible choices: "Follow", "Hold", "RunCW", "RunCCW", "Stay" and "Stop". "Follow" mode is the normal state of operation and allows the DCM-3 control in response to the analog input Demand signal. "Hold" mode forces the DCM-3 to position according to the HART Demand value (see right). "RunCW" mode forces the actuator to move CW. "RunCCW" forces the actuator to move CCW. The "Stay" mode forces the actuator to maintain its present position. Note that in "Stay" mode, the Handwheel cannot be freely turned. The "Stop" mode removes power from the motor. Note that in "Stop" mode the Handwheel can be freely turned. Note that the Handswitch overrides all operating modes.

2 Demand: This procedure sets the effective Demand signal. If "Op mode" is set to "Hold", entering a valid value (-5% to 105%) will control the motor. If "Op mode" is set to "Follow", the analog Demand signal is displayed (unless an alarm condition exists).

3 Reset Stall: This procedure resets normal actuator operation after a stall condition has caused the motor to shut down. Note that stall conditions can also be reset by simply reversing the input Demand signal or cycling the actuator AC power.

MENU 3F -- Diagnostics

This menu provides access to all DCM-3 stored diagnostic information concerning actuator operation.

MENU 4H -- Status

This menu provides links to menus that monitor the operational status of the actuator. It also displays one parameter, line frequency.

5 Line Freq: The power line frequency as measured by the DCM-3.

MENU 5B -- LED Status

The LED Status parameter allows remote checking of which LED's on the DCM-3 are illuminated.

MENU 5C -- Operating Status

The Operating Status parameter is a summary of whether process-related conditions are inside or outside of anticipated limits. These conditions control the Status Indication LEDs.

1 Demand: Caused by the Demand signal falling below or above acceptable levels.

2 Position: Caused by the CPS-5 signal being outside the range anticipated by the DCM-3.

3 Temperature: The ambient temperature of the DCM-3 is outside of the rating.

4 Torque (optiona): Warns that torque is high.

5 Overtorque Stop (optional): Overtorque protection is preventing the DCM-3 from running the motor.

6 Stalled: A Stall alarm is active.

7 Feedback Open: The Feedback signal is enabled, but cannot follow the proper current.

8 Switch Block: The DCM-3 cannot power the motor due to an electro-mechanical switch. Check the Handswitch and over-travel limit switches.

MENU 5D -- Switch Status

Not applicable to Group 11 actuators.

DRAFT

MENU 5E -- Local Cntrl Status

This parameter allows remote monitoring of which buttons on the local configuration interface are being pressed.

MENU 5F -- CW Inhibitors

Allows viewing of the DCM-3 condition that is preventing the actuator motor from running in the CW direction.

MENU 5G -- CCW Inhibitors

Allows viewing of the DCM-3 condition that is preventing the actuator motor from running in the CCW direction.

MENU 4I -- Tests

This menu provides access to some routines that help determine if the actuator is functioning properly.

1 FB Out Test: Allows manual verification of the Feedback output signal to check operation and accuracy.

2 Board Self-Test: Instructs the DCM-3 to check various power and sensing circuits. This test will cause the actuator to reposition, so it should be run offline and only when a DCM-3 problem is suspected.

3 Identify Device: Causes the ACK LED on the DCM-3 to flash for two seconds. Ensures the HART system is addressing the correct actuator.

4 Board Reset: Causes the DCM-3 to initiate a reset cycle similar to a power-up reset. This manual reset will cause the actuator to reposition. This procedure is not typically necessary.

MENU 4J -- CW Torque (optional)

This menu displays the peak output shaft torque measured for 10 segments. These torque values are measured with the motor running and moving the output shaft CW.

MENU 4K -- CCW Torque (optional)

This menu displays the peak output shaft torque measured for 10 segments. These torque values are measured with the motor running and moving the output shaft CCW.

MENU 4L -- Alarm Setup

The Alarm Setup menu parameters allow modification of the behavior of the alarm.

1 AlarmPol: Whether the solid state relay opens on alarm or closes on alarm.

2 Alarm Mask: Link to the Alarm Mask menu which allows specific alarm conditions to be ignored.

MENU 5H -- Alarm Mask

Allows selection of alarm conditions that will not cause an alarm at terminal E.

MENU 4M -- RealTimeClock

This menu allows the date and time to be set.

1 RTC Day: Day of the month (numeric value).

2 RTC Month: Month (numeric value).

3 RTC Year: Year (4 digits).

4 Hour (24): Hour of the day (24 hour format).

5 Minute: Minute of the hour (0 through 59).

MENU 3G -- Calibration Trim

The Calibration Trim menu sets and displays actuator calibration values. **Note that changing the calibration trim can cause signal measurement difficulties if performed improperly.**

1 PresCPS V: Displays and/or trims the present voltage of the position signal. This value may also be measured at DCM-3 test points TP1(–) and TP4(+). This trim is set and tested at the factory. Changing this value can cause voltage measurement errors.

2 Loop(Dem): Displays the Demand signal as measured at the field wiring terminals. When the Demand control loop signal is being overridden by a special mode of operation, the effective Demand will not correspond to the mA value. This value can be edited to trim the Demand to ensure accurate measurement of the analog signal. Demand can only be trimmed at 4.0 mA and 20.0 mA.

3 Feedback: Displays the mA signal representing the output shaft position as measured at the field wiring terminals. This value can be edited.

4 Trq/Thrust (optional): Displays the load measured at the output shaft as a percentage. This is also a short cut to set the 0% torque parameter (“Trq Null”) by removing load from the output shaft, then writing a “0” to this value.

DRAFT

APPENDIX HART® Messages

COMMON HART® MESSAGES

HART® protocol maintains both standard and device specific informational messages that are displayed on the Communicator when various conditions occur.

Below is a table of typical Beck actuator messages and message sequences. It does not include all possible messages, only the most common. (NOTE: Not all messages are applicable to all DCM versions).

Output Shaft Position Measurement Messages

Message	Description
"Process applied to the primary variable is outside the operating limits of the field device."	This is a standard HART-defined message that appears whenever the HART primary variable (Position signal) is outside the design or calibrated range. This message should be accompanied by a Beck-specific message with more detail.
"The Position Signal is less than -5% or greater than 105%."	This Beck-specific message indicates the DCM-3 is reading a Position signal not within the calibration range limits.
"Position signal in LOS."	This is a Beck-specific message. The DCM-3 is indicating that the Position signal is a problem and is intended to identify a CPS-5 or wiring failure. This is triggered when the Position signal is outside the minimum and maximum voltage limits.
"Position out of accurate measurement range."	This is a Beck-specific message. The DCM-3 indicates the Position signal is outside of the design range.
"Position sensing error."	This is a Beck-specific message. The DCM-3 circuitry for measuring the Position signal does not appear to be functioning properly.
"Analog output 1 and its digital representation are outside the operating range limits, and not responding to input."	This is a standard HART-defined message that appears whenever the position signal to the DCM-3 is outside the design or calibrated range. This message should be accompanied by a Beck-specific message with more detail.

Handswitch and Over-travel Limit Switch Message

Message	Description
"Motor power is blocked, check switches."	This message will appear if the DCM-3 detects a condition that prevents current flow to the motor.

Stall Protection Message

Message	Description
"Stall condition has been detected (see 'Stall Time' in the 'General Setup' menu)."	This is a Beck-specific message indicating that the actuator is in a stalled condition. This occurs if the actuator cannot reach the Demand position in the time allotted by the stall time setting (configurable from 30–450 seconds).

DRAFT

Demand, Torque and Temperature Measurement Messages

Message	Description
"Process applied to the non-primary variable is outside the operating limits of the field device."	This is a standard HART-defined message that appears whenever the Demand signal or Temperature are outside their design or calibrated ranges. This message should be accompanied by a Beck-specific message with more detail.
"The Demand Signal is outside of the intended limits (see Demand Setup menu)."	This Beck-specific message indicates the Demand signal is invalid.
"Demand out of accurate measurement range."	This is a Beck-specific message that the Demand signal is not only out of the calibrated range, but also out of the design range of the actuator. The lower and upper limits are 0.1 V dc and 5.5 V dc, respectively. Note that current input DCM-3 boards utilize a 250 Ohm input resistor to convert the current signal to voltage.
Demand Signal is out of limit.	This Beck-specific message indicates the Demand signal is too high to measure accurately. The upper limit is 5.5 V dc. Note that current input DCM-3 boards utilize a 250 Ohm input resistor to convert the current signal to voltage.
Demand sensing error.	This is a Beck-specific message. The Demand sensing circuitry does not appear to be functioning properly.
The Torque/Thrust is greater than the output rating.	This Beck-specific message defines an output shaft torque overload problem.
Motor power has been removed due to excessive output torque.	This Beck-specific message indicates the DCM-3 has removed power from the motor due to excessive output shaft torque load. The Handswitch must be in AUTO mode for this alarm to be accurate.
Torque/Thrust out of accurate measurement range.	This is a Beck-specific message. The DCM-3 is not able to read a valid signal from the Torque sensor.
Torque/Thrust sensing error.	This is a Beck-specific message. The DCM-3 circuitry for measuring the Torque signal does not appear to be functioning properly.
The temperature is outside of -40°F to 185°F.	This is a Beck-specific message indicating that the temperature at the DCM-3 is outside of the acceptable range.
Temperature out of accurate measurement range.	This is a Beck-specific message. The DCM-3 ambient temperature reading is extreme and cannot be accurately measured.
Temperature A/D Fail.	This is a Beck-specific message. The DCM-3 circuitry for measuring the ambient temperature does not appear to be functioning properly.
The Feedback Signal is enabled but the loop is open.	This is a Beck-specific message indicating that the Feedback sourcing circuit is unable to create the proper signal current. This message could result from the signal not being wired to an external load, or a wiring failure has occurred at some point between the actuator and the monitoring device.

DRAFT

Questionable Configuration Messages

Message	Description
Analog output 1 and its digital representation are in fixed mode, and not responsive to input changes.	Standard HART-defined message that appears whenever the Feedback signal has been manually assigned a value. This message should be accompanied by a Beck specific message with more detail.
Feedback is in fixed mode.	A Beck-specific message indicating that the Feedback signal has been manually set to a fixed value and is not following the Position value.
Local control button pressed while locked-out.	A Beck-specific message indicating an incorrect combination of pushbuttons is being pressed on the local configuration interface, or the local control interface is disabled and a pushbutton is being pressed.
Loop Current Detected while under HART/FF Control.	A Beck specific alarm message that alerts the user that analog current is present on the Demand terminals, but the DCM-3 is in an Op Mode expecting digital control. Make certain the Op Mode parameter is set properly.
Loop Current Detected while set for LOS PAT.	A Beck specific alarm message that alerts the user that analog current is present on the Demand terminals, but the DCM-3 is set to a LOS mode intended to be used without an analog signal.

DCM-3 Failure Messages

Message	Description
Real-time Clock hardware failure.	This is a Beck-specific message. The data in the Real-time Clock appears invalid.
FRAM Memory has failed.	A Beck-specific message. The continuous built-in self-test cannot verify the memory for statistics information is operating properly.
Memory failure.	This is a Beck-specific message. The continuous built-in self-test cannot verify the microcomputer is operating properly.

Miscellaneous HART-Defined Messages

Message	Description
Field device has more status available.	This is a standard HART-defined message that appears whenever the DCM-3 signals the HART master that an alarm or other undesirable status exists. This is the HART protocol mechanism for displaying the other messages in this section. If this message is displayed without an additional message, the status cleared before the HART master read the additional status.
A reset or self-test of the field device has occurred, or power has been removed and reapplied.	This message is presented by the HART master if the DCM-3 has gone through a power-up reset sequence since the last communication with the master. This message is only displayed once after a reset.
A modification has been made to the configuration of the field device.	This message indicates that the DCM-3 has undergone a configuration change since the last time the HART master has reset the change flag. Many HART masters disregard the flag and do not report this message.
Field device has malfunctioned due to a hardware error or failure.	This message indicates that the continuous built-in self-test cannot verify the microcomputer is operating properly.

DRAFT

APPENDIX Serial Communication

COMMUNICATIONS

Local configuration of the Beck actuator can be accomplished using Serial commands through the DCM-3 Serial port.

CAUTION

Changes made to the actuator through Serial communications may not necessarily be reflected in asset management systems. Be sure to verify any changes made serially and make manual corrections to the asset management system if necessary.

The Beck Digital Control Module (DCM-3) is equipped with a Serial interface which allows for direct communication with a computer. Using a standard DB9 to USB cable, connect the DCM-3 to the computer using the DCM-3's DB9 connector (see below for location) and one of the computer's USB ports. Note: If your computer is equipped with an active COM port, a DB9 to DB9 cable may be utilized. See below for part numbers of cables available from Beck.

Once connected, communication can be established between the DCM-3 and the computer using a terminal emulation program, such as HyperTerminal®. This method of communication will allow for configuration, calibration and verification of actuator DCM-3 settings without the use of custom software applications.



Hyperterminal® is a product of Hilgraeve, Inc.

HyperTerminal® SOFTWARE

HyperTerminal is the standard ASCII terminal emulation software provided with Microsoft® Windows®. If using HyperTerminal®, the following instructions will assist in setup. Note that some variation to these instructions may be necessary depending on the version of HyperTerminal® being used.

After connecting the DCM-3 to the (Windows®-based) computer, access HyperTerminal® by clicking first on "Start", then "Programs", then "Accessories", then "Communications", then "HyperTerminal". Double-click on the "Hypertrm.exe" icon to start the program. Once HyperTerminal® is running, it is necessary to set up a file with the proper settings to communicate with the DCM-3. Proceed as follows:

1. If prompted to install a modem, answer "no". Proceed to enter a name (e.g., "DCM-3") and select an icon (any will suffice) in the "Connection Description" box. Click the "OK" button.
2. The "Connect to" box should open next. At the bottom of the box, set the "Connect using" selection to the appropriate USB (or COM) port that has been connected to the DCM-3. Click the "OK" button.
3. The port properties box should open next; this is where the communication settings are established. The correct settings are:
   a. Bits per second = "1200"
   b. Data bits = "8"
   c. Parity = "none"
   d. Stop bits = "1"
   e. Flow control = "none"
4. With the appropriate settings entered from Step 3, above, click "OK". Communications should now be enabled.
5. Press the "Enter" key twice. "OK" should be displayed indicating that HyperTerminal® is communicating with the DCM-3.

Beck Serial Communications Cables



DB9 to USB-A
P/N 20-0511-60



DB9 to DB9
P/N 20-0511-14

*Note cables may differ in appearance from depiction.

DRAFT

APPENDIX Serial Commands

COMMANDS AND ARGUMENTS

Commands can be used for a variety of functions including changing the operating configuration of the actuator, verifying operation settings, calibration and accessing diagnostic information. There are essentially four different types of commands:

1. Dual-purpose commands. These commands can be used to either modify actuator configuration settings or display the settings already set in the actuator. In order to set or make a change to the settings, the command requires an argument (***n***). If the command is used for display purposes only, the argument is omitted. Examples of these commands include "temperature" and "demlos".
2. Display only commands. These commands are used to display diagnostic or operating information such as present signal values. No arguments are required. Examples include the "stat" command and the "signals" command.
3. Set only commands. These commands serve only to make a parameter change. Typically, they apply to the actuator calibration. This type of command requires an argument, but unlike dual-purpose commands, they return an error message when entered without an argument. Examples include the “charset” and “trimfdbk4mA” command.
4. Execute action commands. These commands serve to reset, enable or disable features. Entering these commands produces an immediate action. Examples include the "reset" and "restoremodes" command.

The available commands are listed on the next several pages and each is described in detail. The command description explains the use or uses of the command, while the argument column describes any applicable arguments. Arguments are denoted as ***n***. Note that the commands described as "sets and/or displays" signify dual-purpose commands that can be used with or without an argument for setting or verifying configuration settings.

DRAFT

APPENDIX Serial Commands

SERIAL COMMANDS

The following is a categorized list of Serial commands available through the DB9 interface. These commands are described in detail on the pages that follow.

Output Shaft Position Sensing Commands

cpsvat0pct	travel

General Configuration Commands

alarmout	restoremodes
alarmoutmask	sernum
configformodel	stallprot
drvdir	stalltime
limitalarm	stepsize
opmode	

Torque Sensing Commands (optional)

ovtstop	torqalarm
ovtstoplevel	torqconst
torq	torqenable
torq0k	torqprof
torq0pct	

HART® Configuration Commands

harttype	polladdr

Diagnostic and Information Commands

demsource	signals
help	stat
ledtest	temperature
reset	unstall

Demand Signal Commands

dem0pctma	demlosgtp delay
dem100pctma	trimdem4ma
demlos	trimdem20ma
demlosgtp	

Demand Characterizer Commands

charclear	charset
charlist	demfunc

Feedback Signal Commands

fdbk0pctma	trimfdbk4ma
fdbk100pctma	trimfdbk20ma
fdbkfunc	iomode

DRAFT

Output Shaft Position Sensing Commands

Command	Description	Argument *n* and Information
cpsvat0pct ***n***	Sets/displays the DCM-3 voltage setting used to determine 0% signal from the CPS-5. Voltage is dependent upon the actuator model. Typically, this setting does not need to be changed.	***n*** = desired voltage as a decimal (carried out to 3 decimal places). The standard signal range for an actuator configured for 100 degrees of output shaft rotation is approx. 1.000–5.000 V.
travel ***n***	Sets/displays the number of degrees that represents 100% travel. This command does not shift the 0% position; when increasing travel from a reduced travel setting, the 0% position may need to be changed first to keep travel within acceptable end points. The end points are defined by the CPS-5 voltage range.	***n*** = desired length of travel in degrees. This value cannot exceed the maximum output shaft rotation of the actuator.

General Configuration Commands

Command	Description	Argument *n* and Information
alarmout ***n***	Sets/displays the polarity of the alarm output solid state relay.	***n*** = "0": open on Alarm ***n*** = "1": closed on Alarm Upon loss of power, the relay is open regardless of the setting.
alarmoutmask ***n***	Sets/displays (in hexadecimal format) which conditions will cause an alarm: 0x00000001 - Demand Loss of Signal 0x00000002 - Torque High 0x00000004 - Stall Condition 0x00000008 - Torque Stop 0x00000010 - Stop/Limit 0x00000020 - Feedback Loss of Signal 0x00000040 - Temperature too High/Low 0x00000080 - Position Outside of Limits 0x00000100 - Real-time Clock Failure 0x00000200 - Torque Measurement Failure 0x00000400 - Position Analog/Digital Circuit Failure 0x00000800 - Demand Measurement Failure 0x00002000 - Position Loss of Signal 0x00004000 - Temperature Measurement Failure 0x00008000 - Memory Failure 0x00010000 - Invalid Button Pressed 0x00020000 - Demand too High	***n*** = "0x0": no listed condition causes a status alarm ***n*** = "0xffffffff": all listed conditions cause a status alarm ***n*** = hexadecimal value for specific condition(s) which will cause an alarm. Multiple conditions may be selected by performing a hexadecimal addition of the condition values; e.g., Stall Condition and Torque Stop alarms -- *hex* 0x04 + 0x08 = 0x0C.
configformodel ***n***	Sets certain DCM-3 default values based on the actuator Serial number. These values are direction rotation for an increasing CPS-5 signal, expected range of CPS-5 signal, and the maximum travel.	***n*** = "1": executes command
drvdir ***n***	Sets/displays the actuator output shaft rotation direction resulting from an increasing Demand signal.	***n*** = "0": CW rotation ***n*** = "1": CCW rotation
limitalarm ***n****	Sets/displays alarm action if the actuator travels outside of the electronic limits and contacts an over-travel limit switch.	***n*** = "0": mute (no alarm) ***n*** = "1": always
opmode ***n***	Sets/displays the mode that controls the Demand signal source. This mode selects analog or digital control.	***n*** = "0": analog Demand ***n*** = "1": digital Demand ***n*** = "2": run CW ***n*** = "3": run CCW ***n*** = "4": stay ***n*** = "5": stop
restoremodes ***n***	Returns the DCM-3 settings to the original factory configuration.	***n*** = "1": executes command
sernum ***n***	Sets the actuator Serial number.	***n*** = Serial number
stallprot ***n***	Sets/displays stall protection state.	***n*** = "0": disabled ***n*** = "1": enabled
stalltime ***n***	Sets/displays time the actuator runs in one direction before stall alarm is activated.	***n*** = seconds: acceptable range is 30–450 seconds.
stepsize ***n***%	Sets/displays the size of one incremental movement of the output shaft.	***n*** = % of travel desired: acceptable range is 0.10%–2.5%. Include the "%" symbol after the number, otherwise the unit of measure will be degrees.

*Not available with all DCM versions.

DRAFT

Torque Sensing Commands (available with optional hardware)

Command	Description	Argument *n* and Information
ovtstop *n*	Sets/displays whether motor power will be removed during severe overtorque conditions. Torque sensing must be installed and enabled.	*n* = “0”: disabled *n* = “1”: enabled
ovtstoplevel *n*	Sets/displays the torque magnitude associated with severe output shaft torque conditions.	*n* = allowable torque magnitude (without stopping motor) in percent of actuator rating. May be set from 25% to 150% (factory set to 150%).
torq	Displays the torque on the output shaft measurement as a percentage of actuator rating. Also displays related values such as torq0k and torqconst.	No argument.
torq0k *n*	Sets/displays the value of DCM-3 internal measurement corresponding to 0% torque on the output shaft.	*n* = the zero torque value in counts (noted on label inside DCM-3 cover).
torq0pct *n*	This is an alternate method for setting torq0k, and is useful when the correct torq0k value is not already known. To use this command, remove all load from the output shaft, then execute torq0pct with argument “0” to let the DCM-3 know that the torque sensing should be reading 0%.	*n* = “0”
torqalarm *n*	Sets and/or displays the torque magnitude associated with the first level of alarm.	*n* = allowable torque magnitude without alarm, in percent of actuator rating.
torqconst *n*	Sets/displays the value of DCM-3 internal measurement corresponding to the torque span (the measurement at 100% minus the measurement at 0%).	*n* = the torque span value in counts (noted on label inside DCM-3 cover).
torqenable *n*	Sets/displays the enabled or disabled status of torque sensing.	*n* = “0”: disabled *n* = “1”: enabled
torqprof	Displays a three table column: 1. Maximum travel divided into 10 segments 2. peak torque measured in each segment with motor running CW 3. peak torque measured in each segment with motor running CCW	No argument.

HART® Configuration Commands

Command	Description	Argument *n* and Information
harttype ***n***	Sets/displays the DCM-3 HART DD (Device Description). "239" is the proper DD; other DDs are for temporary use if the new DD is not available.	***n*** = "1": ESR-D ***n*** = "10": Beck DCM ***n*** = "239": Beck MK2
polladdr ***n***	Sets/displays the polling address used by the HART master to find individual devices if the HART bus has more than one device.	***n*** = the polling address (a number between "0" and "15"). Unless multiple HART devices are connected in parallel on a single bus, the polling address should be set to "0".

DRAFT

Diagnostic and Information Commands

Command	Description	Argument *n* and Information
demsource	Provides a readout of information regarding the Demand on the actuator including the source of the Demand signal (Handswitch, demlos or Analog I/P), mode (follow, hold, CW, CCW, Stay or Stop), currently applied Demand signal as a %, the Demand function (linear, square root, square, or special), and the Demand out as a % (dem out shows the signal adjusted when using a non-linear Demand function (demfunc command)).	No Argument
help ***n***	Displays help text for a specific command or lists all available Serial commands.	***n*** = command name ***n*** = "all"
ledtest ***n***	Tests the functionality of the DCM-3 LEDs individually or as a group. If "all" is selected, the command will consecutively cycle through each LED twice. If an individual LED is selected, it will flash 12 times.	***n*** = "1": DEMAND ***n*** = "2": POSITION ***n*** = "3": TRQ/THRUST ***n*** = "4": STALL ***n*** = "5": TEMP ºF ***n*** = "6": FB OPEN ***n*** = "7": STOP/LIMIT ***n*** = "8": ACKNOWLEDGE ***n*** = "100": FWD ***n*** = "101": REV ***n*** = "102": STAT ***n*** = "All"
reset ***n***	Performs the same reset sequence as when power is removed and reapplied.	***n*** = "1": must equal "1" for command to execute.
signals	Displays the present DCM-3 readings of four signals: Position signal from CPS-5 Demand Feedback Torque	No argument = signal readings are displayed. ***n*** = "all": an extended set of data is displayed.
stat	Displays information on the status of the actuator, including: Time / Date, Demand, Position, Error (Demand minus Position), Step size, Dead band, Motor Status, Motor Run Time, Line Frequency, Motor Starts, Motor Reversals/Stalls, Number of Overtorque conditions, Positive & Negative Peak Torque (%), CW and CCW Inhibitor Status, Alarms	No argument
temperature ***n***	Displays three values describing the ambient temperature in the actuator. Low extreme, present, high extreme. Can also change the temperature units.	No argument = temperatures are displayed. ***n*** = "F": changes units to Fahrenheit ***n*** = "C": changes units to Celsius
unstall	Resets the Stall Protection alarm to restore power to the motor. If the motor is still physically stalled, the Stall Protection alarm will recur.	No argument.

DRAFT

Demand Signal Commands

Command	Description	Argument *n* and Information
dem0pctma ***n***	Sets/displays the Demand signal value that corresponds to 0% actuator position.	***n*** = Demand signal as a decimal in mA. Minimum value is 0.50; maximum value is 100% Demand less 4.00 mA (e.g., if 100% Demand is 20.00 mA, the 0% value must be set for 16.00 mA or less).
dem100pctma ***n***	Sets/displays the Demand signal value that corresponds to 100% actuator position.	***n*** = Demand signal as a decimal in mA. Minimum value is 0% Demand plus 4.00 mA (e.g., if 0% Demand is 4.00 mA, the 100% value must be set for 8.00 mA or greater). Maximum value is 21.00 mA.
demlos ***n***	Sets/displays the Demand signal threshold, below which the DCM-3 recognizes the signal has been lost. The threshold is entered as a value in mA. This command also sets/displays the action initiated by the actuator during LOS (Loss Of Signal). LOS action options are "sip" (stay in place) or "gtp" (go to position). Demlos always reports both settings, but only sets one argument at a time. Demlos must be used twice to set both the threshold and action.	***n*** = Demand signal in mA below which LOS occurs (e.g., the typical value for a 4–20 mA system is 3.20). **-OR-** ***n*** = "sip", "gtp" or "pat". The "pat" argument acts the same as "sip", but also suppresses the alarm--this is used in some pulsed applications.
demlosgtp ***n***	Sets/displays the position to which the actuator will run upon loss of the Demand signal (LOS). This command has no effect if the actuator is set to "sip" (stay in place).	***n*** = desired position of actuator expressed as a percentage of actuator travel in decimal form (e.g., 50% = 50.00).
demlosgtp delay ***n***	Sets the time delay in seconds before the actuator will move to the position set in “demlosgtp”. Entering this command without an argument will return the present gtp and delay settings.	***n*** = time delay in seconds. Acceptable values are 0 (default) to 25.5.
trimdem4ma *4*	Trims the Demand analog-to-digital sensing circuit to be accurate at 4 mA. This command should only be used when the Demand signal at the actuator is exactly 4.0 mA. Trim is factory set and should not normally require recalibration.	"*4*" is the only acceptable value; this trim can only be performed at 4 mA.
trimdem20ma *20*	Trims the Demand analog-to-digital sensing circuit to be accurate at 20 mA. This command should only be used when the Demand signal at the actuator is exactly 20.0 mA. Trim is factory set and should not normally require recalibration.	"*20*" is the only acceptable value; this trim can only be performed at 20 mA.

DRAFT

Demand Characterizer Commands

Command	Description	Argument *n* and Information
charclear ***n****	Clears a preconfigured Demand characterizer curve node by setting it to "unused". Any node numerically higher will be set to "unused" also.	***n*** = node number: between 1 and 21.
charlist ***n****	Displays the X-values and Y-values of Demand characterizer curve node(s).	***n*** = node number: between 1 and 21. ***n*** = "all": displays all nodes
charset ***n1***, ***n2***, ***n3****	Sets the X-values and Y-values of a specific node of the characterizer curve. The three arguments must be separated by commas.	***n1***,***n2***,***n3*** = (n1 is node number to modify, n2 is X-value as a percentage, n3 is Y-value as a percentage)
demfunc ***n***	Sets/displays the Demand signal characterization function.	***n*** = "0": linear ***n*** = "1": square root ***n*** = "4": special curve* ***n*** = "5": square

*Not available with all DCM versions.

Feedback Signal Commands

Command	Description	Argument *n* and Information
fdbk0pctma *n*	Sets/displays the mA value of the Feedback signal that represents the 0% output shaft position. May also be set for decreasing direction of Feedback. See page 36.	n = desired Feedback signal in mA at 0% output shaft position. Minimum value is 3.00 mA and the maximum must be at least 4.00 mA less than the Feedback signal value for the 100% output shaft position.
fdbk100pctma *n*	Sets/displays the mA value of the Feedback signal that represents the 100% output shaft position. May also be set for decreasing direction of Feedback. See page 36.	*n* = desired Feedback signal in mA at 100% output shaft position. Minimum value must be at least 4.00 mA greater than the Feedback signal value for the 0% output shaft position. Maximum value is 21.00 mA.
fdbkfunc *n*	Sets/displays the curve used to calculate the Feedback signal.	*n* = "0": linear *n* = "1": inverse Demand (curve enabled)
trimfdbk4mA *n*	Trims the Feedback signal at 4 mA. Calibrated at the factory, should not normally require calibration.	*n* = present Feedback signal from the DCM-3 in mA.
trimfdbk20mA *n*	Trims the Feedback signal at 20 mA. Calibrated at the factory, should not normally require calibration.	*n* = present Feedback signal from the DCM-3 in mA.
iomode *n*	Sets/displays the function of a DCM-3 connector pin. May be enabled for Feedback or potentiometer.	*n* = "0": none *n* = "1": Feedback enabled *n* = "2": potentiometer power enabled.

DRAFT

APPENDIX Optional DCM-3 w/ Feedback Display

The DCM-3 Feedback display is an illuminated, numerical readout showing the actuator's position as a percentage of full travel. This display is viewed through a tempered glass window in the electronics compartment. There are also two configurable LEDs visible—a red LED and a green LED.

The DCM-3 display has been calibrated at the factory and should not require any further adjustments.

The display is dependent on the Feedback loop current and will not operate until the loop is closed. If not utilizing external Feedback, a jumper must be installed between terminals DD and EE on the terminal block to activate the display. The Feedback output maximum loop resistance is 500Ω.

The configuration for the Feedback display is 4 mA = 00.0(%) and 20 mA = 100.0(%). By default, the green LED will light when the Feedback is indicated at less than 1(%). The red LED will light when the Feedback is indicated at greater than 99(%).

The illumination points for the LEDs may be modified using a serial command (see next page).

For information on serial communication and commands, see page 70.

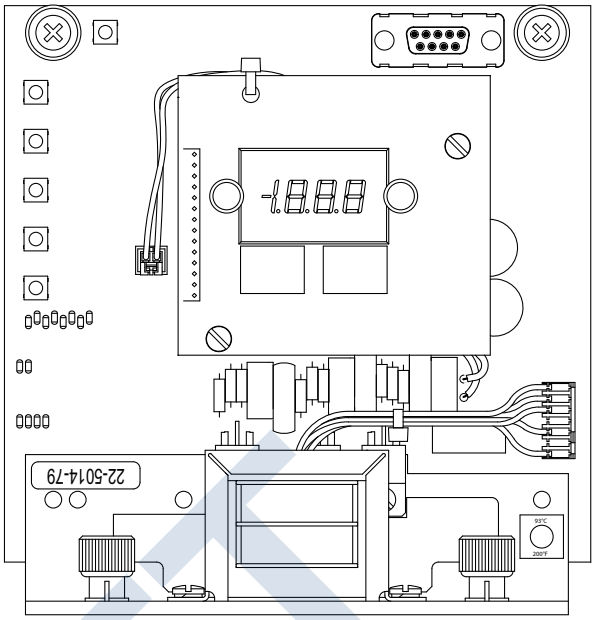

DCM-3 with Feedback Display
Part No. 22-5014-79



DRAFT

Command	Description	Argument *n* and Information
ledconfig ***n1 n2***	Changes the point within the position of travel that causes the LEDs to light. May also be used to swap the LED end point assignments (see Example 2, below) or to individually turn off each LED.	***n1*** = "red": sets the red LED to the ***n2*** argument. "green": sets the green LED to the ***n2*** argument. "inverted": swaps the LED end point assignments (see Example 2, below). "noninverted": sets both LED end points to the default setting (see below). ***n2*** = argument defining position of travel at which the selected LED (***n1***) will light. Accepts any number representing a valid percentage of travel position. "off": turns off the LED defined in ***n1***.

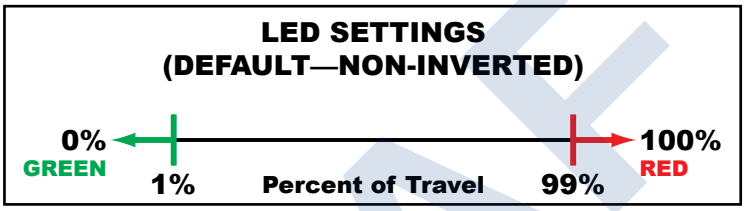

Example 1: Make the "CLOSED" green LED light at 2.0% and the "OPEN" red LED light at 98.0%.

COMMAND	RESULTING LED BEHAVIOR
ledconfig *green 2* **ledconfig *red 98***	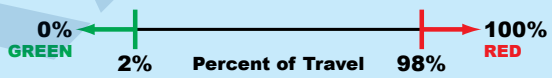

Example 2: Invert the LED assignments from the default configuration.

COMMAND	RESULTING LED BEHAVIOR
ledconfig *inverted*	

Example 3: Make the "OPEN" red LED light at 1.0% and greater, and the "CLOSED" green LED light at less than 1.0%.

COMMAND	RESULTING LED BEHAVIOR
ledconfig *green 1* **ledconfig *red 1***	

NOTE: Both LEDs will not light at the same time; in the event of overlap, the red LED will light.

DRAFT

NOTES

DRAFT

DRAFT

INDEX

Appendices 61–81
HART® Communication 61–66
HART® Messages 67–69
Serial Communication 70
Serial Commands 71–77
Applications Reviews 83
Auxiliary Limit Switches 27
Setting Switches 27
Configuration/Calibration 26–41
Contactless Position Sensor (CPS-5) 22, 49
Demand Calibration 32
Demand Characterization Curves 34–35
Digital Control Module (DCM-3) 22–25
Interfaces 23
Overview LEDs 24
Pushbutton Controls 25
Status Indication LEDs 25
Direction of Output Shaft Rotation 28
Electronics 22–25
Fuse (F1), 3-Phase Power 43
General Specifications 4–5
Handswitch 13, 50
Handwheel 13
HART® Communication 61–66
HART® Device Description Menu 61
HART® Messages 67–69
How to Obtain Service 83
Installation 14–21
Direct-Mount 14
Electrical 19
Linkage-connected 15–18
Link-Assist™ 15
Mechanical 14–18
Valves 14
Wiring 20–21
Introduction 2
Limit Switches (Over-travel) 26
Setting Switches 26
Linkage Kits 16–17
Loss of Demand Signal (LOS) 33
Maintenance 42–55
CPS-5 49
DCM-3 Board 48
Fuse (F1), 3-Phase Power 43
Gaskets 50
Handswitch 50
Lubrication/Gearing 43
Motor Assembly 42
Motor Capacitor & Resistor Network 42, 54
Motor/Gear Mod. Assy.'s, Torque/Timing 55
Over-travel Limit & Auxiliary Switches 47
SLM 44–46
Optional DCM-3 w/ Feedback Display 78–79
Outline Dimension Drawings 6–11
Position Feedback Signal 36–37
Power Quality 19
Precautionary Information 12
Product Demonstrations 83
Restore Factory Settings 29
Safety Precautions 12
Self-Locking Mechanism (SLM) 44–46
Serial Commands 71–77
Serial Communication 70
Services 83
Site Surveys 83
Spare Parts, Recommended 54
Specification Writing 83
Stall Protection 41
Start-up 21
Step Size 29
Storage Information 12
Table of Contents 3
Temperature Sensing 40
Torque Sensing (Optional) 38–39
Live/Historical Torque 38–39
Overtorque Alarm 39
Overtorque Protection 39
Travel (Degrees Rotation) 30–31
Change Travel 31
Troubleshooting 56–60
Warranty Statement 83

DRAFT

SERVICES

PRODUCT DEMONSTRATIONS

Each of Beck's Sales Engineers has access to a complete set of actuator models so that he can demonstrate virtually any of their features at your location. In order to arrange to see a Beck actuator in your plant or office, contact Beck's Sales Department.

SITE SURVEYS

Beck Sales Engineers are available to discuss your process control requirements. Often a visit to your location is the best way to gain a thorough understanding of your needs, in order to meet them most accurately and completely.

Mounting hardware, torque requirements, linkage, control signal information, and optional equipment can be analyzed most effectively at the work site. Beck's analysis at the job site can help ensure that specifications are accurate, especially in the case of complex applications.

APPLICATION REVIEWS

By sharing your needs with a Beck Sales Engineer you can take advantage of the best application advice for the type of control you need. This review will yield a better understanding of the versatility of Beck actuators for your installations, as well as complete details on options and accessories to make the process as effective as possible.

SPECIFICATION WRITING

Beck provides specification writing assistance in order to help you specify and order the right actuators for your applications. Beck Sales Engineers will work with you to make it easier for you to obtain the proper equipment and give you confidence that no details are overlooked.

HOW TO OBTAIN SERVICE

Factory repair of actuators or subassemblies is available for both normal and emergency service. To assure prompt processing, contact the factory to receive a Returned Material Authorization (RMA) number. If a repair estimation is desired, please send the name and phone number of your contact for service authorization. It is helpful to include a description of the work desired with the shipment or, in the event of a problem, the malfunction being experienced.

DRAFT

THREE YEAR LIMITED WARRANTY STATEMENT*

Harold Beck & Sons, Inc. (Beck) warrants that our equipment shall conform to Beck's standard specifications. Beck warrants said equipment to be free from defects in materials and workmanship. This warranty applies to normal recommended use and service for three years from the date on which the equipment is shipped. Improper installation, misuse, improper maintenance, and normal wear and tear are not covered.

The Buyer must notify Beck of any warranty issues within 37 months of original shipment date and return the goods in question, at Buyer's expense, to Beck for evaluation. If the product fails to conform to the warranty, Beck's sole obligation and the Buyer's exclusive remedy will be: 1) the repair or replacement, without charge, at Beck's factory, of any defective equipment covered by this warranty, or 2) at Beck's option, a full refund of the purchase price. In no event will Beck's liability exceed the contract price for the goods claimed to be defective.

THIS WARRANTY IS EXPRESSLY IN LIEU OF ANY OTHER EXPRESS OR IMPLIED WARRANTY, INCLUDING IMPLIED WARRANTIES OF MERCHANTABILITY AND FITNESS FOR A PARTICULAR PURPOSE, AND ALL OTHER OBLIGATIONS OR LIABILITIES OF BECK. In no case shall Beck be liable for any special, incidental or consequential damages based upon breach of warranty, breach of contract, negligence, strict tort, or any other legal theory. Such damages include, but are not limited to, loss of profits, loss of revenue, loss of use of the equipment or any associated equipment, cost of capital, cost of any substitute equipment, facilities or service, downtime, the claims of third parties including customers and injury to property.

Buyer acknowledges its responsibilities under OSHA, related laws and regulations, and other safety laws, regulations, standards, practices or recommendations that are principally directed to the use of equipment in its operating environment. Buyer acknowledges that the conditions under which the equipment will be used, its use or combination with, or proximity to, other equipment, and other circumstances of the operation of such equipment are matters beyond Beck's control. **Buyer hereby agrees to indemnify Beck against all claims, damages, costs or liabilities (including but not limited to, attorney's fees and other legal expenses), whether on account of negligence or otherwise, except those claims based solely upon the negligence of Beck and those claims asserted by Beck's employees which arise out of or result from the operation or use of the equipment by Beck's employees.**

***Note: Internal water damage is not covered by warranty.**

DRAFT

A 100% EMPLOYEE OWNED COMPANY

BECK

~ founded 1936 ~

SINCE 2021



HAROLD BECK & SONS, INC.

11 TERRY DRIVE • NEWTOWN, PENNSYLVANIA 18940 • USA
PHONE: 215-968-4600 • FAX: 215-860-6383 • E-MAIL: sales@haroldbeck.com
www.haroldbeck.com

Made in USA

MPI MCWANE PLANT & INDUSTRIAL

CLOW VALVE CO.

M&H VALVE COMPANY

KENNEDY VALVE

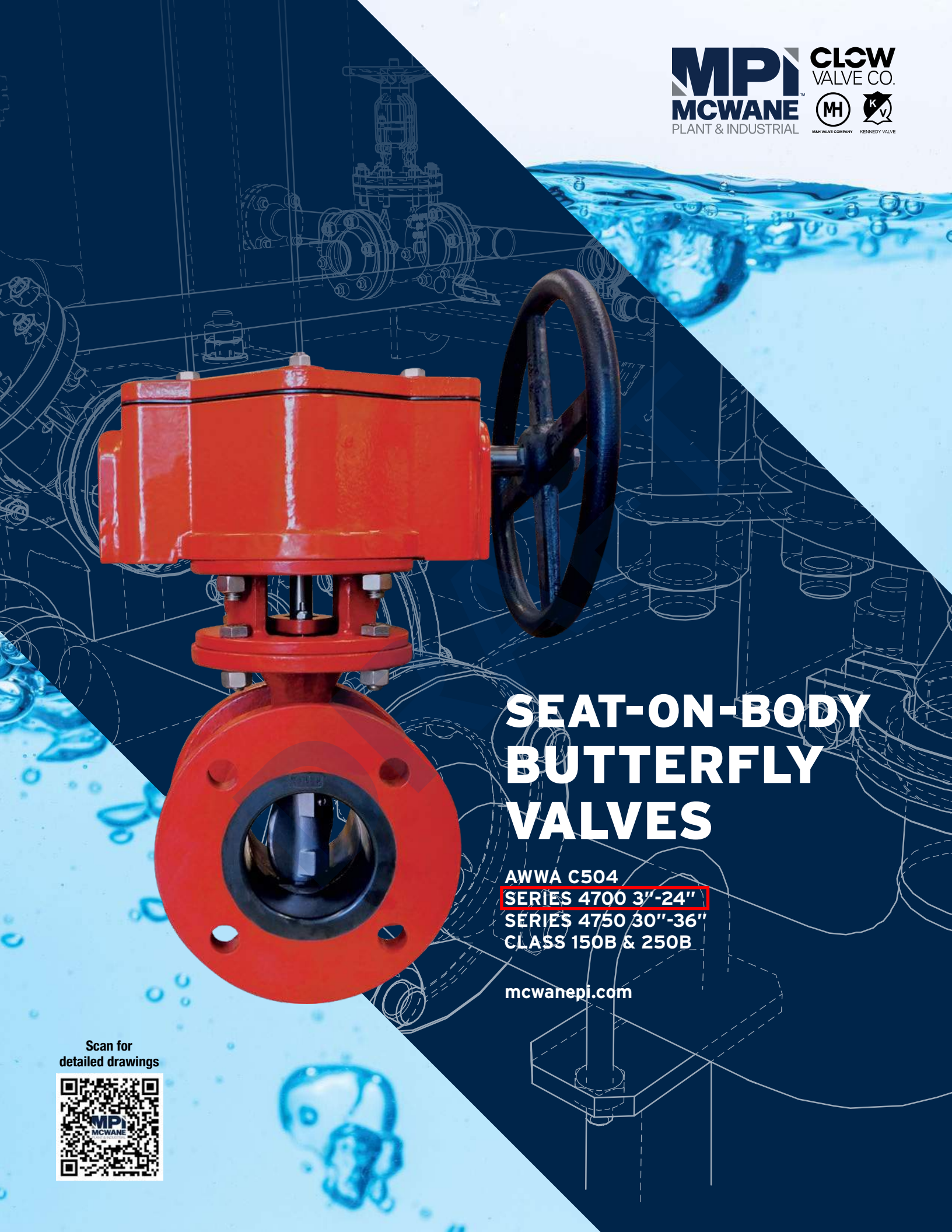

SEAT-ON-BODY BUTTERFLY VALVES

AWWA C504
SERIES 4700 3"-24"
SERIES 4750 30"-36"
CLASS 150B & 250B

mcwanepi.com

Scan for detailed drawings



MPI

THE INTEGRATED SOLUTION FOR TREATMENT PLANT NEEDS

Combining expertise from eight key water infrastructure brands in the McWane family of companies, McWane Plant & Industrial (MPI) provides a singular access point for the essential products and service required for any water or wastewater plant project.

WHY MPI?

We're a new kind of company formed in service of three simple goals:

- To provide a primary source for best-in-class products from time-tested brands
- Offer veteran specialists as resources for any plant project of any scale
- Increase the ease and efficiency of the planning and completion of our clients' projects

Our dedicated team is comprised of dozens of treatment plant specialists with decades of experience. We work cooperatively with industry partners to give each project the attention it deserves, providing unprecedented levels of communication, access and collaboration. Our support teams work within dedicated services regions allowing our experts to apply regionally specific knowledge, including state regulations, codes and environmental specifications. Our nationally certified Associate Design-Build Professionals are a valuable asset to Design-Build projects.

The extended manufacturing capabilities of MPI mean your precise requirements are closer in reach and delivered faster with less legwork from you. We offer products that conform to rigorous industry standards and can work with your team to customize and fulfill unique requests. As part of our commitment to American workers and industries, we're proud of our ability to provide products from domestic facilities and to meet all domestic funding requirements.

MPI – One smart source, ready to work for you.

ENGINEERING FEATURES

SERIES 4700

SIZES 3"-24"

ACTUATOR MOUNTING PAD

Butterfly valves come standard with an integrally cast actuator mounting pad; machined and drilled in accordance with ISO-5211 and MSS SP-101. For buried service valves, this allows for direct mounting of manual and automate actuators without the need of additional plates, brackets or adapters, providing a more compact and rigid arrangement. Above ground service valves come standard with adjustable packing.

STAINLESS STEEL SHAFT

Our butterfly valves utilize stainless steel shafts to resist corrosion and ensure long valve, bearing, and packing life. 316SS is the standard shaft material for CL 150B, while 630SS (17-4) stainless steel is utilized for CL 250B.

FULL RUBBER LINED BODY

Our fully rubber-lined bodies for 3"-24" valves eliminates the need for inner body coating and effectively prevent abrasion from particulate in the media.

PINNED SHAFT CONNECTION

Our disc-to-shaft pinning connections are built in accordance with AWWA C504. We utilize a 630SS (17-4) pin that is held in place with stainless steel nuts, creating a strong and reliable connection. This ensures that our customers will get many years of dependable, backlash-free service from their valve.

LONG LIFE BEARINGS

PTFE-lined fiberglass bearings are designed to provide low friction and long life, reducing the required maintenance and requiring no lubrication.

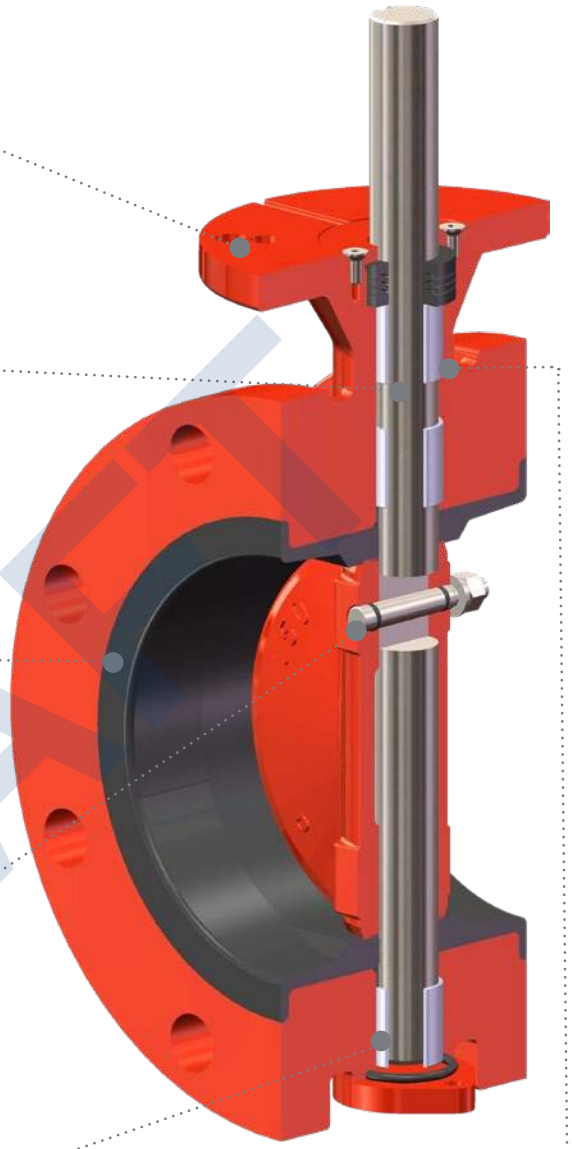

FIELD ADJUSTABLE PACKING

Our above ground service valves feature field- adjustable, V-type (chevron) packing, allowing for quick packing adjustments without disassembling the valve. It's a highly practical feature that streamlines the process of packing adjustments and ensures minimal disruptions to your operations.

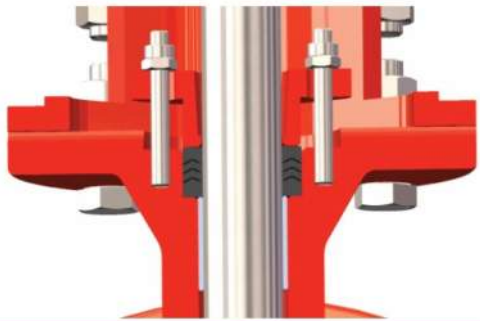

DRAFT

TRAVELING NUT ACTUATORS

MPI style 4700 seat-on-body butterfly valves use slotted-lever traveling nut actuators for smooth operation. Traveling nut actuators were developed to match the torque characteristics and provide greater mechanical advantage near the valve open and close positions where it is most needed. The actuator slows down near the close position to help seat the disc, and the slower opening/closure reduces shocks to the connected piping system.

Model 450 (sizes 3"–12")

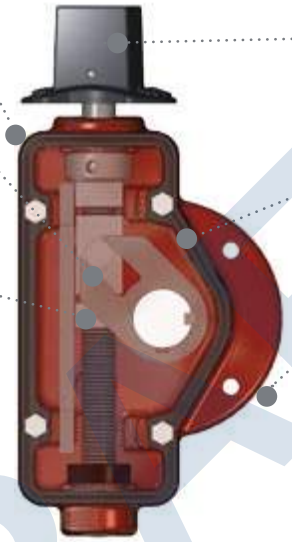

DUCTILE IRON HOUSING
Includes a four bolt ISO-5211 & MSS-101 compliant connection.

LEVER & TRAVELING NUT
Ductile Iron construction, precision machined to transmit torque seamlessly. Contains multiple keyways to change the opening direction.

POSITION STOP NUTS
Factory preset internal adjusters prevent the actuator from going beyond the open and closed positions of the valve.

OVERLOAD PROTECTION
Up to 450 ft-lbs of input torque protection to prevent damage to the valve and actuator.

SEALS
Actuator is fully greased and utilizes a reusable rubber gasket in the housing cover and O-rings to seal the input shaft.

360° ROTATION
Actuator can be mounted in 90-degree increments for easy installation and operation without the need of adapter plates and additional parts.

Model 1250 (sizes 14"-20") • Model 2200 (sizes 24")

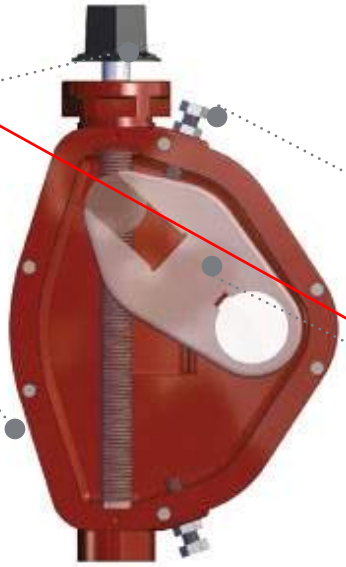

OVERLOAD PROTECTION
Up to 450 ft-lbs of input torque against the stops (open/close) to prevent damage to the valve and actuator.

DUCTILE IRON HOUSING
Proven strength, permanently lubricated and sealed to protect from the elements and groundwater.

POSITION STOP
Factory preset prevents the actuator from going beyond the open and closed positions of the valve.

LEVER
Ductile Iron construction, precision machined to transmit torque seamlessly. Contains multiple keyways to change the opening direction.

DRAFT

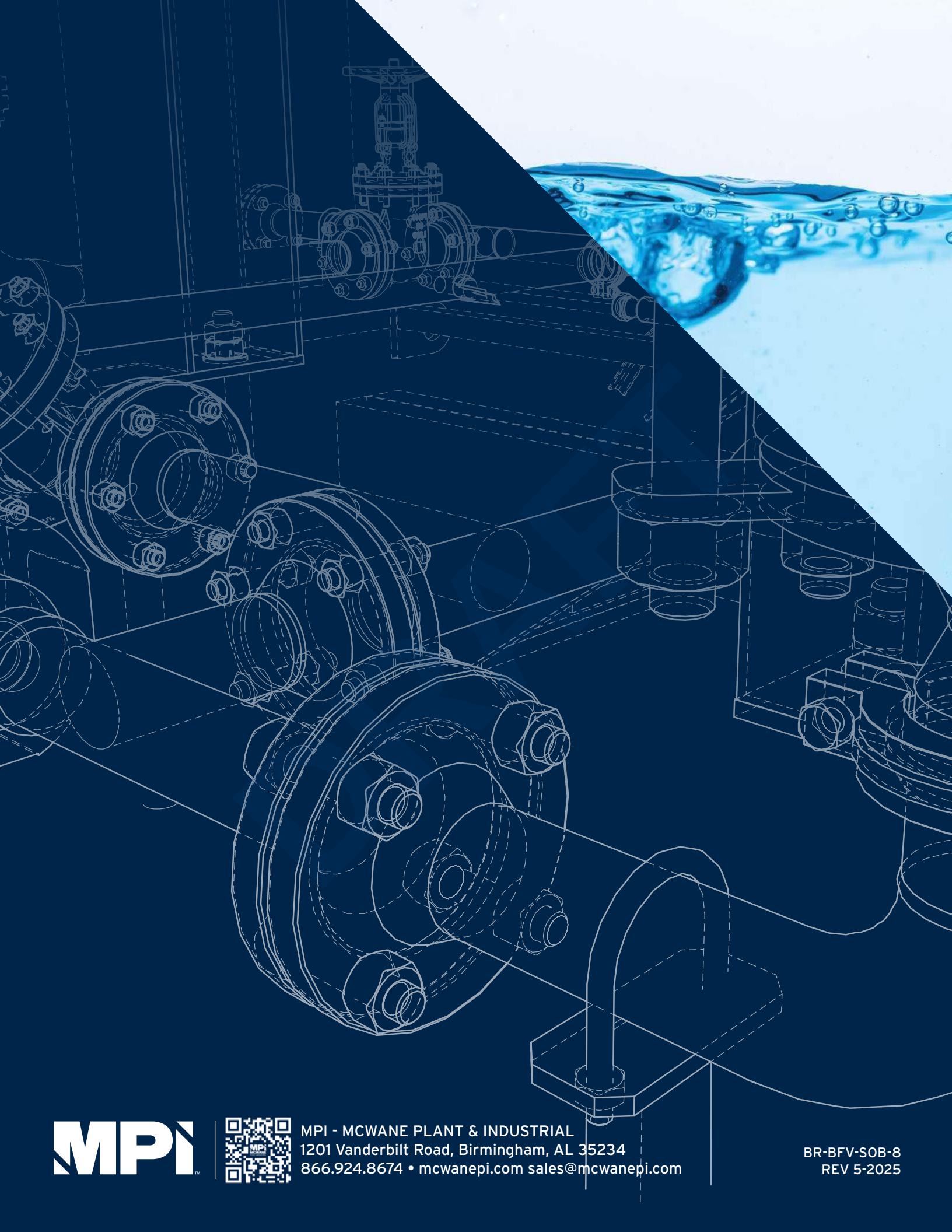

MPI - MCWANE PLANT & INDUSTRIAL
1201 Vanderbilt Road, Birmingham, AL 35234
866.924.8674 • mcwanepi.com sales@mcwanepi.com

BR-BFV-SOB-8
REV 5-2025

MPI MCWANE PLANT & INDUSTRIAL

SEAT ON BODY BUTTERFLY VALVE

3"-36" AWWA C504

INSTALLATION & OPERATION MANUAL

DRAFT

TABLE OF CONTENTS **PAGE**

General 2
Receiving & Storage..... 2
Installation 2
Operation 3
Maintenance 3
Troubleshooting..... 5
Parts & Service 5

MPI
1201 Vanderbilt Road | Birmingham, AL 35234
866.924.8674 • mcwanepi.com
sales@mcwanepi.com

INTRODUCTION

Butterfly Valves are commonly used in water transmission and distribution. This manual will provide you with the information needed to properly install, operate, and maintain the valve and to provide long service life.
The rubber seat provides a drip-tight alternative to metal-seated valves. BFVs offer flow control advantages and economy vs. gate valves, which become increasingly more significant with larger sizes.

For pump station and treatment plant applications, BFVs offer flow control advantages (such as throttling) over gate valves. BFVs are manufactured in accordance with the current version of the American Water Works Association (AWWA) C504 standard. BFVs are constructed of ductile iron, stainless steel, rubber seats & seals. The strength of ductile iron along with stainless steel components provide corrosion resistance for buried service applications.

RECEIVING & STORAGE

Inspect valves upon receipt to ensure correct material, quantity, and any optional equipment has been received. Also inspect all received equipment for any damage which may have occurred during shipment. Contact the McWane Plant & Industrial sales team to report any issues with materials received.

Unload all valves safely to protect both the materials and workers. For valves 36" and larger, use forklifts or slings under skids. Do not lift valves with slings or chains around the operating shaft, operator, or through waterway. Lift smaller valves with eyebolts or rods through the flange holes.

Protect the valve and operators from weather and the accumulation of dirt, rocks, and debris. For long term storage, valves should be kept indoors with the valve disc slightly open (4-6 degrees). When valves fitted with power operators and controls are stored, energize electric operators or otherwise protect electrical control equipment to prevent corrosion of electrical contacts due to condensation resulting from temperature variation. If outdoor storage is required valves need to be protected from weather and foreign materials.

INSTALLATION

WARNING: Installation of valves should be performed by experienced installers. Valves should never be used as structural supports and movement into place. Valves are heavy and may include accessories or bolt on pieces which should be handled with caution.

NOTE: BEFORE INSTALLING THE VALVE:

1. Prior to installation check that the valve and end joints are clean. Check for damage to the valve.

2. Open and close the valve to ensure proper operation.

3. The inside diameter (ID) of the mating of the piping system should be considered BEFORE installing the valve. When BFVs open, the vane will extend into the mating piping system.

It is recommended for valves to be installed into piping system in accordance with AWWA M-11 to prevent any undue piping stress, deflection or bending that may affect the performance of the valve.

1. Place valve into position carefully to avoid impact with trench walls or vault walls.

2. When connecting pipe to the BFV, do not deflect the pipe to connect the valve. Do not use the valve as a jack to pull into alignment. As much as reasonably possible, the BFV should be in an "unconstrained" position with the weight of the valve being supported independently of the pipe connection. Pipe connections can put undue stress on the valve pulling the valve body out of shape and causing it not to seal properly. This becomes increasingly important as the piping size gets larger.

MECHANICAL JOINT INSTALLATION:
When connecting BFV mechanical joints (MJs) bolting torques should not exceed the recommended torque limits in the appendix of AWWA C-111.

A. The use of an NSF 61 approved pipe grade lubricant is recommended to minimize gasket to pipe binding.

B. The most important factor is pulling the gland down uniformly so that the face of the gland follower remains parallel to the face of the valve flange throughout the tightening cycle. The torque on the nuts should be uniform, utilizing an alternating star pattern with as many as five repetitions of tightening to assure even torque stress.

C. The MJ bolts should be torqued in accordance with the AWWA C111 specification. See the chart below for a quick reference. Torques in excess of the recommendations below may damage the BFV, the mechanical joint gland or both.

Valve Size	Bolt Size		Range of Torque	
	in.	mm.	lbf-ft	N-m
3"	5/8	15.9	45-60	61-81
4"-24"	3/4	19.1	75-90	102-122
30"-36"	1	25.4	100-120	136-163
42"-54"	1-1/4	31.8	120-150	163-203

*AWWA C111-17, Table A.1, Mechanical-joint torque loads

DRAFT

FLANGED ENDS INSTALLATION:

1. The weight of the valve should be supported independent of the pipe connection. Provisions for thrust restraint must be adequate to absorb closing thrust.

2. Prior to assembly, flange faces must be cleaned to remove rust, paint runs, or other impediments to smooth surfaces.

3. All bolting patterns are in accordance with ANSI B16.1. Bolt torques for flanged valves should be based on the yield strength of the bolt. Due to size and casting restrictions, BFV sizes 18" and larger for ANSI Class 125# and 10" and larger for ANSI Class 250# have some tapped holes (instead of thru holes) in the flanges. These are located around the operator or thrust ends. The charts below shows thread depth / flange thickness, thread size, and # of threaded holes per flange. NOTE: To determine the total required length of the stud, add this dimension to the thickness of the adjoining flange plus the thickness of the appropriate nut.

ANSI CLASS 125# FLANGES

Valve Size	Thread Depth / Flange Thickness	Thread Size	# of Threaded Holes per Flange
18″	1-9/16″	1-1/8″-7 UNC	4
20″	1-11/16″	1-1/8″-7 UNC	4
24"	1-7/8"	1 1/4"-7 UNC	4
30"	2-1/8"	1 1/4"-7 UNC	4
36"	2-3/8"	1 1/2"-6 UNC	4

ANSI CLASS 250# FLANGES

Valve Size	Thread Depth / Flange Thickness	Thread Size	# of Threaded Holes per Flange
10″	1-7/8″	1″-8 UNC	4
12″	2″	1-1/8″-7 UNC	4
14"	2-1/8"	1-1/8″-7 UNC	4
16"	2-1/4"	1-1/4"-7 UNC	4
18"	2-3/8"	1-1/4"-7 UNC	4
20"	2-1/2"	1-1/4"-7 UNC	4
24"	2-3/4"	1-1/2" -6 UNC	4
30"	2-3/4"	1-3/4" -5 UNC	4
36	2-15/16"	2"-4.5 UNC	4

4. If it is determined to use a bolt rather than a stud, add the tapped bore dimension plus the adjoining flange dimension to acquire the required bolt length.(Bolt length as measured from the base of the bearing surface - or head - to the end of threads). Check the adjoining fitting and flange clearances to confirm there is enough room to swing the bolt into place.

NOTE: Butterfly valves should not be installed at a dead end or near a bend in a pipeline without proper & adequate restraint to support the valve and prevent it from blowing off the end of the line. It is good engineering practice to consider whether thrust blocks, restrained joints, or other means of restraint are needed on or adjacent to valves on pipelines and/or where unusual conditions exist, such as high internal pressures, adjacent fittings, or unsuitable soils. Buried valves installed with valve boxes shall be installed so that the valve box does not transmit shock or stress to the valve operator as a result of shifting soil or traffic load.

OPERATION

Operational criteria for rubber seated BFV are covered in the appendix section of AWWA C504. DO NOT operate any valve at pressures above the rated pressure of the valve. DO NOT exceed 300 ft-lbs input torque on operation with wrench nuts and do not exceed 200 lb. rim pull for hand-wheel or chainwheels against the open or closed stops.

Do not remove a BFV operator while under flow and pressure. Without an operator in place holding the vane, a BFV will try to close in the presence of flow and can create a hazardous water hammer situation. BFVs can be operated manually by rotating the handwheel, chainwheel, or nut. Do not force the handwheel, chainwheel, or nut to close faster. This can cause damage to the gearing.

BFV traveling nut operators are designed to open and close the valve at LESS THAN 150ft-lbs. of input torque. Torque in excess of these limits may damage the valve or operator or both. Maintenance personnel should be aware of the type of operators being used before actuating the valves.

Cylinder operators are base mounted and operated automatically by pneumatic or hydraulic pressure to either side of the power cylinder. Cylinder operators use solenoid valves to direct fluid to the cylinder ports based on electrical power signals.

Motor actuators are designed to open and close the valve through its ¼ turn of rotation. They contain gearing that slowly moves the valve from open to close position. Electrical controls are included in the motor actuator for local electrical control. The positioning of the valve disc will be done by limit switches in the motor actuator. Instructions for adjustment of limit switches or mechanical stops can be found in the motor manual.

BFVs can be automated to suit virtually all control even those with very specific design criteria.

MAINTENANCE

Before any maintenance or service work is conducted on a BFV, whether above or below ground, all potential safety issues should be considered. Prior to maintenance, properly identify the BFV model and its operator then obtain the correct service information.

Annual maintenance of the BFV includes the following:

1. Cycle the valve to verify operation and no interference in line.
2. Close the valve and check for any leaks.

PACKING ADJUSTMENTS:

On valves with adjustable packing, if leakage past the packing occurs, tighten the packing nuts just enough to stop the

DRAFT

leakage. Over-tightening will cause excessive operating torques and premature packing wear. If packing leakage cannot be stopped by tightening the packing nuts, the packing must be replaced.

PACKING REPLACEMENT:
To replace the packing you will need:
- New packing rings
- NSF 61 approved lubricant

1. Close the valve, relieve pipeline pressure and drain portion of the system where valve is located.

!!! Warning: Moving parts from accidental operation of power actuator can cause personal injury or equipment damage. Disconnect and lock out power to actuator before servicing.

2. If the actuator is powered, disconnect and lock out the pneumatic, hydraulic, or electrical power to prevent accidental operation of the actuator.

3. Remove the actuator from the valve.

4. Remove the gear stand from the top of the valve. (Gear stand not present on buried service valves.)

5. Remove the gland off the valve.

6. Pull all of the packing rings from the packing chamber with a hooked tool.

7. Apply a paint-like coat of an NSF 61 approved lubricant to the inside and outside diameters of the new packing rings, then install the new packing rings one ring at a time.
Note: Push the packing firmly into place, but do not use a sharp or pointed tool.

8. Install gland.

9. Install the gear stand on top of the valve. (Gear stand not present on buried service valves.)

10. Install the actuator on the valve.

DISASSEMBLING VALVE
Before disassembly, remove the valve from the pipe line, open the valve and remove actuator (and adapter, if included) from the valve.

For valve reassembly you will need:
-New packing rings
-New bottom cover seals (V-rings 10"-24"", O-ring 3"-8", 30" and larger)
-New valve seat (30" and larger)
-New shaft pins, nuts, washers, o-rings
-NSF 61 approved lubricant.
-Loctite 680
!!! Warning: Moving parts from accidental operation of power actuator can cause personal injury or equipment damage. Disconnect and lock out power to actuator before servicing.

Removing the Disc/Shaft from Body
1. If the valve has packing gland, remove the screws, the washers and the gland.

2. Pull all the packing out using hooked tool.

3. Remove bottom cover and seal (V-rings 10"-24", O-ring 3"-8", 30"and larger)

4. Remove pins holding the disc to shaft with a hammer. Caution- Secure the disc before moving to the next step of removing the shaft.

5. Remove shaft (single-piece shaft up to 24", upper and lower shaft 30" and larger.

6. Remove the disc.

7. For 30" and larger, remove retaining segments and valve seat.

8. Remove bearings.

VALVE CLEANING RECOMMENDATIONS
1. Remove all dirt and chips from all parts.
2. Remove all grease and oil from all surfaces of seat.
3. Remove all rust from the seat groove in body.

LUBRICATION
1. Apply a paint-like coat of an NSF 61 approved lubricant to the following surfaces:
a. The inside and outside diameters of each rubber packing ring
b. The O-ring(s)
c. All surfaces of the keyseat in the shaft
d. The disc sealing surface on the seat
e. For 30" valves and larger apply grease to the disc seat.

2. Apply a light coat of an anti-seize compound to the inside diameter of the bushings, and all surfaces of the key.

REASSEMBLING THE VALVE
1. Block the body in a horizontal position with the seat facing down.

2. For 30" and larger valves, insert seat retaining segments into the valve. Insert seat into seat groove, and tighten the retaining segments to hold the seat in place utilizing a cross over pattern.

3. Apply the Loctite 680 on the outside surface of the bushings. Insert the bushings into the shaft bores

4. Holding the disc in a horizontal position with the shaft connection toward the top of body. Insert the disc into the seat opening and align the shaft holes in the disc with the shaft holes in the body.

5. Insert the shaft through the top of the body and into the top of the disc. Align the holes in the disc with the pin

DRAFT

holes in the stem.

a. Note: Insert the shaft carefully so that the upper bearing is not damaged or moved out of position.

6. For 30" valves and larger, insert the lower shaft through the bottom of the body and into the bottom of the disc. Align the holes in the disc with the pin holes in the stem.

a. Note: Insert the shaft carefully so that the lower bearing is not damaged, or moved out of position.

7. Assemble the pins to connect the disc to the valve shaft(s).

8. Insert the packing rings into the top of the valve, and reinstall the gland.

9. Assemble the bottom cover. For 8" valves and smaller insert the o-ring, 10"-24" valves and larger insert the v-ring seals. For valves 30" and larger install the thrust plate and o-ring. Assemble the bottom cover.

10. Mount the actuator to the valve.

11. Turn the disc to the full close position.

a. Ensure the same depth measurement on the disc to flange face on both sides of the disc to set the close limit on the actuator.

b. Turn the disc to the full open position, set the open limit for the actuator.

b. Cycle the valve full open and full close 5 times, and recheck the depth measurements.

VALVE REMOVAL:

To remove the entire valve assembly from the pipeline, follow these steps carefully.

1. Relieve pipeline pressure and drain portion of the system where valve is located.

!!! Warning: Moving parts from accidental operation of power actuator can cause personal injury or equipment damage. Disconnect and lock out power to actuator before servicing.

2. Close the valve.

3. If the actuator is powered, disconnect and lock out the pneumatic, hydraulic, or electrical power to prevent accidental operation of the actuator.

4. Support the valve assembly, then remove the flange bolts or mechanical joint connector.

5. Remove the valve from the pipeline.

a. Note: Failure to lift the valve properly may cause damage. Lift the valve with slings fastened around the valve body, or attach them to bolts or rods run through the bolt holes for the pipeline flanges. Do not fasten lifting devices to the actuator or disc, or through the seat opening in the body.

SEAT ADJUSTMENTS:

Seat adjustments on 30" and larger are possible by adjusting the tightness of the retaining segments in areas that experience leakage in the valve.

SEAT REPLACEMENT:

For seat replacements please contact the MPI Service department

TROUBLESHOOTING

PROBLEM	CAUSE	SOLUTION
Valve leaks when closed	*Disc not fully closed or past fully closed*	*Adjust actuator closed position stop*
	Disc edge wear or damage	*Clean and/or replace disc edge*
	Rubber seat wear or damage	*Adjust or replace valve seat*
Chainwheel jam	*Poorly fitting chain*	*Replace with correct chain*
Valve hard to operate	*Foreign material in valve*	*Remove obstructions*
	Corroded actuator parts	*Clean and grease actuator*
	Loose Actuator	*Apply locking compound and tighten bolts*
Internal operator obstruction	*Debris in threaded components*	*Work Input shaft in the open or closed direction several times until full travel is permitted*
Internal to the Valve Obstruction	*Vane interference*	*Remove valve from line to modify mating pipe ID*
	Internal obstruction	*Access vane and physically remove obstruction*
External Obstruction	*Op. nut interference*	*Check Op. Nut clearances in buried service valve boxes*
	Binding of operational accessories	*Adjust as needed to resolve binding*
	Thrust plate not mounted securely	*Fully thread the input shaft into the operator housing and tighten*
Packing Leaks	*Packing is loose* *Packing is worn*	*Adjust Packing* *Replace Packing*

**Inspection for the above should be done semi annually at a minimum.

PARTS & SERVICE

Parts and service are available from your local representative or the factory. For availability and pricing of spare parts please contact the MPI sales team:

MCWANE PLANT & INDUSTRIAL
866.924.8674 • sales@mcwanepi.com • mcwanepi.com

DRAFT

SHOP DRAWING REVIEW

Project: **San Luis West WWTP Improvements**

Submittal No. **#X1_001 TSS Probe**

Vendor No. **Kubota 4030-09**

Date Received: **11/10/2025**

Job #: **B777**

Comments:

No Exceptions Taken..... ☐
Submit Specific Item ..... ☐
Accepted with Corrections Noted..... ☒
Revise and Resubmit..... ☐
Rejected ..... ☐

Note:
Review is only for general conformance with the design concept of the project and general compliance with the information included in the Contract Documents. Any action shown is subjected to the requirements of the drawings and the specifications. Contractor is responsible for correlating and confirming dimensions at the job site, choice of fabrication processes and techniques of construction: coordination of his work with that of other trades; and performing the work in a safe satisfactory manner.

DATE: 12/16/2025 BY: NT / DD

Contractor to Note:

Submittal Comments:

1. Due to the outdoor installation and harsh sun; please include, at a minimum, accessory LXZ524.99.00037 (Sunroof with Visor) to protect the SC4500 Controller.

DRAFT

8723 E. Via de Commercio, #A-204 | Scottsdale, AZ 85258
P: (480) 991-3595 F: (480) 751-1810 | www.pacewater.com

For Earth, For Life
Kubota

Submittal Transmittal

TSS Probe

Project Name	San Luis, AZ West WWTP Phase 1 MBR Upgrades
Project Site	San Luis, AZ West WWTP
Engineer	PACIFIC ADVANCED CIVIL ENGINEERING (PACE) 8723 E. VIA de COMMERICO, SUITE A-204 SCOTTSDALE, AZ 85258
Submit to	Duong Do, PE PACE
Prepared by	Brian Travis KUBOTA Water and Environment USA Corporation 19910 North Creek Parkway Suite 100, Bothell WA 98011, USA
KMU Project #	4000580
Issued Date	November 10, 2025
Package #	4030-09
Item	(1) TSS Probe and tansmitter

DRAFT

SUBMITTAL

San Luis, AZ West WWTP: Phase 1 MBR Upgrades

For Earth, For Life

Kubota

Submittal Modification Tracking List

#	Customer request	Kubota comments	Status *
1			
2			
3			
4			
5			
6			
7			
8			
9			

* Status should be “Accepted”, “Info” or “No Change”

DRAFT



Solitax ts-line sc Turbidity (0.001-4000 NTU) and Suspended Solids (0.001-50 g/L) immersion probe, with wiper, stainless steel

Product #: **LXV423.99.00100**

Accurate, colour-independent suspended solids and turbidity measurements

The Solitax ts-line sc turbidity and suspended solids immersion probe provides high-precision results in clear to strongly turbid liquids as well as in low and medium concentrated sludges. Turbidity measurement performance is certified to MCERTS regulation and the probe operates with a 90° measuring method according to DIN EN ISO 7027. The suspended solids measurement by a colour-independent method with an infrared duo scattered light photometer is in accordance with DIN 38414. A proven automatic wiper cleaning system allows sustained performance quality in drinking water as well as in waste water applications. The Solitax ts-line sc probe material is stainless steel and measurement data is displayed and processed with the help of a digital Hach SC200 or SC1000 controller.

Furthermore, the Solitax ts-line sc turbidity immersion probe is compatible for Prognosys which is a predictive diagnostic system that allows you to be proactive in your maintenance, by alerting you to upcoming instrument issues. Know with confidence whether changes in your measurements are due to changes in your instrument or your water.

Please contact Hach for further information. Request for a quote today!

This instrument connects to Claros, Hach's innovative Water Intelligence System, enabling you to seamlessly connect and manage instruments, data, and process – anywhere, anytime. The result is greater confidence in your data and improved efficiency in your operations. To unlock the full potential of Claros, insist on Claros Enabled instruments.

Greater accuracy, less maintenance
Hach Solitax sc sensors provide accurate, colour-independent measurement of turbidity and suspended solids in drinking water, wastewater and industrial process applications. A self-cleaning device prevents biological growth and interference of gas bubbles. This system's reliable performance and full data communication capability help improve process control and reduce treatment costs associated with polymer use, digester volume, and sludge handling.

Excellent correlation to laboratory analysis
Solitax sc sensors show an exceptional correlation to laboratory analysis. On-line measurement not only saves time on manual analysis, but also provides critical real-time measurements that can be used to operate the plant more efficiently.

Fully serviceable sensors
Conventional turbidity and suspended solids sensors are potted and are discarded when they no longer function. Solitax sc sensors are fully serviceable, which often doubles the useful life of the sensor.

Easy one-point calibration
Factory calibrated in conformity with DIN EN ISO 7027 for long-term calibration stability. Calibration is easy with a simple correction factor procedure.

Multi-channel, multi-parameter system
Multiple Solitax sc sensors can be installed on one Hach SC Controller. The same controller can also accommodate any combination of parameters. All of Hach's model sc sensors are "plug and play" with no complicated wiring or set-up procedure necessary.

Specifications

DRAFT

Accuracy:	Turbidity up to 1000 NTU: without calibration < 5% of the measured value ±0.01 NTU with calibration < 1% of the measured value ±0.01 NTU
Automatic Wiper:	Yes
Body Material:	Stainless Steel
Cable Length:	10 m (optional extension cables available)
Calibration Method:	Turbidity: Formazin or STABLCAL Standard (at 800 NTU). Suspended Solids: Sample specific, based on gravimetric TSS analysis with a correction factor procedure.
Certifications:	CE
Configurations:	Sensor only
Controller:	Sensor only
Diameter Sensor:	60 mm
Flow:	Max. 3 m/s (the presence of air bubbles affects the measurement)
Length:	200 mm
Maintenance Interval:	1 h/month
Material:	Optics Carrier and Sleeve: stainless steel 1.4571; Wiper Arm: stainless steel 1.4581; Wiper Rubber: silicone rubber (standard) Optional: Viton (LZX578); Wiper Shaft: stainless steel 1.4571
Max. cable length Sensor-to-Controller:	100 m
Measuring Principle:	Infrared Duo scattered light technique for color-independent turbidity measurement Turbidity in accordance with DIN EN ISO 7027 / TS equivalent DIN 38414
Model:	Solitax ts-line sc
Mounting:	Immersion
Operating Temperature Range:	0 - 40 °C
Parameter:	Suspended Solids, Turbidity
Pressure Range:	Stainless steel immersion sensor: <6 bar or <60 m
Range:	TSS-content: 0.001 mg/L - 50 g/L Turbidity: 0.001 - 4000 NTU
Repeatability:	TSS content: < 3 % Turbidity: < 1 %
Response Time T90:	1 - 300 s adjustable
Special notes:	installation note: distance sensorwall > 50 cm (Turbidity); distance sensorwall>10 cm (TSS),
Warranty:	12 months
Weight:	1.38 kg
What's included?:	Turbidity/Suspended Solids probe, user manual

What's included?

Turbidity/Suspended Solids probe, user manual

Required Accessories

DRAFT

- SC1000 Multi-parameter Universal Controller Display Module (without GSM/GPRS) (Item LXV402.99.00002)
- SC1000 Probe Module for 6 Sensors, Prognosys, Modbus RS485, 100-240 VAC, Conduit, w/o power cord (Item LXV400.99.1H082)
- SC1000 Probe Module for 8 Sensors, Prognosys, 100-240 VAC, Conduit, w/o power cord (Item LXV400.99.1G092)
- SC1500 Controller, 6 SENS 8mA OUT 110V/COND EXT MOD (Item LXV446.99.103N1)
- SC1500 Controller, 6 SENS 8mA OUT 110V/COND 4 REL/C EXT MOD (Item LXV446.99.1R3S1)
- SC4200c Controller, North American Cellular Modem, mA out, 2 digital Sensors, w/o plug (Item LXV524.99.01120)
- SC4200c Controller, North American Cellular Modem, Profibus, 2 digital Sensors, w/o plug (Item LXV524.99.01720)

DRAFT

DOC023.54.03232

SOLITAX sc

User Manual

12/2009, Edition 4A

DRAFT

© HACH Company, 2006–2009. All rights reserved. Printed in Germany.

Table of Contents

Section 1 Specifications 5

Section 2 General Information 7
2.1 Safety Information 7
2.1.1 Use of Hazard Information 7
2.1.2 Precautionary Labels 7
2.2 Sensor Overview 8
2.3 Measuring Principle 8
2.4 Handling 8

Section 3 Installation 9
3.1 Unpacking the Instrument 9
3.1.1 Function Check 9
3.2 Sensor Installation 10
3.3 Pipe Installation 11
3.4 Connecting sensor cable 13

Section 4 Operations 15
4.1 Use of an sc controller 15
4.2 Sensor Setup 15
4.3 Sensor Data Logging 15
4.4 Sensor Diagnostics Menu for pH and ORP 15
4.5 Sensor Setup Menu 15
4.6 Calibration 16
4.6.1 Setting the Outmode 17
4.6.2 Calibration for Turbidity 17
4.6.2.1 Calculating the Factor 17
4.6.3 Calibration for Suspended Solids 18
4.6.3.1 For Single Point (Factor) Calibration 18
4.6.3.2 Multi-point Calibration 18

Section 5 Maintenance 19
5.1 Maintenance Schedule 19
5.2 Cleaning the Sensor Measuring Windows 19
5.3 Replacing the Wiper 20

Section 6 Troubleshooting 21
6.1 Error Codes 21
6.2 Warnings 21

Section 7 Replacement Parts and Accessories 23
7.1 Immersion Sensors 23
7.2 Insertion Sensors 23
7.3 Replacement Parts 23

Section 8 Contact Information 25

Section 9 Limited warranty 27

Appendix A Modbus Register Information 29

DRAFT

Section 1 Specifications

Specifications are subject to change without notice.

Measuring Technique	Infrared Duo scattered light technique for color-independent turbidity measurement Turbidity in accordance with DIN EN 27027 / TS equivalent DIN 38414
Measuring Range	~~t-line turbidity: 0.001–4000 FNU/NTU~~ ts-line, inline turbidity: 0.001–4000 FNU/NTU; TSS content: 0.001 mg/L–50 g/L ~~hs-line, highline turbidity: 0.001–4000 FNU/NTU; TSS content: 0.001 mg/L–500 g/L TSS~~
Reproducibility	Turbidity < 1 %, Total Suspended Solids (TSS) < 3 %
Measuring Accuracy	Turbidity up to 1000 FNU/NTU: without calibration < 5 % of the measured value ± 0.01 FNU/NTU with calibration < 1 % of the measured value ± 0.01 FNU/NTU
Technique variation coefficient	1 % in accordance with DIN 38402
Response Time	1 s ≤ T90 ≤ 300 s (adjustable)
Calibration	Zero point permanently set from the factory, gradient once for the TS content
Cable Length	10 m (33 ft), max. 100 m (328 ft) with extension cable
Ambient Temperature	0 to +40 °C (32 to 104 °F)
Pressure Range	Stainless steel: ≤ 6 bar or ≤ 60 m (87 psi) ~~PVC: ≤ 1 bar or ≤ 10 m (14,5 psi)~~
Flow Velocity	Max. 3 m/s (the presence of air bubbles affects the measurement)
Materials	Optics carrier and sleeve: stainless steel 1.4571 ~~or PVC black~~
	Wiper shaft: stainless steel 1.4104
	Wiper arm: stainless steel 1.4581
	Wiper rubber: silicone rubber (standard) ~~Optional: Viton[1] (LZX578)~~
	Windows and light guide: quartz glass
	O-rings (optics carrier, wiper, windows): NBR (acrylonitrile butadiene rubber)
	Housing seals: NBR 70
	Sensor connecting cable (hard-wired): 1 cable pair AWG 22 / 12 V DC twisted, 1 cable pair AWG 24 / data twisted, common cable screen, Semoflex (PUR)
	Sensor connection plug (hard-wired): type M12 enclosure rating IP 67
	Threaded cable fitting: stainless steel 1.4305
Inspection interval	On request 1/year service contract with guarantee extension to 5 years
Dimensions	Tank probe: D x L 60 mm x 200 mm (2 x 8 in.) ~~Probe for pipe installation: D x L 60 mm x 315 mm (2 x 12.4 in.)~~ ~~(Pipe installation fitting: DN 65 / PN 16 DIN 2633; < 5 bar (73 psi); for pipes from DN 80)~~ Distance sensor - wall (floor): TS > 10 cm (4 in.), turbidity > 50 cm (20 in.)
Weight	Tank probe: approx. 1.8 kg (63 oz) (t-line: approx. 0.6 kg (21 oz)) ~~Probe for pipe installation: approx. 2.4 kg (85 oz)~~ ~~Pipe installation fitting: approx. 2.7 kg (95 oz) (without probe)~~ ~~Pipe installation safety fitting:approx. 18 kg (40 lb) (without probe)~~
User Maintenance	1 h / month, typical
Certifications	CE

[1] Viton® is a registered trademark of E.I. DuPont de Nemours + Co.

DRAFT

Figure 1 Sensor Dimensions

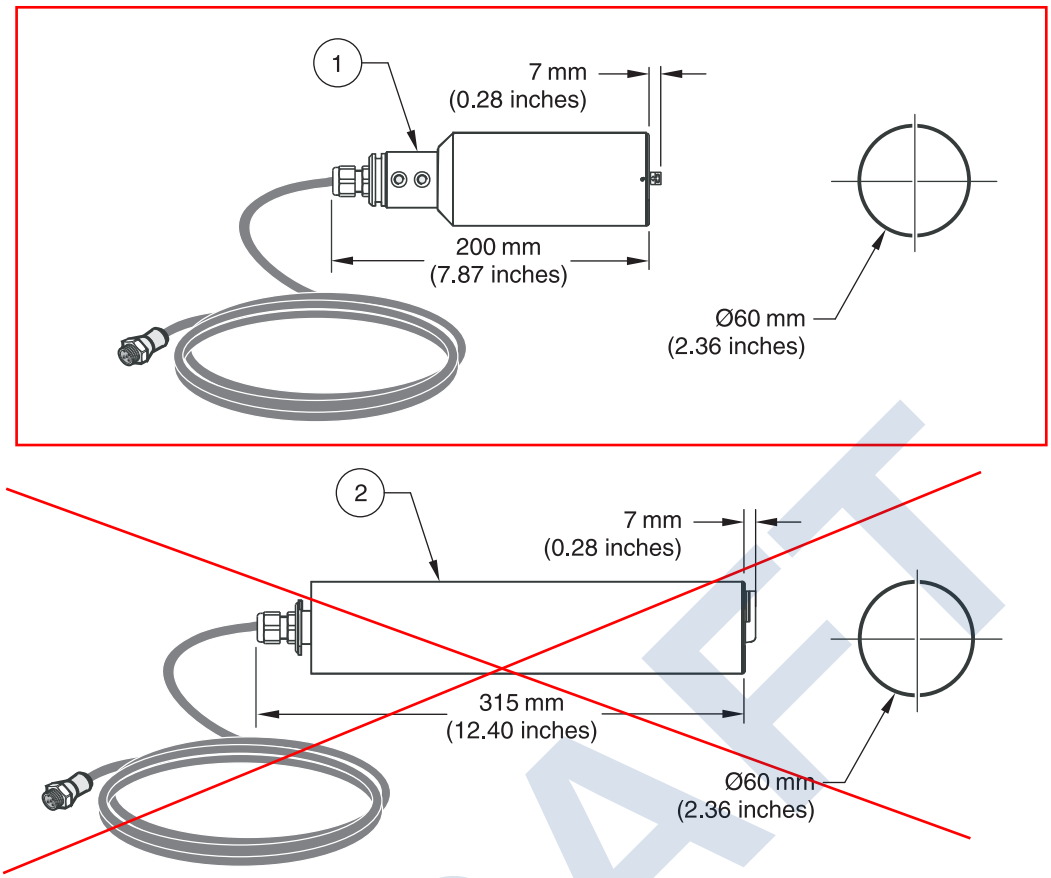

1.	SOLITAX sc models t-line, ts-line, and hs-line for immersion in open tanks
2.	~~SOLITAX sc models inline and highline sensors for insertion in pipes~~

DRAFT

Section 2 General Information

2.1 Safety Information

Please read this entire manual before unpacking, setting up, or operating this equipment. Pay attention to all danger and caution statements. Failure to do so could result in serious injury to the operator or damage to the equipment.

Make sure that the protection provided by this equipment is not impaired, do not use or install this equipment in any manner other than that specified in this manual.

2.1.1 Use of Hazard Information



DANGER
Indicates a potentially or imminently hazardous situation which, if not avoided, will result in death or serious injury.



CAUTION
Indicates a potentially hazardous situation that may result in minor or moderate injury.

Important Note: *Information that requires special emphasis.*

Note: *Information that supplements points in the main text.*

2.1.2 Precautionary Labels

Read all labels and tags attached to the instrument. Personal injury or damage to the instrument could occur if not observed

	This symbol, if noted on the instrument, references the instruction manual for operation and/or safety information.
	This symbol indicates that a risk of electrical shock and/or electrocution exists.
	Electrical equipment marked with this symbol may not be disposed of in European public disposal systems after 12 August of 2005. In conformity with European local and national regulations (EU Directive 2002/96/EC), European electrical equipment users must now return old or end-of life equipment to the Producer for disposal at no charge to the user. ***Note:*** *For return for recycling, please contact the equipment producer or supplier for instructions on how to return end-of-life equipment, producer-supplied electrical accessories, and all auxiliary items for proper disposal.*

DRAFT

2.2 Sensor Overview

Note: *All sensors are also available without wipers for special applications.*

t-line: 0.001–4000 FNU/NTU

High-resolution turbidity probe made of plastic for the outlets of sewage treatment plants and bodies of water.

ts-line: 0.001–4000 FNU/NTU; 0.001 mg/L–50.0 g/L

High-precision turbidity and solids probe made of stainless steel or plastic for color-independent measurement of fine turbidities and sludges.

hs-line: 0.001–4000 FNU/NTU; 0.001 mg/L–500.0 g/L

High-precision turbidity and solids probe made of stainless steel or plastic for color-independent measurement of highly concentrated sludges.

inline: 0.001–4000 FNU/NTU; 0.001 mg/L–50.0 g/L

High-precision pipe installation probe for turbidity and solids made of stainless steel for color-independent measurement of fine turbidities and sludges.

highline: 0.001–4000 FNU/NTU; 0.001 mg/L–500.0 g/L

High-precision pipe installation probe for turbidity and suspended solids made of stainless steel for color-independent measurement of highly concentrated sludges.

Figure 2 Solitax sc Sensors

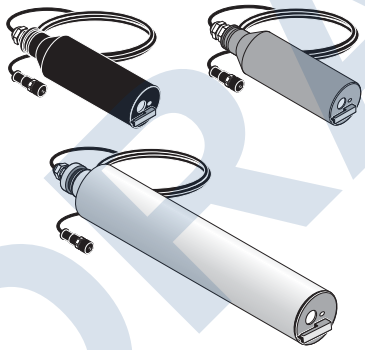

DRAFT

2.3 Measuring Principle

The measuring principle is based on a combined infrared absorption scattered light technique that measures the lowest turbidity values in accordance with DIN EN 27027 just as precisely and continuously as high sludge content. Using this method, the light scattered sideways by the turbidity particles is measured over an angle of 90°.

2.4 Handling

The sensor contains high-quality optical and electronic assemblies. Make sure the sensor is not subjected to any hard mechanical knocks. There are no customer-serviceable items inside the sensor.

Section 3 Installation

DANGER
Only qualified personnel should conduct the tasks described in this section of the manual.

3.1 Unpacking the Instrument

Figure 3 Items Supplied with Sensorl

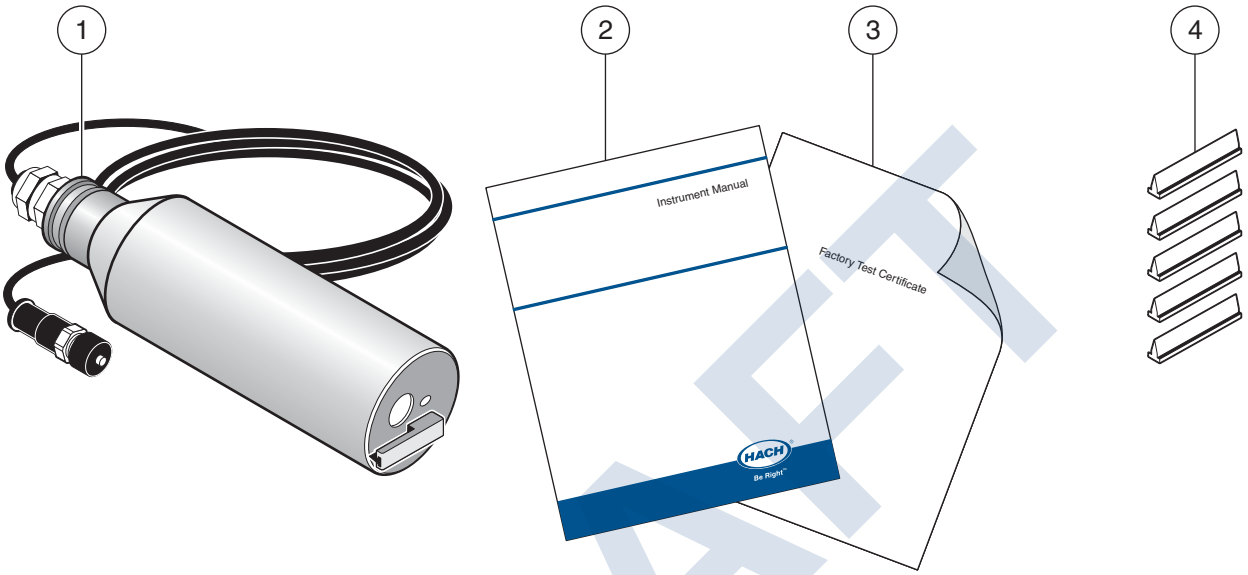

1.	SOLITAX sc Sensor	**3.**	Factory Test Certificate
2.	User Manual	**4.**	Wiper Set (for 5 changes) LZX050

3.1.1 Function Check

After unpacking, both components should be checked for any transport damage and a short function check performed prior to installation.

To perform a function check, connect the sensor to the display unit and power the unit. Shortly after the unit is plugged in, the display is activated and the instrument switches to the measurement display. Measured values taken in air is meaningless.

If no messages appear in the lower part of the display, the function check is then complete.

DRAFT

3.2 Sensor Installation

Figure 4 on page 10 illustrates the installation overview for Solitax sc Models t-line, ts-line, and hs-line for immersion in open tanks.

The maximum distance from the mounting surface to the sensor without the use of an extension tube is 1.5 m (4.9 ft). When that distance exceeds 1.5 m (4.9 ft), one of the following extension tubes is required and can be ordered separately:

- 1.0 m (3.28 ft) extension pipe LZY413
- 1.8 m (5.90 ft) extension pipe LZY414

To ensure a suitable measuring position, install the probe to the following conditions:

- The probe optical window must have a ground clearance of at least 30 cm (11.8 in.).
- Install the probe with the optical window facing (downstream) in the direction of the flow to minimize the risk of fouling.
- Avoid installation sites where air bubbles are inconsistent. If this not possible, try moving the probe slightly or adjusting its alignment to minimize the bubble effect.
- Protect the probe against the oncoming flow of large objects, such as branches or ice and against flow surges.
- Avoid installing the probe with the optical window facing into direct light or facing a highly-reflective surface.

Figure 4 Sensor Installation Overview

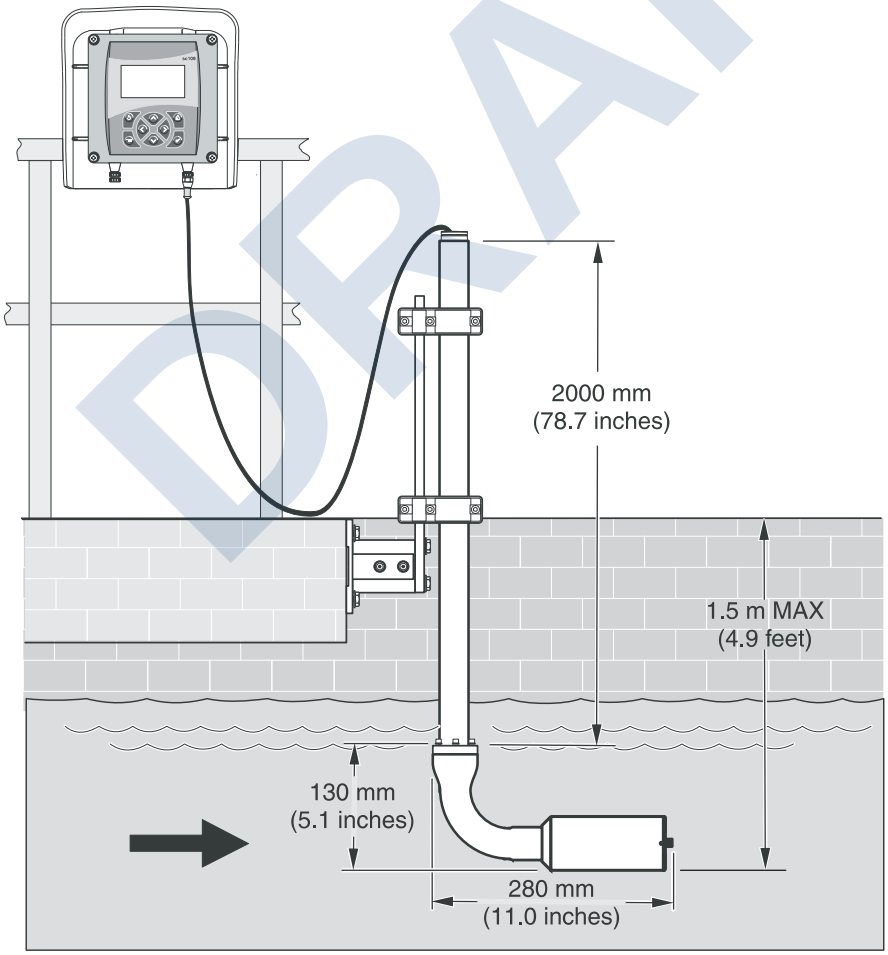

DRAFT

3.3 Pipe Installation

- Install the sensor in an up-flow pipe section for best results. Do not mount the sensor in a down-flow pipe section.
- Mounting in a horizontal pipe section is acceptable if the sensor is fully immersed at all times. Usually, mounting 90 degrees from the top of the pipe guarantees full immersion. Do not mount on the top or bottom of a horizontal pipe section.
- Install the sensor in a pipe that is equal to or greater than 4 inches in diameter.
- Install the sensor at least 1.5 m (5 ft.) or three times the pipe diameter (whichever is greater) downstream of pumps, valves, or pipe elbows.
- Install the sensor on the discharge side of a pump, if possible, with a dilution or flush valve installed on the suction side of the pump.
- If the sensor is to be used to measure sludge with significant amounts of debris, install it after a sludge grinding pump or after a pump with a grinding/comminuting unit in front of it.
- Install the sensor within 7.8 m (25 ft.) of the controller with the standard probe cable. Optional cable extensions can be added for a maximum combined distance of 100 meters (330 ft.).
- If the flange cannot be welded to the pipe due to incompatibility of materials between the stud and the pipe, it is recommended that a stainless steel pipe section be fabricated. Weld the flange onto the stainless steel pipe section and attach the stainless steel section as a segment of the process pipe.

DRAFT

Figure 5 Proper Positioning for Insertion into Pipe

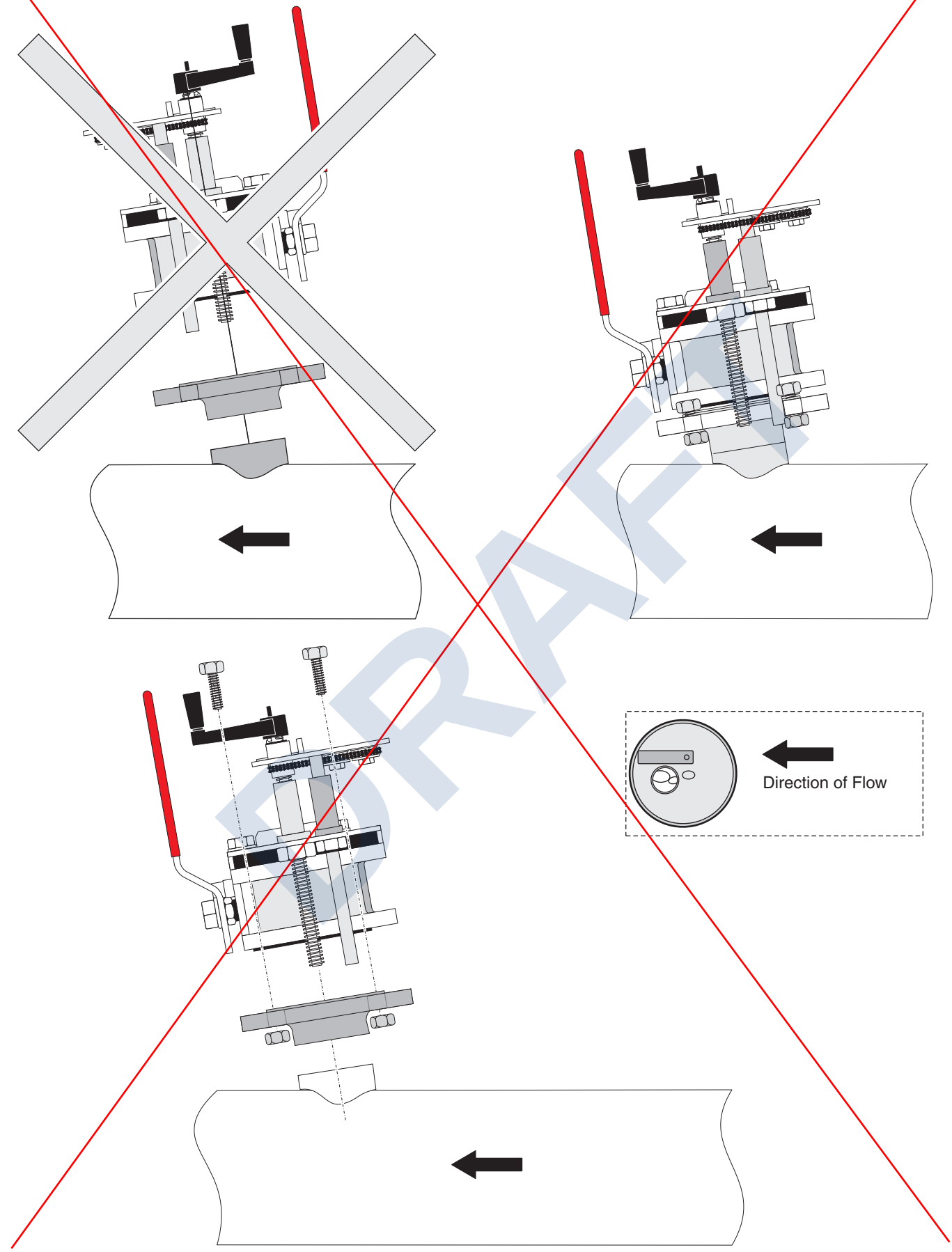

DRAFT

3.4 Connecting sensor cable

CAUTION
Always lay cables and hoses so they do not pose a trip hazard and are not bent.

1. Unscrew the protective cap on the controller socket and retain it.
2. Pay attention to the guide in the plug and push the plug into the socket.
3. Tighten the nuts.

Connector cables are available in various lengths (refer to Section 7 Replacement Parts and Accessories on page 23). Maximum overall cable length: 50 m (165 ft).

Figure 6 Connection of the sensor plug to the controller

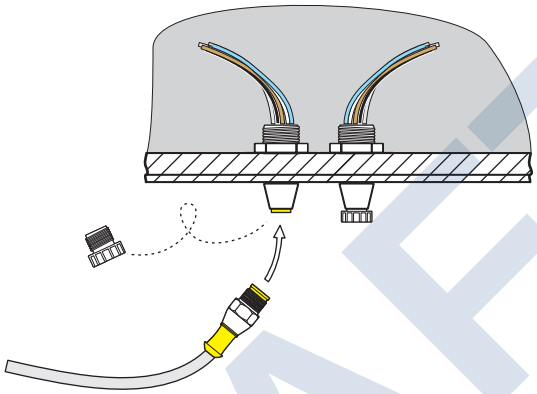

Figure 7 Sensor connector pin assignment

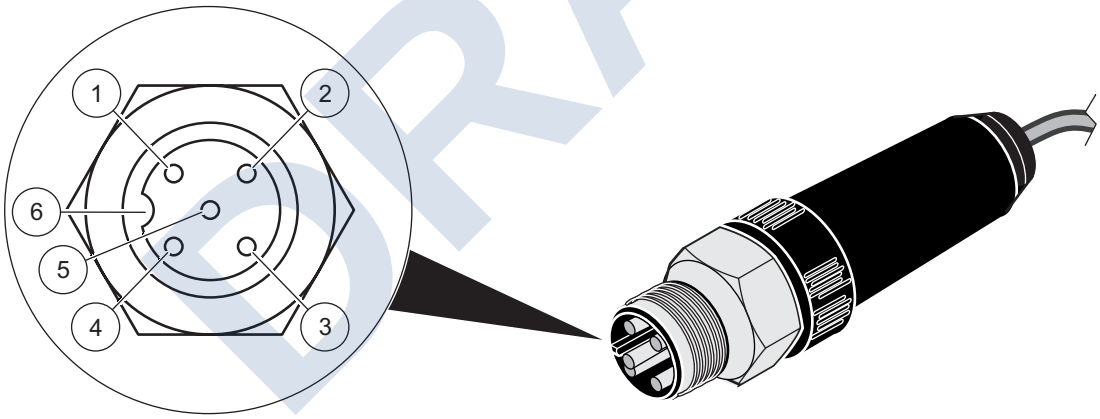

Number	Description	Cable colour (Standard-Cable)
1	+12 VDC	brown
2	Ground	black
3	Data (+)	blue
4	Data (–)	white
5	Screen	Screen (grey)
6	Notch	–

DRAFT

Section 4 Operations

4.1 Use of an sc controller

Before using the sensor in combination with an sc controller, refer to the controller user manual for navigation information.

4.2 Sensor Setup

When a sensor is initially installed, the serial number of the sensor will be displayed as the sensor name. To change the sensor name refer to the following instructions:

1. Select Main Menu.
2. From the Main Menu, select SENSOR SETUP and confirm.
3. Highlight the appropriate sensor if more than one sensor is attached and confirm.
4. Select CONFIGURE and confirm.
5. Select EDIT NAME and edit the name. Confirm or cancel to return to the Sensor Setup menu.

4.3 Sensor Data Logging

A data memory and event memory per sensor are available via the sc controller. While measured data are saved in the data memory at stipulated intervals, the event memory collects numerous events such as configuration changes, alarms and warning conditions. Both the data memory and the event memory can be read out in CSV format. For information on how you can download the data, please see the controller manual.

4.4 Sensor Diagnostics Menu for pH and ORP

SELECT SENSOR (if more than one sensor is attached)

STATUS	
ERROR LIST	See section 6.1 on page 21.
WARNING LIST	See section 6.2 on page 21..

4.5 Sensor Setup Menu

SELECT SENSOR (if more than one sensor is attached)

WIPE	
Initiates a wiping action on the sensor window.	
CALIBRATE	
SET OUTMODE	Select the behavior of the outputs during calibration for zero point setting (Hold, Active, Transfer, Selection). Hold maintains the last reading prior to going into the menu. Active transmits the current level readings, corrected with previous calibration data until new data is entered. Set Transfer transmits the value designated during the system setup
SENSOR MEASURE	Displays the current, uncorrected measured value.
CONFIGURE	Select the calibration type and follow the calibration steps for 2 point, 3 point, 4 point, and 5 point calibration.
FACTOR/2 POINTS/ 3 POINTS/4 POINTS/ 5 POINTS	Display depends on the selection in configuration.
SET CAL DEFAULT	Return the instrument to the default calibration settings.

DRAFT

4.5 Sensor Setup Menu (continued)

CONFIGURE	
EDIT NAME	Enter up to a 10-digit name in any combination of symbols and alpha or numeric characters.
SET PARAMETER	This setting configures the Solitax to measure turbidity or suspended solids. The Solitax cannot simultaneously measure both. Choose “TRB” for turbidity measurements, or “TS” for suspended solids measurement. This selection determines which units may be selected in the “Meas Units” menu.
MEAS UNITS	Choose from the displayed units. TRB (FNU, EBC, TE/F, NTU); TS (mg/L, g/L, ppm, %) Default: FNU If TRB was selected in set parameter, select “NTU” (commonly used in the U.S.), FNU, EBC, or TE/F. If TS was selected, choose mg/L, g/L, ppm, or %. Press enter to choose the selection. If the units selected result in a reading that exceeds 4 digits, the display will only show dashes. For example, if mg/L were selected, and the measurement was 10,500 mg/L, the display will show dashes until the reading drops to 9999 or lower.
CLEAN INTERVAL	Select the cleaning interval (1, 5, 15 or 30 minutes; 1, 4, or 12 hours; 1, 3, 7 days) Default: 12 hours This is the interval between wiper cleaning of the sensor window. It is recommended to start with a setting of 30 minutes. This time may be adjusted according to the application. If readings continue to be accurate, try a longer interval. If not, shorten the interval.
RESPONSE TIME	This is a damping function. While the Solitax takes readings continually, it will average them together over the period of the response time. Once the response time has elapsed, the displayed reading, 4-20 outputs, and alarm status are updated. (0 to 300 seconds) Default: 3 seconds
LOGGER INTERVAL	This is the datalog interval, with options from 1–15 minutes. Values logged are the average of the all readings during the previous logging interval. The controller will hold approximately 360 days of readings for one sensor at 15 minute intervals, or 24 days at 1 minute intervals (and proportional in between). Default:10 minutes
SET DEFAULTS	Resets all user-editable options to the factory-defaults.
TEST/MAIN	
PROBE INFO	Displays the sensor type, entered name of the sensor (Default: sensor serial number), the sensor serial number, the software version number, and the sensor driver version number.
PROFILE	Select Profile Counter to display the number of wipes made (from 20000 backwards). Select Reset Config to manually reset the profile counter.
COUNTER	Shows the number of hours or cycles left for operating hours, test/maint, gasket, and the motor.
TEST/MAIN	WIPE—Initiates the wiping action of the wiper.
	SIGNALS—displays the signal outputs for the device.
	OUTPUT MODE—Select the behavior of the instrument outputs (Hold, Active, Transfer, Selection)
	DEFAULT SETUP—Resets all user-editable options to the factory defaults.

4.6 Calibration

There are two calibration techniques; depending on whether turbidity or suspended solid is required (refer to section 4.6.2 or section 4.6.3 on page 18). Before calibration, determine the behavior of the 4–20 outputs and alarm relays while the user is in the CALIBRATE menu (refer to section 4.6.1).

DRAFT

4.6.1 Setting the Outmode

1. From the Main Menu, select SENSOR SETUP and press confirm.
2. Select the appropriate sensor if more than one is attached and confirm.
3. Select CALIBRATE and press confirm.
4. Select SET OUTMODE. Select the available Out Mode (Active, Hold, Transfer) and confirm.

4.6.2 Calibration for Turbidity

Turbidity calibration requires the use of a Turbidity Standard Solution. The manufacturer recommends the 800 NTU Turbidity Standard Solution (part of the calibration kit No. 57330-00). A zero-point calibration using deionized water is also recommended.

1. From the Main Menu, select SENSOR SETUP and press confirm.
2. Select the appropriate sensor if more than one is attached and confirm.
3. Select CALIBRATE and press confirm.
4. Select SENSOR MEASURE and confirm.
5. Place the sensor in the calibration cylinder with deionized water, mounting it with the supplied clamp. The tip of the probe should be approximately 1-inch below the surface of the water. Record the reading from the sensor measure display.
6. Select OFFSET. Multiply the reading obtained in step 5 and enter the value.
7. Select SENSOR MEASURE.
8. Rinse the outside of the StablCal® 800 NTU standard with water to remove any dust or debris adhering to the surface of the bottle. Gently invert both StablCal standard bottles a minimum of 50 times. Remove the lid and seal from each bottle. Slowly (to avoid creating bubbles) pour the contents of the bottles into the calibration cylinder. Immediately place the tip of the probe into the positioning bracket in the calibration cylinder. The tip of the probe should be approximately 1-inch below the surface standard. Allow the reading to become stable on the SENSOR MEASURE screen. Record the value (measured value). Calculate the factor. Refer to section 4.6.2.1.
9. Select FACTOR to display the corrected measurement.

4.6.2.1 Calculating the Factor

$$\text{New Factor} = \frac{\text{800 NTU Standard}}{\text{measured value}}$$

For example, if a sample measures 750 NTU using the sensor and the standard is 800 NTU, the new factor would be calculated as follows:

$$\text{New Factor} = \frac{\text{800 NTU}}{\text{750 NTU}} = 1.07$$

DRAFT

4.6.3 Calibration for Suspended Solids

Suspended solids calibration requires calibration to the actual sample. This optimizes the compensation for the particle size and shape typical at a measuring site. It is best performed by mounting the sensor as usual for normal measurement, and then grab samples collected and evaluated by laboratory methods. While a single point calibration is usually sufficient to provide accuracy, the SOLITAX does offer the ability to calibrate with up to 5 calibration points.

1. From the Main Menu, select SENSOR SETUP and press confirm.
2. Select the appropriate sensor if more than one is attached and confirm.
3. Select CALIBRATE and press confirm.
4. Select CONFIGURE and confirm.
5. Select the number of points desired for calibration (the unit with linearly interpolate values between calibration points). Select Factor for a single point calibration.
6. Mount the sensor as is during normal operation. Alternatively, place the sensor in the calibration cylinder (or a container with dark, non-reflective walls) 2 inches of clearance from the probe face with the probe face submerged by 1 inch or more.
7. Select SENSOR MEASURE and record the reading.
8. Immediately take a grab sample. Determine the total suspended solids using a gravimetric method such as Method 2540 D in *Standards Methods for the Examination of Water and WasteWater.*
9. Calculate the new factor. Refer to section 4.6.3.1 for single point (Factor) calibration. Refer section 4.6.3.2 on page 18 for multiple point calibrations.
10. Select FACTOR and press confirm. The corrected measurement should be displayed.

4.6.3.1 For Single Point (Factor) Calibration

Calculate the new factor:

$$\text{New Factor} = \frac{\text{Determined gravimetric value}}{\text{measured value}}$$

For example, if a sample measures 2.3 g/L using the SS sensor and the gravimetric value was 2.0 g/L, the new factor would be calculated as follows:

$$\text{New Factor} = \frac{2.0\ \text{g/L}}{2.3\ \text{g/L}} = 0.87$$

4.6.3.2 Multi-point Calibration

1. Repeat steps 6–8 in section 4.6.3 on page 18 at different times to obtain different measurements.
2. From the CONFIGURE menu, select the appropriate calibration point menu.
3. Enter the pairs of values for each reading, the target value being the laboratory determined value, and the actual value being the reading that the SOLITAX produced in step 5. The pairs should be entered in order from lowest values to highest.

DRAFT

Section 5 Maintenance



DANGER
Only qualified personnel should conduct the tasks described in this section of the manual.

Proper maintenance of the measuring windows in the sensor is critical for accurate measurements. The measuring windows should be checked monthly for soiling and the wiper checked for wear.

Important Note: *The seals must be replaced every 2 years by the Service Department. If the seals are not changed regularly, water may enter the probe head and seriously damage the instrument.*

5.1 Maintenance Schedule

Maintenance Task	Duration
Visual inspection	monthly
Check calibration	monthly *(depending on the ambient conditions)*
Inspection	six months (counter)
Seal change	every 2 years (counter)
Change wiper and reset counter	as per counter (20000 cycles)

5.2 Cleaning the Sensor Measuring Windows



CAUTION
Always were
- ***Safety glasses,***
- ***Gloves and***
- ***Overal***

handling hydrochloric acid and observe safety regulations.

The measuring windows are made of quartz glass. If necessary, they can be cleaned with a cleaning agent and a cloth.

DRAFT

5.3 Replacing the Wiper

The life of the wiper is dependent on the number of cleaning actions performed and the type of deposits to be removed. The life of the wiper varies. The wipers supplied with the instrument should last for approximately one year.

1. From the Main Menu, select SENSOR SETUP and press confirm.
2. Select the appropriate sensor if more than one is attached and confirm.
3. Select TEST/MAINT and press confirm.
4. Select PROFILE and confirm. Change the wiper, see section 5.3 on page 20.
5. Select RESET CONFIG and confirm.
6. Select MAN. RESET ARE YOU SURE? and confirm.

Figure 8 Wiper Replacement

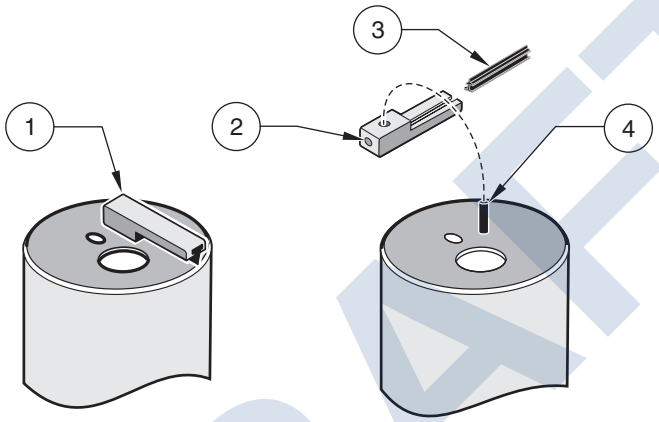

1.	Wiper arm	**3.**	Wiper
2.	M4 hex socket head bolt	**4.**	Wiper axle

DRAFT

Section 6 Troubleshooting

6.1 Error Codes

In the case of an error, the indication of the measured value flashes on the display and all the contacts and current outputs allocated to this sensor are placed on hold. The following conditions will result in flashing measured values:

- Data transmission between controller and sensor interrupted

On the Main menu open the SENSOR DIAG menu using **ENTER** and determine the cause of the fault.

Table 1 Error Messages

Error Displayed	Cause	Solution
POS. UNKNOWN	Wiper position unknown	Open the TEST/MAINT menu and trigger the ”WIPE” function, if the problem persists contact the manufacturer's customer service
LED FAULTY	Faulty LED	Contact customer service
MOIST	Moisture value > 10	Remove the sensor immediately and store in a dry place, contact customer service
CAL. DATA	Factory calibration data lost	Contact customer service

6.2 Warnings

A warning results in a flashing warning icon on the right of the display, all menus, contacts and outputs remain unaffected and continue to work normally. On the Main menu open the SENSOR DIAG menu using **ENTER** and determine the cause of the warning.

A warning may be used to trigger a relay and users can set warning levels to define the severity of the warning.

Table 2 Warnings

Warning Displayed	Cause	Solution
WARNING	Cause	Action
REPLACE WIPER	Counter elapsed	Replace wiper, reset counter
TEST/MAINT	Counter elapsed	Contact customer service
GASKET	Counter elapsed	Contact customer service

DRAFT

Section 7 Replacement Parts and Accessories

7.1 Immersion Sensors[1]

Description	Catalog Number
Turbidity, t-line sc, PVC with wiper (0.001 to 4000 NTU)	LXV423.99.10000
Turbidity, t-line sc, PVC without wiper (0.001 to 4000 NTU)	LXV423.99.12000
Turbidity and Suspended Solids, ts-line sc, PVC with wiper (0.001 to 4000 NTU, 0.001 mg/L to 50 g/L)	LXV423.99.10100
Turbidity and Suspended Solids, ts-line sc, PVC without wiper (0.001 to 4000 NTU, 0.001 mg/L to 50 g/L)	LXV423.99.12100
Turbidity and Suspended Solids, ts-line sc, stainless steel with wiper (0.001 to 4000 NTU, 0.001 mg/L to 50 g/L)	LXV423.99.00100
Turbidity and Suspended Solids, ts-line sc, stainless steel without wiper (0.001 to 4000 NTU, 0.001 mg/L to 50 g/L)	LXV423.99.02100
Turbidity and Suspended Solids, hs-line sc, PVC with wiper (0.001 to 4000 NTU, 0.001 mg/L to 500 g/L)	LXV423.99.10200
Turbidity and Suspended Solids, hs-line sc, PVC without wiper (0.001 to 4000 NTU, 0.001 mg/L to 500 g/L)	LXV423.99.12200
Turbidity and Suspended Solids, hs-line sc, stainless steel with wiper (0.001 to 4000 NTU, 0.001 mg/L to 500 g/L)	LXV423.99.00200
Turbidity and Suspended Solids, hs-line sc, stainless steel without wiper (0.001 to 4000 NTU, 0.001 mg/L to 500 g/L)	LXV423.99.02200

[1] All sensors come with the sensor, replacement wipers, and manual.

7.2 Insertion Sensors[1]

Description	Catalog Number
Turbidity and Suspended Solids, inline sc, stainless steel with wiper (0.001 to 4000 NTU, 0.001 mg/L to 50 g/L)	LXV424.99.00100
Turbidity and Suspended Solids, inline sc, stainless steel without wiper (0.001 to 4000 NTU, 0.001 mg/L to 50 g/L)	LXV424.99.02100
Turbidity and Suspended Solids, highline sc, stainless steel with wiper (0.001 to 4000 NTU, 0.001 mg/L to 500 g/L)	LXV424.99.00200
Turbidity and Suspended Solids, highline sc, stainless steel without wiper (0.001 to 4000 NTU, 0.001 mg/L to 500 g/L)	LXV424.99.02200

[1] All sensors come with the sensor, replacement wipers, and manual.

7.3 Replacement Parts

Description	Catalog Number
Set of wipers (for 5 changes) made of silicone for normal applications	LZX050
Set of wipers (for 5 changes) made of Viton for e. g. media containing oil	LZX578
SOLITAX sc User Manual, english	DOC023.54.03232
Extension cable, 5 m (16.4 ft)	LZX848
Extension cable, 10 m (33 ft)	LZX849
Extension cable, 15 m (50 ft)	LZX850
Extension cable, 20 m (65 ft)	LZX851
Extension cable, 30 m (100 ft)	LZX852
Extension cable, 50 m (165 ft)	LZX853

DRAFT

7.3 Replacement Parts (continued)

Description	Catalog Number
Extension pipe, 1,0 m (3.28 ft)	LZY413
Extension pipe, 1,8 m (5.90 ft)	LZY414
Installation kit, fixed-point (for t-line, ts-line, and hs-line immersion sensors)	LZX414.00.10000
Consisting of:	
Base	ATS010
Mounting plate	HPL061
Holding clamp (2×)	LZX200
Assembly pipe 2 m	BRO075
HS small parts set	LZX416
Installation kit with straight adapter	LZX414.00.20000
Kit, screws and seals for sensor adapters	LZX417
Miscellaneous hardware for probe installation kit	LZX416
Second fastening point, includes: bracket, sensor pipe stand, sensor pipe stand bracket, screws, and grommet)	LZX456
Sensor fixed-point mounting kit: Sensor pipe bracket	ATS010
Sensor pipe stand bracket	LZX200
L-bracket	ATS011
Adapter, Sensor 90° elbow	AHA034
Ball valve for insertion probes without adapting flange	LZX337
Welded flange made of C-steel for the pipe installation fitting	LZX703
Welded flange made of stainless steel for pipe installation safety fitting	LZX660

DRAFT

Section 8 Contact Information

HACH Company
World Headquarters
P.O. Box 389
Loveland, Colorado
80539-0389 U.S.A.
Tel (800) 227-HACH
(800) -227-4224
(U.S.A. only)
Fax (970) 669-2932
orders@hach.com
www.hach.com

Repair Service in the United States:
HACH Company
Ames Service
100 Dayton Avenue
Ames, Iowa 50010
Tel (800) 227-4224
(U.S.A. only)
Fax (515) 232-3835

Repair Service in Canada:
Hach Sales & Service
Canada Ltd.
1313 Border Street, Unit 34
Winnipeg, Manitoba
R3H 0X4
Tel (800) 665-7635
(Canada only)
Tel (204) 632-5598
Fax (204) 694-5134
canada@hach.com

Repair Service in Latin America, the Caribbean, the Far East, Indian Subcontinent, Africa, Europe, or the Middle East:
Hach Company World Headquarters,
P.O. Box 389
Loveland, Colorado,
80539-0389 U.S.A.
Tel +001 (970) 669-3050
Fax +001 (970) 669-2932
intl@hach.com

HACH LANGE GMBH
Willstätterstraße 11
D-40549 Düsseldorf
Tel. +49 (0)2 11 52 88-320
Fax +49 (0)2 11 52 88-210
info@hach-lange.de
www.hach-lange.de

HACH LANGE LTD
Pacific Way
Salford
GB-Manchester, M50 1DL
Tel. +44 (0)161 872 14 87
Fax +44 (0)161 848 73 24
info@hach-lange.co.uk
www.hach-lange.co.uk

HACH LANGE LTD
Unit 1, Chestnut Road
Western Industrial Estate
IRL-Dublin 12
Tel. +353(0)1 46 02 5 22
Fax +353(0)1 4 50 93 37
info@hach-lange.ie
www.hach-lange.ie

HACH LANGE GMBH
Hütteldorferstr. 299/Top 6
A-1140 Wien
Tel. +43 (0)1 9 12 16 92
Fax +43 (0)1 9 12 16 92-99
info@hach-lange.at
www.hach-lange.at

HACH LANGE
Rorschacherstrasse 30 a
CH-9424 Rheineck
Tel. +41 (0)71 886 91 11
Fax +41 (0)71 886 91 66
info@hach-lange.ch
www.hach-lange.ch

HACH LANGE FRANCE S.A.S.
8, mail Barthélémy Thimonnier
Lognes
F-77437 Marne-La-Vallée cedex 2
Tél. +33 (0)8 20 20 14 14
Fax +33 (0)1 69 67 34 99
info@hach-lange.fr
www.hach-lange.fr

HACH LANGE SA
Motstraat 54
B-2800 Mechelen
Tél. +32 (0)15 42 35 00
Fax +32 (0)15 41 61 20
info@hach-lange.be
www.hach-lange.be

DR. LANGE NEDERLAND B.V.
Laan van Westroijen 2a
NL-4003 AZ Tiel
Tel. +31(0)344 63 11 30
Fax +31(0)344 63 11 50
info@hach-lange.nl
www.hach-lange.nl

HACH LANGE APS
Åkandevej 21
DK-2700 Brønshøj
Tel. +45 36 77 29 11
Fax +45 36 77 49 11
info@hach-lange.dk
www.hach-lange.dk

HACH LANGE AB
Vinthundsvägen 159A
SE-128 62 Sköndal
Tel. +46 (0)8 7 98 05 00
Fax +46 (0)8 7 98 05 30
info@hach-lange.se
www.hach-lange.se

HACH LANGE S.R.L.
Via Riccione, 14
I-20156 Milano
Tel. +39 02 39 23 14-1
Fax +39 02 39 23 14-39
info@hach-lange.it
www.hach-lange.it

HACH LANGE S.L.U.
Edif. Arteaga Centrum
C/Larrauri, 1C- 2ª Pl.
E-48160 Derio/Vizcaya
Tel. +34 94 657 33 88
Fax +34 94 657 33 97
info@hach-lange.es
www.hach-lange.es

HACH LANGE LDA
Av. do Forte nº8
Fracção M
P-2790-072 Carnaxide
Tel. +351 214 253 420
Fax +351 214 253 429
info@hach-lange.pt
www.hach-lange.pt

HACH LANGE SP.ZO.O.
ul. Opolska 143 a
PL-52-013 Wrocław
Tel. +48 (0)71 342 10-83
Fax +48 (0)71 342 10-79
info@hach-lange.pl
www.hach-lange.pl

HACH LANGE S.R.O.
Lešanská 2a/1176
CZ-141 00 Praha 4
Tel. +420 272 12 45 45
Fax +420 272 12 45 46
info@hach-lange.cz
www.hach-lange.cz

HACH LANGE S.R.O.
Roľnícka 21
SK-831 07 Bratislava – Vajnory
Tel. +421 (0)2 4820 9091
Fax +421 (0)2 4820 9093
info@hach-lange.sk
www.hach-lange.sk

HACH LANGE KFT.
Vöröskereszt utca. 8-10.
H-1222 Budapest XXII. ker.
Tel. +36 (06)1 225 7783
Fax +36 (06)1 225 7784
info@hach-lange.hu
www.hach-lange.hu

HACH LANGE S.R.L.
Str. Căminului nr. 3
Sector 2
RO-021741 Bucureşti
Tel. +40 (0) 21 205 30 03
Fax +40 (0) 21 205 30 17
info@hach-lange.ro
www.hach-lange.ro

HACH LANGE
8, Kr. Sarafov str.
BG-1164 Sofia
Tel. +359 (0)2 963 44 54
Fax +359 (0)2 866 15 26
info@hach-lange.bg
www.hach-lange.bg

HACH LANGE SU ANALİZ SİSTEMLERİ LTD.ŞTİ.
Hilal Mah. 75. Sokak
Arman Plaza No: 9/A
TR-06550 Çankaya/ANKARA
Tel. +90 (0)312 440 98 98
Fax +90 (0)312 442 11 01
bilgi@hach-lange.com.tr
www.hach-lange.com.tr

DRAFT

HACH LANGE D.O.O.
Fajfarjeva 15
SI-1230 Domžale
Tel. +386 (0)59 051 000
Fax +386 (0)59 051 010
info@hach-lange.si
www.hach-lange.si

HACH LANGE E.Π.E.
Αυλίδος 27
GR-115 27 Αθήνα
Τηλ. +30 210 7777038
Fax +30 210 7777976
info@hach-lange.gr
www.hach-lange.gr

HACH LANGE E.P.E.
27, Avlidos str
GR-115 27 Athens
Tel. +30 210 7777038
Fax +30 210 7777976
info@hach-lange.gr
www.hach-lange.gr

HACH LANGE D.O.O.
Ivana Severa bb
42 000 Varaždin
Tel. +385 (0) 42 305 086
Fax +385 (0) 42 305 087
info@hach-lange.hr
www.hach-lange.hr

HACH LANGE MAROC SARLAU
Villa 14 – Rue 2 Casa Plaisance
Quartier Racine Extension
MA-Casablanca 20000
Tél. +212 (0)522 97 95 75
Fax +212 (0)522 36 89 34
info-maroc@hach-lange.com
www.hach-lange.ma

DRAFT

Section 9 Limited warranty

Hach Company warrants its products to the original purchaser against any defects that are due to faulty material or workmanship for a period of one year from date of shipment unless otherwise noted in the product manual.

In the event that a defect is discovered during the warranty period, Hach Company agrees that, at its option, it will repair or replace the defective product or refund the purchase price excluding original shipping and handling charges. Any product repaired or replaced under this warranty will be warranted only for the remainder of the original product warranty period.

This warranty does not apply to consumable products such as chemical reagents; or consumable components of a product, such as, but not limited to, lamps and tubing.

Contact Hach Company or your distributor to initiate warranty support. Products may not be returned without authorization from Hach Company.

Limitations

This warranty does not cover:

- Damage caused by acts of God, natural disaster, labor unrest, acts of war (declared or undeclared), terrorism, civil strife or acts of any governmental jurisdiction
- Damage caused by misuse, neglect, accident or improper application or installation
- Damage caused by any repair or attempted repair not authorized by Hach Company
- Any product not used in accordance with the instructions furnished by Hach Company
- Freight charges to return merchandise to Hach Company
- Freight charges on expedited or express shipment of warranted parts or product
- Travel fees associated with on-site warranty repair

This warranty contains the sole express warranty made by Hach Company in connection with its products. All implied warranties, including without limitation, the warranties of merchantability and fitness for a particular purpose, are expressly disclaimed.

Some states within the United States do not allow the disclaimer of implied warranties and if this is true in your state the above limitation may not apply to you. This warranty gives you specific rights, and you may also have other rights that vary from state to state.

This warranty constitutes the final, complete, and exclusive statement of warranty terms and no person is authorized to make any other warranties or representations on behalf of Hach Company.

Limitation of Remedies

The remedies of repair, replacement or refund of purchase price as stated above are the exclusive remedies for the breach of this warranty. On the basis of strict liability or under any other legal theory, in no event shall Hach Company be liable for any incidental or consequential damages of any kind for breach of warranty or negligence.

DRAFT

Appendix A Modbus Register Information

Table 3 Sensor Modbus Registers

Group Name	Tag Name	Register	Data Type#	Length	R/W	Description
Measurements	TurbidityFNU	40001	Float	2	R	Turbidity FNU
Measurements	TurbidityEBC	40003	Float	2	R	Turbidity EBC
Measurements	SolidsMGL	40005	Float	2	R	Solids mg/L
Measurements	SolidsGL	40007	Float	2	R	Solids g/L
Measurements	SolidsPR	40009	Float	2	R	Solids %
—	Reserved	40011	Unsigned Integer	1	R	Reserved
Base	Parameter	40012	Unsigned Integer	1	R/W	Parameter
Base	UnitTRB	40013	Unsigned Integer	1	R/W	Unit Turbidity
Base	UnitTS	40014	Unsigned Integer	1	R/W	Units Solids
Calibration	OffsetTRB	40015	Float	2	R/W	Turbdity Offset
Calibration	FactorTRB	40017	Float	2	R/W	Turbidity Factor
Calibration	FactorTS	40019	Float	2	R/W	Solids Factor
Data	Wiperstate	40021	Unsigned Integer	1	R/W	Wiper register
Setup	ResponseInterval	40022	Unsigned Integer	1	R/W	Response time
Setup	CleaningInterval	40023	Unsigned Integer	1	R/W	Wiper interval
Setup	LogInterval	40024	Unsigned Integer	1	R/W	Logger interval
Setup	Outputmodekal	40025	Unsigned Integer	1	R/W	Output when calibrate
Setup	Outputmodesrv	40026	Unsigned Integer	1	R/W	Output when service
Setup	Location	40027	String	8	R/W	Edited name
Setup	ProfilCounter	40035	Unsigned Integer	1	R/W	Profi counter
Data	SerienNummer	40036	String	6	R	Serial number
Calibration	DateUserCal	40042	Date	2	R	Date of manufacturing calibration
Calibration	DateUserCalTURB	40044	Date	2	R	Date of calibration turbidity
Calibration	DateUserCalSOLID	40046	Date	2	R	Date of calibration solid
Data	VersionAppl	40048	Float	2	R	Version application
Data	VersionBoot	40050	Float	2	R	Version Bootlader
Data	VersionStruct	40052	Unsigned Integer	1	R	Version structure probedriver
Data	VersionContent	40053	Unsigned Integer	1	R	Version register probedriver
Data	VersionFirmware	40054	Unsigned Integer	1	R	Version firmware probedriver
Data	FormatMinFNU	40055	Float	2	R	Minimum turbidity FNU
Data	FormatMaxFNU	40057	Float	2	R	Maximum turbidity FNU
Data	FormatMinEBC	40059	Float	2	R	Minimum turbidity EBC
Data	FormatMaxEBC	40061	Float	2	R	Maximum turbidity EBC
Data	FormatMinGL	40063	Float	2	R	Minimum solids g/L
Data	FormatMaxGL	40065	Float	2	R	Maximum solids g/L
Data	FormatMinMGL	40067	Float	2	R	Minimum solids mg/L
Data	FormatMaxMGL	40069	Float	2	R	Maximum mg/L
Data	FormatMinPR	40071	Float	2	R	Minimum solids %
Data	FormatMaxPR	40073	Float	2	R	Maximum solids %
Data	SignalsLED	40075	Unsigned Integer	1	R	Signal LED
Data	SignalsMoist	40076	Unsigned Integer	1	R	Signal moist

DRAFT

DOC053.52.90451

Tank rim mount

Nitratax, Solitax, TSS and UVAS sensors

Description &Technical data

DRAFT

© HACH LANGE GmbH, 2013. All rights reserved. Printed in Germany

Content

LZY714.99.52x20 page 4 +5
Pole Mount Kit with 24cm bracket (Stainless Steel) for Nitratax, Solitax, TSS and UVAS sensors.



LZXY714.99.53x20 page 6+7
Pole Mount Kit with 10cm bracket (Stainless Steel) for Nitratax, Solitax, TSS and UVAS sensors.

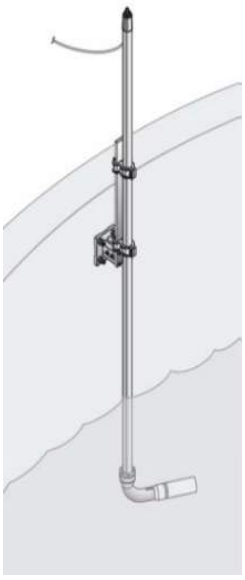

DRAFT

LZY714.99.5xx20

Tank rim mount for Nitratax, Solitax, TSS and UVAS sensors

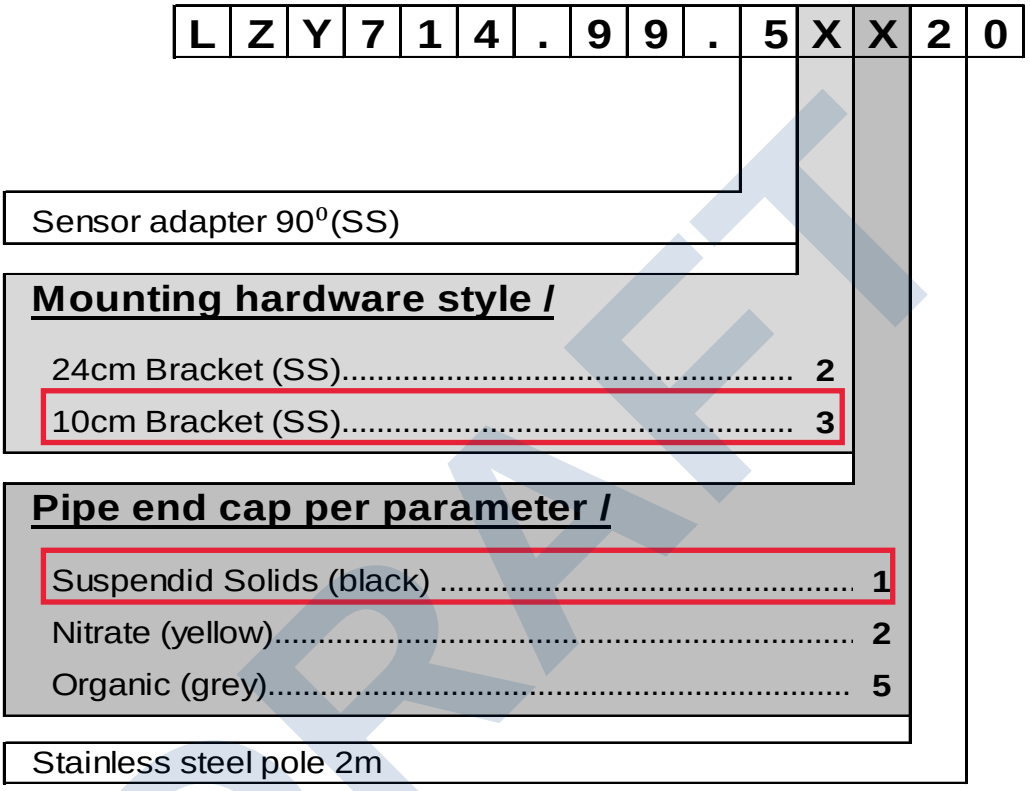

DRAFT

LZY714.99.53x20

Pole Mount Kit with 10cm bracket with pole (Stainless Steel) for Nitratax, Solitax, TSS and UVAS sensors

Part numbers:

For Solitax &TSS:	LZY714.99.53120
For Nitratax:	LZY714.99.53220
For UVAS:	LZY714.99.53520

Specifications:

- Pole: length x diameter 2000mm x 40mm
- Material pole: SS 1.4301
- Material end cap: PVC
- Material sensor adapter 90º: SS 1.4308
- Material bracket: SS

LZY714.99.53x20,
Pole mount kit with 10cm bracket

Pos.	Description	Qty in: LZY714.99.53x20	Spare part number	Qty
1	End cap Suspended Solids	1	LZY714.99.00100	1
	End cap Nitrate	1	LZY714.99.00200	1
	End cap UVAS	1	LZY714.99.00500	1
2	10cm Bracket	1	LZY714.99.03000	1
3	Pole with flange	1	LZY714.99.00020	1
4	Sensor adapter 90º Incl. screws LZY822	1	LZY714.99.50000	1

LZY714.99.03000, 10cm Bracket

Pos.	Description	Qty in: LZY714.99.03000	Spare part number	Qty
2a	Base (SS 1.4308)	1	LZY827	1
2b	Plate (SS 1.4571)	1	LZY804	1
2c	Pole clamp set (SS 1.4308)	2	LZY449 (incl. srews)	1
	Screw set (SS)	1	LZY823	1

DRAFT

LZY714.99.53x20

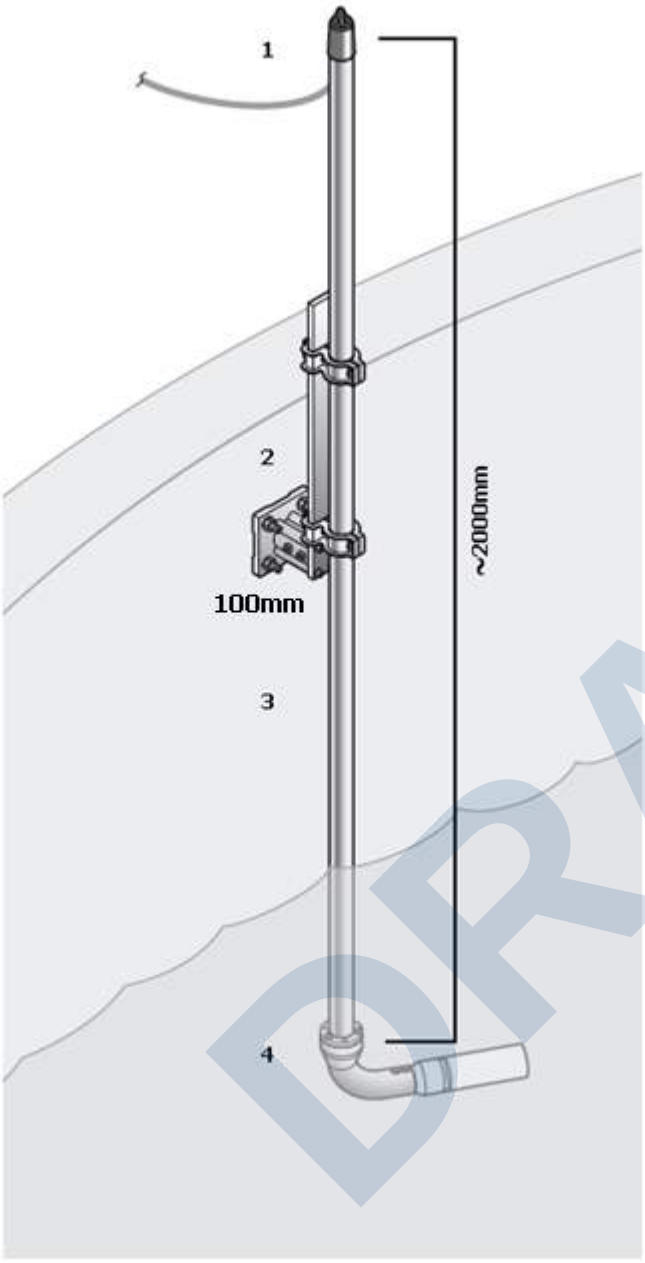

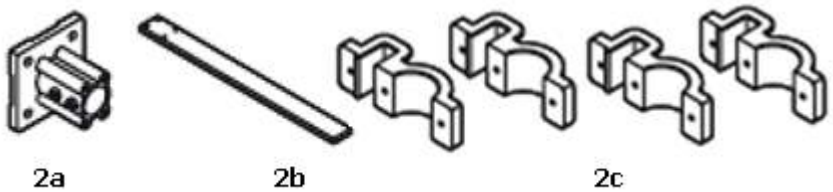

DRAFT

DRAFT

HACH COMPANY World Headquarters
P.O. Box 389, Loveland, CO 80539-0389 U.S.A.
Tel. (970) 669-3050
(800) 227-4224 (U.S.A. only)
Fax (970) 669-2932
orders@hach.com
www.hach.com

HACH LANGE GMBH
Willstätterstraße 11
D-40549 Düsseldorf
Tel. +49 (0) 2 11 52 88-320
Fax +49 (0) 2 11 52 88-210
info@hach-lange.de
www.hach-lange.de

HACH LANGE Sàrl
6, route de Compois
1222 Vésenaz
SWITZERLAND
Tel. +41 22 594 6400
Fax +41 22 594 6499

Digital Controller SC4500

Applications

- Wastewater
- Drinking Water
- Industrial Water
- Other



Claros Enabled

Service Protected

DRAFT

Ready for Now. Ready for the Future.

Technologies are advancing rapidly, providing new levels of convenience, accuracy, and efficiency. Which is exactly why the SC4500 Controller from Hach® is designed to integrate easily into your current system while allowing you to upgrade as your capabilities advance, without having to replace inventory. With a wide range of analog and digital connectivity options and the availability of intelligent instrument and data management features, the SC4500 unlocks the future, today.

Easy Adoption

The familiar experience of a modern touchscreen, the ability to use your current Hach sensors, and the same footprint as the SC200, make installation and integration of the SC4500 Controller seamless.

No Time for Downtime

The SC4500's built-in predictive diagnostic software ensures measurement confidence and reduces the risk of unexpected equipment downtime by enabling proactive maintenance planning via MSM, including step-by-step instructions.

The Connectivity Options You Need

The Controller provides local communication to SCADA or a PLC, as well as remote access through a secure, cloud-based connectivity option to integrate with Claros™, the Water Intelligence System from Hach. From analog and advanced digital protocols to wi-fi, cellular or LAN, the SC4500 gives you the flexibility to adapt in a rapidly changing world.

Technical Data*

Description	Microprocessor-controlled and menu-driven controller that operates the sensor
Dimensions	½ DIN - 144 x 144 x 192 mm (5.7 x 5.7 x 7.6 in.)
Weight	3.7 lb (controller only, w/o modules)
Display	3.5-inch TFT color display with capacitive touchpad
Enclosure Rating	UL50E type 4X, IEC/EN 60529–IP 66, NEMA 250 type 4X Metal enclosure with a corrosion-resistant finish
Operating Temperature Range	-20 to 60 °C (-4 to 140 °F) (8 W (AC)/9 W (DC) sensor load) -20 to 45 °C (-4 to 113 °F) (28 W (AC)/20 W (DC) sensor load) Linear derating between 45 and 60 °C (-1.33 W/°C)
Storage Conditions	-20 - 70 °C (-4 - 158 °F), 0 - 95% relative humidity, non-condensing
Altitude	2000 m (6562 ft) maximum
Installation Category	Category II
Pollution Degree	4
Protection Class	I, connected to protective earth
Power requirements	AC controller: 100-240 VAC ±10%, 50/60 Hz; 1 A (28 W sensor load) DC controller: 24 VDC +15% -20%; 2.5 A (20 W sensor load)
Measurements	Two device digital SC connectors
Relays	Two relays (SPDT); Wire gauge: 0.75 to 1.5 mm^2 (18 to 16 AWG) AC controller Maximum switching voltage: 100 - 240 VAC Maximum switching current: 5 A Resistive/1 A Pilot Duty Maximum switching power: 1200 VA Resistive/360 VA Pilot Duty DC controller Maximum switching voltage: 30 VAC or 42 VDC Maximum switching current: 4 A Resistive/1 A Pilot Duty Maximum switching power: 125 W Resistive/28 W Pilot Duty
Communication (optional)	Analog: Five 0-20 mA or 4-20 mA analog outputs on each analog output module Up to two analog Input modules (0-20 mA or 4-20 mA). Each input module replaces a digital sensor input. Digital: Profibus DPV1 module Modbus TCP Profinet IO module Ethernet IP module
Network Connectivity	LAN: Two Ethernet connectors (10/100 Mbps) Cellular: External 4G Wi-Fi
USB Port	Used for data download and software upload. The controller records approximately 20,000 data points for each connected sensor.
Compliance Certifications	CE. ETL certified to UL and CSA safety standards (with all sensor types), FCC, ISED, KC, RCM, EAC, UKCA, SABS, C (Morocco)
Warranty	12 months
Compatible Network Technologies	GSM 3G/4G (e.g. AT&T, T-Mobile, Rogers, Vodafone etc.) CDMA (e.g. Verizon)

**Subject to change without notice.*

DRAFT

Compatible Instruments / Software Version (Release Year)

Amtax sc / V2.30 (2018) or higher

A-ISE sc / V1.02 or higher

AN-ISE sc / V1.08 (2013) or higher

N-ISE sc / V1.02 or higher

Nitratax clear sc, Nitratax eco sc, Nitratax plus sc / V3.13 (2013) or higher

Phosphax sc / V2.30 (2018) or higher

Phosphax sc LR/MR/HR / V1.01 (2018) or higher

TSS sc / V41.73 (2013) or higher

Solitax sc / V2.20 (2013) or higher

TU5300sc, TU5400sc / V1.34 (2017) or higher

SS7 sc (in Bypass) / V1.06 (2006) or higher

Ultraturb sc / V3.06 (2017) or higher

1720E / V2.10 (2006) or higher

Sonatax sc / V1.15 (2016) or higher

CL17sc / V2.7 (2019) or higher

CL10sc / V1.14 (2013) or higher

9184sc, 9185sc, 9187sc* / V2.03 (2013) or higher

Uvas plus sc / V3.01 (2017) or higher

LDO 2 sc* / V1.22 (2013) or higher

3798sc* / V2.03 (2013) or higher

3700sc + Inductive Conductive Digital Gateway 6120800 / V3.00 (2017) or higher

3422sc, Analog 3400 + Contacting Cond. Digital Gateway 6120700 / V3.00 or higher

pHD sc*, pHD-S sc / V3.10 (2016) or higher

1200-S sc* / V2.04 (2013) or higher

pHD analog + Digital Gateway 6120500 / V3.00 (2017) or higher

RC and PC analog sensor + Digital Gateway for conventional analog pH and ORP sensors 6120600 / V3.00 (2017) or higher

8362sc* / V3.00 (2017) or higher

*Hardware Version1 of instrument is not supported

Dimensions

Panel mounting dimensions

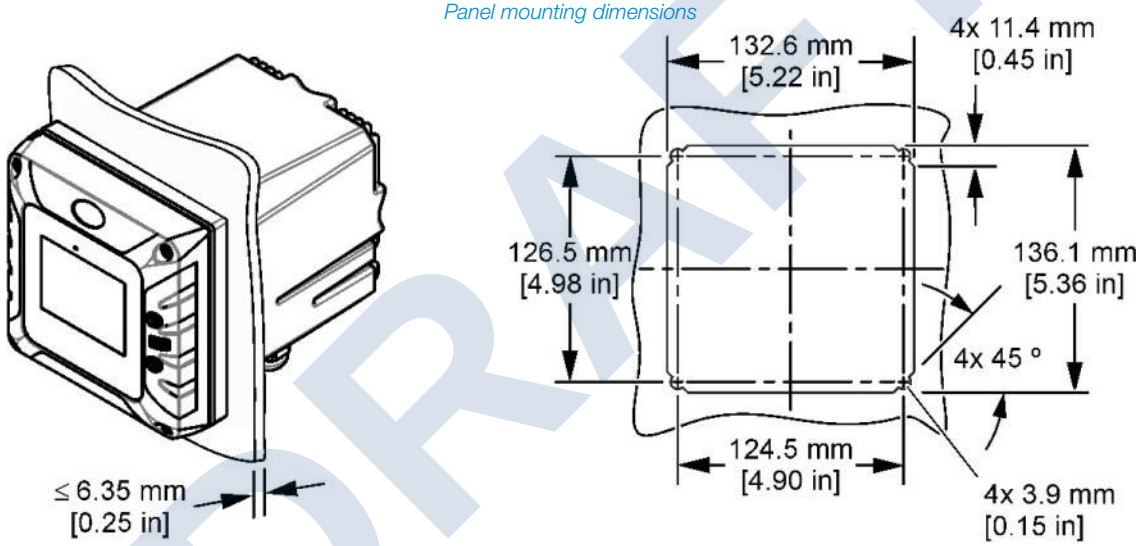

Top and bottom views

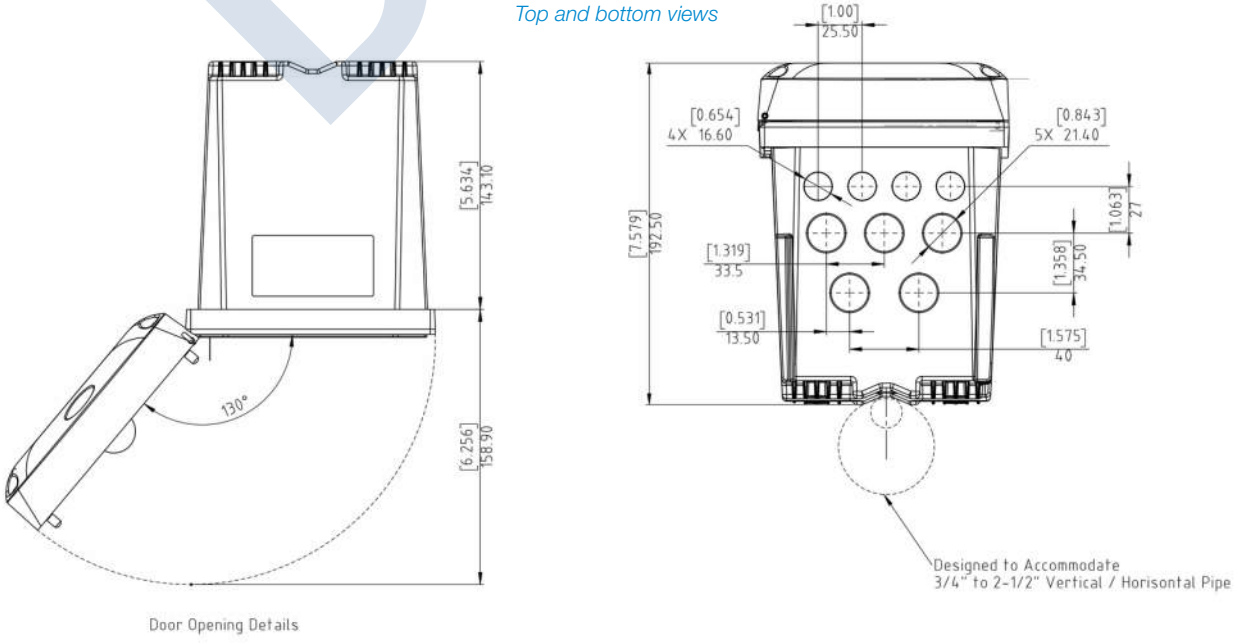

Door Opening Details

DRAFT

Order Information

Controller

LXV525.99A11551	SC4500 Controller, Prognosys, 5x mA Output, 2 digital Sensors, without plug
LXV525.99E11551	SC4500 Controller, Prognosys, 5x mA Output, 2 digital Sensors, US plug
LXV525.99A11541	SC4500 Controller, Prognosys, 5x mA Output, 1 digital Sensor, 1 mA Input, without plug
LXV525.99E11541	SC4500 Controller, Prognosys, 5x mA Output, 1 digital Sensor, 1 mA Input, US plug
LXV525.99AA1551	SC4500 Controller, Claros-enabled, 5x mA Output, 2 digital Sensors, without plug
LXV525.99EA1551	SC4500 Controller, Claros-enabled, 5x mA Output, 2 digital Sensors, US plug
LXV525.99AA1541	SC4500 Controller, Claros-enabled, 5x mA Output, 1 digital Sensor, 1 mA Input, without plug
LXV525.99EA1541	SC4500 Controller, Claros-enabled, 5x mA Output, 1 digital Sensor, 1 mA Input, US plug

Additional configurations are available. Please contact Hach Technical Support or your Hach representative.

Accessories

LXZ525.99.D0001	SC4500 mA Input Module
LXZ525.99.D0002	SC4x00 mA Output Module (5 Outputs)
LXZ525.99.C0002	SC4500 Ethernet IP Upgrade Kit
LXZ525.99.C0003	SC4500 Modbus TCP/IP Upgrade Kit
LXZ525.99.00026	SC4500 Ethernet Cable M12 to M12 / C1D2, 10 m
LXZ525.99.00017	SC4500 USB Stick
LXZ524.99.00004	SC4x00 UV Protection Screen
LXZ524.99.00005	SC4x00 UV Protection Screen with Sunroof
LXZ524.99.00033	SC4x00 Sunroof Visor
LXZ524.99.00036	SC4x00 Mounting Hardware Sunroof with Visor
LXZ524.99.00037	SC4x00 Sunroof with Visor

OUTDOOR INSTALLATION - REQUIRES SUN PROTECTION AT A MINIMUM

DRAFT

Claros Enabled

This instrument connects to Claros, Hach's innovative Water Intelligence System. Claros allows you to seamlessly connect and manage instruments, data, and process – anywhere, anytime. The result is greater confidence in your data and improved efficiencies in your operations. To unlock the full potential of Claros, insist on Claros Enabled instruments.

Service Protected

With Hach Service, you have a global partner who understands your needs and cares about delivering timely, high-quality service you can trust. Our Service Team brings unique expertise to help you maximize instrument uptime, ensure data integrity, maintain operational stability, and reduce compliance risk.

DOC053.53.35316.Aug21

Hach World Headquarters: Loveland, Colorado USA
United States: 800-227-4224 tel 970-669-2932 fax orders@hach.com
Outside United States: 970-669-3050 tel 970-461-3939 fax int@hach.com
hach.com

Printed in U.S.A.
©Hach Company, 2020. All rights reserved.
In the interest of improving and updating its equipment, Hach Company reserves the right to alter specifications to equipment at any time.

HACH® Be Right™

NOTICE - HACH LANGE GmbH claims proprietary rights in the infomation disclosed on this drawing. It is issued in confidence for engeneering information only and may not in whole or a part, be used to manufacture anything, whether or not shown here on, reproduced or disclosed to anyone without direct permission from HACH LANGE GmbH.

Ohne unsere vorherige Zustimmung darf diese Unterlage weder vervielfältigt noch Dritten zugänglich gemacht werden, und sie darf durch den Empfänger oder Dritte auch nicht in anderer Weise mißbräuchlich verwertet werden.

BOTTOM CONNECTIONS VIEW

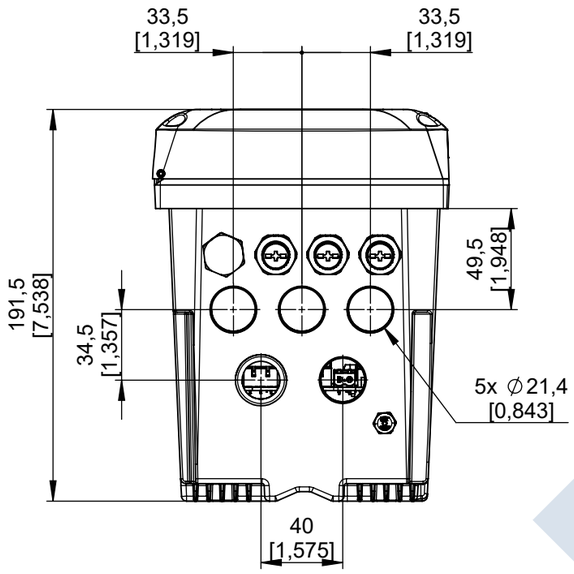

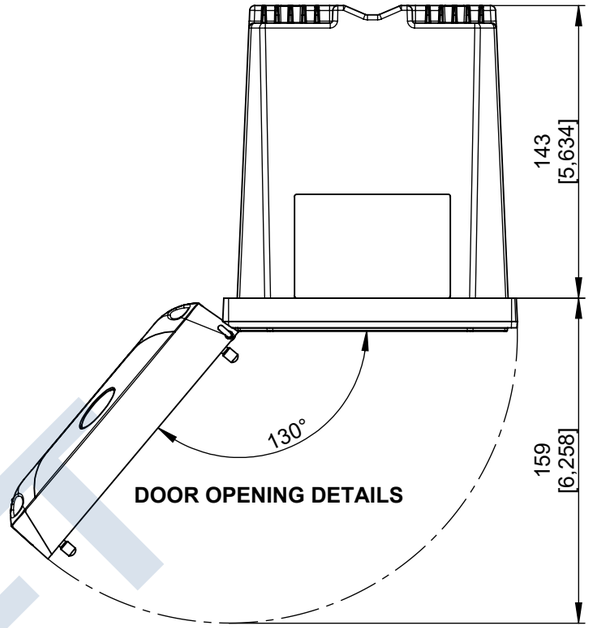

DOOR OPENING DETAILS

GENERAL INFORMATION:

1. CONTROLLER OPERATING TEMPERATURE : -20 TO +60 C (-4 TO +140 F); 95% HUMIDITY, NON CONDENSING.
2. CONTROLLER STORAGE TEMPERATURE: -20 TO +70 C (- 4 TO +158 F); 95% RELATIVE HUMIDITY, NON CONDENSING.
3. ENCLOSURE: NEMA 4x / IP66 METAL ENCLOSURE WITH A CORROSION RESISTANT FINISH.
4. CONTROLLER WEIGHT: 2.0 Kg (4.3 lb).

CUSTOMER CONNECTIONS

ITEMS REMOVED FOR CLARITY

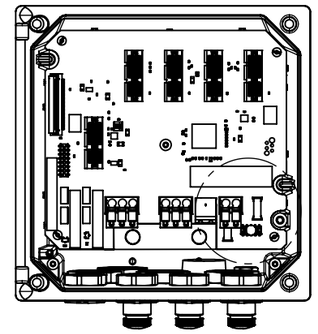

A

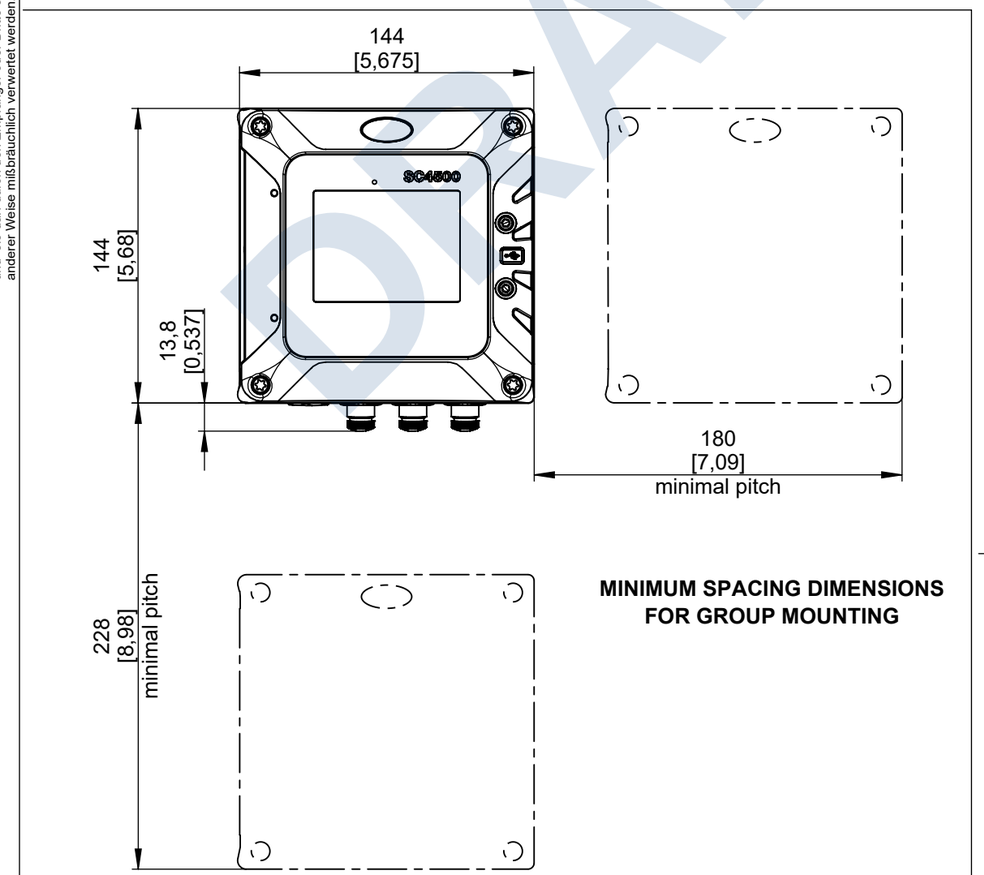

MINIMUM SPACING DIMENSIONS FOR GROUP MOUNTING

MOUNTING DIMENSIONS

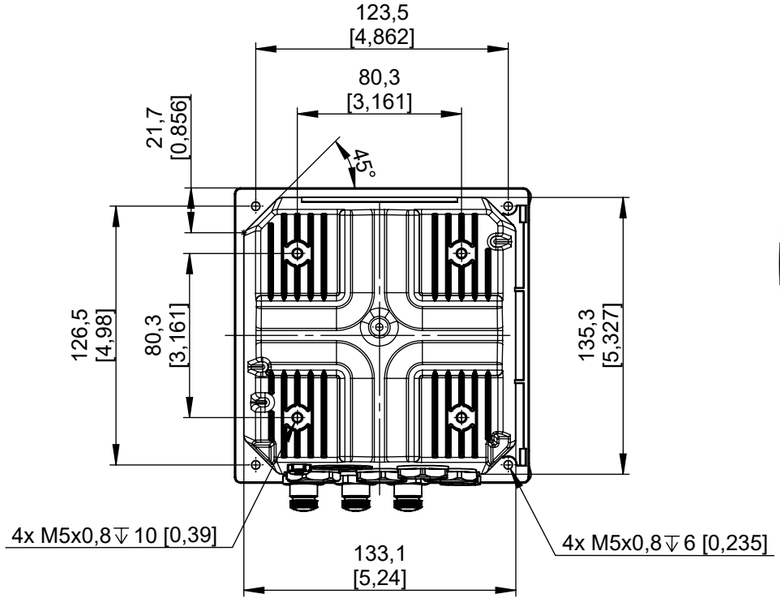

A 2:1

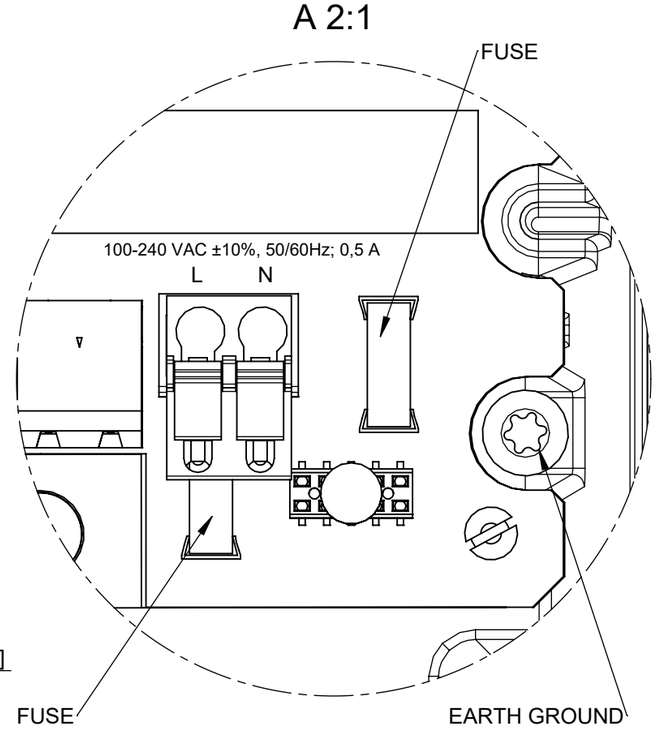

SolidWorks				Maße ohne Toleranzangaben General Tolerance	Maßeinheit/Dim.unit mm	Verwendung Application LXG525	Maßstab Scale 1:3 / 2:1
					Volumen/Volume	Werkstoff, Halbzeug: Material:	
					Datum/Date / Name	Benennung / Designation	
				Bearb./Dwn.	29.01.2021 BPav	Transmittal SC4500	
				Gepr./Chk.	09.02.2021 Lie.		
				Rev.-Chk.			
01		09.02.2021	BPav	HACH Be Right™		Zeichnungsnummer / Dwg.No.: LXV525.TD.10000	Blatt/Sheet 1
Zust./Rev.	Änderung / Rev.No.	Datum/Date	Name			Ers. für Ausgabe	v. of 2 Bl. Sht. Größe Size A3

DRAFT

SHOP DRAWING REVIEW

Project: **San Luis West WWTP Improvements**

Submittal No. **#X2-001 Instrument List**

Vendor No. **X2 Instrument List**

Date Received: **11/25/2025**

Job #: **B777**

Comments:

No Exceptions Taken..... ☐
Submit Specific Item ..... ☐
Accepted with Corrections Noted..... ☒
Revise and Resubmit..... ☐
Rejected ..... ☐

Note:
Review is only for general conformance with the design concept of the project and general compliance with the information included in the Contract Documents. Any action shown is subjected to the requirements of the drawings and the specifications. Contractor is responsible for correlating and confirming dimensions at the job site, choice of fabrication processes and techniques of construction: coordination of his work with that of other trades; and performing the work in a safe satisfactory manner.

DATE: 1/13/2026 BY: NT/DD

Contractor to Note:

Submittal Comments:

1. Vendor to update P&ID tags within the Instrument List. See marked up PDF.
2. Vendor to provide pole mount kits for pH and DO probes.
3. Due to the outdoor installations; please include, at a minimum, the Sunroof with Visor accessory for the SC4500 Controllers.
4. ID# 77,78,79 (all PMC21 pressure transmitters), please verify if isolation valves are being provided by Kubota. If isolation valves are being provided, please verify required connection tap required (size, FNPT, MNPT)
5. ID# 77, 78, 79 (PMC 21 pressure transmitters), verify if vertical installation is acceptable for pressure measurement in liquids. See cutsheet pages 22 & 23.
6. Please verify that the Process Air Piping manifold instrument layout is acceptable as it differs from the Kubota provided P&IDs
    a. Kubota P&IDs show Electric BFV > Flow Meter > Pressure Transmitter

DRAFT

b. PACE proposes Manual BFV (by Contractor) > Flow Meter > Electric BFV > Pressure Transmitter

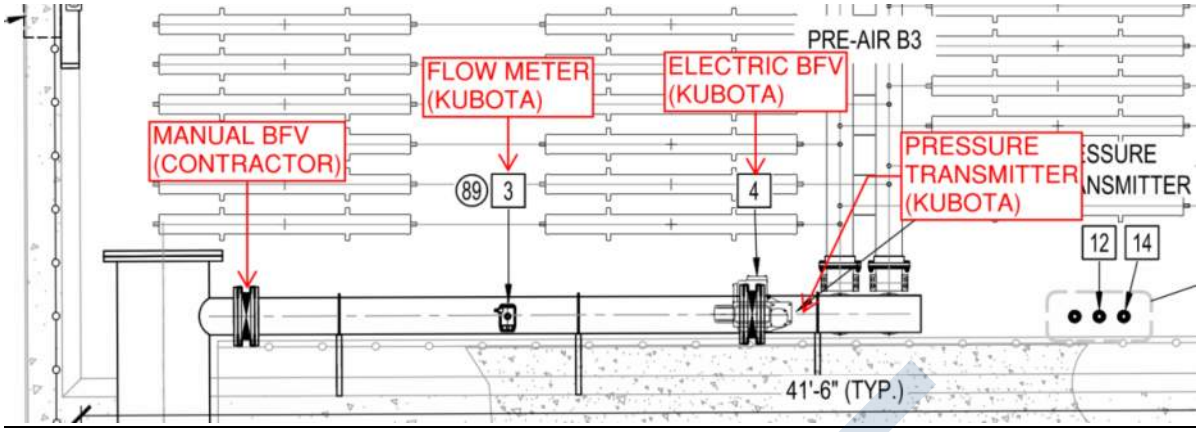

7. Please verify the MBR Air Scour manifold instrument layout is acceptable as it differs from the Kubota provided P&IDs
   a. Kubota P&IDs show Electric BFV > Flow Meter > Pressure Transmitter
   b. PACE proposes Manual BFV (by Contractor) > Flow Meter > Electric BFV > Pressure Transmitter

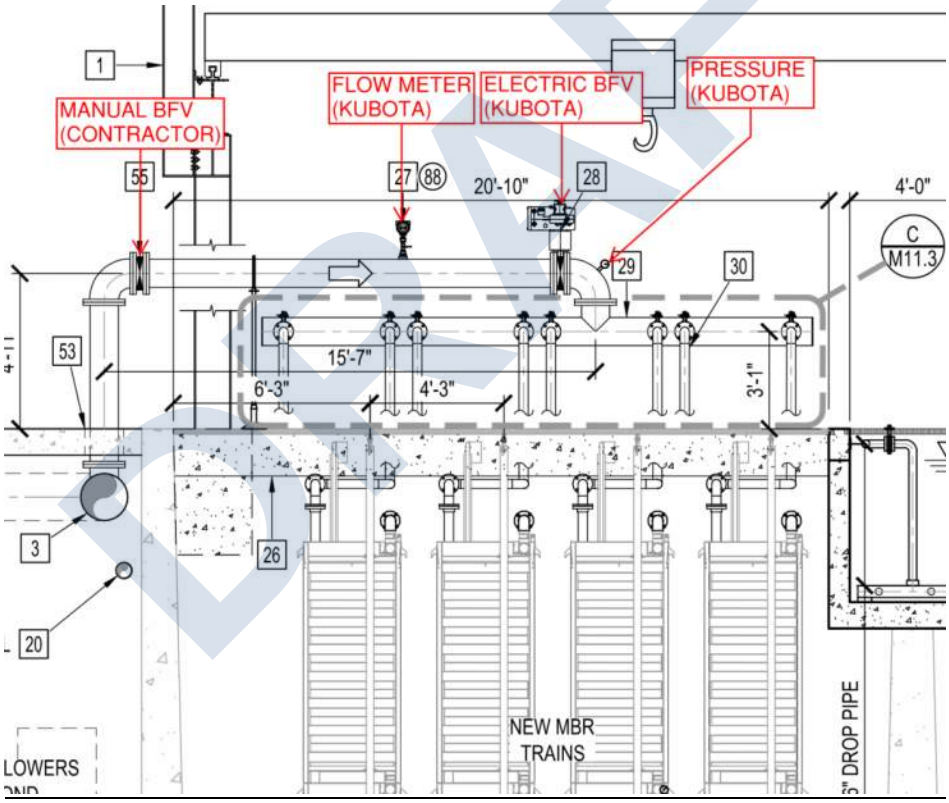

8. Please verify that the selected air flow meter is acceptable at either location (MBR Scour and PA) as inlet/outlet runs specified within the Cut Sheet (Page 39) can not be met.
9. The 6" sludge flow meter to the digesters (FM-06040) is missing from Instrument List, please address.
10. Although the TSS Probe and SC4500 (for the MLSS channel) was provided under a separate submittal, please include the instruments within future Instrument Lists for clarity.

DRAFT

For Earth, For Life
Kubota

Submittal Transmittal

Instrument List

Project Name	San Luis, AZ West WWTP Phase 1 MBR Upgrades
Project Site	San Luis, AZ West WWTP
Engineer	PACIFIC ADVANCED CIVIL ENGINEERING (PACE) 8723 E. VIA de COMMERICO, SUITE A-204 SCOTTSDALE, AZ 85258
Submit to	Duong Do, PE PACE
Prepared by	Brian Travis KUBOTA Water and Environment USA Corporation 19910 North Creek Parkway Suite 100, Bothell WA 98011, USA
KMU Project #	4000580
Issued Date	November 25, 2025
Package #	4000580-3060-03,00 (Instrument List – NOT FOR CONSTRUCTION)
Item	(1) Instrument List

DRAFT

SUBMITTAL

San Luis, AZ West WWTP: Phase 1 MBR Upgrades

For Earth, For Life

Kubota

Submittal Modification Tracking List

#	Customer request	Kubota comments	Status *
1			
2			
3			
4			
5			
6			
7			
8			
9			

* Status should be “Accepted”, “Info” or “No Change”

DRAFT

missing TSS probe and SC4500 to be installed within MLSS Channel I2.0 (Provided as Separate submittal but please include in Instrument List)

KUBOTA TO PROVIDE POLE MOUNT KITS (pH AND DO PROBES)

Instrument List

For Earth, For Life
Kubota

Project Number:	4000580
Project Name:	San Luis, AZ
Project Manager:	BT
Revision:	00
Date:	2025-11-24

ID	Tag	QTY	Category	Manufacturer	Part Number	Item Description	P&ID Page	Datasheet	Cut Sheet	O&M	Revision
4	LSH-02130A LSL-02130B	2	INSTRUMENT	CONERY	3FB	FLOAT LEVEL SWITCH BRACKET, L SHAPED, 300 SERIES SS	I2.1	DATASHEET			00
5	LSH-02130A LSL-02130B	2	INSTRUMENT	CONERY	2902-B6S2-30	FLOAT LEVEL SWITCH, 2900 SERIES B6, POLYPROPYLENE BULB, POLYURETHANE FOAM INTERIOR, INTERNALLY WEIGHTED, 24 VDC, 30 FOOT CABLE	I2.1	DATASHEET	CUT SHEET		00
6	LT-02131 LE-02131	1	INSTRUMENT	E+H	FMX21-CE111GDE20A+PO	LEVEL TRANSMITTER, WATERPILOT FMX21, CSA C/US CLASS1/DIV1, 4-20MA OUTPUT, 316L PROBE, 0-20 FT RANGE, STANDARD ACCURACY, SENSOR RANGE INCH/FT, 30 FT CABLE, FKM SEAL, INCLUDES SUSPENSION CLAMP	I2.1	DATASHEET	CUT SHEET	O&M	00
7	AE-02160A	1	INSTRUMENT	HACH	DPD1P1	DIFERENTIAL PH PROBE, -2 TO 14 PH, PEEK, FKM O-RINGS, TITANIUM ELECTRODE, 1 INCH NPT, CLASS 1 DIV	I2.1		CUT SHEET	O&M	00
8	AE-02160B	1	INSTRUMENT	HACH	9020000	DIGITAL DISSOLVED OXYGEN PROBE, LDO SC MODEL 2, 0-20 MG/L RANGE, 10 M CABLE, CLASS 1 DIV 2, WITHOUT PLUG	I2.1		CUT SHEET	O&M	00
9	AIT-02160	1	INSTRUMENT	HACH	LXV525.99.A11551	DIGITAL TRANSMITTER, SC4500, 2X DIGITAL INPUTS, 5X 4-20 mA OUTPUTS, 120V, PROGNOSYS, CLASS 1 DIV 2	I2.1		CUT SHEET	O&M	00
14	LSH-02230A LSL-02230B	2	INSTRUMENT	CONERY	3FB	FLOAT LEVEL SWITCH BRACKET, L SHAPED, 300 SERIES SS	I2.2	DATASHEET			00
15	LSH-02230A LSL-02230B	2	INSTRUMENT	CONERY	2902-B6S2-30	FLOAT LEVEL SWITCH, 2900 SERIES B6, POLYPROPYLENE BULB, POLYURETHANE FOAM INTERIOR, INTERNALLY WEIGHTED, 24 VDC, 30 FOOT CABLE	I2.2	DATASHEET	CUT SHEET		00
16	LT-02231 LE-02231	1	INSTRUMENT	E+H	FMX21-CE111GDE20A+PO	LEVEL TRANSMITTER, WATERPILOT FMX21, CSA C/US CLASS1/DIV1, 4-20MA OUTPUT, 316L PROBE, 0-20 FT RANGE, STANDARD ACCURACY, SENSOR RANGE INCH/FT, 30 FT CABLE, FKM SEAL, INCLUDES SUSPENSION CLAMP	I2.2	DATASHEET	CUT SHEET	O&M	00
17	AE-02260A	1	INSTRUMENT	HACH	DPD1P1	DIFERENTIAL PH PROBE, -2 TO 14 PH, PEEK, FKM O-RINGS, TITANIUM ELECTRODE, 1 INCH NPT, CLASS 1 DIV	I2.2		CUT SHEET	O&M	00
18	AE-02260B	1	INSTRUMENT	HACH	9020000	DIGITAL DISSOLVED OXYGEN PROBE, LDO SC MODEL 2, 0-20 MG/L RANGE, 10 M CABLE, CLASS 1 DIV 2, WITHOUT PLUG	I2.2		CUT SHEET	O&M	00
19	AIT-02260	1	INSTRUMENT	HACH	LXV525.99.A11551	DIGITAL TRANSMITTER, SC4500, 2X DIGITAL INPUTS, 5X 4-20 mA OUTPUTS, 120V, PROGNOSYS, CLASS 1 DIV 2	I2.2		CUT SHEET	O&M	00
24	LSH-02330A LSL-02330B	2	INSTRUMENT	CONERY	3FB	FLOAT LEVEL SWITCH BRACKET, L SHAPED, 300 SERIES SS	I2.3	DATASHEET			00
25	LSH-02330A LSL-02330B	2	INSTRUMENT	CONERY	2902-B6S2-30	FLOAT LEVEL SWITCH, 2900 SERIES B6, POLYPROPYLENE BULB, POLYURETHANE FOAM INTERIOR, INTERNALLY WEIGHTED, 24 VDC, 30 FOOT CABLE	I2.3	DATASHEET	CUT SHEET		00
26	LT-02331 LE-02331	1	INSTRUMENT	E+H	FMX21-CE111GDE20A+PO	LEVEL TRANSMITTER, WATERPILOT FMX21, CSA C/US CLASS1/DIV1, 4-20MA OUTPUT, 316L PROBE, 0-20 FT RANGE, STANDARD ACCURACY, SENSOR RANGE INCH/FT, 30 FT CABLE, FKM SEAL, INCLUDES SUSPENSION CLAMP	I2.3	DATASHEET	CUT SHEET	O&M	00
27	AE-02360A	1	INSTRUMENT	HACH	DPD1P1	DIFERENTIAL PH PROBE, -2 TO 14 PH, PEEK, FKM O-RINGS, TITANIUM ELECTRODE, 1 INCH NPT, CLASS 1 DIV	I2.3		CUT SHEET	O&M	00
28	AE-02360B	1	INSTRUMENT	HACH	9020000	DIGITAL DISSOLVED OXYGEN PROBE, LDO SC MODEL 2, 0-20 MG/L RANGE, 10 M CABLE, CLASS 1 DIV 2, WITHOUT PLUG	I2.3		CUT SHEET	O&M	00
29	AIT-02360	1	INSTRUMENT	HACH	LXV525.99.A11551	DIGITAL TRANSMITTER, SC4500, 2X DIGITAL INPUTS, 5X 4-20 mA OUTPUTS, 120V, PROGNOSYS, CLASS 1 DIV 2	I2.3		CUT SHEET	O&M	00
39	LSL-02430	1	INSTRUMENT	CONERY	3FB	FLOAT LEVEL SWITCH BRACKET, L SHAPED, 300 SERIES SS		DATASHEET			00
40	LSL-02430	1	INSTRUMENT	CONERY	2902-B6S2-30	FLOAT LEVEL SWITCH, 2900 SERIES B6, POLYPROPYLENE BULB, POLYURETHANE FOAM INTERIOR, INTERNALLY WEIGHTED, 24 VDC, 30 FOOT CABLE	I2.4	DATASHEET	CUT SHEET		00

DRAFT

Project Number:	4000580
Project Name:	San Luis, AZ
Project Manager:	BT
Revision:	0
Date:	2025-

strument List

For Earth, For Life
Kubota

LT-02431
LE-02431

SPECIFY CONNECTION REQUIRED, CONFIRM IF ISOLATION VALVE IS PROVIDED BY KUBOTA FOR ALL PMC21

ID	Tag	QTY	Category	Manufacturer	Part Number	Item Description	P&ID Page	Datasheet	Cut Sheet	O&M	Revision
41	LT-024XX LE-024XX	1	INSTRUMENT	E+H	FMX21-CE111GDE20A+PO	LEVEL TRANSMITTER, WATERPILOT FMX21, CSA C/US CLASS1/DIV1, 4-20MA OUTPUT, 316L PROBE, 0-20 FT RANGE, STANDARD ACCURACY, SENSOR RANGE INCH/FT, 30 FT CABLE, FKM SEAL, INCLUDES SUSPENSION CLAMP	I2.4	DATASHEET	CUT SHEET	O&M	00
77	PT-04050	1	INSTRUMENT	E+H	PMC21-CA1V1HFVXJA	PMC21 PRESSURE TRANSMITTER, CSA C/US GENERAL PURPOSE, 4-20MA, VALVE PLUG ISO4400 NPT1/2, IP65 NEMA TYPE 4X EENCL., 0 TO 15 PSIG, PSI SENSOR RANGE, 1/2 INCH MNPT X 1/4 INCH FNPT PROCESS CONNECTION, FKM SEAL, 316L	I4.0	DATASHEET	CUT SHEET	O&M	00
78	PT-04051	1	INSTRUMENT	E+H	PMC21-CA1V1HFVXJA	PMC21 PRESSURE TRANSMITTER, CSA C/US GENERAL PURPOSE, 4-20MA, VALVE PLUG ISO4400 NPT1/2, IP65 NEMA TYPE 4X EENCL., 0 TO 15 PSIG, PSI SENSOR RANGE, 1/2 INCH MNPT X 1/4 INCH FNPT PROCESS CONNECTION, FKM SEAL, 316L	I4.0	DATASHEET	CUT SHEET	O&M	00
79	PT-04052	1	INSTRUMENT	E+H	PMC21-CA1V1HFVXJA	PMC21 PRESSURE TRANSMITTER, CSA C/US GENERAL PURPOSE, 4-20MA, VALVE PLUG ISO4400 NPT1/2, IP65 NEMA TYPE 4X EENCL., 0 TO 15 PSIG, PSI SENSOR RANGE, 1/2 INCH MNPT X 1/4 INCH FNPT PROCESS CONNECTION, FKM SEAL, 316L	I4.0	DATASHEET	CUT SHEET	O&M	00
80	FM-04040	1	INSTRUMENT	E+H	5W4C3H-C6HLHP2DUA12GA+AA	W400 FLOWMETER, 12'', CSA C/US CL 1/DIV2, 0xDN INLET X OUTLET, 100-240VAC/24VDC, 4-20 MA HART, REMOTE ALUMINUM COATED, 1/2 NPT ELECTRICAL CONN, PU LINER, CL150 CS LAP JOINT, 316L ELECTRODES, 0.5%	I4.0	DATASHEET	CUT SHEET	O&M	00
81	FM-04041	1	INSTRUMENT	E+H	5W4C3H-C6HLHP2DUA12GA+AA	W400 FLOWMETER, 12'', CSA C/US CL 1/DIV2, 0xDN INLET X OUTLET, 100-240VAC/24VDC, 4-20 MA HART, REMOTE ALUMINUM COATED, 1/2 NPT ELECTRICAL CONN, PU LINER, CL150 CS LAP JOINT, 316L ELECTRODES, 0.5%	I4.0	DATASHEET	CUT SHEET	O&M	00
82	FM-04042	1	INSTRUMENT	E+H	5W4C3H-C6HLHP2DUA12GA+AA	W400 FLOWMETER, 12'', CSA C/US CL 1/DIV2, 0xDN INLET X OUTLET, 100-240VAC/24VDC, 4-20 MA HART, REMOTE ALUMINUM COATED, 1/2 NPT ELECTRICAL CONN, PU LINER, CL150 CS LAP JOINT, 316L ELECTRODES, 0.5%	I4.0	DATASHEET	CUT SHEET	O&M	00
83	AE-04160	1	INSTRUMENT	HACH	LXV445.99.53212	TU5400SC WITH FLOW SENSOR, 0-700 NTU, AUTOMATIC CLEANING, RFID AND SYSTEM CHECK, EPA VERSION.	I4.1		CUT SHEET	O&M	00
84	AE-~~04161~~	1	INSTRUMENT	HACH	LXV445.99.53212	TU5400SC WITH FLOW SENSOR, 0-700 NTU, AUTOMATIC CLEANING, RFID AND SYSTEM CHECK, EPA VERSION.	I4.1		CUT SHEET	O&M	00
85	AE-~~04162~~	1	INSTRUMENT	HACH	LXV445.99.53212	TU5400SC WITH FLOW SENSOR, 0-700 NTU, AUTOMATIC CLEANING, RFID AND SYSTEM CHECK, EPA VERSION.	I4.1		CUT SHEET	O&M	00
86	AIT-04161	1	INSTRUMENT	HACH	LXV525.99.A11551	DIGITAL TRANSMITTER, SC4500, 2X DIGITAL INPUTS, 5X 4-20 mA OUTPUTS, 120V, PROGNOSYS, CLASS 1 DIV 2	I4.1		CUT SHEET	O&M	00
87	AIT-~~04162~~	1	INSTRUMENT	HACH	LXV525.99.A11551	DIGITAL TRANSMITTER, SC4500, 2X DIGITAL INPUTS, 5X 4-20 mA OUTPUTS, 120V, PROGNOSYS, CLASS 1 DIV 2	I4.1		CUT SHEET	O&M	00
88	AIT-~~04163~~	1	INSTRUMENT	HACH	LXV525.99.A11551	DIGITAL TRANSMITTER, SC4500, 2X DIGITAL INPUTS, 5X 4-20 mA OUTPUTS, 120V, PROGNOSYS, CLASS 1 DIV 2	I4.1		CUT SHEET	O&M	00
93	FM-04440	1	INSTRUMENT	E+H	5W4C1F-C6HLHA0DUA12GA+AA	W400 FLOWMETER, 6'', CSA C/US CL 1/DIV2, 0xDN INLET X OUTLET, 100-240VAC/24VDC, 4-20 MA HART, COMPACT ALUMINUM COATED, 1/2 NPT ELECTRICAL CONN, PU LINER, CL150 CS LAP JOINT, 316L ELECTRODES, 0.5%	I4.4	DATASHEET	CUT SHEET	O&M	00
97	PT-05250	1	INSTRUMENT	E+H	PMC21-CA1V1HFVXJA	PMC21 PRESSURE TRANSMITTER, CSA C/US GENERAL PURPOSE, 4-20MA, VALVE PLUG ISO4400 NPT1/2, IP65 NEMA TYPE 4X EENCL., 0 TO 15 PSIG, PSI SENSOR RANGE, 1/2 INCH MNPT X 1/4 INCH FNPT PROCESS CONNECTION, FKM SEAL, 316L	I5.2	DATASHEET	CUT SHEET	O&M	00
98	PT-05251	1	INSTRUMENT	E+H	PMC21-CA1V1HFVXJA	PMC21 PRESSURE TRANSMITTER, CSA C/US GENERAL PURPOSE, 4-20MA, VALVE PLUG ISO4400 NPT1/2, IP65 NEMA TYPE 4X EENCL., 0 TO 15 PSIG, PSI SENSOR RANGE, 1/2 INCH MNPT X 1/4 INCH FNPT PROCESS CONNECTION, FKM SEAL, 316L	I5.2	DATASHEET	CUT SHEET	O&M	00

AE 04162
AE 04164
AIT 04163
AIT 04165

DRAFT

Project Number:	4000580
Project Name:	San Luis, AZ
Project Manager:	BT
Revision:	00
Date:	2025-11-24

Instrument List

For Earth, For Life
Kubota

ID	Tag	QTY	Category	Manufacturer	Part Number	Item Description	P&ID Page	Datasheet	Cut Sheet	O&M	Revision
99	PT-05252	1	INSTRUMENT	E+H	PMC21-CA1V1HFVXJA	PMC21 PRESSURE TRANSMITTER, CSA C/US GENERAL PURPOSE, 4-20MA, VALVE PLUG ISO4400 NPT1/2, IP65 NEMA TYPE 4X EENCL., 0 TO 15 PSIG, PSI SENSOR RANGE, 1/2 INCH MNPT X 1/4 INCH FNPT PROCESS CONNECTION, FKM SEAL, 316L	I5.2	DATASHEET	CUT SHEET	O&M	00
106	FM-05240	1	INSTRUMENT	E+H	6I3BL1-AAIBADAGADSANA2AAGA2+AA	FLOWMETER, T-MASS I 300, GENERAL USE, 24 VDC, 4-20 MA HART, TOUCH CONTROL AND WLAN, ALUMINUM COATED HOUSING, 1/2 NPT ELECTRICAL CONN, UNIDIRECTIONAL, SS SENSOR AND INSERTION TUBE, 1 INCH NPT PROCESS CONNECTION, PEEK SEAL	I5.2	DATASHEET	CUT SHEET	O&M	00
107	FM-05241	1	INSTRUMENT	E+H	6I3BL1-AAIBADAGADSANA2AAGA2+AA	FLOWMETER, T-MASS I 300, GENERAL USE, 24 VDC, 4-20 MA HART, TOUCH CONTROL AND WLAN, ALUMINUM COATED HOUSING, 1/2 NPT ELECTRICAL CONN, UNIDIRECTIONAL, SS SENSOR AND INSERTION TUBE, 1 INCH NPT PROCESS CONNECTION, PEEK SEAL	I5.2	DATASHEET	CUT SHEET	O&M	00
108	FM-05242	1	INSTRUMENT	E+H	6I3BL1-AAIBADAGADSANA2AAGA2+AA	FLOWMETER, T-MASS I 300, GENERAL USE, 24 VDC, 4-20 MA HART, TOUCH CONTROL AND WLAN, ALUMINUM COATED HOUSING, 1/2 NPT ELECTRICAL CONN, UNIDIRECTIONAL, SS SENSOR AND INSERTION TUBE, 1 INCH NPT PROCESS CONNECTION, PEEK SEAL	I5.2	DATASHEET	CUT SHEET	O&M	00
111	PT-05423	1	INSTRUMENT	E+H	PMC21-CA1V1HFVXJA	PMC21 PRESSURE TRANSMITTER, CSA C/US GENERAL PURPOSE, 4-20MA, VALVE PLUG ISO4400 NPT1/2, IP65 NEMA TYPE 4X EENCL., 0 TO 15 PSIG, PSI SENSOR RANGE, 1/2 INCH MNPT X 1/4 INCH FNPT PROCESS CONNECTION, FKM SEAL, 316L	I5.4	DATASHEET	CUT SHEET	O&M	00
112	PT-05424	1	INSTRUMENT	E+H	PMC21-CA1V1HFVXJA	PMC21 PRESSURE TRANSMITTER, CSA C/US GENERAL PURPOSE, 4-20MA, VALVE PLUG ISO4400 NPT1/2, IP65 NEMA TYPE 4X EENCL., 0 TO 15 PSIG, PSI SENSOR RANGE, 1/2 INCH MNPT X 1/4 INCH FNPT PROCESS CONNECTION, FKM SEAL, 316L	I5.4	DATASHEET	CUT SHEET	O&M	00
113	PT-05425	1	INSTRUMENT	E+H	PMC21-CA1V1HFVXJA	PMC21 PRESSURE TRANSMITTER, CSA C/US GENERAL PURPOSE, 4-20MA, VALVE PLUG ISO4400 NPT1/2, IP65 NEMA TYPE 4X EENCL., 0 TO 15 PSIG, PSI SENSOR RANGE, 1/2 INCH MNPT X 1/4 INCH FNPT PROCESS CONNECTION, FKM SEAL, 316L	I5.4	DATASHEET	CUT SHEET	O&M	00
121	FM-05440	1	INSTRUMENT	E+H	6I3BL1-AAIBADAGADSANA2AAGA2+AA	FLOWMETER, T-MASS I 300, GENERAL USE, 24 VDC, 4-20 MA HART, TOUCH CONTROL AND WLAN, ALUMINUM COATED HOUSING, 1/2 NPT ELECTRICAL CONN, UNIDIRECTIONAL, SS SENSOR AND INSERTION TUBE, 1 INCH NPT PROCESS CONNECTION, PEEK SEAL	I5.4	DATASHEET	CUT SHEET	O&M	00
122	FM-05441	1	INSTRUMENT	E+H	6I3BL1-AAIBADAGADSANA2AAGA2+AA	FLOWMETER, T-MASS I 300, GENERAL USE, 24 VDC, 4-20 MA HART, TOUCH CONTROL AND WLAN, ALUMINUM COATED HOUSING, 1/2 NPT ELECTRICAL CONN, UNIDIRECTIONAL, SS SENSOR AND INSERTION TUBE, 1 INCH NPT PROCESS CONNECTION, PEEK SEAL	I5.4	DATASHEET	CUT SHEET	O&M	00
123	FM-05442	1	INSTRUMENT	E+H	6I3BL1-AAIBADAGADSANA2AAGA2+AA	FLOWMETER, T-MASS I 300, GENERAL USE, 24 VDC, 4-20 MA HART, TOUCH CONTROL AND WLAN, ALUMINUM COATED HOUSING, 1/2 NPT ELECTRICAL CONN, UNIDIRECTIONAL, SS SENSOR AND INSERTION TUBE, 1 INCH NPT PROCESS CONNECTION, PEEK SEAL	I5.4	DATASHEET	CUT SHEET	O&M	00

PT 05450

PT 05451

PT 05452

SUBMITTAL DOES NOT INCLUDE 6" DIGESTER SLUDGE FLOW METER (FM-06040) ON P&ID PAGE 16.0

DRAFT

CITY OF SAN LUIS
YUMA COUNTY, ARIZONA
WEST WASTEWATER TREATMENT PLANT
3.0 MGD MBR UPGRADES

100% ISSUED FOR REVIEW

DRAFT

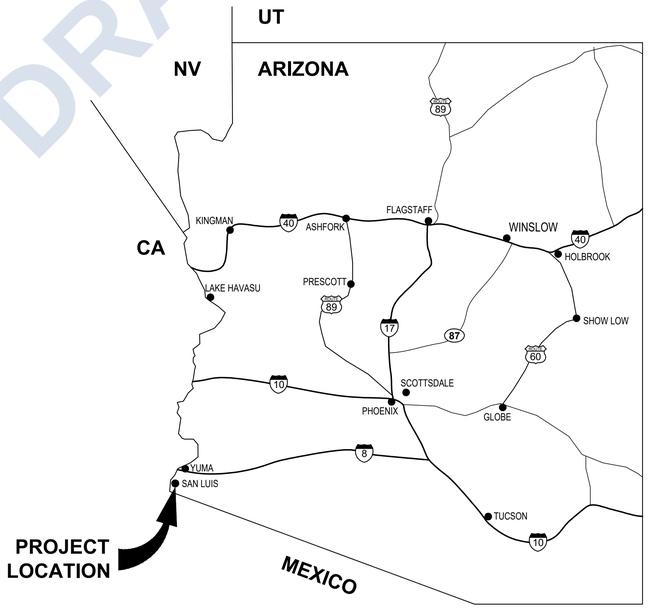

LOCATION MAP
N.T.S.

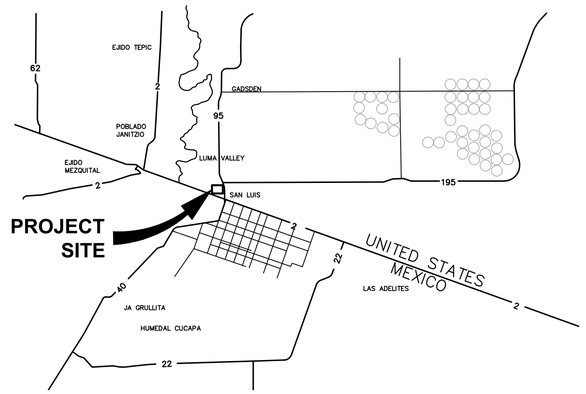

VICINITY MAP
N.T.S.

MAYOR:	NIEVES RIEDEL
VICE MAYOR:	TADEO AZAEL DE LA HOYA
CITY COUNCIL:	LUIS E. CABRERA MARIA CECILIA CRUZ ESTEBAN C. ROSALES LIZETH SERVIN JAVIER VARGAS
ACTING CITY MANAGER:	JENNY TORRES
PUBLIC WORKS DIRECTOR:	EULOGIO VERA

FINAL DESIGN APPROVAL:

BY: _____ DATE: _____

PUBLIC WORKS DIRECTOR

THE CITY APPROVES THESE PLANS FOR CONCEPT ONLY AND IS NOT LIABLE FOR ERRORS OR OMISSIONS

RECORD DRAWING:

THESE RECORD DRAWINGS HAVE BEEN PREPARED BASED ON INFORMATION PROVIDED BY THE CONSTRUCTION CONTRACTOR. THE ENGINEER HAS INSPECTED THE COMPLETED FACILITIES AND CERTIFIES THAT THEY ARE A SUBSTANTIALLY ACCURATE PRESENTATION OF THE LAYOUT AND CONDITION OF THE CONSTRUCTED PROJECT.

NAME _____(SEAL)

REGISTRATION NO. _____ DATE _____

REVD. BY: _____
FIELD ENGINEERING

CONSULTANTS:

ENGINEER OF RECORD

PACIFIC ADVANCED CIVIL ENGINEERING (PACE)
8723 E. VIA de COMMERICO, SUITE A-204
SCOTTSDALE, AZ 85258
BUSINESS LICENSE NO. 1006013
(480) 991-3595
CONTACT: DUONG DO, PE

GEOTECH

GEOTECHNICAL TESTING SERVICES, GTSI
1044 E. 21ST STREET
YUMA,AZ 85365
CONTACT: COURTNEY M. ARVISO, P.E.
(928) 329-4695

SURVEYOR

DAHL, ROBINS & ASSOCIATES, INC.
1560 S. 5TH AVENUE
YUMA, AZ 85364
CONTACT: KEVIN A. DAHL, R.L.S.
(928) 819-0825

STRUCTURAL ENGINEER

PK ASSOCIATES, LLC
7434 E McDONALD DRIVE
SCOTTSDALE, AZ 85250
CONTACT: JAMES APPLEYARD, P.E.
(480) 922-8854

SURVEYOR'S NOTES

THE SUBJECT PROPERTY IS LOCATED WITHIN AN AREA HAVING A FLOOD ZONE A DESIGNATION. ZONE A - THE 1% ANNUAL CHANCE FLOOD (100-YEAR FLOOD), ALSO KNOWN AS THE BASE FLOOD, IS THE FLOOD THAT HAS A 1% CHANCE OF BEING EQUALED OR EXCEEDED IN ANY GIVEN YEAR. THE SPECIAL FLOOD HAZARD AREA IS THE AREA SUBJECT TO FLOODING BY THE 1% ANNUAL CHANCE FLOOD. AREAS OF SPECIAL FLOOD HAZARD INCLUDE ZONES A, AE, AH, AO, AR, A99, V, AND VE. THE BASE FLOOD ELEVATION IS THE WATER-SURFACE ELEVATION OF THE 1% ANNUAL CHANCE FLOOD. REFERENCE - FLOOD INSURANCE RATE MAP (FIRM), MAP NUMBER 04027C2135F DATED JANUARY 16, 2014, WHICH IS THE FLOOD INSURANCE RATE MAP FOR THE COMMUNITY IN WHICH THIS PROJECT IS SITUATED. THE TITLE REPORT WITH A OUR NO. 91400359 ISSUED BY PIONEER TITLE AGENCY, INC AND COMMITMENT DATE JULY 22, 2024 AT 7:30 AM WAS REFERENCED DURING THE PREPARATION OF THIS ALTA SURVEY.

BASIS OF BEARING

BEARINGS ARE RELATIVE TO NAD 83 ARIZONA WEST STATE PLANE COORDINATE SYSTEM AS MEASURED BY GPS KINEMATIC SURVEY AS OBSERVED CONTROL POINTS.

LEGAL DESCRIPTION

LOTS 2 AND 3, SECTION 2, AND LOT 27, SECTION 11, ALL IN TOWNSHIP 11 SOUTH, RANGE 25 WEST OF THE GILA AND SALT RIVER BASE AND MERIDIAN, YUMA COUNTY, ARIZONA; EXCEPT ALL MINERAL DEPOSITS AS RESERVED IN THE PATENT FROM THE UNITED STATES OF AMERICA, RECORDED IN DOCUMENT NO. 2001-14799 AND IN DOCUMENT NO. 2004-39688, RECORDS OF YUMA COUNTY, ARIZONA.

SEISMIC DESIGN COEFFICIENTS

PARAMETER	VALUE
SITE CLASS	D
MAPPED SPECTRAL ACCELERATION - SHORT PERIOD S_S(g)	0.737
MAPPED SPECTRAL ACCELERATION - 1 SEC. PERIOD, S1(g)	0.304
SITE COEFFICIENT - SHORT PERIOD, Fa	1.21
MCE2 SPECTRAL RESPONSE ACCELERATION - SHORT PERIOD, S_{MS}(g)	1.19
DESIGN SPECTRAL RESPONSE ACCELERATION - SHORT PERIOD, SDS(g)	0.595
PGA	0.306
PGAm	0.396
F pga	1.294
Ie	1.0
Cv	1.169

CALCULATION USING USGS PROGRAM ASCE/SEI: 7-16
SITE COORDINATES ESTIMATED FROM GOOGLE EARTH: 32.493794; 114.797252, RISK CATEGORY II

CALL TWO WORKING DAYS BEFORE YOU DIG
602-263-1100
1-800-STAKE-IT
(OUTSIDE MARICOPA COUNTY)

NO	BY	DATE	REVISIONS	DATE	APP.

Registered Professional Engineer (Civil) — 40050 — DUONG T. DO — Date Signed 12/31/27 — ARIZONA, U.S.A. — Expires 12/31/27

THESE DRAWINGS ARE THE PROPERTY OF P.A.C.E. AND SHALL NOT BE REPRODUCED IN ANY MANNER NOR BE USED FOR CONSTRUCTION UNLESS STAMPED "ISSUED FOR CONSTRUCTION".

PREPARED BY: DUONG DO — PROJECT ENGINEER #40050 — R.C.E. NO. 1— — EXP. DATE — SCALE — DRAWN WW, MSA — DESIGNED NT, NE — CHECKED DD — DATE FEB 2026

TITLE: TITLE SHEET

JOB: CITY OF SAN LUIS WEST WWTP 3.0 MGD MBR UPGRADES — SAN LUIS AZ.

PACE
Advanced Water Engineering
8723 E. VIA de COMMERICO, SUITE A-204 | SCOTTSDALE, CA 85258
P: (408) 991-3595 | www.pacewater.com

SHEET G1.0
1 OF 209 SHEETS

JOB NO. B777

FINAL PLANS ISSUED FOR BID

W:\B777\Engineering\B777 - 3MGD Exp\3MGD FINAL ISSN\sheets\B777 - G1.0-TITLE SHEET.dwg - Tab: G1.0 - by wwright on 02/05/26 at 2:10:21 PM

SHEET INDEX

DWG No.	SHT No.	TITLE
GENERAL		
1	G1.0	TITLE SHEET
2	G1.1	SHEET INDEX
3	G2.0	GENERAL NOTES AND ABBREVIATIONS
4	G3.0	LAND TITLE SURVEY - REFERENCE
5	G3.1	LAND TITLE SURVEY - REFERENCE
6	G3.2	TOPOGRAPHIC SURVEY - REFERENCE
7	G4.0	BASIS OF DESIGN
8	G5.0	HYDRAULIC PROFILE I
9	G5.1	HYDRAULIC PROFILE II
CIVIL		
10	C1.0	EXISTING SITE PLAN
11	C2.0	PROPOSED SITE PLAN
12	C2.1	HORIZONTAL CONTROL PLAN
13	C3.0	GRADING PLAN
14	C3.1	HEADWORKS CROSS SECTION
15	C4.0	YARD PIPING PLAN
16	C4.1	24 INCH EFFLUENT REUSE DISTRIBUTION LINE PLAN & PROFILE
17	C6.0	CIVIL DETAILS
18	C6.1	CIVIL DETAILS
19	C6.2	CIVIL DETAILS
20	C6.3	CIVIL DETAILS
DEMOLITION		
21	D1.0	DEMO SEQUENCING & PROCESS CONNECTION FOR BASIN 4 INTENSIFICATION
22	D1.1	DEMOLITION PLAN
23	D1.2	EXISTING SBR BASIN 1 & 2
24	D1.3	EXISTING SBR BASIN 3 & 4
25	D1.4	SUGGESTED SEQUENCE OF CONSTRUCTION
MECHANICAL		
26	M0.0	OVERALL SITE MAP
27	M0.1	EQUIPMENT LIST
28	M0.2	INSTRUMENT LIST
29	M1.0	HEADWORKS STRUCTURE PLAN & ISO
30	M1.1	HEADWORKS MECHANICAL PLAN
31	M1.2	HEADWORKS MECHANICAL SECTIONS 1
32	M1.3	HEADWORKS MECHANICAL SECTIONS 2
33	M1.4	HEADWORKS PLUMBING & DUCTING PLAN
34	M2.0	MBR UPGRADES PLAN - LEVEL 3
35	M2.1	MBR UPGRADES PLAN - LEVEL 2
36	M2.2	MBR UPGRADES PLAN - LEVEL 1
37	M2.3	MBR SECTIONS 1
38	M2.4	MBR SECTIONS 2
39	M4.0	PROCESS TANK UPGRADES - PLAN
40	M4.1	PROCESS TANK SECTIONS 1
41	M4.2	PROCESS TANK SECTIONS 2
42	M4.3	PROCESS TANK SECTIONS 3
43	M5.0	EQ TANK UPGRADES - PLAN & SECTION
44	M6.0	EXIST EFF PUMP STATION & CHLORINE BLDG
45	M6.1	EXIST EFF PUMP STATION & CHLORINE BLDG SECTION
46	M7.0	DEWATERING PLAN
47	M7.1	DEWATERING SECTIONS
48	M8.0	F.E.B. PUMP STATION MECHANICAL PLAN
49	M8.1	F.E.B. PUMP STATION MECHANICAL SECTIONS
50	M9.0	PLANT DRAIN PUMP STATION PLAN
51	M9.1	PLANT DRAIN PUMP STATION SECTIONS
52	M10.0	PLANT PROCESS WATER BOOSTER PUMP STATION PLAN & SECTIONS
53	M11.0	MECHANICAL DETAILS 1
54	M11.1	MECHANICAL DETAILS 2
55	M11.2	MECHANICAL DETAILS 3
56	M11.3	MECHANICAL DETAILS 4
57	M11.4	MECHANICAL DETAILS 5
58	M11.5	MECHANICAL DETAILS 6
59	M12.0	MBR ASSEMBLY DRAWING
60	M12.1	MBR INSTALLATION DRAWING
61	M12.2	CIP STATION - ISO & PARTS LIST
62	M12.3	DEWATERING LAYOUT CUTSHEET
63	M12.4	FLOC TANK AND SCREW CONVEYOR
64	M12.5	POLYMER SYSTEM SKID
65	M12.6	MEDIA SCREEN CUTSHEET
STRUCTURAL		
66	S0.1	GENERAL STRUCTURAL NOTES
67	S0.2	GENERAL STRUCTURAL NOTES
68	S0.3	TYPICAL DETAILS
69	S0.4	TYPICAL DETAILS
70	S0.5	TYPICAL DETAILS
71	S1.0	HEADWORKS PLAN
72	S2.1	FOUNDATION PLAN
73	S2.2	FRAMING PLAN
74	S7.0	DEWATERING PLAN
75	S10.0	CANOPY FRAMING PLANS
76	S11.0	FOUNDATION DETAILS
77	S11.1	FOUNDATION DETAILS
78	S11.2	FOUNDATION DETAILS
79	S11.3	FOUNDATION DETAILS
80	S12.0	FRAMING DETAILS
81	S12.1	FRAMING DETAILS
82	S12.2	FRAMING DETAILS
83	S12.3	FRAMING DETAILS
84	S12.4	FRAMING DETAILS
ELECTRICAL		
85	E0.0	GENERAL NOTES
86	E0.1	LEGEND & ABBREVIATIONS
87	E0.2	SINGLE LINE DIAGRAM 1 - DEMO
88	E0.3	SINGLE LINE DIAGRAM 2 - DEMO
89	E0.4	SINGLE LINE DIAGRAM 3 - DEMO
90	E0.4T	SINGLE LINE DIAGRAM - TEMP
91	E0.5	SINGLE LINE DIAGRAM 1 - PROPOSED
92	E0.6	SINGLE LINE DIAGRAM 2 - PROPOSED
93	E0.7	SINGLE LINE DIAGRAM 3 - PROPOSED
94	E0.8	SINGLE LINE DIAGRAM 4 - PROPOSED
95	E0.9	SINGLE LINE DIAGRAM 5 - PROPOSED
96	E0.10	EQUIPMENT ELEVATION 1 - PROPOSED
97	E0.11	EQUIPMENT ELEVATION 2 - PROPOSED
98	E0.12	EQUIPMENT ELEVATION 3 - PROPOSED
99	E0.13	LOAD SUMMARIES
100	E0.14	PANEL SCHEDULES 1
101	E0.15	PANEL SCHEDULES 2
102	E0.20	POWER CABLE & CONDUIT SCHEDULE 1
103	E0.21	POWER CABLE & CONDUIT SCHEDULE 2
104	E0.22	POWER CABLE & CONDUIT SCHEDULE 3
105	E0.23	POWER CABLE & CONDUIT SCHEDULE 4
106	E0.24	POWER CABLE & CONDUIT SCHEDULE 5
107	E0.25	POWER CABLE & CONDUIT SCHEDULE 6
108	E0.26	POWER CABLE & CONDUIT SCHEDULE 7
109	E0.27	POWER CABLE & CONDUIT SCHEDULE 8
110	E0.28	POWER CABLE & CONDUIT SCHEDULE 9
111	E0.30	CONTROL CABLE & CONDUIT SCHEDULE 1
112	E0.31	CONTROL CABLE & CONDUIT SCHEDULE 2
113	E0.32	CONTROL CABLE & CONDUIT SCHEDULE 3
114	E0.33	CONTROL CABLE & CONDUIT SCHEDULE 4
115	E0.34	CONTROL CABLE & CONDUIT SCHEDULE 5
116	E0.35	CONTROL CABLE & CONDUIT SCHEDULE 6
117	E0.36	CONTROL CABLE & CONDUIT SCHEDULE 7
118	E0.37	CONTROL CABLE & CONDUIT SCHEDULE 8
119	E0.38	CONTROL CABLE & CONDUIT SCHEDULE 9
120	E0.50P	ELECTRICAL SITE POWER PLAN - NORTH
121	E0.50C	ELECTRICAL SITE CONTROL PLAN - NORTH
122	E0.50G	ELECTRICAL SITE GROUNDING PLAN - NORTH
123	E0.51	ELECTRICAL SITE PLAN - SOUTH
124	E0.52	SITE HAZARDOUS CLASSIFICATION MAP
125	E0.60D	ELEC BLDG & OUTDOOR AREA DEMO PLAN
126	E0.60P	ELEC BLDG & OUTDOOR AREA POWER PLAN
127	E0.60C	ELEC BLDG & OUTDOOR AREA CONTROL PLAN
128	E0.60G	ELEC BLDG & OUTDOOR AREA GROUNDING PLAN
129	E1.0P	HEADWORKS POWER PLAN
130	E1.0C	HEADWORKS CONTROL PLAN
131	E1.0L	HEADWORKS LIGHTING & RECEPTACLE PLAN
132	E1.0G	HEADWORKS GROUNDING PLAN
133	E2.0P	MBR TANKS LEVEL 3 POWER PLAN
134	E2.0C	MBR TANKS LEVEL 3 CONTROL PLAN
135	E2.1P	MBR TANKS LEVEL 2 POWER PLAN
136	E2.1C	MBR TANKS LEVEL 2 CONTROL PLAN
137	E2.1L	BLR RM & PIPE GALL LIGHTING & RECEP PLAN
138	E2.1G	BLR RM & PIPE GALL GROUNDING PLAN
139	E2.2P	MBR TANKS LEVEL 1 POWER PLAN
140	E2.2C	MBR TANKS LEVEL 1 CONTROL PLAN
141	E2.3	DIGESTER BLOWERS AREA ELECTRICAL PLAN
142	E4.0P	PROCESS TANKS POWER PLAN
143	E4.0C	PROCESS TANKS CONTROL PLAN
144	E4.0G	PROCESS TANKS GROUNDING PLAN
145	E5.0P	FEQ BASIN POWER PLAN
146	E5.0C	FEQ BASIN CONTROL PLAN
147	E5.0G	FEQ BASIN GROUNDING PLAN
148	E6.0P	EFF PS & CHLORINE BLDG POWER PLAN
149	E6.0C	EFF PS & CHLORINE BLDG CONTROL PLAN
150	E6.0G	EFF PS & CHLORINE BLDG GROUNDING PLAN
151	E7.0P	DEWAT & PLNT PROCESS WTR PS POWER PLAN
152	E7.0C	DEWAT & PLNT PROCESS WTR PS CONTROL PLAN
153	E7.0L	DEWAT & PLNT PROCESS WTR PS LTG & RECEP PLAN
154	E7.0G	DEWAT & PLNT PROCESS WTR PS GROUNDING PLAN
155	E8.0	FLOW EQ PS ELECTRICAL PLAN
156	E9.0	PLANT DRAIN PS ELECTRICAL PLAN
157	E10.0	ELEMENTARY CONTROL DIAGRAM 1
158	E10.1	ELEMENTARY CONTROL DIAGRAM 2
159	E10.2	ELEMENTARY CONTROL DIAGRAM 3
160	E10.3	ELEMENTARY CONTROL DIAGRAM 4
161	E11.0	ELECTRICAL DETAILS 1
162	E11.1	ELECTRICAL DETAILS 2
163	E11.2	ELECTRICAL DETAILS 3
164	E11.3	ELECTRICAL DETAILS 4
165	E11.4	ELECTRICAL DETAILS 5
166	E11.5	ELECTRICAL DETAILS 6
167	E11.6	ELECTRICAL DETAILS 7
168	E11.7	ELECTRICAL DETAILS 8
169	E11.20	DUCT BANK DETAILS 1
170	E11.21	DUCT BANK DETAILS 2
171	E11.22	DUCT BANK DETAILS 3
172	E11.23	DUCT BANK DETAILS 4
173	E11.24	DUCT BANK DETAILS 5
P&ID		
174	I0.0	P&ID LEGEND
175	I0.1	NETWORK DIAGRAM
176	I1.0	HEADWORKS TRAIN - 1
177	I1.1	HEADWORKS TRAIN - 2
178	I1.2	GRIT CLASSIFIERS
179	I1.3	6MM WASHER COMPACTORS
180	I1.4	2MM WASHER COMPACTORS
181	I1.5	MLSS SPLITTER BOX
182	I1.6	EQ BASIN
183	I2.0	MLSS CHANNEL
184	I2.1	PROCESS BASIN
185	I2.2	PROCESS BASIN
186	I2.3	PROCESS BASIN
187	I2.4	FEED FORWARD CHANNEL
188	I3.0	MBR BASIN
189	I3.1	MBR BASIN
190	I3.2	MBR BASIN
191	I4.0	CIP INJECTION
192	I4.1	CHEMICAL ANALYZER
193	I4.2	EFFLUENT PUMP STATION
194	I4.3	PLANT PROCESS WATER BOOSTER PUMP STATION
195	I4.4	CIP SYSTEM
196	I4.5	CHEM STORAGE
197	I5.0	EQ BLOWERS
198	I5.1	PA BLOWERS
199	I5.2	PA PIPING
200	I5.3	SCOUR BLOWERS
201	I5.4	SCOUR PIPING
202	I5.5	DIGESTER BLOWERS
203	I6.0	DIGESTERS
204	I7.0	SLUDGE PUMP STATION
205	I7.1	SCREW PRESS
206	I7.2	PLANT DRAIN PS
207	I7.3	SLUDGE DRYING BEDS
208	I8.0	ODOR CONTROL
209	I9.0	GENERATOR

DRAFT

THESE DRAWINGS ARE THE PROPERTY OF P.A.C.E. AND SHALL NOT BE REPRODUCED IN ANY MANNER NOR BE USED FOR CONSTRUCTION UNLESS STAMPED "ISSUED FOR CONSTRUCTION".

NO	BY	DATE	REVISIONS	DATE	APP.

Registered Professional Engineer (Civil) — DUONG T. DO — 40050 — Date Signed 12/31/27 — ARIZONA, U.S.A. — Expires 12/31/27

PREPARED BY: DUONG DO
PROJECT ENGINEER #40050
R.C.E. NO. 40050
EXP. DATE 12/31/27
SCALE
DRAWN WW, MSA
DESIGNED NT, NE
CHECKED DD
DATE FEB 2026

TITLE: SHEET INDEX

JOB: CITY OF SAN LUIS WEST WWTP
3.0 MGD MBR UPGRADES
AZ.
SAN LUIS

PACE Advanced Water Engineering
8723 E. VIA de COMMERCIO, SUITE A-204 | SCOTTSDALE, CA 85258
P: (408) 991-3595 | www.pacewater.com

SHEET G1.1
2 OF 209 SHEETS

JOB NO. B777

FINAL PLANS ISSUED FOR BID

W:\B777\Engineering\B777 - 3MGD Exp\3MGD FINAL DS\Arbeit\B777 - G1.1-SHEET INDEX.dwg - Tab: G1.1 - by wwright on 02/25/26 at 2:02:21 PM

SCOPE OF WORK

1. WWTP PROCESS UPGRADES THROUGH THE CONVERSION OF THE EXISTING 1.5 MGD SBRs TO NEW 3.0 MGD MBR TREATMENT PLANT, INCLUDING CIVIL, MECHANICAL, STRUCTURAL, ELECTRICAL, AND CONTROLS FOR THE CONSTRUCTION OF NEW PROCESS BASINS; INSTALLATION OF NEW MEMBRANE CASSETTES; INSTALLATION OF NEW HEADWORKS, DEWATERING, AND EQUALIZATION EQUIPMENT; AND ASSOCIATED EQUIPMENT, PIPING, AND APPURTENANCES.

GENERAL NOTES

1. ALL WORK ON THIS PROJECT SHALL BE PERFORMED IN ACCORDANCE WITH 1. THESE PLANS AND SPECIFICATIONS; 2. THE LATEST 2016 CITY OF SAN LUIS SUPPLEMENTAL TO THE 2015 MAG UNIFORM STANDARD SPECIFICATIONS AND DETAILS FOR PUBLIC WORKS CONSTRUCTION; CITY OF YUMA CONSTRUCTION STANDARD DETAIL DRAWINGS; MAG UNIFORM STANDARD SPECIFICATIONS AND DETAILS FOR PUBLIC WORKS CONSTRUCTION; AND THE CITY OF YUMA CONSTRUCTION STANDARD DETAIL DRAWINGS - EDITION 2019. IN THE EVENT OF CONFLICT, THE MOST STRINGENT SHALL GOVERN. THE PERFORMANCE AND COMPLETION OF ALL WORK MUST MEET THE REQUIREMENTS OF THE CONTRACT DOCUMENTS.
2. ALL SITE GRADING, TANK FOUNDATION EXCAVATION, BACKFILL MATERIALS, PLACEMENT AND COMPACTION SHALL COMPLY WITH GEOTECHNICAL EVALUATION PREPARED BY GEOTECHNICAL TESTING SERVICES, INC., DATED 06/12/2025.
3. ALL CONSTRUCTION SHALL BE IN ACCORDANCE WITH UNITED STATES ENVIRONMENTAL PROTECTION AGENCY STANDARDS AND POLICIES FOR WASTEWATER SYSTEMS AND CURRENT SUPPLEMENTS THERETO.
4. HORIZONTAL DATUM IS NAD 83 (2007) ARIZONA STATE PLANE GRID COORDINATE SYSTEM EAST ZONE. VERTICAL DATUM IS NAVD 88.
5. THE CONTRACTOR SHALL LOCATE EXISTING SURVEY MARKERS OR MONUMENTS. ANY SURVEY MARKERS/MONUMENTS DISTURBED OR DAMAGED DURING CONSTRUCTION SHALL BE REPLACED IN KIND BY A REGISTERED LAND SURVEYOR AND SHALL BE INCIDENTAL TO THE OTHER PAY ITEMS.
6. THE CONTRACTOR IS RESPONSIBLE FOR PROVIDING ALL MATERIALS, EQUIPMENT, AND PERSONNEL REQUIRED FOR CONSTRUCTION OF A FULLY FUNCTIONAL SEWER SYSTEM IN ACCORDANCE WITH THESE PLANS AND SPECIFICATIONS.
7. THE CONTRACTOR SHALL VERIFY THAT ALL NECESSARY PERMITS HAVE BEEN OBTAINED PRIOR TO CONSTRUCTION.
8. ANY WORK PERFORMED WITHOUT THE APPROVAL OF THE ENGINEER AND/OR ALL WORK AND MATERIAL NOT IN CONFORMANCE WITH THE SPECIFICATIONS IS SUBJECT TO REMOVAL AND REPLACEMENT AT THE CONTRACTOR'S EXPENSE.
9. DEBRIS SHALL BE DISPOSED OF WITHIN APPROVED DISPOSAL FACILITIES.
10. THE CONTRACTOR SHALL PROVIDE ADEQUATE MEANS FOR CLEANING TRUCKS AND/OR OTHER EQUIPMENT FOR MUD REMOVAL PRIOR TO ENTERING PUBLIC STREETS. IT IS THE CONTRACTOR'S RESPONSIBILITY TO CLEAN STREETS, ALLEY DUST, AND TAKE WHATEVER MEASURES ARE NECESSARY TO INSURE THAT ALL ADJACENT ROADS ARE MAINTAINED IN A CLEAN, MUD AND DUST FREE CONDITION AT ALL TIMES.
11. AN APPROVED SET OF PLANS SHALL BE KEPT ON THE JOB SITE AT ALL TIMES WORK IS IN PROGRESS. DEVIATION FROM THE PLANS WILL NOT BE ALLOWED WITHOUT AN APPROVED PLAN REVISION OR AUTHORIZATION FROM THE ENGINEER.
12. THE CONTRACTOR SHALL TAKE MEASURES TO CONTROL DUST AND FUGITIVE EMISSIONS, INCLUDING BUT NOT LIMITED TO WATERING THE SITE TWICE DAILY DURING GRADING TO CONTROL DUST.
13. ALL CONSTRUCTION VEHICLES OR EQUIPMENT, MOBILE OR FIXED OPERATED, SHALL BE EQUIPPED WITH PROPERLY OPERATING AND MAINTAINED MUFFLERS IN ACCORDANCE WITH THE LOCAL NOISE ORDINANCES.
14. ALL PIPE SUPPORTS SPACING SHALL MEET PIPING MANUFACTURER'S REQUIREMENTS.
15. THE WORK AREA SHALL BE LIMITED TO THE PUBLIC RIGHT-OF-WAY, PERMANENT EASEMENTS, AND TEMPORARY CONSTRUCTION EASEMENTS AS SHOWN ON THESE PLANS FOR CONSTRUCTION OF THE PROJECT. NO TEMPORARY CONSTRUCTION EASEMENTS EXIST UNLESS INDICATED ON THE PLANS.
16. THE LOCATION OF RIGHT-OF-WAY RELATIVE TO AERIAL PHOTOS OF THE DRAWINGS MAY NOT MATCH FIELD CONDITIONS.
17. IT IS NOT THE INTENT OF THE SPECIFICATIONS TO SUPERSEDE ANY FEDERAL, STATE, OR LOCAL LAWS, REGULATIONS, AND/OR ORDINANCES, WHICH SHALL GOVERN IN ALL INSTANCES. IT IS THE CONTRACTOR'S RESPONSIBILITY TO SHOW A GOOD FAITH EFFORT AND TO PROTECT ALL EXISTING UTILITIES AND STRUCTURES AND TO ABIDE BY ALL FEDERAL, STATE AND LOCAL LAWS AND ORDINANCES IN THIS PROJECT.
18. THE CONTRACTOR SHALL TAKE APPROPRIATE STEPS TO PREVENT EROSION OF MATERIAL FROM THE WORK AREA AND DEPOSITION OF SEDIMENTS INTO WATER COURSES OR DRAINAGE SWALES. THE CONTRACTOR SHALL SUBMIT AND EROSION CONTROL PLAN AND SWPPP TO THE CITY'S REPRESENTATIVE AND ADEQ PRIOR TO THE START OF ANY EXCAVATION. ALL EROSION AND SEDIMENT CONTROL WORK SHALL BE INCIDENTAL TO THE OTHER PAY ITEMS.
19. ALL EQUIPMENT MATERIAL DEMO'D WILL BE OFFERED TO THE CITY FOR FIRST REFUSAL PRIOR TO CONTRACTOR DISPOSAL.

ENGINEER'S NOTES

1. THE ENGINEER WILL NOT BE RESPONSIBLE FOR CONSTRUCTION MEANS, METHODS, TECHNIQUES, SEQUENCES, OR PROCEDURES OR FOR SAFETY PRECAUTIONS OR PROGRAMS UTILIZED IN CONNECTION WITH THE WORK, AND HE WILL NOT BE RESPONSIBLE FOR THE CONTRACTOR'S FAILURE TO CARRY OUT THE WORK IN ACCORDANCE WITH THE CONTRACT DOCUMENTS.
2. THE ENGINEER AND APPLICABLE AGENCY MUST APPROVE, PRIOR TO CONSTRUCTION, ANY ALTERATION OR VARIANCE FROM THESE PLANS. ANY VARIATION FROM THESE PLANS SHALL BE PROPOSED ON CONSTRUCTION FIELD PRINTS AND TRANSMITTED TO THE ENGINEER.
3. THE CONTRACTOR SHALL PROTECT AND MAINTAIN ALL EXISTING UTILITIES ON THE SITE. ANY DAMAGE TO EXISTING UTILITIES, WHETHER SHOWN OR NOT ON THE DRAWINGS SHALL BE REPAIRED OR REPLACED AT THE CONTRACTOR'S EXPENSE. EXISTING SURFACE FEATURES AND FENCING SHALL BE REPLACED IN KIND.
4. ANY INSPECTION BY THE CITY OR THE ENGINEER SHALL NOT IN ANY WAY RELIEVE THE CONTRACTOR FROM ANY OBLIGATION TO PERFORM THE WORK IN STRICT COMPLIANCE WITH THE APPLICABLE CODES AND AGENCY REQUIREMENTS.
5. NOTHING CONTAINED IN THE CONTRACT DOCUMENTS SHALL CREATE, NOR SHALL BE CONSTRUED TO CREATE, ANY CONTRACTUAL RELATIONSHIP BETWEEN THE ENGINEER AND THE CONTRACTOR OR ANY SUBCONTRACTOR.
6. THE CONTRACTOR SHALL MAKE NO CLAIM AGAINST THE OWNER OR THE ENGINEER REGARDING ALEGED INACCURACY OF CONSTRUCTION STAKES SET BY THE ENGINEER UNLESS ALL STAKES SET BY THE ENGINEER ARE MAINTAINED INTACT AND CAN BE VERIFIED AS TO THEIR ORIGIN. IF IN THE OPINION OF THE ENGINEER, THE STAKES ARE NOT MAINTAINED INTACT AND CANNOT BE VERIFIED AS TO THEIR ORIGIN, ANY REMEDIAL WORK REQUIRED TO CORRECT ANY ITEM OR IMPROPER CONSTRUCTION WORK IN THIS DEVELOPMENT SHALL BE PERFORMED AT THE SOLE EXPENSE OF THE RESPONSIBLE CONTRACTOR OR SUBCONTRACTOR.
7. TRAFFIC CONTROL SHALL BE MAINTAINED IN ACCORDANCE WITH CITY MUNICIPAL CODES.
8. PRIOR TO FINAL APPROVAL AND ACCEPTANCE OF THE WORK, THE CONTRACTOR WILL BE REQUIRED TO CLEAN AND REPAIR ADJACENT (OFF-PROJECT) ROADWAYS USED OR DAMAGED DURING THE COURSE OF CONSTRUCTION.
9. ANY CONSTRUCTION WATER OBTAINED FROM THE CITY WATER SOURCE MUST BE METERED. CONTACT CITY TO REQUEST A METER.

CIVIL CONSTRUCTION NOTES

1. CONTRACTOR SHALL FIELD VERIFY EXISTING CONDITIONS PRIOR TO THE START OF CONSTRUCTION.
2. EXISTING UTILITIES LOCATIONS SHOWN ON THESE PLANS ARE APPROXIMATE ONLY, AND ARE NOT RELIABLE FOR CONSTRUCTION PURPOSES.
3. ALL YARD PIPING SHALL BE SURVEYED FOR VERTICAL AND HORIZONTAL ALIGNMENT PRIOR TO BACKFILL. ALL SURVEYING DATA SHALL BE PROVIDED TO THE ENGINEER FOR RECORD DRAWINGS.
4. ALL BURIED DUCTILE IRON PIPE SHALL BE FULLY ENCASED IN POLYETHYLENE FILM OR CORROSION PROTECTION, PER AWWA C105/A21.5, MAG STANDARDS, AND SUPPLEMENTAL STANDARDS.
5. ALL YARD PIPING SHALL BE INSTALLED WITH TRACER WIRE PER MAG STANDARD DETAILS.
6. CONTRACTOR SHALL RAISE OR LOWER ALL EXISTING MANHOLES, VALVE WELLS AND UTILITY IMPROVEMENTS TO FINISH GRADE.

MECHANICAL CONSTRUCTION NOTES

1. CONTRACTOR TO PROVIDE AND INSTALL PIPE SUPPORTS PER MANUFACTURER'S REQUIREMENTS AND SPECIFICATIONS. ALL DRY AREA PIPE SUPPORTS SHALL BE GALVANIZED STEEL U.N.O. ALL SUBMERGED PIPE SUPPORTS SHALL BE SS 316.
2. CONTRACTOR TO INSTALL PUMP BASE, GUIDE RAILS, AND BRACKETS PER MANUFACTURER'S REQUIREMENTS. CONTRACTOR SHALL CONFIRM SUPPLY OF PUMP MOUNTING EQUIPMENT WITH PUMP SUPPLIER.
3. CONTRACTOR TO PROVIDE MECHANICAL JOINT WALL PIPE FITTING WITH INTEGRAL WATER STOP COLLAR, LINK SEAL, OR EQUAL FOR ALL SUBSURFACE WALL PENETRATIONS.
4. ALL PROCESS PIPES SHALL BE COLOR COATED PER THE SPECIFICATIONS WITH THE EXCEPTION OF STAINLESS STEEL PIPES. ALL ABOVE GROUND PIPES SHALL ALSO BE OUTFITTED WITH A FLOW DIRECTION ARROW.
5. ALL ANCHORING/FASTENING SYSTEMS SHALL BE SS 316 REGARDLESS OF LOCATION, U.N.O.
6. CONTRACTOR SHALL SUBMIT SHOP DRAWINGS FOR REVIEW AND APPROVAL FOR EACH EQUIPMENT ITEM PRIOR TO INSTALLATION. INSTALLATION DETAILS FOR ALL EQUIPMENT ITEMS SHALL BE PER RESPECTIVE EQUIPMENT MANUFACTURER'S SHOP DRAWINGS AND RECOMMENDED INSTALLATION REQUIREMENTS.
7. DUCTILE IRON PIPE 12" AND LESS SHALL BE PRESSURE CLASS 350. DIP PIPE GREATER THAN 12" DIAMETER SHALL BE PRESSURE CLASS 250, U.N.O. ALL UNDERGROUND DUCTILE IRON PIPE SHALL BE POLYETHYLENE WRAPPED.
8. C900 PVC PRESSURE PIPE SHALL BE CLASS 235 (DR 18). C900 PVC GRAVITY PIPE SHALL BE AT A MINIMUM CLASS 165 (SDR 35).
9. ELEVATIONS OF EXISTING STRUCTURES, PIPING, AND COMPONENTS ARE APPROXIMATE. CONTRACTOR TO FIELD VERIFY PRIOR TO CONSTRUCTION.
10. PRECAST SUPPLIER TO PROVIDE STRUCTURAL CALCULATIONS STAMPED BY A REGISTERED ENGINEER IN AZ TO DOCUMENT DESIGN OF PRECAST STRUCTURE.
11. GROOVE FITTINGS MAY BE USED N LIEU OF FLANGE FITTINGS FOR ALL ABOVE GROUND DUCTILE IRON PIPING.
12. CONTRACTOR SHALL BE RESPONSIBLE FOR ALL TEMPORARY PIPING AND EQUIPMENT NEEDED FOR PROCESS ISOLATION, BYPASS, AND TRANSITION.
13. "±" INDICATES ASSUMED ELEVATION. CONTRACTOR TO FIELD VERIFY PRIOR TO CONSTRUCTION COORDINATE WITH ENGINEER FOR ALL DISCREPANCIES.
14. ALL YARD PIPING SHALL BE SURVEYED AT ALL FITTINGS PRIOR TO BACKFILL.
15. THE CONTRACTOR IS RESPONSIBLE FOR ALL TRENCHING MEANS AND METHODS. NO CONTRACT CHANGE ORDERS WILL BE ALLOWED FOR CHANGES IN TRENCH SUPPORT/PROTECTION DUE TO DIFFERING SOIL CONDITIONS.
16. ALL NEW SEWER LINE ALIGNMENTS, LATERALS, CLEAN-OUTS, AND OTHER APPURTENANCES SHALL BE SURVEYED PRIOR TO BACKFILL.
17. ALL NEW MANHOLE CENTERLINES, RIM ELEVATIONS, AND INLET/OUTLET INVERTS SHALL BE SURVEYED.
18. CONTRACTOR TO PROVIDE ALL FITTINGS AND APPURTENANCES NEEDED AT ALL POINTS OF CONNECTION.
19. CONTRACTOR TO PROVIDE DEFERRED SUBMITTALS FOR THE FOLLOWING ITEMS: MBR REMOVABLE COVERS, ACCESS GRATING (TYP. ACROSS SITE), HANDRAILS, HEADWORKS SHADE CANOPY, METAL STAIRS, PIPE SUPPORTS, ODOR CONTROL PIPING LAYOUT, MBR OVERHEAD CRANE SYSTEM, STRUCTURAL CANOPIES, AND MISCELLANEOUS METALS.

UTILITY AND OWNER TELEPHONE INDEX

SAN LUIS UTILITIES DEPARTMENT (WATER DIVISION)	(928)-341-8577
ARIZONA PUBLIC SERVICE (APS) ELECTRICITY	(602) 371-7171

SEQUENCE OF CONSTRUCTION

CONTRACTOR TO PROVIDE A SEQUENCE OF CONSTRUCTION FOR CITY REVIEW AND APPROVAL PRIOR TO COMMENCEMENT OF WORK. ALL TEMPORARY BYPASS WORK SHALL BE PERFORMED BY THE CONTRACTOR. THE CITY'S OPERATION STAFF SHALL BE AVAILABLE DURING NORMAL WORKING TIME TO PROVIDE LABOR FROM DRAINING AND CLEANING OF THE TANKS. ALL EQUIPMENT, PIPING, AND APPURTENANCES SHALL BE PROVIDED BY THE CONTRACTOR.

CONTRACTOR SHALL ASSIST THE CITY'S OPERATIONS STAFF DURING THE SEEDING PROCESS.

ABBREVIATIONS

A.B.	AGGREGATE BASE
A.C.	ASPHALT CONCRETE
AI	ANALOG INPUT
AL	AIR LINE
ALUM	ALUMINUM
APPROX	APPROXIMATELY
ARV	AIR RELEASE VALVE
AUTO	AUTOMATIC
AUX	AUXILARY
BO	BLOWOFF
BC	BEGINNING OF CURVE
BF	BLIND FLANGE
BLDG	BUILDING
BM	BEAM, BENCHMARK
BOT	BOTTOM
BVC	BEGIN VERTICAL CURVE
CFH	CUBIC FOOT PER HOUR
CFM	CUBIC FOOT PER MINUTE
CFS	CUBIC FOOT PER SECOND
CML&C	CEMENT MORTAR LINED & COATED
CML&EC	CEMENT MORTAR LINED & EPOXY COATED
CL	CHEMICAL LINE
CLR	CLEAR
CMU	CONCRETE MASONRY UNIT
CO	CLEAN OUT
CONT.	CONTINUOUS
COTG	CLEANOUT TO GRADE
CONST	CONSTRUCTION
CPLG	COUPLING
CTR	CENTER
CV	CHECK VALVE
DI	DIGITAL INPUT
DIA	DIAMETER
DIP	DUCTILE IRON PIPE
DTL	DETAIL
DWG	DRAWING
DL	DRAIN LINE
E	ELECTRICAL POWER
EA	EACH
EC	END OF CURVE
ECC	ECCENTRIC
EF	EACH FACE
EL.	ELEVATION
ELEC	ELECTRIC
ELECT	ELECTRICAL
EP	EDGE OF PAVEMENT
EQUIP	EQUIPMENT
E.W.	EACH WAY
EXH	EXHAUST
EXIST.	EXISTING
FC	FLEXIBLE COUPLING
FF	FINISHED FLOOR
FG	FINISHED GROUND
FH	FIRE HYDRANT
FL	FLOW LINE
FLEX	FLEXIBLE
FLG	FLANGE
FM	FORCE MAIN
FLG'D	FLANGED
FPS	FEET PER SECOND
FT	FEET
FUT	FUTURE
G	GAS
GA	GAUGE
GAL	GALLONS
GALV	GALVANIZED
GB	GRADE BREAK
GPD	GALLONS PER DAY
GPM	GALLONS PER MINUTE
H/A	HAND-AUTOMATIC
HDPE	HIGH DENSITY POLYETHYLENE
H.H.W.L.	HIGH HIGH WATER LEVEL
HOA	HAND-OFF-AUTOMATIC
HORIZ.	HORIZONTAL
HP	HORSEPOWER
H.W.L.	HIGH WATER LEVEL
HZ	HERTZ
ID	INSIDE DIAMETER
IE	INVERT ELEVATION
IN	INCHES
INFL	INFLUENT
IRR	IRRIGATION
INV.	INVERT
JB	JUNCTION BOX
LBS	POUNDS
LBS/D	POUNDS PER DAY
LF	LINEAR FEET
LI	LEVEL INDICATOR
LP	LOW PRESSURE
LT	LEVEL TRANSDUCER
L.W.L.	LOW WATER LEVEL
MAX.	MAXIMUM
MCC	MOTOR CONTROL CENTER
MECH	MECHANICAL
MFR	MANUFACTURER
MGD	MILLION GALLONS PER DAY
MG/L	MILLIGRAMS PER LITER
MH	MANHOLE OR MAINTENANCE HOLE
MIN	MINIMUM, MINUTE
MISC	MISCELLANEOUS
MJ	MECHANICAL JOINT
N/C	NORMALLY CLOSED
N/O	NORMALLY OPEN
NTS	NOT TO SCALE
NWL	NORMAL WATER LEVEL
NPSH	NET POSITIVE SECTION HEAD
OC	ON CENTER
OD	OUTSIDE DIAMETER
PCC	PORTLAND CEMENT CONCRETE
PG	PRESSURE GAUGE
PI	POINT OF INTERSECTION
P/L	PROPERTY LINE
PLC	PROGRAMMABLE LOGIC CONTROLLER
PRC	POINT OF REVERSE CURVE
PRV	PRESSURE REGULATING (REDUCING) VALVE
PS	PRESSURE SWITCH, PIPE SUPPORT
P.S.	PUMP STATION
PSI	POUNDS PER SQUARE INCH
PV	PLUG VALVE
PVC	POLYVINYL CHLORIDE
R	RADIUS
REF	REFERENCE
REQ'D	REQUIRED
RPM	REVOLUTIONS PER MINUTE
RW	RECLAIMED WATER / ONSITE PROCESS WATER
S	SLOPE
SCH.	SCHEDULE
SECT.	SECTION
SF.	SQUARE FEET
SHT.	SHEET
SL	SLUDGE LINE
SPEC.	SPECIFICATION
SQ.	SQUARE
S. STL.	STAINLESS STEEL
ST	STREET
STA	STATION
T&B	TOP AND BOTTOM
TB	THRUST BLOCK
TC	TOP OF CURB
TBA	TO BE ABANDONED
TDH	TOTAL DYNAMIC HEAD
TEL	TELEPHONE
TG	TOP OF GRATE
TOS	TOP OF SLAB
TSP	TWISTED SHIELDED PAIR
TYP	TYPICAL
U.N.O.	UNLESS NOTED OTHERWISE
VAC	VOLTS ALTERNATING CURRENT
VERT.	VERTICAL
W	WATER
WAS	WASTE ACTIVATED SLUDGE
W.S.	WATER SURFACE
WWF	WELDED WIRE FABRIC

LEGEND

- B / M6 — DETAIL OR SECTION LETTER / SHEET WHERE DETAIL IS SHOWN
- PROPERTY BOUNDARY
- SETBACK
- EXISTING ACCESS ROAD
- EXISTING 5' CONTOUR (1555)
- EXISTING 1' CONTOUR
- PROPOSED 5' CONTOUR (1555)
- PROPOSED 1' CONTOUR
- PROPOSED FUTURE 5' CONTOUR
- EXISTING FENCE (X — X)
- PROPOSED CHAINLINK FENCE (X — X)
- EXISTING UNDERGROUND ELECTRICAL CONDUIT
- PROPOSED UNDERGROUND ELECTRICAL CONDUIT
- EXISTING WATER LINE
- EXISTING UTILITY POLE
- EXISTING LIGHT POLE
- XX — CONSTRUCTION NOTES
- 1 — EQUIPMENT CALL OUT (SEE EQUIPMENT LIST)
- EXISTING CONCRETE
- CONCRETE
- NATURE SOIL / BACKFILL
- AGGREGATE BASE
- COMPACT NATIVE SOIL
- DEMO
- UNPUNCHED GRATING
- OPEN GRATING
- CONTROL PANEL
- X / XX — DETAIL LETTER / SHEET #

NO	BY	DATE	REVISIONS	DATE	APP.

Registered Professional Engineer — Duong T. Do — 40050 — Arizona, U.S.A. — Expires 12/31/27

PREPARED BY: DUONG DO — PROJECT ENGINEER — #40050 — R.C.E. NO. / EXP. DATE
DRAWN: WW, MSA — DESIGNED: NT, NE — CHECKED: DD — SCALE — DATE: FEB 2026

TITLE: GENERAL NOTES AND ABBREVIATIONS

JOB: CITY OF SAN LUIS WEST WWTP 3.0 MGD MBR UPGRADES — SAN LUIS AZ.

PACE — Advanced Water Engineering
8723 E. VIA de COMMERCIO, SUITE A-204 | SCOTTSDALE, CA 85258
P: (408) 991-3595 | www.pacewater.com

SHEET: G2.0 — 3 OF 209 SHEETS

JOB NO. B777

THESE DRAWINGS ARE THE PROPERTY OF P.A.C.E. AND SHALL NOT BE REPRODUCED IN ANY MANNER NOR BE USED FOR CONSTRUCTION UNLESS STAMPED "ISSUED FOR CONSTRUCTION".

FINAL PLANS ISSUED FOR BID

DRAFT

W:\B777\Engineering\B777 - 3MGD Exp\3MGD FINAL DS\Sheets\B777-G2.0-GENERAL NOTES.dwg - Tab: G2.0 - by wwright on 01/30/26 at 2:08:38 PM

DRAFT



VICINITY MAP

DATE OF PREPARATION

AUGUST 2024

PARCEL AREA

1,086,239 S.F. OR 24.9366 ACRES

CURRENT ZONING

ZONING CF

BASIS OF BEARINGS

BEARINGS ARE RELATIVE TO NAD 83 ARIZONA WEST STATE PLANE COORDINATE SYSTEM AS MEASURED BY GPS KINEMATIC SURVEY AS OBSERVED CONTROL POINTS.

SURVEYOR'S NOTES

1. THE SUBJECT PROPERTY IS LOCATED WITHIN AN AREA HAVING A FLOOD ZONE A DESIGNATION.
   ZONE A – THE 1% ANNUAL CHANCE FLOOD (100–YEAR FLOOD), ALSO KNOWN AS THE BASE FLOOD, IS THE FLOOD THAT HAS A 1% CHANCE OF BEING EQUALED OR EXCEEDED IN ANY GIVEN YEAR. THE SPECIAL FLOOD HAZARD AREA IS THE AREA SUBJECT TO FLOODING BY THE 1% ANNUAL CHANCE FLOOD. AREAS OF SPECIAL FLOOD HAZARD INCLUDE ZONES A, AE, AH, AO, AR, A99, V, AND VE. THE BASE FLOOD ELEVATION IS THE WATER–SURFACE ELEVATION OF THE 1% ANNUAL CHANCE FLOOD.
   REFERENCE – FLOOD INSURANCE RATE MAP (FIRM), MAP NUMBER 04027C2135F DATED JANUARY 16, 2014, WHICH IS THE FLOOD INSURANCE RATE MAP FOR THE COMMUNITY IN WHICH THIS PROJECT IS SITUATED.
2. THE TITLE REPORT WITH A OUR NO. 91400359 ISSUED BY PIONEER TITLE AGENCY, INC AND COMMITMENT DATE JULY 22, 2024 AT 7:30 AM WAS REFERENCED DURING THE PREPARATION OF THIS ALTA SURVEY.

LEGAL DESCRIPTION

LOTS 2 AND 3, SECTION 2, AND LOT 27, SECTION 11, ALL IN TOWNSHIP 11 SOUTH, RANGE 25 WEST OF THE GILA AND SALT RIVER BASE AND MERIDIAN, YUMA COUNTY, ARIZONA;

EXCEPT ALL MINERAL DEPOSITS AS RESERVED IN THE PATENT FROM THE UNITED STATES OF AMERICA, RECORDED IN DOCUMENT NO. 2001–14799 AND IN DOCUMENT NO. 2004–39688, RECORDS OF YUMA COUNTY, ARIZONA.

SCHEDULE OF EXCEPTIONS

ESCROW/TITLE No. 91400359 SCHEDULE B

1 RESERVATIONS, RIGHTS, EASEMENTS OR OTHER MATTERS AS MAY BE SET FORTH IN THE PATENT TO SAID LAND RECORDED IN THE OFFICE OF THE COUNTY RECORDER, OR IN ACTS AUTHORIZING THE ISSUANCE THEREOF.

2 WATER RIGHTS, CLAIMS OR TITLE TO WATER, AND AGREEMENTS, COVENANTS, CONDITIONS OR RIGHTS INCIDENT THERETO, WHETHER OR NOT SHOWN BY THE PUBLIC RECORDS.

THIS EXCEPTION IS NOT LIMITED BY REASON OF THE DISCLOSURE OF ANY MATTER RELATING TO WATER RIGHTS AS MAY BE SET FORTH ELSEWHERE IN SCHEDULE B.

3 THE RIGHT OF ENTRY TO PROSPECT FOR, MINE AND REMOVE ALL MINERALS AS RESERVED IN PATENT TO SAID LAND RECORDED IN DOCUMENT NO. 2001–14799 AND IN DOCUMENT NO. 2004–39688.
(AFFECTS THE SUBJECT PROPERTY, HOWEVER, IS NOT PLOTTABLE.)

4 RIGHT–OF–WAY FOR CANALS, LATERAL AND DITCHES CONSTRUCTED BY THE AUTHORITY OF THE UNITED STATES AS SET FORTH IN INSTRUMENT RECORDED IN DOCUMENT NO. 2001–14799 AND IN DOCUMENT NO. 2004–39688.
(AFFECTS THE SUBJECT PROPERTY, HOWEVER, IS NOT PLOTTABLE.)

5 RIGHT–OF–WAY FOR BORDER PATROL, FOR A CAMERA SITE, WASTEWATER PIPELINE PURPOSES, AND TERMS AND CONDITIONS RELATING TO HAZARDOUS WASTE AS SET FORTH IN DOCUMENT NO. 2001–14799 AND IN DOCUMENT NO. 2004–39688.
(AFFECTS THE SUBJECT PROPERTY, HOWEVER, IS NOT PLOTTABLE.)

6 WASTEWATER TREATMENT PLANT GROUND LEASE UNDER THE TERMS AND CONDITIONS CONTAINED THEREIN MADE BY:

LESSOR	CITY OF SAN LUIS, ARIZONA, A MUNICIPAL CORPORATION OF THE STATE OF ARIZONA
LESSEE	SAN LUIS CIVIC IMPROVEMENT CORPORATION, A NONPROFIT CORPORATION
DATED	10–4–02
TERM EXPIRES	10–4–2042
RECORDED	11–1–02
DOCUMENT NO.	2002–31209

(NOT A SURVEY MATTER)

7 WASTEWATER TREATMENT PLANT CITY LEASE UNDER THE TERMS AND CONDITIONS CONTAINED THEREIN MADE BY:

LESSOR	SAN LUIS CIVIC IMPROVEMENT CORPORATION, A NONPROFIT CORPORATION
LESSEE	CITY OF SAN LUIS, ARIZONA, A MUNICIPAL CORPORATION OF THE STATE OF ARIZONA
DATED	10–4–02
TERM EXPIRES	10–4–2042
RECORDED	11–1–02
DOCUMENT NO.	2002–31213

(NOT A SURVEY MATTER)

8 TERMS AND CONDITIONS OF RESOLUTION NO. 454, RECORDED IN DOCUMENT NO. 2017–16631, FOR USE OF THE LEVEE ROAD.
(AFFECTS THE SUBJECT PROPERTY, HOWEVER, IS NOT PLOTTABLE.)

9 UNRECORDED LEASE UNDER THE TERMS AND CONDITIONS CONTAINED THEREIN MADE BY:

LESSOR	CITY OF SAN LUIS, AN ARIZONA MUNICIPALITY
LESSEE	ARTEMIS SUN INSTITUTIONAL SOLAR, INC., A TEXAS CORPORATION
DATED	1–30–14
TERM	UNDISCLOSED
AS DISCLOSED BY	THIRD AMENDMENT TO SITE LEASE
RECORDED	6–27–18
DOCUMENT NO.	2018–16580

AND THEREAFTER, LESSEE'S INTEREST WAS ASSIGNED TO LUIS SPEAR POINT SOLAR I, LLC, A DELAWARE LIMITED LIABILITY COMPANY BY UNRECORDED INSTRUMENT;

AND THEREAFTER, A FOURTH AMENDMENT RECORDED IN DOCUMENT NO. 2018–16581.
(NOT A SURVEY MATTER)

10 TERMS AND CONDITIONS OF CONTRACT NO. 18–07–34–L 1933 BY AND BETWEEN THE CITY OF SAN LUIS AND THE UNITED STATES DEPARTMENT OF THE INTERIOR, BUREAU OF RECLAMATION, AS SET FORTH IN DOCUMENT NO. 2022–31612.
(NOT A SURVEY MATTER)

17 EASEMENTS AND RIGHTS INCIDENT THERETO, AS SET FORTH IN INSTRUMENT:

RECORDED IN	DOCUMENT NO. 2023–21631
PURPOSE	CONSTRUCTION, OPERATION AND MAINTENANCE OF NEW UNDERGROUND FIBER–OPTIC CABLE AND APPURTENANT FACILITIES

(AFFECTS THE SUBJECT PROPERTY, HOWEVER, IS NOT PLOTTABLE.)

SURVEY CERTIFICATE

To
CITY OF SAN LUIS, ARIZONA

This is to certify that this map or plat and the survey on which it is based were made in accordance with the 2021 Minimum Standard Detail Requirements for ALTA/NSPS Land Title Surveys, jointly established and adopted by ALTA and NSPS and includes items 1, 3, 4, 8, 13 and 18 from Table A thereof.
The fieldwork was completed on 08/10/2024.

Date of Plat or Map: 08/19/2024

REGISTERED LAND SURVEYOR CERTIFICATE NO. 31018 KEVIN A. DAHL Date Signed 08/19/24 ARIZONA U.S.A.

KEVIN A. DAHL, R.L.S. 31018 STATE OF ARIZONA

FOR REFERENCE ONLY

C:\Users\Juan\Desktop\August 2024\24160\drawings\24160.dwg

DRAWINGS ISSUE RECORD:

DATE:

DAHL, ROBINS & ASSOCIATES, INC.
1560 S. 5th Avenue
Yuma, AZ 85364
Phone (928) 783-0825
Fax (928) 783-0828
www.dahlrobins.com

CITY OF SAN LUIS WEST WASTEWATER TREATMENT PLANT
SAN LUIS
ARIZONA

ALTA/NSPS LAND TITLE SURVEY

A SURVEY OF A PORTION OF THE LOTS 2 AND 3 OF SECTION 2, AND A PORTION OF THE LOT 27 OF SECTION 11, ALL IN TOWNSHIP 11 SOUTH, RANGE 25 WEST OF THE GILA & SALT RIVER BASE & MERIDIAN, YUMA COUNTY, ARIZONA

THIS DRAWING AND THE DATA CONTAINED HEREON ARE THE PROPERTY OF DAHL, ROBINS & ASSOCIATES, INC. AND SHALL NOT BE USED, REPRODUCED OR TRANSFERRED, WITHOUT THE PRIOR EXPRESS CONSENT OF THE COMPANY. NOR SHALL ANY DATA OR INFORMATION CONTAINED HEREON BE USED IN A MANNER INCONSISTENT WITH THE PRIOR EXPRESS WRITTEN AUTHORIZATION OF THE COMPANY.

DATE:	AUG 2024
DESIGNED BY:	DRA
DRAWN BY:	JDL
CHECKED BY:	KAD
SURVEYED BY:	MAC
PROJECT NO.:	24160
SHEET	OF
1	2

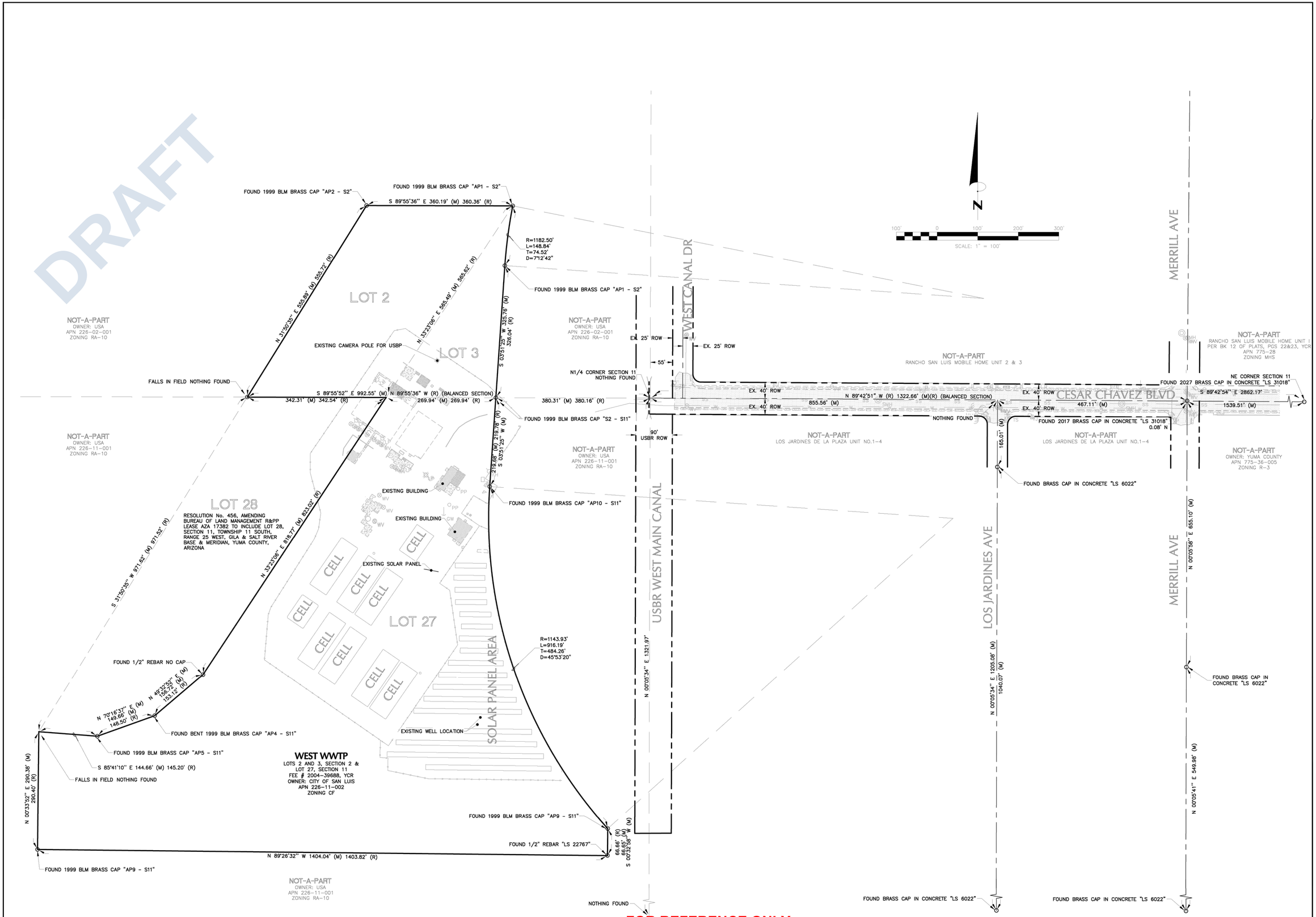

DRAWINGS ISSUE RECORD:

DATE:

DAHL, ROBINS & ASSOCIATES, INC.
1560 S. 5th Avenue
Yuma, AZ 85364
Phone: (928) 819-0825
Fax: (928) 819-0826
www.dahlrobins.com

CITY OF SAN LUIS WEST WASTEWATER TREATMENT PLANT

SAN LUIS
ARIZONA

ALTA/NSPS LAND TITLE SURVEY

A SURVEY OF A PORTION OF THE LOTS 2 AND 3 OF SECTION 2, AND A PORTION OF THE LOT 27 OF SECTION 11, ALL IN TOWNSHIP 11 SOUTH, RANGE 25 WEST OF THE GILA & SALT RIVER BASE & MERIDIAN, YUMA COUNTY, ARIZONA

THIS DRAWING AND THE DATA CONTAINED HEREON ARE THE PROPERTY OF DAHL, ROBINS & ASSOCIATES, INC. AND SHALL NOT BE USED, REPRODUCED OR TRANSFERRED, WITHOUT THE PRIOR EXPRESS CONSENT OF THE COMPANY. NOR SHALL ANY DATA OR INFORMATION CONTAINED HEREON BE USED IN A MANNER INCONSISTENT WITH THE PRIOR EXPRESS WRITTEN AUTHORIZATION OF THE COMPANY.

REGISTERED LAND SURVEYOR
CERTIFICATE NO.
31018
KEVIN A.
DAHL
Date Signed: 08/ 19/24
ARIZONA U.S.A.

DATE:	AUG 2024
DESIGNED BY:	DRA
DRAWN BY:	JDL
CHECKED BY:	KAD
SURVEYED BY:	MAC
PROJECT NO.:	24160
SHEET	OF
2	2

C:\Users\Juan\Desktop\August 2024\24160\drawings\24160.dwg

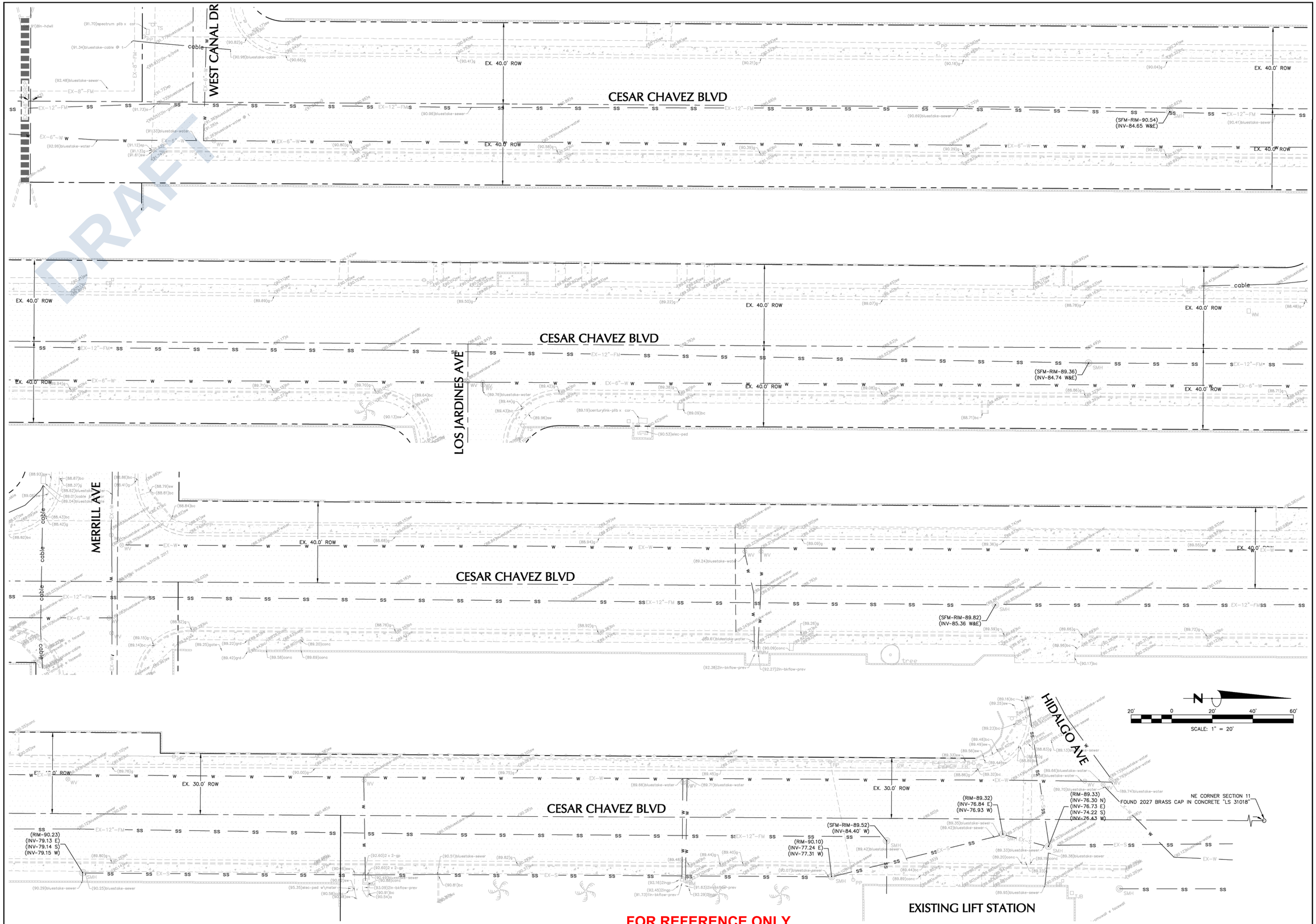

DRAFT

FOR REFERENCE ONLY

C:\Users\Juan\Desktop\August 2024\24160\drawings\24160.dwg

DRAWINGS ISSUE RECORD:								
DATE:								

DAHL, ROBINS & ASSOCIATES, INC.
1560 S. 5th Avenue
Yuma, AZ 85364
Phone: (928) 819-0825
Fax: (928) 819-0826
www.dahlrobins.com

CITY OF SAN LUIS

SAN LUIS
ARIZONA

TOPOGRAPHIC SURVEY

THIS DRAWING AND THE DATA CONTAINED HEREON ARE THE PROPERTY OF DAHL, ROBINS & ASSOCIATES, INC. AND SHALL NOT BE USED, REPRODUCED OR TRANSFERRED, WITHOUT THE PRIOR EXPRESS CONSENT OF THE COMPANY. NOR SHALL ANY DATA OR INFORMATION CONTAINED HEREON BE USED IN A MANNER INCONSISTENT WITH THE PRIOR EXPRESS AUTHORIZATION OF THE COMPANY.

REGISTERED LAND SURVEYOR
CERTIFICATE NO.
31018
KEVIN A.
DAHL
Date Signed: 08/19/24
ARIZONA, U.S.A.

DATE:	AUG 2024
DESIGNED BY:	DRA
DRAWN BY:	JDL
CHECKED BY:	KAD
SURVEYED BY:	MAC
PROJECT NO.:	24160
SHEET	OF
1	1

CITY OF SAN LUIS WEST WASTEWATER TREATMENT PLANT - 3.0 MGD MBR UPGRADE - BASIS OF DESIGN

DESCRIPTION	UNIT	PHASE 1	PHASE 2	PHASE 3
INFLUENT CHARACTERISTICS				
FLOW				
MAX MONTH AVERAGE DAY FLOW (MMADF)	MGD	3.0	4.5	6
MAXIMUM DAY FLOW (MDF)	MGD	3.9	5.9	7.8
FLOW EQUALIZATION VOLUME	MG	0.3	0.45	0.6
BIOCHEMICAL OXYGEN DEMAND (BOD)				
BOD5 CONCENTRATION	mg/L		360	
BOD5 LOADING @ AADF	LBS/D	9007	13511	18014
BOD5 LOADING @ MDF	LBS/D	11709	17564	23419
TOTAL SUSPENDED SOLIDS (TSS)				
TSS CONCENTRATION	mg/L		300	
TSS LOADING @ AADF	LBS/D	7506	11259	15012
TSS LOADING @ MDF	LBS/D	9758	14637	19516
TOTAL KJEDAHI NITROGEN (TKN)				
TKN CONCENTRATION	mg/L		80	
TSS LOADING @ AADF	LBS/D	2002	3002	4003
TSS LOADING @ MDF	LBS/D	2602	3903	5204
TEMPERATURE				
MINIMUM WW TEMPERATURE	DEG C		15	
MAXIMUM WW TEMPERATURE	DEG C		25	
TREATMENT OBJECTIVES				
EFFLUENT STANDARDS	AZ TITLE 18 BADCT			
BOD5	mg/L	< 10		
TSS	MG/L	< 10		
TOTAL NITROGEN	MG/L	< 10		
E-COLI	CFU/100 ml	NON-DETECT 4 OF 7 DAILY SAMPLES ≤23 SINGLE SAMPLE MAX		

DESCRIPTION	UNIT	PHASE 1
INFLUENT HEADWORKS AND GRIT REMOVAL		
FINE SCREENING		
MECHANICAL - TYPE	CENTER FLOW BAND SCREEN	
NUMBER OF UNITS		1 + 1
OPENING SIZE (PERFORATED)	MM	6
PEAK CAPACITY (TOTAL)	MGD	15.0
SCREEN MOTOR	HP	0.75
MBR FINE SCREENING		
MECHANICAL - TYPE	CENTER FLOW BAND SCREEN	
NUMBER OF UNITS		1 + 1
OPENING SIZE (PERFORATED)	MM	2
PEAK CAPACITY (TOTAL)	MGD	15.0
SCREEN MOTOR	HP	0.75
SCREENS CONVEYOR WASHER COMPACTOR		
CAPACITY (EACH)	CY/HR	TBD
SCREENS BAGGERS	CONTINUOUS BAG	2
GEAR MOTOR	HP	3
GRIT REMOVAL	PADDLE VORTEX GRIT TRAP	
NUMBER OF UNITS		1 + 1
DIAMETER	FT	16
CAPACITY (EACH)	MGD	15.0
PADDLE MOTOR	HP	0.75
GRIT PUMP CAPACITY	GPM	TBD
PUMP MOTOR	HP	5
GRIT CLASSIFIER	SAND WASHER	
NUMBER OF UNITS		1 + 1
REMOVAL	MESH	TBD
PEAK CAPACITY (EACH)	GPM	TBD
GRIT CAPACITY (EACH)	CY/HR	TBD
AGITATOR GEAR MOTOR	HP	0.75
CONVEYOR GEAR MOTOR	HP	0.75

DESCRIPTION	UNIT	PHASE 1
EQUALIZATION BASIN		
BASIN WIDTH	FT	44
BASIN LENGTH	FT	91
BASIN DEPTH (VARIES)	FT	18 FT. MAX.
BASIN VOLUME (MAX)	MG	0.540
EQUALIZATION BASIN PUMP TYPE	SUBMERSIBLE	
NUMBER OF PUMPS		1 + 1
PUMP CAPACITY (EACH)	GPM	1300
PUMP HEAD (EACH)	PSI	25 (MAX)
SPEED CONTROL		ADJUSTABLE
PUMP MOTOR	HP	27
BIOLOGICAL TREATMENT SYSTEM		
TYPE	MODIFIED LUDZACK ETTINGER (MLE)	
NUMBER OF TREATMENT TRAINS		3
MIXED LIQUOR SUSPENDED SOLIDS (MLSS) CONCENTRATION	mg/L	13,000
SOLIDS RETENTION TIME	DAYS	15
HRT AT MMADF W/ ALL BASINS IN OPERATION	HR	8.0
ANOXIC ZONE		
ZONE WIDTH	FT	22
ZONE LENGTH	FT	48
ZONE DEPTH	FT	17.5
ZONE VOLUME PER TRAIN (3 TRAINS)	MG	0.138
TOTAL ANOXIC VOLUME	MG	0.415
HRT AT MMADF W/ ALL BASINS IN OPERATION	HR	3.3
NUMBER OF MIXERS PER BASIN		1
MIXER TYPE	LOW SPEED SUBMERSIBLE	
MIXER MOTOR	HP	6.0
INTERNAL RECYCLE PUMP		
PUMP TYPE	PROPELLER PUMP	
NUMBER OF UNITS PER TRAIN		1
PUMP CAPACITY (EACH)	GPM	2,700
PUMP HEAD (EACH)	FT	5
SPEED CONTROL		ADJUSTABLE
PUMP MOTOR	HP	4
AERATION ZONE		
PRE-AIR BASIN		
ZONE WIDTH	FT	22
ZONE LENGTH	FT	42
ZONE DEPTH (VARIES)	FT	14-17
ZONE VOLUME PER TRAIN (MIN)	MG	0.097
TOTAL PRE-AIR VOLUME (3 TRAINS)	MG	0.290
MBR TANK		
ZONE WIDTH	FT	22
ZONE LENGTH	FT	24
ZONE DEPTH	FT	19.5
ZONE VOLUME PER TRAIN	MG	0.077
TOTAL MBR AERATION VOLUME (3 TRAINS)	MG	0.231
TOTAL AERATION VOLUME (PRE-AIR AND MBR)	MG	0.521
HRT AT MMADF W/ ALL BASINS IN OPERATION	HR	4.2
AERATION TYPE	FINE BUBBLE TUBE DIFFUSERS	
AERATION TIME PER DAY	HR	24
AERATION BLOWERS		
BLOWER TYPE	POSITIVE DISPLPACEMENT ROTARY LOBE	
NUMBER OF UNITS		3+1
BLOWER OUTPUT	SCFM	2,126
PRESSURE PER BLOWER	PSI	10.5
SPEED CONTROL		ADJUSTABLE
BLOWER MOTOR	HP	200
INFLUENT CHANNEL BLOWERS		
BLOWER TYPE	REGENERATIVE	
NUMBER OF UNITS		1+1
BLOWER OUTPUT	SCFM	150
PRESSURE PER BLOWER	PSI	3.5
SPEED CONTROL		ADJUSTABLE
BLOWER MOTOR	HP	7.5

DESCRIPTION	UNIT	PHASE 1
MBR FEED PUMPS		
TYPE	SUBMERSIBLE AXIAL FLOW PROPELLER CAN PUMP	
NUMBER OF PUMPS		2 + 1
NUMBER OF PUMP COLUMN CANS		4
PUMP CAPACITY (EACH)	GPM	6,800
PUMP HEAD (EACH)	FT	6.5
SPEED CONTROL		ADJUSTABLE
PUMP MOTOR	HP	26
MBR SYSTEM		
TYPE OF MEMBRANE FILTRATION	FLAT PLATE	
NUMBER OF TRAINS		3
NUMBER OF MBR CASSETTES PER TRAIN		8
FILTRATION AREA PER CASSETTE	SF	9,688
TOTAL MEMBRANE FILTRATION AREA (ALL TRAINS)	SF	232,500
TOTAL MEMBRANE FILTRATION AREA (N-1 TRAINS)	SF	155,008
NET FLUX @ MMADF (ALL TRAINS)	GAL/FT2/DAY	12.9
NET FLUX @ MMADF (N-1 TRAINS)	GAL/FT2/DAY	19.3
MEMBRANE BLOWER TYPE	POSITIVE DISPLPACEMENT ROTARY LOBE	
NUMBER OF MBR BLOWERS		3 + 1
AIR SUPPLIED PER BLOWER	SCFM	767
PRESSURE PER BLOWER	PSI	10.5
SPEED CONTROL		ADJUSTABLE
BLOWER MOTOR	HP	150
SODIUM HYPOCHLORITE DISINFECTION		
CHLORINE CONTACT TANK (EFFLUENT PIPELINE)		
LENGTH OF PIPELINE	FT	4,400
PIPELINE DIAMETER	IN	20
VOLUME OF PIPELINE	MG	0.07
CALCULATED CONTACT TIME @ MDF	MIN	26.5
FINAL EFFLUENT PUMPS (EXISTING)		
TYPE	VERTICAL ONE STAGE SOLIDS-HANDLING	
NUMBER OF PUMPS		2
PUMP CAPACITY (EACH)	GPM	2,500
PUMP HEAD (EACH)	FT	10
SPEED CONTROL		ADJUSTABLE
PUMP MOTOR	HP	20

DESCRIPTION	UNIT	PHASE 1
SOLIDS PROCESSING		
SOLIDS YIELD FACTOR		0.75
MMAD WASTE SOLIDS	LBS/DAY	6,755
	LBS/WK	47,288
WAS LIQUID VOLUME @ 2% (13,000 MG/L MLSS)	GAL/WK	283,500
DIGESTER TANK		
TANK WIDTH	FT	20
TANK LENGTH	FT	27
TANK DEPTH	FT	19.5
VOLUME PER TANK	MG	0.079
TOTAL VOLUME (2 TANKS)	MG	0.158
DIGESTER BLOWER TYPE	POSITIVE DISPLPACEMENT ROTARY LOBE	
NUMBER OF BLOWERS		2+1
AIR SUPPLIED PER BLOWER	SCFM	760
PRESSURE PER BLOWER	PSI	10
SPEED CONTROL		ADJUSTABLE
BLOWER MOTOR	HP	50
DEWATERING SYSTEM		
TYPE OF DEWATERING	SCREW PRESS	
NUMBER OF UNITS		1
HYDRUALIC CAPACITY PER UNIT @ 1% CONC.	GPM	200
SOLIDS CAPACITY PER UNIT @ 2% CONC.	LBS/HR DS	1188
NUMBER OF HOURS PER WEEK (ONE UNIT OPERATING)		34
POLYMER CONSUMPTION @ 26# / TON DS	LBS/WK	715.0
TARGET SOLIDS CONCENTRATION	%	18
WET TONS FOR DISPOSAL	TONS/WK	124.0
SCREWPRESS MOTOR	HP	3
SPRAY WASH MOTOR	HP	0.25
SLUDGE FEED PUMPS		
TYPE	POSITIVE DISPLACEMENT ROTARY LOBE	
NUMBER OF PUMPS		2
PUMP CAPACITY (EACH)	GPM	208
PUMP HEAD (EACH)	PSI	30
SPEED CONTROL		ADJUSTABLE
PUMP MOTOR	HP	10
ODOR CONTROL SYSTEMS		
TYPE	BIOLOGICAL MEDIA	
HEADWORKS SYSTEM		
CAPACITY	SCFM	640
FAN MOTOR	HP	1.5

DRAFT

THESE DRAWINGS ARE THE PROPERTY OF P.A.C.E. AND SHALL NOT BE REPRODUCED IN ANY MANNER NOR BE USED FOR CONSTRUCTION UNLESS STAMPED "ISSUED FOR CONSTRUCTION".

NO	BY	DATE	REVISIONS	DATE	APP.

Registered Professional Engineer (Civil) — DUONG T. DO — 40050 — Date Signed 12/31/27 — ARIZONA, U.S.A. — Expires 12/31/27

PREPARED BY: DUONG DO
PROJECT ENGINEER #40050
R.C.E. NO. 40050
EXP. DATE 12/31/27
DRAWN WW, MSA
DESIGNED NT, NE
CHECKED DD
SCALE
DATE FEB 2026

TITLE: BASIS OF DESIGN

JOB: CITY OF SAN LUIS WEST WWTP
3.0 MGD MBR UPGRADES
SAN LUIS AZ.

PACE
Advanced Water Engineering
8723 E. VIA de COMMERCIO, SUITE A-204 | SCOTTSDALE, CA 85258
P: (408) 991-3595 | www.pacewater.com

FINAL PLANS ISSUED FOR BID

SHEET
G4.0
7 OF 209 SHEETS

JOB NO. B777

W:\B777\Engineering\B777 - 3MGD Exp\3MGD FINAL DSN\sheets\B777-G4.0-BASIS OF DESIGN.dwg - Tab: G4.0 - by wwright on 01/09/26 at 3:51:31 PM

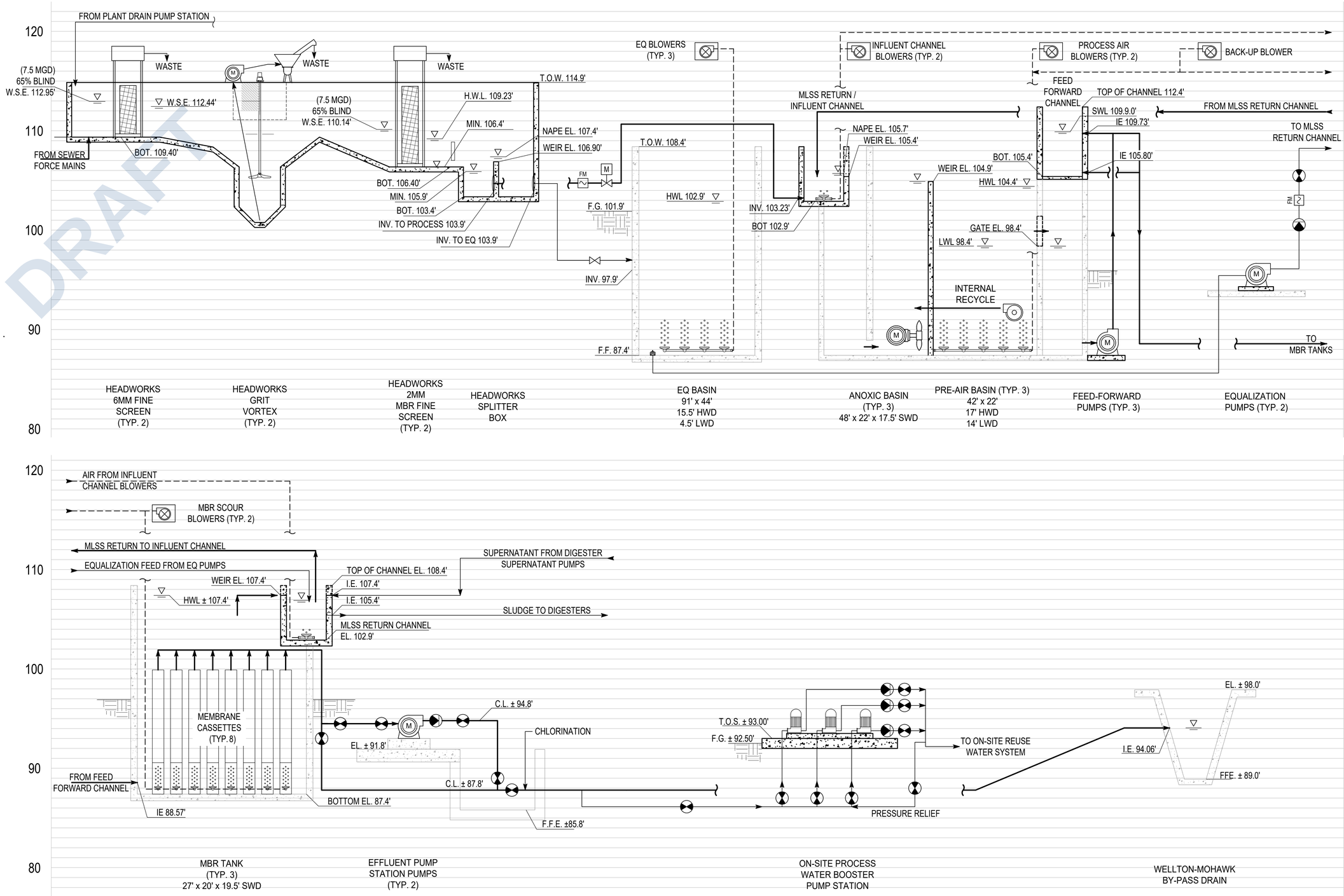

SYMBOLS

- PROCESS VALVE NORMALLY OPEN (N/O)
- CHECK VALVE
- PROCESS VALVE (ELECTRIC)
- DIFFUSED AERATION
- FLOW METER
- BLOWER
- RECLAIMED WATER PUMP
- PUMP
- MIXER
- PRIMARY PROCESS LINE
- SECONDARY PROCESS LINE
- AERATION PROCESS LINE

NOTE:
1. VERIFY ALL FINISHED FLOOR ELEVATIONS (F.F.E.) WITH ARCHITECTURAL AND STRUCTURAL PLANS.
2. ALL PROCESS LINES ARE SHOWN SCHEMATICALLY. SEE MECHANICAL PLANS FOR CORRESPONDING ELEVATIONS.

NO	BY	DATE	REVISIONS	DATE	APP.

Registered Professional Engineer (Civil) — DUONG T. DO — 40050 — Arizona, U.S.A. — Date Signed 12/31/27 — Expires 12/31/27

THESE DRAWINGS ARE THE PROPERTY OF P.A.C.E. AND SHALL NOT BE REPRODUCED IN ANY MANNER NOR BE USED FOR CONSTRUCTION UNLESS STAMPED 'ISSUED FOR CONSTRUCTION'.

PREPARED BY
DUONG DO
PROJECT ENGINEER
R.C.E. NO. #40050
EXP. DATE

SCALE

DRAWN WW, MSA
DESIGNED NT, NE
CHECKED DD

DATE FEB 2026

TITLE
HYDRAULIC PROFILE I

JOB
CITY OF SAN LUIS WEST WWTP
3.0 MGD MBR UPGRADES
AZ.
SAN LUIS

PACE
Advanced Water Engineering
8733 E. VIA de COMMERCIO, SUITE A-204 | SCOTTSDALE, CA 85258
P: (408) 991-3595 | www.pacewater.com

FINAL PLANS ISSUED FOR BID

SHEET
G5.0
8 OF 209 SHEETS

JOB NO. B777

W:\B777\Engineering\B777 - 3MGD Exp\3MGD FINAL DSN\sheets\B777-G5.0-HYDRAULIC PROFILE.dwg - Tab: G5.0 - by wwright on 01/08/26 at 3:52:13 PM

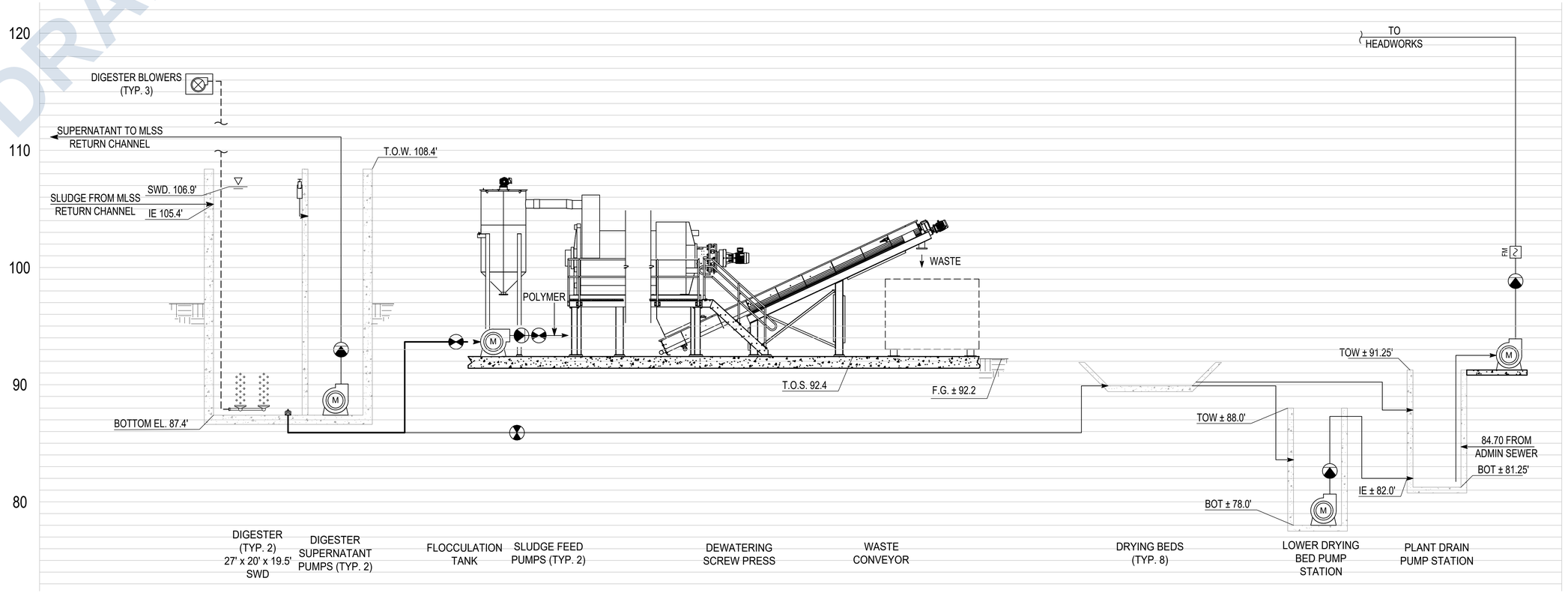

SYMBOLS

PROCESS VALVE NORMALLY OPEN (N/O)	DIFFUSED AERATION	RECLAIMED WATER PUMP	PRIMARY PROCESS LINE
CHECK VALVE	FM FLOW METER	PUMP	SECONDARY PROCESS LINE
PROCESS VALVE (ELECTRIC)	BLOWER	MIXER	AERATION PROCESS LINE

NOTE:
1. VERIFY ALL FINISHED FLOOR ELEVATIONS (F.F.E.) WITH ARCHITECTURAL AND STRUCTURAL PLANS.
2. ALL PROCESS LINES ARE SHOWN SCHEMATICALLY. SEE MECHANICAL PLANS FOR CORRESPONDING ELEVATIONS.

NO	BY	DATE	REVISIONS	DATE	APP.

Registered Professional Engineer (Civil) CERTIFICATE NO. 40050 DUONG T. DO Date Signed 12/31/21 ARIZONA, U.S.A. Expires 12/31/27

PREPARED BY DUONG DO
PROJECT ENGINEER
R.C.E. NO. -- #40050
EXP. DATE
DRAWN WW, MSA
SCALE
DESIGNED NT, NE
CHECKED DD
DATE FEB 2026

TITLE
HYDRAULIC PROFILE II

JOB
CITY OF SAN LUIS WEST WWTP
3.0 MGD MBR UPGRADES
SAN LUIS AZ.

PACE
Advanced Water Engineering
8723 E. VIA de COMMERCIO, SUITE A-204 | SCOTTSDALE, CA 85258
P: (408) 991-3595 | www.pacewater.com

SHEET
G5.1
9 OF 209 SHEETS
JOB NO. B777

THESE DRAWINGS ARE THE PROPERTY OF P.A.C.E. AND SHALL NOT BE REPRODUCED IN ANY MANNER NOR BE USED FOR CONSTRUCTION UNLESS STAMPED "ISSUED FOR CONSTRUCTION".

FINAL PLANS ISSUED FOR BID

DRAFT

W:\B777\Engineering\B777 - 3MGD Exp\3MGD FINAL DSN\sheets\B777-G5.0-HYDRUALIC PROFILE.dwg - Tab: G5.1 - by wwright on 01/08/26 at 3:52:13 PM

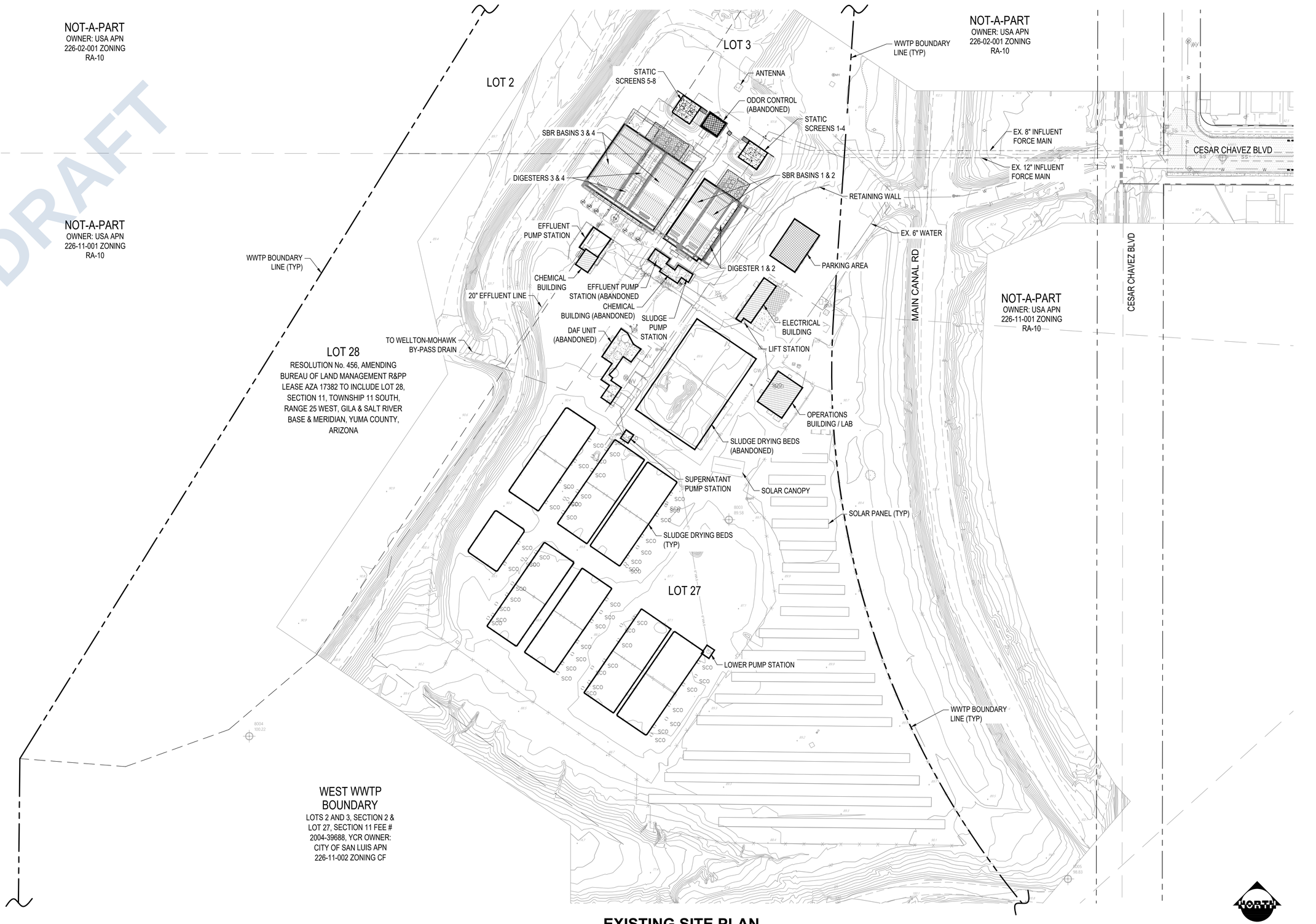

EXISTING SITE PLAN

SCALE: 1" = 60'

NO	BY	DATE	REVISIONS	DATE	APP.

Registered Professional Engineer (Civil) CERTIFICATE NO. 40050 DUONG T. DO Date Signed 12/31/27 ARIZONA, U.S.A. Expires 12/31/27

PREPARED BY DUONG DO
PROJECT ENGINEER
R.C.E. NO. -- #40050
EXP. DATE
DRAWN WW, MSA
SCALE
DESIGNED NT, NE
CHECKED DD
DATE FEB 2026

TITLE
EXISTING SITE PLAN

JOB
CITY OF SAN LUIS WEST WWTP
3.0 MGD MBR UPGRADES
SAN LUIS AZ.

PACE
Advanced Water Engineering
8723 E. VIA de COMMERCIO, SUITE A-204 | SCOTTSDALE, CA 85258
P: (408) 991-3595 | www.pacewater.com

SHEET
C1.0
10 OF 209 SHEETS
JOB NO. B777

FINAL PLANS ISSUED FOR BID

THESE DRAWINGS ARE THE PROPERTY OF P.A.C.E. AND SHALL NOT BE REPRODUCED IN ANY MANNER NOR BE USED FOR CONSTRUCTION UNLESS STAMPED "ISSUED FOR CONSTRUCTION".

W:\B777\Engineering\B777 - 3MGD Exp\3MGD FINAL DSN\sheets\B777-C1.0-EXISTING SITE PLAN.dwg - Tab: C1.0 - by wwright on 12/18/25 at 10:56:46 AM

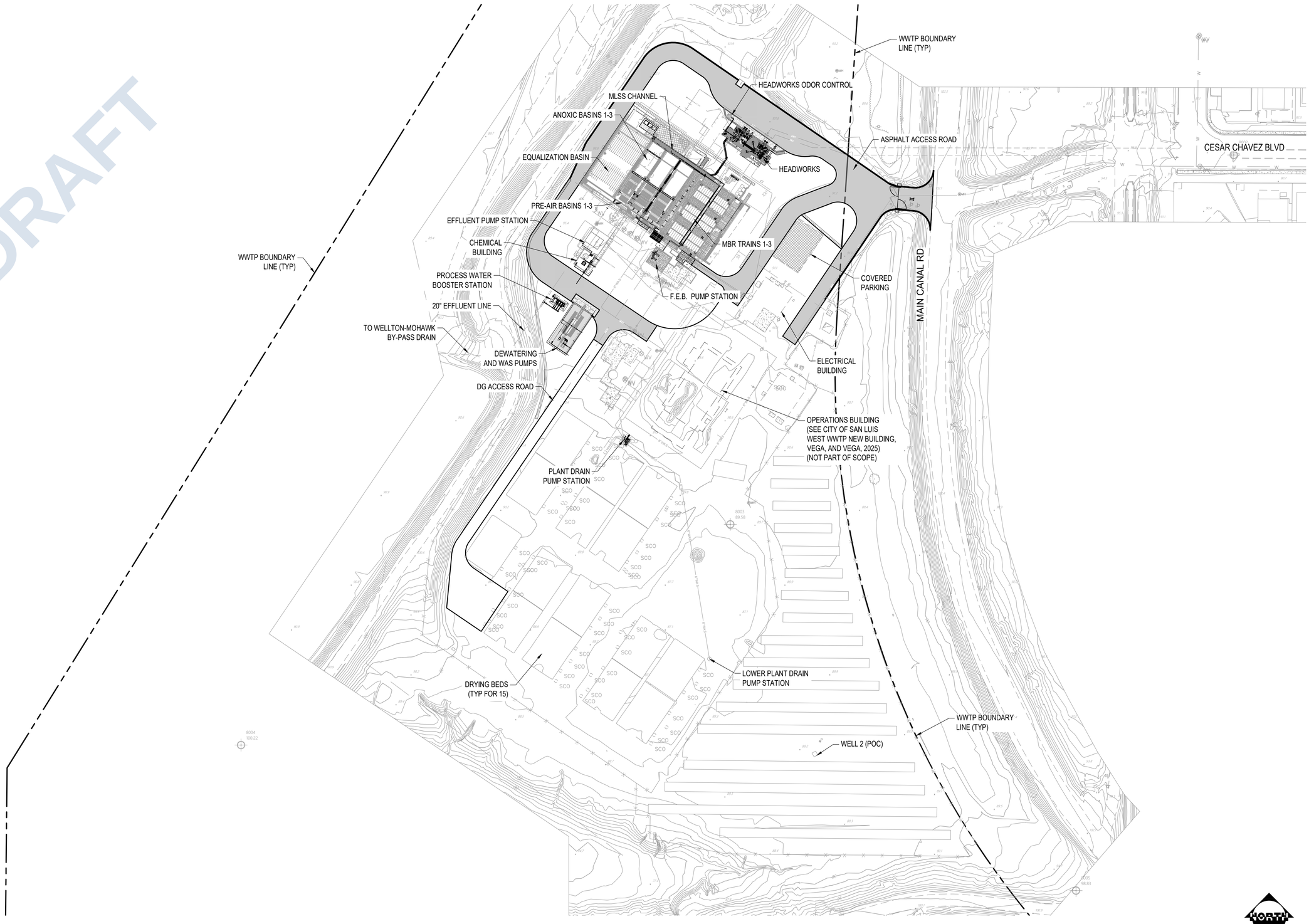

PROPOSED SITE PLAN

SCALE: 1" = 60'

DRAFT

NO	BY	DATE	REVISIONS	DATE	APP.

Registered Professional Engineer (Civil) CERTIFICATE NO. 40050 DUONG T. DO Date Signed 12/31/27 ARIZONA, U.S.A. Expires 12/31/27

PREPARED BY DUONG DO
PROJECT ENGINEER
R.C.E. NO. -- #40050
EXP. DATE
DRAWN WW, MSA
SCALE
DESIGNED NT, NE
CHECKED DD
DATE FEB 2026

TITLE
PROPOSED SITE PLAN

JOB
CITY OF SAN LUIS WEST WWTP
3.0 MGD MBR UPGRADES
SAN LUIS AZ.

PACE
Advanced Water Engineering
8723 E. VIA de COMMERCIO, SUITE A-204 | SCOTTSDALE, CA 85258
P: (408) 991-3595 | www.pacewater.com

SHEET
C2.0
11 OF 209 SHEETS
JOB NO. B777

FINAL PLANS ISSUED FOR BID

THESE DRAWINGS ARE THE PROPERTY OF P.A.C.E. AND SHALL NOT BE REPRODUCED IN ANY MANNER NOR BE USED FOR CONSTRUCTION UNLESS STAMPED "ISSUED FOR CONSTRUCTION".

W:\B777\Engineering\B777 - 3MGD Exp\3MGD FINAL DSN\sheets\B777-C2.0 PROPOSED SITE PLAN.dwg - Tab: C2.0 - by wwright on 01/30/26 at 3:53:08 PM

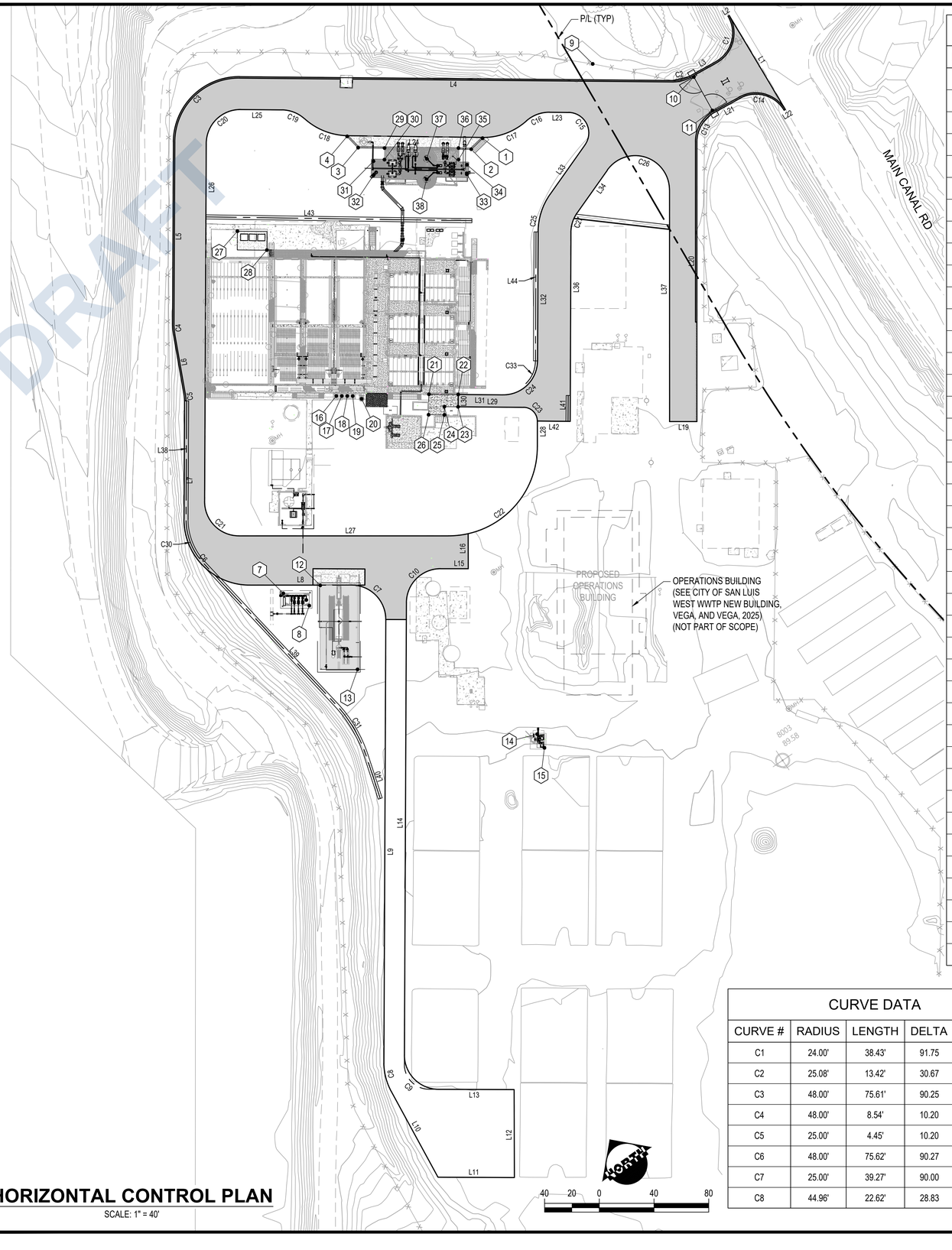

HORIZONTAL CONTROL PLAN

SCALE: 1" = 40'

LINE DATA

LINE #	DISTANCE	BEARING	START POINT	END POINT
L1	80.04'	S3°13'28"W	N 545067.57, E 377468.60	N 544987.66, E 377464.10
L2	1.00'	S86°46'32"E	N 545067.63, E 377467.61	N 545067.57, E 377468.60
L3	21.95'	S85°01'24"E	N 545046.97, E 377419.70	N 545045.07, E 377441.56
L4	316.00'	N55°29'05"W	N 545051.58, E 377407.26	N 545230.63, E 377146.88
L5	132.62'	S34°15'42"W	N 545218.11, E 377080.02	N 545108.50, E 377005.35
L6	44.33'	S24°03'57"W	N 545101.05, E 377001.20	N 545060.57, E 376983.12
L7	86.62'	S34°15'42"W	N 545056.69, E 376980.95	N 544985.10, E 376932.19
L8	74.53'	S56°00'23"E	N 544918.28, E 376945.02	N 544876.61, E 377006.82
L9	323.71'	S34°16'02"W	N 544841.91, E 377013.57	N 544574.39, E 376831.30
L10	71.29'	S5°27'10"W	N 544553.33, E 376823.70	N 544482.37, E 376816.93
L11	55.90'	S55°44'44"E	N 544482.37, E 376816.93	N 544450.90, E 376863.13
L12	64.32'	N33°48'14"E	N 544450.90, E 376863.13	N 544504.35, E 376898.91
L13	62.31'	N55°44'44"W	N 544504.35, E 376898.91	N 544539.42, E 376847.42
L14	325.54'	N34°15'25"E	N 544564.43, E 376842.67	N 544833.50, E 377025.92
L15	20.19'	S56°00'23"E	N 544850.22, E 377067.42	N 544838.93, E 377084.16
L16	25.60'	N33°59'37"E	N 544838.93, E 377084.16	N 544860.16, E 377098.47
L19	19.95'	N55°59'22"W	N 544834.64, E 377282.89	N 544845.80, E 377266.35
L20	204.19'	N34°00'19"E	N 544834.63, E 377282.91	N 545003.90, E 377397.11
L21	21.31'	N85°01'24"W	N 545012.98, E 377441.22	N 545014.83, E 377420.00
L22	1.00'	N86°46'32"W	N 544987.66, E 377464.10	N 544987.72, E 377463.10
L23	13.79'	N55°40'35"W	N 545074.52, E 377331.54	N 545082.30, E 377320.15
L24	98.12'	N55°14'59"W	N 545094.70, E 377268.89	N 545150.64, E 377188.27
L25	30.13'	N55°29'05"W	N 545193.21, E 377158.92	N 545210.29, E 377134.09
L26	261.83'	S34°15'16"W	N 545203.76, E 377099.26	N 544987.35, E 376951.89
L27	153.22'	S56°00'23"E	N 544952.55, E 376958.57	N 544866.88, E 377085.61
L28	18.98'	S33°59'37"W	N 544900.17, E 377186.45	N 544884.43, E 377175.84
L29	48.02'	S55°29'05"E	N 544941.21, E 377144.26	N 544914.00, E 377183.83
L30	9.00'	S34°30'27"W	N 544948.63, E 377149.36	N 544941.21, E 377144.26
L31	32.76'	N55°29'05"W	N 544930.06, E 377176.35	N 544948.63, E 377149.36
L32	94.28'	S34°15'16"W	N 545014.52, E 377264.25	N 544936.59, E 377211.18
L33	44.24'	N69°12'03"E	N 545032.38, E 377286.88	N 545048.09, E 377328.23
L34	38.30'	S69°12'03"W	N 545023.65, E 377331.50	N 545010.05, E 377295.69
L36	138.17'	S34°14'08"W	N 545000.75, E 377283.91	N 544886.52, E 377206.17
L37	169.46'	N33°59'37"E	N 544845.80, E 377266.35	N 544986.30, E 377361.10
L38	86.60'	S34°15'42"W	N 545055.84, E 376982.19	N 544984.27, E 376933.44
L39	141.87'	S9°06'42"E	N 544950.73, E 376925.95	N 544810.65, E 376948.42
L40	33.29'	S15°47'25"W	N 544767.60, E 376945.91	N 544735.56, E 376936.85
L41	18.94'	S34°30'55"W	N 544903.03, E 377215.59	N 544887.42, E 377204.86
L42	23.98'	N55°18'50"W	N 544886.52, E 377206.17	N 544900.17, E 377186.45
L43	194.48'	S55°10'13"E	N 545159.45, E 377069.10	N 545048.37, E 377228.74
L44	94.28'	S34°15'16"W	N 545015.37, E 377263.01	N 544937.44, E 377209.94

POINT TABLE

PNT. #	NORTHING	EASTING	DESCRIPTION
1	545094.05	377269.01	RET WALL
2	545091.98	377257.61	RET WALL
3	545139.11	377189.68	RET WALL
4	545150.52	377187.62	RET WALL
7	544899.58	376962.03	NW CNR CONC PAD
8	544881.49	376972.75	SE CNR CONC PAD
9	545094.02	377366.07	FENCE
10	545042.77	377421.84	GATE POST
11	545018.86	377419.76	GATE POST
12	544889.31	376987.67	NW CONC PAD
13	544823.06	376975.90	SE CONC PAD
14	544710.37	377058.24	NW CONC PAD
15	544699.17	377057.11	SE CONC PAD
16	544997.54	377074.90	PIPE CTR
17	544995.28	377078.21	PIPE CTR
18	544993.03	377081.51	PIPE CTR
19	544990.78	377084.82	PIPE CTR
20	544985.49	377089.06	PIPE CTR
21	544960.69	377131.76	CONC CNR
22	544948.63	377149.36	CONC CNR
23	544941.21	377144.26	CONC CNR
24	544946.88	377136.02	CONC CNR
25	544941.94	377132.62	CONC CNR
26	544948.45	377123.15	CONC CNR
27	545137.90	377082.32	NW CONC CNR
28	545114.36	377092.42	SE CONC CNR
29	545128.12	377205.52	CONC CNR
30	545121.19	377200.71	CONC CNR
31	545124.69	377193.47	INSIDE CONC CNR
32	545116.07	377187.49	INSIDE CONC CNR
33	545078.55	377244.64	INSIDE CONC CNR
34	545084.30	377248.63	INSIDE CONC CNR
35	545089.18	377244.67	CONC CNR
36	545097.13	377250.18	CONC CNR
37	545104.35	377226.74	PIPE CTR
38	545092.03	377218.20	PIPE CTR

CURVE DATA

CURVE #	RADIUS	LENGTH	DELTA	TANGENT
C1	24.00'	38.43'	91.75	24.75
C2	25.08'	13.42'	30.67	6.88
C3	48.00'	75.61'	90.25	48.21
C4	48.00'	8.54'	10.20	4.28
C5	25.00'	4.45'	10.20	2.23
C6	48.00'	75.62'	90.27	48.23
C7	25.00'	39.27'	90.00	25.00
C8	44.96'	22.62'	28.83	11.56

CURVE DATA

CURVE #	RADIUS	LENGTH	DELTA	TANGENT
C9	18.00'	28.27'	90.00	18.00
C10	25.00'	39.16'	89.74	24.89
C13	25.00'	26.60'	60.97	14.72
C14	24.00'	36.97'	88.25	23.28
C15	15.00'	32.79'	125.26	28.97
C16	25.00'	18.50'	42.41	9.70
C17	48.00'	35.45'	42.32	18.58
C18	48.00'	34.69'	41.41	18.14

CURVE DATA

CURVE #	RADIUS	LENGTH	DELTA	TANGENT
C19	25.00'	18.17'	41.65	9.51
C20	25.00'	39.38'	90.26	25.11
C21	25.00'	39.38'	90.26	25.11
C22	65.00'	102.10'	90.00	65.00
C23	10.00'	15.62'	89.48	9.91
C24	25.00'	39.38'	90.26	25.11
C25	47.89'	29.28'	35.03	15.11
C26	25.00'	63.18'	144.79	78.79
C27	25.00'	15.25'	34.95	7.87
C30	46.50'	35.20'	43.37	18.49
C31	100.00'	43.46'	24.90	22.08
C33	23.50'	18.51'	45.13	9.77

NO	BY	DATE	REVISIONS	DATE	APP.

Registered Professional Engineer (Civil) — DUONG T. DO — 40050 — Date Signed 12/31/27 — ARIZONA, U.S.A. — Expires 12/31/27

THESE DRAWINGS ARE THE PROPERTY OF P.A.C.E. AND SHALL NOT BE REPRODUCED IN ANY MANNER NOR BE USED FOR CONSTRUCTION UNLESS STAMPED "ISSUED FOR CONSTRUCTION".

PREPARED BY: DUONG DO — PROJECT ENGINEER — R.C.E. NO. #40050 — EXP. DATE —
DRAWN: WW, MSA — DESIGNED: NT, NE — CHECKED: DD — SCALE — DATE: FEB 2026

TITLE: HORIZONTAL CONTROL PLAN

JOB: CITY OF SAN LUIS WEST WWTP 3.0 MGD MBR UPGRADES — SAN LUIS AZ.

PACE Advanced Water Engineering
8723 E. VIA de COMMERCIO, SUITE A 204 | SCOTTSDALE, CA 85258
P: (408) 991-3995 | www.pacewater.com

SHEET C2.1 — 12 OF 209 SHEETS

JOB NO. B777

FINAL PLANS ISSUED FOR BID

W:\B777\Engineering\B777 - 3MGD Exp\3MGD FINAL DSN\sheets\B777-C2.1 HORIZONTAL CONTROL PLAN.dwg - Tab: C2.1 - by wwright on 01/26/26 at 3:15:45 PM

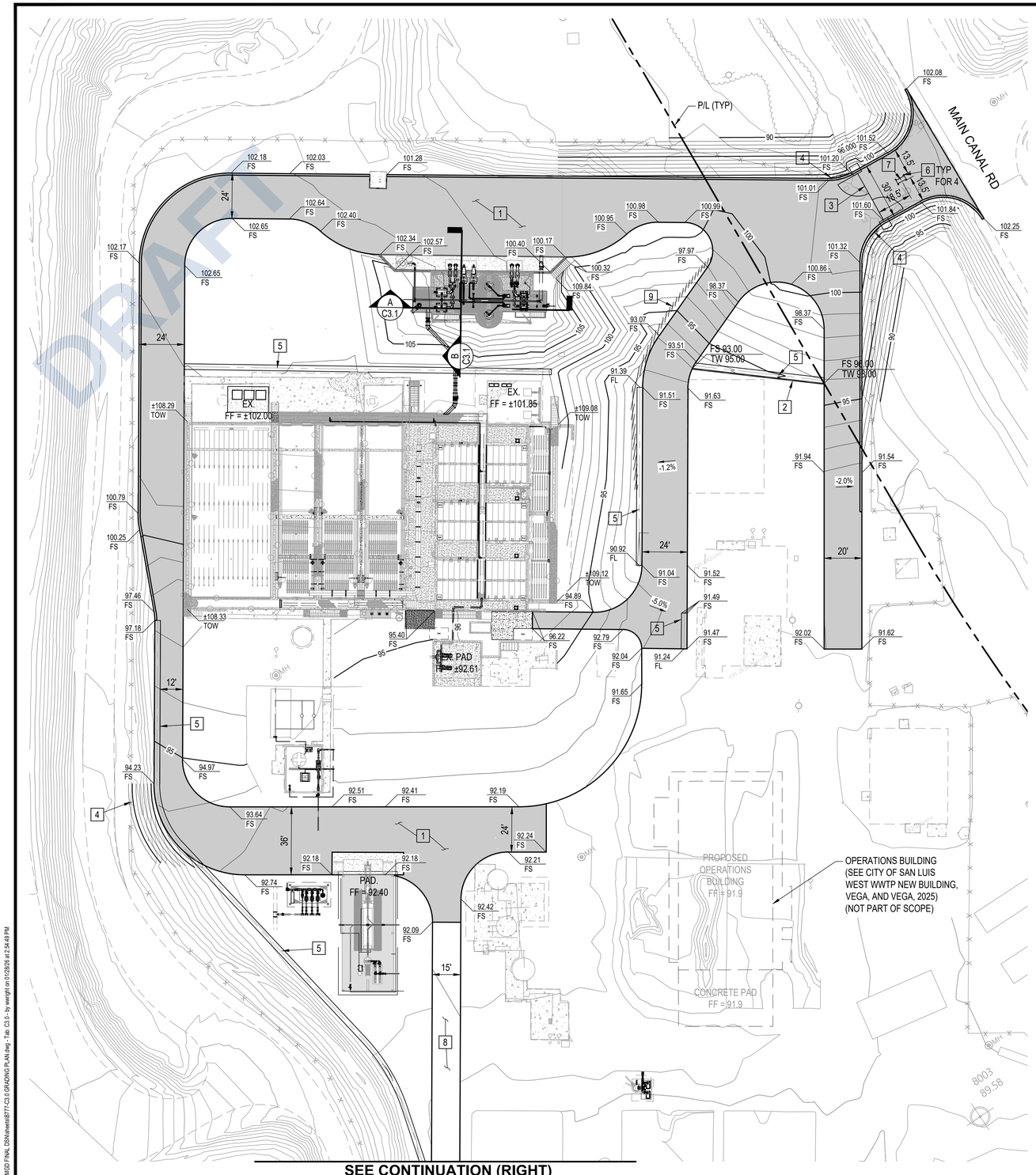

CONSTRUCTION NOTES:

1. INSTALL 3" ASPHALT OVER 8" AGGREGATE BASE COARSE PER GEOTECHNICAL REPORT WITH TYPE A THICKENED EDGE PER PER DETAIL: C/C6.0
2. INSTALL CONCRETE RETAINING WALL PER STRUCTURAL PLANS.
3. INSTALL ACCESS GATE PER DETAIL: D/C6.3
4. RELOCATE AND INSTALL NEW CHAIN LINK FENCE WHERE REQUIRED PER DETAIL F/C6.0. MATCH EXISTING.
5. INSTALL 3' CONCRETE SWALE PER DETAIL: F/C6.2
6. INSTALL PROTECTIVE BOLLARD PER DETAIL: D/C6.2
7. INSTALL GATE CARD READER PER CITY SPECIFICATION.
8. INSTALL 3" DG OVER COMPACTED NATIVE PER SPECIFICATIONS.
9. REMOVE EXISTING RETAINING WALL.

EARTHWORK ESTIMATE

CUT	773	Cu. Yd.
FILL	7,180	Cu. Yd.
NET	6,407	Cu. Yd. <FILL> ADJUSTED FOR 20% SHRINKAGE

CONTRACTOR SHALL VERIFY EARTHWORK QUANTITIES
ESTIMATED FILL INCLUDES FILL FOR PROPOSED OPERATIONS BUILDING

SEE CONTINUATION (LEFT)

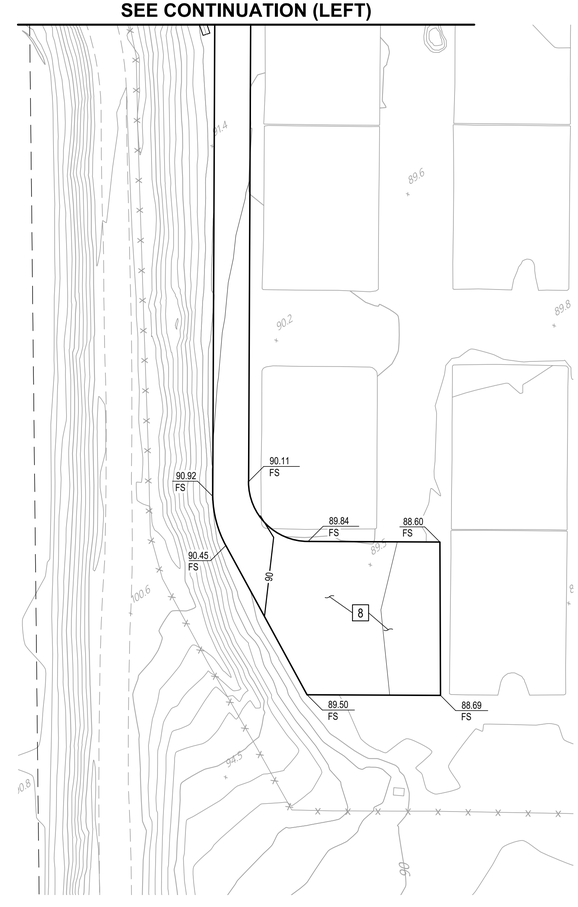

PROPOSED GRADING PLAN

SCALE: 1" = 30'

30 15 0 30 60

NO	BY	DATE	REVISIONS	DATE	APP.

Registered Professional Engineer (Civil) CERTIFICATE NO. 40050 DUONG T. DO Date Signed 12/31/27 ARIZONA, U.S.A. Expires 12/31/27

PREPARED BY DUONG DO
PROJECT ENGINEER R.C.E. NO. -- #40050
EXP. DATE
DRAWN WW, MSA
SCALE
DESIGNED NT, NE
CHECKED DD
DATE FEB 2026

TITLE
GRADING PLAN

JOB
CITY OF SAN LUIS WEST WWTP
3.0 MGD MBR UPGRADES
SAN LUIS AZ.

PACE
Advanced Water Engineering
8723 E. VIA de COMMERCIO, SUITE A-204 | SCOTTSDALE, CA 85258
P: (408) 991-3595 | www.pacewater.com

SHEET
C3.0
13 OF 209 SHEETS
JOB NO. B777

THESE DRAWINGS ARE THE PROPERTY OF P.A.C.E. AND SHALL NOT BE REPRODUCED IN ANY MANNER NOR BE USED FOR CONSTRUCTION UNLESS STAMPED "ISSUED FOR CONSTRUCTION".

FINAL PLANS ISSUED FOR BID

W:\B777\Engineering\B777 - 3MGD Exp\3MGD FINAL DSN\sheets\B777-C3.0 GRADING PLAN.dwg - Tab: C3.0 - by wwright on 01/28/26 at 2:54:49 PM

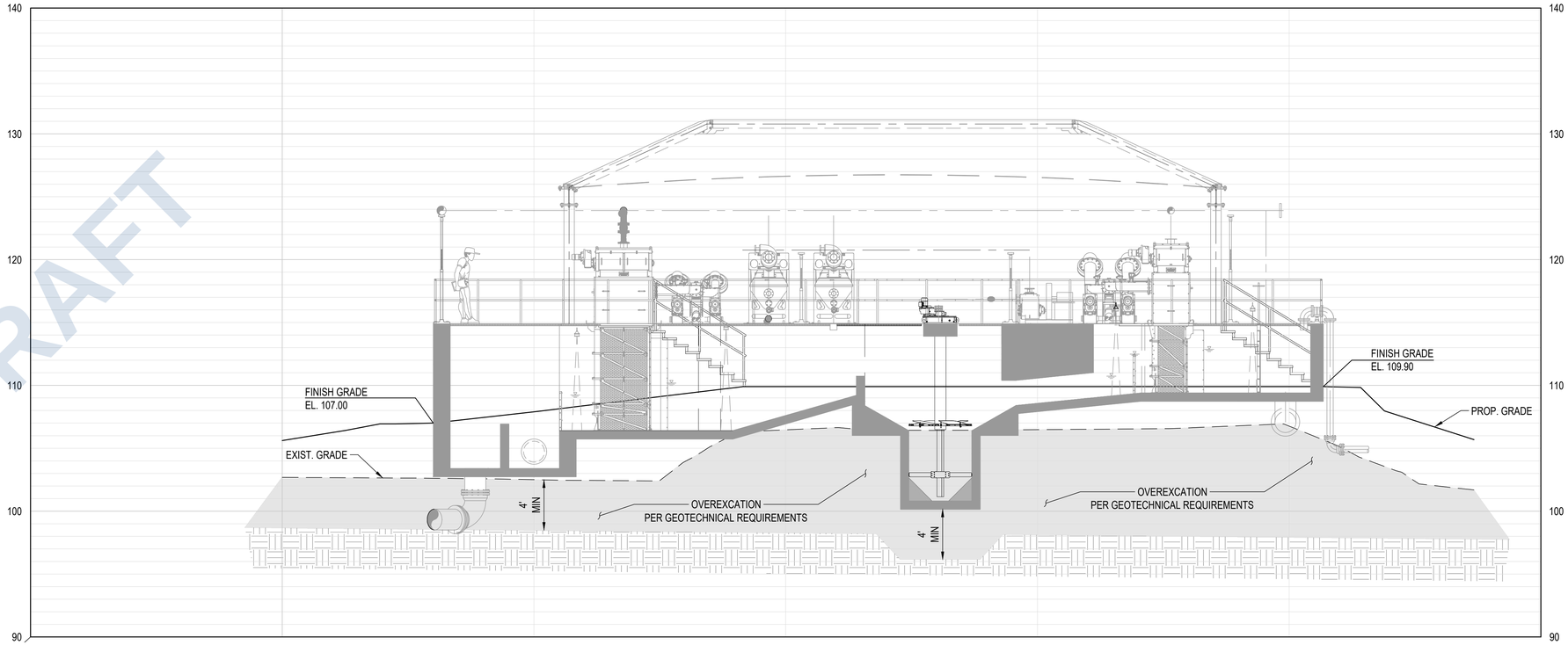

HEADWORKS CROSS SECTION - A

SCALE: 1" = 5'

NOTE:
1. OVEREXCAVATION AND BACKFILL TO OCCUR PER GEOTECHNICAL REQUIREMENTS.
2. ALL FILL MATERIAL SHALL BE APPROVED BY GEOTECHNICAL ENGINEER PRIOR TO PLACEMENT.

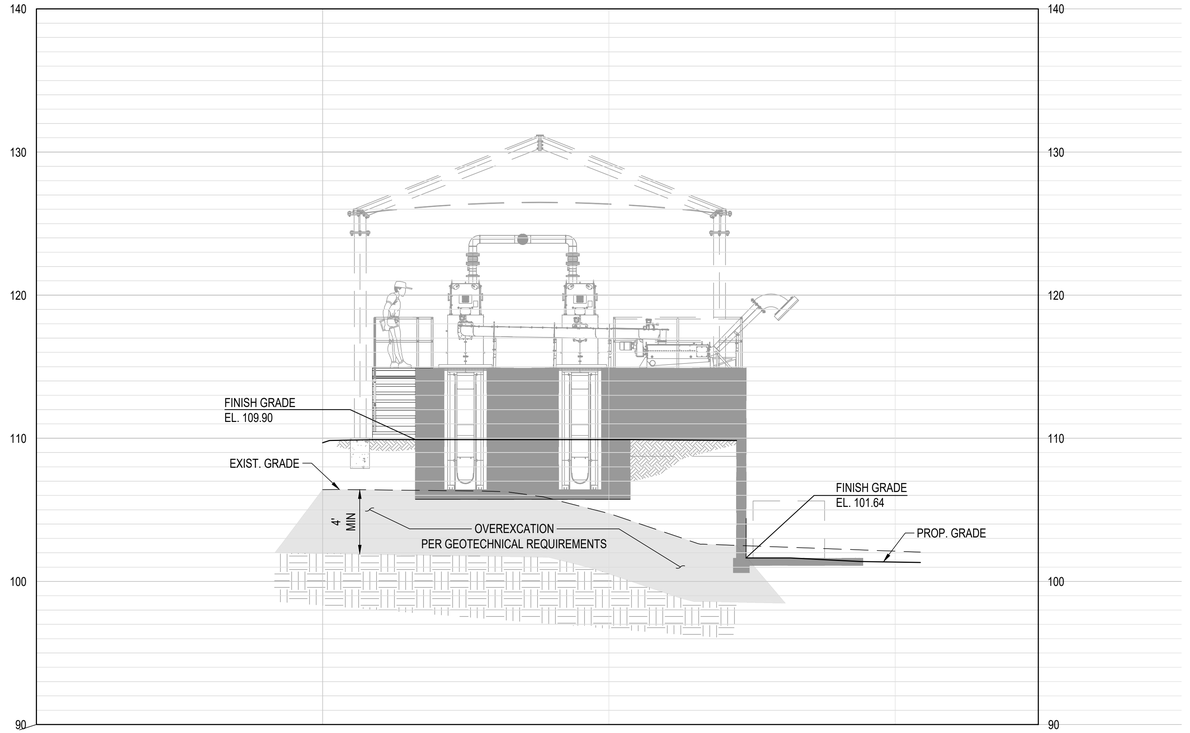

HEADWORKS CROSS SECTION - B

SCALE: 1" = 5'

DRAFT

NO	BY	DATE	REVISIONS	DATE	APP.

Registered Professional Engineer (Civil)
Dustin Tuong Duong
No. 40050
Expires 12/31/27
Date Signed 2/26/26
ARIZONA, U.S.A.

PREPARED BY
DUONG DO
PROJECT ENGINEER
#40050
R.C.E. NO. +--
EXP. DATE
SCALE
DRAWN
WW, MSA
DESIGNED
NT, NE
CHECKED
DD
DATE
FEB 2026

THESE DRAWINGS ARE THE PROPERTY OF P.A.C.E. AND SHALL NOT BE REPRODUCED IN ANY MANNER NOR BE USED FOR CONSTRUCTION UNLESS STAMPED "ISSUED FOR CONSTRUCTION".

TITLE
HEADWORKS CROSS SECTION

JOB
CITY OF SAN LUIS WEST WWTP
3.0 MGD MBR UPGRADES
SAN LUIS AZ.

PACE
Advanced Water Engineering
8723 E. VIA de COMMERCIO, SUITE A 204 | SCOTTSDALE, CA 85258
P: (408) 991-3595 | www.pacewater.com

SHEET
C3.1
14 OF 209 SHEETS

JOB NO. B777

FINAL PLANS ISSUED FOR BID

W:\B777 Engineering\B777 - 3MGD Exp\3MGD FINAL DS\Arkwest\B777-C3.0 GRADING PLAN.dwg - Tab: C3.1 - by wwright on 01/29/26 at 2:54:49 PM

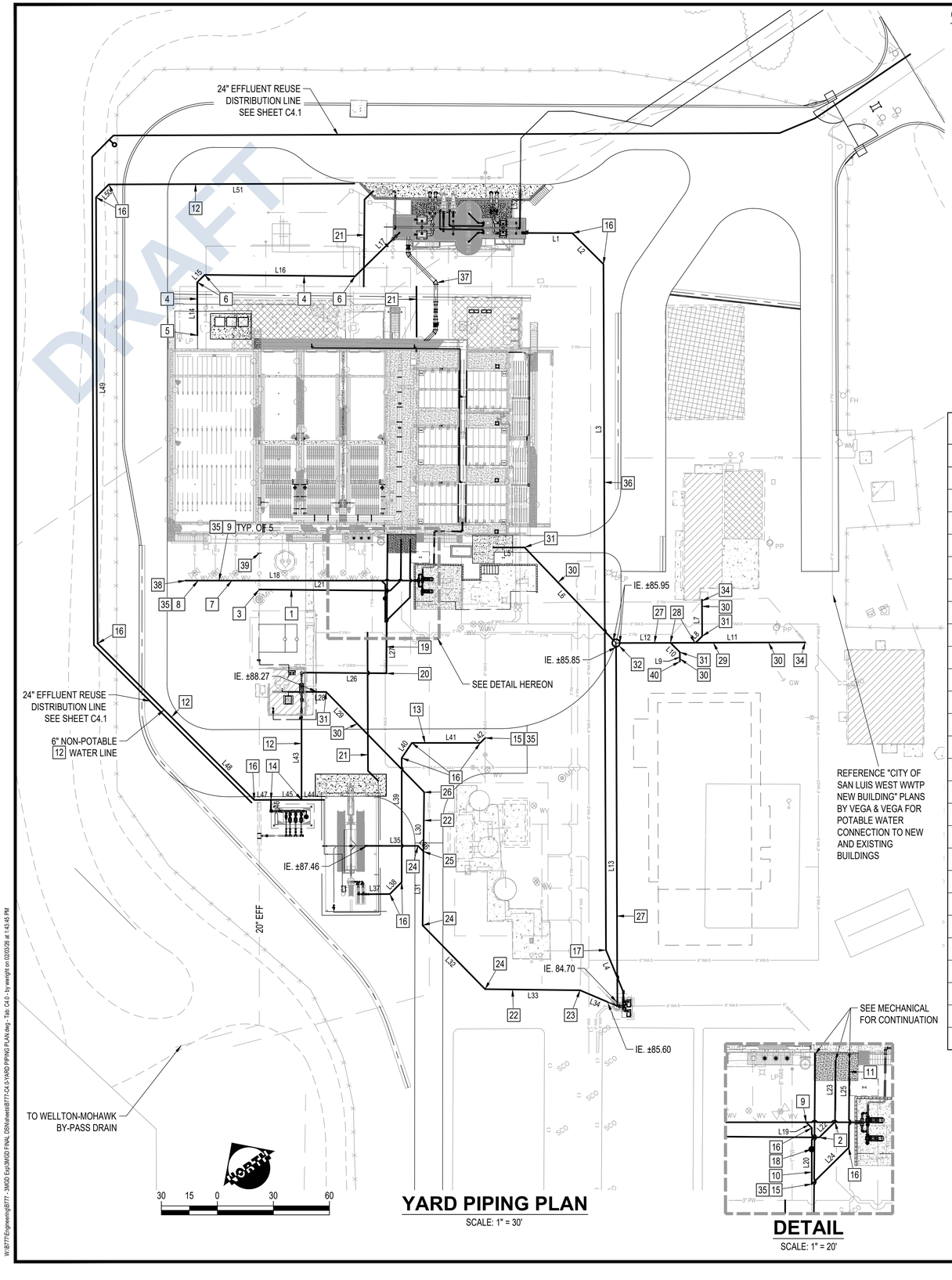

YARD PIPING PLAN

SCALE: 1" = 30'

DETAIL

SCALE: 1" = 20'

CONSTRUCTION NOTES:

1. INSTALL 24" DIP EFFLUENT LINE WITH ASSOCIATED FITTINGS AND APPURTENANCES.
2. INSTALL 24" 45° MJ ELBOW WITH RESTRAINTS
3. INSTALL 24"x18" 90° MJ REDUCING ELBOW WITH RESTRAINTS, TIE TO EXISTING 18" EFFLUENT LINE.
4. INSTALL 20" PVC C900 EQ LINE WITH ASSOCIATED FITTINGS AND APPURTENANCES.
5. INSTALL 20" MJ PLUG VALVE WITH VALVE BOX PER DETAIL: E / C6.0 SEE MECHANICAL FOR CONTINUATION .
6. INSTALL 20" 45° MJ ELBOW WITH RESTRAINTS.
7. REPLACE 6" WITH NEW 12" DIP EQ DRAIN WITH ASSOCIATED FITTINGS AND APPURTENANCES.
8. INSTALL 12"x6" 45° MJ REDUCING ELBOW WITH RESTRAINTS.
9. INSTALL 12"x12"x6" MJ WYE WITH RESTRAINTS.
10. INSTALL 6" PVC C900 EQ DRAIN WITH ASSOCIATED FITTINGS AND APPURTENANCES.
11. INSTALL 6" PVC C900 CIP DRAIN WITH ASSOCIATED FITTINGS AND APPURTENANCES.
12. INSTALL 6" PVC C900 NPW LINE WITH ASSOCIATED FITTINGS AND APPURTENANCES.
13. INSTALL 6" PVC C900 WAS LINE WITH ASSOCIATED FITTINGS AND APPURTENANCES.
14. INSTALL 6" MJ TEE WITH RESTRAINTS.
15. INSTALL 6" MJ WYE WITH RESTRAINTS.
16. INSTALL 6" 45° MJ ELBOW WITH RESTRAINTS.
17. INSTALL 6" 22.5° MJ ELBOW WITH RESTRAINTS.
18. INSTALL 6" MJ PLUG VALVE WITH VALVE BOX PER DETAIL: E / C6.0
19. INSTALL 6" PVC SCH 80 CIP LINE WITH ASSOCIATED FITTINGS AND APPURTENANCES.
20. INSTALL 6" 90° PVC SCH 80 ELBOW.
21. INSTALL 2" PVC SCH 80 POTABLE WATER LINE WITH ASSOCIATED FITTINGS AND APPURTENANCES, TIE INTO EXISTING SITE POTABLE WATER SYSTEM.
22. INSTALL 8" SDR 35 PVC GRAVITY DRAIN WITH ASSOCIATED FITTINGS AND APPURTENANCES.
23. INSTALL 8" 22.5° SDR 35 PVC ELBOW.
24. INSTALL 8" 45° SDR 35 PVC ELBOW.
25. INSTALL 8" SDR 35 PVC WYE.
26. INSTALL 8"x4" 45° SDR 35 PVC REDUCING ELBOW.
27. INSTALL 6" SDR 35 PVC GRAVITY DRAIN WITH ASSOCIATED FITTINGS AND APPURTENANCES.
28. INSTALL 6"x6"x4" SDR 35 PVC WYE.
29. INSTALL 6"x4" SDR 35 PVC REDUCER.
30. INSTALL 4" SDR 35 PVC GRAVITY DRAIN WITH ASSOCIATED FITTINGS AND APPURTENANCES.
31. INSTALL 4" 45° SDR 35 PVC ELBOW.
32. INSTALL 48" PRECAST CONCRETE MANHOLE PER DETAIL: E / C6.1
33. TRENCH AND BACKFILL PER DETAIL: B / C6.1
34. TIE INTO EXISTING GRAVITY DRAINS, CAP EXISTING PIPES DOWNSTREAM OF TIE IN, MAINTAIN MINIMUM 1% SLOPE TO INVERT AT NEW SEWER MANHOLE.
35. TIE INTO EXISTING 6" WAS LINE.
36. INSTALL 6" PVC C900 PLANT DRAIN FORCE MAIN WITH ASSOCIATED FITTINGS AND APPURTENANCES.
37. INSTALL 20" 45° DI FLANGED ELBOW, REFERENCE SHEET M1.1 FOR CONTINUATION EACH WAY.
38. INSTALL 12" DI CAP.
39. INSTALL 18" DI CAP.
40. INSTALL 4" PVC CAP.

LINE DATA

LINE #	DISTANCE	BEARING	START POINT	END POINT
L1	24.58'	N55°38'26"W	N 545064.64, E 377266.75	N 545078.51, E 377246.46
L2	23.61'	N10°50'02"W	N 545041.45, E 377271.18	N 545064.64, E 377266.75
L3	367.35'	N33°59'37"E	N 544736.88, E 377065.79	N 545041.45, E 377271.18
L4	24.31'	N11°39'25"E	N 544713.07, E 377060.88	N 544736.88, E 377065.79
L5	16.81'	N56°00'23"W	N 544939.76, E 377151.01	N 544949.16, E 377137.07
L6	70.86'	N9°30'23"W	N 544869.88, E 377162.71	N 544939.76, E 377151.01
L7	19.57'	N33°59'37"E	N 544847.00, E 377202.90	N 544863.22, E 377213.84
L8	4.95'	N78°59'37"E	N 544846.05, E 377198.04	N 544847.00, E 377202.90
L9	5.00'	N33°59'37"E	N 544842.48, E 377185.43	N 544846.62, E 377188.23
L10	7.09'	N11°00'23"W	N 544846.62, E 377188.23	N 544853.58, E 377186.88
L11	58.65'	S56°00'23"E	N 544846.05, E 377198.04	N 544813.26, E 377246.67
L12	29.15'	S56°00'23"E	N 544869.88, E 377162.71	N 544853.58, E 377186.88
L13	114.17'	N33°59'37"E	N 544710.68, E 377055.35	N 544805.34, E 377119.18
L14	28.44'	N33°59'37"E	N 545132.19, E 377069.95	N 545155.77, E 377085.85
L15	5.62'	N79°22'19"E	N 545155.77, E 377085.85	N 545156.81, E 377091.37
L16	80.54'	S55°15'00"E	N 545156.81, E 377091.37	N 545110.90, E 377157.55
L17	33.44'	N79°45'00"E	N 545110.90, E 377157.55	N 545116.85, E 377190.46
L18	126.93'	S55°47'59"E	N 545027.19, E 376990.73	N 544955.84, E 377095.71
L19	2.83'	S10°47'59"E	N 544968.12, E 377077.65	N 544965.34, E 377078.18
L20	20.06'	S34°12'15"W	N 544965.34, E 377078.18	N 544948.75, E 377066.90
L21	69.92'	S55°19'08"E	N 545000.83, E 377020.97	N 544961.04, E 377078.47
L22	7.90'	N79°40'45"E	N 544961.04, E 377078.47	N 544962.46, E 377086.24
L23	21.83'	N34°42'10"E	N 544962.46, E 377086.24	N 544980.41, E 377098.67
L24	18.52'	N79°32'00"E	N 544948.75, E 377066.90	N 544952.12, E 377085.12
L25	31.00'	N34°40'45"E	N 544952.12, E 377085.12	N 544977.61, E 377102.76
L26	42.36'	N55°19'15"W	N 544925.61, E 377051.89	N 544949.72, E 377017.05

LINE DATA

LINE #	DISTANCE	BEARING	START POINT	END POINT
L27	73.98'	S34°40'19"W	N 544986.46, E 377093.97	N 544925.61, E 377051.89
L28	10.49'	N55°23'16"W	N 544935.45, E 377019.61	N 544941.41, E 377010.97
L29	75.00'	N10°09'32"W	N 544861.63, E 377032.84	N 544935.45, E 377019.61
L30	31.83'	N34°50'28"E	N 544835.50, E 377014.65	N 544861.63, E 377032.84
L31	39.55'	N34°50'28"E	N 544803.04, E 376992.06	N 544835.50, E 377014.65
L32	47.83'	N10°09'32"W	N 544755.97, E 377000.49	N 544803.04, E 376992.06
L33	50.90'	N55°07'49"W	N 544726.87, E 377042.25	N 544755.97, E 377000.49
L34	21.69'	N32°40'10"W	N 544708.61, E 377053.96	N 544726.87, E 377042.25
L35	27.72'	S55°46'59"E	N 544855.26, E 376990.98	N 544839.67, E 377013.90
L36	4.23'	S10°09'32"E	N 544839.67, E 377013.90	N 544835.50, E 377014.65
L37	12.42'	S56°14'38"E	N 544833.70, E 376976.64	N 544826.80, E 376986.97
L38	9.01'	N79°12'01"E	N 544826.80, E 376986.97	N 544828.49, E 376995.82
L39	66.46'	N34°12'01"E	N 544828.49, E 376995.82	N 544883.45, E 377033.17
L40	9.73'	N67°57'01"E	N 544883.45, E 377033.17	N 544887.11, E 377042.19
L41	36.63'	S55°47'24"E	N 544887.11, E 377042.19	N 544866.51, E 377072.48
L42	3.75'	N79°12'01"E	N 544866.51, E 377072.48	N 544867.22, E 377076.17
L43	44.07'	N34°10'09"E	N 544895.06, E 376976.21	N 544931.52, E 377000.96
L44	12.07'	S55°50'46"E	N 544895.06, E 376976.21	N 544888.29, E 376986.20
L45	16.39'	S55°49'50"E	N 544904.27, E 376962.65	N 544895.06, E 376976.21
L46	6.07'	S34°10'10"W	N 544904.27, E 376962.65	N 544899.25, E 376959.24
L47	8.96'	S55°48'34"E	N 544909.30, E 376955.24	N 544904.27, E 376962.65
L48	118.54'	S10°49'50"E	N 545025.73, E 376932.96	N 544909.30, E 376955.24
L49	238.95'	S33°59'48"W	N 545223.84, E 377066.57	N 545025.73, E 376932.96
L50	9.73'	S78°59'37"W	N 545225.70, E 377076.13	N 545223.84, E 377066.57
L51	131.47'	N56°00'23"W	N 545152.19, E 377185.13	N 545225.70, E 377076.13
L52	21.55'	N34°44'29"E	N 545082.56, E 377245.00	N 545100.26, E 377257.28

NO	BY	DATE	REVISIONS	DATE	APP.

THESE DRAWINGS ARE THE PROPERTY OF P.A.C.E. AND SHALL NOT BE REPRODUCED IN ANY MANNER NOR BE USED FOR CONSTRUCTION UNLESS STAMPED "ISSUED FOR CONSTRUCTION".

Registered Professional Engineer (Civil) — DUONG T. DO — 40050 — State of Arizona — Expires 12/31/27

PREPARED BY: DUONG DO
PROJECT ENGINEER #40050
R.C.E. NO. 40050
EXP. DATE 12/31/27
DRAWN: WW, MSA
SCALE:
DESIGNED: NT, NE
CHECKED: DD
DATE: FEB 2026

TITLE: YARD PIPING PLAN

JOB: CITY OF SAN LUIS WEST WWTP 3.0 MGD MBR UPGRADES — SAN LUIS AZ.

PACE
Advanced Water Engineering
8723 E. VIA de COMMERCIO, SUITE A-204 | SCOTTSDALE, CA 85258
P: (408) 991-3595 | www.pacewater.com

FINAL PLANS ISSUED FOR BID

SHEET C4.0
15 OF 209 SHEETS

JOB NO. B777

W:\B777\Engineering\B777 - 3MGD Exp\3MGD FINAL DSN\sheets\B777-C4.0-YARD PIPING PLAN.dwg - Tab: C4.0 - by wwright on 02/03/26 at 1:45:45 PM

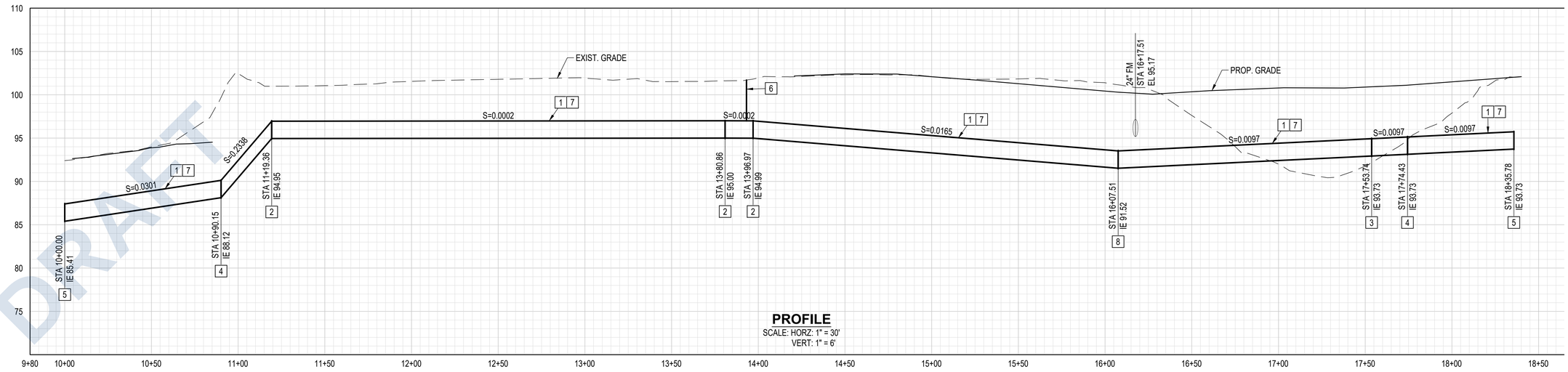

PROFILE
SCALE: HORZ: 1" = 30'
VERT: 1" = 6'

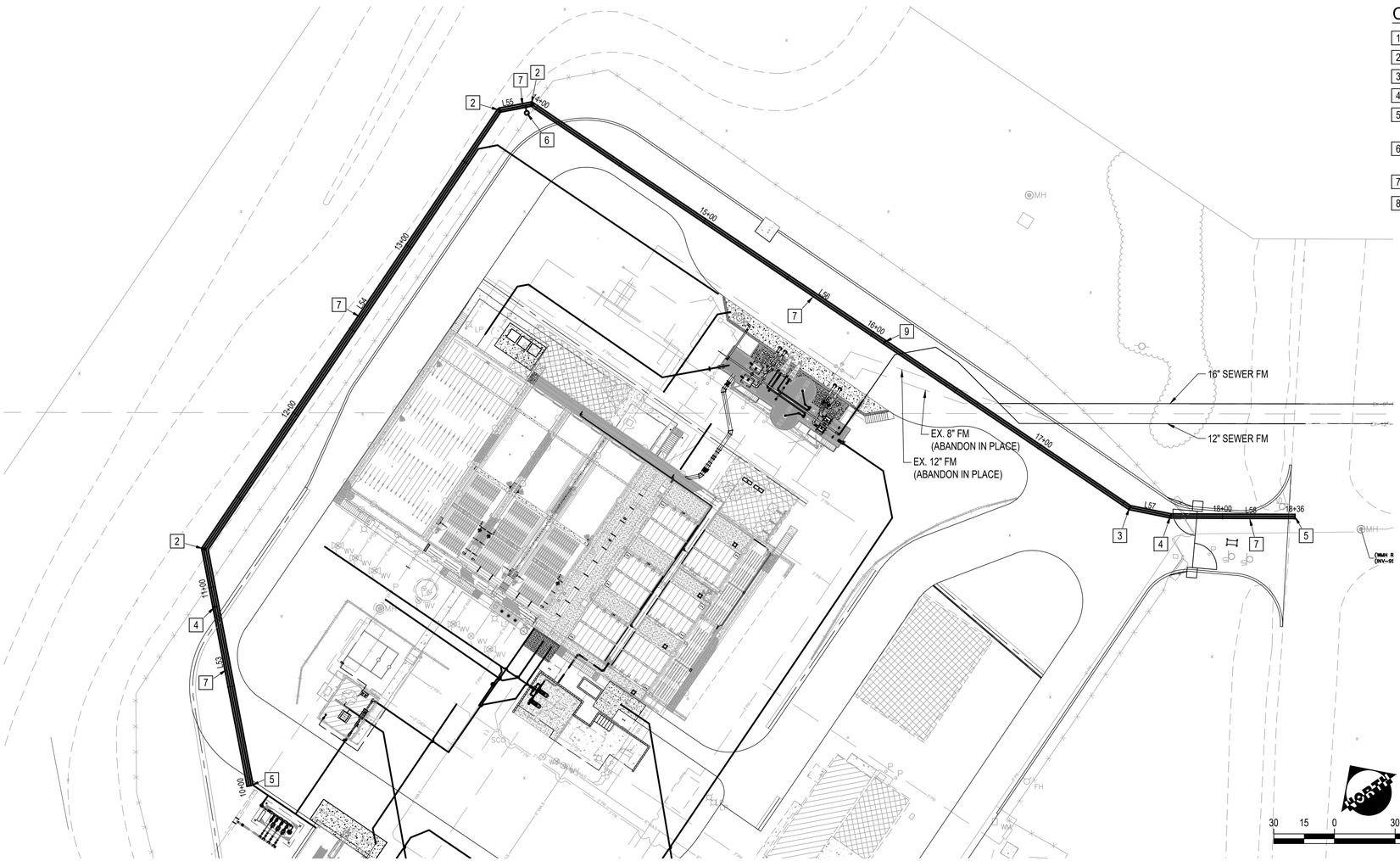

CONSTRUCTION NOTES:

1. INSTALL 24" PVC C900 WITH ASSOCIATED FITTINGS AND APPURTENANCES.
2. INSTALL 24" 45° MJ ELBOW WITH RESTRAINTS.
3. INSTALL 24" 22.5° MJ ELBOW WITH RESTRAINTS.
4. INSTALL 24" 11.25° MJ ELBOW WITH RESTRAINTS.
5. INSTALL 24" MJ CAP FOR FUTURE LINE CONNECTION.
6. INSTALL 2" SADDLE TAP PER DETAIL C/M11.1 WITH 2" GALVANIZED STEEL PIPE (WRAPPED) AND CAPPED FOR FUTURE COMBINATION AIR VALVE.
7. TRENCH AND BACKFILL PER DETAIL: B/C6.1
8. INSTALL 24" MJ COUPLING.

LINE DATA

LINE #	DISTANCE	BEARING	START POINT	END POINT
L53	119.36'	N10°49'50"W	N 544908.93, E 376953.27	N 545026.17, E 376930.84
L54	261.49'	N33°59'22"E	N 545026.17, E 376930.84	N 545242.98, E 377077.03
L55	16.12'	N79°10'51"E	N 545242.98, E 377077.03	N 545246.00, E 377092.86
L56	356.77'	S56°00'23"E	N 545246.00, E 377092.86	N 545046.54, E 377388.65
L57	20.68'	S78°30'23"E	N 545046.54, E 377388.65	N 545042.41, E 377408.92
L58	61.36'	S89°45'23"E	N 545042.41, E 377408.92	N 545042.15, E 377470.28

30 15 0 30 60

24" INFLUENT REUSE PLAN
SCALE: 1" = 30'

NO	BY	DATE	REVISIONS	DATE	APP.

Registered Professional Engineer (Civil)
CERTIFICATE NO. 40050
DUONG T. DO
Date Signed 12/31/27
ARIZONA, U.S.A.
Expires 12/31/27

PREPARED BY DUONG DO
PROJECT ENGINEER
R.C.E. NO. -- #40050
EXP. DATE
DRAWN WW, MSA
SCALE
DESIGNED NT, NE
CHECKED DD
DATE FEB 2026

TITLE
24 INCH EFFLUENT REUSE DISTRIBUTION LINE PLAN & PROFILE

JOB
CITY OF SAN LUIS WEST WWTP
3.0 MGD MBR UPGRADES
SAN LUIS AZ.

PACE
Advanced Water Engineering
8723 E. VIA de COMMERCIO, SUITE A-204 | SCOTTSDALE, CA 85258
P: (408) 991-3595 | www.pacewater.com

SHEET
C4.1
16 OF 209 SHEETS
JOB NO. B777

THESE DRAWINGS ARE THE PROPERTY OF P.A.C.E. AND SHALL NOT BE REPRODUCED IN ANY MANNER NOR BE USED FOR CONSTRUCTION UNLESS STAMPED "ISSUED FOR CONSTRUCTION".

FINAL PLANS ISSUED FOR BID

W:\B777\Engineering\B777 - 3MGD Exp\3MGD FINAL DS\Nsheets\B777-C4.0-YARD PIPING PLAN.dwg - Tab: C4.1 - by wwright on 02/03/26 at 1:43:45 PM

JOINT RESTRAINT — N.T.S. — A

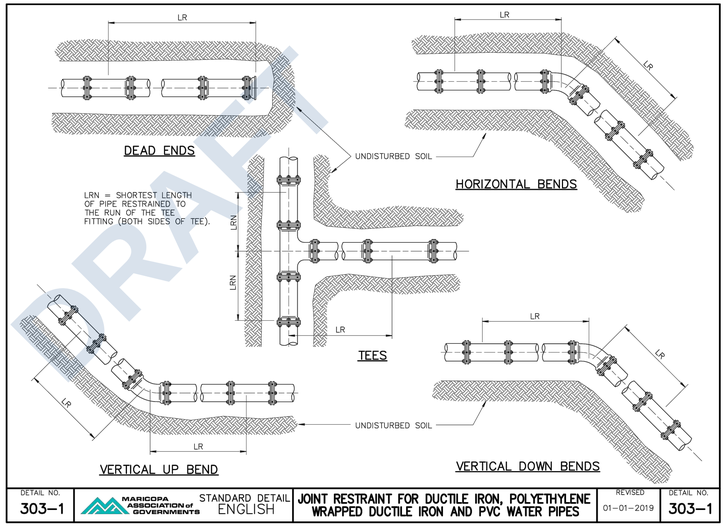

DETAIL NO.	STANDARD DETAIL		REVISED	DETAIL NO.
303–1	MARICOPA ASSOCIATION of GOVERNMENTS ENGLISH	JOINT RESTRAINT FOR DUCTILE IRON, POLYETHYLENE WRAPPED DUCTILE IRON AND PVC WATER PIPES	01–01–2019	303–1

NOT USED — N.T.S. — B

ASPHALT EDGE DETAIL — N.T.S. — C

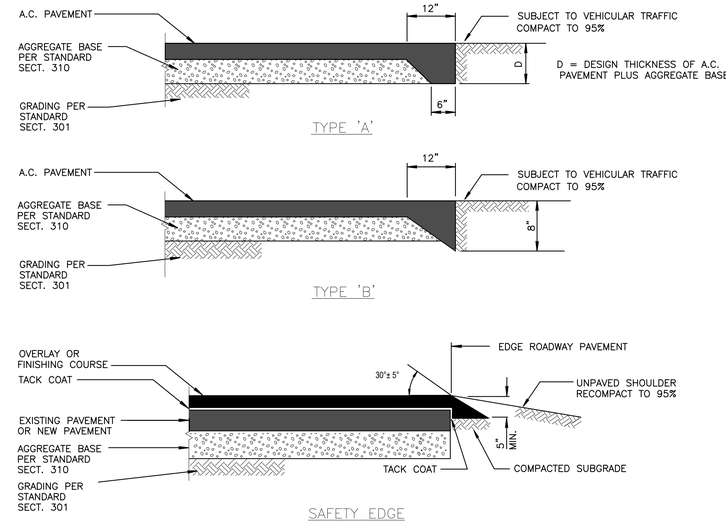

NOT USED — N.T.S. — D

VALVE BOX — N.T.S. — E

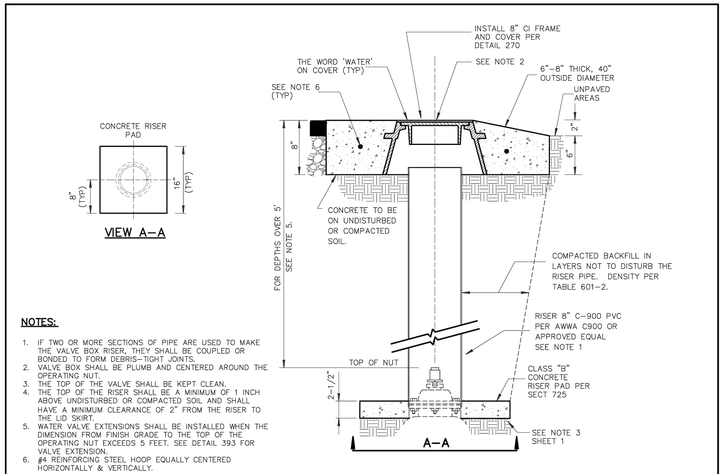

NOTES:

1. IF TWO OR MORE SECTIONS OF PIPE ARE USED TO MAKE THE VALVE BOX RISER, THEY SHALL BE COUPLED OR BONDED TO FORM DEBRIS–TIGHT JOINTS.
2. VALVE BOX SHALL BE PLUMB AND CENTERED AROUND THE OPERATING NUT.
3. THE TOP OF THE VALVE SHALL BE KEPT CLEAN.
4. THE TOP OF THE RISER SHALL BE A MINIMUM OF 1 INCH ABOVE UNDISTURBED OR COMPACTED SOIL AND SHALL HAVE A MINIMUM CLEARANCE OF 2" FROM THE RISER TO THE LID SKIRT.
5. WATER VALVE EXTENSIONS SHALL BE INSTALLED WHEN THE DIMENSION FROM FINISH GRADE TO THE TOP OF THE OPERATING NUT EXCEEDS 5 FEET. SEE DETAIL 393 FOR VALVE EXTENSION.
6. #4 REINFORCING STEEL HOOP EQUALLY CENTERED HORIZONTALLY & VERTICALLY.

DETAIL NO.	STANDARD DETAIL		REVISED	DETAIL NO.
391–2	MARICOPA ASSOCIATION of GOVERNMENTS ENGLISH	VALVE BOX INSTALLATION AND GRADE ADJUSTMENT	01–01–2023	391–2

6' CHAIN LINK FENCE & GATE — N.T.S. — F

	MEMBER	AISC SIZE	OUTSIDE DIA.
1	CORNER POST	2 1/2"	2.875"
2	LINE POST	1 1/2"	1.900"
3	STRAIN POST	1 1/2"	1.900"
4	BRACE	1 1/4"	1.666"
5	STRETCH BAR	3/16" X 3/4" FLAT	3/16" X 3/4" FLAT
6	GATE POST	3 1/2"	4.000"
7	TOP RAIL	1 1/4"	1.666"

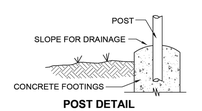

POST DETAIL

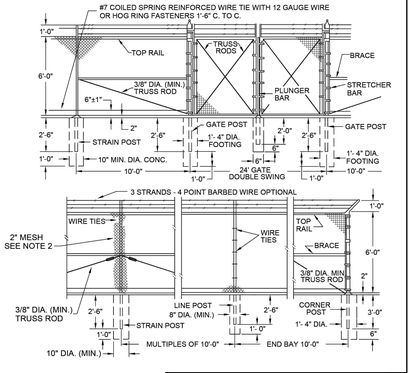

NOTES

1. All concrete shall be Class C per MAG Section 725.
2. Fence fabric shall be nine gauge / 2" mesh chain link.
3. Strain posts shall be spaced at 500' intervals (maximum).
4. Both corner and strain posts shall have at least one strain panel.
5. All posts shall be capped and plumb.
6. Fence shall not extend into visibility triangles at alleys, driveways and street intersections.
7. Fences built in front yard setbacks shall have a maximum height of three feet (3').
8. Construction and materials shall conform to MAG Sections 420 and 772 respectively. See MAG Table 772-1 for weight of member

Issued: May 2019

CITY OF YUMA
CONSTRUCTION STANDARD DETAIL DRAWINGS
STANDARD NO. 1-035
6' CHAIN LINK FENCE & GATE
(INDUSTRIAL USE ONLY)

NO	BY	DATE	REVISIONS	DATE	APP.

Registered Professional Engineer (Civil) — DUONG T. DO — 40050 — ARIZONA, U.S.A. — Date Signed 12/31/27 — Expires 12/31/27

PREPARED BY: DUONG DO
PROJECT ENGINEER #40050
R.C.E. NO. —
EXP. DATE
SCALE
DRAWN: WW, MSA
DESIGNED: NT, NE
CHECKED: DD
DATE: FEB 2026

THESE DRAWINGS ARE THE PROPERTY OF P.A.C.E. AND SHALL NOT BE REPRODUCED IN ANY MANNER NOR BE USED FOR CONSTRUCTION UNLESS STAMPED 'ISSUED FOR CONSTRUCTION'.

TITLE: CIVIL DETAILS

JOB: CITY OF SAN LUIS WEST WWTP 3.0 MGD MBR UPGRADES — SAN LUIS, AZ.

PACE
Advanced Water Engineering
8723 E. VIA de COMMERCIO, SUITE A-204 | SCOTTSDALE, CA 85258
P: (408) 991-3595 | www.pacewater.com

FINAL PLANS ISSUED FOR BID

SHEET C6.0
17 OF 209 SHEETS

JOB NO. B777

W:\B777\Engineering\B777 - 3MGD Exp\3MGD FINAL DS\sheets\B777-C6.0-CIVIL DETAILS.dwg - Tab: C6.0 - by wwright on 01/29/26 at 11:15:32 AM

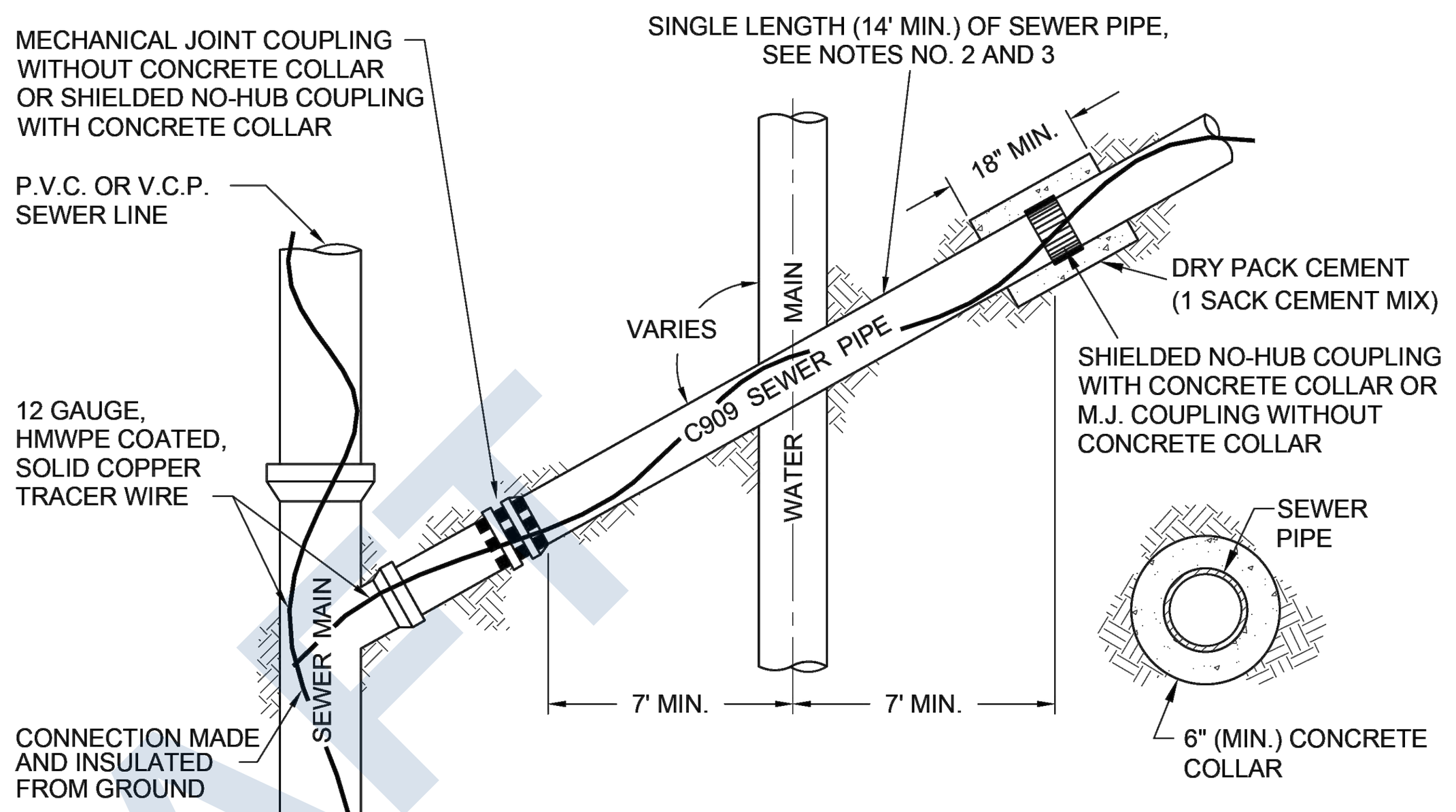

NOTES

1. In order to protect the public water systems from possible contamination, a water main and/or water service line shall not be placed:
   A. Within seven (7) feet, horizontal distance of either side of a sewer manhole, sewer main or sewer service, and below two (2) feet vertical distance, above the top of the sewer line unless extra protection is provided. Extra protection shall consist of constructing the sewer main with mechanical joints or with approved no-hub joints encased in a minimum of 6" thick by 18" long concrete collar centered on the joint.
   B. Within 2 feet horizontally and 2 feet below the sewer main.
2. For extra protection use molecularly oriented polyvinyl chloride (PVCO) which meets ANSI/AWWA C909 installed at crossing location per drawing.
3. Water over sewer:
   2' or less separation: C909 required
   Over 2' separation: C909 not required.
   Sewer over water:
   C909 is required no matter the distance of separation.
4. All ferrous fittings, pipe, connectors and appurtenances shall receive a 10mil (minimum) polyethylene wrap to prevent direct contact with soil.
5. All sewer lines shall have tracer wire in accordance with State Law and City utility department policy.

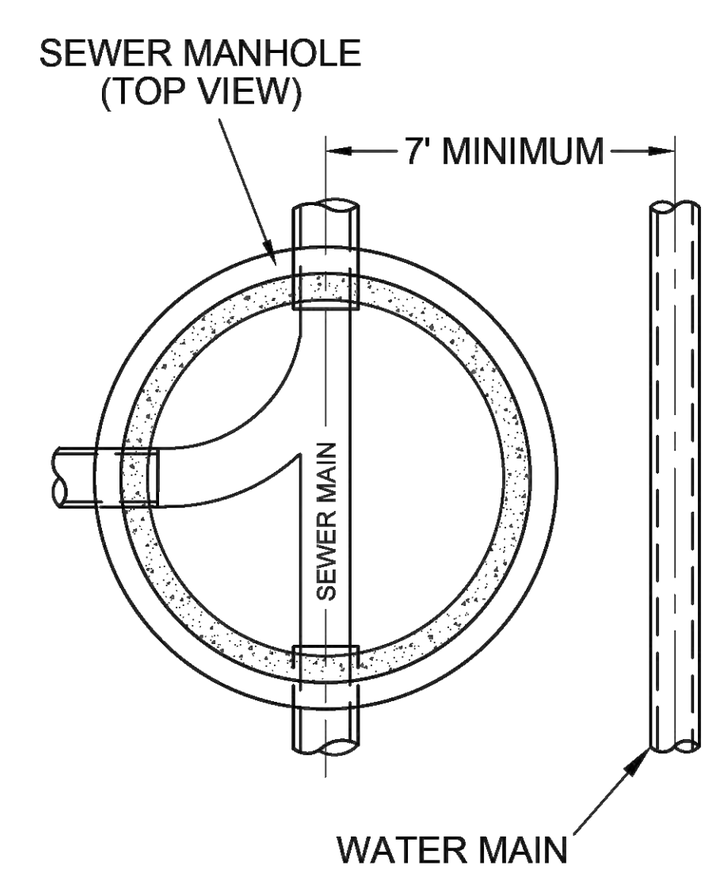

Issued: May 2019

CITY OF YUMA
CONSTRUCTION STANDARD DETAIL DRAWINGS

STANDARD NO. 5-005
TYPICAL WATER & SEWER CROSSINGS

DRAFT

TYPICAL WATER & SEWER CROSSING
N.T.S. A

WATER MAIN TRENCH

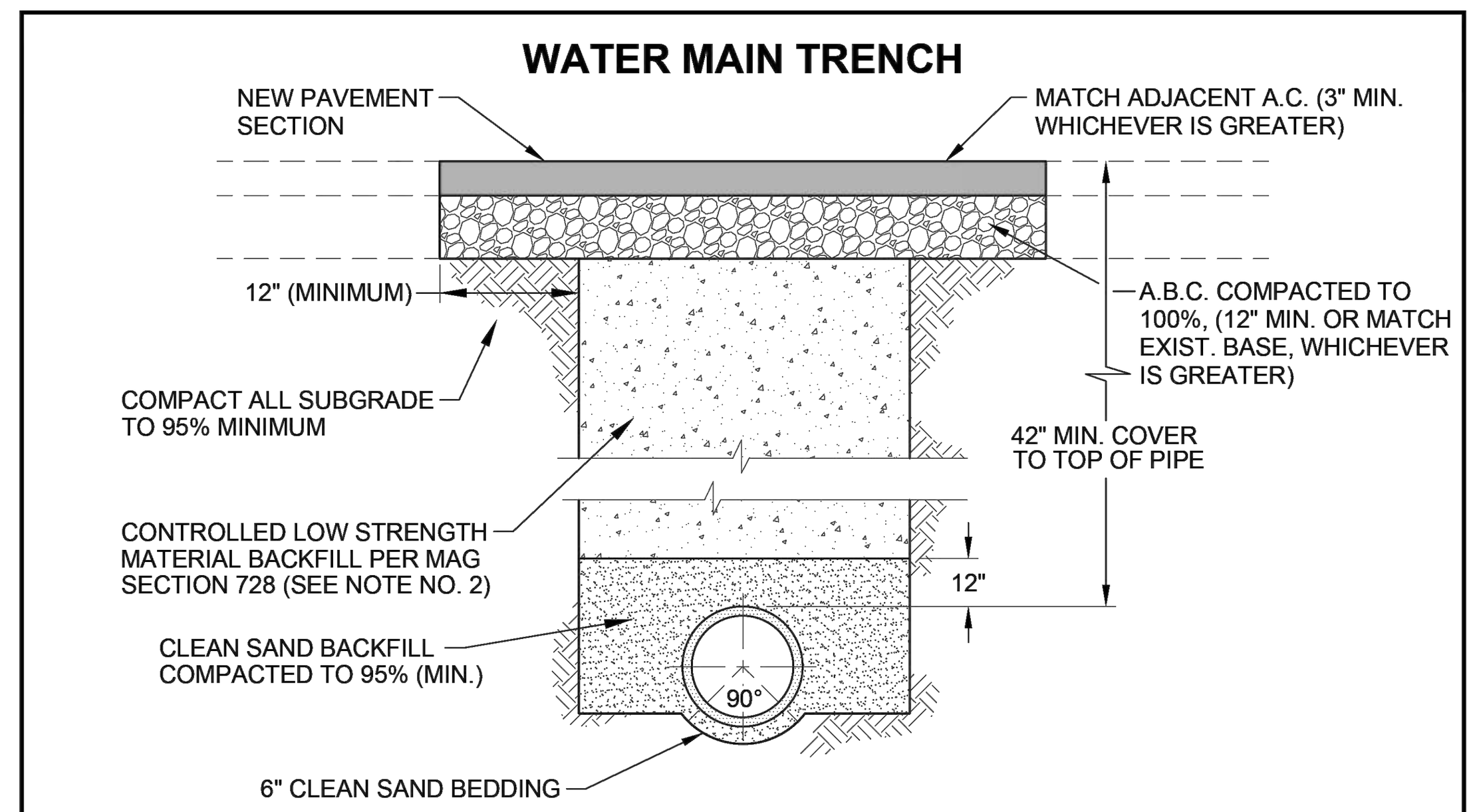

SEWER MAIN TRENCH

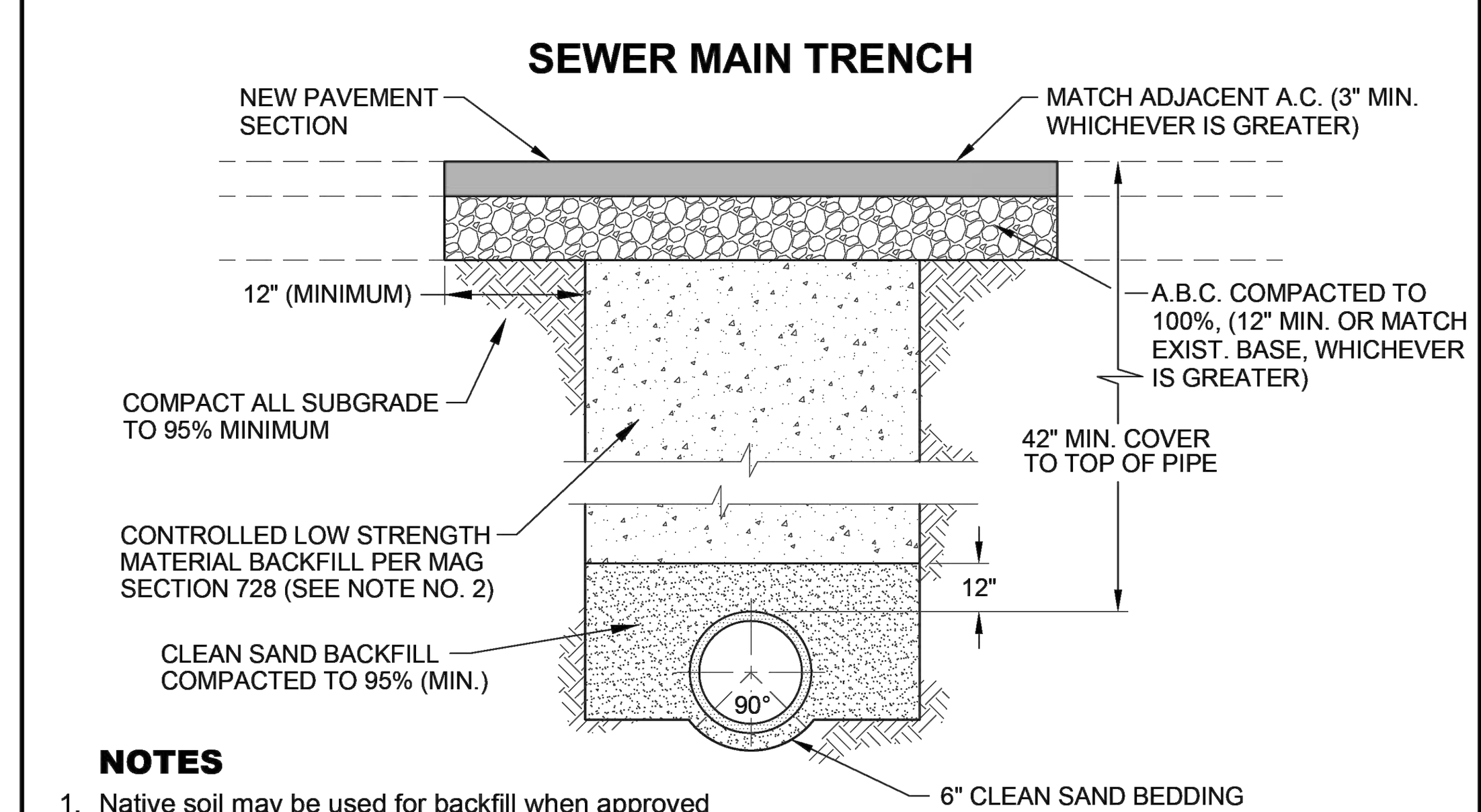

NOTES

1. Native soil may be used for backfill when approved by the City Engineer.
2. Controlled low strength material shall consist of one sack of cement per cubic yard of clean sand.
3. Bedding shown is a minimum standard for shallow trenches and acceptable native base. Exact type of bedding shall be determined by the City Engineer.
4. Ditch sides shall be sloped or shored as required per OSHA standards.
5. All trenches shall be cold-patched if left open to traffic. All trenches shall be hot-mix paved within two (2) weeks of its excavation.

Issued: May 2019

CITY OF YUMA
CONSTRUCTION STANDARD DETAIL DRAWINGS

STANDARD NO. 5-010
TYPICAL WATER & SEWER MAIN TRENCH BACKFILL

TYPICAL WATER & SEWER MAIN TRENCH BACKFILL
N.T.S. B

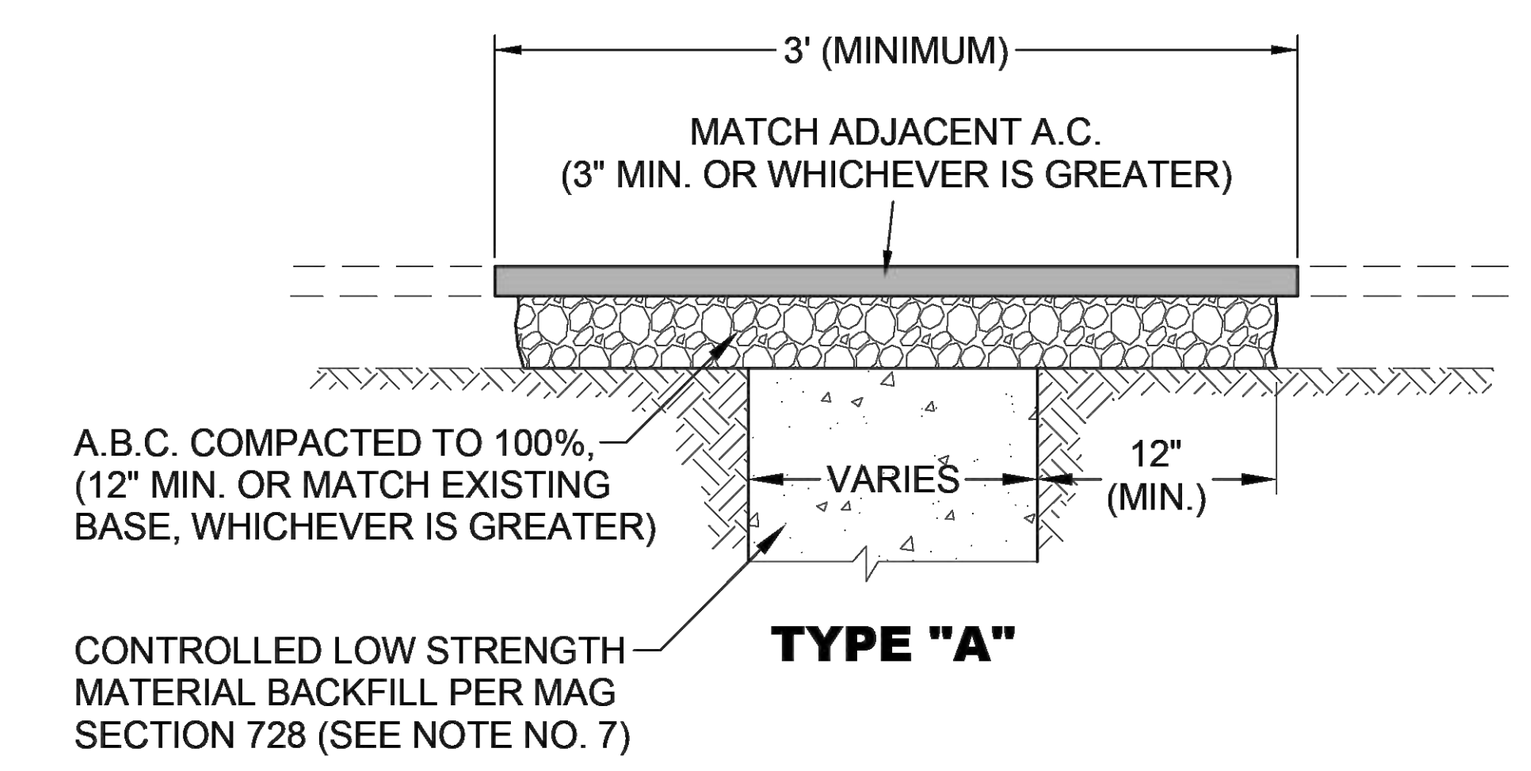

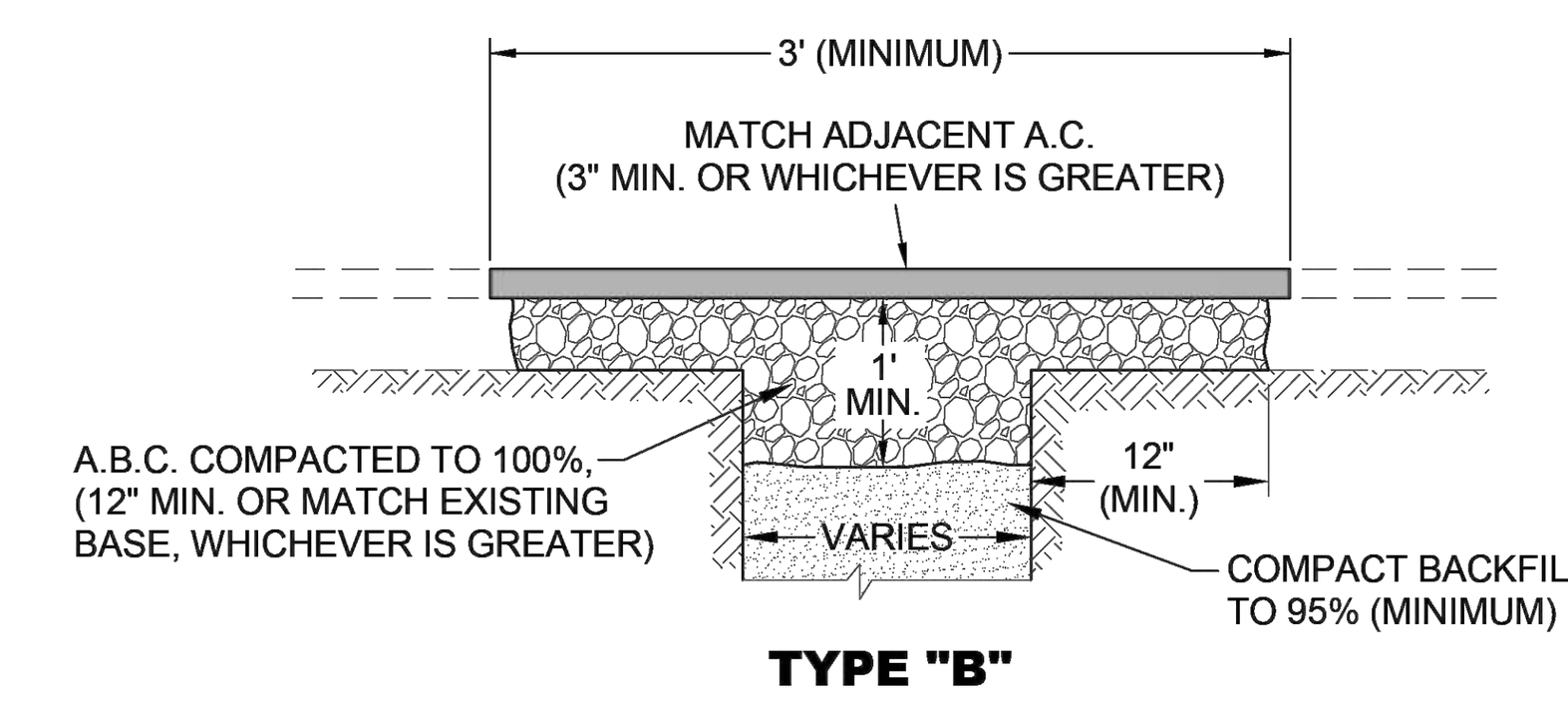

NOTES

1. This detail is to be used for trench backfill and pavement replacement.
2. All cut edges shall be sawcut to a true regular line and free of all foreign matter.
3. Edges of asphalt pavement shall be painted with emulsified asphalt or hot asphalt before permanent repair material is placed.
4. Type "B" repairs will not be permitted without prior approval of the City Engineer.
5. Asphaltic concrete for pavement repairs shall meet or be equivalent to requirements of the latest MAG Standard Specifications Section 710.
6. Pavement replacement in State highways or County highways shall be in accordance with ADOT and/or Yuma County requirements.
7. Controlled low strength material shall consist of one sack of cement per cubic yard of clean sand.
8. All trenches shall be cold-patched if left open to traffic prior to hot-mix paving. All trenches shall be hot-mix paved within two (2) weeks from its excavation.

Issued: May 2019

CITY OF YUMA
CONSTRUCTION STANDARD DETAIL DRAWINGS

STANDARD NO. 5-016
PAVEMENT REPLACEMENT

PAVEMENT REPLACEMENT
N.T.S. C

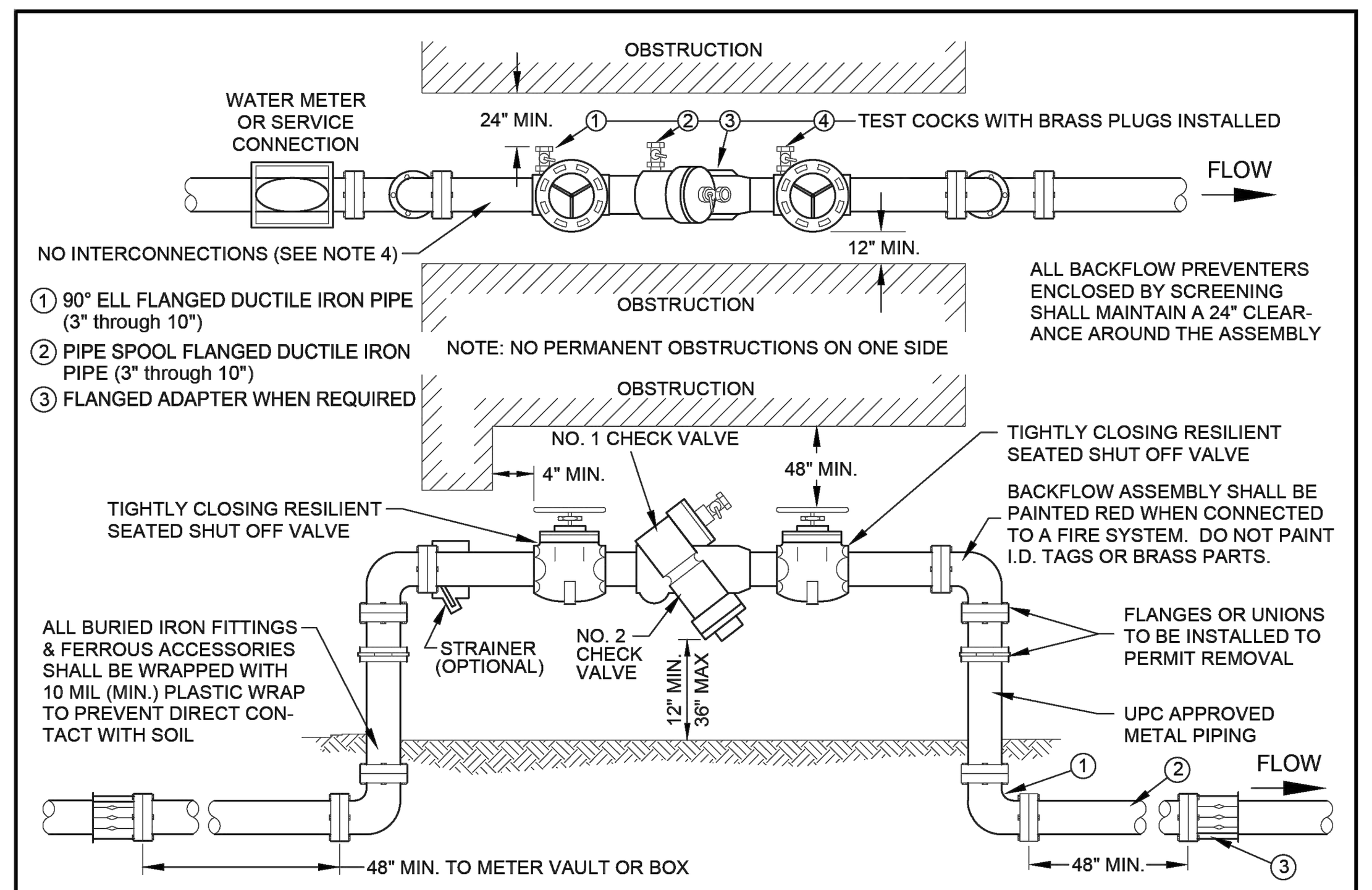

NOTES

1. A permit is required before installing or replacing a backflow assembly. Permits are obtained at the Department of Community Development, 1 City Plaza (SW corner of Madison Ave. and 3rd St.).
2. For a list of approved backflow assemblies, refer to the University of Southern California Foundation for Cross-Connection Control and Hydraulic Research.
3. The D.C.V.A. shall be installed outside, above ground, as close to the water meter as possible. The D.C.V.A. shall be located on private property unless otherwise authorized.
4. There shall be no other piping connected to the piping between the water meter and the backflow assembly except for parallel assembly installations.
5. Installations shall meet all current uniform plumbing codes in addition to the City of Yuma building codes.
6. Installations shall be left exposed until inspected and approved by the City of Yuma.
7. If this unit is installed to serve a retention basin, this unit shall be placed a minimum of 12" (36" maximum) above the flood rim of the retention basin.
8. Protective cages are optional and will meet clearance, access and drainage requirements. Tamperproof switches may be required on fire backflow assemblies.
9. It is recommended that backflow assemblies be protected from the elements. Care shall be taken to ensure that the protection does not hinder the assembly's operation.
10. Approval from the City of Yuma Fire Marshal is required before any backflow assembly is connected to any fire system.
11. All backflow units are to be tested by a certified professional prior to final approval. Backflow units shall be tested on an annual basis.
12. The installation of a backflow assembly may create a closed system. Consult with the City of Yuma Building Official for pressure relief valves, thermal expansion or other needed requirements.

For additional information contact the City of Yuma Pretreatment Section at (928) 373-4544.

Issued: May 2019

CITY OF YUMA
CONSTRUCTION STANDARD DETAIL DRAWINGS

STANDARD NO. 5-120
DOUBLE CHECK VALVE (D.C.V.A.) BACKFLOW PREVENTION ASSEMBLY 3" AND SMALLER WATER LINE

DOUBLE CHECK VALVE BACKFLOW ASSEMBLY
N.T.S. D

NOTES

1. Concentric manholes shall be constructed only upon the approval of the City Engineer.
2. Precast concrete cones and sections shall meet ASTM C478 specifications (latest revision) except where shown. Concrete shall be Type III with flyash additive. Inside diameter of manhole and elevations as shown on plans.
3. Use Polymer manhole.
4. An asphalt waterproofing seal shall be applied to all exterior surfaces of the manhole that may be exposed to ground water.
5. Provide a 20' wide vehicular access road.
6. Apply interior surface sealant (from Approved Sewer Components List) on adjustment rings, bench or on any other concrete surface.
7. Base constructed of Class A concrete per MAG Section 725.
8. Base reinforcing steel shall be ASTM A615, grade 60.
9. See standard Detail 6-040 for adjusting manhole frame and cover to final grade.

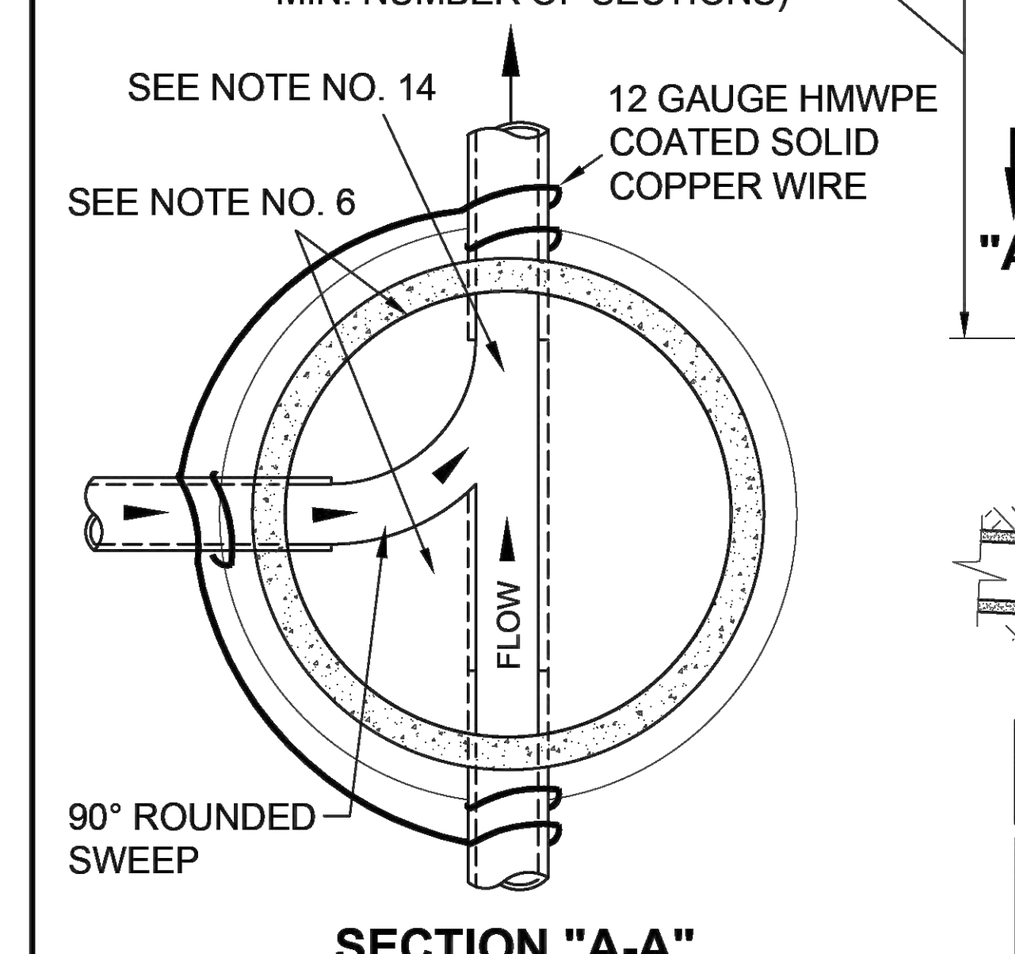

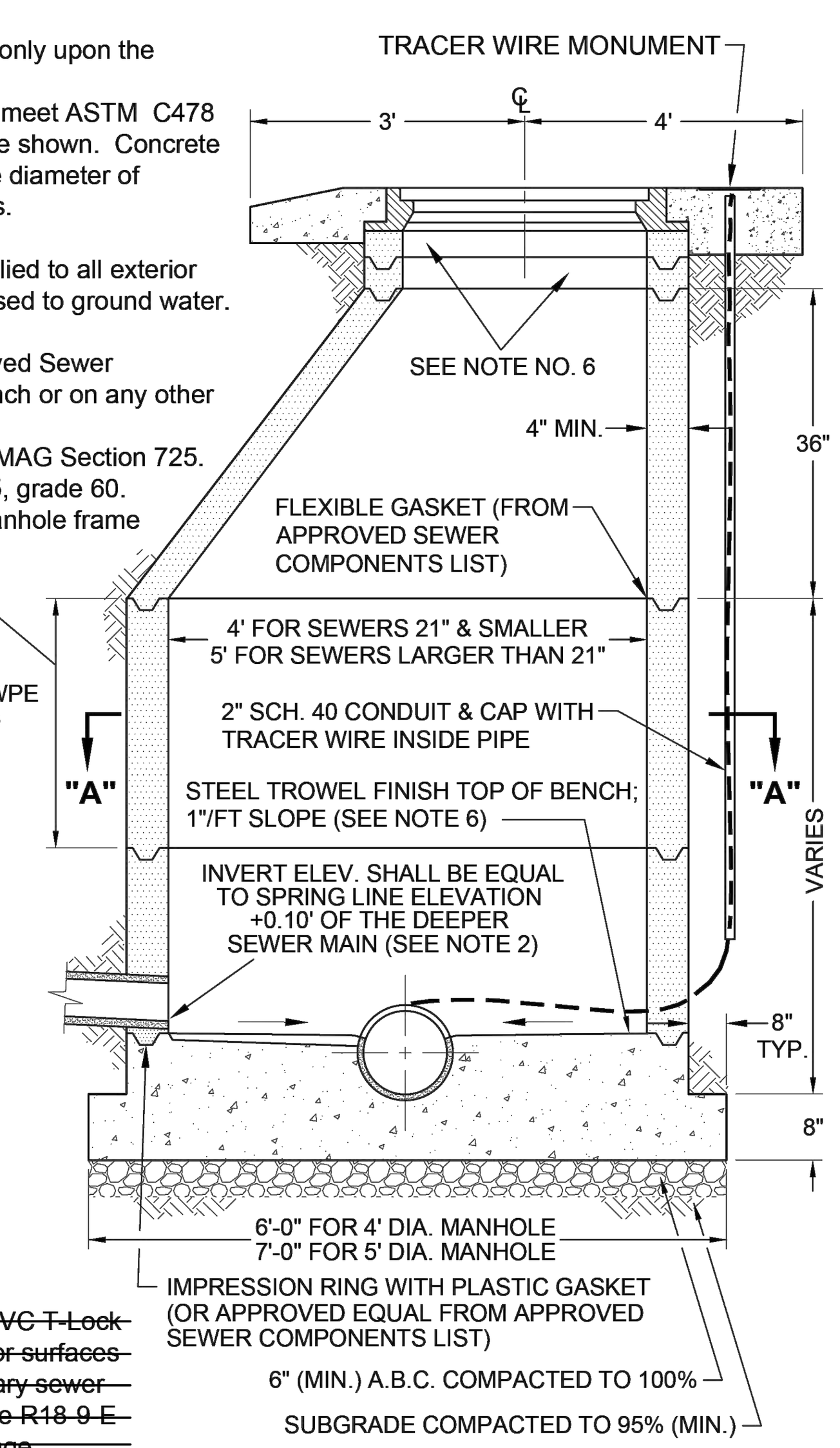

10. ~~Precast concrete manholes shall have a PVC T-Lock liner and sealed gas tight. Liner and interior surfaces shall be spark tested (applies only to sanitary sewer manholes, see Arizona Administrative Code R18-9-E-301 D.3.e Manholes General Permit: Sewage Collection Systems pertaining to Holiday testing).~~
11. Backfill used to fill manhole excavation shall be a one sack cement per cubic yard of sand slurry mixture, unless otherwise approved.
12. Grout seal around pipe. Match and apply same protective coating on grout as used on the other exposed concrete surfaces (see Note 6).
13. Special details shall be required for: Manholes greater than 40' in depth; at deflection manholes; for multiple pipe penetrations with at least one pipe greater than 21"; or if sewer main is larger than 48" in diameter. Calculations shall be signed/sealed by a registered professional engineer (AZ license) and submitted to the City Engineer for review & acceptance.

PRECAST POLYMER CONCRETE MANHOLE
N.T.S. E

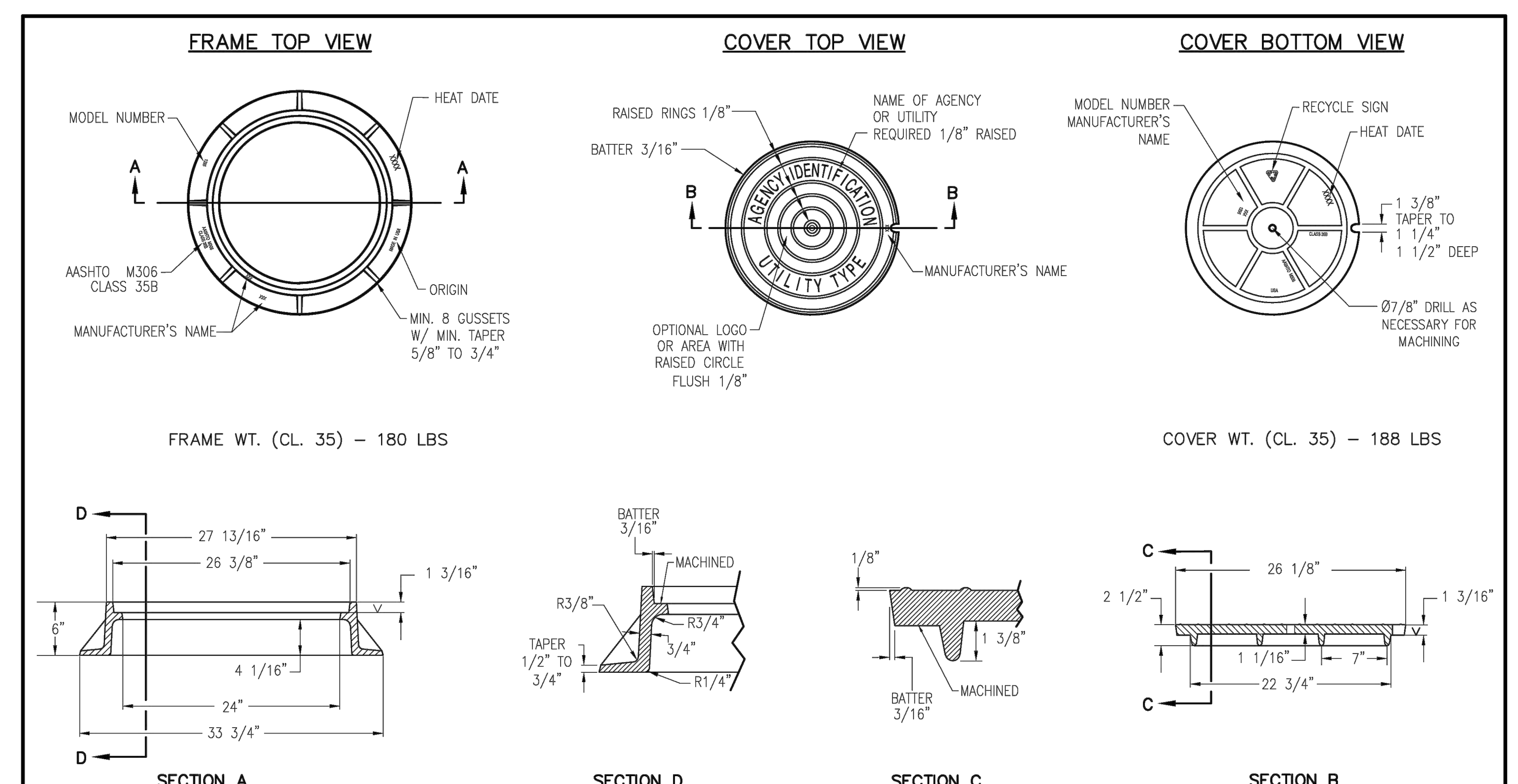

NOTE:
LETTERING ON MANHOLE COVER TO CONTAIN NAME OF AGENCY AND UTILITY FOR WHICH MANHOLE IS NEEDED, (I.E. "PHOENIX SANITARY SEWER"), OR AS DIRECTED. THE TOTAL WIDTH OF INDIVIDUAL LETTERS TO BE SUCH THAT LETTERS AND WORDS ARE EQUALLY SPACED AND BALANCED TO FORM A COMPLETE CIRCLE WITH SPACERS BEFORE AND AFTER THE WORD IDENTIFYING THE AGENCY INVOLVED. LETTERS TO BE 2" IN HEIGHT AND RAISED FLUSH W/ TOP OF RINGS. TYPE OF LETTERS TO BE SUBMITTED FOR APPROVAL. WEIGHT OF CASTINGS SHALL BE NO MORE THAN 2% MORE OR LESS THAN THE APPROXIMATE WEIGHT SPECIFIED. CASTINGS SHALL CONFORM TO ASTM A-48, CLASS 35 AND AASHTO M306. THE BEARING SURFACES OF THE FRAMES AND COVERS SHALL BE MACHINED AND THE COVERS SHALL SEAT FIRMLY WITHOUT ROCKING. ALL DIMENSIONS SHALL HAVE A 1/16" TOLERANCE.

DETAIL NO.			REVISED	DETAIL NO.
423–1	MARICOPA ASSOCIATION of GOVERNMENTS — STANDARD DETAIL ENGLISH	24" CAST IRON MANHOLE FRAME AND COVER	01–01–2020	423–1

STANDARD MANHOLE FRAME AND COVER
N.T.S. F

NO	BY	DATE	REVISIONS	DATE	APP.

Registered Professional Engineer (Civil) CERTIFICATE No. 40050 DUONG T. DO ARIZONA, U.S.A. Date Signed 02/06/26
Expires 12/31/27

PREPARED BY *DUONG DO*
PROJECT ENGINEER *#40050*
R.C.E. NO. --
EXP. DATE
DRAWN *WW, MSA*
DESIGNED *NT, NE*
CHECKED *DD*
SCALE
DATE *FEB 2026*

THESE DRAWINGS ARE THE PROPERTY OF P.A.C.E. AND SHALL NOT BE REPRODUCED IN ANY MANNER NOR BE USED FOR CONSTRUCTION UNLESS STAMPED "ISSUED FOR CONSTRUCTION".

TITLE
CIVIL DETAILS

JOB
CITY OF SAN LUIS WEST WWTP
3.0 MGD MBR UPGRADES
SAN LUIS AZ.

PACE
Advanced Water Engineering
8723 E. VIA de COMMERICO, SUITE A-204 | SCOTTSDALE, CA 85258
P: (408) 991-3595 | www.pacewater.com

FINAL PLANS ISSUED FOR BID

SHEET
C6.1

JOB NO. B777

W:\B777\Engineering\B777 - 3MGD Exp\3MGD FINAL DSN\sheets\B777-C6.0-CIVIL DETAILS.dwg - Tab: C6.1 - by wwright on 01/29/26 at 11:15:32 AM

DRAFT

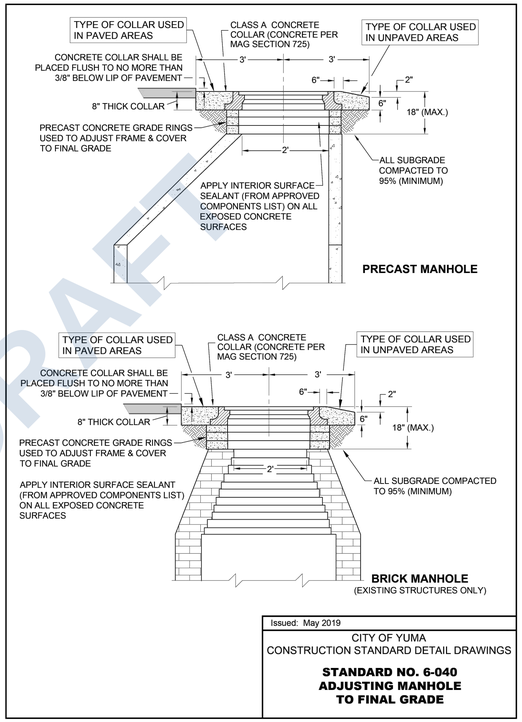

Issued: May 2019

CITY OF YUMA
CONSTRUCTION STANDARD DETAIL DRAWINGS

STANDARD NO. 6-040
ADJUSTING MANHOLE TO FINAL GRADE

ADJUSTING MANHOLE TO FINAL GRADE

N.T.S. | A

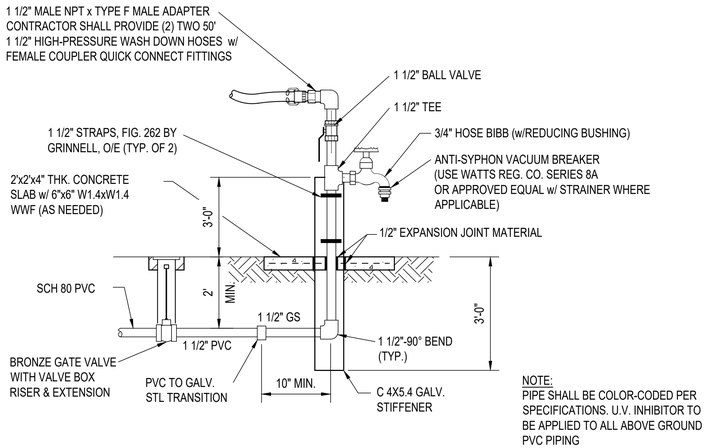

NOTE:
PIPE SHALL BE COLOR-CODED PER SPECIFICATIONS. U.V. INHIBITOR TO BE APPLIED TO ALL ABOVE GROUND PVC PIPING

HOSE BIB

N.T.S. | B

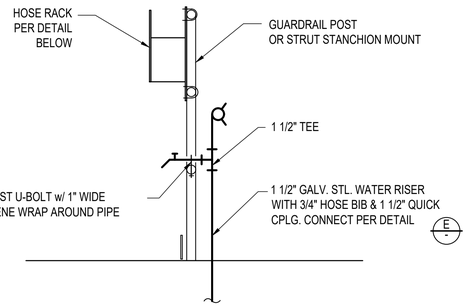

GUARDRAIL MOUNTED HOSE RACK

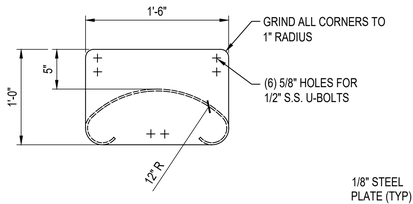

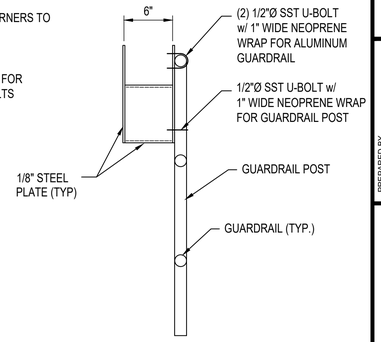

NOTE:
HOT DIP GALVANIZE ALL STEEL PARTS AFTER FABRICATION

HOSE RACK

N.T.S. | C

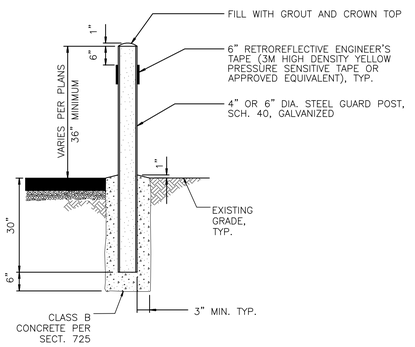

TYPE 1 PERMANENT

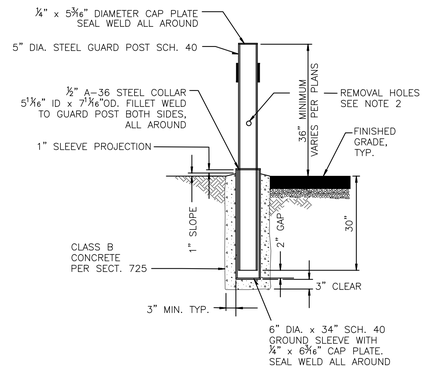

TYPE 2 REMOVABLE

NOTES

1. BOLLARDS SHALL HAVE A HEIGHT OF 3 FEET OR BE EQUAL TO THE HEIGHT OF THE BACK SCREEN WALL OF BIN ENCLOSURES. POSTS SHALL BE PLACED A MINIMUM OF 4" FROM THE WALL.
2. REMOVABLE POSTS SHALL HAVE 1" DIA. HOLES DRILLED THROUGH AT A DISTANCE ⅕ THE OVERALL POST LENGTH FROM TOP.
3. REMOVABLE POST – GRIND SMOOTH ALL SHARP EDGES PRIOR TO GALVANIZATION. GALVANIZE PER ASTM A123 AFTER FABRICATION.

BOLLARD

N.T.S. | D

NOT USED

N.T.S. | E

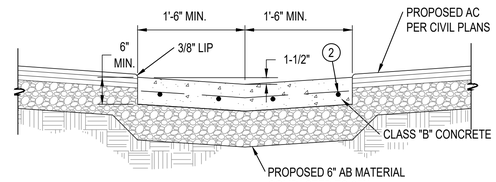

NOTES

1. CONSTRUCT EXPANSION JOINTS AT BEGINNING & ENDS OF CURBS, EACH SIDE OF CATCH BASINS AND OTHER FIXED OBJECTS.
2. 4 - #4 BARS CONTINUOUS WITH #4 BARS AT 48" ON CENTER
3. FOUR - 5/8" X 24" LONG STEEL DOWELS, GREASED AND WRAPPED ONE SIDE THROUGH ALL EXPANSION JOINTS.
4. PREFORMED FIBER EXPANSION TO ASTM D-1751 JOINT FILLER CONFORMING.

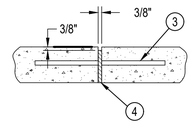

EXPANSION JOINT

CONCRETE SWALE

N.T.S. | F

NO	BY	DATE	REVISIONS	DATE	APP.

Registered Professional Engineer (Civil) DUONG T. DO 40050 ARIZONA, U.S.A. Date Signed 12/31/27 Expires 12/31/27

PREPARED BY
DUONG DO
PROJECT ENGINEER
R.C.E. NO. #40050
EXP. DATE

SCALE
DRAWN WW, MSA
DESIGNED NT, NE
CHECKED DD
DATE FEB 2026

TITLE
CIVIL DETAILS

JOB
CITY OF SAN LUIS WEST WWTP
3.0 MGD MBR UPGRADES
AZ.
SAN LUIS

PACE
Advanced Water Engineering
8723 E. VIA de COMMERCIO, SUITE A-204 | SCOTTSDALE, CA 85258
P: (408) 991-3595 | www.pacewater.com

SHEET
C6.2
19 OF 209 SHEETS

JOB NO. B777

THESE DRAWINGS ARE THE PROPERTY OF P.A.C.E. AND SHALL NOT BE REPRODUCED IN ANY MANNER NOR BE USED FOR CONSTRUCTION UNLESS STAMPED 'ISSUED FOR CONSTRUCTION'.

FINAL PLANS ISSUED FOR BID

W:\B777\Engineering\B777 - 3MGD Exp\3MGD FINAL DS\sheets\B777-C6.0-CIVIL DETAILS.dwg - Tab: C6.2 - by wwright on 01/29/26 at 11:15:32 AM

DRAFT

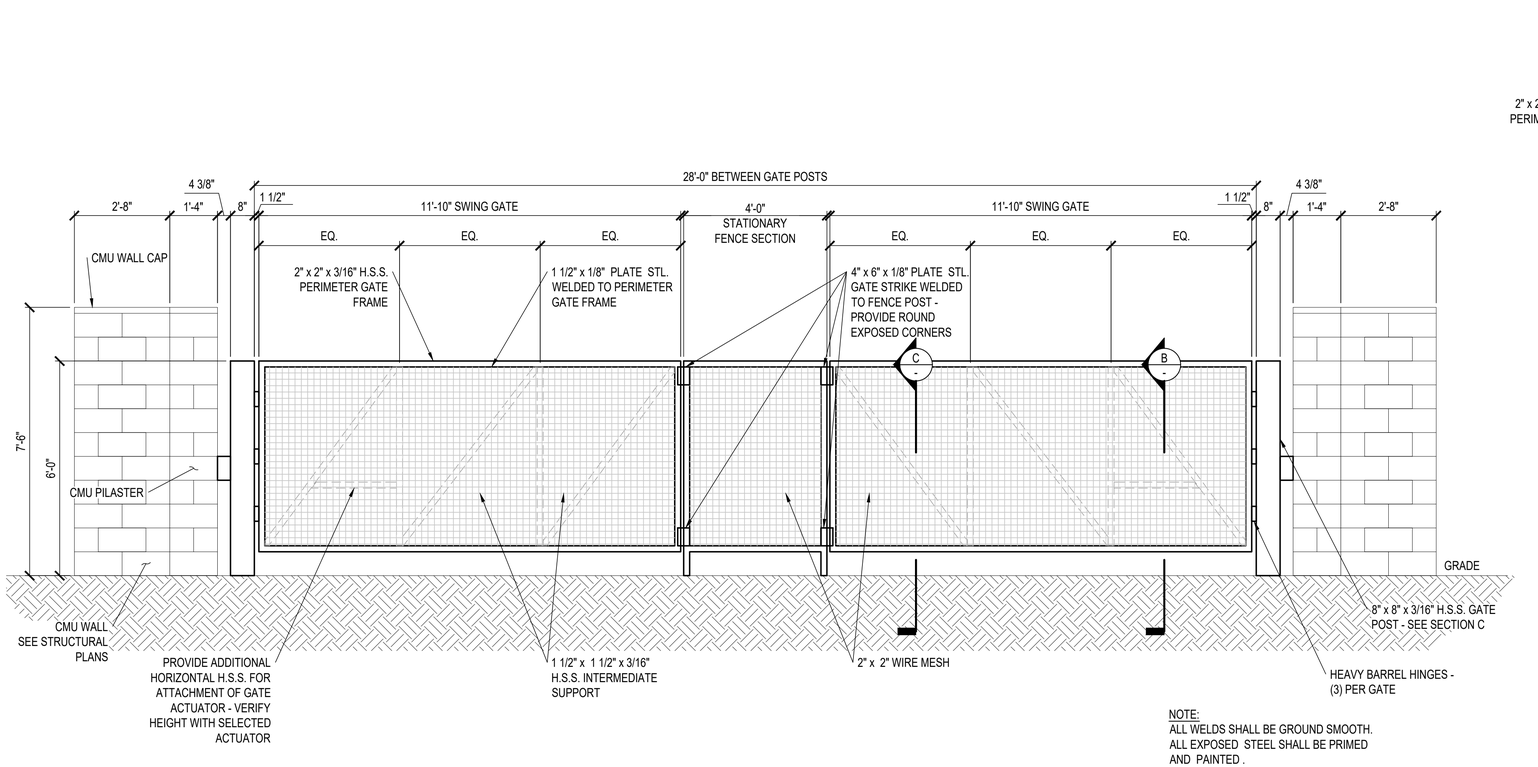

NOTE:
ALL WELDS SHALL BE GROUND SMOOTH.
ALL EXPOSED STEEL SHALL BE PRIMED
AND PAINTED .

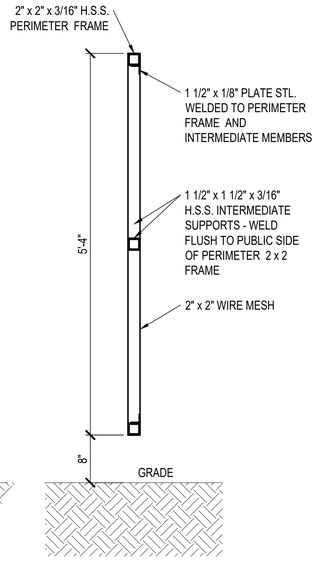

SECTION - B

SCALE: 1" = 1'-0"

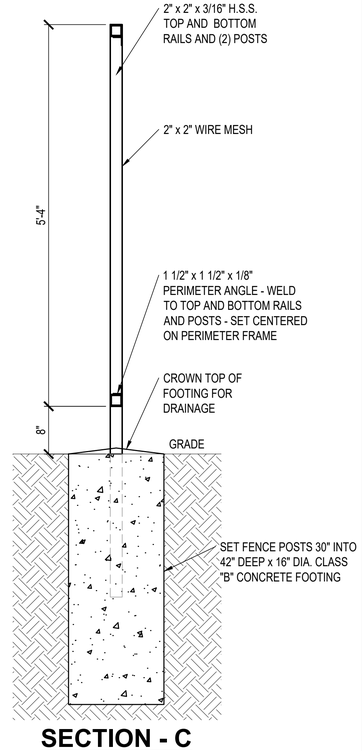

SECTION - C

SCALE: 1" = 1'-0"

SWINGING GATE ELEVATION

SCALE: N.T.S. | D

PREPARED BY
DUONG DO
R.C.E. NO. #40050
EXP. DATE
DRAWN
WW, MSA
DESIGNED
NT, NE
CHECKED
DD
SCALE
DATE
FEB 2026

Registered Professional Engineer (Civil)
DUONG T. DO
40050
Date Signed 12/31/25
ARIZONA, U.S.A.
Expires 12/31/27

NO	BY	DATE	REVISIONS	DATE	APP.

THESE DRAWINGS ARE THE PROPERTY OF P.A.C.E. AND SHALL NOT BE REPRODUCED IN ANY MANNER NOR BE USED FOR CONSTRUCTION UNLESS STAMPED "ISSUED FOR CONSTRUCTION".

TITLE
CIVIL DETAILS

JOB
CITY OF SAN LUIS WEST WWTP
3.0 MGD MBR UPGRADES
SAN LUIS AZ.

PACE
Advanced Water Engineering
8723 E. VIA de COMMERCIO, SUITE A-204 | SCOTTSDALE, CA 85258
P: (408) 991-3595 | www.pacewater.com

FINAL PLANS ISSUED FOR BID

SHEET
C6.3
20 OF 209 SHEETS

JOB NO. B777

W:\B777\Engineering\B777 - 3MGD Exp\3MGD FINAL DGN\sheets\B777-C6.3-CIVIL DETAILS.dwg - Tab: C6.3 - by wwright on 01/29/26 at 11:15:32 AM

SUGGESTED SEQUENCING FOR TRANSITIONING TO INTENSIFICATION PROCESS BY WORLD WATER WORKS (INTENSIFICATION UP TO 1.4 MGD)

1. INSTALL PROCESS EQUIPMENT AND PIPING FOR INSTENSIFICATION. SEE PLAN AND SECTION HERIN, SPECIFICATIONS AND WORLD WATER WORKS DETAIL A, SHEET M12.6.
2. OPERATE SBR 1-4 LIKE NORMAL BUT START TO INTENSIFY BASIN 4.
3. GRADUALLY INCREASE FLOW TO BASIN 4 AS INTENSIFICATION PROCESS MATURES AND SLOWLY REMOVE BASINS 1/2 AND THEN BASIN 3. INSTALL ISOLATION WALL IN DECANT CHANNEL FOR ISOLATION PER STRUCTURAL PLANS.
4. ONCE BASINS 1& 2 ARE REMOVED, INSTALL NEW CANOPY AND RELOCATE SBR BLOWERS TO NEW LOCATION AT BASIN 4 , RE-PIPE AND MODIFY ELECTRICAL PER PLAN. THESE WILL BECOME THE FEB BLOWERS.
5. DIRECT ALL FLOW TO SCREENS 5 THRU 8. REMOVE EXISTING HEADWORKS SCREENS 1 THRU 4.

DRAFT

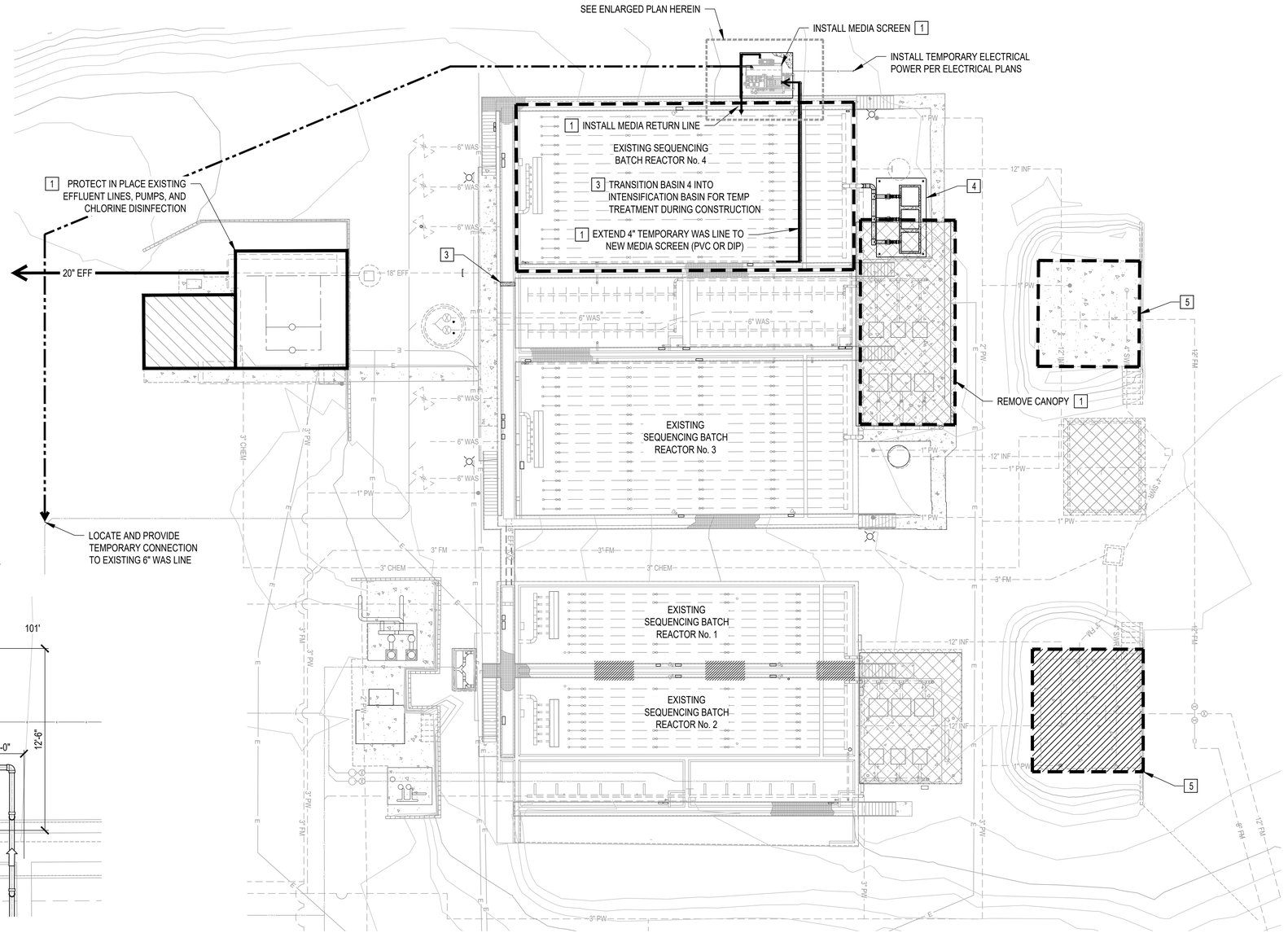

DEMO SEQUENCING & INTENSIFICATION SITE PLAN

SCALE: 1/16" = 1'-0"

NORTH

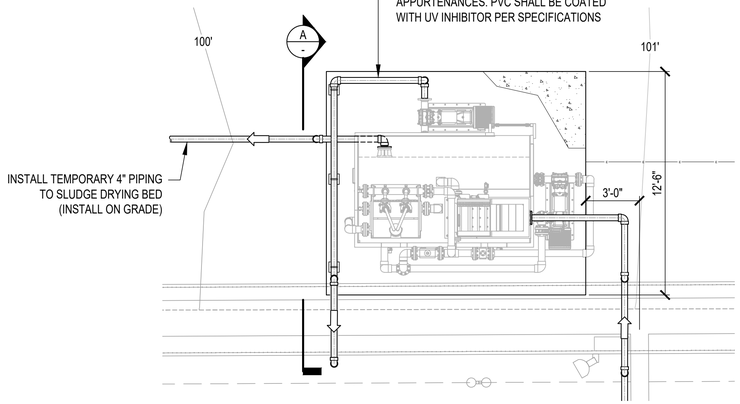

ENLARGED PLAN VIEW OF MEDIA SCREEN

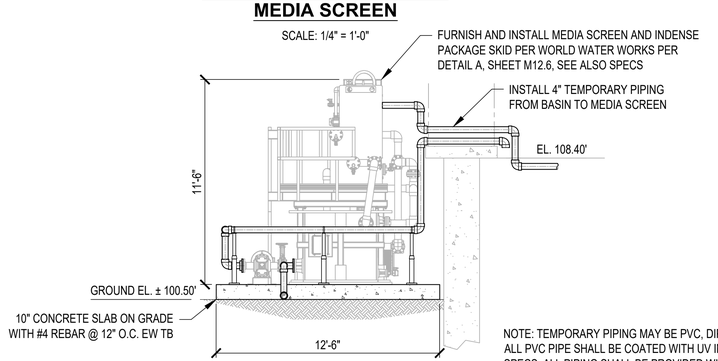

MEDIA SCREEN SECTION VIEW - A

SCALE: 1/4" = 1'-0"

NOTE: TEMPORARY PIPING MAY BE PVC, DIP, OR HDPE. ALL PVC PIPE SHALL BE COATED WITH UV INHIBITOR PER SPECS. ALL PIPING SHALL BE PROVIDED WITH PIPE SUPPORTS PER SPECS.

NO	BY	DATE	REVISIONS	DATE	APP.

Registered Professional Engineer (Civil) — DUONG T. DO — 40050 — Arizona, U.S.A. — Date Signed 12/31/27 — Expires 12/31/27

THESE DRAWINGS ARE THE PROPERTY OF P.A.C.E. AND SHALL NOT BE REPRODUCED IN ANY MANNER NOR BE USED FOR CONSTRUCTION UNLESS STAMPED "ISSUED FOR CONSTRUCTION".

PREPARED BY: DUONG DO — PROJECT ENGINEER — R.C.E. NO. #40050 — EXP. DATE —
DRAWN: WW, MSA — DESIGNED: NT, NE — CHECKED: DD — SCALE — DATE: FEB 2026

TITLE: **DEMO SEQUENCING & PROCESS CONNECTION FOR BASIN 4 INTENSIFICATION**

JOB: CITY OF SAN LUIS WEST WWTP 3.0 MGD MBR UPGRADES — SAN LUIS AZ.

PACE Advanced Water Engineering
8723 E. VIA de COMMERCIO, SUITE A-204 | SCOTTSDALE, CA 85258
P: (408) 991-3595 | www.pacewater.com

SHEET **D1.0**
21 OF 209 SHEETS

JOB NO. B777

FINAL PLANS ISSUED FOR BID

W:\B777\Engineering\B777 - 3MGD Exp\3MGD FINAL DS\Sheets\B777 - DEMOLITION.dwg - Tab: D1.0 - by wwright on 12/22/26 at 4:35:19 PM

DRAFT

LEGEND:

DEMO

SEE SHEET D1.3 FOR DEMO

CUT AND CAP EXISTING 12" C900 INFLUENT LINE OUTSIDE OF VAULT (TYP.)

PROTECT IN PLACE - EXISTING 6" DRAIN LINES AND VALVES (TYP.)

ABANDON IN PLACE EXISTING 18" EFFLUENT LINE

SEE SHEET M6.0 FOR DEMO OF EXISTING EFFLUENT PUMP STATION AND CHLORINE BUILDING

CUT AND CAP EXISTING POTABLE WATER LINES FEEDING HEADWORKS AND ODOR CONTROL. REMOVE UNDERGROUND PIPING. (TYP.)

DEMO EXISTING STATIC SCREENS 5-8. REMOVE ALL EQUIPMENT, PIPING, AND APPURTENANCES. DEMO CONCRETE PADS, RETAINING WALL, AND STAIRS. RE-GRADE PER CIVIL SHEETS

DEMO EXISTING HEADWORKS ODOR CONTROL SYSTEM. REMOVE ALL EQUIPMENT, CONCRETE, PIPING, DUCTING, AND APPURTENANCES. REGRADE PER CIVIL SHEETS

PROTECT IN PLACE EXISTING ANTENNA

CUT AND CAP EXISTING 3" FORCE MAIN AND CHEMICAL LINE OUTSIDE OF BASINS . REMOVE ALL UNDERGROUND PIPING BETWEEN BASINS AND ALL PIPING NEAR HEADWORKS

ABANDONED DAF UNIT, CONTRACTOR TO DEMO ALL STRUCTURES ABOVE CONCRETE PADS

DEMO EXISTING WET WELL, EQUIPMENT, AND SUBGRADE PIPING

DEMO EXISTING BOLLARDS (TYP.)

DEMO OLD EFFLUENT PUMPS. REMOVE ALL ABOVE GRADE EQUIPMENT, PIPING, AND APPURTENANCES

DEMO EXISTING STATIC SCREENS 1-4. REMOVE ALL EQUIPMENT, PIPING, AND APPURTENANCES. DEMO CONCRETE PADS, RETAINING WALL, AND STAIRS. RE-GRADE PER CIVIL SHEETS

DEMO OLD ODOR CONTROL SYSTEM. REMOVE ALL ABOVE GRADE STRUCTURES, EQUIPMENT, PIPING, AND APPURTENANCES

CUT AND CAP EXISTING 12" C900 INFLUENT LINE OUTSIDE OF BLOWER PAD. REMOVE PIPING TO HEADWORKS SCREENS 1-4

SEE SHEET D1.2 FOR DEMO

DEMO EXISTING SLUDGE PUMPS. REMOVE ALL ABOVE GRADE EQUIPMENT, PIPING, AND APPURTENANCES

EXISTING SEQUENCING BATCH REACTOR No. 4

EXISTING SEQUENCING BATCH REACTOR No. 3

EXISTING SEQUENCING BATCH REACTOR No. 1

EXISTING SEQUENCING BATCH REACTOR No. 2

DEMO SITE PLAN

SCALE: 1/16" = 1'-0"

NORTH

NOTES:

1. DEMO PLANS SHOWN ARE SUGGESTED FOR REFERENCE ONLY. CONTRACTOR TO PROVIDE DEMO PLAN FOR APPROVAL BY CITY PRIOR TO CONSTRUCTION.
2. ALL EQUIPMENT AND MATERIAL DEMO'D WILL BE OFFERED TO THE CITY FOR FIRST REFUSAL PRIOR TO CONTRACTOR'S DISPOSAL.

NO	BY	DATE	REVISIONS	DATE	APP.

Registered Professional Engineer (Civil) — DUONG T. DO — 40050 — Arizona, U.S.A. — Date Signed 12/31/27 — Expires 12/31/27

THESE DRAWINGS ARE THE PROPERTY OF P.A.C.E. AND SHALL NOT BE REPRODUCED IN ANY MANNER NOR BE USED FOR CONSTRUCTION UNLESS STAMPED "ISSUED FOR CONSTRUCTION".

PREPARED BY: DUONG DO
R.C.E. NO.: 40050
EXP. DATE: 12/31/27
PROJECT ENGINEER: DUONG DO
DRAWN: WW, MSA
DESIGNED: NT, NE
CHECKED: DD
SCALE:
DATE: FEB 2026

TITLE: DEMOLITION PLAN

JOB: CITY OF SAN LUIS WEST WWTP 3.0 MGD MBR UPGRADES — SAN LUIS AZ.

PACE Advanced Water Engineering
8723 E. VIA de COMMERCIO, SUITE A-204 | SCOTTSDALE, CA 85258
P: (408) 991-3595 | www.pacewater.com

SHEET D1.1
22 OF 209 SHEETS

JOB NO. B777

FINAL PLANS ISSUED FOR BID

W:\B777\Engineering\B777 - 3MGD Exp\3MGD FINAL DS\Sheets\B777 - DEMOLITION.dwg - Tab: D1.1 - by wwright on 02/02/26 at 4:35:19 PM

DRAFT

LEGEND:

DEMO

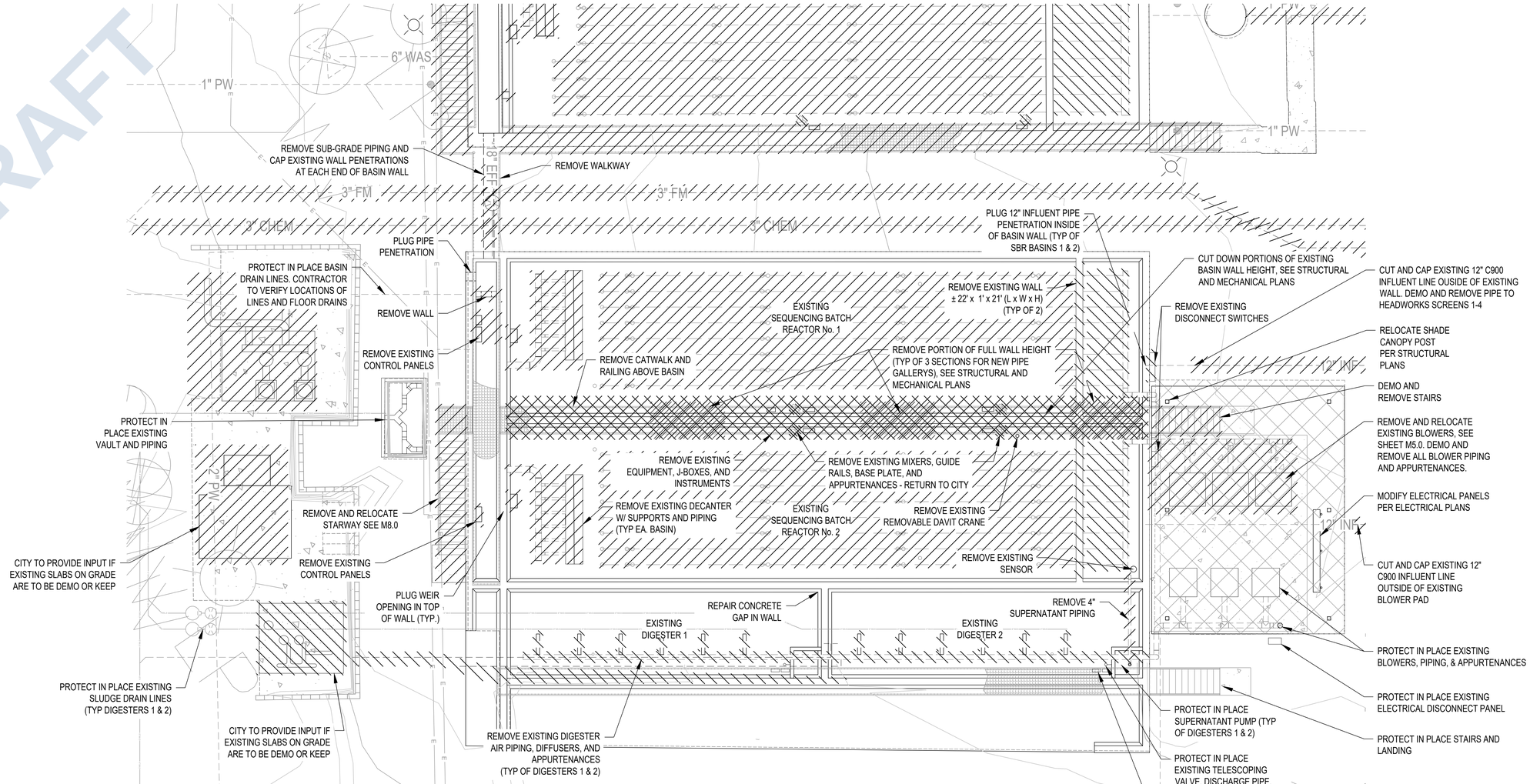

EXISTING SBR & DIGESTER BASINS

SCALE:1/8" = 1'-0"

NOTES:

1. DEMO PLAN SHOWN ARE SUGGESTED FOR REFERENCE ONLY. CONTRACTOR TO PROVIDE DEMO PLAN FOR APPROVAL BY CITY PRIOR TO CONSTRUCTION.
2. ALL EQUIPMENT AND MATERIAL DEMO'D WILL BE OFFERED TO THE CITY FOR FIRST REFUSAL PRIOR TO CONTRACTOR'S DISPOSAL.

NO	BY	DATE	REVISIONS	DATE	APP.

Registered Professional Engineer (Civil) — DUONG T. DO — 40050 — Arizona, U.S.A. — Date Signed 12/31/27 — Expires 12/31/27

THESE DRAWINGS ARE THE PROPERTY OF P.A.C.E. AND SHALL NOT BE REPRODUCED IN ANY MANNER NOR BE USED FOR CONSTRUCTION UNLESS STAMPED "ISSUED FOR CONSTRUCTION".

PREPARED BY: DUONG DO — PROJECT ENGINEER — R.C.E. NO. #40050 — EXP. DATE —
DRAWN: WW, MSA — SCALE —
DESIGNED: NT, NE
CHECKED: DD — DATE: FEB 2026

TITLE: **EXISTING SBR BASIN 1 & 2**

JOB: CITY OF SAN LUIS WEST WWTP 3.0 MGD MBR UPGRADES — SAN LUIS AZ.

PACE Advanced Water Engineering
8723 E. VIA de COMMERCIO, SUITE A-204 | SCOTTSDALE, CA 85258
P: (408) 991-3595 | www.pacewater.com

SHEET **D1.2**

23 OF 209 SHEETS

JOB NO. B777

FINAL PLANS ISSUED FOR BID

W:\B777\Engineering\B777 - 3MGD Exp\3MGD FINAL DS\Sheets\B777 - DEMOLITION.dwg - Tab: D1.2 - by wwright on 02/02/26 at 4:35:19 PM

DRAFT

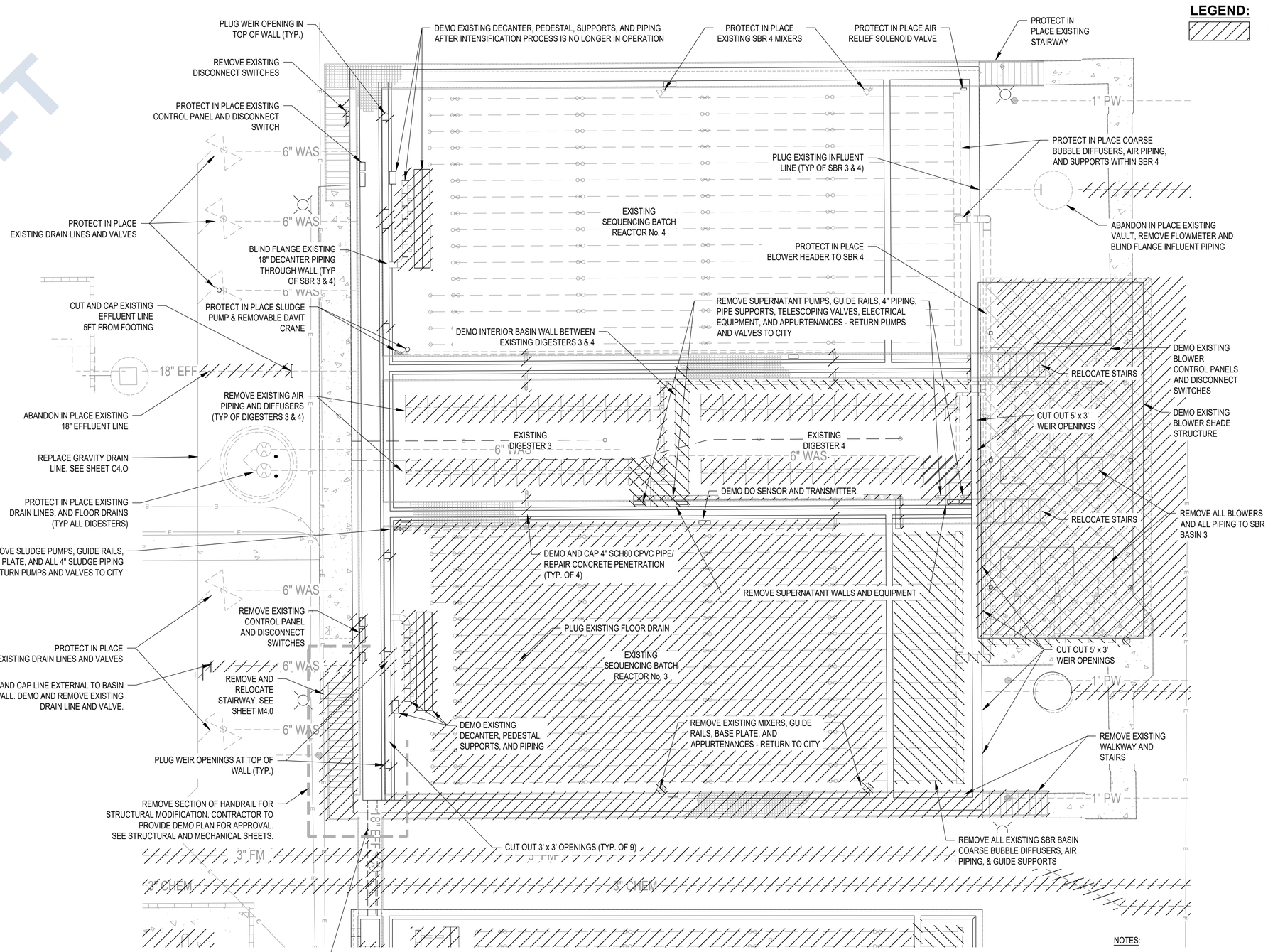

LEGEND:

DEMO

EXISTING SBR & DIGESTER BASINS

SCALE: 1/8" = 1'-0"

NORTH

NOTES:

1. DEMO PLAN SHOWN ARE SUGGESTED FOR REFERENCE ONLY. CONTRACTOR TO PROVIDE DEMO PLAN FOR APPROVAL BY CITY PRIOR TO CONSTRUCTION.
2. ALL EQUIPMENT AND MATERIAL DEMO'D WILL BE OFFERED TO THE CITY FOR FIRST REFUSAL PRIOR TO CONTRACTOR'S DISPOSAL.

NO	BY	DATE	REVISIONS	DATE	APP.

Registered Professional Engineer (Civil) — DUONG T. DO — 40050 — ARIZONA, U.S.A. — Date Signed 12/31/25 — Expires 12/31/27

PREPARED BY: DUONG DO
PROJECT ENGINEER: #40050
R.C.E. NO.: —
EXP. DATE:
SCALE:
DRAWN: WW, MSA
DESIGNED: NT, NE
CHECKED: DD
DATE: FEB 2026

THESE DRAWINGS ARE THE PROPERTY OF P.A.C.E. AND SHALL NOT BE REPRODUCED IN ANY MANNER NOR BE USED FOR CONSTRUCTION UNLESS STAMPED 'ISSUED FOR CONSTRUCTION'.

TITLE: **EXISTING SBR BASIN 3 & 4**

JOB: CITY OF SAN LUIS WEST WWTP 3.0 MGD MBR UPGRADES — SAN LUIS AZ.

PACE
Advanced Water Engineering
8723 E. VIA de COMMERCIO, SUITE A-204 | SCOTTSDALE, CA 85258
P: (408) 991-3995 | www.pacewater.com

SHEET **D1.3**

24 OF 209 SHEETS

JOB NO. B777

FINAL PLANS ISSUED FOR BID

W:\B777\Engineering\B777 - 3MGD Exp\3MGD FINAL DS\sheets\B777 - DEMOLITION.dwg - Tab: D1.3 - by wwright on 02/02/26 at 4:35:19 PM

SUGGESTED SEQUENCE OF CONSTRUCTION FOR MAIN WWTP CONVERSION

STAGE 1 :
- a. COMPLETE INTENSIFICATION PROCESS IN SBR 4 (SEE D1.0)
- b. OPERATE EFFLUENT DISCHARGE AND EFFLUENT PUMP STATION AS IS
- c. ALL WASTE ACTIVATED SLUDGE WILL BE WASTED TO SLUDGE DRYING BEDS

STAGE 2 :
- a. REDUCE FLOW TO 1 MGD BY DIVERTING EXCESS FLOW TO EAST WWTP
- b. PROVIDE TEMPORARY PIPING FROM PLANT DRAIN PUMP STATION TO SCREENS 5-8
- c. INSTALL TEMPORARY CATCH BASIN AND SUMP PUMP AT SCREENS 5-8 WITH DRAIN LINE FROM EXISTING SCREEN

STAGE 3 :
- a. DIVERT ALL FLOW TO SCREENS 5-8 AND ONLY OPERATE SBR 4 (WITH INTENSIFICATION)

STAGE 4 : DEMO AND/OR REMOVE THE FOLLOWING:
- a. SCREENS 1-4
- b. SBRs 1 AND 2
- c. SBRs 1 AND 2 AERATION BLOWERS
- d. DIGESTERS 1 AND 2
- e. SLUDGE PUMPS, ODOR CONTROL, AND OLD EFFLUENT PUMPS
- f. EASTERN WALKWAY AND HANDRAIL ON SBR 3
- g. DEMO SBRs 3 AND 4 AERATION BLOWER CANOPY
- h. CLEAN OUT SBR3 AND DIGESTERS 3 &4 BUT KEEP AS EMERGENCY STORAGE WITH TEMPORARY TRANSFER PUMPS UNTIL STAGE 7

STAGE 5 :
- a. MOVE SBRs 1 AND 2 AERATION BLOWER AND INSTALLED AT FEB BASIN LOCATION PER PLAN
  - i. CONNECT NEW FEB BLOWER TO SBR 4 AIR MANIFOLD
  - ii. DEMO SBR AND DIGESTER PROCESS BLOWERS

STAGE 6 : CONSTRUCT AND INSTALL ALL STRUCTURAL, MECHANICAL, ELECTRICAL IN THE FOLLOWING PROCESS AREAS PER PLAN:
- a. MBR PROCESS
  - i. MBR BASINS
  - ii. BLOWER/PIPE GALLERIES
  - iii. DIGESTERS 1 AND 2
- b. NEW HEADWORKS AND HW ODOR CONTROL
- c. NON-POTABLE WATER PUMP STATION
- d. SLUDGE DEWATERING
- e. FEB PUMPS
- f. YARD PIPING

STAGE 7 :
- a. IMPROVEMENTS TO SBR 3 FOR CONVERSTION TO PROCESS TRAINS 1 AND 2
- b. CONSTRUCT MLSS CHANNEL
- c. CONSTRUCT AND INSTALL FEED FORWARD CHANNEL AND EQUIPMENT
- d. PLANT DRAIN PUMP STATION (DIVERT TEMPORARY WAS FROM INTENSIFICATION TO SLUDGE DEWATERING UNIT)
- e. IMPROVE CHEMICAL BUILDING AND CIP PIPING
- f. KEEP DIGESTERS 3 & 4 AS EMERGENCY STORAGE UNTIL STAGE 9

STAGE 8 : START UP MBR PROCESS
- a. SEEDING PROCESS TRAINS 1 AND 2
  - i. DIVERT PARTIAL INFLUENT FLOW TO NEW HEADWORKS AND PROCESS TRAINS 1 AND 2
  - ii. USE INTENSIFICATION WAS TO SEED PROCESS
    1. SEED MUST BE TEMPORARY PIPE TO NEW HEADWORKS SCREEN TO ENSURE SEED IS CLEAN FROM TRASH
  - iii. START MBR PROCESS - AS PROCESS MATURES, DIVERT MORE FLOW TO MBR PROCESS

STAGE 9 :
- a. IMPROVEMENTS TO DIGESTERS 3 AND 4
- b. REUSE DISTRIBUTION PIPE

STAGE 10 :
- a. REMOVE INTENSIFICATION PROCESS EQUIPMENT ONCE MBR PROCESS IS FULLY OPERATIONAL
- b. CONVERT SBR 4 TO FEB BASIN
- c. COMPLETE ALL REMAIN SCOPE INCLUDING ALL SITE WORK, DEMO, AND ALL UPGRADES REQUIRED BY THE CONTRACT DOCUMENTS

SUGGESTED ELECTRICAL SEQUENCE OF CONSTRUCTION

1. INSTALL TEMPORARY INTENSIFICATION PACKAGED PLANT SKID. ROUTE TEMPORARY SOOW MULTICONDUCTOR CABLE PROTECTED IN HEAVY DUTY CABLE PROTECTOR (POWER RAMP) FROM MCC-N1 TO POWER SKID-MTD. MOTOR CONTROL PANEL. ALTERNATIVELY, USE A SPARE CONDUIT TO TEMPORARILY ROUTE THE FEEDER CABLE AND REMOVE THE CABLE ONCE THE INTENSIFICATION IS COMPLETED.
2. INSTALL FIELD PULLBOXES, DUCT BANKS, CONDUITS, CONDUCTORS, AND ALL FIELD PANELS/EQUIPMENT.
3. INSTALL NEW MCC-1, ACTIVE HARMONIC FILTER, XFMR-EA, PANEL-EA, MBR PLC PANEL, AND MAIN PLC PANEL INSIDE THE EXISTING ELECTRICAL ROOM.
4. REPLACE PANEL H1
5. INSTALL AND COMMISSION NEW SERVICE ENTRANCE SECTION.
6. DECOMMISSION AND REMOVE EXISTING STANDBY GENERATOR 1
7. RELOCATE EXISTING STANDBY GENERATOR. INSTALL TEMPORARY POWER CABLES FROM THE STANDBY GENERATOR 2 TO THE EXISTING ATSs/MTSs.
8. INSTALL THE AUTOMATIC TRANSFER SWITCH AND MAIN SWITCHGEAR.
9. INSTALL AND COMMISSION (2) NEW 500 KW STANDBY GENERATORS SOUTHWEST OF ELECTRICAL ROOM.
10. DECOMMISSION AND REMOVE EXISTING STANDBY GENERATOR 2.
11. RE-ROUTE FEEDER POWER FOR PANEL H1 FROM MCC-E2 TO MCC-1.
12. REPLACE EXISTING AC UNITS AT ELECTRICAL ROOM. POWER NEW AC UNITS FROM PANEL-EA.
13. DECOMMISSION AND REMOVE EXISTING MCC-E2 ONCE EXISTING LOADS HAVE BEEN DECOMMISSIONED AND RETURN TO CITY. INSTALL NEW MCC-2.
14. COMMISSION ALL NEW LOADS ON MCC-1 AND MCC-2.
15. DECOMMISSION AND REMOVE MCC-E1 AND MCC-N1.
16. REMOVE EXISTING SERVICE ENTRANCE SECTION, ATS #1/2, MTS #1/2, AND CONTROL PANELS INSIDE ELECTRICAL ROOM AND RETURN TO CITY.

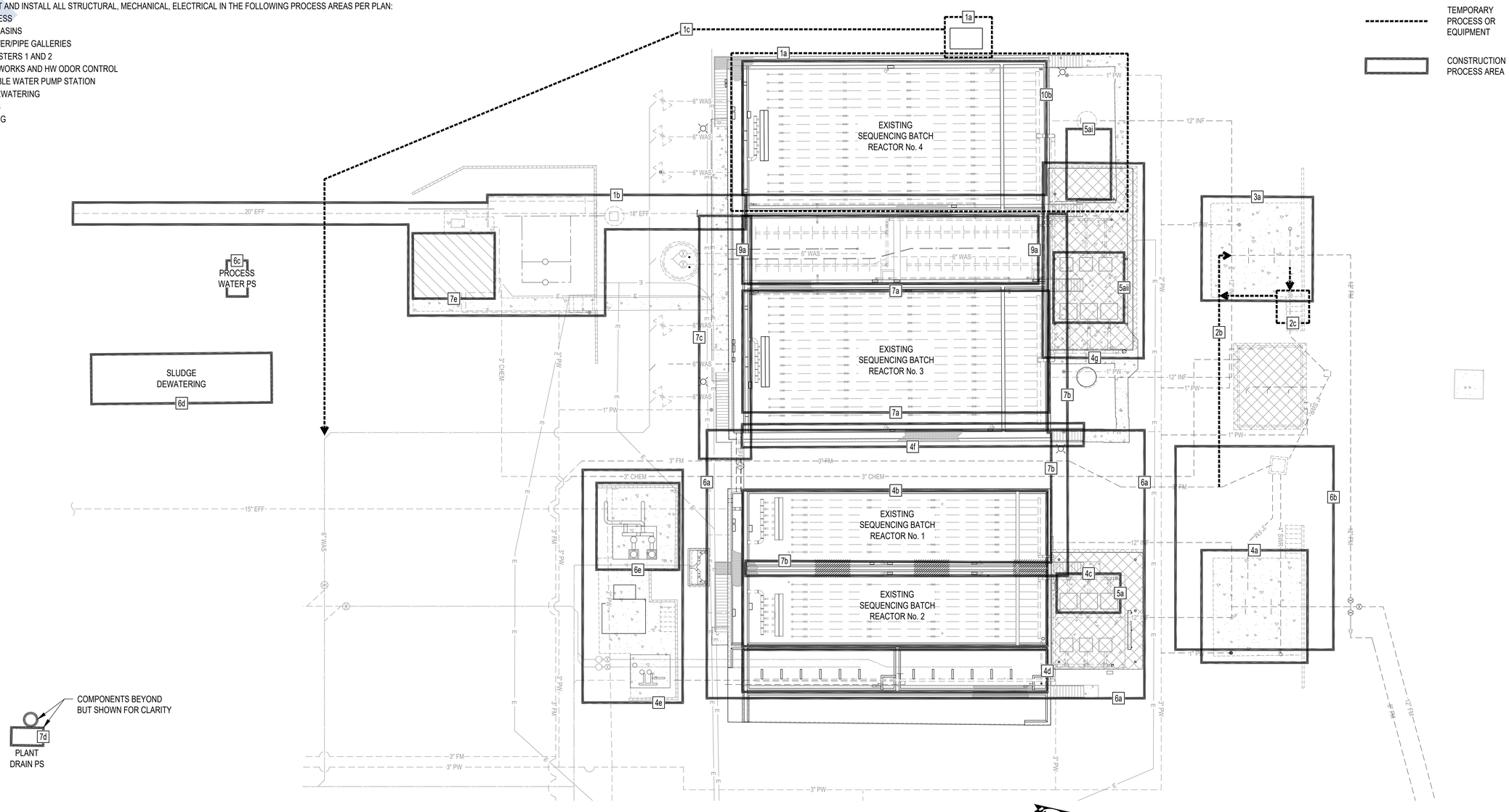

SEQUENCE SITE PLAN

SCALE: 1/16" = 1'-0"

DRAFT

NO	BY	DATE	REVISIONS	DATE	APP.

Registered Professional Engineer (Civil) — DUONG T. DO — 40050 — Date Signed 12/31/27 — ARIZONA, U.S.A. — Expires 12/31/27

PREPARED BY: DUONG DO
PROJECT ENGINEER #40050
R.C.E. NO. 1—
EXP. DATE
SCALE
DRAWN: WW, MSA
DESIGNED: NT, NE
CHECKED: DD
DATE: FEB 2026

TITLE: SUGGESTED SEQUENCE OF CONSTRUCTION

JOB: CITY OF SAN LUIS WEST WWTP 3.0 MGD MBR UPGRADES — SAN LUIS AZ.

PACE Advanced Water Engineering
8723 E. VIA de COMMERCIO, SUITE A-204 | SCOTTSDALE, CA 85258
P: (408) 991-3595 | www.pacewater.com

SHEET D1.4
25 OF 209 SHEETS

JOB NO. B777

FINAL PLANS ISSUED FOR BID

THESE DRAWINGS ARE THE PROPERTY OF P.A.C.E. AND SHALL NOT BE REPRODUCED IN ANY MANNER NOR BE USED FOR CONSTRUCTION UNLESS STAMPED "ISSUED FOR CONSTRUCTION".

W:\B777\Engineering\B777 - 3MGD Exp\3MGD FINAL DSN\sheets\B777 - DEMOLITION.dwg - Tab: D1.4 - by wwright on 12/22/26 at 4:35:19 PM

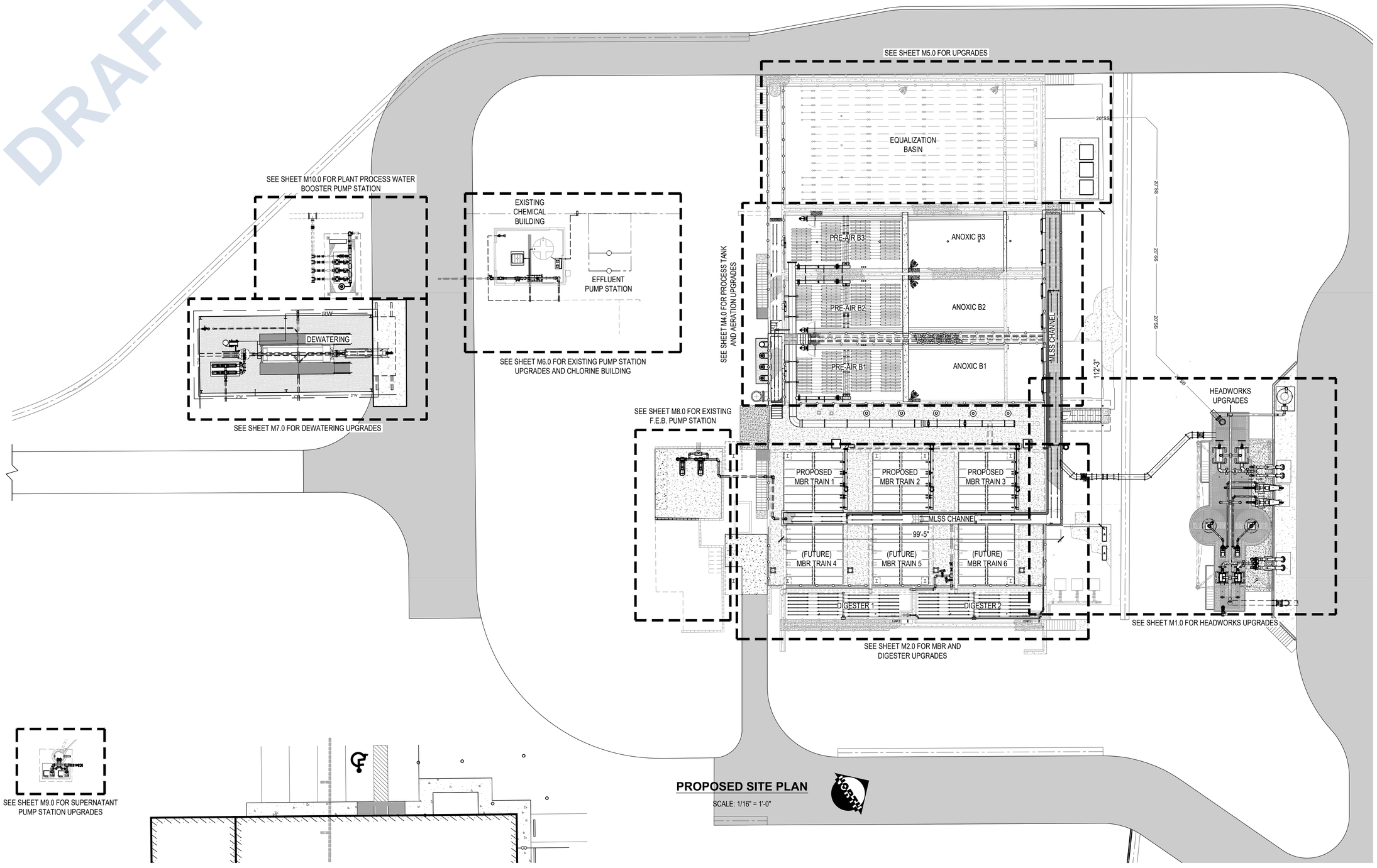

PROPOSED SITE PLAN

SCALE: 1/16" = 1'-0"

NO	BY	DATE	REVISIONS	DATE	APP.

Registered Professional Engineer (Civil) CERTIFICATE NO. 40050 DUONG T. DO Date Signed 12/31/27 ARIZONA, U.S.A. Expires 12/31/27

PREPARED BY DUONG DO
PROJECT ENGINEER
R.C.E. NO. -- #40050
EXP. DATE
DRAWN WW, MSA
SCALE
DESIGNED NT, NE
CHECKED DD
DATE FEB 2026

TITLE
OVERALL SITE MAP

JOB
CITY OF SAN LUIS WEST WWTP
3.0 MGD MBR UPGRADES
SAN LUIS AZ.

PACE
Advanced Water Engineering
8723 E. VIA de COMMERCIO, SUITE A-204 | SCOTTSDALE, CA 85258
P: (408) 991-3595 | www.pacewater.com

SHEET
M0.0
26 OF 209 SHEETS

JOB NO. B777

THESE DRAWINGS ARE THE PROPERTY OF P.A.C.E. AND SHALL NOT BE REPRODUCED IN ANY MANNER NOR BE USED FOR CONSTRUCTION UNLESS STAMPED "ISSUED FOR CONSTRUCTION".

FINAL PLANS ISSUED FOR BID

W:\B777\Engineering\B777 - 3MGD Exp\3MGD FINAL DSNsheets\B777 - M0.0 SITE MAP.dwg - Tab: M0.0 - by wwright on 02/02/26 at 3:25:37 PM

(#) NO.	DESCRIPTION	TAG ID	SUPPLIER	MF'R	MODEL #	HP	VFD	SPECIFICATION	QTY
				EQUIPMENT LIST					
				HEADWORKS					
1	INFLUENT 6 MM FINE SCREEN	M-01010 M-01110	CITY-SUPPLIED (HYDRO-DYNE)	HYDRO-DYNE	CF 26-30-144-6-P	0.75	YES	7.5 MGD CAPACITY 6 MM PERFORATED CENTER-FLOW BAND SCREEN.	2
2	INFLUENT GRIT VORTEX	M-01011 M-01111	CITY-SUPPLIED (HYDRO-DYNE)	HYDRO-DYNE	GTT60I102CC4C	0.75	NO	7.5 MGD - 95% CAPTURE OF > 50 MESH (297 MICRON), 480V, 3PH, 60 HZ.	2
3	INFLUENT 2 MM MBR FINE SCREEN	M-01012 M-01112	CITY-SUPPLIED (HYDRO-DYNE)	HYDRO-DYNE	CF 26-49-176-2-P	0.75	YES	15 MGD CAPACITY 2 MM PERFORATED CENTER-FLOW BAND SCREEN.	2
4	INFLUENT WASHER COMPACTOR (6 MM)	M-01310 M-01311	CITY-SUPPLIED (HYDRO-DYNE)	HYDRO-DYNE	WCW8S-23-5P4	3	NO	SLUIDCE/LAUNDER FED WASHER COMPACTOR, 480V, 3PH, 60HZ.	2
5	INFLUENT WASHER COMPACTOR (2 MM)	M-01410 M-01411	CITY-SUPPLIED (HYDRO-DYNE)	HYDRO-DYNE	WCW6S-38-2P4	1.5	NO	SLUIDCE/LAUNDER FED WASHER COMPACTOR, 480V, 3PH, 60HZ.	2
6	GRIT PUMP	PMP-01001 PMP-01101	CITY-SUPPLIED (HYDRO-DYNE)	GORMAN RUPP	T4A71S-B/F	5	NO	250 GPM @12.5 PSI, SELF-PRIMING CENTRIFUGAL PUMP, 4" INLET/OUTLET, 480V, 3PH, 60 HZ.	2
7	GRIT CLASSIFIER	M-01210 M-01211	CITY-SUPPLIED (HYDRO-DYNE)	HYDRO-DYNE	GC12-98-4C	0.5	NO	250 GPM HYDRO-CYCLONE WITH CLASSIFIER, 480V, 3HP, 60 HZ.	2
				MEMBRANES					
8	MBR CASSETTES	SMU-03070 - SMU-03277	CITY-SUPPLIED (KUBOTA)	KUBOTA	SP900	NA	NO	232,500 SF OF TOTAL INSTALLED MEMBRANE FILTERS. 9688 SF / CASSETTE, 8 CASSETTE/ BASIN - PEAK DAY 3.9 MGD @ 16.7 GFD. INSTALLED WITH GUIDRAILS AND SUPPORTS. SEE SHEET M12.0 & M12.1.	24
				PUMPS AND MIXERS					
10	ANOXIC MIXER	MXR-02110 MXR-02210 MXR-02310	CITY-SUPPLIED (KUBOTA)	FLYGT	SR 4650.492	6	NO	304SS SUBMERSIBLE MIXER w/ SUPPORT STAND AND GUIDERAIL, 138,240 GAL/TANK. 480V, 3 PH, 60HZ.	3
11	FLOW EQUALIZATION PUMPS	PMP-01601 PMP-01602	CONTRACTOR	SEE SPECIFICATIONS	SEE SPECIFICATIONS	27	YES	ROTARY LOBE, SELF-PRIMING PUMP, 1300 GPM, 25 PSI MAX, 480V, 3PH, 60 HZ, VFD.	2
12	FEED FORWARD COLUMN PUMP	PMP-02402 PMP-02403 PMP-02404	CITY-SUPPLIED (KUBOTA)	FLYGT	PL 7030.090-622	26	YES	AXIAL FLOW SUBMERSIBLE PUMP WITH GRIP EYE LIFTING DEVICE, SAFETY HOOK, AND CABLE HANDLING SYSTEM, 6800 GPM @ 6.5 FT, 480V, 3PH, 60HZ, VFD.	3
13	INTERNAL RECYCLE PUMPS	PMP-02101 PMP-02201 PMP-02301	CONTRACTOR/ *KUBOTA	FLYGT	PP 4640	4	YES	THREE-BLADE PROPELLER PUMP, 2700 GPM, 480V, 3PH, 60HZ. INSTALLED WITH DISCHARGE BASE, FLANGE ADAPTER, SS GUIDERAIL, AND SUPPORT BRACKETS.	3
14	EXISTING EFFLUENT PUMP	PMP-5001P PMP-5002P	CITY	SEE SPECIFICATIONS	613A	20	NO	VERTICAL ONE STAGE SOLIDS HANDLING PUMPS, 2500 GPM AT 10' OF TDH, 480V, 3PH, 60 HZ, VFD. PROTECT IN PLACE.	2
15	SLUDGE DEWATERING FEED PUMPS	PMP-07001 PMP-07002	CITY-SUPPLIED (FKC)	SEEPEX	BN 70-6L/A1-C1-L8-F0-GA	15	YES	PROGRESSIVE CAVITY PUMP, 240 GPM, 480V, 3PH, 60 HZ, VFD.	2
16	PLANT DRAIN PUMP	PMP-07202 PMP-07203	CONTRACTOR	SEE SPECIFICATIONS	SEE SPECIFICATIONS	7.5	NO	SELF-PRIMING, CENTRIFUGAL LOBE PUMP, 400GPM @ 35 FT TDH, 480V, 3PH, 60 HZ, 4" DISCHARGE.	2
17	PLANT PROCESS WATER BOOSTER PUMP SKID	PMP-04301A PMP-04301B PMP-04301C	CONTRACTOR	SEE SPECIFICATIONS	SEE SPECIFICATIONS	20	YES	825 GPM @ 85 PSI. PRE-PACKAGE TRIPLEX PUMP SKID. 275 GPM @ 85 PSI, 20 HP, VFD PER PUMP. 480V, 3PH, 60HZ. PACKAGE INCLUDES CONTROL PANELS WITH DRIVES, BLADDER TANK, FLOW METER, VALVES, INSTRUMENTS, AND OTHER APPURTENANCES.	1
18	DIGESTER SUPERNATANT PUMP (EXISTING)	PMP-06001 PMP-06002	CITY	FLYGT	C/N 3085.092-163	1	NO	SUBMERSIBLE PUMP, 250 GPM @15 FT, 480V, 3PH, 60 HZ.	2
19	EXISTING FEB MIXER	-	CITY	-	-	-	-	EXISTING FEB MIXER.	2
				BLOWERS & DIFFUSERS					
20	FEB BLOWERS (EXISTING, RELOCATED)	BLR-05001 BLR-05002 BLR-05003	CITY	GARDNER DENVER/ SUTORBUILT	7MP-GAGMDPAX	75	NO	POSITIVE DISPLACEMENT ROTARY LOBE BLOWERS w/ SOUND ENCLOSURE, 1300 SCFM AT 10 PSI, 2050 RPM MAX, 480V, 3PH, 60 HZ, VFD.	3
21	MLSS CHANNEL BLOWERS	BLR-02010 BLR-02011	CONTRACTOR	SEE SPECIFICATIONS	SEE SPECIFICATIONS	17	NO	REGENERATIVE BLOWERS, 260 SCFM AT 3.5 PSI, 480V, 3PH, 60 HZ, PACKAGED WITH ENCLOSURE, INLET FILTER, PRESSURE RELIEF AND CHECK VALVE.	2
22	PRE-AERATION BLOWER	BLR-05101 BLR-05102 BLR-05103	CITY-SUPPLIED (KUBOTA)	AERZEN	GM 90 S DN 250	200	YES	POSITIVE DISPLACEMENT ROTARY LOBE BLOWERS w/ SOUND ENCLOSURE, 2125 SCFM AT 10.5 PSI, 480V, 3PH, 60 HZ, VFD	3
23	MBR BLOWER	BLR-05301 BLR-05302	CITY-SUPPLIED (KUBOTA)	AERZEN	GM 60 S DN 200	150	YES	POSITIVE DISPLACEMENT ROTARY LOBE BLOWERS, 767 SCFM @ 10.5 PSI, 480V, 3PH, 60 HZ, VFD.	2
24	DIGESTER BLOWERS (EXISTING)	BLR-05501 BLR-05502 BLR-05503	CITY	GARDNER DENVER/ SUTORBUILT	GMT - GAFMCTA	50	NO	POSITIVE DISPLACEMENT ROTARY LOBE BLOWERS, 760 SCFM @ 10 PSI, 2350 RPM MAX, 480V, 3PH, 60 HZ.	3
25	PRE-AIR BASIN FINE BUBBLE DIFFUSER ASSEMBLY	FBD-02180 FBD-02280 FBD-02380	CITY-SUPPLIED (KUBOTA)	JAEGER AERATION	OXYSTRIP SD/160/2200 FF SERIES	NA	NA	1500 SCFM CAPACITY PER BASIN, 7"W X 81" LONG TUBULAR, AND OVAL FINE BUBBLE MEMBRANE STRIP DIFFUSERS, SILICON, RANGE 2 SCFM/SF - 22 SCFM/SF, 72 TUBE DIFFUSERS/ BASIN, INCLUDE HEADER AND SUPPORT ASSEMBLY.	216
26	DIGESTER FINE BUBBLE DIFFUSER ASSEMBLY	FBD-06080 FBD-06081	CONTRACTOR/ *KUBOTA	JAEGER AERATION	OXYTUBE	NA	NA	500 SCFM CAPACITY PER BASIN, 2.5" DIAMETER, FINE BUBBLE MEMBRANE STRIP DIFFUSERS, SILICON, RANGE 3 SCFM/SF - 16 SCFM/SF, 28 TUBE DIFFUSERS/ BASIN, INCLUDE HEADER AND SUPPORT ASSEMBLY.	56
27	FEED FORWARD CHANNEL FINE BUBBLE DIFFUSER ASSEMBLY	FBD-02480	CONTRACTOR/ *KUBOTA	JAEGER AERATION	OXYTUBE	NA	NA	60 SCFM CAPACITY PER BASIN, 2.5" DIAMETER, FINE BUBBLE MEMBRANE STRIP DIFFUSERS, SILICON, RANGE 3 SCFM/SF - 16 SCFM/SF, INCLUDE HEADER, SS DROP PIPE AND SUPPORT ASSEMBLY.	12
28	MLSS CHANNEL FINE BUBBLE DIFFUSER ASSEMBLY	FBD-02080	CONTRACTOR/ *KUBOTA	JAEGER AERATION	OXYTUBE	NA	NA	140 SCFM CAPACITY PER BASIN, 2.5" DIAMETER, FINE BUBBLE MEMBRANE STRIP DIFFUSERS, SILICON, RANGE 3 SCFM/SF - 16 SCFM/SF, INCLUDE HEADER, SS DROP PIPE, AND DIFFUSER SUPPORT ASSEMBLY.	40
				CHEMICAL SYSTEM					
30	CIP SYSTEM	--	CITY-SUPPLIED (KUBOTA)	SEE MBR VENDOR	SEE MBR VENDOR	NA		4" MAZZEI INJECTION SYSTEM WITH CIP SOLUTION TANK, SEE DETAIL ON SHEET M12.2.	1
31	SODIUM HYPOCHLORITE CHEMICAL STORAGE TANK (EXISTING)	ST-04590	CITY	NA	NA	NA	NA	2,000 GAL POLY TANK - INSTALL NEW LEVEL SENSOR (RADAR TYPE) PER SPECIFICATIONS.	1
32	CIITRIC ACID CHEMICAL STORAGE TANK	ST-04591	CONTRACTOR	SEE SPECIFICATIONS	SEE SPECIFICATIONS	NA	NA	275 GALLON CHEMICAL TOTE.	1
33	CHEMICAL CONTAINMENT SUMP	--	CONTRACTOR	SEE SPECIFICATIONS	SEE SPECIFICATIONS	NA	NA	385 GALLON DOUBLE CONTAINMENT (PALLET SYTLE).	1
34	CHLORINE METERING PUMP (EXISTING, RELOCATED)	PMP-04502 PMP-04503	CONTRACTOR	SEE SPECIFICATIONS	SEE SPECIFICATIONS	NA	YES	PERISTALTIC CHLORINE PUMP 0.0019 - 19.02 GPH FOR 12.5% SODIUM HYPOCHLORITE. REPLACE EXISTING METERING PUMPS ON EXISTING METERING STATION. 120 V.	2
				DEWATERING EQUIPMENT					
40	SCREW PRESS	M-07112	CITY-SUPPLIED (FKC)	FKC DEWATERING	BHX-1350x7500L	5	YES	SCREW PRESS, MAXIMUM LOADING RATE 170 GPM AT 1.2% FEED SOLIDS CONCENTRATION, 480V, 3PH, 60 HZ WITH LOCAL CONTROL PANEL.	1
41	FLOCCULATION TANK	M-07111	CITY-SUPPLIED (FKC)	FKC DEWATERING	540GL	1.5	NO	FLOCCULATION MIXER, 460V, 3PH, 60 HZ.	1
42	CONVEYOR DRIVE	M-07113	CITY-SUPPLIED (FKC)	FKC DEWATERING	SEE DEWATERING SPEC	5	YES	SLUDGE CAKE INCLINED, SHAFTELES, SCREW CONVEYOR, 480V, 3PH, 60HZ, VFD.	1
43	POLYMER SYSTEM	PU-07110	CITY-SUPPLIED (FKC)	FKC DEWATERING	PMS-M-5-P-120-P	1		POLYMER FLOW RANGE 0.5-5.0 GPH, DILUTION WATER 5-20 GPH, 120V.	1
				MISCELLANEOUS					
50	HW ODOR CONTROL UNIT	PMP-08001	CONTRACTOR	SEE SPECIFICATIONS	SEE SPECIFICATIONS	1.5	NO	640 SCFM @ 8" W.G. BIOLOGICAL MEDIA ODOR CONTROL UNIT, 480 V, 3 HP, 60 HZ.	1
51	FEED FORWARD PUMP CAN	--	CONTRACTOR/ *KUBOTA	FLYGT	NA	NA	NA	20" DIAMETER 304 SS CAN COLUMNS FOR FEED FORWARD PUMP. CONTRACTOR TO PROCURE FROM PUMP MANUFACTURER.	4
52	ANOXIC BASIN WEIR GATE	WEG-02120 WEG-02220 WEG-02320	CONTRACTOR	SEE SPECIFICATIONS	SEE SPECIFICATIONS	NA	NO	60" WIDE, DOWNWARD-OPENING 304 SS WEIR GATE WITH, WALL-MOUNTED FRAME AND WEIR PLATE WITH RISING STEM 5' x 3' OPENING.	6
53	PRE-AIR BASIN SLUICE GATE	WEG-02121 WEG-02221 WEG-02321	CONTRACTOR	SEE SPECIFICATIONS	SEE SPECIFICATIONS	NA	NO	36" 304 SS SLUICE GATE FOR SUBMERGE INSTALLATION. INCLUDE STEM EXTENSION, SUPPORT AND FLOOR STAND WITH CRANK.	3
54	MBR BRIDGE CRANE	--	CONTRACTOR	SEE SPECIFICATIONS	SEE SPECIFICATIONS	18	NO	5-TON, TOP-RUNNING, SINGLE GIRDER, OVERHEAD TRAVELING BRIDGE CRANE WITH ELECTRIC TROLLEY AND HOIST, 18 HP, 580V 3PH, 60Hz, AND 120V CONTROL POWER.	1
55	BLOWER ROOM EVAP COOLER	--	CONTRACTOR	SEE SPECIFICATIONS	SEE SPECIFICATIONS	0.75	NO	4700 CFM EVAPORATIVE COOLER, 120/240V, 1PH, 60 HZ.	2
56	PIPE GALLERY EXTRACTION FAN	--	CONTRACTOR	SEE SPECIFICATIONS	SEE SPECIFICATIONS	0.17	NO	851 CFM @0.25"SP, DOWNBLAST, CETRIFUGAL EXHAUST FAN, 13.5" SQUARE OPENING W/ 17" SQUARE CURB, 120V, 1PH, 60 HZ.	4
57	HEADWORKS CHANNEL GATE	--	SEE SPECIFICATIONS	SEE SPECIFICATIONS				1'-6" WIDE x 52" TALL EMBEDDED CHANNEL GATE W/ SELF CONTAINED FRAME AND RISING STEM W/ HANDWHEEL ACTUATOR.	2
58	I-BEAM CRANE SYSTEM	--	CONTRACTOR	SEE SPECIFICATIONS	SEE SPECIFICATIONS			2-TON I-BEAM CRANE SYSTEM WITH PUSH TROLLEY AND ELECTRIC HOIST.	1
59	ELECTRICAL BUILDING AIR CONDITIONING UNIT	--	CONTRACTOR	SEE SPECIFICATIONS	SEE SPECIFICATIONS	NA	NA	3-TON, 36,000 BTU WALL MOUNT MINI SPLIT COOLING SYSTEM	3

* CONTRACTOR / KUBOTA INDICATES EQUIPMENT THAT THE CONTRACTOR PURCHASES THROUGH KUBOTA BUT IS NOT PART OF THE ORIGINAL CITY-SUPPLIED KUBOTA PACKAGE.

DRAFT

FINAL PLANS ISSUED FOR BID

THESE DRAWINGS ARE THE PROPERTY OF P.A.C.E. AND SHALL NOT BE REPRODUCED IN ANY MANNER NOR BE USED FOR CONSTRUCTION UNLESS STAMPED 'ISSUED FOR CONSTRUCTION'.

NO	BY	DATE	REVISIONS	DATE	APP.

Registered Professional Engineer (Civil) DUONG T. DO 40050 Date Signed 12/31/27 ARIZONA, U.S.A. Expires 12/31/27

PREPARED BY: DUONG DO
PROJECT ENGINEER #40050
R.C.E. NO. --
EXP. DATE
SCALE
DRAWN WW, MSA
DESIGNED NT, NE
CHECKED DD
DATE FEB 2026

TITLE: EQUIPMENT LIST

JOB: CITY OF SAN LUIS WEST WWTP 3.0 MGD MBR UPGRADES — SAN LUIS AZ.

PACE Advanced Water Engineering
8723 E. VIA de COMMERCIO, SUITE A-204 | SCOTTSDALE, CA 85258
P: (408) 991-3595 | www.pacewater.com

SHEET M0.1
27 OF 209 SHEETS

JOB NO. B777

W:\B777\Engineering\B777 - 3MGD Exp\3MGD FINAL DS\sheets\B777 - M0.1 EQUIPMENT LIST.dwg - Tab: M0.1 - by wwright on 02/26/26 at 3:13:19 PM

(#)	INSTRUMENTATION								
NO.	DESCRIPTION	TAG ID	SUPPLIER	MF'R	MODEL #	HP	VFD	SPECIFICATION	QTY
60	HEADWORKS FLOAT LEVEL SWITCHES	LSH-01030 LSH-01032 LSH-01130 LSH-01132	CITY-SUPPLIED (HYDRO-DYNE)	ANCHOR SCIENTIFIC	ROTO-FLOAT SSTNM	NA	NO	SPST MECHANICAL LEVEL FLOAT, NON-MERCURY, 100' NC CABLE, 316 SS HOOKS AND BRACKETS MOUNTING KIT W/ QUICK CONNECT CABLES.	4
61	PA TANK FLOAT LEVEL SWITCHES	LSH-02130A LSL-02130B LSH-02230A LSL-02230B LSH-02330A LSL-02330B LSL-02430	CITY-SUPPLIED (KUBOTA)	CONERY	2902-B6S2-30	NA	NO	SPDT MECHANICAL LEVEL FLOAT, NON-MERCURY, 30' NO-NC CABLE, 316 SS HOOKS AND BRACKETS MOUNTING KIT.	7
62	FLOAT LEVEL SWITCHES	LSL-01631A LSH-01631B LSHH-07231A LSH-07321B LSL-07321C LSH-02432	CONTRACTOR	SEE SPECIFICATIONS	SEE SPECIFICATIONS	NA	NO	SPDT MECHANICAL LEVEL FLOAT, NON-MERCURY, 15' NO-NC CABLE, 316 SS HOOKS AND BRACKETS MOUNTING KIT W/ QUICK CONNECT CABLES.	6
63	HEADWORKS LEVEL CONTROLLER	LT-01031 LT-01033 LT-01131 LT-01133	CITY-SUPPLIED (HYDRO-DYNE)	MILLTRONICS	HYDRO-RANGER LT500	NA	NO	MIN 0-50 PSI, MAX 1" DIA., SS CONSTRUCTION, 4-20 mA INPUT/OUTPUT, 250VAC POWER SUPPLY.	4
64	HEADWORKS LEVEL TRANSDUCER	LE-01031 A/B LE-01033 A/B LE-01131 A/B LE-01133 A/B	CITY-SUPPLIED (HYDRO-DYNE)	SEIMENS	ECHO MAX XPS-15F	NA	NO	NEMA 4X/7 LEVEL TRANSDUCERS W/ 30' CABLE, 1.5-50 FT MEASUREMENT RANGE, 4-20 mA OUTPUT.	8
65	PA TANK LEVEL TRANSDUCER	LT-02131 LT-02231 LT-02331 LT-02431	CITY-SUPPLIED (KUBOTA)	ENDRESS & HAUSER	WATERPILOT FMX21	NA	NO	HYDROSTATIC PRESSURE-TYPE SUBMERSIBLE LEVEL TRANSDUCER W/ INTRINSICALLY SAFE BARRIER, 316 SS, 1.5-300 PSI, 4-20mA OUTPUT, 24VDC POWER SUPPLY, POLYURETHANE CABLE.	4
66	LEVEL TRANSDUCER	LE-01630 LE-04330 LE-07232 LE-04530 LE-04630 LE-04632 LE-06031 LE-06033	CONTRACTOR	SEE SPECIFICATIONS	SEE SPECIFICATIONS	NA	NO	HYDROSTATIC PRESSURE-TYPE SUBMERSIBLE LEVEL TRANSDUCER W/ INTRINSICALLY SAFE BARRIER, 316 SS, 1.5-300 PSI, 4-20mA OUTPUT, 24VDC POWER SUPPLY, POLYURETHANE CABLE.	8
70	PERMEATE PRESSURE TRANSMITTER	PT-04050 PT-04051 PT-04052	CITY-SUPPLIED (KUBOTA)	ENDRESS & HAUSER	CERABAR PMC21	NA	NO	15-150 PSI, 0-20mA OUTPUT, 24 VDC POWER SUPPLY, 316 SS, 1/2" MNPT W/ INTEGRAL DISPLAY.	3
71	CIP PRESSURE GAUGE	PG-04450 PG-04451	CITY-SUPPLIED (KUBOTA)	SEE SPECIFICATIONS	SEE SPECIFICATIONS	NA	NO	4-1/2" 316 SS PRESSURE GAUGE, 0-50 PSI, ±0.5 SPAN ACCURACY, LIQUID GLYCERIN FILLED, SHATTER PROOF GLASS, BLOW OUT BACK.	2
72	SLUDGE FEED PRESSURE GAUGE	PG-07050 PG-07051	CITY-SUPPLIED (FKC)	SEE SPECIFICATIONS	SEE SPECIFICATIONS	NA	NO	2-1/2" 316 SS PRESSURE GAUGE, 0-300 PSI, LIQUID FILLED, SHATTER PROOF GLASS, BLOW OUT BACK.	2
73	PRESSURE GAUGE	SEE PID	CONTRACTOR	SEE SPECIFICATIONS	SEE SPECIFICATIONS	NA	NO	4-1/2" 316 SS PRESSURE GAUGE, 0-50 PSI, ±0.5 SPAN ACCURACY, LIQUID GLYCERIN FILLED, SHATTER PROOF GLASS, BLOW OUT BACK.	15
74	BLOWER PRESSURE TRANSMITTER	PT-05250 PT-05051 PT-05052 PT-05450 PT-05451 PT-05452	CITY-SUPPLIED (KUBOTA)	ENDRESS & HAUSER	CERABAR PMC21	NA	NO	15-150 PSI, 0-20mA OUTPUT, 24 VDC POWER SUPPLY, 316 SS, 1/2" MNPT W/ INTEGRAL DISPLAY.	6
80	MBR PERMEATE FLOW METER	FM-04040 FM-04041 FM-04042	CITY-SUPPLIED (KUBOTA)	ENDRESS & HAUSER	PROMAG W 400	NA	NO	12" ELECTROMAGNETIC FLOW METER W/ REMOTE DISPLAY, INTEGRAL TRANSMITTER, FLANGED CONNECTION, 4-20mA OUTPUT W/ DIGITAL HART PROTOCOL, 24VDC POWER SUPPLY.	3
81	CIP FLOW METER	FM-04440	CITY-SUPPLIED (KUBOTA)	ENDRESS & HAUSER	PROMAG W 400	NA	NO	6" ELECTROMAGNETIC FLOW METER W/ INTEGRAL DISPLAY, INTEGRAL TRANSMITTER, FLANGED CONNECTION, 4-20mA OUTPUT W/ DIGITAL HART PROTOCOL, 24VDC POWER SUPPLY.	1
82	SLUDGE FEED FLOW METER	FM-07140	CITY-SUPPLIED (FKC)	IFM	MAGNET FLOW METER	NA	NO	4" ELECTROMAGNETIC FLOW METER W/ INTEGRAL DISPLAY, 4-20mA OUTPUT, 24VDC POWER SUPPLY.	1
83	POLYMER FLOW METER	--	CITY-SUPPLIED (FKC)	IFM	MAGNET FLOW METER	NA	NO	1" ELECTROMAGNETIC FLOW METER W/ REMOTE DISPLAY, 4-20mA OUTPUT W/ DIGITAL HART PROTOCOL, 24VDC POWER SUPPLY.	1
84	SECONDARY PROCESS FLOW METER	FM-01540	CONTRACTOR	SEE SPECIFICATIONS	SEE SPECIFICATIONS	NA	NO	16" ELECTROMAGNETIC FLOW METER W/ INTEGRAL DISPLAY, INTEGRAL TRANSMITTER, FLANGED CONNECTION, 4-20mA OUTPUT W/ DIGITAL HART PROTOCOL, 24VDC POWER SUPPLY.	1
85	FEB RETURN FLOW METER	FM-01640	CONTRACTOR	SEE SPECIFICATIONS	SEE SPECIFICATIONS	NA	NO	10" ELECTROMAGNETIC FLOW METER W/ INTEGRAL DISPLAY, INTEGRAL TRANSMITTER, FLANGED CONNECTION, 4-20mA OUTPUT W/ DIGITAL HART PROTOCOL, 24VDC POWER SUPPLY.	1
86	EFFLUENT FLOW METER	FM-04240	CONTRACTOR	SEE SPECIFICATIONS	SEE SPECIFICATIONS	NA	NO	18" ELECTROMAGNETIC FLOW METER W/ INTEGRAL DISPLAY, INTEGRAL TRANSMITTER, FLANGED CONNECTION, 4-20mA OUTPUT W/ DIGITAL HART PROTOCOL, 24VDC POWER SUPPLY.	1
87	PLANT REUSE FLOW METER	FM-04340 FM-04341	CONTRACTOR	SEE SPECIFICATIONS	SEE SPECIFICATIONS	NA	NO	6" ELECTROMAGNETIC FLOW METER W/ INTEGRAL DISPLAY, INTEGRAL TRANSMITTER, FLANGED CONNECTION, 4-20mA OUTPUT W/ DIGITAL HART PROTOCOL, 24VDC POWER SUPPLY.	1
88	BLOWER DISCHARGE AIR FLOW METER	FM-05240 FM-05241 FM-05242	CITY-SUPPLIED (KUBOTA)	ENDRESS & HAUSER	PROLINE t-MASS I500	NA	NO	THERMAL MASS FLOW METER W/ INTEGRAL DISPLAY, INTEGRAL TRANSMITTER, 4-20mA OUTPUT, 24VDC POWER SUPPLY.	3
89	PA TANK AERATION AIR FLOW METER	FM-05440 FM-05441 FM-05442	CITY-SUPPLIED (KUBOTA)	ENDRESS & HAUSER	PROLINE t-MASS I500	NA	NO	THERMAL MASS FLOW METER W/ INTEGRAL DISPLAY, INTEGRAL TRANSMITTER, 4-20mA OUTPUT, 24VDC POWER SUPPLY.	3
90	WAS FLOW METER	FM-06040	CITY-SUPPLIED (KUBOTA)	ENDRESS & HAUSER	PROMAG W 400	NA	NO	6" ELECTROMAGNETIC FLOW METER W/ INTEGRAL DISPLAY, INTEGRAL TRANSMITTER, FLANGED CONNECTION, 4-20mA OUTPUT W/ DIGITAL HART PROTOCOL, 24VDC POWER SUPPLY.	1
91	INFLUENT FLOW METER	FM-01040	CONTRACTOR	SEE SPECIFICATIONS	SEE SPECIFICATIONS	NA	NO	18" ELECTROMAGNETIC FLOW METER W/ REMOTE DISPLAY, INTEGRAL TRANSMITTER, FLANGED CONNECTION, 4-20mA OUTPUT W/ DIGITAL HART PROTOCOL, 24VDC POWER SUPPLY.	1
92	PLANT DRAIN RETURN FLOW METER	FM-07240	CONTRACTOR	SEE SPECIFICATIONS	SEE SPECIFICATIONS	NA	NO	6" ELECTROMAGNETIC FLOW METER W/ INTEGRAL DISPLAY, INTEGRAL TRANSMITTER, FLANGED CONNECTION, 4-20mA OUTPUT W/ DIGITAL HART PROTOCOL, 24VDC POWER SUPPLY.	1
100	PA TANK DO PROBE	AE-02160B AE-02260B AE-02360B	CITY-SUPPLIED (KUBOTA)	HACH	LDO MODEL 2	NA	NO	HACH DIGITAL DO PROBE, 0-20 mg/L MEASUREMENT RANGE.	3
101	PA TANK pH PROBE	AE-02160A AE-02260A AE-02360A	CITY-SUPPLIED (KUBOTA)	HACH	pHD SC DPD1P1	NA	NO	HACH DIGITAL PROBE 0-14 pH MEASURING RANGE W/ 30' CABLE.	3
102	PROCESS AIR TANK CONTROLLER	AIT-02160 AIT-02260 AIT-02360	CITY-SUPPLIED (KUBOTA)	HACH	SC4500	NA	NO	HACH DIGITAL CONTROLLER FOR DO/PH, 4-20mA OUTPUT.	3
103	PERMEATE TURBIDITY METER	AE-04160 AE-04162 AE-04164	CITY-SUPPLIED (KUBOTA)	HACH	TU5300sc	NA	NO	WALL-MOUNTED HACH LOW RANGE TURBIDIMETER, 0-1000 NTU MEASURING RANGE.	3
104	PERMEATE TURBIDITY CONTROLLER	AIT-04161 AIT-04163 AIT-04165	CITY-SUPPLIED (KUBOTA)	HACH	SC4500	NA	NO	HACH DIGITAL CONTROLLER FOR TURBIDITY, 4-20 Ma OUTPUT.	3
105	CHEMICAL STORAGE RADAR LEVEL TRANSMITTER	LE-04530	CONTRACTOR	SEE SPECIFICATIONS	SEE SPECIFICATIONS	NA	NO	4-20 mA, TWO WIRE, PVDF HOUSING AND WETTED PARTS, FKM SEALS, 1-1/2" NPT THREADED CONNECTION WITH REMOTE MOUNTED TRANSMITTER DISPLAY	1
106	PIPE BASEMENT EXHAUST FAN	--	CONTRACTOR	SEE SPECIFICATIONS	SEE SPECIFICATIONS	0.5	NO	1440 CFM @0.25" SP, DOWNBLAST, CENTRIFUGAL EXHAUST FAN, 120V, 1PH, 60 HZ.	1

DRAFT

W:\B777\Engineering\B777 - 3MGD Exp\3MGD FINAL DS\Sheets\B777 - M0.1 EQUIPMENT LIST.dwg - Tab: M0.2 - by wwright on 02/06/26 at 3:13:19 PM

NO	BY	DATE	REVISIONS	DATE	APP.
1					
2					
3					
4					
5					
6					

Registered Professional Engineer (Civil) DUONG T. DO No. 40050 CERTIFICATE NO. Date Signed 12/31/27 STATE OF ARIZONA

Expires 12/31/27

PREPARED BY: DUONG DO
R.C.E. NO.: 40050
EXP. DATE: 12/31/27
PROJECT ENGINEER: #40050
SCALE:
DRAWN: WW, MSA
DESIGNED: NT, NE
CHECKED: DD
DATE: FEB 2026

THESE DRAWINGS ARE THE PROPERTY OF P.A.C.E. AND SHALL NOT BE REPRODUCED IN ANY MANNER NOR BE USED FOR CONSTRUCTION UNLESS STAMPED 'ISSUED FOR CONSTRUCTION'.

TITLE: **INSTRUMENT LIST**

JOB: CITY OF SAN LUIS WEST WWTP
3.0 MGD MBR UPGRADES
SAN LUIS AZ.

PACE
Advanced Water Engineering
8723 E. VIA de COMMERCIO, SUITE A-204 | SCOTTSDALE, CA 85258
P: (408) 991-3595 | www.pacewater.com

FINAL PLANS ISSUED FOR BID

SHEET
M0.2
28 OF 209 SHEETS

JOB NO. B777

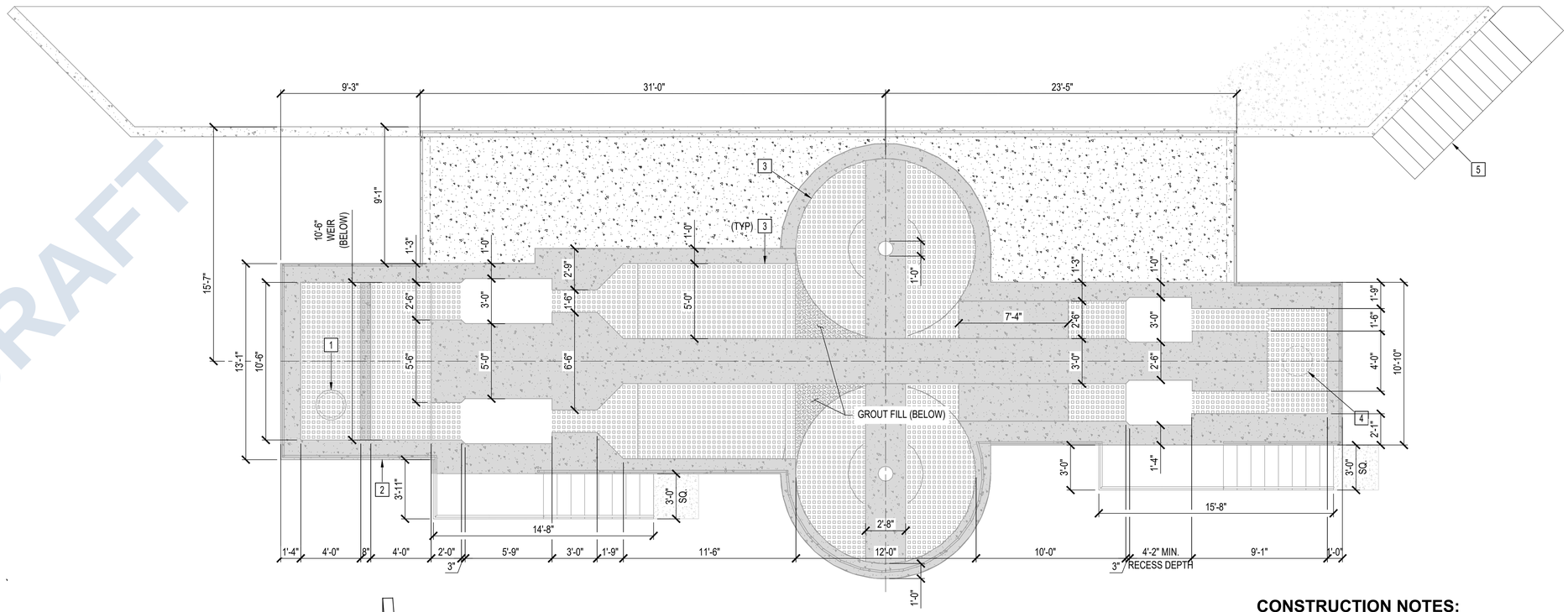

STRUCTURAL PLAN
SCALE: 1/4"=1'-0"

CONSTRUCTION NOTES:

1. 20" PIPE THROUGH CONCRETE (BELOW), CAST-IN-PLACE SLAB PENETRATION (WET WELL) PER DETAIL: A/M11.1
2. 20" PIPE THROUGH CONCRETE WALL, WALL PENETRATION (WET PIT) PER DETAIL: A/M11.1
3. INSTALL 2" SOLID COVERED UN-PUNCHED FRP GRATING WITH EMBEDDED ANGLE (SEE SPECS) (TYP.) INSTALL PER MANUFACTURERS REQUIREMENTS
4. 20" INFLUENT PIPE (BELOW), CAST-IN-PLACE SLAB PENETRATION (WET WELL) PER DETAIL: A/M11.1
5. INSTALL CONCRETE STAIRS ON GRADE PER STRUCTURAL PLANS.

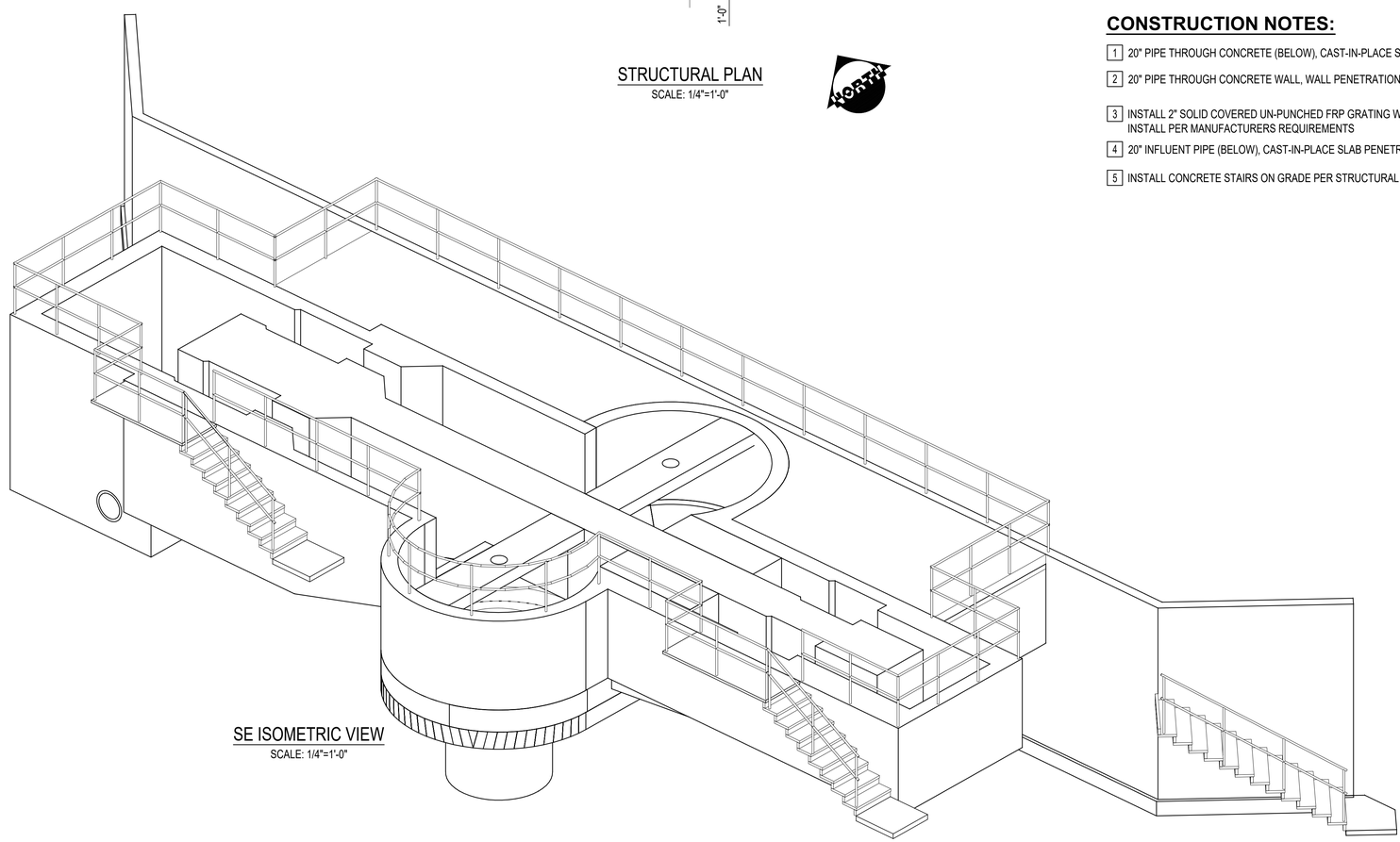

SE ISOMETRIC VIEW
SCALE: 1/4"=1'-0"

DRAFT

NO	BY	DATE	REVISIONS	DATE	APP.

Registered Professional Engineer (Civil) CERTIFICATE NO. 40050 DUONG T. DO Date Signed 12/31/21 ARIZONA, U.S.A. Expires 12/31/27

PREPARED BY DUONG DO
PROJECT ENGINEER
R.C.E. NO. -- #40050
EXP. DATE
DRAWN WW, MSA
SCALE
DESIGNED NT, NE
CHECKED DD
DATE FEB 2026

THESE DRAWINGS ARE THE PROPERTY OF P.A.C.E. AND SHALL NOT BE REPRODUCED IN ANY MANNER NOR BE USED FOR CONSTRUCTION UNLESS STAMPED "ISSUED FOR CONSTRUCTION".

TITLE
HEADWORKS STRUCTURE PLAN & ISO

JOB
CITY OF SAN LUIS WEST WWTP
3.0 MGD MBR UPGRADES
SAN LUIS AZ.

PACE
Advanced Water Engineering
8723 E. VIA de COMMERCIO, SUITE A-204 | SCOTTSDALE, CA 85258
P: (408) 991-3595 | www.pacewater.com

SHEET
M1.0
29 OF 209 SHEETS
JOB NO. B777

FINAL PLANS ISSUED FOR BID

W:\B777\Engineering\B777 - 3MGD Exp\3MGD FINAL DSN\sheets\B777 - M1.0 HW STRUC PLAN.dwg - Tab: M1.0 - by wwright on 02/02/26 at 3:28:35 PM

CONSTRUCTION NOTES:

1. CONSTRUCT ODOR CONTROL DUCTING PER SHEET M1.4
2. CONSTRUCT 2" SERRATED, UNPUNCHED FRP PLANK GRATING, SEE SPECS
3. CONSTRUCT PRE-ENGINEERED STRUCTURE ACCESS STAIRS AND PLATFORM (PROVIDED AS DEFERRED SUBMITTAL)
4. CONSTRUCT PRE-ENGINEERED GUARD RAIL PER DETAIL: B / M11.3
5. CONSTRUCT GRIT VORTEX BRIDGE, SEE STRUCTURAL PLANS
6. CONSTRUCT 8" THICK KNEE WALL, SEE STRUCTURAL PLANS
7. INSTALL 1'-6" WIDE SELF-CONTAINED 316 SS SLIDE GATE PER SPECIFICATIONS
8. INSTALL PRE-ENGINEERED CANOPY SHADE STRUCTURE PER SPECS
9. INSTALL SHADE CANOPY STRUCTURAL FOUNDATION PER CANOPY VENDOR REQUIREMENTS
10. ROLL-OFF DUMPSTERS PROVIDED BY CITY
11. INSTALL 6" Ø DIP
12. INSTALL 6" D.I. 90° BEND (MJ x MJ)
13. INSTALL 6" D.I. 90° BEND (FLG x FLG)
14. INSTALL PIPE SUPPORT, SIZE PER PLAN, PER DETAIL: S1 / M11.4
15. INSTALL 20" Ø DIP
16. INSTALL 20" D.I. ELBOW EMBEDDED IN CONCRETE (MJ x MJ)
17. INSTALL STAIRS PER STRUCTURAL PLANS
18. INSTALL LINK SEAL, SIZE PER PLAN, PER DETAIL: A / M11.1
19. INSTALL 4" FLOOR DRAIN w/ PROSET TRAP GUARD SYSTEM. ROUTE 4" SCH. 80 PVC DRAIN IN FLOOR TO PROCESS CHANNEL E / M11.0
21. INSTALL 4" GLASS LINED D.I.P. (FLG x FLG)
22. INSTALL 4" GLASS LINED D.I. 90° BEND (FLG x FLG)
23. INSTALL 4" GLASS LINED D.I. 45° BEND (FLG x FLG)
24. SHADE CANOPY ROOF OVERHANG, SEE STRUCTURAL
25. INSTALL 20" BURIED SERVICE PLUG VALVE W/ VALVE CAN (MJ)
26. INSTALL 20" D.I. 45° BEND (FLG x FLG)
27. INSTALL 20" x 16" D.I. REDUCER (FLG x FLG)
28. INSTALL 16" ELECTROMAGNETIC FLOW METER (FLG x FLG)
29. INSTALL 16" DIP (FLG x FLG)
30. INSTALL 20" ELECTRICALLY ACTUATED PLUG VALVE (FLG x FLG)
31. INSTALL 2MM FINE SCREEN WEIR (PROVIDED BY HEADWORKS VENDOR)
32. INSTALL 6MM COARSE SCREEN WEIR (PROVIDED BY HEADWORKS VENDOR)
33. INSTALL GRIT RAMP/BAFFLE (PROVIDED BY HEADWORKS VENDOR)
34. INSTALL LEVEL SENSOR (PROVIDED BY HEADWORKS VENDOR)
35. CONSTRUCT PIPE PENETRATION THROUGH SOLID GRATING, SEAL PENETRATION WITH RUBBER BOOT OR EQUIVALENT, FIELD LOCATE AND SIZE PER PLAN (TYP. OF ALL FRP DECK PENETRATIONS)
36. INSTALL 4" SCH 40 PVC DRAIN LINE, CONNECT TO WASHER/COMPACTOR DRAIN WITH FLEXIBLE 90° ELBOW, ROUTE AND SLOPE TO CHANNEL (TYP. OF EACH COMPACTOR)
37. INSTALL 6" PLUG VALVE (FLG'D)
38. CONSTRUCT 4'-0" WIDE CONCRETE STAIRS ON GRADE PER STRUCTURAL PLANS

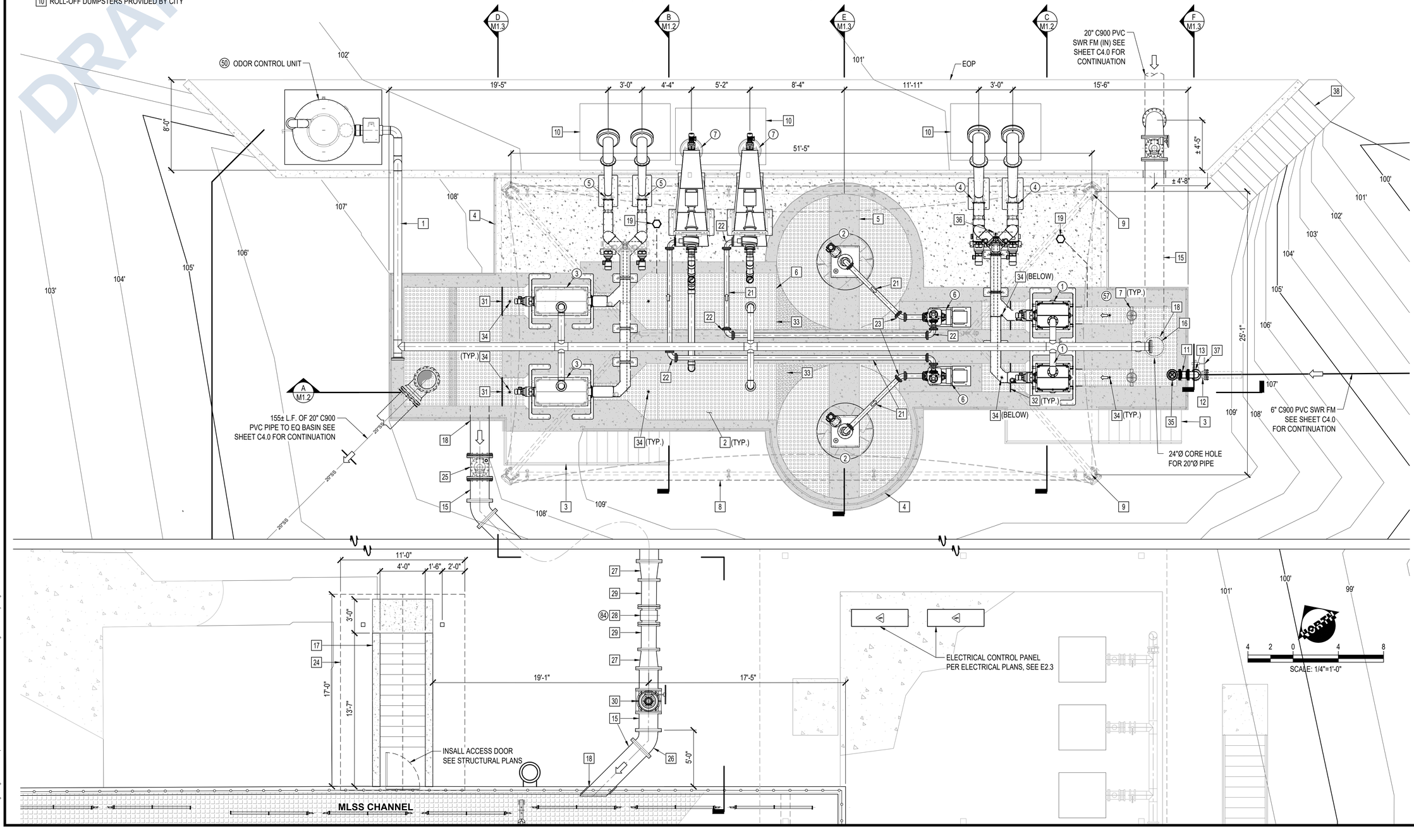

DRAFT

NO	BY	DATE	REVISIONS	DATE	APP.

Registered Professional Engineer (Civil) — DUONG T. DO — 40050 — Arizona, U.S.A. — Date Signed 12/31/25 — Expires 12/31/27

PREPARED BY: DUONG DO — PROJECT ENGINEER #40050 — R.C.E. NO. 40050 — EXP. DATE —
DRAWN: WW, MSA — DESIGNED: NT, NE — CHECKED: DD — SCALE — DATE: FEB 2026

TITLE: **HEADWORKS MECHANICAL PLAN**

JOB: CITY OF SAN LUIS WEST WWTP 3.0 MGD MBR UPGRADES — SAN LUIS AZ.

PACE Advanced Water Engineering
8723 E. VIA de COMMERCIO, SUITE A-204 | SCOTTSDALE, CA 85258
P: (408) 991-3595 | www.pacewater.com

SHEET **M1.1**
30 OF 209 SHEETS

JOB NO. B777

THESE DRAWINGS ARE THE PROPERTY OF P.A.C.E. AND SHALL NOT BE REPRODUCED IN ANY MANNER NOR BE USED FOR CONSTRUCTION UNLESS STAMPED 'ISSUED FOR CONSTRUCTION'.

FINAL PLANS ISSUED FOR BID

W:\B777\Engineering\B777 - 3MGD Exp\3MGD FINAL DS\Sheets\B777 - M1.1 HW MECH PLAN.dwg - Tab: M1.1 - by wwright on 02/02/26 at 3:31:02 PM

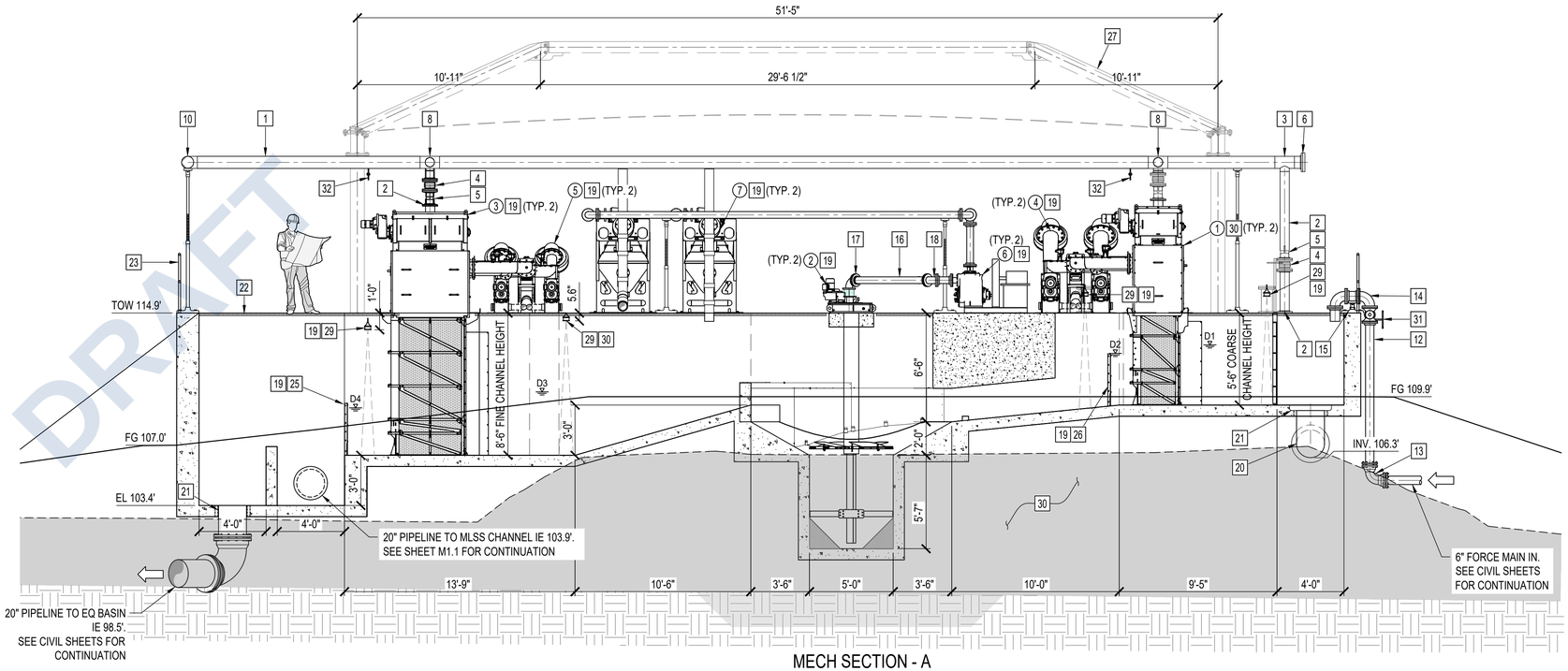

MECH SECTION - A

SCALE: 1/4"=1'-0"

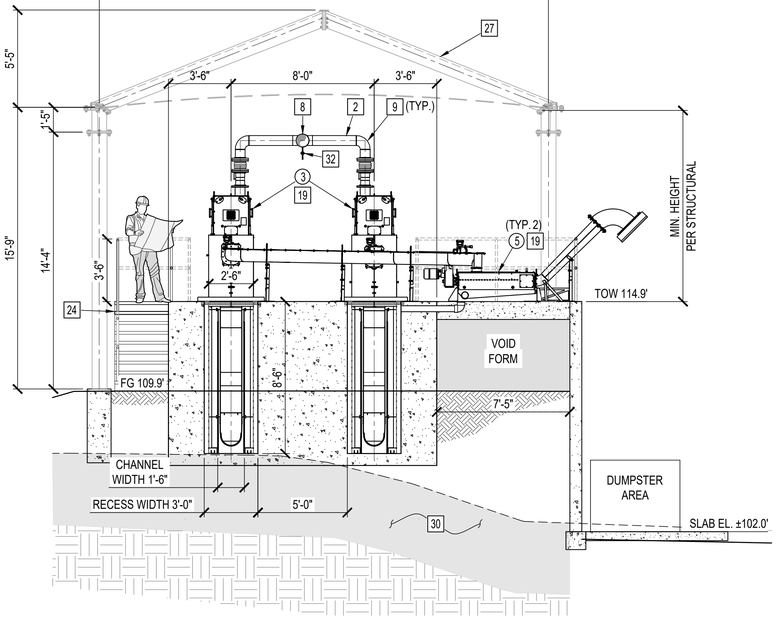

MECH SECTION - B

SCALE: 1/4"=1'-0"

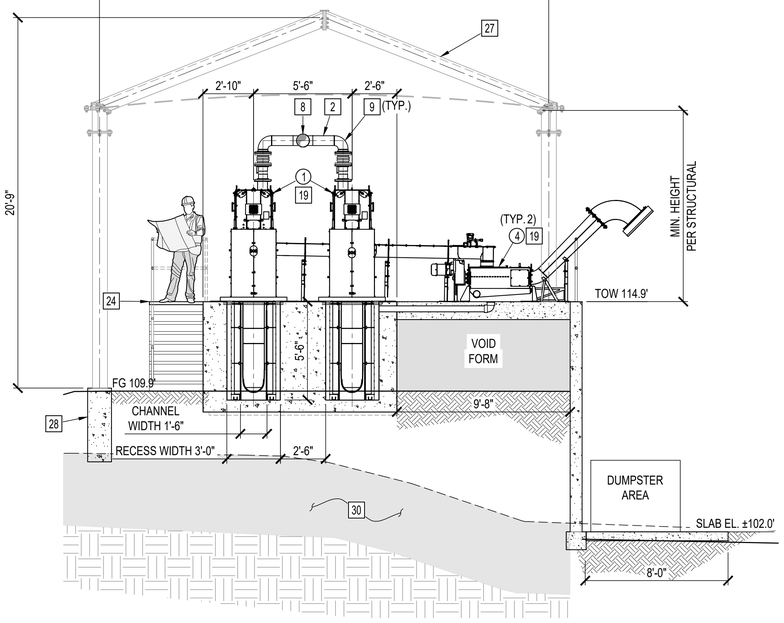

MECH SECTION - C

SCALE: 1/4"=1'-0"

CONSTRUCTION NOTES:

1. INSTALL FRP ODOR CONTROL DUCTING PER SPECS AND SHEET M1.4
2. CONNECT FRP DUCTING TO EQUIPMENT AND GRATING PER DETAIL: B / M11.0
3. INSTALL 10" x 6" x 10" FRP TEE
4. INSTALL 6" RUBBER EXPANSION JOINT
5. INSTALL 6" AIR VOLUME DAMPER
6. INSTALL 10" Ø FRP BLIND FLANGE
7. INSTALL 6" CLASS 150 FRP VANSTONE FLANGE, INSTALL PER FRP VENDOR REQUIREMENTS
8. INSTALL 10" x 6" FRP CROSS
9. INSTALL 6" 90° FRP ELBOW
10. INSTALL 10" FRP TEE
11. INSTALL DUCT SUPPORT, SIZE PER PLANS, SEE SPECS
12. INSTALL 6" Ø DIP
13. INSTALL 6" D.I. 90° BEND (MJ x MJ)
14. INSTALL 6" D.I. 90° BEND (FLG x FLG)
15. INSTALL PIPE SUPPORT PER DETAIL, SIZE PER PLAN S1 / M11.4
16. INSTALL 4" Ø GLASS LINED DIP (FLG'D)
17. INSTALL 4" D.I. 90° BEND (FLG'D)
18. INSTALL 4" D.I. 45° BEND (FLG'D)
19. INSTALL HYDRO-DYNE PROVIDED EQUIPMENT PER VENDOR REQUIREMENTS
20. INSTALL 20" 90° ELBOW CONCRETE ENCASED (MJ)
21. INSTALL LINK SEAL PER DETAIL, SIZE PER PLAN A / M11.1
22. INSTALL 2" SERRATED, UNPUNCHED FRP PLANK GRATING, SEE SPECS
23. INSTALL PRE-ENGINEERED GUARD RAIL (POSTS @ 8' O.C.)
24. INSTALL METAL ACCESS STAIRS AND PLATFORM
25. INSTALL 2mm FINE SCREEN WEIR BY HYDRO-DYNE ENGINEERING
26. INSTALL 6mm COARSE SCREEN WEIR BY HYDRO-DYNE ENGINEERING
27. INSTALL PRE-ENGINEERED SHADE CANOPY STRUCTURE PER SPECIFICATIONS SECTION 10-7316
28. INSTALL SHADE CANOPY STRUCTURAL FOUNDATION PER VENDOR REQUIREMENTS
29. INSTALL LEVEL SENSORS BY HYDRO-DYNE ENGINEERING PER VENDOR REQUIREMENTS. FOR ABOVE-DECK INSTALLATION, REFERENCE DETAIL: A / M11.0
30. OVER-EXCAVATION AND BACKGILL PER GEOTECHNICAL REQUIREMENTS.
31. INSTALL 6" PLUG VALVE (FLG'D)
32. INSTALL 1/2" DRIP LINE (TAP & BALL VALVE 316SS)

NO	BY	DATE	REVISIONS	DATE	APP.

Registered Professional Engineer (Civil) — DUONG T. DO — 40050 — Arizona, U.S.A. — One Signed Copy — Expires 12/31/27

PREPARED BY: DUONG DO
PROJECT ENGINEER #40050
R.C.E. NO. —
EXP. DATE
SCALE
DRAWN WW, MSA
DESIGNED NT, NE
CHECKED DD
DATE FEB 2026

THESE DRAWINGS ARE THE PROPERTY OF P.A.C.E. AND SHALL NOT BE REPRODUCED IN ANY MANNER NOR BE USED FOR CONSTRUCTION UNLESS STAMPED 'ISSUED FOR CONSTRUCTION'.

TITLE: HEADWORKS MECHANICAL SECTIONS 1

JOB: CITY OF SAN LUIS WEST WWTP 3.0 MGD MBR UPGRADES — SAN LUIS AZ.

PACE
Advanced Water Engineering
8723 E. VIA de COMMERCIO, SUITE A-204 | SCOTTSDALE, CA 85258
P: (408) 991-3595 | www.pacewater.com

SHEET M1.2
31 OF 209 SHEETS

JOB NO. B777

FINAL PLANS ISSUED FOR BID

DRAFT

W:\B777\Engineering\B777 - 3MGD Exp\3MGD FINAL DSN\sheets\B777 - M1.2 HW SECTIONS.dwg - Tab: M1.2 - by wwright on 02/06/26 at 9:45:19 AM

DRAFT

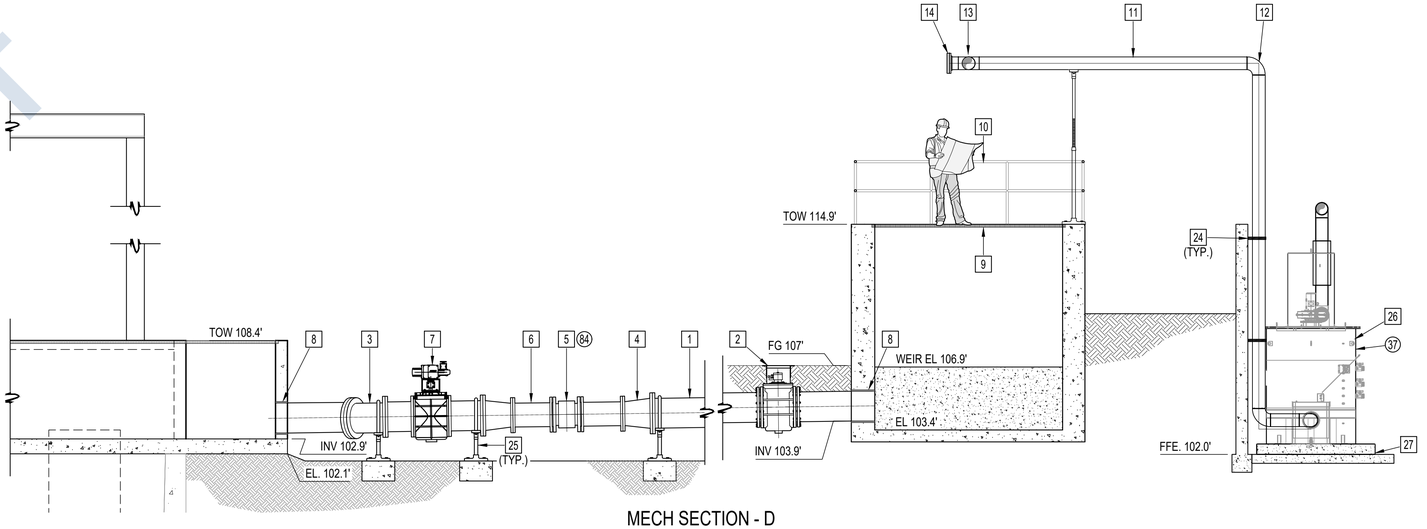

MECH SECTION - D

SCALE: 1/4"=1'-0"

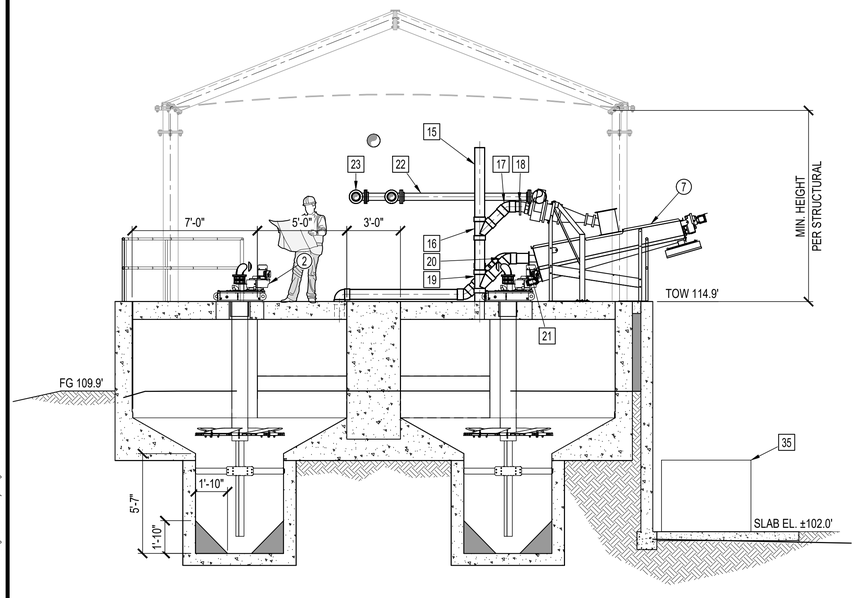

MECH SECTION - E

SCALE: 1/4"=1'-0"

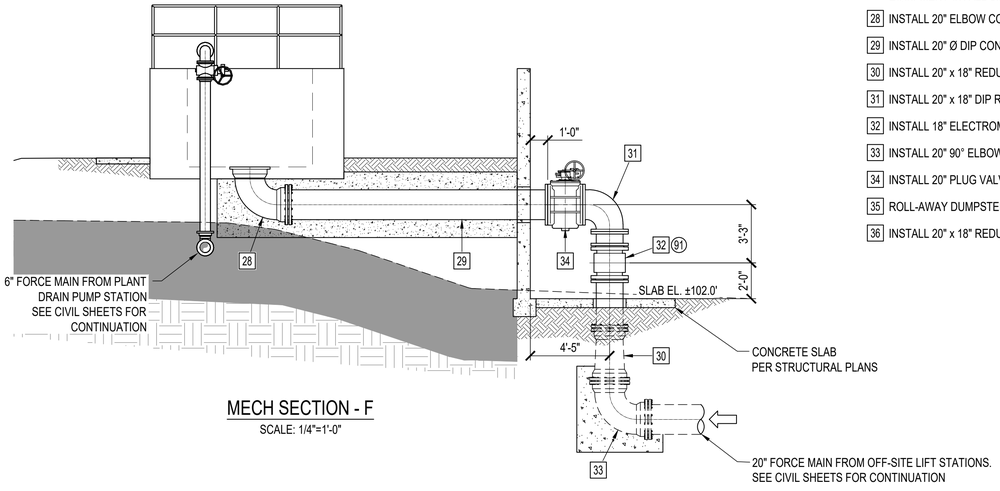

MECH SECTION - F

SCALE: 1/4"=1'-0"

CONSTRUCTION NOTES:

1. INSTALL 20" Ø DIP
2. INSTALL 20" BURIED SERVICE PLUG VALVE W/ VALVE CAN (MJ) PER DETAIL: (F / C6.0)
3. INSTALL 20" D.I. 45° BEND (FLG'D)
4. INSTALL 20" x 16" D.I. REDUCER (FLG'D)
5. INSTALL 16" ELECTROMAGNETIC FLOW METER (FLG'D), SEE SPECS
6. INSTALL 16" Ø DIP (FLG'D)
7. INSTALL 20" ELECTRICALLY ACTUATED PLUG VALVE (FLG'D)
8. INSTALL WALL PENETRATION (WET PIT) PER DETAIL: (A / M11.1)
9. INSTALL 2" SERRATED, UNPUNCHED FRP PLANK GRATING, SEE SPECS
10. INSTALL PRE-ENGINEERED GUARD RAIL PER DETAIL: (D / M11.0)
11. INSTALL 10" Ø FRP ODOR CONTROL DUCTING, SEE SPECS
12. INSTALL 10" FRP 90° BEND
13. INSTALL 10" FRP TEE
14. INSTALL 10" Ø FRP BLIND FLANGE
15. INSTALL 6" Ø SCH. 80 PVC PIPE AND FITTINGS
16. INSTALL 6" SCH. 80 PVC WYE
17. INSTALL 6" SCH. 80 PVC 45° SR BEND
18. INSTALL 6" SCH. 80 VANSTONE FLANGE
19. INSTALL 6" x 4" SCH. 80 PVC REDUCING WYE
20. INSTALL 4" SCH. 80 PVC 45° SR BEND
21. INSTALL 4" SCH. 80 PVC VANSTONE FLANGE
22. INSTALL 4" Ø GLASS LINED D.I.P.
23. INSTALL 4" GLASS LINED D.I. 90° ELBOW
24. INSTALL DUCT SUPPORT PER DETAIL: (S9 / M11.4)
25. INSTALL PIPE SUPPORT PER DETAIL: (S1 / M11.4)
26. INSTALL HEADWORKS ODOR CONTROL SYSTEM PER VENDOR REQUIREMENTS, SEE SPECS
27. INSTALL 6" EQUIPMENT PAD, EXTEND PAD A MINIMUM OF 6" FROM EQUIPMENT ON ALL SIDES, SEE STRUCTURAL SHEETS
28. INSTALL 20" ELBOW CONCRETE ENCASED (MJ)
29. INSTALL 20" Ø DIP CONCRETE ENCASED PER STRUCTURAL DETAIL
30. INSTALL 20" x 18" REDUCER (MJ x MJ)
31. INSTALL 20" x 18" DIP REDUCING ELBOW (FLG)
32. INSTALL 18" ELECTROMAGNETIC FLOW METER (FLG'D), SEE SPECS
33. INSTALL 20" 90° ELBOW WITH CONCRETE THRUST BLOCK (MJ)
34. INSTALL 20" PLUG VALVE (FLG'D)
35. ROLL-AWAY DUMPSTER PROVIDED BY CITY
36. INSTALL 20" x 18" REDUCER (MJ x MJ)

NO	BY	DATE	REVISIONS	DATE	APP.

Registered Professional Engineer (Civil) — DUONG T. DO — 40050 — Arizona, U.S.A. — Date Signed 12/31/25 — Expires 12/31/27

PREPARED BY: DUONG DO
PROJECT ENGINEER: #40050
R.C.E. NO.: 40050
EXP. DATE: 12/31/27
DRAWN: WW, MSA
DESIGNED: NT, NE
CHECKED: DD
SCALE:
DATE: FEB 2026

THESE DRAWINGS ARE THE PROPERTY OF P.A.C.E. AND SHALL NOT BE REPRODUCED IN ANY MANNER NOR BE USED FOR CONSTRUCTION UNLESS STAMPED 'ISSUED FOR CONSTRUCTION'.

TITLE: HEADWORKS MECHANICAL SECTIONS 2

JOB: CITY OF SAN LUIS WEST WWTP 3.0 MGD MBR UPGRADES — SAN LUIS AZ.

PACE
Advanced Water Engineering
8723 E. VIA de COMMERCIO, SUITE A-204 | SCOTTSDALE, CA 85258
P: (408) 991-3395 | www.pacewater.com

FINAL PLANS ISSUED FOR BID

SHEET M1.3
32 OF 209 SHEETS

JOB NO. B777

W:\B777\Engineering\B777 - 3MGD Exp\3MGD FINAL DSN\sheets\B777 - M1.2 HW SECTIONS.dwg - Tab: M1.3 - by vwright on 02/06/26 at 9:45:19 AM

CONSTRUCTION NOTES:

1. INSTALL 10" Ø FRP ODOR CONTROL DUCTING, SEE SPECIFICATIONS
2. INSTALL 10" Ø FRP 90° ELBOW
3. INSTALL 10" FRP TEE
4. INSTALL 10" Ø FRP BLIND FLANGE
5. INSTALL 10" x 6" FRP REDUCING CROSS
6. INSTALL 6" Ø FRP ODOR CONTROL DUCTING, SEE SPECIFICATIONS
7. INSTALL 6" FRP 90° ELBOW
8. INSTALL 10" x 6" FRP REDUCING TEE
9. INSTALL 6" Ø C900 PVC PIPING
10. INSTALL 6" DI 45° MJ BEND
11. INSTALL 6" x 4" DI 90° REDUCING MJ BEND
12. INSTALL 4" Ø DIP (FLG x PE)
13. INSTALL 4" Ø SCH. 80 PVC RW PIPING AND FITTINGS
14. INSTALL ARV AT HIGH POINT OF 4" WATER HEADER, SEE SPECS
15. INSTALL 4" SCH. 80 PVC ISOLATION BALL VALVE
16. INSTALL SCH. 80 PVC WASH WATER LATERAL, SIZE PER CONNECTION POINTS TABLE
17. INSTALL ODOR CONTROL SYSTEM PER VENDOR REQUIREMENTS, SEE SPECS
18. INSTALL 6" EQUIPMENT PAD PER STRUCTURAL PLANS. EXTEND PAD A MINIMUM OF 6" FROM EQUIPMENT ON ALL SIDES
19. INSTALL ISOLATION DAMPER AND RUBBER EXPANSION JOINT AT ALL CONNECTION POINTS. SEE SPECIFICATIONS AND ODOR CONNECTION DETAIL: B / M11.0
20. INSTALL 2" Ø SCH. 80 PVC POTABLE WATER LINE
21. INSTALL HOSE BIB AND HOSE RACK AT LOWER LEVEL PER DETAIL: C / C6.2
22. INSTALL HOSE BIB AND HOSE RACK AT UPPER LEVEL OF HEADWORKS PER DETAIL: C / C6.2
23. INSTALL 4" SCH. 80 PVC Y-STRAINER
24. INSTALL 2" BACKFLOW PREVENTER

EQUIPMENT CONNECTION POINTS			
ID	DESCRIPTION	SIZE	QTY.
[A]	GRIT TRAP	1.5"	2
[B]	6MM COARSE SCREEN	1"	6
[C]	COARSE SLUICE	1"	1
[D]	COARSE SLUICE WYE	.75"	1
[E]	COARSE COMPACTORS	.75"	2
[F]	COARSE COMPACTORS	.5"	4
[G]	2MM FINE SCREEN	1.5"	4
[H]	2MM FINE SCREEN	1"	2
[J]	2MM FINE SCREEN	.75"	8
[K]	FINE SLUICE	1"	1
[L]	FINE SLUICE WYE	.75"	1
[M]	FINE COMPACTORS	.75"	2
[N]	FINE COMPACTORS	.5"	4
[O]	ODOR CONTROL (POTABLE)	1"	1
[P]	HOSE BIBB (POTABLE)	1.5"	2

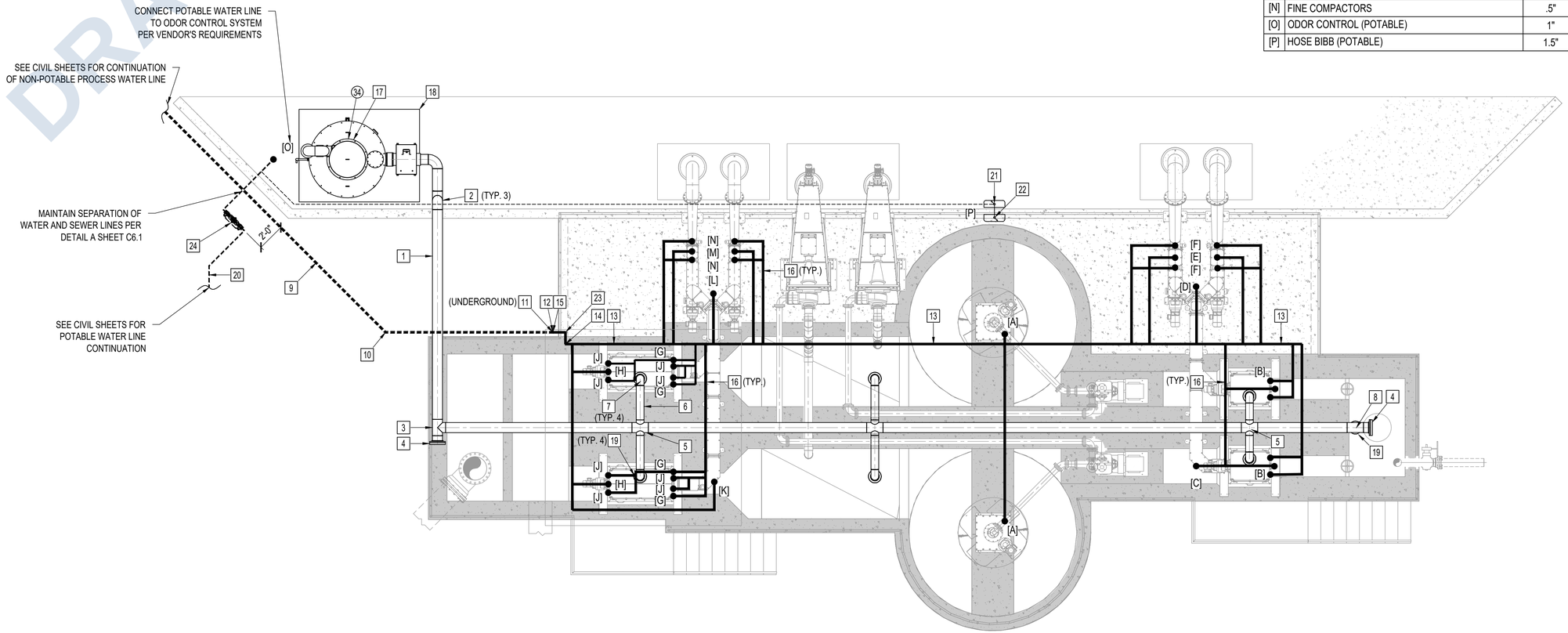

PLUMBING AND ODOR CONTROL PLAN
SCALE: 1/4"=1'-0"

NOTES:
1. CONTRACTOR TO INCLUDE ALL REQUIRED FITTINGS AND APPURTENANCES FOR WATER SYSTEM. CONNECTIONS SHALL INCLUDE MANUAL ISOLATION VALVE AT ALL CONNECTION POINTS.
2. RW PIPING IS SHOWN SCHEMATICALLY. FIELD LOCATE PIPING, ROUTE, INSTALL, AND TIE TO EQUIPMENT PER MANUFACTURER'S REQUIREMENTS.

DRAFT

NO	BY	DATE	REVISIONS	DATE	APP.

Registered Professional Engineer (Civil) — DUONG T. DO — 40050 — Arizona, U.S.A. — Date Signed 12/31/27 — Expires 12/31/27

PREPARED BY: DUONG DO
PROJECT ENGINEER: #40050
R.C.E. NO.: —
EXP. DATE:
SCALE:
DRAWN: WW, MSA
DESIGNED: NT, NE
CHECKED: DD
DATE: FEB 2026

TITLE: HEADWORKS PLUMBING & DUCTING PLAN

JOB: CITY OF SAN LUIS WEST WWTP 3.0 MGD MBR UPGRADES — SAN LUIS AZ.

THESE DRAWINGS ARE THE PROPERTY OF P.A.C.E. AND SHALL NOT BE REPRODUCED IN ANY MANNER NOR BE USED FOR CONSTRUCTION UNLESS STAMPED 'ISSUED FOR CONSTRUCTION'.

PACE Advanced Water Engineering
8723 E. VIA de COMMERCIO, SUITE A-204 | SCOTTSDALE, CA 85258
P: (408) 991-3595 | www.pacewater.com

FINAL PLANS ISSUED FOR BID

SHEET M1.4
33 OF 209 SHEETS

JOB NO. B777

W:\B777\Engineering\B777 - 3MGD Exp\3MGD FINAL DSN\sheets\B777 - M1.4 HW Plumbing and Ducting.dwg - Tab: M1.4 - by wwright on 02/02/26 at 3:32:09 PM

CONSTRUCTION NOTES:

1. OVERHEAD CRANE FOOTING, SEE STRUCTURAL PLANS
2. INSTALL MBR FRP COVER (3'-0" WIDTH MAX) SEE SPECIFICATIONS
3. INSTALL 10" Ø SCH 10 STEEL MBR SCOUR AIR PIPE
4. INSTALL 3" Ø 304 SS MBR SCOUR AIR PIPE
5. INSTALL 3" LUG STYLE BUTTERFLY VALVE, SEE DETAIL: C / M11.3 (PROVIDED BY MBR VENDOR)
6. INSTALL 24" Ø DIP BLIND FLANGE
7. FUTURE MBR SCOUR AIR PIPE (SHOWN FOR REFERENCE)
8. INSTALL 3" Ø SCH 10 STEEL AIR PIPE AND FITTINGS FROM REGENERATIVE BLOWERS BELOW
9. INSTALL 3" Ø SCH 10 SS AIR PIPE
10. INSTALL 3" Ø 304 SS DROP AIR PIPE (PROCURED THROUGH DIFFUSER VENDOR)
11. INSTALL 2-1/2" THICK ALUMINUM OPEN GRATING (3FT WIDE PANELS) SEE SPECS
12. INSTALL NEW HANDRAIL WITH KICK PLATE PER DETAIL D / M11.0 (TYP.)
13. EXISTING 8" Ø STEEL DIGESTER AIR PIPE
14. INSTALL 6" Ø 304 SS DROP AIR PIPE WITH ISOLATION BFV
15. REPLACE EXISTING PVC SUPERNATANT PIPE WITH 3" Ø DIP
16. INSTALL 18" Ø SCH 10 STEEL MBR SCOUR AIR PIPE AND FITTINGS
17. INSTALL 10" BUTTERFLY VALVE
18. INSTALL 8" SCH. 10 STEEL WELDED TEE WITH 6" Ø BRANCH FLANGE ON EXISTING BLOWER PIPING
19. EXISTING TELESCOPING VALVE AND MOTORIZED VALVE (P.I.P.)
20. INSTALL 6" Ø DIP WAS PIPING FROM MLSS CHANNEL TO EXISTING DIGESTERS
21. INSTALL 24" Ø SCH. 10 COATED STEEL AIR PIPE AND FITTINGS
22. FUTURE 18" AIR PIPING LAYOUT - FOR FUTURE EXPANSION
23. INSTALL 3" LUGGED BUTTERFLY VALVE
24. INSTALL ELECTRICALLY ACTUATED 24" BUTTERFLY VALVE (LUGGED)
25. INSTALL 6" FLANGED MOTORIZED PLUG VALVE (PROVIDED BY MBR VENDOR)
26. CORED HOLE FOR PIPE PENETRATION, SIZE PER PLAN, SEE DETAIL: A / M11.1
27. INSTALL 6" DUCK BILL CHECK VALVE
28. CONTRACTOR TO INSTALL EVAP COOLER WITH CURB. VERIFY DISCHARGE OPENING TO BLOWER ROOM BELOW. CONNECT POTABLE WATER LINE WITH ISOLATION VALVE.
29. INSTALL PORTION OF REMOVABLE POST GUARD RAIL FOR MBR PASS THROUGH
30. INSTALL 6" PLUG VALVE (FLANGED)
31. INSTALL 6" MAG FLOW METER (PROVIDED BY MBR VENDOR)
32. INSTALL SS WEIR PLATE PER DETAIL A / M11.3 (TYP. OF 12)

DRAFT

PROPOSED MBR TRAIN 1
PROPOSED MBR TRAIN 2
PROPOSED MBR TRAIN 3
(FUTURE) MBR TRAIN 4
(FUTURE) MBR TRAIN 5
(FUTURE) MBR TRAIN 6
DIGESTER 1
DIGESTER 2
10" Ø DIP FROM F.E.B. SEE M8.0
RELOCATE EXISTING STAIRS (SHIFT TO EDGE OF BASIN)
HANDRAIL WITH REMOVABLE POSTS. SEE DETAIL A, SHEET M11.0
6'-0" (CENTER W/ MLSS CHANNEL)
10" Ø MBR AIR SCOUR HEADER SEE DETAIL F / M11.3 (TYP.)
43 MLSS CHANNEL FINE BUBBLE DIFFUSER ASSEMBLY (TYP)
NEW ROOF EXHAUST FAN (TYP. OF 4)
18 EXISTING DIGESTER SUPERNATANT PUMP
26 DIGESTER FINE BUBBLE DIFFUSER ASSEMBLY
24 EXISTING DIGESTER BLOWERS AND PIPING - PROTECT IN PLACE (TYP)
EXISTING OVERHEAD SHADE STRUCTURE
O2 SENSOR FOR EXHAUST FAN - TYPICAL
DIGESTER BLOWER CANOPY POST MODIFICATION PER STRUCTURAL DETAIL: 217 / S12.2
SEE M1.1 FOR STAIRWAY AND RETAINING WALL
INSTALL EXHAUST FAN 106
20" Ø DIP FROM HEADWORKS SEE M1.0 & M1.1
EXISTING OVERHEAD SHADE STRUCTURE

MBR UPGRADES PLAN - LEVEL 3

SCALE: 1/4" = 1'-0"

NORTH

W:\B777\Engineering\B777 - 3MGD Exp\3MGD FINAL DS\sheets\B777 - Mechanical Structure Plan.dwg - Tab: M2.0 - by wwright on 02/06/26 at 3:28:23 PM

NO	BY	DATE	REVISIONS	DATE	APP.

Registered Professional Engineer (Civil) — DUONG T. DO — 40050 — ARIZONA, U.S.A. — Date Signed 12/31/26 — Expires 12/31/27

PREPARED BY: DUONG DO
PROJECT ENGINEER: #40050
R.C.E. NO.: —
EXP. DATE:
SCALE:
DRAWN: WW, MSA
DESIGNED: NT, NE
CHECKED: DD
DATE: FEB 2026

THESE DRAWINGS ARE THE PROPERTY OF P.A.C.E. AND SHALL NOT BE REPRODUCED IN ANY MANNER NOR BE USED FOR CONSTRUCTION UNLESS STAMPED "ISSUED FOR CONSTRUCTION".

TITLE: MBR UPGRADES PLAN - LEVEL 3

JOB: CITY OF SAN LUIS WEST WWTP 3.0 MGD MBR UPGRADES — SAN LUIS AZ.

PACE
Advanced Water Engineering
8723 E. VIA de COMMERCIO, SUITE A-204 | SCOTTSDALE, CA 85258
P: (408) 991-3595 | www.pacewater.com

SHEET: M2.0
34 OF 209 SHEETS

JOB NO. B777

FINAL PLANS ISSUED FOR BID

CONSTRUCTION NOTES:

1. INSTALL 3FT STEEL MAN-DOOR
2. INSTALL CAST IN PLACE CONCRETE WALL PER STRUCTURAL PLANS
3. INSTALL 10FT-WIDE ROLL UP DOOR
4. INSTALL 6" Ø SCH 80 PVC CIP PIPE AND FITTINGS
5. INSTALL 10" BUTTERFLY VALVE
6. INSTALL 24" DIP BLIND FLANGE
7. INSTALL 18" Ø SCH. 10 STEEL MBR SCOUR AIR PIPE AND FITTINGS
8. INSTALL 2-1/2" THICK ALUMINUM OPEN GRATING (3FT WIDE PANELS) SEE SPECS
9. INSTALL 3" Ø SCH 80 PVC PIPE & FITTINGS FOR MBR SCOUR AIR
10. INSTALL 3" Ø SCH 80 PVC PERMEATE PIPE AND FITTINGS
11. 2" PERMEATE LATERALS - CLEAR ACRYLIC SCH 80 PVC (TYP. OF 16 PER BASIN)
12. 1/2" SAMPLING PORT WITH ISOLATION BALL VALVE
13. INSTALL 16" Ø SCH 10 STEEL PERMEATE PIPE AND FITTINGS
14. INSTALL 12" BUTTERFLY VALVE
15. INSTALL 4" Ø SCH 80 PVC CIP PIPE AND FITTINGS
16. INSTALL 3'-0" x 3'-0" (CLEAR OPENING) SAFETY ACCESS HATCH WITH LADDER TO VAULT BELOW, SEE SPECIFICATIONS
17. INSTALL 3'-0" x 4'-0" (CLEAR OPENING) SAFETY ACCESS HATCH WITH LADDER TO VAULT BELOW
18. INSTALL METAL LADDER TO ACCESS LEVEL BELOW
19. INSTALL ELECTRICALLY ACTUATED 24" BUTTERFLY VALVE (LUGGED)
20. INSTALL 2" Ø POTABLE WATER LINE FOR EVAP COOLER INLET
21. CONTRACTOR TO PROVIDE KNOCKOUT IN CONCRETE ROOF SLAB FOR FUTURE PIPE PENETRATION - SEE ALSO STRUCTURAL PLANS
22. INSTALL DIGESTER FINE BUBBLE TUBE DIFFUSERS INCLUDING HEADER AND SUPPORT ASSEMBLY (PROVIDED BY AERATION VENDOR)
23. INSTALL TURBIDITY METER TYPICAL PER DETAIL: A / M11.5
24. INSTALL 1" PERMEATE VENT WITH SS ACTUATOR BALL VALVE (PROVIDED BY MBR VENDOR)
25. INSTALL 4" PVC PLUG CAP FOR FUTURE CIP FILL LINE TIE-IN CONNECTION
26. INSTALL 6" PVC PLUG CAP FOR FUTURE CIP FILL LINE TIE-IN CONNECTION
27. INSTALL 6" x 4" REDUCING PVC ELBOW

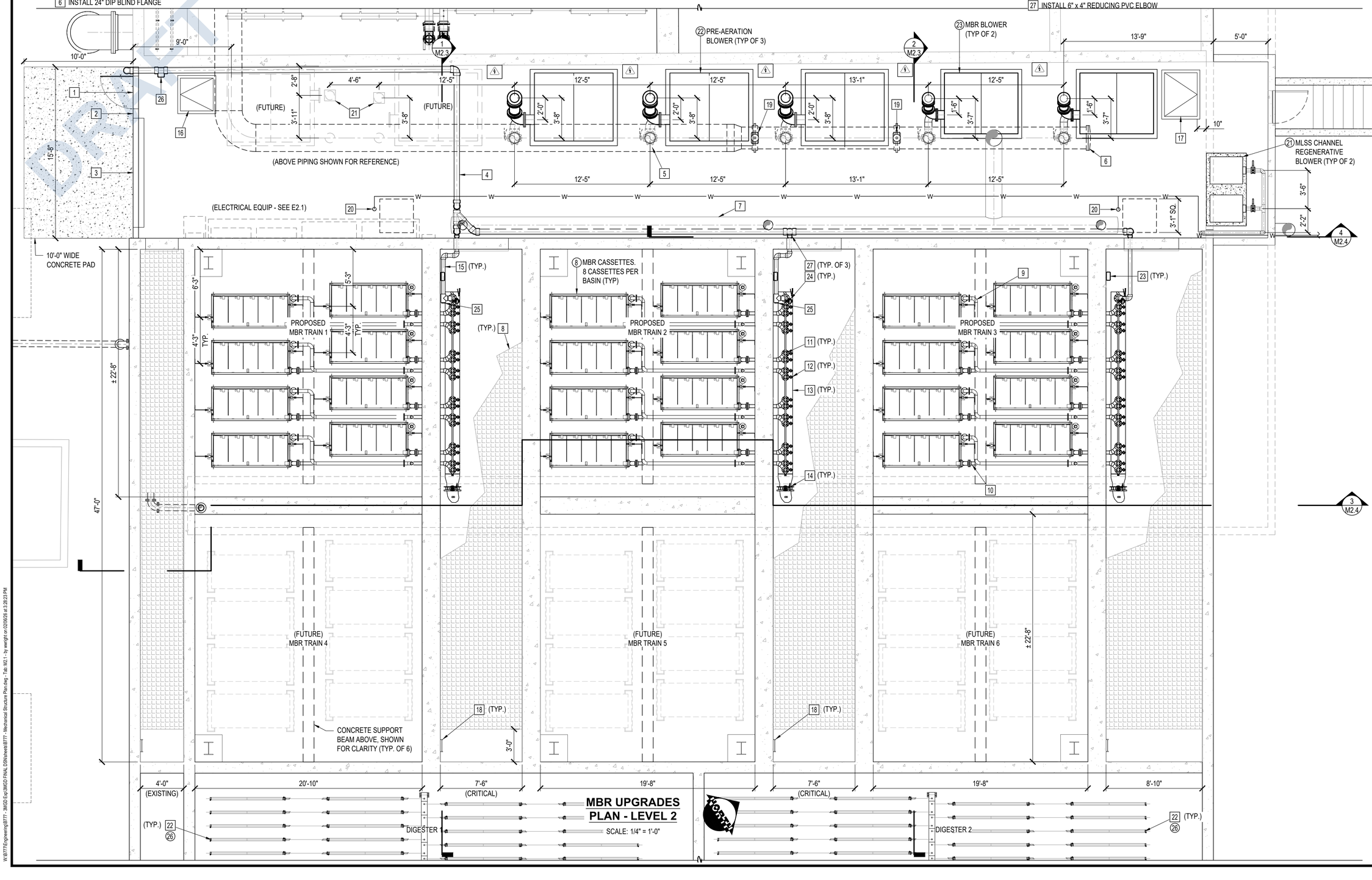

MBR UPGRADES PLAN - LEVEL 2

SCALE: 1/4" = 1'-0"

DRAFT

FINAL PLANS ISSUED FOR BID

THESE DRAWINGS ARE THE PROPERTY OF P.A.C.E. AND SHALL NOT BE REPRODUCED IN ANY MANNER NOR BE USED FOR CONSTRUCTION UNLESS STAMPED 'ISSUED FOR CONSTRUCTION'.

NO	BY	DATE	REVISIONS	DATE	APP.

Registered Professional Engineer (Civil) — DUONG T. DO — 40050 — Expires 12/31/27 — ARIZONA, U.S.A.

PREPARED BY: DUONG DO
PROJECT ENGINEER: #40050
R.C.E. NO.: —
EXP. DATE:
SCALE:
DRAWN: WW, MSA
DESIGNED: NT, NE
CHECKED: DD
DATE: FEB 2026

TITLE: MBR UPGRADES PLAN - LEVEL 2

JOB: CITY OF SAN LUIS WEST WWTP
3.0 MGD MBR UPGRADES
SAN LUIS AZ.

PACE
Advanced Water Engineering
8723 E. VIA de COMMERCIO, SUITE A-204 | SCOTTSDALE, CA 85258
P: (408) 991-3995 | www.pacewater.com

SHEET M2.1
35 OF 209 SHEETS

JOB NO. B777

W:\B777\Engineering\B777 - 3MGD Exp\3MGD FINAL DS\sheets\B777 - Mechanical Structure Plan.dwg - Tab: M2.1 - by wwright on 02/06/26 at 3:26:23 PM

CONSTRUCTION NOTES:

1. INSTALL 20" Ø DIP MBR FEED PIPE AND FITTINGS W/ MECH. RESTRAINT
2. INSTALL 24" Ø DIP PERMEATE LATERAL PIPE AND FITTINGS W/ MECH. RESTRAINT
3. INSTALL 12" Ø DIP PERMEATE LATERAL PIPE AND FITTINGS W/ MECH. RESTRAINT
4. INSTALL 12" Ø BF VALVE WITH WORM GEAR AND HANDWHEEL ACTUATOR
5. INSTALL 20" SIDE ACCESS PLUG VALVE WITH WORM GEAR AND HANDWHEEL ACTUATOR
6. INSTALL CONCRETE SLAB PER STRUCTURAL PLANS
7. INSTALL 6" Ø C900 CIP DRAIN PIPE AND FITTINGS
8. INSTALL 6" DIP TEE WITH BLIND FLANGE
9. INSTALL 36" Ø DIP FEED FORWARD RAS PIPE AND FITTINGS W/ MECH. RESTRAINTS
10. INSTALL 12" BFV VALVE WITH ELECTRIC ACTUATOR (PROVIDED BY MBR VENDOR)
11. INSTALL 6" SS BFV VALVE W/ ELECTRIC ACTUATOR
12. INSTALL 12" Ø 304 SS PERMEATE LATERAL PIPE AND FITTINGS
13. INSTALL 20" Ø DIP BLIND FLANGE
14. SAW CUT DRAIN LINE TIE-IN FOR PIPE GALLERY 4
15. INSTALL 36" x 20" TEE WITH MEGALUG FITTINGS
16. INSTALL 36" Ø DIP BLIND FLANGE
17. INSTALL 24" x 12" WYE WITH MEGALUG FITTINGS, ROTATE WYE TO MATCH INVERT OF 12" PIPE AT 45° ELBOW
18. INSTALL 12" 45° MJ ELBOW (TYP. OF 6)
19. NOT USED
20. INSTALL 12" TRANSITION COUPLING (DIP TO 304SS)
21. INSTALL 6" PVC PLUG CAP FOR FUTURE CIP DRAIN LINE TIE-IN CONNECTION
22. INSTALL 1/2" PIPE TAP PER DETAIL: C M11.1 / CONNECT 1/2" PVC SCH 40 PVC DRAIN PIPE TO TURBIDITY METER PER DETAIL: A M11.5
23. INSTALL 14" Ø STEEL EXHAUST DUCTING (18 GAUGE MIN.)
24. INSTALL RECTANGULAR DUCT MOUNTED GRILL

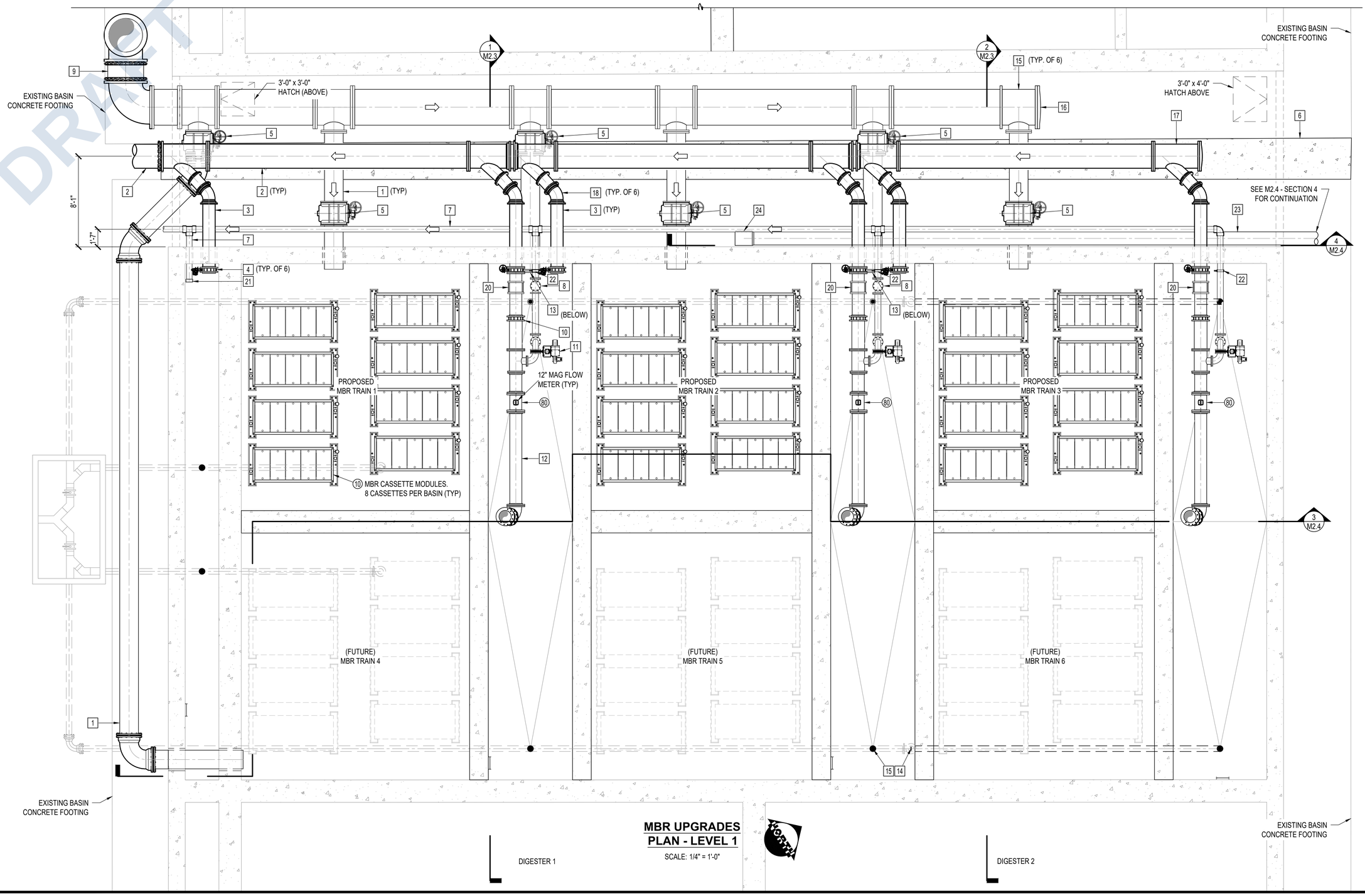

MBR UPGRADES
PLAN - LEVEL 1
SCALE: 1/4" = 1'-0"

DRAFT

NO	BY	DATE	REVISIONS	DATE	APP.

Registered Professional Engineer (Civil) — 40050 — DUONG T. DO — Date Signed 12/31/27 — ARIZONA, U.S.A. — Expires 12/31/27

PREPARED BY: DUONG DO
PROJECT ENGINEER: #40050
R.C.E. NO. / EXP. DATE:
DRAWN: WW, MSA
DESIGNED: NT, NE
CHECKED: DD
SCALE:
DATE: FEB 2026

THESE DRAWINGS ARE THE PROPERTY OF P.A.C.E. AND SHALL NOT BE REPRODUCED IN ANY MANNER NOR BE USED FOR CONSTRUCTION UNLESS STAMPED 'ISSUED FOR CONSTRUCTION'.

TITLE: **MBR UPGRADES PLAN - LEVEL 1**

JOB: CITY OF SAN LUIS WEST WWTP 3.0 MGD MBR UPGRADES — SAN LUIS AZ.

PACE
Advanced Water Engineering
8723 E. VIA de COMMERCIO, SUITE A-204 | SCOTTSDALE, CA 85258
P: (408) 991-3595 | www.pacewater.com

SHEET **M2.2**
36 OF 209 SHEETS

JOB NO. B777

FINAL PLANS ISSUED FOR BID

W:\B777\Engineering\B777 - 3MGD Exp\3MGD FINAL DSN\sheets\B777 - Mechanical Structure Plan.dwg - Tab: M2.2 - by rwright on 02/09/26 at 3:28:23 PM

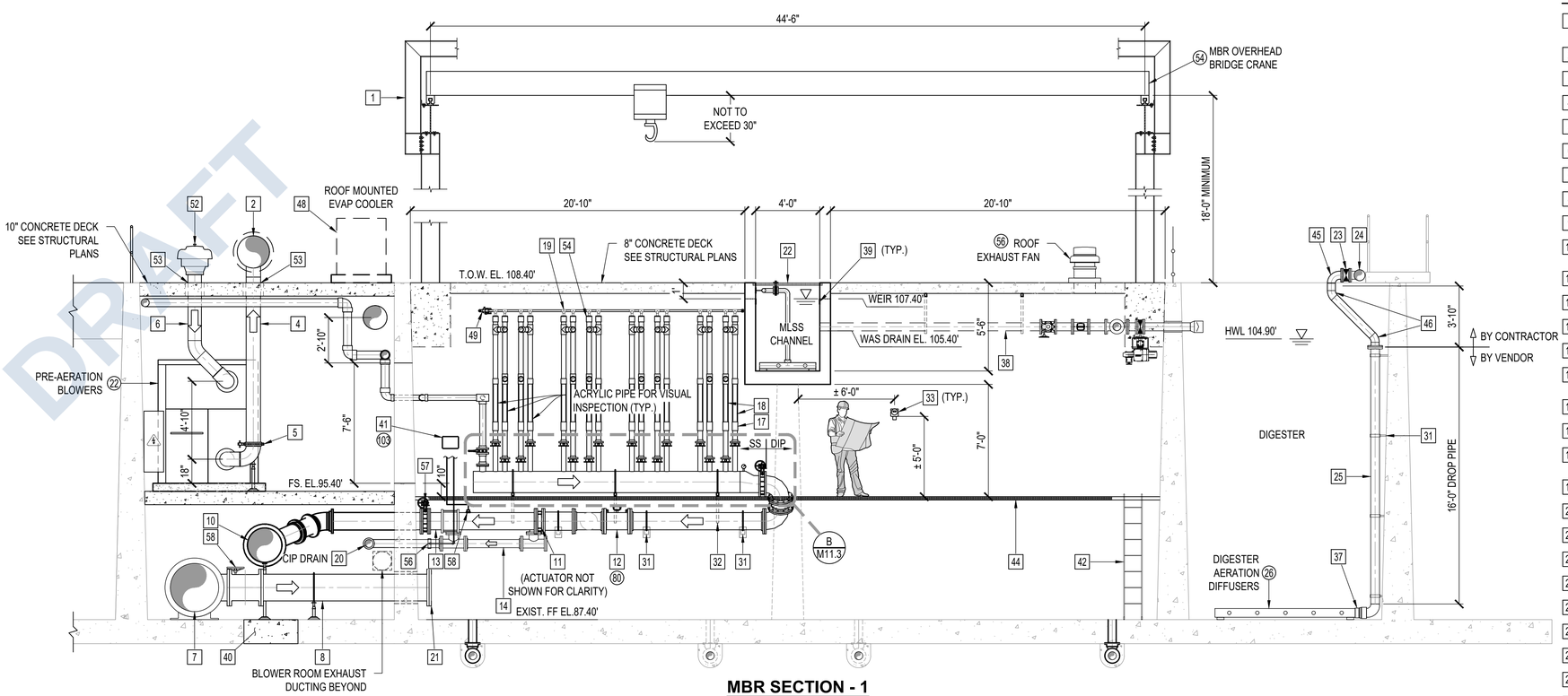

MBR SECTION - 1

SCALE: 1/4" = 1'-0"

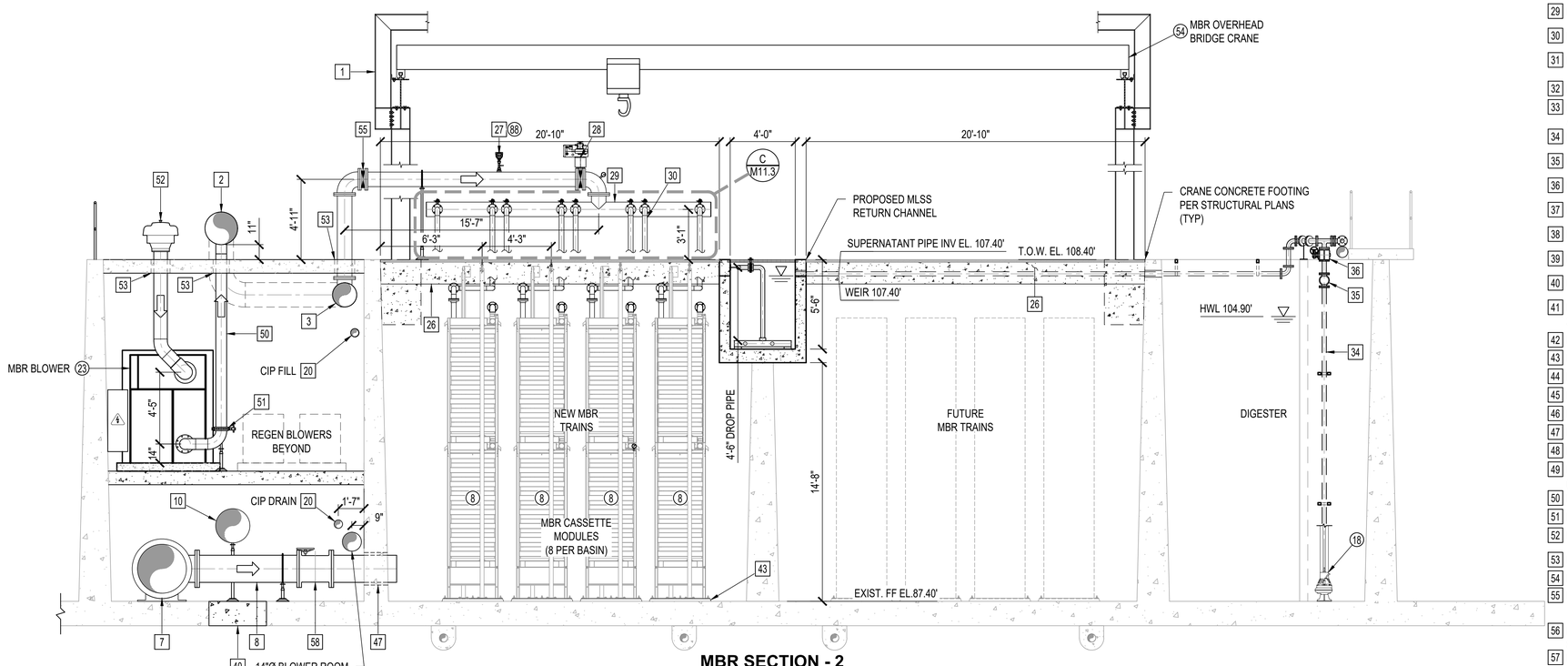

MBR SECTION - 2

SCALE: 1/4" = 1'-0"

CONSTRUCTION NOTES:

1. CONSTRUCT OVERHEAD CRANE BEAM AND SUPPORT COLUMN PER STRUCTURAL PLANS
2. INSTALL 24" Ø SCH. 10 STEEL AIR PIPE AND FITTINGS
3. INSTALL 18" Ø SCH. 10 STEEL AIR PIPE AND FITTINGS
4. INSTALL 10" Ø SCH 10 STEEL PRE-AIR BLOWER DISCHARGE PIPE
5. INSTALL 10" BUTTERFLY VALVE LUGGED CONNECTION
6. INSTALL 10" Ø SCH. 10 STEEL AIR PIPE AND FITTINGS
7. INSTALL 36" x 20" DIP TEE
8. INSTALL 20" Ø D.I. PIPE AND FITTINGS FOR MBR FEED
9. INSTALL PRESSURE TRANSMITTER PER DETAIL: B/M11.1 (PROVIDED BY MBR VENDOR)
10. INSTALL 24" Ø DIP MBR PERMEATE/EFFLUENT PIPE AND FITTINGS W/ MECH. RESTRAINTS (TYP.)
11. INSTALL 12" BUTTERFLY VALVE WITH ELECTRIC ACTUATOR (PROVIDED BY MBR VENDOR)
12. INSTALL 12" MAG FLOW METER (PROVIDED BY MBR VENDOR)
13. INSTALL 12" Ø DIP MBR PERMEATE PIPE AND FITTINGS
14. INSTALL 6" Ø DIP CIP DRAIN PIPE AND FITTINGS (TYP)
15. INSTALL 16" Ø 304 SS PERMEATE PIPE MANIFOLD AND ALL REQUIRED FITTINGS AND APPURTENANCES (TYP.) SEE DETAIL: B/M11.3
16. INSTALL 12" LUG STYLE BUTTERFLY VALVE
17. INSTALL 3" TRANSITION COUPLING PVC TO ACRYLIC PIPE
18. INSTALL 3" Ø MBR PERMEATE LINE MINIMUM OF 2.5 FT. BELOW THE OUTLET TO BE CLEAR ACRYLIC PVC PIPING
19. INSTALL 1" Ø SCH. 80 PVC TEE
20. INSTALL 6" Ø C900 PVC FOR CIP PIPE AND FITTINGS
21. INSTALL 20" WITH SPOOL AND BLIND FLANGE
22. FRP OPEN GRATING ABOVE MLSS CHANNEL, SEE SPECIFICATIONS
23. INSTALL 6" BUTTERFLY VALVE (FLG'D)
24. INSTALL 8" SCH. 10 STEEL WELDED TEE W/ 6" BRANCH FLANGE ON EX. BLOWER PIPING
25. INSTALL 8" Ø 304 SS DROP PIPE AND FITTINGS (PROCURED THROUGH DIFFUSER VENDOR)
26. CONCRETE BEAM FOR MBR GUIDE RAIL SUPPORT
27. INSTALL PROCESS AIR FLOW METER (PROVIDED BY MBR VENDOR)
28. INSTALL 10" MODULATING BUTTERFLY VALVE (PROVIDED BY MBR VENDOR)
29. INSTALL 10" Ø SCH. 10 STEEL MBR AIR SCOUR HEADER AND PIPING, SEE DETAIL: C/M11.3
30. INSTALL 3" Ø 304 SS STEEL AIR DROP PIPE WITH ISOLATION BF VALVE
31. INSTALL PIPE SUPPORT (MIN. SPACING AS REQUIRED) PER DETAIL: S13/M10.4
32. INSTALL KNEE BRACE PIPE SUPPORT (MIN. SPACING AS REQUIRED) PER DETAIL: S5/M10.4
33. INSTALL OXYGEN SENSOR ATI TOXIC GAS SENSOR, MODEL D-12-F-G OR APPROVED EQUAL
34. INSTALL 3" DIP PIPE AND FITTINGS (TYP.) FOR DIGESTER SUPERNATANT LINE
35. INSTALL 3" SWING CHECK VALVE (FLG'D)
36. INSTALL 3" PLUG VALVE (FLG'D)
37. INSTALL TRANSITION FLANGE FROM STAINLESS STEEL TO SCH 80 PVC
38. INSTALL 6" DIP WAS PIPING FROM MLSS CHANNEL TO EXISTING DIGESTERS
39. INSTALL WEIR PLATES PER DETAIL: A/M11.3
40. NEW CONCRETE FOOTING TIED INTO EXISTING STRUCTURES
41. INSTALL TURBIDITY METER AND CONTROLLER TYPICAL PER DETAIL: A/M11.5 36"H ABOVE GRATING (PROVIDED BY MBR VENDOR)
42. INSTALL METAL LADDER TO ACCESS LEVEL BELOW
43. INSTALL 2" GROUT LAYER UNDER MBR EQUIPMENT
44. INSTALL 2-1/2" THICK ALUMINUM OPEN GRATING (3FT WIDTH MAX PANELS)
45. INSTALL 6" 304 SS 90° ELBOW (FLANGED AT VALVE CONNECTION)
46. INSTALL 6" 304 SS 45° ELBOW (FLANGED AT DROP PIPE CONNECTION)
47. INSTALL 20" DIP SPOOL (FLG x PE)
48. INSTALL EVAP COOLER PER SPECS, SEE ALSO ELECTRICAL PLANS
49. INSTALL 1" PERMEATE VENT WITH 1" SS BALL VALVE W/ ELECTRIC ACTUATOR (PROVIDED BY MBR VENDOR)
50. INSTALL 8" Ø SCH. 10 STEEL MBR BLOWER DISCHARGE PIPE
51. INSTALL 8" BUTTERFLY VALVE LUGGED CONNECTION
52. INSTALL OUTSIDE AIR INTAKE FILTER (PROVIDED BY BLOWER VENDOR) (TYP OF 5)
53. INSTALL PIPE PENETRATION SEAL (WET), SIZE PER PLAN, PER DETAIL: A/M11.1
54. INSTALL TRANSITION BUSHING FROM 3" TO 1"
55. INSTALL 10" BUTTERFLY VALVE. (LUGGED)
56. INSTALL 1/2" PIPE TAP PER DETAIL: C/M11.1 CONNECT 1/2" PVC SCH 40 PVC DRAIN PIPE FROM TURBIDITY METER PER DETAIL: A/M11.5
57. INSTALL 12" BUTTERFLY VALVE. (FLG'D)
58. INSTALL 20" PLUG VALVE WITH WORM GEAR AND HANDWHEEL ACTUATOR

NO	BY	DATE	REVISIONS	DATE	APP.

Registered Professional Engineer (Civil) — DUONG T. DO — 40050 — Arizona, U.S.A. — Expires 12/31/27

PREPARED BY: DUONG DO
PROJECT ENGINEER #40050
R.C.E. NO. —
EXP. DATE
SCALE
DRAWN: WW, MSA
DESIGNED: NT, NE
CHECKED: DD
DATE: FEB 2026

THESE DRAWINGS ARE THE PROPERTY OF P.A.C.E. AND SHALL NOT BE REPRODUCED IN ANY MANNER NOR BE USED FOR CONSTRUCTION UNLESS STAMPED 'ISSUED FOR CONSTRUCTION'.

TITLE: MBR SECTIONS 1

JOB: CITY OF SAN LUIS WEST WWTP 3.0 MGD MBR UPGRADES — SAN LUIS AZ.

PACE Advanced Water Engineering
8723 E. VIA de COMMERCIO, SUITE A-204 | SCOTTSDALE, CA 85258
P: (408) 991-3595 | www.pacewater.com

FINAL PLANS ISSUED FOR BID

SHEET M2.3
37 OF 209 SHEETS

JOB NO. B777

DRAFT

W:\B777\Engineering\B777 - 3MGD Exp\3MGD FINAL DSN\sheets\B777 - M2.3 MBR Sections.dwg - Tab: M2.3 - by wwright on 02/06/26 at 1:18:26 PM

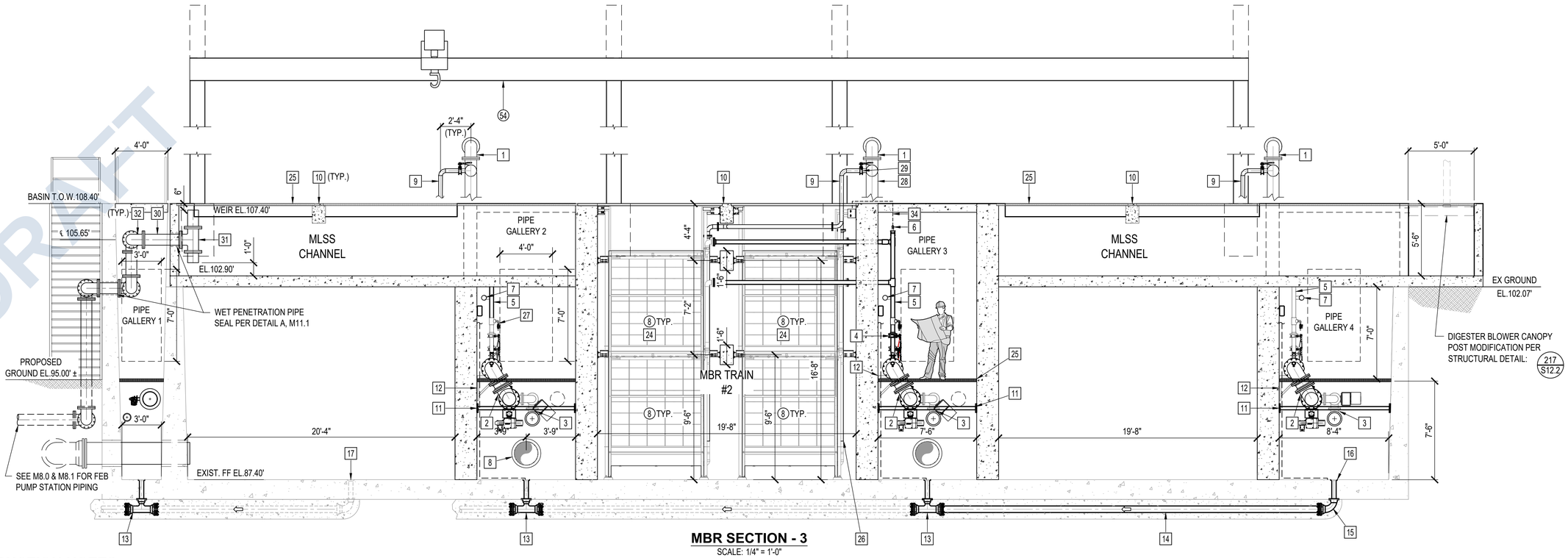

MBR SECTION - 3
SCALE: 1/4" = 1'-0"

CONSTRUCTION NOTES:

1. INSTALL 10" Ø SCH 10 STEEL AIR PIPE AND FITTING
2. INSTALL 12" Ø DIP MBR PERMEATE PIPE AND FITTINGS
3. INSTALL 6" Ø DIP CIP DRAIN PIPE AND FITTINGS
4. INSTALL 3" LUG STYLE BUTTERFLY VALVE
5. INSTALL 3" Ø MBR PERMEATE LINE MINIMUM OF 2.5 FT. BELOW THE OUTLET TO BE CLEAR ACRYLIC PVC PIPING
6. INSTALL 1" PERMEATE VENT WITH 1" SS BALL VALVE W/ ELECTRIC ACTUATOR (PROVIDED BY MBR VENDOR)
7. INSTALL 3" Ø SCH. 80 PVC CIP PIPE AND FITTINGS
8. INSTALL 20" BLIND FLANGE FOR FUTURE MBR EXPANSION
9. INSTALL 3" Ø 304 SS AIR DROP PIPE (PROVIDED BY AERATION VENDOR)
10. CONCRETE BEAM FOR MBR GUIDE RAIL SUPPORT, SEE STRUCTURAL PLANS
11. INSTALL PIPE SUPPORT (MIN. SPACING AS REQUIRED) PER DETAIL: S4 / M11.4
12. INSTALL KNEE BRACE PIPE SUPPORT (MIN. SPACING AS REQUIRED) PER DETAIL: S5 / M11.4
13. INSTALL 6" x 4" REDUCING TEE TIE-IN TO EXISTING CONCRETE ENCASED FLOOR DRAIN LINE
14. SAW CUT AND EXTEND EXISTING 6" FLOOR DRAIN LINE TO CENTER OF PIPE GALLERY 4
15. INSTALL 6" x 4" REDUCING ELBOW MJ CONNECTION
16. INSTALL 4" FLOOR DRAIN CONCRETE ENCASED
17. CAP AND ABANDON EXISTING FLOOR DRAIN
18. INSTALL 3" SS BUTTERFLY VALVE
19. INSTALL MLSS AERATION MANIFOLD (PROVIDED BY AERATION VENDOR)
20. INSTALL 3" Ø SCH 10 STEEL AIR PIPE FROM REGENERATIVE BLOWERS
21. INSTALL STEPPED FOOTING RETAINING WALL PER STRUCTURAL DETAILS
22. INSTALL HAND RAIL PER DETAIL: B / M11.3
23. INSTALL SHADE STRUCTURE AND ROOF OVERHANG PER STRUCTURAL DETAIL
24. CONTRACTOR TO INSTALL MBR MODULES WITH SUPPORT, GUIDES, AND APPURTENANCES PER MBR VENDOR'S REQUIREMENTS. SEE DETAIL ON M12.0 FOR EQUIPMENT DIMENSIONS
25. INSTALL 2-1/2" THICK ALUMINUM OPEN GRATING (3 FT WIDE MAX.) SEE SPECIFICATIONS
26. POINT OF CONNECTION OF MBR AIR SCOUR LINE
27. 1/2" SAMPLING PORT WITH BALL VALVE AND FITTINGS ON 3" Ø PERMEATE LATERAL PIPE
28. INSTALL 10" Ø MBR AIR SCOUR MANIFOLD PER DETAIL: F / M11.3
29. INSTALL 3" LUG STYLE BUTTERFLY VALVE
30. INSTALL 10" Ø DIP SPOOL
31. INSTALL 10" D.I. TEE
32. INSTALL 10" D.I. 90° ELBOW
33. INSTALL 24" LUGGED BUTTERFLY VALVE W/ ELECTRIC ACTUATOR
34. INSTALL 1" PVC DRAIN LINE TO MBR BASIN
35. INSTALL 14" Ø STEEL EXHAUST DUCTING (18 GAUGE MIN.)
36. INSTALL RECTANGULAR DUCT MOUNTED GRILL
37. INSTALL PIPE SUPPORT (MIN. SPACING AS REQUIRED) PER DETAIL: S6 / M11.4
38. INSTALL EXHAUST FAN WITH TRANSITION BASE FOR PIPE CONNECTION

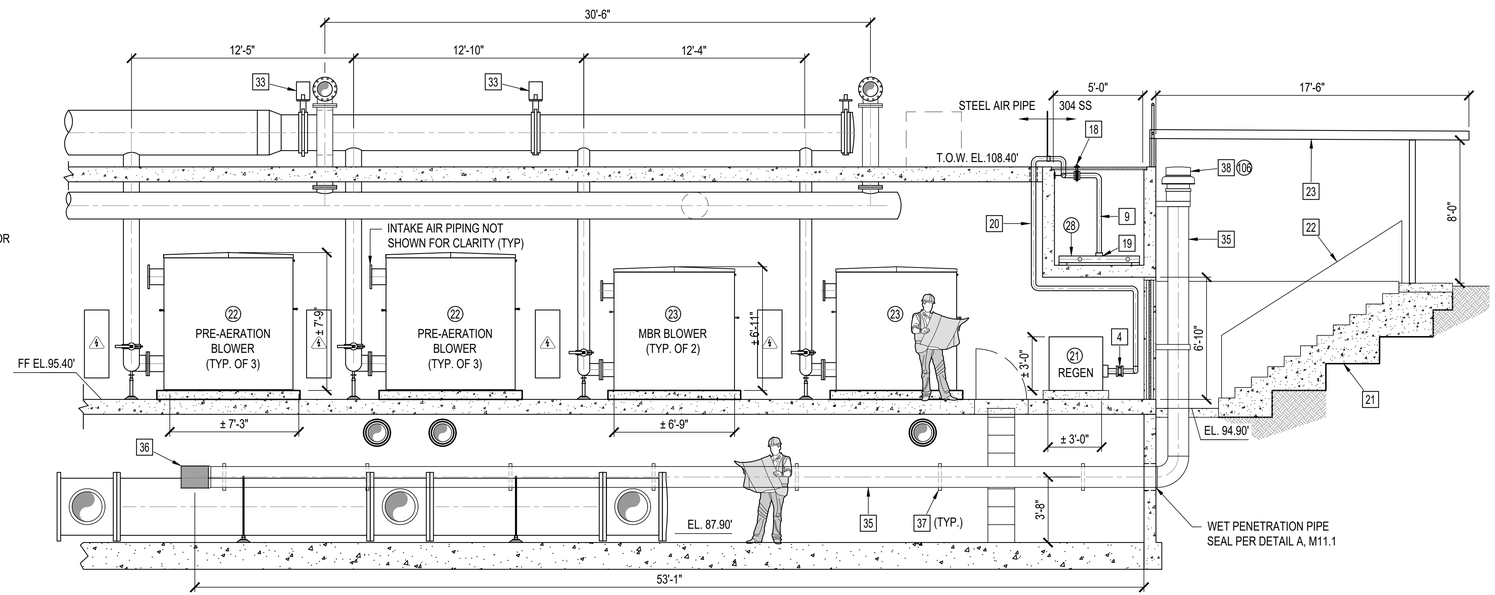

BLOWER ROOM SECTION - 4
SCALE: 1/4" = 1'-0"

DRAFT

W:\B777\Engineering\B777 - 3MGD Exp\3MGD FINAL DSN\sheets\B777 - M2.3 MBR Sections.dwg - Tab: M2.4 - by wwright on 02/26/26 at 14:29:23 PM

NO	BY	DATE	REVISIONS	DATE	APP.

Registered Professional Engineer (Civil) — DUONG T. DO — 40050 — Date Signed 12/31/27 — ARIZONA, U.S.A. — Expires 12/31/27

THESE DRAWINGS ARE THE PROPERTY OF P.A.C.E. AND SHALL NOT BE REPRODUCED IN ANY MANNER NOR BE USED FOR CONSTRUCTION UNLESS STAMPED 'ISSUED FOR CONSTRUCTION'.

PREPARED BY: DUONG DO — PROJECT ENGINEER #40050 — R.C.E. NO. — EXP. DATE
DRAWN: WW, MSA — DESIGNED: NT, NE — CHECKED: DD — SCALE — DATE: FEB 2026

TITLE: **MBR SECTIONS 2**

JOB: CITY OF SAN LUIS WEST WWTP 3.0 MGD MBR UPGRADES — SAN LUIS AZ.

PACE
Advanced Water Engineering
8723 E. VIA de COMMERCIO, SUITE A-204 | SCOTTSDALE, CA 85258
P: (408) 991-3595 | www.pacewater.com

FINAL PLANS ISSUED FOR BID

SHEET **M2.4**
38 OF 209 SHEETS

JOB NO. B777

CONSTRUCTION NOTES:

1. INSTALL 30" Ø SCH. 10 COATED STEEL AIR PIPE AND FITTINGS
2. INSTALL 24" Ø SCH. 10 COATED STEEL AIR PIPE AND FITTINGS
3. INSTALL PROCESS AIR FLOW METER PER MFGR REQUIREMENTS (PROVIDED BY MBR VENDOR) SEE ALSO DETAIL: (H / M11.1)
4. INSTALL 12" BUTTERFLY VALVE WITH MODULATING ELECTRIC ACTUATOR (PROVIDED BY MBR VENDOR)
5. INSTALL 24" Ø D.I. BLIND FLANGE
6. INSTALL ELECTRICALLY ACTUATED 24" BUTTERFLY VALVE (LUGGED)
7. INSTALL NEW HANDRAIL W/ KICK PLATE PER DETAIL: (D / M11.0)
8. INSTALL OUTSIDE AIR INTAKE FILTER FOR BLOWERS BELOW
9. INSTALL PIPE SUPPORTS PER DETAIL - MIN. SPACING PER SPECS (S1 / M11.4)
10. INSTALL 12" Ø SCH. 10 COATED STEEL AIR PIPE AND FITTINGS
11. INSTALL 3" BUTTERFLY VALVE (LUG)
12. INSTALL LEVEL TRANSDUCER AND FLOAT TREE (PROVIDED BY MBR VENDOR) PER DETAIL: (B / M11.2)
13. INSTALL 3" Ø SCH. 10 304 SS AIR PIPE AND FITTINGS
14. INSTALL DISSOLVED OXYGEN/pH PROBE WITH ANALYZER PER MFGR REQUIREMENTS (PROVIDED BY MBR VENDOR) SEE ALSO DETAIL: (D / M11.2)
15. INSTALL 3" BUTTERFLY VALVE (LUG) PROVIDE STEM EXTENSION
16. RELOCATE EXISTING STAIRCASE LOCATION TO ALLOW FOR THE FEED FORWARD PUMP AREA.
17. INSTALL 2-1/2" THICK ALUMINUM OPEN GRATING (3FT. MAX. PANEL WIDTH) SEE SPECIFICATIONS
18. CONTRACTOR TO PROVIDE KNOCKOUT IN CONCRETE ROOF SLAB FOR FUTURE PIPE PENETRATION - SEE ALSO STRUCTURAL PLANS
19. INSTALL PROCESS AIR PRESSURE TRANSMITTER (PROVIDED BY MBR VENDOR)
20. INSTALL FEED FORWARD COLUMN PUMP (PROVIDED BY MBR VENDOR)
21. INSTALL 36" SLUICE GATE WITH STEM EXTENSION AND CRANK
22. INSTALL FEED FORWARD CHANNEL FINE BUBBLE DIFFUSERS (PROCURED THROUGH DIFFUSER VENDOR)
23. INSTALL FEED FORWARD COLUMN PUMP (PROVIDED BY MBR VENDOR)
24. INSTALL PRE-AIR FINE BUBBLE DIFFUSERS (PROVIDED BY MBR VENDOR)
25. INSTALL NEW METAL STAIRCASE WITH HANDRAIL PER STRUCTURAL PLANS AND DETAIL: (F / M11.0)
26. INSTALL CHAINLINK HANDRAIL PER DETAIL: (D / M11.0)
27. INSTALL INTERNAL RECYCLE PUMP (PROVIDED BY MBR VENDOR)

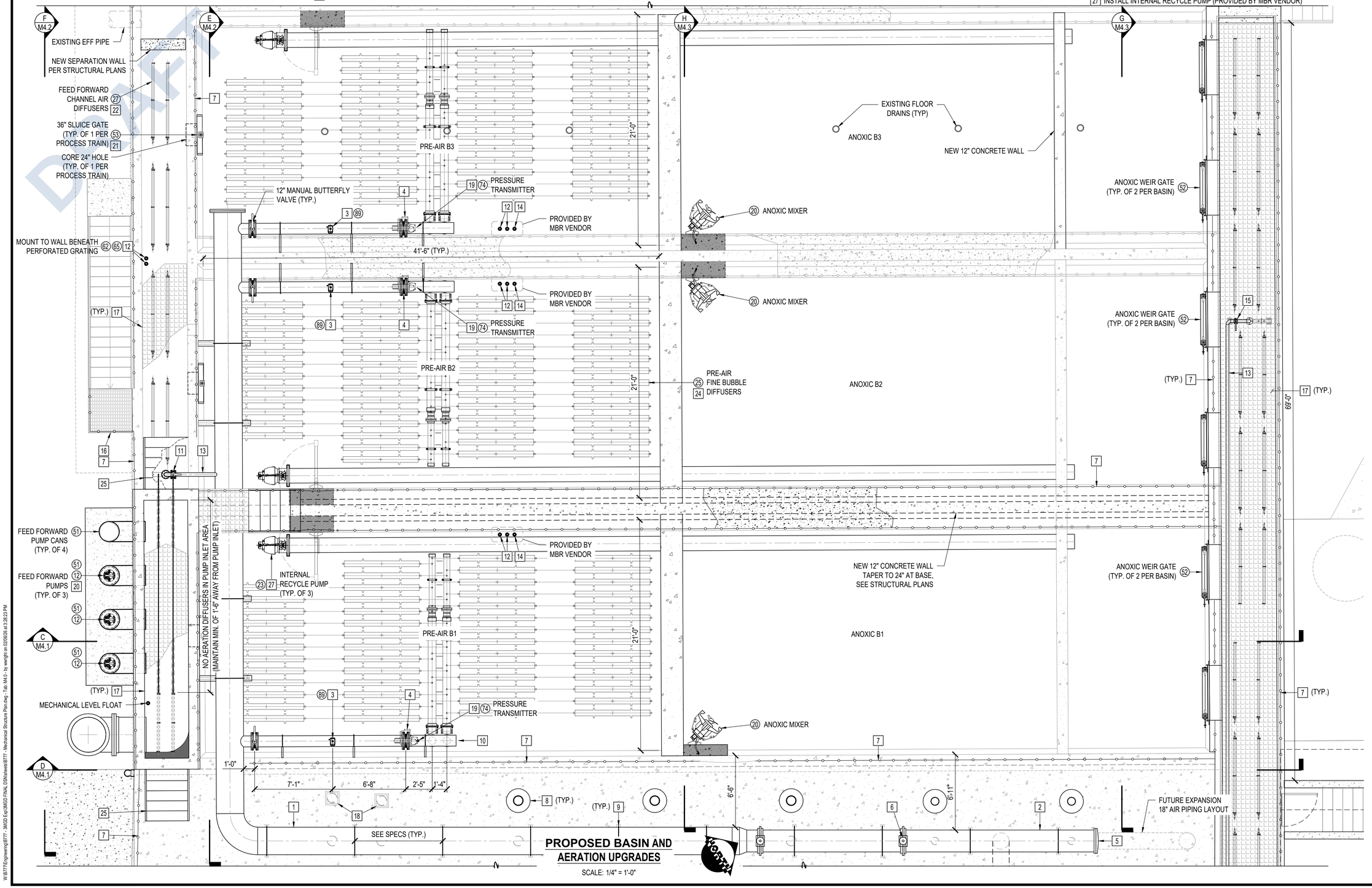

PROPOSED BASIN AND AERATION UPGRADES

SCALE: 1/4" = 1'-0"

NO	BY	DATE	REVISIONS	DATE	APP.

Registered Professional Engineer (Civil) — DUONG T. DO — 40050 — Arizona, U.S.A. — Date Signed 12/31/27 — Expires 12/31/27

PREPARED BY: DUONG DO
PROJECT ENGINEER #40050
R.C.E. NO. 1—
EXP. DATE
SCALE
DRAWN: WW, MSA
DESIGNED: NT, NE
CHECKED: DD
DATE: FEB 2026

THESE DRAWINGS ARE THE PROPERTY OF P.A.C.E. AND SHALL NOT BE REPRODUCED IN ANY MANNER NOR BE USED FOR CONSTRUCTION UNLESS STAMPED "ISSUED FOR CONSTRUCTION".

TITLE: **PROCESS TANK UPGRADES - PLAN**

JOB: CITY OF SAN LUIS WEST WWTP 3.0 MGD MBR UPGRADES — SAN LUIS AZ.

PACE Advanced Water Engineering
8723 E. VIA de COMMERCIO, SUITE A-204 | SCOTTSDALE, CA 85258
P: (408) 991-3595 | www.pacewater.com

SHEET **M4.0**
39 OF 209 SHEETS

JOB NO. B777

FINAL PLANS ISSUED FOR BID

DRAFT

W:\B777\Engineering\B777 - 3MGD Exp\3MGD FINAL DS\Sheets\B777 - Mechanical Structure Plan.dwg - Tab: M4.0 - by wwright on 02/26/26 at 3:28:23 PM

CONSTRUCTION NOTES:

1. INSTALL 30" Ø SCH. 10 COATED STEEL AIR PIPE AND FITTINGS
2. INSTALL PROCESS AIR FLOW METER (PROVIDED BY MBR VENDOR)
3. INSTALL 12" MODULATING BUTTERFLY VALVE (PROVIDED BY MBR VENDOR)
4. INSTALL 12" Ø SCH 10 COATED STEEL AIR PIPE AND FITTINGS
5. INSTALL 8" Ø STAINLESS STEEL DROP PIPE (PROVIDED BY MBR VENDOR)
6. INSTALL 16" DIP PIPE FOR INTERNAL RECYCLE (TYP. OF 3)
7. 18" CORED HOLE OPENING FOR 16" PIPE, SEE DETAIL A ON SHEET M10.1
8. NEW 24" CONCRETE STRUCTURAL WEIR WALL, SEE STRUCTURAL PLANS
9. INSTALL 20" 304 SS TEE ANCHORED AND SEALED TO CONCRETE PAD (PROCURED THROUGH FF PUMP MFG'R)
10. INSTALL 20" 304 SS FEED FORWARD CAN COLUMN (PROCURED THROUGH FF PUMP MFG'R)
11. INSTALL 20" BLIND FLANGE WITH LIFTING EYE BOLT (PROCURED THROUGH FF PUMP MFG'R)
12. INSTALL 36" SLUICE GATE WITH STEM EXTENSION AND CRANK
13. INSTALL STRUCTURAL KNEE BRACE PIPE SUPPORT FOR 30" AIR PIPE
14. DAVIT CRANE, CITY-PROVIDED
15. INSTALL INTERMEDIATE PIPE SUPPORT MIDWAY HEIGHT OF GUIDERAIL (PROVIDED BY MBR VENDOR)
16. INSTALL 3" BUTTERFLY VALVE FLANGED CONNECTION
17. INSTALL 36" Ø DIP FEED FORWARD RAS PIPE AND FITTINGS
18. INSTALL 36" Ø DIP ELBOW WITH MEGALUG FITTINGS
19. INSTALL 36" DIP TEE
20. INSTALL 36" BLIND FLANGE WITH 8" AIR RELIEF PIPE SPOOL
21. INSTALL 8" BUTTERFLY VALVE FLANGED CONNECTION
22. INSTALL 18" D.I. BLIND FLANGE, FIELD VERIFY LOCATION OF EXISTING SPOOL TO PLUG
23. INSTALL NEW METAL STAIRCASE WITH HANDRAIL PER STRUCTURAL PLANS AND DETAIL: (F / M11.0)
24. WALL PENETRATION (WET) PER DETAIL: (A / M11.1)
25. INSTALL 2-1/2" ALUMINUM GRATING (SEE SPECS)
26. INSTALL 3" Ø 304 SS AIR DROP PIPE AND FITTINGS (PROCURED THROUGH DIFFUSER VENDOR)
27. INSTALL MLSS AERATION MANIFOLD (PROCURED THROUGH DIFFUSER VENDOR)
28. CONTRACTOR TO PROVIDE 20" 304 SS FLANGED SPOOL FOR PUMP CAN CONNECTION
29. INSTALL MECHANICAL LEVEL FLOAT W/ SS MOUNTING BRACKET

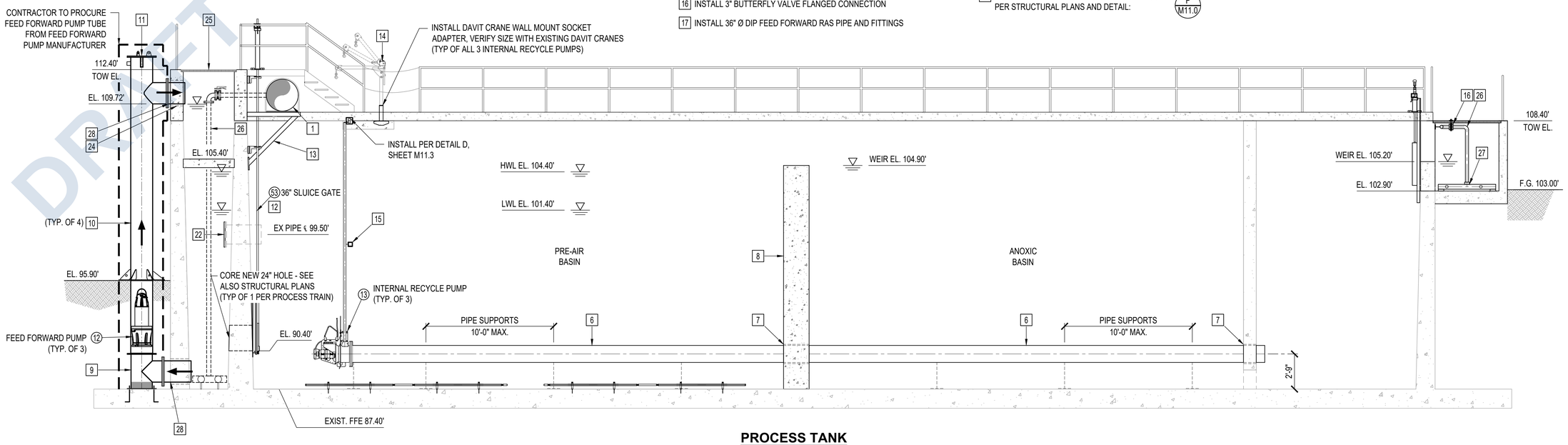

PROCESS TANK
SECTION - C

SCALE: 1/4" = 1'-0"

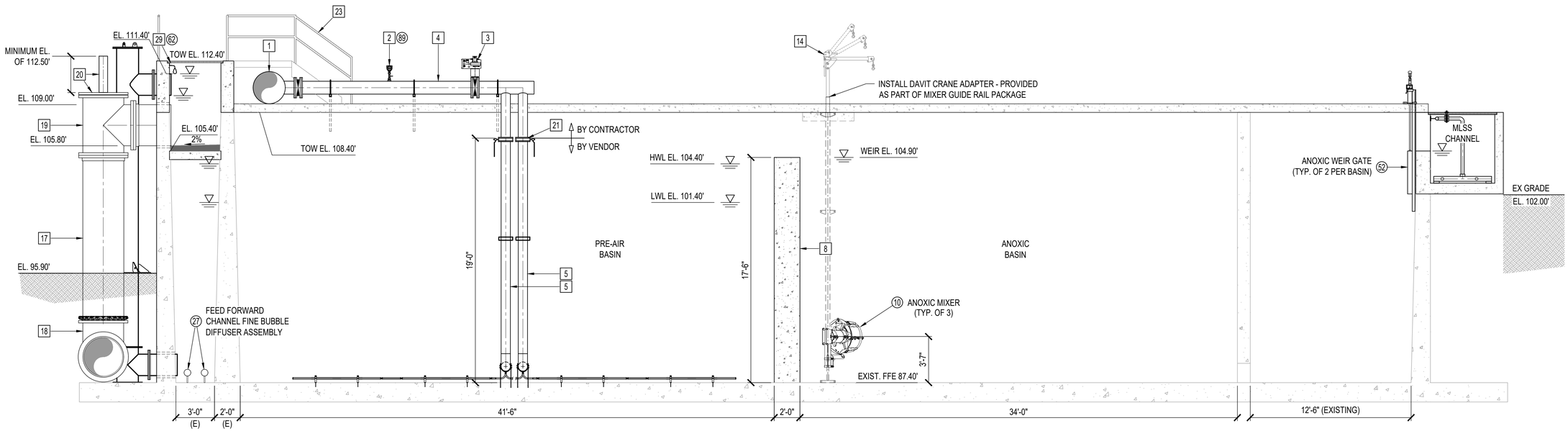

PROCESS TANK
SECTION - D

SCALE:1/4" = 1'-0"

DRAFT

NO	BY	DATE	REVISIONS	DATE	APP.

Registered Professional Engineer (Civil) — DUONG T. DO — 40050 — Arizona, U.S.A. — Date Signed 12/31/26 — Expires 12/31/27

PREPARED BY: DUONG DO
PROJECT ENGINEER #40050
R.C.E. NO. —
EXP. DATE
SCALE
DRAWN: WW, MSA
DESIGNED: NT, NE
CHECKED: DD
DATE: FEB 2026

THESE DRAWINGS ARE THE PROPERTY OF P.A.C.E. AND SHALL NOT BE REPRODUCED IN ANY MANNER NOR BE USED FOR CONSTRUCTION UNLESS STAMPED 'ISSUED FOR CONSTRUCTION'.

TITLE: **PROCESS TANK SECTIONS 1**

JOB: CITY OF SAN LUIS WEST WWTP 3.0 MGD MBR UPGRADES — SAN LUIS AZ.

PACE Advanced Water Engineering
8723 E. VIA de COMMERCIO, SUITE A-204 | SCOTTSDALE, CA 85258
P: (408) 991-3595 | www.pacewater.com

SHEET **M4.1**
40 OF 209 SHEETS

JOB NO. B777

FINAL PLANS ISSUED FOR BID

W:\B777\Engineering\B777 - 3MGD Exp\3MGD FINAL DSN\sheets\B777 - Process Tank Sections.dwg - Tab: M4.1 - by wwright on 02/26/26 at 3:28:13 PM

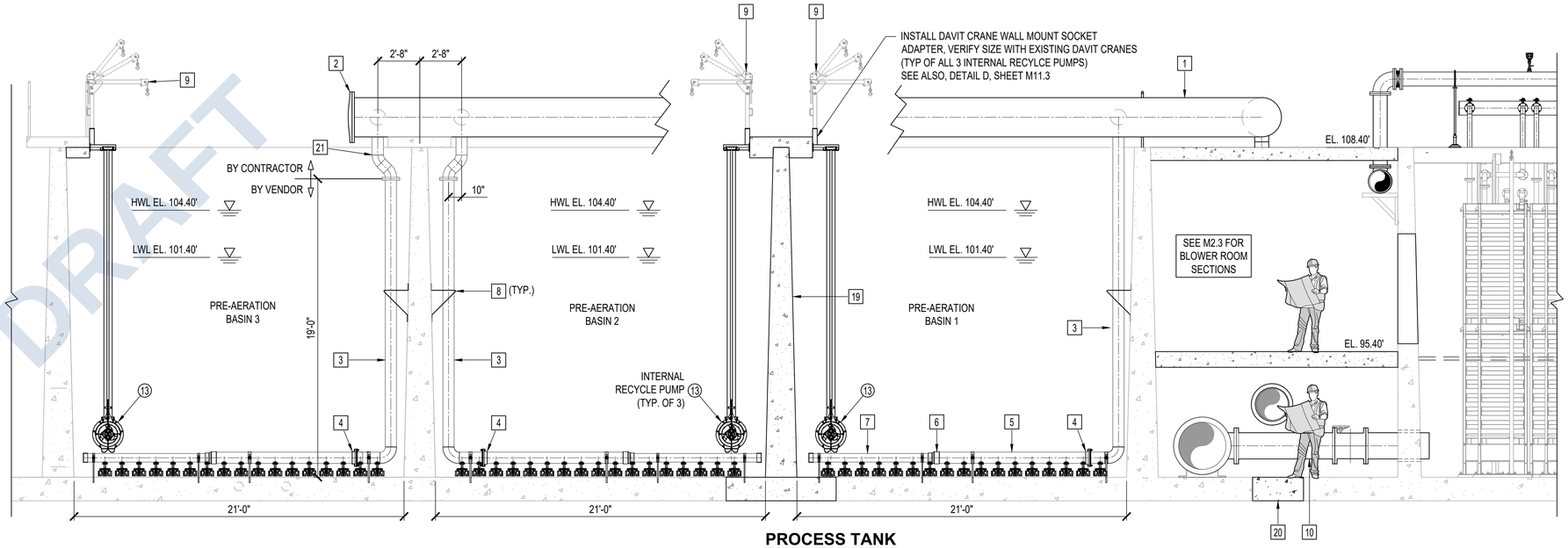

PROCESS TANK SECTION - E

SCALE: 1/4" = 1'-0"

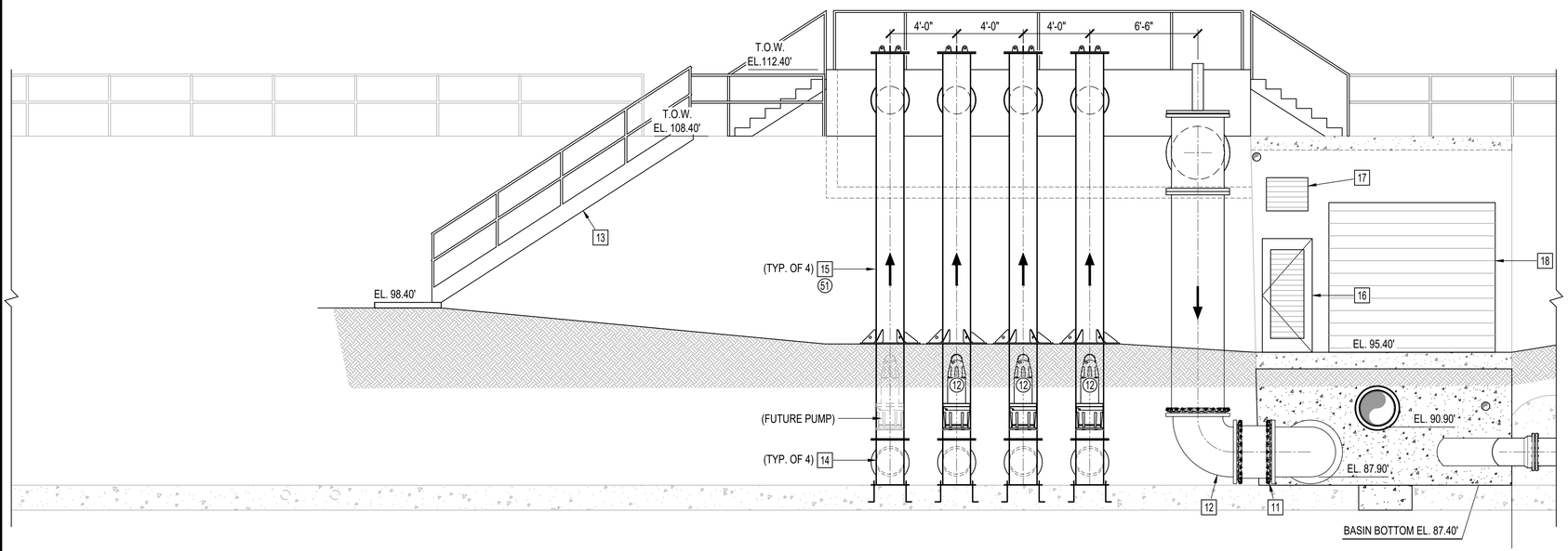

PROCESS TANK SECTION - F

SCALE:1/4" = 1'-0"

CONSTRUCTION NOTES:

1. INSTALL 30" Ø SCH. 10 COATED STEEL AIR PIPE AND FITTINGS (TYP.)
2. INSTALL 30" BLIND FLANGE
3. INSTALL 8" Ø SCH. 10 STAINLESS STEEL DROP PIPE (PROVIDED BY MBR VENDOR)
4. INSTALL TRANSITION FLANGE FROM STAINLESS STEEL TO SCH 80 PVC (PROVIDED BY MBR VENDOR)
5. INSTALL 8" SCH 80 PVC AERATION DIFFUSER HEADER PIPE (PROVIDED BY MBR VENDOR)
6. INSTALL 8" x 6" SCH 80 PVC REDUCER (PROVIDED BY MBR VENDOR)
7. INSTALL 6" SCH 80 PVC AERATION DIFFUSER HEADER PIPE (PROVIDED BY MBR VENDOR)
8. INSTALL PIPE SUPPORT KNEE BRACE - SEE DETAIL ON M10.3
9. INSTALL DAVIT CRANE - SEE SPECS
10. INSTALL 20" DIP MBR FEED PIPE AND FITTINGS (TYP.)
11. INSTALL 36" MEGALUG FITTING
12. INSTALL 36" 90° DIP ELBOW WITH MEGALUG FITTINGS
13. RELOCATE EXISTING STAIRCASE
14. INSTALL 20" 304 SS TEE ANCHORED AND SEALED TO CONCRETE PAD (PROCURED THROUGH FF PUMP MRG'R)
15. INSTALL 20" 304 SS FEED FORWARD CAN COLUMN (PROCURED THROUGH FF PUMP MFG'R)
16. INSTALL 3'-0" HOLLOW METAL DOOR WITH LOUVERS
17. INSTALL ADJUSTABLE WALL LOUVERS ABOVE DOOR, DESIGN AIR FLOW IS 851 CFM
18. INSTALL 10'-0" x 9'-0" ROLL-UP DOOR PER SPECIFICATIONS
19. NEW 12" TAPERED CONCRETE WALL (24" AT BASE) PER STRUCTURAL PLANS
20. NEW CONCRETE FOOTING TIED INTO EXISTING STRUCTURES
21. INSTALL 8" Ø SCH. 10 304 SS AIR PIPE AND FITTINGS, TIE TO DIFFUSER DROP PIPE

NO	BY	DATE	REVISIONS	DATE	APP.

Registered Professional Engineer (Civil) — DUONG T. DO — 40050 — Date Signed 12/31/27 — ARIZONA, U.S.A. — Expires 12/31/27

PREPARED BY: DUONG DO
PROJECT ENGINEER: DUONG DO
R.C.E. NO.: #40050
EXP. DATE: —
SCALE:
DRAWN: WW, MSA
DESIGNED: NT, NE
CHECKED: DD
DATE: FEB 2026

TITLE: PROCESS TANK SECTIONS 2

JOB: CITY OF SAN LUIS WEST WWTP 3.0 MGD MBR UPGRADES — SAN LUIS AZ.

PACE Advanced Water Engineering
8723 E. VIA de COMMERCIO, SUITE A-204 | SCOTTSDALE, CA 85258
P: (408) 991-3595 | www.pacewater.com

SHEET M4.2
41 OF 209 SHEETS

JOB NO. B777

DRAFT
FINAL PLANS ISSUED FOR BID
THESE DRAWINGS ARE THE PROPERTY OF P.A.C.E. AND SHALL NOT BE REPRODUCED IN ANY MANNER NOR BE USED FOR CONSTRUCTION UNLESS STAMPED 'ISSUED FOR CONSTRUCTION'.

W:\B777\Engineering\B777 - 3MGD Exp\3MGD FINAL DSN\sheets\B777 - Process Tank Sections.dwg - Tab: M4.2 - by wwright on 02/06/26 at 3:28:13 PM

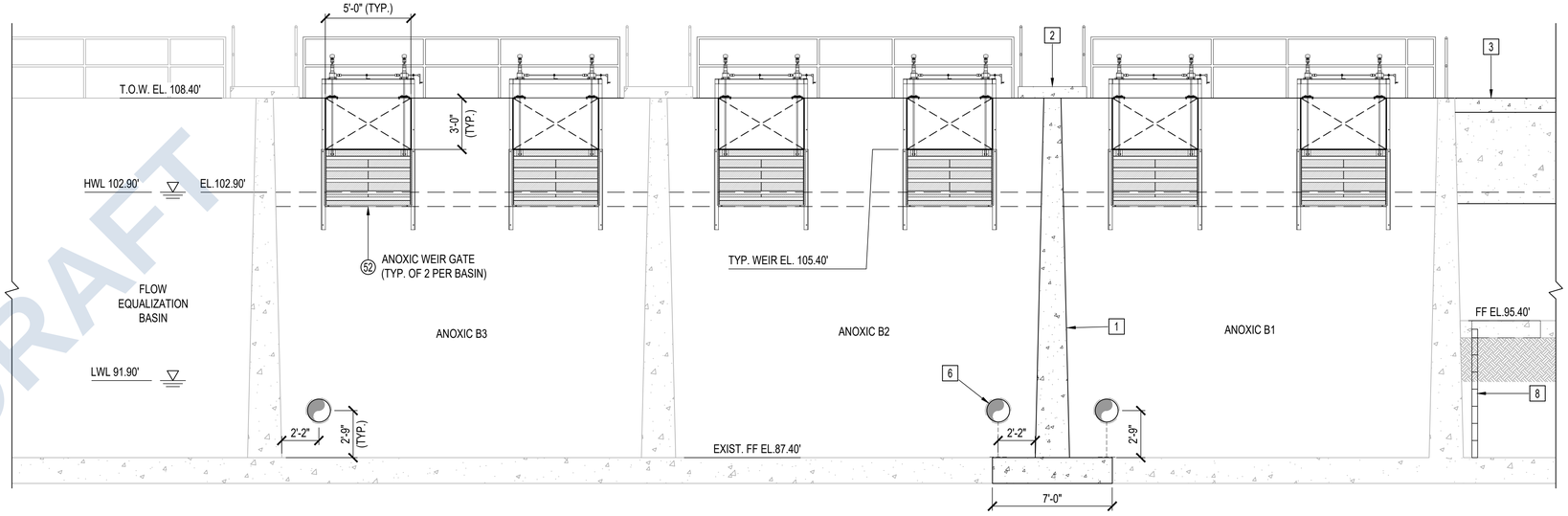

PROCESS TANK
SECTION - G

SCALE: 1/4" = 1'-0"

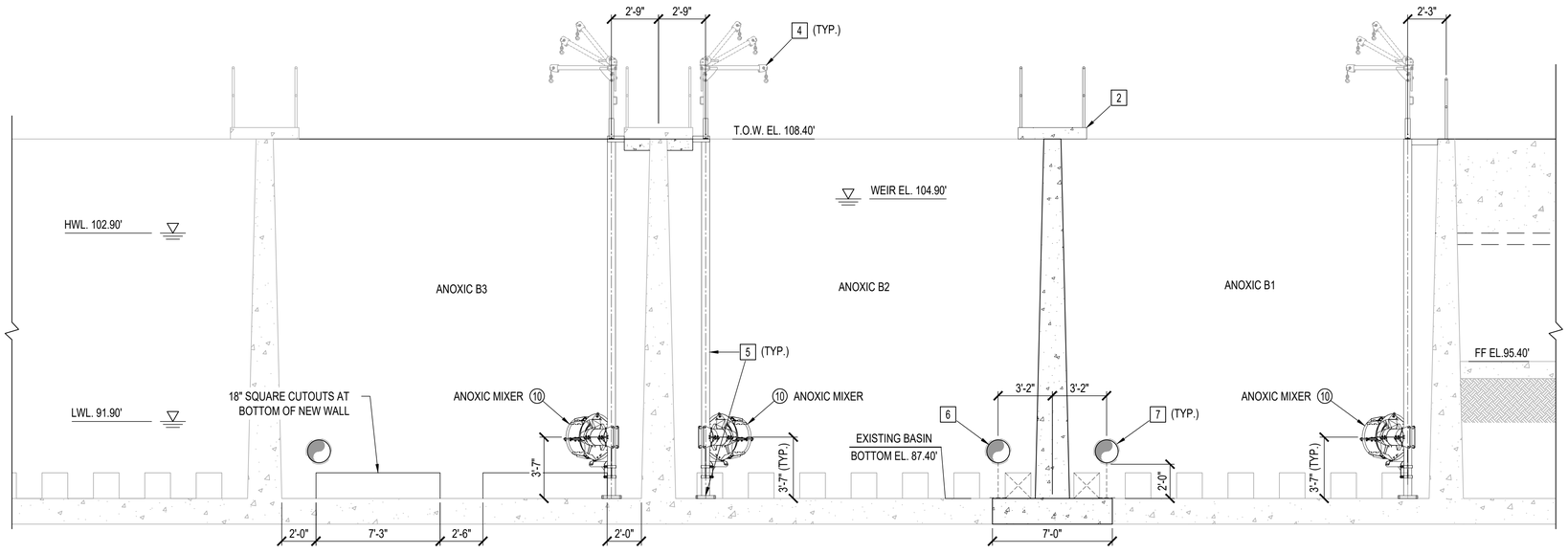

PROCESS TANK
SECTION - H

SCALE:1/4" = 1'-0"

CONSTRUCTION NOTES:

1. NEW TAPERED CONCRETE STRUCTURAL WALL, SEE STRUCTURAL PLANS
2. NEW CONCRETE WALKWAY WITH GUIDE RAILS
3. NEW STRUCTURAL CONCRETE ROOF SLAB, SEE STRUCTURAL PLANS
4. DAVIT CRANE ADAPTER - PROVIDED AS PART OF MIXER GUIDE RAIL PACKAGE
5. INSTALL 4" GUIDE RAIL AND FLOOR MOUNTED SUPPORTS FOR ANOXIC MIXER (PROVIDED BY MBR VENDOR)
6. INSTALL 16" DIP PIPE FOR INTERNAL RECYCLE (TYP. OF 3)
7. 18" CORED HOLE OPENING FOR 16" PIPE, SEE DETAIL: A / M11.1
8. INSTALL NEW HATCH AND ACCESS LADDER TO PIPE VAULT

DRAFT

NO	BY	DATE	REVISIONS	DATE	APP.

THESE DRAWINGS ARE THE PROPERTY OF P.A.C.E. AND SHALL NOT BE REPRODUCED IN ANY MANNER NOR BE USED FOR CONSTRUCTION UNLESS STAMPED 'ISSUED FOR CONSTRUCTION'.

Registered Professional Engineer (Civil) — DUONG T. DO — 40050 — Arizona, U.S.A. — Date Signed 12/31/27 — Expires 12/31/27

PREPARED BY: DUONG DO
PROJECT ENGINEER: #40050
R.C.E. NO.: —
EXP. DATE:
DRAWN: WW, MSA
DESIGNED: NT, NE
CHECKED: DD
SCALE:
DATE: FEB 2026

TITLE: PROCESS TANK SECTIONS 3

JOB: CITY OF SAN LUIS WEST WWTP 3.0 MGD MBR UPGRADES — SAN LUIS AZ.

PACE
Advanced Water Engineering
8723 E. VIA de COMMERCIO, SUITE A-204 | SCOTTSDALE, CA 85258
P: (408) 991-3595 | www.pacewater.com

SHEET
M4.3
42 OF 209 SHEETS

JOB NO. B777

FINAL PLANS ISSUED FOR BID

W:\B777\Engineering\B777 - 3MGD Exp\3MGD FINAL DSN\sheets\B777 - Process Tank Sections.dwg - Tab: M4.3 - by wwright on 02/06/26 at 3:26:13 PM

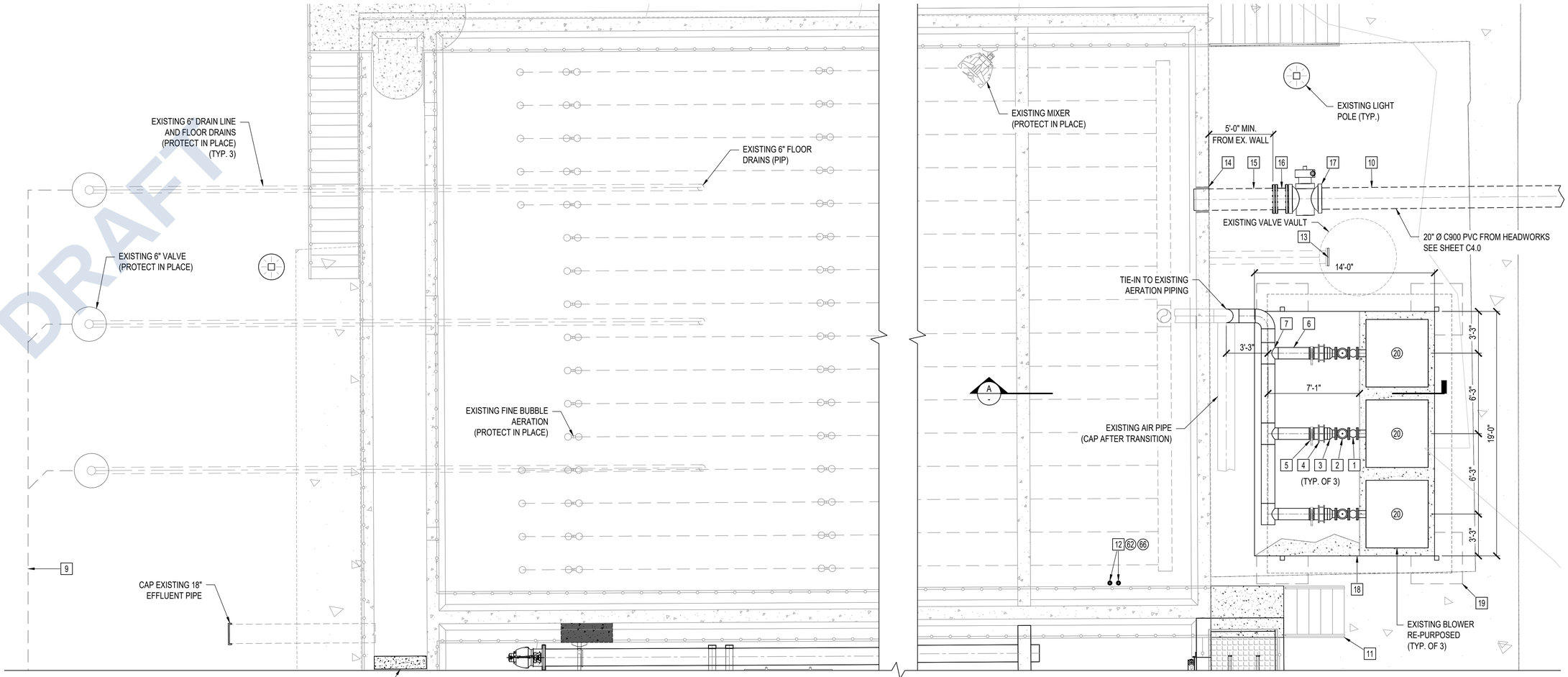

PROPOSED BASIN AND AERATION UPGRADES

SCALE: 1/4" = 1'-0"

CONSTRUCTION NOTES:

1. INSTALL 6" EXPANSION JOINT
2. RE-PURPOSED 6" RELIEF VALVE
3. RE-PURPOSED 6"x10" REDUCER
4. INSTALL 10" DUAL DISK CHECK VALVE
5. INSTALL 10" BUTTERFLY VALVE
6. INSTALL 10" SCH 40. STEEL PIPE
7. INSTALL 10" x 12" SCH. 40 STEEL REDUCING TEE
8. INSTALL NEW SHADE CANOPY PER STRUCTURAL PLANS
9. INSTALL NEW 12" DRAIN LINE PER CIVIL
10. INSTALL NEW 20" INFLUENT OVERFLOW LINE
11. RELOCATE EXISTING STAIRS AND WALKWAY TO EDGE OF NEW CHANNEL. NEW CONCRETE PLATFORM TO RUN ALONG TOP OF MLSS CHANNEL.
12. INSTALL LEVEL TRANSDUCER AND FLOAT TREE, SEE ALSO DETAIL: G / M11.2
13. INSTALL 12" BLIND FLANGE TO ABANDONED 12" DIP LINE
14. PIPE PENETRATION PER DETAIL: A / M11.1
15. INSTALL 20" DUCTILE IRON PIPE
16. INSTALL 20" MJ TRANSITIONAL COUPLING
17. INSTALL 20" MJ BURIED SERVICE PLUG VALVE WITH VALVE CAN AND RISER PER DETAIL C, SHEET C6.0.
18. INSTALL CONCRETE BLOWER PAD PER STRUCTURAL PLANS
19. INSTALL CONCRETE FOOTING PER STRUCTURAL PLANS

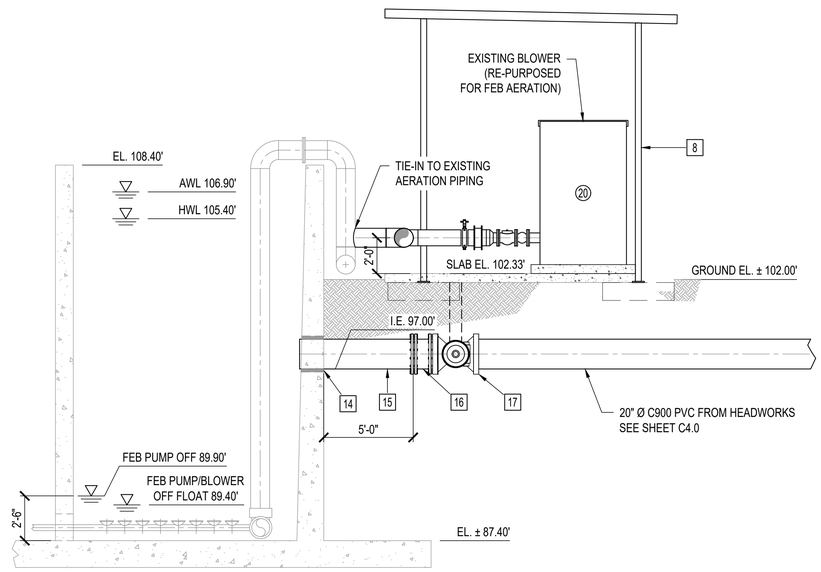

PROPOSED BASIN AND AERATION UPGRADES SECTION - A

SCALE: 1/4" = 1'-0"

NO	BY	DATE	REVISIONS	DATE	APP.

Registered Professional Engineer (Civil) — DUONG T. DO — 40050 — Date Signed — ARIZONA, U.S.A. — Expires 12/31/27

PREPARED BY: DUONG DO
R.C.E. NO.: 40050
EXP. DATE:
PROJECT ENGINEER: DUONG DO
SCALE:
DRAWN: WW, MSA
DESIGNED: NT, NE
CHECKED: DD
DATE: FEB 2026

THESE DRAWINGS ARE THE PROPERTY OF P.A.C.E. AND SHALL NOT BE REPRODUCED IN ANY MANNER NOR BE USED FOR CONSTRUCTION UNLESS STAMPED "ISSUED FOR CONSTRUCTION".

TITLE: **EQ TANK UPGRADES - PLAN & SECTION**

JOB: CITY OF SAN LUIS WEST WWTP
3.0 MGD MBR UPGRADES
SAN LUIS AZ.

PACE Advanced Water Engineering
8723 E. VIA de COMMERCIO, SUITE A-204 | SCOTTSDALE, CA 85258
P: (408) 991-3995 | www.pacewater.com

SHEET **M5.0**
43 OF 209 SHEETS

JOB NO. B777

FINAL PLANS ISSUED FOR BID

DRAFT

W:\B777\Engineering\B777 - 3MGD Exp\3MGD FINAL DS\Sheets\B777 - M5.0 EQ Tank Plan.dwg - Tab: M5.0 - by wwright on 02/26/26 at 10:56:18 AM

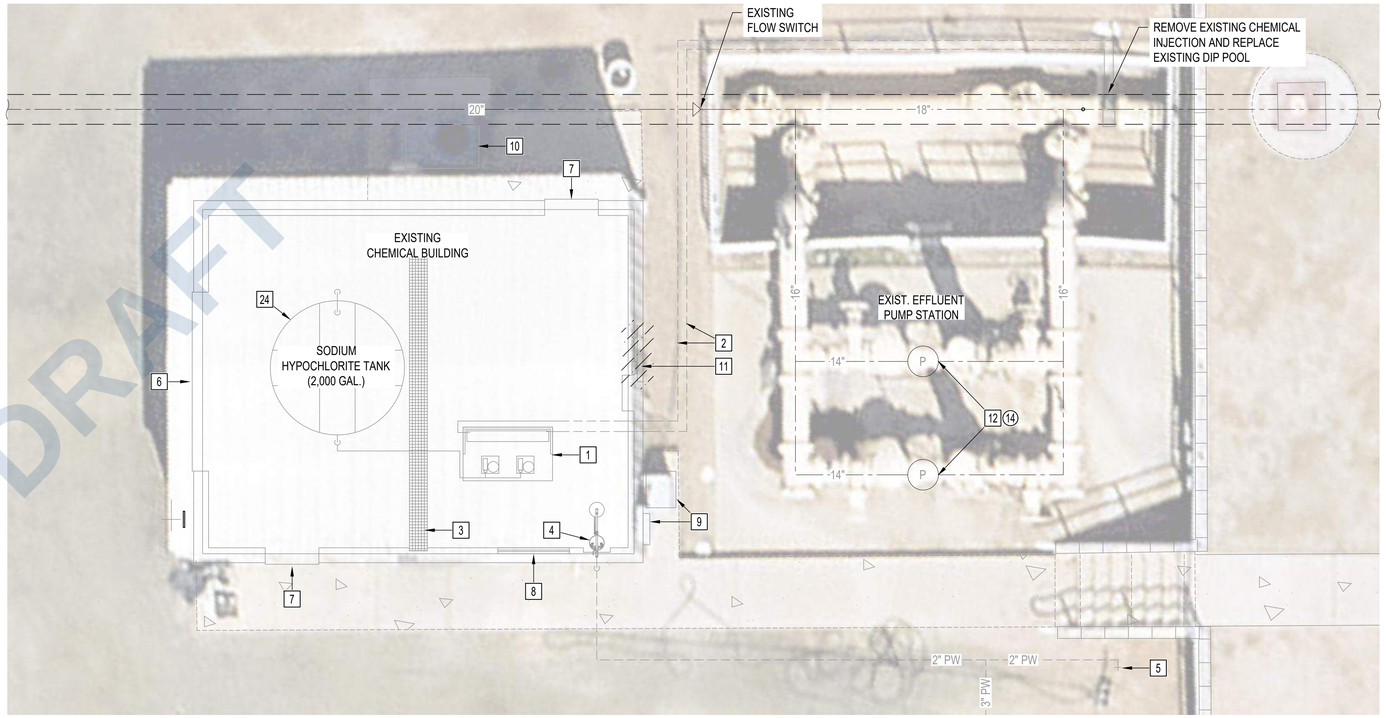

EXISTING EFFLUENT PUMP STATION & CHLORINE BLDG.

SCALE: 1/4" = 1'-0"

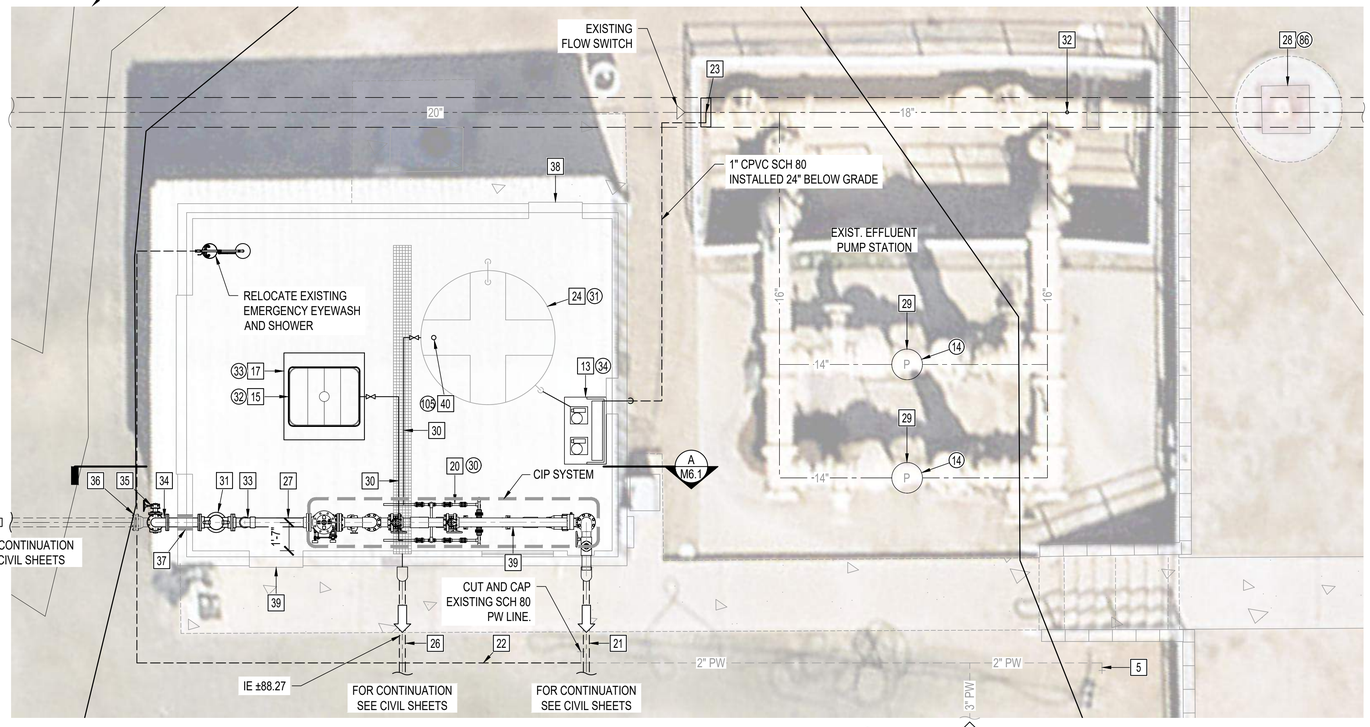

PROPOSED EFFLUENT PUMP STATION & CHLORINE BLDG.

SCALE: 1/4" = 1'-0"

CONSTRUCTION NOTES:

1. EXIST. CHEMICAL INJECTION SYSTEM TO BE RELOCATED
2. EXIST. UNDERGROUND 2" PVC CHLORINE LINES
3. EXIST. TRENCH DRAIN
4. EXIST. EYEWASH STATION
5. EXIST. HOSE BIBB
6. EXIST. 10' WIDE ROLL-UP DOOR
7. EXIST. DOOR
8. EXIST. WINDOW
9. EXIST. ELEC.
10. EXIST. HVAC EQUIP.
11. REMOVE CHEMICAL INJECTION SYSTEM
12. EXISTING EFFLUENT PUMPS - PROTECT IN PLACE
13. CHEMICAL INJECTION METERING STATION (DUAL PERISTALTIC PUMPS) - RELOCATED. SEE DETAIL HEREON.
14. NEW CHLORINE ANALYZER
15. NEW CITRIC ACID CHEMICAL CONTAINER (275 GAL TOTE)
16. NEW 40% SOLUTION OF SODIUM BISULFITE (100 GAL TOTE)
17. NEW SPILL CONTAINMENT PALLET (385 GAL SUMP)
18. NEW INJECTION QUILL FOR DECHLOR PER DETAIL: D / M11.1
19. NEW SAMPLING POINT FOR FREE CHLORINE RESIDUAL. INSTALL ½" DIRECT TAP WITH ISOLATION VALVE AND ½" PVC PIPE CONNECTION.
20. NEW CIP STATION. SEE SHEETS M12.2 & M12.3.
21. NEW 6" C900 SCH 80 PVC LINE TO MBR BASIN / PERMEATE LINE
22. INSTALL NEW 2" SCH 80 PVC PW LINE.
23. REPLACE EXISTING 18" 304 S.S. SPOOL AND INSTALL NEW DIP SPOOL WITH NEW CHLORINE INJECTION QUILL PER DETAIL: D / M11.1
24. RELOCATE EXISTING SODIUM HYPOCHLORITE TANK (2,000 GAL)
26. NEW 4" SDR 35 PVC DRAIN LINE TO PLANT DRAIN PUMP STATION, MAINTAIN MINIMUM 1% SLOPE, SEE C4.0 FOR CONTINUATION.
27. NEW 6" SCH 80 PVC RW LINE.
28. REPLACE EXIST. FLOW METER.
29. REPLACE EXIST. EFFLUENT PUMP STATION IN KIND.
30. INSTALL ¾" CPVC CONDUIT PIPING.
31. INSTALL 150 MESH BASKET STRAINER
32. INSTALL PRESSURE TRANSDUCER WITH SADDLE OR DIRECT TAP. PER DETAIL. B / M11.5
33. INSTALL 6" - 90° SCH. 80 PVC ELBOW.
34. INSTALL 6" - 90° D.I. BEND (FLGxFLG)
35. INSTALL 6" PLUG VALVE. (FLGxFLG)
36. INSTALL 6" - 90° D.I. RESTRAINED BEND (MJxMJ)
37. PENETRATE EX. BUILDING - PROVIDE PIPE BOOT OR BUILDING WALL SEAL.
38. INSTALL HAZARD PLACARD AT DOOR PER DETAIL: A / M11.2
39. INSTALL PIPE SUPPORTS FOR CIP SYSTEM (TYP) PER DETAIL: S7 / M11.4
40. CONTRACTOR TO INSTALL BULKHEAD FITTING ON EXISTING CHEMICAL STORAGE TANK AND RADAR LEVEL TRANSMITTER, INSTALL PER MANUFACTURER REQUIREMENTS, SEE SPECS.

LEGEND

DEMO

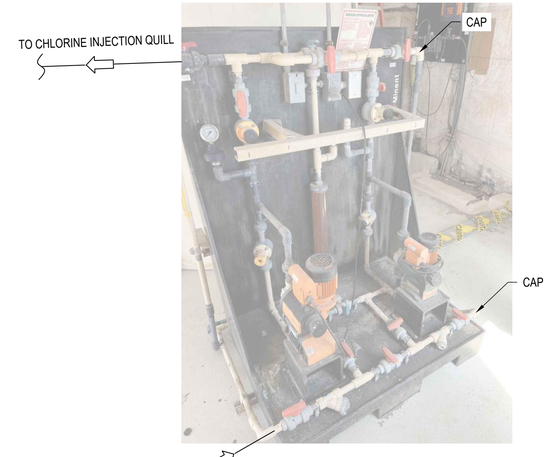

EXISTING CHEMICAL INJECTION SYSTEM (TO BE RELOCATED)

NO	BY	DATE	REVISIONS	DATE	APP.

Registered Professional Engineer (Civil) — DUONG T. DO — 40050 — Arizona, U.S.A. — Expires 12/31/27

PREPARED BY: DUONG DO
R.C.E. NO.: 40050 — EXP. DATE: —
PROJECT ENGINEER: DUONG DO
SCALE:
DRAWN: WW, MSA
DESIGNED: NT, NE
CHECKED: DD
DATE: FEB 2026

THESE DRAWINGS ARE THE PROPERTY OF P.A.C.E. AND SHALL NOT BE REPRODUCED IN ANY MANNER NOR BE USED FOR CONSTRUCTION UNLESS STAMPED 'ISSUED FOR CONSTRUCTION'.

TITLE: EXIST EFF PUMP STATION & CHLORINE BLDG

JOB: CITY OF SAN LUIS WEST WWTP 3.0 MGD MBR UPGRADES — SAN LUIS AZ.

PACE
Advanced Water Engineering
8723 E. VIA de COMMERCIO, SUITE A-204 | SCOTTSDALE, CA 85258
P.: (408) 991-3595 | www.pacewater.com

SHEET M6.0
44 OF 209 SHEETS

JOB NO. B777

FINAL PLANS ISSUED FOR BID

DRAFT

W:\B777\Engineering\B777 - 3MGD Exp\3MGD FINAL DSNsheets\B777 - M6.0 Effluent PS & Chlorine Bldg.dwg - Tab: M6.0 - by wwright on 02/05/26 at 9:44:37 AM

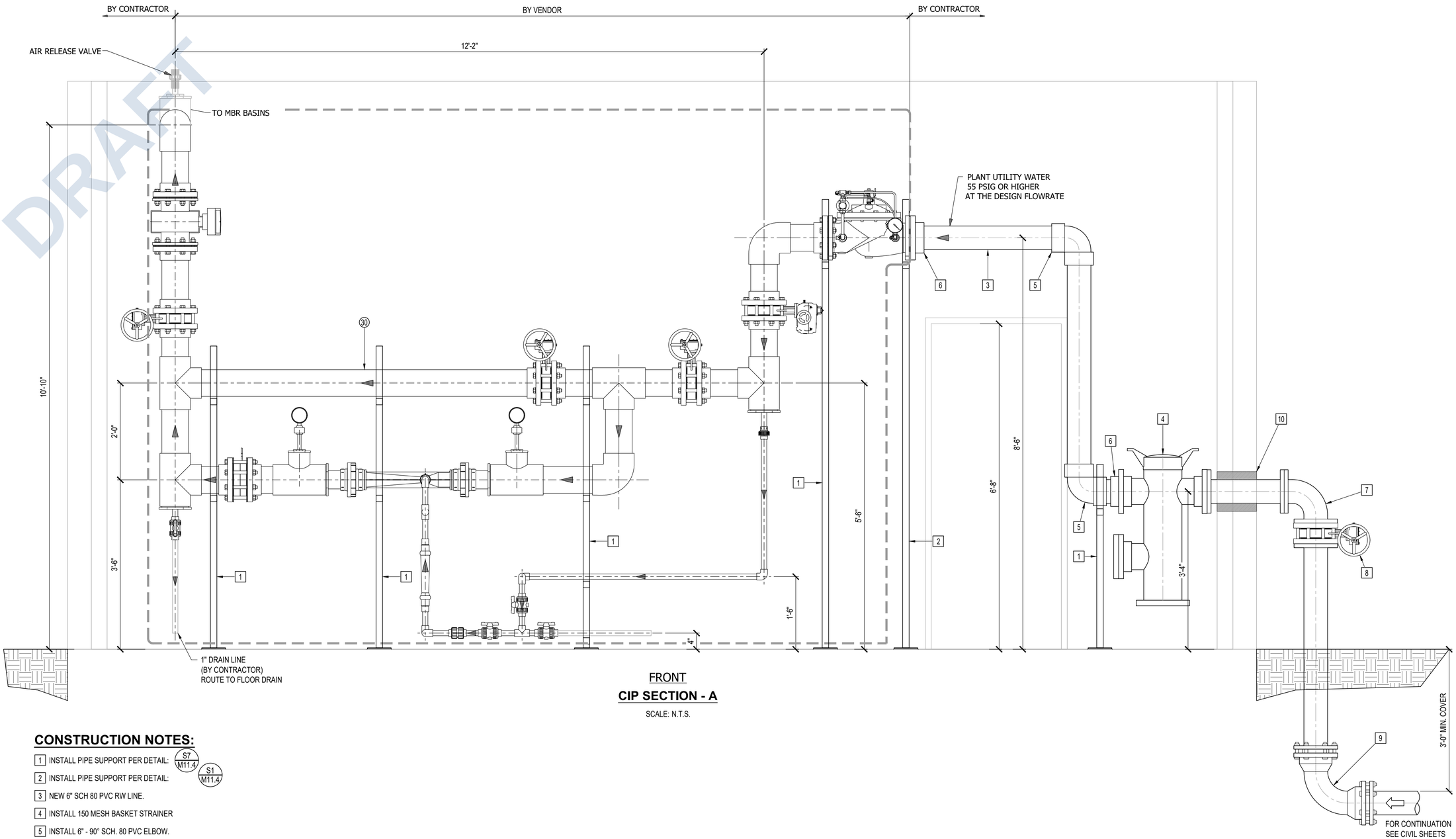

FRONT

CIP SECTION - A

SCALE: N.T.S.

CONSTRUCTION NOTES:

1. INSTALL PIPE SUPPORT PER DETAIL: S7 M11.4
2. INSTALL PIPE SUPPORT PER DETAIL: S1 M11.4
3. NEW 6" SCH 80 PVC RW LINE.
4. INSTALL 150 MESH BASKET STRAINER
5. INSTALL 6" - 90° SCH. 80 PVC ELBOW.
6. INSTALL 6" SCH. 80 PVC FLANGE ADAPTER.
7. INSTALL 6" - 90° D.I. BEND (FLGxFLG)
8. INSTALL 6" LUG STYLE BUTTERFLY VALVE. (FLGxFLG)
9. INSTALL 6" - 90° D.I. RESTRAINED BEND (MJxMJ)
10. PENETRATE EX. BUILDING - PROVIDE PIPE BOOT OR BUILDING WALL SEAL.

NO	BY	DATE	REVISIONS	DATE	APP.

Registered Professional Engineer (Civil) CERTIFICATE NO. 40050 DUONG T. DO Date Signed 12/31/25 ARIZONA, U.S.A. Expires 12/31/27

PREPARED BY DUONG DO
PROJECT ENGINEER
R.C.E. NO. -- #40050
EXP. DATE
DRAWN WW, MSA
SCALE
DESIGNED NT, NE
CHECKED DD
DATE FEB 2026

THESE DRAWINGS ARE THE PROPERTY OF P.A.C.E. AND SHALL NOT BE REPRODUCED IN ANY MANNER NOR BE USED FOR CONSTRUCTION UNLESS STAMPED "ISSUED FOR CONSTRUCTION".

TITLE
EXIST EFF PUMP STATION & CHLORINE BLDG SECTION

JOB
CITY OF SAN LUIS WEST WWTP
3.0 MGD MBR UPGRADES
SAN LUIS AZ.

PACE
Advanced Water Engineering
8723 E. VIA de COMMERCIO, SUITE A-204 | SCOTTSDALE, CA 85258
P: (408) 991-3595 | www.pacewater.com

FINAL PLANS ISSUED FOR BID

SHEET
M6.1
45 OF 209 SHEETS

JOB NO. B777

W:\B777\Engineering\B777 - 3MGD Exp\3MGD FINAL DS\Sheets\B777 - M6.0 Effluent PS & Chlorine Bldg.dwg - Tab: M6.1 - by wwright on 02/05/26 at 9:44:37 AM

CONSTRUCTION NOTES:

1. INSTALL 6" DIP
2. INSTALL 6" D.I. 90° ELBOW (MJ)
3. INSTALL 6" D.I. 90° ELBOW (FLG'D)
4. INSTALL 6" D.I. TEE (FLG'D)
5. INSTALL 6" PLUG VALVE
6. INSTALL 2" SCH80 PVC WATER PIPE AND FITTINGS (TYP)
7. INSTALL 2" SCH80 PVC NPW PIPE AND FITTINGS (TYP)
8. INSTALL COMBINATION EYEWASH/SHOWER PER: (C / M11.2)
9. INSTALL SLUDGE DEWATER EQUIPMENT AND ACCESORIES (PROVIDED BY VENDOR) SEE SHEET M12.3, M12.4, AND M12.5
10. ROLL-OFF DUMPSTER PROVIDED BY CITY
11. INSTALL STEEL DUMPSTER GUIDES, SEE DETAIL (D / M11.5)
12. INSTALL STEEL SHADE STRUCTURE, SEE STRUCTURAL PLANS
13. INSTALL 55 - GAL POLYMER DRUM (PROVIDED BY CITY)
14. INSTALL 6" FLOOR DRAIN PER DETAIL (E / M11.0)
15. INSTALL 4" SDR 35 DRAIN PIPE AND FITTINGS
16. INSTALL 4" FLOOR DRAIN PER DETAIL (E / M11.0)
17. INSTALL 4" SDR 35 DRAIN PIPE AND FITTINGS
18. INSTALL 8" SDR 35 DRAIN PIPE AND FITTINGS
19. INSTALL 6" SDR 35 CLEANOUT
20. INSTALL POLYMER LINE. PER VENDOR REQUIREMENTS
21. INSTALL 6" C900 x SCH80 PVC TRANSITION COUPLING
22. INSTALL 6" SCH80 PVC 90° ELBOW
23. INSTALL 6" x 2" SCH80 PVC REDUCING BUSHING ABOVE GRADE
24. INSTALL 6" SCH80 PVC NPW LINE
25. INSTALL 6" SCH80 PVC PLUG VALVE ABOVE GRADE

NOTES:
1. CONTRACTOR TO INCLUDE ALL REQUIRED FITTINGS AND APPURTENANCES FOR WATER SYSTEMS. CONNECTIONS SHALL INCLUDE MANUAL ISOLATION VALVE AT CONNECTION PONITS.
2. ONSITE PROCESS WATER (RW) PIPING IS SHOWN SCHEMATICALLY. FIELD LOCATE PIPING, ROUTE, INSTALL, AND TIE TO EQUIPMENT PER MANUFACTURER'S REQUIREMENTS.

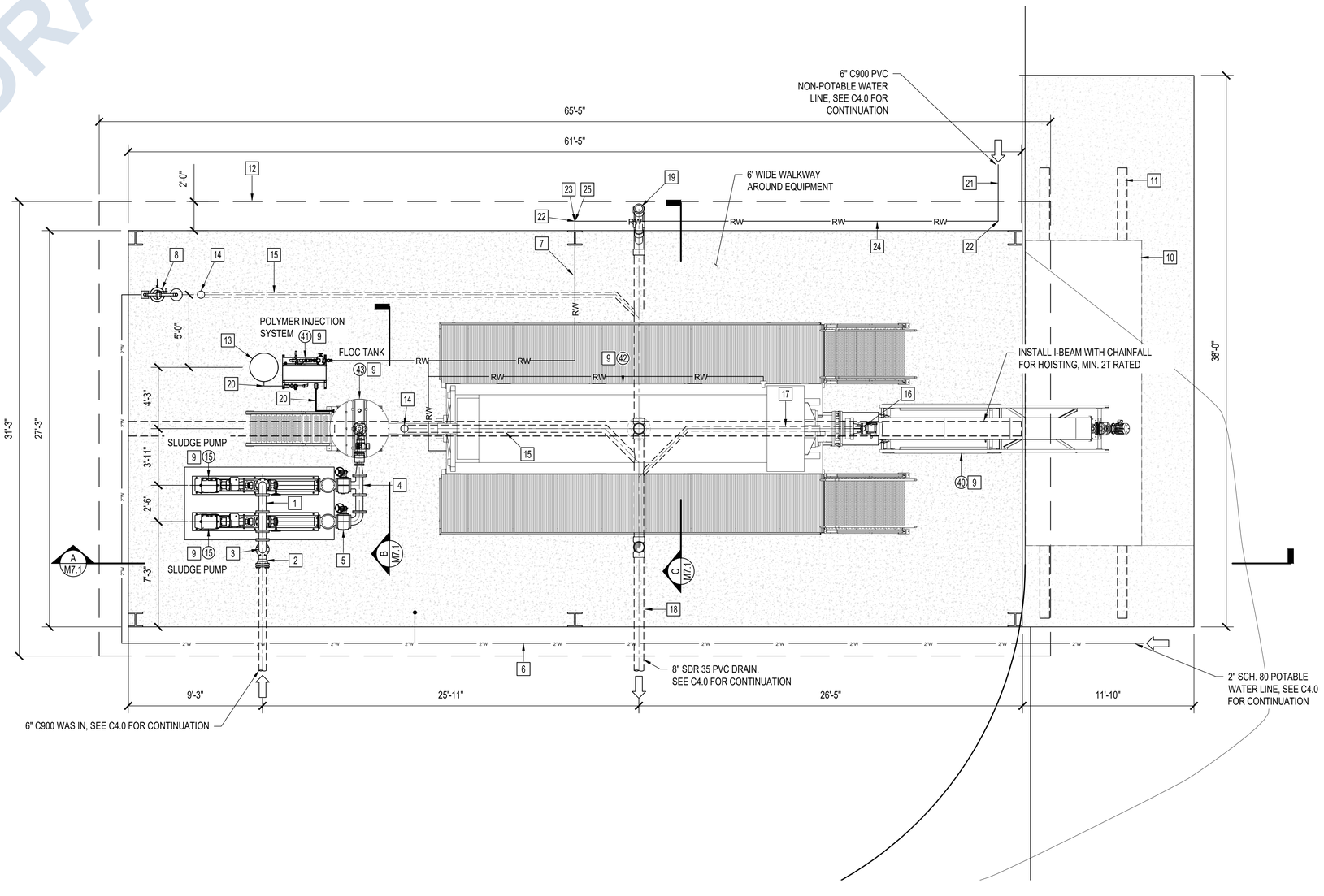

PROPOSED SITE PLAN

SCALE: 1/4" = 1'-0"

NORTH

DRAFT

NO	BY	DATE	REVISIONS	DATE	APP.

Registered Professional Engineer (Civil) — DUONG T. DO — 40050 — Arizona, U.S.A. — Date Signed 12/31/27 — Expires 12/31/27

PREPARED BY: DUONG DO — PROJECT ENGINEER — R.C.E. NO. #40050 — EXP. DATE —
DRAWN: WW, MSA — DESIGNED: NT, NE — CHECKED: DD — SCALE — DATE: FEB 2026

TITLE: DEWATERING PLAN

JOB: CITY OF SAN LUIS WEST WWTP 3.0 MGD MBR UPGRADES — SAN LUIS AZ.

PACE
Advanced Water Engineering
8723 E. VIA de COMMERCIO, SUITE A-204 | SCOTTSDALE, CA 85258
P: (408) 991-3595 | www.pacewater.com

SHEET M7.0
46 OF 209 SHEETS

JOB NO. B777

FINAL PLANS ISSUED FOR BID

THESE DRAWINGS ARE THE PROPERTY OF P.A.C.E. AND SHALL NOT BE REPRODUCED IN ANY MANNER NOR BE USED FOR CONSTRUCTION UNLESS STAMPED 'ISSUED FOR CONSTRUCTION'.

W:\B777\Engineering\B777 - 3MGD Exp\3MGD FINAL DS\Sheets\B777 -M7.0 DEWATERING.dwg - Tab: M7.0 - by wwright on 02/02/26 at 3:37:33 PM

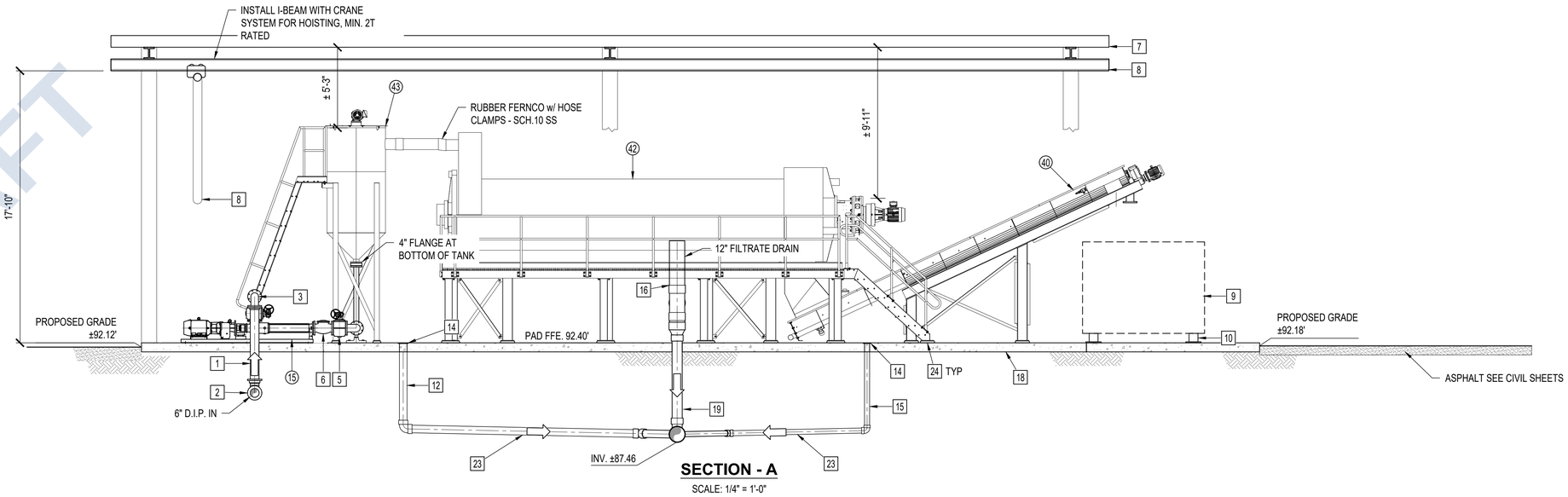

SECTION - A

SCALE: 1/4" = 1'-0"

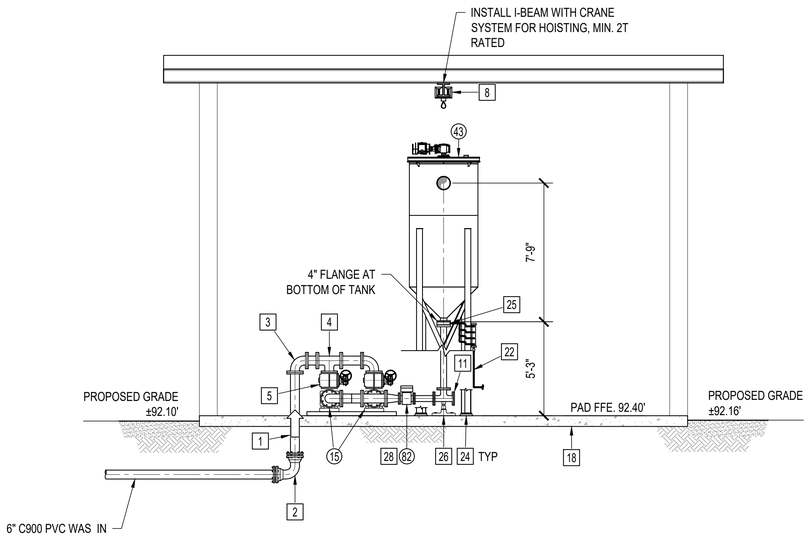

SECTION - B

SCALE: 1/4" = 1'-0"

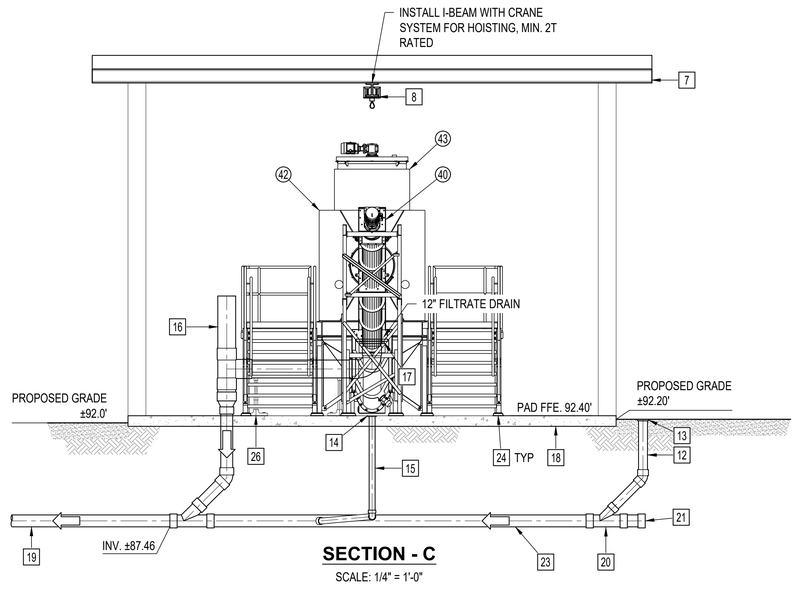

SECTION - C

SCALE: 1/4" = 1'-0"

CONSTRUCTION NOTES:

1. INSTALL 6" DIP
2. INSTALL 6" D.I. 90° ELBOW (MJ)
3. INSTALL 6" D.I. 90° ELBOW (FLG'D)
4. INSTALL 6" D.I. TEE (FLG'D)
5. INSTALL 6" PLUG VALVE
6. INSTALL 6" CHECK VALVE
7. INSTALL SHADE STRUCTURE PER STRUCTURAL PLANS
8. INSTALL 2T RATED I-BEAM CRANE SYSTEM w/ HOIST w/ CHAINFALL. SEE ALSO STRUCTURAL PLANS
9. INSTALL ROLL-OFF DUMPSTER
10. INSTALL STEEL DUMPSTER GUIDES. PER DETAIL: D / M11.5
11. INSTALL 4" DIP BLIND FLANGE
12. INSTALL 6" SDR 35 DRAIN PIPE AND FITTINGS
13. INSTALL 6" SDR 35 SEWER CLEANOUT
14. INSTALL 4" FLOOR DRAIN. PER DETAIL E / M11.0
15. INSTALL 4" SDR 35 DRAIN PIPE AND FITTINGS
16. INSTALL 12" SDR 35 DRAIN PIPE AND FITTINGS
17. INSTALL 12" VAN STONE FLANGE. CONNECT TO SCREW PRESS FILTRATE DRAIN LINE
18. INSTALL CONCRETE DEWATERING PAD, SEE STRUCTURAL
19. INSTALL 8" SDR 35 DRAIN PIPE AND FITTINGS
20. 8"x6" SDR 35 REDUCING WYE
21. INSTALL 8" SDR 35 CAP
22. INSTALL POLYMER LINE. SEE SPECS
23. MAINTAIN 2% MINIMUM SLOPE (TYP.)
24. INSTALL 1-1/2" GROUT AS REQUIRED BY FKC (TYP.)
25. INSTALL 4" POLYMER INJECTION RING PER DETAIL: A / M11.0
26. INSTALL PIPE SUPPORT PER DETAIL S1, SIZE PER PLAN S1 / M11.4
27. INSTALL SLUDGE FLOW METER (PROVIDED BY SLUDGE DEWATERING VENDOR)

DRAFT

NO	BY	DATE	REVISIONS	DATE	APP.

Registered Professional Engineer (Civil) — DUONG T. DO — 40050 — Arizona, U.S.A. — Date Signed 12/31/27 — Expires 12/31/27

THESE DRAWINGS ARE THE PROPERTY OF P.A.C.E. AND SHALL NOT BE REPRODUCED IN ANY MANNER NOR BE USED FOR CONSTRUCTION UNLESS STAMPED 'ISSUED FOR CONSTRUCTION'.

PREPARED BY: DUONG DO — PROJECT ENGINEER — #40050 — R.C.E. NO. / EXP. DATE: —
DRAWN: WW, MSA — DESIGNED: NT, NE — CHECKED: DD — SCALE — DATE: FEB 2026

TITLE: **DEWATERING SECTIONS**

JOB: CITY OF SAN LUIS WEST WWTP 3.0 MGD MBR UPGRADES — SAN LUIS AZ.

PACE
Advanced Water Engineering
8723 E. VIA de COMMERCIO, SUITE A-204 | SCOTTSDALE, CA 85258
P: (408) 991-3595 | www.pacewater.com

SHEET **M7.1**
47 OF 209 SHEETS

JOB NO. B777

FINAL PLANS ISSUED FOR BID

W:\B777\Engineering\B777 - 3MGD Exp\3MGD FINAL DSN\sheets\B777 - M7.0 DEWATERING.dwg - Tab: M7.1 - by wwright on 02/02/26 at 3:37:33 PM

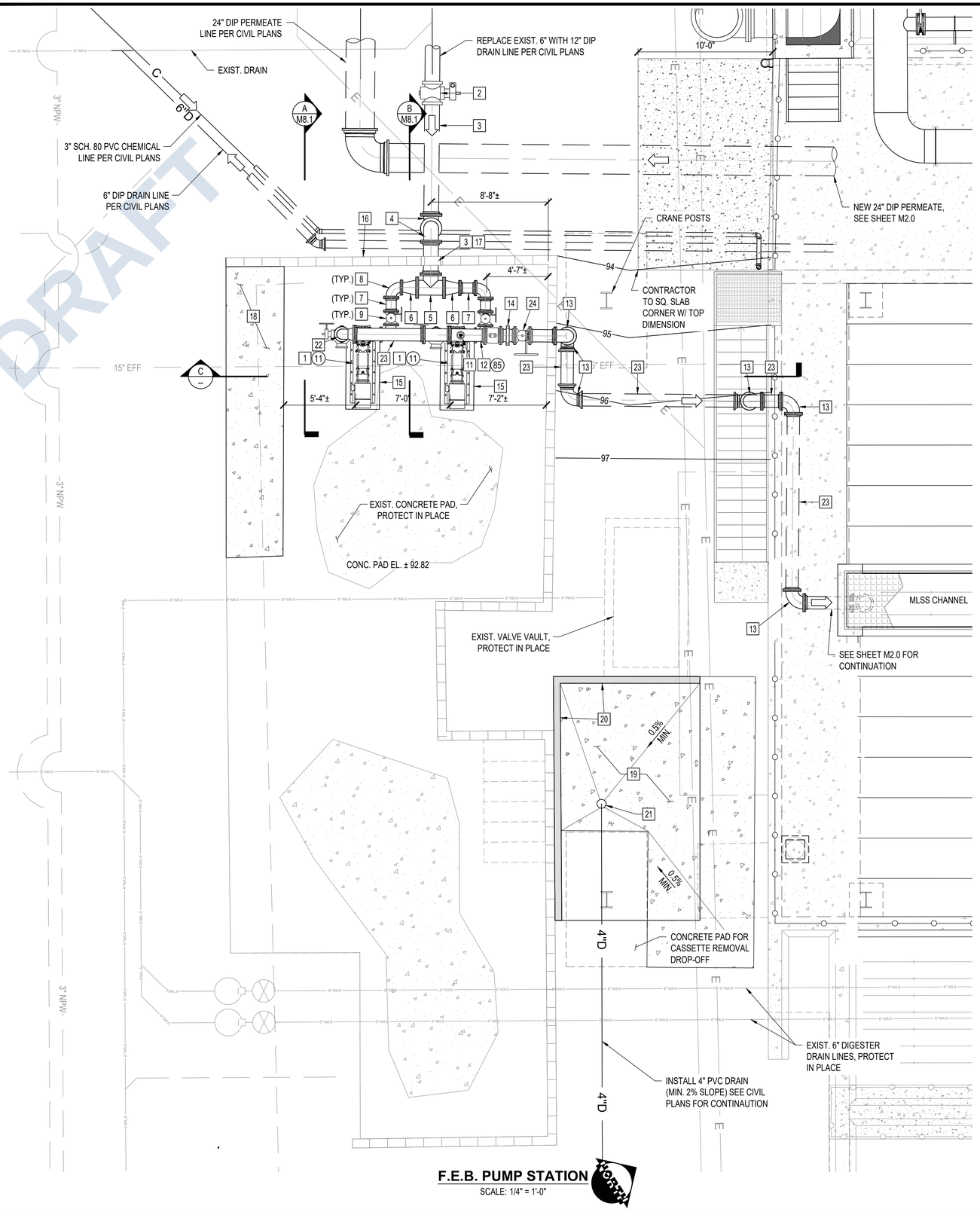

F.E.B. PUMP STATION
SCALE: 1/4" = 1'-0"

CONSTRUCTION NOTES:

1. INSTALL NEW FEB ROTARY LOBE PUMPS PER MFR. REQUIREMENTS.
2. INSTALL BURIED SERVICE PLUG VALVE (MJ x MJ) w/ VALVE CAN & RISER PER DETAIL: (E/C6.0)
3. INSTALL CLASS 350 12" DIP.
4. INSTALL CLASS 350 12" - 90° D.I. BEND (FLG x FLG).
5. INSTALL CLASS 350 12" D.I. TEE (FLG x FLG).
6. INSTALL 12" x 8" D.I. REDUCER (FLG x FLG).
7. INSTALL CLASS 350 8" DIP.
8. INSTALL CLASS 350 8" - 90° D.I. BEND (FLG x FLG).
9. INSTALL CLASS 350 8" PLUG VALVE (FLG x FLG), VAL-MATIC CAM-CENTRIC OR EQUAL.
10. INSTALL 8" CHECK VALVE (FGL x FLG), VAL-MATIC SWING FLEX OR EQUAL.
11. INSTALL 2" COMBINATION AIR VALVE, ARI D-020 OR EQUAL.
12. INSTALL 10" ELECTROMAGNETIC FLOW METER PER SPECS.
13. INSTALL CLASS 350 10" - 90° D.I. BEND (MJ x MJ).
14. INSTALL 10" FLEXIBLE GROOVED COUPLING, VICTAULIC OR EQUAL.
15. INSTALL CONCRETE EQUIPMENT PAD PER STRUCTURAL PLANS (15/S0.4)
16. INSTALL CMU RETAINING WALL, TIE INTO EXISTING WALL.
17. INSTALL PIPE PENETRATION PER DETAIL: (A/M11.1)
18. NEW CONCRETE SLAB. SEE STRUCTURAL PLAN. MATCH EXIST. CONCRETE THICKNESS.
19. INSTALL 12" THK. CONCRETE PAD w/ #4 BARS @12" O.C. E.W. TOP & BOTTOM SLOPE TO DRAIN.
20. INSTALL 6" x 6" CONCRETE RETAINING CURB PER STRUCTURAL DETAIL
21. INSTALL 4" FLOOR DRAIN.
22. INSTALL 10" x 8" D.I. REDUCER ELBOW (FLG x FLG).
23. INSTALL CLASS 350 10" DIP.
24. INSTALL CLASS 350 10" PLUG VALVE (FLG x FLG), VAL-MATIC CAM-CENTRIC OR EQUAL.

DRAFT

NO	BY	DATE	REVISIONS	DATE	APP.

Registered Professional Engineer (Civil) — DUONG T. DO — 40050 — Arizona, U.S.A. — Expires 12/31/27

PREPARED BY: DUONG DO
PROJECT ENGINEER: #40050
R.C.E. NO.: 40050
EXP. DATE: 12/31/27
SCALE:
DRAWN: WW, MSA
DESIGNED: NT, NE
CHECKED: DD
DATE: FEB 2026

THESE DRAWINGS ARE THE PROPERTY OF P.A.C.E. AND SHALL NOT BE REPRODUCED IN ANY MANNER NOR BE USED FOR CONSTRUCTION UNLESS STAMPED 'ISSUED FOR CONSTRUCTION'.

TITLE
F.E.B. PUMP STATION MECHANICAL PLAN

JOB
CITY OF SAN LUIS WEST WWTP
3.0 MGD MBR UPGRADES
SAN LUIS AZ.

PACE
Advanced Water Engineering
8723 E. VIA de COMMERCIO, SUITE A-204 | SCOTTSDALE, CA 85258
P: (408) 991-3595 | www.pacewater.com

SHEET
M8.0
48 OF 209 SHEETS

JOB NO. B777

FINAL PLANS ISSUED FOR BID

W:\B777\Engineering\B777 - 3MGD Exp\3MGD FINAL DS\Sheets\B777 - M8.0 FEB PS.dwg - Tab: M8.0 - by wwright on 02/02/26 at 3:38:08 PM

DRAFT

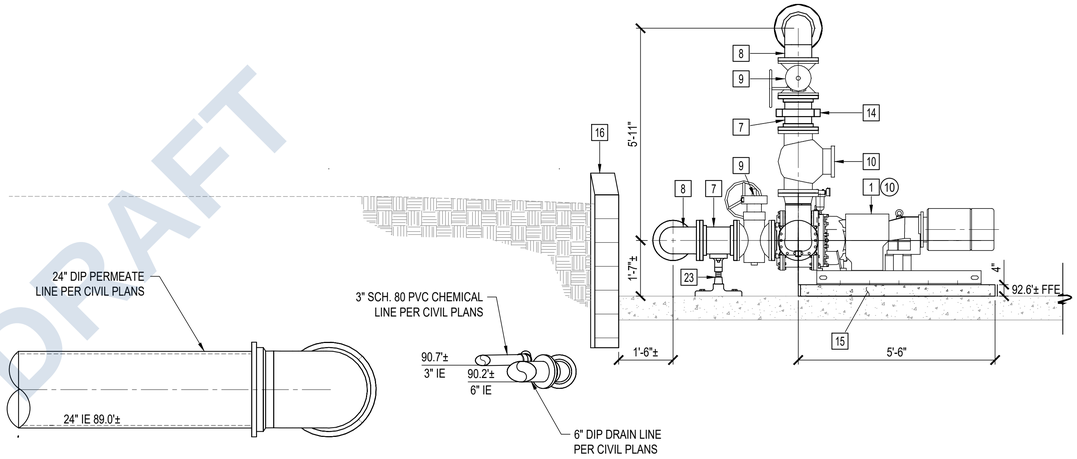

SECTION A

SCALE: 1/2" = 1'-0"

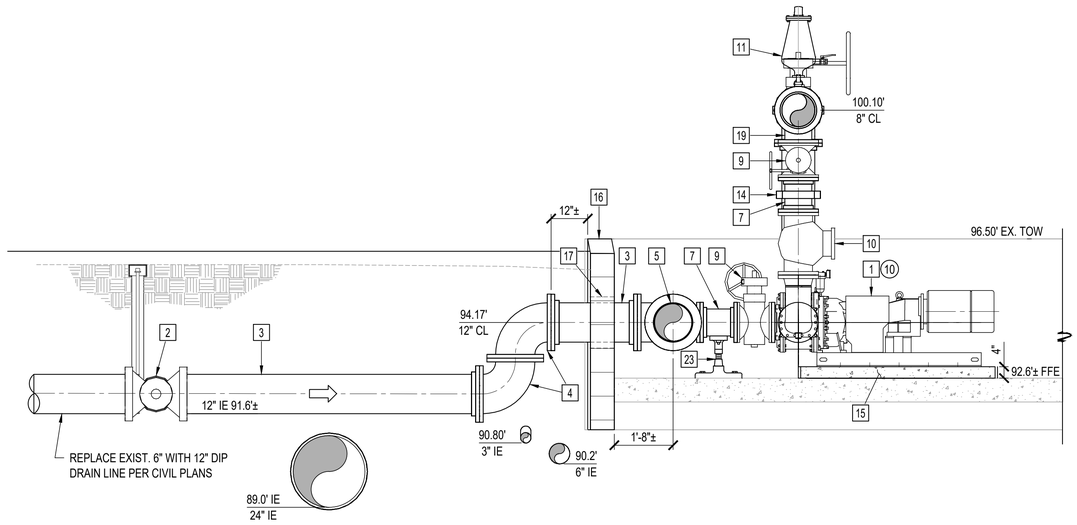

SECTION B

SCALE: 1/2" = 1'-0"

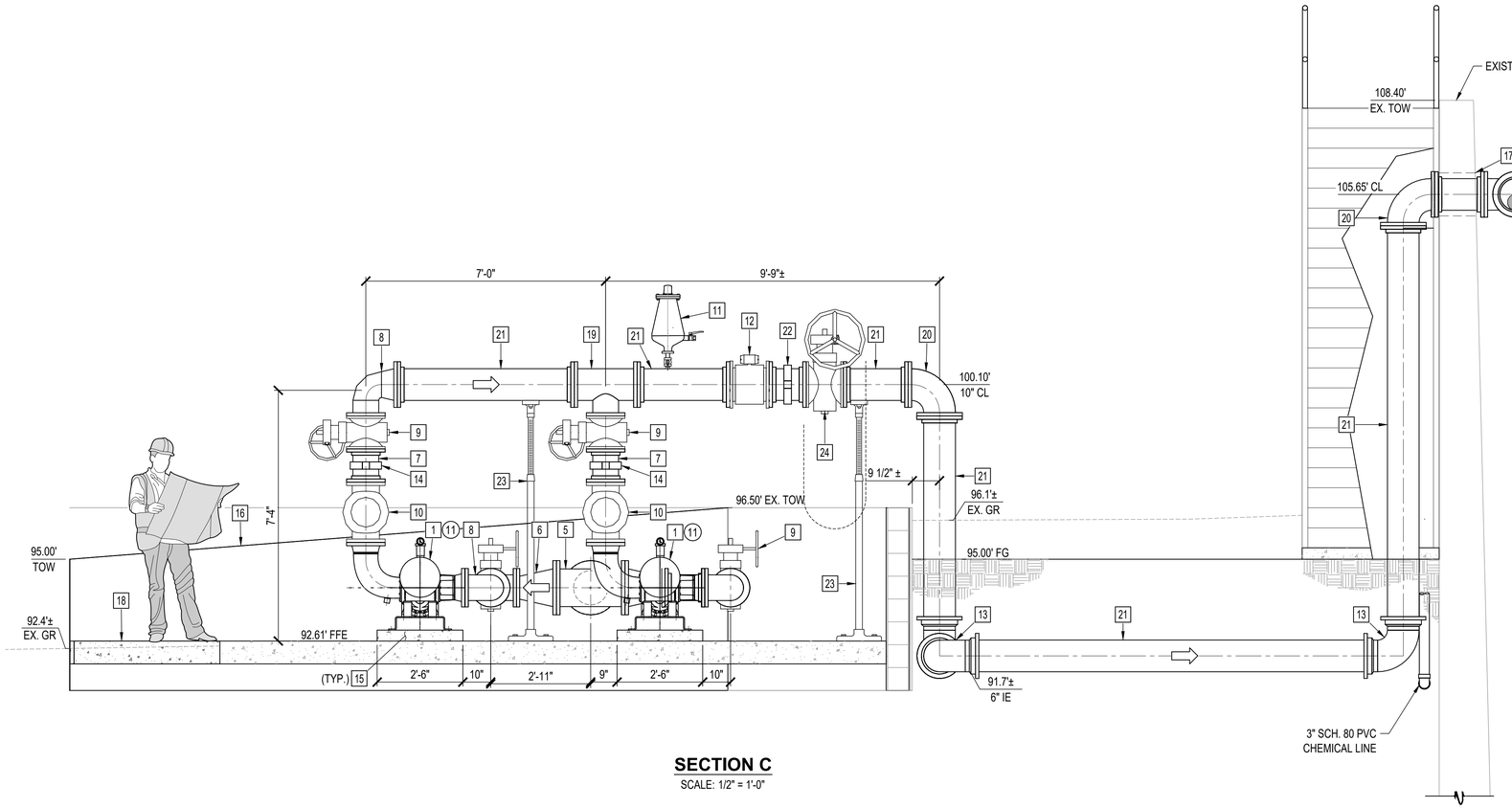

SECTION C

SCALE: 1/2" = 1'-0"

CONSTRUCTION NOTES:

1. INSTALL NEW FEB ROTARY LOBE PUMPS PER MFR. REQUIREMENTS
2. INSTALL BURIED SERVICE PLUG VALVE (MJ x MJ) w/ VALVE CAN & RISER PER DETAIL: E / C6.0
3. INSTALL 12" D.I. PIPE
4. INSTALL 12"- 90° D.I. BEND (FLG x FLG)
5. INSTALL 12" D.I. TEE (FLG x FLG).
6. INSTALL 12"x8" D.I. REDUCER (FLG x FLG)
7. INSTALL 8" D.I. PIPE
8. INSTALL 8" x 10 REDUCING D.I. ELBOW (FLG x FLG)
9. INSTALL 8" PLUG VALVE (FLG x FLG), WITH HAND-WHEEL
10. INSTALL 8" SWING CHECK VALVE (FGL x FLG)
11. INSTALL 2" COMBINATION AIR VALVE PER DETAIL: F / M11.1 SEE SPECS.
12. INSTALL 10" ELECTROMAGNETIC FLOW METER PER SPECS
13. INSTALL 10"-90° D.I. BEND (MJ x MJ)
14. INSTALL 8" FLEXIBLE GROOVED COUPLING
15. INSTALL CONCRETE EQUIPMENT PAD PER STRUCTURAL PLANS 15 / S0.4
16. CONSTRUCT CMU RETAINING WALL, TIE INTO EXISTING WALL. PER STRUCTURAL PLANS
17. INSTALL DRY PIPE PENETRATION PER DETAIL: A / M11.1
18. NEW CONCRETE SLAB. SEE STRUCTURAL PLANS. MATCH EXIST. CONCRETE THICKNESS
19. INSTALL 8" x 10" REDUCING D.I. TEE (FLG x FLG)
20. INSTALL 10" ELBOW (FLG x FLG)
21. INSTALL 10" D.I. PIPE
22. INSTALL 10" FLEXIBLE GROOVED COUPLING
23. INSTALL PIPE SUPPORT PER DETAIL: S1 / M11.4
24. INSTALL 10" PLUG VALVE (FLG x FLG), WITH HAND-WHEEL AND CHAIN

NO	BY	DATE	REVISIONS	DATE	APP.

Registered Professional Engineer (Civil) — DUONG T. DO — 40050 — State of Arizona — Expires 12/31/27

PREPARED BY: DUONG DO
PROJECT ENGINEER #40050
R.C.E. NO.: 40050
EXP. DATE: 12/31/27
DRAWN: WW, MSA
DESIGNED: NT, NE
CHECKED: DD
SCALE:
DATE: FEB 2026

THESE DRAWINGS ARE THE PROPERTY OF P.A.C.E. AND SHALL NOT BE REPRODUCED IN ANY MANNER NOR BE USED FOR CONSTRUCTION UNLESS STAMPED 'ISSUED FOR CONSTRUCTION'.

TITLE
F.E.B. PUMP STATION MECHANICAL SECTIONS

JOB
CITY OF SAN LUIS WEST WWTP
3.0 MGD MBR UPGRADES
SAN LUIS AZ.

PACE
Advanced Water Engineering
8723 E. VIA de COMMERCIO, SUITE A-204 | SCOTTSDALE, CA 85258
P: (408) 991-3595 | www.pacewater.com

FINAL PLANS ISSUED FOR BID

SHEET
M8.1
49 OF 209 SHEETS

JOB NO. B777

W:\B777\Engineering\B777 - 3MGD Exp\3MGD FINAL DSN\sheets\B777 - M8.1 FEB PS SEC.dwg - Tab: M8.1 - by wwright on 02/02/26 at 3:58:33 PM

DRAFT

EXISTING SLUDGE DRYING BEDS

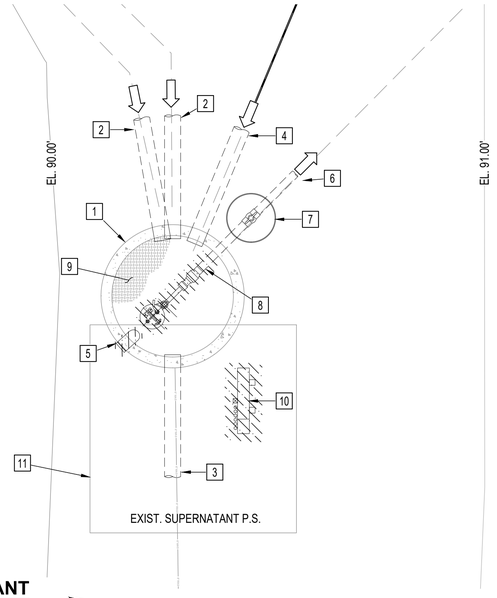

EXISTING SUPERNATANT PUMP STATION MECHANICAL PLAN

SCALE: ½" = 1'-0"

NORTH

CONSTRUCTION NOTES:

1. EXIST. 4' Ø STANDARD PRECAST MANHOLE
2. EXIST. 6" DRAIN FROM SLUDGE DRYING BEDS (CONTRACTOR TO VERIFY DEPTH, SIZE, AND PIPE MATERIAL)
3. EXIST. FORCE MAIN FROM SLUDGE DRAIN PUMP STATION (CONTRACTOR TO VERIFY DEPTH, SIZE, AND PIPE MATERIAL)
4. EXIST. 8" DRAIN FROM DAF UNIT (CONTRACTOR TO VERIFY DEPTH, SIZE, AND PIPE MATERIAL)
5. REMOVE / DEMO EXIST. 4" VENT
6. EXIST. 3" FORCE MAIN TO HEADWORKS
7. EXIST. VALVE BOX AND PLUG VALVE
8. EXIST. SUPERNATANT PUMPS AND DISCHARGE PIPING TO BE REMOVED. CAP FORCE MAIN INSIDE PUMP STATION.
9. REMOVE / DEMO EXIST. METAL COVER AND HATCH
10. REMOVE / DEMO EXIST. CONTROL PANEL. CONDUIT TO BE REUSED PER ELECTRICAL PLANS
11. REMOVE / DEMO EXIST. SHADE STRUCTURE
12. CONSTRUCT CONCRETE SLAB PER STRUCTURAL PLANS
13. INSTALL 6" PVC C900 FORCE MAIN
14. INSTALL 6" DIP FORCE MAIN (FLG x FLG)
15. INSTALL 6" MAG FLOW METER
16. INSTALL 4" DIP SUCTION LINE (FLG x FLG)
17. INSTALL 4" PLUG VALVE (TYP.)
18. INSTALL 4" CHECK VALVE (TYP.)
19. INSTALL ALUMINUM GRATING
20. INSTALL NEW SHADE CANOPY PER STRUCTURAL PLANS
21. INSTALL PIPE SUPPORT PER DETAIL: S1 / M11.4
22. INSTALL LEVEL TRANSDUCER AND FLOAT TREE PER DETAIL: B / 11.2

LEGEND

DEMO

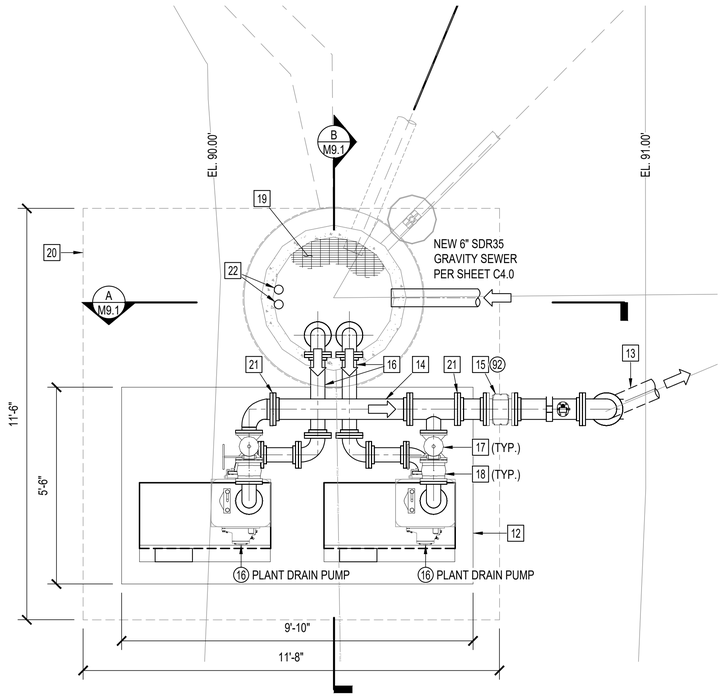

PLANT DRAIN PUMP STATION MECHANICAL PLAN

SCALE: ½" = 1'-0"

NORTH

NO	BY	DATE	REVISIONS	DATE	APP.

Registered Professional Engineer (Civil) — DUONG T. DO — 40050 — Date Signed 12/31/25 — ARIZONA, U.S.A. — Expires 12/31/27

PREPARED BY: DUONG DO
PROJECT ENGINEER: DUONG DO #40050
R.C.E. NO.: 40050
EXP. DATE: 12/31/27
SCALE:
DRAWN: WW, MSA
DESIGNED: NT, NE
CHECKED: DD
DATE: FEB 2026

THESE DRAWINGS ARE THE PROPERTY OF P.A.C.E. AND SHALL NOT BE REPRODUCED IN ANY MANNER NOR BE USED FOR CONSTRUCTION UNLESS STAMPED 'ISSUED FOR CONSTRUCTION'.

TITLE: PLANT DRAIN PUMP STATION PLAN

JOB: CITY OF SAN LUIS WEST WWTP 3.0 MGD MBR UPGRADES — SAN LUIS AZ.

PACE
Advanced Water Engineering
8723 E. VIA de COMMERCIO, SUITE A-204 | SCOTTSDALE, CA 85258
P: (408) 991-3595 | www.pacewater.com

SHEET: M9.0
50 OF 209 SHEETS

JOB NO. B777

FINAL PLANS ISSUED FOR BID

W:\B777\Engineering\B777 - 3MGD Exp\3MGD FINAL DS\Sheets\B777 - M9.0 PLANT DRAIN PS PLAN.dwg - Tab: M9.0 - by wwright on 02/02/26 at 3:39:10 PM

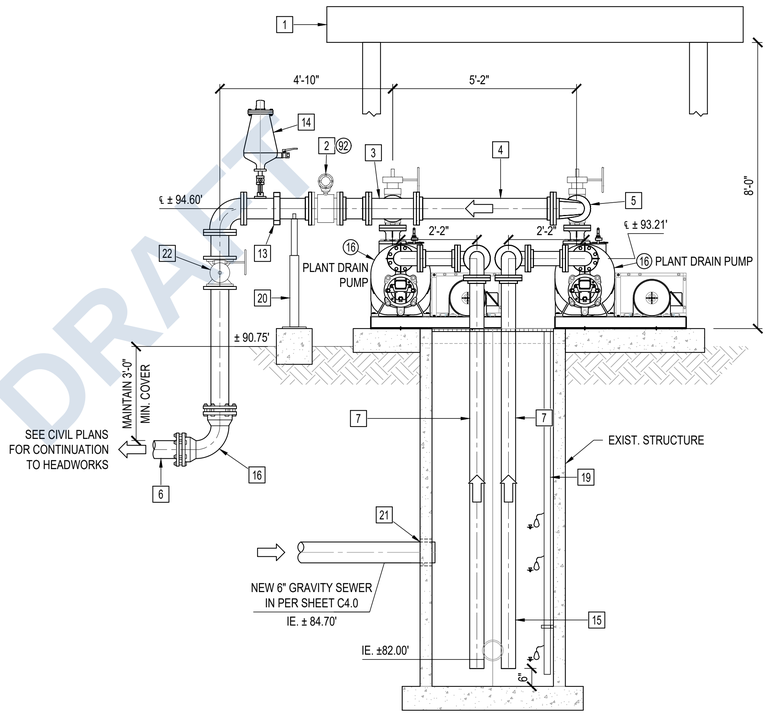

PLANT DRAIN PUMP STATION SECT-A

SCALE: ½" = 1'-0"

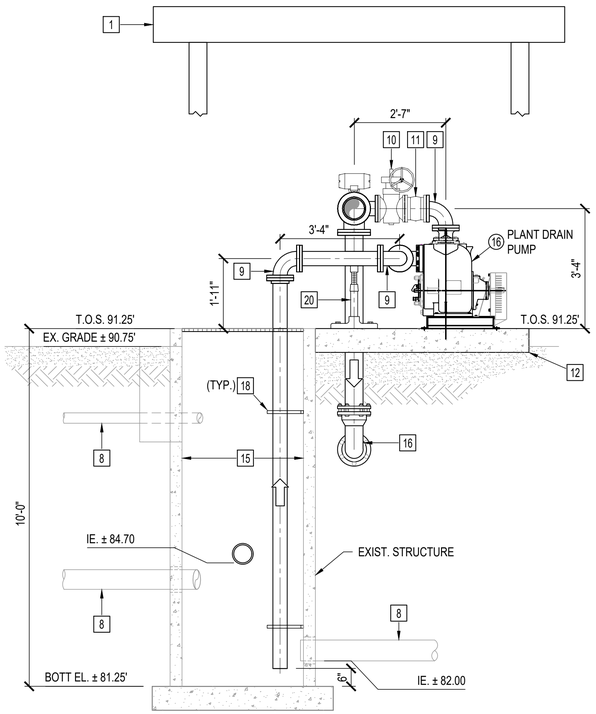

PLANT DRAIN PUMP STATION SECT-B

SCALE: ½" = 1'-0"

CONSTRUCTION NOTES:

1. INSTALL NEW SHADE CANOPY PER STRUCTURAL PLANS
2. INSTALL 6" MAG FLOW METER PER SPECS
3. INSTALL 4" x 6" D.I. REDUCING TEE (FLG x FLG)
4. INSTALL 6" DIP
5. INSTALL 4" x 6" D.I. REDUCING 90° BEND (FLG x FLG)
6. INSTALL 6" PVC C900 PLANT DRAIN PUMP STATION FORCE MAIN
7. INSTALL 4" DIP
8. CONTRACTOR TO VERIFY ALL EXISTING PIPING
9. INSTALL 4" D.I. 90° BEND (TYP.) (FLG x FLG)
10. INSTALL 4" PLUG VALVE (FLG)
11. INSTALL 4" CHECK VALVE (TYP.)
12. INSTALL CONCRETE SLAB PER DETAIL: 15/S1.4
13. INSTALL 6" GROOVED COUPLING PER VICTAULIC, OR ENGINEER APPROVED EQUAL
14. INSTALL 2" AIR COMBINATION VALVE PER DETAIL: F/M11.1
15. COAT STRUCTURE AND ALL INTERIOR PIPING FOR HIGH H2S EXPOSURE PER SPECIFICATIONS.
16. INSTALL 6" D.I. 90° MJ ELBOW WITH JOINT RESTRAINTS.
17. NOT USED
18. INSTALL WET WELL PIPE SUPPORT PER DETAIL: S9/11.4
19. INSTALL LEVEL TRANSDUCER WITH FLOATS PER DETAIL: B/11.2
20. INSTALL ABOVE GROUND PIPE SUPPORTS PER DETAIL: S1/11.4
21. INSTALL PIPE SLEEVE W/ MODULAR SEAL PER DETAIL: A/M11.1
22. INSTALL 6" PLUG VALVE (FLG)

NO	BY	DATE	REVISIONS	DATE	APP.

Registered Professional Engineer (Civil) CERTIFICATE NO. 40050 DUONG T. DO Date Signed 12/31/27 ARIZONA, U.S.A. Expires 12/31/27

PREPARED BY DUONG DO
PROJECT ENGINEER
R.C.E. NO. -- #40050
EXP. DATE
DRAWN WW, MSA
SCALE
DESIGNED NT, NE
CHECKED DD
DATE FEB 2026

TITLE
PLANT DRAIN PUMP STATION SECTIONS

JOB
CITY OF SAN LUIS WEST WWTP
3.0 MGD MBR UPGRADES
SAN LUIS AZ.

PACE
Advanced Water Engineering
8723 E. VIA de COMMERCIO, SUITE A-204 | SCOTTSDALE, CA 85258
P: (408) 991-3595 | www.pacewater.com

SHEET
M9.1
51 OF 209 SHEETS

JOB NO. B777

THESE DRAWINGS ARE THE PROPERTY OF P.A.C.E. AND SHALL NOT BE REPRODUCED IN ANY MANNER NOR BE USED FOR CONSTRUCTION UNLESS STAMPED "ISSUED FOR CONSTRUCTION".

FINAL PLANS ISSUED FOR BID

DRAFT

W:\B777\Engineering\B777 - 3MGD Exp\3MGD FINAL DS\Nicheets\B777 - M9.0 PLANT DRAIN PS SECTIONS.dwg - Tab: M9.1 - by wwright on 02/02/26 at 3:39:42 PM

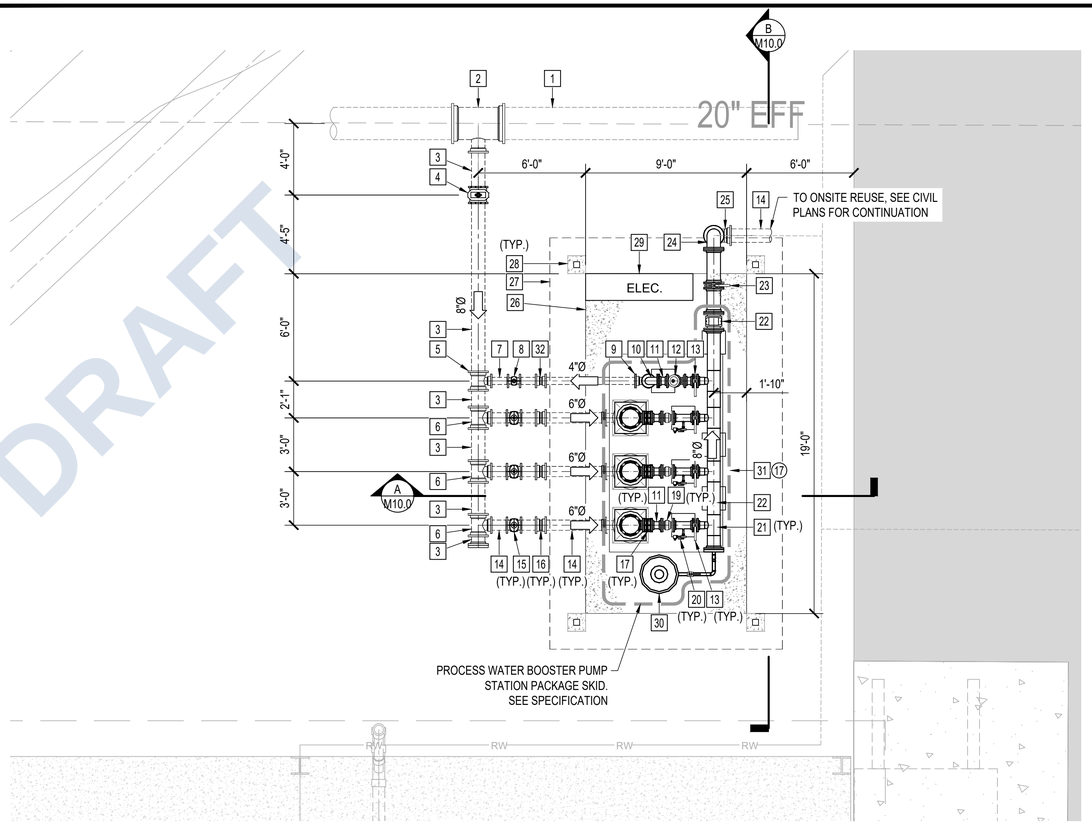

CONSTRUCTION NOTES:

1. EXIST. 20" EFF. FROM EFF. P.S.
2. INSTALL 20"x8" D.I. RESTRAINED REDUCING TEE. (MJxMJ).
3. INSTALL 8" C900 PVC PIPE, CLASS 250.
4. INSTALL 8" BURIED SERVICE GATE VALVE (MJxMJ) WITH VALVE BOX AND RISER PER CIVIL DETAIL:
5. INSTALL 8"x4" D.I. REDUCING TEE. (MJxMJ W/ RESTRAINTS).
6. INSTALL 8"x6" D.I. REDUCING TEE. (MJxMJ W/ RESTRAINTS).
7. INSTALL 4" C900 PIPE
8. INSTALL 4" BURIED SERVICE GATE VALVE (MJxMJ) WITH VALVE BOX AND RISER PER CIVIL DETAIL:
9. INSTALL 4" - 90° D.I. RESTRAINED BEND (MJxMJ)
10. INSTALL 4" - 90° D.I. BEND (FLGxFLG) (PROVIDED BY PUMP SKID VENDOR)
11. 4" STEEL PIPE (PROVIDED BY PUMP SKID VENDOR)
12. 4" PRESSURE REDUCING VALVE. (PROVIDED BY PUMP SKID VENDOR)
13. 4" BUTTERFLY VALVE (PROVIDED BY PUMP SKID VENDOR)
14. INSTALL 6" C900 PIPE.
15. INSTALL 6" BURIED SERVICE GATE VALVE (MJxMJ) WITH VALVE BOX AND RISER PER CIVIL DETAIL:
16. INSTALL 6" DIP FLEX COUPLING (MJ).
17. 4" COUPLING (FLGxFLG) (PROVIDED BY PUMP SKID VENDOR)
18. 4" SILENT CHECK VALVE (PROVIDED BY PUMP SKID VENDOR)
19. 4" SILENT CHECK VALVE (PROVIDED BY PUMP SKID VENDOR)
20. PRESSURE GAUGE, 0-150 PSI. (PROVIDED BY PUMP SKID VENDOR)
21. 8" x 4" WELDED REDUCING TEE (PROVIDED BY PUMP SKID VENDOR)
22. INSTALL 6" WELDING STEEL PIPE (PROVIDED BY PUMP SKID VENDOR)
22. INSTALL 8" FLOWMETER (PROVIDE BY PUMP SKID MFG).
23. INSTALL 6" BUTTERFLY VALVE.
24. INSTALL 6" - 90° D.I. BEND (FLGxFLG)
25. INSTALL 6" - 90° D.I. RESTRAINED BEND (MJxMJ)
26. CONSTRUCT 19' x 9' CONCRETE TANK PER STRUCTURAL PLANS.
27. CONSTRUCT SHADE STRUCTURE PER STRUCTURAL PLANS.
28. CONSTRUCT SHADE STRUCTURE POST PER STRUCTURAL PLANS
29. INSTALL 2'x'4'x6' TALL ELECTRICAL PANEL PER ELECTRICAL PLANS
30. 100 GAL. BLADDER TANK (PROVIDED BY PUMP SKID VENDOR)
31. INSTALL PACKAGE ONSITE REUSE PUMP SKID
32. INSTALL 4" DIP FLEX COUPLING (MJ)

NEW PLANT RE-USE PUMP STATION
MECHANICAL PLAN
SCALE: 1/4" = 1'-0"

NORTH
4 2 0 4 8

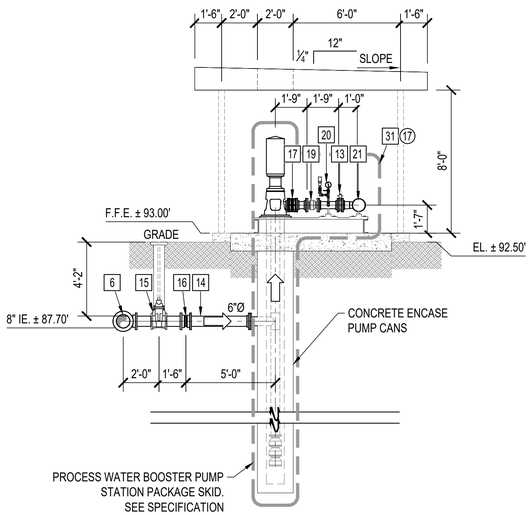

MECH SECTION - A
SCALE: 1/4"=1'-0"

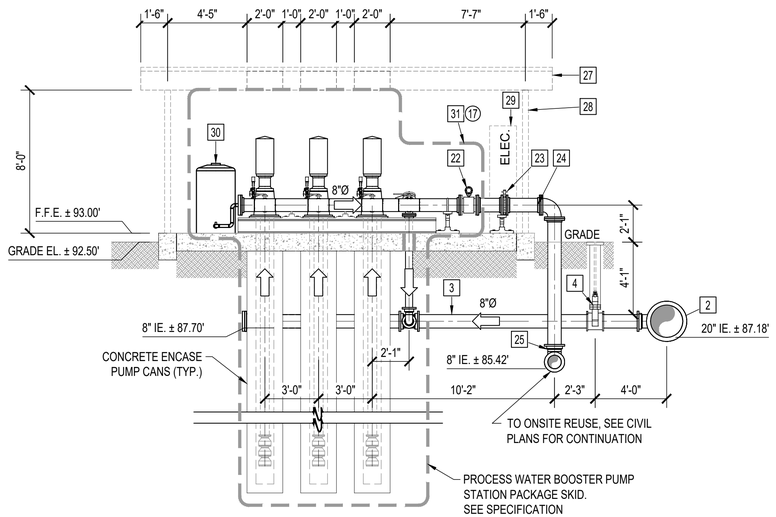

MECH SECTION - B
SCALE: 1/4"=1'-0"

NO	BY	DATE	REVISIONS	DATE	APP.

Registered Professional Engineer (Civil)
DUONG T. DO
40050
Date Signed 12/31/27
ARIZONA, U.S.A.
Expires 12/31/27

THESE DRAWINGS ARE THE PROPERTY OF P.A.C.E. AND SHALL NOT BE REPRODUCED IN ANY MANNER NOR BE USED FOR CONSTRUCTION UNLESS STAMPED 'ISSUED FOR CONSTRUCTION'.

PREPARED BY
DUONG DO
R.C.E. NO. 40050
EXP. DATE
PROJECT ENGINEER
DRAWN
WW, MSA
DESIGNED
NT, NE
CHECKED
DD
SCALE
DATE
FEB 2026

TITLE
PLANT PROCESS WATER BOOSTER PUMP STATION PLAN & SECTIONS

JOB
CITY OF SAN LUIS WEST WWTP
3.0 MGD MBR UPGRADES
SAN LUIS AZ.

PACE
Advanced Water Engineering
8723 E. VIA de COMMERCIO, SUITE A-204 | SCOTTSDALE, CA 85258
P.: (408) 991-3995 | www.pacewater.com

FINAL PLANS ISSUED FOR BID

SHEET
M10.0
52 OF 209 SHEETS

JOB NO. B777

W:\B777\Engineering\B777 - 3MGD Exp\3MGD FINAL DS\Nehebit\B777 - M10.0 REUSE PS.dwg - Tab: M10.0 - by wwright on 02/02/26 at 3:40:43 PM

DRAFT

ABOVE DECK HYDRO-DYNE LEVEL SENSOR N.T.S. A

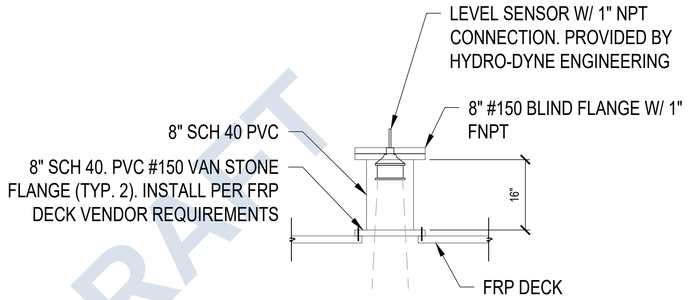

ODOR CONTROL CONNECTION N.T.S. B

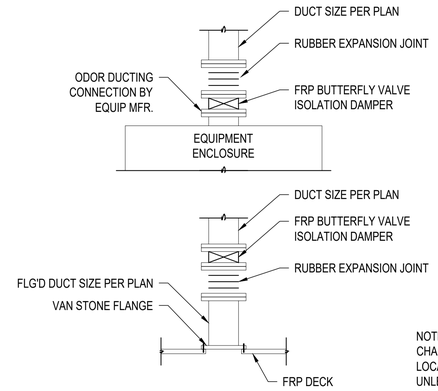

NOTE:
CHANNEL DAMPERS TO BE LOCATED +42" ABOVE CHANNELS, UNLESS OTHERWISE REQUIRED FOR CLEARANCES FROM OTHER EQUIPMENT/OBSTRUCTIONS.

HOSE BIBB N.T.S. C

NOTES:
1. PIPE SHALL BE COLOR-CODED PER SPECIFICATIONS
2. ABOVE GROUND PIPING SHALL BE INSULATED PER SPECIFICATIONS. EXTEND INSULATION TO 12" BELOW GROUND.

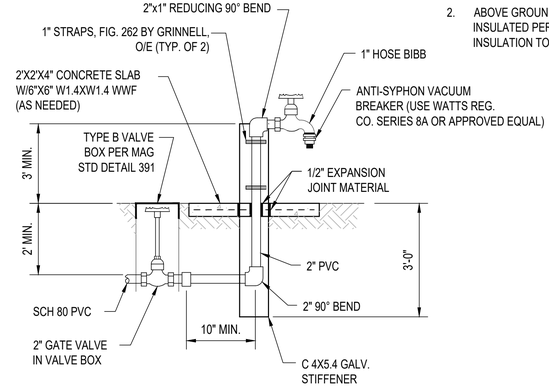

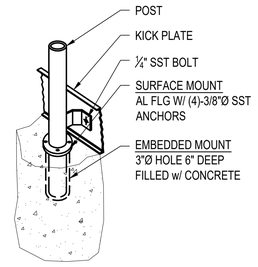

FIXED SURFACE OR EMBEDDED MOUNT

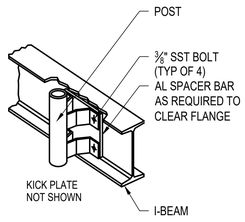

FIXED I-BEAM MOUNT
(CHANNEL MOUNT SIMILAR)

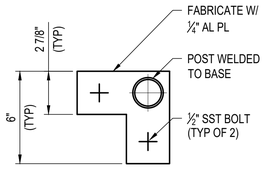

SURFACE CORNER MOUNT

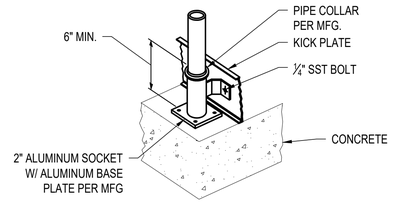

REMOVABLE POST SURFACE MOUNTED SOCKET

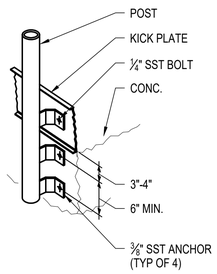

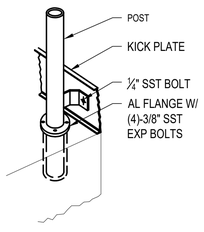

FIXED CORNER MOUNT

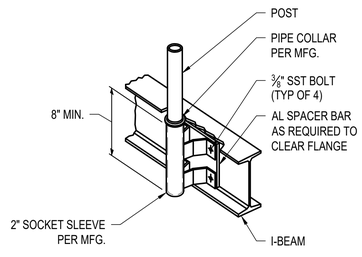

SIDE MOUNT SOCKET SLEEVE

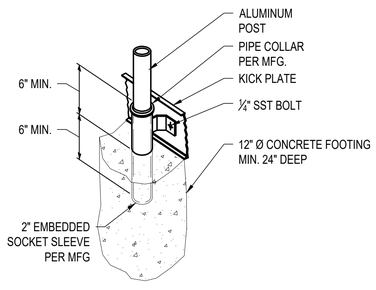

REMOVABLE POST EMBEDDED SOCKET SLEEVE

NOTE:
TYPICAL DETAILS SHOWN FOR REFERENCE ONLY. RAILING MFR/SUPPLIER TO PROVIDE SUBMITTAL WITH All REQUIRED CONNECTIONS FOR A COMPLETE SYSTEM, AS PART OF DEFERRED SUBMITTAL TYPICAL RAILING DETAILS

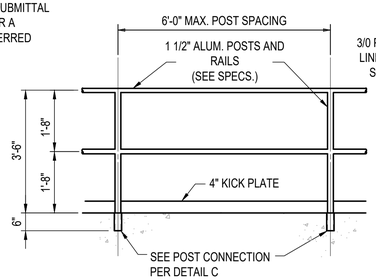

TYPICAL
RAILING SECTION

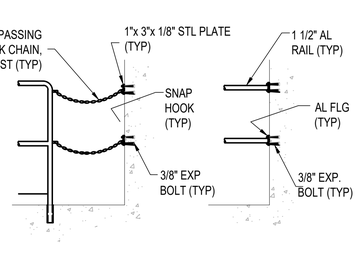

CHAIN GATE

WALL MOUNT

HANDRAIL NOTES:
1. ALUM. TUBE (OR POST) TO BE SET IN CORED OR FORMED HOLES (REMOVABLE FORMS) AND SECURELY FIXED BY GROUT (SEE SPECS).
2. TOP RAIL AT END POST SHALL BEND DOWN ON 1" MAX. CENTER LINE RADIUS. TOP RAIL AT CORNERS SHALL BE A SIDE OUTLET ELBOW (OR OFFSET CORNER POST 6" AND USE 3" CENTER LINE RADIUS HORIZ. BEND IN ALL RAILS AND TOEBOARD).
3. VERTICAL MITERS, OFFSETS OR PROTRUSIONS IN THE TOP RAIL ARE NOT ACCEPTABLE. ALL SPLICES SHALL BE SMOOTH AND TIGHT. REFER TO ELECT. PLANS FOR LIGHT POST LOCATIONS AND DETAILS WHERE REQUIRED.
4. PROVIDE EXPANSION JOINTS IN HANDRAILING PER MANUFACTURER RECOMMENDATIONS.

RAILING AND MOUNTING DETAILS N.T.S. D

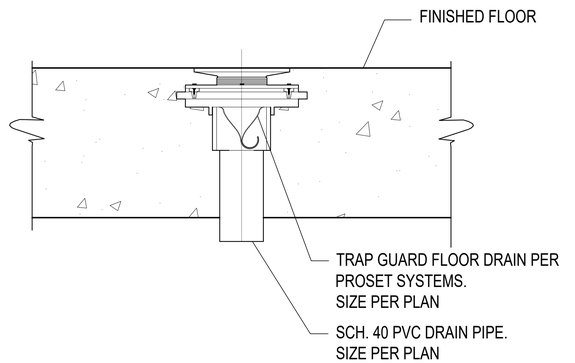

FLOOR DRAIN W/ TRAP GUARD N.T.S. E

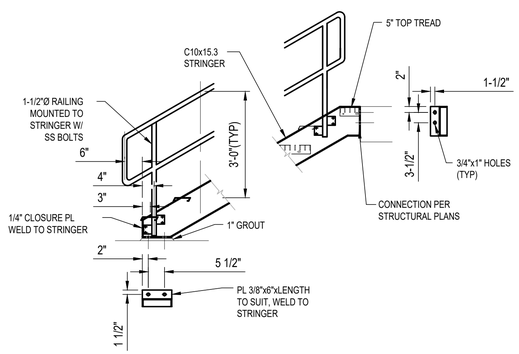

STAIR MOUNTING DETAIL N.T.S. F

NO	BY	DATE	REVISIONS	DATE	APP.

Registered Professional Engineer (Civil) — DUONG T. DO — 40050 — Date Signed 12/31/27 — ARIZONA, U.S.A. — Expires 12/31/27

PREPARED BY: DUONG DO
PROJECT ENGINEER #40050
R.C.E. NO. / EXP. DATE: —
SCALE:
DRAWN: WW, MSA
DESIGNED: NT, NE
CHECKED: DD
DATE: FEB 2026

THESE DRAWINGS ARE THE PROPERTY OF P.A.C.E. AND SHALL NOT BE REPRODUCED IN ANY MANNER NOR BE USED FOR CONSTRUCTION UNLESS STAMPED "ISSUED FOR CONSTRUCTION".

TITLE: **MECHANICAL DETAILS 1**

JOB: CITY OF SAN LUIS WEST WWTP
3.0 MGD MBR UPGRADES
SAN LUIS AZ.

PACE
Advanced Water Engineering
8723 E. VIA de COMMERCIO, SUITE A-204 | SCOTTSDALE, CA 85258
P: (408) 991-3995 | www.pacewater.com

FINAL PLANS ISSUED FOR BID

SHEET
M11.0
53 OF 209 SHEETS

JOB NO. B777

W:\B777\Engineering\B777 - 3MGD Exp\3MGD FINAL DS\Sheets\B777 - M11.0 DETAILS.dwg - Tab: M11.0 - by wwright on 02/24/26 at 3:22:08 PM

TYPICAL PIPE PENETRATIONS

N.T.S. **A**

NOTE:
COAT PIPE WITH SPECIFIED PAINT SYSTEM PRIOR TO CONCRETE PLACEMENT

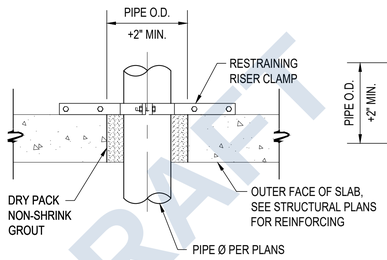

SLAB PENETRATION (DRY)

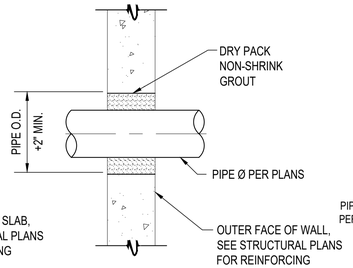

WALL PENETRATION (DRY)

NOTES:
1. BOLT HEAD ON ACCESSIBLE SIDE OF WALL
2. WALL THK. OF 12" OR LESS = 1 SEAL; WALL THK. > THAN 12" = 2 SEALS
3. CORED OR CAST IN-PLACE SLEEVED HOLE DIA. PER LINK SEAL SPECIFICATIONS. PIPE MATERIAL PER PLANS. CONSULT MANUFACTURER FOR REQUIRED LINKS FOR SPECIFIC PIPE MATERIAL.
4. PIPE THROUGH WALLS SHOULD BE SEALED WITH LINK SEAL BEFORE CONNECTION TO OTHER PIPES.

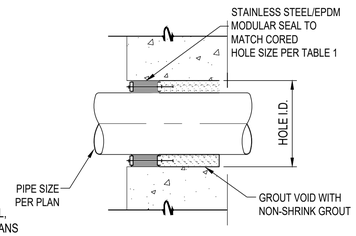

WALL PENETRATION W/ MODULAR SEAL (WET)

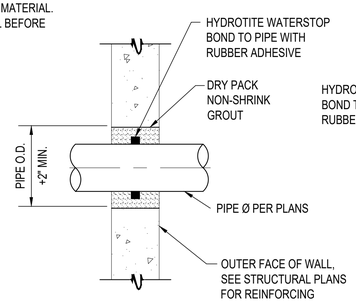

WALL PENETRATION W/ HYDROTITE (WET)

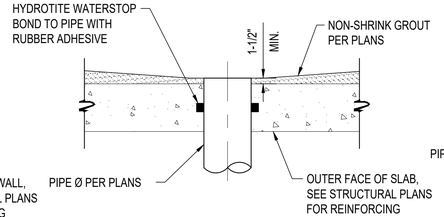

CAST-IN-PLACE SLAB PENETRATION (WET)

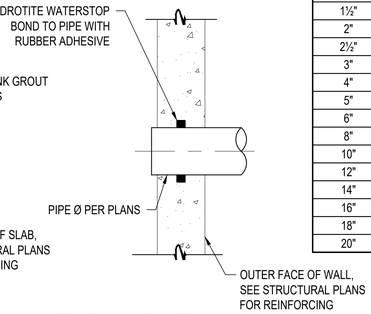

CAST-IN-PLACE WALL PENETRATION (WET)

TABLE 1:

CORED HOLES	
PIPE SIZE NOMINAL	HOLE I.D.
1"	3"
1½"	3 1/2"
2"	4"
2½"	4"
3"	5"
4"	6"
5"	8"
6"	10"
8"	12"
10"	14"
12"	16"
14"	18"
16"	20"
18"	22"
20"	24"

PRESSURE AND TEMPERATURE GAUGE

N.T.S. **B**

NOTE: INSTALL PER VENDOR REQUIREMENTS

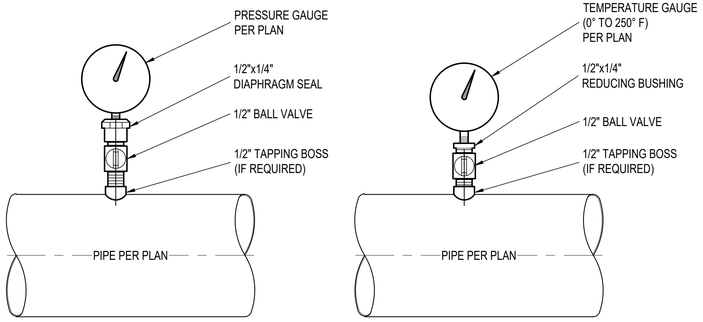

PIPE TAP

N.T.S. **C**

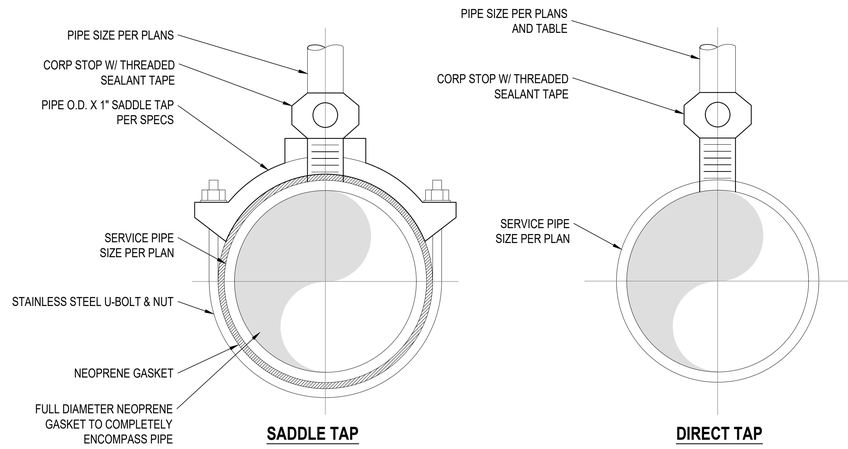

SIZE (in.)	PRESSURE CLASS				
	150	200	250	300	350
	MAXIMUM RECOMMENDED DIRECT TAP SIZE (inch)				
3	-	-	-	-	3/4
4	-	-	-	-	3/4
6	-	-	-	-	1
8	-	-	-	-	1
10	-	-	-	-	1
12	-	-	-	-	1 1/4
14	-	-	1 1/4	1 1/2	1 1/2
16	-	-	1 1/2	2	2
18	-	-	2	2	2
20	-	-	2	2	2
24	-	2	2	2	2

CHEMICAL INJECTION QUILL

N.T.S. **D**

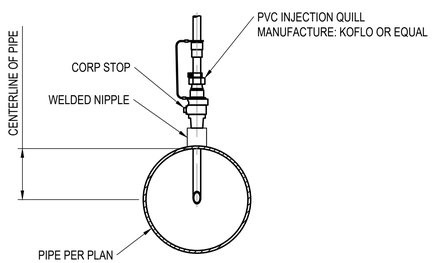

PROCESS AIR FLOW METER

N.T.S. **E**

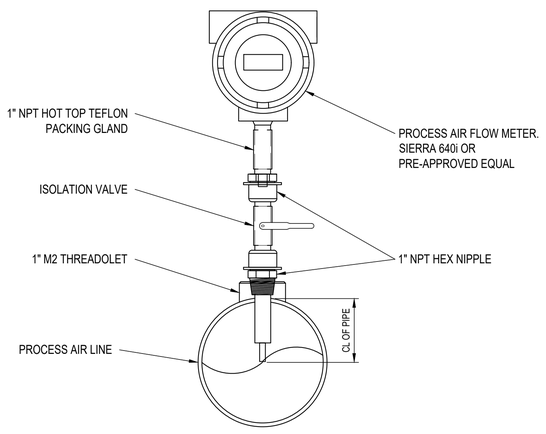

AIR COMBINATION VALVE DETAIL

N.T.S. **F**

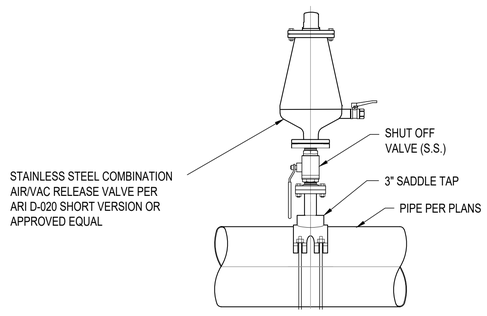

DRAFT

THESE DRAWINGS ARE THE PROPERTY OF P.A.C.E. AND SHALL NOT BE REPRODUCED IN ANY MANNER NOR BE USED FOR CONSTRUCTION UNLESS STAMPED "ISSUED FOR CONSTRUCTION".

NO	BY	DATE	REVISIONS	DATE	APP.

Registered Professional Engineer (Civil) — DUONG T. DO — 40050 — CERTIFICATE — Arizona, U.S.A. — Date Signed 12/31/27 — Expires 12/31/27

PREPARED BY: DUONG DO
PROJECT ENGINEER #40050
R.C.E. NO.: 1—
EXP: DATE
SCALE
DRAWN: WW, MSA
DESIGNED: NT, NE
CHECKED: DD
DATE: FEB 2026

TITLE: **MECHANICAL DETAILS 2**

JOB: CITY OF SAN LUIS WEST WWTP 3.0 MGD MBR UPGRADES — SAN LUIS AZ.

PACE
Advanced Water Engineering
8723 E. VIA de COMMERCIO, SUITE A-204 | SCOTTSDALE, CA 85258
P: (408) 991-3595 | www.pacewater.com

SHEET **M11.1**
54 OF 209 SHEETS

JOB NO. B777

FINAL PLANS ISSUED FOR BID

W:\B777\Engineering\B777 - 3MGD Exp\3MGD FINAL DSN\sheets\B777 - M11.0 DETAILS.dwg - Tab: M11.1 - by wwright on 02/04/26 at 3:22:58 PM

DRAFT

HAZARD SIGN

N.T.S.

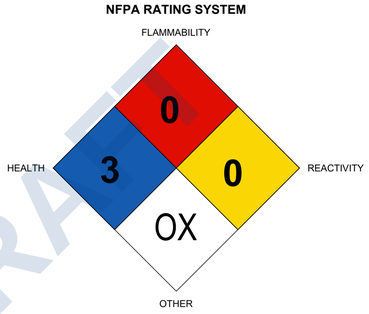

DANGER
SODIUM
HYPOCHLORITE
12.5%

A — LEVEL FLOAT / LEVEL TRANSDUCER INSTALLATION

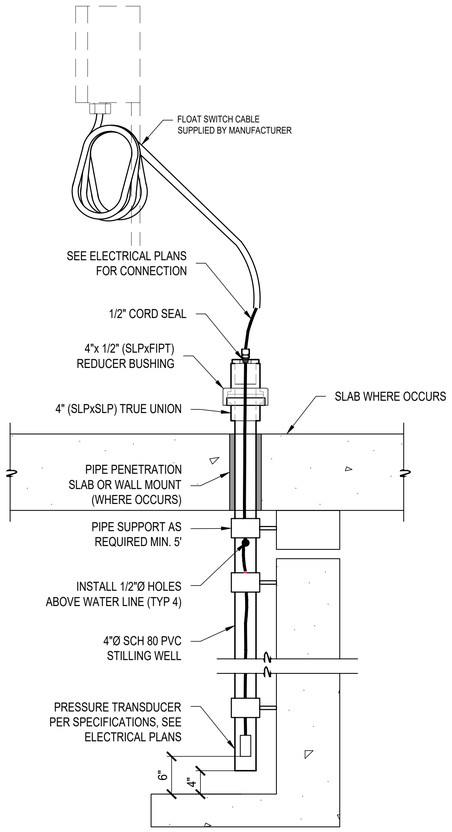

B — JUNCTION BOX DETAIL

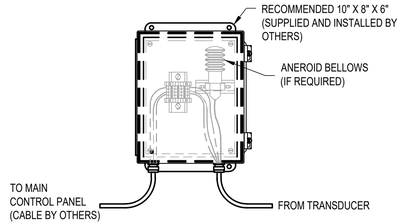

Float Installation Depths		
Process Area	Instrument ID	Elevation
Plant Drain Pump Station	LSHH 07231A LSH 07231B LSL 07231C	84.75' 84.5' 82.75'
Feed Forward (Lower)	LSL 02430	99.5'
Feed Forward (Upper)	LSH 02432	111.4'
PA Basins (Typ. 3)	LSH 02130A LSL 02130B	105.25' 99.5'
Flow Equalization Basin	LSH 01631B LSL 01631A	106.9' 89.40'

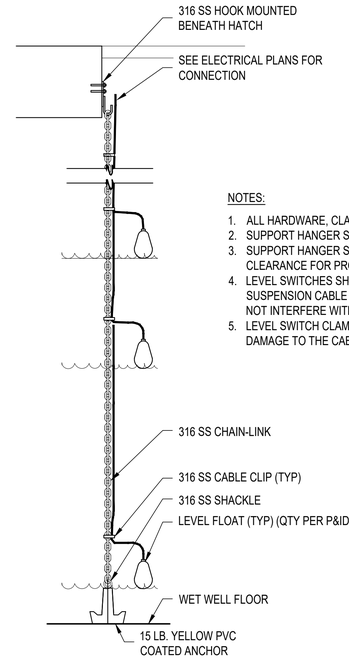

NOTES:

1. ALL HARDWARE, CLAMPS & HANGER SHALL BE STAINLESS STEEL.
2. SUPPORT HANGER SHALL BE LOCATED AT THE TOP OF THE BASIN.
3. SUPPORT HANGER SHALL SUSPEND CABLE TO PROVIDE CLEARANCE FOR PROPER LEVEL SWITCH OPERATION.
4. LEVEL SWITCHES SHALL BE POSITIONED AND ROTATED ON SUSPENSION CABLE IN ORDER THAT THE LEVEL SWITCHES DO NOT INTERFERE WITH EACH OTHER.
5. LEVEL SWITCH CLAMPS HAVE FLEX BUSHINGS TO PREVENT DAMAGE TO THE CABLE.

C — EYE WASH / SHOWER STATION

N.T.S.

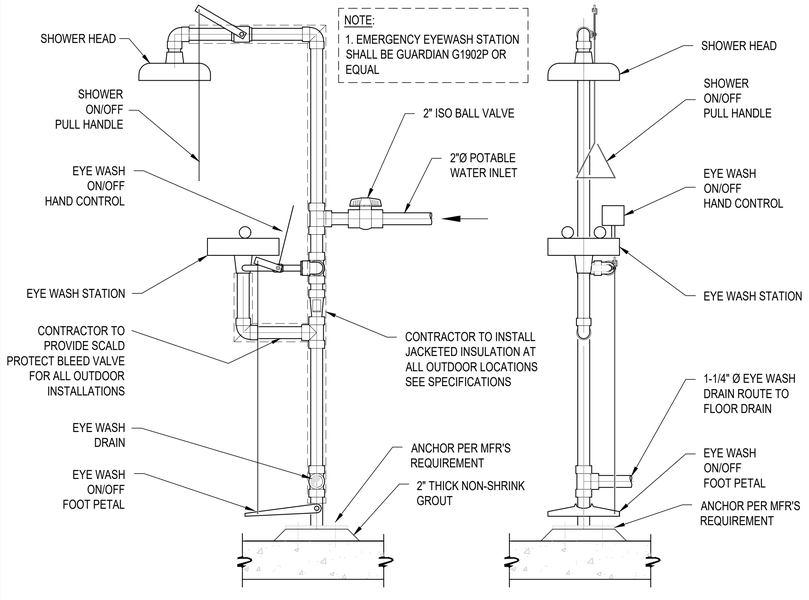

D — DO, TSS, AND pH PROBE

N.T.S.

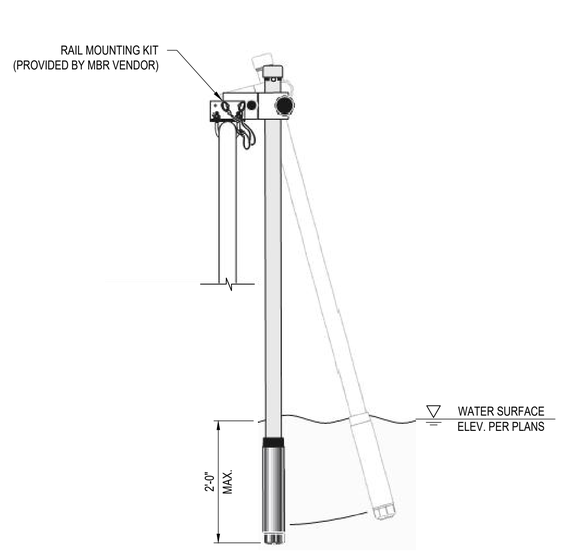

THESE DRAWINGS ARE THE PROPERTY OF P.A.C.E. AND SHALL NOT BE REPRODUCED IN ANY MANNER NOR BE USED FOR CONSTRUCTION UNLESS STAMPED 'ISSUED FOR CONSTRUCTION'.

NO	BY	DATE	REVISIONS	DATE	APP.

Registered Professional Engineer (Civil) — DUONG T. DO — 40050 — Date Signed 12/31/27 — ARIZONA, U.S.A. — Expires 12/31/27

PREPARED BY: DUONG DO
PROJECT ENGINEER #40050
R.C.E. NO. 40050
EXP. DATE 12/31/27
SCALE
DRAWN WW, MSA
DESIGNED NT, NE
CHECKED DD
DATE FEB 2026

TITLE: **MECHANICAL DETAILS 3**

JOB: CITY OF SAN LUIS WEST WWTP
3.0 MGD MBR UPGRADES
SAN LUIS AZ.

PACE
Advanced Water Engineering
8723 E. VIA de COMMERCIO, SUITE A-204 | SCOTTSDALE, CA 85258
P: (408) 991-3595 | www.pacewater.com

SHEET
M11.2
55 OF 209 SHEETS

JOB NO. B777

FINAL PLANS ISSUED FOR BID

W:\B777\Engineering\B777 - 3MGD Exp\3MGD FINAL DS\Sheets\B777 - M11.0 DETAILS.dwg - Tab: M11.2 - by nwright on 02/04/26 at 3:22:08 PM

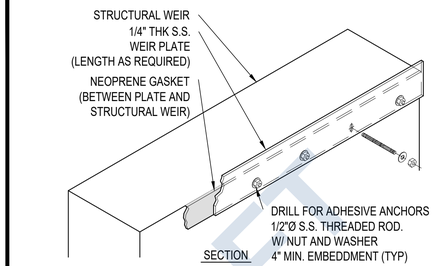

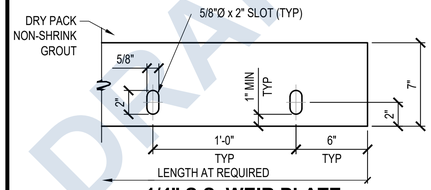

1/4" S.S. WEIR PLATE

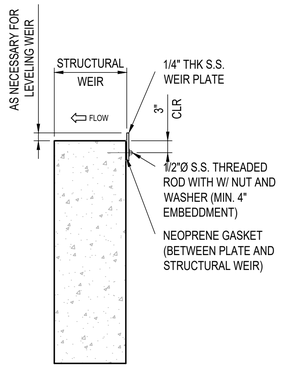

SECTION

WEIR PLATE

N.T.S. | A

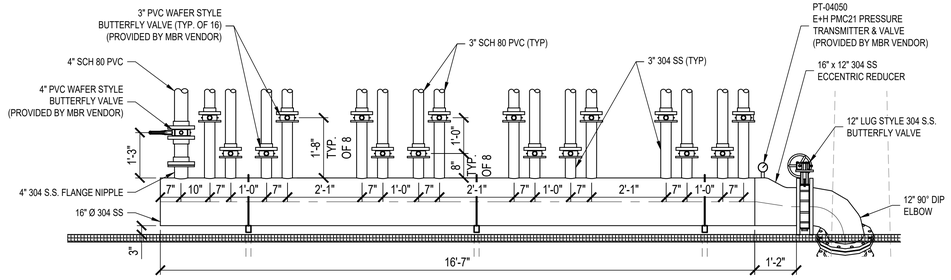

MBR PERMEATE PIPING HEADER

N.T.S. | B

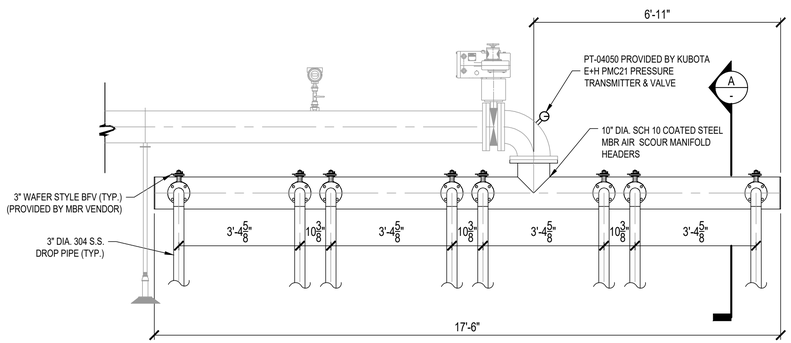

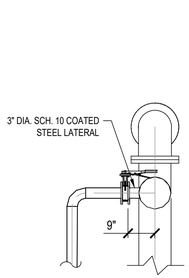

SECTION - A

MBR AIR SCOUR HEADER

N.T.S. | C

INTERNAL RECYCLE PUMP UPPER GUIDE RAIL BRACKET MOUNT

N.T.S. | D

NO	BY	DATE	REVISIONS	DATE	APP.

Registered Professional Engineer (Civil) — DUONG T. DO — 40050 — Arizona, U.S.A. — Date Signed 12/31/27 — Expires 12/31/27

PREPARED BY
DUONG DO
PROJECT ENGINEER
#40050
R.C.E. NO. / EXP. DATE

DRAWN
WW, MSA
DESIGNED
NT, NE
CHECKED
DD
SCALE
DATE
FEB 2026

THESE DRAWINGS ARE THE PROPERTY OF P.A.C.E. AND SHALL NOT BE REPRODUCED IN ANY MANNER NOR BE USED FOR CONSTRUCTION UNLESS STAMPED "ISSUED FOR CONSTRUCTION".

TITLE
MECHANICAL DETAILS 4

JOB
CITY OF SAN LUIS WEST WWTP
3.0 MGD MBR UPGRADES
AZ.
SAN LUIS

PACE
Advanced Water Engineering
8723 E. VIA de COMMERCIO, SUITE A-204 | SCOTTSDALE, CA 85258
P: (408) 991-3595 | www.pacewater.com

SHEET
M11.3
56 OF 209 SHEETS

JOB NO. B777

FINAL PLANS ISSUED FOR BID

DRAFT

W:\B777\Engineering\B777 - 3MGD Exp\3MGD FINAL DS\Sheets\B777 - M110 DETAILS.dwg - Tab: M11.3 - by wwright on 02/04/26 at 3:22:08 PM

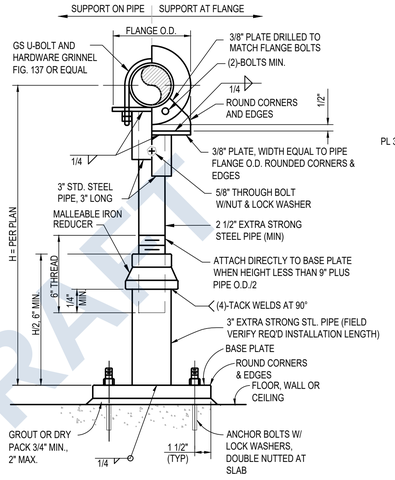

LOCATION	MEMBER	
	BASE PLATE	ANCHOR BOLTS
FLOOR	3/8 X 9 X 9	4-5/8"
CEILING	5/8 X 9 X 9	4-3/4"
WALL	5/8 X 9 X 9	4-3/4"

NOTES:
1. AS AN ALTERNATE, IF ADJUSTMENT IS NOT NECESSARY, DELETE 2 1/2" PIPE AND REDUCER AND WELD 3" STEEL PIPE DIRECTLY TO 3/8" PLATE ATTACHED TO PIPE FLANGE.
2. HOT DIP GALVANIZE AFTER FABRICATION. DO NOT CUT OR WELD AFTER GALVANIZING.
3. PIPE SUPPORT MAY BE ORIENTATED IN ANY DIRECTION.
4. FOR H > 3'-0", CONTRACTOR SHALL USE GRINNELL FIG. 264 AS APPROVED BY ENGINEER.

S1

DIMENSIONS			
PIPE Ø SIZE	BOLT SIZE	STAND PIPE "A"	ADJ. PIPE "B"	FLANGE SUPPORT PLATE THK. "C"
4-12	1/2	3"	2 1/2"	1/4"
14-16	5/8	4"	3"	3/8"
18-36	7/8	6"	4"	3/8"

INSTALLATION NOTE:
PIPE SUPPORT SPACING, MATERIAL AND QUANTITY PER SPECS.

* BOLT EMBEDMENT DEPTH PER STRUCTURAL PLANS.

S1A

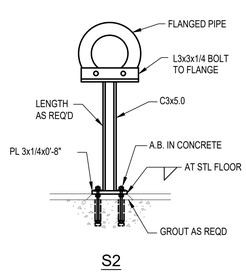

S2

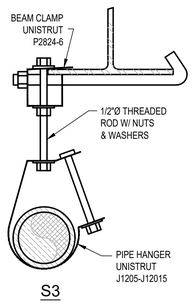

S3

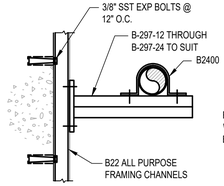

S4

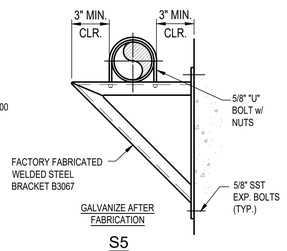

S5

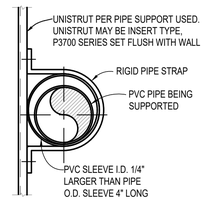

S6

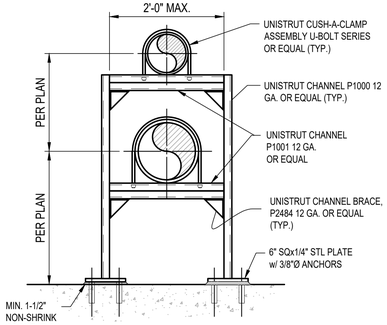

S7

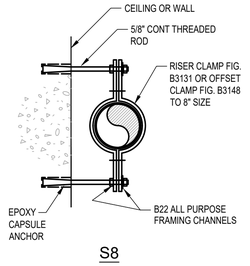

S8

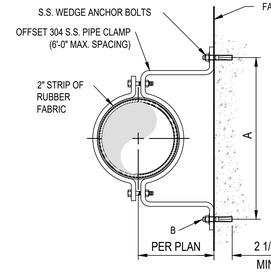

DIMENSIONS			
PIPE SIZE	A	HOLE SIZE B	BOLT SIZE
3	9 1/2	7/16	3/8
4	10 9/16	9/16	1/2
5	11 11/16	9/16	1/2
6	14 3/8	9/16	1/2
8	16 7/16	9/16	1/2
10	21 1/2	13/16	3/4
12	24 7/8	13/16	3/4
18	31	13/16	3/4
24	37	1 11/16	1

S9

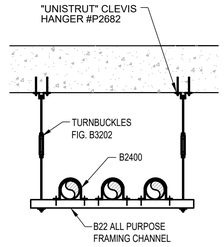

S10

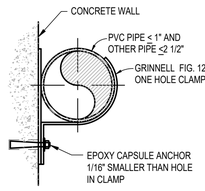

S11

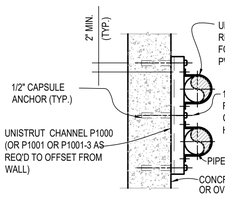

NOTE:
ADD ADDITIONAL CAPSULE ANCHOR FOR EACH ADDITIONAL PIPE.

S12

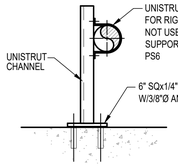

S13

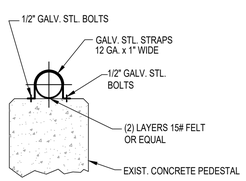

S14

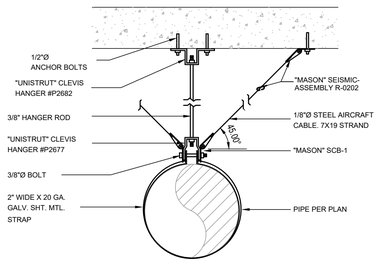

S15

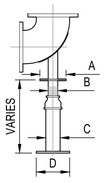

PIPE SIZE	PLATE SIZE A	PIPE SIZE B	PIPE SIZE C	PLATE SIZE D
3	5+ x1/4	1 1/2	2 1/2	8x8x3/8
4	6+ x1/4	2	3	8x8x3/8
6	6+ x1/4	2	3	8x8x3/8
8	7+ x3/8	3	4	8x8x1/2
10	7+ x3/8	3	4	8x8x1/2
12	9+ x3/8	4	6	10x10x3/4
14	9+ x3/8	4	6	10x10x3/4

S16

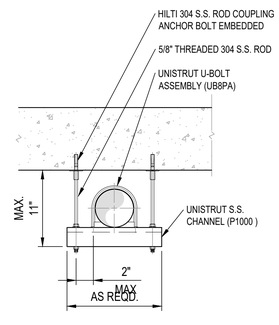

S17

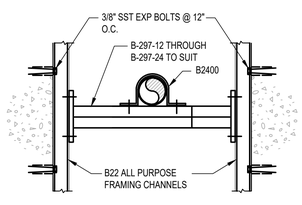

S18

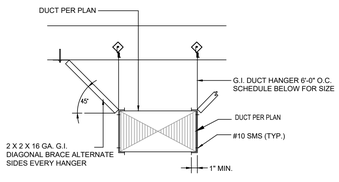

MAX. HALF OF DUCT PERIMETER (P=DUCT PERIMETER)	MAX. LOAD EA. HANGER	HANGER SIZE	HANGER SPACING
P/2 = 30"	260 LBS.	1"X22" GA.	10'-0" O.C.
P/2 = 72"	420 LBS.	1"X18" GA.	10'-0" O.C.
P/2 = 96"	700 LBS.	1"X16" GA.	10'-0" O.C.
P/2 = 120"	1100 LBS.	1 1/2"X16" GA.	10'-0" O.C.

ADDITIONAL NOTE:
EQUIPMENT MUST BE SUPPORTED OR HUNG FROM A UNISTRUT SYSTEM OR TRUSS SYSTEM. DO NOT ATTACH TO UNDERSIDE OF THE ROOF.

S19

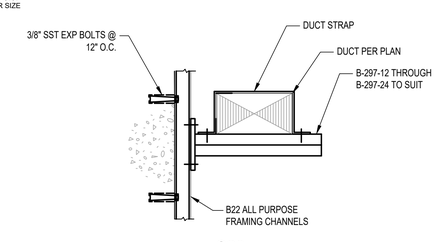

S20

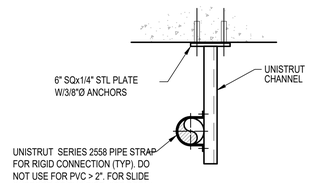

S21

GENERAL NOTES:

1. WHERE NO REFERENCE TO PIPE HANGERS OR SUPPORTS IS GIVEN ON THE DRAWINGS, THE CONTRACTOR SHALL USE THE APPROPRIATE HANGER OR SUPPORT SHOWN ON THIS DRAWING. MAXIMUM HANGER AND SUPPORT SPACING SHALL BE AS SHOWN IN SCHEDULE "A" ON THIS DRAWING. FIGURE NUMBERS ARE B-LINE, UNISTRUT OR GRINNELL.
2. ALL CONCRETE INSERTS, BRACKETS, CHANNELS, BOLTS, RODS, AND MISCELLANEOUS HARDWARE USED FOR PIPE HANGERS OR SUPPORTS SHALL BE GALVANIZED AFTER FABRICATION, EXCEPT STAINLESS STEEL SHALL BE USED IN DAMP LOCATIONS OR CORROSIVE ATMOSPHERES. 316 STAINLESS STEEL FASTENERS SHALL BE USED IN ALL LOCATIONS.
3. CONCRETE CONTINUOUS INSERTS, B-LINE SERIES B52i, OR EQUAL, SHALL BE PROVIDED IN THE WALLS AND CEILINGS AS REQ'D OR AS NOTED ON THE DRAWINGS. INSERTS IN THE WALLS SHALL BE VERTICAL, UNLESS OTHERWISE NOTED AND SHALL BEGIN 6 INCHES ABOVE THE FLOOR AND END 6 INCHES BELOW THE CEILING. INSERTS IN THE CEILING SHALL BEGIN AND END 3 INCHES FROM WALLS AND BEAMS, WHERE PRACTICABLE. THE CENTERLINES OF WALL AND CEILING INSERTS SHALL ALIGN. MAXIMUM CENTER TO ENTER SPACING OF INSERTS SHALL BE 5'-0".
4. IN AREAS NOT COVERED UNDER NOTE 3, CONCRETE INSERTS SHALL BE B-LINE SERIES B3014N WITH APPROPRIATE NUT, B-LINE SERIES B521i CHANNEL EMBEDDED ANCHOR BOLTS, OR EQUAL. IN WITHOUT THE PRIOR WRITTEN APPROVAL OF THE ENGINEER (FOR EQUIPMENT LIFTING DEVICES, (SEE STRUCTURAL DRAWINGS).
5. SUPPORTS SHALL MEET MANUFACTURERS STANDARDIZATION SOCIETY OF THE VALVE AND FITTINGS INDUSTRY STANDARD PRACTICE SP58, LATEST EDITION.
6. HANGER BRACKET AND SUPPORT COMPONENTS MAY BE INTERCHANGED AS APPROVED BY THE ENGINEER.
7. TRAPEZE AND PIPE RACK COMPONENTS SHALL HAVE A MINIMUM STEEL THICKNESS OF 12 GAUGE. MAXIMUM DEFLECTION SHALL BE LIMITED TO 1/240 OF THE SPAN. CHANNEL COMPONENTS SHALL BE B-LINE SERIES B22 OR B22A, OR EQUAL.
8. CONCRETE INSERTS IN AREAS BELOW WATER SURFACE OR NORMALLY SUBJECT TO SUBMERGING SHALL BE EMBEDDED ANCHOR BOLTS, OR APPROVED EQUAL. IN NO CASE SHALL CONCRETE CONTINUOUS INSERTS BE USED IN THESE AREAS.
9. ALL PIPING, DUCTWORK, ACCESSORIES, APPURTENANCES, ETC. SHALL BE ANCHORED TO RESIST 200% OF THE APPLIED LOAD & A LATERAL SEISMIC FORCE OF 40 PERCENT OF ITS WEIGHT WITHOUT EXCESSIVE DEFLECTION.
10. CONTRACTOR SHALL VERIFY ALL SUPPORT DIMENSIONS AND LOCATIONS WITH APPROVED SHOP DRAWINGS FOR ITEMS BEING SUPPORTED BEFORE FABRICATION OR INSTALLATION OF SUPPORTS.
11. PIPE SUPPORT DETAILS ARE SCHEMATIC AND PROVIDED FOR PRICING ASSISTANCE. DEFERRED SUBMITTALS, STAMPED BY A STRUCTURAL PE, MUST BE PROVIDED FOR ALL PIPE SUPPORTS TO ENSURE COMPLIANCE WITH SEISMIC REQUIREMENTS.

SCHEDULE "A"

PIPE HANGER RODS AND SUPPORT SPACING

PIPE SIZE	ROD SIZE (INCHES)	MAX. SPAN (FT.)				
		STEEL PIPE	COPPER PIPE	PVC PIPE	DUCTILE IRON PIPE	FIBERGLASS
UP TO 1"	3/8	6	5	5	-	-
1 1/4" TO 2"	3/8	10	8	5.5	10	-
2 1/2" TO 3 1/2"	1/2	10	8	6	10	-
4" TO 5"	5/8	10	-	8	10	-
6"	3/4	10	-	9	10	-
8" TO 12"	7/8	10	-	9	10	-
ABOVE 12"	1	10	-	9	10	-

BOLT DIAMETER	VERT BOLT EMBEDMENT LENGTH	HORIZ BOLT EMBEDMENT LENGTH	HEADED STUD FILLET WELD SIZE, "S".
1/2"	6"	4"	1/4"
5/8"	6"	4"	5/16"
3/4"	7"	5"	5/16"
7/8"	8"	6"	5/16"
1"	9"	7"	3/8"
1 1/8"	10"	8"	- - - - -
1 1/4"	11"	9"	- - - - -

TYP. ANCHOR AND EXPANSION BOLT SCHEDULE

NO	BY	DATE	REVISIONS	DATE	APP.
1					
2					
3					
4					
5					
6					

Registered Professional Engineer — DUONG T. DO — 40050 — Arizona, U.S.A. — Expires 12/31/27

PREPARED BY: DUONG DO
PROJECT ENGINEER #40050
R.C.E. NO. 1—
EXP. DATE
SCALE
DRAWN WW, MSA
DESIGNED NT, NE
CHECKED DD
DATE FEB 2026

THESE DRAWINGS ARE THE PROPERTY OF P.A.C.E. AND SHALL NOT BE REPRODUCED IN ANY MANNER NOR BE USED FOR CONSTRUCTION UNLESS STAMPED "ISSUED FOR CONSTRUCTION".

TITLE: **MECHANICAL DETAILS 5**

JOB: CITY OF SAN LUIS WEST WWTP 3.0 MGD MBR UPGRADES — SAN LUIS AZ.

PACE Advanced Water Engineering
8723 E. VIA de COMMERCIO, SUITE A-201 | SCOTTSDALE, CA 85258
P: (408) 991-3595 | www.pacewater.com

FINAL PLANS ISSUED FOR BID

SHEET **M11.4**
57 OF 209 SHEETS

JOB NO. B777

PIPE SUPPORT DETAILS N.T.S. **A**

DRAFT

W:\B777\Engineering\B777 - 3MGD Exp\3MGD FINAL DS\sheets\B777 - M11.0 DETAILS.dwg - Tab: M11.4 - by wwright on 02/04/26 at 3:22:26 PM

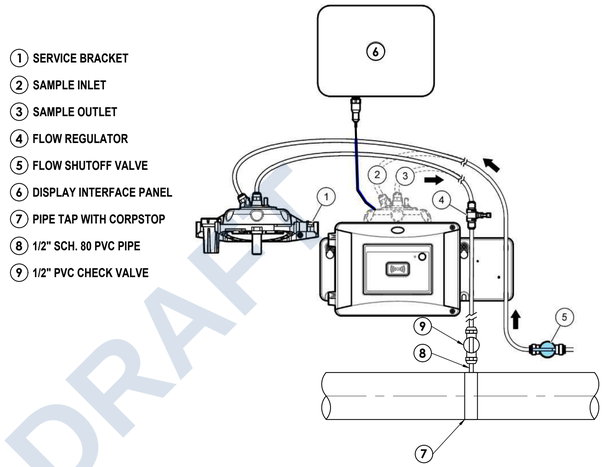

TURBIDITY METER

N.T.S. **A**

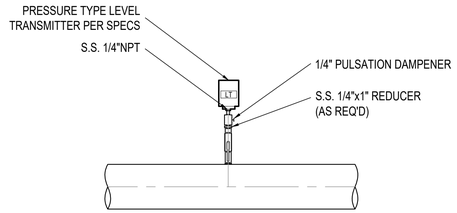

PRESSURE TRANSMITTER / TRANSDUCER

N.T.S. **B**

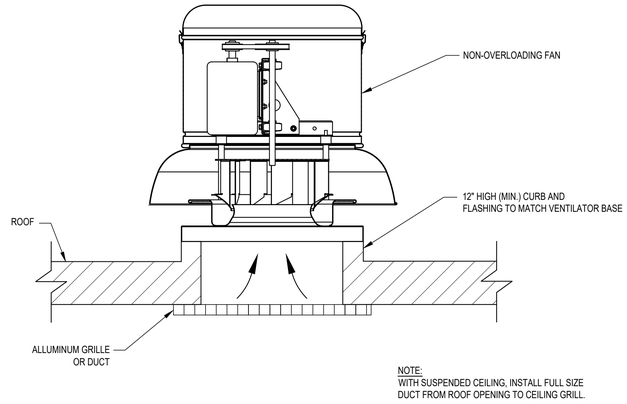

NOTE:
WITH SUSPENDED CEILING, INSTALL FULL SIZE DUCT FROM ROOF OPENING TO CEILING GRILL.

EXHAUST FAN

N.T.S. **C**

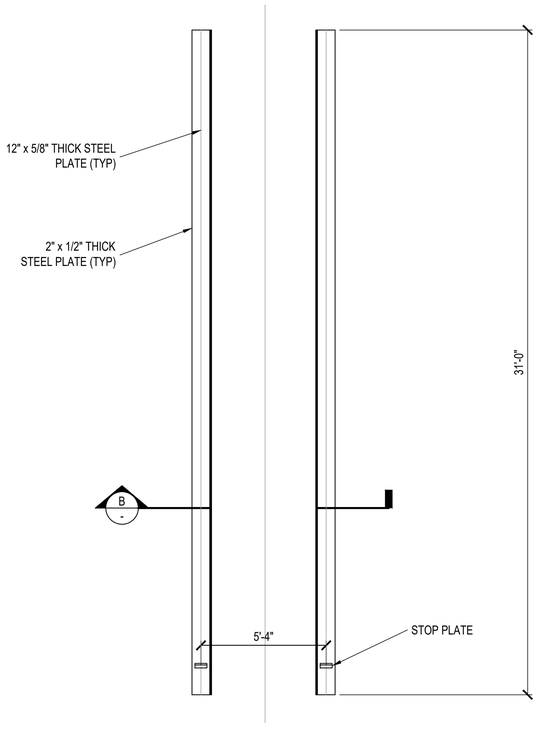

PLAN
SCALE: N.T.S.

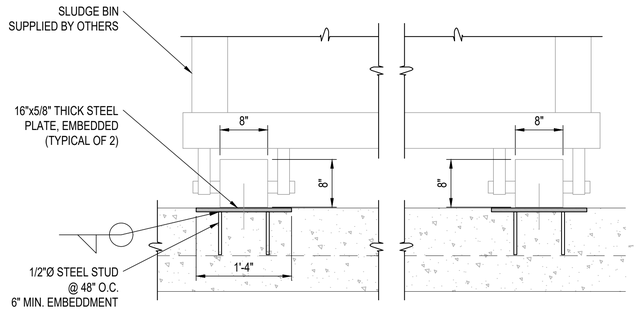

SECTION - A
SCALE: N.T.S.

SLUDGE BIN TRACK

N.T.S. **D**

NO	BY	DATE	REVISIONS	DATE	APP.

Registered Professional Engineer (Civil) CERTIFICATE NO. 40050 DUONG T. DO Date Signed 12/31/26 ARIZONA, U.S.A. Expires 12/31/27

PREPARED BY DUONG DO
PROJECT ENGINEER
R.C.E. NO. -- #40050
EXP. DATE
DRAWN WW, MSA
SCALE
DESIGNED NT, NE
CHECKED DD
DATE FEB 2026

TITLE
MECHANICAL DETAILS 6

JOB
CITY OF SAN LUIS WEST WWTP
3.0 MGD MBR UPGRADES
SAN LUIS AZ.

PACE
Advanced Water Engineering
8723 E. VIA de COMMERCIO, SUITE A-204 | SCOTTSDALE, CA 85258
P: (408) 991-3595 | www.pacewater.com

SHEET
M11.5
58 OF 209 SHEETS
JOB NO. B777

THESE DRAWINGS ARE THE PROPERTY OF P.A.C.E. AND SHALL NOT BE REPRODUCED IN ANY MANNER NOR BE USED FOR CONSTRUCTION UNLESS STAMPED "ISSUED FOR CONSTRUCTION".

FINAL PLANS ISSUED FOR BID

W:\B777\Engineering\B777 - 3MGD Exp\3MGD FINAL DSN\sheets\B777 - M11.0 DETAILS.dwg - Tab: M11.5 - by wwright on 02/04/26 at 3:22:08 PM

How to use Module Lifting Tool

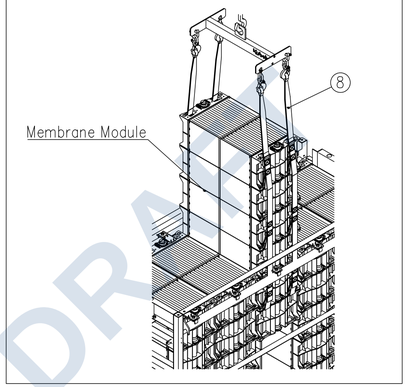

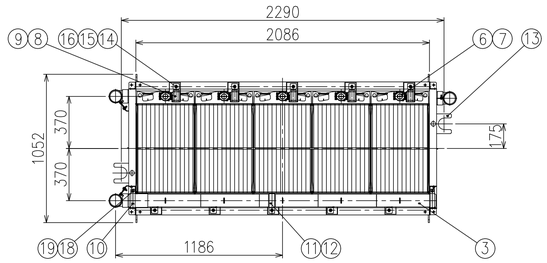

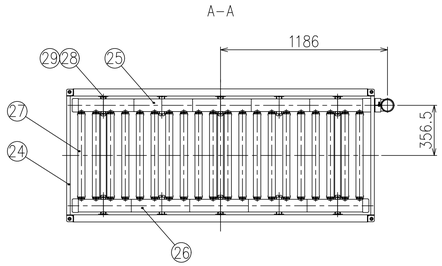

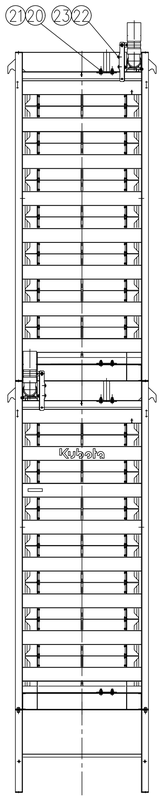

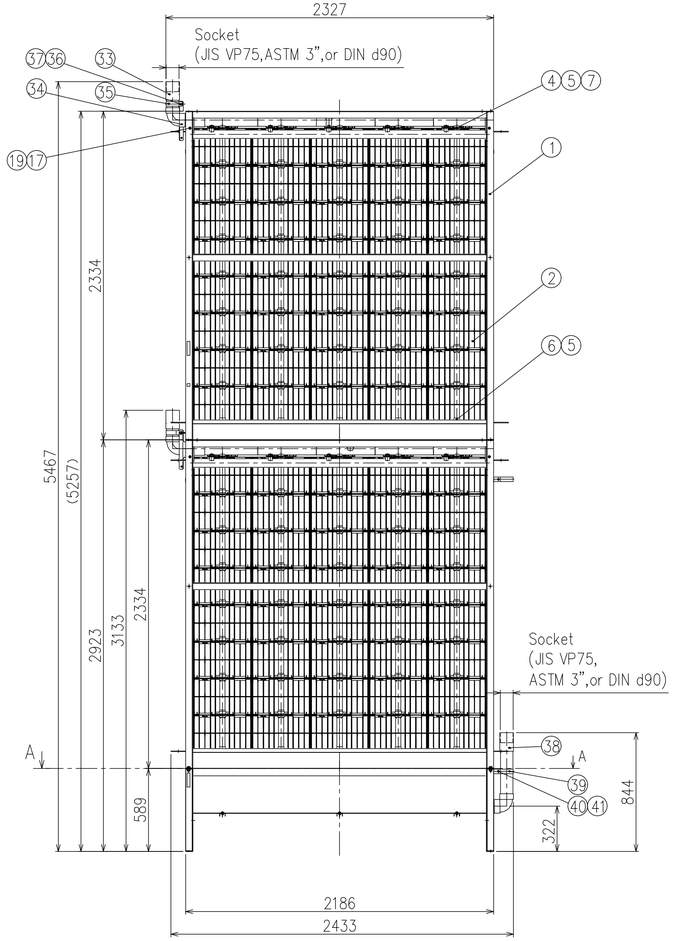

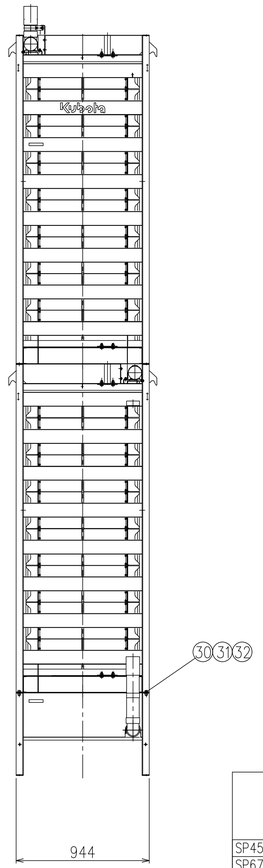

41	Washer	SUS	2	M8
40	Bolt	SUS	4	M8x25L
39	Support	SUS	2	
38	Diffuser Piping	PVC	1	
Diffuser Adapter			1	FT002
37	Washer	SUS	1	M8
36	Bolt	SUS	2	M8x25L
35	Support	SUS	1	
34	Bracket	SUS	1	
33	Manifold Piping	PVC	1	
Manifold Adapter (L)			1	FT004L
37	Washer	SUS	1	M8
36	Bolt	SUS	2	M8x25L
35	Support	SUS	1	
34	Bracket	SUS	1	
33	Manifold Piping	PVC	1	
Manifold Adapter			1	FT004
32	Washer	SUS	8	M12
31	Nut	SUS	4	M12
30	Bolt	SUS	4	M12x25L
29	Washer	SUS	12	M8
28	Nut	SUS	12	M8 (Locknut)
27	Diffuser Rubber	ABS etc.	20	
26	Diffuser Header Pipe (B)	ABS	1	
25	Diffuser Header Pipe (A)	ABS/PVC	1	
24	Diffuser Block Frame	SUS	1	
Diffuser Block			1	DB005
23	Washer	SUS	2	M8
22	Bolt	SUS	2	M8x25L
21	Nut	SUS	8	M12
20	Bolt	SUS	8	M12x30L
19	Washer	SUS	4	M8
18	Nut	SUS	2	M8
17	Bolt	SUS	2	M8x16L
16	Bolt	SUS	10	M12x25L (Squareheadbolt)
15	Washer	SUS	9	M12
14	Nut	SUS	10	M12
13	Guide Plate	SUS	4	
12	Sheet	EPDM	1	
11	Manifold Holder	SUS	1	
10	Manifold Saddle	SUS	2	
9	Retainer Pad	NBR	10	
8	Retainer	SUS	10	
7	O-Ring (P-46)	EPDM	80	
6	Plug	PS	15	
5	O-Ring (P-34)	NBR	85	
4	Joint	PS	75	
3	Manifold	ABS etc.	1	
2	Membrane Module	PP etc.	40	
1	Membrane Block Frame	SUS	1	
Membrane Block (L)			1	MB450-508L-A
23	Washer	SUS	2	M8
22	Bolt	SUS	2	M8x25L
21	Nut	SUS	8	M12
20	Bolt	SUS	8	M12x30L
19	Washer	SUS	4	M8
18	Nut	SUS	2	M8
17	Bolt	SUS	2	M8x16L
16	Bolt	SUS	10	M12x25L (Squareheadbolt)
15	Washer	SUS	9	M12
14	Nut	SUS	10	M12
13	Guide Plate	SUS	4	
12	Sheet	EPDM	1	
11	Manifold Holder	SUS	1	
10	Manifold Saddle	SUS	2	
9	Retainer Pad	NBR	10	
8	Retainer	SUS	10	
7	O-Ring (P-46)	EPDM	80	
6	Plug	PS	15	
5	O-Ring (P-34)	NBR	85	
4	Joint	PS	75	
3	Manifold	ABS etc.	1	
2	Membrane Module	PP etc.	40	
1	Membrane Block Frame	SUS	1	
Membrane Block			1	MB450-508-A

Model	a	b	c	d	e	f	g	Mass (kg)			*2 Maximum lifting load (kg)
								Membrane Block (Upper and Lower), Diffuser Block,and Adapter		Lifting Tool	
								dry	wet *1		
SP450W-508-A	1877	3165	3600	2146	3434	1874	3162	1110	3070	210	1850
SP675-512-A	2401	4213	4600	2670	4482	2398	4210	1510	4450	210	2540
SP900-516-A	2923	5257	5700	3192	5526	2920	5254	1910	5830	210	3230

*1 "Wet" mass includes "dry" mass and expected mass of sludge when all the gaps between membrane elements are clogged with sludge.

*2 Assuming that all the gaps between membrane elements are clogged with sludge.Mass of Membrane Block(Lower), Diffuser Block, Adapters,and Unit Lifting Tool which is fully filled with water are also included.

DRAFT

NO	BY	DATE	REVISIONS	DATE	APP.

Registered Professional Engineer (Civil) — DUONG T. DO — 40050 — Arizona, U.S.A. — Expires 12/31/27

PREPARED BY: DUONG DO
PROJECT ENGINEER: #40050
R.C.E. NO.: —
EXP. DATE:
DRAWN: WW, MSA
DESIGNED: NT, NE
CHECKED: DD
SCALE:
DATE: FEB 2026

THESE DRAWINGS ARE THE PROPERTY OF P.A.C.E. AND SHALL NOT BE REPRODUCED IN ANY MANNER NOR BE USED FOR CONSTRUCTION UNLESS STAMPED "ISSUED FOR CONSTRUCTION".

TITLE: **MBR ASSEMBLY DRAWING**

JOB: CITY OF SAN LUIS WEST WWTP
3.0 MGD MBR UPGRADES
SAN LUIS AZ.

PACE
Advanced Water Engineering
8723 E. VIA de COMMERCIO, SUITE A-204 | SCOTTSDALE, CA 85258
P: (408) 991-3595 | www.pacewater.com

FINAL PLANS ISSUED FOR BID

SHEET
M12.0
59 OF 209 SHEETS

JOB NO. B777

W:\B777\Engineering\B777 - 3MGD Exp\3MGD FINAL DS\Sheets\B777 - M12.0 MBR Cutsheet.dwg - Tab: M12.0 - by wwright on 02/02/26 at 3:58:00 PM

FOR REFERENCE ONLY

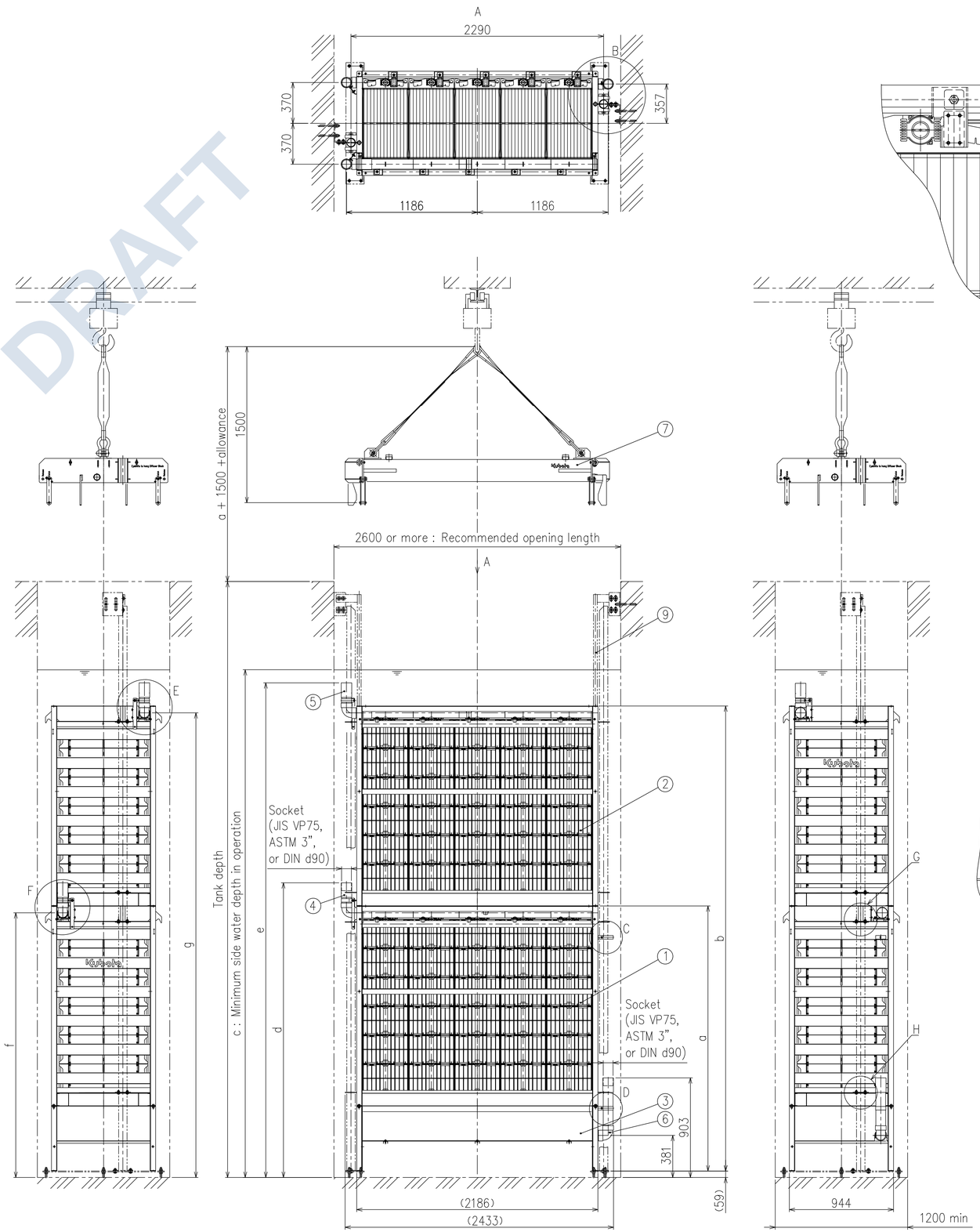

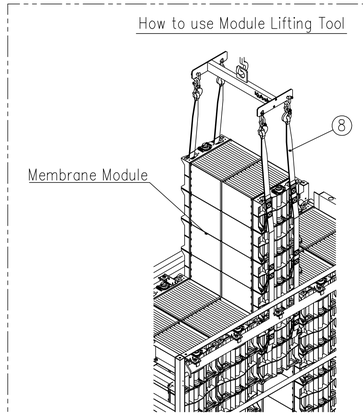

Notes

1. This drawing shows an example that Membrane Block (L) is placed as upper Membrane Block of SP675-512-A.
   Each model may be different in outline and dimensions.
2. The upper and lower Membrane Blocks are replaceable mutually.
3. This drawing conforms to JIS standards.
4. The Guide Set has to be prepared by Customer.
5. Membrane Block (Lower) and Diffuser Block are fixed with bolts. Never use bolts to fix the Membrane Block (Upper) and Membrane Block (Lower).
6. For lifting up Membrane Unit, use the specified Unit Lifting Tool.
7. Use Module Lifting Tool in taking out Membrane Modules.

Model	a	b	c	d	e	f	g	Mass (kg) Membrane Block (Upper and Lower), Diffuser Block,and Adapter dry	Mass (kg) Membrane Block (Upper and Lower), Diffuser Block,and Adapter wet *1	Mass (kg) Lifting Tool	Maximum lifting load (kg) *2
SP450W-508-A	1877	3165	3600	2146	3434	1874	3162	1110	3070	210	1850
SP675-512-A	2401	4213	4600	2670	4482	2398	4210	1510	4450	210	2540
SP900-516-A	2923	5257	5700	3192	5526	2920	5254	1910	5830	210	3230

*1 "Wet" mass includes "dry" mass and expected mass of sludge when all the gaps between membrane elements are clogged with sludge.

*2 Assuming that all the gaps between membrane elements are clogged with sludge.Mass of Membrane Block(Lower), Diffuser Block, Adapters,and Unit Lifting Tool which is fully filled with water are also included.

NO	BY	DATE	REVISIONS	DATE	APP.

Registered Professional Engineer (Civil) Certificate No. 40050 DUONG T. DO Date Signed 12/31/21 ARIZONA, U.S.A. Expires 12/31/27

PREPARED BY DUONG DO
PROJECT ENGINEER
R.C.E. NO. -- #40050
EXP. DATE
DRAWN WW, MSA
SCALE
DESIGNED NT, NE
CHECKED DD
DATE FEB 2026

TITLE
MBR INSTALLATION DRAWING

JOB
CITY OF SAN LUIS WEST WWTP
3.0 MGD MBR UPGRADES
SAN LUIS AZ.

PACE
Advanced Water Engineering
8723 E. VIA de COMMERCIO, SUITE A-204 | SCOTTSDALE, CA 85258
P: (408) 991-3595 | www.pacewater.com

SHEET
M12.1
60 OF 209 SHEETS
JOB NO. B777

THESE DRAWINGS ARE THE PROPERTY OF P.A.C.E. AND SHALL NOT BE REPRODUCED IN ANY MANNER NOR BE USED FOR CONSTRUCTION UNLESS STAMPED "ISSUED FOR CONSTRUCTION".

FINAL PLANS ISSUED FOR BID

DRAFT

FOR REFERENCE ONLY

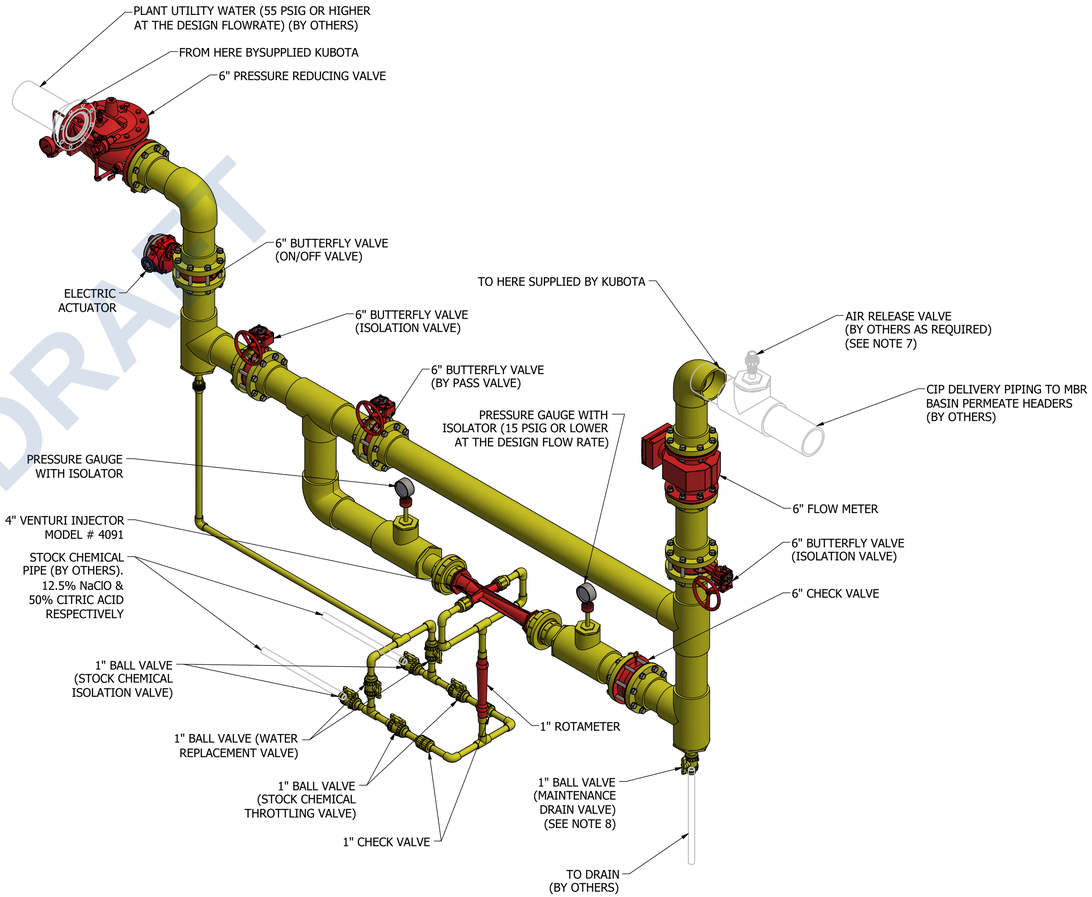

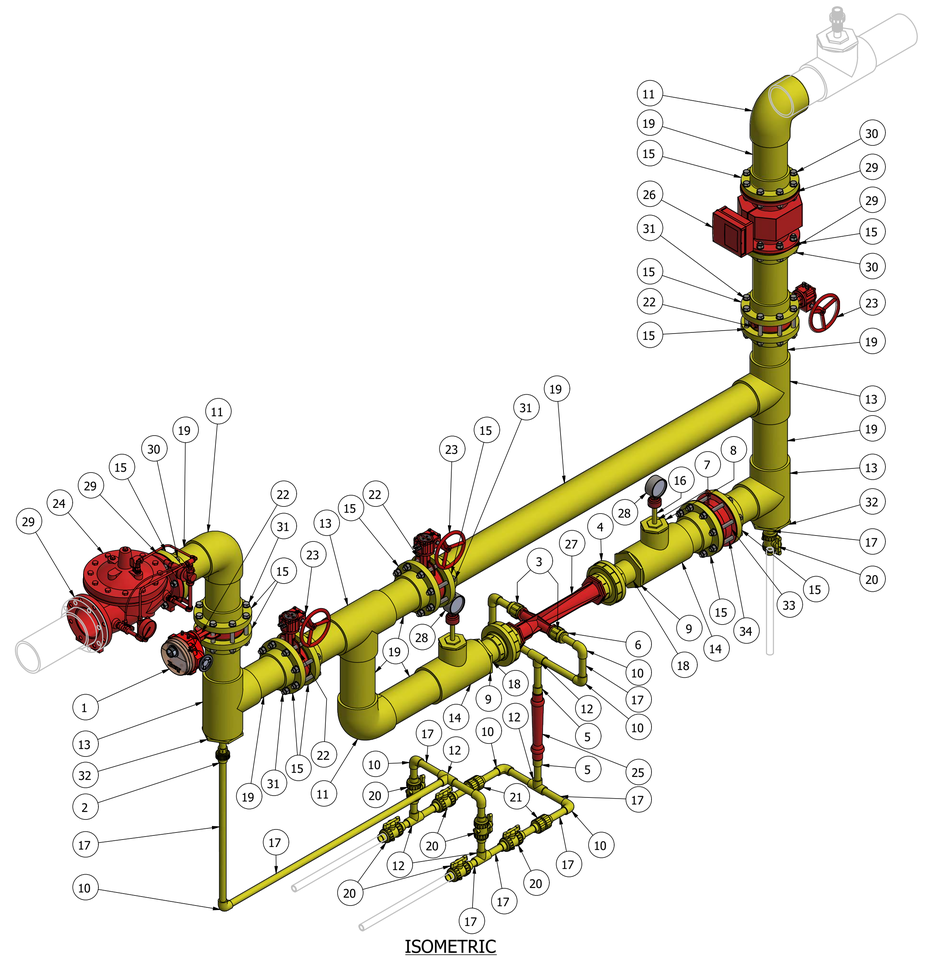

ISOMETRIC

PARTS LIST			
ITEM	QTY	MATERIAL	DESCRIPTION
1	1	COATED ALU	ACTUATOR, ELECTRIC
2	1	PVC S80	UNION, 1", S X S
3	2	PVC S80	UNION, 2", S X S
4	2	PVC S80	UNION, 4", S X S
5	2	PVC S80	ADAPTER, MALE, 1". S X MNPT
6	2	PVC S80	BUSHING, REDUCING, 2" X 1", SPG X S
7	2	PVC S80	BUSHING, REDUCING, 2" X 1/2", SPG X S
8	2	PVC S80	BUSHING, REDUCING, 4" X 2", SPG X S
9	2	PVC S80	BUSHING. REDUCING, 6" X 4". SPG X S
10	9	PVC S80	ELBOW, 90 DEGREE, 1", S X S
11	3	PVC S80	ELBOW, 90 DEGREE, 6". S X S
12	5	PVC S80	TEE, 1", S X S X S
13	4	PVC S80	TEE, 6". S X S X S
14	2	PVC S80	TEE, REDUCING, 6" X 6" X 4", S X S X S
15	13	PVC S80	FLANGE, VANSTONE, 6"
16	2 L.F.	PVC S80	PIPE, 1/2"
17	30 L.F.	PVC S80	PIPE, 1"
18	2 L.F.	PVC S80	PIPE, 4"
19	30 L.F.	PVC S80	PIPE, 6"
20	7	PVC S80, FKM SEAL	VALVE, BALL, 1", TRUE UNION, S X S, SEALED, VENTED
21	2	PVC S80, FKM SEAL	VALVE, BALL, CHECK, 1", TRUE UNION, S X S
22	4	DUCTILE IRON	VALVE, BUTTERFLY, 6"
23	3	DUCTILE IRON	VALVE, BUTTEFLY, HAND WHEEL
24	1	DUCTILE IRON	VALVE, PRESSURE REDUCING, 6". FLG X FLG (SEE NOTE 3)
25	1	POLYSUFONE	METER, FLOW, 1", FNPT X FNPT
26	1	COATED ALU, SS, PTFE	METER, FLOW, MAGNETIC, 6", FLG X FLG, GROUNDING RINGS
27	1	POLYPROPYLENE	VENTURI INJECTOR, 4", 2" SUCTION
28	2	PVC	GAUGE, PRESSURE, W/ ISOLATOR, 0-60 PSI
29	6	EPDM	GASKET, 6", #150
30	3	304SS	FLANGE BOLT SET (8), 3/4" DIA. X 3-1/2" LG. BOLT W/ 1 NUT & 2 WASHERS EACH
31	4	304SS	FLANGE BOLT SET (8), 3/4" DIA. X 6-1/2" LG. BOLT W/ 1 NUT & 2 WASHERS EACH
32	2	PVC S80	BUSHING, REDUCING, 6" X 1", SPG X S
33	1	DUCTILE IRON	VALVE, WAFER CHECK, 6"-150#
34	8	304SS	FLANGE BOLT SET (8), 3/4" DIA. X 7 1/2" LG. BOLT W/ 1 NUT & 2 WASHERS EACH

GENERAL NOTES:

1. DESIGN OF THIS CLEAN IN PLACE (CIP) STATION IS BASED ON THE ASSUMPTION THAT A REQUIRED BACKFLOW PREVENTER EXISTS IN THE PLANT WATER SUPPLY SYSTEM UPSTREAM OF CIP STATION. BACKFLOW PREVENTER NOT SUPPLIED BY KUBOTA MEMBRANE USA (KMU).
2. DRAIN PIPING & ALL PIPE SUPPORTS ARE NOT SUPPLIED BY KMU. LOCATION, TYPE, & QUANTITY OF PIPE SUPPORTS TO BE DETERMINED BY CONTRACTOR.
3. KMU SUPPLIED PRESSURE REDUCING VALVE, FLANGES, FASTENER ASSEMBLIES & GASKETS TO BE LOCATED BY CONTRACTOR IN HORIZONTAL OR VERTICAL RUN OF PIPE (FLOW UP) BETWEEN PLANT WATER SUPPLY CONNECTION & CIP STATION. ANY REQUIRED SUPPORTS ARE NOT SUPPLIED BY KMU.
4. ALL PARTS ARE SHIPPED LOOSE AND CIP STATION MUST BE FABRICATED AND INSTALLED BY CONTRACTOR PER THIS DOCUMENT. PIPE IS SHIPPED IN STANDARD LENGTHS AND MUST BE CUT BY CONTRACTOR.
5. ORIENTATION OF ALL PARTS & STATION CAN BE ALTERED TO SUIT SITE CONDITIONS BUT ALL PARTS MUST REMAIN IN THE SAME RESPECTIVE LOCATIONS AND CONFORM TO REQUIRED DIMENSIONS. MAJOR CHANGES TO BE APPROVED BY KMU.
6. PVC SOLVENT, PVC GLUE AND THREAD ANTI SEIZE COMPOUND NOT SUPPLIED BY KMU.
7. CONTRACTOR TO SUPPLY AND LOCATE AIR RELEASE VALVES AT ALL HIGH POINTS IN CIP PIPING SYSTEM. AIR RELEASE VALVES TO BE LOCATED AT POINT WHERE HIGH POINT PIPING TURNS DOWN.
8. **CIP SYSTEM SHOULD BE DRAINED ONLY FOR MAINTENANCE OR REPLACEMENT OF CIP EQUIPMENT. CLEAN WATER TO REMAIN IN SYSTEM BETWEEN CIP EVENTS.**
9. **WATER REPLACEMENT MUST BE PERFORMED AFTER EVERY CIP EVENT TO AVOID MIXING NaClO AND CITRIC ACID IN CIP STATION PIPING, CIP EQUIPMENT AND CIP TRANSFER PIPING.**

CIP PROCEDURE:

1. SET VALVE POSITIONS MANUALLY FOR EITHER NaClO INJECTION PROCEDURE OR CITRIC ACID INJECTION PROCEDURE.
2. PRESS "CIP INJECTION" BUTTON ON THE MBR OIT.
3. CIP INJECTION STOPS AUTOMATICALLY WHEN THE TOTAL GALLONS INJECTED REACHES THE TARGET AMOUNT.
4. SET VALVE POSITIONS FOR WATER REPLACEMENT PROCEDURE.
5. PRESS "WATER REPLACEMENT" BUTTON ON THE MBR OIT.
6. WATER REPLACEMENT STOPS AUTOMATICALLY WHEN THE INJECTION TIMER EXPIRES.
7. SET THE MANUAL VALVES TO THEIR ORIGINAL POSITIONS.
8. ALLOW 2 HOURS MEMBRANE SOAKING TIME FOR NaClO AND 1 HOUR FOR CITRIC ACID.

NO	BY	DATE	REVISIONS	DATE	APP.

Registered Professional Engineer (Civil) — DUONG T. DO — 40050 — ARIZONA, U.S.A. — Date Signed 3/31/26 — Expires 12/31/27

THESE DRAWINGS ARE THE PROPERTY OF P.A.C.E. AND SHALL NOT BE REPRODUCED IN ANY MANNER NOR BE USED FOR CONSTRUCTION UNLESS STAMPED "ISSUED FOR CONSTRUCTION".

PREPARED BY: DUONG DO — PROJECT ENGINEER — R.C.E. NO. 40050 — EXP. DATE —
DRAWN: WW, MSA — DESIGNED: NT, NE — CHECKED: DD — SCALE — DATE: FEB 2026

TITLE: **CIP STATION - ISO & PARTS LIST**

JOB: CITY OF SAN LUIS WEST WWTP 3.0 MGD MBR UPGRADES — AZ. SAN LUIS

PACE Advanced Water Engineering
8723 E. VIA de COMMERCIO, SUITE A-204 | SCOTTSDALE, CA 85258
P: (408) 991-3595 | www.pacewater.com

SHEET **M12.2**
61 OF 209 SHEETS

JOB NO. B777

FINAL PLANS ISSUED FOR BID

DRAFT
FOR REFERENCE ONLY

W:\B777\Engineering\B777 - 3MGD Exp\3MGD FINAL DSNsheets\B777 -M12.2 CIP Cutsheet.dwg - Tab: M12.2 - by wwright on 02/02/26 at 4:49:20 PM

DRAFT

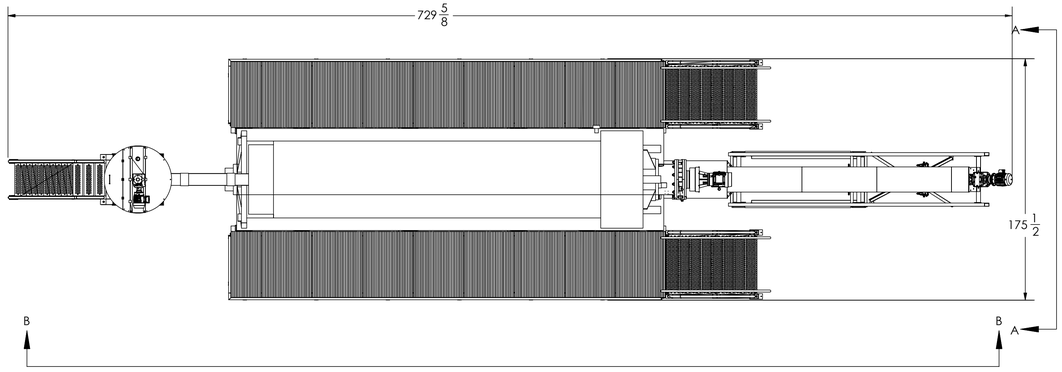

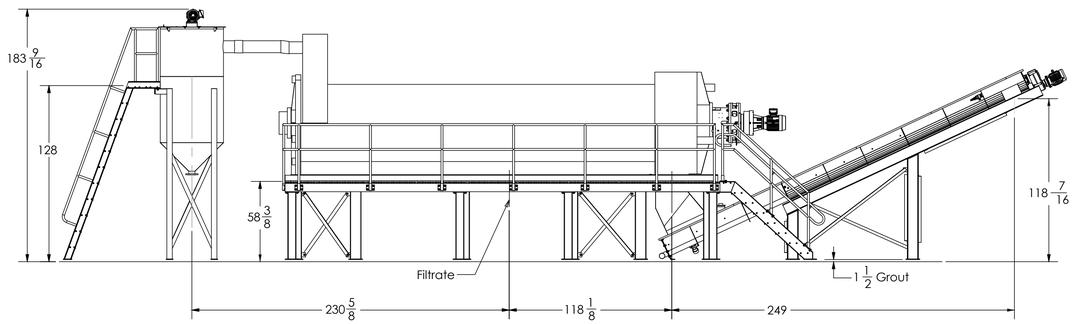

SECTION B-B

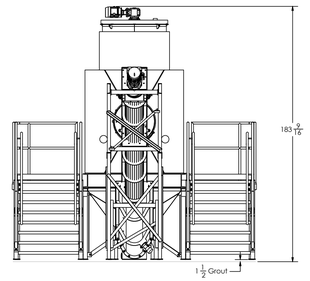

SECTION A-A

NO	BY	DATE	REVISIONS	DATE	APP.

Registered Professional Engineer (Civil) — DUONG T. DO — 40050 — Arizona, U.S.A. — Date Signed 12/31/27 — Expires 12/31/27

PREPARED BY: DUONG DO
PROJECT ENGINEER
R.C.E. NO. #40050
EXP. DATE

DRAWN: WW, MSA
DESIGNED: NT, NE
CHECKED: DD
SCALE
DATE: FEB 2026

THESE DRAWINGS ARE THE PROPERTY OF P.A.C.E. AND SHALL NOT BE REPRODUCED IN ANY MANNER NOR BE USED FOR CONSTRUCTION UNLESS STAMPED "ISSUED FOR CONSTRUCTION".

TITLE
DEWATERING LAYOUT CUTSHEET

JOB
CITY OF SAN LUIS WEST WWTP
3.0 MGD MBR UPGRADES
SAN LUIS AZ.

PACE
Advanced Water Engineering
8723 E. VIA de COMMERCIO, SUITE A-204 | SCOTTSDALE, CA 85258
P: (408) 991-3595 | www.pacewater.com

SHEET
M12.3
62 OF 209 SHEETS

JOB NO. B777

FINAL PLANS ISSUED FOR BID

FOR REFERENCE ONLY

W:\B777\Engineering\B777 - 3MGD Exp\3MGD FINAL DSN\sheets\B777 - M12.4 Dewatering Cutsheets.dwg - Tab: M12.3 - by wwright on 02/02/26 at 4:01:57 PM

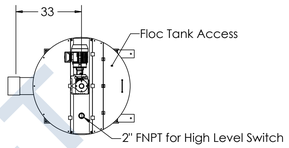

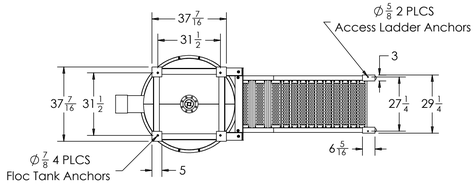

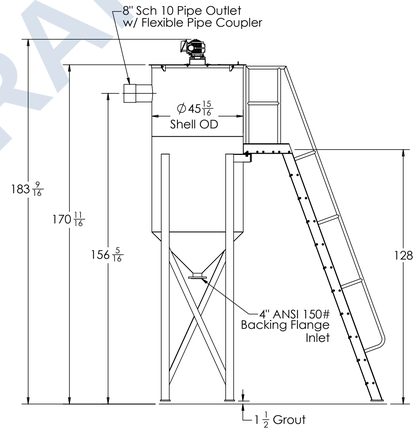

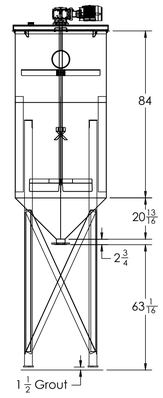

Notes:
1. Material of Construction Tank: 304L S.S.
2. Material of Construction Access Ladder 6061 AL
3. Equipment Weight: 1350 Lbs.
4. Operating Weight: 6000 Lbs.
5. Agitator Drive: SEW SAF67AMS145 46.4:1 Ratio
6. 1.5 Hp 1750 RPM Motor 145TC Frame.
7. Agitator Speed 3.8~38.0 RPM
8. Speed is adjusted via VFD.
9. FKC recommends the polymer inlet to be within 10' of Floc Tank.
10. FKC recomends piping a drain into the Floc Tank feed piping.
11. FKC recommends 1-1/2" grout under all equipment foot pads.

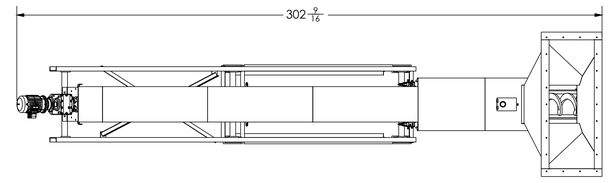

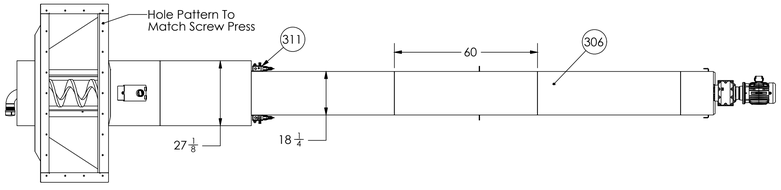

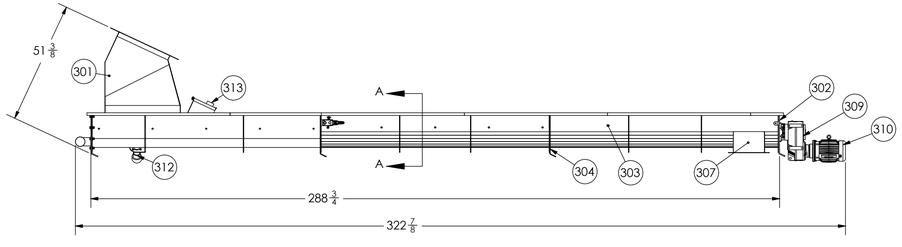

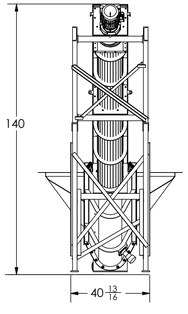

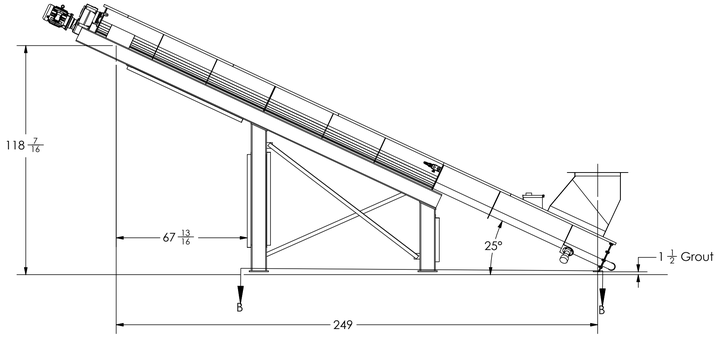

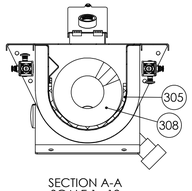

SECTION A-A
SCALE 1 : 12

Note:
- Material of Construction 304 S.S.
- Equipment Weight: 3000 LBS
- Operating Weight: 4000 LBS
- Drive: SEW FAS77AMS184, Ratio: 66.46:1
- Motor: 5HP 1800 RPM 182TC
- Operating Speed: 26 RPM

NO	BY	DATE	REVISIONS	DATE	APP.

Registered Professional Engineer (Civil) — DUONG T. DO — 40050 — Arizona, U.S.A. — Date Signed 12/31/27 — Expires 12/31/27

PREPARED BY: DUONG DO
PROJECT ENGINEER: #40050
R.C.E. NO.: —
EXP. DATE:
DRAWN: WW, MSA
DESIGNED: NT, NE
CHECKED: DD
SCALE:
DATE: FEB 2026

THESE DRAWINGS ARE THE PROPERTY OF P.A.C.E. AND SHALL NOT BE REPRODUCED IN ANY MANNER NOR BE USED FOR CONSTRUCTION UNLESS STAMPED "ISSUED FOR CONSTRUCTION".

TITLE: **FLOC TANK AND SCREW CONVEYOR**

JOB: CITY OF SAN LUIS WEST WWTP
3.0 MGD MBR UPGRADES
SAN LUIS AZ.

PACE
Advanced Water Engineering
8723 E. VIA de COMMERCIO, SUITE A-204 | SCOTTSDALE, CA 85258
P: (408) 991-3595 | www.pacewater.com

SHEET
M12.4
63 OF 209 SHEETS

JOB NO. B777

FINAL PLANS ISSUED FOR BID

DRAFT

W:\B777\Engineering\B777 - 3MGD Exp\3MGD FINAL DSN\sheets\B777 - M12.4 Dewatering Cutsheets.dwg - Tab: M12.4 - by wwright on 02/02/26 at 4:01:57 PM

FOR REFERENCE ONLY

DRAFT

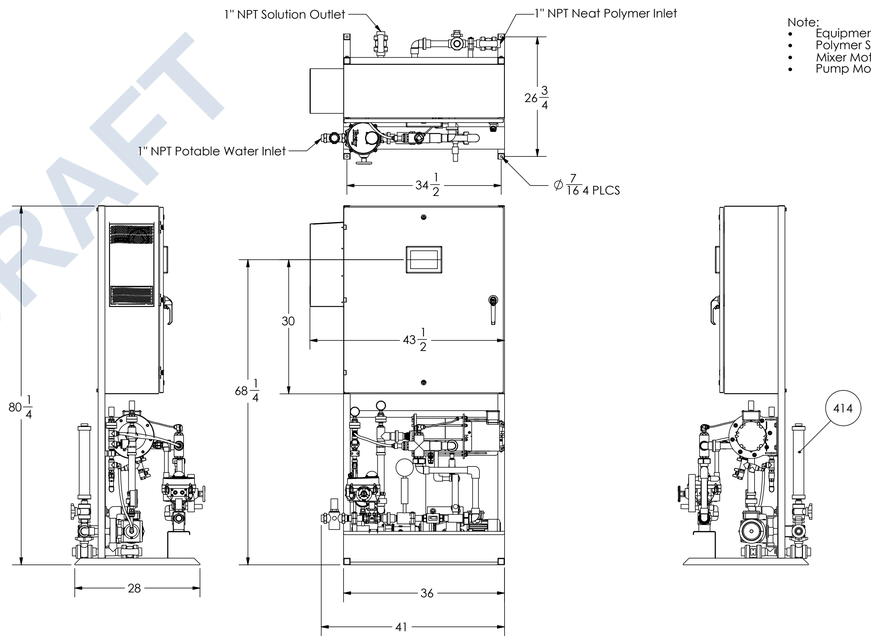

Note:
- Equipment Weight 350 lbs.
- Polymer System 120 VAC
- Mixer Motor 1/3 HP 230 VAC
- Pump Motor 1/2 HP 230 VAC

Item #	FKC - Polymer System M-1200-5-P-120-P	Manufacturer	Part Number	Qty
401	Mixing Chamber	FKC	NA	1
402	Buna-N O-Ring Dash 448	McMaster	9452K223	2
403	Mixing Motor 230VAC 1/3 HP 1800 RPM 56C	Leeson	11254.00	1
404	Mixing Blade	FKC	NA	1
405	Mechanical Seal	McMaster	9281K620	1
406	Injection Vavle	Circle Valve	532T1-2M	1
407	1" Flow Meter	IFM	SM8601	1
408	Rotometer .5-5 GPM	Harrington	Blue White F-55500LA	1
409	1" Actuated Floating Ball Valve	Bray	"140100-11000SSKR-NA 70E031-113G0536/K"	1
410	Pressure Regulator	McMaster	45805K68	1
411	Inline Mixer	Harrington	Koflo 1-40C-4-6-2	1
412	1" PSS Isolator Ring W/Pressure Guage/Switch	Onyx/IFM	1" NPT PSS/PG2794	1
413	Pressure Relief Valve	McMaster	8088K140	1
414	Calibration Column 6.34 GPH	Harrington	Koflo 500ML-SC	1
415	Polymer Pump 230VAC 1/2 HP	Seepex	MD 003-12	1
416	Gauge Isolator/Pressure Guage 0-160 PSI	Harrington	TG-25T160SB-PVC	2
417	Pipe and Fittings Sch 80			As Req.
418	Frame	FKC	NA	1
419	Polymer Flow Monitor	IFM	SI5006	1
420	Screw-In Adapter for part SI5006	IFM	E40107	1
421	Cordset for part SI5006	IFM	E18027	1
422	Control Panel	TSI	NA	1
423	"1/2"" PSS Isolator Ring W/Pressure Guage/Switch"	Onyx/IFM	1/2" NPT PSS/PG2794	1

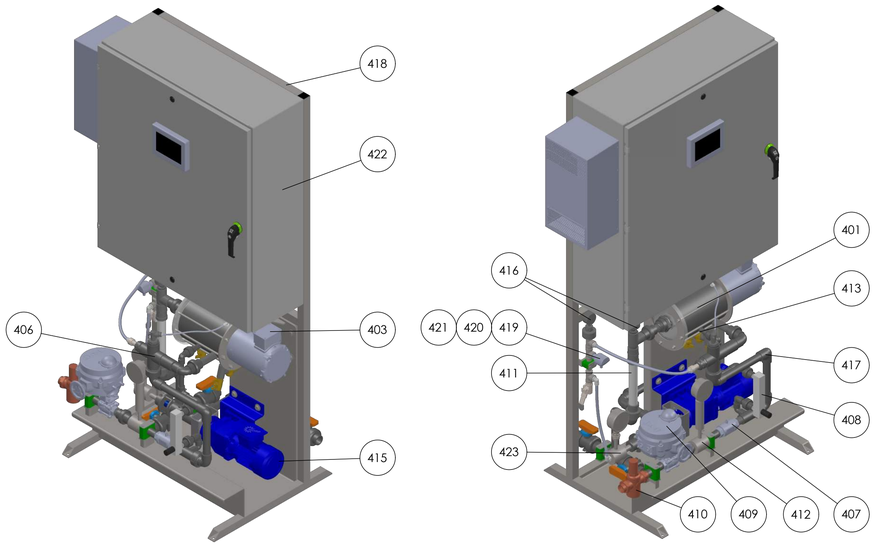

NO	BY	DATE	REVISIONS	DATE	APP.

Registered Professional Engineer (Civil) — DUONG T. DO — 40050 — Arizona, U.S.A. — Date Signed 12/31/27 — Expires 12/31/27

THESE DRAWINGS ARE THE PROPERTY OF P.A.C.E. AND SHALL NOT BE REPRODUCED IN ANY MANNER NOR BE USED FOR CONSTRUCTION UNLESS STAMPED "ISSUED FOR CONSTRUCTION".

PREPARED BY: DUONG DO
R.C.E. NO.: 40050
EXP. DATE: 12/31/27
PROJECT ENGINEER: DUONG DO
DRAWN: WW, MSA
DESIGNED: NT, NE
CHECKED: DD
SCALE:
DATE: FEB 2026

TITLE: **POLYMER SYSTEM SKID**

JOB: CITY OF SAN LUIS WEST WWTP
3.0 MGD MBR UPGRADES
SAN LUIS AZ.

PACE
Advanced Water Engineering
8723 E. VIA de COMMERCIO, SUITE A-204 | SCOTTSDALE, CA 85258
P: (408) 991-3595 | www.pacewater.com

SHEET
M12.5
64 OF 209 SHEETS

JOB NO. B777

FINAL PLANS ISSUED FOR BID

W:\B777\Engineering\B777 - 3MGD Exp\3MGD FINAL DSN\sheets\B777 - M12.5 Dewatering Cutsheets.dwg - Tab: M12.5 - by wwright on 02/02/26 at 4:01:57 PM

FOR REFERENCE ONLY

INDENSE PACKAGED PLANT
8 FT L X 4 FT W X 4 FT H

GENERAL NOTES

1. ALL IS TO BE CONSTRUCTED GREY FROM HIGH IMPACT NATURAL STRESS RELIEVED, VIRGIN COPOLYMER POLYPROPYLENE, U.O.W.S
2. SERVICE: WASTE WATER @ 40°F ~ 130°F
3. ALL FLANGES TWO-HOLED TO THE CENTER LINE
4. STEEL REINFORCEMENTS TO BE: CARBON STEEL HOT-DIPPED GALVANIZED
5. ALL DIMENSIONS SHOWN APPLY TO AMBIENT TEMPERATURE (NON-EXPAND)
6. A SPREADER BEAM IS REQUIRED TO BE DESIGNED TO ENSURE VERTICAL OR MINIMUM OUTWARD LIFT
7. SOME HIDDEN LINES AND COMPONENTS OMITTED FOR CLARITY
8. ALL GASKET MATERIAL TO BE 3/16" THK. BUNA-N
9. ALL FASTENERS TO BE 304 SS
10. HYDRO. TEST TO BE COMPLETED BEFORE SHIPMENT
11. PIPING TO BE PVC.

NOTE: CONTROL PANEL NOT SHOWN BUT WILL BE INSTALLED ON SKID BY VENDOR. CONTRACTOR SHALL PROVIDE 460V, 3PH, 60 Hz (20A) POWER TO CONTROL PANEL PER PLAN. CONTROL PANEL SHALL BE PRE-WIRED BY VENDOR TO SKID.

ITEM NO.	DESCRIPTION
1	TANK ASSY 8 FT L X 4 FT W X 4 FT H
2	SHS-18
3	2 CYCLONE INDENSE
4	WALKWAY WITH LADDER
5	VOGELSANG PUMP - 2 NOS.
6	FLOWMETER, 4 IN
7	KNIFE GATE VALVE, 4 IN - 4 NOS.
8	PRESSURE RELIEF VALVE, 4 IN
9	ANCHOR SCIENTIFIC FLOAT - 3 NOS.
10	JUNCTION PANEL
11	E&H LEVEL TRANSMITTER - 3 NOS.

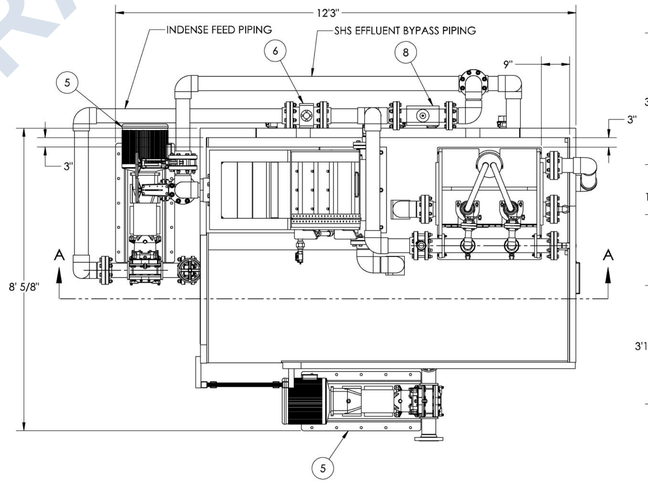

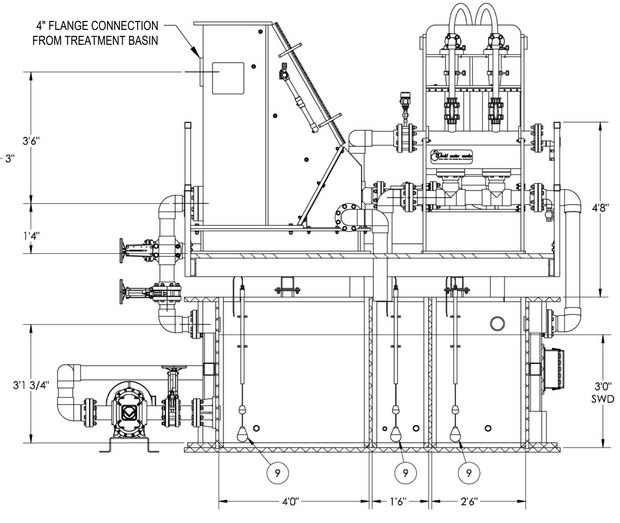

SECTION A-A

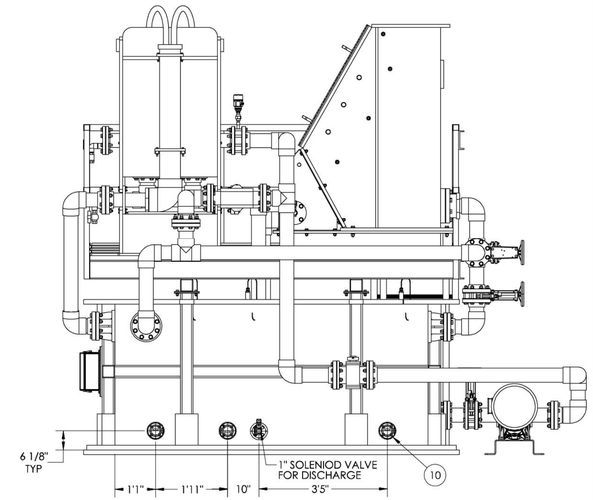

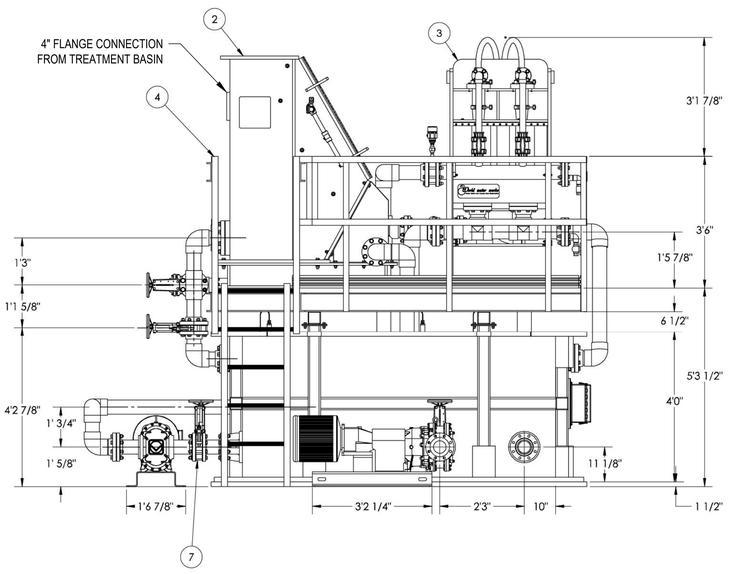

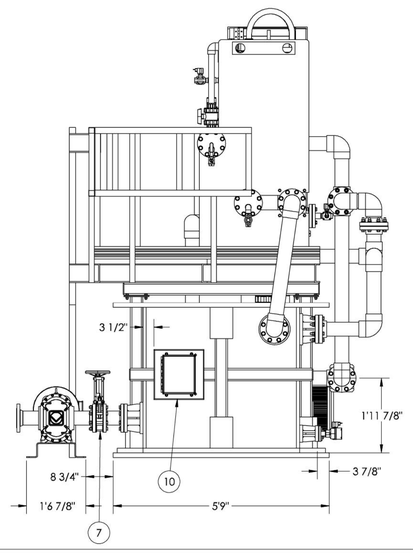

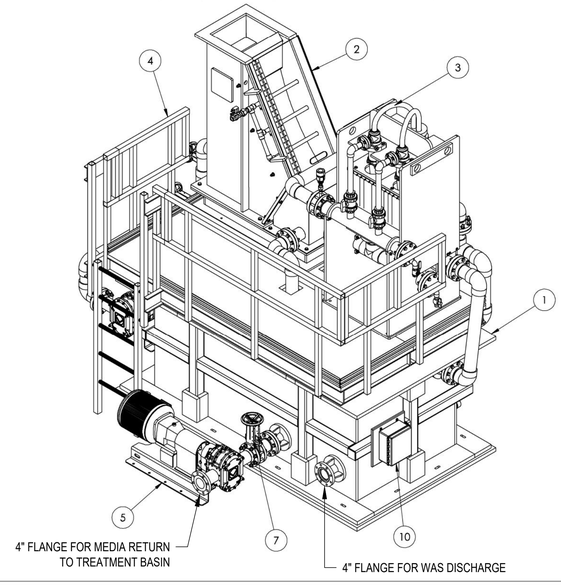

REV	DATE	DESCRIPTION	BY
R00	02/12/24	INTERNAL REVIEW	TA
R01	02/12/24	FOR APPROVAL	SRC

World water works

CLIENT:	WORLD WATER WORKS - ARXTERA
LOCATION:	WARMINSTER, PA
FILE NAME:	24003-0701
DESCRIPTION:	GENERAL ARRANGEMENT

FOR APPROVAL
P.O.#: 240115-01
DRAWN BY: TA
REVIEWED BY: GH
DATE: 02/12/24
SCALE:
JOB #: 24-003
DRAWING # 0701
SHEET: 1 OF 1 SHEETS

NO	BY	DATE	REVISIONS	DATE	APP.

Professional Engineer (Civil) — DUONG T. DO — 40050 — Registered — ARIZONA, U.S.A. — Date Signed 12/31/27 — Expires 12/31/27

PREPARED BY: DUONG DO
PROJECT ENGINEER
R.C.E. NO.: 40050
EXP: DATE
DRAWN: WW, MSA
DESIGNED: NT, NE
CHECKED: DD
SCALE:
DATE: FEB 2026

TITLE: MEDIA SCREEN CUTSHEET

JOB: CITY OF SAN LUIS WEST WWTP
3.0 MGD MBR UPGRADES
SAN LUIS AZ.

PACE
Advanced Water Engineering
8723 E. VIA de COMMERCIO, SUITE A-204 | SCOTTSDALE, CA 85258
P.: (408) 991-3595 | www.pacewater.com

SHEET
M12.6
65 OF 209 SHEETS

JOB NO. B777

THESE DRAWINGS ARE THE PROPERTY OF P.A.C.E. AND SHALL NOT BE REPRODUCED IN ANY MANNER NOR BE USED FOR CONSTRUCTION UNLESS STAMPED "ISSUED FOR CONSTRUCTION".

FINAL PLANS ISSUED FOR BID

DRAFT

FOR REFERENCE ONLY

W:\B777\Engineering\B777 - 3MGD Exp\3MGD FINAL DSN\sheets\B777 - M12.6 Dewatering Cutsheets.dwg - Tab: M12.6 - by wwright on 02/02/26 at 4:01:57 PM

GENERAL STRUCTURAL NOTES

APPLY UNLESS NOTED OTHERWISE

PK ASSOCIATES, LLC
6900 E. Belleview Ave. #200
Greenwood Village, Colorado 80111
Phone: (720) 799-1058
Email: cadd@pkastructural.com
Website: www.pkastructural.com

RAFT

BUILDING CODE:

2018 EDITION OF THE INTERNATIONAL BUILDING CODE, WITH THE CITY OF SAN LUIS, ARIZONA AMENDMENTS.

LOADS:

SUPERIMPOSED DEAD LOAD ON ROOF SLAB = 20 PSF.
FLOOR LIVE LOAD = 100 PSF (REDUCIBLE).
SUPERIMPOSED DEAD LOAD ON FLOOR SLABS = 100 PSF.
STAIR LIVE LOAD = 100 PSF.

WIND:

THE STRUCTURE AND ITS COMPONENTS ARE DESIGNED FOR WIND LOADS AS DEFINED BY THE BUILDING CODE, WHERE:

BASIC WIND SPEED 105 MPH.
RISK CATEGORY: III.
WIND EXPOSURE: C.
INTERNAL PRESSURE COEFFICIENT (GCpi) = +_ 0.18.

SEISMIC:

RISK CATEGORY = III.
Seismic Importance Factor: Ie = 1.25.
DESIGN CATEGORY = D.
SITE CLASS D.
Ss = 0.737, S1 = 0.304.
Sds = 0.595, Sd1 = 0.405.

FOUNDATIONS:

SOIL REPORT BY GEOTECHNICAL TESTING SERVICES, INC.; JOB NO.24-034-G; DATED APRIL 2025; SPREAD FOOTINGS SHALL BEAR ON FIRM, UNDISTURBED SOIL (CONTROLLED COMPACTED FILL). IN ACCORDANCE WITH THE ABOVE REPORT. BOTTOM OF FOOTING TO BE 24" MINIMUM BELOW FINISHED GRADE. (THESE FOOTING DEPTHS ARE MINIMUMS AND THE CONTRACTOR SHALL COORDINATE WITH SOILS REPORT AND OTHER TRADES TO ENSURE THESE MINIMUMS ARE SUFFICIENT FOR THE WORK.) (COMPACTED FILL SHALL EXTEND 5'-0" BEYOND EACH EDGE OF FOOTING.) FINISHED GRADE IS DEFINED AS TOP OF SLAB FOR INTERIOR FOOTINGS AND LOWEST ADJACENT GRADE WITHIN 5 FEET FOR PERIMETER FOOTINGS. DESIGN SOIL BEARING VALUE = 2800 PSF. FOUNDATION EXCAVATIONS SHALL BE INSPECTED BY SOILS ENGINEER PRIOR TO PLACEMENT OF CONCRETE.

CONCRETE:

MINIMUM 28 DAY STRENGTH 5,000 PSI W/C = 0.45, (TYPE II, U.N.O.)

BEAMS AND WALLS ----------5,000 PSI
MILD SLABS ----------5,000 PSI
SLABS ON GRADE ----------5,000 PSI
FOUNDATIONS ----------5,000 PSI

MECHANICALLY VIBRATE ALL CONCRETE WHEN PLACED.MAXIMUM SLUMP 4 1/2" FOR CONCRETE WITHOUT PLASTICIZER. IF PLASTICIZER IS USED, A HIGHER FINAL SLUMP MAY BE ALLOWED UPON STRUCTURAL ENGINEER'S APPROVAL.CONCRETE AGGREGATE SHALL BE NON-REACTIVE.

FLY ASH-IF PERMITTED BY THE SPECIFICATIONS, SHALL BE LIMITED 20% OF CEMENTIOUS MATERIALS.

REINFORCING:

ASTM A615 (Fy = 60 KSI) DEFORMED BARS FOR ALL BARS. ALL GRADE 60 REINFORCING TO BE WELDED SHALL BE ASTM A706. WELDED WIRE FABRIC PER ASTM A185, WIRE PER ASTM A82.NO TACK WELDING OF REINFORCING BARS ALLOWED WITHOUT PRIOR REVIEW OF PROCEDURE WITH THE STRUCTURAL ENGINEER. LATEST ACI CODE AND DETAILING MANUAL APPLY. CLEAR CONCRETE COVERAGES AS FOLLOWS UNLESS NOTED OTHERWISE IN THE CONCRETE FIRE RATING TABLE:

CAST AGAINST AND PERMANENTLY EXPOSED TO EARTH ---------- 3"
EXPOSED TO EARTH OR WEATHER
#6 OR LARGER ---------- 2"
#5 AND SMALLER ---------- 1 1/2"
COLUMNS (TO TIES) ---------- 1 1/2"
BEAMS (TO STIRRUPS) ---------- 1 1/2"
FLAT SLAB ---------- 3/4"
ALL OTHER PER LATEST EDITION OF ACI 318.

LAP SPLICES IN CONCRETE:

LAP SPLICES, UNLESS NOTED OTHERWISE, SHALL BE CLASS "B" TENSION LAP SPLICES PER LATEST EDITION OF ACI 318. LAP SPLICES IN CONCRETE COLUMNS SHALL BE TENSION LAP SPLICES. STAGGER SPLICES A MINIMUM OF ONE LAP LENGTH. LAPS IN WELDED WIRE FABRIC SHALL BE MADE SO THAT THE OVERLAP, MEASURED BETWEEN OUTERMOST CROSS WIRES OF EACH FABRIC SHEET, IS NOT LESS THAN THE SPACING OF CROSS WIRES PLUS 2 INCHES. ALL WELDED WIRE FABRIC SHALL BE CHAIRED TO ENSURE PROPER CLEARANCES.

ALL SPLICE LOCATIONS SUBJECT TO APPROVAL BY THE STRUCTURAL ENGINEER. PROVIDE BENT CORNER BARS TO MATCH AND LAP WITH HORIZONTAL BARS AT ALL CORNERS AND INTERSECTIONS PER TYPICAL DETAILS. REINFORCING BAR SPACING GIVEN ARE MAXIMUM ON CENTERS.ALL BARS PER CRSI SPECIFICATIONS AND HANDBOOK. DOWEL ALL VERTICAL REINFORCING TO FOUNDATION WITH STANDARD 90-DEGREE HOOKS UNLESS NOTED OTHERWISE. SECURELY TIE ALL BARS IN LOCATION BEFORE PLACING CONCRETE. CONCRETE COLUMN DOWEL EMBEDMENT SHALL BE A TENSION LAP DOWEL WITH EMBEDMENT ACCORDING TO THE LATEST EDITION OF THE ACI 318.

CONCRETE SLABS OVER RIGID FOAM FILL:

ALL RIGID FOAM SHALL BE ASTM D6817 TYPE EPS15 OR BETTER WITH THE FOLLOWING MINIMUM PROPERTIES:

DENSITY: 0.9PCF (MIN.) PER ASTM C303
FLEXURAL STRENGTH: 25 PSI PER ASTM C203
COMPRESSIVE RESISTANCE @ 1% DEFORMATION: 3.6 PSI PER ASTM C165 OR ASTM D1621
COMPRESSIVE RESISTANCE @ 10% DEFORMATION: 10 PSI PER ASTM C165 OR ASTM D1621

ANCHOR BOLTS:

ALL ANCHOR BOLTS SHALL BE ASTM F1554 GRADE 36 U.N.O. - WHEN SPECIFIED ON PLAN, ALL ASTM F1554 GRADE ANCHOR BOLTS SHALL BE GRADE 55 (SUPPLEMENTAL GRADE REQUIREMENT 'S1' AT WELDABLE) ANCHOR BOLTS.

MAY BE BENT IN FIELD PER AISC REQUIREMENTS TO FIX DAMAGED ANCHOR BOLTS; FIELD BENT IS LIMITED TO 45° OR LESS. ANCHOR BOLTS CAN HAVE HEADED OR HOOKED BOLTS SHAPES. USE HEADED ANCHOR BOLTS WHERE ANCHOR BOLT SHAPE IS NOT SPECIFIED. ANCHOR BOLTS SHALL BE INSPECTED PER SPECIAL INSPECTION TABLE REQUIREMENTS.

DRYPACK:

DRYPACK SHALL BE 5,000 PSI NON-SHRINK GROUT, FIVE STAR OR EQUIVALENT. INSTALL DRYPACK UNDER BEARING PLATES BEFORE FRAMING MEMBER IS INSTALLED. AT COLUMNS, INSTALL DRYPACK UNDER BASEPLATES AFTER COLUMN HAS BEEN PLUMBED BUT PRIOR TO FLOOR OR ROOF INSTALLATION.

STRUCTURAL STEEL:

STEEL SECTIONS - MINIMUM GRADE AND STRENGTH

STEEL WIDE FLANGES	= ASTM A992 (50KSI)
STEEL CHANNELS	= ASTM A36 (36KSI)
STEEL ANGLES	= ASTM A36 (36KSI)
STEEL COLUMN BASE PLATES	= ASTM A572 (50KSI)
STEEL PLATES AT MOMENT FRAME AND BRACED FRAME CONNECTIONS	= ASTM A572 (50KSI)
STEEL PLATES (MISCELLANEOUS)	= ASTM A36 (36KSI)
STEEL HSS (RECTANGLE)	= ASTM A500 (50KSI), GRADE C
STEEL HSS (ROUND)	= ASTM A500 (46KSI), GRADE C
STEEL PIPES	= ASTM A501 (36KSI) -- OR -- ASTM A53 (35KSI), TYPE E OR S

NOTE: ALL 36KSI STEEL MAY BE SUBSTITUTED WITH 50KSI STEEL UNLESS NOTED OTHERWISE.

ALL CONSTRUCTION PER LATEST AISC HANDBOOK. ALL REFERENCE TO HEADED STUDS SHALL BE HIGH STRENGTH HEADED STUDS. ATTACHMENT OF HEADED STUDS SHALL CONFORM TO ALL REQUIREMENTS OF THE LATEST EDITION OF THE "RECOMMENDED PRACTICES FOR STUD WELDING" AND THE "STRUCTURAL WELDING CODE" PUBLISHED BY AWS. ALL BOLTS, ANCHOR BOLTS, EXPANSION BOLTS, ETC. SHALL BE INSTALLED WITH SLOTTED HOLES IN STEEL SECTIONS. ALL HIGH STRENGTH BOLTING SHALL BE INSPECTED BY AN INDEPENDENT TESTING LABORATORY. ALL WELDING SHALL BE PERFORMED BY WELDERS HOLDING VALID CERTIFICATES AND HAVING CURRENT EXPERIENCE IN THE TYPE OF WELD SHOWN ON THE DRAWINGS OR NOTES. CERTIFICATES SHALL BE THOSE ISSUED BY AN ACCEPTED TESTING AGENCY. ALL WELDING DONE BY E70 SERIES LOW HYDROGEN RODS UNLESS NOTED OTHERWISE. FOR GRADE 60 REINFORCING BARS, USE E90 SERIES. AT MOMENT CONNECTIONS, REMOVE ALL WELD BACKING AND RUN-OFF TABS AND BACKGOUGE TO SOUND WELD METAL. BACKWELD WITH A MINIMUM 5/16" FILLET. ALL WELDING PER LATEST AMERICAN WELDING SOCIETY STANDARDS, (EXCEPT STEEL JOISTS AND JOIST GIRDERS SHALL COMPLY WITH SJI STANDARDS). THESE DRAWINGS DO NOT DISTINGUISH BETWEEN SHOP AND FIELD WELDS; THE CONTRACTOR MAY SHOP WELD OR FIELD WELD AT HIS DISCRETION. SHOP WELDS AND FIELD WELDS SHALL BE SHOWN ON THE SHOP DRAWINGS SUBMITTED FOR REVIEW. ALL FULL (COMPLETE) PENETRATION WELDS SHALL BE TESTED AND CERTIFIED BY AN INDEPENDENT TESTING LABORATORY. WHEN STRUCTURAL STEEL IS FURNISHED TO A SPECIFIED MINIMUM YIELD POINT GREATER THAN 36 KSI, THE ASTM OR OTHER SPECIFICATION DESIGNATION SHALL BE INCLUDED NEAR THE ERECTION MARK ON EACH SHIPPING ASSEMBLY OR IMPORTANT CONSTRUCTION COMPONENT, OVER ANY SHOP COAT OF PAINT, PRIOR TO SHIPMENT FROM THE FABRICATOR'S PLANT. STRUCTURAL STEEL COMPONENTS, AND FASTENERS AT ALL EXTERIOR CONDITIONS SHALL BE GALVANIZED OR PROTECTED AGAINST CORROSION USING APPROVED METHOD PUBLISHED BY AISC OR ANSI. WELDS ON GALVANIZED STEEL SHALL FOLLOW AWS D-19.0 SPECIFICATIONS.

STRUCTURAL BOLTS:

ALL STRUCTURAL BOLTS SHALL BE ASTM F3125 GRADE A325 TYPE 1 AND SHALL BE INSTALLED AS BEARING-TYPE CONNECTIONS WITH THREADS INCLUDED IN SHEAR PLANE (I.E. A TYPE "N" CONNECTION) UNLESS NOTED OTHERWISE. USE A325 TYPE 3 BOLTS AT ALL CONNECTIONS EXPOSED TO WEATHERING. USE SC (SLIP CRITICAL) AT ALL MOMENT FRAMES AND BRACED FRAMES. USE ASTM A354 BOLTS WHERE THE BOLT LENGTH REQUIRED FOR THE CONNECTION EXCEEDS THE MINIMUM LENGTH OF AN A325 BOLT. BOLTS MAY BE TIGHTENED USING ANY AISC APPROVED METHOD. ALL STRUCTURAL BOLTING SHALL BE INSPECTED BY AN INDEPENDENT TESTING LABORATORY TO ENSURE BOLT TENSION.

STEEL GRATING:

UNLESS NOTED OTHERWISE IN ARCHITECTURAL SPECIFICATIONS, USE PAINTED (GALVANIZED) STEEL GRATING WITH 2 1/2" X 3/16" BEARING BARS AT 1 3/16" O.C. AND CROSSBARS AT 4" O.C. GRATING SHALL BE ERECTED AND ATTACHED PER MANUFACTURER'S RECOMMENDATIONS.

STEEL STAIRS:

REFER TO PROJECT SPECIFICATIONS, ARCHITECTURAL DRAWINGS AND STRUCTURAL DRAWINGS TO DETERMINE EXTENT OF STAIRS AND WHAT SHALL BE PROVIDED BY THE STAIR MANUFACTURER. STAIRS ARE TO FRAME INTO FLOOR BEAMS AND BUILDING COLUMNS ONLY. DO NOT CONNECT STAIRS TO ELEVATOR GUIDE RAIL SUPPORTS OR DIAGONAL BRACING. VERIFY ALL OTHER CONDITIONS WITH ARCHITECT PRIOR TO PROCEEDING. IF STAIR FRAMING RESULTS IN ECCENTRIC LOADING OF THE STRUCTURAL MEMBERS, STAIR MANUFACTURER SHALL PROVIDE BRACING OF STRUCTURAL MEMBERS. CONTRACTOR SHALL SUBMIT DETAILED SHOP DRAWINGS TO THE ARCHITECT/ENGINEER FOR REVIEW PRIOR TO FABRICATION.

LANDING PANS SHALL BE 12 GAGE MINIMUM. TREAD PANS SHALL BE 14 GAGE MINIMUM. CONCRETE FILL FOR TREADS UNDER 4'-0" IN LENGTH SHALL BE REINFORCED WITH 6 X 6 - W1.4 X W1.4 W.W.F CONCRETE FILL FOR TREADS GREATER THAN 4'-0" IN LENGTHS SHALL BE REINFORCED WITH #3 AT 12" o.c. FOR ACTUAL LANDING AND STAIR PAN CONFIGURATIONS, SEE ARCHITECTURAL DRAWINGS.

CONSTRUCTION JOINTS:

ALL CONSTRUCTION JOINTS IN WALLS SHALL BE KEYED IN ACCORDANCE WITH THE TYPICAL CONSTRUCTION JOINT DETAILS SHOWN ON THE STRUCTURAL DRAWINGS OR, AT THE CONTRACTOR'S OPTION, SHALL BE INTENTIONALLY ROUGHENED IN ACCORDANCE WITH THE FOLLOWING: THE SURFACE OF ROUGHENED JOINTS SHALL BE SAND BLASTED OR ROUGHENED WITH A CHIPPING HAMMER TO EXPOSE THE AGGREGATE EMBEDDED IN THE PREVIOUS POUR. THE EXPOSED AGGREGATE SHALL PROTRUDE A MINIMUM OF 1/4 INCH. ALL SURFACES OF CONSTRUCTION JOINTS SHALL BE CLEANED AND LAITANCE REMOVED. IMMEDIATELY BEFORE NEW CONCRETE IS PLACED, ALL CONSTRUCTION JOINTS SHALL BE WETTED AND STANDING WATER REMOVED. VERTICAL CONSTRUCTION JOINTS IN WALLS SHALL BE HELD TO A MAXIMUM SPACING OF 60'-0". ALL CONSTRUCTION JOINTS IN SLABS, JOISTS, BEAMS, AND GIRDERS SHALL BE OFFSET A DISTANCE EQUAL TO TWICE THE WIDTH OF THE BEAM.

ACCORDANCE WITH THE TYPICAL SLAB ON DECK CONSTRUCTION JOINT DETAIL SHOWN ON THE STRUCTURAL DRAWINGS. BEAMS AND GIRDERS HAVE BEEN DESIGNED ASSUMING THE CONSTRUCTION JOINTS TO BE LOCATED IN THE MIDDLE THIRD OF THE BEAM, GIRDER, OR SLAB SPAN. ALL CONSTRUCTION, CONTROL, AND ISOLATION JOINTS FOR SLABS ON GRADE SHALL BE IN ACCORDANCE WITH THE TYPICAL SLAB ON GRADE DETAILS. THE CONTRACTOR SHALL SUBMIT THE PROPOSED LOCATIONS OF CONSTRUCTION JOINTS TO THE ENGINEER FOR ACCEPTANCE BEFORE STARTING CONSTRUCTION.

FORM CAMBER FOR CONCRETE SLABS:

CONCRETE FORMWORK SHALL HAVE BUILT-IN CAMBER TO COMPENSATE FOR FORM SAG UNDER WET CONCRETE LOAD, IN ADDITION TO STRUCTURAL CAMBER NOTED. ONE-WAY POST-TENSIONED SLABS SHALL BE CAMBERED 1/1000 OF THE SPAN DISTANCE, ONE-WAY MILD REINFORCED SLABS SHALL BE CAMBERED 1/500 OF THE SPAN DISTANCE, TWO-WAY POST-TENSIONED SLABS SHALL BE CAMBERED 1/1000 OF THE ACROSS DIAGONAL SPAN DISTANCE, TWO-WAY MILD REINFORCED SLABS SHALL BE CAMBERED 1/500 OF THE ACROSS DIAGONAL SPAN DISTANCE, UNLESS NOTED OTHERWISE ON THE DRAWINGS. BEAM AND JOIST STRUCTURAL CAMBERS ARE NOTED ON THE DRAWINGS. CAMBERS OF LESS THAN 1/8 INCH MAY BE NEGLECTED.

CONTRACTOR IS REQUIRED TO PROVIDE SLABS WITH FLATNESS PROPERTIES IN CONFORMANCE WITH SPECIFICATIONS AS PART OF THE BASE BID. WHERE SLAB FLATNESS DOES NOT MEET SPECIFICATIONS, CONTRACTOR SHALL LEVEL THE SLAB USING AN APPROVED LEVELING AGENT.

ELECTRICAL CONDUIT IN CONCRETE SLABS:

ELECTRICAL CONDUIT SHALL BE RIGID STEEL CONDUIT OR FLEXIBLE PLASTIC CONDUIT. ALUMINUM CONDUIT IS PROHIBITED. CONDUIT WITH A MAXIMUM OUTSIDE DIAMETER OF 1/6 TIMES THE SLAB THICKNESS MAY BE EMBEDDED IN ONE LAYER AT THE MID-DEPTH OF SLABS. MINIMUM CLEAR DISTANCE BETWEEN CONDUITS SHALL BE 3 TIMES CONDUIT DIAMETER. CONDUIT SHALL BE FIRMLY CHAIRED AND TIED TO PREVENT DISPLACEMENT DURING POURING. PLACE #3 AT 12 INCHES O.C. ADDITIONAL REINFORCING ABOVE AND BELOW, PERPENDICULAR TO THE CONDUIT. THE ADDED REINFORCING SHALL EXTEND 1'-0" PAST THE CONDUIT ON BOTH SIDES. FOR CONDUIT PLACED IN SLABS ON METAL DECKING, CONDUIT SHALL RUN IN THE METAL DECK FLUTES PER THE TYPICAL CONDUIT IN SLAB ON METAL DECK DETAIL.

CONCRETE INSERTS:

THIN SLAB TYPE INSERTS SHALL BE GALVANIZED AND HAVE THE FOLLOWING MINIMUM WORKING LOADS(A 4:1 RATIO OF ULTIMATE TO WORKING VALUES IS ASSUMED):

BOLT DIAMETER	WORKING LOAD SHEAR	TENSION
1/2"	1,000 LBS.	650 LBS.
5/8"	1,250 LBS.	700 LBS.
3/4"	1,600 LBS.	850 LBS.

COIL LOOP INSERTS SHALL BE GALVANIZED AND HAVE THE FOLLOWING MINIMUM WORKING LOADS(A 3:1 RATIO OF ULTIMATE TO WORKING VALUES IS ASSUMED):

BOLT DIAMETER	WORKING LOAD SHEAR	TENSION
1/2"	2,200 LBS.	2,820 LBS.
5/8"	3,000 LBS.	3,620 LBS.
3/4"	3,100 LBS.	3,660 LBS.

THREADED COIL RODS, COIL NUTS, ETC., USED IN CONJUNCTION WITH CONCRETE INSERTS, SHALL HAVE A WORKING LOAD EQUAL TO OR GREATER THAN THE CORRESPONDING CONCRETE INSERT. CONTRACTOR SHALL SUBMIT MANUFACTURER'S SIZE AND STRENGTH DATA PRIOR TO CONSTRUCTION TO THE STRUCTURAL ENGINEER THRU THE ARCHITECT. VALUES LISTED ABOVE ARE FOR RICHMOND STRUCTURAL CONNECTION INSERTS.

EXPANSION AND SCREW ANCHORS:

USE STUD TYPE EXPANSION ANCHOR WITH A SINGLE PIECE WEDGE ONLY WHERE NOTED ON PLANS. IF USE IS REQUESTED FOR OTHER THAN WHERE NOTED CONTACT STRUCTURAL ENGINEER THROUGH ARCHITECT FOR APPROVAL.

CONTRACTOR SHALL SUBMIT MANUFACTURER'S SIZE AND STRENGTH DATA TO ENGINEER THROUGH ARCHITECT PRIOR TO CONSTRUCTION. INSTALL ALL BOLTS AS OUTLINED IN MANUFACTURER'S SPECIFICATIONS, UTILIZING PROPER SIZE AND TYPE OF DRILL, CLEANING HOLE, DRIVING AND TIGHTENING BOLT.

IN CONCRETE:

ANCHORS USED MUST HAVE ICC APPROVAL AND INCLUDE HILTI KWIK BOLT TZ2 (ESR-4266), AND SIMPSON STRONG BOLT-2 (ESR-3037), AND DEWALT POWER-STUD+SD2 (ESR-2502), AND SIMPSON TITEN HD (ESR-2713), HILTI KWIK HUS-EZ (ESR-3027), AND DEWALT SCREW-BOLT+ (ESR-3889) OR APPROVED EQUAL.

EPOXY ANCHORS IN CONCRETE MASONRY:

INJECTABLE ADHESIVE SHALL BE USED FOR INSTALLATION OF REINFORCING STEEL DOWELS OR THREADED
ANCHOR RODS AND INSERTS INTO NEW OR EXISTING CONCRETE OR SOLID GROUTED CONCRETE MASONRY
UNITS ONLY WHERE SPECIFIED ON PLANS. IF USE IS REQUESTED FOR OTHER THAN WHERE NOTED CONTACT STRUCTURAL ENGINEER THROUGH ARCHITECT FOR APPROVAL. ADHESIVE SHALL BE FURNISHED IN SIDE BY SIDE PACKS WHICH KEEP COMPONENT A AND COMPONENT B SEPARATE. USE ONLY INJECTION TOOLS AND STATIC MIXING NOZZLES RECOMMENDED BY MANUFACTURER. MANUFACTURER'S INSTRUCTIONS SHALL BE FOLLOWED.

IN CONCRETE:

ANCHORS USED MUST HAVE I.C.C. APPROVAL IN CRACKED CONCRETE AND INCLUDE SIMPSON SET-3G (ESR-4057), HILTI HIT-RE500-V3 (ESR-3814), DEWALT PURE110+ (ESR-3298) OR APPROVED EQUIVALENT. THE USE OF ANY EPOXY ANCHOR MUST BE APPROVED BY THE ENGINEER OF RECORD PRIOR TO INSTALLATION.

STRUCTURAL FILL:

ALL FILL PLACED TO SUPPORT SLABS ON GRADE, BEHIND PERMANENT WALLS, AND AROUND ALL DRAINS SHALL CONSIST OF WELL GRADED, GRANULAR MATERIAL PER THE SPECIFICATIONS. SOILS FOR STRUCTURAL FILL SHALL BE APPROVED BY THE GEOTECHNICAL ENGINEER. STRUCTURAL FILL SHALL BE PLACED ON SOUND NATIVE MATERIAL. PROOF-ROLL CUT AREAS WHICH PROVIDE SUPPORT FOR PERMANENT STRUCTURES. AREAS WHICH ARE EXCESSIVELY YIELDING, AS DETERMINED BY THE CONTINUOUS OBSERVATION OF THE GEOTECHNICAL ENGINEER, SHALL BE OVEREXCAVATED AND REPLACED WITH STRUCTURAL FILL. STRUCTURAL FILL SHALL BE PLACED PER THE SPECIFICATION. USE LEAN CONCRETE FILL BELOW ALL PIPES EXISTING OUT OF BASEMENT WALL, FULL HEIGHT OF WALL. CONCRETE SHALL CONTAIN 2 SACKS OF CEMENT PER YARD.

LATERAL PRESSURE ON SUBGRADE WALLS:

THE DESIGN PRESSURES FOR SUBGRADE WALLS ARE BASED ON A "DRAINED" CONDITION. SEE CIVIL AND MECHANICAL DRAWINGS FOR SUBGRADE DRAINAGE SYSTEM. SEE GEOTECHNICAL REPORT FOR COMPACTION REQUIREMENTS AT SUBGRADE WALLS. SUBGRADE WALLS AND SUPPORTING SLABS SHALL HAVE ATTAINED THEIR FULL CONCRETE STRENGTH BEFORE PLACING ANY BACKFILL U.N.O. THE CONTRACTOR SHALL PROVIDE TEMPORARY BRACES FOR WALLS IF BACKFILL IS PLACED BEFORE WALLS AND SLABS ACHIEVE FULL CONCRETE STRENGTH.

NOTES ON CRACKING OF CONCRETE STRUCTURES:

CRACKING IS INHERENT TO THE MATERIAL PROPERTIES OF CONCRETE CONSTRUCTION (INCLUDING POST-TENSIONED CONCRETE STRUCTURES). WHILE EVERY EFFORT HAS BEEN MADE TO MINIMIZE THE EFFECTS OF UNSIGHTLY CRACKING, THE PRESENCE OF CRACKS ARE NORMAL AND UNAVOIDABLE. THE DESIGN OF THE CONCRETE STRUCTURAL ITEMS HAVE BEEN ANALYZED USING A "CRACKING SECTION." THE PRESENCE OF THE CRACKING SHOULD NOT BE CONSIDERED DETRIMENTAL TO THE STRUCTURE. CRACKS LARGER THAN 10 MILS SHALL BE FILLED AND SEALED WITH AN APPROVED CRACK FILLER TO PREVENT FUTURE DETERIORATION. ALLOWANCE SHALL BE MADE IN THE CONSTRUCTION BUDGET FOR SEALING OF SUCH CRACKS. IN SOME CASE, CRACKS DO NOT APPEAR UNTIL WELL AFTER CONSTRUCTION HAS BEEN COMPLETED. IT IS THE RESPONSIBILITY OF THE OWNER TO MAINTAIN THE STRUCTURE PROPERLY OVER THE LIFE OF THE STRUCTURE. CONCRETE CRACKS, SHOULD THEY OCCUR, SHALL BE FILLED AND SEALED TO PREVENT PREMATURE DETERIORATION OF THE STRUCTURE.

SHOP DRAWINGS:

SHOP DRAWINGS SHALL BE SUBMITTED FOR ALL STRUCTURAL ITEMS IN ADDITION TO ITEMS REQUIRED BY ARCHITECTURAL SPECIFICATIONS.

THE CONTRACTOR SHALL REVIEW ALL SHOP DRAWINGS PRIOR TO SUBMITTAL. ITEMS NOT IN ACCORDANCE WITH CONTRACT DOCUMENTS SHALL BE FLAGGED UPON HIS REVIEW.

VERIFY ALL DIMENSIONS WITH ARCHITECTURAL DRAWINGS AND ALL FINISHED GRADE WITH CIVIL DRAWINGS.

ANY CHANGES, SUBSTITUTIONS, OR DEVIATIONS FROM CONTRACT DOCUMENTS SHALL BE CLOUDED BY MANUFACTURER OR FABRICATOR. ANY OF THE AFOREMENTIONED WHICH ARE NOT CLOUDED OR FLAGGED BY SUBMITTING PARTIES, SHALL NOT BE CONSIDERED APPROVED AFTER ENGINEER'S REVIEW, UNLESS NOTED ACCORDINGLY.

THE ENGINEER HAS THE RIGHT TO APPROVE OR DISAPPROVE ANY CHANGES TO CONTRACT DOCUMENTS AT ANYTIME BEFORE OR AFTER SHOP DRAWING REVIEW.

THE SHOP DRAWINGS DO NOT REPLACE THE CONTRACT DOCUMENTS. ITEMS OMITTED OR SHOWN INCORRECTLY AND ARE NOT FLAGGED BY THE STRUCTURAL ENGINEER OR ARCHITECT ARE NOT TO BE CONSIDERED CHANGES TO CONTRACT DOCUMENTS. IT IS THE CONTRACTOR'S RESPONSIBILITY TO MAKE SURE ITEMS ARE CONSTRUCTED PER THE CONTRACT DOCUMENTS.

THE ADEQUACY OF ENGINEERING DESIGNS AND LAYOUT PERFORMED BY OTHERS RESTS WITH THE DESIGNING OR SUBMITTING AUTHORITY.

REVIEWING IS INTENDED ONLY AS AN AID TO THE CONTRACTOR IN OBTAINING CORRECT SHOP DRAWINGS. RESPONSIBILITY FOR CORRECTNESS SHALL REST WITH THE CONTRACTOR.

DEFERRED SUBMITTALS: (PER 2018 IBC 107.3.4.1)

FOR THE PURPOSES OF THIS SECTION, DEFERRED SUBMITTALS ARE DEFINED AS THOSE PORTIONS OF THE DESIGN WHICH ARE NOT SUBMITTED AT THE TIME OF THE APPLICATION AND THAT ARE TO BE SUBMITTED TO THE BUILDING OFFICIAL WITHIN A SPECIFIED PERIOD.

DOCUMENTS FOR DEFERRED SUBMITTAL ITEMS SHALL BE SUBMITTED TO THE PROFESSIONAL IN RESPONSIBLE CHARGE FOR REVIEW. THE CONTRACTOR SHALL FORWARD THE REVIEWED DOCUMENTS TO BUILDING OFFICAL WITH A NOTATION INDICATING THAT THE DEFERRED SUBMITTAL DOCUMENTS HAVE BEEN REVIEWED AND BEEN FOUND TO BE IN GENERAL CONFORMANCE TO THE DESIGN OF THE BUILDING. THE DEFERRED SUBMITTAL ITEMS SHALL NOT BE INSTALLED UNTIL THE DESIGN AND SUBMITTAL DOCUMENTS HAVE BEEN APPROVED BY THE BUILDING OFFICIAL.

DEFERRED SUBMITTAL ITEMS:

METAL STAIRS
EXCAVATION SHORING SYSTEMS
GUARDRAILS/HANDRAILS
EQUIPMENT/PIPING ANCHORS/SEISMIC BRACING
PREENGINEERED CANOPY
CRANE RAIL AND RAIL CLAMPS

GENERAL:

ENTIRE CONTRACT DOCUMENTS SHALL BE USED TO CONSTRUCT ALL BUILDINGS. SOME CRITICAL ITEMS REQUIRED BY OTHER DISCIPLINES MAY NOT BE SHOWN ON STRUCTURAL DRAWING (i.e. WALL, FLOOR AND ROOF OPENINGS, ARCHITECTURAL, MECHANICAL AND PLUMBING LOADS, SUPPORT PLATES ETC.)

ITEMS SHOWN BY OTHER DISCIPLINES WITH REFERENCE TO STRUCTURAL DRAWING BUT NOT SHOWN ON THESE STRUCTURAL DOCUMENTS SHALL BE CONSIDERED DESIGN BUILD ITEMS. CONTRACTOR SHALL SUBMIT DESIGN BY OTHERS FOR REVIEW.

THE STRUCTURAL CONSTRUCTION DOCUMENTS REPRESENT THE FINISHED STRUCTURE. THEY DO NOT INDICATE THE METHOD OF CONSTRUCTION. THE CONTRACTOR SHALL PROVIDE ALL MEASURES NECESSARY TO PROTECT THE STRUCTURE DURING CONSTRUCTION. SUCH MEASURES SHALL INCLUDE, BUT NOT BE LIMITED TO, BRACING, SHORING FOR LOADS DUE TO CONSTRUCTION EQUIPMENT, ETC. THE STRUCTURAL ENGINEER SHALL NOT BE RESPONSIBLE FOR THE CONTRACTOR'S MEANS, METHODS, TECHNIQUES, SEQUENCES FOR PROCEDURE OF CONSTRUCTION, OR THE SAFETY PRECAUTIONS AND THE PROGRAMS INCIDENT THERETO (NOR SHALL OBSERVATION VISITS TO THE SITE INCLUDE INSPECTION OF THESE ITEMS).

CONSTRUCTION MATERIALS SHALL BE SPREAD OUT IF PLACED ON FRAMED CONSTRUCTION. LOAD SHALL NOT EXCEED THE DESIGN LIVE LOAD PER SQUARE FOOT.

WHERE REFERENCE IS MADE TO VARIOUS TEST STANDARDS FOR MATERIALS, SUCH STANDARDS SHALL BE THE LATEST EDITION AND/OR ADDENDA.

ESTABLISH AND VERIFY ALL OPENINGS AND INSERTS FOR ARCHITECTURAL, MECHANICAL, PLUMBING AND ELECTRICAL WITH APPROPRIATE TRADES, DRAWINGS AND SUBCONTRACTORS PRIOR TO CONSTRUCTION.

OPTIONS ARE FOR CONTRACTOR'S CONVENIENCE. IF THE CONTRACTOR CHOOSES AN OPTION, THE CONTRACTOR SHALL BE RESPONSIBLE FOR ALL NECESSARY CHANGES AND SHALL COORDINATE ALL DETAILS.

NOTES AND DETAILS ON DRAWINGS SHALL TAKE PRECEDENCE OVER GENERAL STRUCTURAL NOTES AND TYPICAL DETAILS. WHERE NO DETAILS ARE SHOWN, CONSTRUCTION SHALL CONFORM TO SIMILAR WORK ON THE PROJECT.

ALL DIMENSIONS SHOWN (INCLUDING ELEVATIONS) ON STRUCTURAL DRAWINGS ARE TO ASSIST CONTRACTOR IN VERIFICATION. SCALING DIMENSIONS FROM DRAWINGS IS NOT PERMITTED. LOCATION OF ALL ITEMS SHALL BE DETERMINED BY DIMENSIONS OR NOTES ONLY; DO NOT USE GRAPHIC APPEARANCE TO ASSUME SPECIFIC LOCATIONS.

CONTRACTOR SHALL BE RESPONSIBLE FOR VERIFICATION OF ALL DIMENSIONS WITH ARCHITECTURAL AND FINISHED GRADE WITH CIVIL DRAWINGS PRIOR TO START OF CONSTRUCTION. RESOLVE ANY DISCREPANCY WITH THE ARCHITECT.

STRUCTURAL SHEET INDEX

SHEET	DESCRIPTION
S0.1	GENERAL STRUCTURAL NOTES
S0.2	GENERAL STRUCTURAL NOTES
S0.3	TYPICAL DETAILS
S0.4	TYPICAL DETAILS
S0.5	TYPICAL DETAILS
S1.0	HEADWORKS PLAN
S2.1	FOUNDATION PLAN
S2.2	FRAMING PLAN
S7.0	DEWATERING PLAN
S10.0	CANOPY FRAMING PLANS
S11.0	FOUNDATION DETAILS
S11.1	FOUNDATION DETAILS
S11.2	FOUNDATION DETAILS
S11.3	FOUNDATION DETAILS
S12.0	FRAMING DETAILS
S12.1	FRAMING DETAILS
S12.2	FRAMING DETAILS
S12.3	FRAMING DETAILS
S12.4	FRAMING DETAILS

NO	BY	DATE	REVISIONS	DATE	APP.

Registered Professional Engineer's Seal
CERTIFICATE NO. 70374
JAMES APPLEYARD
Date Signed 1/24/26
ARIZONA, U.S.A.

PREPARED BY: DUONG DO
PROJECT ENGINEER
R.C.E. NO. #40060
EXP. DATE

DRAWN: WW
DESIGNED: DD
CHECKED: DD
SCALE
DATE: 5/16/2025

TITLE: GENERAL STRUCTURAL NOTES

JOB: CITY OF SAN LUIS WWTP IMPROVEMENTS
SAN LUIS AZ.

PACE
Advanced

GENERAL STRUCTURAL NOTES

APPLY UNLESS NOTED OTHERWISE

DRAFT

GENERAL (CONT.):

TYPICAL DETAILS MAY NOT NECESSARILY BE CUT ON PLANS, BUT APPLY UNLESS NOTED OTHERWISE.

WHERE DISCREPANCIES OCCUR BETWEEN PLANS, DETAILS, GENERAL STRUCTURAL NOTES AND SPECIFICATIONS, THE GREATER REQUIREMENTS SHALL GOVERN.

ANY ENGINEERING DESIGN, PROVIDED BY OTHERS AND SUBMITTED FOR REVIEW, SHALL BEAR THE SEAL OF AN ENGINEER REGISTERED IN THE STATE OF JURISDICTION.

SUPPLIER OF ENGINEERED STRUCTURAL COMPONENTS (i.e. STEEL JOISTS, STAIRS, PRECAST ITEMS) SHALL BE RESPONSIBLE FOR COMPLETE DESIGN AND SHALL USE ENTIRE CONTRACT DOCUMENTS TO INCLUDE ALL LOADS AND DETAIL REQUIREMENTS FROM ALL DISCIPLINES. SUPPLIER SHALL PROVIDE ADDITIONAL MATERIAL REQUIRED TO MEET ALL THEIR REQUIREMENTS FOR INSTALLATION (i.e. WIDER BEARING PLATES, SHIMS, ERECTION BOLTS ETC.).

STRUCTURAL STEEL SUPPLIER SHALL FURNISH BOLTS FOR OSHA CONNECTIONS (SEE DRAWINGS FOR DETAILS).

WALL SHORING SHALL BE INSTALLED PRIOR TO BACKFILLING BEHIND ALL BUILDING RETAINING WALLS, UNLESS ALL RESTRAINING SLABS ARE INSTALLED. USE HANDTAPPING ONLY WHEN WITHIN 8'–0", OR WITHIN HALF THE WALL HEIGHT OF BACKFILLED WALL.

CONTINUOUS FOUNDATION DRAIN PIPES (FRENCH DRAINS) OR WEEP HOLES SHALL BE PROVIDED BEHIND ALL
BASEMENT WALLS AND ALL EXTERIOR RETAINING WALLS THAT RETAIN MORE THAN 3'–0" OF SOIL. WEEP
HOLES WHERE USED SHALL BE 2" IN DIAMETER AT 6'–0" O.C. MAXIMUM.

EXISTING STRUCTURE:

EXISTING STRUCTURAL DIMENSIONS AND MEMBER SIZES ARE FOR REFERENCE ONLY. CONTRACTOR SHALL VERIFY ALL DIMENSIONS IN THE FIELD PRIOR TO FABRICATION. THE CONTRACTOR SHALL VERIFY THE ACTUAL CONFIGURATION OF EXISTING CONSTRUCTION AND THE CONDITION OF THE STRUCTURE BEFORE BEGINNING WORK. ANY DISCREPANCIES OR UNSOUND CONDITIONS SHALL BE REPORTED TO THE ARCHITECT FOR RESOLUTION BEFORE BEGINNING WORK. REFER TO ARCHITECTURAL PLANS FOR DIMENSIONS, EMBEDMENTS, AND OPENINGS NOT SHOWN. REFER TO MECHANICAL AND ELECTRICAL PLANS FOR DUCTS, PIPING, EMBEDMENTS, AND OPENINGS NOT SHOWN.

TEMPORARY SHORING AND BRACING MAY BE NECESSARY IN ORDER TO PERFORM THE NECESSARY STRUCTURAL MODIFICATIONS TO THE EXISTING STRUCTURE SHOWN ON THE STRUCTURAL AND ARCHITECTURAL PLANS AND DETAILS. THE CONTRACTOR MUST RETAIN A LICENSED STRUCTURAL ENGINEER WHO SHALL INVESTIGATE WHERE THIS TEMPORARY SHORING/BRACING IS REQUIRED, AND SHALL DESIGN THIS TEMPORARY SHORING/BRACING.

SEQUENCING CONSTRUCTION AND LATERAL STABILITY:

THE STRUCTURAL COMPONENTS BY THEMSELVES ARE A NON–SELF–SUPPORTING STRUCTURE. LATERAL FORCES DUE TO WIND, EARTHQUAKE, OR SOIL ARE CARRIED BY THE ROOF AND FLOOR DIAPHRAGMS TO THE LATERAL SYSTEM. CERTAIN ELEMENTS SHOWN ON OR LOCAL STABILITY OF OTHER ELEMENTS (SUCH AS BEAMS, COLUMNS, AND WALLS). IF, DUE TO SEQUENCING OF CONSTRUCTION, THESE STABILITY ELEMENTS ARE NOT IN PLACE, THE CONTRACTOR SHALL RETAIN A LICENSED STRUCTURAL ENGINEER WHO SHALL INVESTIGATE WHERE TEMPORARY SHORING/BRACING IS REQUIRED, AND SHALL DESIGN THIS TEMPORARY SHORING/BRACING. THE CONTRACTOR SHALL PROVIDE THIS SHORING/BRACING UNTIL THE REQUIRED STRUCTURAL ELEMENTS AND THEIR CONNECTIONS HAVE BEEN INSTALLED AND REACH THEIR FINAL DESIGN STRENGTHS.

MISCELLANEOUS:

REFER TO ARCHITECTURAL, MECHANICAL, ELECTRICAL, CIVIL, ELEVATOR, OR OTHER SPECIALTY ENGINEERING DRAWINGS FOR DIMENSIONS NOT SHOWN, INCLUDING BUT NOT LIMITED TO: SIZE AND LOCATION OF CURBS, EQUIPMENT HOUSEKEEPING PADS, WALL AND FLOOR OPENINGS, BLOCKOUTS, FLOOR DEPRESSIONS, SUMPS, DRAINS, ANCHOR BOLTS, EMBEDDED ITEMS, ARCHITECTURAL TREATMENT, ETC. CONTRACTOR SHALL VERIFY DIMENSIONS AND RESOLVE DISCREPANCIES OR CONFLICTS PRIOR TO CONSTRUCTION. WHERE SECTIONS ARE INDICATED ON THE PLAN BY A NUMBER AND A DRAWING NUMBER THUS, 1/S5.01, THE INDICATED SECTION (1) IS SHOWN ON STRUCTURAL DRAWING S5.01.

FLOOR FLATNESS/LEVELNESS SHALL MEET ARCHITECTURAL SPECIFICATIONS (1/4" IN 10 FOOT MINIMUM LEVELNESS UNLESS TIGHTER REQUIREMENT IN SPECIFICATIONS) IN HEIGHT FOR ALL STRUCTURAL SYSTEMS. CONTRACTOR SHALL INCLUDE COST FOR LEVELING ALL FLOORS. FOR ESTIMATING PURPOSES ONLY, ASSUME 1/2" THICK LEVELING AGENT OVER 15% OF FLOOR AREA.

SPECIAL INSPECTION:

SEE "SPECIAL INSPECTIONS TABLE" THIS SHEET.

FABRICATOR APPROVAL:

SPECIAL INSPECTIONS NOTED ABOVE APPLY TO SHOP FABRICATED ASSEMBLIES IN ADDITION TO ON–SITE WORK UNLESS THE FABRICATOR IS AN "APPROVED FABRICATOR" AS DEFINED IN 2018 IBC.

STRUCTURAL OBSERVATION:

ENGINEER OF RECORD SHALL PROVIDE VISUAL OBSERVATION OF THE STRUCTURAL SYSTEM, FOR GENERAL CONFORMANCE TO THE APPROVED PLANS AND SPECIFICATIONS, AT SIGNIFICANT CONSTRUCTION STAGES AND AT THE COMPLETION OF THE STRUCTURAL SYSTEM. CONTRACTOR IS REQUIRED FOR COORDINATING THE TIMING OF SITE VISITS AND SHALL INCLUDE A MINIMUM OF 3 VISITS. THESE VISITS ARE TO BE PAID BY THE CONTRACTOR. STRUCTURAL OBSERVATION DOES NOT INCLUDE OR WAIVE THE RESPONSIBILITY FOR THE INSPECTIONS REQUIRED BY THE BUILDING CODE (NOTED ABOVE).

INSTRUCTIONS TO BIDDERS CONTINGENCIES:

1. UNDER NO CIRCUMSTANCES SHALL THESE DRAWINGS BE "FINAL BID" UNTIL THE PROJECT IS FULLY PERMITTED.
2. ALL PRELIMINARY PRICING EFFORTS SHALL BE CONSIDERED TO BE ESTIMATES ONLY AND SHALL INCLUDE THE NECESSARY CONTINGENCIES, ALLOWANCES, ALTERNATES, ETC. AS APPROPRIATE TO ACCOUNT FOR MODIFICATIONS AND ADDITIONS THAT WILL OCCUR TO THE DRAWINGS DURING THE FINALIZATION OF THE DESIGN AND PERMITTING.
3. THE OWNER OR CONTRACTOR SHALL UTILIZE THE FOLLOWING MINIMUM CONTINGENCIES FOR EACH OF THE STRUCTURAL ELEMENT COSTS TO BE USED AT THE SOLE DISCRETION OF THE STRUCTURAL ENGINEER:

CONSTRUCTION DOCUMENTS/FINAL BID   3% MINIMUM

ALL OF THE "FINAL BID" CONTINGENCIES NOT USED BY THE STRUCTURAL ENGINEER SHALL BE REFUNDED TO THE OWNER PRIOR TO THE CLOSEOUT OF THE PROJECT.
4. ANY MODIFICATIONS, DELETIONS OR ELIMINATIONS TO THE STRUCTURAL BIDDING AND CONTINGENCY REQUIREMENTS, WITHOUT THE CONSENT OF THE STRUCTURAL ENGINEER, SHALL AUTOMATICALLY INDEMNIFY THE STRUCTURAL ENGINEER OF ANY COSTS THAT MAY ARISE DURING THE DESIGN AND CONSTRUCTION OF THE PROJECT.
5. WHERE DISCREPANCIES OCCUR WITHIN THE DRAWINGS THE CONTRACTOR WILL EITHER RESOLVE THE DISCREPANCIES WITH THE ARCHITECT BEFORE BIDDING OR INCLUDE THE GREATER COST ITEM IN THE BID AND RESOLVE THE DISCREPANCY PRIOR TO CONSTRUCTION.

NOTE TO CONTRACTOR REGARDING PRICING/BIDDING OF CITY SUBMITTAL DRAWINGS:

THESE DRAWINGS HAVE BEEN PREPARED FOR CITY SUBMITTAL, AND ARE NOT TO BE CONSIDERED 100% CONSTRUCTION DOCUMENTS UNTIL CITY PLAN REVIEW HAS BEEN COMPLETED AND FINAL BUILDING PERMIT HAS BEEN ISSUED. IF THESE DOCUMENTS ARE TO BE USED FOR PRICING, BID, OR STEEL MILL ORDER, THE CONTRACTOR SHALL PROVIDE IN THE PROJECT BUDGET AN ALLOWANCE FOR POTENTIAL CHANGES BETWEEN THE CITY SUBMITTAL DRAWINGS AND THE FINAL APPROVED SUBMITTAL AND CONSTRUCTION DOCUMENTS. ADDITIONALLY, MISCELLANEOUS ITEMS MAY NOT BE SHOWN ON THESE DRAWINGS. THESE ITEMS INCLUDE, BUT ARE NOT LIMITED TO, ELEVATOR AND EQUIPMENT SUPPORTS, BLOCKOUTS, ETC. REFER TO ARCHITECTURAL, MECHANICAL, ELECTRICAL, AND OTHER SPECIALTY DRAWINGS FOR ADDITIONAL INFORMATION. THE CONSTRUCTION BUDGET SHALL INCLUDE THESE ITEMS. THE STRUCTURAL ENGINEER WILL NOT BE RESPONSIBLE FOR CHANGE ORDER COSTS INCURRED (INCLUDING DISCARDED MATERIAL COSTS) DUE TO BIDDING OR STEEL MILL ORDER FROM THESE DRAWINGS. CONTACT STRUCTURAL ENGINEER FOR CLARIFICATION IF THE SCOPE AND QUANTITY OF ALLOWANCE TO BE CARRIED IS NOT CLEAR.

SPECIAL INSPECTION:

PER IBC CHAPTER 17, SPECIAL INSPECTION IS REQUIRED FOR THE FOLLOWING ITEMS:

CONCRETE: VERIFICATION AND INSPECTION	CONTINUOUS	PERIODIC	REFERRENCED STANDARD (NOTE 1)	IBC REFERENCE
1. Inspection of reinforcing steel, including prestressing tendons, and placement.	–	X	ACI 318: Ch. 20, 25.2 25.3, 26.6.1–26.6.3	1908.4
2. Reinforcing bar welding:			AWS D1.4 ACI 318: 26.6.4	---
a. Verify weldability of reinforcing bars other than ASTM A706;	–	X		
b. Inspect single–pass fillet welds, maximum 5/16"; and	–	X		
c. Inspect all other welds.	X	–		
3. Inspect anchors to be installed in concrete prior to and during placement of concrete where allowable loads have been increased or where strength design is used.	–	X	ACI 318: 17.8.2	---
4. Inspection of anchors post–installed in hardened concrete members. a. Adhesive anchors installed in horizontally or upwardly inclined orientations to resist sustained tension loads.	X	–	ACI 318: 17.8.2.4	---
b. Mechanical anchors and adhesive anchors not defined in 4.a.	–	X	ACI 318: 17.8.2	
5. Verifying use of required design mix.	–	X	ACI318: Ch. 19, 26.4.3, 26.4.4	1904.1, 1904.2 1908.2, 1908.3
6. Prior to concrete placement, fabricate specimens for strength tests, per form slump and air content tests, and determine the temperature of the concrete.	X	–	ASTM C172 ASTM C31 ACI 318: 26.4, 26.12	1908.10
7. Inspection of concrete and shotcrete placement for proper application techniques.	X	–	ACI 318: 26.5	1908.6, 1908.7, 1908.8
8. Verify maintenance of specified curing temperature and techniques.	–	X	ACI 318: 26.5.3–26.5.5	1908.9
9. Verification of in–situ concrete strength, prior to stressing of tendons in post–tensioned concrete and prior to removal of shores and forms from beams and structural slab.	–	X	ACI 318: 26.11.2	---
10. Inspect formwork for shape, location and dimensions of the concrete member being formed.	–	X	ACI 318: 26.11.1.2(b)	---

NOTES:
1. WHERE APPLICABLE, SEE ALSO SECTION 1707.1, SPECIAL INSPECTION FOR SEISMIC RESISTANCE.
2. TABLES TAKEN DIRECTLY FROM IBC FOR REFERENCE.

STEEL: VERIFICATION AND INSPECTION	CONTINUOUS	PERIODIC	REFERENCED STANDARD (NOTE1)	IBC REFERENCE
1. Material verification of high–strength bolts, nuts and washers: a. Identification markings to conform to ASTM standards specified in the approved construction documents.	–	X	APPLICABLE ASTM MATERIAL SPECS AISC 360, SEC. A3.3	
b. Manufacturer's certificate of compliance required.	–	X		
2. Inspection of high–strength bolting: a. Bearing–type connections. AISC 360, Section M2.5 1704.3.3	–	X		
3. Material verification of structural steel: a. Identification markings to conform to ASTM standards specified in the approved construction documents. b. Manufacturers' certified mill test reports.	–	–	AISC 360, SEC. M2.5 ASTM A 6 OR ASTM A 568	
4. Material verification of weld filler materials: a. Identification markings to conform to AWS specification in the approved construction documents.	–	–	AISC 360, SEC. A3.5	
b. Manufacturer's certificate of compliance required.	–	–		
5. Inspection of welding: a. Structural steel:	–	–		
1) Complete and partial penetration groove welds.	X	–	AWS D1.1	
2) Multipass fillet welds.	X	–	AWS D1.1	
3) Single–pass fillet welds > 5/16"	X	–	AWS D1.1	
4) Single–pass fillet welds = 5/16"	–	X	AWS D1.1	
5) Floor and roof deck welds.	–	X	AWS D1.3	
b. Reinforcing steel:	–	–		
1) Verification of weld ability of reinforcing steel other than ASTM A 706.	–	X	AWS D1.4 ACI 318: 3.5.2	
2) Reinforcing steel–resisting flexural and Axial forces in intermediate and special Moment frames, and boundary elements of Special reinforced concrete shear walls and shear reinforcement.	X	–		
3) Shear reinforcement.	X	–		
4) Other reinforcing steel.	–	X		
6. Inspection of steel frame joint details for compliance with approved construction documents:	–	X		
a. Details such as bracing and stiffening.	–	–		
b. Member locations.	–	–		
c. Application of joint details at each connection.	–	–		

NOTES:
1. WHERE APPLICABLE SEE ALSO SECTION 1701.1, SPECIAL INSPECTION FOR SEISMIC RESISTANCE.
2. TABLES TAKEN DIRECTLY FROM IBC FOR REFERENCE.

STEEL: CONSTRUCTION OTHER THAN STRUCTURAL STEEL: VERIFICATION AND INSPECTION	CONTINUOUS	PERIODIC	REFERENCED STANDARD (NOTE1)	IBC REFERENCE
1. Material verification of cold–formed steel deck: a. Identification markings to conform to ASTM standards specified in the approved construction documents.	–	X	APPLICABLE ASTM MATERIAL STANDARDS	
b. Manufacturer's certified test reports.	–			
2. Inspection of welding: a. Cold formed steel deck: 1) Floor and roof deck welds.	–	X	AWS D1.3	
b. Reinforcing steel: 1) Verification of weldability of reinforcing steel other than ASTM A 706.	–	X	ACI 318: 3.5.2	
2) Reinforcing steel resisting flexural and axial forces in intermediate and special moment frames, and boundary elements of special structural walls of concrete and shear reinforcement.	X	–		
3) Shear reinforcement.	–	X	AWS D1.4	
4) Other reinforcing steel.	X	–		
SOILS: Not the responsibility of the structural engineer. Special inspection certificate to be completed by geotechnical engineer.				
1. Verify materials below shallow foundations are adequate to achieve the design bearing capacity.	–	X		
2. Verify excavations are extended to proper depth and have reached proper material.	–	X		
3. Perform classification and testing of compacted fill materials.	–	X		
4. Verify use of proper materials, densities and lift thicknesses during placement and compaction of compacted fill.	X	–		
5. Prior to placement of compacted fill, inspect subgrade and verify that site has been properly prepared.	–	X		
EXPANSION, SCREW, AND EPOXY BOLTS: 1. During placement of all expansion, screw, & epoxy bolts, for visual verification of hole diameter and depth and placement of bolt and/or epoxy.	–	X		

DUTIES AND RESPONSIBILITIES OF THE SPECIAL INSPECTOR:

A) THE SPECIAL INSPECTOR SHALL OBSERVE THE WORK ASSIGNED TO BE CERTAIN IT CONFORMS WITH THE APPROVED DESIGN DRAWINGS AND SPECIFICATION.

B) THE SPECIAL INSPECTOR SHALL FURNISH INSPECTION REPORTS TO THE BUILDING OFFICIAL, AND TO THE ENGINEER.

C) UPON COMPLETION OF THE ASSIGNED WORK THE ENGINEER OR ARCHITECT SHALL COMPLETE AND SIGN THE APPROPRIATE FORMS CERTIFYING THAT TO THE BEST OF HIS KNOWLEDGE THE WORK IS IN CONFORMANCE WITH THE APPROVED PLANS AND SPECIFICATIONS AND THE APPLICABLE WORKMANSHIP PROVISIONS OF THE CODE.

PK ASSOCIATES, LLC
6900 E. Belleview Ave. #200
Greenwood Village, Colorado 80111
Phone: (720) 799–1058
Email: cadd@pkastructural.com
Website: www.pkastructural.com

INTERPRETATION OF DRAWINGS

LOCATION OF INFORMATION

ITEM	INFORMATION	LOCATION	SHEET
FOOTINGS	SIZE, REINFORCING	SCHEDULE (F) (WF) (GB)	S2.0
	DEPTH OF FOOTING	GENERAL STRUCTURAL NOTES (G.S.N.) SEE PLAN(S) AND/OR DETAILS	S1.0
CONCRETE WALLS	THICKNESS, REINFORCING	SEE PLAN(S) AND/OR DETAILS	S2.0

PLAN LEGEND

SYMBOL	DESCRIPTION	REMARKS
101; 201 PLAN VIEW	DETAIL CUTS SHOWN ON PLANS	TYPICAL DETAILS ARE TWO DIGIT SERIES NUMBERS FOUNDATION DETAILS ARE 100 SERIES NUMBERS PANEL DETAILS ARE 200 SERIES NUMBERS FRAMING DETAILS ARE 300 SERIES NUMBERS
(dashed box)	MECHANICAL EQUIPMENT	SEE PLANS FOR UNIT WEIGHTS
(crossed box)	OPENING IN FRAMING	SEE NOTE #4

NOTES

1. FOR MATERIAL STRENGTHS, SEE GENERAL STRUCTURAL NOTES
2. VERIFY ALL DIMENSION WITH ARCHITECTURAL DRAWINGS PRIOR TO START OF CONSTRUCTION – RESOLVE ANY DISCREPANCIES WITH ARCHITECT.
3. FOR CLARITY, ALL EXTERIOR SLABS AND SIDEWALKS MAY NOT BE SHOWN. FOR EXACT DIMENSIONS, LOCATIONS, JOINT AND SCORE LINES, SEE ARCHITECTURAL DRAWINGS
4. FOR CLARITY, ALL OPENINGS MAY NOT BE SHOWN ON FRAMING PLANS. FOR EXACT SIZE, NUMBER, AND LOCATION OF OPENINGS, SEE ARCHITECTURAL, MECHANICAL, ELECTRICAL AND PLUMBING DRAWINGS. FOR FRAMING AT OPENINGS, SEE TYPICAL STRUCTURAL DETAILS. VERIFY ALL SIZES, WEIGHTS AND LOCATIONS OF MECHANICAL EQUIPMENT WITH MECHANICAL ENGINEER AND MECHANICAL CONTRACTOR THROUGH ARCHITECT.
5. DETAILS MARKED "TYPICAL" MAY NOT BE CUT ON PLANS.
6. CONC C.J. – AS SHOWN ON PLAN INDICATES LOCATION OF EITHER KEYED OR SAW CUT CONTROL JOINT IN SLAB ON GRADE AT CONTRACTOR'S OPTION, SEE GENERAL STRUCTURAL NOTES AND PLANS.
7. MAS C.J. – AS SHOWN ON PLAN INDICATES MASONRY CONTROL JOINT IN MASONRY WALL, SEE G.S.N. AND TYPICAL DETAIL.
8. FOR CLARITY, DETAILS MAY SHOW ONLY ONE SIDE OF FRAMING CONDITION.
9. CONTRACTOR TO VERIFY, AND BE RESPONSIBLE FOR VARIATIONS IN CONCRETE QUANTITY DUE TO CAMBER, CONSTRUCTION DEAD LOAD DEFLECTIONS AND/OR TOLERANCES OF STRUCTURAL STEEL ELEMENTS (i.e. BEAMS, STEEL DECK, ETC.) AND PRECAST CONCRETE ELEMENTS.
10. ALL SCHEDULE MARK DESIGNATIONS MAY NOT NECESSARILY BE FOUND ON THE PLANS WHERE THE SCHEDULES OCCUR. SCHEDULES ARE TYPICAL TO THE PROJECT.

ABBREVIATIONS

A.B.C. – AGGREGATE BASE COURSE
A/C – AIR CONDITIONER
A.F.F. – ABOVE FINISHED FLOOR
ALT. – ALTERNATE
A.B. – ANCHOR BOLT
@ – AT (MEASUREMENT)
BM – BEAM
B.F.F – BELOW FINISHED FLOOR
B.O.B. – BOTTOM OF BEAM
B.O.D. – BOTTOM OF DECK
B.O.F. – BOTTOM OF FOOTING
BRG – BEARING
C.I.P. – CAST IN PLACE
C.L. – CENTERLINE
C.L.B. – CENTERLINE OF BEAM
C.L.C. – CENTERLINE OF COLUMN
C.L.F. – CENTERLINE OF FOOTING
C.L.W. – CENTERLINE OF WALL
CLR – CLEAR
CONC – CONCRETE
CONC C.J. – CONCRETE CONTROL JOINT
CONC S.J. – CONCRETE SAWCUT JOINT
C.M.U. – CONCRETE MASONRY UNIT
CONN – CONNECTION
CONT – CONTINUOUS
D.L. – DEAD LOAD
ø OR DIA. – DIAMETER
DN – DOWN
DWG(S) – DRAWING(S)
E.O.S. – EDGE OF SLAB
EQ – EQUAL
EQUIP – EQUIPMENT
EXP. BOLT – EXPANSION BOLT
EXP. JT (E.J.) – EXPANSION JOINT
E.W. – EACH WAY
F.F. – FINISHED FLOOR
F.O.M. – FACE OF MEMBER
F.O.S. – FACE OF STEEL
F.O.W. – FACE OF WALL
GA – GAGE
GALV – GALVANIZED
G.S.N. – GENERAL STRUCTURAL NOTES
GLB (GLULAM) – GLUED–LAMINATED BEAM
I.F.W. – INSIDE FACE OF WALL
HORIZ – HORIZONTAL
K(KIP) – 1000 POUNDS
L.L. – LIVE LOAD
LBS (#) – POUNDS
LLH – LONG LEG HORIZONTAL
LLV – LONG LEG VERTICAL
MFR('S) – MANUFACTURER('S)
MAS C.J. – MASONRY CONTROL JOINT
MECH'L – MECHANICAL
N/A – NOT APPLICABLE
N.T.S. – NOT TO SCALE
O.C. – ON CENTER
O.F.W. – OUTSIDE FACE OF WALL
OPP – OPPOSITE
P.C. – PRECAST CONCRETE
P.J. – PANEL JOINT
PLF – POUNDS PER LINEAR FOOT
PLYWD – PLYWOOD
PREFAB – PREFABRICATED
PSF – POUNDS PER SQUARE FOOT
PSI – POUNDS PER SQUARE INCH
REINF – REINFORCING
SLH – SHORT LEG HORIZONTAL
SLV – SHORT LEG VERTICAL
SIM – SIMILAR
SQ. – SQUARE
STD – STANDARD
T.L. – TOTAL LOAD
T.O.B. – TOP OF BEAM
T.O.C. – TOP OF CONCRETE
T.O.D. – TOP OF DECK
T.O.F. – TOP OF FOOTING
T.O.L. – TOP OF LEDGER
T.O.M. – TOP OF MASONRY
T.O.P. – TOP OF PLATE
T.O.S. – TOP OF STEEL
T.O.W. – TOP OF WALL
TYP – TYPICAL
U.N.O. – UNLESS NOTED OTHERWISE
VERT – VERTICAL
W.W.F. – WELDED WIRE FABRIC
W/ – WITH
W/O – WITHOUT

NO	BY	DATE	REVISIONS	DATE	APP.

Registered Professional Engineer (Civil) CERTIFICATE NO. 70374 JAMES APPLEYARD Date Signed 1/26/26 ARIZONA, U.S.A.

PREPARED BY DUONG DO
PROJECT ENGINEER #40050
R.C.E. NO. -- EXP. DATE
DRAWN WW SCALE
DESIGNED DD
CHECKED DD DATE 5/16/2025

TITLE GENERAL STRUCTURAL NOTES

JOB CITY OF SAN LUIS WWTP IMPROVEMENTS
SAN LUIS AZ.

PACE Advanced Water Engineering
8723 E. VIA de COMMERCIO, SUITE A-204 | SCOTTSDALE, CA 85258
P: (408) 991-3595 | www.pacewater.com

SHEET S0.2
67 OF 209 SHEETS
JOB NO. B777

THESE DRAWINGS ARE THE PROPERTY OF P.A.C.E. AND SHALL NOT BE REPRODUCED IN ANY MANNER NOR BE USED FOR CONSTRUCTION UNLESS STAMPED "ISSUED FOR CONSTRUCTION".

FINAL PLANS ISSUED FOR BID

M:\PROJECTS\2024\PACE\SAN LUIS WWTP 3MGD EXPANSION (24291)\GSN\S0.1-S0.2.dwg - Tab: S0.2 - by nslonaker on 01/26/26 at 12:59:49 PM

DRAFT

NOTES:

1. FLOOR OR ROOF LINE.
2. PROVIDE A MIN. OF 50% OF REINF. INTERRUPTED BY THE OPENING ON EACH SIDE OF THE OPENING – 2 BARS AT 4" O.C. MIN., EACH FACE.
3. WHERE 2'–0" CANNOT BE OBTAINED. EXTEND BAR AS FAR AS POSSIBLE AND HOOK OR BEND.
4. 2– #5 FOR OPENINGS 4'–0" WIDE OR LESS. 2 – #6 FOR OPENINGS WIDER THAN 4'–0".
5. 2– #5 TYPICAL CORNER DIAGONAL BARS.
6. WHERE WIDTH OF OPENING EXCEEDS 2 TIMES WALL THICKNESS. JAMB BARS SHALL EXTEND FULL HEIGHT OF WALL.
7. 2– #5 UNLESS LARGER BARS ARE SHOWN ON PLANS OR DETAILS.
8. DOWELS ARE SAME SIZE AS JAMB BARS.
9. EMBED AND LAP PER G.S.N.
10. ROUND HOLE WHERE OCCURS.
11. #5 AT 10" O.C. ADD'L. SHEAR REINF. FOR 4'–0" SECTION, 2'–0" ABOVE, AND 2'–0" BELOW OPENINGS. FOR MORE INFO. SEE DETAIL X.
12. CONCRETE WALL.
13. OPENING.
14. #5 AT 10" O.C. ADDIT'L. SHEAR REINF. FOR 4'–0" SECTION 2'–0" ABOVE AND 2'–0" BELOW (IF THAT IS POSSIBLE) OPENING.
15. TYPICAL HORIZ. REINF.

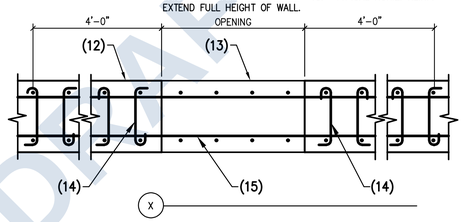

NOTES:

1. CONCRETE SLAB.
2. 6'–0" PAST OPENING (MIN.) UNLESS NOTED OTHERWISE.
3. OPENING IN CONCRETE SLAB SEE ARCH'L. AND MECH'L.
4. PROVIDE A MINIMUM OF 50% OF THE REINFORCEMENT INTERUPTED BY THE OPENING ON EACH SIDE OF THE OPENING (4 #6 AT 4" O.C. MINIMUM).

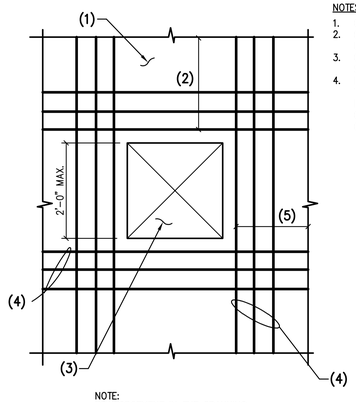

NOTE:
REINFORCEMENT IN THE SPANNING DIRECTION SHALL BE CONTINUOUS.

07 PLAN – TYPICAL OPENING IN CONCRETE SLAB

NO SCALE

STANDARD ASTM A615 (60 KSI) REBAR

BAR SIZE	EMBEDMENT		EXTENSION		MINIMUM OUTSIDE DIAMETER OF BEND (INCHES)	CLASS A STRAIGHT BAR DEVELOPMENT	
	3000 PSI CONCRETE	5000 PSI CONCRETE & HIGHER	90° HOOK	180° HOOK		5000 PSI & HIGHER	3000 PSI
#3	6.00	6.00	4.5	2.5	3.00	13	17
#4	7.75	6.00	6.0	2.5	4.00	17	22
#5	9.75	7.50	7.5	2.5	5.00	22	28
#6	11.50	9.00	9.0	3.0	6.00	26	33
#7	13.50	10.50	10.5	3.5	7.00	38	48
#8	15.50	12.00	12.0	4.0	8.00	43	55
#9	17.50	13.50	13.75	4.75	11.28	48	62
#10	19.50	15.25	15.25	5.25	12.70	54	70
#11	21.75	16.75	17.00	5.75	14.10	60	78

NOTES:
1. EMBEDMENT LENGTH IS BASED ON 2 1/2" MINIMUM SIDE COVER AND 2" MINIMUM END COVER.
2. CONTACT STRUCTURAL ENGINEER IF CENTER TO CENTER SPACING OF REINFORCING IS LESS THAN OR EQUAL TO 3 BAR DIAMETERS <3db OR 2db CLEAR SPACING BETWEEN BARS.
3. WHERE CLEAR COVER <db, MULTIPLY EMBEDMENT AND STRAIGHT BAR DEVELOPMENT BY 1.5.

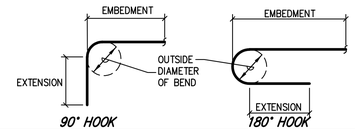

04 HOOKED DOWEL DEVELOPMENT LENGTH IN TENSION (INCHES)

NO SCALE

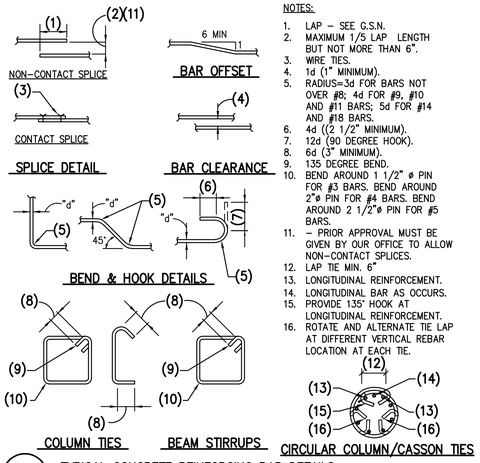

NOTES:
1. LAP – SEE G.S.N.
2. MAXIMUM 1/3 LAP LENGTH BUT NOT MORE THAN 6".
3. WIRE TIES.
4. 1d (1" MINIMUM).
5. RADIUS=3d FOR BARS NOT OVER #8; 4d FOR #9, #10 AND #11 BARS; 5d FOR #14 AND #18 BARS.
6. 4d ((2 1/2" MINIMUM).
7. 12d (90 DEGREE HOOK).
8. 6d (3" MINIMUM).
9. 135 DEGREE BEND.
10. BEND AROUND 1 1/2" ø PIN FOR #3 BARS. BEND AROUND 2"ø PIN FOR #4 BARS. BEND AROUND 2 1/2"ø PIN FOR #5 BARS.
11. – PRIOR APPROVAL MUST BE GIVEN BY OUR OFFICE TO ALLOW NON-CONTACT SPLICES.
12. LAP TIE MIN. 6"
13. LONGITUDINAL REINFORCEMENT.
14. LONGITUDINAL BAR AS OCCURS.
15. PROVIDE 135° HOOK AT LONGITUDINAL REINFORCEMENT.
16. ROTATE AND ALTERNATE TIE LAP AT DIFFERENT VERTICAL REBAR LOCATION AT EACH TIE.

05 TYPICAL CONCRETE REINFORCING BAR DETAILS

NO SCALE

STANDARD ASTM A615 (60 KSI) REBAR

CONC. PSI	CLASS B TENSION SPLICE LENGTHS						COMP. BARS	
	f'c = 2,500 PSI/ f'c = 3,000 PSI		f'c = 4,000 PSI		f'c = 5,000 PSI AND HIGHER		f'c = ALL	
BAR LOCATION	REGULAR	TOP	REGULAR	TOP	REGULAR	TOP	STD LAP	ENCLOSED W/ SPIRAL TIES
SIZE	CLASS	CLASS	CLASS	CLASS	CLASS	CLASS		
#3	24"	31"	19"	24"	17"	22"	12"	12"
#4	32"	41"	25"	33"	23"	29"	15"	12"
#5	39"	51"	31"	41"	28"	36"	19"	14"
#6	47"	61"	37"	49"	34"	43"	23"	17"
#7	69"	89"	54"	71"	49"	63"	26"	20"
#8	78"	102"	62"	81"	56"	72"	30"	23"
#9	88"	115"	70"	91"	63"	81"	34"	25"
#10	100"	129"	79"	102"	70"	92"	38"	29"
#11	110"	143"	87"	113"	78"	102"	42"	32"

NOTES:
1. TOP BARS ARE ANY HORIZONTAL BARS PLACED SO THAT MORE THAN 12" OF FRESH CONCRETE IS CAST IN THE MEMBER BELOW THE REINFORCEMENT.
2. UNLESS NOTED OTHERWISE, LAP SPLICES IN CONCRETE BEAMS, SLABS AND WALLS SHALL BE CLASS "B" TENSION SPLICES. CONCRETE COLUMNS SHALL USE COMPRESSION LAP SPLICES.
3. CONTACT STRUCTURAL ENGINEER IF CENTER TO CENTER SPACING OF REINFORCING IS LESS THAN OR EQUAL TO 3 BAR DIAMETERS <3db OR 2db CLEAR SPACING BETWEEN BARS.

01 LAP SCHEDULE FOR REINFORCING STEEL

NO SCALE

BOLT DIAMETER	VERT BOLT EMBEDMENT LENGTH	HORIZ BOLT EMBEDMENT LENGTH	HEADED STUD FILLET WELD SIZE, "S".
1/2"	6"	4"	1/4"
5/8"	6"	4"	5/16"
3/4"	7"	5"	5/16"
7/8"	8"	6"	5/16"
1"	9"	7"	3/8"
1 1/8"	10"	8"	-----
1 1/4"	11"	9"	-----

NOTES:

PROVIDE ANCHORS, ANCHOR BOLTS AND EXPANSION BOLTS PER THIS SCHEDULE UNLESS NOTED ON PLANS OR DETAILS.

EXPANSION OR ADHESIVE BOLTS USED IN MASONRY SHALL HAVE I.C.B.O. APPROVAL IN MASONRY.

AT "ANCHORS" USE 3/16" FILLET WELD("S").

THICKNESS OF DRYPACK DOES NOT APPLY TOWARDS EMBEDMENT.

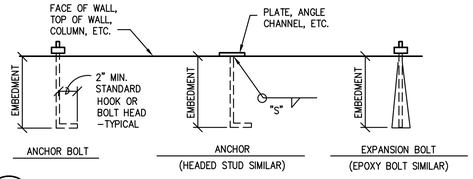

02 TYPICAL ANCHOR, ANCHOR BOLT, AND EXPANSION BOLT SCHEDULE

NO SCALE

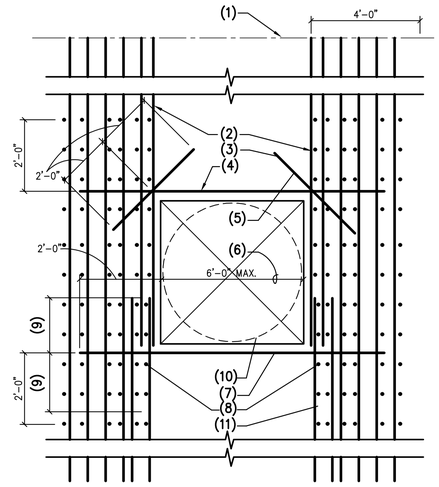

10 TYPICAL OPENING OR KNOCK OUT AS OCCURS IN CONCRETE WALL

NO SCALE

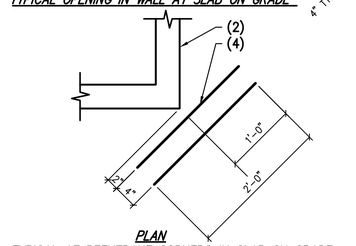

08 TYPICAL REENTRANT CORNER REINFORCING IN SLAB ON GRADE

NO SCALE

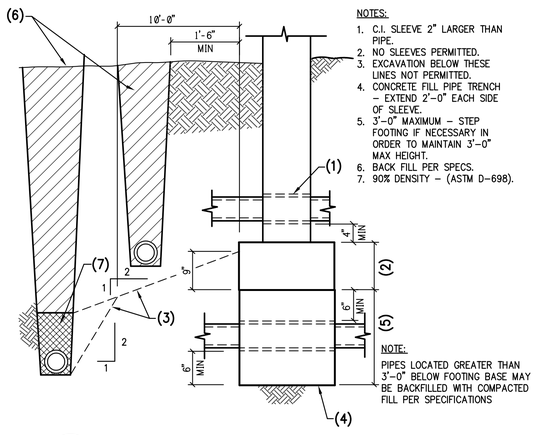

NOTES:
1. C.I. SLEEVE 2" LARGER THAN PIPE.
2. NO SLEEVES PERMITTED.
3. EXCAVATION BELOW THESE LINES NOT PERMITTED.
4. CONCRETE FILL PIPE TRENCH – EXTEND 2'–0" EACH SIDE OF SLEEVE.
5. 3'–0" MAXIMUM – STEP FOOTING IF NECESSARY IN ORDER TO MAINTAIN 3'–0" MAX HEIGHT.
6. BACK FILL PER SPECS.
7. 90% DENSITY – (ASTM D–698).

NOTE:
PIPES LOCATED GREATER THAN 3'–0" BELOW FOOTING BASE MAY BE BACKFILLED WITH COMPACTED FILL PER SPECIFICATIONS

11 PIPE THROUGH FOOTING AND TRENCH

NO SCALE

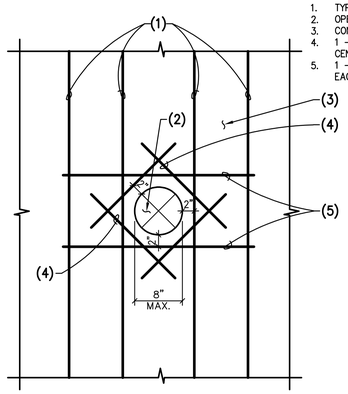

NOTES:
1. TYPICAL WALL REINF.
2. OPENING IN CONCRETE WALL.
3. CONCRETE WALL.
4. 1 – #5 DIAG. BARS IN THE CENTER OF WALL.
5. 1 – #5 TOP AND BOTTOM EACH FACE.

09 TYPICAL SMALL OPENING IN CONCRETE WALL

NO SCALE

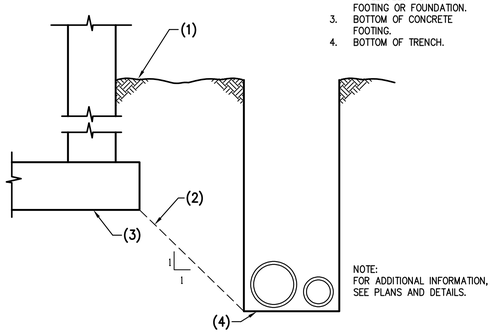

NOTES:
1. FINISHED GRADE WHERE OCCURS.
2. DO NOT EXCAVATE A TRENCH CLOSER THAN A 45 DEGREE ANGLE BELOW BOTTOM OF FOOTING OR FOUNDATION.
3. BOTTOM OF CONCRETE FOOTING.
4. BOTTOM OF TRENCH.

NOTE:
FOR ADDITIONAL INFORMATION, SEE PLANS AND DETAILS.

06 TRENCH PARALLEL TO FOUNDATION

NO SCALE

NOTES:
1. CONCRETE.
2. KEYED JOINT – REMOVE FORM MATERIAL PRIOR TO PLACING ADJACENT CONCRETE.

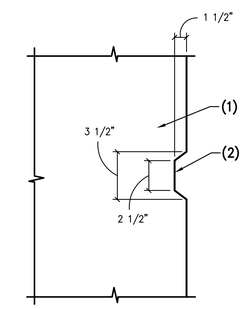

NOTE:
ALL DIMENSIONS ARE ± 1/2".

03 TYPICAL KEY IN CONCRETE

NO SCALE

PK ASSOCIATES, LLC
6900 E. Belleview Ave. #200
Greenwood Village, Colorado 80111
Phone: (720) 799-1058
Email: cadd@pkastructural.com
Website: www.pkastructural.com

NO	BY	DATE	REVISIONS	DATE	APP.

THESE DRAWINGS ARE THE PROPERTY OF P.A.C.E. AND SHALL NOT BE REPRODUCED IN ANY MANNER NOR BE USED FOR CONSTRUCTION UNLESS STAMPED 'ISSUED FOR CONSTRUCTION'.

Registered Professional Engineer (Civil) CERTIFICATE NO. 70374 JAMES APPLEYARD Date Signed 1/24/25 ARIZONA, U.S.A.

PREPARED BY: DUONG DO
PROJECT ENGINEER
R.C.E. NO. #40060
EXP. DATE

DRAWN: WW
DESIGNED: DD
CHECKED: DD
SCALE
DATE: 5/16/2025

TITLE: TYPICAL DETAILS

JOB: CITY OF SAN LUIS WWTP IMPROVEMENTS — SAN LUIS AZ.

PACE
Advanced Water Engineering
8733 E. VIA de COMMERCIO, SUITE A-204 | SCOTTSDALE, CA 85258
P: (408) 991-3595 | www.pacewater.com

FINAL PLANS ISSUED FOR BID

SHEET
S0.3
68 OF 209 SHEETS

JOB NO. B777

M:\PROJECTS\2024\PACE\SAN LUIS WWTP 3MGD EXPANSION (24291)\TYPS\0.3.dwg - Tab: S0.3 - by rsitonaller on 09/02/25 at 4:53:41 PM

H	t	VERTICAL WALL REINFORCING		T	HEEL	TOE	FOOTING HEEL REINF.	SHEAR KEY		REMARKS
		WALL	DOWELS					Sd	Sw	
0'–0" TO 3'–0"	8"	#5 AT 18" O.C.	---	15"	0'–8"	0'–8"	---	---	---	SEE NOTE 1 & 2
3'–1" TO 5'–0"	8"	#5 AT 18" O.C.	---	12"	1'–1"	1'–1"	#5 AT 18" O.C.	12"	8"	SEE NOTE 1 & 2
5'–1" TO 7'–0"	8"	#5 AT 14" O.C.	---	12"	1'–7"	1'–6"	#5 AT 18" O.C.	24"	8"	SEE NOTE 1 & 2
7'–1" TO 9'–0"	8"	#5 AT 12" O.C.	#6 AT 12" O.C.	14"	2'–2"	2'–0"	#5 AT 12" O.C.	32"	8"	SEE NOTE 1 & 2
9'–1" TO 15'–6"	12"	#8 AT 10" O.C.	#8 AT 10" O.C.	20"	5'–0"	5'–0"	#6 AT 12" O.C.	32"	8"	SEE NOTE 1 & 2

NOTES:
1. USE #4 AT 12" O.C. HORIZONTALS.
2. LAP AND/OR EMBED ALL DOWELS 40 BAR DIAMETERS MINIMUM.

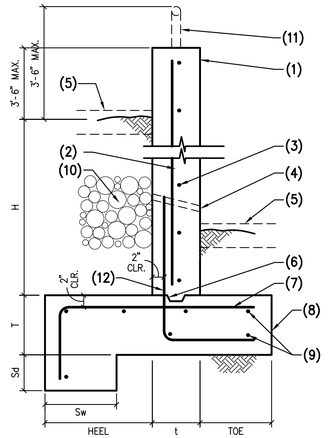

NOTES:
1. CONCRETE WALL.
2. VERTICAL WALL REINFORCING.
3. HORIZONTAL REINFORCING.
4. 1" DIA. WEEP HOLES AT 32" O.C.
5. FINISHED GRADE OR CONCRETE SLAB WHERE OCCURS.
6. CONTINUOUS KEY – SEE TYPICAL KEY IN CONCRETE DETAIL.
7. FOOTING HEEL REINFORCING.
8. CONCRETE FOOTING.
9. #4 AT 16" O.C.
10. 1 1/2" DIA. ROCK IN 12" X 12" X CONTINUOUS ROCK POCKET.
11. HANDRAIL ATTACHMENT BY OTHERS.
12. DOWELS TO MATCH AND LAP WALL REINFORCING U.N.O IN SCHEDULE.

18 *CONCRETE RETAINING WALL* — NO SCALE

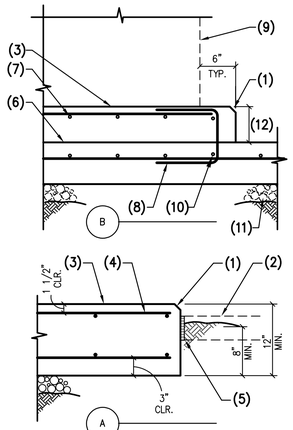

NOTES:
1. CHAMFER EDGES.
2. CONCRETE SLAB OR FINISHED GRADE WHERE OCCURS.
3. CONCRETE EQUIPMENT SLAB.
4. #4 AT 12" O.C. EACH WAY, TOP AND BOTTOM.
5. AT ABUTTING CONCRETE SLABS, INSTALL 1/2" EXPANSION JOINT MATERIAL ALL ROUND.
6. CONCRETE SLAB (ON GRADE AS SOIL OCCURS).
7. #4 AT 12" O.C. EACH WAY.
8. #3 AT EACH CORNER AND AT 48" O.C. MAX. x 6" 6" 6"
9. EDGE OF MECH'L UNIT.
10. #3 AT BEND, TYP.
11. SOIL AS OCCURS.
12. 4" MIN. VARIES AS REQ'D WHEN OVER A SLOPED SLAB.

15 *CONCRETE EQUIPMENT PAD* — NO SCALE

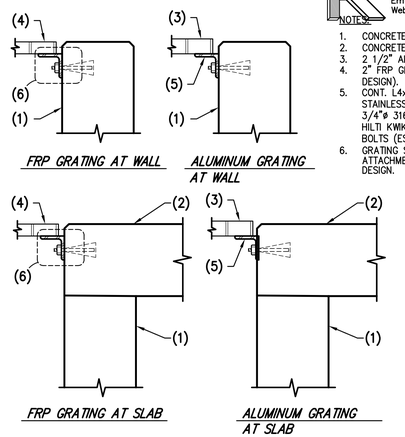

FRP GRATING AT WALL — *ALUMINUM GRATING AT WALL*

FRP GRATING AT SLAB — *ALUMINUM GRATING AT SLAB*

NOTES:
1. CONCRETE WALL.
2. CONCRETE SLAB.
3. 2 1/2" ALUMINUM GRATING.
4. 2" FRP GRATING (DEFERED DESIGN).
5. CONT. L4x4x3/8 316 STAINLESS STEEL ANGLE W/ 3/4"ø 316 STAINLESS STEEL HILTI KWIK BOLT TZ EXPANSION BOLTS (ESR-1917) AT 48" O.C.
6. GRATING SUPPORT AND ATTACHMENT PER DEFFERED DESIGN.

12 *GRATING SUPPORT* — NO SCALE

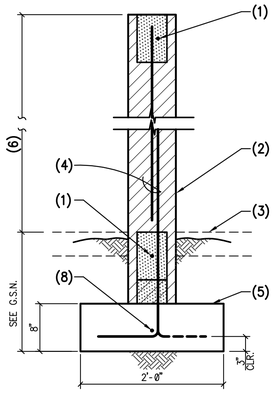

NOTES:
1. 1 #4 CONTINUOUS IN 8" DEEP GROUTED BOND BEAM.
2. 8" MASONRY WALL WITH #5 VERTS AT 48" O.C. GROUT SOLID BELOW GRADE.
3. FINISHED GRADE OR CONCRETE SLAB ON GRADE AS OCCURS.
4. DOWELS TO MATCH AND LAP VERTICAL WALL REINFORCING PER G.S.N. – ALTERNATE BENDS.
5. CONCRETE FOOTING.
6. FOR TOP OF WALL, SEE ARCHITECTURAL DRAWINGS – 8'–0" MAX.
8. 1 #4 CONTINUOUS.

21 *8'–0" MAXIMUM FREE–STANDING MASONRY WALL AND FOOTING* — NO SCALE

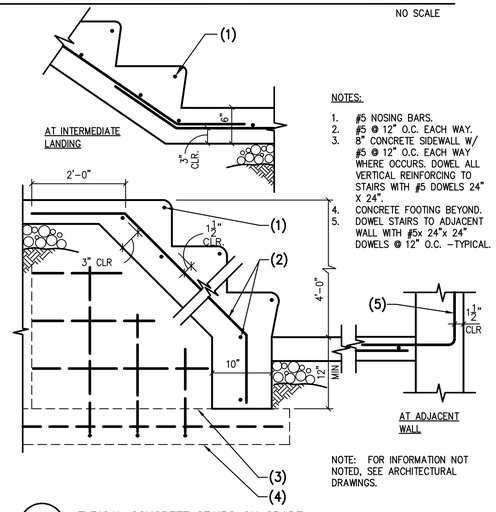

NOTES:
1. #5 NOSING BARS.
2. #5 @ 12" O.C. EACH WAY.
3. 8" CONCRETE SIDEWALL W/ #5 @ 12" O.C. EACH WAY WHERE OCCURS. DOWEL ALL VERTICAL REINFORCING TO STAIRS WITH #5 DOWELS 24" X 24".
4. CONCRETE FOOTING BEYOND.
5. DOWEL STAIRS TO ADJACENT WALL WITH #5x 24"x 24" DOWELS @ 12" O.C. –TYPICAL.

NOTE: FOR INFORMATION NOT NOTED, SEE ARCHITECTURAL DRAWINGS.

19 *TYPICAL CONCRETE STAIRS ON GRADE* — NO SCALE

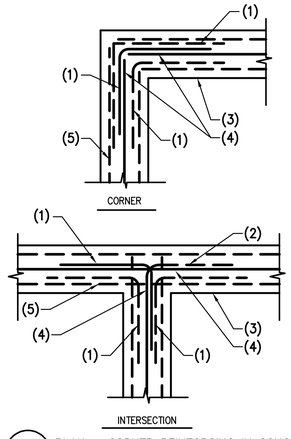

NOTES:
1. CORNER BARS SAME SIZE AND SPACING AS HORIZONTAL REINFORCING. LAP PER G.S.N. (24" MINIMUM).
2. ALTERNATE BEND.
3. CONCRETE STEM WALL OR FOOTING.
4. REINFORCING PER PLANS AND /OR G.S.N.
5. BARS EACH FACE WHERE OCCURS.

16 *PLAN – CORNER REINFORCING IN CONCRETE GRADE BEAM WALL AND/OR FOOTING* — NO SCALE

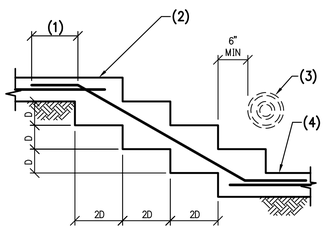

NOTES:
1. LAP PER G.S.N. (24" MIN.) – TYPICAL.
2. TOP OF WALL FOOTING.
3. PIPE THRU STEM WALL AS OCCURS – SEE TYPICAL DETAIL.
4. RETURN TO FOOTING THICKNESS AS SHOWN ON PLAN.

NOTE:
D = 2'–0" MAXIMUM.

13 *TYPICAL STEP IN CONCRETE FOOTING* — NO SCALE

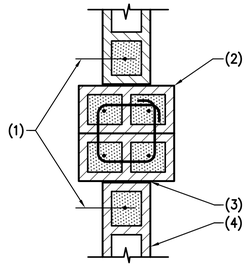

NOTES:
1. VERTICAL REINFORCING IN SOLID GROUTED CELL EACH SIDE OF PILASTER.
2. MASONRY PILASTER.
3. MASONRY CONTROL JOINT.
4. MASONRY WALL.

NOTE:
CONTINUE HORIZONTAL JOINT REINFORCING THROUGH PILASTER.

20 *MASONRY PILASTER IN MASONRY WALL* — NO SCALE

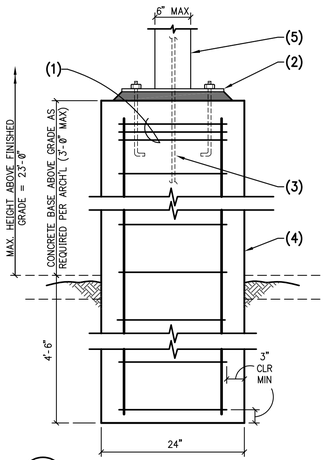

NOTES:
1. 3 TIES IN TOP 5". (1 1/2" O.C.)
2. ANCHOR BOLT AND PLATE PER LIGHT SUPPLIER.
3. ELECTRICAL CONDUIT REQ'D.
4. CONCRETE PIER W/(6) #6 VERTICALS
5. LIGHT POLE HEIGHT ABOVE THE FINISHED GRADE PER SCHEDULE.

17 *TYPICAL LIGHT POLE BASE* — NO SCALE

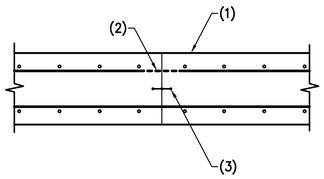

NOTES:
1. CONCRETE WALL.
2. CUT EVERY OTHER BAR ON EACH FACE OF WALL. STAGGER CUT BARS.
3. CONT. WATERSTOP, GREENSTREAK PVC RIBBED WITH CENTER BULB, PER SPECIFICATIONS (OR APPROVED EQUAL.)

NOTE:
LOCATION OF VERTICAL WALL C.J. TO BE AT A MAXIMUM OF TWICE THE WALL HEIGHT.

14 *PLAN – WALL C.J.* — NO SCALE

PK ASSOCIATES, LLC
6900 E. Belleview Ave. #200
Greenwood Village, Colorado 80111
Phone: (720) 799-1058
Email: cadd@pkastructural.com
Website: www.pkastructural.com

NO	BY	DATE	REVISIONS	DATE	APP.

Registered Professional Engineer (Civil) CERTIFICATE No. 70374 JAMES APPLEYARD Date Signed 1/24/25 ARIZONA, U.S.A.

PREPARED BY DUONG DO
PROJECT ENGINEER #40060
R.C.E. NO. –
EXP. DATE
DRAWN WW
DESIGNED DD
CHECKED DD
SCALE
DATE 5/16/2025

TITLE **TYPICAL DETAILS**

JOB CITY OF SAN LUIS WWTP IMPROVEMENTS — SAN LUIS AZ.

PACE Advanced Water Engineering
8723 E. VIA de COMMERCIO, SUITE A-204 | SCOTTSDALE, CA 85258
P: (408) 991-3995 | www.pacewater.com

SHEET **S0.4**
69 OF 209 SHEETS
JOB NO. B777

THESE DRAWINGS ARE THE PROPERTY OF P.A.C.E. AND SHALL NOT BE REPRODUCED IN ANY MANNER NOR BE USED FOR CONSTRUCTION UNLESS STAMPED "ISSUED FOR CONSTRUCTION".

FINAL PLANS ISSUED FOR BID

DRAFT

M:\PROJECTS\2020\PACE\SAN LUIS WWTP 3MGD EXPANSION (24291)\TYPS\X.4.dwg - Tab: S0.4 - by rabolador on 01/26/26 at 3:09:24 PM

PK ASSOCIATES, LLC
6900 E. Belleview Ave. #200
Greenwood Village, Colorado 80111
Phone: (720) 799-1058
Email: cadd@pkastructural.com
Website: www.pkastructural.com

NOTES:

1. CONCRETE WALL OR SLAB.
2. STARTER WALL.
3. EDGE OF CONCRETE AS OCCURS.
4. WHEN WATER ONLY ON ONE SIDE OF CONCRETE, PLACE WATER STOP BETWEEN WATER AND REBAR.
5. EXISTING CONCRETE.
6. CONT. GREENSTREAK PVC RIBBED WITH CENTER BULB WATER STOP PER SPECIFICATIONS.
7. CONTINUOUS GREENSTREAK WATER STOP ADJACENT TO EXISTING CONCRETE PER SPECIFICATIONS.

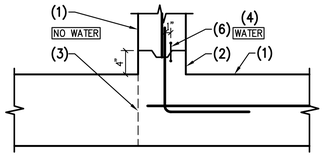

A CONCRETE WALL AT CONCRETE SLAB

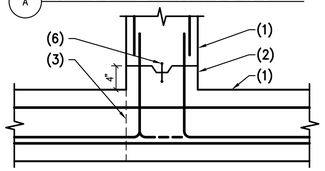

B CONCRETE WALL AT CONCRETE SLAB

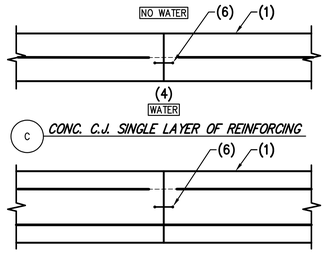

C CONC. C.J. SINGLE LAYER OF REINFORCING

D CONC. C.J. DOUBLE LAYER OF REINFORCING

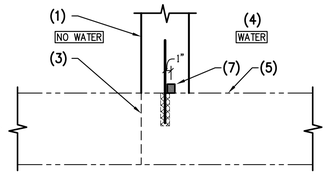

E CONCRETE WALL AT CONCRETE SLAB

22 WATER STOP AT CONCRETE C.J.

NO SCALE

NO	BY	DATE	REVISIONS	DATE	APP.

Registered Professional Engineer (Civil)
CERTIFICATE NO.
70374
JAMES
APPLEYARD
Date Signed 1/24/24
ARIZONA, U.S.A.

PREPARED BY
DUONG DO
PROJECT ENGINEER
R.C.E. NO. --
EXP. DATE
DRAWN
WW
SCALE
DESIGNED
DD
CHECKED
DD
DATE
5/16/2025

TITLE
TYPICAL DETAILS

JOB
CITY OF SAN LUIS WWTP
IMPROVEMENTS
SAN LUIS AZ.

PACE
Advanced Water Engineering
8723 E. VIA de COMMERCIO, SUITE A-204 | SCOTTSDALE, CA 85258
P: (408) 991-3595 | www.pacewater.com

SHEET
S0.5
70 OF 209 SHEETS
JOB NO. B777

THESE DRAWINGS ARE THE PROPERTY OF P.A.C.E. AND SHALL NOT BE REPRODUCED IN ANY MANNER NOR BE USED FOR CONSTRUCTION UNLESS STAMPED "ISSUED FOR CONSTRUCTION".

FINAL PLANS ISSUED FOR BID

DRAFT

M:\PROJECTS\2024\PACE\SAN LUIS WWTP SMGD EXPANSION (24291)\TYPS\0.5.dwg - Tab: S0.5 - by rsdonaker on 01/26/26 at 4:05:18 PM

DRAFT

PK ASSOCIATES, LLC
6900 E. Belleview Ave. #200
Greenwood Village, Colorado 80111
Phone: (720) 799-1058
Email: cadd@pkastructural.com
Website: www.pkastructural.com

CONCRETE WALL (CW) SCHEDULE

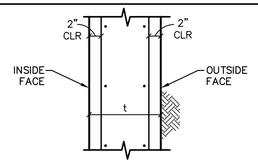

MARK	THICKNESS t	VERTICAL REINF.		HORIZONTAL REINF.		REMARKS
		INSIDE FACE	OUTSIDE FACE	INSIDE FACE	OUTSIDE FACE	
CW1	16"	#5 AT 6" O.C. E.F.	#5 AT 6" O.C. E.F.	#5 AT 6" O.C. E.F.	#5 AT 6" O.C. E.F.	---
CW2	8"	#5 AT 10" O.C.	---	#5 AT 10" O.C.	---	ABOVE AND BELOW SLAB AT CW2
CW3	24"	#8 AT 4" O.C. E.F.	#5 AT 6" O.C. E.F.	#8 AT 4" O.C. E.F.	#5 AT 6" O.C. E.F.	WALL TAPERS TO 12" AT TOP OF WALL
CW4	12"	#5 AT 10" O.C. E.F.	#5 AT 10" O.C. E.F.	#5 AT 10" O.C. E.F.	#5 AT 10" O.C. E.F.	---

ISOLATED FOOTING (F) SCHEDULE

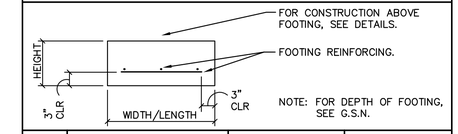

MARK	DIMENSIONS			FOOTING REINFORCING	REMARKS
	HEIGHT	WIDTH	LENGTH		
F1	18"	10'-0"	6'-0"	11- #6 CONT. AND 7- #6 TRANSVERSE TOP AND BOTTOM	---
F2	12"	6'-0"	6'-0"	7- #5 EACH WAY TOP AND BOTTOM	---
F3	12"	4'-0"	4'-0"	5- #5 EACH WAY TOP AND BOTTOM	---

CONTINUOUS FOOTING (WF) SCHEDULE

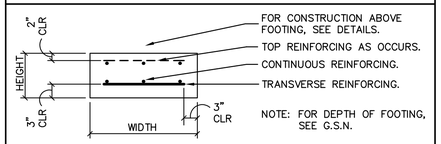

MARK	DIMENSIONS		FOOTING REINFORCING	REMARKS
	HEIGHT	WIDTH		
WF1	12"	2'-6"	3- #5 CONT. AND #5 AT 12" TRANS.	---

FOUNDATION NOTES

1. FOR LOCATION OF DETAILS SEE GENERAL STRUCTURAL NOTES.
2. VERIFY ALL DIMENSIONS WITH ARCHITECTURAL DRAWINGS. DO NOT USE "CONC C.J." AS DIMENSION LINE OR TO LOCATE BUILDING ELEMENTS.
3. SCHEDULED MARK DESIGNATIONS ARE TYPICAL TO THE PROJECT AND MAY NOT NECESSARILY BE FOUND ON THIS PLAN.
4. DEPTH OF FOOTING DIMENSIONS INDICATED IN THE G.S.N. ARE MINIMUMS. FOUNDATION CONTRACTOR SHALL COORDINATE WITH SOILS REPORT AND OTHER TRADES TO INSURE THAT THESE MINIMUMS ARE SUFFICIENT FOR THE WORK. SEE TYPICAL DETAILS FOR ADDITIONAL REQUIREMENTS. G.C. SHALL FIELD VERIFY AS-BUILT T.O.F. ELEVATIONS AND COORDINATE W/ STEEL SUPPLIER. RESOLVE ANY DISCREPANCIES PRIOR TO STEEL FABRICATION & DELIVERY.
5. VERIFY EXACT SIZE AND LOCATION OF DEPRESSED AND/OR RAISED SLABS WITH PACE DRAWINGS.
6. FOR SIDEWALK LOCATION, SEE CIVIL DRAWINGS.

FOUNDATION PLAN KEYNOTES

1. EXISTING 12" WALL.
2. EXISTING 18" WALL.
3. EXISTING 24" WALL.
4. EXISTING 18" CONCRETE MAT SLAB.
5. #5 AT 8" O.C. BOTTOM AND #4 AT 18" O.C. TOP.
6. #4 AT 18" O.C. TOP AND BOTTOM.
7. PRE-ENGINEERED CANOPY STEEL COLUMN AND ATTACHMENT PER CANOPY SUPPLIER - TYP OF 4.
8. CONCRETE STAIRS PER TYPICAL DETAIL 19. FULL EXTENT OF STAIRS PER PACE DRAWINGS.

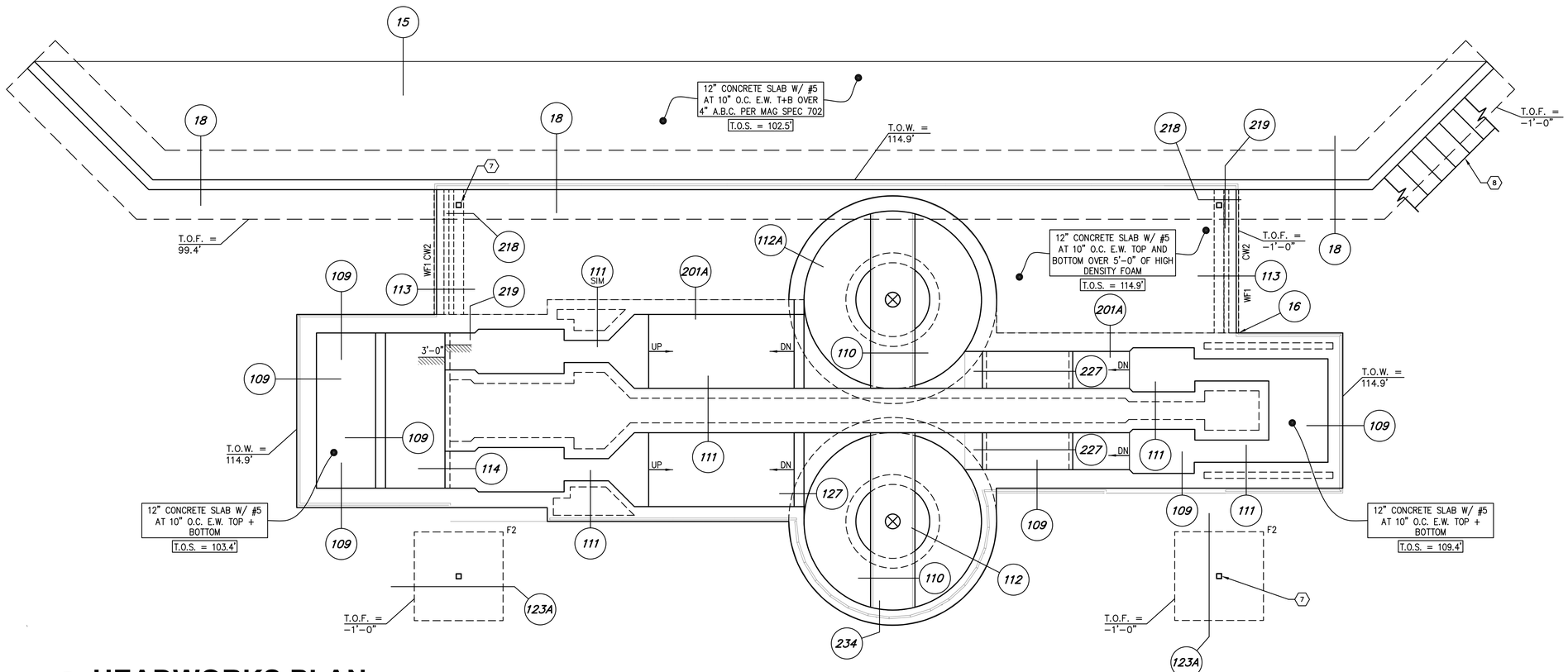

1 HEADWORKS PLAN

SCALE: 1/4"=1'-0"

NO	BY	DATE	REVISIONS	DATE	APP.

Registered Professional Engineer (Civil) CERTIFICATE No. 70374 JAMES APPLEYARD Date Signed 1/24/25 ARIZONA, U.S.A.

PREPARED BY DUONG DO | PROJECT ENGINEER #40060 | R.C.E. NO. — | EXP. DATE | SCALE | DRAWN WW | DESIGNED DD | CHECKED DD | DATE 5/16/2025

THESE DRAWINGS ARE THE PROPERTY OF P.A.C.E. AND SHALL NOT BE REPRODUCED IN ANY MANNER NOR BE USED FOR CONSTRUCTION UNLESS STAMPED 'ISSUED FOR CONSTRUCTION'.

TITLE: HEADWORKS PLAN

JOB: CITY OF SAN LUIS WWTP IMPROVEMENTS — SAN LUIS AZ.

PACE
Advanced Water Engineering
8723 E. VIA de COMMERCIO, SUITE A-204 | SCOTTSDALE, CA 85258
P: (408) 991-3595 | www.pacewater.com

SHEET S1.0
71 OF 209 SHEETS

JOB NO. B777

FINAL PLANS ISSUED FOR BID

M:\PROJECTS\2020\PACE\SAN LUIS WWTP 3MGD EXPANSION (2429)\PLANS\S-HEADWORKS.dwg - Tab: S1.0 - by rabcmaker on 01/28/26 at 2:26:06 PM

DRAFT

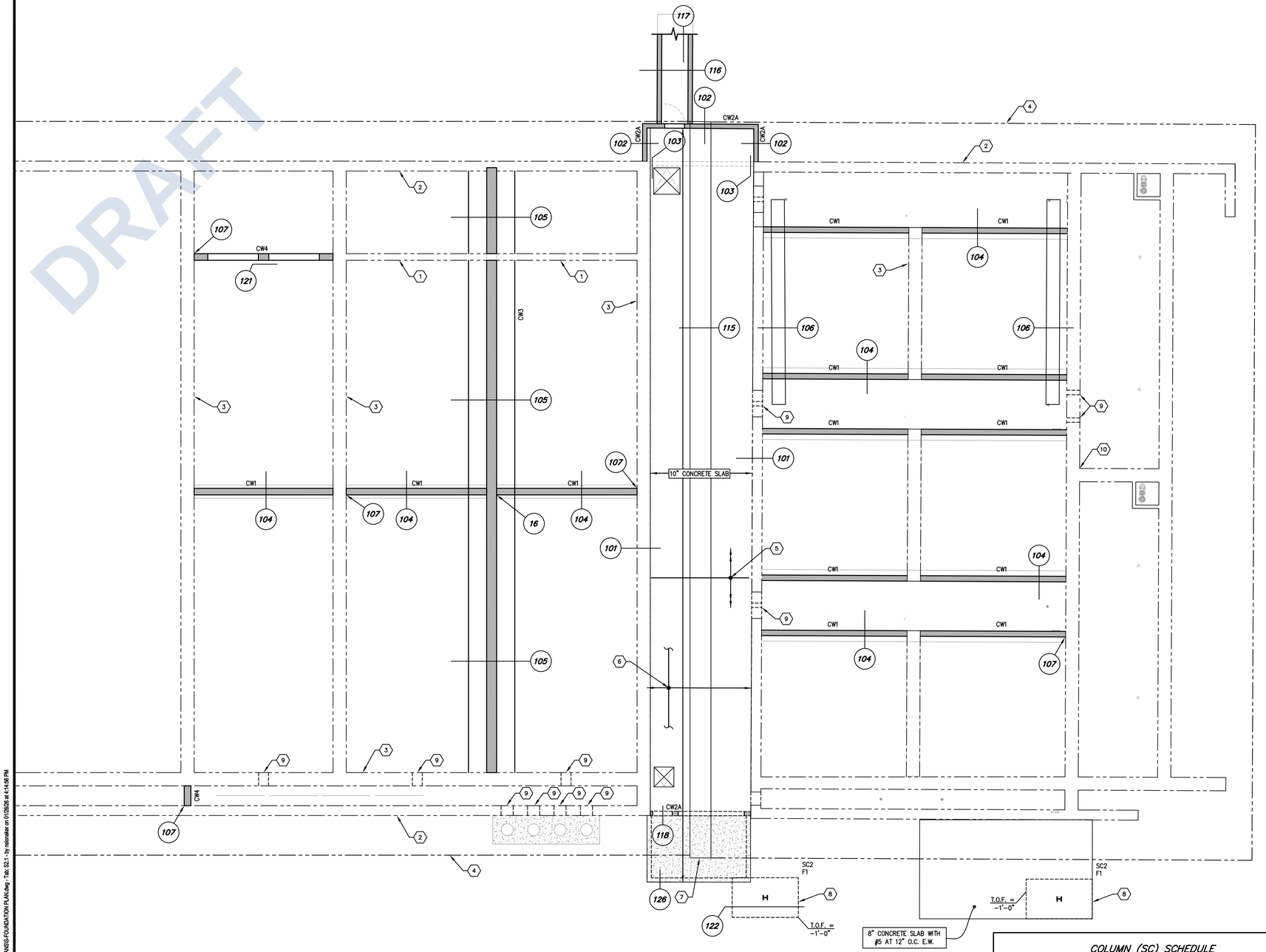

FOUNDATION PLAN

1 SCALE: 1/8"=1'-0"

PK ASSOCIATES, LLC
6900 E. Belleview Ave. #200
Greenwood Village, Colorado 80111
Phone: (720) 799-1058
Email: cadd@pkastructural.com
Website: www.pkastructural.com

FOUNDATION NOTES

1. FOR LOCATION OF DETAILS SEE GENERAL STRUCTURAL NOTES.
2. VERIFY ALL DIMENSIONS WITH ARCHITECTURAL DRAWINGS. DO NOT USE "CONC C.J." AS DIMENSION LINE OR TO LOCATE BUILDING ELEMENTS.
3. SCHEDULED MARK DESIGNATIONS ARE TYPICAL TO THE PROJECT AND MAY NOT NECESSARILY BE FOUND ON THIS PLAN.
4. DEPTH OF FOOTING DIMENSIONS INDICATED IN THE G.S.N. ARE MINIMUMS. FOUNDATION CONTRACTOR SHALL COORDINATE WITH SOILS REPORT AND OTHER TRADES TO INSURE THAT THESE MINIMUMS ARE SUFFICIENT FOR THE WORK. SEE TYPICAL DETAILS FOR ADDITIONAL REQUIREMENTS. G.C. SHALL FIELD VERIFY AS-BUILT T.O.F. ELEVATIONS AND COORDINATE W/ STEEL SUPPLIER. RESOLVE ANY DISCREPANCIES PRIOR TO STEEL FABRICATION & DELIVERY.
5. VERIFY EXACT SIZE AND LOCATION OF DEPRESSED AND/OR RAISED SLABS WITH ARCHITECTURAL DRAWINGS.
6. FOR SIDEWALK LOCATION, SEE ARCHITECTURAL DRAWINGS.
7. VERIFY EXACT SIZE AND LOCATION OF OPENINGS IN PRECAST CONCRETE WALL PANELS WITH ARCHITECTURAL DRAWINGS.

FOUNDATION PLAN KEYNOTES

1. EXISTING 12" WALL TO REMAIN.
2. EXISTING 18" WALL TO REMAIN.
3. EXISTING 24" WALL TO REMAIN.
4. EXISTING 18" CONCRETE MAT SLAB.
5. #5 AT 8" O.C. BOTTOM AND #4 AT 18" O.C. TOP.
6. #4 AT 18" O.C. TOP AND BOTTOM.
7. CONCRETE POUR BACK PER DETAIL 115.
8. PROVIDE SLURRY UNDER FOOTING TO THE DEPTH OF ADJACENT BOTTOM OF FOOTING OF RETAINING WALL.
9. EXISTING SAWCUT PENETRATION 2" LARGER THAN DIAMETER OF SLEEVE. EPOXY COAT ALL EXPOSED REBAR AND PROVIDE 1" COMPRESSION MATERIAL AROUND SLEEVE. VERIFY EXACT LOCATIONS PER PACE PLANS. NOT ALL ARE SHOWN ON STRUCTURAL PLAN.
10. G.C. TO PROVIDE REPORT OF EXTENTS OF WALL SEPARATION HERE SO A FIX CAN BE PROVIDED.

CONCRETE WALL (CW) SCHEDULE

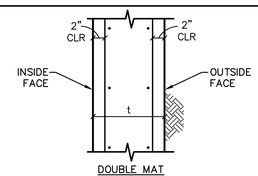

MARK	THICKNESS t	VERTICAL REINF. INSIDE FACE	VERTICAL REINF. OUTSIDE FACE	HORIZONTAL REINF. INSIDE FACE	HORIZONTAL REINF. OUTSIDE FACE	REMARKS
CW1	16"	#5 AT 6" O.C. E.F.	#5 AT 6" O.C. E.F.	#5 AT 6" O.C. E.F.	#5 AT 6" O.C. E.F.	---
CW2	8"	#5 AT 10" O.C.	---	#5 AT 10" O.C.	---	ABOVE AND BELOW SLAB AT CW2
CW3	24"	#8 AT 4" O.C. E.F.	#5 AT 6" O.C. E.F.	#8 AT 4" O.C. E.F.	#5 AT 6" O.C. E.F.	WALL TAPERS TO 12" AT TOP OF WALL
CW4	12"	#5 AT 10" O.C. E.F.	#5 AT 10" O.C. E.F.	#5 AT 10" O.C. E.F.	#5 AT 10" O.C. E.F.	---

ISOLATED FOOTING (F) SCHEDULE

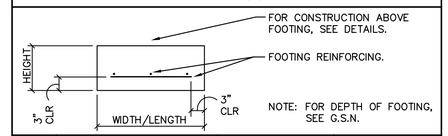

NOTE: FOR DEPTH OF FOOTING, SEE G.S.N.

MARK	DIMENSIONS HEIGHT	DIMENSIONS WIDTH	DIMENSIONS LENGTH	FOOTING REINFORCING	REMARKS
F1	18"	10'-0"	6'-0"	11- #6 CONT. AND 7- #6 TRANSVERSE TOP AND BOTTOM	---
F2	12"	6'-0"	6'-0"	7- #5 EACH WAY TOP AND BOTTOM	---
F3	12"	4'-0"	4'-0"	5- #5 EACH WAY TOP AND BOTTOM	---

COLUMN (SC) SCHEDULE

NOTE: FOR ANCHOR BOLT PATTERN, SEE TYPICAL DETAIL

MARK	SIZE	BASE CONNECTION	REMARKS
SC1	W14x61	1"x22"x18" STEEL PLATE W/ 6- 1"ø GR36F1554 ANCHOR RODS.	REFERENCE DETAIL 216
SC2	W14x159	1 1/2"x30"x24" STEEL PLATE W/ W/ 6- 1"ø GR36F1554 ANCHOR RODS.	---
SC3	HSS8x8x1/2	1"x14"x14" STEEL PLATE W/ 4- 1"ø F1554GR36 ANCHOR RODS	---
SC4	HSS6x6x3/8	3/4"x12"x12" W/ 4- 3/4"ø F1554GR36 ANCHOR RODS	---

NO	BY	DATE	REVISIONS	DATE	APP.

Registered Professional Engineer (Civil) CERTIFICATE NO. 70374 JAMES APPLEYARD Date Signed 1/24/26 ARIZONA, U.S.A.

PREPARED BY DUONG DO
PROJECT ENGINEER
R.C.E. NO. #40080
EXP. DATE
DRAWN WW
SCALE
DESIGNED DD
CHECKED DD
DATE 5/16/2025

THESE DRAWINGS ARE THE PROPERTY OF P.A.C.E. AND SHALL NOT BE REPRODUCED IN ANY MANNER NOR BE USED FOR CONSTRUCTION UNLESS STAMPED 'ISSUED FOR CONSTRUCTION'.

TITLE: FOUNDATION PLAN

JOB: CITY OF SAN LUIS WWTP IMPROVEMENTS AZ. SAN LUIS

PACE Advanced Water Engineering
8723 E. VIA de COMMERCIO, SUITE A-204 | SCOTTSDALE, CA 85258
P: (408) 991-3595 | www.pacewater.com

FINAL PLANS ISSUED FOR BID

SHEET S2.1
72 OF 209 SHEETS

JOB NO. B777

M:\PROJECTS\2024\PACE\SAN LUIS WWTP 3MGD EXPANSION (2429)\PLANS\S-FOUNDATION PLAN.dwg - Tab: S2.1 - by rodonaller on 01/26/26 at 1:14:56 PM

DRAFT

COLUMN (SC) SCHEDULE

NOTE: FOR ANCHOR BOLT PATTERN, SEE TYPICAL DETAIL

MARK	SIZE	BASE CONNECTION	REMARKS
SC1	W14x61	1"x22"x18" STEEL PLATE W/ 6– 1"ø GR36F1554 ANCHOR RODS.	REFERENCE DETAIL 216
SC2	W14x159	1 1/2"x30"x24" STEEL PLATE W/ W/ 6– 1"ø GR36F1554 ANCHOR RODS.	---
SC3	HSS8x8x1/2	1"x14"x14" STEEL PLATE W/ 4– 1"ø F1554GR36 ANCHOR RODS	---
SC4	HSS6x6x3/8	3/4"x12"x12" W/ 4– 3/4"ø F1554GR36 ANCHOR RODS	---

FRAMING PLAN KEYNOTES

11. 12" DEEP SAW CUTS.
12. #5 AT 8" O.C. BOTTOM AND #4 AT 18" O.C. TOP.
13. #4 AT 18" O.C. TOP AND BOTTOM.
14. HSS6x6x1/2" BRACES.
15. 18" DEEP x 12" WIDE BEAM W/ 3– ROWS OF 2– #7 AND #4 TIES AT 12" O.C. PROVIDE 3 BEAMS. ELEVATIONS OF BEAMS PER PACE PLANS.
16. HSS12x8x1/2" (LSH).
17. EXISTING CANOPY COLUMN.
18. 5 TON CRANE, RAIL, AND ATTACHMENTS PER CRANE SUPPLIER.
19. HSS4x4x3/8" POST AT TOP OF CONC. WALL. REFERENCE DETAIL 229 – TYP. OF 2.
20. 1 1/2"x20 GA. STEEL DECK ATTACH PER G.S.N.

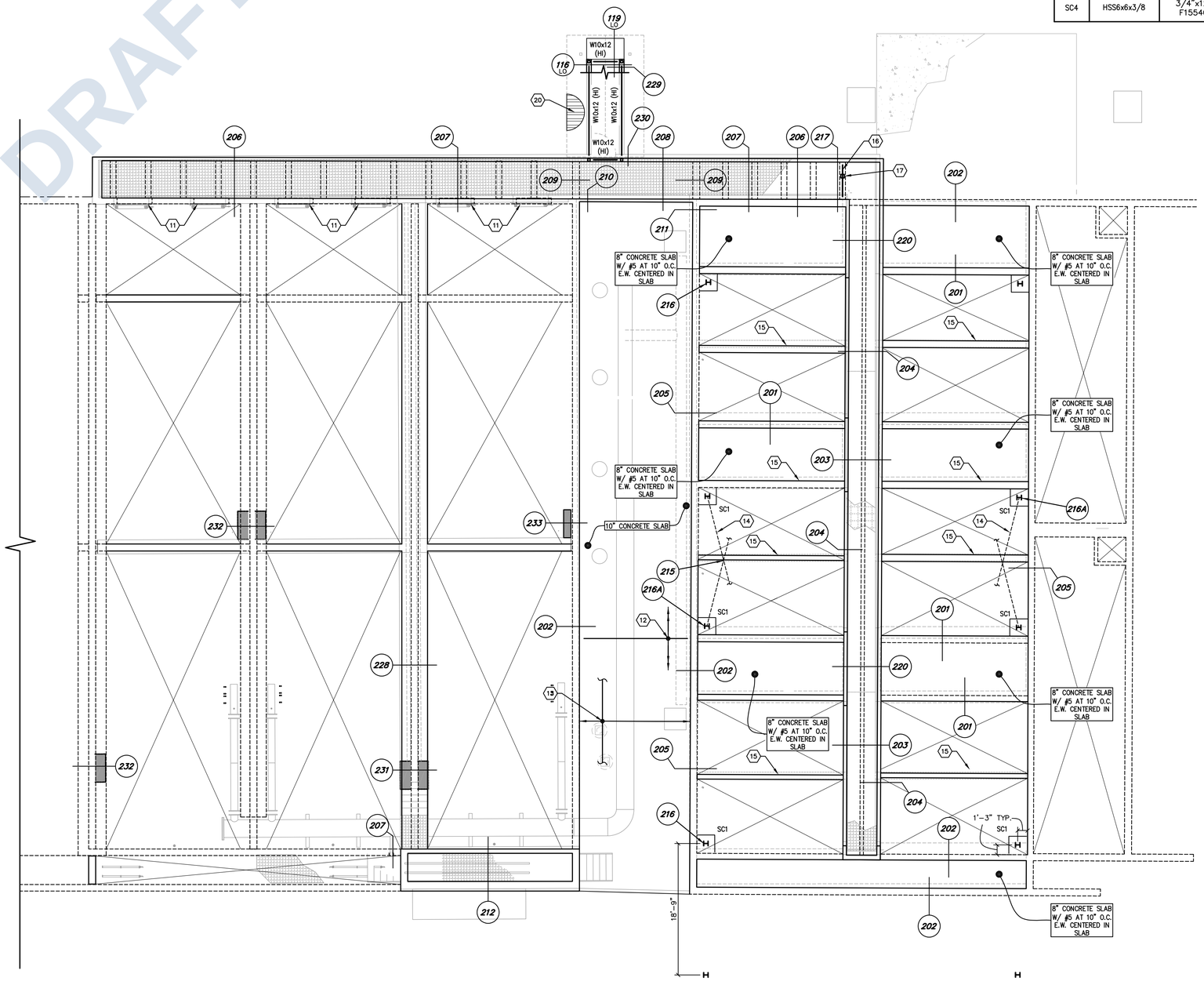

1 **FRAMING PLAN**
SCALE: 1/8"=1'-0"

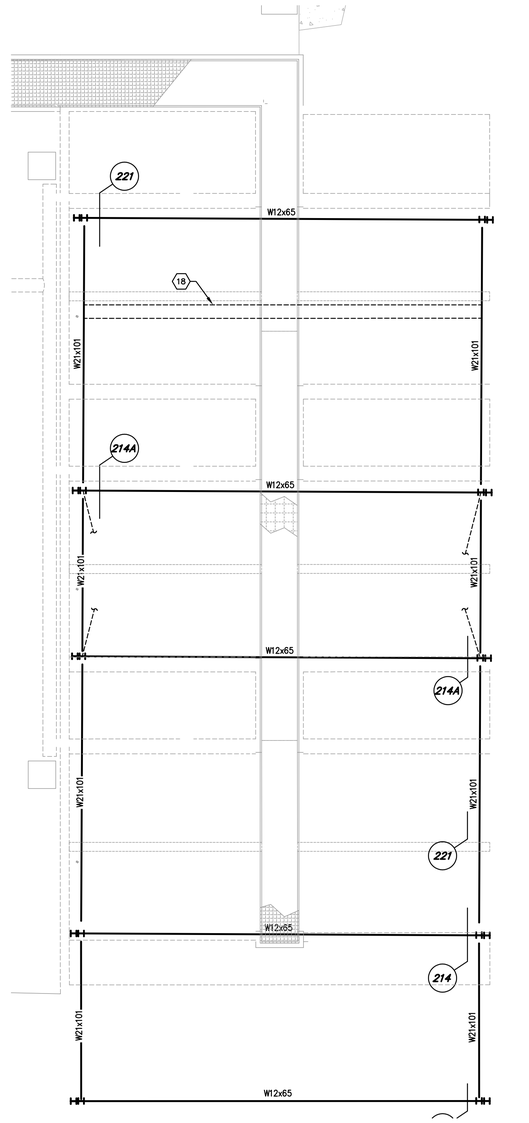

2 **CRANE FRAMING PLAN**
SCALE: 1/8"=1'-0"

PK ASSOCIATES, LLC
6900 E. Belleview Ave. #200
Greenwood Village, Colorado 80111
Phone: (720) 799-1058
Email: cadd@pkastructural.com
Website: www.pkastructural.com

NO	BY	DATE	REVISIONS	DATE	APP.

Registered Professional Engineer (Civil) CERTIFICATE No. 70374 JAMES APPLEYARD Date Signed 2/6/26 ARIZONA, U.S.A.

PREPARED BY: DUONG DO
PROJECT ENGINEER
R.C.E. NO.: #40080
EXP. DATE: –
DRAWN: WW
DESIGNED: DD
CHECKED: DD
SCALE:
DATE: 5/16/2025

TITLE: **FRAMING PLAN**

JOB: CITY OF SAN LUIS WWTP IMPROVEMENTS
SAN LUIS AZ.

PACE
Advanced Water Engineering
8723 E. VIA de COMMERCIO, SUITE A-204 | SCOTTSDALE, CA 85258
P: (408) 991-3995 | www.pacewater.com

SHEET **S2.2**
73 OF 209 SHEETS
JOB NO. B777

THESE DRAWINGS ARE THE PROPERTY OF P.A.C.E. AND SHALL NOT BE REPRODUCED IN ANY MANNER NOR BE USED FOR CONSTRUCTION UNLESS STAMPED "ISSUED FOR CONSTRUCTION".

FINAL PLANS ISSUED FOR BID

M:\PROJECTS\2024\PACE\SAN LUIS WWTP 3MGD EXPANSION (24291)\PLANS\S-FRAMING PLAN.dwg - Tab: S2.2 - by rstonaker on 01/26/26 at 4:17:54 PM

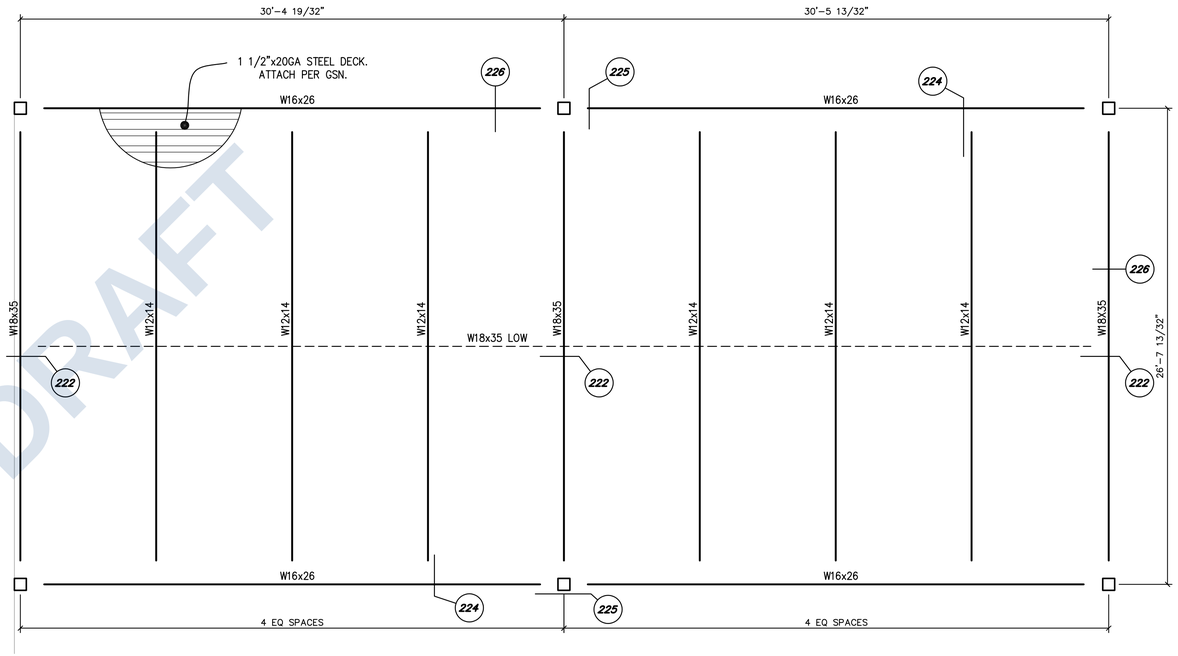

2 DEWATERING CANOPY FRAMING PLAN

SCALE: 1/4"=1'-0"

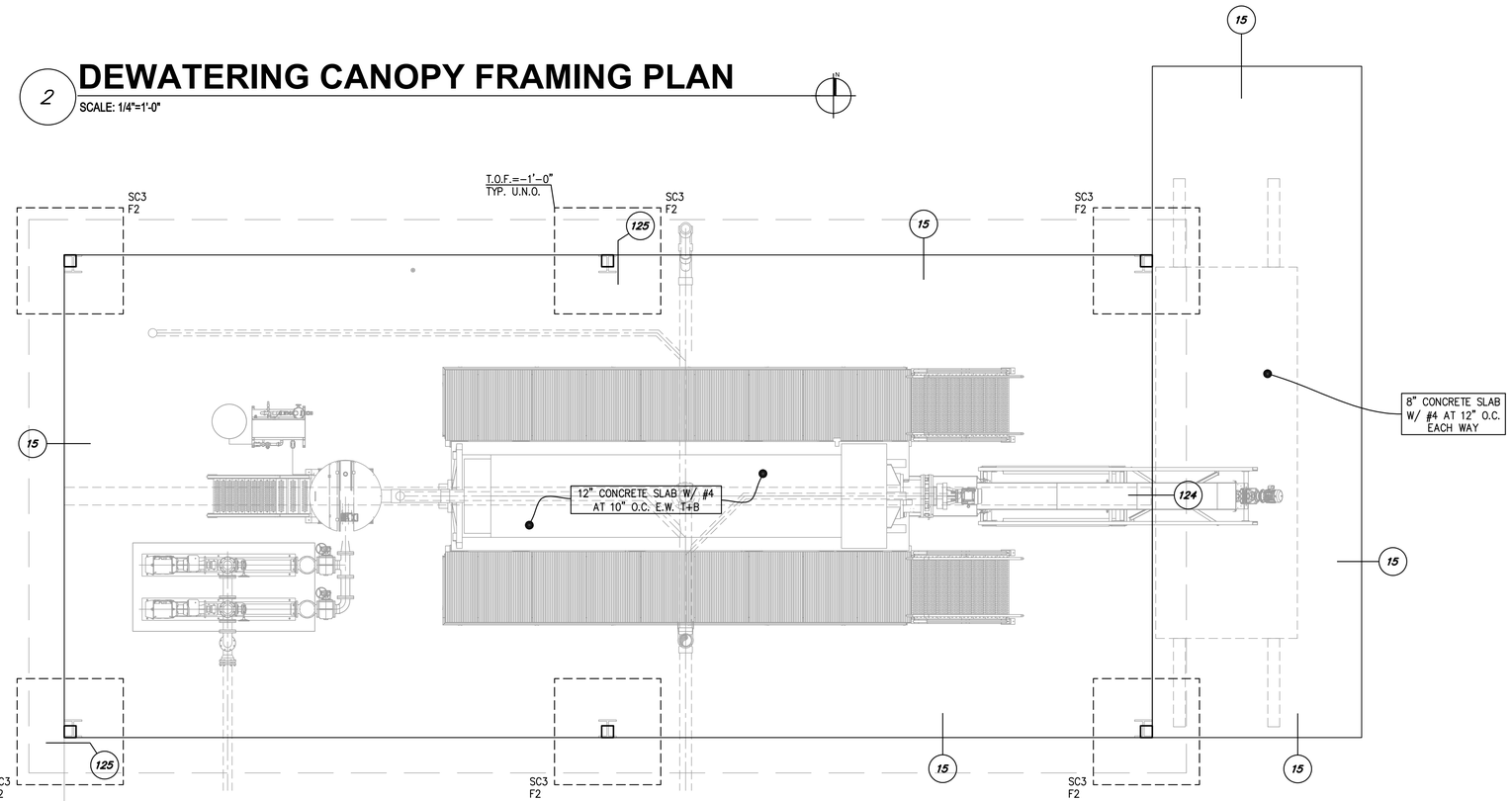

1 DEWATERING CANOPY FOUNDATION PLAN

SCALE: 1/4"=1'-0"

FOUNDATION NOTES

1. FOR LOCATION OF DETAILS SEE GENERAL STRUCTURAL NOTES.
2. VERIFY ALL DIMENSIONS WITH ARCHITECTURAL DRAWINGS. DO NOT USE "CONC C.J." AS DIMENSION LINE OR TO LOCATE BUILDING ELEMENTS.
3. SCHEDULED MARK DESIGNATIONS ARE TYPICAL TO THE PROJECT AND MAY NOT NECESSARILY BE FOUND ON THIS PLAN.
4. DEPTH OF FOOTING DIMENSIONS INDICATED IN THE G.S.N. ARE MINIMUMS. FOUNDATION CONTRACTOR SHALL COORDINATE WITH SOILS REPORT AND OTHER TRADES TO INSURE THAT THESE MINIMUMS ARE SUFFICIENT FOR THE WORK. SEE TYPICAL DETAILS FOR ADDITIONAL REQUIREMENTS. G.C. SHALL FIELD VERIFY AS-BUILT T.O.F. ELEVATIONS AND COORDINATE W/ STEEL SUPPLIER. RESOLVE ANY DISCREPANCIES PRIOR TO STEEL FABRICATION & DELIVERY.
5. VERIFY EXACT SIZE AND LOCATION OF DEPRESSED AND/OR RAISED SLABS WITH ARCHITECTURAL DRAWINGS.
6. FOR SIDEWALK LOCATION, SEE ARCHITECTURAL DRAWINGS.
7. VERIFY EXACT SIZE AND LOCATION OF OPENINGS IN PRECAST CONCRETE WALL PANELS WITH ARCHITECTURAL DRAWINGS.

ISOLATED FOOTING (F) SCHEDULE

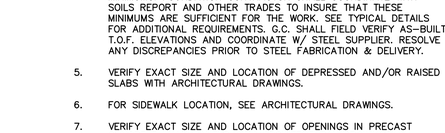

MARK	DIMENSIONS			FOOTING REINFORCING	REMARKS
	HEIGHT	WIDTH	LENGTH		
F1	18"	10'-0"	6'-0"	11- #6 CONT. AND 7- #6 TRANSVERSE TOP AND BOTTOM	---
F2	12"	6'-0"	6'-0"	7- #5 EACH WAY TOP AND BOTTOM	---
F3	12"	4'-0"	4'-0"	5- #5 EACH WAY TOP AND BOTTOM	---

COLUMN (SC) SCHEDULE

NOTE: FOR ANCHOR BOLT PATTERN, SEE TYPICAL DETAIL

MARK	SIZE	BASE CONNECTION	REMARKS
SC1	W14x61	1"x22"x18" STEEL PLATE W/ 6- 1"ø GR36F1554 ANCHOR RODS.	REFERENCE DETAIL 216
SC2	W14x159	1 1/2"x30"x24" STEEL PLATE W/ W/ 6- 1"ø GR36F1554 ANCHOR RODS.	---
SC3	HSS8x8x1/2	1"x14"x14" STEEL PLATE W/ 4- 1"ø F1554GR36 ANCHOR RODS	---
SC4	HSS6x6x3/8	3/4"x12"x12" W/ 4- 3/4"ø F1554GR36 ANCHOR RODS	---

PK ASSOCIATES, LLC
6900 E. Belleview Ave. #200
Greenwood Village, Colorado 80111
Phone: (720) 799-1058
Email: cadd@pkastructural.com
Website: www.pkastructural.com

NO	BY	DATE	REVISIONS	DATE	APP.

Registered Professional Engineer (Civil) CERTIFICATE NO. 70374 JAMES APPLEYARD Date Signed 1/24/25 ARIZONA, U.S.A.

PREPARED BY DUONG DO
PROJECT ENGINEER #40060
R.C.E. NO. --
EXP. DATE
SCALE
DRAWN WW
DESIGNED DD
CHECKED DD
DATE 5/16/2025

THESE DRAWINGS ARE THE PROPERTY OF P.A.C.E. AND SHALL NOT BE REPRODUCED IN ANY MANNER NOR BE USED FOR CONSTRUCTION UNLESS STAMPED 'ISSUED FOR CONSTRUCTION'.

TITLE: DEWATERING PLAN

JOB: CITY OF SAN LUIS WWTP IMPROVEMENTS — SAN LUIS AZ.

PACE
Advanced Water Engineering
8723 E. VIA de COMMERCIO, SUITE A-204 | SCOTTSDALE, CA 85258
P: (408) 991-3595 | www.pacewater.com

SHEET S7.0
74 OF 209 SHEETS

JOB NO. B777

FINAL PLANS ISSUED FOR BID

DRAFT

M:\PROJECTS\2024\PACE\SAN LUIS WWTP 3MGD EXPANSION (2429)\PLANS\S-DEWATERING PLAN.dwg - Tab: S7.0 - by rsbrowker on 01/23/25 at 1:45:55 PM

PK ASSOCIATES, LLC
6900 E. Belleview Ave. #200
Greenwood Village, Colorado 80111
Phone: (720) 799-1058
Email: cadd@pkastructural.com
Website: www.pk.astructural.com

FOUNDATION NOTES

1. FOR LOCATION OF DETAILS SEE GENERAL STRUCTURAL NOTES.
2. VERIFY ALL DIMENSIONS WITH ARCHITECTURAL DRAWINGS. DO NOT USE "CONC C.J." AS DIMENSION LINE OR TO LOCATE BUILDING ELEMENTS.
3. SCHEDULED MARK DESIGNATIONS ARE TYPICAL TO THE PROJECT AND MAY NOT NECESSARILY BE FOUND ON THIS PLAN.
4. DEPTH OF FOOTING DIMENSIONS INDICATED IN THE G.S.N. ARE MINIMUMS. FOUNDATION CONTRACTOR SHALL COORDINATE WITH SOILS REPORT AND OTHER TRADES TO INSURE THAT THESE MINIMUMS ARE SUFFICIENT FOR THE WORK. SEE TYPICAL DETAILS FOR ADDITIONAL REQUIREMENTS. G.C. SHALL FIELD VERIFY AS-BUILT T.O.F. ELEVATIONS AND COORDINATE W/ STEEL SUPPLIER. RESOLVE ANY DISCREPANCIES PRIOR TO STEEL FABRICATION & DELIVERY.
5. VERIFY EXACT SIZE AND LOCATION OF DEPRESSED AND/OR RAISED SLABS WITH ARCHITECTURAL DRAWINGS.
6. FOR SIDEWALK LOCATION, SEE ARCHITECTURAL DRAWINGS.
7. VERIFY EXACT SIZE AND LOCATION OF OPENINGS IN PRECAST CONCRETE WALL PANELS WITH ARCHITECTURAL DRAWINGS.

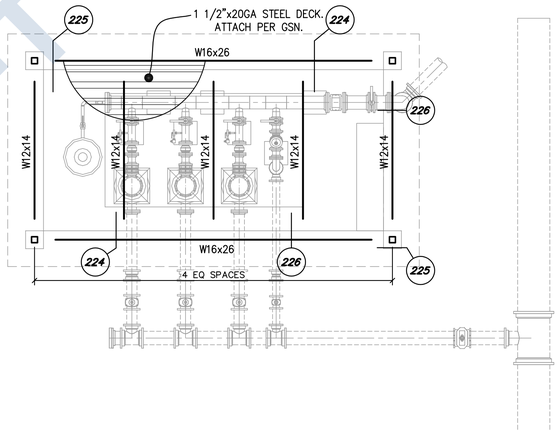

2 RE-USE PUMP STATION AND BLOWER FRAMING PLAN

SCALE: 1/4"=1'-0"

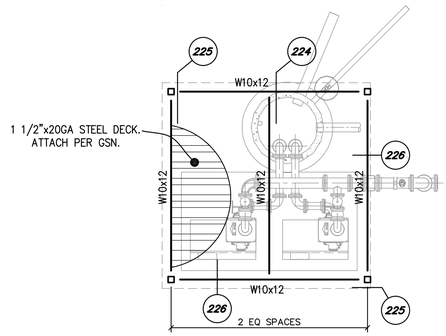

4 PLANT DRAIN FRAMING PLAN

SCALE: 1/4"=1'-0"

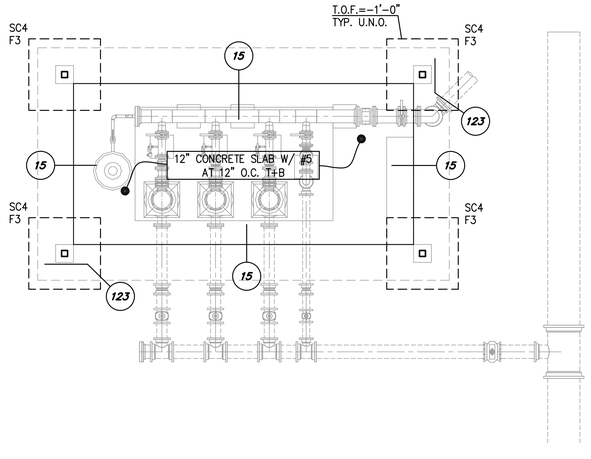

1 RE-USE PUMP STATION AND BLOWER FOUNDATION PLAN

SCALE: 1/4"=1'-0"

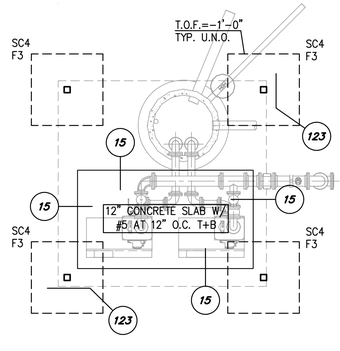

3 PLANT DRAIN FOUNDATION PLAN

SCALE: 1/4"=1'-0"

ISOLATED FOOTING (F) SCHEDULE

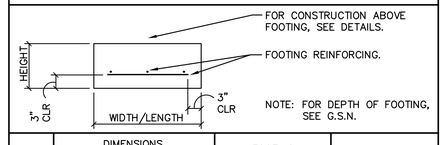

MARK	DIMENSIONS			FOOTING REINFORCING	REMARKS
	HEIGHT	WIDTH	LENGTH		
F1	18"	10'-0"	6'-0"	11- #6 CONT. AND 7- #6 TRANSVERSE TOP AND BOTTOM	---
F2	12"	6'-0"	6'-0"	7- #5 EACH WAY TOP AND BOTTOM	---
F3	12"	4'-0"	4'-0"	5- #5 EACH WAY TOP AND BOTTOM	---

COLUMN (SC) SCHEDULE

NOTE: FOR ANCHOR BOLT PATTERN, SEE TYPICAL DETAIL

MARK	SIZE	BASE CONNECTION	REMARKS
SC1	W14x61	1"x22"x18" STEEL PLATE W/ 6- 1"ø GR36F1554 ANCHOR RODS.	REFERENCE DETAIL 216
SC2	W14x159	1 1/2"x30"x24" STEEL PLATE W/ W/ 6- 1"ø GR36F1554 ANCHOR RODS.	---
SC3	HSS8x8x1/2	1"x14"x14" STEEL PLATE W/ 4- 1"ø F1554GR36 ANCHOR RODS	---
SC4	HSS6x6x3/8	3/4"x12"x12" W/ 4- 3/4"ø F1554GR36 ANCHOR RODS	---

NO	BY	DATE	REVISIONS	DATE	APP.

Registered Professional Engineer (Civil) CERTIFICATE NO. 70374 JAMES APPLEYARD Date Signed 1/24/25 ARIZONA, U.S.A.

PREPARED BY DUONG DO
PROJECT ENGINEER
R.C.E. NO. #40060
EXP. DATE
SCALE
DRAWN WW
DESIGNED DD
CHECKED DD
DATE 5/16/2025

THESE DRAWINGS ARE THE PROPERTY OF P.A.C.E. AND SHALL NOT BE REPRODUCED IN ANY MANNER NOR BE USED FOR CONSTRUCTION UNLESS STAMPED 'ISSUED FOR CONSTRUCTION'.

TITLE **CANOPY FRAMING PLANS**

JOB CITY OF SAN LUIS WWTP IMPROVEMENTS — SAN LUIS AZ.

PACE
Advanced Water Engineering
8723 E. VIA de COMMERCIO, SUITE A-204 | SCOTTSDALE, CA 85258
P: (408) 991-3595 | www.pacewater.com

SHEET **S10.0**
75 OF 209 SHEETS

JOB NO. B777

DRAFT
FINAL PLANS ISSUED FOR BID

M:\PROJECTS\2024\PACE\SAN LUIS WWTP 3MGD EXPANSION (242911)\PLANS\S-CANOPY FRAMING PLANS.dwg - Tab: S10.0 - by rsteinaller on 01/28/26 at 2:06:13 PM

PK ASSOCIATES, LLC
6900 E. Belleview Ave. #200
Greenwood Village, Colorado 80111
Phone: (720) 799-1058
Email: cadd@pkastructural.com
Website: www.pkastructural.com

DRAFT

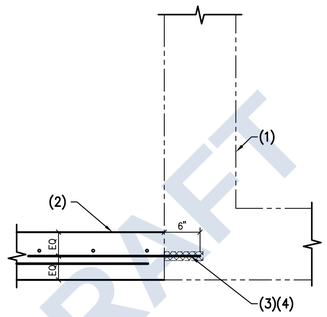

NOTES:
1. EXISTING CONCRETE SLAB.
2. CONCRETE WALL.
3. #5x30" AT 12" O.C.
4. DRILL AND EPOXY W/ HILTI HIT-RE 500 V3 EPOXY (ESR-3814) OR APPROVED EQUAL.

108 *PLAN – CONCRETE WALL AT EXISTING CONCRETE WALL*
NO SCALE

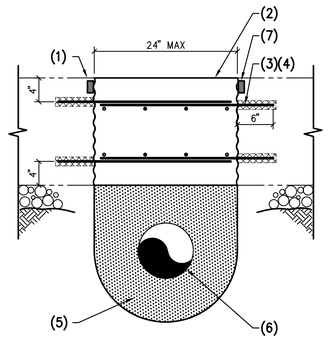

NOTES:
1. EXISTING CONCRETE SLAB.
2. CONCRETE BACKFILL.
3. #5 AT 12" O.C.
4. DRILL AND EPOXY W/ HILTI HIT-RE 500 V3.
5. SLURRY FILL
6. PIPE BY OTHERS.
7. WATER STOP PER TYPICAL DETAIL.

106 *NEW PIPE AT EXISTING SLAB*
NO SCALE

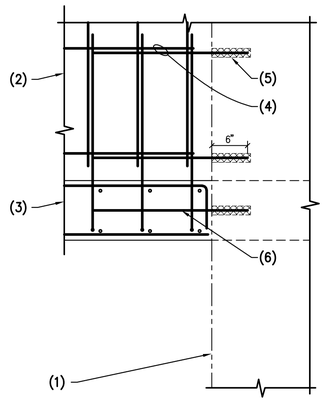

NOTES:
1. EXISTING CONCRETE WALL.
2. CONCRETE WALL.
3. CONCRETE SLAB.
4. #5x30" TO LAP WALL REINFORCING.
5. DRILL AND EPOXY W/ HILTI HIT-RE 500 V3 EPOXY (ESR-3814) OR APPROVED EQUAL.
6. #5x30".

103 *CONCRETE WALL AT EXISTING CONCRETE WALL*
NO SCALE

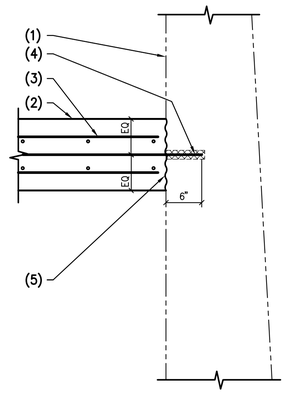

NOTES:
1. EXISTING CONCRETE WALL.
2. CONCRETE SLAB.
3. #5x30" AT 12".
4. DRILL AND EPOXY W/ HILTI HIT-RE 500 V3 EPOXY (ESR-3814), OR APPROVED EQUAL.
5. ROUGHEN TO 1/4" AMPLITUDE.

101 *CONCRETE SLAB ON GRADE AT EXISTING CONCRETE WALL.*
NO SCALE

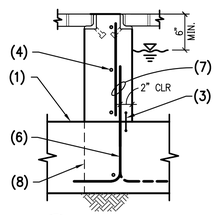

A *8" THICK WALL WATER 1 SIDE*

NOTES:
1. CONCRETE SLAB.
2. CONCRETE WALL.
3. CONT. WATER STOP.
4. HORIZONTAL REINFORCING PER SCHEDULE.
5. #5 AT 9" O.C.
6. CONT. #5 AT HOOK.
7. DOWELS TO MATCH AND LAP VERTICAL WALL REINF.
8. EDGE OF SLAB A OCCURS.

NOTE:
MAX. HEIGHT OF WATER = 11'-0"

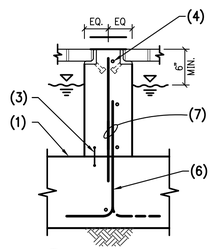

B *8" THICK WALL WATER 2 SIDE*

WALL THICKNESS	HORIZONTAL REINFORCING
8"	#5 AT 8" o.c.
10"	#5 AT 12" E.F.
12"	#5 AT 10" E.F.
14"	#5 AT 8" E.F.
16"	#6 AT 10" E.F.
18"	#6 AT 9" E.F.
20"	#6 AT 8" E.F.
22"	#6 AT 8" E.F.
24"	#7 AT 10" E.F.

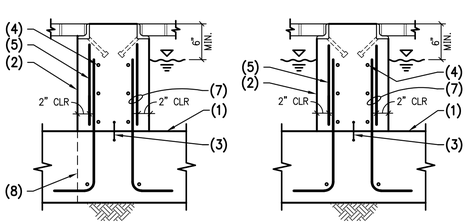

C *10" OR THICKER WALL WATER 1 SIDE*

D *10" OR THICKER WALL WATER 2 SIDES*

109 *CONCRETE WALL AT GRIT COLLECTOR HEADWORKS*
NO SCALE

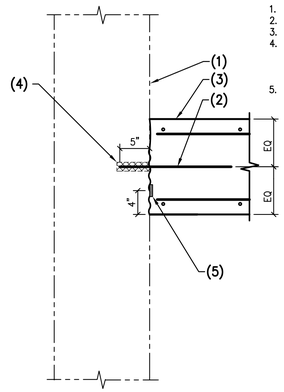

NOTES:
1. EXISTING CONCRETE WALL.
2. #5x30" AT 12" O.C.
3. CONCRETE WALL.
4. DRILL AND EPOXY WITH HILTI HIT-RE 500 V3 EPOXY (ESR 3814), OR APPROVED EQUAL.
5. CONT. WATERSTOP PER TYPICAL DETAIL, GREENSTREAK MODEL 609 PER MECH'L. (OR APPROVED EQUAL).

107 *PLAN – NEW WALL AT EXISTING WALL*
NO SCALE

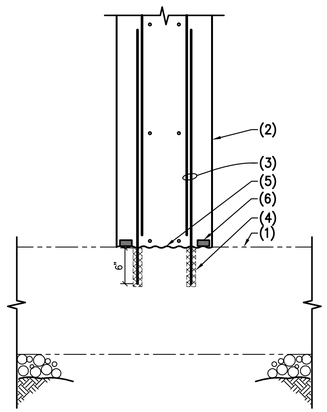

NOTES:
1. EXISTING CONCRETE SLAB.
2. CONCRETE WALL.
3. DOWELS TO MATCH AND LAP VERTICAL WALL REINFORCING.
4. DRILL AND EPOXY W/ HILTI HIT-RE 500 V3 EPOXY (ESR-3814) OR APPROVED EQUAL.
5. ROUGHEN TO 1/4" AMPLITUDE.
6. WATER STOP PER TYPICAL DETAIL.

104 *CONCRETE WALL AT EXISTING CONCRETE SLAB*
NO SCALE

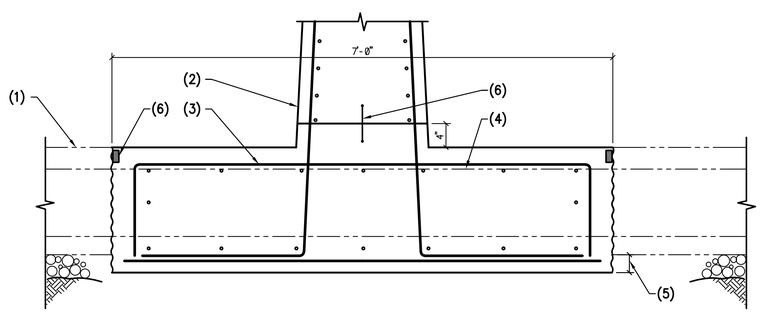

NOTES:
1. EXISTING CONCRETE SLAB.
2. CONCRETE WALL.
3. #6 AT 9" O.C. E.W. TOP AND BOTTOM.
4. EXISTING REINFORCING TO REMAIN. CHIP OUT CONCRETE AROUND REBAR. DO NOT DAMAGE EXISTING TRANSVERSE REBAR.
5. NEW FOOTING TO MATCH DEPTH OF EXISTING SLAB OR 18" DEEP, WHICHEVER IS GREATER.
6. WATER STOP PER TYPICAL DETAIL.

105 *CONCRETE WALL AT EXISTING MAT SLAB*
NO SCALE

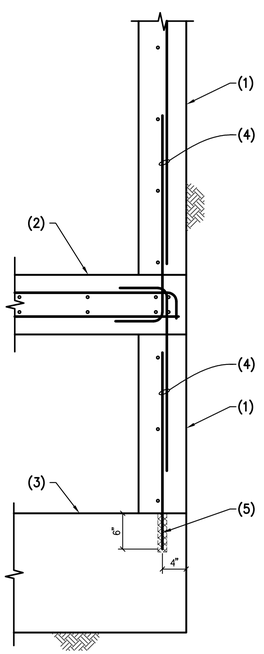

NOTES:
1. CONCRETE WALL.
2. CONCRETE SLAB.
3. CONCRETE FOOTING.
4. DOWELS TO MATCH AND LAP WALL REINFORCING.
5. DRILL AND EPOXY W/ HILITI HIT-RE 500 V3, OR APPROVED EQUAL.

102 *CONCRETE SLAB AT CONCRETE WALL.*
NO SCALE

NO	BY	DATE	REVISIONS	DATE	APP.

Registered Professional Engineer (Civil) CERTIFICATE No. 70374 JAMES APPLEYARD Date Signed 1/26/26 ARIZONA, U.S.A.

PREPARED BY DUONG DO
PROJECT ENGINEER #40060
R.C.E. NO. ---
EXP. DATE
SCALE
DRAWN WW
DESIGNED DD
CHECKED DD
DATE 5/16/2025

THESE DRAWINGS ARE THE PROPERTY OF P.A.C.E. AND SHALL NOT BE REPRODUCED IN ANY MANNER NOR BE USED FOR CONSTRUCTION UNLESS STAMPED 'ISSUED FOR CONSTRUCTION'.

TITLE **FOUNDATION DETAILS**

JOB CITY OF SAN LUIS WWTP IMPROVEMENTS SAN LUIS AZ.

PACE
Advanced Water Engineering
8723 E. VIA de COMMERCIO, SUITE A-204 | SCOTTSDALE, CA 85258
P: (408) 991-3595 | www.pacewater.com

SHEET **S11.0**
76 OF 209 SHEETS

JOB NO. B777

FINAL PLANS ISSUED FOR BID

M:\PROJECTS\2024\PACE\SAN LUIS WWTP 3MGD EXPANSION (24291)\100\S11.0.dwg – Tab: S11.0 – by nstonaker on 01/26/26 at 2:09:15 PM

DRAFT

PK ASSOCIATES, LLC
6900 E. Belleview Ave. #200
Greenwood Village, Colorado 80111
Phone: (720) 799-1058
Email: cadd@pkastructural.com
Website: www.pkastructural.com

NOTES:
1. 8" CONCRETE WALL WITH #5 AT 12" O.C. E.W.
2. CONCRETE SLAB WITH #5 AT 12" O.C. E.W. TOP AND BOTTOM.
3. CONCRETE SLAB OR FINISHED GRADE AS OCCURS.
4. DOWELS TO MATCH AND LAP WALL REINFORCING.

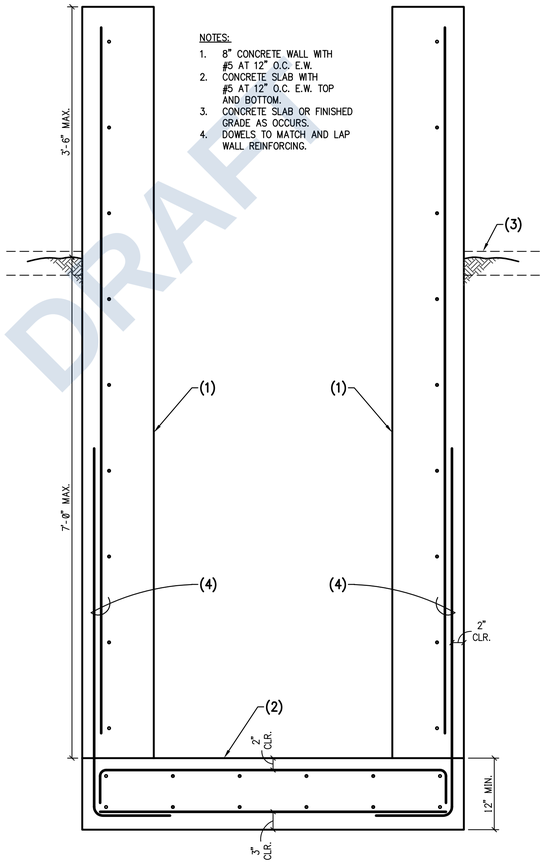

116 CONCRETE WALL AT STAIR WALL — NO SCALE

NOTES:
1. 5'-0" MAXIMUM – SEE ARCHITECTURAL DRAWINGS.
2. 8" CONCRETE WALL WITH #4 AT 16" O.C. EACH WAY.
3. FINISHED GRADE OR CONCRETE SLAB WHERE OCCURS.
4. CONCRETE FOOTING.
5. CONCRETE SLAB ON GRADE.
6. #4x24"x24" AT 24" O.C.
7. 1– #4 CONTINUOUS.
8. CONT. L6x6x5/16 W/ 1/2"ø H.S. x6" LONG AT 18" O.C.
9. LIGHT DENSITY FOAM.

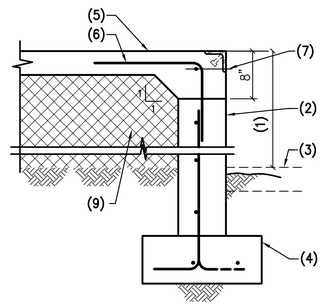

113 CONCRETE SLAB AT CONCRETE WALL — NO SCALE

NOTES:
1. TOOLED EDGE.
2. #4 AT 18" O.C. – BEND AS REQUIRED.
3. 1– #4 CONTINUOUS.
4. CONCRETE SLAB ON GRADE.
5. #4 AT 12" O.C.
6. 8" CONCRETE WALL.

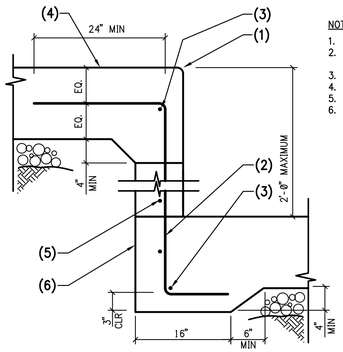

NOTE:
FOR INFORMATION NOT SHOWN, SEE ARCHITECTURAL DRAWINGS.

114 STEP IN CONCRETE SLAB ON GRADE — NO SCALE

NOTES:
1. EXISTING CONCRETE FOOTING.
2. CONCRETE POUR BACK.
3. #6 AT 12" O.C. TOP AND BOTTOM.
4. DRILL AND EPOXY WITH HILTI HIT-RE 500 V3, OR APPROVED EQUAL.

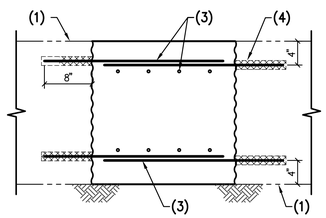

115 CONCRETE POUR BACK AT EXISTING FOUNDATIONS — NO SCALE

NOTES:
1. CONCRETE SLAB.
2. CONCRETE WALLS.
3 CONCRETE SLAB ON GRADE OR FINISHED GRADE AS OCCURS.
4. DOWELS TO MATCH AND LAP WALL REINFORCING.
5. 8" CONCRETE WALL/SLAB WITH #5 AT 10" O.C. E.W.
6. CONCRETE SLURRY.
7. CONCRETE SLAB AT 112A.
8. #5x30"x30" AT 12" O.C.

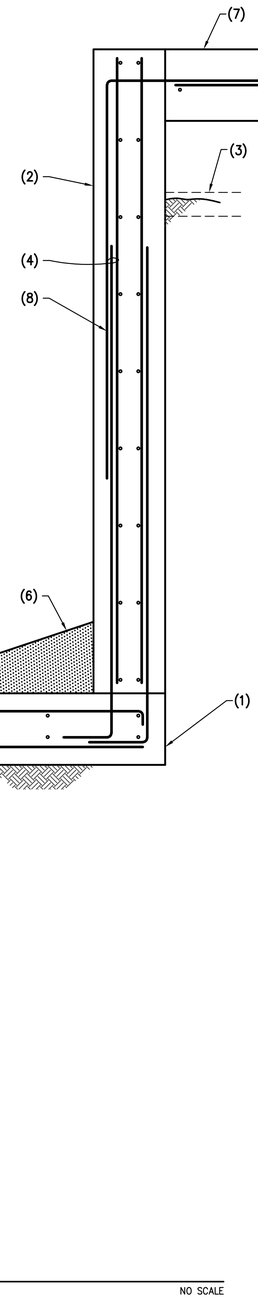

112 CONCRETE GRIT ENCLOSURE — NO SCALE
112A AS NOTED

NOTES:
1. 4– #5 CONT. TOP AND BOTTOM.
2. #4 TIES AT 12" O.C.
3. 12" ø PENETRATION AS OCCURS.

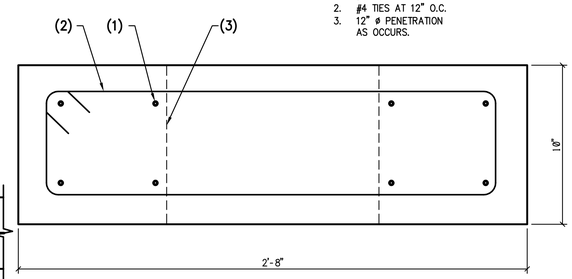

110 BEAM SECTION — NO SCALE

NOTES:
1. 8" CONCRETE WALL WITH #5 AT 9" O.C. VERTICAL AND #5 AT 12" O.C.
2. 8" CONCRETE SLAB WITH #5 AT 12" O.C.
3. CONCRETE SLAB.
4. VOID FORM, HIGH DENSITY FOAM, SOIL, OR SAND AT CONTRACTOR OPTION.
5. DOWELS TO MATCH AND LAP WALL REINFORCING.
6. CONCRETE SLAB OR GRADE AS OCCURS.
7. EDGE OF SLAB AS OCCURS.
8. WATERSTOP ON WATER SIDE PER TYPICAL DETAIL.

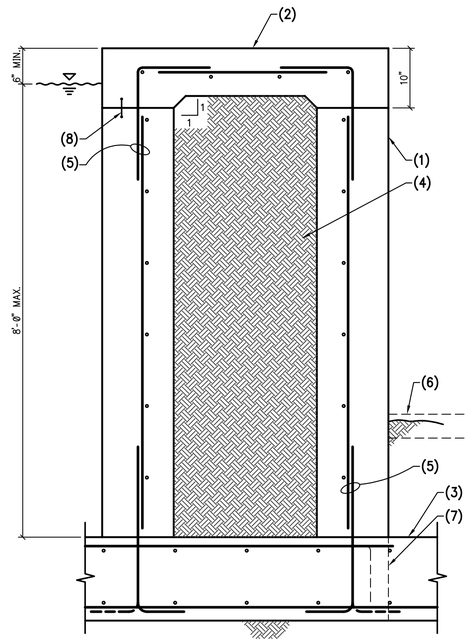

111 CONCRETE WALLS AT CONCRETE SLAB — NO SCALE

NO	BY	DATE	REVISIONS	DATE	APP.

Registered Professional Engineer (Civil) CERTIFICATE No. 70374 JAMES APPLEYARD Date Signed 2/5/26 ARIZONA, U.S.A.

PREPARED BY: DUONG DO
PROJECT ENGINEER: #40060
R.C.E. NO.: ---
EXP. DATE:
SCALE:
DRAWN: WW
DESIGNED: DD
CHECKED: DD
DATE: 5/16/2025

THESE DRAWINGS ARE THE PROPERTY OF P.A.C.E. AND SHALL NOT BE REPRODUCED IN ANY MANNER NOR BE USED FOR CONSTRUCTION UNLESS STAMPED "ISSUED FOR CONSTRUCTION".

TITLE: **FOUNDATION DETAILS**

JOB: CITY OF SAN LUIS WWTP IMPROVEMENTS — SAN LUIS AZ.

PACE
Advanced Water Engineering
8723 E. VIA de COMMERCIO, SUITE A-204 | SCOTTSDALE, CA 85258
P: (408) 991-3595 | www.pacewater.com

SHEET **S11.1**
77 OF 209 SHEETS

JOB NO. B777

FINAL PLANS ISSUED FOR BID

M:\PROJECTS\2024\PACE\SAN LUIS WWTP 3MGD EXPANSION (24291)\100\S11.1.dwg – Tab: S11.1 – by rabrooker on 01/26/26 at 4:12:45 PM

PK ASSOCIATES, LLC
6900 E. Belleview Ave. #200
Greenwood Village, Colorado 80111
Phone: (720) 799-1058
Email: cadd@pkastructural.com
Website: www.pkastructural.com

DRAFT

NOTES:
1. CONCRETE SLAB.
2. #5x24" AT 12" O.C.

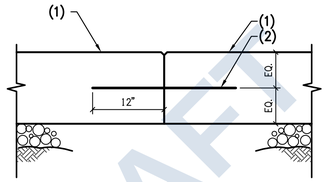

124 CONCRETE SLAB AT CONCRETE SLAB — NO SCALE

NOTES:
1. CONCRETE WALL.
2. EXISTING CONCRETE MAT SLAB.
3. #4 TIES AT 4" O.C.
4. 3 TIES IN BOTTOM 5".
5. DRILL AND EPOXY WITH HILTI HIT–RE 500 V3 EPOXY, OR APPROVED EQUAL.
6. ROUGHEN TO 1/4" AMPLITUDE.
7. #5 "U" BAR TO MATCH AND LAP WALL REINFORCING.
8. 6– #7 VERTICALS.
9. DOWELS TO MATCH AND LAP VERTICAL REINFORCING.
10. CHAMFER CORNERS.

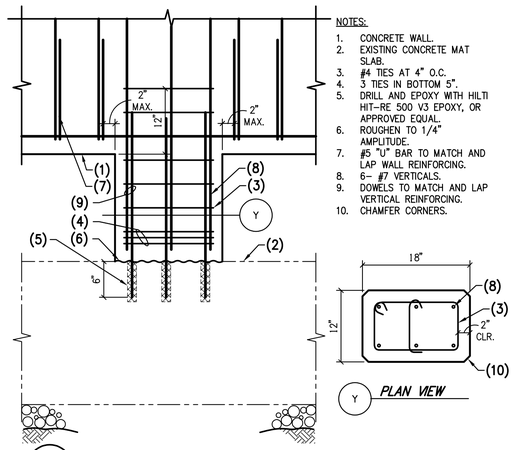

121 PIER AT CONCRETE WALL — NO SCALE

NOTES:
1. CONCRETE SLAB.
2. CONCRETE WALL.
3. CONCRETE STAIRS.
4. #4x20"x20" AT 12" O.C.
5. CONT. #4.
6. #5x36" AT 12" O.C.

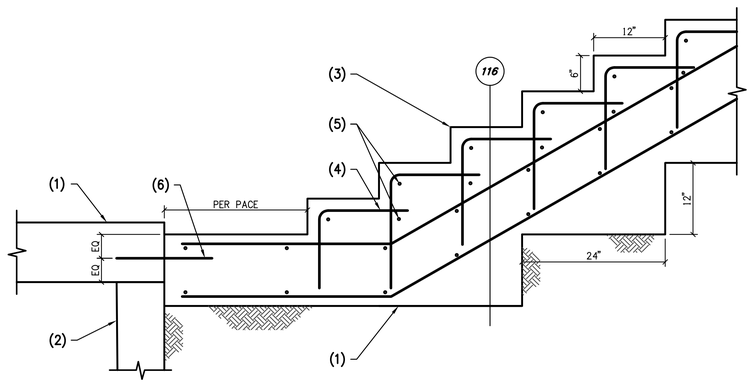

117 BOTTOM OF STAIR WALL AT CONCRETE SLAB — NO SCALE

NOTES:
1. STEEL COLUMN.
2. 1/4" CONTINUOUS SHEET FLEX FOAM.
3. FINISHED GRADE OR CONCRETE SLAB AS OCCURS.
4. 3" MINIMUM CONCRETE COVER AROUND ALL STEEL BELOW GRADE.
5. CONCRETE FOOTING.
6. STEEL BASE PLATE WITH DOUBLE NUTS OVER 1 1/2" ± DRYPACK.
7. CONCRETE SLAB ON GRADE.

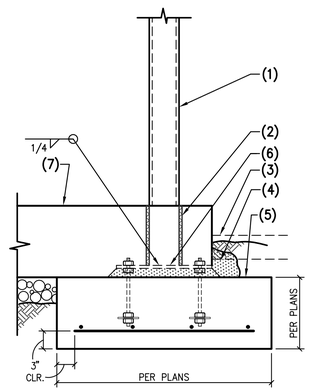

125 EXTERIOR STEEL COLUMN FOOTING — NO SCALE

NOTES:
1. STEEL COLUMN – FOR DIRECTION OF WEB, SEE PLAN.
2. CONCRETE CLOSURE POUR AROUND COLUMN.
3. FINISHED GRADE OR CONCRETE SLAB WHERE OCCURS.
4. 3" MINIMUM CONCRETE COVER AROUND ALL STEEL BELOW GRADE.
5. STEEL BASE PLATE WITH DOUBLE NUTS OVER 1 1/2"± DRYPACK.
6. CONCRETE FOOTING.
7. SLURRY TO BOTTOM OF EXISTING FOOTING.

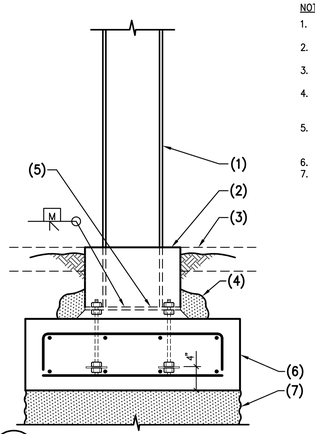

122 EXTERIOR STEEL COLUMN FOOTING — NO SCALE

NOTES:
1. STEEL COLUMN.
2. CONCRETE PEDESTAL WITH DIMENSIONS AS SHOWN.
3. #4 DOWEL AT EACH CORNER.
4. EXTERIOR GRADE OR CONCRETE SLAB ON GRADE AS OCCURS.
5. STEEL BASE PLATE WITH DOUBLE NUTS OVER 1 1/2"± DRYPACK.
6. CONCRETE FOOTING.
7. #3 TIES AT 8" O.C.
8. MASONRY VENEER AND ATTACHMENT AS OCCURS PER ARCH'L.

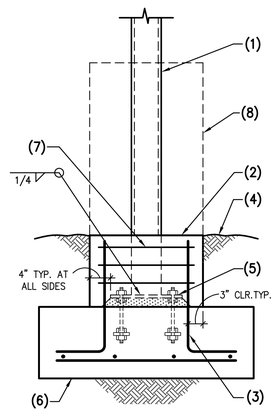

120 STEEL COLUMN FOOTING AND PEDESTAL AT EXTERIOR — NO SCALE

NOTES:
1. CONCRETE SLAB.
2. CONCRETE WALL.
3. CONCRETE FOOTING.
4. DRILL AND EPOXY WITH HILTI HIT–RE 500 V3, OR APPROVED EQUAL.
5. DOWELS TO MATCH AND LAP WALL REINFORCING.

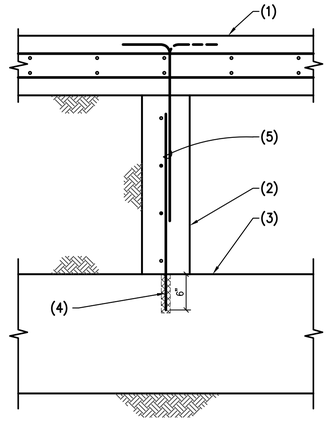

118 CONCRETE WALL AT CONCRETE SLAB. — NO SCALE

NOTES:
1. CONCRETE SLAB.
2. CONCRETE SLAB OR FINISHED GRADE.
3. CONCRETE TURNDOWN.
4. HOOK SLAB REINFORCING. OR FINISHED GRADE AS
5. CONT. #5 AT 12" O.C. MAX.

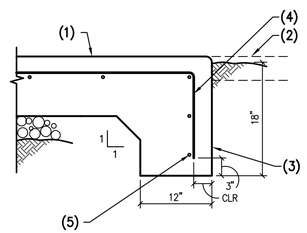

126 CONCRETE SLAB TURNDOWN — NO SCALE

NOTES:
1. STEEL COLUMN – FOR DIRECTION OF WEB, SEE PLAN.
2. CONCRETE CLOSURE POUR AROUND COLUMN.
3. FINISHED GRADE OR CONCRETE SLAB WHERE OCCURS.
4. 3" MINIMUM CONCRETE COVER AROUND ALL STEEL BELOW GRADE.
5. STEEL BASE PLATE WITH DOUBLE NUTS OVER 1 1/2"± DRYPACK.
6. CONCRETE FOOTING.
7. STEEL POST, BASE PLATE AND ANCHORS PER DEFERRED SUBMITTAL AT 123A.

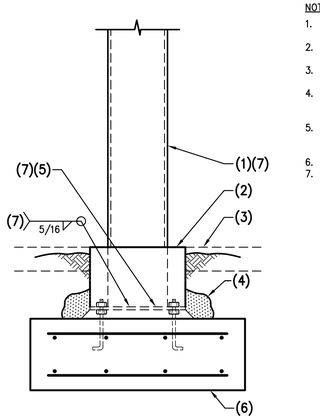

123 EXTERIOR STEEL COLUMN FOOTING
123A AS NOTED — NO SCALE

NOTES:
1. CONCRETE SLAB.
2. CONCRETE STAIRS..
3. #4X20"X20" AT 12" O.C.
4. CONT. #4.
5. CONCRETE SLAB OR FINISHED GRADE AS OCCURS.

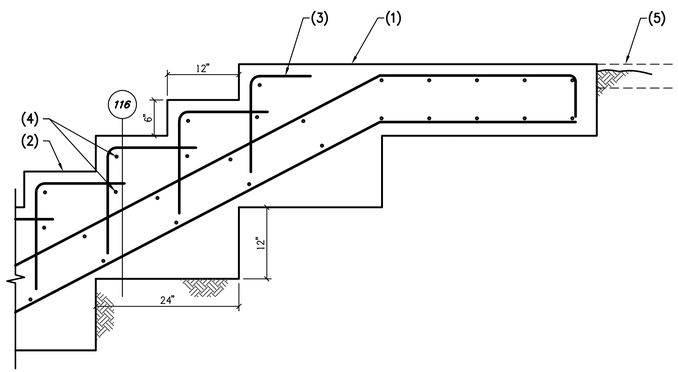

119 CONCRETE STAIR AT CONCRETE SLAB — NO SCALE

NO	BY	DATE	REVISIONS	DATE	APP.

Registered Professional Engineer — CERTIFICATE No. 70374 — JAMES APPLEYARD — Date Signed 2/5/26 — ARIZONA, U.S.A.

PREPARED BY: DUONG DO
PROJECT ENGINEER: #40060
R.C.E. NO.: ---
EXP. DATE:
SCALE:
DRAWN: WW
DESIGNED: DD
CHECKED: DD
DATE: 5/16/2025

TITLE: FOUNDATION DETAILS

JOB: CITY OF SAN LUIS WWTP IMPROVEMENTS — SAN LUIS AZ.

PACE
Advanced Water Engineering
8723 E. VIA de COMMERCIO, SUITE A-204 | SCOTTSDALE, CA 85258
P: (408) 991-3995 | www.pacewater.com

SHEET
S11.2
78 OF 209 SHEETS

JOB NO. B777

THESE DRAWINGS ARE THE PROPERTY OF P.A.C.E. AND SHALL NOT BE REPRODUCED IN ANY MANNER NOR BE USED FOR CONSTRUCTION UNLESS STAMPED 'ISSUED FOR CONSTRUCTION'.

FINAL PLANS ISSUED FOR BID

M:\PROJECTS\2024\PACE\SAN LUIS WWTP 3MGD EXPANSION (24291)\100\S11.2.dwg – Tab: S11.2 – by mslonaker on 01/26/26 at 4:12:45 PM

DRAFT

NOTES:
1. CONCRETE SLAB.
2. 8" CONCRETE WALL WITH #5 AT 10" O.C.
3. DOWELS TO MATCH AND LAP WALL REINFORCING.
4. CONCRETE SLURRY.
5. #5x24"x24" AT 12" O.C.

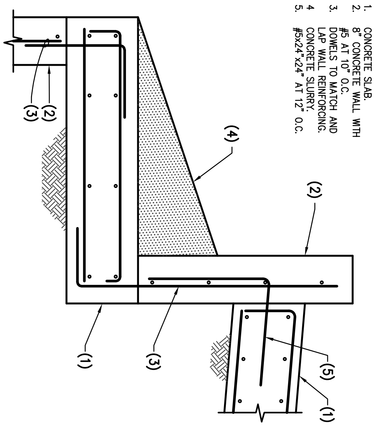

127 CONCRETE KNEEWALL AT GRIT COLLECTOR

NO SCALE

PK ASSOCIATES, LLC
6900 E. Belleview Ave. #200
Greenwood Village, Colorado 80111
Phone: (720) 779-1555
Email: cody@pkstructural.com
Website: www.pkstructural.com

JOB NO. 8777	SHEET S11.3 79 OF 209 SHEETS	

PACE Advanced Water Engineering
8723 E. VIA de COMMERICO, SUITE A-204 | SCOTTSDALE, CA 85258
P: (408) 991-3595 | www.pacewater.com

JOB
CITY OF SAN LUIS WWTP IMPROVEMENTS
SAN LUIS AZ.

TITLE
FOUNDATION DETAILS

PREPARED BY
DUONG DO
PROJECT ENGINEER
R.C.E. NO. #40050
EXP. DATE

DRAWN WW | SCALE
DESIGNED DD
CHECKED DD | DATE 5/16/2025

Registered Professional Engineer
DUONG DO
76374
APPLEYARD
Civil
STATE OF ARIZONA
5/16/25

NO	BY	DATE	REVISIONS	DATE	APP.
1					
2					
3					
4					
5					

FINAL PLANS ISSUED FOR BID

THESE DRAWINGS ARE THE PROPERTY OF P.A.C.E. AND SHALL NOT BE REPRODUCED IN ANY MANNER NOR BE USED FOR CONSTRUCTION UNLESS STAMPED "ISSUED FOR CONSTRUCTION".

PK ASSOCIATES, LLC
6900 E. Belleview Ave. #200
Greenwood Village, Colorado 80111
Phone: (720) 799-1058
Email: cadd@pkastructural.com
Website: www.pkastructural.com

DRAFT

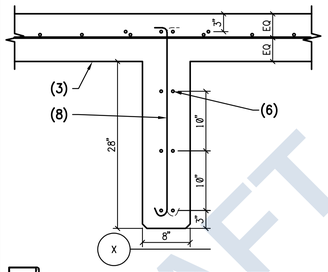

NOTES:
1. EXISTING CONCRETE WALL.
2. CONCRETE WALL.
3. CONCRETE SLAB.
4. STD HOOK.
5. 4– #5 AT 4" O.C.
6. 3– SETS OF 2– #5 AT 4" O.C.
7. DRILL AND EPOXY W/ HILTI HIT–RE 500 V3 (ESR–3814), OR APPROVED EQUAL.
8. #4 AT 12" O.C. W/ 135° BEND AND STD HOOK.
9. CONCRETE BEAM.

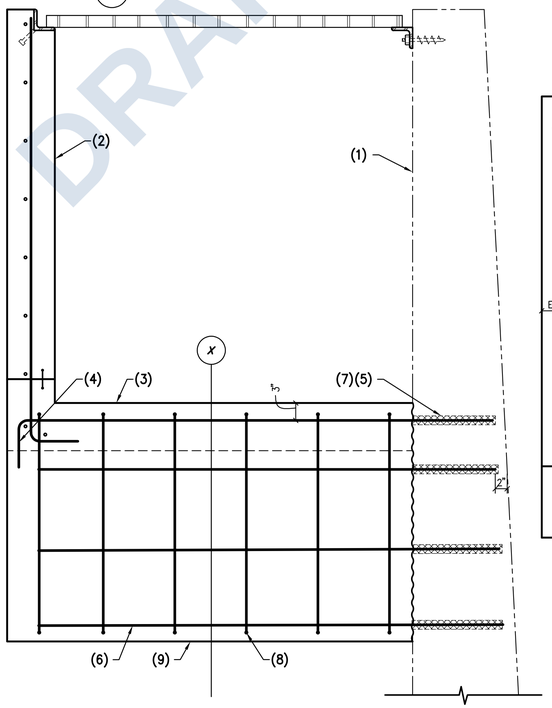

207 CONCRETE BEAM AT EXISTING WALL
NO SCALE

NOTES:
1. EXISTING CONCRETE WALL.
2. 8" CONCRETE WALL W/ #5 AT 7" O.C. E.W.
3. 8" CONCRETE SLAB W/ #5 AT 7" O.C. E.W.
4. STANDARD HOOK.
5. #5x30" AT 14" O.C.
6. DRILL AND EPOXY W/ HILTI HIT–RE500 V3 (ESR–3814) EPOXY, OR APPROVED EQUAL.
7. GRATING AND ATTACHMENT BY OTHERS.
8. L3x3x1/4 W/ 1/2"ø H.S. AT 18" O.C.
9. L3x3x1/4 W/ 1/2"ø HILTI KWIK HUS EZ SCREW ANCHOR AT 48" O.C.
10. WATER STOP PER TYPICAL DETAIL.

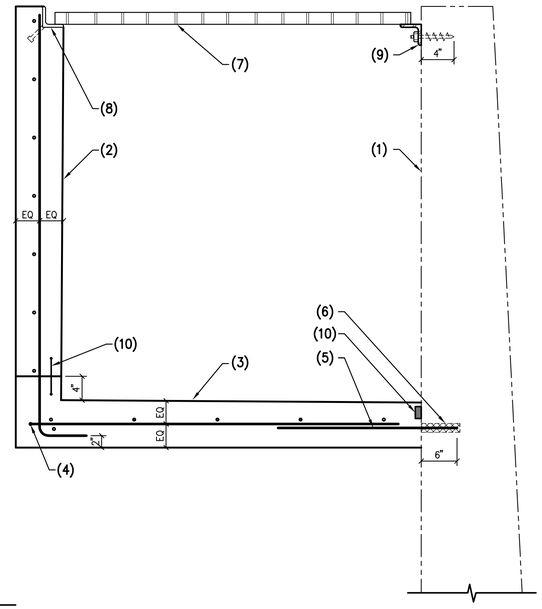

206 CONCRETE CHANNEL AT EXISTING WALL
NO SCALE

NOTES:
1. EXISTING CONCRETE WALL.
2. 8" CONCRETE WALL WITH #5 AT 7" O.C. E.W.
3. 8" CONCRETE SLAB WITH #5 AT 8" O.C. TOP AND BOTTOM E.W.
4. STD HOOK.
5. FRP COVER AND ATTACHMENT BY OTHERS.
6. STEEL ANGLE.
7. GRATING AND ATTACHMENT BY OTHERS.
8. DRILL AND EPOXY W/ HILTI HIT–RE 500 V3 EPOXY (ESR–3814) OR APPROVED EQUAL.
9. WATER STOP PER TYPICAL DETAIL.

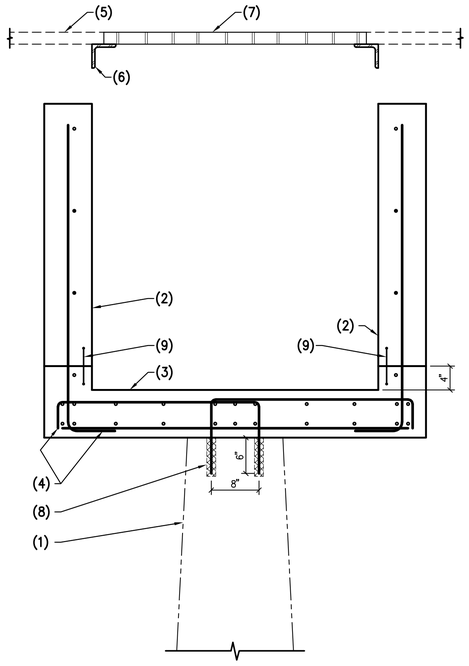

203 CONCRETE CHANNEL AT EXISTING WALL
NO SCALE

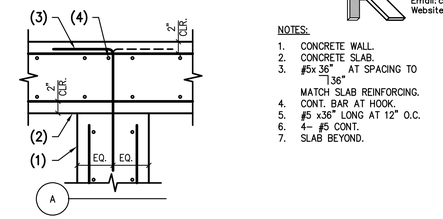

NOTES:
1. CONCRETE WALL.
2. CONCRETE SLAB.
3. #5x 36" AT SPACING TO 1'-36" MATCH SLAB REINFORCING.
4. CONT. BAR AT HOOK.
5. #5 x36" LONG AT 12" O.C.
6. 4– #5 CONT.
7. SLAB BEYOND.

201 CONCRETE WALL AT CONCRETE WALL
NO SCALE

NOTES:
1. EXISTING CONCRETE WALL.
2. CONCRETE SLAB.
3. #5x30" AT 12" O.C.
4. DRILL AND EPOXY W/ HILTI HIT–RE 500 V3 EPOXY (ESR–3814) OR APPROVED EQUAL.
5. CONCRETE SLAB EACH SIDE AT 201A.
6. DRILL AND EPOXY DOWELS TO BE STAGGERED AT NET 6" O.C.
7. ROUGHEN TO 1/4" AMPLITUDE.

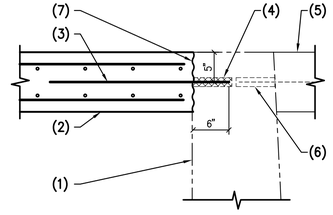

202 CONCRETE SLAB
NO SCALE

NOTES:
1. EXISTING CONCRETE WALL.
2. CONCRETE BEAM.
3. 3– SETS OF 2– #5 AT 8" O.C.
4. DRILL AND EPOXY W/ HILTI HIT–RE 500 V3 EPOXY (ESR–3814), OR APPORVED EQUAL.
5. ROUGHEN TO 1/4" AMPLITUDE.

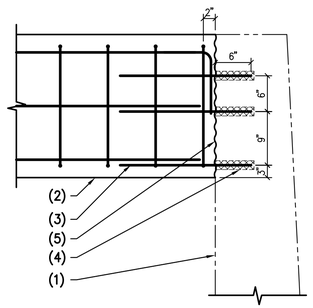

205 CONCRETE BEAM AT EXISTING WALL
NO SCALE

NOTES:
1. CONCRETE WALL.
2. CONCRETE BEAM.
3. 2– #5x24"x24" AT 8" O.C.
4. #5 BENT "U" BAR

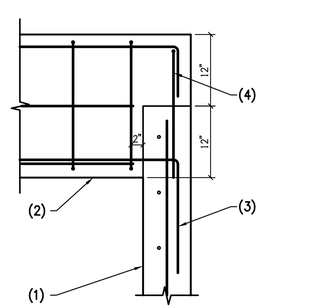

204 CONCRETE BEAM AT CONCRETE WALL
NO SCALE

NO	BY	DATE	REVISIONS	DATE	APP.

Registered Professional Engineer (Civil) CERTIFICATE No. 70374 JAMES APPLEYARD Date Signed 1/26/26 ARIZONA, U.S.A.

PREPARED BY DUONG DO
PROJECT ENGINEER #40060
R.C.E. NO. ---
EXP. DATE
SCALE
DRAWN WW
DESIGNED DD
CHECKED DD
DATE 5/16/2025

TITLE: FRAMING DETAILS

JOB: CITY OF SAN LUIS WWTP IMPROVEMENTS — SAN LUIS AZ.

PACE
Advanced Water Engineering
8723 E. VIA de COMMERCIO, SUITE A-204 | SCOTTSDALE, CA 85258
P: (408) 991-3595 | www.pacewater.com

SHEET
S12.0
80 OF 209 SHEETS

JOB NO. B777

THESE DRAWINGS ARE THE PROPERTY OF P.A.C.E. AND SHALL NOT BE REPRODUCED IN ANY MANNER NOR BE USED FOR CONSTRUCTION UNLESS STAMPED "ISSUED FOR CONSTRUCTION".

FINAL PLANS ISSUED FOR BID

M:\PROJECTS\2024\PACE\SAN LUIS WWTP 3MGD EXPANSION (24291)\200\S12.0.dwg – Tab: S12.0 – by rolandaker on 01/23/26 at 3:42:57 PM

PK ASSOCIATES, LLC
6900 E. Belleview Ave. #200
Greenwood Village, Colorado 80111
Phone: (720) 799-1058
Email: cadd@pkastructural.com
Website: www.pkastructural.com

DRAFT

NOTES:
1. EXISTING CONCRETE WALL.
2. CONCRETE SLAB.
3. 12" THICK CONCRETE WALL W/ #5 AT 9" O.C. EACH WAY.
4. DRILL AND EPOXY WITH HIT-RE 500 V3 EPOXY, OR APPROVED EQUAL.
5. DOWEL TO MATCH AND LAP SLAB REINFORCING.
6. ROUGHEN TO 1/4" AMPLITUDE.
7. EDGE OF WALL BEYOND.

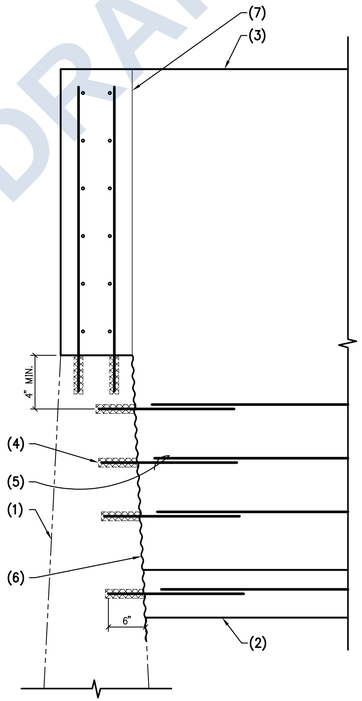

213 CONCRETE WALL AT EXISTING CONCRETE WALL
NO SCALE

NOTES:
1. EXISTING CONCRETE WALL.
2. 8" THICK CONCRETE SLAB W/ #5 AT 10" O.C. EACH WAY.
3. DRILL AND EPOXY W/ HILTI HIT-RE 500 V3 EPOXY, OR APPROVED EQUAL.
4. ROUGHEN TO 1/4" AMPLITUDE.
5. DOWEL TO MATCH AND LAP SLAB REINFORCING.
6. 12" THICK CONRETE WALL W/ #5 AT 9" O.C. E.W. E.F.
7. WATER STOP PER TYPICAL DETAIL.

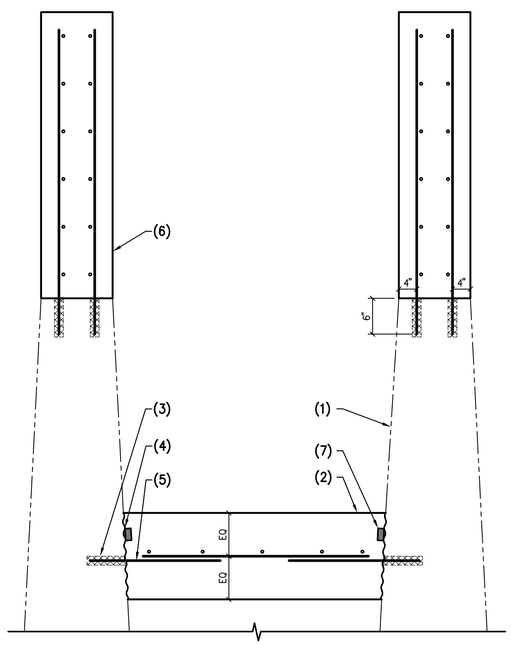

212 CONCRETE SLAB AT EXISTING CONCRETE WALL
NO SCALE

NOTES:
1. EXISTING CONCRETE WALL.
2. CONCRETE WALL.
3. CONCRETE SLAB.
4. #5x30" TO LAP WALL REINFORCING.
5. DRILL AND EPOXY W/ HILTI HIT-RE 500 V3 EPOXY (ESR-3814) OR APPROVED EQUAL.
6. #5x30".
7. ROUGHEN TO 1/4" AMPLITUDE.

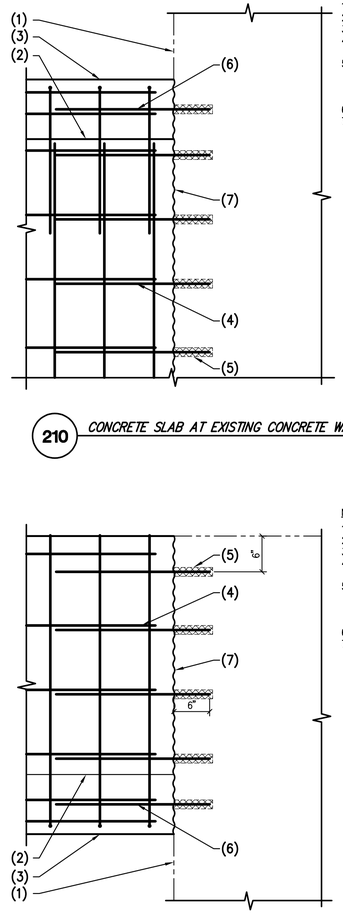

210 CONCRETE SLAB AT EXISTING CONCRETE WALL
NO SCALE

NOTES:
1. EXISTING CONCRETE WALL.
2. CONCRETE WALL.
3. CONCRETE SLAB.
4. #5x30" TO LAP WALL REINFORCING.
5. DRILL AND EPOXY W/ HILTI HIT-RE 500 V3 EPOXY (ESR-3814) OR APPROVED EQUAL.
6. #5x30".
7. ROUGHEN TO 1/4" AMPLITUDE.

211 CONCRETE WALL AT TOP OF EXISTING CONCRETE WALL
NO SCALE

NOTES:
1. 8" CONCRETE WALL W/ #5 AT 7" O.C. E.W.
2. 8" CONCRETE SLAB W/ #5 AT 7" O.C. E.W.
3. CONCRETE SLAB.
4. CONCRETE WALL.
5. CONT. #5 AT BEND.
6. #5x24"x24" AT 12" O.C.
7. CONT. L2x2x3/16 W/ 1/2"ø H.S. AT 18" O.C.
8. GRATING AND ATTACHMENT BY OTHERS.
9. WATER STOP PER TYPICAL DETAIL.

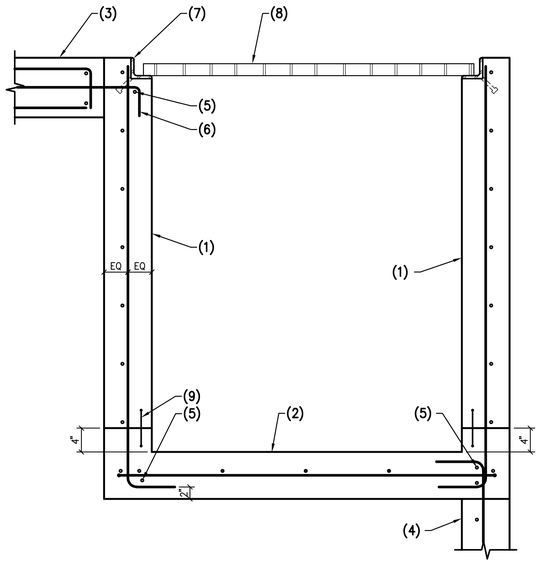

208 CONCRETE CHANNEL AT CONCRETE WALLS
NO SCALE

NOTES:
1. CONCRETE WALL.
2. CONCRETE SLAB.
3. #5x24"x24" AT 12" O.C.
4. CONT. #5 AT BEND.
5. ALTERNATE BEND.

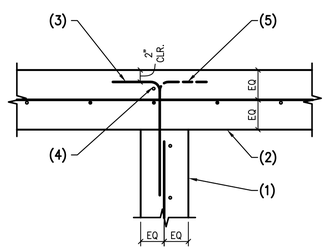

209 CONCRETE SLAB AT CONCRETE WALL
NO SCALE

NO	BY	DATE	REVISIONS	DATE	APP.

Registered Professional Engineer (Civil) CERTIFICATE No. 70374 JAMES APPLEYARD Date Signed 1/24/26 ARIZONA, U.S.A.

PREPARED BY: DUONG DO
PROJECT ENGINEER: #40060
R.C.E. NO.: —
EXP. DATE:
DRAWN: WW
SCALE:
DESIGNED: DD
CHECKED: DD
DATE: 5/16/2025

THESE DRAWINGS ARE THE PROPERTY OF P.A.C.E. AND SHALL NOT BE REPRODUCED IN ANY MANNER NOR BE USED FOR CONSTRUCTION UNLESS STAMPED "ISSUED FOR CONSTRUCTION".

TITLE: FRAMING DETAILS

JOB: CITY OF SAN LUIS WWTP IMPROVEMENTS — SAN LUIS AZ.

PACE
Advanced Water Engineering
8723 E. VIA de COMMERCIO, SUITE A-204 | SCOTTSDALE, CA 85258
P: (408) 991-3595 | www.pacewater.com

SHEET
S12.1
81 OF 209 SHEETS

JOB NO. B777

FINAL PLANS ISSUED FOR BID

W:\PROJECTS\2024\PACE\SAN LUIS WWTP 3MGD EXPANSION (24291)\200\S12.1.dwg — Tab: S12.1 — by rslonaker on 01/23/26 at 3:42:55 PM

PK ASSOCIATES, LLC
6900 E. Belleview Ave. #200
Greenwood Village, Colorado 80111
Phone: (720) 799-1058
Email: cadd@pkastructural.com
Website: www.pkastructural.com

DRAFT

NOTES:
1. CONCRETE SLAB.
2. PRE ENGINEERED CANOPY STEEL COLUMN AND ATTACHMENT PER CANOPY SUPPLIER.
3. CONCRETE BEAM W/ 5– #7 TOP AND BOTTOM, 2– #5 EACH FACE, AND #4 TIES AT 12" O.C.
4. HIGH DENSITY FOAM.

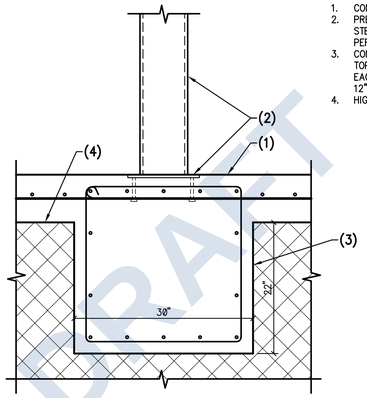

218 STEEL COLUMN AT CONCRETE BEAM — NO SCALE

NOTES:
1. EXISTING CONCRETE WALL.
2. 8" CONCRETE WALL W/ #5 AT 7" O.C. E.W.
3. L3x3x1/4 W/ 1/2"ø H.S. AT 18" O.C.
4. STEEL BEAM.
5. 1/2"x9"x15" STEEL PLATE W/ 4– 3/4"ø H.S. AT 30" O.C.
6. 1/2"x10"x18" STEEL PLATE W/ 4– 3/4"ø HILTI KWIK HUS EZ SCREW ANCHORS, OR APPROVED EQUAL AT 15" O.C.
7. 1/2" HSS SLEEVE.
8. EXISTING STEEL COLUMN.

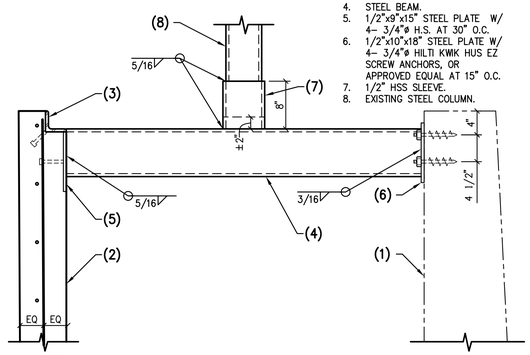

217 STEEL BEAM AT CONCRETE WALL — NO SCALE

NOTES:
1. STEEL BRACE.
2. 1" STEEL PLATE.

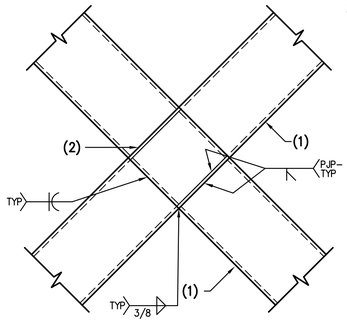

215 STEEL BRACE INTERSECTION — NO SCALE

NOTES:
1. STEEL COLUMN.
2. STEEL BEAM.
3. W12x65.
4. 1"x24 1/2" STEEL CAP PLATE.
5. 8– 1"ø BOLTS.
6. 8– 1"ø BOLTS AT 4" O.C.
7. 1" STEEL CAP PLATE.
8. 1" STEEL PLATE EACH SIDE OF COLUMN.
9. STEEL CRANE RAIL.
10. 2– L4x4x1/2x12 1/2" LONG
11. 2– SETS OF 3 1"ø BOLTS.
12. 1/2" STEEL PLATE EACH SIDE OF STEEL BEAM.
13. 3/4" STEEL GUSSET PLATE AT 214A.
14. STEEL BRACE AT 214A.
15. 1/4" STEEL CAP PLATE, BUTT WELD ALL AROUND AT 214A.

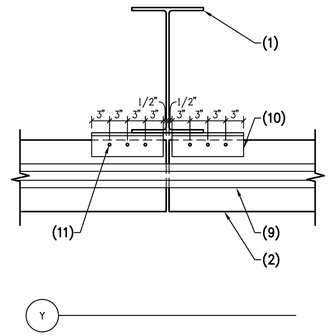

NOTES:
1. CONCRETE WALL.
2. CONCRETE BEAM.
3. KEY PER TYPICAL DETAIL.
4. (2) ROWS OF (3)– #6 AT 9" O.C.
5. AT G.C. OPTIONS USE THREADED INSERTS THAT DEVELOP 125% OF THE TENSILE LAP OF THE REBAR.
6. TOP OF WALL AS OCCURS.

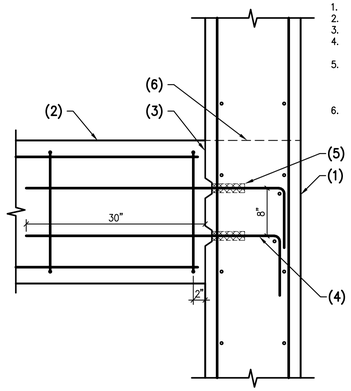

219 CONCRETE BEAM AT CONCRETE WALL — NO SCALE

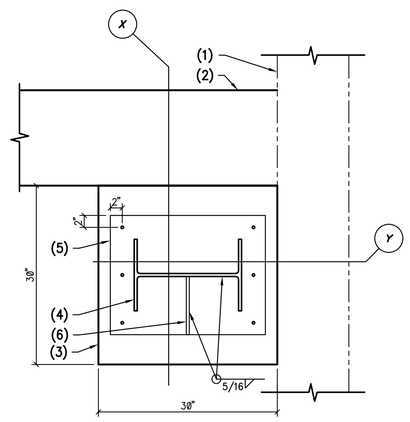

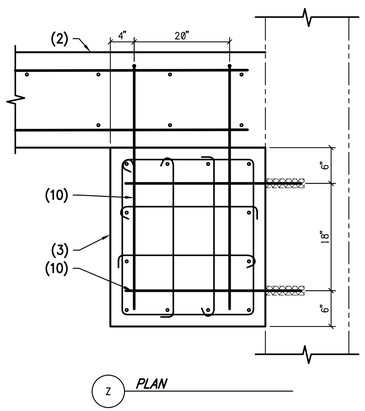

Z PLAN

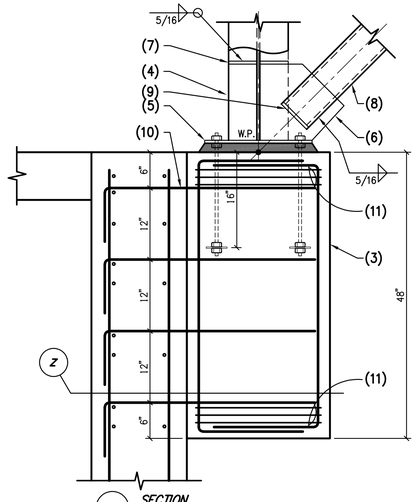

X SECTION

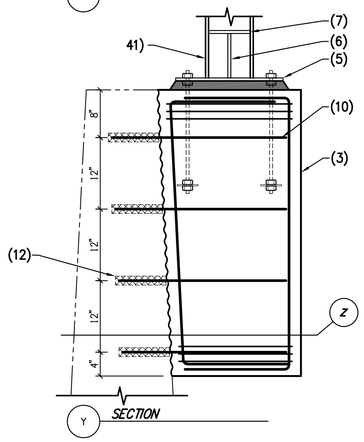

Y SECTION

216 PLAN – STEEL COLUMN AT CONCRETE WALLS — NO SCALE
216A AS NOTED

NOTES:
1. EXISTING CONCRETE WALL.
2. CONCRETE SLAB.
3. CONCRETE PIER W/ 12 #8 VERT. AND #4 TIES AT 12" O.C.
4. STEEL COLUMN.
5. STEEL BASE PLATE OVER ±1 1/2" DRYPACK.
6. 3/4" STEEL GUSSET PLATE AT 216A.
7. 1/2" STEEL PLATE EACH SIDE OF COLUMNS AT 216A.
8. STEEL BRACE AT 216A.
9. 1/4" STEEL CAP PLATE. BUTT WELD ALL AROUND.
10. 4– SETS OF 2– #6.
11. 3– TIES IN TOP AND BOTTOM 5".
12. DRILL AND EPOXY W/ HILTI HIT–RE 500 V3 EPOXY (ESR–3814) OR APPROVED EQUAL.

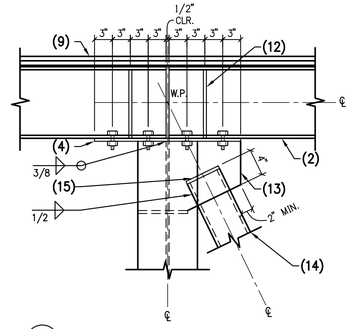

X

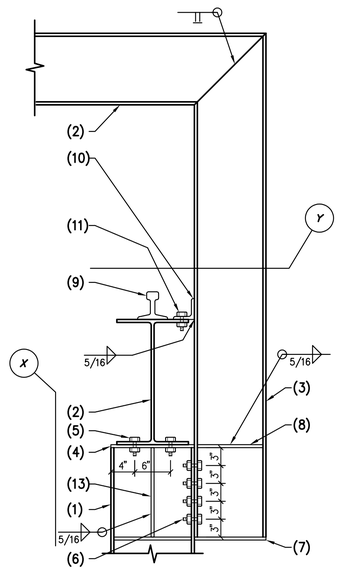

214 CRANE BEAM AT STEEL COLUMN — NO SCALE
214A AS NOTED

NO	BY	DATE	REVISIONS	DATE	APP.

Registered Professional Engineer (Civil) CERTIFICATE No. 70374 JAMES APPLEYARD Date Signed 1/24/25 ARIZONA, U.S.A.

PREPARED BY: DUONG DO
PROJECT ENGINEER: #40060
R.C.E. NO.: ---
EXP. DATE:
DRAWN: WW
DESIGNED: DD
CHECKED: DD
SCALE:
DATE: 5/16/2025

THESE DRAWINGS ARE THE PROPERTY OF P.A.C.E. AND SHALL NOT BE REPRODUCED IN ANY MANNER NOR BE USED FOR CONSTRUCTION UNLESS STAMPED "ISSUED FOR CONSTRUCTION".

TITLE: **FRAMING DETAILS**

JOB: CITY OF SAN LUIS WWTP IMPROVEMENTS — SAN LUIS AZ.

PACE
Advanced Water Engineering
8723 E. VIA de COMMERCIO, SUITE A-204 | SCOTTSDALE, CA 85258
P: (408) 991-3595 | www.pacewater.com

SHEET **S12.2**
82 OF 209 SHEETS
JOB NO. B777

FINAL PLANS ISSUED FOR BID

M:\PROJECTS\2024\PACE\SAN LUIS WWTP 3MGD EXPANSION (24291)\200\S12.2.dwg – Tab: S12.2 – by mdonaker on 09/05/25 at 4:56:10 PM

DRAFT

PK ASSOCIATES, LLC
6900 E. Belleview Ave. #200
Greenwood Village, Colorado 80111
Phone: (720) 799-1058
Email: cadd@pkastructural.com
Website: www.pkastructural.com

NOTES:
1. CONCRETE SLAB ON GRADE.
2. 8" THICK CONCRETE WALL/SLAB
3. 2/ #5 AT 10" O.C. E.W. HIGH DENSITY FOAM.
4. DOWEL INTO WALLS BEYOND W/ #5 x 24"x24" TO LAP W/ SLAB /WALL REINFORCEMENT.
5. WATER STOP PER TYPICAL DETAIL.

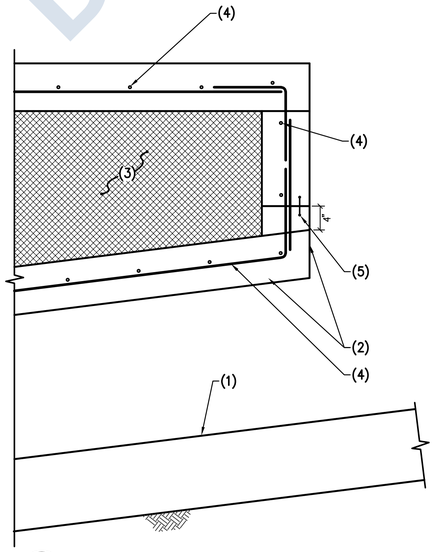

227 CONCRETE CHANNEL AT HEADWORKS
NO SCALE

NOTES:
1. HSS SQUARE OR RECTANGULAR COLUMN.
2. STEEL BEAM.
3. STEEL SHEAR PLATE. SEE TYP. BOLT SCHEDULE.
4. FOR SIZE, TYPE, AND NUMBER OF BOLTS, REFER TO TYP. BOLT SCHEDULE.
5. 1/2" STEEL CAP PLATE.
6. AT t ≤ 1/4" USE FILLET WELD SIZE TO MATCH "t". AT t > 1/4" USE 5/16" FILLET.
7. 1/2" STEEL BACKER PLATE x BEAM DEPTH x WIDTH OF COLUMN LESS 1".
8. TOP OF COLUMN AS OCCURS.
9. DEPTH TO MATCH JOIST SHOE.
10. BEAM BOTH SIDES WHERE OCCURS.

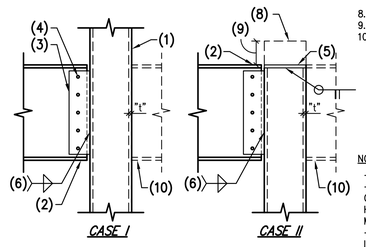

B SHEAR PLATE TO COLUMN

NOTES:
–DETAIL A MAY BE USED TYP. U.N.O.
–DETAIL B MAY BE USED AT CONTRACTOR'S OPTION WHERE HSS MIN. FLANGE THICKNESSES ARE MET PER SCHEDULE.
–WHERE COLUMNS ARE RECTANGULAR IN LIEU OF SQUARE, THE GREATER FLANGE LENGTH (I.E. WORST CASE) APPLIES PER SCHEDULE.
–CONTRACTOR MAY INCREASE PLAN COLUMN THICKNESS AT THEIR OPTION.

MINIMUM COLUMN FLANGE THICKNESS FOR DETAIL B

HSS MEMBER	THICKNESS ("t")
4x4	1/4"
5x5	1/4"
6x6	1/4"
7x7	1/4"
8x8	5/16"
9x9	5/16"
10x10	3/8"
12x12	3/8"
14x14	1/2"
16x16	1/2"

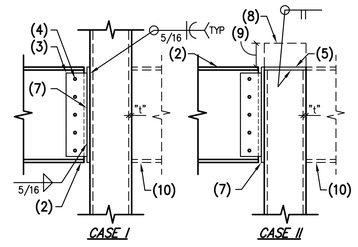

A SHEAR PLATE TO BACKER PLATE TO COLUMN

225 TYPICAL BEAM TO HSS STEEL COLUMN
NO SCALE

NOTES:
1. STEEL BEAM.
2. 4 – 3/4" DIA. BOLTS ON BEAM GAGE.
3. 3/8" STIFFENER PLATE BOTH SIDES AT END OF BEAM.
4. END OF BEAM AS OCCURS.

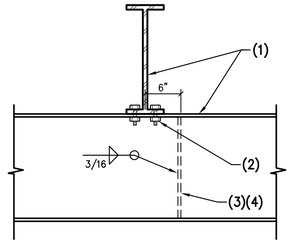

222 STEEL BEAM TO STEEL BEAM CONNECTION
NO SCALE

NOMINAL BEAM DEPTH "D"	NUMBER OF 1" DIA. ASTM, F3125 BOLTS
UP TO 7"	2
8" – 11"	2
12" – 14"	3
15" – 17"	4
18" – 20"	5
21" – 23"	6
24" – 29"	7
30" – 32"	8
33" – 35"	9
36"	10

223 BOLT SCHEDULE FOR TYPICAL STEEL CONNECTIONS
NO SCALE

FRAMING NOTES:
1. THE TYPICAL STEEL BEAM TO STEEL COLUMN OR STEEL BEAM TO STEEL BEAM CONNECTION CONSISTS OF 3/8" SINGLE SHEAR PLATES WITH 1"ø, ASTM F3125 BOLTS. USE 5/8" SHEAR PLATES WHERE "D" = 27" OR GREATER.
2. ALL BOLTS SHALL BE INSTALLED USING SHORT SLOTTED HOLES IN EITHER THE BEAM WEB OR THE SHEAR PLATE PER LATEST AISC SPECIFICATIONS.

NOTES:
1. EXISTING CONCRETE WALL.
2. 8" CONCRETE WALL WITH #5 AT 7" O.C. E.W.
3. 8" CONCRETE SLAB WITH #5 AT 8" O.C. TOP AND BOTTOM E.W.
4. STD HOOK.
5. L3x3x1/4 W/ 1/2"ø H.S. AT 18" O.C.
6. CONCRETE SLAB.
7. GRATING AND ATTACHMENT BY OTHERS.
8. DRILL AND EPOXY W/ HILTI HIT–RE 500 V3 EPOXY (ESR–3814) OR APPROVED EQUAL.
9. #5x30"x.30" AT 12" O.C.

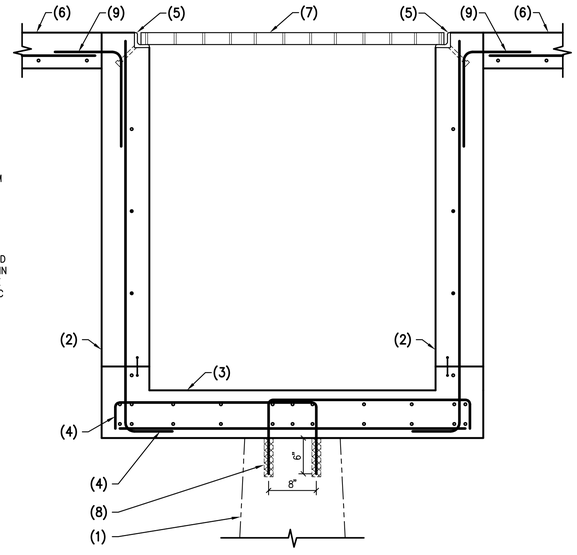

220 CONCRETE CHANNEL AT CONCRETE SLABS
NO SCALE

NOTES:
1. CONCRETE WALL.
2. CONCRETE SLAB W/ #4 AT 12" O.C. EACH WAY, TOP AND BOTTOM.
3. HANDRAIL POST PER PACE.

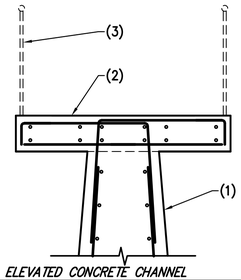

228 ELEVATED CONCRETE CHANNEL
NO SCALE

NOTES:
1. CONT. 1/4" STEEL BENT PLATE.
2. TOP FLANGE OF STEEL BEAM
3. STEEL DECK – FOR DIRECTION OF DECK, SEE PLANS.

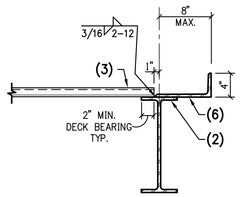

226 TYPICAL DECK EDGE AT ROOF
NO SCALE

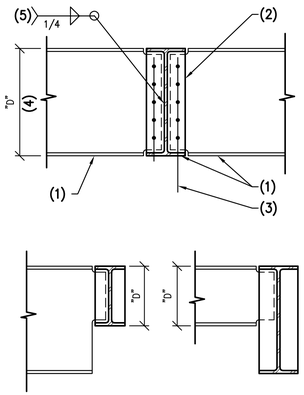

NOTES:
1. STEEL BEAM.
2. 3/8" STEEL SHEAR PLATE –USE 5/8" STEEL SHEAR PLATE WHERE "D" = 27" OR GREATER.
3. FOR SIZE, TYPE & NUMBER OF BOLTS, SEE TYPICAL BOLT SCHEDULE.
4. "D" = LESSER OF BEAM DEPTHS AS OCCURS.
5. WELD 3 SIDES TYPICAL – USE SAME CONNECTION AT STIFFENER PLATES WHEN REQUIRED.

NOTE:
AT ONE SIDED CONNECTIONS, INSTALL 3/8" STIFFENER PLATE OPPOSITE SHEAR PLATE.

224 TYPICAL CONNECTION WIDE FLANGE BEAM TO BEAM
NO SCALE

NOTES:
1. STEEL CRANE COLUMN.
2. STEEL CRANE BEAM.
3. 1" STEEL CAP PLATE.
4. 4– 1"ø BOLTS.
5. 1/2" STEEL STIFFENER EACH SIDE OF BEAM.
6. IMPACT LOAD OF 10K (ULTIMATE).
7. STEEL CRANE RAIL.
8. W24x131x2'–4" LONG.
9. 1" STEEL PLATE.
10. 6– 1"ø AUTOMATICALLY WELDED THREADED H.S. AT 4 1/2" O.C.

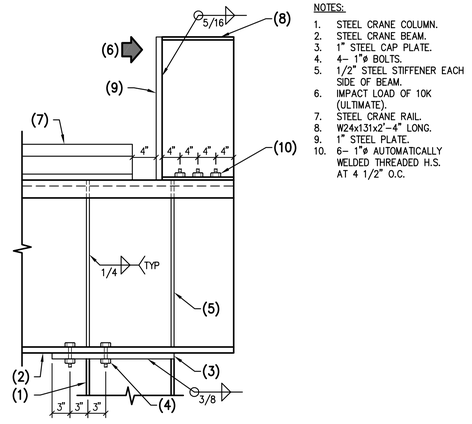

221 CRANE STOP AT END OF CRANE WALL
NO SCALE

NO	BY	DATE	REVISIONS	DATE	APP.

Registered Professional Engineer (Civil) CERTIFICATE No. 70374 JAMES APPLEYARD Date Signed 1/26/26 ARIZONA, U.S.A.

PREPARED BY: DUONG DO
PROJECT ENGINEER: #40060
R.C.E. NO.: ---
EXP. DATE:
DRAWN: WW
SCALE:
DESIGNED: DD
CHECKED: DD
DATE: 5/16/2025

THESE DRAWINGS ARE THE PROPERTY OF P.A.C.E. AND SHALL NOT BE REPRODUCED IN ANY MANNER NOR BE USED FOR CONSTRUCTION UNLESS STAMPED 'ISSUED FOR CONSTRUCTION'.

TITLE: FRAMING DETAILS

JOB: CITY OF SAN LUIS WWTP IMPROVEMENTS — SAN LUIS AZ.

PACE
Advanced Water Engineering
8723 E. VIA de COMMERCIO, SUITE A-204 | SCOTTSDALE, CA 85258
P: (408) 991-3595 | www.pacewater.com

SHEET S12.3
83 OF 209 SHEETS
JOB NO. B777

FINAL PLANS ISSUED FOR BID

M:\PROJECTS\2024\PACE\SAN LUIS WWTP 3MGD EXPANSION (24291)\200\S12.3.dwg – Tab: S12.3 – by mslonaker on 01/26/26 at 4:05:12 PM

DRAFT

PK ASSOCIATES, LLC
6900 E. Belleview Ave. #200
Greenwood Village, Colorado 80111
Phone: (720) 799-1058
Email: cadd@pkastructural.com
Website: www.pkastructural.com

NOTES:
1. EXISTING CONCRETE SLAB.
2. EXISTING CONCRETE WALL.
3. #5 "U" BAR AT 12" O.C.
4. 3- CONT. #4 TOP AND BOTTOM.
5. #5 AT 12" O.C.
6. DRILL AND EPOXY WITH HILTI HIT-RE 500 V3 EPOXY OR APPROVED EQUAL.
7. CRANE AND ATTACHMENT PER CRANE MANUFACTURER.
8. 600# MAX.

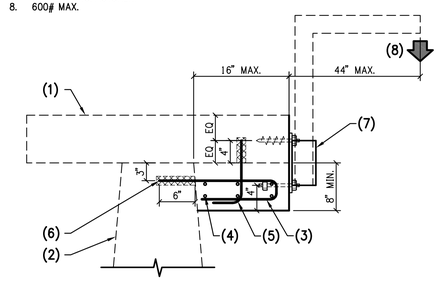

232 *CRANE AT EXISTING WALKWAY* — NO SCALE

NOTES:
1. STEEL DECK.
2. STEEL BEAM.
3. STEEL POST.
4. 3/4"x10"x6" STEEL BASE PLATE W/ 2- 3/4"ø A.B. AT 7" O.C.
5. ±1 1/2" DRYBACK.
6. CONCRETE WALL.

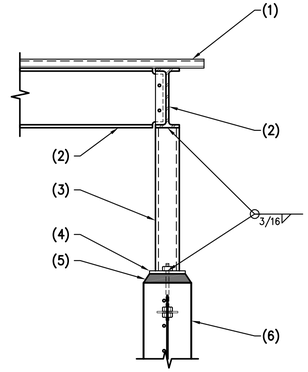

229 *STEEL DECK AND STEEL BEAM OVER STEEL POST ABOVE CONCRETE WALL.* — NO SCALE

NOTES:
1. EXISTING CONCRETE WALL.
2. CONCRETE SLAB.
3. CONCRETE SLAB EXTENSION x 36" WIDE.
4. DRILL AND EPOXY W/ HILTI HIT-RE 500 V3 EPOXY (ESR-3814) OR APPROVED EQUAL.
5. #5 BENT "U" BAR AT 12" O.C.
6. 3- #4 TOP AND BOTTOM.
7. ROUGHEN TO 1/4" AMPLITUDE.
8. CRANE AND ATTACHMENT PER CRANE SUPPLIER.
9. 600# MAX.

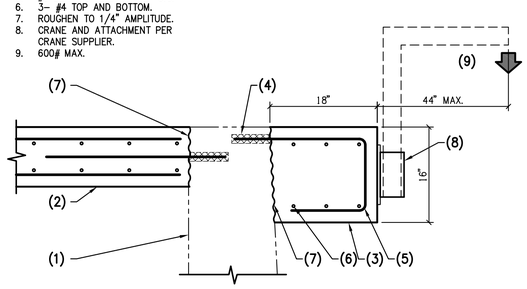

233 *CRANE AT EXISTING WALL* — NO SCALE

NOTES:
1. STEEL DECK.
2. STEEL BEAM.
3. STEEL POST.
4. GROUTING AND ATTACHMENT BY OTHERS.
5. L8x5x1/2" STEEL ANGLEx12" LONG.
6. 2- 3/4"ø H.S. AT 9" O.C.
7. 2- 3/4"ø H.S. AT 5" O.C.
8. CONC. WALL.
9. 1/4" STEEL CAP PLATE. BUTTWELD ALL AROUND.
10. 3/8" STEEL SHEAR TAB.
11. BOLT SIZE, TYPE, AND QUANTITY PER TYPICAL DETAIL.

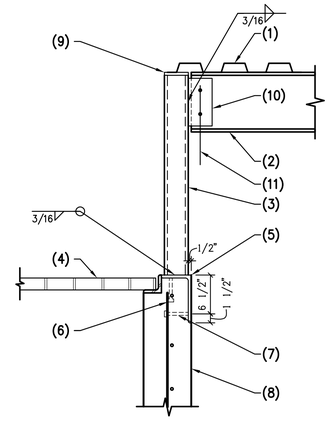

230 *STEEL BEAM AT STEEL POST OVER CONCRETE WALL* — NO SCALE

NOTES:
1. CONCRETE WALL.
2. CONCRETE BEAM.
3. DOWELS TO MATCH AND LAP BEAM REINFORCING.

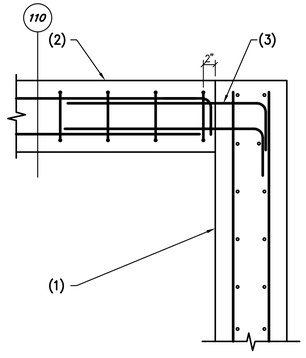

234 *CONCRETE BEAM AT CONCRETE WALL* — NO SCALE

NOTES:
1. CONCRETE SLAB.
2. BOTTOM OF SLAB BEYOND.
3. CONCRETE WALL.
4. CRANE AND ATTACHMENT PER CRANE MANUFACTURER.
5. 600# MAX.
6. THICKEND SLAB 36" WIDE.
7. 3- CONT. #4.
8. #4 TO LAP AND MATCH SLAB REINFORCING.

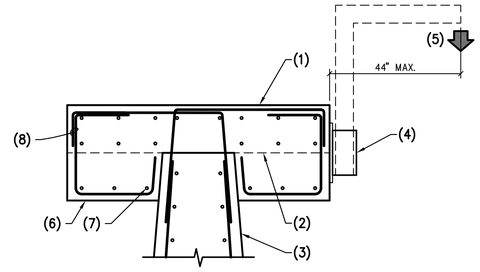

231 *CRANE AT THICKENED SLAB* — NO SCALE

NO	BY	DATE	REVISIONS	DATE	APP.

Registered Professional Engineer (Civil) CERTIFICATE No. 70374 JAMES APPLEYARD Date Signed 1/24/25 ARIZONA, U.S.A.

PREPARED BY: DUONG DO
PROJECT ENGINEER: #40060
R.C.E. NO.: ---
EXP. DATE:
DRAWN: WW
DESIGNED: DD
CHECKED: DD
SCALE:
DATE: 5/16/2025

THESE DRAWINGS ARE THE PROPERTY OF P.A.C.E. AND SHALL NOT BE REPRODUCED IN ANY MANNER NOR BE USED FOR CONSTRUCTION UNLESS STAMPED "ISSUED FOR CONSTRUCTION".

TITLE: **FRAMING DETAILS**

JOB: CITY OF SAN LUIS WWTP IMPROVEMENTS — SAN LUIS AZ.

PACE
Advanced Water Engineering
8723 E. VIA de COMMERCIO, SUITE A-204 | SCOTTSDALE, CA 85258
P: (408) 991-3595 | www.pacewater.com

SHEET **S12.4**
84 OF 209 SHEETS

JOB NO. B777

FINAL PLANS ISSUED FOR BID

M:\PROJECTS\2024\PACE\SAN LUIS WWTP 3MGD EXPANSION (24291)\200\S12.4.dwg -- Tab: S12.4 -- by rstonaker on 01/26/26 at 4:12:48 PM

ELECTRICAL NOTES:

1. ELECTRICAL WORK SHALL COMPLY WITH THE ADOPTED NATIONAL ELECTRICAL CODE VERSION, FEDERAL, STATE AND LOCAL JURISDICTION CODES.
2. ALL WORK SHALL BE DONE IN A NEAT, WORKMANLIKE, FINISHED AND SAFE MANNER, ACCORDING TO THE LATEST PUBLISHED NATIONAL ELECTRICAL CONTRACTORS ASSOCIATION STANDARDS OF INSTALLATION, UNDER COMPETENT SUPERVISION.
3. CONTRACTOR SHALL VISIT THE SITE PRIOR TO CONSTRUCTION TO BECOME FAMILIAR WITH EXISTING CONDITIONS AND ALL OTHER FACTORS WHICH MAY AFFECT THE EXECUTION OF THIS WORK.
4. CONTRACTOR SHALL BE RESPONSIBLE FOR DAMAGE TO EXISTING WALKS, WALLS, DRIVEWAYS, CURBS, LANDSCAPE, TREES, IRRIGATION, ETC. DAMAGES SHALL BE REPAIRED BY THE CONTRACTOR TO THE SATISFACTION OF THE OWNER AT NO ADDITIONAL COST TO THE OWNER.
5. CONTRACTOR SHALL PAY FOR LOCAL FEES AND INSPECTIONS AS MAY BE REQUIRED AND PROVIDE A CERTIFICATE OF INSPECTION TO THE OWNER.
6. CONTRACTOR SHALL LEAVE THE SITE CLEAN, REMOVE ALL DEBRIS, EMPTY CARTONS, TOOLS, CONDUIT, WIRE SCRAPS AND ALL MISCELLANEOUS SPARE EQUIPMENT AND MATERIALS USED IN THE WORK DURING CONSTRUCTION.
7. IT IS THE OBLIGATION OF THE CONTRACTOR TO ORGANIZE HIS WORK SO THAT A COMPLETE ELECTRICAL, INSTRUMENTATION, AND/OR CONTROL SYSTEM FOR THE FACILITY AS CALLED FOR IN THE DESIGN WILL BE PROVIDED AND SUPPORTED BY ACCURATE SHOP AND RECORD DRAWINGS, AND ALL O & M MANUALS.
8. ALL CABLES SHALL BE NEW, COPPER, RATED FOR 600V AND LISTED FOR ITS LOCATION WITH A MINIMUM TEMPERATURE RATING OF 90 DEG. C; POWER CABLES SHALL BE TYPE XHHW-2, UNLESS NOTED OTHERWISE.
9. MINIMUM SIZE CONDUIT ABOVE GROUND SHALL BE 3/4". MINIMUM SIZE CONDUIT BELOW GROUND SHALL BE 1" UNLESS NOTED OTHERWISE.
10. MINIMUM SIZE POWER CONDUCTORS SHALL BE #12 AWG UNLESS NOTED OTHERWISE.
11. ALL WIRE TERMINATIONS SHALL HAVE A MINIMUM TEMPERATURE RATING OF 75 DEG C, AS SUCH, WIRE AMPACITIES ARE CALCULATED ON 75 DEG C RATINGS.
12. CONDUIT SIZE SHALL BE AS SPECIFIED IN THE PLANS OR DETAILS. UNDERGROUND CONDUIT SHALL BE SCH 40 PVC ENCASED IN CONCRETE WITH PVC COATED GRS BENDS, ELBOWS AND STUB-UPS. ABOVE-GROUND CONDUIT SHALL BE PVC COATED GALVANIZED RIGID STEEL (RMC). OUTDOOR EQUIPMENT SHALL BE NEMA 3R, UNLESS NOTED OTHERWISE.
13. GROUND AND BOND ALL EQUIPMENT AND ENCLOSURES PER NEC ARTICLE 250 AND MANUFACTURER REQUIREMENTS.
14. CONTRACTOR SHALL PLAN AND INSTALL WORK IN SUCH A MANNER AS TO CONFORM TO THE STRUCTURE, AVOID OBSTRUCTIONS, PRESERVE HEADROOM AND KEEP OPENINGS AND PASSAGEWAYS CLEAR.
15. THE CONTRACTOR SHALL PROVIDE ALL LABOR, MATERIALS, EQUIPMENT, AND SERVICES NECESSARY TO DELIVER A COMPLETE AND FUNCTIONAL ELECTRICAL SYSTEM AS SHOWN AND DESCRIBED IN THE CONTRACT DOCUMENTS. WHILE NOT EVERY COMPONENT MAY BE EXPLICITLY DETAILED, THE CONTRACTOR IS RESPONSIBLE FOR FURNISHING AND INSTALLING ITEMS THAT ARE REASONABLY INFERABLE FROM THE INTENT OF THE DRAWINGS AND SPECIFICATIONS AND ARE CUSTOMARILY REQUIRED FOR A COMPLETE INSTALLATION. THIS DOES NOT RELIEVE THE ENGINEER OF DESIGN RESPONSIBILITY, NOR DOES IT REQUIRE THE CONTRACTOR TO MAKE DESIGN DECISIONS. AMBIGUITIES, CONFLICTS, OR MISSING INFORMATION IN THE DESIGN SHALL BE BROUGHT TO THE ATTENTION OF THE ENGINEER FOR CLARIFICATION OR DIRECTION PRIOR TO PROCEEDING.
16. ALL TRENCHING, CONDUITS, ETC. SHALL BE ROUTED AND INSTALLED IN SUCH A MANNER THAT WILL NOT DAMAGE EXISTING FACILITIES OR UNDERGROUND UTILITIES. SHOULD DAMAGE OCCUR, IT WILL BE THE CONTRACTOR'S RESPONSIBILITY TO REPAIR DAMAGE TO THE SATISFACTION OF THE OWNER OR INSPECTOR.
17. ALL CONDUIT RUNS SHOWN ON THIS PLAN ARE SCHEMATIC IN NATURE. THE CONTRACTOR SHALL MAKE SURE THAT ALL CONDUIT INSTALLATIONS MEET LOCAL AND STATE CODES.
18. WHEN CROSSING PATHWAYS OR SIDEWALKS, CONTRACTOR SHALL BORE UNDER OR SAWCUT EXISTING CONCRETE SIDEWALKS AND ASPHALT WALKS. ANY DAMAGE TO CONCRETE SIDEWALKS AND ASPHALT WALKS TO BE REPLACED IN KIND.
19. CONTRACTOR SHALL GUARANTEE WORK INSTALLED UNDER THE CONTRACT TO BE FREE FROM DEFECTIVE WORKMANSHIP AND MATERIALS, USUAL WEAR EXPECTED, AND SHOULD ANY SUCH DEFECTS DEVELOP WITHIN A PERIOD OF ONE YEAR ACCEPTANCE OF THE PROJECT BY THE OWNER, THE CONTRACTOR SHALL REPAIR AND/OR REPLACE ANY DEFECTIVE ITEMS AND DAMAGE RESULTING FROM FAILURE OF THESE ITEMS, AT NO EXPENSE WHATSOEVER TO THE OWNER.
20. ALL CIRCUITS SHALL BE LEGIBLY IDENTIFIED AT THE PANEL, JUNCTION BOXES AND AT ALL EQUIPMENT IN A PERMANENT MANNER (I.E. ETCHED PLATES, CONDUCTOR TAG, PERMANENT MARKER, ETC.). THE LABELING SHALL INCLUDE PANEL CIRCUIT NUMBER, "TO" AND "FROM" IDENTIFICATION, AND MARKED "SPARE" WHERE APPLICABLE.
21. CONTRACTOR SHALL TEST ELECTRICAL SYSTEM FOR SHORT CIRCUITS AND MEGGER TEST FEEDERS AND BRANCH CIRCUIT WIRING. INSURE LOW IMPEDANCE GROUND PATH SYSTEM. PERFORM HIPOT TESTING WHEN REQUIRED BY LOCAL JURISDICTION.
22. CONTRACTOR SHALL COORDINATE ALL EQUIPMENT CONNECTIONS WITH EQUIPMENT SUPPLIER PRIOR TO ROUGH-IN. PROVIDE ADDITIONAL FUSED DISCONNECT SWITCHES AND CONTROLS IF OVERCURRENT PROTECTION OR CONTROLS ARE NOT INTEGRAL WITH UNITS.
23. FULL LOAD AMPS (FLA) SIZES, AS NOTED IN THESE DRAWINGS, ARE BASED ON SPECIFIED EQUIPMENT DATA. CONTRACTOR SHALL VERIFY NAMEPLATE FLA OF EQUIPMENT SUPPLIED AND COORDINATE ACCORDINGLY PER EQUIPMENT SUPPLIERS RECOMMENDATIONS AND CODE REQUIREMENTS.
24. CONDUITS OR RACEWAYS INSTALLED IN AREAS WHERE ELEVATION CHANGES MAY CAUSE WATER OR MOISTURE TO ENTER THE ELECTRICAL EQUIPMENT THROUGH THE CONDUIT SHALL BE SEALED IN ACCORDANCE WITH NEC 300.5 (G).
25. MATERIALS SHALL BE NEW AND OF THE BEST QUALITY. MATERIALS SHALL BE MANUFACTURED IN ACCORDANCE WITH NEMA, ANSI, UNDERWRITER'S LABORATORY OR OTHER APPLICABLE STANDARDS AND RATED FOR HEAVY DUTY SERVICE.
26. SELECTION OF MATERIALS SHALL BE IN STRICT ACCORDANCE WITH THE DRAWINGS AND/OR SPECIFICATIONS.
27. THE SUBMITTALS SHALL BE NEATLY GROUPED AND ORGANIZED. PERTINENT INFORMATION SHALL BE HIGHLIGHTED, AND THE SPECIFIC PRODUCT SHALL BE IDENTIFIED. ALL SUBMITTALS SHALL BE COMPLETE, AND PRESENTED IN ONE PACKAGE. THE SUBMITTAL SHALL INCLUDE A COMPLETE LIST OF THE EQUIPMENT AND MATERIALS, INCLUDING THE MANUFACTURER'S NAME, PRODUCT SPECIFICATION, DESCRIPTIVE DATA, TECHNICAL LITERATURE, PERFORMANCE CHARTS, CATALOG CUTS, INSTALLATION INSTRUCTION, AND SPARE PART RECOMMENDATIONS FOR EACH DIFFERENT ITEM OF THE EQUIPMENT SPECIFIED.
28. VERIFY ALL CONDUIT FILL RATIOS, BOX FILLS, AND CONDUIT BENDS (MAX 360 DEGREES) ARE MET PER NEC REQUIREMENTS. INSTALL PULL BOXES AND DE-RATE CABLE AMPACITY AS NECESSARY.
29. CONTRACTOR TO READ ALL THE DRAWINGS IN THIS SET TO BECOME FAMILIARIZED WITH THE FULL ELECTRICAL SCOPE, INCLUDING BUT NOT LIMITED TO THE MECHANICAL, INSTRUMENTATION AND CIVIL DRAWINGS.
30. THESE DRAWINGS AND THE PROJECT SPECIFICATIONS ARE COMPLEMENTARY. WHERE THERE IS OVERLAP, THE MORE STRINGENT REQUIREMENT WILL TAKE PRECEDENCE.
31. CONTRACTOR SHALL VERIFY ALL CIRCUITS CONTAIN LESS THAN 5% VOLTAGE DROP. CONTRACTOR SHALL PROVIDE SHORT CIRCUIT ANALYSIS AND ARC FLASH STUDY, AS REQUIRED.
32. CONTRACTOR SHALL COORDINATE AND PERFORM WORK TO THE STANDARDS OF ALL APPLICABLE UTILITY COMPANIES, INCLUDING BUT NOT LIMITED TO UNDERGROUND ELECTRICAL LINES, GAS LINES AND WATER LINES. WHEN AN ISSUE OR DISCREPANCY ARISES, NOTIFY THE ENGINEER AND OWNER IMMEDIATELY.
33. CONTRACTOR SHALL NOTIFY THE ENGINEER AND OWNER WITH ANY DISCREPANCIES FOUND DURING INSTALLATION OR REVIEW.
34. CONTRACTOR TO PROVIDE REQUIREMENTS FOR NFPA 70E, AS REQUIRED.
35. ALL POWER AND LIGHTING CONDUITS SHALL HAVE A GROUND WIRE, BE AT LEAST #12 THHN, AND SIZED FOR PROPER AMPACITY DERATING AND CONDUIT FILL.
36. ALL 120V RECEPTACLES SHALL BE GFCI PROTECTED, EITHER WITH A GFCI RECEPTACLE OR THROUGH A GFCI CIRCUIT BREAKER.
37. ELECTRICAL EQUIPMENT INCLUDING, BUT NOT LIMITED TO, ELECTRICAL SERVICE EQUIPMENT AND DISTRIBUTION PANELBOARDS SHALL BE SEISMIC-CERTIFIED AND ANCHORED ACCORDING TO EQUIPMENT MANUFACTURER'S INSTALLATION INSTRUCTIONS.
38. CONTROL PANELS, ATS, AND POWER DISTRIBUTION PANELS SHALL BE EQUIPPED WITH HEATER(S) PROPERLY SIZED TO PREVENT MOISTURE ENTERING THE PANELS.
39. CONTRACTOR TO POTHOLE THE LOCATIONS OF NEW DUCTBANKS AND CONDUITS BEFORE DIGGING TO VERIFY EXISTING UNDERGROUND UTILITY

DRAFT

NO	BY	DATE	REVISIONS	DATE	APP.
1					
2					
3					
4					
5					

Registered Professional Engineer (Electrical) CERTIFICATE NO. 25656 Basher Shaq Date Signed 1/31/26 ARIZONA U.S.A.
Expires 03/31/28

PREPARED BY: BASHAR SHAQ
PROJECT ENGINEER
R.C.E. NO. E24580
EXP. DATE

DRAWN: NC
DESIGNED: NC, BI
CHECKED: BI
SCALE:
DATE: FEB 2026

THESE DRAWINGS ARE THE PROPERTY OF P.A.C.E. AND SHALL NOT BE REPRODUCED IN ANY MANNER NOR BE USED FOR CONSTRUCTION UNLESS STAMPED 'ISSUED FOR CONSTRUCTION'.

TITLE: **GENERAL NOTES**

JOB: CITY OF SAN LUIS WEST WWTP
3.0 MGD MBR UPGRADES
SAN LUIS AZ.

PACE
Advanced Water Engineering
8723 E. VIA de COMMERCIO, SUITE A-204 | SCOTTSDALE, CA 85258
P: (408) 991-3595 | www.pacewater.com

SHEET
E0.0
85 OF 209 SHEETS

JOB NO. B777

FINAL PLANS ISSUED FOR BID

W:\B777 Engineering\B777 - 3MGD Exp\3MGD FINAL DS\Sheets\B777 - E0.0.dwg - Tab: E0.0 - by rchin on 02/02/26 at 3:24:45 PM

PLAN LEGEND

- EXPOSED CONDUIT
- EXISTING EXPOSED CONDUIT
- CONDUIT WITHIN CEILING, FLOOR, WALLS, OR UNDERGROUND
- EXISTING CONDUIT WITHIN CEILING, FLOOR, WALLS, OR UNDERGROUND
- GROUNDING ELECTRODE CONDUCTOR
- OHE EXISTING OVERHEAD ELECTRIC
- CONDUIT BEND UP
- CONDUIT BEND DOWN
- FENCE
- FLOOR MOUNTED ETHERNET (10/100) OUTLET (RJ-45)
- TELEPHONE OUTLET (RJ-11)
- ETHERNET (10/100) OUTLET (RJ-45)
- COMBINATION TELEPHONE/ETHERNET (10/100) OUTLET (RJ-11 & RJ-45)
- 20 240V SIMPLEX RECEPTACLE (NUMBER DENOTES CIRCUIT AMPS)
- 20 480V SIMPLEX RECEPTACLE (NUMBER DENOTES CIRCUIT AMPS)
- 120V, 20A SIMPLEX RECEPTACLE
- 120V, 20A DUPLEX RECEPTACLE
- 120V, 20A QUADRAPLEX RECEPTACLE
- $ 120V, 20A SPST SWITCH
- $M MANUAL MOTOR STARTER
- $3 120V, 20A 3-WAY SWITCH
- $4 120V, 20A 4-WAY SWITCH
- AT ANALYZER TRANSMITTER
- CS CONDUCTIVITY SWITCH
- FS FLOAT SWITCH
- J ABOVE GROUND JUNCTION BOX
- LE LEVEL ELEMENT
- LP LEVEL PROBES
- LT LEVEL TRANSPONDER
- PC PHOTOCELL
- PS PRESSURE SWITCH
- TS TEMPERATURE SWITCH
- T THERMOSTAT
- ZS INTRUSION ALARM SWITCH
- JB UNDERGROUND JUNCTION BOX
- MH MANHOLE
- HH HANDHOLE
- DISCONNECT SWITCH
- F FUSED DISCONNECT SWITCH
- CB ENCLOSED CIRCUIT BREAKER
- COMBINATION MOTOR STARTER
- MOTOR STARTER
- PUSHBUTTON CONTROL STATION
- CONDUIT SEAL-OFF FITTING
- S SOLENOID VALVE (ENERGIZED TO CLOSE)
- S SOLENOID VALVE (ENERGIZED TO OPEN)
- BUTTERFLY VALVE
- PLUG VALVE
- GATE VALVE
- ALARM BEACON
- H HORN
- GROUND ROD
- GROUND INSPECTION ROD

SINGLE LINE DIAGRAM AND SCHEMATIC LEGEND

- FIELD WIRING
- PANEL WIRING
- COMMUNICATIONS WIRING
- CABLE (MULTICONDUTOR SHIELDED)
- R PILOT LIGHT (LETTER DENOTES COLOR)
- H R PUSH-TO-TEST PILOT LIGHT (LETTER DENOTES COLOR)
- PRESSURE SWITCH (N.O.) CLOSES ON RISING LEVEL
- PRESSURE SWITCH (N.C.) OPENS ON RISING LEVEL
- TIMING RELAY, (N.O.T.C.) CONTACT TIME TO CLOSE (ON DELAY TIMER)
- TIMING RELAY, (N.C.T.O.) CONTACT TIME TO OPEN (ON DELAY TIMER)
- TIMING RELAY, (N.O.T.O.) CONTACT TIME TO OPEN (OFF DELAY TIMER)
- TIMING RELAY, (N.C.T.C.) CONTACT TIME TO CLOSE (OFF DELAY TIMER)
- FLOW SWITCH (N.O.) CLOSES ON RISING LEVEL
- FLOW SWITCH (N.C.) OPENS ON RISING LEVEL
- FLOAT SWITCH (N.C.) OPENS ON RISING LEVEL
- FLOAT SWITCH (N.O.) CLOSES ON RISING LEVEL
- LIMIT SWITCH (N.C.)
- LIMIT SWITCH (N.O.)
- LIMIT SWITCH (N.C.)
- LIMIT SWITCH (N.O.)
- TEMPERATURE SWITCH (N.C.) OPENS ON RISING LEVEL
- TEMPERATURE SWITCH (N.O.) CLOSES ON RISING LEVEL
- CIRCUIT BREAKER WITH DOOR OPERATED HANDLE, 3P, 480V, THERM MAG TRIP, UNO
- 3P, 480V MOLDED CASE CIRCUIT BREAKER WITH THERMAL MAG TRIP, UNO
- CONTACT (N.O.)
- CONTACT (N.C.)
- PUSHBUTTON (N.O.) MOMENTARY CLOSE
- PUSHBUTTON (N.C.) MOMENTARY OPEN
- 2-POSITION SELECTOR SWITCH
- H O A 3-POSITION SELECTOR SWITCH (HAND-OFF-AUTO)
- LO STOP LOCKOUT STOP PUSHBUTTON
- PUSH-PULL EMERGENCY STOP PUSHBUTTON
- DISCONNECT SWITCH (N.O.)
- DISCONNECT SWITCH (N.C.)
- EARTH GROUND CONNECTION
- GROUND ROD AND WELL
- OVERLOAD (ELECTRONIC TYPE)
- THERMAL OVERLOAD (BI-METALLIC)
- FUSED TERMINAL BLOCK
- N NEUTRAL BUS
- G GROUND BUS
- BUZZER
- TERMINAL BLOCK
- FIELD TERMINATION
- MLO MAIN LUG ONLY
- POWER DISTRIBUTION BLOCK
- COIL/INDUCTOR
- POWER TRANSFORMER
- HEATER
- M MOTOR STARTER CONTACTOR COIL
- ETM ELAPSED TIME METER
- M METER & CURRENT TRANSFORMER
- WHM WATT HOUR METER AND SOCKET
- PFR PHASE FAILURE RELAY
- TR XX TIME DELAY RELAY
- LR XX LATCHING RELAY
- CR XX CONTROL RELAY
- ISR XX INTRINSICALLY SAFE RELAY
- EDGE CONNECTORS
- INTERNAL CONTACT (N.O.)
- INTERNAL CONTACT (N.C.)
- BATTERY
- CAPACITOR
- SOLENOID
- RESISTOR
- DIODE
- MOV METAL OXIDE VARISTOR
- INDICATING FUSE HOLDER AMPERE SIZE SHOWN
- S LA LIGHTNING ARRESTER
- CXXXX CONDUIT DESIGNATION
- EQUIPMENT TAG REFERENCE
- I/O POINT REFERENCE PLC, I/O RACK, OR ENUNCIATOR PANEL
- DRAWING REFERENCE
- LOCATION SYMBOL
- SHEET NOTE TAG
- EDGE CONNECTOR
- INSTRUMENTATION
- PHOTOCELL AND TIME CLOCK
- CONDUIT STUB-UP AND CAP
- INV ACTIVE HARMONIC FILTER
- EYS CONDUIT SEAL WITH SEALANT

ABBREVIATION LIST

A, AMP	AMPERES
AM	AMMETER
AC	ALTERNATING CURRENT
AIC	AMPS INTERRUPTING CAPACITY
BAT	BATTERY BC BATTERY CHARGER
C	COMMON
CB	CIRCUIT BREAKER
CNTL	CONTROL
CPT	CONTROL POWER TRANSFORMER
CP	CONTROL PANEL
CR	CONTROL RELAY, CORROSION RESISTANT
CT	CURRENT TRANSFORMER
DC	DIRECT CURRENT
DR	DUPLEX RECEPTACLE
(E)	EXISTING
EC	EDGE CONNECTOR
EF	EXHAUST FAN
ETH	ETHERNET
ETM	ELAPSED TIME METER
F	FUSE
FB	FUSE BLOCK
(F)	FUTURE
FLTR	FILTER
FS	FLOAT SWITCH
FVNR	FULL VOLTAGE NON REVERSING
FVR	FULL VOLTAGE REVERSING
G, GND	GROUND
GFCI	GROUND FAULT CIRCUIT INTERRUPTER
HPS	HIGH PRESSURE SODIUM
HS	HAND SWITCH
ICP	INSTRUMENTATION CONTROL PANEL
ISR	INTRINSICALLY SAFE RELAY
I, IND	INDICATOR
INST	INSTANTANEOUS
KV	KILOVOLT
KVA	KILOVOLT AMPERES
KW	KILOWATT
LED	LIGHT EMITTING DIODE
LCD	LIQUID CRYSTAL DISPLAY
LA	LIGHTNING ARRESTER
LCP	LOCAL CONTROL PANEL
LPU	LIGHTNING PROTECTION UNIT
LOS	LOCK OUT STOP
LR	LATCH RELAY
LS	LOAD SPLITTER
MA	MILLIAMPERES
MB	MAIN BREAKER
MCC	MOTOR CONTROL CENTER
MCP	MOTOR CIRCUIT PROTECTOR
MOT	MOTOR OVERTEMPERATURE
MMS	MOTOR MOISTURE SENSOR
MS	MOTOR STARTER
N	NEUTRAL
NA	NON AUTOMATIC
(N)	NEW
N.I.C.	NOT IN CONTRACT
NP	NAMEPLATE
OT	OVERTEMPERATURE
O/L	OVERLOAD DEVICE
PB	PUSHBUTTON
PCB	PRINTED CIRCUIT BOARD
PC	PROGRAMMABLE CONTROLLER
PLC	PROGRAMMABLE LOGIC CONTROLLER
PL-1	PILOT LIGHT 1
PFR	PHASE/POWER FAIL RELAY
PNL	PANEL
POT	POTENTIOMETER
PPM	POWER PHASE MONITOR
PR	PAIR CABLE
PS	PRESSURE SWITCH
PT	POTENTIAL TRANSFORMER
PTT	PUSH TO TEST
PVC	POLYVINYL CHLORIDE
PWR	POWER
RR	RUN RELAY
RV	REDUCED VOLTAGE
RVAT	REDUCED VOLTAGE AUTO-TRANSFORMER
SSS	SOLID-STATE STARTER
SR	SIMPLEX RECEPTACLE
SS	SELECTOR SWITCH, SOFT STARTER
SP	SURGE PROTECTOR
SPD	SURGE PROTECTOR DEVICE
SV	SOLENOID VALVE
SWBD	SWITCHBOARD
TB	TERMINAL BLOCK
TR	TIME DELAY RELAY
TC	TIMECLOCK
TM	THERMAL MAGNETIC
TS	TEMPERATURE SWITCH
TSP	TWISTED SHIELDED PAIR
TWP	TWISTED PAIR
TYP	TYPICAL
UG	UNDERGROUND
V	VOLTS, VOLTAGE
VM	VOLTMETER
VFD	VARIABLE FREQUENCY DRIVE
WP	WEATHERPROOF
TR,XFMR	TRANSFORMER
XP	EXPLOSION PROOF
XMTR	TRANSMITTER/TRANSPONDER

DRAFT

W:\B777\Engineering\B777 - 3MGD Exp\3MGD FINAL DSN\sheets\B777 - E0.1 dwg - Tab: E0.1 - by rschin on 02/03/26 at 5:21:33 PM

NO	BY	DATE	REVISIONS	DATE	APP.

Registered Professional Engineer (Electrical) CERTIFICATE NO. 25258 Basher Shaho Expires 03/31/28 ARIZONA, U.S.A.

Expires 03/31/28

PREPARED BY: BASHAR SHAHO, PROJECT ENGINEER, E24580
R.C.E. NO. --
EXP. DATE
SCALE
DRAWN: NC
DESIGNED: NC, BI
CHECKED: BI
DATE: FEB 2026

THESE DRAWINGS ARE THE PROPERTY OF P.A.C.E. AND SHALL NOT BE REPRODUCED IN ANY MANNER NOR BE USED FOR CONSTRUCTION UNLESS STAMPED "ISSUED FOR CONSTRUCTION".

TITLE: LEGEND & ABBREVIATIONS

JOB: CITY OF SAN LUIS WEST WWTP, 3.0 MGD MBR UPGRADES, SAN LUIS, AZ.

PACE
Advanced Water Engineering
8723 E. VIA de COMMERCIO, SUITE A- 204 | SCOTTSDALE, CA 85258
P: (408) 991-3595 | www.pacewater.com

FINAL PLANS ISSUED FOR BID

SHEET E0.1
86 OF 209 SHEETS

JOB NO. B777

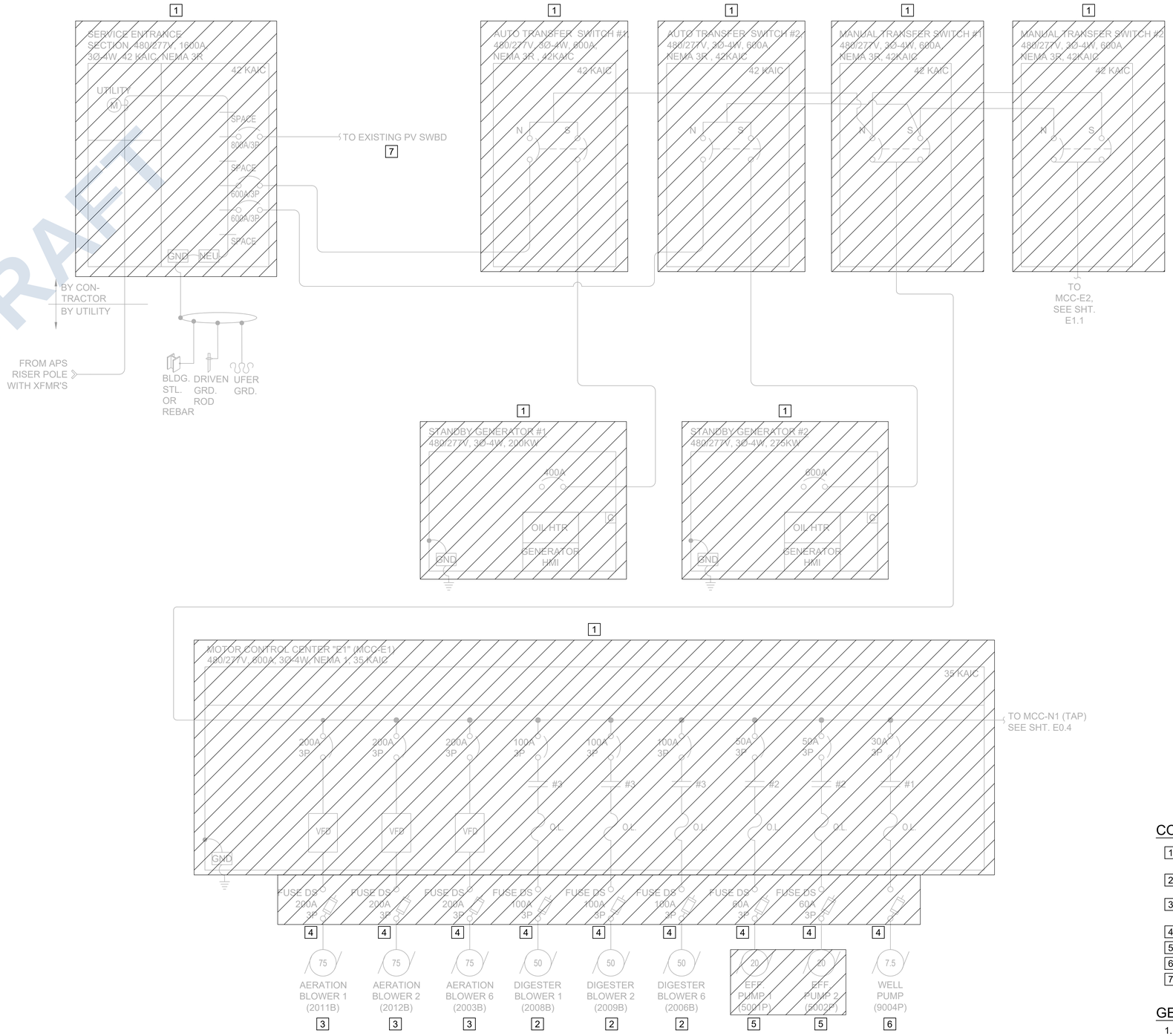

SINGLE LINE DIAGRAM - DEMO

N.T.S

CONSTRUCTION NOTES:

1. REMOVE AND RETURN TO CITY. REMOVE/DISPOSE OF CONDUCTORS, CUT AND CAP CONDUITS AS NEEDED.
2. EXISTING DIGESTER BLOWERS TO REMAIN IN PLACE. TRANSFER TO PROPOSED MCC-1 AND MCC-2.
3. EXISTING AERATION BLOWERS TO BE RELOCATED AND REPURPOSED AS FEQ BLOWERS. TRANSFER TO PROPOSED MCC-1 AND MCC-2.
4. EXISTING DISCONNECT SWITCHES TO BE REPLACED.
5. EXISTING EFFLUENT PUMPS TO BE REPLACED.
6. EXISTING WELL PUMP, PROTECT IN PLACE.
7. EXISTING PV SWITCHBOARD, PROTECT IN PLACE. SEE E11.6, DETAIL "B"

GENERAL NOTES:

1. ALL FADED BACK ITEMS ARE EXISTING TO BE PROTECTED IN PLACE UNLESS NOTED OTHERWISE.
2. GREY ITEMS SHOWN ARE REFERENCED FROM RECORD DRAWINGS DATED 03/02/2001. SEE JOL ENTERPRISES PROJECT NUMBER 00-124 AS-BUILT DRAWINGS AND VERIFY ALL CONDITIONS FIRST.

LEGEND:

DEMO

NO	BY	DATE	REVISIONS	DATE	APP.

Registered Professional Engineer (Electrical) CERTIFICATE NO. 35936 Kevan Nelson Date Signed 03/31/28 ARIZONA, U.S.A. Expires 03/31/28

THESE DRAWINGS ARE THE PROPERTY OF P.A.C.E. AND SHALL NOT BE REPRODUCED IN ANY MANNER NOR BE USED FOR CONSTRUCTION UNLESS STAMPED 'ISSUED FOR CONSTRUCTION'.

PREPARED BY: BASHAR ISHAQ
PROJECT ENGINEER
R.C.E. NO.: E24580
EXP: DATE
SCALE
DRAWN: NC
DESIGNED: NC, BI
CHECKED: BI
DATE: FEB 2026

TITLE: SINGLE LINE DIAGRAM 1 - DEMO

JOB: CITY OF SAN LUIS WEST WWTP 3.0 MGD MBR UPGRADES — SAN LUIS AZ.

PACE
Advanced Water Engineering
8723 E. VIA de COMMERCIO, SUITE A, 2ND FL | SCOTTSDALE, CA 85258
P.: (408) 991-3595 | www.pacewater.com

SHEET E0.2
87 OF 209 SHEETS

JOB NO. B777

FINAL PLANS ISSUED FOR BID

DRAFT

W:\B777 Engineering\B777 - 3MGD Exp\3MGD FINAL DS\sheets\B777 - E0.2.dwg - Tab: E0.2 - by nchin on 01/29/26 at 5:00:55 PM

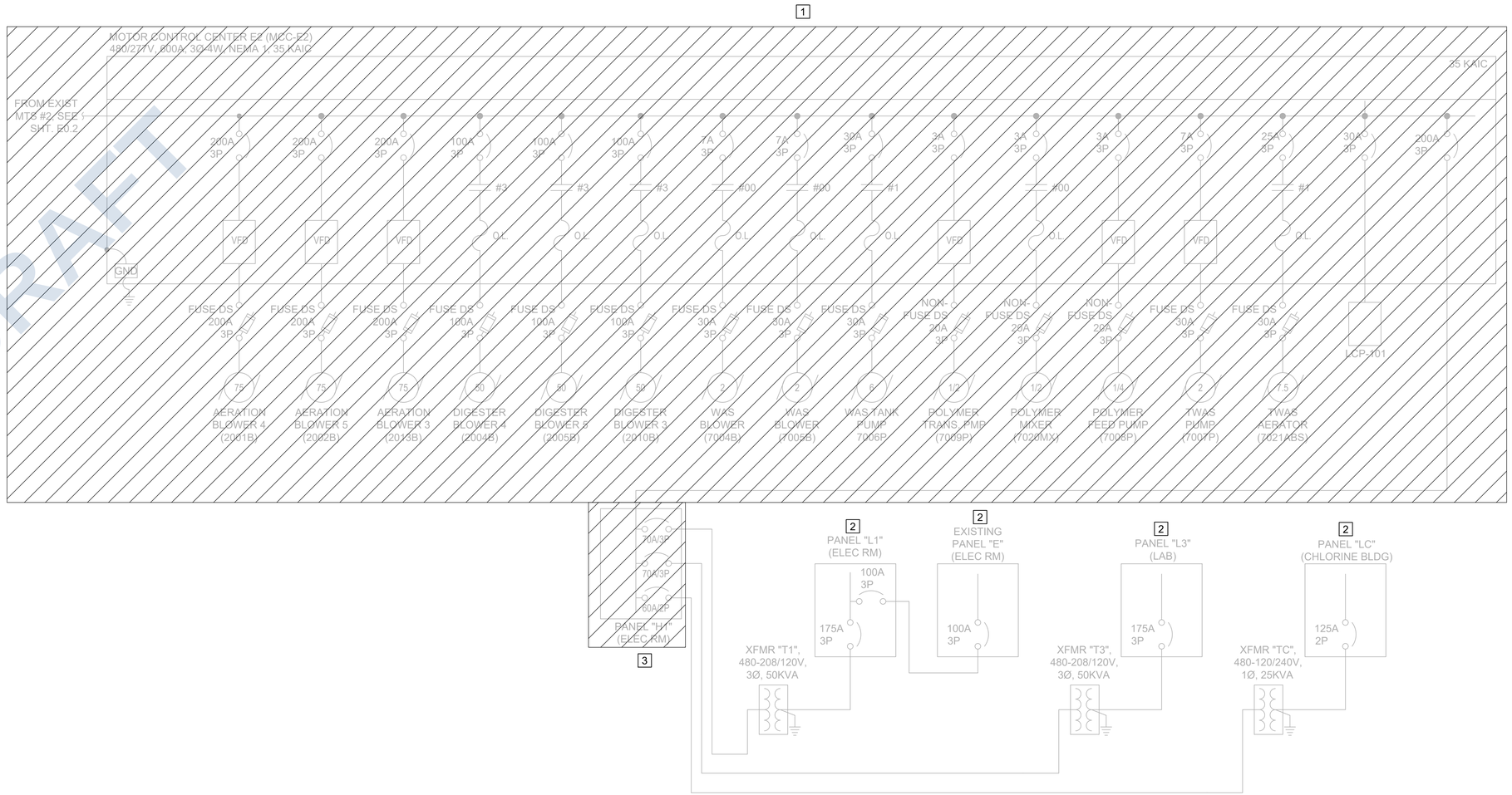

SINGLE LINE DIAGRAM - DEMO

N.T.S

CONSTRUCTION NOTES:

1. REMOVE AND RETURN TO CITY. REMOVE/DISPOSE OF CONDUCTORS, CUT AND CAP CONDUITS AS NEEDED.
2. EXISTING EQUIPMENT TO REMAIN IN PLACE. TRANSFER TO PROPOSED MCC-1.
3. REPLACE EXISTING PANEL H-1 IN PLACE. SEE PROPOSED SINGLE LINE DIAGRAM.

GENERAL NOTES:

1. ALL FADED BACK ITEMS ARE EXISTING TO BE PROTECTED IN PLACE UNLESS NOTED OTHERWISE.
2. GREY ITEMS SHOWN ARE REFERENCED FROM RECORD DRAWINGS DATED 03/02/2001. SEE JOL ENTERPRISES PROJECT NUMBER 00-124 AS-BUILT DRAWINGS AND VERIFY ALL CONDITIONS FIRST.

LEGEND:

DEMO

DRAFT

NO	BY	DATE	REVISIONS	DATE	APP.

Registered Professional Engineer (Electrical) CERTIFICATE NO. 35268 Brian Kenneth Bier Date Signed 1/31/26 ARIZONA, U.S.A.
Expires 03/31/28

PREPARED BY: BASHAR ISHAQ
PROJECT ENGINEER
R.C.E. NO. --- E24580
EXP. DATE
DRAWN: NC
DESIGNED: NC, BI
CHECKED: BI
SCALE
DATE: FEB 2026

THESE DRAWINGS ARE THE PROPERTY OF P.A.C.E. AND SHALL NOT BE REPRODUCED IN ANY MANNER NOR BE USED FOR CONSTRUCTION UNLESS STAMPED 'ISSUED FOR CONSTRUCTION'.

TITLE: **SINGLE LINE DIAGRAM 2 - DEMO**

JOB: CITY OF SAN LUIS WEST WWTP 3.0 MGD MBR UPGRADES — SAN LUIS AZ.

PACE Advanced Water Engineering
8723 E. VIA de COMMERCIO, SUITE A-204 | SCOTTSDALE, CA 85258
P: (408) 991-3595 | www.pacewater.com

SHEET **E0.3**
88 OF 209 SHEETS

JOB NO. B777

FINAL PLANS ISSUED FOR BID

W:\B777\Engineering\B777 - 3MGD Exp\3MGD FINAL DS\Sheets\B777 - E0.3.dwg - Tab: E0.3 - by rchin on 01/29/26 at 2:58:23 PM

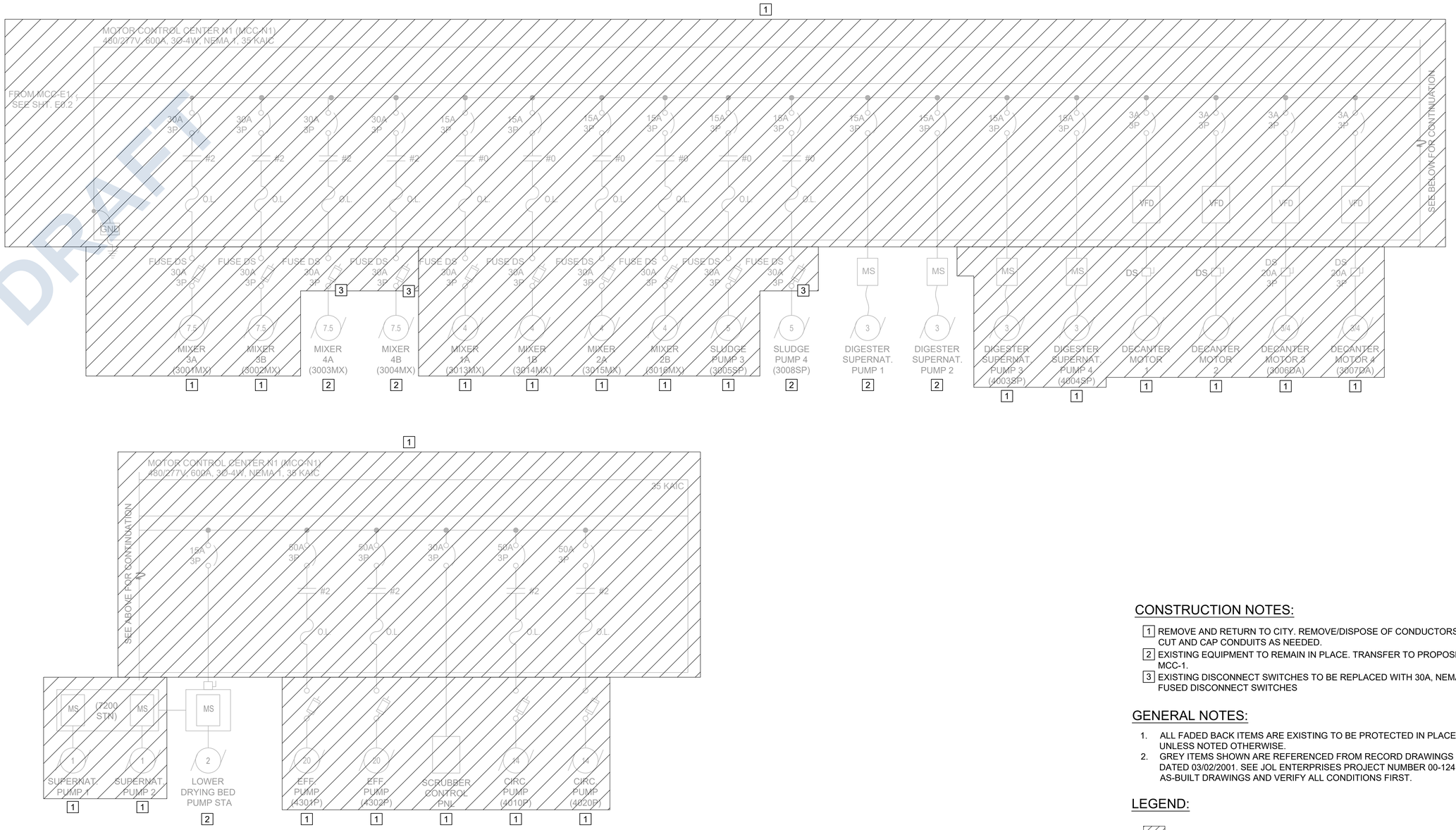

SINGLE LINE DIAGRAM - DEMO

N.T.S

CONSTRUCTION NOTES:

1. REMOVE AND RETURN TO CITY. REMOVE/DISPOSE OF CONDUCTORS, CUT AND CAP CONDUITS AS NEEDED.
2. EXISTING EQUIPMENT TO REMAIN IN PLACE. TRANSFER TO PROPOSED MCC-1.
3. EXISTING DISCONNECT SWITCHES TO BE REPLACED WITH 30A, NEMA 4X FUSED DISCONNECT SWITCHES

GENERAL NOTES:

1. ALL FADED BACK ITEMS ARE EXISTING TO BE PROTECTED IN PLACE UNLESS NOTED OTHERWISE.
2. GREY ITEMS SHOWN ARE REFERENCED FROM RECORD DRAWINGS DATED 03/02/2001. SEE JOL ENTERPRISES PROJECT NUMBER 00-124 AS-BUILT DRAWINGS AND VERIFY ALL CONDITIONS FIRST.

LEGEND:

DEMO

DRAFT

NO	BY	DATE	REVISIONS	DATE	APP.

Registered Professional Engineer (Electrical) CERTIFICATE NO. 25958 Basher Shaq Ishaq Stamped 1/31/26 ARIZONA, U.S.A. Expires 03/31/28

THESE DRAWINGS ARE THE PROPERTY OF P.A.C.E. AND SHALL NOT BE REPRODUCED IN ANY MANNER NOR BE USED FOR CONSTRUCTION UNLESS STAMPED 'ISSUED FOR CONSTRUCTION'.

PREPARED BY: BASHAR ISHAQ, PROJECT ENGINEER
R.C.E. NO.: 25958 EXP.: 03/31/28
DRAWN: NC | DESIGNED: NC, BI | CHECKED: BI | SCALE: | DATE: FEB 2026

TITLE: SINGLE LINE DIAGRAM 3 - DEMO

JOB: CITY OF SAN LUIS WEST WWTP 3.0 MGD MBR UPGRADES — SAN LUIS AZ.

PACE Advanced Water Engineering
8723 E. VIA de COMMERCIO, SUITE A- 204 | SCOTTSDALE, CA 85258
P: (408) 991-3595 | www.pacewater.com

SHEET E0.4
89 OF 209 SHEETS

JOB NO. B777

FINAL PLANS ISSUED FOR BID

W:\B777\Engineering\B777 - 3MGD Exp\3MGD FINAL DSN\sheets\B777 - E0.4.dwg - Tab: E0.4 - by rschin on 01/29/26 at 2:58:27 PM

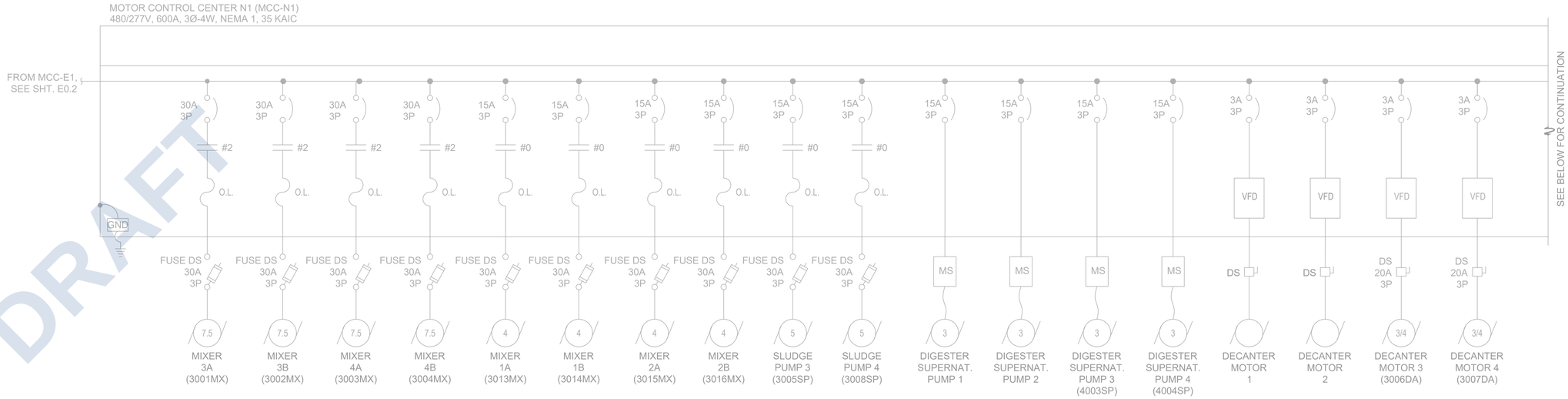

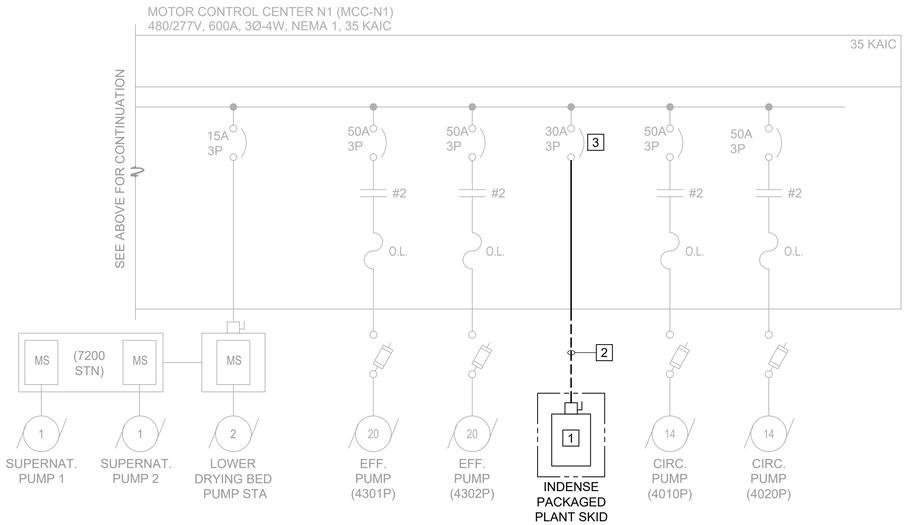

SINGLE LINE DIAGRAM - TEMPORARY

N.T.S



CONSTRUCTION NOTES:

1. SKID-MOUNTED MOTOR CONTROL PANEL, 480V, 3PH, 20A.
2. SOOW MULTI-CONDUCTOR CABLE (3-#8, 1-#8G) PROTECTED IN HEAVY-DUTY CABLE PROTECTOR (POWER-RAMP)
3. UTILIZE EXISTING 30A/3P CIRCUIT BREAKER PREVIOUSLY USED FOR SCRUBBER CONTROL PANEL.

GENERAL NOTES:

1. ALL FADED BACK ITEMS ARE EXISTING TO BE PROTECTED IN PLACE UNLESS NOTED OTHERWISE.
2. GREY ITEMS SHOWN ARE REFERENCED FROM RECORD DRAWINGS DATED 03/02/2001. SEE JOL ENTERPRISES PROJECT NUMBER 00-124 AS-BUILT DRAWINGS AND VERIFY ALL CONDITIONS FIRST.
3. GROUND AND BOND ALL ENCLOSURES PER MANUFACTURER/ CODE REQUIREMENTS.
4. DRAWINGS ARE DIAGRAMMATIC AND DO NOT REFLECT ACTUAL ROUTING. CONTRACTOR SHALL INSTALL PULLPOINTS WHERE REQUIRED FOR PULLING TENSION AND MAINTAINING LESS THEN (4) 90 DEGREE BENDS.
5. CONTRACTOR SHALL PERFORM SAFE WORK IN ACCORDANCE WITH NFPA 70E STANDARDS.
6. WHEN REQUIRED CONTRACTOR SHALL PROVIDE STRUCTURAL DESIGN CALCULATIONS FOR MOUNTING AND ANCHORING OF FABRICATED ASSEMBLIES AND SUPPORT STRUCTURES, SIGNED AND SEALED BY A REGISTERED PROFESSIONAL ENGINEER (CIVIL/STRUCTURAL) CURRENTLY LICENSED IN THE SAME STATE AS THE FINAL INSTALLATION. CALCULATIONS SHALL INCLUDE SEISMIC CONSIDERATIONS FOR THE LOCATION OF INSTALLATION.

DRAFT

NO	BY	DATE	REVISIONS	DATE	APP.

Registered Professional Engineer (Electrical) CERTIFICATE NO. 82958 Basheer Ishaq Shaq Stamped Apr 2026 ARIZONA, U.S.A. Expires 03/31/28

THESE DRAWINGS ARE THE PROPERTY OF P.A.C.E. AND SHALL NOT BE REPRODUCED IN ANY MANNER NOR BE USED FOR CONSTRUCTION UNLESS STAMPED 'ISSUED FOR CONSTRUCTION'.

PREPARED BY: BASHAR ISHAQ
PROJECT ENGINEER
R.C.E. NO.: --
EXP: DATE
DRAWN: NC
DESIGNED: NC, BI
CHECKED: BI
SCALE:
DATE: FEB 2026

TITLE: SINGLE LINE DIAGRAM - TEMP

JOB: CITY OF SAN LUIS WEST WWTP 3.0 MGD MBR UPGRADES — SAN LUIS AZ.

PACE
Advanced Water Engineering
8723 E. VIA de COMMERCIO, SUITE A-204 | SCOTTSDALE, CA 85258
P.: (408) 991-3595 | www.pacewater.com

SHEET: E0.4T
90 OF 209 SHEETS

JOB NO. B777

FINAL PLANS ISSUED FOR BID

W:\B777\Engineering\B777 - 3MGD Exp\3MGD FINAL DSN\sheets\B777 - E0.4T.dwg - Tab: E0.4T - by nchi on 01/28/26 at 5:50:46 PM

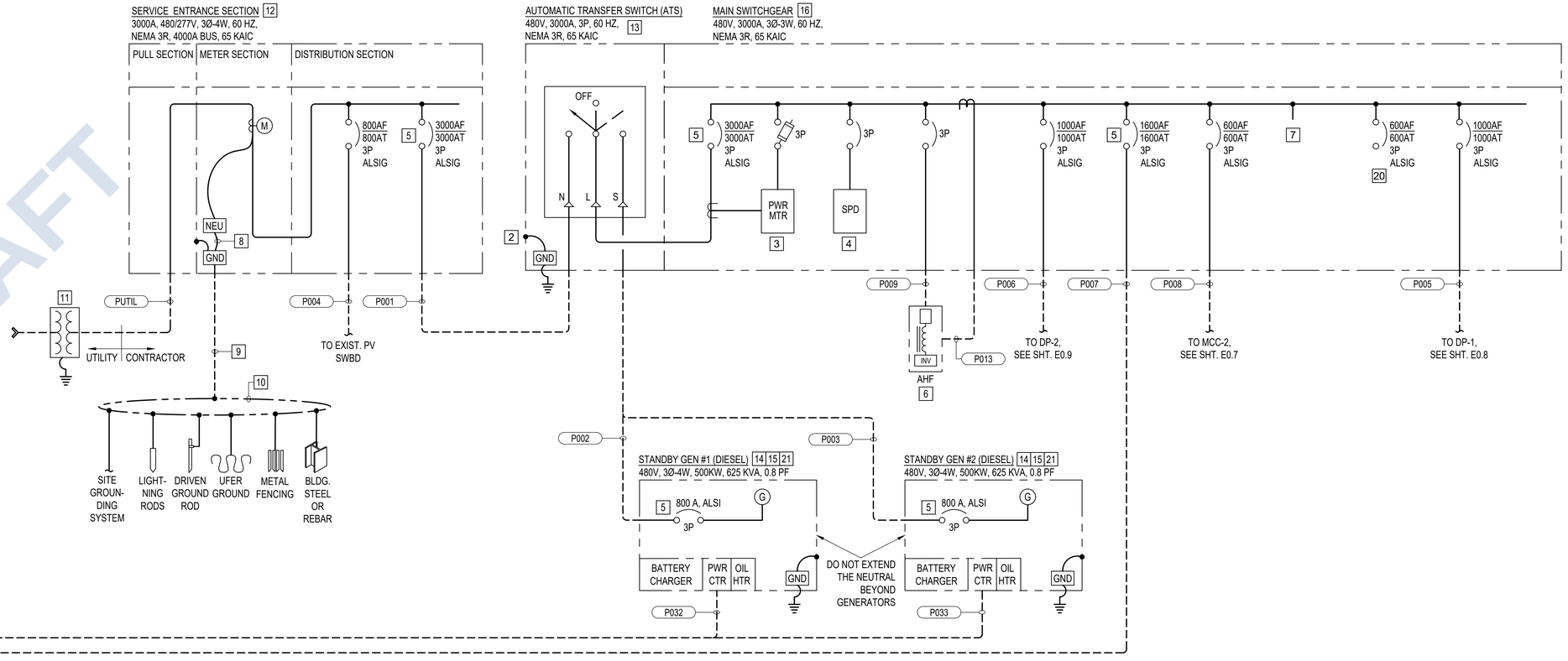

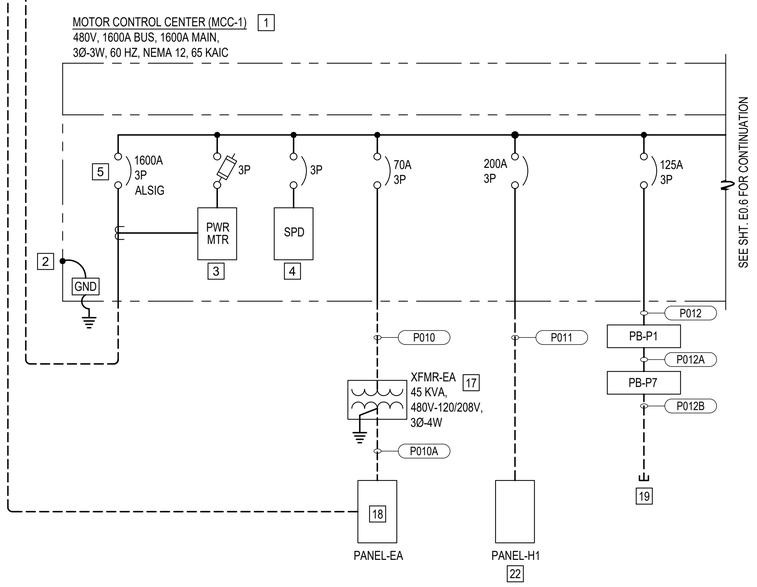

CONSTRUCTION NOTES:

1. MOTOR CONTROL CENTER (MCC-1), 1600A BUS, 1600A MAIN, 480V, 3PH-3W, 60 HZ, 65 KAIC, NEMA 12, PAD-MTD.
2. GROUND AND BOND EQUIPMENT TO GROUND SYSTEM PER GROUNDING PLAN AND MANUFACTURER REQUIREMENTS.
3. POWER METER, INTEGRAL CIRCUIT PROTECTION DEVICE TO BE SIZED BY MANUFACTURER.
4. SURGE PROTECTION DEVICE, INTEGRAL CIRCUIT PROTECTION DEVICE TO BE 200 KA/PH MINIMUM.
5. CIRCUIT BREAKER EQUIPPED WITH ENERGY REDUCING MAIN SWITCH WITH LOCAL STATUS INDICATORS PER NEC 240.87(B)(3).
6. COMMON ACTIVE HARMONIC FILTER, NEMA 12, PAD-MTD. TO BE SIZED BY VFD MF'R.
7. PROVISION FOR BREAKER.
8. 500 KCMIL BARE COPPER MAIN BONDING JUMPER.
9. 4/0 BARE COPPER GROUNDING ELECTRODE CONDUCTOR.
10. 4/0 BARE COPPER GROUND RING.
11. UTILITY TRANSFORMER & PAD PER ARIZONA PUBLIC SERVICE (APS) REQUIREMENTS.
12. INSTALL EUSERC APPROVED SERVICE ENTRANCE SECTION (SES) W/ MAIN METER PER UTILITY COMPANY SPECIFICATIONS, 3000A, 480/277V, 3Ø-4W, 60 HZ, NEMA 3R, 4000A BUS, 65 KAIC, PAD-MTD.
13. AUTOMATIC TRANSFER SWITCH (ATS), 480V, 3000A, 3P, 60 HZ, NEMA 3R, 65 KAIC.
14. STANDBY GENERATOR (DIESEL), 480V, 3Ø-4W, 500KW, 625 KVA, 0.8 PF, 100% RATED 800A ALSI BREAKER INTEGRATED AND EMERGENCY STOP PER NEC 445.19. GENERATOR TO BE PAD-MTD IN WEATHER-PROTECTED ENCLOSURE, MF'R: GENERAC OR APPROVED EQUAL.
15. GENERATOR MUST COMPLY WITH ALL LOCAL EMISSIONS AND OTHER REQUIREMENTS. CONTRACTOR TO OBTAIN GENERATOR PERMIT PRIOR TO INSTALLATION.
16. MAIN SWITCHGEAR, 480V, 3000A, 3Ø-3W, 60 HZ, NEMA 3R, 65 KAIC.
17. 45 KVA TRANSFORMER (XFMR-EA), 480-120/208V, 3Ø-4W, 60 HZ, NEMA 12 ENCLOSURE, WALL-MTD., MF'R: EATON, PN V48M22T4516 OR APPROVED EQUAL.
18. PANELBOARD (PANEL-EA), 120/208V, 3Ø-4W, 60 HZ, 150A MCB, 22 KAIC, BOLT-ON TYPE, 42 CIRCUITS, NEMA 12, WALL-MTD., MF'R: EATON, PN PRL1X (DIMS: 20"W x 5.75"D x 48"H) OR APPROVED EQUAL.
19. STUB-UP AT ADMIN BLDG.
20. SPARE BREAKER.
21. GENERATORS MUST BE CAPABLE OF AUTO-SYNCHRONIZING AND RUN SIMULTANEOUSLY. GENERAC OR EQUAL.
22. REPLACE EXISTING PANEL-H1 IN PLACE, TRANSFER EXISTING LOADS. REPLACEMENT PANEL TO BE 480V, 3PH, 225A BUS, 200A MCB, 42 CIRCUITS, 65 KAIC, NEMA 12.

NOTES:

1. CONTRACTOR SHALL LABEL EQUIPMENT FOR ARC-FLASH HAZARD WARNINGS IN ACCORDANCE WITH NEC 110.16(A).
2. CONTRACTOR SHALL LABEL SERVICE ENTRANCE EQUIPMENT WITH AVAILABLE FAULT CURRENT IN ACCORDANCE WITH NEC 110.16 (B) AND 110.24 (A) (B).
3. GROUND AND BOND ALL ENCLOSURES PER GROUNDING PLANS AND MANUFACTURER/ CODE REQUIREMENTS.
4. NOT ALL EQUIPMENT AND WIRING IS SHOWN ON THIS DIAGRAM. REFERENCE DRAWINGS IN THE ELECTRICAL SET AND ENTIRE PROJECT TO COMPLETELY UNDERSTAND THE ELECTRICAL SCOPE OF WORK.
5. DRAWINGS ARE DIAGRAMMATIC AND DO NOT REFLECT ACTUAL ROUTING. CONTRACTOR SHALL INSTALL PULLPOINTS WHERE REQUIRED FOR PULLING TENSION AND MAINTAINING LESS THEN (4) 90 DEGREE BENDS.
6. CONTRACTOR SHALL PERFORM SAFE WORK IN ACCORDANCE WITH NFPA 70E STANDARDS.
7. WHEN REQUIRED CONTRACTOR SHALL PROVIDE STRUCTURAL DESIGN CALCULATIONS FOR MOUNTING AND ANCHORING OF FABRICATED ASSEMBLIES AND SUPPORT STRUCTURES, SIGNED AND SEALED BY A REGISTERED PROFESSIONAL ENGINEER (CIVIL/STRUCTURAL) CURRENTLY LICENSED IN THE SAME STATE AS THE FINAL INSTALLATION. CALCULATIONS SHALL INCLUDE SEISMIC CONSIDERATIONS FOR THE LOCATION OF INSTALLATION.
8. VFD'S SHALL MEET ALL REQUIREMENTS OF IEEE 519 WITH USE OF EQUIPMENT. SEE SPECIFICATIONS FOR FURTHER INFORMATION.

DRAFT

NO	BY	DATE	REVISIONS	DATE	APP.

Registered Professional Engineer (Electrical) CERTIFICATE NO. 35508 Basher Shaho Date Signed 3/31/26 ARIZONA, U.S.A. Expires 03/31/28

THESE DRAWINGS ARE THE PROPERTY OF P.A.C.E. AND SHALL NOT BE REPRODUCED IN ANY MANNER NOR BE USED FOR CONSTRUCTION UNLESS STAMPED 'ISSUED FOR CONSTRUCTION'.

PREPARED BY: BASHAR SHAHO, PROJECT ENGINEER
R.C.E. NO.: E24590
EXP. DATE: —
SCALE:
DRAWN: NC
DESIGNED: NC, BI
CHECKED: BI
DATE: FEB 2026

TITLE: **SINGLE LINE DIAGRAM 1 - PROPOSED**

JOB: CITY OF SAN LUIS WEST WWTP 3.0 MGD MBR UPGRADES — SAN LUIS AZ.

PACE
Advanced Water Engineering
8723 E. VIA de COMMERCIO, SUITE A-204 | SCOTTSDALE, CA 85258
P: (408) 991-3595 | www.pacewater.com

FINAL PLANS ISSUED FOR BID

SHEET **E0.5**
91 OF 209 SHEETS

JOB NO. B777

W:\B777\Engineering\B777 - 3MGD Exp\3MGD FINAL DSN\sheets\B777 - E0.5.dwg - Tab: E0.5 - by rchin on 01/30/26 at 2:47:07 PM

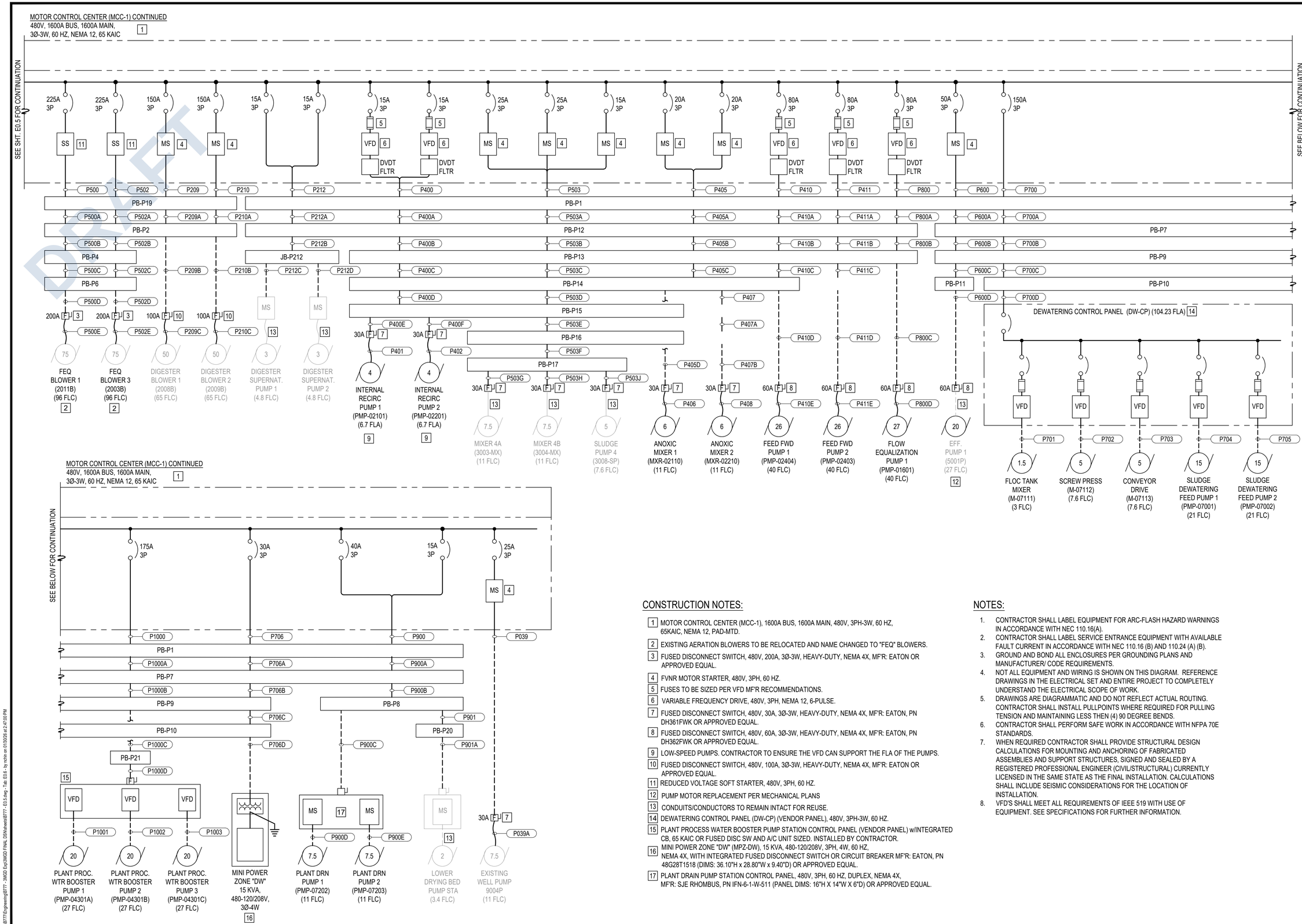

CONSTRUCTION NOTES:

1. MOTOR CONTROL CENTER (MCC-1), 1600A BUS, 1600A MAIN, 480V, 3PH-3W, 60 HZ, 65KAIC, NEMA 12, PAD-MTD.
2. EXISTING AERATION BLOWERS TO BE RELOCATED AND NAME CHANGED TO "FEQ" BLOWERS.
3. FUSED DISCONNECT SWITCH, 480V, 200A, 3Ø-3W, HEAVY-DUTY, NEMA 4X, MF'R: EATON OR APPROVED EQUAL.
4. FVNR MOTOR STARTER, 480V, 3PH, 60 HZ.
5. FUSES TO BE SIZED PER VFD MF'R RECOMMENDATIONS.
6. VARIABLE FREQUENCY DRIVE, 480V, 3PH, NEMA 12, 6-PULSE.
7. FUSED DISCONNECT SWITCH, 480V, 30A, 3Ø-3W, HEAVY-DUTY, NEMA 4X, MF'R: EATON, PN DH361FWK OR APPROVED EQUAL.
8. FUSED DISCONNECT SWITCH, 480V, 60A, 3Ø-3W, HEAVY-DUTY, NEMA 4X, MF'R: EATON, PN DH362FWK OR APPROVED EQUAL.
9. LOW-SPEED PUMPS. CONTRACTOR TO ENSURE THE VFD CAN SUPPORT THE FLA OF THE PUMPS.
10. FUSED DISCONNECT SWITCH, 480V, 100A, 3Ø-3W, HEAVY-DUTY, NEMA 4X, MF'R: EATON OR APPROVED EQUAL.
11. REDUCED VOLTAGE SOFT STARTER, 480V, 3PH, 60 HZ.
12. PUMP MOTOR REPLACEMENT PER MECHANICAL PLANS
13. CONDUITS/CONDUCTORS TO REMAIN INTACT FOR REUSE.
14. DEWATERING CONTROL PANEL (DW-CP) (VENDOR PANEL), 480V, 3PH-3W, 60 HZ.
15. PLANT PROCESS WATER BOOSTER PUMP STATION CONTROL PANEL (VENDOR PANEL) w/INTEGRATED CB, 65 KAIC OR FUSED DISC SW AND A/C UNIT SIZED. INSTALLED BY CONTRACTOR.
16. MINI POWER ZONE "DW" (MPZ-DW), 15 KVA, 480-120/208V, 3PH, 4W, 60 HZ, NEMA 4X, WITH INTEGRATED FUSED DISCONNECT SWITCH OR CIRCUIT BREAKER MF'R: EATON, PN 48G28T1518 (DIMS: 36.10"H x 28.80"W x 9.40"D) OR APPROVED EQUAL.
17. PLANT DRAIN PUMP STATION CONTROL PANEL, 480V, 3PH, 60 HZ, DUPLEX, NEMA 4X, MF'R: SJE RHOMBUS, PN IFN-6-1-W-511 (PANEL DIMS: 16"H X 14"W X 6"D) OR APPROVED EQUAL.

NOTES:

1. CONTRACTOR SHALL LABEL EQUIPMENT FOR ARC-FLASH HAZARD WARNINGS IN ACCORDANCE WITH NEC 110.16(A).
2. CONTRACTOR SHALL LABEL SERVICE ENTRANCE EQUIPMENT WITH AVAILABLE FAULT CURRENT IN ACCORDANCE WITH NEC 110.16 (B) AND 110.24 (A) (B).
3. GROUND AND BOND ALL ENCLOSURES PER GROUNDING PLANS AND MANUFACTURER/ CODE REQUIREMENTS.
4. NOT ALL EQUIPMENT AND WIRING IS SHOWN ON THIS DIAGRAM. REFERENCE DRAWINGS IN THE ELECTRICAL SET AND ENTIRE PROJECT TO COMPLETELY UNDERSTAND THE ELECTRICAL SCOPE OF WORK.
5. DRAWINGS ARE DIAGRAMMATIC AND DO NOT REFLECT ACTUAL ROUTING. CONTRACTOR SHALL INSTALL PULLPOINTS WHERE REQUIRED FOR PULLING TENSION AND MAINTAINING LESS THEN (4) 90 DEGREE BENDS.
6. CONTRACTOR SHALL PERFORM SAFE WORK IN ACCORDANCE WITH NFPA 70E STANDARDS.
7. WHEN REQUIRED CONTRACTOR SHALL PROVIDE STRUCTURAL DESIGN CALCULATIONS FOR MOUNTING AND ANCHORING OF FABRICATED ASSEMBLIES AND SUPPORT STRUCTURES, SIGNED AND SEALED BY A REGISTERED PROFESSIONAL ENGINEER (CIVIL/STRUCTURAL) CURRENTLY LICENSED IN THE SAME STATE AS THE FINAL INSTALLATION. CALCULATIONS SHALL INCLUDE SEISMIC CONSIDERATIONS FOR THE LOCATION OF INSTALLATION.
8. VFD'S SHALL MEET ALL REQUIREMENTS OF IEEE 519 WITH USE OF EQUIPMENT. SEE SPECIFICATIONS FOR FURTHER INFORMATION.

DRAFT

NO	BY	DATE	REVISIONS	DATE	APP.

Registered Professional Engineer (Electrical) CERTIFICATE NO. 35656 Bashar Shaio State of ARIZONA U.S.A. Expires 03/31/28

PREPARED BY BASHAR SHAIO PROJECT ENGINEER
R.C.E. NO. E24590
EXP. DATE

SCALE	DATE
DRAWN NC	FEB 2026
DESIGNED NC, BI	
CHECKED BI	

THESE DRAWINGS ARE THE PROPERTY OF P.A.C.E. AND SHALL NOT BE REPRODUCED IN ANY MANNER NOR BE USED FOR CONSTRUCTION UNLESS STAMPED "ISSUED FOR CONSTRUCTION".

TITLE: **SINGLE LINE DIAGRAM 2 - PROPOSED**

JOB: CITY OF SAN LUIS WEST WWTP 3.0 MGD MBR UPGRADES — SAN LUIS AZ.

PACE Advanced Water Engineering
8723 E. VIA de COMMERCIO, SUITE A- 204 | SCOTTSDALE, CA 85258
P: (408) 991-3595 | www.pacewater.com

SHEET **E0.6**
92 OF 209 SHEETS

JOB NO. B777

FINAL PLANS ISSUED FOR BID

W:\B777\Engineering\B777 - 3MGD Exp\3MGD FINAL DSN\sheets\B777 - E0.5.dwg - Tab: E0.6 - by rschin on 01/30/26 at 2:47:00 PM

DRAFT

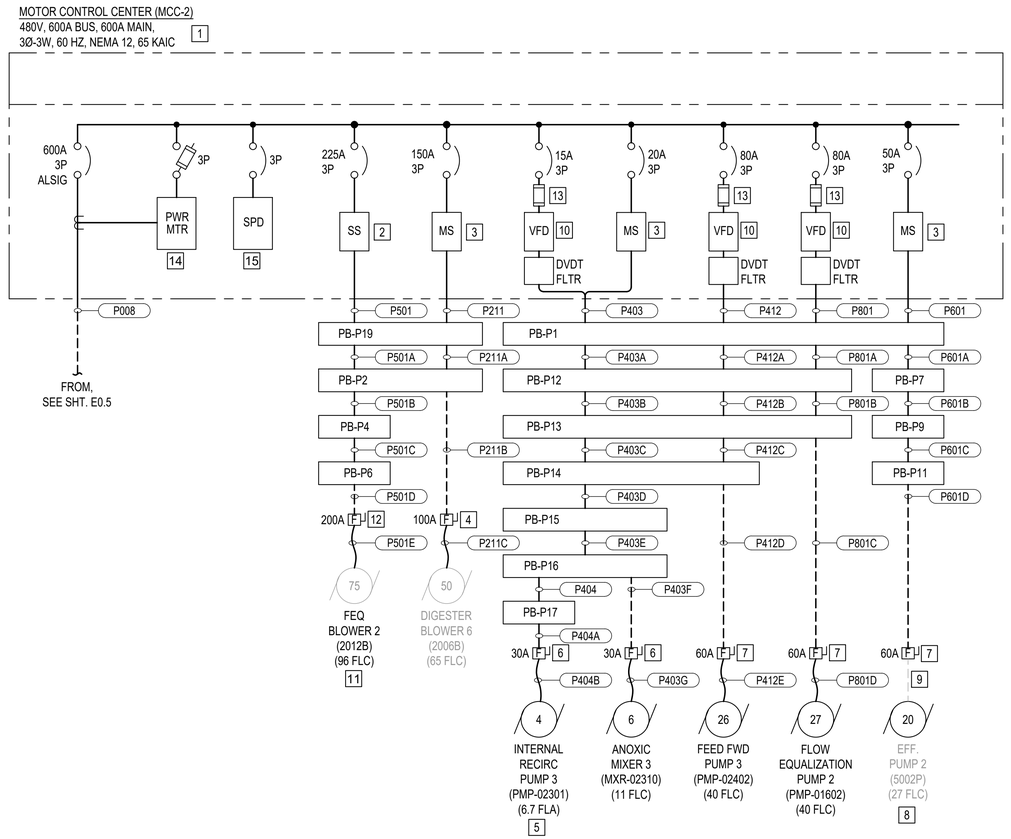

CONSTRUCTION NOTES:

1. MOTOR CONTROL CENTER (MCC-2), 600A BUS, 600A MAIN, 480V, 3PH-3W, 60 HZ, 65KAIC, NEMA 12, PAD-MTD.
2. REDUCED VOLTAGE SOFT STARTER, 480V, 3PH, 60 HZ.
3. FVNR MOTOR STARTER, 480V, 3PH, 60 HZ.
4. FUSED DISCONNECT SWITCH, 480V, 100A, 3Ø-3W, HEAVY-DUTY, NEMA 4X, MF'R: EATON OR APPROVED EQUAL.
5. LOW-SPEED PUMPS. CONTRACTOR TO ENSURE THE VFD CAN SUPPORT THE FLA OF THE PUMPS.
6. FUSED DISCONNECT SWITCH, 480V, 30A, 3Ø-3W, HEAVY-DUTY, NEMA 4X, MF'R: EATON, PN DH361FWK OR APPROVED EQUAL.
7. FUSED DISCONNECT SWITCH, 480V, 60A, 3Ø-3W, HEAVY-DUTY, NEMA 4X, MF'R: EATON, PN DH362FWK OR APPROVED EQUAL.
8. PUMP REPLACEMENT MOTORS TO BE INVERTER DUTY.
9. CONDUITS/CONDUCTORS TO REMAIN INTACT FOR REUSE.
10. VARIABLE FREQUENCY DRIVE, 480V, 3PH, NEMA 12, 6-PULSE.
11. EXISTING AERATION BLOWER TO BE RELOCATED AND NAME CHANGED TO "FEQ" BLOWER.
12. FUSED DISCONNECT SWITCH, 480V, 200A, 3Ø-3W, HEAVY-DUTY, NEMA 4X, MF'R: EATON OR APPROVED EQUAL.
13. FUSES TO BE SIZED PER VFD MF'R RECOMMENDATIONS.
14. POWER METER, INTEGRAL CIRCUIT PROTECTION DEVICE TO BE SIZED BY MANUFACTURER.
15. SURGE PROTECTION DEVICE, INTEGRAL CIRCUIT PROTECTION DEVICE TO BE 200 KA/PH MINIMUM.

NOTES:

1. CONTRACTOR SHALL LABEL EQUIPMENT FOR ARC-FLASH HAZARD WARNINGS IN ACCORDANCE WITH NEC 110.16(A).
2. CONTRACTOR SHALL LABEL SERVICE ENTRANCE EQUIPMENT WITH AVAILABLE FAULT CURRENT IN ACCORDANCE WITH NEC 110.16 (B) AND 110.24 (A) (B).
3. GROUND AND BOND ALL ENCLOSURES PER GROUNDING PLANS AND MANUFACTURER/ CODE REQUIREMENTS.
4. NOT ALL EQUIPMENT AND WIRING IS SHOWN ON THIS DIAGRAM. REFERENCE DRAWINGS IN THE ELECTRICAL SET AND ENTIRE PROJECT TO COMPLETELY UNDERSTAND THE ELECTRICAL SCOPE OF WORK.
5. DRAWINGS ARE DIAGRAMMATIC AND DO NOT REFLECT ACTUAL ROUTING. CONTRACTOR SHALL INSTALL PULLPOINTS WHERE REQUIRED FOR PULLING TENSION AND MAINTAINING LESS THEN (4) 90 DEGREE BENDS.
6. CONTRACTOR SHALL PERFORM SAFE WORK IN ACCORDANCE WITH NFPA 70E STANDARDS.
7. WHEN REQUIRED CONTRACTOR SHALL PROVIDE STRUCTURAL DESIGN CALCULATIONS FOR MOUNTING AND ANCHORING OF FABRICATED ASSEMBLIES AND SUPPORT STRUCTURES, SIGNED AND SEALED BY A REGISTERED PROFESSIONAL ENGINEER (CIVIL/STRUCTURAL) CURRENTLY LICENSED IN THE SAME STATE AS THE FINAL INSTALLATION. CALCULATIONS SHALL INCLUDE SEISMIC CONSIDERATIONS FOR THE LOCATION OF INSTALLATION.
8. VFD'S SHALL MEET ALL REQUIREMENTS OF IEEE 519 WITH USE OF EQUIPMENT. SEE SPECIFICATIONS FOR FURTHER INFORMATION.

NO	BY	DATE	REVISIONS	DATE	APP.

Registered Professional Engineer (Electrical) CERTIFICATE NO. 35958 BASHAR ISHAQ Date Signed 03/31/26 ARIZONA, U.S.A. Expires 03/31/28

PREPARED BY BASHAR ISHAQ
PROJECT ENGINEER
R.C.E. NO. E24590
EXP. DATE

DRAWN NC
DESIGNED NC, BI
CHECKED BI
SCALE
DATE FEB 2026

THESE DRAWINGS ARE THE PROPERTY OF P.A.C.E. AND SHALL NOT BE REPRODUCED IN ANY MANNER NOR BE USED FOR CONSTRUCTION UNLESS STAMPED "ISSUED FOR CONSTRUCTION".

TITLE
SINGLE LINE DIAGRAM 3 - PROPOSED

JOB
CITY OF SAN LUIS WEST WWTP
3.0 MGD MBR UPGRADES
AZ.
SAN LUIS

PACE
Advanced Water Engineering
8723 E. VIA de COMMERCIO, SUITE A 204 | SCOTTSDALE, CA 85258
P: (408) 991-3595 | www.pacewater.com

SHEET
E0.7
93 OF 209 SHEETS

JOB NO. B777

FINAL PLANS ISSUED FOR BID

W:\B777\Engineering\B777 - 3MGD Exp\3MGD FINAL DS\Sheets\B777 - E0.5.dwg - Tab: E0.7 - by rchin on 01/30/26 at 2:47:00 PM

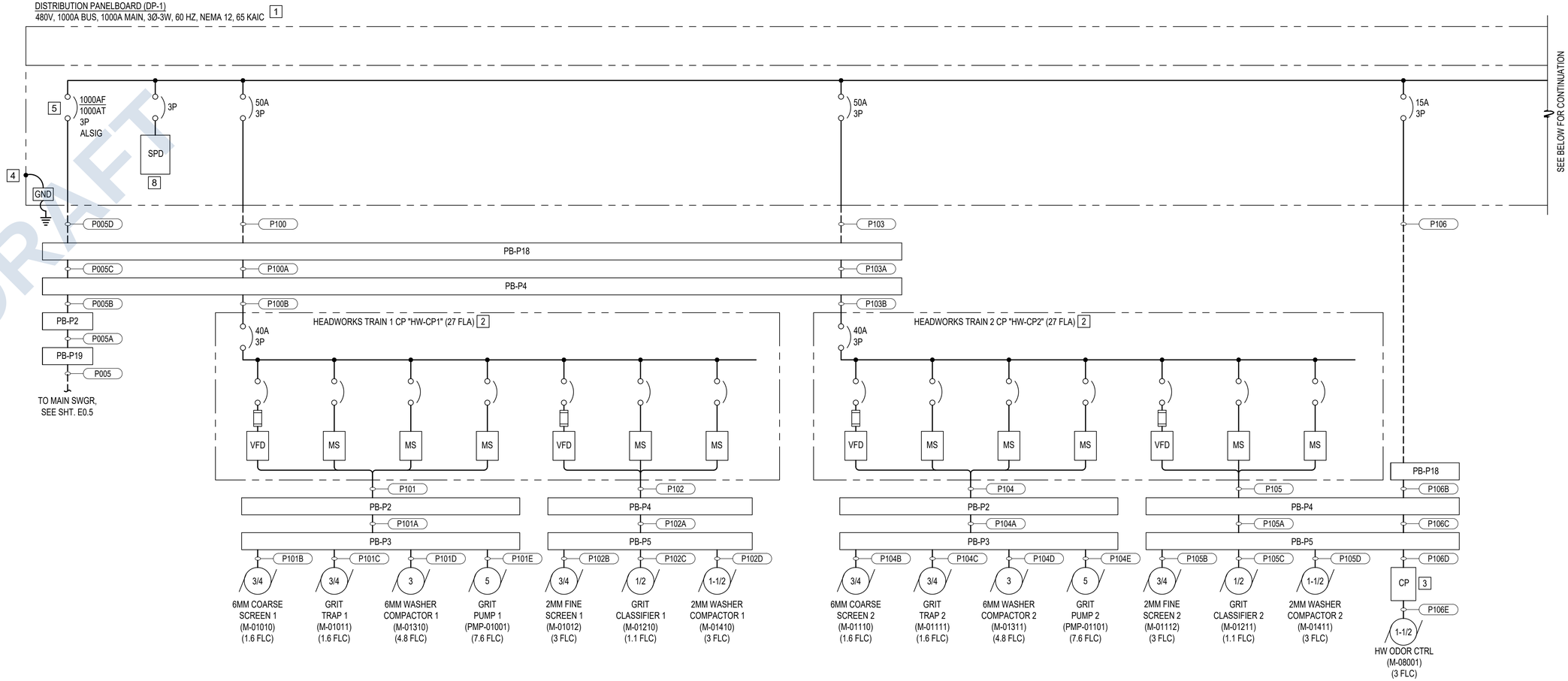

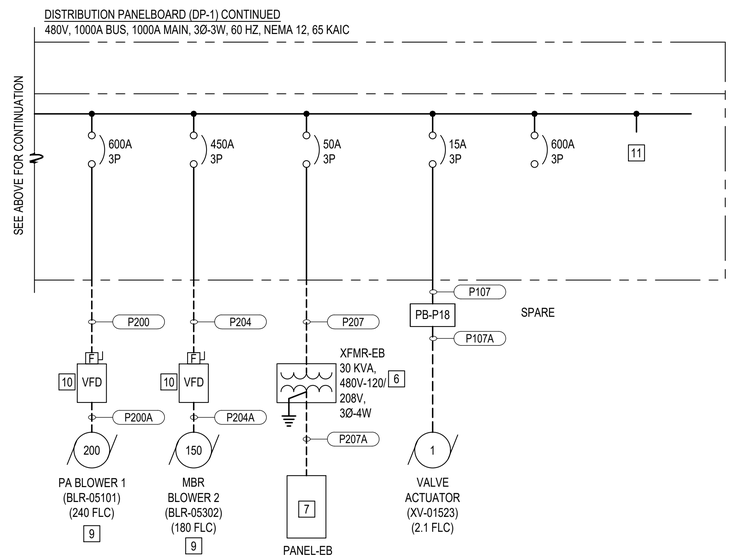

CONSTRUCTION NOTES:

1. DISTRIBUTION PANELBOARD (DP-1), 480V, 1000A BUS, 1000A MAIN, 3Ø-3W, 60 HZ, NEMA 12, 65 KAIC, PAD-MTD.
2. HEADWORKS CONTROL PANELS (VENDOR PANELS), 480V, 3PH, 60 HZ.
3. HEADWORKS ODOR CONTROL UNIT CONTROL PANEL (VENDOR PANEL).
4. GROUND AND BOND EQUIPMENT TO GROUND SYSTEM PER GROUNDING PLAN AND MANUFACTURER REQUIREMENTS.
5. CIRCUIT BREAKER EQUIPPED WITH ENERGY REDUCING MAIN SWITCH WITH LOCAL STATUS INDICATORS PER NEC 240.87(B)(3).
6. 30 KVA TRANSFORMER (XFMR-EB), 480-120/208V, 3Ø-4W, 60 HZ, NEMA 12 ENCLOSURE, PAD-MTD., MF'R: EATON OR APPROVED EQUAL.
7. PANELBOARD (PANEL-EB), 120/208V, 3Ø-4W, 60 HZ, 100A MCB, 22 KAIC, BOLT-ON TYPE, 54 CIRCUITS, NEMA 12, WALL-MTD., MF'R: EATON, PN PRL1X (DIMS: 20"W x 5.75"D) OR APPROVED EQUAL.
8. SURGE PROTECTION DEVICE, INTEGRAL WITH DP. CIRCUIT PROTECTION DEVICE TO BE 200 KA/PH MINIMUM.
9. PROVIDE LOCKABLE E-STOP LOCALLY AT BLOWERS.
10. VARIABLE FREQUENCY DRIVE WITH FUSED DISCONNECT SWITCH, 480V, 3PH, NEMA 12, WALL-MTD., MF'R: DANFOSS, PN: FC202 AQUA DRIVE (OR APPROVED EQUAL).
11. PROVISION FOR FUTURE CIRCUIT BREAKERS (TYP 2).

NOTES:

1. CONTRACTOR SHALL LABEL EQUIPMENT FOR ARC-FLASH HAZARD WARNINGS IN ACCORDANCE WITH NEC 110.16(A).
2. CONTRACTOR SHALL LABEL SERVICE ENTRANCE EQUIPMENT WITH AVAILABLE FAULT CURRENT IN ACCORDANCE WITH NEC 110.16 (B) AND 110.24 (A) (B).
3. GROUND AND BOND ALL ENCLOSURES PER GROUNDING PLANS AND MANUFACTURER/ CODE REQUIREMENTS.
4. NOT ALL EQUIPMENT AND WIRING IS SHOWN ON THIS DIAGRAM. REFERENCE DRAWINGS IN THE ELECTRICAL SET AND ENTIRE PROJECT TO COMPLETELY UNDERSTAND THE ELECTRICAL SCOPE OF WORK.
5. DRAWINGS ARE DIAGRAMMATIC AND DO NOT REFLECT ACTUAL ROUTING. CONTRACTOR SHALL INSTALL PULLPOINTS WHERE REQUIRED FOR PULLING TENSION AND MAINTAINING LESS THEN (4) 90 DEGREE BENDS.
6. CONTRACTOR SHALL PERFORM SAFE WORK IN ACCORDANCE WITH NFPA 70E STANDARDS.
7. WHEN REQUIRED CONTRACTOR SHALL PROVIDE STRUCTURAL DESIGN CALCULATIONS FOR MOUNTING AND ANCHORING OF FABRICATED ASSEMBLIES AND SUPPORT STRUCTURES, SIGNED AND SEALED BY A REGISTERED PROFESSIONAL ENGINEER (CIVIL/STRUCTURAL) CURRENTLY LICENSED IN THE SAME STATE AS THE FINAL INSTALLATION. CALCULATIONS SHALL INCLUDE SEISMIC CONSIDERATIONS FOR THE LOCATION OF INSTALLATION.
8. VFD'S SHALL MEET ALL REQUIREMENTS OF IEEE 519 WITH USE OF EQUIPMENT. SEE SPECIFICATIONS FOR FURTHER INFORMATION.

DRAFT

NO	BY	DATE	REVISIONS	DATE	APP.

Registered Professional Engineer (Electrical) CERTIFICATE NO. 35508 Basheer Shaiq ARIZONA, U.S.A. Expires 03/31/28

THESE DRAWINGS ARE THE PROPERTY OF P.A.C.E. AND SHALL NOT BE REPRODUCED IN ANY MANNER NOR BE USED FOR CONSTRUCTION UNLESS STAMPED 'ISSUED FOR CONSTRUCTION'.

PREPARED BY: BASHAR SHAIQ
PROJECT ENGINEER
R.C.E. NO.: E24590
EXP: DATE
DRAWN: NC
DESIGNED: NC, BI
CHECKED: BI
SCALE
DATE: FEB 2026

TITLE: **SINGLE LINE DIAGRAM 4 - PROPOSED**

JOB: CITY OF SAN LUIS WEST WWTP
3.0 MGD MBR UPGRADES
SAN LUIS AZ.

PACE
Advanced Water Engineering
8723 E. VIA de COMMERCIO, SUITE A 204 | SCOTTSDALE, CA 85258
P: (408) 991-3595 | www.pacewater.com

SHEET
E0.8
94 OF 209 SHEETS

JOB NO. B777

FINAL PLANS ISSUED FOR BID

W:\B777 Engineering\B777 - 3MGD Exp\3MGD FINAL DSN\sheets\B777 - E0.5.dwg - Tab: E0.8 - by rchin on 01/30/26 at 2:47:00 PM

DRAFT

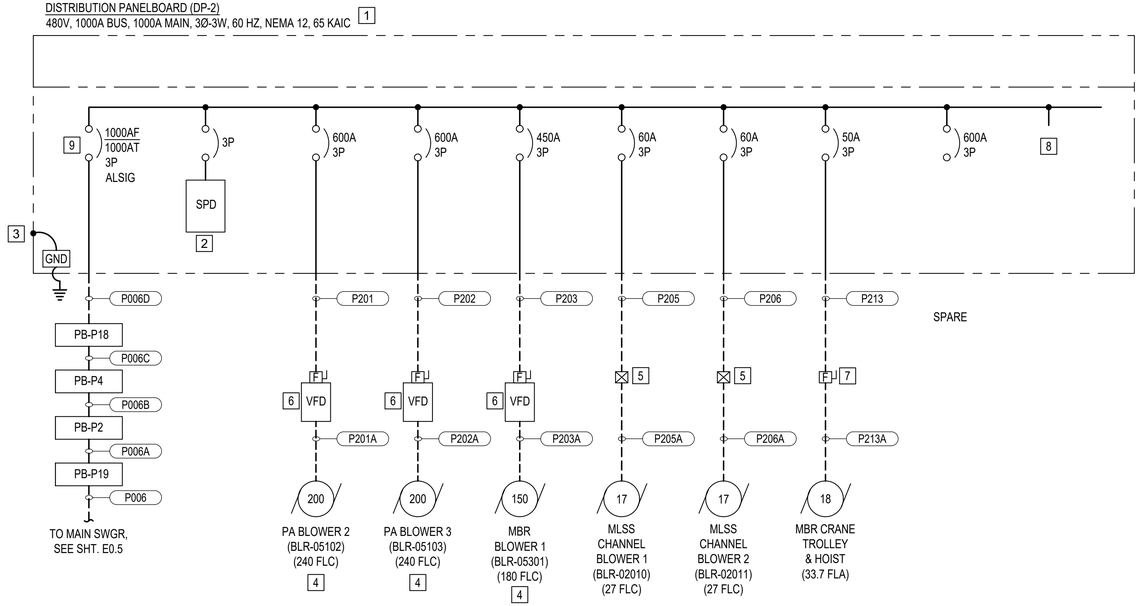

CONSTRUCTION NOTES:

1. DISTRIBUTION PANELBOARD (DP-2), 480V, 1000A BUS, 1000A MAIN, 3Ø-3W, 60 HZ, NEMA 12, 65 KAIC, PAD-MTD.
2. SURGE PROTECTION DEVICE, INTEGRAL WITH DP. CIRCUIT PROTECTION DEVICE TO BE 200 KA/PH MINIMUM.
3. GROUND AND BOND EQUIPMENT TO GROUND SYSTEM PER GROUNDING PLAN AND MANUFACTURER REQUIREMENTS.
4. PROVIDE LOCKABLE E-STOP LOCALLY AT BLOWERS.
5. COMBINATION FVNR MOTOR STARTER, WITH H-O-A SELECTOR SWITCH, NEMA 12, MF'R: EATON, TYPE FREEDOM FULL VOLTAGE CONTROLS (OR EQUAL).
6. VARIABLE FREQUENCY DRIVE WITH FUSED DISCONNECT SWITCH, 480V, 3PH, NEMA 12, WALL-MTD., MF'R: DANFOSS, PN: FC202 AQUA DRIVE (OR APPROVED EQUAL).
7. FUSED DISCONNECT SWITCH, 60A, 35A FUSES, NEMA 4X, EATON OR EQUAL.
8. PROVISION FOR FUTURE CIRCUIT BREAKERS (TYP 2).
9. CIRCUIT BREAKER EQUIPPED WITH ENERGY REDUCING MAIN SWITCH WITH LOCAL STATUS INDICATORS PER NEC 240.87(B)(3).

NOTES:

1. CONTRACTOR SHALL LABEL EQUIPMENT FOR ARC-FLASH HAZARD WARNINGS IN ACCORDANCE WITH NEC 110.16(A).
2. CONTRACTOR SHALL LABEL SERVICE ENTRANCE EQUIPMENT WITH AVAILABLE FAULT CURRENT IN ACCORDANCE WITH NEC 110.16 (B) AND 110.24 (A) (B).
3. GROUND AND BOND ALL ENCLOSURES PER GROUNDING PLANS AND MANUFACTURER/ CODE REQUIREMENTS.
4. NOT ALL EQUIPMENT AND WIRING IS SHOWN ON THIS DIAGRAM. REFERENCE DRAWINGS IN THE ELECTRICAL SET AND ENTIRE PROJECT TO COMPLETELY UNDERSTAND THE ELECTRICAL SCOPE OF WORK.
5. DRAWINGS ARE DIAGRAMMATIC AND DO NOT REFLECT ACTUAL ROUTING. CONTRACTOR SHALL INSTALL PULLPOINTS WHERE REQUIRED FOR PULLING TENSION AND MAINTAINING LESS THEN (4) 90 DEGREE BENDS.
6. CONTRACTOR SHALL PERFORM SAFE WORK IN ACCORDANCE WITH NFPA 70E STANDARDS.
7. WHEN REQUIRED CONTRACTOR SHALL PROVIDE STRUCTURAL DESIGN CALCULATIONS FOR MOUNTING AND ANCHORING OF FABRICATED ASSEMBLIES AND SUPPORT STRUCTURES, SIGNED AND SEALED BY A REGISTERED PROFESSIONAL ENGINEER (CIVIL/STRUCTURAL) CURRENTLY LICENSED IN THE SAME STATE AS THE FINAL INSTALLATION. CALCULATIONS SHALL INCLUDE SEISMIC CONSIDERATIONS FOR THE LOCATION OF INSTALLATION.
8. VFD'S SHALL MEET ALL REQUIREMENTS OF IEEE 519 WITH USE OF EQUIPMENT. SEE SPECIFICATIONS FOR FURTHER INFORMATION.

NO	BY	DATE	REVISIONS	DATE	APP.

Registered Professional Engineer (Electrical) CERTIFICATE NO. 55558 Nicholas Chan State of ARIZONA U.S.A. Expires 03/31/28

THESE DRAWINGS ARE THE PROPERTY OF P.A.C.E. AND SHALL NOT BE REPRODUCED IN ANY MANNER NOR BE USED FOR CONSTRUCTION UNLESS STAMPED "ISSUED FOR CONSTRUCTION".

PREPARED BY: BASHAR ISHAQ
R.C.E. NO.: PROJECT ENGINEER
EXP: DATE: E24590
SCALE:
DRAWN: NC
DESIGNED: NC, BI
CHECKED: BI
DATE: FEB 2026

TITLE: **SINGLE LINE DIAGRAM 5 - PROPOSED**

JOB: CITY OF SAN LUIS WEST WWTP
3.0 MGD MBR UPGRADES
SAN LUIS AZ.

PACE
Advanced Water Engineering
8723 E. VIA de COMMERCIO, SUITE A-204 | SCOTTSDALE, CA 85258
P: (408) 991-3595 | www.pacewater.com

SHEET
E0.9
95 OF 209 SHEETS

JOB NO. B777

FINAL PLANS ISSUED FOR BID

W:\B777\Engineering\B777 - 3MGD Exp\3MGD FINAL DSN\sheets\B777 - E0.5.dwg - Tab: E0.9 - by rchin on 01/30/26 at 2:47:07 PM

NOTES:

1. DETAIL IS SHOWN FOR REFERENCE ONLY, SEE VENDOR SUBMITTALS.

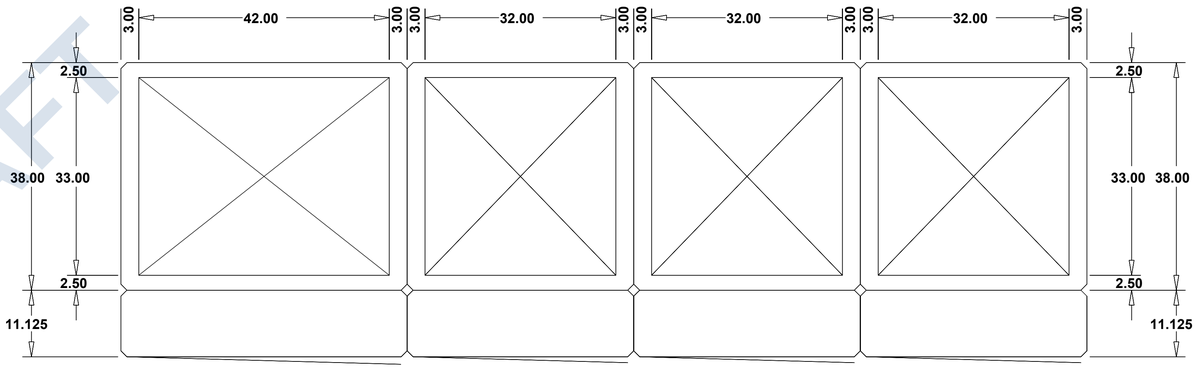

PLAN

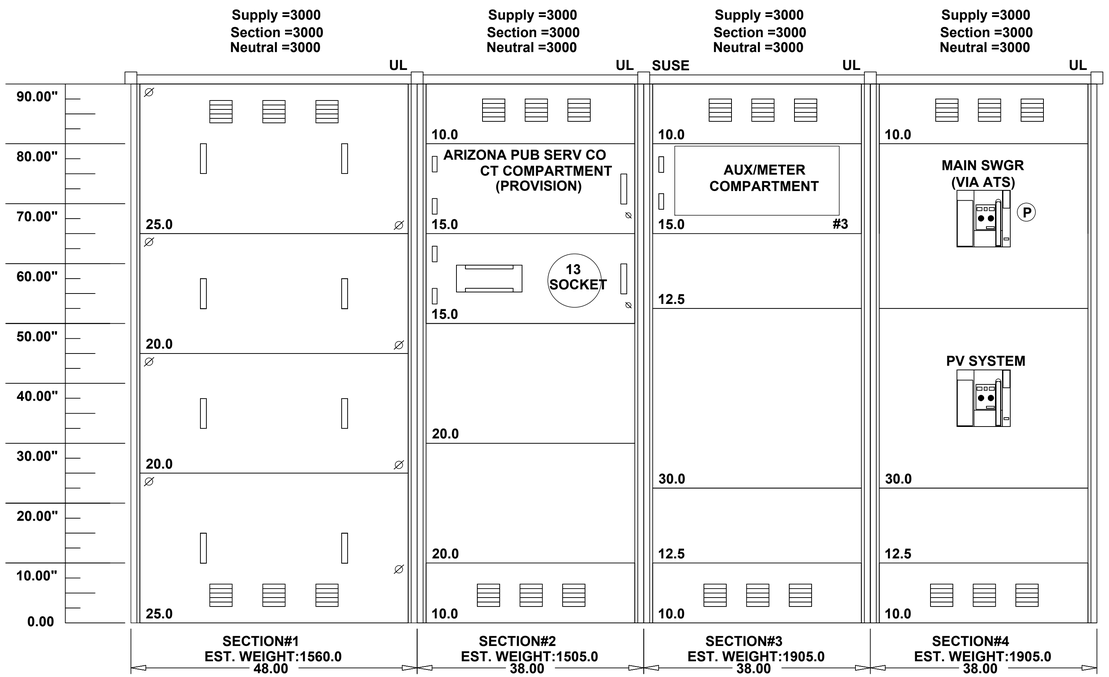

ELEVATION

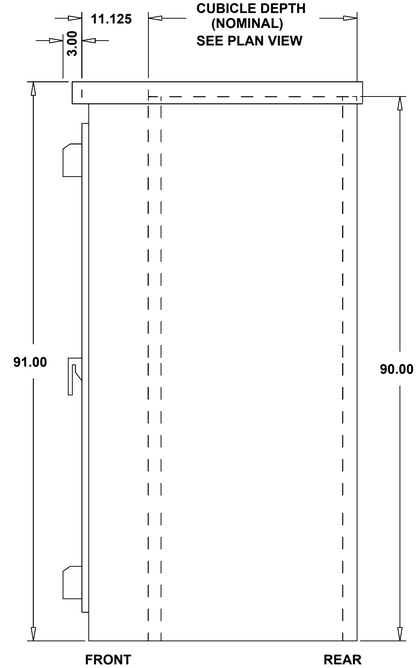

SECTION

SES DETAIL

NTS

DRAFT

THESE DRAWINGS ARE THE PROPERTY OF P.A.C.E. AND SHALL NOT BE REPRODUCED IN ANY MANNER NOR BE USED FOR CONSTRUCTION UNLESS STAMPED "ISSUED FOR CONSTRUCTION".

NO	BY	DATE	REVISIONS	DATE	APP.

Registered Professional Engineer (Electrical) CERTIFICATE NO. 82968 BASHAR ISHAQ Date Signed 3/31/28 ARIZONA, U.S.A. Expires 03/31/28

PREPARED BY BASHAR ISHAQ
PROJECT ENGINEER
R.C.E. NO. -- E24590
EXP. DATE
DRAWN NC
SCALE
DESIGNED NC, BI
CHECKED BI
DATE FEB 2026

TITLE
EQUIPMENT ELEVATION 1 - PROPOSED

JOB
CITY OF SAN LUIS WEST WWTP
3.0 MGD MBR UPGRADES
SAN LUIS AZ.

PACE
Advanced Water Engineering
8723 E. VIA de COMMERCIO, SUITE A-204 | SCOTTSDALE, CA 85258
P: (408) 991-3595 | www.pacewater.com

FINAL PLANS ISSUED FOR BID

SHEET
E0.10
96 OF 209 SHEETS

JOB NO. B777

W:\B777\Engineering\B777 - 3MGD Exp\3MGD FINAL DSN\sheets\B777 - E0.10.dwg - Tab: E0.10 - by nchn on 01/29/26 at 2:59:10 PM

DRAFT

NOTES:

1. DETAIL IS SHOWN FOR REFERENCE ONLY, SEE VENDOR SUBMITTALS.

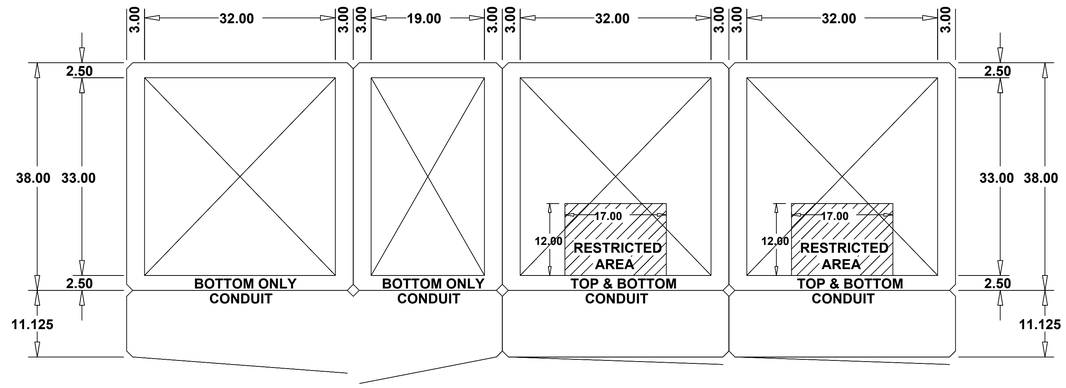

PLAN

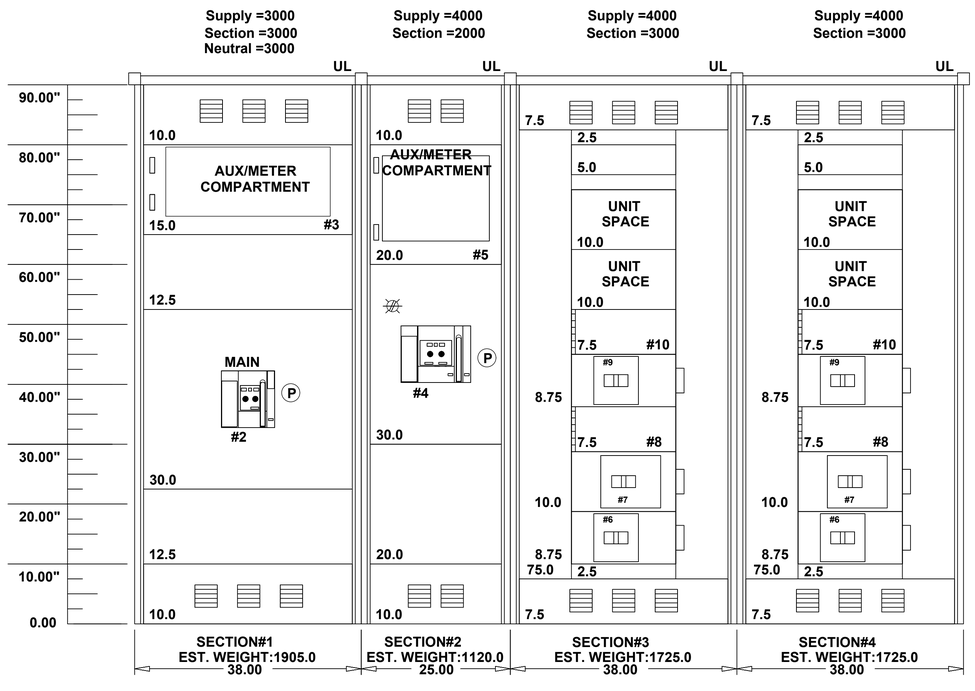

ELEVATION

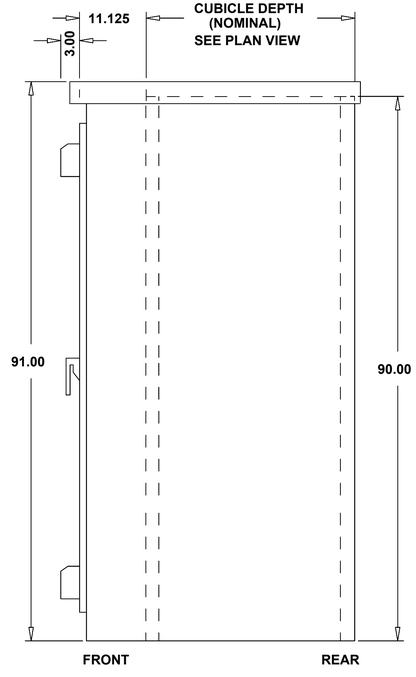

SECTION

SWITCHGEAR DETAIL

NTS

NO	BY	DATE	REVISIONS	DATE	APP.

THESE DRAWINGS ARE THE PROPERTY OF P.A.C.E. AND SHALL NOT BE REPRODUCED IN any MANNER NOR BE USED FOR CONSTRUCTION UNLESS STAMPED "ISSUED FOR CONSTRUCTION".

Registered Professional Engineer (Electrical) CERTIFICATE NO. 82958 BASHAR ISHAQ Date Signed 1/31/26 ARIZONA, U.S.A. Expires 03/31/28

PREPARED BY: BASHAR ISHAQ
PROJECT ENGINEER
R.C.E. NO. 82958
EXP. DATE 03/31/28
SCALE
DRAWN NC
DESIGNED NC, BI
CHECKED BI
DATE FEB 2026

TITLE: EQUIPMENT ELEVATION 2 - PROPOSED

JOB: CITY OF SAN LUIS WEST WWTP 3.0 MGD MBR UPGRADES — SAN LUIS AZ.

PACE
Advanced Water Engineering
8723 E. VIA de COMMERCIO, SUITE A-204 | SCOTTSDALE, CA 85258
P: (408) 991-3595 | www.pacewater.com

FINAL PLANS ISSUED FOR BID

SHEET
E0.11
97 OF 209 SHEETS

JOB NO. B777

W:\B777\Engineering\B777 - 3MGD Exp\3MGD FINAL ISN\sheets\B777 - E0.10.dwg - Tab: E0.11 - by rohin on 01/29/26 at 2:59:10 PM

NOTES:

1. THE ELEVATION DRAWINGS ARE BASED ON ALLEN BRADLEY CENTERLINE MCC. DETAIL IS SHOWN FOR REFERENCE ONLY, SEE VENDOR SUBMITTALS.

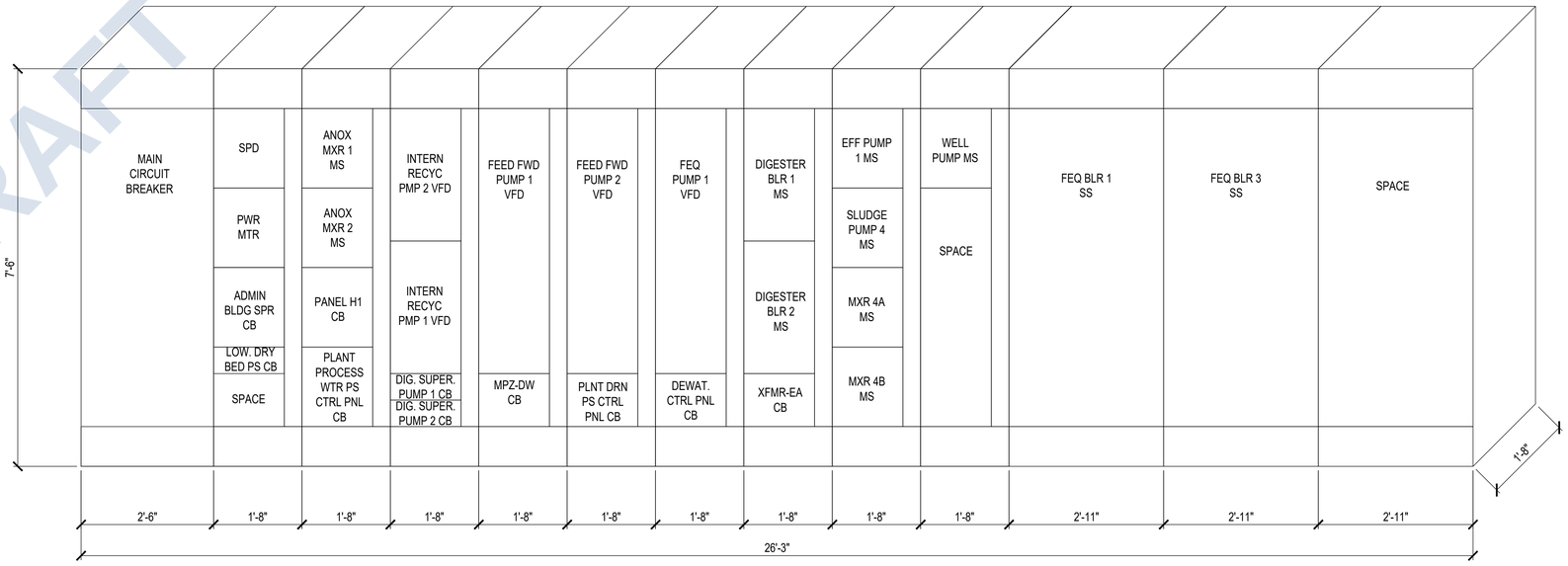

MCC-1 ELEVATION

NTS

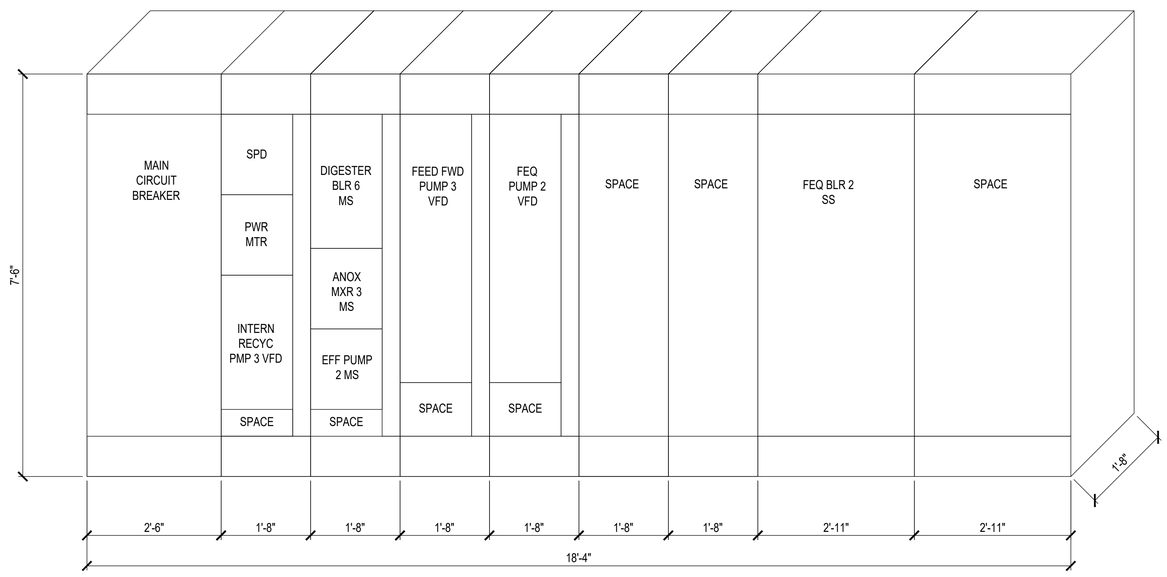

MCC-2 ELEVATION

NTS

DRAFT

NO	BY	DATE	REVISIONS	DATE	APP.

Registered Professional Engineer (Electrical) CERTIFICATE NO. 82968 ARIZONA, U.S.A. Date Signed 3/31/28 Expires 03/31/28

PREPARED BY BASHAR ISHAQ
PROJECT ENGINEER
R.C.E. NO. -- E24590
EXP. DATE
DRAWN NC
SCALE
DESIGNED NC, BI
CHECKED BI
DATE FEB 2026

TITLE
EQUIPMENT ELEVATION 3 - PROPOSED

JOB
CITY OF SAN LUIS WEST WWTP
3.0 MGD MBR UPGRADES
SAN LUIS AZ.

PACE
Advanced Water Engineering
8723 E. VIA de COMMERCIO, SUITE A-204 | SCOTTSDALE, CA 85258
P: (408) 991-3595 | www.pacewater.com

SHEET
E0.12
98 OF 209 SHEETS

JOB NO. B777

THESE DRAWINGS ARE THE PROPERTY OF P.A.C.E. AND SHALL NOT BE REPRODUCED IN ANY MANNER NOR BE USED FOR CONSTRUCTION UNLESS STAMPED "ISSUED FOR CONSTRUCTION".

FINAL PLANS ISSUED FOR BID

W:\B777\Engineering\B777 - 3MGD Exp\3MGD FINAL DSN\sheets\B777 - E0.10.dwg - Tab: E0.12 - by nchin on 01/29/26 at 2:59:10 PM

DRAFT

SERVICE SITE LOAD SUMMARY (MAIN BREAKER 3000A @ 480V)				
LOAD DESCRIPTION	HP	ACTIVE (A)	REDUNANT (A)	GENERATOR (A)
MCC-1	521	797.3	168	645
MCC-2	208	285.7	0	17.7
DP-1	377	488.1	27	308.1
DP-2	602	480.7	267	300.7
SUBTOTAL	1708	2051.8	462	1271.5
25% LARGEST MOTOR LOAD	-	60	-	-
GRAND TOTAL (AMPS)	-	2111.8	-	1271.5
% CAPACITY	-	70.4%	-	84.6%

MCC-1 LOAD SUMMARY (MAIN BREAKER 1600A @ 480V)				
LOAD DESCRIPTION	HP	ACTIVE (A)	REDUNDANT (A)	GENERATOR (A)
FLOW EQUALIZATION PUMP 1 (PMP-01601)	27	40	-	40
INTERNAL RECYLE PUMP 1 (PMP-02101)	4	6.7	-	-
INTERNAL RECYLE PUMP 2 (PMP-02201)	4	6.7	-	6.7
FEED FORWARD PUMP 1 (PMP-02404)	26	40	-	-
FEED FORWARD PUMP 2 (PMP-02403)	26	-	40	-
SLUDGE DEWATERING FEED PUMP 1 (PMP-07001)	15	21	-	21
SLUDGE DEWATERING FEED PUMP 2 (PMP-07002)	15	-	21	-
FLOC. TANK MIXER (M-07111)	1.5	3	-	3
SCREW PRESS (M-07112)	5	7.6	-	7.6
CONVEYOR DRIVE (M-07113)	5	7.6	-	7.6
PLANT PROC. WTR BOOST. PUMP 1 (PMP-04301A)	20	27	-	27
PLANT PROC. WTR BOOST. PUMP 2 (PMP-04301B)	20	27	-	27
PLANT PROC. WTR BOOST. PUMP 3 (PMP-04301C)	20	27	-	27
PLANT DRAIN PUMP 1 (PMP-07202)	7.5	11	-	11
PLANT DRAIN PUMP 2 (PMP-07203)	7.5	-	11	-
ANOXIC MIXER 1 (MXR-02110)	6	11	-	11
ANOXIC MIXER 2 (MXR-02210)	6	11	-	11
45 KVA XFMR-EA	-	54.1	-	54.1
15 KVA MPZ-DW	-	18	-	18
[1] FEQ BLOWER 1 (2011B)	75	96		-
[1] FEQ BLOWER 3 (2003B)	75	-	96	-
EXISTING DIGESTER BLOWER 1 (2008B)	50	65	-	65
EXISTING DIGESTER BLOWER 2 (2009B)	50	65		65
EXISTING LOWER DRYING BED PUMP STATION	2	3.4	-	3.4
EXISTING DIGESTER SUPERNATANT PUMP 1	3	4.8	-	-
EXISTING DIGESTER SUPERNATANT PUMP 2	3	4.8	-	-
EFFLUENT PUMP 1 (5001P)	20	27	-	27
PANEL-H1	-	172	-	172
EXISTING MIXER 4A (3003-MX)	7.5	11	-	11
EXISTING MIXER 4B (3004-MX)	7.5	11	-	11
EXISTING SLUDGE PUMP 4 (3008-SP)	5	7.6	-	7.6
EXISTING WELL PUMP (9004P)	7.5	11	-	11
SUBTOTAL	521	797.3	168	645
25% LARGEST MOTOR LOAD	-	24	-	-
GRAND TOTAL (AMPS)	-	821.3	-	-
% CAPACITY	-	51.3%	-	-

MCC-2 LOAD SUMMARY (MAIN BREAKER 600A @ 480V)				
LOAD DESCRIPTION	HP	ACTIVE (A)	REDUNDANT (A)	GENERATOR (A)
FLOW EQUALIZATION PUMP 2 (PMP-01602)	27	40	-	-
INTERNAL RECYLE PUMP 3 (PMP-02301)	4	6.7	-	6.7
FEED FORWARD PUMP 3 (PMP-02402)	26	40	-	-
ANOXIC MIXER 3 (MXR-02310)	6	11	-	11
[1] FEQ BLOWER 2 (2012B)	75	96	-	-
EXISTING DIGESTER BLOWER 6 (2006B)	50	65	-	-
EFFLUENT PUMP 2 (5002P)	20	27	-	-
SUBTOTAL	208	285.7	0	17.7
25% LARGEST MOTOR LOAD	-	24	-	-
GRAND TOTAL (AMPS)	-	309.7	-	-
% CAPACITY	-	51.6%	-	-

DP-1 LOAD SUMMARY (MAIN BREAKER 1000A @ 480V)				
LOAD DESCRIPTION	HP	ACTIVE (A)	REDUNDANT (A)	GENERATOR (A)
HEADWORKS CTRL PNL (HWCP-1)	12.25	27	-	27
HEADWORKS CTRL PNL (HWCP-2)	12.25	-	27	-
HEADWORKS ODOR CTRL UNIT (M-08001)	1.5	3	-	3
PA BLOWER 1 (BLR-05101)	200	240	-	240
MBR BLOWER 2 (BLR-05302)	150	180	-	-
30 KVA XFMR-EB	-	36	-	36
VALVE ACTUATOR (XV-01523)	1	2.1	-	2.1
SUBTOTAL	377	488.1	27	308.1
25% LARGEST MOTOR LOAD	-	60	-	-
GRAND TOTAL (AMPS)	-	548.1	-	-
% CAPACITY	-	54.8%	-	-

DP-2 LOAD SUMMARY (MAIN BREAKER 1000A @ 480V)				
LOAD DESCRIPTION	HP	ACTIVE (A)	REDUNDANT (A)	GENERATOR (A)
PA BLOWER 2 (BLR-05102)	200	240	-	240
PA BLOWER 3 (BLR-05103)	200	-	240	-
MBR BLOWER 1 (BLR-05301)	150	180	-	-
MLSS CHANNEL BLOWER 1 (BLR-02010)	17	27	-	27
MLSS CHANNEL BLOWER 2 (BLR-02011)	17	-	27	-
MBR CRANE TROLLEY & HOIST	18	33.7	-	33.7
SUBTOTAL	602	480.7	267	300.7
25% LARGEST MOTOR LOAD	-	60	-	-
GRAND TOTAL (AMPS)	-	540.7	-	-
% CAPACITY	-	54.1%	-	-

CONSTRUCTION NOTES:

[1] EXISTING AERATION BLOWERS TO BE RELOCATED AND NAME CHANGED TO "FEQ" BLOWERS.

NO	BY	DATE	REVISIONS	DATE	APP.

Registered Professional Engineer (Electrical) CERTIFICATE NO. 35958 BASHAR ISHAQ Date Signed 03/31/28 ARIZONA, U.S.A. Expires 03/31/28

PREPARED BY BASHAR ISHAQ
PROJECT ENGINEER
R.C.E. NO. E24590
EXP. DATE
DRAWN NC
DESIGNED NC, BI
CHECKED BI
SCALE
DATE FEB 2026

THESE DRAWINGS ARE THE PROPERTY OF P.A.C.E. AND SHALL NOT BE REPRODUCED IN ANY MANNER NOR BE USED FOR CONSTRUCTION UNLESS STAMPED 'ISSUED FOR CONSTRUCTION'.

TITLE
LOAD SUMMARIES

JOB
CITY OF SAN LUIS WEST WWTP
3.0 MGD MBR UPGRADES
AZ.
SAN LUIS

PACE
Advanced Water Engineering
8723 E. VIA de COMMERCIO, SUITE A-204 | SCOTTSDALE, CA 85258
P: (408) 991-3595 | www.pacewater.com

SHEET
E0.13
99 OF 209 SHEETS

JOB NO. B777

FINAL PLANS ISSUED FOR BID

W:\B777\Engineering\B777 - 3MGD Exp\3MGD FINAL ISSN\sheets\B777 - E0.13.dwg - Tab: E0.13 - by rishin on 02/06/26 at 2:49:37 PM

[1]

PANEL-EA												
VOLTAGE:	120/208 VAC	VOLT AMPS									MAIN BKR:	150 A
SCCR:	22 KAIC										PANEL BUS:	150 A

LOAD DESCRIPTION	VA	CB	BKR	PHASE A	PHASE B	PHASE C	BKR	CB	VA	LOAD DESCRIPTION
MAIN PLC PANEL	1500	20/1	1	3000			2	20/1	1500	MBR PLC PANEL
GEN 1 POWER PANEL	1440	30/2	3		2880		4	30/2	1440	GEN 2 POWER PANEL
	1440		5			2880	6		1440	
SPARE		15/1	7	125			8	15/1	125	PLANT DRAIN LTS*
ENTRANCE GATE MTR NORTH	1176	20/1	9		1356		10	20/1	180	PLANT DRAIN RECEP.
ENTRANCE GATE MTR SOUTH	1176	20/1	11			1176	12	15/1		SPARE
FIBER PANEL @ HW PNLS	500	15/1	13	500			14	15/1		SPARE
ELEC RM AC UNIT 1	2392	25/2	15		2392		16	20/1		SPARE
	2392		17			2392	18	20/1		SPARE
ELEC RM AC UNIT 2	2392	25/2	19	2392			20			"SPACE"
	2392		21		2392		22			"SPACE"
ELEC RM AC UNIT 3	2392	25/2	23			2392	24			"SPACE"
	2392		25	2392			26			"SPACE"
SPARE		15/1	27		0		28			"SPACE"
SPARE		15/1	29			0	30			"SPACE"
SPARE		20/1	31	0			32			"SPACE"
SPARE		20/1	33		0		34			"SPACE"
"SPACE"			35			0	36			"SPACE"
"SPACE"			37	0			38			"SPACE"
"SPACE"			39		0		40			"SPACE"
"SPACE"			41			0	42			"SPACE"

	PHASE A	PHASE B	PHASE C	
VA/PHASE (SUBTOTAL)	8409	9020	8840	3Φ, 4W
AMPS/PHASE (SUBTOTAL)	70.1	75.2	73.7	22,000 AIC BREAKERS
VA (SUBTOTAL)	26269			NEMA 12
25% OF LARGEST INDUCTIVE LOAD (VA)	598	598	598	LOCATED IN ELEC RM
GRAND TOTAL (AMPS)	77.9			* INDICATES LOAD CALCULATED AT 125%
PERCENT CAPACITY	51.9%			

[1]

PANEL-EB												
VOLTAGE:	120/208 VAC	VOLT AMPS									MAIN BKR:	100 A
SCCR:	22 KAIC										PANEL BUS:	100 A

LOAD DESCRIPTION	VA	CB	BKR	PHASE A	PHASE B	PHASE C	BKR	CB	VA	LOAD DESCRIPTION
MAIN RIO PANEL	1500	20/1	1	3000			2	20/1	1500	MBR RIO PANEL
XV-04024	110	15/1	3		638		4	15/1	528	EXH FAN 1 (M-04110)
XV-04025	110	15/1	5			110	6	15/1		SPARE
XV-04026	110	15/1	7	638			8	15/1	528	EXH FAN 3 (M-04112)
XV-04027	110	15/1	9		638		10	15/1	528	EXH FAN 4 (M-04113)
XV-04028	110	15/1	11			1766	12	25/1	1656	EVAP COOLER (EC-1)
XV-04029	110	15/1	13	110			14	15/1		SPARE
XV-05420	110	15/1	15		1766		16	25/1	1656	EVAP COOLER (EC-2)
XV-05421	110	15/1	17			1235	18	15/1	1125	BLR RM LTS*
XV-05422	110	15/1	19	360			20	15/1	250	PIPE GALL 1 LTS*
XV-05220	110	15/1	21		360		22	15/1	250	PIPE GALL 2 LTS*
XV-05221	110	15/1	23			360	24	15/1	250	PIPE GALL 3 LTS*
XV-05222	110	15/1	25	360			26	15/1	250	PIPE GALL 4 LTS*
XV-03028	110	15/1	27		1010		28	20/1	900	BLR RM RECEP'S
XV-03128	110	15/1	29			650	30	20/1	540	PIPE GALL 1 RECEP'S
XV-03228	110	15/1	31	650			32	20/1	540	PIPE GALL 2 RECEP'S
FEQ BLR AREA LTS*	250	15/1	33		790		34	20/1	540	PIPE GALL 3 RECEP'S
FEQ BLR AREA RECEP	180	20/1	35			720	36	20/1	540	PIPE GALL 4 RECEP'S
FEB PS LTS*	113	15/1	37	331			38	15/1	218	LTG CTRL PNL (LCP-A)
FEB PS RECEP	180	20/1	39		206		40	15/1	26	BLR RM EGRESS LTS*
HW AREA LTS*	450	15/1	41			560	42	15/1	110	XV-06021A
HW AREA RECEP'S	540	20/1	43	650			44	15/1	110	XV-06025A
XV-05123	110	15/1	45		110		46	20/1		ODOR CONTROL UNIT
EXHAUST FAN 5 (M-04114)	1176	20/1	47			1176	48	15/1		SPARE
SPARE		20/1	49	94			50	15/1	94	PIPE GALL BELOW BLR LIGHTS*
XV-05124	110	15/1	51		638		52	15/1	528	EXHAUST FAN 2 (M-04111)
"SPACE"			53			0	54			"SPACE"

	PHASE A	PHASE B	PHASE C	
VA/PHASE (SUBTOTAL)	6193	6156	6577	3Φ, 4W
AMPS/PHASE (SUBTOTAL)	51.6	51.3	54.8	22,000 AIC BREAKERS
VA (SUBTOTAL)	18926			NEMA 12
25% OF LARGEST INDUCTIVE LOAD (VA)	132	414	414	LOCATED IN BLOWER ROOM
GRAND TOTAL (AMPS)	55.2			* INDICATES LOAD CALCULATED AT 125%
PERCENT CAPACITY	55.2%			

CONSTRUCTION NOTES:

[1] PANEL TO BE EQUIPPED WITH SURGE PROTECTIVE DEVICE FROM THE PANEL PROVIDER, 100 KA MIN PER PHASE.

NOTES:

1. PROVIDE UPDATED, COMPLETE, AND ACCURATE TYPED PANELBOARD CIRCUIT DIRECTORIES AT THE COMPLETION OF WORK.
2. CIRCUIT BREAKERS SHALL BE THERMAL MAGNETIC, TRIP INDICATING.
3. MULTI-POLE CIRCUIT BREAKERS SHALL BE EQUIPPED WITH AN INTERNAL COMMON TRIP MECHANISM.
4. CIRCUIT BREAKERS SHALL BE OF THE SAME MANUFACTURER AS THE PANELBOARD.
5. PANELBOARDS SHALL BE BOLT-ON TYPE.
6. BREAKER SHALL HAVE FIXED LOCKS WHEN REQUIRED BY NEC CODE.
7. PANELBOARDS SHALL BE PROVIDED WITH SPARE BREAKERS AS INDICATED.
8. "SPACE" INDICATES A LISTED CIRCUIT BREAKER COVER.
9. BOTH ENDS OF CONDUCTORS SHALL BE LABELED WITH THE PANEL NAME AND CIRCUIT.
10. EQUIPMENT FED FROM PANELBOARDS SHALL BE LABELED WITH THEIR CIRCUIT IN ACCORDANCE WITH NEC 110.22 (A).

DRAFT

W:\B777\Engineering\B777 - 3MGD Exp\3MGD FINAL DSN\sheets\B777 - E0.14.dwg - Tab: E0.14 - by robin on 02/06/26 at 2:26:45 PM

NO	BY	DATE	REVISIONS	DATE	APP.

Registered Professional Engineer (Electrical) CERTIFICATE NO. 25258 Basher Shaho Date Signed 1-31-26 ARIZONA, U.S.A.

Expires 03/31/28

THESE DRAWINGS ARE THE PROPERTY OF P.A.C.E. AND SHALL NOT BE REPRODUCED IN ANY MANNER NOR BE USED FOR CONSTRUCTION UNLESS STAMPED 'ISSUED FOR CONSTRUCTION'.

PREPARED BY: BASHAR SHAHO
PROJECT ENGINEER
R.C.E. NO.: E24580
EXP: DATE

DRAWN: NC
DESIGNED: NC, BI
CHECKED: BI
SCALE
DATE: FEB 2026

TITLE: **PANEL SCHEDULES 1**

JOB: CITY OF SAN LUIS WEST WWTP
3.0 MGD MBR UPGRADES
SAN LUIS AZ.

PACE
Advanced Water Engineering
8723 E. VIA de COMMERCIO, SUITE A-204 | SCOTTSDALE, CA 85258
P: (408) 991-3595 | www.pacewater.com

SHEET
E0.14
100 OF 209 SHEETS

JOB NO. B777

FINAL PLANS ISSUED FOR BID

[1]

PANEL "LC" (CHLORINE BLDG)									
VOLTAGE:	120/240 VAC	**VOLT AMPS**						**MAIN BKR:**	125 A
SCCR:	10 KAIC							**PANEL BUS:**	125 A

LOAD DESCRIPTION	VA	CB	BKR	PHASE A	PHASE B	BKR	CB	VA	LOAD DESCRIPTION
RECEP'S-CHLOR BLDG	1620	20/1	1	1620		2	20/1		SPARE
RECEP-CHLOR PUMP	1150	20/1	3		1975	4	20/1	825	LIGHTING-CHLOR BLDG
RECEP/CTRL PNL - EFF PS	360	20/1	5	2280		6	40/2	1920	A/C UNIT-CHLOR BLDG
SPARE		20/1	7		1920	8		1920	
XV-04424	110	15/1	9	110		10			"SPACE"
"SPACE"			11		0	12			"SPACE"
"SPACE"			13	0		14			"SPACE"
"SPACE"			15		0	16			"SPACE"
"SPACE"			17	0		18			"SPACE"
"SPACE"			19		0	20			"SPACE"
"SPACE"			21	0		22			"SPACE"
"SPACE"			23		0	24			"SPACE"
"SPACE"			25	0		26			"SPACE"
"SPACE"			27		0	28			"SPACE"
"SPACE"			29	0		30			"SPACE"
				PHASE A	PHASE B				
VA/PHASE (SUBTOTAL)				4010	3895	1Φ, 3W			
AMPS/LEG (SUBTOTAL)				33.4	32.5				
VA (SUBTOTAL)				7905					
25% OF LARGEST INDUCTIVE LOAD				0	0	LOCATED AT CHLORINE BLDG			
GRAND TOTAL (AMPS)				32.9		* INDICATES LOAD CALCULATED AT 125%			
PERCENT CAPACITY				26.4%					

[1]

MPZ-DW											
VOLTAGE:	120/208 VAC	**VOLT AMPS**								**MAIN BKR:**	50 A
SCCR:	25 KAIC									**PANEL BUS:**	A

LOAD DESCRIPTION	VA	CB	BKR	PHASE A	PHASE B	PHASE C	BKR	CB	VA	LOAD DESCRIPTION
PLNT PROC. WTR PS RECEP	180	20/1	1	430			2	15/1	250	PLNT PROCESS WTR PS LTS*
DEWAT AREA LTS*	1250	20/1	3		1250		4	15/1		SPARE
DEWAT AREA RECEP'S	720	20/1	5			720	6	15/1		SPARE
FIBER PANEL (DW)	500	15/1	7	500			8	20/1		SPARE
SPARE		15/1	9		0		10	20/1		SPARE
SPARE		15/1	11			0	12			"SPACE"
SPARE		20/1	13	0			14			"SPACE"
SPARE		20/1	15		0		16			"SPACE"
"SPACE"			17			0	18			"SPACE"
				PHASE A	PHASE B	PHASE C				
VA/PHASE (SUBTOTAL)				930	1250	720	3Φ, 4W			
AMPS/PHASE (SUBTOTAL)				7.8	10.4	6.0	25,000 AIC BREAKERS			
VA (SUBTOTAL)				2900			NEMA 4X			
25% OF LARGEST INDUCTIVE LOAD (VA)				0	0	0	LOCATED AT DEWATERING AREA			
GRAND TOTAL (AMPS)				8.0			* INDICATES LOAD CALCULATED AT 125%			
PERCENT CAPACITY				16.1%						

CONSTRUCTION NOTES:

[1] PANEL TO BE EQUIPPED WITH SURGE PROTECTIVE DEVICE FROM THE PANEL PROVIDER, 100 KA MIN PER PHASE.

NOTES:

1. PROVIDE UPDATED, COMPLETE, AND ACCURATE TYPED PANELBOARD CIRCUIT DIRECTORIES AT THE COMPLETION OF WORK.
2. CIRCUIT BREAKERS SHALL BE THERMAL MAGNETIC, TRIP INDICATING.
3. MULTI-POLE CIRCUIT BREAKERS SHALL BE EQUIPPED WITH AN INTERNAL COMMON TRIP MECHANISM.
4. CIRCUIT BREAKERS SHALL BE OF THE SAME MANUFACTURER AS THE PANELBOARD.
5. PANELBOARDS SHALL BE BOLT-ON TYPE.
6. BREAKER SHALL HAVE FIXED LOCKS WHEN REQUIRED BY NEC CODE.
7. PANELBOARDS SHALL BE PROVIDED WITH SPARE BREAKERS AS INDICATED.
8. "SPACE" INDICATES A LISTED CIRCUIT BREAKER COVER.
9. BOTH ENDS OF CONDUCTORS SHALL BE LABELED WITH THE PANEL NAME AND CIRCUIT.
10. EQUIPMENT FED FROM PANELBOARDS SHALL BE LABELED WITH THEIR CIRCUIT IN ACCORDANCE WITH NEC 110.22 (A).

DRAFT

W:\B777\Engineering\B777 - 3MGD Exp\3MGD FINAL DSN\sheets\B777 - E0.14.dwg - Tab: E0.15 - by rcbln on 02/06/26 at 2:50:45 PM

NO	BY	DATE	REVISIONS	DATE	APP.

THESE DRAWINGS ARE THE PROPERTY OF P.A.C.E. AND SHALL NOT BE REPRODUCED IN ANY MANNER NOR BE USED FOR CONSTRUCTION UNLESS STAMPED 'ISSUED FOR CONSTRUCTION'.

Registered Professional Engineer (Electrical) CERTIFICATE NO. 35958 Basher Ishaq Shaikh Date Signed 1/31/26 ARIZONA, U.S.A.

Expires 03/31/28

PREPARED BY *BASHAR ISHAQ* PROJECT ENGINEER
R.C.E. NO. *E24580*
EXP. DATE *--*

DRAWN *NC*
DESIGNED *NC, BI*
CHECKED *BI*
SCALE

DATE *FEB 2026*

TITLE

PANEL SCHEDULES 2

JOB

CITY OF SAN LUIS WEST WWTP
3.0 MGD MBR UPGRADES

SAN LUIS AZ.

PACE
Advanced Water Engineering
8723 E. VIA de COMMERCIO, SUITE A-204 | SCOTTSDALE, CA 85258
P.: (408) 991-3595 | www.pacewater.com

SHEET
E0.15
101 OF 209 SHEETS

JOB NO. B777

FINAL PLANS ISSUED FOR BID

DRAFT

POWER CONDUIT WIRE SCHEDULE						
CONDUIT		WIRE		FROM	TO	REMARKS
NO.	SIZE	POWER	GROUND			
PUTIL	TBD	TBD	TBD	UTILITY TRANSFORMER	SERVICE ENTRANCE SECTION (SES)	TBD BY APS
P001	(10) 4"	10 sets of 3 - 500 kcmil	10 sets of 1 - 500 kcmil	DISTRIBUTION SECTION @ SERVICE ENTRANCE	AUTOMATIC TRANSFER SWITCH (ATS)	ONE EGC IN EACH CONDUIT
P002	(3) 4"	3 sets of 3 - 500 kcmil	3 sets of 1 - 4/0	AUTOMATIC TRANSFER SWITCH (ATS)	STANDBY GENERATOR 1	ONE EGC IN EACH CONDUIT
P003	(3) 4"	3 sets of 3 - 500 kcmil	3 sets of 1 - 4/0	AUTOMATIC TRANSFER SWITCH (ATS)	STANDBY GENERATOR 2	ONE EGC IN EACH CONDUIT
P004	(3) 4"	3 sets of 3 - 500 kcmil	3 sets of 1 - 4/0	DISTRIBUTION SECTION @ SERVICE ENTRANCE	EXISTING PHOTOVOLTAIC SYSTEM	ONE EGC IN EACH CONDUIT
P005	(3) 3-1/2"	3 sets of 3 - 500 kcmil	3 sets of 1 - 3/0	MAIN SWITCHGEAR	PB-P19	ONE EGC IN EACH CONDUIT
P005A	(3) 3-1/2"	3 sets of 3 - 500 kcmil	3 sets of 1 - 3/0	PB-P19	PB-P2	ONE EGC IN EACH CONDUIT
P005B	(3) 3-1/2"	3 sets of 3 - 500 kcmil	3 sets of 1 - 3/0	PB-P2	PB-P4	ONE EGC IN EACH CONDUIT
P005C	(3) 3-1/2"	3 sets of 3 - 500 kcmil	3 sets of 1 - 3/0	PB-P4	PB-P18	ONE EGC IN EACH CONDUIT
P005D	(3) 3-1/2"	3 sets of 3 - 500 kcmil	3 sets of 1 - 3/0	PB-P18	DISTRIBUTION PANELBOARD (DP-1)	ONE EGC IN EACH CONDUIT
P006	(3) 3-1/2"	3 sets of 3 - 500 kcmil	3 sets of 1 - 3/0	MAIN SWITCHGEAR	PB-P19	ONE EGC IN EACH CONDUIT
P006A	(3) 3-1/2"	3 sets of 3 - 500 kcmil	3 sets of 1 - 3/0	PB-P19	PB-P2	ONE EGC IN EACH CONDUIT
P006B	(3) 3-1/2"	3 sets of 3 - 500 kcmil	3 sets of 1 - 3/0	PB-P2	PB-P4	ONE EGC IN EACH CONDUIT
P006C	(3) 3-1/2"	3 sets of 3 - 500 kcmil	3 sets of 1 - 3/0	PB-P4	PB-P18	ONE EGC IN EACH CONDUIT
P006D	(3) 3-1/2"	3 sets of 3 - 500 kcmil	3 sets of 1 - 3/0	PB-P18	DISTRIBUTION PANELBOARD (DP-2)	ONE EGC IN EACH CONDUIT
P007	(5) 4"	5 sets of 3 - 500 kcmil	5 sets of 1 - 250 kcmil	MAIN SWITCHGEAR	MOTOR CONTROL CENTER (MCC-1)	ONE EGC IN EACH CONDUIT
P008	(2) 4"	2 sets of 3 - 500 kcmil	2 sets of 1 - 1/0	MAIN SWITCHGEAR	MOTOR CONTROL CENTER (MCC-2)	ONE EGC IN EACH CONDUIT
P009	3"	TBD	TBD	MAIN SWITCHGEAR	ACTIVE HARMONIC FILTER (AHF)	TBD BY VFD MF'R (POWER)
P010	1-1/4"	3 - #4	1 - #6	MOTOR CONTROL CENTER (MCC-1)	XFMR-EA	
P010A	2"	4 - 2/0	1 - #4	XFMR-EA	PANEL-EA	
P011	3"	3 - 4/0	1 - #4	MOTOR CONTROL CENTER (MCC-1)	PANEL-H1	
P012	2"	-	-	MOTOR CONTROL CENTER (MCC-1)	PB-P1	SPARE CONDUIT, ADD PULL STRING
P012A	2"	-	-	PB-P1	PB-P7	SPARE CONDUIT, ADD PULL STRING
P012B	2"	-	-	PB-P7	STUB-UP AT ADMIN BLDG	SPARE CONDUIT, ADD PULL STRING
P013	1"	3 - #18 TSP	-	MAIN SWITCHGEAR	ACTIVE HARMONIC FILTER (AHF-1)	TBD BY VFD MF'R (CT'S)
P030	3/4"	2 - #12	1 - #10	PANEL-EA (CKT. 1)	MAIN PLC PANEL	
P031	3/4"	2 - #12	1 - #10	PANEL-EA (CKT. 2)	MBR PLC PANEL	
P032	1"	3 - #6	1 - #8	PANEL-EA (CKTS. 3, 5)	STANDBY GEN 1 POWER PANEL	
P033	1"	3 - #6	1 - #8	PANEL-EA (CKTS. 4, 6)	STANDBY GEN 2 POWER PANEL	
P034	1"	2 - #8	1 - #10	PANEL-EA (CKT. 9)	PB-P19	
P034A	1"	2 - #8	1 - #10	PB-P19	ENTRANCE GATE MOTOR (NORTH)	
P035	1"	2 - #8	1 - #10	PANEL-EA (CKT. 11)	PB-P19	
P035A	1"	2 - #8	1 - #10	PB-P19	ENTRANCE GATE MOTOR (SOUTH)	
P036	3/4"	2 - #10	1 - #8	PANEL-EA (CKTS. 15, 17)	DISC SW - ELEC RM AC CONDENSOR UNIT 1	
P036A	1"	2 - #10	1 - #8	DISC SW - ELEC RM AC CONDENSOR UNIT 1	ELEC RM AC CONDENSOR UNIT 1 (CU-1)	
P036B	1"	2 - #10	1 - #8	ELEC RM AC CONDENSOR UNIT 1 (CU-1)	ELEC RM AC FAN UNIT 1 (FU-1)	
P037	3/4"	2 - #10	1 - #8	PANEL-EA (CKTS. 19, 21)	DISC SW - ELEC RM AC CONDENSOR UNIT 2	
P037A	1"	2 - #10	1 - #8	DISC SW - ELEC RM AC CONDENSOR UNIT 2	ELEC RM AC CONDENSOR UNIT 2 (CU-2)	

NO	BY	DATE	REVISIONS	DATE	APP.

Registered Professional Engineer (Electrical) CERTIFICATE NO. 82958 Basher Ishaq Date Signed 1/31/26 ARIZONA, U.S.A.

Expires 03/31/28

PREPARED BY BASHAR ISHAQ
PROJECT ENGINEER E24590
R.C.E. NO. —
EXP. DATE

DRAWN NC
DESIGNED NC, BI
CHECKED BI
SCALE
DATE FEB 2026

THESE DRAWINGS ARE THE PROPERTY OF P.A.C.E. AND SHALL NOT BE REPRODUCED IN ANY MANNER NOR BE USED FOR CONSTRUCTION UNLESS STAMPED 'ISSUED FOR CONSTRUCTION'.

TITLE
POWER CABLE & CONDUIT SCHEDULE 1

JOB
CITY OF SAN LUIS WEST WWTP
3.0 MGD MBR UPGRADES
SAN LUIS AZ.

PACE
Advanced Water Engineering
8723 E. VIA de COMMERCIO, SUITE A-204 | SCOTTSDALE, CA 85258
P: (408) 991-3595 | www.pacewater.com

FINAL PLANS ISSUED FOR BID

SHEET
E0.20
102 OF 209 SHEETS

JOB NO. B777

W:\B777\Engineering\B777 - 3MGD Exp\3MGD FINAL DSN\sheets\B777 - E0.20.dwg - Tab: E0.20 - by rohn on 02/06/26 at 3:17:49 PM

DRAFT

POWER CONDUIT WIRE SCHEDULE

CONDUIT		WIRE		FROM	TO	REMARKS
NO.	SIZE	POWER	GROUND			
P037B	1"	2 - #10	1 - #8	ELEC RM AC CONDENSOR UNIT 2 (CU-2)	ELEC RM AC FAN UNIT 2 (FU-2)	
P038	3/4"	2 - #10	1 - #8	PANEL-EA (CKTS. 23, 25)	DISC SW - ELEC RM AC CONDENSOR UNIT 3	
P038A	1"	2 - #10	1 - #8	DISC SW - ELEC RM AC CONDENSOR UNIT 3	ELEC RM AC CONDENSOR UNIT 3 (CU-3)	
P038B	1"	2 - #10	1 - #8	ELEC RM AC CONDENSOR UNIT 3 (CU-3)	ELEC RM AC FAN UNIT 3 (FU-3)	
P039	1"	3 - #12	1 - #8	MOTOR CONTROL CENTER (MCC-1)	DISC SW - EXISTING WELL PUMP	
P039A	1"	FACT. CBL.		DISC SW - EXISTING WELL PUMP	EXISTING WELL PUMP (9004P)	
P100	1-1/4"	3 - #6	1 - #6	DISTRIBUTION PANELBOARD (DP-1)	PB-P18	
P100A	2"	3 - #6	1 - #6	PB-P18	PB-P4	
P100B	1-1/4"	3 - #6	1 - #6	PB-P4	HEADWORKS CTRL PNL (HW-CP1)	
P101	1-1/2"	12 - #10	4 - #12	HEADWORKS CTRL PNL (HW-CP1)	PB-P2	
P101A	2"	12 - #10	4 - #12	PB-P2	PB-P3	
P101B	1"	3 - #10	1 - #12	PB-P3	6mm COARSE SCREEN 1 (M-01010)	
P101C	1"	3 - #10	1 - #12	PB-P3	GRIT TRAP 1 (M-01011)	
P101D	1"	3 - #10	1 - #12	PB-P3	6mm WASHER COMPACTOR 1 (M-01310)	
P101E	1"	3 - #10	1 - #12	PB-P3	GRIT PUMP 1 (PMP-01001)	
P102	1-1/4"	9 - #12	3 - #12	HEADWORKS CTRL PNL (HW-CP1)	PB-P4	
P102A	2"	9 - #12	3 - #12	PB-P4	PB-P5	
P102B	1"	3 - #12	1 - #12	PB-P5	2mm FINE SCREEN 1 (M-01012)	
P102C	1"	3 - #12	1 - #12	PB-P5	GRIT CLASSIFIER 1 (M-01210)	
P102D	1"	3 - #12	1 - #12	PB-P5	2mm WASHER COMPACTOR 1 (M-01410)	
P103	1-1/4"	3 - #6	1 - #6	DISTRIBUTION PANELBOARD (DP-1)	PB-P18	
P103A	2"	3 - #6	1 - #6	PB-P18	PB-P4	
P103B	1-1/4"	3 - #6	1 - #6	PB-P4	HEADWORKS CTRL PNL (HW-CP2)	
P104	1-1/2"	12 - #10	4 - #12	HEADWORKS CTRL PNL (HW-CP2)	PB-P2	
P104A	2"	12 - #10	4 - #12	PB-P2	PB-P3	
P104B	1"	3 - #10	1 - #12	PB-P3	6mm COARSE SCREEN 2 (M-01110)	
P104C	1"	3 - #10	1 - #12	PB-P3	GRIT TRAP 2 (M-01111)	
P104D	1"	3 - #10	1 - #12	PB-P3	6mm WASHER COMPACTOR 2 (M-01311)	
P104E	1"	3 - #10	1 - #12	PB-P3	GRIT PUMP 2 (PMP-01101)	
P105	1-1/4"	9 - #12	3 - #12	HEADWORKS CTRL PNL (HW-CP2)	PB-P4	
P105A	2"	9 - #12	3 - #12	PB-P4	PB-P5	
P105B	1"	3 - #12	1 - #12	PB-P5	2mm FINE SCREEN 2 (M-01112)	
P105C	1"	3 - #12	1 - #12	PB-P5	GRIT CLASSIFIER 2 (M-01211)	
P105D	1"	3 - #12	1 - #12	PB-P5	2mm WASHER COMPACTOR 2 (M-01411)	
P106	3/4"	3 - #10	1 - #10	DISTRIBUTION PANELBOARD (DP-1)	PB-P18	CONT. VIA P106B
P106A	3/4"	2 - #10	1 - #10	PANEL-EB (CKT. 46)	PB-P18	CONT. VIA P106B
P106B	2"	5 - #10	2 - #10	PB-P18	PB-P4	
P106C	2"	5 - #10	2 - #10	PB-P4	PB-P5	
P106D	1"	5 - #10	2 - #10	PB-P5	CTRL PNL - HW ODOR CTRL UNIT (M-08001)	
P106E	1"	3 - #10	1 - #10	CTRL PNL - HW ODOR CTRL UNIT (M-08001)	HW ODOR CTRL UNIT (M-08001)	
P107	3/4"	3 - #12	1 - #12	DISTRIBUTION PANELBOARD (DP-1)	PB-P18	
P107A	1"	3 - #12	1 - #12	PB-P18	XV-01523	
P130	1"	2 - #10, 2 - #12	1 - #10, 1 - #12	PANEL-EB (CKTS. 41, 43)	PB-P18	
P130A	2"	2 - #10, 2 - #12	1 - #10, 1 - #12	PB-P18	PB-P4	CONT. 2 - #12, 1 - #12G THRU P130B; 2 - #10, 1 - #10G THRU P131
P130B	1"	2 - #12	1 - #12	PB-P4	HW AREA LIGHT SWITCH	
P131	1"	2 - #10	1 - #10	PB-P4	PB-P5	
P131A	1"	2 - #10	1 - #10	PB-P5	HW AREA RECEPTACLES	

NO	BY	DATE	REVISIONS	DATE	APP.

THESE DRAWINGS ARE THE PROPERTY OF P.A.C.E. AND SHALL NOT BE REPRODUCED IN ANY MANNER NOR BE USED FOR CONSTRUCTION UNLESS STAMPED 'ISSUED FOR CONSTRUCTION'.

Registered Professional Engineer (Electrical) CERTIFICATE NO. 82556 Basher Ishaq Expires 03/31/28 ARIZONA, U.S.A.

PREPARED BY BASHAR ISHAQ
PROJECT ENGINEER
R.C.E. NO. --- E24580
EXP. DATE

DRAWN NC
DESIGNED NC, BI
CHECKED BI
SCALE
DATE FEB 2026

TITLE
POWER CABLE & CONDUIT SCHEDULE 2

JOB
CITY OF SAN LUIS WEST WWTP
3.0 MGD MBR UPGRADES
SAN LUIS AZ.

PACE
Advanced Water Engineering
8723 E. VIA de COMMERCIO, SUITE A-204 | SCOTTSDALE, CA 85258
P: (408) 991-3595 | www.pacewater.com

FINAL PLANS ISSUED FOR BID

SHEET
E0.21
103 OF 209 SHEETS

JOB NO. B777

W:\B777\Engineering\B777 - 3MGD Expt\3MGD FINAL DSN\sheets\B777 - E0.20.dwg - Tab: E0.21 - by nchn on 02/06/26 at 3:17:49 PM

DRAFT

POWER CONDUIT WIRE SCHEDULE						
CONDUIT		WIRE		FROM	TO	REMARKS
NO.	SIZE	POWER	GROUND			
P132	1"	2 - #10	1 - #10	PANEL-EA (CKT. 13)	PB-P19	
P132A	2"	2 - #10	1 - #10	PB-P19	PB-P2	
P132B	1"	2 - #10	1 - #10	PB-P2	FIBER PANEL @ HEADWORKS PANELS	
P160	1"	6 - #12	3 - #12	MAIN RIO PANEL	PB-P18	CONT. 2 - #12, 1 - #12G THRU P160A; 4 - #12, 2 - #12 THRU P161
P160A	1"	2 - #12	1 - #12	PB-P18	FT-01540	
P161	2"	4 - #12	2 - #12	PB-P18	PB-P4	
P161A	2"	4 - #12	2 - #12	PB-P4	PB-P5	
P161B	1"	2 - #12	1 - #12	PB-P5	FT-04341	
P161C	1"	2 - #12	1 - #12	PB-P5	FT-01040	
P200	3-1/2"	3 - 500 kcmil	1 - 1/0	DISTRIBUTION PANELBOARD (DP-1)	VFD - PA BLOWER 1	
P200A	3-1/2"	3 - 500 kcmil	1 - 1/0	VFD - PA BLOWER 1	PA BLOWER 1 (BLR-05101)	
P201	3-1/2"	3 - 500 kcmil	1 - 1/0	DISTRIBUTION PANELBOARD (DP-2)	VFD - PA BLOWER 2	
P201A	3-1/2"	3 - 500 kcmil	1 - 1/0	VFD - PA BLOWER 2	PA BLOWER 2 (BLR-05102)	
P202	3-1/2"	3 - 500 kcmil	1 - 1/0	DISTRIBUTION PANELBOARD (DP-2)	VFD - PA BLOWER 3	
P202A	3-1/2"	3 - 500 kcmil	1 - 1/0	VFD - PA BLOWER 3	PA BLOWER 3 (BLR-05103)	
P203	3"	3 - 300 kcmil	1 - #1	DISTRIBUTION PANELBOARD (DP-2)	VFD - MBR BLOWER 1	
P203A	3"	3 - 300 kcmil	1 - #1	VFD - MBR BLOWER 1	MBR BLOWER 1 (BLR-05301)	
P204	3"	3 - 300 kcmil	1 - #1	DISTRIBUTION PANELBOARD (DP-1)	VFD - MBR BLOWER 2	
P204A	3"	3 - 300 kcmil	1 - #1	VFD - MBR BLOWER 2	MBR BLOWER 2 (BLR-05302)	
P205	1"	3 - #8	1 - #8	DISTRIBUTION PANELBOARD (DP-2)	MTR STARTER - MLSS CHANNEL BLR 1	
P205A	1"	3 - #8	1 - #8	MTR STARTER - MLSS CHANNEL BLR 1	MLSS CHANNEL BLR 1 (BLR-02010)	
P206	1"	3 - #8	1 - #8	DISTRIBUTION PANELBOARD (DP-2)	MTR STARTER - MLSS CHANNEL BLR 2	
P206A	1"	3 - #8	1 - #8	MTR STARTER - MLSS CHANNEL BLR 2	MLSS CHANNEL BLR 2 (BLR-02011)	
P207	1"	3 - #6	1 - #8	DISTRIBUTION PANELBOARD (DP-1)	XFMR-EB	
P207A	2"	4 - #1	1 - #6	XFMR-EB	PANEL-EB	
P208	1"	4 - #12	2 - #12	PANEL-EB (CKTS. 42, 44)	JB-P208	
P208A	3/4"	2 - #12	1 - #12	JB-P208	XV-06021A	
P208B	3/4"	2 - #12	1 - #12	JB-P208	XV-06025A	
P209	2"	3 - #3	1 - #4	MOTOR CONTROL CENTER (MCC-1)	PB-P19	
P209A	2"	3 - #3	1 - #4	PB-P19	PB-P2	
P209B	1-1/2"	3 - #3	1 - #4	PB-P2	DISC SW - DIGESTER BLOWER 1	
P209C	1-1/2"	3 - #3	1 - #4	DISC SW - DIGESTER BLOWER 1	EXISTING DIGESTER BLOWER 1 (2008B)	
P210	2"	3 - #3	1 - #4	MOTOR CONTROL CENTER (MCC-1)	PB-P19	
P210A	2"	3 - #3	1 - #4	PB-P19	PB-P2	
P210B	1-1/2"	3 - #3	1 - #4	PB-P2	DISC SW - DIGESTER BLOWER 2	
P210C	1-1/2"	3 - #3	1 - #4	DISC SW - DIGESTER BLOWER 2	EXISTING DIGESTER BLOWER 2 (2009B)	
P211	2"	3 - #3	1 - #4	MOTOR CONTROL CENTER (MCC-2)	PB-P19	
P211A	2"	3 - #3	1 - #4	PB-P19	PB-P2	
P211B	1-1/2"	3 - #3	1 - #4	PB-P2	DISC SW - DIGESTER BLOWER 6	
P211C	1-1/2"	3 - #3	1 - #4	DISC SW - DIGESTER BLOWER 6	EXISTING DIGESTER BLOWER 4 (2006B)	
P212	2"	6 - #12	2 - #12	MOTOR CONTROL CENTER (MCC-1)	PB-P1	
P212A	2"	6 - #12	2 - #12	PB-P1	PB-P12	
P212B	1"	6 - #12	2 - #12	PB-P12	JB-P212	
P212C	3/4"	3 - #12	1 - #12	JB-P212	EXISTING MTR STARTER - SUPERNATANT PUMP 1	
P212D	3/4"	3 - #12	1 - #12	JB-P212	EXISTING MTR STARTER - SUPERNATANT PUMP 2	

NO	BY	DATE	REVISIONS	DATE	APP.

Registered Professional Engineer (Electrical) CERTIFICATE NO. 35668 Basheer Ishaq State of Arizona Expires 03/31/28

PREPARED BY BASHAR ISHAQ
PROJECT ENGINEER
R.C.E. NO. E24590
EXP. DATE
SCALE
DRAWN NC
DESIGNED NC, BI
CHECKED BI
DATE FEB 2026

THESE DRAWINGS ARE THE PROPERTY OF P.A.C.E. AND SHALL NOT BE REPRODUCED IN ANY MANNER NOR BE USED FOR CONSTRUCTION UNLESS STAMPED 'ISSUED FOR CONSTRUCTION'.

TITLE
POWER CABLE & CONDUIT SCHEDULE 3

JOB
CITY OF SAN LUIS WEST WWTP
3.0 MGD MBR UPGRADES
SAN LUIS AZ.

PACE
Advanced Water Engineering
8723 E. VIA de COMMERCIO, SUITE A-204 | SCOTTSDALE, CA 85258
P: (408) 991-3595 | www.pacewater.com

FINAL PLANS ISSUED FOR BID

SHEET
E0.22
104 OF 209 SHEETS

JOB NO. B777

W:\B777 Engineering\B777 - 3MGD Exp\3MGD FINAL DS\sheets\B777 - E0.20.dwg - Tab: E0.22 - by rodm on 02/09/26 at 3:17:49 PM

DRAFT

POWER CONDUIT WIRE SCHEDULE						
CONDUIT		WIRE		FROM	TO	REMARKS
NO.	SIZE	POWER	GROUND			
P213	1"	3 - #8	1 - #8	DISTRIBUTION PANELBOARD (DP-2)	DISC SW - MBR CRANE TROLLEY & HOIST	
P213A	1"	3 - #8	1 - #8	DISC SW - MBR CRANE TROLLEY & HOIST	MBR CRANE TROLLEY & HOIST	
P230	1"	6 - #12	3 - #12	PANEL-EB (CKTS. 3, 9, 27)	JB-P230	
P230A	3/4"	2 - #12	1 - #12	JB-P230	XV-04024	
P230B	3/4"	2 - #12	1 - #12	JB-P230	XV-04027	
P230C	3/4"	2 - #12	1 - #12	JB-P230	XV-03028	
P231	1"	6 - #12	3 - #12	PANEL-EB (CKTS. 5, 11, 29)	JB-P231	
P231A	3/4"	2 - #12	1 - #12	JB-P231	XV-04025	
P231B	3/4"	2 - #12	1 - #12	JB-P231	XV-04028	
P231C	3/4"	2 - #12	1 - #12	JB-P231	XV-03128	
P232	1"	6 - #12	3 - #12	PANEL-EB (CKTS. 7, 13, 31)	JB-P232	
P232A	3/4"	2 - #12	1 - #12	JB-P232	XV-04026	
P232B	3/4"	2 - #12	1 - #12	JB-P232	XV-04029	
P232C	3/4"	2 - #12	1 - #12	JB-P232	XV-03228	
P233	3/4"	2 - #12	1 - #12	PANEL-EB (CKT. 15)	XV-05420	
P234	3/4"	2 - #12	1 - #12	PANEL-EB (CKT. 17)	XV-05421	
P235	3/4"	2 - #12	1 - #12	PANEL-EB (CKT. 19)	XV-05422	
P236	3/4"	2 - #12	1 - #12	LIGHTING CONTROL PANEL (LCP-A)	BLR BLDG OUTDOOR WALL PACK LIGHTS	
P237	3/4"	2 - #12	1 - #10	PANEL-EB (CKT. 1)	MAIN RIO PANEL	
P238	3/4"	2 - #12	1 - #10	PANEL-EB (CKT. 2)	MBR RIO PANEL	
P239	3/4"	2 - #12	1 - #12	PANEL-EB (CKT. 4)	MOTOR STARTER - EXH FAN 1	
P239A	3/4"	2 - #12	1 - #12	MOTOR STARTER - EXH FAN 1	EXH FAN 1 (M-04110)	
P240	3/4"	2 - #12	1 - #12	PANEL-EB (CKT. 52)	MOTOR STARTER - EXH FAN 2	
P240A	3/4"	2 - #12	1 - #12	MOTOR STARTER - EXH FAN 2	EXH FAN 2 (M-04111)	
P241	3/4"	2 - #12	1 - #12	PANEL-EB (CKT. 8)	MOTOR STARTER - EXH FAN 3	
P241A	3/4"	2 - #12	1 - #12	MOTOR STARTER - EXH FAN 3	EXH FAN 3 (M-04112)	
P242	3/4"	2 - #12	1 - #12	PANEL-EB (CKT. 10)	MOTOR STARTER - EXH FAN 4	
P242A	3/4"	2 - #12	1 - #12	MOTOR STARTER - EXH FAN 4	EXH FAN 4 (M-04113)	
P243	1"	2 - #8	1 - #8	PANEL-EB (CKT. 12)	MOTOR STARTER - EVAP COOLER 1	
P243A	1"	2 - #8	1 - #8	MOTOR STARTER - EVAP COOLER 1	EVAP COOLER 1 (EC-1)	
P243B	1"	2 - #8	1 - #8	PANEL-EB (CKT. 16)	MOTOR STARTER - EVAP COOLER 2	
P243C	1"	2 - #8	1 - #8	MOTOR STARTER - EVAP COOLER 2	EVAP COOLER 2 (EC-2)	
P244	3/4"	2 - #10	1 - #10	PANEL-EB (CKT. 18)	BLOWER RM LIGHT SWITCH	
P245	3/4"	2 - #12	1 - #12	PANEL-EB (CKT. 20)	PIPE GALLERY 1 LIGHT SWITCH	
P246	3/4"	2 - #12	1 - #12	PANEL-EB (CKT. 22)	PIPE GALLERY 2 LIGHT SWITCH	
P247	3/4"	2 - #12	1 - #12	PANEL-EB (CKT. 24)	PIPE GALLERY 3 LIGHT SWITCH	
P248	3/4"	2 - #12	1 - #12	PANEL-EB (CKT. 26)	PIPE GALLERY 4 LIGHT SWITCH	
P249	3/4"	2 - #12	1 - #10	PANEL-EB (CKT. 28)	BLOWER RM RECEPTACLES	
P250	3/4"	2 - #12	1 - #10	PANEL-EB (CKT. 30)	PIPE GALLERY 1 RECEPTACLES	

NO	BY	DATE	REVISIONS	DATE	APP.

Registered Professional Engineer (Electrical) CERTIFICATE NO. 59566 Basher Ishaq Expires 03/31/28 ARIZONA, U.S.A.

PREPARED BY BASHAR ISHAQ
PROJECT ENGINEER
R.C.E. NO. --
EXP. DATE
DRAWN NC
DESIGNED NC, BI
CHECKED BI
SCALE
DATE FEB 2026

THESE DRAWINGS ARE THE PROPERTY OF P.A.C.E. AND SHALL NOT BE REPRODUCED IN ANY MANNER NOR BE USED FOR CONSTRUCTION UNLESS STAMPED 'ISSUED FOR CONSTRUCTION'.

TITLE
POWER CABLE & CONDUIT SCHEDULE 4

JOB
CITY OF SAN LUIS WEST WWTP
3.0 MGD MBR UPGRADES
SAN LUIS AZ.

PACE
Advanced Water Engineering
8723 E. VIA de COMMERCIO, SUITE A-204 | SCOTTSDALE, CA 85258
P: (408) 991-3595 | www.pacewater.com

SHEET
E0.23
105 OF 209 SHEETS

JOB NO. B777

FINAL PLANS ISSUED FOR BID

W:\B777\Engineering\B777 - 3MGD Exp\3MGD FINAL DSN\sheets\B777 - E0.23.dwg - Tab: E0.23 - by rschi on 02/06/26 at 3:17:49 PM

DRAFT

POWER CONDUIT WIRE SCHEDULE						
CONDUIT		WIRE		FROM	TO	REMARKS
NO.	SIZE	POWER	GROUND			
P251	3/4"	2 - #12	1 - #10	PANEL-EB (CKT. 32)	PIPE GALLERY 2 RECEPTACLES	
P252	3/4"	2 - #12	1 - #10	PANEL-EB (CKT. 34)	PIPE GALLERY 3 RECEPTACLES	
P253	3/4"	2 - #12	1 - #10	PANEL-EB (CKT. 36)	PIPE GALLERY 4 RECEPTACLES	
P254	3/4"	2 - #12	1 - #12	PANEL-EB (CKT. 38)	LIGHTING CONTROL PANEL (LCP-A)	
P255	3/4"	2 - #12	1 - #12	PANEL-EB (CKT. 40)	BLR RM EGRESS LIGHTS	
P256	1"	2 - #12	1 - #12	PANEL-EB (CKT. 45)	XV-05123	
P257	1"	2 - #12	1 - #12	PANEL-EB (CKT. 51)	XV-05124	
P258	1"	2 - #12	1 - #12	PANEL-EB (CKT. 50)	LIGHT SWITCH FOR PIPE GALL BELOW BLR LTS	
P259	1"	2 - #12	1 - #12	PANEL-EB (CKT. 47)	MOTOR STARTER - EXH FAN 5	
P259A	1"	2 - #12	1 - #12	MOTOR STARTER - EXH FAN 5	EXH FAN 5 (M-04114)	
P260	1"	2 - #10, 2 - #12	1 - #10, 1 - #12	MBR RIO PANEL	JB-P230	
P260A	3/4"	2 - #10	1 - #10	JB-P230	AIT-04161	
P260B	3/4"	2 - #12	1 - #12	JB-P230	FT-04040	
P260C	1"	FACT. CBL.		FT-04040	FE-04040	
P261	1"	2 - #10, 2 - #12	1 - #10, 1 - #12	MBR RIO PANEL	JB-P231	
P261A	3/4"	2 - #10	1 - #10	JB-P231	AIT-04163	
P261B	3/4"	2 - #12	1 - #12	JB-P231	FT-04041	
P261C	1"	FACT. CBL.		FT-04041	FE-04041	
P262	1"	2 - #10, 2 - #12	1 - #10, 1 - #12	MBR RIO PANEL	JB-P232	
P262A	3/4"	2 - #10	1 - #10	JB-P232	AIT-04165	
P262B	3/4"	2 - #12	1 - #12	JB-P232	FT-04042	
P262C	1"	FACT. CBL.		FT-04042	FE-04042	
P263	3/4"	2 - #12	1 - #12	MBR RIO PANEL	FT-05440	
P264	3/4"	2 - #12	1 - #12	MBR RIO PANEL	FT-05441	
P265	3/4"	2 - #12	1 - #12	MBR RIO PANEL	FT-05442	
P266	3/4"	2 - #12	1 - #12	MBR RIO PANEL	FT-06040	
P266A	1"	FACT.CBL.		FT-06040	FE-06040	
P267	1"	2 - #10	1 - #10	MBR RIO PANEL	AIT-02060	
P400	2"	6 - #10	2 - #10	MOTOR CONTROL CENTER (MCC-1)	PB-P1	
P400A	2"	6 - #10	2 - #10	PB-P1	PB-P12	
P400B	1"	6 - #10	2 - #10	PB-P12	PB-P13	
P400C	1"	6 - #10	2 - #10	PB-P13	PB-P14	
P400D	1"	6 - #10	2 - #10	PB-P14	PB-P15	
P400E	1"	3 - #10	1 - #10	PB-P15	DISC SW - INTERNAL RECIRC PUMP 1	
P400F	1"	3 - #10	1 - #10	PB-P15	DISC SW - INTERNAL RECIRC PUMP 2	
P401	1"	FACT. CBL.		DISC SW - INTERNAL RECIRC PUMP 1	INTERNAL RECIRC PUMP 1 (PMP-02101)	
P402	1"	FACT. CBL.		DISC SW - INTERNAL RECIRC PUMP 2	INTERNAL RECIRC PUMP 2 (PMP-02201)	
P403	2"	6 - #10	2 - #10	MOTOR CONTROL CENTER (MCC-2)	PB-P1	
P403A	2"	6 - #10	2 - #10	PB-P1	PB-P12	
P403B	1"	6 - #10	2 - #10	PB-P12	PB-P13	

NO	BY	DATE	REVISIONS	DATE	APP.

Registered Professional Engineer (Electrical) CERTIFICATE NO. 50356 Kevin Chen State of ARIZONA U.S.A. Expires 03/31/28

PREPARED BY BASHAR ISHAQ
PROJECT ENGINEER
R.C.E. NO. E24580
EXP. DATE

DRAWN NC
DESIGNED NC, BI
CHECKED BI
SCALE
DATE FEB 2026

THESE DRAWINGS ARE THE PROPERTY OF P.A.C.E. AND SHALL NOT BE REPRODUCED IN ANY MANNER NOR BE USED FOR CONSTRUCTION UNLESS STAMPED 'ISSUED FOR CONSTRUCTION'.

TITLE
POWER CABLE & CONDUIT SCHEDULE 5

JOB
CITY OF SAN LUIS WEST WWTP
3.0 MGD MBR UPGRADES
SAN LUIS AZ.

PACE
Advanced Water Engineering
8723 E. VIA de COMMERCIO, SUITE A-204 | SCOTTSDALE, CA 85258
P: (408) 991-3595 | www.pacewater.com

SHEET
E0.24
106 OF 209 SHEETS

JOB NO. B777

FINAL PLANS ISSUED FOR BID

W:\B777\Engineering\B777 - 3MGD Expt\3MGD FINAL DSN\sheets\B777 - E0.20.dwg - Tab: E0.24 - by nchin on 02/06/26 at 3:17:49 PM

DRAFT

POWER CONDUIT WIRE SCHEDULE						
CONDUIT		WIRE		FROM	TO	REMARKS
NO.	SIZE	POWER	GROUND			
P403C	1"	6 - #10	2 - #10	PB-P13	PB-P14	
P403D	1"	6 - #10	2 - #10	PB-P14	PB-P15	
P403E	1"	6 - #10	2 - #10	PB-P15	PB-P16	CONT. VIA P403F, P404
P403F	1"	3 - #10	1 - #10	PB-P16	DISC SW - ANOXIC MIXER 3	
P403G	1"	FACT. CBL.		DISC SW - ANOXIC MIXER 3	ANOXIC MIXER 3 (MXR-02310)	
P404	1"	3 - #10	1 - #10	PB-P16	PB-P17	
P404A	1"	3 - #10	1 - #10	PB-P17	DISC SW - INTERNAL RECIRC PUMP 3	
P404B	1"	FACT. CBL.		DISC SW - INTERNAL RECIRC PUMP 3	INTERNAL RECIRC PUMP 3 (PMP-02301)	
P405	2"	6 - #10	2 - #10	MOTOR CONTROL CENTER (MCC-1)	PB-P1	
P405A	2"	6 - #10	2 - #10	PB-P1	PB-P12	
P405B	1"	6 - #10	2 - #10	PB-P12	PB-P13	
P405C	1"	6 - #10	2 - #10	PB-P13	PB-P14	CONT. VIA P405D & P407
P405D	1"	3 - #10	1 - #10	PB-P14	DISC SW - ANOXIC MIXER 1	
P406	1"	FACT. CBL.		DISC SW - ANOXIC MIXER 1	ANOXIC MIXER 1 (MXR-02110)	
P407	1"	6 - #10	2 - #10	PB-P14	PB-P15	
P407A	1"	6 - #10	2 - #10	PB-P15	PB-P16	
P407B	1"	3 - #10	1 - #10	PB-P16	DISC SW - ANOXIC MIXER 2	
P408	1"	FACT. CBL.		DISC SW - ANOXIC MIXER 2	ANOXIC MIXER 2 (MXR-02210)	
P410	2"	3 - #6	1 - #6	MOTOR CONTROL CENTER (MCC-1)	PB-P1	
P410A	2"	3 - #6	1 - #6	PB-P1	PB-P12	
P410B	1-1/4"	3 - #6	1 - #6	PB-P12	PB-P13	
P410C	1-1/4"	3 - #6	1 - #6	PB-P13	PB-P14	
P410D	1-1/4"	3 - #6	1 - #6	PB-P14	DISC SW - FEED FWD PUMP 1	
P410E	2"	FACT. CBL.		DISC SW - FEED FWD PUMP 1	FEED FWD PUMP 1 (PMP-02404)	
P411	2"	3 - #6	1 - #6	MOTOR CONTROL CENTER (MCC-1)	PB-P1	
P411A	2"	3 - #6	1 - #6	PB-P1	PB-P12	
P411B	1-1/4"	3 - #6	1 - #6	PB-P12	PB-P13	
P411C	1-1/4"	3 - #6	1 - #6	PB-P13	PB-P14	
P411D	1-1/4"	3 - #6	1 - #6	PB-P14	DISC SW - FEED FWD PUMP 2	
P411E	2"	FACT. CBL.		DISC SW - FEED FWD PUMP 2	FEED FWD PUMP 2 (PMP-02403)	
P412	2"	3 - #6	1 - #6	MOTOR CONTROL CENTER (MCC-2)	PB-P1	
P412A	2"	3 - #6	1 - #6	PB-P1	PB-P12	
P412B	1-1/4"	3 - #6	1 - #6	PB-P12	PB-P13	
P412C	1-1/4"	3 - #6	1 - #6	PB-P13	PB-P14	
P412D	1-1/4"	3 - #6	1 - #6	PB-P14	DISC SW - FEED FWD PUMP 3	
P412E	2"	FACT. CBL.		DISC SW - FEED FWD PUMP 3	FEED FWD PUMP 3 (PMP-02402)	
P430	1"	6 - #12	3 - #12	PANEL-EB (CKTS. 21, 23, 25)	PB-P13	
P430A	1"	6 - #12	3 - #12	PB-P13	PB-P14	CONT. VIA P430B & P431
P430B	3/4"	2 - #12	1 - #12	PB-P14	XV-05220	
P431	1"	4 - #12	2 - #12	PB-P14	PB-P15	
P431A	1"	4 - #12	2 - #12	PB-P15	PB-P16	
P431B	3/4"	2 - #12	1 - #12	PB-P16	XV-05221	
P431C	3/4"	2 - #12	1 - #12	PB-P16	XV-05222	
P432	1"	6 - #12	3 - #12	MBR RIO PANEL	PB-P13	
P432A	1"	6 - #12	3 - #12	PB-P13	PB-P14	CONT. VIA P432B & P433
P432B	3/4"	2 - #12	1 - #12	PB-P14	FT-05240	
P433	3/4"	4 - #12	2 - #12	PB-P14	PB-P15	
P433A	3/4"	4 - #12	2 - #12	PB-P15	PB-P16	

NO	BY	DATE	REVISIONS	DATE	APP.

Registered Professional Engineer (Electrical) CERTIFICATE NO. 50356 Basher Ishaq Not Signed ARIZONA, U.S.A. Expires 03/31/28

PREPARED BY BASHAR ISHAQ
PROJECT ENGINEER
R.C.E. NO. --
EXP. DATE
DRAWN NC
DESIGNED NC, BI
CHECKED BI
SCALE
DATE FEB 2026

THESE DRAWINGS ARE THE PROPERTY OF P.A.C.E. AND SHALL NOT BE REPRODUCED IN ANY MANNER NOR BE USED FOR CONSTRUCTION UNLESS STAMPED 'ISSUED FOR CONSTRUCTION'.

TITLE
POWER CABLE & CONDUIT SCHEDULE 6

JOB
CITY OF SAN LUIS WEST WWTP
3.0 MGD MBR UPGRADES
SAN LUIS AZ.

PACE
Advanced Water Engineering
8723 E. VIA de COMMERCIO, SUITE A-204 | SCOTTSDALE, CA 85258
P: (408) 991-3595 | www.pacewater.com

FINAL PLANS ISSUED FOR BID

SHEET
E0.25
107 OF 209 SHEETS

JOB NO. B777

W:\B777\Engineering\B777 - 3MGD Exp\3MGD FINAL DSN\sheets\B777 - E0.20.dwg - Tab: E0.25 - by rschn on 02/26/26 at 3:17:49 PM

DRAFT

POWER CONDUIT WIRE SCHEDULE						
CONDUIT		WIRE		FROM	TO	REMARKS
NO.	SIZE	POWER	GROUND			
P433B	3/4"	2 - #12	1 - #12	PB-P16	FT-05241	
P433C	3/4"	2 - #12	1 - #12	PB-P16	FT-05242	
P434	1-1/4"	6 - #10	3 - #10	MBR RIO PANEL	PB-P13	
P434A	1-1/4"	6 - #10	3 - #10	PB-P13	PB-P14	
P434B	1-1/4"	6 - #10	3 - #10	PB-P14	PB-P15	CONT. VIA P434C & P435
P434C	3/4"	2 - #10	1 - #10	PB-P15	AIT-02160	
P435	1"	4 - #10	2 - #10	PB-P15	PB-P16	
P435A	3/4"	2 - #10	1 - #10	PB-P16	AIT-02260	
P435B	3/4"	2 - #10	1 - #10	PB-P16	AIT-02360	
P500	2"	3 - 1/0	1 - #3	MOTOR CONTROL CENTER (MCC-1)	PB-P19	
P500A	2"	3 - 1/0	1 - #3	PB-P19	PB-P2	
P500B	2"	3 - 1/0	1 - #3	PB-P2	PB-P4	
P500C	2"	3 - 1/0	1 - #3	PB-P4	PB-P6	
P500D	2"	3 - 1/0	1 - #3	PB-P6	DISC SW - FEQ BLOWER 1	
P500E	2"	3 - 1/0	1 - #3	DISC SW - FEQ BLOWER 1	FEQ BLOWER 1 (2011B)	EXISTING BLOWER RELOCATED
P501	2"	3 - 1/0	1 - #3	MOTOR CONTROL CENTER (MCC-2)	PB-P19	
P501A	2"	3 - 1/0	1 - #3	PB-P19	PB-P2	
P501B	2"	3 - 1/0	1 - #3	PB-P2	PB-P4	
P501C	2"	3 - 1/0	1 - #3	PB-P4	PB-P6	
P501D	2"	3 - 1/0	1 - #3	PB-P6	DISC SW - FEQ BLOWER 2	
P501E	2"	3 - 1/0	1 - #3	DISC SW - FEQ BLOWER 2	FEQ BLOWER 2 (2012B)	EXISTING BLOWER RELOCATED
P502	2"	3 - 1/0	1 - #3	MOTOR CONTROL CENTER (MCC-1)	PB-P19	
P502A	2"	3 - 1/0	1 - #3	PB-P19	PB-P2	
P502B	2"	3 - 1/0	1 - #3	PB-P2	PB-P4	
P502C	2"	3 - 1/0	1 - #3	PB-P4	PB-P6	
P502D	2"	3 - 1/0	1 - #3	PB-P6	DISC SW - FEQ BLOWER 3	
P502E	2"	3 - 1/0	1 - #3	DISC SW - FEQ BLOWER 3	FEQ BLOWER 3 (2003B)	EXISTING BLOWER RELOCATED
P503	1-1/4"	6 - #10, 3 - #12	2 - #8, 1 - #12	MOTOR CONTROL CENTER (MCC-1)	PB-P1	
P503A	2"	6 - #10, 3 - #12	2 - #8, 1 - #12	PB-P1	PB-P12	
P503B	1-1/4"	6 - #10, 3 - #12	2 - #8, 1 - #12	PB-P12	PB-P13	
P503C	1-1/4"	6 - #10, 3 - #12	2 - #8, 1 - #12	PB-P13	PB-P14	
P503D	1-1/4"	6 - #10, 3 - #12	2 - #8, 1 - #12	PB-P14	PB-P15	
P503E	1-1/4"	6 - #10, 3 - #12	2 - #8, 1 - #12	PB-P15	PB-P16	
P503F	1-1/4"	6 - #10, 3 - #12	2 - #8, 1 - #12	PB-P16	PB-P17	
P503G	3/4"	3 - #10	1 - #10	PB-P17	DISC SW - EXIST MIXER (3003-MX)	
P503H	3/4"	3 - #10	1 - #10	PB-P17	DISC SW - EXIST MIXER (3004-MX)	
P503J	3/4"	3 - #12	1 - #12	PB-P17	DISC SW - SLUDGE PUMP 4 (3008-SP)	
P530	1"	2 - #12, 2 - #10	1 - #12, 1 - #10	PANEL-EB (CKTS. 33, 35)	PB-P18	
P530A	2"	2 - #12, 2 - #10	1 - #12, 1 - #10	PB-P18	PB-P4	
P530B	2"	2 - #12, 2 - #10	1 - #12, 1 - #10	PB-P4	PB-P6	
P530C	1"	2 - #12	1 - #12	PB-P6	FEQ BLR AREA LIGHT SWITCH	
P530D	1"	2 - #10	1 - #10	PB-P6	FEQ BLR AREA RECEPTACLE	
P600	2"	3 - #8	1 - #8	MOTOR CONTROL CENTER (MCC-1)	PB-P1	
P600A	2"	3 - #8	1 - #8	PB-P1	PB-P7	
P600B	2"	3 - #8	1 - #8	PB-P7	PB-P9	
P600C	2"	3 - #8	1 - #8	PB-P9	PB-P11	
P600D	1"	3 - #8	1 - #8	PB-P11	DISC SW - EFF PUMP 1	
P601	2"	3 - #8	1 - #8	MOTOR CONTROL CENTER (MCC-2)	PB-P1	
P601A	2"	3 - #8	1 - #8	PB-P1	PB-P7	
P601B	2"	3 - #8	1 - #8	PB-P7	PB-P9	
P601C	2"	3 - #8	1 - #8	PB-P9	PB-P11	
P601D	1"	3 - #8	1 - #8	PB-P11	DISC SW - EFF PUMP 2	

W:\B777\Engineering\B777 - 3MGD Exp\3MGD FINAL DSN\sheets\B777 - E0.26.dwg - Tab: E0.26 - by rrohn on 02/06/26 at 3:17:49 PM

NO	BY	DATE	REVISIONS	DATE	APP.

Registered Professional Engineer (Electrical) CERTIFICATE NO. 82568 Basharat Ishaq State of ARIZONA U.S.A. Expires 03/31/28

PREPARED BY BASHAR ISHAQ | PROJECT ENGINEER | R.C.E. NO. E24580 | EXP. DATE | SCALE | DRAWN NC | DESIGNED NC, BI | CHECKED BI | DATE FEB 2026

THESE DRAWINGS ARE THE PROPERTY OF P.A.C.E. AND SHALL NOT BE REPRODUCED IN ANY MANNER NOR BE USED FOR CONSTRUCTION UNLESS STAMPED 'ISSUED FOR CONSTRUCTION'.

TITLE

POWER CABLE & CONDUIT SCHEDULE 7

JOB

CITY OF SAN LUIS WEST WWTP
3.0 MGD MBR UPGRADES

SAN LUIS AZ.

PACE
Advanced Water Engineering
8723 E. VIA de COMMERCIO, SUITE A-204 | SCOTTSDALE, CA 85258
P: (408) 991-3595 | www.pacewater.com

FINAL PLANS ISSUED FOR BID

SHEET
E0.26
108 OF 209 SHEETS

JOB NO. B777

DRAFT

POWER CONDUIT WIRE SCHEDULE						
CONDUIT		WIRE		FROM	TO	REMARKS
NO.	SIZE	POWER	GROUND			
P630	3/4"	2 - #12	1 - #12	PANEL-LC (EXISTING) (CKT. 9)	XV-04424	
P660	1"	2 - #12	1 - #12	MAIN PLC PANEL	PB-P1	
P660A	1"	2 - #12	1 - #12	MBR PLC PANEL	PB-P1	
P661	2"	4 - #12	2 - #12	PB-P1	PB-P7	
P661A	2"	4 - #12	2 - #12	PB-P7	PB-P9	
P661B	2"	4 - #12	2 - #12	PB-P9	PB-P11	
P662	1"	2 - #12	1 - #12	PB-P11	FT-04240	FROM MAIN PLC PANEL
P662A	1"	2 - #12	1 - #12	PB-P11	JB-P662	
P662B	3/4"	2 - #12	1 - #12	JB-P662	FT-04440	FROM MBR PLC PANEL
P700	2"	3 - 2/0	1 - #4	MOTOR CONTROL CENTER (MCC-1)	PB-P1	
P700A	2"	3 - 2/0	1 - #4	PB-P1	PB-P7	
P700B	2"	3 - 2/0	1 - #4	PB-P7	PB-P9	
P700C	2"	3 - 2/0	1 - #4	PB-P9	PB-P10	
P700D	2"	3 - 2/0	1 - #4	PB-P10	DEWATERING CTRL PNL (CP-1)	
P701	1"	3 - #12	1 - #12	DEWATERING CTRL PNL (CP-1)	FLOC TANK MIXER (M-07111)	
P702	1"	3 - #12	1 - #10	DEWATERING CTRL PNL (CP-1)	SCREW PRESS (M-07112)	
P703	1"	3 - #12	1 - #10	DEWATERING CTRL PNL (CP-1)	CONVEYOR DRIVE (M-07113)	
P704	1"	3 - #10	1 - #10	DEWATERING CTRL PNL (CP-1)	SLUDGE DEWAT FEED PUMP 1 (PMP-07001)	
P705	1"	3 - #10	1 - #10	DEWATERING CTRL PNL (CP-1)	SLUDGE DEWAT FEED PUMP 2 (PMP-07002)	
P706	1"	3 - #8	1 - #8	MOTOR CONTROL CENTER (MCC-1)	PB-P1	
P706A	2"	3 - #8	1 - #8	PB-P1	PB-P7	
P706B	2"	3 - #8	1 - #8	PB-P7	PB-P9	
P706C	2"	3 - #8	1 - #8	PB-P9	PB-P10	
P706D	1"	3 - #8	1 - #8	PB-P10	MINI POWER ZONE (MPZ-DW)	
P730	3/4"	2 - #10	1 - #10	MPZ-DW (CKT. 3)	DEWATERING AREA LIGHT SWITCH	
P731	3/4"	2 - #12	1 - #10	MPZ-DW (CKT. 5)	DEWATERING AREA RECEPTACLES	
P732	3/4"	2 - #12	1 - #12	MPZ-DW (CKT. 7)	FIBER PANEL @ DEWATERING	
P760	3/4"	2 - #12	1 - #12	DEWATERING CTRL PNL (CP-1)	FT-07140	
P761	1"	2 - #8	1 - #8	DEWATERING CTRL PNL (CP-1)	POLYMER SYSTEM CONTROL PANEL (PS-CP)	
P762	3/4"	2 - #12	1 - #12	DEWATERING CTRL PNL (CP-1)	CONVEYOR ZERO SPEED SWITCH	
P763	1"	3 - #12	1 - #12	POLYMER SYSTEM CONTROL PANEL (PS-CP)	NEAT POLYMER PUMP	
P764	1"	3 - #12	1 - #12	POLYMER SYSTEM CONTROL PANEL (PS-CP)	POLYMER MIXER	
P765	1"	2 - #12	1 - #12	POLYMER SYSTEM CONTROL PANEL (PS-CP)	FEED VALVE	WATER FEED
P800	2"	3 - #6	1 - #6	MOTOR CONTROL CENTER (MCC-1)	PB-P1	
P800A	2"	3 - #6	1 - #6	PB-P1	PB-P12	
P800B	1-1/4"	3 - #6	1 - #6	PB-P12	PB-P13	
P800C	1-1/4"	3 - #6	1 - #6	PB-P13	DISC SW - FLOW EQ PUMP 1	
P800D	1-1/4"	3 - #6	1 - #6	DISC SW - FLOW EQ PUMP 1	FLOW EQ PUMP 1 (PMP-01601)	
P801	2"	3 - #6	1 - #6	MOTOR CONTROL CENTER (MCC-2)	PB-P1	
P801A	2"	3 - #6	1 - #6	PB-P1	PB-P12	
P801B	1-1/4"	3 - #6	1 - #6	PB-P12	PB-P13	

W:\B777\Engineering\B777 - 3MGD Exp\3MGD FINAL DSN\sheets\B777 - E0.20.dwg - Tab: E0.27 - by rschi on 02/06/26 at 3:17:49 PM

NO	BY	DATE	REVISIONS	DATE	APP.

Registered Professional Engineer (Electrical) CERTIFICATE NO. 82586 Brian Stanek ARIZONA, U.S.A. Expires 03/31/28

PREPARED BY BASHAR ISHAQ | PROJECT ENGINEER | R.C.E. NO. E24580 | EXP. DATE | SCALE | DRAWN NC | DESIGNED NC, BI | CHECKED BI | DATE FEB 2026

THESE DRAWINGS ARE THE PROPERTY OF P.A.C.E. AND SHALL NOT BE REPRODUCED IN ANY MANNER NOR BE USED FOR CONSTRUCTION UNLESS STAMPED 'ISSUED FOR CONSTRUCTION'.

TITLE: **POWER CABLE & CONDUIT SCHEDULE 8**

JOB: CITY OF SAN LUIS WEST WWTP 3.0 MGD MBR UPGRADES — SAN LUIS AZ.

PACE Advanced Water Engineering
8723 E. VIA de COMMERCIO, SUITE A-204 | SCOTTSDALE, CA 85258
P. (408) 991-3595 | www.pacewater.com

FINAL PLANS ISSUED FOR BID

SHEET **E0.27**

109 OF 209 SHEETS

JOB NO. B777

DRAFT

POWER CONDUIT WIRE SCHEDULE

CONDUIT		WIRE		FROM	TO	REMARKS
NO.	SIZE	POWER	GROUND			
P801C	1-1/4"	3 - #6	1 - #6	PB-P13	DISC SW - FLOW EQ PUMP 2	
P801D	1-1/4"	3 - #6	1 - #6	DISC SW - FLOW EQ PUMP 2	FLOW EQ PUMP 2 (PMP-01602)	
P830	1"	2 - #10, 2 - #12	1 - #10, 1 - #12	PANEL-EB (CKTS. 37, 39)	PB-P13	
P830A	1"	2 - #10, 2 - #12	1 - #10, 1 - #12	PB-P13	JB-P830	
P830B	3/4"	2 - #12	1 - #12	JB-P830	FEB PS LIGHT SWITCH	
P830C	3/4"	2 - #10	1 - #10	JB-P830	FEB PS RECEPTACLE	
P860	3/4"	2 - #12	1 - #12	MAIN RIO PANEL	PB-P13	
P860A	3/4"	2 - #12	1 - #12	PB-P13	FT-01640	
P900	2"	3 - #6, 3 - #10	1 - #8, 1 - #10	MOTOR CONTROL CENTER (MCC-1)	PB-P1	
P900A	2"	3 - #6, 3 - #10	1 - #8, 1 - #10	PB-P1	PB-P7	
P900B	2"	3 - #6, 3 - #10	1 - #8, 1 - #10	PB-P7	PB-P8	CONT. 3 - #6, 1 - #8 THRU P900C; 3 - #10, 1 - #10 THRU P901
P900C	1-1/4"	3 - #6	1 - #8	PB-P8	CTRL PNL - PLANT DRAIN PUMP STATION	
P900D	1"	3 - #12	1 - #10	CTRL PNL - PLANT DRAIN PUMP STATION	PLANT DRAIN PUMP 1 (PMP-07202)	
P900E	1"	3 - #12	1 - #10	CTRL PNL - PLANT DRAIN PUMP STATION	PLANT DRAIN PUMP 2 (PMP-07203)	
P901	2"	3 - #10	1 - #10	PB-P8	PB-P20	
P901A	1"	3 - #10	1 - #10	PB-P20	EXISTING CTRL PNL - LOWER DRYING BED PS	
P930	1"	2 - #12, 2 - #10	1 - #12, 1 - #10	PANEL-EA (CKTS. 8, 10)	PB-P1	
P930A	2"	2 - #12, 2 - #10	1 - #12, 1 - #10	PB-P1	PB-P7	
P930B	2"	2 - #12, 2 - #10	1 - #12, 1 - #10	PB-P7	PB-P8	
P930C	1"	2 - #12	1 - #12	PB-P8	PLANT DRAIN PS LIGHT SWITCH	
P930D	1"	2 - #10	1 - #10	PB-P8	PLANT DRAIN PS RECEPTACLE	
P960	2"	2 - #12	1 - #12	MAIN PLC PANEL	PB-P1	
P960A	2"	2 - #12	1 - #12	PB-P1	PB-P7	
P960B	2"	2 - #12	1 - #12	PB-P7	PB-P8	
P960C	1"	2 - #12	1 - #12	PB-P8	FT-07240	
P1000	2-1/2"	3 - 4/0	1 - #4	MOTOR CONTROL CENTER (MCC-1)	PB-P1	
P1000A	2-1/2"	3 - 4/0	1 - #4	PB-P1	PB-P7	
P1000B	2-1/2"	3 - 4/0	1 - #4	PB-P7	PB-P9	
P1000C	2-1/2"	3 - 4/0	1 - #4	PB-P9	PB-P21	
P1000D	2-1/2"	3 - 4/0	1 - #4	PB-P21	PLANT PROCESS WATER PS CONTROL PANEL	
P1001	1"	3 - #8	1 - #8	PLANT PROCESS WTR PS CONTROL PANEL	PLANT PROC. WTR BOOST PUMP 1 (PMP-04301A)	
P1002	1"	3 - #8	1 - #8	PLANT PROCESS WTR PS CONTROL PANEL	PLANT PROC. WTR BOOST PUMP 2 (PMP-04301B)	
P1003	1"	3 - #8	1 - #8	PLANT PROCESS WTR PS CONTROL PANEL	PLANT PROC. WTR BOOST PUMP 3 (PMP-04301C)	
P1030	1"	2 - #12	1 - #12	MPZ-DW (CKT. 2)	PLANT PROCESS WTR PS LIGHT SWITCH	
P1031	1"	2 - #10	1 - #10	MPZ-DW (CKT. 1)	PLANT PROCESS WTR PS RECEPTACLE	
P1060	1"	2 - #12	1 - #12	PLANT PROCESS WTR PS CONTROL PANEL	FT-04340	

NO	BY	DATE	REVISIONS	DATE	APP.

Registered Professional Engineer (Electrical) CERTIFICATE NO. 35958 BASHAR ISHAQ Date Signed 1/5/26 ARIZONA, U.S.A. Expires 03/31/28

THESE DRAWINGS ARE THE PROPERTY OF P.A.C.E. AND SHALL NOT BE REPRODUCED IN ANY MANNER NOR BE USED FOR CONSTRUCTION UNLESS STAMPED 'ISSUED FOR CONSTRUCTION'.

PREPARED BY
BASHAR ISHAQ
PROJECT ENGINEER
R.C.E. NO. E24590
EXP. DATE

DRAWN NC
DESIGNED NC, BI
CHECKED BI
SCALE
DATE FEB 2026

TITLE
POWER CABLE & CONDUIT SCHEDULE 9

JOB
CITY OF SAN LUIS WEST WWTP
3.0 MGD MBR UPGRADES
SAN LUIS AZ.

PACE
Advanced Water Engineering
8723 E. VIA de COMMERCIO, SUITE A-204 | SCOTTSDALE, CA 85258
P: (408) 991-3595 | www.pacewater.com

SHEET
E0.28
110 OF 209 SHEETS

JOB NO. B777

FINAL PLANS ISSUED FOR BID

W:\B777\Engineering\B777 - 3MGD Exp\3MGD FINAL DSN\sheets\B777 - E0.28.dwg - Tab: E0.28 - by rcohn on 02/06/26 at 3:17:49 PM

DRAFT

CONTROL CONDUIT WIRE SCHEDULE						
CONDUIT		WIRE		FROM	TO	REMARKS
NO.	SIZE	CONTROL	GROUND			
C001	3"	46 - #14, 1 - ETH	1 - #12	MAIN PLC PANEL	MOTOR CONTROL CENTER (MCC-1)	TO VFD-01601, MS-3003, MS-3004, MS-3008, MS-5001P, MS-9004P INSIDE MCC-1
C001A	3"	34 - #14, 1 - ETH	1 - #12	MAIN PLC PANEL	MOTOR CONTROL CENTER (MCC-2)	TO VFD-01602, MS-2006B, MS-5002P, MS-02012B INSIDE MCC-2
C002	3"	40 - #14	1 - #12	MAIN PLC PANEL	MOTOR CONTROL CENTER (MCC-1)	TO MS-2008B, MS-2009B, MS-02011B, MS-02003B INSIDE MCC-1
C003	3"	52 - #14, 4 - ETH	1 - #12	MBR PLC PANEL	MOTOR CONTROL CENTER (MCC-1)	TO MS-02110, MS-02210, VFD-02101, VFD-02201, VFD-02403, VFD-02404 INSIDE MCC-1
C003A	3"	26 - #14, 2 - ETH	1 - #12	MBR PLC PANEL	MOTOR CONTROL CENTER (MCC-2)	TO MS-02310, VFD-02301, VFD-02402 INSIDE MCC-2
C004	2"	2 - FIBER OPTIC	-	SCADA (OPERATIONS ROOM)	PB-C7	CONT. 1 - FIBER OPTIC THRU C004A TO MBR PLC; 1 - FIBER OPTIC THRU C005 TO DEWAT.
C004A	2"	1 - FIBER OPTIC	-	PB-C7	PB-C1	
C004B	2"	3 - FIBER OPTIC	-	PB-C1	MBR PLC PANEL	CONT. 2 - FIBER OPTIC THRU C006 TO MBR RIO
C004C	2"	2 - FIBER OPTIC	-	PB-C1	MAIN PLC PANEL	CONT. 2 - FIBER OPTIC THRU C006 TO MAIN RIO
C005	2"	1 - FIBER OPTIC	-	PB-C7	PB-C9	
C005A	2"	1 - FIBER OPTIC	-	PB-C9	PB-C10	
C005B	2"	1 - FIBER OPTIC	-	PB-C10	FIBER PANEL @ DEWATERING	
C005C	1"	1 - ETH	-	FIBER PANEL @ DEWATERING	DEWATERING CTRL PNL (CP-1)	
C006	2"	4 - FIBER OPTIC	-	PB-C1	PB-C12	
C006A	2"	4 - FIBER OPTIC	-	PB-C12	PB-C13	
C006B	2"	2 - FIBER OPTIC	-	PB-C13	MBR RIO PANEL	
C006C	2"	2 - FIBER OPTIC	-	PB-C13	MAIN RIO PANEL	
C007	2"	1 - FIBER OPTIC	-	MBR PLC PANEL	PB-C19	CONT. 1 - FIBER OPTIC THRU C007B TO HW
C007A	2"	1 - FIBER OPTIC	-	MAIN PLC PANEL	PB-C19	CONT. 1 - FIBER OPTIC THRU C007B TO HW
C007B	2"	2 - FIBER OPTIC	-	PB-C19	PB-C2	
C007C	2"	2 - FIBER OPTIC	-	PB-C2	FIBER PANEL @ HEADWORKS	
C008	1"	1 - ETH	-	FIBER PANEL @ HEADWORKS	HEADWORKS CTRL PNL (HWCP-1)	
C008A	1"	1 - ETH	-	FIBER PANEL @ HEADWORKS	HEADWORKS CTRL PNL (HWCP-2)	
C009	1"	1 - ETH	-	FIBER PANEL @ DEWATERING	PLANT PROCESS WATER BOOSTER PS CP	
C020	1"	2 - #14	1 - #12	AUTOMATIC TRANSFER SWITCH (ATS)	MAIN PLC PANEL	
C021	1"	2 - #14	1 - #12	AUTOMATIC TRANSFER SWITCH (ATS)	STANDBY GENERATOR 1	
C022	1"	2 - #14	1 - #12	AUTOMATIC TRANSFER SWITCH (ATS)	STANDBY GENERATOR 2	
C023	1"	8 - #14, 1 - ETH	1 - #12	MAIN PLC PANEL	STANDBY GENERATOR 1	
C024	1"	8 - #14, 1 - ETH	1 - #12	MAIN PLC PANEL	STANDBY GENERATOR 2	
C025	2"	30 - #12	3 - #12	MAIN PLC PANEL	PB-C19	NUMBER OF WIRES IS ESTIMATED, ACTUAL NUMBER TO BE VERIFIED PER MF'R SPECS
C025A	1-1/4"	10 - #12	1 - #12	PB-C19	GATE ENTRANCE MOTOR (NORTH)	
C025B	1-1/4"	10 - #12	1 - #12	PB-C19	GATE ENTRANCE MOTOR (SOUTH)	
C025C	1-1/4"	10 - #12	1 - #12	PB-C19	GATE CARD READER	
C026	1-1/4"	10 - #12	1 - #12	GATE ENTRANCE MOTOR (NORTH)	GATE ENTRANCE MOTOR (SOUTH)	
C027	1"	-	-	MAIN PLC PANEL	DISC SW - WELL PUMP	
C100	2-1/2"	33 - #12	12 - #12	HEADWORKS CTRL PNL (HW-CP1)	PB-C2	
C100A	2-1/2"	33 - #12	12 - #12	PB-C2	PB-C3	CONT. 8 - #12, 3 - #12G THRU C100B; 6 - #12, 3 - #12G THRU C100F; 13 - #12, 3 - #12G THRU C104; 6 - #12, 3 - #12G THRU C104E
C100B	1-1/4"	8 - #12	3 - #12	PB-C3	JB-C100	
C100C	3/4"	2 - #12	1 - #12	JB-C100	SV-01021A	
C100D	3/4"	4 - #12	1 - #12	JB-C100	6mm COARSE SCRN 1 (M-01010) LOCAL CTRL PNL	

NO	BY	DATE	REVISIONS	DATE	APP.

Registered Professional Engineer (Electrical)
CERTIFICATE NO. 82586
Basher Ishaq
Date Signed
ARIZONA, U.S.A.
Expires 03/31/28

THESE DRAWINGS ARE THE PROPERTY OF P.A.C.E. AND SHALL NOT BE REPRODUCED IN ANY MANNER NOR BE USED FOR CONSTRUCTION UNLESS STAMPED 'ISSUED FOR CONSTRUCTION'.

PREPARED BY
BASHAR ISHAQ
PROJECT ENGINEER
R.C.E. NO. E24580
EXP. DATE

DRAWN NC
DESIGNED NC, BI
CHECKED BI
SCALE
DATE FEB 2026

TITLE
CONTROL CABLE & CONDUIT SCHEDULE 1

JOB
CITY OF SAN LUIS WEST WWTP
3.0 MGD MBR UPGRADES
AZ.
SAN LUIS

PACE
Advanced Water Engineering
8723 E. VIA de COMMERCIO, SUITE A 204 | SCOTTSDALE, CA 85258
P: (408) 991-3595 | www.pacewater.com

SHEET
E0.30
111 OF 209 SHEETS

JOB NO. B777

FINAL PLANS ISSUED FOR BID

W:\B777\Engineering\B777 - 3MGD Exp\3MGD FINAL DSN\sheets\B777 - E0.30.dwg - Tab: E0.30 - by rodm on 02/09/26 at 3:34:52 PM

DRAFT

CONTROL CONDUIT WIRE SCHEDULE

CONDUIT		WIRE		FROM	TO	REMARKS
NO.	SIZE	CONTROL	GROUND			
C100E	3/4"	2 - #12	1 - #12	JB-C100	TSH-01010	
C100F	1"	6 - #12	3 - #12	PB-C3	JB-C100A	
C100G	3/4"	2 - #12	1 - #12	JB-C100A	SV-01022A	FROM HW-CP1
C100H	3/4"	2 - #12	1 - #12	JB-C100A	TSH-01001	FROM HW-CP1
C100J	3/4"	2 - #12	1 - #12	JB-C100A	TSH-01011	FROM HW-CP1
C101	2-1/2"	29 - #12	11 - #12	HEADWORKS CTRL PNL (HW-CP1)	PB-C4	
C101A	2-1/2"	29 - #12	11 - #12	PB-C4	PB-C5	CONT. 10 - #12, 4 - #12G THRU C101B; 9 - #12, 2 - #12G THRU C105; 8 - #12, 4 - #12G THRU C105E; 2 - #12, 1 - #12G THRU C105L
C101B	1-1/4"	10 - #12	4 - #12	PB-C5	JB-C101	
C101C	3/4"	2 - #12	1 - #12	JB-C101	SV-01023A	
C101D	3/4"	4 - #12	1 - #12	JB-C101	2mm FINE SCREEN 1 (M-01012) LOCAL CTRL PNL	
C101E	3/4"	2 - #12	1 - #12	JB-C101	TSH-01012	
C101F	3/4"	2 - #12	1 - #12	JB-C101	SV-01420	
C102	2-1/2"	37 - #12	14 - #12	HEADWORKS CTRL PNL (HW-CP2)	PB-C2	
C102A	2-1/2"	37 - #12	14 - #12	PB-C2	PB-C3	CONT. 8 - #12, 3 - #12G THRU C102B; 14 - #12, 5 - #12G THRU C102F; 5 - #12, 1 - #12G THRU C104; 10 - #12, 5 - #12G THRU C104E
C102B	1-1/4"	8 - #12	3 - #12	PB-C3	JB-C102	
C102C	3/4"	2 - #12	1 - #12	JB-C102	SV-01120A	
C102D	3/4"	4 - #12	1 - #12	JB-C102	6mm COARSE SCRN 2 (M-01110) LOCAL CTRL PNL	
C102E	3/4"	2 - #12	1 - #12	JB-C102A	TSH-01110	
C102F	1-1/2"	14 - #12	5 - #12	PB-C3	JB-C102A	
C102G	3/4"	4 - #12	1 - #12	JB-C102A	GRIT PUMP 2 (PMP-01101) LOCAL CTRL PNL	FROM HW-CP2
C102H	3/4"	2 - #12	1 - #12	JB-C102A	SV-01121A	FROM HW-CP2
C102J	3/4"	4 - #12	1 - #12	JB-C102A	GRIT TRAP 2 (M-01111) LOCAL CTRL PNL	FROM HW-CP2
C102K	3/4"	2 - #12	1 - #12	JB-C102A	TSH-01101	FROM HW-CP2
C102L	3/4"	2 - #12	1 - #12	JB-C102A	TSH-01111	FROM HW-CP2
C103	2"	25 - #12	9 - #12	HEADWORKS CTRL PNL (HW-CP2)	PB-C4	
C103A	2"	25 - #12	9 - #12	PB-C4	PB-C5	CONT. 4 - #12, 2 - #12G THRU C103B; 4 - #12, 1 - #12G THRU C103E; 9 - #12, 2 - #12G THRU C105; 6 - #12, 3 - #12G THRU C105E; 2 - #12, 1 - #12G THRU C105L
C103B	1"	4 - #12	2 - #12	PB-C5	JB-C103	
C103C	3/4"	2 - #12	1 - #12	JB-C103	SV-01122A	
C103D	3/4"	2 - #12	1 - #12	JB-C103	TSH-01112	
C103E	1"	4 - #12	1 - #12	PB-C5	JB-C101	
C103F	3/4"	4 - #12	1 - #12	JB-C101	2mm FINE SCREEN 2 (M-01112) LOCAL CTRL PNL	
C104	1-1/2"	18 - #12	4 - #12	PB-C3	JB-C104	FROM C100A, C102A
C104A	1"	5 - #12	1 - #12	JB-C104	6mm WASH COMP. 1 (M-01310) LOCAL CTRL PNL	FROM HW-CP1
C104B	1"	5 - #12	1 - #12	JB-C104	6mm WASH COMP. 2 (M-01311) LOCAL CTRL PNL	FROM HW-CP2
C104C	3/4"	4 - #12	1 - #12	JB-C104	GRIT TRAP 1 (M-01011) LOCAL CTRL PNL	FROM HW-CP1
C104D	3/4"	4 - #12	1 - #12	JB-C104	GRIT PUMP 1 (PMP-01001) LOCAL CTRL PNL	FROM HW-CP1
C104E	2"	16 - #12	8 - #12	PB-C3	JB-C104A	FROM C100A, C102A
C104F	1"	4 - #12	2 - #12	JB-C104A	SV-01322A, SV-01322B	FROM HW-CP1
C104G	3/4"	2 - #12	1 - #12	JB-C104A	SV-01320	FROM HW-CP2
C104H	1"	4 - #12	2 - #12	JB-C104A	SV-01323A, SV-01323B	FROM HW-CP2
C104J	3/4"	2 - #12	1 - #12	JB-C104A	SV-01321	FROM HW-CP2
C104K	3/4"	2 - #12	1 - #12	JB-C104A	TSH-01310	FROM HW-CP1
C104L	3/4"	2 - #12	1 - #12	JB-C104A	TSH-01311	FROM HW-CP2
C105	1-1/2"	18 - #12	4 - #12	PB-C5	JB-C105	FROM C101A, C103A
C105A	1"	5 - #12	1 - #12	JB-C105	2mm WASH COMP. 1 (M-01410) LOCAL CTRL PNL	FROM HW-CP1
C105B	1"	5 - #12	1 - #12	JB-C105	2mm WASH COMP. 2 (M-01411) LOCAL CTRL PNL	FROM HW-CP2
C105C	3/4"	4 - #12	1 - #12	JB-C105	GRIT CLASSIFIER 1 (M-01210) LOCAL CTRL PNL	FROM HW-CP1
C105D	3/4"	4 - #12	1 - #12	JB-C105	GRIT CLASSIFIER 2 (M-01211) LOCAL CTRL PNL	FROM HW-CP2
C105E	1-1/2"	14 - #12	7 - #12	PB-C5	JB-C105A	FROM C101A, C103A
C105F	1"	4 - #12	2 - #12	JB-C105A	SV-01422A, SV-01422B	FROM HW-CP1

NO	BY	DATE	REVISIONS	DATE	APP.

Registered Professional Engineer (Electrical) CERTIFICATE NO. 82958 Basher Shaq Expires 03/31/28 ARIZONA, U.S.A.

PREPARED BY BASHAR ISHAQ
PROJECT ENGINEER
R.C.E. NO. E24590
EXP. DATE
DRAWN NC
DESIGNED NC, BI
CHECKED BI
SCALE
DATE FEB 2026

THESE DRAWINGS ARE THE PROPERTY OF P.A.C.E. AND SHALL NOT BE REPRODUCED IN ANY MANNER NOR BE USED FOR CONSTRUCTION UNLESS STAMPED 'ISSUED FOR CONSTRUCTION'.

TITLE
CONTROL CABLE & CONDUIT SCHEDULE 2

JOB
CITY OF SAN LUIS WEST WWTP
3.0 MGD MBR UPGRADES
SAN LUIS AZ.

PACE
Advanced Water Engineering
8723 E. VIA de COMMERCIO, SUITE A-204 | SCOTTSDALE, CA 85258
P: (408) 991-3595 | www.pacewater.com

SHEET
E0.31
112 OF 209 SHEETS

JOB NO. B777

FINAL PLANS ISSUED FOR BID

W:\B777\Engineering\B777 - 3MGD Exp\3MGD FINAL DSN\sheets\B777 - E0.30.dwg - Tab: E0.31 - by rcohn on 02/06/26 at 3:34:52 PM

DRAFT

CONTROL CONDUIT WIRE SCHEDULE

CONDUIT		WIRE		FROM	TO	REMARKS
NO.	SIZE	CONTROL	GROUND			
C105G	1"	4 - #12	2 - #12	JB-C105A	SV-01423A, SV-01423B	FROM HW-CP2
C105H	3/4"	2 - #12	1 - #12	JB-C105A	SV-01421	FROM HW-CP1
C105J	3/4"	2 - #12	1 - #12	JB-C105A	TSH-01410	FROM HW-CP1
C105K	3/4"	2 - #12	1 - #12	JB-C105A	TSH-01411	FROM HW-CP2
C105L	1"	4 - #12	2 - #12	PB-C5	JB-C105B	FROM C101A, C103A
C105M	3/4"	2 - #12	1 - #12	JB-C105B	TSH-01210	FROM HW-CP1
C105N	3/4"	2 - #12	1 - #12	JB-C105B	TSH-01211	FROM HW-CP2
C106	2"	26 - #14, 3 - #18 TSP	6 - #12	MAIN RIO PANEL	PB-C18	
C106A	1"	2 - #14, 1 - #18 TSP	-	PB-C18	FT-01540	
C106B	1"	6 - #14	1 - #12	PB-C18	XV-01523	
C107	2"	18 - #14, 2 - #18 TSP	5 - #12	PB-C18	PB-C4	
C108	2"	18 - #14, 2 - #18 TSP	5 - #12	PB-C4	PB-C5	
C108A	1"	6 - #14	1 - #12	PB-C5	CTRL PNL - HW ODOR CTRL UNIT	
C108B	1"	2 - #14, 1 - #18 TSP	-	PB-C5	FT-04341	
C108C	1"	2 - #14, 1 - #18 TSP	-	PB-C5	FT-01040	
C108D	1"	4 - #14	2 - #12	PB-C5	JB-C101	
C108E	3/4"	2 - #14	1 - #12	JB-C101	CGD-01590	
C108F	3/4"	2 - #14	1 - #12	JB-C101	HORN/STROBE LIGHT COMBO	
C108G	1"	4 - #14	2 - #12	PB-C5	JB-C103	
C108H	3/4"	2 - #14	1 - #12	JB-C103	CGD-01591	
C108J	3/4"	2 - #14	1 - #12	JB-C103	HORN/STROBE LIGHT COMBO	
C109	1"	2 - #12	1 - #12	CTRL PNL - HW ODOR CTRL UNIT	SV-08020	
C110	1-1/2"	8 - #12, 2 - #18 TSP	3 - #12	HEADWORKS CTRL PNL (HW-CP1)	PB-C2	
C110A	2"	8 - #12, 2 - #18 TSP	3 - #12	PB-C2	PB-C3	CONT. 3 - #12, 1 - #12G THRU C110B; 3 - #12, 1 - #12G THRU C114; 2 - #12, 1 - #12G, 2 - #18 TSP THRU C117
C110B	1"	3 - #12	1 - #12	PB-C3	JB-C100	
C110C	3/4"	3 - #12	1 - #12	JB-C100	LSH-01330A	2 - #12, 1 - #12G FOR POWER
C111	1-1/2"	8 - #12, 2 - #18 TSP	3 - #12	HEADWORKS CTRL PNL (HW-CP1)	PB-C4	
C111A	2"	8 - #12, 2 - #18 TSP	3 - #12	PB-C4	PB-C5	CONT. 3 - #12, 1 - #12G THRU C111B; 3 - #12, 1 - #12G THRU C115; 2 - #12, 1 - #12G, 2 - #18 TSP THRU C116
C111B	1"	3 - #12	1 - #12	PB-C5	JB-C101	
C111C	3/4"	3 - #12	1 - #12	JB-C101	LSH-01430A	2 - #12, 1 - #12G FOR POWER
C112	1-1/2"	8 - #12, 2 - #18 TSP	3 - #12	HEADWORKS CTRL PNL (HW-CP2)	PB-C2	
C112A	2"	8 - #12, 2 - #18 TSP	3 - #12	PB-C2	PB-C3	CONT. 3 - #12, 1 - #12G C112B; 3 - #12, 1 - #12G THRU C114; 2 - #12, 1 - #12G, 2 - #18 TSP THRU C117
C112B	1"	3 - #12	1 - #12	PB-C3	JB-C102	
C112C	3/4"	3 - #12	1 - #12	JB-C102	LSH-01331A	2 - #12, 1 - #12G FOR POWER
C113	1-1/2"	8 - #12, 2 - #18 TSP	3 - #12	HEADWORKS CTRL PNL (HW-CP2)	PB-C4	
C113A	2"	8 - #12, 2 - #18 TSP	3 - #12	PB-C4	PB-C5	CONT. 3 - #12, 1 - #12G THRU C113B; 3 - #12, 1 - #12G THRU C115; 2 - #12, 1 - #12G, 2 - #18 TSP THRU C116
C113B	1"	3 - #12	1 - #12	PB-C5	JB-C103	
C113C	3/4"	3 - #12	1 - #12	JB-C103	LSH-01431A	2 - #12, 1 - #12G FOR POWER
C114	1"	6 - #12	2 - #12	PB-C3	JB-C104A	FROM C110A, C112A
C114A	3/4"	3 - #12	1 - #12	JB-C104A	LSH-01330	FROM HW-CP1
C114B	3/4"	3 - #12	1 - #12	JB-C104A	LSH-01331	FROM HW-CP2
C115	1"	6 - #12	2 - #12	PB-C5	JB-C105A	FROM C111A, C113A
C115A	3/4"	3 - #12	1 - #12	JB-C105A	LSH-01430	FROM HW-CP1
C115B	3/4"	3 - #12	1 - #12	JB-C105A	LSH-01431	FROM HW-CP2
C116	1-1/4"	4 - #12, 4 - #18 TSP	2 - #12	PB-C5	JB-C116	FROM C111A, C113A
C116A	1"	2 - #12, 2 - #18 TSP	1 - #12	JB-C116	LT-01033	2 - #12, 1 - #12G FOR 24 VDC POWER

NO	BY	DATE	REVISIONS	DATE	APP.

Registered Professional Engineer (Electrical) CERTIFICATE NO. 35668 Nicolas Carter Stanek ARIZONA U.S.A. Expires 03/31/28

PREPARED BY BASHAR ISHAQ
PROJECT ENGINEER E24590
R.C.E. NO. --
EXP. DATE

DRAWN NC
DESIGNED NC, BI
CHECKED BI
SCALE
DATE FEB 2026

THESE DRAWINGS ARE THE PROPERTY OF P.A.C.E. AND SHALL NOT BE REPRODUCED IN ANY MANNER NOR BE USED FOR CONSTRUCTION UNLESS STAMPED 'ISSUED FOR CONSTRUCTION'.

TITLE
CONTROL CABLE & CONDUIT SCHEDULE 3

JOB
CITY OF SAN LUIS WEST WWTP
3.0 MGD MBR UPGRADES
SAN LUIS AZ.

PACE
Advanced Water Engineering
8723 E. VIA de COMMERCIO, SUITE A-204 | SCOTTSDALE, CA 85258
P: (408) 991-3595 | www.pacewater.com

FINAL PLANS ISSUED FOR BID

SHEET
E0.32
113 OF 209 SHEETS

JOB NO. B777

W:\B777\Engineering\B777 - 3MGD Exp\3MGD FINAL DSN\sheets\B777 - E0.32.dwg - Tab: E0.32 - by rohn on 02/06/26 at 3:34:52 PM

DRAFT

CONTROL CONDUIT WIRE SCHEDULE

CONDUIT		WIRE		FROM	TO	REMARKS
NO.	SIZE	CONTROL	GROUND			
C116B	1"	2 - #12, 2 - #18 TSP	1 - #12	JB-C116	LT-01133	2 - #12, 1 - #12G FOR 24 VDC POWER
C116C	1"	FACT. CBL.	-	LT-01033	LE-01033A	
C116D	1"	FACT. CBL.	-	LT-01033	LE-01033B	
C116E	1"	FACT. CBL.	-	LT-01133	LE-01133A	
C116F	1"	FACT. CBL.	-	LT-01133	LE-01133B	
C117	1-1/4"	4 - #12, 4 - #18 TSP	2 - #12	PB-C3	JB-C117	FROM C110A, C112A
C117A	1"	2 - #12, 2 - #18 TSP	1 - #12	JB-C117	LT-01031	2 - #12, 1 - #12G FOR 24 VDC POWER
C117B	1"	2 - #12, 2 - #18 TSP	1 - #12	JB-C117	LT-01131	2 - #12, 1 - #12G FOR 24 VDC POWER
C117C	1"	FACT. CBL.	-	LT-01031	LE-01031A	
C117D	1"	FACT. CBL.	-	LT-01031	LE-01031B	
C117E	1"	FACT. CBL.	-	LT-01131	LE-01131A	
C117F	1"	FACT. CBL.	-	LT-01131	LE-01131B	
C118	3/4"	2 - #12	1 - #12	HEADWORKS CTRL PNL (HW-CP1)	CONDULET TEE	
C118A	3/4"	2 - #12	1 - #12	HEADWORKS CTRL PNL (HW-CP2)	CONDULET TEE	
C118B	1"	4 - #12	2 - #12	CONDULET TEE	PB-C2	
C118C	2"	4 - #12	2 - #12	PB-C2	PB-C3	
C118D	1"	2 - #12	1 - #12	PB-C3	JB-C100	INTRINSICALLY SAFE CIRCUITS
C118E	1"	2 - #12	1 - #12	PB-C3	JB-C102	
C118F	1"	FACT. CBL.	-	JB-C100	LSH-01030	
C118G	1"	FACT. CBL.	-	JB-C102	LSH-01130	
C119	3/4"	2 - #12	1 - #12	HEADWORKS CTRL PNL (HW-CP1)	CONDULET TEE	
C119A	3/4"	2 - #12	1 - #12	HEADWORKS CTRL PNL (HW-CP2)	CONDULET TEE	
C119B	1"	4 - #12	2 - #12	CONDULET TEE	PB-C4	
C119C	2"	4 - #12	2 - #12	PB-C4	PB-C5	
C119D	1"	2 - #12	1 - #12	PB-C5	JB-C101	INTRINSICALLY SAFE CIRCUITS
C119E	1"	2 - #12	1 - #12	PB-C5	JB-C103	
C119F	1"	FACT. CBL.	-	JB-C101	LSH-01032	
C119G	1"	FACT. CBL.	-	JB-C103	LSH-01132	
C200	2"	16 - #14	4 - #12	MOTOR CONTROL CENTER (MCC-1)	PB-C19	FROM MS-2008B, MS-2009B, MS-2011B, MS-2003B INSIDE MCC-1
C200A	2"	8 - #14	2 - #12	MOTOR CONTROL CENTER (MCC-2)	PB-C19	FROM MS-2006B, MS-2012B INSIDE MCC-2
C200B	2"	24 - #14	6 - #12	PB-C19	PB-C2	CONT. 12 - #14, 3 - #12G THRU C200C; 12 - #14, 3 - #12G THRU C501
C200C	1-1/4"	12 - #14	3 - #12	PB-C2	JB-C200	
C200D	3/4"	4 - #14	1 - #12	JB-C200	EXISTING DIGESTER BLOWER 1 (BLR-2008B)	TO TSH-2008B, TSH-05560B
C200E	3/4"	4 - #14	1 - #12	JB-C200	EXISTING DIGESTER BLOWER 2 (BLR-2009B)	TO TSH-2009B, TSH-05561B
C200F	3/4"	4 - #14	1 - #12	JB-C200	EXISTING DIGESTER BLOWER 6 (BLR-2006B)	TO TSH-2006B, TSH-05562B
C201	1"	4 - #14, 2 - #18 TSP	1 - #12	MBR RIO PANEL	JB-C201	
C201A	1"	4 - #14	1 - #12	JB-C201	XV-05420	
C201B	3/4"	1 - #18 TSP	-	JB-C201	FT-05440	
C201C	3/4"	1 - #18 TSP	-	JB-C201	PT-05450	
C202	1"	4 - #14, 2 - #18 TSP	1 - #12	MBR RIO PANEL	JB-C202	
C202A	1"	4 - #14	1 - #12	JB-C202	XV-05421	
C202B	3/4"	1 - #18 TSP	-	JB-C202	FT-05441	
C202C	3/4"	1 - #18 TSP	-	JB-C202	PT-05451	
C203	1"	4 - #14, 2 - #18 TSP	1 - #12	MBR RIO PANEL	JB-C203	
C203A	1"	4 - #14	1 - #12	JB-C203	XV-05422	
C203B	3/4"	1 - #18 TSP	-	JB-C203	FT-05442	
C203C	3/4"	1 - #18 TSP	-	JB-C203	PT-05452	

NO	BY	DATE	REVISIONS	DATE	APP.

Registered Professional Engineer (Electrical) CERTIFICATE NO. 25868 Basher Ishaq State of ARIZONA U.S.A. Expires 03/31/28

PREPARED BY BASHAR ISHAQ
PROJECT ENGINEER E24590
R.C.E. NO. —
EXP. DATE
DRAWN NC
DESIGNED NC, BI
CHECKED BI
SCALE
DATE FEB 2026

THESE DRAWINGS ARE THE PROPERTY OF P.A.C.E. AND SHALL NOT BE REPRODUCED IN ANY MANNER NOR BE USED FOR CONSTRUCTION UNLESS STAMPED 'ISSUED FOR CONSTRUCTION'.

TITLE
CONTROL CABLE & CONDUIT SCHEDULE 4

JOB
CITY OF SAN LUIS WEST WWTP
3.0 MGD MBR UPGRADES
SAN LUIS AZ.

PACE
Advanced Water Engineering
8723 E. VIA de COMMERCIO, SUITE A- 204 | SCOTTSDALE, CA 85258
P: (408) 991-3595 | www.pacewater.com

FINAL PLANS ISSUED FOR BID

SHEET
E0.33
114 OF 209 SHEETS

JOB NO. B777

W:\B777\Engineering\B777 - 3MGD Exp\3MGD FINAL DSN\sheets\B777 - E0.33.dwg - Tab: E0.33 - by rishn on 02/06/26 at 3:34:52 PM

DRAFT

CONTROL CONDUIT WIRE SCHEDULE						
CONDUIT		WIRE		FROM	TO	REMARKS
NO.	SIZE	CONTROL	GROUND			
C204	1-1/2"	20 - #14, 3 - #18 TSP	3 - #12	MBR RIO PANEL	JB-C204	
C204A	1"	6 - #14	1 - #12	JB-C204	XV-03028	
C204B	1"	6 - #14	1 - #12	JB-C204	XV-04024	
C204C	3/4"	2 - #14, 1 - #18 TSP	-	JB-C204	FT-04040	
C204D	3/4"	1 - #18 TSP	-	JB-C204	PT-04050	
C204E	3/4"	1 - #18 TSP	-	JB-C204	AIT-04161	
C204F	1"	FACT. CBL.	-	AIT-04161	AE-04160	
C204G	1"	6 - #14	1 - #12	JB-C204	XV-04027	
C205	1-1/2"	20 - #14, 3 - #18 TSP	3 - #12	MBR RIO PANEL	JB-C205	
C205A	1"	6 - #14	1 - #12	JB-C205	XV-03128	
C205B	1"	6 - #14	1 - #12	JB-C205	XV-04025	
C205C	3/4"	2 - #14, 1 - #18 TSP	-	JB-C205	FT-04041	
C205D	3/4"	1 - #18 TSP	-	JB-C205	PT-04051	
C205E	3/4"	1 - #18 TSP	-	JB-C205	AIT-04163	
C205F	1"	FACT. CBL.	-	AIT-04163	AE-04162	
C205G	1"	6 - #14	1 - #12	JB-C205	XV-04028	
C206	1-1/2"	20 - #14, 3 - #18 TSP	3 - #12	MBR RIO PANEL	JB-C206	
C206A	1"	6 - #14	1 - #12	JB-C206	XV-03228	
C206B	1"	6 - #14	1 - #12	JB-C206	XV-04026	
C206C	3/4"	2 - #14, 1 - #18 TSP	-	JB-C206	FT-04042	
C206D	3/4"	1 - #18 TSP	-	JB-C206	PT-04052	
C206E	3/4"	1 - #18 TSP	-	JB-C206	AIT-04165	
C206F	1"	FACT. CBL.	-	AIT-04165	AE-04164	
C206G	1"	6 - #14	1 - #12	JB-C206	XV-04029	
C207	1-1/4"	14 - #14, 1 - #18 TSP	2 - #12	MBR RIO PANEL	JB-C207	
C207A	1"	6 - #14	1 - #12	JB-C207	XV-06021A	
C207B	1"	6 - #14	1 - #12	JB-C207	XV-06025A	
C207C	3/4"	2 - #14, 1 - #18 TSP	-	JB-C207	FT-06040	
C208	1-1/4"	14 - #14, 1 - #18 TSP	2 - #12	MAIN RIO PANEL	JB-C208	
C208A	3/4"	1 - #18 TSP	-	JB-C208	LT-06031	
C208B	1"	6 - #14	1 - #12	JB-C208	XV-06023 (4008-MOV) (EXISTING)	
C208C	1"	8 - #14	1 - #12	JB-C208	MOTOR STARTER - DIGESTER SUPERNATANT PUMP 1 (EXISTING)	
C209	1-1/4"	14 - #14, 1 - #18 TSP	2 - #12	MAIN RIO PANEL	JB-C209	
C209A	3/4"	1 - #18 TSP	-	JB-C209	LT-06033	
C209B	1"	6 - #14	1 - #12	JB-C209	XV-06027 (4007-MOV) (EXISTING)	
C209C	1"	8 - #14	1 - #12	JB-C209	MOTOR STARTER - DIGESTER SUPERNATANT PUMP 2 (EXISTING)	
C210	1"	6 - #14	1 - #12	MAIN RIO PANEL	XV-05526 (4015-MOV) (EXISTING)	
C211	3/4"	1 - ETH	-	MBR RIO PANEL	VFD - PA BLOWER 1	
C211A	3/4"	1 - ETH	-	MBR RIO PANEL	VFD - PA BLOWER 2	
C211B	3/4"	1 - ETH	-	MBR RIO PANEL	VFD - PA BLOWER 3	
C212	3/4"	1 - ETH	-	MBR RIO PANEL	VFD - MBR BLOWER 1	
C212A	3/4"	1 - ETH	-	MBR RIO PANEL	VFD - MBR BLOWER 2	
C213	1-1/2"	14 - #14	4 - #12	MAIN RIO PANEL	JB-C213	
C213A	3/4"	8 - #14	1 - #12	JB-C213	MTR STARTER - EXH FAN 1 (M-04110)	
C213B	3/4"	2 - #14	1 - #12	JB-C213	COMBUST. GAS DETECTOR (CGD-04190)	
C213C	3/4"	2 - #14	1 - #12	JB-C213	STROBE LIGHT 1	
C213D	3/4"	2 - #14	1 - #12	JB-C213	MANDOWN SWITCH 1 (MDN-04199B)	
C213E	3/4"	2 - #14	1 - #12	MTR STARTER - EXH FAN 1 (M-04110)	COMBUST. GAS DETECTOR (CGD-04190)	
C214	1-1/2"	14 - #14	4 - #12	MAIN RIO PANEL	JB-C214	
C214A	3/4"	8 - #14	1 - #12	JB-C214	MTR STARTER - EXH FAN 2 (M-04111)	
C214B	3/4"	2 - #14	1 - #12	JB-C214	COMBUST. GAS DETECTOR (CGD-04191)	

NO	BY	DATE	REVISIONS	DATE	APP.

Registered Professional Engineer (Electrical) CERTIFICATE NO. 35668 Basshar Ishaq ARIZONA, U.S.A. Expires 03/31/28

PREPARED BY BASHAR ISHAQ | PROJECT ENGINEER | R.C.E. NO. E24590 | EXP. DATE --- | SCALE | DRAWN NC | DESIGNED NC, BI | CHECKED BI | DATE FEB 2026

THESE DRAWINGS ARE THE PROPERTY OF P.A.C.E. AND SHALL NOT BE REPRODUCED IN ANY MANNER NOR BE USED FOR CONSTRUCTION UNLESS STAMPED "ISSUED FOR CONSTRUCTION".

TITLE
CONTROL CABLE & CONDUIT SCHEDULE 5

JOB
CITY OF SAN LUIS WEST WWTP
3.0 MGD MBR UPGRADES
SAN LUIS AZ.

PACE
Advanced Water Engineering
8723 E. VIA de COMMERCIO, SUITE A-204 | SCOTTSDALE, CA 85258
P: (408) 991-3595 | www.pacewater.com

FINAL PLANS ISSUED FOR BID

SHEET
E0.34
115 OF 209 SHEETS

JOB NO. B777

W:\B777\Engineering\B777 - 3MGD Exp\3MGD FINAL DSK\sheets\B777 - E0.30.dwg - Tab: E0.34 - by rodm on 02/26/26 at 3:34:52 PM

DRAFT

CONTROL CONDUIT WIRE SCHEDULE

CONDUIT		WIRE		FROM	TO	REMARKS
NO.	SIZE	CONTROL	GROUND			
C214C	3/4"	2 - #14	1 - #12	JB-C214	STROBE LIGHT 2	
C214D	3/4"	2 - #14	1 - #12	JB-C214	MANDOWN SWITCH 2 (MDN-04199C)	
C214E	3/4"	2 - #14	1 - #12	MTR STARTER - EXH FAN 2 (M-04111)	COMBUST. GAS DETECTOR (CGD-04191)	
C215	1-1/2"	14 - #14	4 - #12	MAIN RIO PANEL	JB-C215	
C215A	3/4"	8 - #14	1 - #12	JB-C215	MTR STARTER - EXH FAN 3 (M-04112)	
C215B	3/4"	2 - #14	1 - #12	JB-C215	COMBUST. GAS DETECTOR (CGD-04192)	
C215C	3/4"	2 - #14	1 - #12	JB-C215	STROBE LIGHT 3	
C215D	3/4"	2 - #14	1 - #12	JB-C215	MANDOWN SWITCH 3 (MDN-04199D)	
C215E	3/4"	2 - #14	1 - #12	MTR STARTER - EXH FAN 3 (M-04112)	COMBUST. GAS DETECTOR (CGD-04192)	
C216	1-1/2"	14 - #14	4 - #12	MAIN RIO PANEL	JB-C216	
C216A	3/4"	8 - #14	1 - #12	JB-C216	MTR STARTER - EXH FAN 4 (M-04113)	
C216B	3/4"	2 - #14	1 - #12	JB-C216	COMBUST. GAS DETECTOR (CGD-04193)	
C216C	3/4"	2 - #14	1 - #12	JB-C216	STROBE LIGHT 4	
C216D	3/4"	2 - #14	1 - #12	JB-C216	MANDOWN SWITCH 4 (MDN-04199E)	
C216E	3/4"	2 - #14	1 - #12	MTR STARTER - EXH FAN 4 (M-04113)	COMBUST. GAS DETECTOR (CGD-04193)	
C217	1"	4 - #14	2 - #12	MAIN RIO PANEL	CONDULET TEE	
C217A	3/4"	2 - #14	1 - #12	CONDULET TEE	COMBUST. GAS DETECTOR (CGD-04193A)	
C217B	3/4"	2 - #14	1 - #12	CONDULET TEE	STROBE LIGHT 5	
C218	3/4"	2 - #14	1 - #12	MAIN RIO PANEL	STROBE LIGHT 6	
C219	3/4"	2 - #14	1 - #12	MAIN RIO PANEL	HORN/STROBE LIGHT COMBO	
C220	3/4"	2 - #14	1 - #12	MAIN RIO PANEL	MANDOWN SWITCH 5 (MDN-04199F)	
C221	1-1/4"	16 - #14	2 - #12	MAIN RIO PANEL	JB-C221	
C221A	3/4"	8 - #14	1 - #12	JB-C221	MOTOR STARTER - MLSS CHANNEL BLR 1	
C221B	3/4"	8 - #14	1 - #12	JB-C221	MOTOR STARTER - MLSS CHANNEL BLR 2	
C222	3/4"	4 - #14	1 - #12	VFD - PA BLOWER 1	PA BLOWER 1	TO TSH-05101, TSH-05160A INSIDE BLOWER
C223	3/4"	4 - #14	1 - #12	VFD - PA BLOWER 2	PA BLOWER 2	TO TSH-05102, TSH-05161A INSIDE BLOWER
C224	3/4"	4 - #14	1 - #12	VFD - PA BLOWER 3	PA BLOWER 3	TO TSH-05103, TSH-05162A INSIDE BLOWER
C225	3/4"	4 - #14	1 - #12	VFD - MBR BLOWER 1	MBR BLOWER 1	TO TSH-05301, TSH-05360A INSIDE BLOWER
C226	3/4"	4 - #14	1 - #12	VFD - MBR BLOWER 2	MBR BLOWER 2	TO TSH-05302, TSH-05361A INSIDE BLOWER
C227	1"	1 - #18 TSP	-	MBR RIO PANEL	AIT-02060	
C227A	-	FACT. CBL.	-	AIT-02060	AE-02060	
C228	1"	6 - #14	1 - #12	MBR RIO PANEL	XV-05123	
C229	1"	6 - #14	1 - #12	MBR RIO PANEL	XV-05124	
C230	1"	8 - #14	1 - #12	MAIN RIO PANEL	MTR STARTER - EXH FAN 5 (M-04114)	
C400	2"	30 - #14	9 - #12	PB-C1	PB-C12	20 - #14, 6 - #12G FROM C600K, 10 - #14, 3 - #12G FROM C600L
C400A	2"	30 - #14	9 - #12	PB-C12	PB-C13	
C400B	2"	30 - #14	9 - #12	PB-C13	PB-C14	
C400C	3/4"	2 - #14	1 - #12	PB-C14	DISC SW - ANOXIC MIXER 1	FROM MINICAS INSIDE MCC-1
C401	1-1/4"	16 - #14	5 - #12	PB-C14	PB-C15	
C401A	1"	8 - #14	3 - #12	PB-C15	PB-C16	
C401B	3/4"	2 - #14	1 - #12	PB-C16	DISC SW - ANOXIC MIXER 2	FROM MINICAS INSIDE MCC-1
C401C	3/4"	2 - #14	1 - #12	PB-C16	DISC SW - ANOXIC MIXER 3	FROM MINICAS INSIDE MCC-2

NO	BY	DATE	REVISIONS	DATE	APP.

Registered Professional Engineer (Electrical) CERTIFICATE NO. 82568 Basher Ishaq ARIZONA, U.S.A. Expires 03/31/28

PREPARED BY BASHAR ISHAQ
PROJECT ENGINEER
R.C.E. NO. --
EXP. DATE E24580
SCALE
DRAWN NC
DESIGNED NC, BI
CHECKED BI
DATE FEB 2026

THESE DRAWINGS ARE THE PROPERTY OF P.A.C.E. AND SHALL NOT BE REPRODUCED IN ANY MANNER NOR BE USED FOR CONSTRUCTION UNLESS STAMPED 'ISSUED FOR CONSTRUCTION'.

TITLE
CONTROL CABLE & CONDUIT SCHEDULE 6

JOB
CITY OF SAN LUIS WEST WWTP
3.0 MGD MBR UPGRADES
AZ.
SAN LUIS

PACE
Advanced Water Engineering
8723 E. VIA de COMMERCIO, SUITE A-204 | SCOTTSDALE, CA 85258
P: (408) 991-3595 | www.pacewater.com

FINAL PLANS ISSUED FOR BID

SHEET
E0.35
116 OF 209 SHEETS

JOB NO. B777

W:\B777\Engineering\B777 - 3MGD Exp\3MGD FINAL DSN\sheets\B777 - E0.35.dwg - Tab: E0.35 - by rohn on 02/06/26 at 3:34:52 PM

DRAFT

CONTROL CONDUIT WIRE SCHEDULE						
CONDUIT		WIRE		FROM	TO	REMARKS
NO.	SIZE	CONTROL	GROUND			
C402	3/4"	4 - #14	1 - #12	PB-C14	DISC SW - FEED FWD PUMP 1	FROM MINICAS & VFD-02404 INSIDE MCC-1
C402A	3/4"	4 - #14	1 - #12	PB-C14	DISC SW - FEED FWD PUMP 2	FROM MINICAS & VFD-02403 INSIDE MCC-1
C402B	3/4"	4 - #14	1 - #12	PB-C14	DISC SW - FEED FWD PUMP 3	FROM MINICAS & VFD-02402 INSIDE MCC-2
C402C	3/4"	4 - #14	1 - #12	PB-C15	DISC SW - INTERN RECYC PUMP 1	FROM MINICAS & VFD-02101 INSIDE MCC-1
C402D	3/4"	4 - #14	1 - #12	PB-C15	DISC SW - INTERN RECYC PUMP 2	FROM MINICAS & VFD-02201 INSIDE MCC-1
C402E	3/4"	4 - #14	1 - #12	PB-C16	PB-C17	
C402F	3/4"	4 - #14	1 - #12	PB-C17	DISC SW - INTERN RECYC PUMP 3	FROM MINICAS & VFD-02301 INSIDE MCC-2
C403	1"	1 - #18 TSP	-	MBR RIO PANEL	PB-C13	
C403A	1"	1 - #18 TSP	-	PB-C13	PB-C14	
C403B	1"	1 - #18 TSP	-	PB-C14	PB-C15	
C404	1"	1 - #18 TSP	-	PB-C15	PB-C16	
C404A	1"	1 - #18 TSP	-	PB-C16	JB-C404	
C404B	1"	1 - #18 TSP	-	JB-C404	LT-02431	
C405	1"	2 - #14	1 - #12	MBR RIO PANEL	PB-C13	
C405A	1"	2 - #14	1 - #12	PB-C13	PB-C14	
C405B	1"	2 - #14	1 - #12	PB-C14	PB-C15	
C405C	1"	2 - #14	1 - #12	PB-C15	PB-C16	INTRINSICALLY SAFE CIRCUIT
C405D	1"	2 - #14	1 - #12	PB-C16	JB-C404	
C405E	1"	FACT. CBL.	-	JB-C404	LSL-02430	
C406	2-1/2"	12 - #14, 18 - #18 TSP	3 - #12	MBR RIO PANEL	PB-C13	
C406A	2-1/2"	12 - #14, 18 - #18 TSP	3 - #12	PB-C13	PB-C14	CONT. 4 - #14, 2 - #18 TSP, 1 - #12G THRU C410; 8 - #14, 16 - #18 TSP, 2 - #12G THRU C406B
C406B	2-1/2"	8 - #14, 16 - #18 TSP	2 - #12	PB-C14	PB-C15	CONT. 4 - #18 TSP THRU C407; 8 - #14, 12 - #18 TSP, 2 - #12G THRU C406C
C406C	2"	8 - #14, 12 - #18 TSP	2 - #12	PB-C15	PB-C16	CONT. 4 - #18 TSP THRU C408; 4 - #18 TSP THRU C409; 4 - #14, 2 - #18 TSP, 1 - #12G THRU C411; 4 - #14, 2 - #18 TSP, 1 - #12G THRU C412
C407	1"	4 - #18 TSP	-	PB-C15	JB-C407	FROM MBR RIO PANEL
C407A	1"	1 - #18 TSP	-	JB-C407	LT-02131	
C407B	1"	3 - #18 TSP	-	JB-C407	AIT-02160	
C407C	1"	FACT. CBL.	-	AIT-02160	AE-02160A, AE-02160B	
C408	1"	4 - #18 TSP	-	PB-C16	JB-C408	FROM MBR RIO PANEL
C408A	1"	1 - #18 TSP	-	JB-C408	LT-02231	
C408B	1"	3 - #18 TSP	-	JB-C408	AIT-02260	
C408C	1"	FACT. CBL.	-	AIT-02260	AE-02260A, AE-02260B	
C409	1"	4 - #18 TSP	-	PB-C16	JB-C409	FROM MBR RIO PANEL
C409A	1"	1 - #18 TSP	-	JB-C409	LT-02331	
C409B	1"	3 - #18 TSP	-	JB-C409	AIT-02360	
C409C	1"	FACT. CBL.	-	AIT-02360	AE-02360A, AE-02360B	
C410	1"	4 - #14, 2 - #18 TSP	1 - #12	PB-C14	JB-C410	FROM MBR RIO PANEL
C410A	3/4"	4 - #14	1 - #12	JB-C410	XV-05220	
C410B	3/4"	1 - #18 TSP	-	JB-C410	FT-05240	
C410C	3/4"	1 - #18 TSP	-	JB-C410	PT-05250	
C411	1"	4 - #14, 2 - #18 TSP	1 - #12	PB-C16	JB-C411	FROM MBR RIO PANEL
C411A	3/4"	4 - #14	1 - #12	JB-C411	XV-05221	
C411B	3/4"	1 - #18 TSP	-	JB-C411	FT-05241	
C411C	3/4"	1 - #18 TSP	-	JB-C411	PT-05251	
C412	1"	4 - #14, 2 - #18 TSP	1 - #12	PB-C16	JB-C412	FROM MBR RIO PANEL
C412A	3/4"	4 - #14	1 - #12	JB-C412	XV-05222	
C412B	3/4"	1 - #18 TSP	-	JB-C412	FT-05242	
C412C	3/4"	1 - #18 TSP	-	JB-C412	PT-05252	

NO	BY	DATE	REVISIONS	DATE	APP.

Registered Professional Engineer (Electrical) CERTIFICATE NO. 35668 Basshar Ishaq ARIZONA, U.S.A. Expires 03/31/28

PREPARED BY BASSHAR ISHAQ
PROJECT ENGINEER E24590
R.C.E. NO. —
EXP. DATE
SCALE
DRAWN NC
DESIGNED NC, BI
CHECKED BI
DATE FEB 2026

THESE DRAWINGS ARE THE PROPERTY OF P.A.C.E. AND SHALL NOT BE REPRODUCED IN ANY MANNER NOR BE USED FOR CONSTRUCTION UNLESS STAMPED 'ISSUED FOR CONSTRUCTION'.

TITLE
CONTROL CABLE & CONDUIT SCHEDULE 7

JOB
CITY OF SAN LUIS WEST WWTP
3.0 MGD MBR UPGRADES
SAN LUIS AZ.

PACE
Advanced Water Engineering
8723 E. VIA de COMMERCIO, SUITE A-204 | SCOTTSDALE, CA 85258
P: (408) 991-3595 | www.pacewater.com

SHEET
E0.36
117 OF 209 SHEETS

JOB NO. B777

FINAL PLANS ISSUED FOR BID

W:\B777\Engineering\B777 - 3MGD Exp\3MGD FINAL DSN\sheets\B777 - E0.36.dwg - Tab: E0.36 - by rohm on 02/06/26 at 3:34:52 PM

DRAFT

CONTROL CONDUIT WIRE SCHEDULE

CONDUIT		WIRE		FROM	TO	REMARKS
NO.	SIZE	CONTROL	GROUND			
C413	3/4"	2 - #14	1 - #12	MAIN RIO PANEL	PB-C13	INTRINSICALLY SAFE CIRCUIT
C413A	3/4"	2 - #14	1 - #12	PB-C13	PB-C14	
C413B	3/4"	2 - #14	1 - #12	PB-C14	JB-C413	
C413C	3/4"	FACT. CBL.	-	JB-C413	LSH-02432	
C414	1-1/2"	12 - #14	6 - #12	MBR RIO PANEL	PB-C13	INTRINSICALLY SAFE CIRCUITS
C414A	1-1/2"	12 - #14	6 - #12	PB-C13	PB-C14	
C414B	1-1/2"	12 - #14	6 - #12	PB-C14	PB-C15	
C415	1"	4 - #14	2 - #12	PB-C15	JB-C407	
C415A	1"	2-FACT. CBL.	-	JB-C407	LSH-02130A, LSL-02130B	
C416	1"	8- #14	4 - #12	PB-C15	PB-C16	
C416A	1"	4 - #14	2 - #12	PB-C16	JB-C408	
C416B	1"	4 - #14	2 - #12	PB-C16	JB-C409	
C417	1"	2-FACT. CBL.	-	JB-C408	LSH-02230A, LSL-02230B	
C417A	1"	2-FACT. CBL.	-	JB-C409	LSH-02330A, LSL-02330B	
C500	1"	4 - #14, 1 - #18 TSP	2 - #12	MAIN RIO PANEL	PB-C13	
C500A	1"	4 - #14, 1 - #18 TSP	2 - #12	PB-C13	PB-C14	
C500B	1"	4 - #14, 1 - #18 TSP	2 - #12	PB-C14	PB-C15	
C500C	1"	4 - #14, 1 - #18 TSP	2 - #12	PB-C15	PB-C16	
C500D	1"	4 - #14, 1 - #18 TSP	2 - #12	PB-C16	PB-C17	
C500E	2"	2 - FACT. CBL., 1 - #18 TSP	-	PB-C17	LSL-01631A, LSH-01631B, LT-01630	
C501	2"	12 - #14	3 - #12	PB-C2	PB-C4	FROM C200B
C501A	2"	12 - #14	3 - #12	PB-C4	PB-C6	
C501B	1-1/4"	12 - #14	3 - #12	PB-C6	JB-C501	
C501C	3/4"	4 - #14	1 - #12	JB-C501	FEQ BLOWER 1 (2011B)	FROM MS-2011B INSIDE MCC-1 TO TSH-2011B, TSH-05060B INSIDE BLOWER
C501D	3/4"	4 - #14	1 - #12	JB-C501	FEQ BLOWER 2 (2012B)	FROM MS-2012B INSIDE MCC-2 TO TSH-2012B, TSH-05061B INSIDE BLOWER
C501E	3/4"	4 - #14	1 - #12	JB-C501	FEQ BLOWER 3 (2003B)	FROM MS-2003B INSIDE MCC-1 TO TSH-2003B, TSH-05062B INSIDE BLOWER
C502	1"	-	-	MAIN PLC PANEL	PB-C1	
C502A	1"	-	-	PB-C1	PB-C12	
C502B	1"	-	-	PB-C12	PB-C13	
C502C	1"	-	-	PB-C13	PB-C14	
C502D	1"	-	-	PB-C14	PB-C15	
C502E	1"	-	-	PB-C15	PB-C16	
C502F	1"	-	-	PB-C16	PB-C17	
C502G	3/4"	-	-	PB-C17	DISC SW - MIXER 4A	
C502H	3/4"	-	-	PB-C17	DISC SW - MIXER 4B	
C502J	3/4"	-	-	PB-C17	DISC SW - SLUDGE PUMP 4	
C600	1"	6 - #14, 1 - #18 TSP	1 - #12	MBR PLC PANEL	PB-C1	
C600A	2"	14 - #14, 6 - #18 TSP	1 - #12	PB-C1	PB-C7	8 - #14, 5 - #18 TSP FROM C601
C600B	2"	14 - #14, 6 - #18 TSP	1 - #12	PB-C7	PB-C9	
C600C	2"	14 - #14, 6 - #18 TSP	1 - #12	PB-C9	PB-C11	
C600D	2"	14 - #14, 6 - #18 TSP	1 - #12	PB-C11	JB-C600	
C600E	3/4"	1 - #18 TSP	-	JB-C600	LT-04530	FROM MAIN PLC PANEL
C600F	1-1/4"	8 - #14, 4 - #18 TSP	-	JB-C600	PMP-04503A, PMP-04503B	FROM MAIN PLC PANEL
C600G	3/4"	2 - #14, 1 - #18 TSP	-	JB-C600	FT-04440	FROM MBR PLC PANEL
C600H	3/4"	4 - #14	1 - #12	JB-C600	XV-04424	FROM MBR PLC PANEL
C600K	1-1/2"	22 - #14	7 - #12	MCC-1	PB-C1	CONT. 20 - #14, 6 - #12G THRU C400; 2 - #14, 1 - #12G THRU C601A
C600L	1-1/4"	12 - #14	4 - #12	MCC-2	PB-C1	CONT. 10 - #14, 3 - #12G THRU C400; 2 - #14, 1 - #12G THRU C601A
C601	2"	12 - #14, 6 - #18 TSP	1 - #12	MAIN PLC PANEL	PB-C1	CONT. 8 - #14, 5 - #18 TSP THRU C600A
C601A	2"	8 - #14, 1 - #18 TSP	3 - #12	PB-C1	PB-C7	
C601B	2"	8 - #14, 1 - #18 TSP	3 - #12	PB-C7	PB-C9	

W:\B777\Engineering\B777 - 3MGD Exp\3MGD FINAL DS\sheets\B777 - E0.30.dwg - Tab: E0.37 - by rodm on 02/26/26 at 3:34:52 PM

NO	BY	DATE	REVISIONS	DATE	APP.

Registered Professional Engineer (Electrical) CERTIFICATE NO. 82586 Basher Ishaq Shaq Stamped ARIZONA, U.S.A. Expires 03/31/28

PREPARED BY BASHAR ISHAQ
PROJECT ENGINEER E24590
R.C.E. NO. --
EXP. DATE
DRAWN NC
DESIGNED NC, BI
CHECKED BI
SCALE
DATE FEB 2026

THESE DRAWINGS ARE THE PROPERTY OF P.A.C.E. AND SHALL NOT BE REPRODUCED IN ANY MANNER NOR BE USED FOR CONSTRUCTION UNLESS STAMPED 'ISSUED FOR CONSTRUCTION'.

TITLE
CONTROL CABLE & CONDUIT SCHEDULE 8

JOB
CITY OF SAN LUIS WEST WWTP
3.0 MGD MBR UPGRADES
AZ.
SAN LUIS

PACE
Advanced Water Engineering
8723 E. VIA de COMMERCIO, SUITE A-204 | SCOTTSDALE, CA 85258
P: (408) 991-3595 | www.pacewater.com

FINAL PLANS ISSUED FOR BID

SHEET
E0.37
118 OF 209 SHEETS

JOB NO. B777

DRAFT

CONTROL CONDUIT WIRE SCHEDULE						
CONDUIT		WIRE		FROM	TO	REMARKS
NO.	SIZE	CONTROL	GROUND			
C601C	2"	8 - #14, 1 - #18 TSP	3 - #12	PB-C9	PB-C11	
C601D	1"	2 - #14, 1 - #18 TSP	-	PB-C11	FT-04240	FROM MAIN PLC PANEL
C601E	1"	2 - #14	1 - #12	PB-C11	EXISTING FLOW SWITCH @ EFF PUMPS	FROM MAIN PLC PANEL
C601F	1"	4 - #14	2 - #12	PB-C11	JB-C601	
C602	3/4"	2 - #14	1 - #12	JB-C601	DISC SW - EFF PUMP 1	FROM MCC-1
C602A	3/4"	2 - #14	1 - #12	JB-C601	DISC SW - EFF PUMP 2	FROM MCC-2
C700	1"	4 - #14, 1 - #18 TSP	2 - #12	DEWATERING CTRL PNL (CP-1)	JB-C700	
C700A	3/4"	2 - #14	1 - #12	JB-C700	SLUDGE DEWAT FEED PUMP 1 (PMP-07001)	FOR TSH-07001
C700B	3/4"	2 - #14	1 - #12	JB-C700	SLUDGE DEWAT FEED PUMP 2 (PMP-07002)	FOR TSH-07002
C700C	3/4"	1 - #18 TSP	-	JB-C700	FT-07140	
C701	2"	2 - FACT. CBL., 1 - #18 TSP	-	DEWATERING CTRL PNL (CP-1)	FLOC TANK	HIGH PROBE, REFERENCE PROBE, LT-07130
C702	3/4"	2 - #12	1 - #12	DEWATERING CTRL PNL (CP-1)	SV-07125A	120 VAC
C703	3/4"	2 - #12	1 - #12	DEWATERING CTRL PNL (CP-1)	SV-07125B	120 VAC
C704	3/4"	2 - #12	1 - #12	DEWATERING CTRL PNL (CP-1)	SV-07125C	120 VAC
C705	3/4"	2 - #14	1 - #12	DEWATERING CTRL PNL (CP-1)	CONVEYOR PULL CORD	
C706	3/4"	2 - #14	1 - #12	DEWATERING CTRL PNL (CP-1)	CONVEYOR ZERO SPEED SWITCH	
C707	1"	8 - #14, 2 - #18 TSP	-	DEWATERING CTRL PNL (CP-1)	POLYMER SYSTEM CONTROL PANEL (PS-CP)	
C708	1-1/4"	4 - #14, 5 - #18 TSP	1 - #12	POLYMER SYSTEM CONTROL PANEL (PS-CP)	JB-C708	
C708A	3/4"	2 - #14	1 - #12	JB-C708	PRESSURE SWITCH	NEAT POLY PUMP LOSS OF PWR ALARM
C708B	3/4"	2 - #14, 2 - #18 TSP	-	JB-C708	FEED VALVE	WATER FEED
C708C	3/4"	1 - #18 TSP	-	JB-C708	FLOW METER	WATER FLOW
C708D	3/4"	1 - #18 TSP	-	JB-C708	PRESSURE TRANSDUCER 1	WATER PRESSURE
C708E	3/4"'	1 - #18 TSP	-	JB-C708	PRESSURE TRANSDUCER 2	NEAT POLY PUMP DISCHARGE PRESSURE
C800	1"	6 - #14	1 - #12	MCC-1	PB-C1	
C800A	1"	6 - #14	1 - #12	MCC-2	PB-C1	
C800B	2"	12 - #14	2 - #12	PB-C1	PB-C12	
C800C	1"	12 - #14	2 - #12	PB-C12	PB-C13	
C800D	1"	12 - #14	2 - #12	PB-C13	JB-C800	
C800E	3/4"	6 - #14	1 - #12	JB-C800	DISC SW - FLOW EQ PUMP 1	2 - #14 FROM VFD-01601 & 4 - #14 FROM MONITORING RELAY INSIDE MCC-1
C800F	3/4"	6 - #14	1 - #12	JB-C800	DISC SW - FLOW EQ PUMP 2	2 - #14 FROM VFD-01602 & 4 - #14 FROM MONITORING RELAY INSIDE MCC-2
C801	3/4"	2 - #14, 1 - #18 TSP	-	MAIN RIO PANEL	PB-C13	
C801A	3/4"	2 - #14, 1 - #18 TSP	-	PB-C13	JB-C800	
C801B	3/4"	2 - #14, 1 - #18 TSP	-	JB-C800	FT-01640	
C900	2"	30 - #14, 1 - #18 TSP	2 - #12	MAIN PLC PANEL	PB-C1	
C900A	2"	30 - #14, 1 - #18 TSP	2 - #12	PB-C1	PB-C7	
C900B	2"	30 - #14, 1 - #18 TSP	2 - #12	PB-C7	PB-C8	CONT. 20 - #14, 1 - #12G THRU C901; 2 - #14, 1 - #18 TSP THRU C902; 8 - #14, 1 - #12G THRU C903
C901	1-1/4"	20 - #14	1 - #12	PB-C8	PLANT DRAIN PS CTRL PNL	FROM MAIN PLC PANEL
C902	1"	2 - #14, 1 - #18 TSP	-	PB-C8	FT-07240	FROM MAIN PLC PANEL
C903	2"	8 - #14	1 - #12	PB-C8	PB-C20	
C903A	1"	8 - #14	1 - #12	PB-C20	CTRL PNL - LOWER DRYING BED PS (EXISTING)	FROM MAIN PLC PANEL
C904	2"	3 - FACT. CBL., 1 - #18 TSP	-	CTRL PNL - PLANT DRAIN PS	LSHH-07231A, LSH-07231B, LSL-07231C, LT-07232	
C1000	1"	2 - #14, 1 - #18 TSP	-	PLANT PROCESS WATER PS CONTROL PANEL	FT-04340	
C1001	1"	1 - #18 TSP	-	PLANT PROCESS WATER PS CONTROL PANEL	PT-04353	

NO	BY	DATE	REVISIONS	DATE	APP.

Registered Professional Engineer (Electrical) CERTIFICATE NO. 82568 Basher Ishaq Shaq Expires 03/31/28 ARIZONA, U.S.A.

THESE DRAWINGS ARE THE PROPERTY OF P.A.C.E. AND SHALL NOT BE REPRODUCED IN ANY MANNER NOR BE USED FOR CONSTRUCTION UNLESS STAMPED 'ISSUED FOR CONSTRUCTION'.

PREPARED BY BASHAR ISHAQ
PROJECT ENGINEER
R.C.E. NO. --
EXP. DATE
SCALE
DRAWN NC
DESIGNED NC, BI
CHECKED BI
DATE FEB 2026

TITLE
CONTROL CABLE & CONDUIT SCHEDULE 9

JOB
CITY OF SAN LUIS WEST WWTP
3.0 MGD MBR UPGRADES
SAN LUIS AZ.

PACE
Advanced Water Engineering
8723 E. VIA de COMMERCIO, SUITE A-204 | SCOTTSDALE, CA 85258
P: (408) 991-3595 | www.pacewater.com

SHEET
E0.38
119 OF 209 SHEETS

JOB NO. B777

FINAL PLANS ISSUED FOR BID

W:\B777\Engineering\B777 - 3MGD Exp\3MGD FINAL DSN\sheets\B777 - E0.38.dwg - Tab: E0.38 - by rschn on 02/26/26 at 3:34:52 PM

DRAFT

CONSTRUCTION NOTES:

1. ENTRANCE GATE MOTOR (NORTH), 120 VAC, 1/2 HP, MF'R: LIFTMASTER, PN CSW200UL (OR EQUAL).
2. ENTRANCE GATE MOTOR (SOUTH), 120 VAC, 1/2 HP, MF'R: LIFTMASTER, PN CSW200UL (OR EQUAL).
3. FUSED DISCONNECT SWITCH, 480V, 30A, 3Ø-3W, HEAVY-DUTY, NEMA 4X, MF'R: EATON, PN DH361FWK OR APPROVED EQUAL. SEE DETAIL "C" SHEET E11.1.

LEGEND:

- POWER PULLBOX. SEE DETAIL "A" SHEET E11.7.
- CONTROL PULLBOX. SEE DETAIL "B" SHEET E11.7.

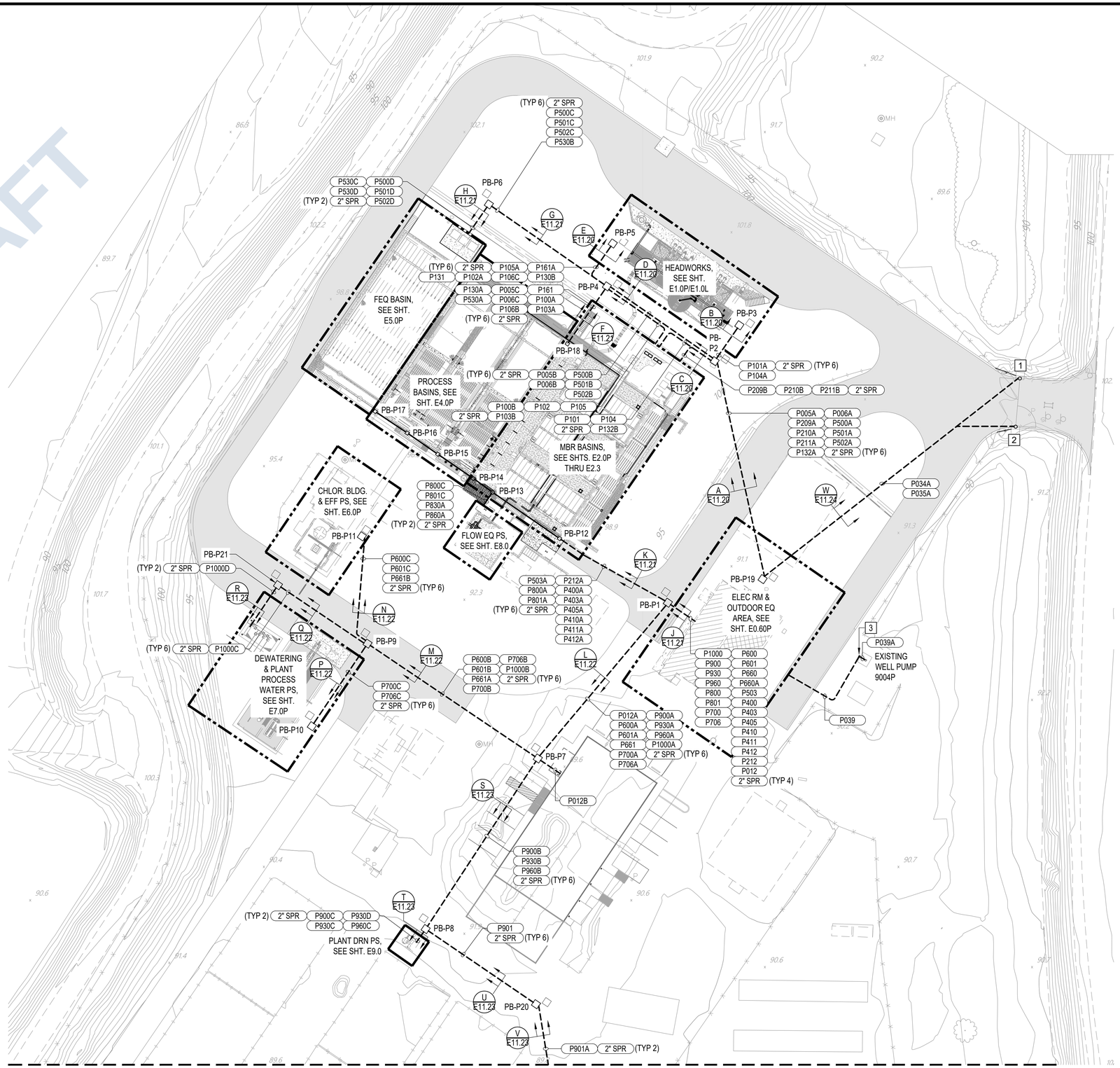

SEE SHEET E0.51

ELECTRICAL POWER SITE PLAN - NORTH

SCALE: 1" = 30'

NO	BY	DATE	REVISIONS	DATE	APP.

Registered Professional Engineer (Electrical) CERTIFICATE NO. 35958 Basheer Shaiq State of ARIZONA U.S.A. Expires 03/31/28

PREPARED BY: BASHAR SHAIQ
PROJECT ENGINEER
R.C.E. NO. 1--
EXP. DATE
DRAWN: NC
DESIGNED: NC, BI
CHECKED: BI
SCALE
DATE: FEB 2026

THESE DRAWINGS ARE THE PROPERTY OF P.A.C.E. AND SHALL NOT BE REPRODUCED IN ANY MANNER NOR BE USED FOR CONSTRUCTION UNLESS STAMPED 'ISSUED FOR CONSTRUCTION'.

TITLE: ELECTRICAL SITE POWER PLAN - NORTH

JOB: CITY OF SAN LUIS WEST WWTP 3.0 MGD MBR UPGRADES — SAN LUIS AZ.

PACE Advanced Water Engineering
8723 E. VIA de COMMERCIO, SUITE A-204 | SCOTTSDALE, CA 85258
P: (408) 991-3595 | www.pacewater.com

SHEET E0.50P
120 OF 209 SHEETS

JOB NO. B777

FINAL PLANS ISSUED FOR BID

W:\B777\Engineering\B777 - 3MGD Exp\3MGD FINAL DSN\sheets\B777 - E0.50.dwg - Tab: E0.50P - by rchin on 02/06/26 at 4:43:58 PM

DRAFT

CONSTRUCTION NOTES:

1. ENTRANCE GATE MOTOR (NORTH), 120 VAC, 1/2 HP, MF'R: LIFTMASTER, PN CSW200UL (OR EQUAL).
2. ENTRANCE GATE MOTOR (SOUTH), 120 VAC, 1/2 HP, MF'R: LIFTMASTER, PN CSW200UL (OR EQUAL).
3. GATE CARD READER PER DETAIL "E" SHEET E11.2.
4. FUSED DISCONNECT SWITCH, 480V, 30A, 3Ø-3W, HEAVY-DUTY, NEMA 4X, MF'R: EATON, PN DH361FWK OR APPROVED EQUAL. SEE DETAIL "C" SHEET E11.1.

LEGEND:

- POWER PULLBOX. SEE DETAIL "A" SHEET E11.7.
- CONTROL PULLBOX. SEE DETAIL "B" SHEET E11.7.

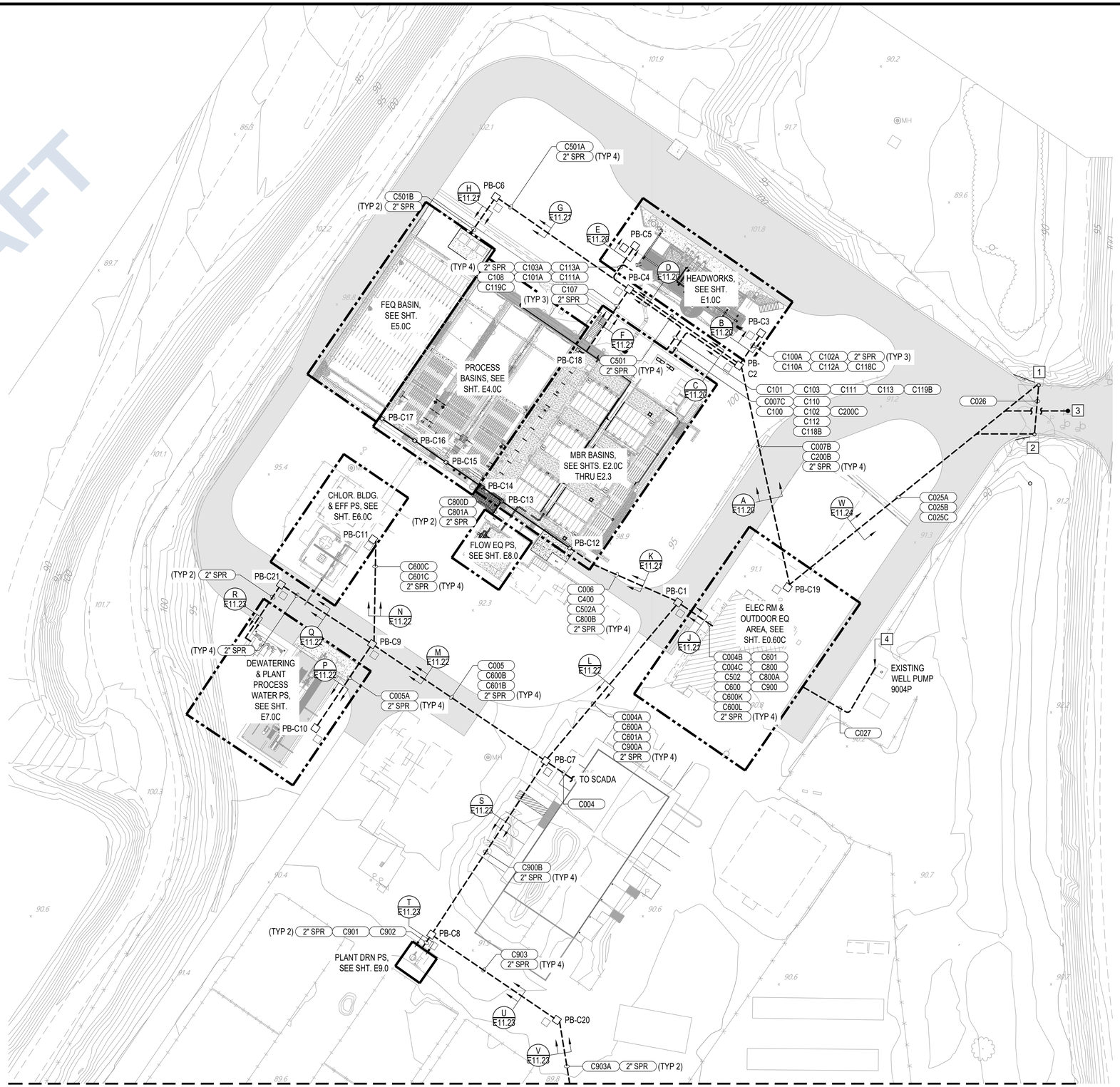

SEE SHEET E0.51

ELECTRICAL CONTROL SITE PLAN - NORTH

SCALE: 1" = 30'

NORTH ARROW

30 15 0 30 60

NO	BY	DATE	REVISIONS	DATE	APP.

Registered Professional Engineer (Electrical) CERTIFICATE NO. 35668 Basher Shaq Shaq Date Signed 1/31/26 ARIZONA, U.S.A. Expires 03/31/28

PREPARED BY: BASHAR SHAQ, PROJECT ENGINEER
R.C.E. NO. 1--- EXP. DATE
DRAWN: NC | SCALE
DESIGNED: NC, BI
CHECKED: BI | DATE: FEB 2026

THESE DRAWINGS ARE THE PROPERTY OF P.A.C.E. AND SHALL NOT BE REPRODUCED IN ANY MANNER NOR BE USED FOR CONSTRUCTION UNLESS STAMPED 'ISSUED FOR CONSTRUCTION'.

TITLE: ELECTRICAL SITE CONTROL PLAN - NORTH

JOB: CITY OF SAN LUIS WEST WWTP 3.0 MGD MBR UPGRADES — SAN LUIS AZ.

PACE Advanced Water Engineering
8723 E. VIA de COMMERCIO, SUITE A-204 | SCOTTSDALE, CA 85258
P: (408) 991-3595 | www.pacewater.com

FINAL PLANS ISSUED FOR BID

SHEET E0.50C
121 OF 209 SHEETS

JOB NO. B777

W:\B777\Engineering\B777 - 3MGD Exp\3MGD FINAL DSN\sheets\B777 - E0.50.dwg - Tab: E0.50C - by nchin on 02/05/26 at 4:32:28 PM

DRAFT

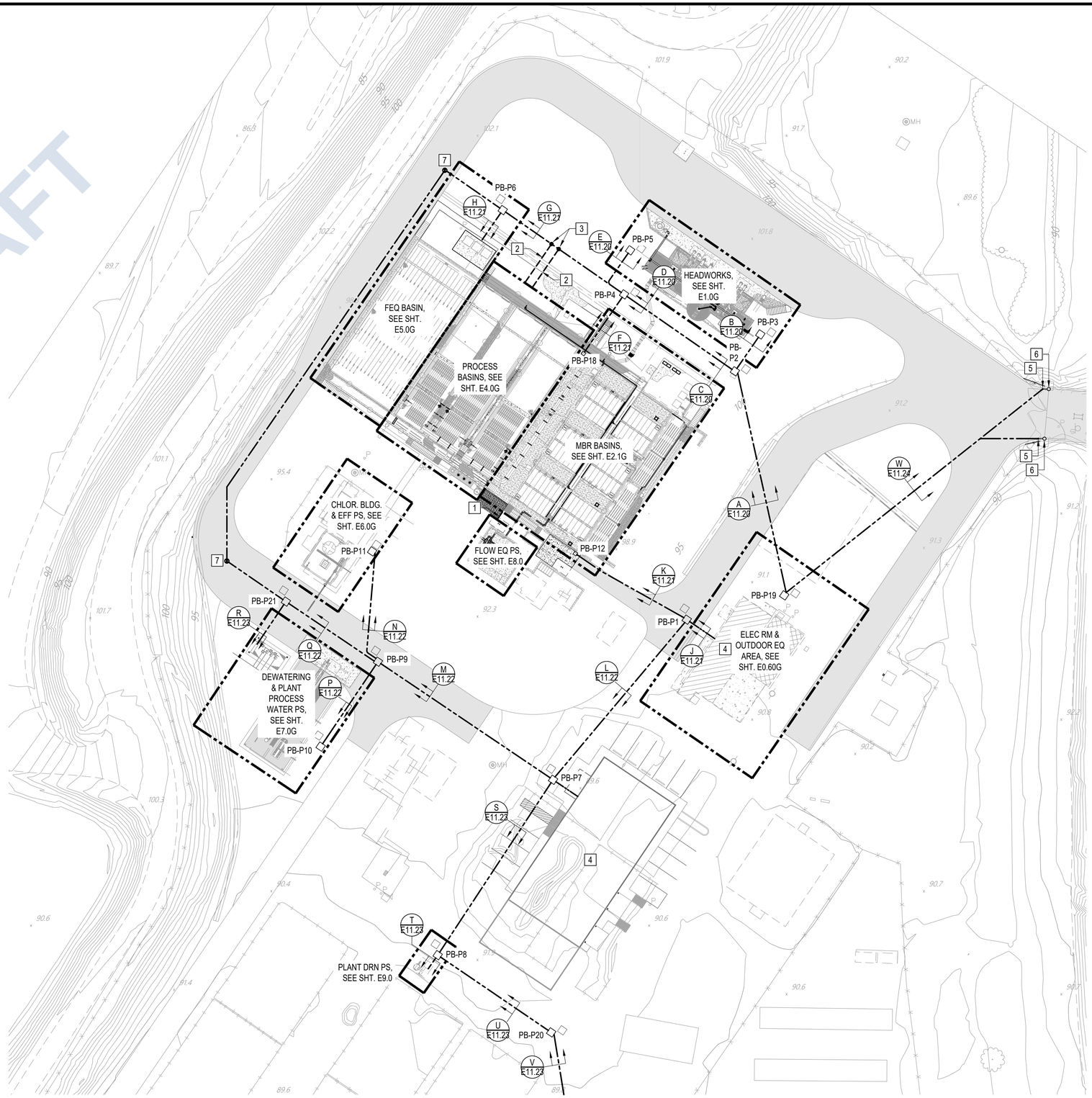

ELECTRICAL SITE GROUNDING PLAN - NORTH

SCALE: 1" = 30'

CONSTRUCTION NOTES:

1. 4/0 BARE COPPER, GROUNDING ELECTRODE CONDUCTOR ROUTED WITHIN SCH80 PVC CONDUIT (ABOVEGRADE).
2. 4/0 BARE COPPER, GROUNDING ELECTRODE CONDUCTOR (TYP)
3. EXOTHERMIC WELD PER DETAIL "C" SHEET E11.0.
4. LIGHTNING PROTECTION FOR ELECTRICAL & OPERATIONS BUILDING TO BE A DEFERRED SUBMITTAL.
5. GROUND INSPECTION ROD PER DETAIL "A" SHEET E11.2.
6. #2 BARE COPPER GROUNDING ELECTRODE CONDUCTORS TO ENTRANCE GATE MOTORS.
7. INSPECTION GROUND ROD PER DETAIL "A" SHEET E11.2.

LEGEND:

- POWER PULLBOX WITH INSPECTION GROUND ROD PER DETAIL "A" SHEET E11.2 AND DETAIL "A" SHEET E11.7.
- 4/0 CU GROUND CONDUCTOR ROUTED WITHIN DUCT BANK.

NOTES:

1. GROUND AND BOND ALL EQUIPMENT AND ENCLOSURES PER MANUFACTURER REQUIREMENTS AND NEC 250.
2. GROUND AND BOND ALL MOTOR FRAMES TO THE GROUND RING.
3. ALL METALLIC ENCLOSURES INCLUDING ROLL UP GATES, RAILINGS, FENCES, STAIR CASES OR OTHER METAL PERSONNEL MAY COME IN CONTACT WITH, SHALL BE EFFECTIVELY GROUNDED.
4. GROUNDING ROUTING IS DIAGRAMMATIC.
5. THE GEC MUST BE INSTALLED WITH SUFFICIENT LENGTH SO THAT REMOVAL OF ONE EQUIPMENT DOES NOT INTERRUPT THE EFFECTIVE GROUND PATH OF ANY OTHER EQUIPMENT.

NO	BY	DATE	REVISIONS	DATE	APP.

THESE DRAWINGS ARE THE PROPERTY OF P.A.C.E. AND SHALL NOT BE REPRODUCED IN ANY MANNER NOR BE USED FOR CONSTRUCTION UNLESS STAMPED "ISSUED FOR CONSTRUCTION".

Registered Professional Engineer (Electrical) CERTIFICATE NO. 25256 Basher Shaho State of ARIZONA U.S.A. Expires 03/31/28

PREPARED BY: BASHAR SHAHO
PROJECT ENGINEER
R.C.E. NO. E24580
EXP. DATE
SCALE
DRAWN: NC
DESIGNED: NC, BI
CHECKED: BI
DATE: FEB 2026

TITLE: ELECTRICAL SITE GROUNDING PLAN - NORTH

JOB: CITY OF SAN LUIS WEST WWTP 3.0 MGD MBR UPGRADES — SAN LUIS AZ.

PACE
Advanced Water Engineering
8723 E. VIA de COMMERCIO, SUITE A-204 | SCOTTSDALE, CA 85258
P.: (408) 991-3595 | www.pacewater.com

SHEET
E0.50G
122 OF 209 SHEETS

JOB NO. B777

FINAL PLANS ISSUED FOR BID

W:\B777\Engineering\B777 - 3MGD Exp\3MGD FINAL DSN\sheets\B777 - E0.50.dwg - Tab: E0.50G - by nchin on 02/05/26 at 4:32:58 PM

DRAFT

SEE SHEET E0.50C

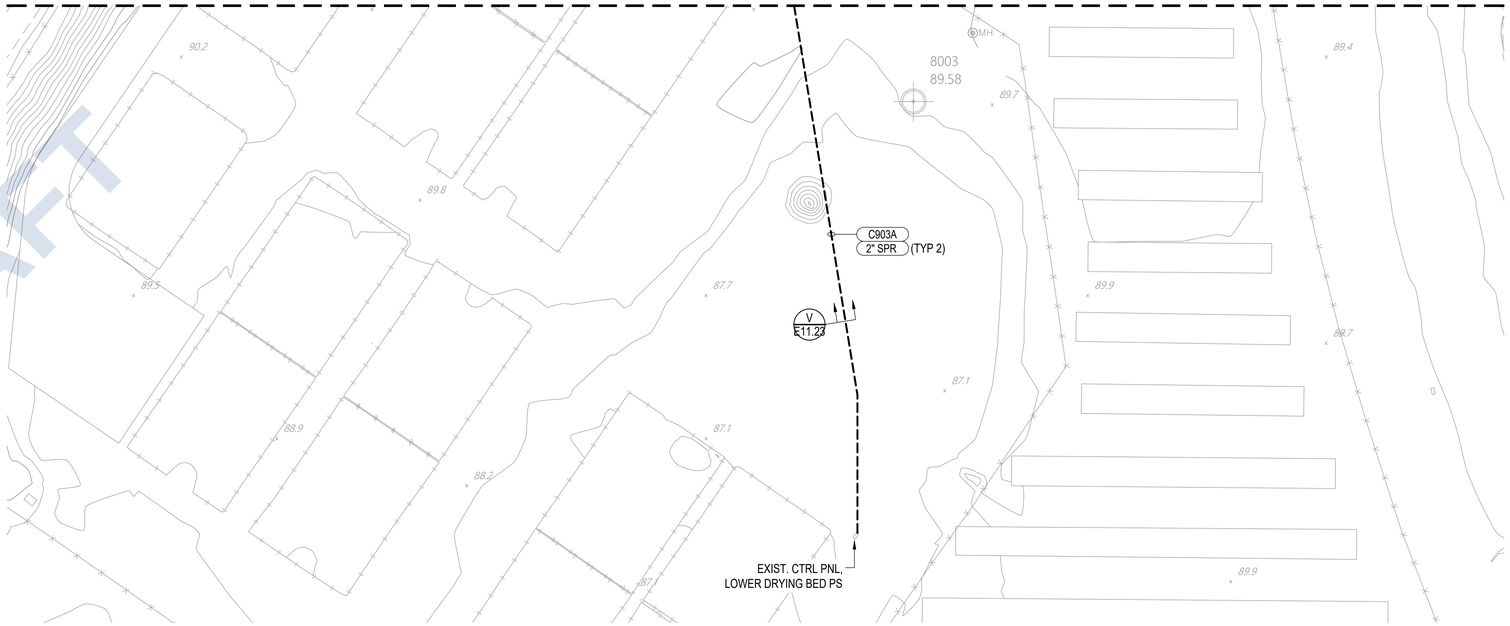

ELECTRICAL CONTROL SITE PLAN - SOUTH

SCALE: 1" = 30'

SEE SHEET E0.50P

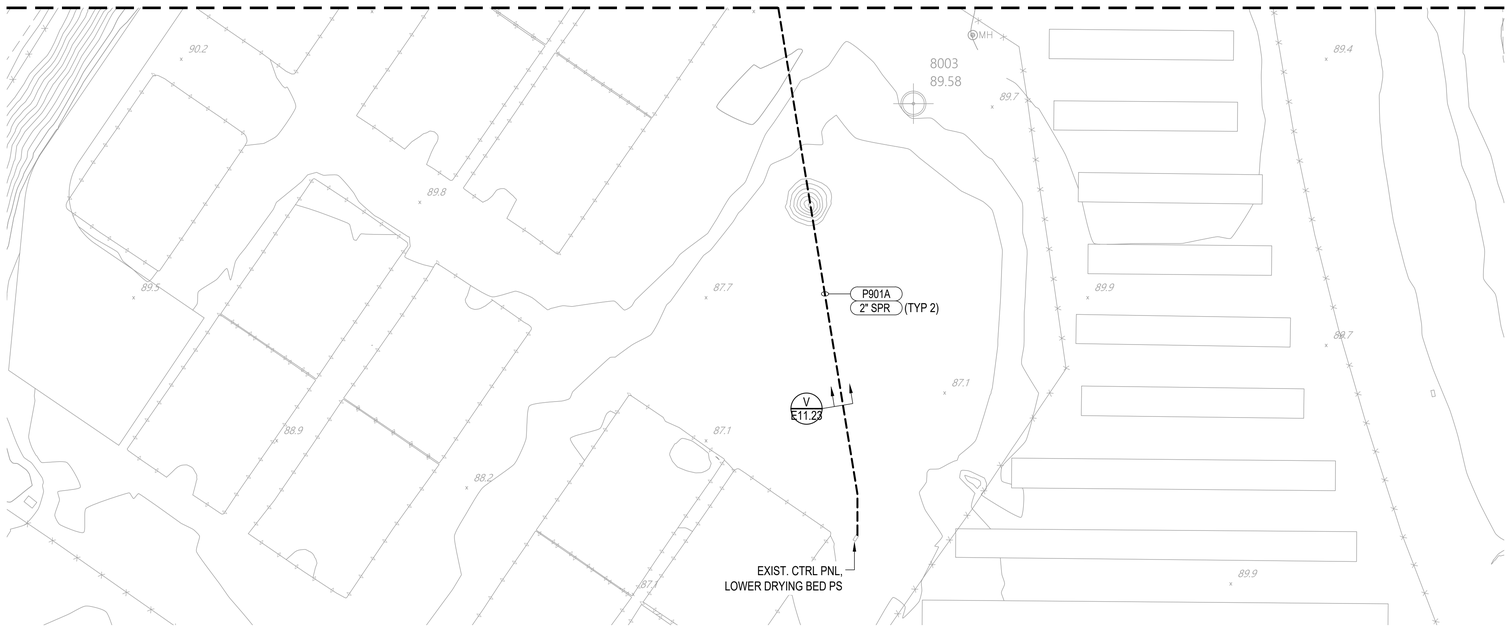

ELECTRICAL POWER SITE PLAN - SOUTH

SCALE: 1" = 30'

NORTH

30 15 0 30 60

NO	BY	DATE	REVISIONS	DATE	APP.

Registered Professional Engineer (Electrical) CERTIFICATE NO. 35696 Bashar Ishaq Stanek ARIZONA, U.S.A. Expires 03/31/28

PREPARED BY
BASHAR ISHAQ
PROJECT ENGINEER
R.C.E. NO. E24580
EXP. DATE

SCALE

DRAWN NC
DESIGNED NC, BI
CHECKED BI
DATE FEB 2026

TITLE
ELECTRICAL SITE PLAN - SOUTH

JOB
CITY OF SAN LUIS WEST WWTP
3.0 MGD MBR UPGRADES
SAN LUIS AZ.

PACE
Advanced Water Engineering
8723 E. VIA de COMMERCIO, SUITE A-204 | SCOTTSDALE, CA 85258
P: (408) 991-3595 | www.pacewater.com

SHEET
E0.51
123 OF 209 SHEETS

JOB NO. B777

THESE DRAWINGS ARE THE PROPERTY OF P.A.C.E. AND SHALL NOT BE REPRODUCED IN ANY MANNER NOR BE USED FOR CONSTRUCTION UNLESS STAMPED "ISSUED FOR CONSTRUCTION".

FINAL PLANS ISSUED FOR BID

W:\B777\Engineering\B777 - 3MGD Exp\3MGD FINAL DS\Arsheets\B777 - E0.50.dwg - Tab: E0.51 - by rothn on 02/05/26 at 4:32:58 PM

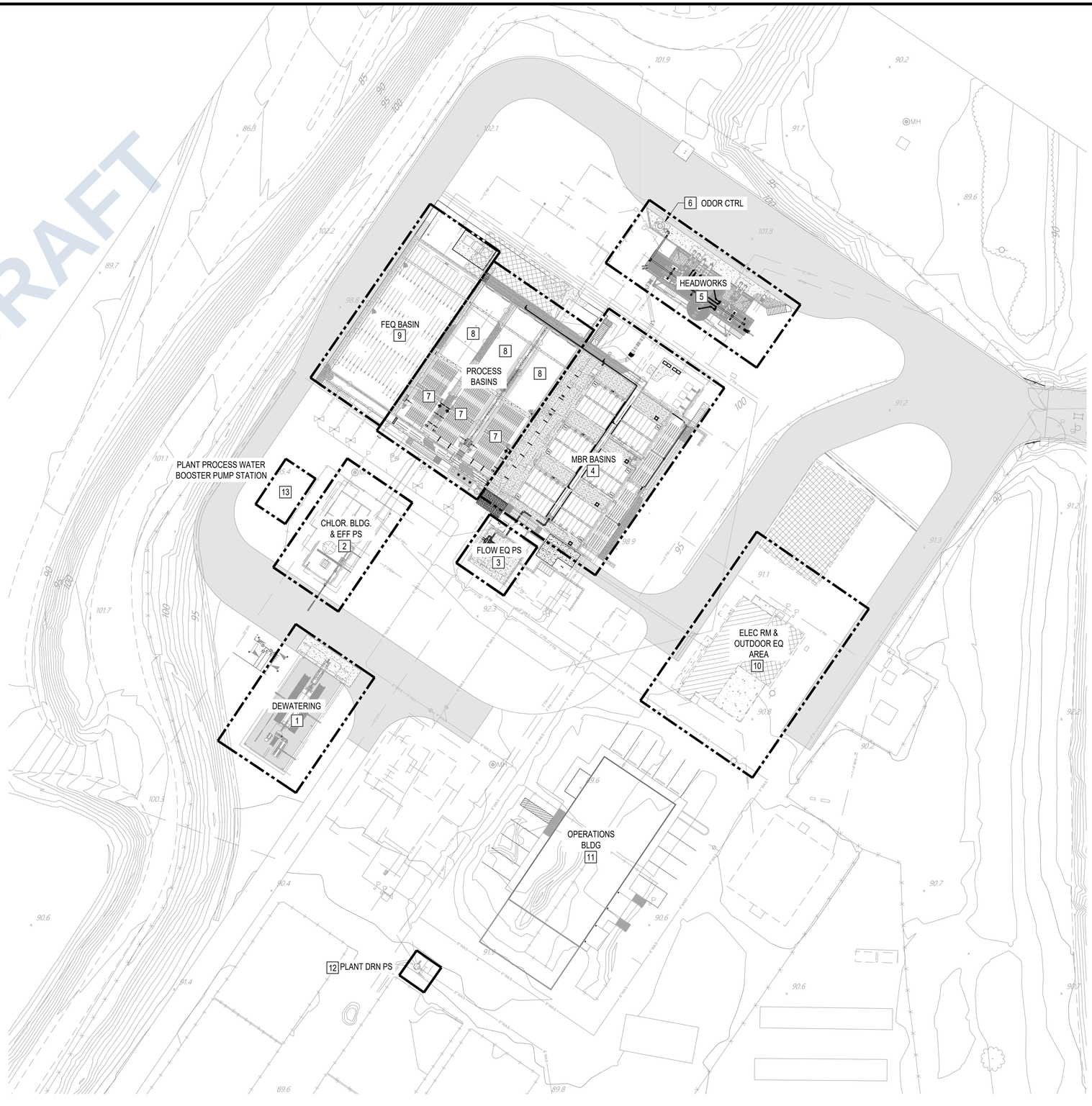

SITE HAZARDOUS CLASSIFICATION MAP

SCALE: 1" = 30'

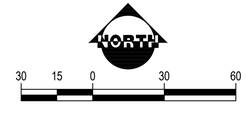

CONSTRUCTION NOTES:

1. DEWATERING AREA IS UNCLASSIFIED (NO BUILDING, OUTDOOR SKID).
2. EXISTING CHEM BUILDING AND EFFLUENT PUMP STATION IS UNCLASSIFIED.
3. FLOW EQUALIZATION PUMP STATION IS UNCLASSIFIED.
4. MBR BASINS ARE UNCLASSIFIED.
5. COARSE & FINE SCREENS & GRIT REMOVAL TANKS ARE CLASS I/DIV II WITHIN 10 FT ENVELOPE AROUND EQUIPMENT AND OPEN CHANNEL PER NFPA 820 TABLE 5.2.2 (2)(C) & (5)(C).
6. ODOR CONTROL IS CLASS I/DIV II WITHIN 3 FT ENVELOPE AROUND UNIT AND VENT(S) PER NFPA 820 TABLE 4.2.2 (18)(E).
7. PRE-AERATION BASINS ARE CLASS I/DIV II WITHIN 10 FT ENVELOPE AROUND EQUIPMENT AND OPEN CHANNEL PER NFPA 820 TABLE 5.2.2 (6)(C).
8. AERATION BASINS ARE UNCLASSIFIED.
9. FLOW EQUALIZATION BASIN IS CLASS I/DIV II WITHIN 10 FT ENVELOPE AROUND EQUIPMENT AND OPEN CHANNEL PER NFPA 820 TABLE 5.5.2 (4)(C).
10. ELECTRICAL BLDG AND OUTDOOR EQ AREA IS UNCLASSIFIED.
11. OPERATIONS BLDG IS UNCLASSIFIED.
12. PLANT DRAIN PUMP STATION IS UNCLASSIFIED.
13. PLANT PROCESS WATER BOOSTER PUMP STATION IS UNCLASSIFIED.

NO	BY	DATE	REVISIONS	DATE	APP.

Registered Professional Engineer (Electrical) CERTIFICATE NO. 55558 Basher Ishaq Shaq State of ARIZONA U.S.A. Expires 03/31/28

THESE DRAWINGS ARE THE PROPERTY OF P.A.C.E. AND SHALL NOT BE REPRODUCED IN ANY MANNER NOR BE USED FOR CONSTRUCTION UNLESS STAMPED "ISSUED FOR CONSTRUCTION".

PREPARED BY: BASHAR ISHAQ
PROJECT ENGINEER
R.C.E. NO. 55558 EXP. 03/31/28
DRAWN: NC
DESIGNED: NC, BI
CHECKED: BI
SCALE:
DATE: FEB 2026

TITLE: SITE HAZARDOUS CLASSIFICATION MAP

JOB: CITY OF SAN LUIS WEST WWTP 3.0 MGD MBR UPGRADES
SAN LUIS AZ.

PACE Advanced Water Engineering
8723 E. VIA de COMMERCIO, SUITE A-204 | SCOTTSDALE, CA 85258
P: (408) 991-3595 | www.pacewater.com

SHEET E0.52
124 OF 209 SHEETS

JOB NO. B777

FINAL PLANS ISSUED FOR BID

W:\B777\Engineering\B777 - 3MGD Exp\3MGD FINAL DSN\sheets\B777 - E0.52.dwg - Tab: E0.52 - by rohin on 02/04/26 at 5:54:08 PM

DRAFT

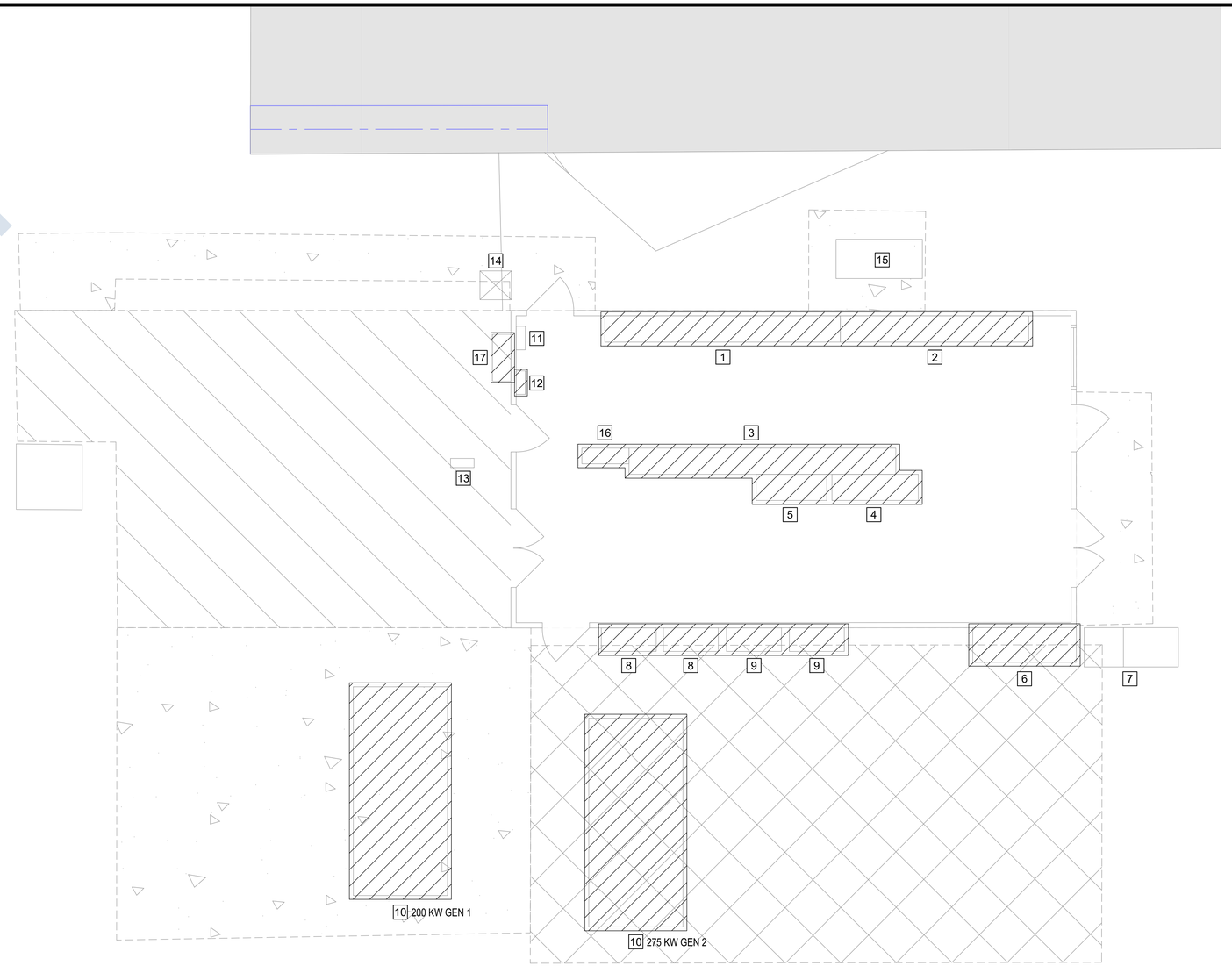

CONSTRUCTION NOTES:

1. EXISTING MCC-E1, REMOVE AND RETURN TO CITY.
2. EXISTING MCC-N1, REMOVE AND RETURN TO CITY.
3. EXISTING MCC-E2, REMOVE AND RETURN TO CITY.
4. EXISTING PLC PANEL, REMOVE AND RETURN TO CITY.
5. EXISTING CONTROL PANEL, REMOVE AND RETURN TO CITY.
6. EXISTING SES, REMOVE AND RETURN TO CITY.
7. EXISTING PV SWITCHBOARD, PROTECT IN PLACE.
8. EXISTING ATS PANEL, REMOVE AND RETURN TO CITY.
9. EXISTING MTS PANEL, REMOVE AND RETURN TO CITY.
10. EXISTING STANDBY GENERATOR, REMOVE AND RETURN TO CITY.
11. EXISTING PANEL-L1, PROTECT IN PLACE.
12. REPLACE EXISTING PANEL-H1 IN PLACE, SEE E0.60P.
13. EXISTING PANEL-E, PROTECT IN PLACE.
14. EXISTING XFMR-T1, PROTECT IN PLACE.
15. EXISTING HP-2, PROTECT IN PLACE.
16. EXISTING PULLBOX, REMOVE AND RETURN TO CITY.
17. EXISTING PANEL, REMOVE AND RETURN TO CITY.

LEGEND:

DEMO

ELECTRICAL ROOM & OUTDOOR AREA DEMO PLAN

SCALE: 1/4" = 1'

NORTH

4 2 0 4 8

NO	BY	DATE	REVISIONS	DATE	APP.

Registered Professional Engineer (Electrical) CERTIFICATE NO. 35958 Date Signed 03/31/26 ARIZONA, U.S.A. Expires 03/31/28

PREPARED BY BASHAR ISHAQ
PROJECT ENGINEER E24590
R.C.E. NO. —
EXP. DATE
SCALE
DRAWN NC
DESIGNED NC, BI
CHECKED BI
DATE FEB 2026

THESE DRAWINGS ARE THE PROPERTY OF P.A.C.E. AND SHALL NOT BE REPRODUCED IN ANY MANNER NOR BE USED FOR CONSTRUCTION UNLESS STAMPED "ISSUED FOR CONSTRUCTION".

TITLE
ELEC BLDG & OUTDOOR AREA DEMO PLAN

JOB
CITY OF SAN LUIS WEST WWTP
3.0 MGD MBR UPGRADES
SAN LUIS AZ.

PACE
Advanced Water Engineering
8723 E. VIA de COMMERCIO, SUITE A-204 | SCOTTSDALE, CA 85258
P: (408) 991-3595 | www.pacewater.com

SHEET
E0.60D
125 OF 209 SHEETS

JOB NO. B777

FINAL PLANS ISSUED FOR BID

W:\B777 Engineering\B777 - 3MGD Exp\3MGD FINAL DSN\sheets\B777 - E0.60D.dwg - Tab: E0.60D - by rchin on 02/04/26 at 4:04:36 PM

DRAFT

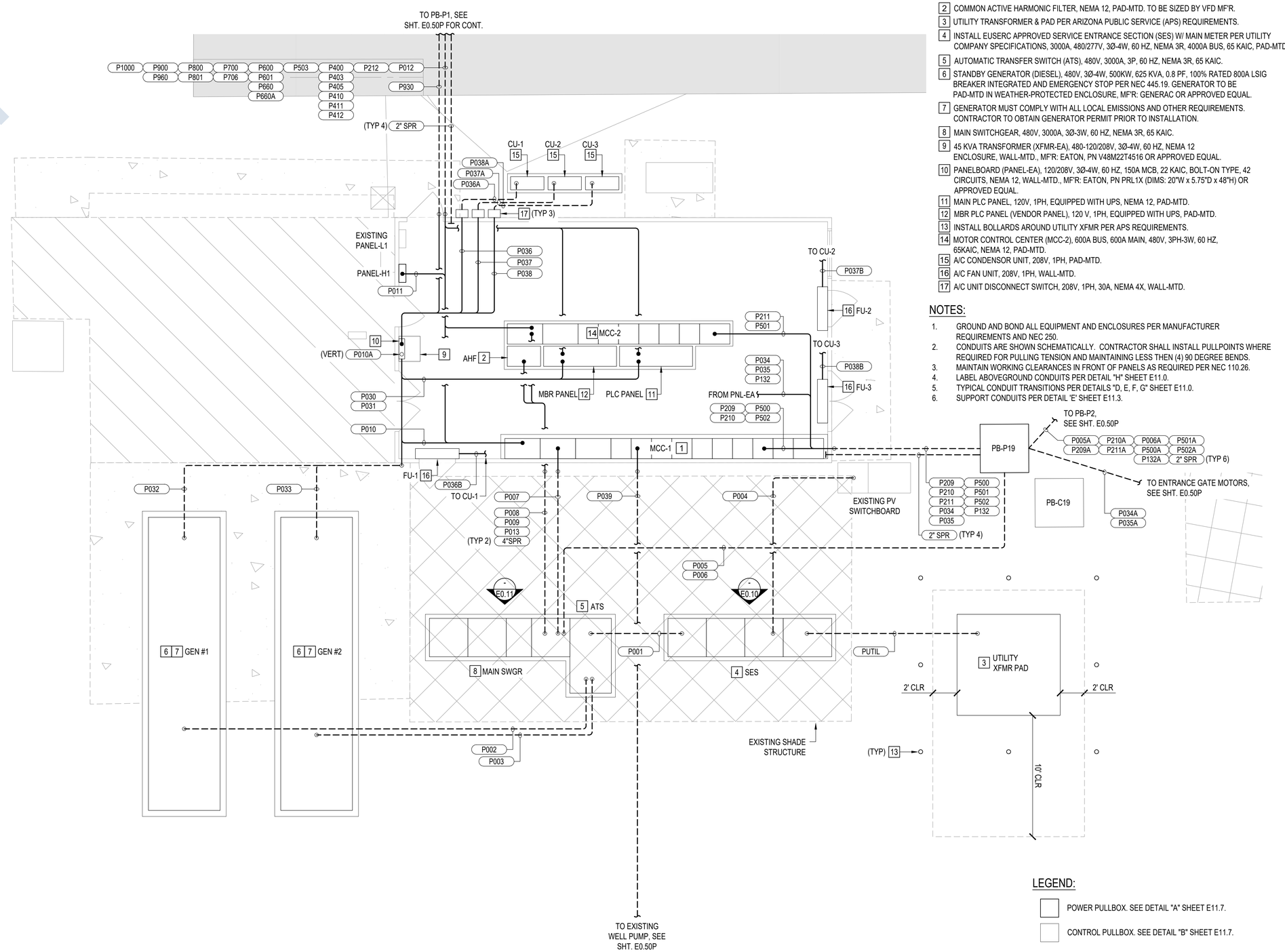

CONSTRUCTION NOTES:

1. MOTOR CONTROL CENTER (MCC-1), 1600A BUS, 1600A MAIN, 480V, 3PH-3W, 60 HZ, 65 KAIC, NEMA 12, PAD-MTD.
2. COMMON ACTIVE HARMONIC FILTER, NEMA 12, PAD-MTD. TO BE SIZED BY VFD MF'R.
3. UTILITY TRANSFORMER & PAD PER ARIZONA PUBLIC SERVICE (APS) REQUIREMENTS.
4. INSTALL EUSERC APPROVED SERVICE ENTRANCE SECTION (SES) W/ MAIN METER PER UTILITY COMPANY SPECIFICATIONS, 3000A, 480/277V, 3Ø-4W, 60 HZ, NEMA 3R, 4000A BUS, 65 KAIC, PAD-MTD.
5. AUTOMATIC TRANSFER SWITCH (ATS), 480V, 3000A, 3P, 60 HZ, NEMA 3R, 65 KAIC.
6. STANDBY GENERATOR (DIESEL), 480V, 3Ø-4W, 500KW, 625 KVA, 0.8 PF, 100% RATED 800A LSIG BREAKER INTEGRATED AND EMERGENCY STOP PER NEC 445.19. GENERATOR TO BE PAD-MTD IN WEATHER-PROTECTED ENCLOSURE, MF'R: GENERAC OR APPROVED EQUAL.
7. GENERATOR MUST COMPLY WITH ALL LOCAL EMISSIONS AND OTHER REQUIREMENTS. CONTRACTOR TO OBTAIN GENERATOR PERMIT PRIOR TO INSTALLATION.
8. MAIN SWITCHGEAR, 480V, 3000A, 3Ø-3W, 60 HZ, NEMA 3R, 65 KAIC.
9. 45 KVA TRANSFORMER (XFMR-EA), 480-120/208V, 3Ø-4W, 60 HZ, NEMA 12 ENCLOSURE, WALL-MTD., MF'R: EATON, PN V48M22T4516 OR APPROVED EQUAL.
10. PANELBOARD (PANEL-EA), 120/208V, 3Ø-4W, 60 HZ, 150A MCB, 22 KAIC, BOLT-ON TYPE, 42 CIRCUITS, NEMA 12, WALL-MTD., MF'R: EATON, PN PRL1X (DIMS: 20"W x 5.75"D x 48"H) OR APPROVED EQUAL.
11. MAIN PLC PANEL, 120V, 1PH, EQUIPPED WITH UPS, NEMA 12, PAD-MTD.
12. MBR PLC PANEL (VENDOR PANEL), 120 V, 1PH, EQUIPPED WITH UPS, PAD-MTD.
13. INSTALL BOLLARDS AROUND UTILITY XFMR PER APS REQUIREMENTS.
14. MOTOR CONTROL CENTER (MCC-2), 600A BUS, 600A MAIN, 480V, 3PH-3W, 60 HZ, 65KAIC, NEMA 12, PAD-MTD.
15. A/C CONDENSOR UNIT, 208V, 1PH, PAD-MTD.
16. A/C FAN UNIT, 208V, 1PH, WALL-MTD.
17. A/C UNIT DISCONNECT SWITCH, 208V, 1PH, 30A, NEMA 4X, WALL-MTD.

NOTES:

1. GROUND AND BOND ALL EQUIPMENT AND ENCLOSURES PER MANUFACTURER REQUIREMENTS AND NEC 250.
2. CONDUITS ARE SHOWN SCHEMATICALLY. CONTRACTOR SHALL INSTALL PULLPOINTS WHERE REQUIRED FOR PULLING TENSION AND MAINTAINING LESS THEN (4) 90 DEGREE BENDS.
3. MAINTAIN WORKING CLEARANCES IN FRONT OF PANELS AS REQUIRED PER NEC 110.26.
4. LABEL ABOVEGROUND CONDUITS PER DETAIL "H" SHEET E11.0.
5. TYPICAL CONDUIT TRANSITIONS PER DETAILS "D, E, F, G" SHEET E11.0.
6. SUPPORT CONDUITS PER DETAIL 'E' SHEET E11.3.

LEGEND:

- POWER PULLBOX. SEE DETAIL "A" SHEET E11.7.
- CONTROL PULLBOX. SEE DETAIL "B" SHEET E11.7.

ELECTRICAL ROOM & OUTDOOR AREA POWER PLAN

SCALE: 1/4" = 1'

NORTH

4 2 0 4 8

NO	BY	DATE	REVISIONS	DATE	APP.

Registered Professional Engineer (Electrical) CERTIFICATE NO. 36908 Basher Shaq ARIZONA, U.S.A. Expires 03/31/28

PREPARED BY BASHAR SHAQ
PROJECT ENGINEER E24590
R.C.E. NO. —
EXP. DATE
SCALE
DRAWN NC
DESIGNED NC, BI
CHECKED BI
DATE FEB 2026

THESE DRAWINGS ARE THE PROPERTY OF P.A.C.E. AND SHALL NOT BE REPRODUCED IN ANY MANNER NOR BE USED FOR CONSTRUCTION UNLESS STAMPED 'ISSUED FOR CONSTRUCTION'.

TITLE
ELEC BLDG & OUTDOOR AREA POWER PLAN

JOB
CITY OF SAN LUIS WEST WWTP
3.0 MGD MBR UPGRADES
AZ.
SAN LUIS

PACE
Advanced Water Engineering
8723 E. VIA de COMMERCIO, SUITE A-204 | SCOTTSDALE, CA 85258
P: (408) 991-3595 | www.pacewater.com

SHEET
E0.60P
126 OF 209 SHEETS

JOB NO. B777

FINAL PLANS ISSUED FOR BID

W:\B777\Engineering\B777 - 3MGD Exp\3MGD FINAL DSN\sheets\B777 - E0.60.dwg - Tab: E0.60P - by rchin on 02/04/26 at 4:04:24 PM

DRAFT

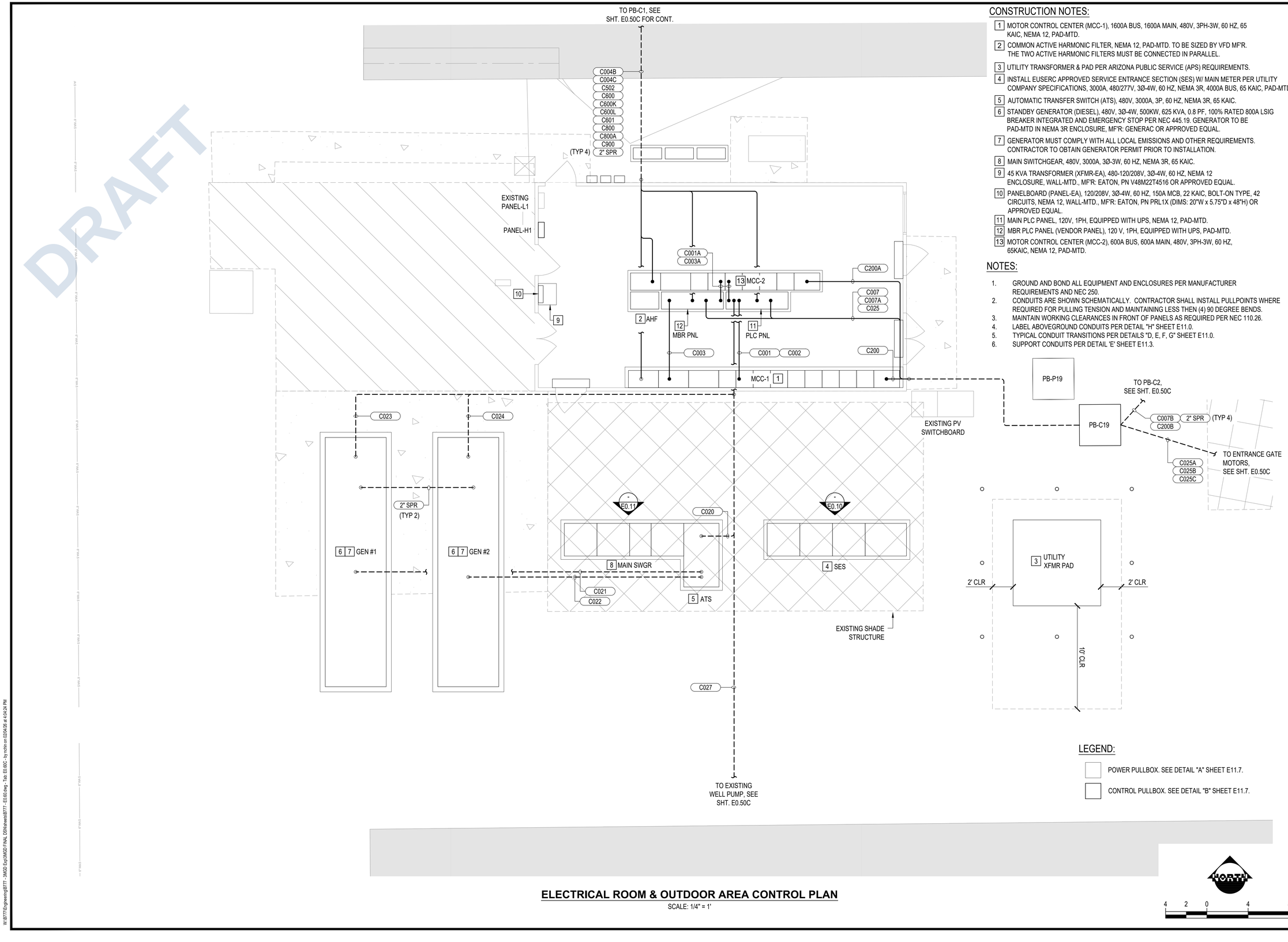

CONSTRUCTION NOTES:

1. MOTOR CONTROL CENTER (MCC-1), 1600A BUS, 1600A MAIN, 480V, 3PH-3W, 60 HZ, 65 KAIC, NEMA 12, PAD-MTD.
2. COMMON ACTIVE HARMONIC FILTER, NEMA 12, PAD-MTD. TO BE SIZED BY VFD MF'R. THE TWO ACTIVE HARMONIC FILTERS MUST BE CONNECTED IN PARALLEL.
3. UTILITY TRANSFORMER & PAD PER ARIZONA PUBLIC SERVICE (APS) REQUIREMENTS.
4. INSTALL EUSERC APPROVED SERVICE ENTRANCE SECTION (SES) W/ MAIN METER PER UTILITY COMPANY SPECIFICATIONS, 3000A, 480/277V, 3Ø-4W, 60 HZ, NEMA 3R, 4000A BUS, 65 KAIC, PAD-MTD.
5. AUTOMATIC TRANSFER SWITCH (ATS), 480V, 3000A, 3P, 60 HZ, NEMA 3R, 65 KAIC.
6. STANDBY GENERATOR (DIESEL), 480V, 3Ø-4W, 500KW, 625 KVA, 0.8 PF, 100% RATED 800A LSIG BREAKER INTEGRATED AND EMERGENCY STOP PER NEC 445.19. GENERATOR TO BE PAD-MTD IN NEMA 3R ENCLOSURE, MF'R: GENERAC OR APPROVED EQUAL.
7. GENERATOR MUST COMPLY WITH ALL LOCAL EMISSIONS AND OTHER REQUIREMENTS. CONTRACTOR TO OBTAIN GENERATOR PERMIT PRIOR TO INSTALLATION.
8. MAIN SWITCHGEAR, 480V, 3000A, 3Ø-3W, 60 HZ, NEMA 3R, 65 KAIC.
9. 45 KVA TRANSFORMER (XFMR-EA), 480-120/208V, 3Ø-4W, 60 HZ, NEMA 12 ENCLOSURE, WALL-MTD., MF'R: EATON, PN V48M22T4516 OR APPROVED EQUAL.
10. PANELBOARD (PANEL-EA), 120/208V, 3Ø-4W, 60 HZ, 150A MCB, 22 KAIC, BOLT-ON TYPE, 42 CIRCUITS, NEMA 12, WALL-MTD., MF'R: EATON, PN PRL1X (DIMS: 20"W x 5.75"D x 48"H) OR APPROVED EQUAL.
11. MAIN PLC PANEL, 120V, 1PH, EQUIPPED WITH UPS, NEMA 12, PAD-MTD.
12. MBR PLC PANEL (VENDOR PANEL), 120 V, 1PH, EQUIPPED WITH UPS, PAD-MTD.
13. MOTOR CONTROL CENTER (MCC-2), 600A BUS, 600A MAIN, 480V, 3PH-3W, 60 HZ, 65KAIC, NEMA 12, PAD-MTD.

NOTES:

1. GROUND AND BOND ALL EQUIPMENT AND ENCLOSURES PER MANUFACTURER REQUIREMENTS AND NEC 250.
2. CONDUITS ARE SHOWN SCHEMATICALLY. CONTRACTOR SHALL INSTALL PULLPOINTS WHERE REQUIRED FOR PULLING TENSION AND MAINTAINING LESS THEN (4) 90 DEGREE BENDS.
3. MAINTAIN WORKING CLEARANCES IN FRONT OF PANELS AS REQUIRED PER NEC 110.26.
4. LABEL ABOVEGROUND CONDUITS PER DETAIL "H" SHEET E11.0.
5. TYPICAL CONDUIT TRANSITIONS PER DETAILS "D, E, F, G" SHEET E11.0.
6. SUPPORT CONDUITS PER DETAIL 'E' SHEET E11.3.

LEGEND:

- POWER PULLBOX. SEE DETAIL "A" SHEET E11.7.
- CONTROL PULLBOX. SEE DETAIL "B" SHEET E11.7.

ELECTRICAL ROOM & OUTDOOR AREA CONTROL PLAN

SCALE: 1/4" = 1'

NORTH

4 2 0 4 8

NO	BY	DATE	REVISIONS	DATE	APP.

Registered Professional Engineer (Electrical) CERTIFICATE NO. 35958 BASHAR ISHAQ ARIZONA, U.S.A. Expires 03/31/28

PREPARED BY: BASHAR ISHAQ
PROJECT ENGINEER E24590
R.C.E. NO. --
EXP. DATE
DRAWN NC
DESIGNED NC, BI
CHECKED BI
SCALE
DATE FEB 2026

THESE DRAWINGS ARE THE PROPERTY OF P.A.C.E. AND SHALL NOT BE REPRODUCED IN ANY MANNER NOR BE USED FOR CONSTRUCTION UNLESS STAMPED 'ISSUED FOR CONSTRUCTION'.

TITLE: ELEC BLDG & OUTDOOR AREA CONTROL PLAN

JOB: CITY OF SAN LUIS WEST WWTP 3.0 MGD MBR UPGRADES — SAN LUIS AZ.

PACE
Advanced Water Engineering
8723 E. VIA de COMMERCIO, SUITE A-204 | SCOTTSDALE, CA 85258
P: (408) 991-3595 | www.pacewater.com

SHEET E0.60C
127 OF 209 SHEETS

JOB NO. B777

FINAL PLANS ISSUED FOR BID

W:\B777\Engineering\B777 - 3MGD Exp\3MGD FINAL DSN\sheets\B777 - E0.60.dwg - Tab: E0.60C - by rschin on 02/04/26 at 4:04:24 PM

DRAFT

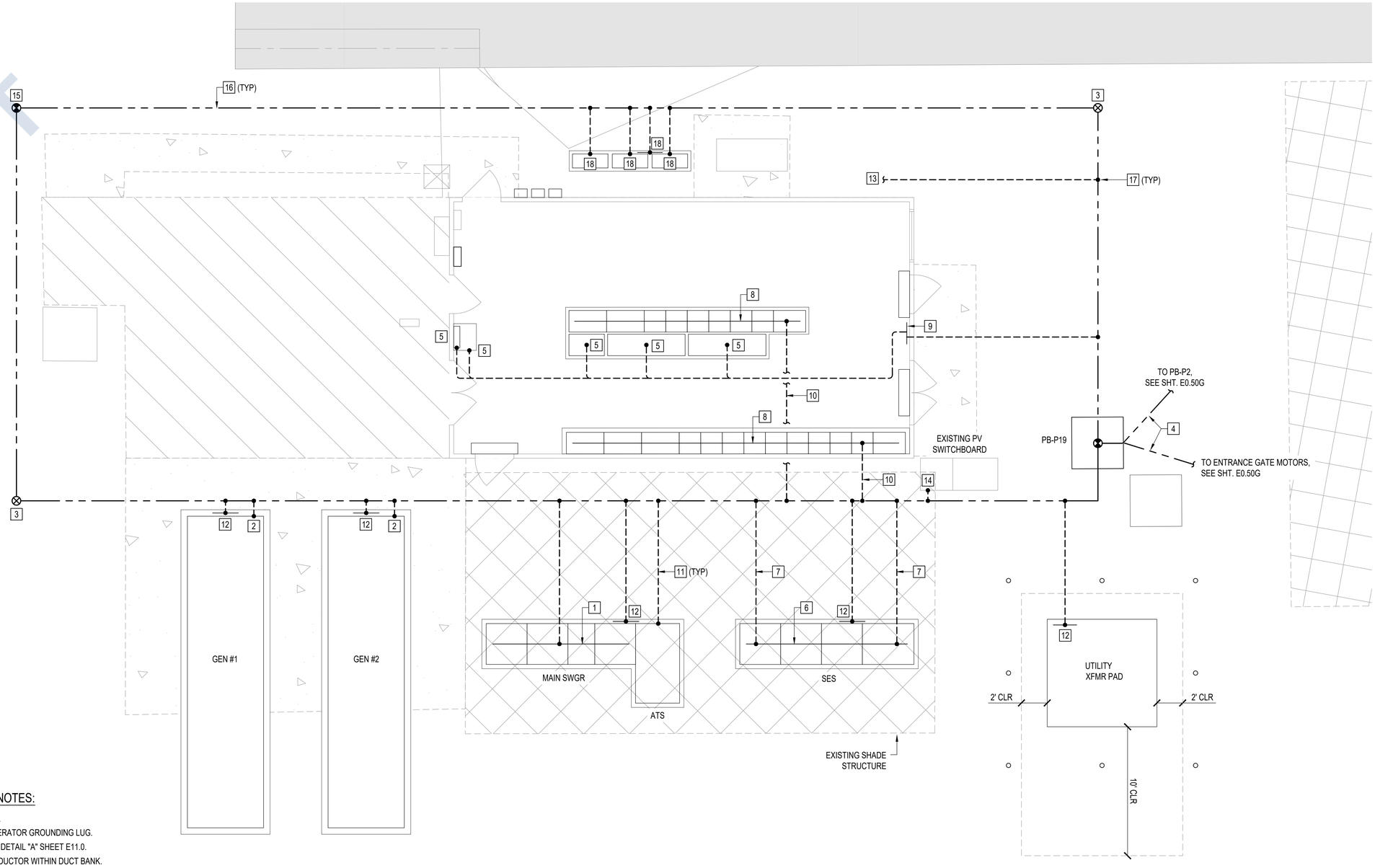

CONSTRUCTION NOTES:

1. MSG GROUND BUS.
2. CONNECT TO GENERATOR GROUNDING LUG.
3. GROUND ROD PER DETAIL "A" SHEET E11.0.
4. #4/0 BARE CU CONDUCTOR WITHIN DUCT BANK.
5. GROUND PANELS, XFMR, AND AHF.
6. SES GROUND BUS.
7. #4/0 INSULATED GND GROUNDING ELECTRODE CONDUCTOR ROUTED THROUGH 1.5" SCH 80 PVC UNDERGROUND.
8. MCC GROUND BUS.
9. GROUNDING BUS BAR PER DETAIL "A" SHEET E11.6.
10. #4/0 GROUNDING ELECTRODE CONDUCTOR ROUTED THROUGH 1.5" SCH 80 PVC CONDUIT.
11. #4/0 BARE COPPER, GROUNDING ELECTRODE CONDUCTOR (TYP)
12. GROUND TO REBAR PER DETAIL "C" SHEET E11.5.
13. CONTRACTOR TO INSTALL LIGHTNING PROTECTION FOR ELECTRICAL ROOM PER DETAIL "C" SHEET E11.2. THE LIGHTNING SYSTEM DESIGN IS A DEFERRED SUBMITTAL.
14. GROUND EXISTING PV SWBD.
15. INSPECTION GROUND ROD PER DETAIL "A" SHEET E11.2.
16. #4/0 BARE GROUND RING, MINIMUM 30" BELOW GRADE.
17. EXOTHERMIC WELD PER DETAIL "C" SHEET E11.0.
18. GROUND NEW AC UNITS & EQUIPMENT PADS.

ELECTRICAL ROOM & OUTDOOR AREA GROUNDING PLAN

SCALE: 1/4" = 1'

NOTES:

1. GROUND AND BOND ALL EQUIPMENT AND ENCLOSURES PER MANUFACTURER REQUIREMENTS AND NEC 250.
2. GROUND AND BOND ALL MOTOR FRAMES TO THE GROUND RING.
3. ALL METALLIC ENCLOSURES INCLUDING ROLL UP GATES, RAILINGS, FENCES, STAIR CASES OR OTHER METAL PERSONNEL MAY COME IN CONTACT WITH, SHALL BE EFFECTIVELY GROUNDED.
4. GROUNDING ROUTING IS DIAGRAMMATIC.
5. THE GEC MUST BE INSTALLED WITH SUFFICIENT LENGTH SO THAT REMOVAL OF ONE EQUIPMENT DOES NOT INTERRUPT THE EFFECTIVE GROUND PATH OF ANY OTHER EQUIPMENT.

LEGEND:

POWER PULLBOX WITH INSPECTION GROUND ROD PER DETAIL "A" SHEET E11.2 AND DETAIL "A" SHEET E11.7.

NORTH

4 2 0 4 8

NO	BY	DATE	REVISIONS	DATE	APP.

Registered Professional Engineer (Electrical) CERTIFICATE NO. 35958 Brandon Scott Shaw Date Signed 03/31/26 ARIZONA U.S.A. Expires 03/31/28

PREPARED BY: BASHAR ISHAQ, PROJECT ENGINEER, R.C.E. NO. E24580, EXP. DATE —
DRAWN: NC | SCALE | DATE: FEB 2026
DESIGNED: NC, BI
CHECKED: BI

TITLE: ELEC BLDG & OUTDOOR AREA GROUNDING PLAN

JOB: CITY OF SAN LUIS WEST WWTP 3.0 MGD MBR UPGRADES — SAN LUIS AZ.

PACE Advanced Water Engineering
8723 E. VIA de COMMERCIO, SUITE A-204 | SCOTTSDALE, CA 85258
P: (408) 991-3595 | www.pacewater.com

SHEET E0.60G
128 OF 209 SHEETS

JOB NO. B777

THESE DRAWINGS ARE THE PROPERTY OF P.A.C.E. AND SHALL NOT BE REPRODUCED IN ANY MANNER NOR BE USED FOR CONSTRUCTION UNLESS STAMPED "ISSUED FOR CONSTRUCTION".

FINAL PLANS ISSUED FOR BID

W:\B777\Engineering\B777 - 3MGD Exp\3MGD FINAL DS\Sheets\B777 - E0.60.dwg - Tab: E0.60G - by rchin on 02/04/26 at 4:04:24 PM

DRAFT

CONSTRUCTION NOTES:

1. GRIT CLASSIFIER 1 (M-01210).
2. GRIT CLASSIFIER 2 (M-01211).
3. 6mm COARSE SCRN 1 (M-01010).
4. 2mm FINE SCREEN 1 (M-01012).
5. 6mm COARSE SCRN 2 (M-01110).
6. 2mm FINE SCREEN 2 (M-01112).
7. GRIT TRAP 1 (M-01011).
8. GRIT PUMP 1 (PMP-01001).
9. GRIT TRAP 2 (M-01111).
10. GRIT PUMP 2 (PMP-01101).
11. 6mm WASH COMP. 1 (M-01310).
12. 6mm WASH COMP. 2 (M-01311).
13. 2mm WASH COMP. 1 (M-01410).
14. 2mm WASH COMP. 2 (M-01411).
15. HEADWORKS ODOR CONTROL UNIT CONTROL PANEL (VENDOR PANEL) TO BE EQUIPPED WITH SHADE COVERING. PANEL TO BE LOCATED OUTSIDE OF THE HAZARDOUS AREAS.

NOTES:

1. GROUND AND BOND ALL EQUIPMENT AND ENCLOSURES PER MANUFACTURER REQUIREMENTS AND NEC 250.
2. CONDUITS ARE SHOWN SCHEMATICALLY. CONTRACTOR SHALL INSTALL PULLPOINTS WHERE REQUIRED FOR PULLING TENSION AND MAINTAINING LESS THEN (4) 90 DEGREE BENDS.
3. MAINTAIN WORKING CLEARANCES IN FRONT OF PANELS AS REQUIRED PER NEC 110.26.
4. LABEL ABOVEGROUND CONDUITS PER DETAIL "H" SHEET E11.0.
5. TYPICAL CONDUIT TRANSITIONS PER DETAILS "D, E, F, G" SHEET E11.0.
6. SUPPORT CONDUITS PER DETAIL 'E' SHEET E11.3.
7. COARSE & FINE SCREENS & GRIT REMOVAL TANKS ARE CLASS I/DIV II WITHIN 10 FT ENVELOPE AROUND EQUIPMENT AND OPEN CHANNEL PER NFPA 820 TABLE 5.5.2 (2)(C) & (5)(C).
8. ODOR CONTROL IS CLASS I/DIV II WITHIN 3 FT ENVELOPE AROUND UNIT AND VENT(S) PER NFPA 820 TABLE 4.2.2 (18)(E).
9. CONTRACTOR TO INSTALL EYS SEALS ON ALL CONDUITS ROUTED TO EQUIPMENT BETWEEN CLASSIFIED LOCATION AND NON-CLASSIFIED LOCATIONS PER NEC LOCATIONS PER NEC 500 - 504.

LEGEND:

- POWER PULLBOX. SEE DETAIL "A" SHEET E11.7.
- CONTROL PULLBOX. SEE DETAIL "B" SHEET E11.7.

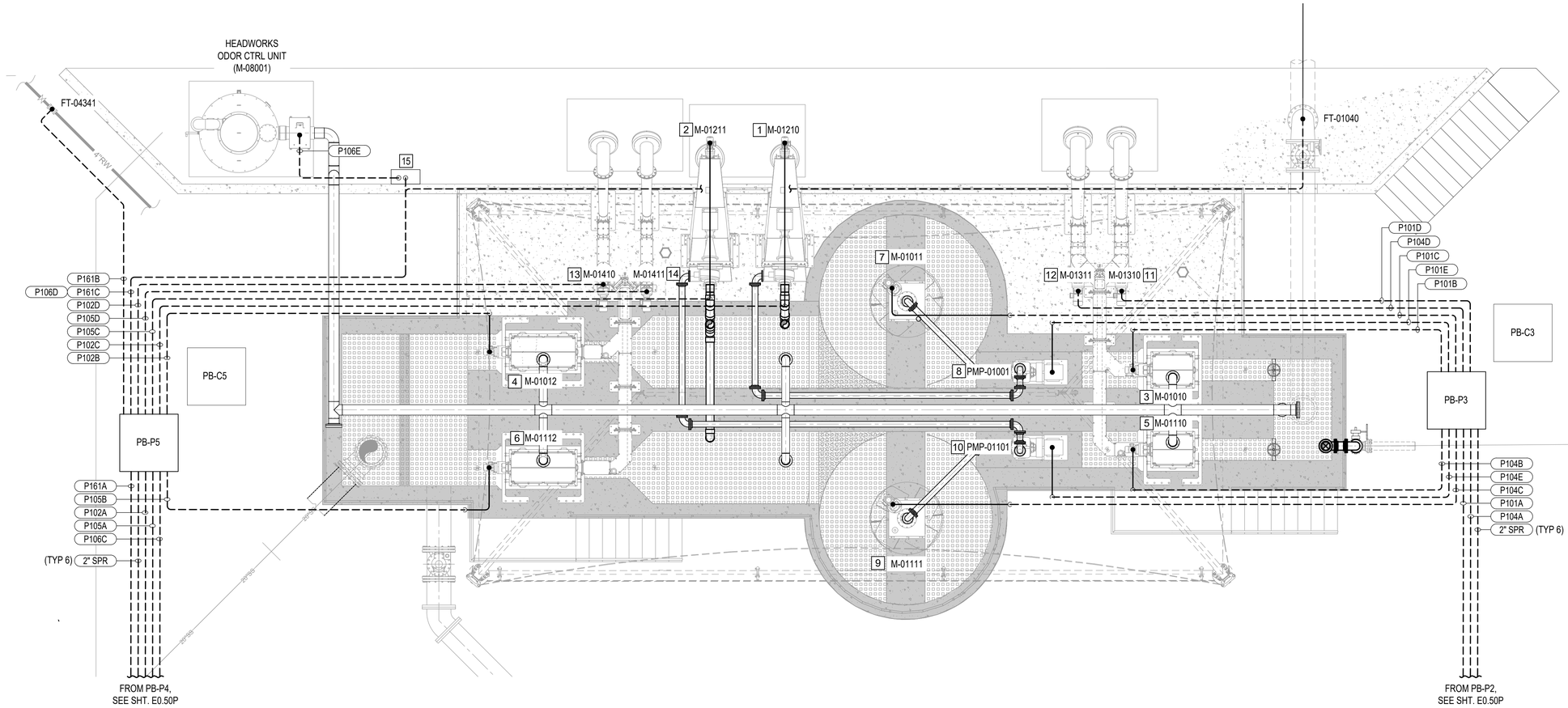

HEADWORKS POWER PLAN

SCALE: 1/4"=1'-0"

NORTH

4 2 0 4 8

SCALE: 1/4"=1'-0"

NO	BY	DATE	REVISIONS	DATE	APP.

Registered Professional Engineer (Electrical) CERTIFICATE NO. 32656 Basharat Shaikh State of ARIZONA U.S.A. Expires 03/31/28

PREPARED BY BASHAR SHAIQ
PROJECT ENGINEER E24590
R.C.E. NO. —
EXP. DATE
SCALE
DRAWN NC
DESIGNED NC, BI
CHECKED BI
DATE FEB 2026

THESE DRAWINGS ARE THE PROPERTY OF P.A.C.E. AND SHALL NOT BE REPRODUCED IN ANY MANNER NOR BE USED FOR CONSTRUCTION UNLESS STAMPED 'ISSUED FOR CONSTRUCTION'.

TITLE: HEADWORKS POWER PLAN

JOB: CITY OF SAN LUIS WEST WWTP 3.0 MGD MBR UPGRADES — SAN LUIS AZ.

PACE
Advanced Water Engineering
8723 E. VIA de COMMERCIO, SUITE A 204 | SCOTTSDALE, CA 85258
P: (408) 991-3595 | www.pacewater.com

SHEET E1.0P
129 OF 209 SHEETS

JOB NO. B777

FINAL PLANS ISSUED FOR BID

W:\B777\Engineering\B777 - 3MGD Exp\3MGD FINAL OSN\sheets\B777 - E1.0.dwg - Tab: E1.0P - by rohin on 02/06/26 at 2:45:33 PM

DRAFT

CONSTRUCTION NOTES:

1. GRIT CLASSIFIER 1 (M-01210) LOCAL CONTROL PANEL, VENDOR-SUPPLIED, GUARDRAIL-MTD.
2. GRIT CLASSIFIER 2 (M-01211) LOCAL CONTROL PANEL, VENDOR-SUPPLIED, GUARDRAIL-MTD.
3. 6mm COARSE SCRN 1 (M-01010) LOCAL CONTROL PANEL, VENDOR-SUPPLIED, GUARDRAIL-MTD.
4. 2mm FINE SCREEN 1 (M-01012) LOCAL CONTROL PANEL, VENDOR-SUPPLIED, GUARDRAIL-MTD.
5. 6mm COARSE SCRN 2 (M-01110) LOCAL CONTROL PANEL, VENDOR-SUPPLIED, GUARDRAIL-MTD.
6. 2mm FINE SCREEN 2 (M-01112) LOCAL CONTROL PANEL, VENDOR-SUPPLIED, GUARDRAIL-MTD.
7. GRIT TRAP 1 (M-01011) LOCAL CONTROL PANEL, VENDOR-SUPPLIED, GUARDRAIL-MTD.
8. GRIT PUMP 1 (PMP-01001) LOCAL CONTROL PANEL, VENDOR-SUPPLIED, GUARDRAIL-MTD.
9. GRIT TRAP 2 (M-01111) LOCAL CONTROL PANEL, VENDOR-SUPPLIED, GUARDRAIL-MTD.
10. GRIT PUMP 2 (PMP-01101) LOCAL CONTROL PANEL, VENDOR-SUPPLIED, GUARDRAIL-MTD.
11. 6mm WASH COMP. 1 (M-01310) LOCAL CONTROL PANEL, VENDOR-SUPPLIED, GUARDRAIL-MTD.
12. 6mm WASH COMP. 2 (M-01311) LOCAL CONTROL PANEL, VENDOR-SUPPLIED, GUARDRAIL-MTD.
13. 2mm WASH COMP. 1 (M-01410) LOCAL CONTROL PANEL, VENDOR-SUPPLIED, GUARDRAIL-MTD.
14. 2mm WASH COMP. 2 (M-01411) LOCAL CONTROL PANEL, VENDOR-SUPPLIED, GUARDRAIL-MTD.
15. SV-01321
16. SV-01023A
17. HEADWORKS ODOR CONTROL UNIT CONTROL PANEL (VENDOR PANEL) TO BE EQUIPPED WITH SHADE COVERING. PANEL TO BE LOCATED OUTSIDE OF THE HAZARDOUS AREAS.
18. SV-01320
19. LSH-01330A
20. TSH-01012
21. LSH-01430A
22. SV-01323A, SV-01323B.
23. LSH-01331A
24. TSH-01112
25. LSH-01431A
26. LEVEL CONTROL PANEL (VENDOR PANEL) TO BE EQUIPPED WITH SHADE COVERING. PANEL TO BE LOCATED OUTSIDE OF THE HAZARDOUS AREAS.
27. TO LE-1033A, LE-01033B, LE-01133A, LE-01133B.
28. TO LE-1031A, LE-01031B, LE-01131A, LE-01131B.
29. TSH-01010
30. TSH-01110
31. TSH-01310
32. TSH-01311
33. TSH-01410
34. TSH-01411
35. SV-01420
36. SV-01421
37. SV-01422A, SV-01422B.
38. SV-01423A, SV-01423B.
39. LSH-01430
40. LSH-01431
41. SV-01122A
42. LSH-01330
43. LSH-01331
44. SV-01322A, SV-01322B.
45. TO SV-08020.
46. CGD-01590 & HORN/STROBE LIGHT COMBO.
47. CGD-01591 & HORN/STROBE LIGHT COMBO.

LEGEND:

- (J) NEMA 4X JUNCTION BOX. INSTALL OUTSIDE CLASSIFIED AREA.
- POWER PULLBOX. SEE DETAIL "A" SHEET E11.7.
- CONTROL PULLBOX. SEE DETAIL "B" SHEET E11.7.

NOTES:

1. INSTALL INTRINSICALLY SAFE WIRING IN ACCORDANCE WITH NEC 504. PROVIDE BARRIERS IN CONDUITS, JUNCTION BOXES, ETC. AS REQUIRED.
2. GROUND AND BOND ALL EQUIPMENT AND ENCLOSURES PER MANUFACTURER REQUIREMENTS AND NEC 250.
3. CONDUITS ARE SHOWN SCHEMATICALLY. CONTRACTOR SHALL INSTALL PULLPOINTS WHERE REQUIRED FOR PULLING TENSION AND MAINTAINING LESS THEN (4) 90 DEGREE BENDS.
4. MAINTAIN WORKING CLEARANCES IN FRONT OF PANELS AS REQUIRED PER NEC 110.26.
5. LABEL ABOVEGROUND CONDUITS PER DETAIL "H" SHEET E11.0.
6. TYPICAL CONDUIT TRANSITIONS PER DETAILS "D, E, F, G" SHEET E11.0.
7. SUPPORT CONDUITS PER DETAIL 'E' SHEET E11.3.
8. COARSE & FINE SCREENS & GRIT REMOVAL TANKS ARE CLASS I/DIV II WITHIN 10 FT ENVELOPE AROUND EQUIPMENT AND OPEN CHANNEL PER NFPA 820 TABLE 5.2.2 (2)(C) & (5)(C).
9. ODOR CONTROL IS CLASS I/DIV II WITHIN 3 FT ENVELOPE AROUND UNIT AND VENT(S) PER NFPA 820 TABLE 4.2.2 (18)(E).
10. CONTRACTOR TO INSTALL EYS SEALS ON ALL CONDUITS ROUTED TO EQUIPMENT BETWEEN CLASSIFIED LOCATION AND NON-CLASSIFIED LOCATIONS PER NEC LOCATIONS PER NEC 500 - 504.

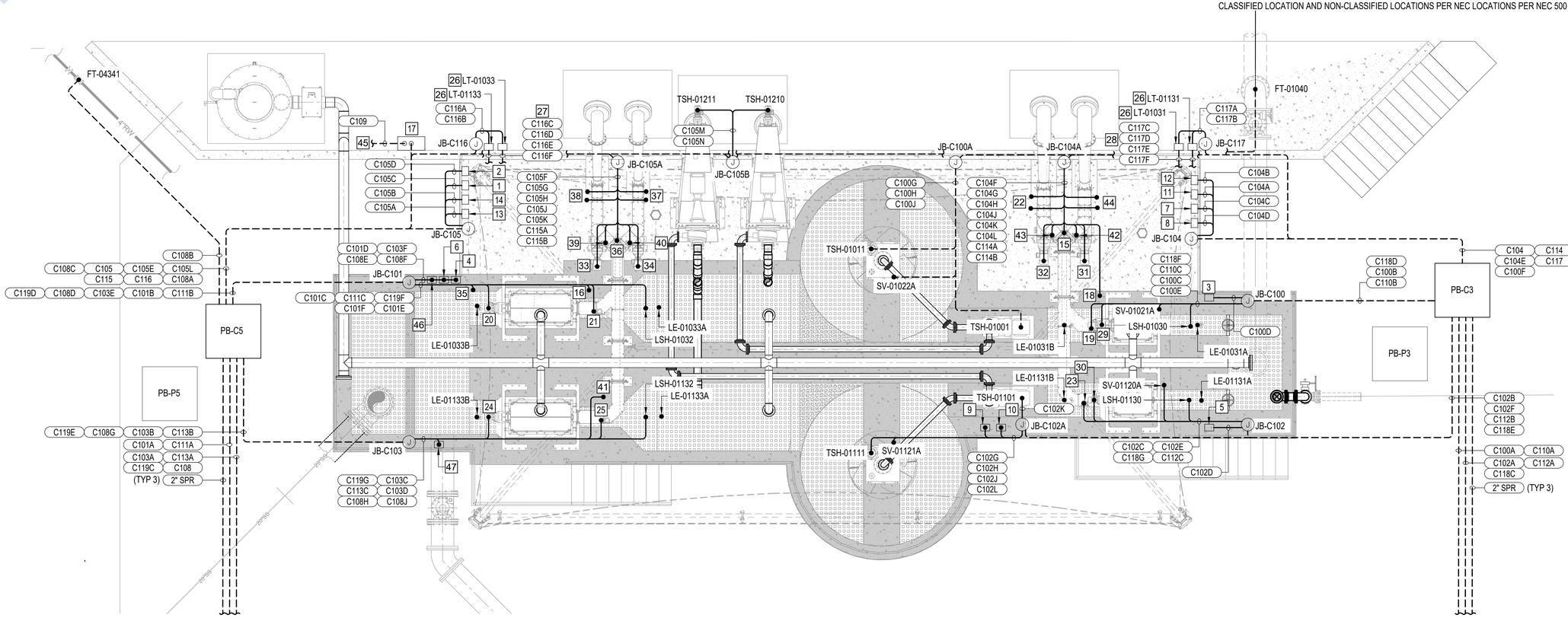

HEADWORKS CONTROL PLAN

SCALE: 1/4"=1'-0"

NORTH

4 2 0 4 8

SCALE: 1/4"=1'-0"

NO	BY	DATE	REVISIONS	DATE	APP.

Registered Professional Engineer (Electrical) CERTIFICATE NO. 65258 State of Arizona — Expires 03/31/28

PREPARED BY: BASHAR ISHAQ
PROJECT ENGINEER
R.C.E. NO. E24580
EXP. DATE

DRAWN: NC
DESIGNED: NC, BI
CHECKED: BI
SCALE:
DATE: FEB 2026

THESE DRAWINGS ARE THE PROPERTY OF P.A.C.E. AND SHALL NOT BE REPRODUCED IN ANY MANNER NOR BE USED FOR CONSTRUCTION UNLESS STAMPED "ISSUED FOR CONSTRUCTION".

TITLE: HEADWORKS CONTROL PLAN

JOB: CITY OF SAN LUIS WEST WWTP
3.0 MGD MBR UPGRADES
AZ.
SAN LUIS

PACE
Advanced Water Engineering
8723 E. VIA de COMMERCIO, SUITE A-204 | SCOTTSDALE, CA 85258
P.: (408) 991-3595 | www.pacewater.com

FINAL PLANS ISSUED FOR BID

SHEET
E1.0C
130 OF 209 SHEETS

JOB NO. B777

W:\B777\Engineering\B777 - 3MGD Exp\3MGD FINAL DSN\sheets\B777 - E1.0.dwg - Tab: E1.0C - by rschin on 02/06/26 at 2:45:33 PM

DRAFT

NOTES:

1. CONDUCTORS FOR HOME RUN CIRCUITS FOR LIGHTING AND RECEPTACLES SHALL BE #12 AWG MINIMUM SIZE, UNLESS NOTED OTHERWISE.
2. LIGHTING AND RECEPTACLE WIRING SHALL BE TYPE XHHW-2.
3. ALL WIRING SHOWN SHALL BE WITHIN CONDUITS (PVC COATED RGS FOR OUTDOOR EXPOSED CONDUIT).
4. ALL CONDUITS SHALL CONTAIN A PROPERLY SIZED GROUND CONDUCTOR. DE-RATE CONDUCTORS PER NEC 310.15(C)(1).
5. MOUNT AND WIRE ALL EQUIPMENT PER MANUFACTURER REQUIREMENTS.
6. DE-RATE CONDUCTOR AMPACITY BASED ON # OF CURRENT CARRYING CONDUCTORS AS APPLICABLE.
7. RECEPTACLE OUTLETS SHALL BE CLEARLY LABELED WITH THE CIRCUIT PROVIDING POWER. LABEL SHALL BE SUITED FOR ENVIRONMENT RECEPTACLE IS LOCATED IN.
8. INSTALL A PHOTOCELL SENSOR IN A NON-SHADED AREA, 120V, NO/NC CONTACT.
9. COARSE & FINE SCREENS & GRIT REMOVAL TANKS ARE CLASS I/DIV II WITHIN 10 FT ENVELOPE AROUND EQUIPMENT AND OPEN CHANNEL PER NFPA 820 TABLE 5.5.2 (2)(C) & (5)(C).
10. ODOR CONTROL IS CLASS I/DIV II WITHIN 3 FT ENVELOPE AROUND UNIT AND VENT(S) PER NFPA 820 TABLE 4.2.2 (18)(E).
11. CONTRACTOR TO INSTALL EYS SEALS ON ALL CONDUITS ROUTED TO EQUIPMENT BETWEEN CLASSIFIED LOCATION AND NON-CLASSIFIED LOCATIONS PER NEC LOCATIONS PER NEC 500 - 504.

LEGEND:

- (L) — 45W EXPLOSION-PROOF JELLY JAR LIGHT, CLASS 1/DIV 2 RATED, 5679 LUMENS, 5000K, DIMMABLE, 120-277V, CEILING-MOUNT, MAXLITE HRLS SERIES OR APPROVED EQUAL.
- ((— HASH MARKS INDICATING NUMBER OF CURRENT CARRYING CONDUCTORS. GROUND CONDUCTOR(S) NOT SHOWN FOR CLARITY, ALL CONDUITS SHALL HAVE A MINIMUM #12 GROUND AND SIZED PER CODE REQUIREMENTS.
- WP — 120V, 20A GFCI DUPLEX TAMPER-WEATHER RESISTANT RECEPTACLE WITH METALLIC WEATHERPROOF WHILE-IN-USE COVER, CLASS 1/DIV 2 RATED, EXTRA DUTY, GUARDRAIL-MTD.
- 3 $ WP — 120 VAC, 20 AMP, NEMA 7X LIGHT SWITCH, GUARDRAIL-MTD. @ 42" AFF. (WP = WEATHERPROOF) (#3 = 3-WAY SWITCH REQUIRED). CLASS 1/DIV 2 RATED.
- POWER PULLBOX. SEE DETAIL "A" SHEET E11.7.
- CONTROL PULLBOX. SEE DETAIL "B" SHEET E11.7.

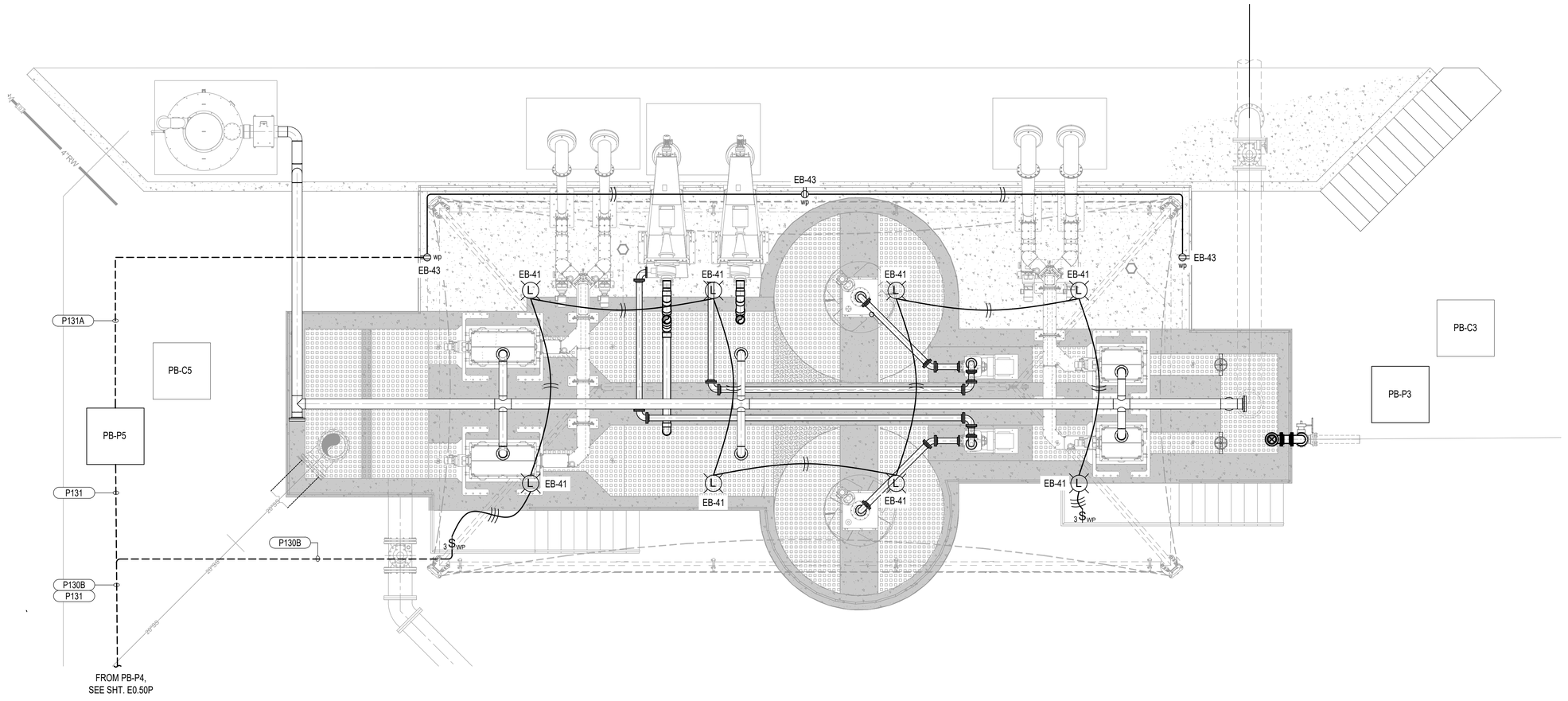

HEADWORKS LIGHTING & RECEPTACLE PLAN

SCALE: 1/4"=1'-0"

NORTH

4 2 0 4 8

SCALE: 1/4"=1'-0"

NO	BY	DATE	REVISIONS	DATE	APP.

Registered Professional Engineer (Electrical) CERTIFICATE NO. 80966 Basharat Ishaq State of ARIZONA U.S.A. Expires 03/31/28

THESE DRAWINGS ARE THE PROPERTY OF P.A.C.E. AND SHALL NOT BE REPRODUCED IN ANY MANNER NOR BE USED FOR CONSTRUCTION UNLESS STAMPED "ISSUED FOR CONSTRUCTION".

PREPARED BY BASHAR ISHAQ
PROJECT ENGINEER
R.C.E. NO. E24590
EXP. DATE
SCALE
DRAWN NC
DESIGNED NC, BI
CHECKED BI
DATE FEB 2026

TITLE: HEADWORKS LIGHTING & RECEPTACLE PLAN

JOB: CITY OF SAN LUIS WEST WWTP
3.0 MGD MBR UPGRADES
AZ. SAN LUIS

PACE Advanced Water Engineering
8723 E. VIA de COMMERCIO, SUITE A-204 | SCOTTSDALE, CA 85258
P: (408) 991-3595 | www.pacewater.com

SHEET
E1.0L
131 OF 209 SHEETS

JOB NO. B777

FINAL PLANS ISSUED FOR BID

W:\B777 Engineering\B777 - 3MGD Exp\3MGD FINAL DS\Sheets\B777 - E1.0.dwg - Tab: E1.0L - by rohn on 02/06/26 at 2:45:33 PM

DRAFT

LEGEND:

POWER PULLBOX WITH INSPECTION GROUND ROD PER DETAIL "A" SHEET E11.2 AND DETAIL "A" SHEET E11.7.

CONSTRUCTION NOTES:

1. EXOTHERMIC WELD PER DETAIL "C" SHEET E11.0.
2. #4/0 BARE CU CONDUCTOR WITHIN DUCT BANK.
3. GROUND HANDRAILS (TYP).
4. GROUND ODOR CONTROL UNIT.
5. GROUND TO REBAR PER DETAIL "C" SHEET E11.5.
6. GROUND EXPOSED PIPES.
7. #2 BARE COPPER, GROUNDING ELECTRODE CONDUCTOR (TYP)
8. GROUND ROD PER DETAIL "A" SHEET E11.0.
9. #4/0 BARE GROUND RING, MINIMUM 30" BELOW GRADE.

NOTES:

1. GROUND AND BOND ALL EQUIPMENT AND ENCLOSURES PER MANUFACTURER REQUIREMENTS AND NEC 250.
2. GROUND AND BOND ALL MOTOR FRAMES TO THE GROUND RING.
3. ALL METALLIC ENCLOSURES INCLUDING ROLL UP GATES, RAILINGS, FENCES, STAIR CASES OR OTHER METAL PERSONNEL MAY COME IN CONTACT WITH, SHALL BE EFFECTIVELY GROUNDED.
4. GROUNDING ROUTING IS DIAGRAMMATIC.
5. THE GEC MUST BE INSTALLED WITH SUFFICIENT LENGTH SO THAT REMOVAL OF ONE EQUIPMENT DOES NOT INTERRUPT THE EFFECTIVE GROUND PATH OF ANY OTHER EQUIPMENT.

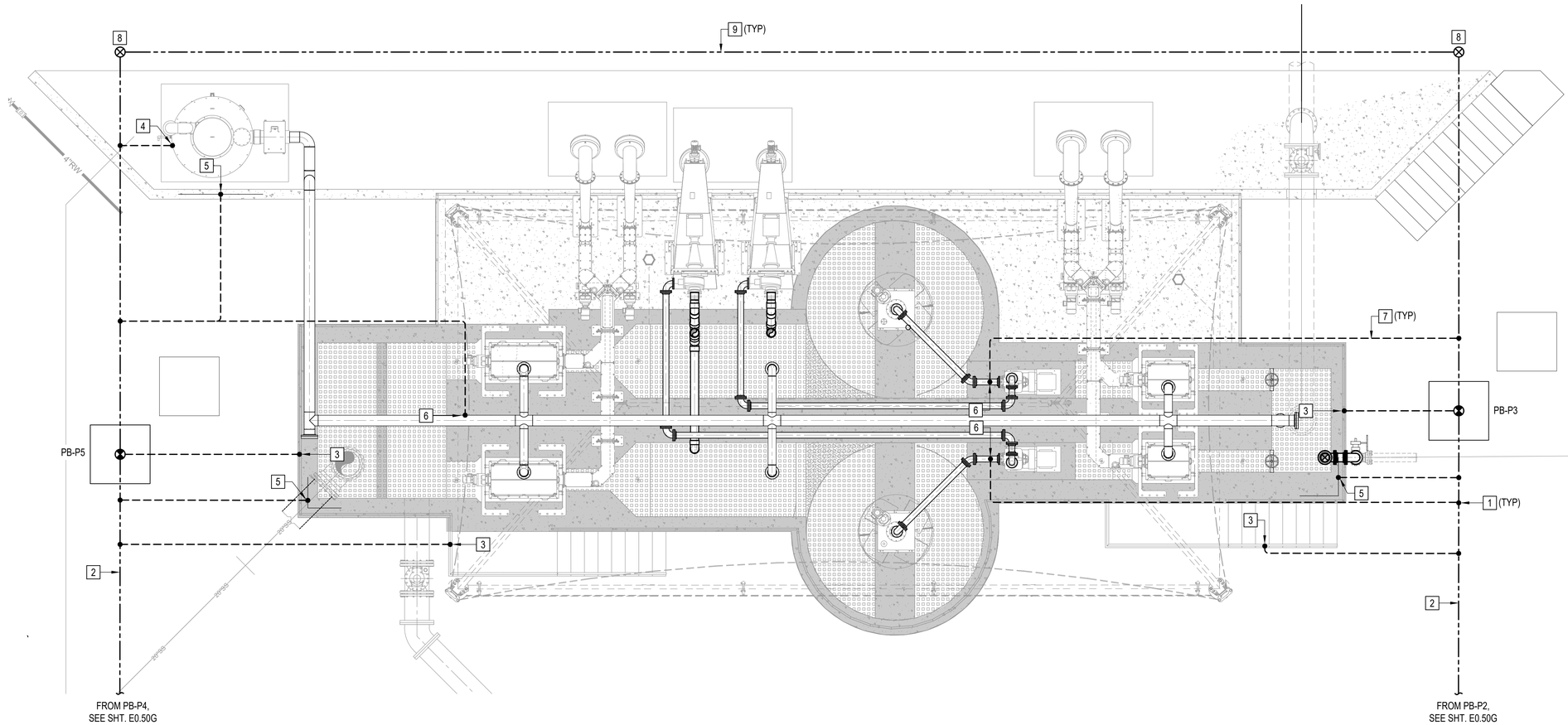

HEADWORKS GROUNDING PLAN

SCALE: 1/4"=1'-0"

NORTH

4 2 0 4 8

SCALE: 1/4"=1'-0"

NO	BY	DATE	REVISIONS	DATE	APP.

Registered Professional Engineer (Electrical)
CERTIFICATE NO. 35958
Nasser Bashar Shaiq
State of ARIZONA, U.S.A.
Expires 03/31/28

PREPARED BY
BASHAR SHAIQ
PROJECT ENGINEER
R.C.E. NO. E24580
EXP. DATE

DRAWN NC
DESIGNED NC, BI
CHECKED BI
SCALE
DATE FEB 2026

TITLE
HEADWORKS GROUNDING PLAN

JOB
CITY OF SAN LUIS WEST WWTP
3.0 MGD MBR UPGRADES
AZ.
SAN LUIS

PACE
Advanced Water Engineering
8723 E. VIA de COMMERCIO, SUITE A-204 | SCOTTSDALE, CA 85258
P: (408) 991-3595 | www.pacewater.com

SHEET
E1.0G
132 OF 209 SHEETS

JOB NO. B777

FINAL PLANS ISSUED FOR BID

THESE DRAWINGS ARE THE PROPERTY OF P.A.C.E. AND SHALL NOT BE REPRODUCED IN ANY MANNER NOR BE USED FOR CONSTRUCTION UNLESS STAMPED "ISSUED FOR CONSTRUCTION".

W:\B777\Engineering\B777 - 3MGD Exp\3MGD FINAL DSN\sheets\B777 - E1.0.dwg - Tab: E1.0G - by rozhin on 02/26/26 at 2:45:33 PM

CONSTRUCTION NOTES:

1. FVNR COMBO MOTOR STARTER, 120V, 1PH, 30A, NEMA 4X, STANCHION-MTD. SEE DETAIL "C" SHEET E11.1.
2. FAN MOTOR STARTER, 120V, 1PH, NEMA 12, WALL-MTD. BELOW INSIDE PIPE GALLERIES, GREENHECK MS-1P OR EQUAL.
3. NEMA 4X ENCLOSURE, GUARDRAIL-MTD. INSTALL WEATHER PROTECTION HOOD.
4. WALL-MTD. PULLBOX, NEMA 4X.

NOTES:

1. GROUND AND BOND ALL EQUIPMENT AND ENCLOSURES PER MANUFACTURER REQUIREMENTS AND NEC 250.
2. CONDUITS ARE SHOWN SCHEMATICALLY. CONTRACTOR SHALL INSTALL PULLPOINTS WHERE REQUIRED FOR PULLING TENSION AND MAINTAINING LESS THEN (4) 90 DEGREE BENDS.
3. MAINTAIN WORKING CLEARANCES IN FRONT OF PANELS AS REQUIRED PER NEC 110.26.
4. LABEL ABOVEGROUND CONDUITS PER DETAIL "H" SHEET E11.0.
5. TYPICAL CONDUIT TRANSITIONS PER DETAILS "D, E, F, G" SHEET E11.0.
6. SUPPORT CONDUITS PER DETAIL 'E' SHEET E11.3.

LEGEND:

(J) NEMA 4X JUNCTION BOX

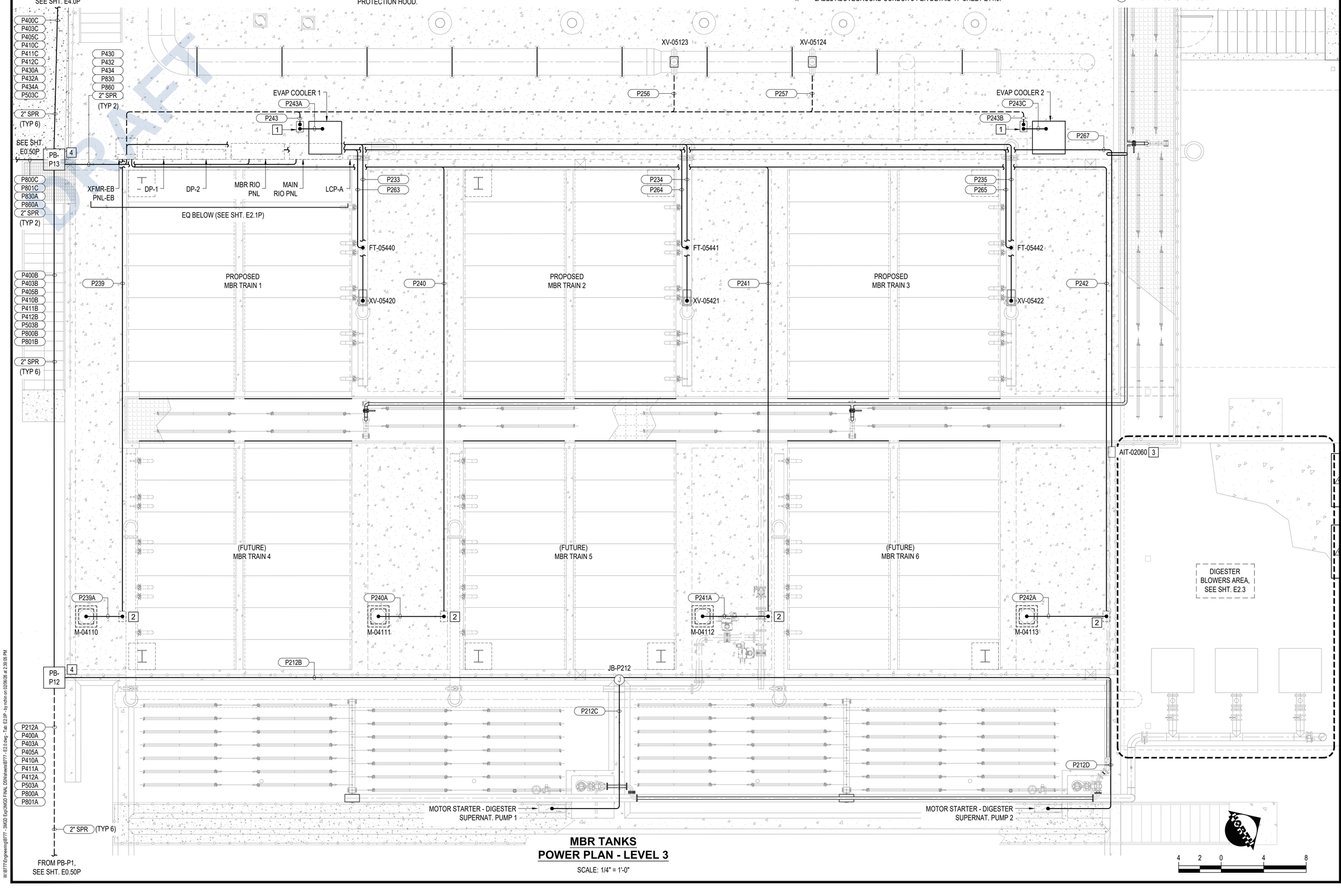

MBR TANKS
POWER PLAN - LEVEL 3

SCALE: 1/4" = 1'-0"

DRAFT

NO	BY	DATE	REVISIONS	DATE	APP.

Registered Professional Engineer (Electrical) CERTIFICATE NO. 35258 BASHAR ISHAQ State of ARIZONA U.S.A. Expires 03/31/28

PREPARED BY
BASHAR ISHAQ
PROJECT ENGINEER
R.C.E. NO. E24580
EXP. DATE —

DRAWN	SCALE
NC	
DESIGNED	DATE
NC, BI	FEB 2026
CHECKED	
BI	

THESE DRAWINGS ARE THE PROPERTY OF P.A.C.E. AND SHALL NOT BE REPRODUCED IN ANY MANNER NOR BE USED FOR CONSTRUCTION UNLESS STAMPED 'ISSUED FOR CONSTRUCTION'.

TITLE
MBR TANKS LEVEL 3 POWER PLAN

JOB
CITY OF SAN LUIS WEST WWTP
3.0 MGD MBR UPGRADES
SAN LUIS AZ.

PACE
Advanced Water Engineering
8723 E. VIA de COMMERCIO, SUITE A-204 | SCOTTSDALE, CA 85258
P: (408) 991-3595 | www.pacewater.com

SHEET
E2.0P
133 OF 209 SHEETS

JOB NO. B777

FINAL PLANS ISSUED FOR BID

W:\B777\Engineering\B777 - 3MGD Exp\3MGD FINAL DS\Sheets\B777 - E2.0.dwg - Tab: E2.0P - by rodin on 02/26/26 at 2:39:05 PM

CONSTRUCTION NOTES:

1. PULLBOXES LOCATED BENEATH POWER PULLBOXES, WALL-MTD., NEMA 4X.
2. NEMA 4X ENCLOSURE, GUARDRAIL-MTD. INSTALL WEATHER PROTECTION HOOD.

NOTES:

1. GROUND AND BOND ALL EQUIPMENT AND ENCLOSURES PER MANUFACTURER REQUIREMENTS AND NEC 250.
2. CONDUITS ARE SHOWN SCHEMATICALLY. CONTRACTOR SHALL INSTALL PULLPOINTS WHERE REQUIRED FOR PULLING TENSION AND MAINTAINING LESS THEN (4) 90 DEGREE BENDS.
3. MAINTAIN WORKING CLEARANCES IN FRONT OF PANELS AS REQUIRED PER NEC 110.26.
4. LABEL ABOVEGROUND CONDUITS PER DETAIL "H" SHEET E11.0.
5. TYPICAL CONDUIT TRANSITIONS PER DETAILS "D, E, F, G" SHEET E11.0.
6. SUPPORT CONDUITS PER DETAIL 'E' SHEET E11.3.

LEGEND:

(J) NEMA 4X JUNCTION BOX

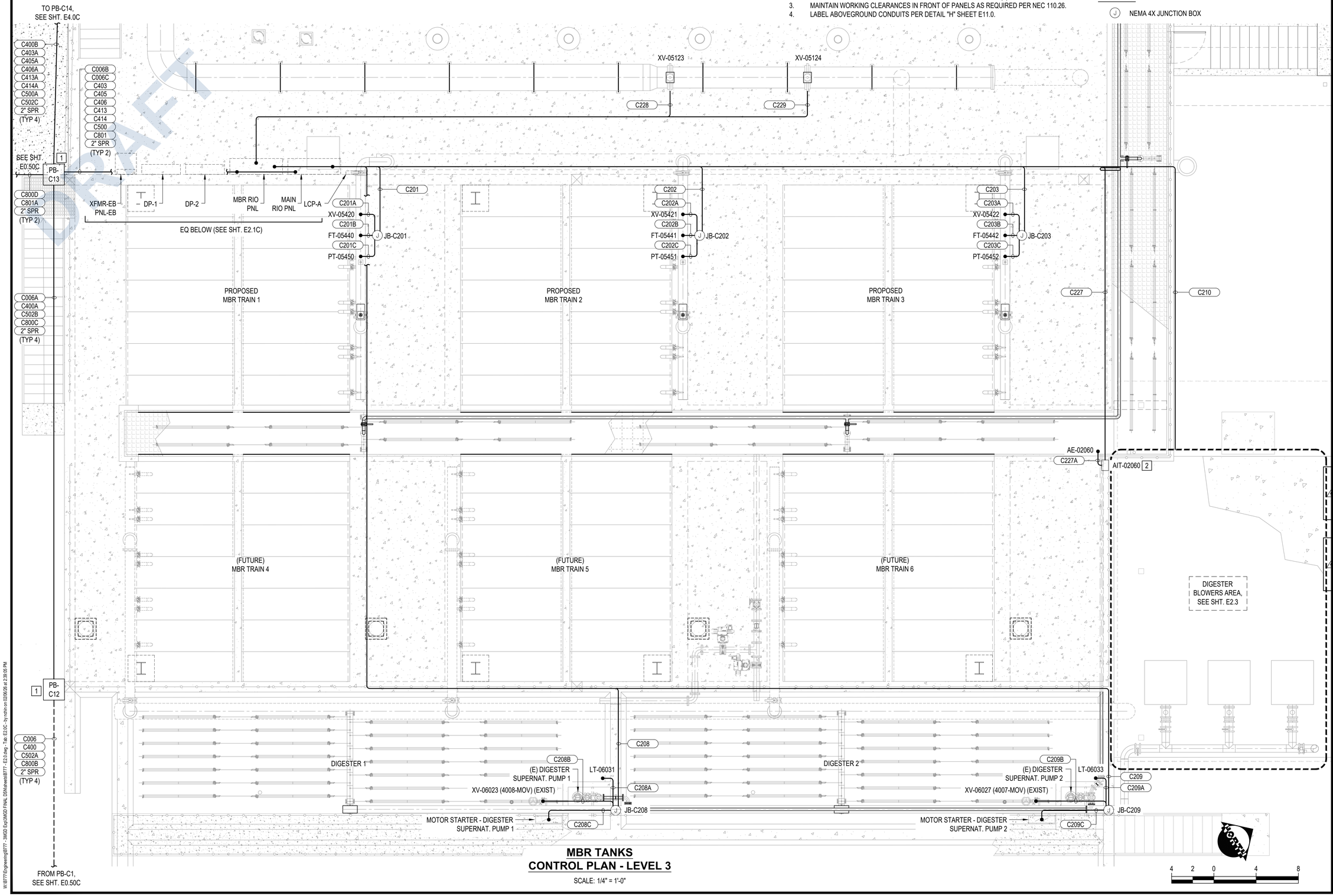

MBR TANKS
CONTROL PLAN - LEVEL 3

SCALE: 1/4" = 1'-0"

DRAFT

NO	BY	DATE	REVISIONS	DATE	APP.

Registered Professional Engineer (Electrical) CERTIFICATE NO. 25656 Basheer Shaq State of ARIZONA U.S.A. Expires 03/31/28

PREPARED BY
BASHAR SHAQ
PROJECT ENGINEER
R.C.E. NO. E24580
EXP. DATE

DRAWN NC
DESIGNED NC, BI
CHECKED BI
SCALE
DATE FEB 2026

THESE DRAWINGS ARE THE PROPERTY OF P.A.C.E. AND SHALL NOT BE REPRODUCED IN ANY MANNER NOR BE USED FOR CONSTRUCTION UNLESS STAMPED 'ISSUED FOR CONSTRUCTION'.

TITLE
MBR TANKS
LEVEL 3
CONTROL PLAN

JOB
CITY OF SAN LUIS WEST WWTP
3.0 MGD MBR UPGRADES
AZ.
SAN LUIS

PACE
Advanced Water Engineering
8723 E. VIA de COMMERCIO, SUITE A-204 | SCOTTSDALE, CA 85258
P: (408) 991-3595 | www.pacewater.com

SHEET
E2.0C
134 OF 209 SHEETS

JOB NO. B777

FINAL PLANS ISSUED FOR BID

W:\B777\Engineering\B777 - 3MGD Exp\3MGD FINAL DS\Arbeit\B777 E2.0.dwg - Tab: E2.0C - by rohn on 02/06/26 at 2:39:05 PM

LEGEND:

(J) NEMA 4X JUNCTION BOX IF OUTDOORS
NEMA 12 JUNCTION BOX IF INDOORS

CONSTRUCTION NOTES:

1. OUTDOOR LIGHTING CONTROL PANEL (LCP-A), 120-277 VAC, 1PH, 8 RELAYS, DIGITAL TIME CLOCK, ANALOG PHOTOSENSOR (WIRED TO PANEL MTD. OUTDOOR), PANEL DIMS: 14.41"H x 14.41"W x 4.05"D, MF'R: ACUITY BRANDS, PN ARP INTENC08 NLT-8FCR-MVOLT-SC-SM-DTC-ARPA APS OL (OR APPROVED EQUAL). SEE SHEET E10.0.
2. COMBINATION FVNR MOTOR STARTER, WITH H-O-A SELECTOR SWITCH, NEMA 12, MF'R: EATON, TYPE FREEDOM FULL VOLTAGE CONTROLS (OR EQUAL).
3. DISTRIBUTION PANELBOARD (DP-2), 480V, 1000A BUS, 1000A MAIN, 3Ø-3W, 60 HZ, NEMA 12, 65 KAIC, PAD-MTD.
4. 30 KVA TRANSFORMER (XFMR-EB), 480-120/208V, 3Ø-4W, 60 HZ, NEMA 12 ENCLOSURE, WALL-MTD., MF'R: EATON OR APPROVED EQUAL.
5. PANELBOARD (PANEL-EB), 120/208V, 3Ø-4W, 60 HZ, 100A MCB, 22 KAIC, BOLT-ON TYPE, 54 CIRCUITS, NEMA 12, WALL-MTD., MF'R: EATON, PN PRL1X (DIMS: 20"W x 5.75"D) OR APPROVED EQUAL.
6. MAIN RIO PANEL, 120 VAC, EQUIPPED WITH UPS, PAD-MTD.
7. DISTRIBUTION PANELBOARD (DP-1), 480V, 1000A BUS, 1000A MAIN, 3Ø-3W, 60 HZ, NEMA 12, 65 KAIC, PAD-MTD.
8. MBR RIO PANEL, VENDOR PROVIDED, CONTRACTOR INSTALLED, 120 VAC, EQUIPPED WITH UPS, 72" x 60" x 18", PAD-MTD.
9. DOORS SHALL BE EQUIPPED WITH PANIC BARS PER NEC CODE REQUIREMENTS.
10. TO MBR CRANE TROLLEY & HOIST MOTOR DISCONNECT SWITCH.
11. VARIABLE FREQUENCY DRIVE WITH INTEGRATED FUSED DISCONNECT SWITCH, 480V, 3PH, NEMA 12, WALL-MTD., MF'R: DANFOSS, PN: FC202 AQUA DRIVE (OR APPROVED EQUAL).

NOTES:

1. GROUND AND BOND ALL EQUIPMENT AND ENCLOSURES PER MANUFACTURER REQUIREMENTS AND NEC 250.
2. CONDUITS ARE SHOWN SCHEMATICALLY. CONTRACTOR SHALL INSTALL PULLPOINTS WHERE REQUIRED FOR PULLING TENSION AND MAINTAINING LESS THEN (4) 90 DEGREE BENDS.
3. MAINTAIN WORKING CLEARANCES IN FRONT OF PANELS AS REQUIRED PER NEC 110.26.
4. LABEL ABOVEGROUND CONDUITS PER DETAIL "H" SHEET E11.0.
5. TYPICAL CONDUIT TRANSITIONS PER DETAILS "D, E, F, G" SHEET E11.0.
6. SUPPORT CONDUITS PER DETAIL 'E' SHEET E11.3.

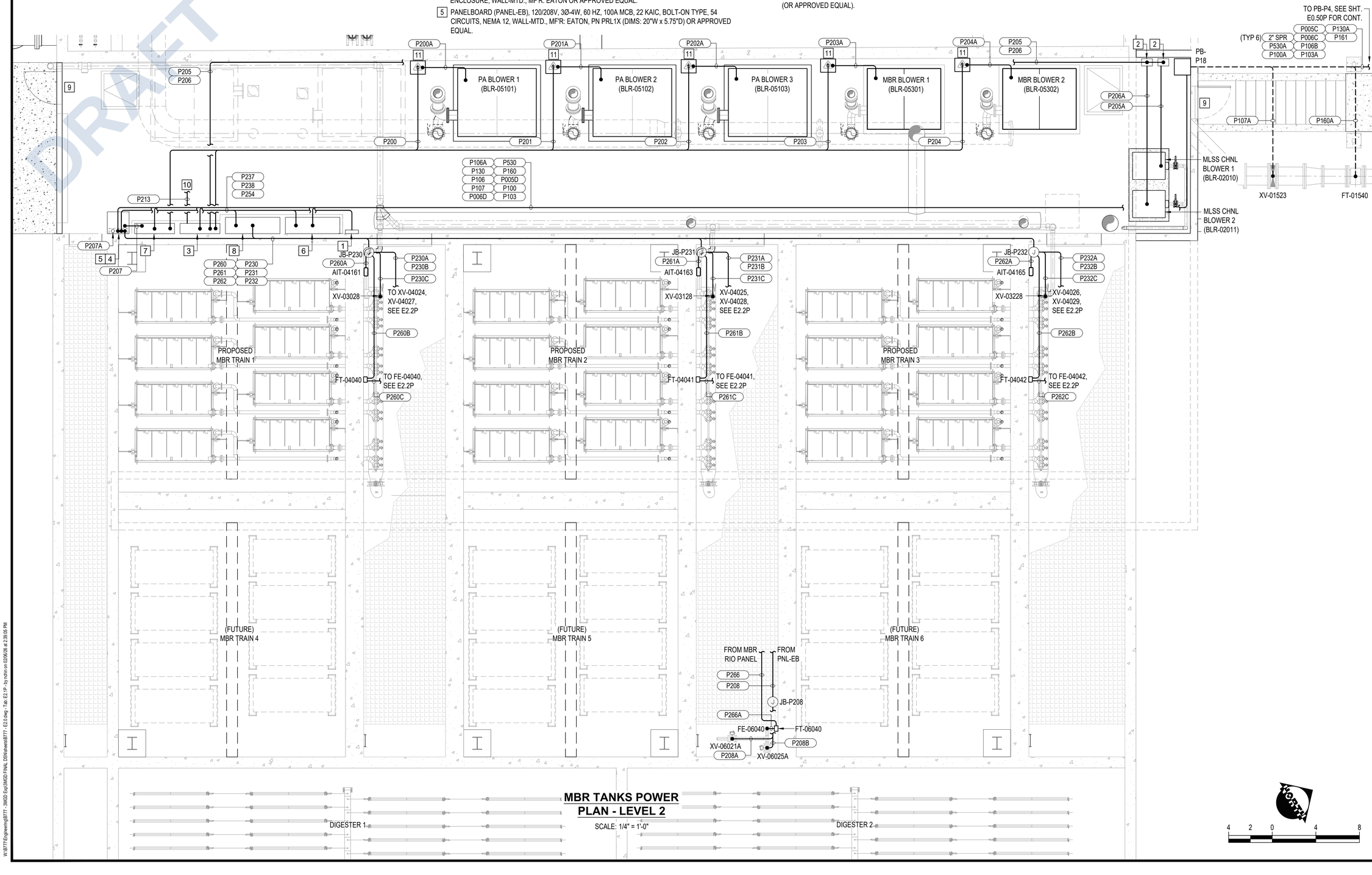

MBR TANKS POWER PLAN - LEVEL 2

SCALE: 1/4" = 1'-0"

NORTH

4 2 0 4 8

DRAFT

NO	BY	DATE	REVISIONS	DATE	APP.

Registered Professional Engineer (Electrical) CERTIFICATE NO. 35268 Basher Shaq Shaq State of ARIZONA U.S.A. Expires 03/31/28

PREPARED BY: BASHAR SHAQ
PROJECT ENGINEER
R.C.E. NO. E24580
EXP. DATE

DRAWN: NC
DESIGNED: NC, BI
CHECKED: BI
SCALE
DATE: FEB 2026

THESE DRAWINGS ARE THE PROPERTY OF P.A.C.E. AND SHALL NOT BE REPRODUCED IN ANY MANNER NOR BE USED FOR CONSTRUCTION UNLESS STAMPED 'ISSUED FOR CONSTRUCTION'.

TITLE: **MBR TANKS LEVEL 2 POWER PLAN**

JOB: CITY OF SAN LUIS WEST WWTP
3.0 MGD MBR UPGRADES
SAN LUIS AZ.

PACE
Advanced Water Engineering
8723 E. VIA de COMMERCIO, SUITE A-204 | SCOTTSDALE, CA 85258
P: (408) 991-3595 | www.pacewater.com

FINAL PLANS ISSUED FOR BID

SHEET **E2.1P**
135 OF 209 SHEETS

JOB NO. B777

W:\B777\Engineering\B777 - 3MGD Eng\3MGD FINAL DSN\sheets\B777 - E2.0.dwg - Tab: E2.1P - by rohn on 02/06/26 at 2:39:05 PM

CONSTRUCTION NOTES:

1. FAN MOTOR STARTER, 120V, 1PH, NEMA 12, WALL-MTD., GREENHECK MS-1P OR EQUAL.
2. COMBINATION FVNR MOTOR STARTER, WITH H-O-A SELECTOR SWITCH, NEMA 12, MF'R: EATON, TYPE FREEDOM FULL VOLTAGE CONTROLS (OR EQUAL).
3. DISTRIBUTION PANELBOARD (DP-2), 480V, 1000A BUS, 1000A MAIN, 3Ø-3W, 60 HZ, NEMA 12, 65 KAIC, PAD-MTD.
4. 30 KVA TRANSFORMER (XFMR-EB), 480-120/208V, 3Ø-4W, 60 HZ, NEMA 12 ENCLOSURE, WALL-MTD., MF'R: EATON OR APPROVED EQUAL.
5. PANELBOARD (PANEL-EB), 120/208V, 3Ø-4W, 60 HZ, 100A MCB, 22 KAIC, BOLT-ON TYPE, 54 CIRCUITS, NEMA 12, WALL-MTD., MF'R: EATON, PN PRL1X (DIMS: 20"W x 5.75"D) OR APPROVED EQUAL.
6. MAIN RIO PANEL, 120 VAC, EQUIPPED WITH UPS, PAD-MTD.
7. DISTRIBUTION PANELBOARD (DP-1), 480V, 1000A BUS, 1000A MAIN, 3Ø-3W, 60 HZ, NEMA 12, 65 KAIC, PAD-MTD.
8. MBR RIO PANEL, VENDOR PROVIDED, CONTRACTOR INSTALLED, 120 VAC, EQUIPPED WITH UPS, 72" x 60" x 18", PAD-MTD.
9. OUTDOOR LIGHTING CONTROL PANEL (LCP-A), 120-277 VAC, 1PH, 8 RELAYS, DIGITAL TIME CLOCK, ANALOG PHOTOSENSOR (WIRED TO PANEL MTD. OUTDOOR), PANEL DIMS: 14.41"H x 14.41"W x 4.05"D, MF'R: ACUITY BRANDS, PN ARP INTENC08 NLT-8FCR-MVOLT-SC-SM-DTC-ARPA APS OL (OR APPROVED EQUAL). SEE SHEET E10.0.
10. PULLBOX LOCATED BENEATH POWER PULLBOX.
11. VARIABLE FREQUENCY DRIVE WITH INTEGRATED FUSED DISCONNECT SWITCH, 480V, 3PH, NEMA 12, WALL-MTD., MF'R: DANFOSS, PN: FC202 AQUA DRIVE (OR APPROVED EQUAL).

NOTES:

1. GROUND AND BOND ALL EQUIPMENT AND ENCLOSURES PER MANUFACTURER REQUIREMENTS AND NEC 250.
2. CONDUITS ARE SHOWN SCHEMATICALLY. CONTRACTOR SHALL INSTALL PULLPOINTS WHERE REQUIRED FOR PULLING TENSION AND MAINTAINING LESS THEN (4) 90 DEGREE BENDS.
3. MAINTAIN WORKING CLEARANCES IN FRONT OF PANELS AS REQUIRED PER NEC 110.26.
4. LABEL ABOVEGROUND CONDUITS PER DETAIL "H" SHEET E11.0.
5. TYPICAL CONDUIT TRANSITIONS PER DETAILS "D, E, F, G" SHEET E11.0.
6. SUPPORT CONDUITS PER DETAIL 'E' SHEET E11.3.

LEGEND:

(J) NEMA 4X JUNCTION BOX

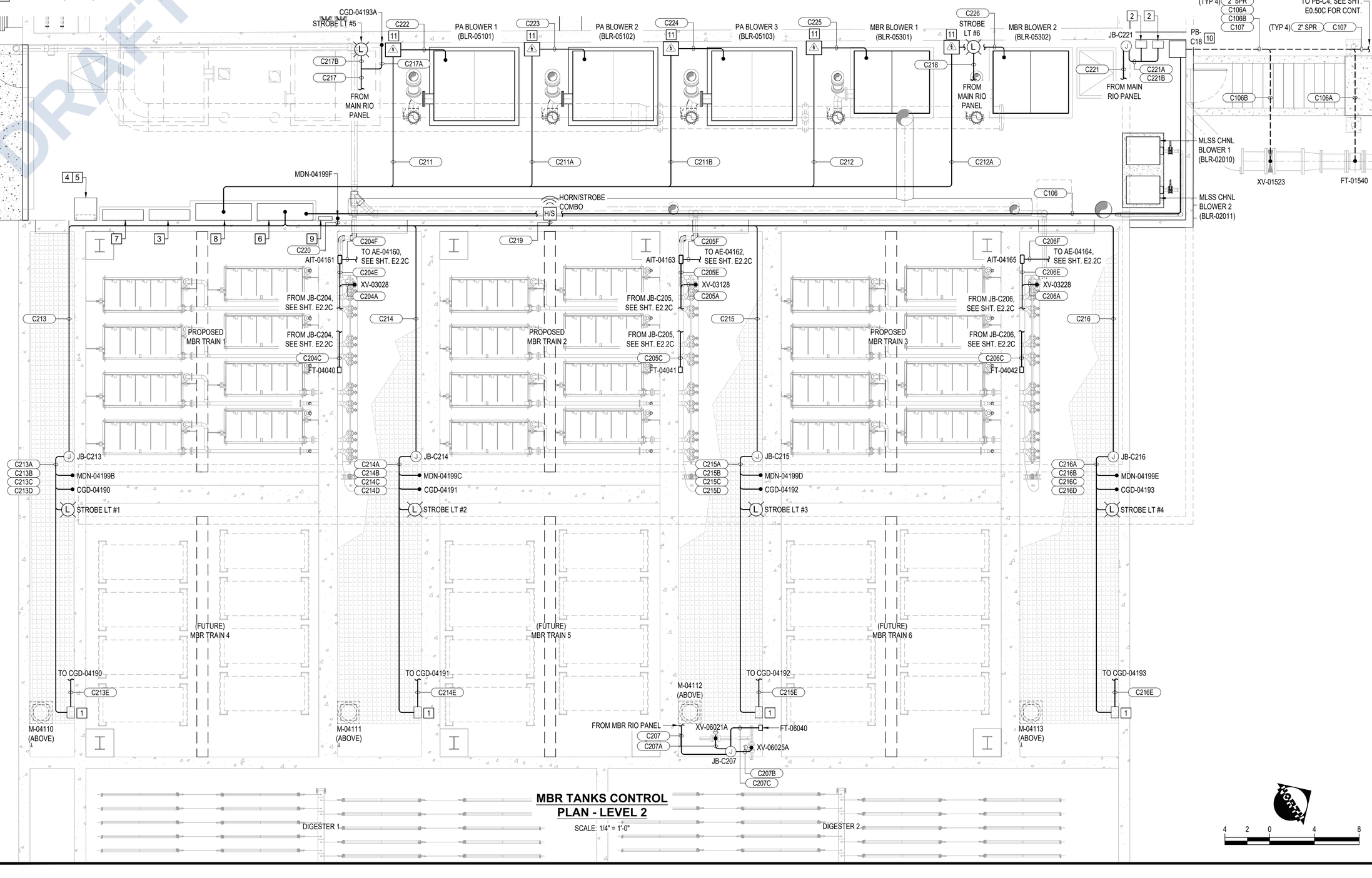

MBR TANKS CONTROL PLAN - LEVEL 2

SCALE: 1/4" = 1'-0"

DRAFT

NO	BY	DATE	REVISIONS	DATE	APP.

Registered Professional Engineer (Electrical) CERTIFICATE NO. 35268 Basher Shaio State of ARIZONA U.S.A. Expires 03/31/28

PREPARED BY: BASHAR SHAIO
PROJECT ENGINEER
R.C.E. NO. E24590
EXP. DATE
SCALE
DRAWN NC
DESIGNED NC, BI
CHECKED BI
DATE FEB 2026

TITLE: **MBR TANKS LEVEL 2 CONTROL PLAN**

JOB: CITY OF SAN LUIS WEST WWTP
3.0 MGD MBR UPGRADES
SAN LUIS AZ.

PACE
Advanced Water Engineering
8723 E. VIA de COMMERCIO, SUITE A 204 | SCOTTSDALE, CA 85258
P: (408) 991-3595 | www.pacewater.com

SHEET **E2.1C**
136 OF 209 SHEETS

JOB NO. B777

THESE DRAWINGS ARE THE PROPERTY OF P.A.C.E. AND SHALL NOT BE REPRODUCED IN ANY MANNER NOR BE USED FOR CONSTRUCTION UNLESS STAMPED 'ISSUED FOR CONSTRUCTION'.

FINAL PLANS ISSUED FOR BID

W:\B777\Engineering\B777 - 3MGD Exp\3MGD FINAL DSN\sheets\B777 - E2.0.dwg - Tab: E2.1C - by rodm on 02/06/26 at 2:39:05 PM

CONSTRUCTION NOTES:

1. PANELBOARD (PANEL-EB), 120/208V, 3Ø-4W, 60 HZ, 100A MCB, 22 KAIC, BOLT-ON TYPE, 54 CIRCUITS, NEMA 12, WALL-MTD., MF'R: EATON, PN PRL1X (DIMS: 20"W x 5.75"D) OR APPROVED EQUAL.
2. OUTDOOR LIGHTING CONTROL PANEL (LCP-A), 120-277 VAC, 1PH, 8 RELAYS, DIGITAL TIME CLOCK, ANALOG PHOTOSENSOR (WIRED TO PANEL MTD. OUTDOOR), PANEL DIMS: 14.41"H x 14.41"W x 4.05"D, MF'R: ACUITY BRANDS, PN ARP INTENC08 NLT-8FCR-MVOLT-SC-SM-DTC-ARPA APS OL (OR APPROVED EQUAL). SEE SHEET E10.0.

LEGEND:

100W EB-# — INDICATES CIRCUIT NUMBER
LINEAR WASHDOWN 8FT, 100W, 5000K LED, 120-277V, NEMA 4X, 0-10V DIMMER. DIAGONAL LINE IMPLIES BATTERY BACKUP. MF'R: RAB, PN SHARK8-100W/D10 (ADD "E2" FOR BATTERY BACKUP) (OR APPROVED EQUAL)

50W EB-# — INDICATES CIRCUIT NUMBER
LINEAR WASHDOWN 4FT, 50W, 5000K LED, 120-277V, NEMA 4X, 0-10V DIMMER. DIAGONAL LINE IMPLIES BATTERY BACKUP. MF'R: RAB, PN SHARK4-50W/D10 (ADD "E2" FOR BATTERY BACKUP) (OR APPROVED EQUAL)

^{3} — 120 VAC, 20A, WALL-MTD. LIGHT SWITCH LOCATED 42" AFF. NUMBER INDICATES 3-WAY SWITCH REQUIRED.

((— HASH MARKS INDICATE NUMBER OF CURRENT CARRYING CONDUCTORS. GROUND CONDUCTOR(S) NOT SHOWN FOR CLARITY. ALL CONDUITS SHALL HAVE A MINIMUM #12 GROUND AND SIZED PER CODE REQUIREMENTS.

OUTDOOR LED WALL PACK, 57W, 3000K LED, 120-277V, BRONZE, 0-10V DIMMABLE, MF'R: RAB, PN SLIM57Y/D10 (OR APPROVED EQUAL).

EGRESS LIGHT, 9W, MF'R: THE EXIT LIGHT CO., PN EL-HD6 (OR APPROVED EQUAL).

EXIT — 1.3W, SINGLE FACE, ALUMINUM, 120 VAC. LED EXIT LIGHT WITH BATTERY BACKUP. LITHONIA SIGNATURE (OR APPROVED EQUAL).

GENERAL NOTES:

1. CONDUCTORS FOR HOME RUN CIRCUITS FOR LIGHTING & RECEPTACLES SHALL BE #10 AWG MINIMUM SIZE.
2. ADDITIONAL RECEPTACLES ARE SHOWN ON THE POWER/CONTROL DRAWINGS IN THIS PLAN SET THAT ARE NOT SHOWN ON THE LIGHTING/RECEPTACLE PLANS DUE TO NATURE OF EQUIPMENT.
3. LIGHTING & RECEPTACLE WIRING SHALL BE TYPE XHHW-2.
4. RECEPTACLE OUTLETS SHALL BE CLEARLY LABELED WITH THE CIRCUIT PROVIDING POWER. LABEL SHALL BE SUITED FOR ENVIRONMENT RECEPTACLE IS LOCATED IN.
5. ALL WIRING SHOWN SHALL BE WITHIN CONDUITS (PVC COATED RGS FOR OUTDOOR EXPOSED CONDUIT AND RGS FOR INDOOR CONDUIT).
6. ALL CONDUITS SHALL CONTAIN A PROPERLY SIZED GROUND CONDUCTOR. DE-RATE CONDUCTORS PER NEC 310.15(C)(1).
7. MOUNT AND WIRE ALL EQUIPMENT PER MANUFACTURER REQUIREMENTS.
8. DE-RATE CONDUCTOR AMPACITY BASED ON # OF CURRENT CARRYING CONDUCTORS AS APPLICABLE.
6. SUPPORT CONDUITS PER DETAIL 'E' SHEET E11.3.

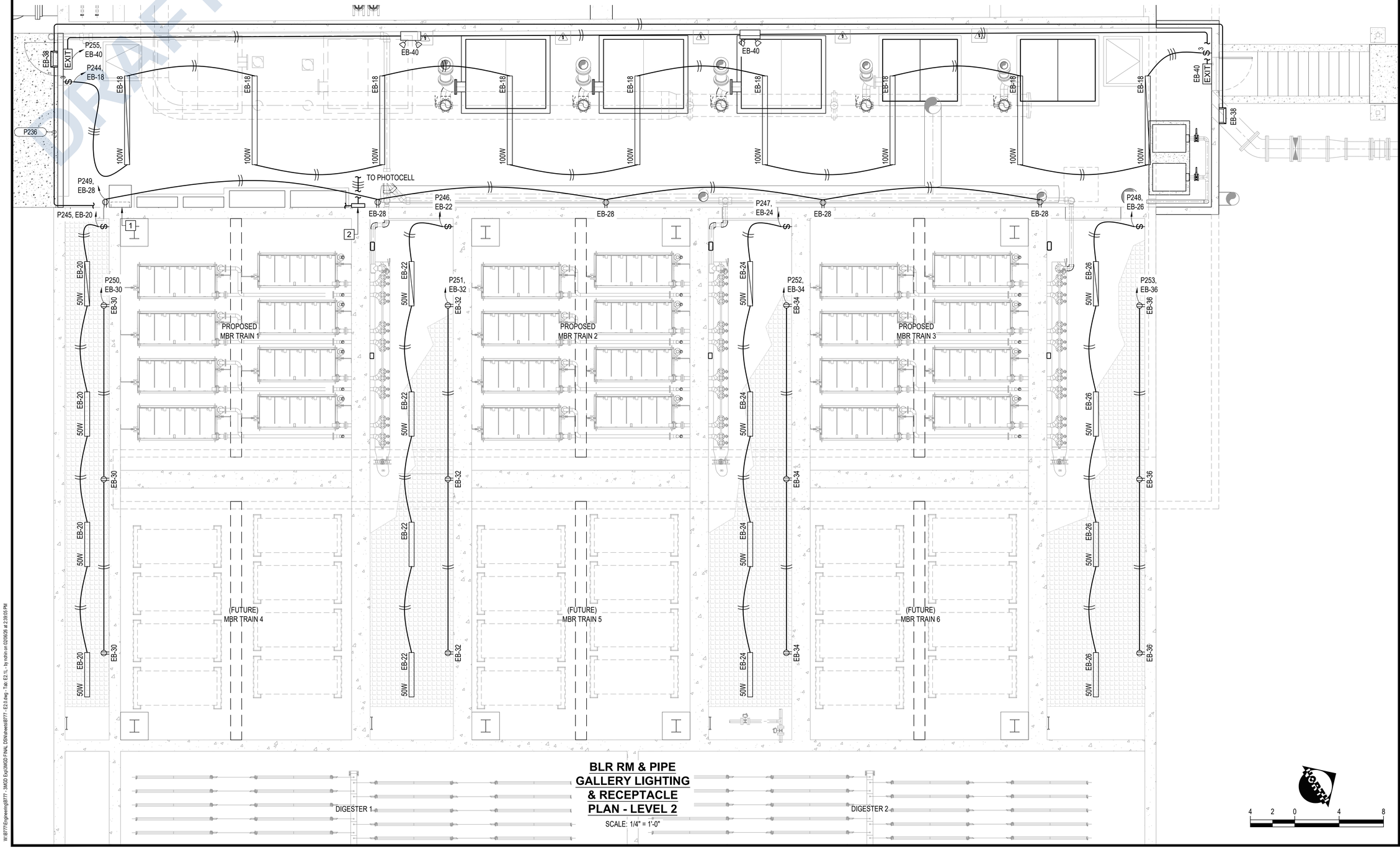

BLR RM & PIPE GALLERY LIGHTING & RECEPTACLE PLAN - LEVEL 2

SCALE: 1/4" = 1'-0"

NORTH

4 2 0 4 8

DRAFT

NO	BY	DATE	REVISIONS	DATE	APP.

Registered Professional Engineer (Electrical) CERTIFICATE NO. 25358 Basher Shaq Shaikh ARIZONA, U.S.A. Expires 03/31/28

PREPARED BY BASHAR SHAIQ
PROJECT ENGINEER
R.C.E. NO. E24590
EXP. DATE
DRAWN NC
DESIGNED NC, BI
CHECKED BI
SCALE
DATE FEB 2026

THESE DRAWINGS ARE THE PROPERTY OF P.A.C.E. AND SHALL NOT BE REPRODUCED IN ANY MANNER NOR BE USED FOR CONSTRUCTION UNLESS STAMPED 'ISSUED FOR CONSTRUCTION'.

TITLE
BLR RM & PIPE GALL LIGHTING & RECEP PLAN

JOB
CITY OF SAN LUIS WEST WWTP
3.0 MGD MBR UPGRADES
SAN LUIS AZ.

PACE
Advanced Water Engineering
8723 E. VIA de COMMERCIO, SUITE A 204 | SCOTTSDALE, CA 85258
P: (408) 991-3595 | www.pacewater.com

FINAL PLANS ISSUED FOR BID

SHEET
E2.1L
137 OF 209 SHEETS

JOB NO. B777

W:\B777\Engineering\B777 - 3MGD Exp\3MGD FINAL DSN\sheets\B777 - E2.0.dwg - Tab: E2.1L - by rohn on 02/26/26 at 2:39:05 PM

CONSTRUCTION NOTES:

1. EXOTHERMIC WELD PER DETAIL "C" SHEET E11.0.
2. #4/0 BARE CU CONDUCTOR WITHIN DUCT BANK.
3. GROUNDING BUS BAR PER DETAIL "A" SHEET E11.6.
4. #2 BARE COPPER, GROUNDING ELECTRODE CONDUCTOR (TYP)
5. GROUND TO REBAR PER DETAIL "C" SHEET E11.5.
6. GROUND BLOWERS & BLOWER PADS.
7. GROUND PANELS.
8. GROUND XFMR.
9. GROUND PIPES.
10. 4/0 BARE COPPER, GROUNDING ELECTRODE CONDUCTOR ROUTED WITHIN SCH80 PVC CONDUIT (ABOVEGRADE).
11. GROUND VFD'S.
12. GROUND I-BEAMS IF EXPOSED.
13. BOND ALL EXPOSED PIPES.

NOTES:

1. GROUND AND BOND ALL EQUIPMENT AND ENCLOSURES PER MANUFACTURER REQUIREMENTS AND NEC 250.
2. GROUND AND BOND ALL MOTOR FRAMES TO THE GROUND RING.
3. ALL METALLIC ENCLOSURES INCLUDING ROLL UP GATES, RAILINGS, FENCES, STAIR CASES OR OTHER METAL PERSONNEL MAY COME IN CONTACT WITH, SHALL BE EFFECTIVELY GROUNDED.
4. GROUNDING ROUTING IS DIAGRAMMATIC.
5. THE GEC MUST BE INSTALLED WITH SUFFICIENT LENGTH SO THAT REMOVAL OF ONE EQUIPMENT DOES NOT INTERRUPT THE EFFECTIVE GROUND PATH OF ANY OTHER EQUIPMENT.

SEE SHT. E4.0G FOR CONT.

TO PB-P4, SEE SHT. E0.50G FOR CONT.

PB-P18

(TYP) 1

2

(TYP) 4

5

10 (TYP)

TO FEB PS, SEE SHT. E0.50G FOR CONT.

PROPOSED MBR TRAIN 1

PROPOSED MBR TRAIN 2

PROPOSED MBR TRAIN 3

(FUTURE) MBR TRAIN 4

(FUTURE) MBR TRAIN 5

(FUTURE) MBR TRAIN 6

DIGESTER 1

DIGESTER 2

MBR TANKS GROUNDING PLAN - LEVEL 2

SCALE: 1/4" = 1'-0"

NORTH

4 2 0 4 8

DRAFT

NO	BY	DATE	REVISIONS	DATE	APP.

Registered Professional Engineer (Electrical) CERTIFICATE NO. 35668 Basher Ishaq Date Signed 03/31/28 ARIZONA, U.S.A. Expires 03/31/28

PREPARED BY BASHAR ISHAQ
PROJECT ENGINEER
R.C.E. NO. E24580
EXP. DATE

SCALE

DRAWN NC
DESIGNED NC, BI
CHECKED BI

DATE FEB 2026

THESE DRAWINGS ARE THE PROPERTY OF P.A.C.E. AND SHALL NOT BE REPRODUCED IN ANY MANNER NOR BE USED FOR CONSTRUCTION UNLESS STAMPED "ISSUED FOR CONSTRUCTION".

TITLE

BLR RM & PIPE GALL GROUNDING PLAN

JOB

CITY OF SAN LUIS WEST WWTP
3.0 MGD MBR UPGRADES

AZ.
SAN LUIS

PACE
Advanced Water Engineering
8723 E. VIA de COMMERCIO, SUITE A-204 | SCOTTSDALE, CA 85258
P.: (408) 991-3595 | www.pacewater.com

FINAL PLANS ISSUED FOR BID

SHEET
E2.1G
138 OF 209 SHEETS

JOB NO. B777

W:\B777\Engineering\B777 - 3MGD Exp\3MGD FINAL DSN\sheets\B777 - E2.1G.dwg - Tab: E2.1G - by rothin on 02/06/26 at 2:39:05 PM

CONSTRUCTION NOTES:

1. LIGHT SWITCH TO BE LOCATED AT BLOWER ROOM LEVEL ABOVE.
2. FAN MOTOR STARTER, 120V, 1PH, NEMA 12, WALL-MTD. AT BLOWER ROOM LEVEL ABOVE, TYPE GREENHECK MS-1P OR EQUAL.

LEGEND:

EB-#
25W
← INDICATES CIRCUIT NUMBER
LINEAR WASHDOWN 2FT, 25W, 5000K LED, 120-277V, NEMA 4X, 0-10V DIMMER. DIAGONAL LINE IMPLIES BATTERY BACKUP. MF'R: RAB, PN SHARK2-25W/D10 (ADD "E2" FOR BATTERY BACKUP) (OR APPROVED EQUAL)

$ — 120 VAC, 20A, WALL-MTD. LIGHT SWITCH LOCATED 42" AFF.

((— HASH MARKS INDICATE NUMBER OF CURRENT CARRYING CONDUCTORS. GROUND CONDUCTOR(S) NOT SHOWN FOR CLARITY. ALL CONDUITS SHALL HAVE A MINIMUM #12 GROUND AND SIZED PER CODE REQUIREMENTS.

NOTES:

1. GROUND AND BOND ALL EQUIPMENT AND ENCLOSURES PER MANUFACTURER REQUIREMENTS AND NEC 250.
2. CONDUITS ARE SHOWN SCHEMATICALLY. CONTRACTOR SHALL INSTALL PULLPOINTS WHERE REQUIRED FOR PULLING TENSION AND MAINTAINING LESS THEN (4) 90 DEGREE BENDS.
3. MAINTAIN WORKING CLEARANCES IN FRONT OF PANELS AS REQUIRED PER NEC 110.26.
4. LABEL ABOVEGROUND CONDUITS PER DETAIL "H" SHEET E11.0.
5. TYPICAL CONDUIT TRANSITIONS PER DETAILS "D, E, F, G" SHEET E11.0.
6. SUPPORT CONDUITS PER DETAIL 'E' SHEET E11.3.
7. CONDUCTORS FOR HOME RUN CIRCUITS FOR LIGHTING SHALL BE #10 AWG MINIMUM SIZE.
8. LIGHTING WIRING SHALL BE TYPE XHHW-2.
9. ALL WIRING SHOWN SHALL BE WITHIN CONDUITS (PVC COATED RGS FOR OUTDOOR EXPOSED CONDUIT AND RGS FOR INDOOR CONDUIT).
10. ALL CONDUITS SHALL CONTAIN A PROPERLY SIZED GROUND CONDUCTOR. DE-RATE CONDUCTORS PER NEC 310.15(C)(1).
11. MOUNT AND WIRE ALL EQUIPMENT PER MANUFACTURER REQUIREMENTS.
12. DE-RATE CONDUCTOR AMPACITY BASED ON # OF CURRENT CARRYING CONDUCTORS AS APPLICABLE.

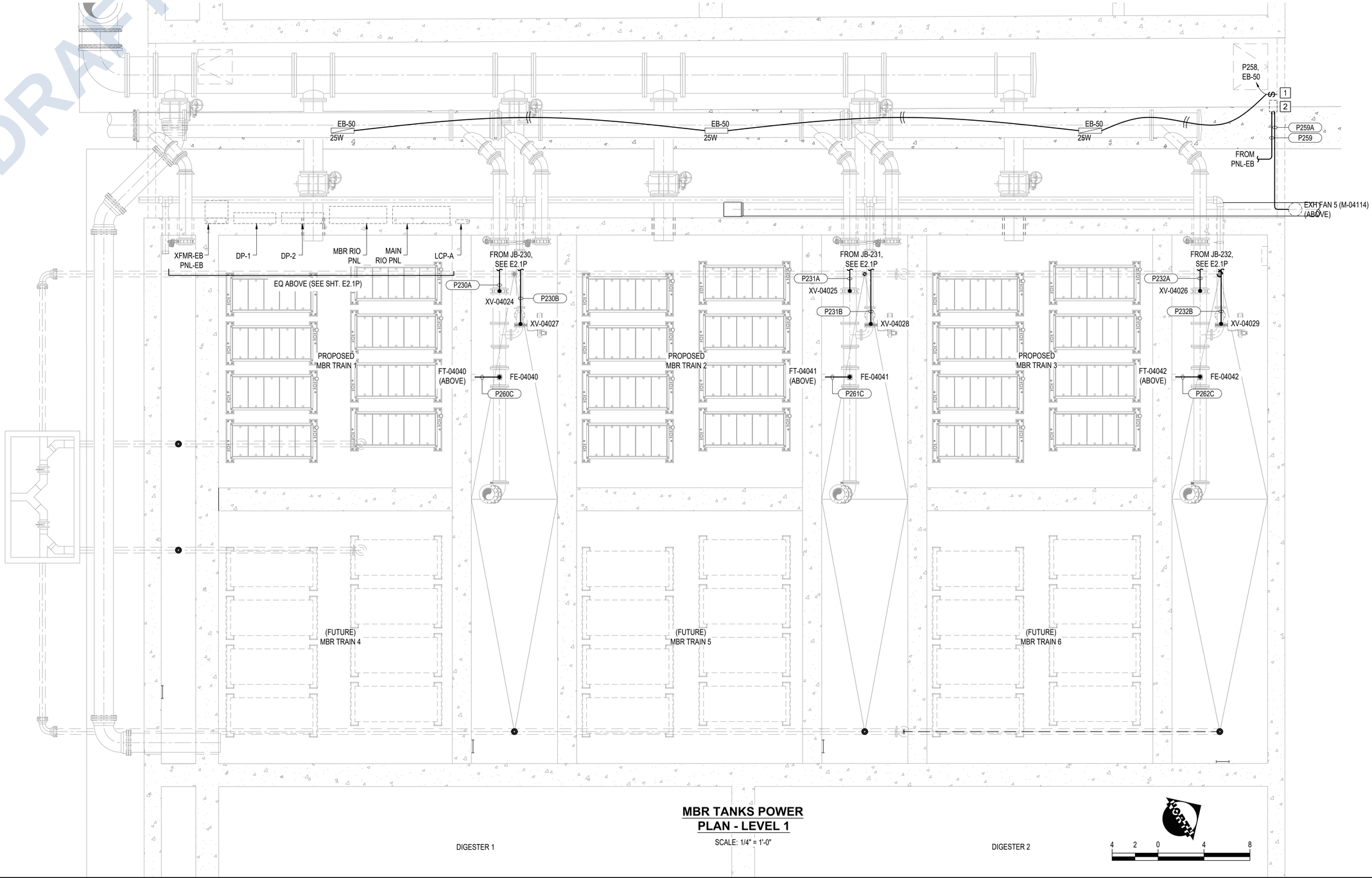

MBR TANKS POWER PLAN - LEVEL 1

SCALE: 1/4" = 1'-0"

NO	BY	DATE	REVISIONS	DATE	APP.

Registered Electrical Engineer (Electrical) CERTIFICATE NO. 25858 Brian Stanley Ishaq ARIZONA, U.S.A. Expires 03/31/28

PREPARED BY BASHAR ISHAQ
PROJECT ENGINEER E24580
R.C.E NO. —
EXP. DATE
SCALE
DRAWN NC
DESIGNED NC, BI
CHECKED BI
DATE FEB 2026

THESE DRAWINGS ARE THE PROPERTY OF P.A.C.E. AND SHALL NOT BE REPRODUCED IN ANY MANNER NOR BE USED FOR CONSTRUCTION UNLESS STAMPED 'ISSUED FOR CONSTRUCTION'.

TITLE
MBR TANKS LEVEL 1 POWER PLAN

JOB
CITY OF SAN LUIS WEST WWTP
3.0 MGD MBR UPGRADES
AZ.
SAN LUIS

PACE
Advanced Water Engineering
8723 E. VIA de COMMERCIO, SUITE A-204 | SCOTTSDALE, CA 85258
P.: (408) 991-3595 | www.pacewater.com

SHEET
E2.2P
139 OF 209 SHEETS

JOB NO. B777

FINAL PLANS ISSUED FOR BID

DRAFT

W:\B777\Engineering\B777 - 3MGD Exp\3MGD FINAL DSN\sheets\B777 - E1.0.dwg - Tab: E2.2P - by robin on 02/06/26 at 2:39:05 PM

CONSTRUCTION NOTES:

1 FAN MOTOR STARTER, 120V, 1PH, NEMA 12, WALL-MTD. AT BLOWER ROOM LEVEL ABOVE, TYPE GREENHECK MS-1P OR EQUAL.

NOTES:

1. GROUND AND BOND ALL EQUIPMENT AND ENCLOSURES PER MANUFACTURER REQUIREMENTS AND NEC 250.
2. CONDUITS ARE SHOWN SCHEMATICALLY. CONTRACTOR SHALL INSTALL PULLPOINTS WHERE REQUIRED FOR PULLING TENSION AND MAINTAINING LESS THEN (4) 90 DEGREE BENDS.
3. MAINTAIN WORKING CLEARANCES IN FRONT OF PANELS AS REQUIRED PER NEC 110.26.
4. LABEL ABOVEGROUND CONDUITS PER DETAIL "H" SHEET E11.0.
5. TYPICAL CONDUIT TRANSITIONS PER DETAILS "D, E, F, G" SHEET E11.0.
6. SUPPORT CONDUITS PER DETAIL 'E' SHEET E11.3.

LEGEND:

(J) NEMA 4X JUNCTION BOX

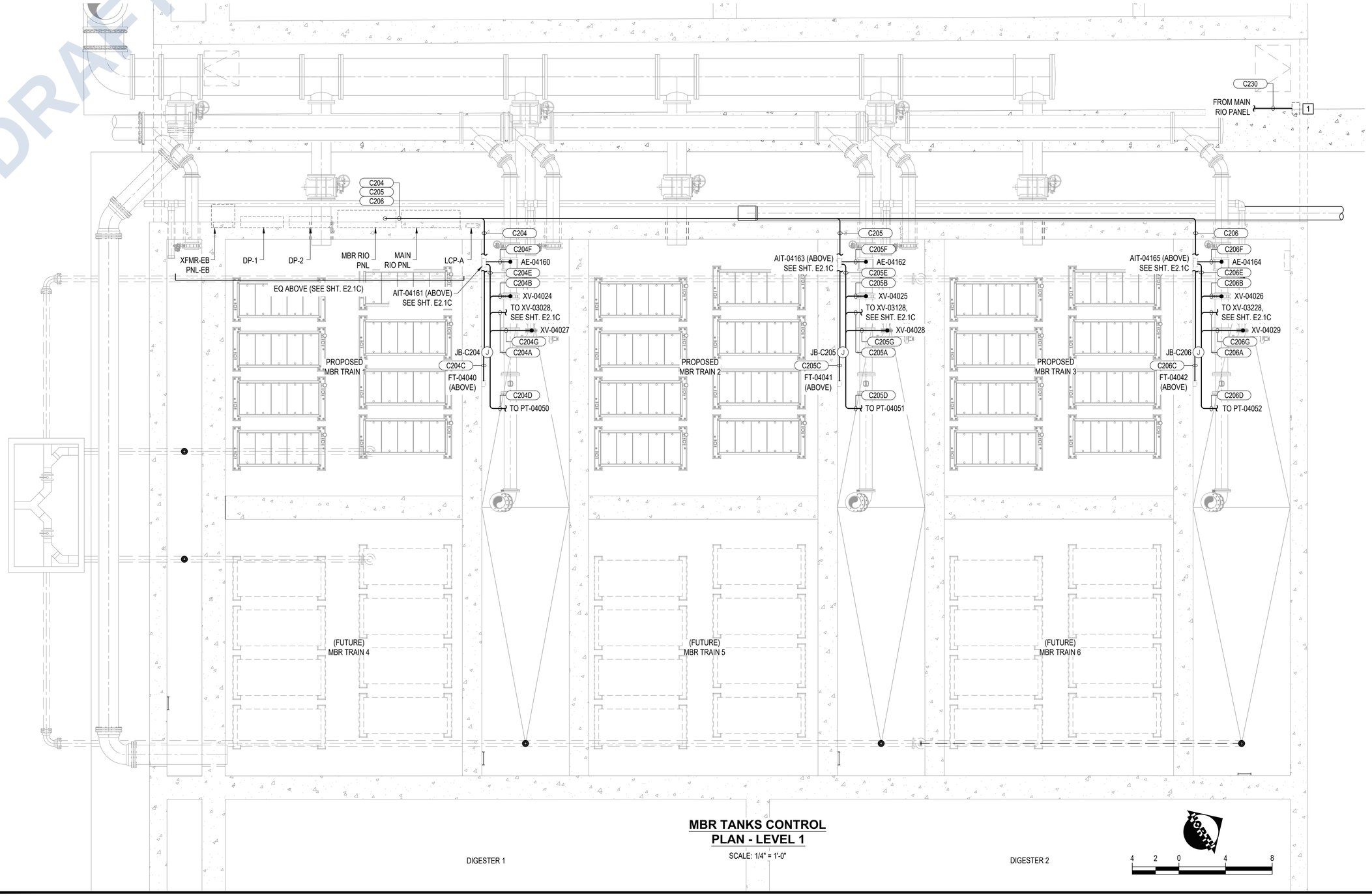

MBR TANKS CONTROL PLAN - LEVEL 1

SCALE: 1/4" = 1'-0"

DRAFT

W:\B777\Engineering\B777 - 3MGD Exp\3MGD FINAL DSN\sheets\B777 - E2.0.dwg - Tab: E2.2C - by rohin on 02/06/26 at 2:39:05 PM

NO	BY	DATE	REVISIONS	DATE	APP.

Registered Professional Engineer (Electrical) CERTIFICATE NO. 35958 Rohin Chand Expires 03/31/28 ARIZONA, U.S.A.

PREPARED BY BASHAR SHAIQ
PROJECT ENGINEER
R.C.E. NO. E24580
EXP. DATE

DRAWN NC
DESIGNED NC, BI
CHECKED BI
SCALE
DATE FEB 2026

THESE DRAWINGS ARE THE PROPERTY OF P.A.C.E. AND SHALL NOT BE REPRODUCED IN ANY MANNER NOR BE USED FOR CONSTRUCTION UNLESS STAMPED 'ISSUED FOR CONSTRUCTION'.

TITLE
MBR TANKS LEVEL 1 CONTROL PLAN

JOB
CITY OF SAN LUIS WEST WWTP
3.0 MGD MBR UPGRADES
SAN LUIS AZ.

PACE
Advanced Water Engineering
8723 E. VIA de COMMERCIO, SUITE A-204 | SCOTTSDALE, CA 85258
P: (408) 991-3595 | www.pacewater.com

FINAL PLANS ISSUED FOR BID

SHEET
E2.2C
140 OF 209 SHEETS

JOB NO. B777

DRAFT

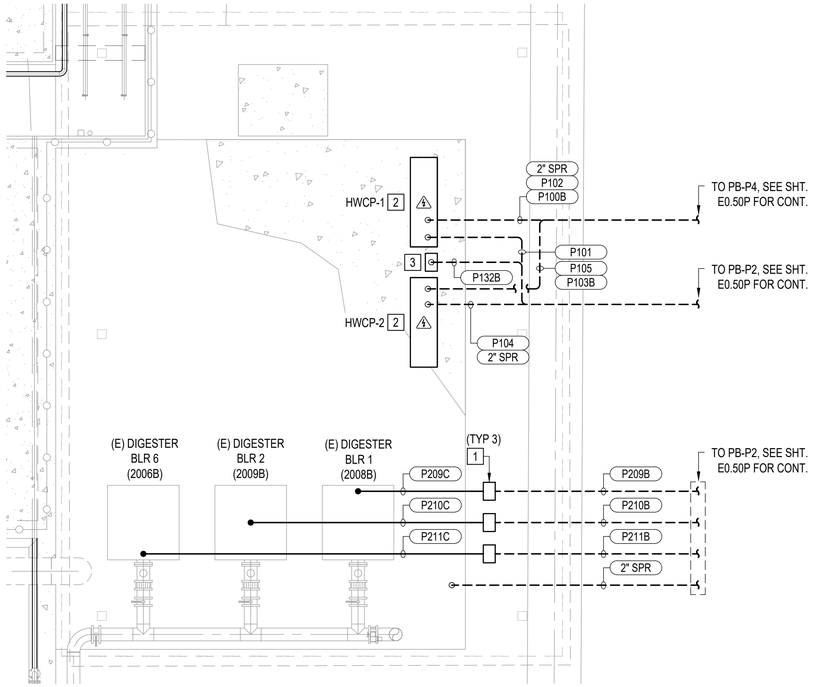

DIGESTER BLOWERS AREA POWER PLAN

SCALE: 1/4" = 1'

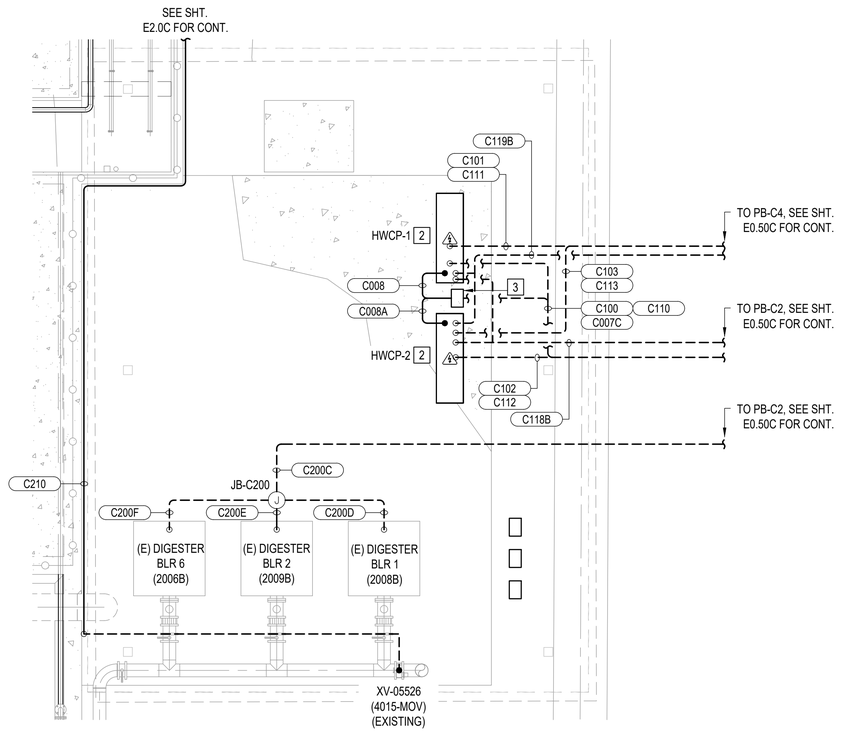

DIGESTER BLOWERS AREA CONTROL PLAN

SCALE: 1/4" = 1'

CONSTRUCTION NOTES:

1. REMOVE EXISTING DIGESTER BLOWER DISCONNECT SWITCHES AND REPLACE WITH FUSED DISCONNECT SWITCHES, 480V, 100A, 3Ø-3W, HEAVY-DUTY, NEMA 4X, MF'R: EATON OR APPROVED EQUAL. NEW DISCONNECT SWITCH LOCATIONS TO MEET ALL NEC CODE WORKING SPACE REQUIREMENTS. SEE DETAIL "C" SHEET E11.1.
2. HEADWORKS CONTROL PANELS (VENDOR PANELS), 480V, 3PH, 60 HZ. MAINTAIN MIN CLR WORKING SPACE IN FRONT OF PANELS PER NEC 110.26.
3. FIBER PATCH PANEL EQUIPPED WITH UPS AND ETHERNET SWITCH, NEMA 4X, STANCHION-MTD. PROVIDED BY SYSTEM INTEGRATOR, INSTALLED BY CONTRACTOR.

LEGEND:

(J) NEMA 4X JUNCTION BOX



NO	BY	DATE	REVISIONS	DATE	APP.

Registered Professional Engineer (Electrical) CERTIFICATE NO. 35656 Basher Ishaq Date Signed 03/31/28 ARIZONA, U.S.A.

Expires 03/31/28

THESE DRAWINGS ARE THE PROPERTY OF P.A.C.E. AND SHALL NOT BE REPRODUCED IN ANY MANNER NOR BE USED FOR CONSTRUCTION UNLESS STAMPED "ISSUED FOR CONSTRUCTION".

PREPARED BY: BASHAR ISHAQ
PROJECT ENGINEER
R.C.E. NO. E24590
EXP. DATE —

DRAWN: NC
DESIGNED: NC, BI
CHECKED: BI
SCALE:
DATE: FEB 2026

TITLE: DIGESTER BLOWERS AREA ELECTRICAL PLAN

JOB: CITY OF SAN LUIS WEST WWTP 3.0 MGD MBR UPGRADES — SAN LUIS AZ.

PACE
Advanced Water Engineering
8723 E. VIA de COMMERCIO, SUITE A-204 | SCOTTSDALE, CA 85258
P.: (408) 991-3595 | www.pacewater.com

SHEET
E2.3
141 OF 209 SHEETS

JOB NO. B777

FINAL PLANS ISSUED FOR BID

W:\B777\Engineering\B777 - 3MGD Exp\3MGD FINAL DSN\sheets\B777 - E2.3.dwg - Tab: E2.3 - by rchin on 02/25/26 at 3:45:17 PM

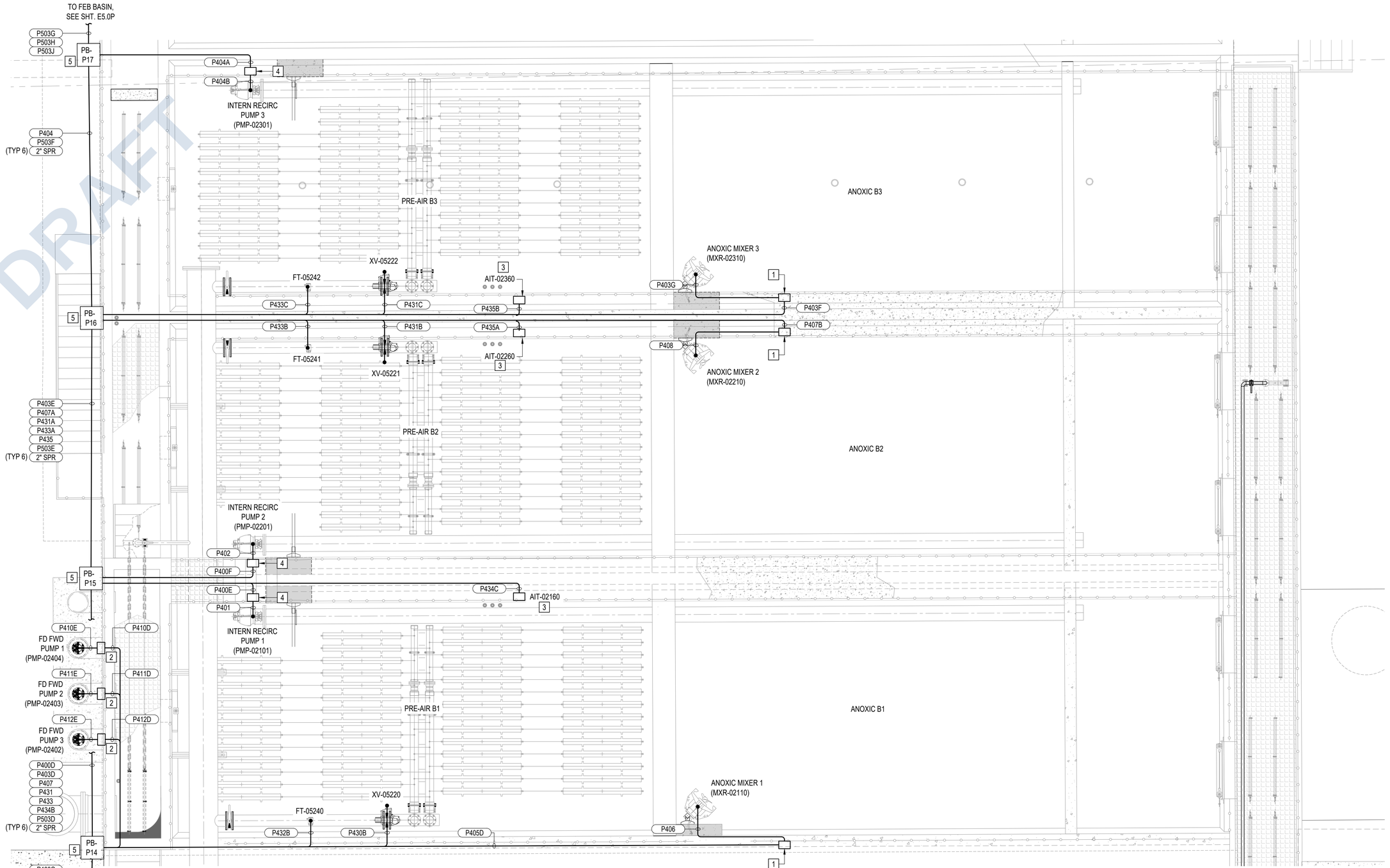

PROCESS TANKS POWER PLAN

SCALE: 1/4" = 1'-0"

CONSTRUCTION NOTES:

1. FUSED DISCONNECT SWITCH, 480V, 30A, 3Ø-3W, HEAVY-DUTY, NEMA 4X, MF'R: EATON, PN DH361FWK OR APPROVED EQUAL. SEE DETAIL "C" SHEET E11.1.
2. FUSED DISCONNECT SWITCH, 480V, 60A, 3Ø-3W, HEAVY-DUTY, NEMA 4X, MF'R: EATON, PN DH362FWK OR APPROVED EQUAL. SEE DETAIL "C" SHEET E11.1.
3. NEMA 4X ENCLOSURES. PANELS TO BE PLACED ABOVE HAZARDOUS LOCATION (MIN 18" ABOVE WATER LEVEL). INSTALL WEATHER PROTECTION HOOD.
4. FUSED DISC SW, 480V, 30A, 3PH-3W, HEAVY-DUTY, NEMA 4X, GUARDRAIL-MTD. GREATER THAN 18" ABOVE MAX WATER LEVEL, EATON OR EQUAL.
5. WALL-MTD. PULLBOX, NEMA 4X.

NOTES:

1. GROUND AND BOND ALL EQUIPMENT AND ENCLOSURES PER MANUFACTURER REQUIREMENTS AND NEC 250.
2. CONDUITS ARE SHOWN SCHEMATICALLY. CONTRACTOR SHALL INSTALL PULLPOINTS WHERE REQUIRED FOR PULLING TENSION AND MAINTAINING LESS THEN (4) 90 DEGREE BENDS.
3. MAINTAIN WORKING CLEARANCES IN FRONT OF PANELS AS REQUIRED PER NEC 110.26.
4. LABEL ABOVEGROUND CONDUITS PER DETAIL "H" SHEET E11.0.
5. TYPICAL CONDUIT TRANSITIONS PER DETAILS "D, E, F, G" SHEET E11.0.
6. SUPPORT CONDUITS PER DETAIL 'E' SHEET E11.3.
7. PRE-AERATION BASINS ARE CLASS I/DIV II WITHIN 10 FT ENVELOPE AROUND EQUIPMENT AND OPEN CHANNEL PER NFPA 820 TABLE 5.2.2 (6)(C).
8. CONTRACTOR TO INSTALL EYS SEALS ON ALL CONDUITS ROUTED TO EQUIPMENT BETWEEN CLASSIFIED LOCATION AND NON-CLASSIFIED LOCATIONS PER NEC LOCATIONS PER NEC 500 - 504.

NORTH

4 2 0 4 8

DRAFT

NO	BY	DATE	REVISIONS	DATE	APP.

Registered Professional Engineer (Electrical) CERTIFICATE NO. 36908 Nicholas Carlson State of ARIZONA U.S.A. Expires 03/31/28

PREPARED BY: BASHAR ISHAQ
PROJECT ENGINEER
R.C.E. NO. E24590
EXP. DATE
SCALE
DRAWN: NC
DESIGNED: NC, BI
CHECKED: BI
DATE: FEB 2026

TITLE: PROCESS TANKS POWER PLAN

JOB: CITY OF SAN LUIS WEST WWTP 3.0 MGD MBR UPGRADES — SAN LUIS AZ.

PACE Advanced Water Engineering
8723 E. VIA de COMMERCIO, SUITE A-204 | SCOTTSDALE, CA 85258
P: (408) 991-3595 | www.pacewater.com

SHEET E4.0P
142 OF 209 SHEETS

JOB NO. B777

THESE DRAWINGS ARE THE PROPERTY OF P.A.C.E. AND SHALL NOT BE REPRODUCED IN ANY MANNER NOR BE USED FOR CONSTRUCTION UNLESS STAMPED 'ISSUED FOR CONSTRUCTION'.

FINAL PLANS ISSUED FOR BID

W:\B777\Engineering\B777 - 3MGD Exp\3MGD FINAL DSN\sheets\B777 - E2.0.dwg - Tab: E4.0P - by rcbin on 02/26/26 at 2:28:05 PM

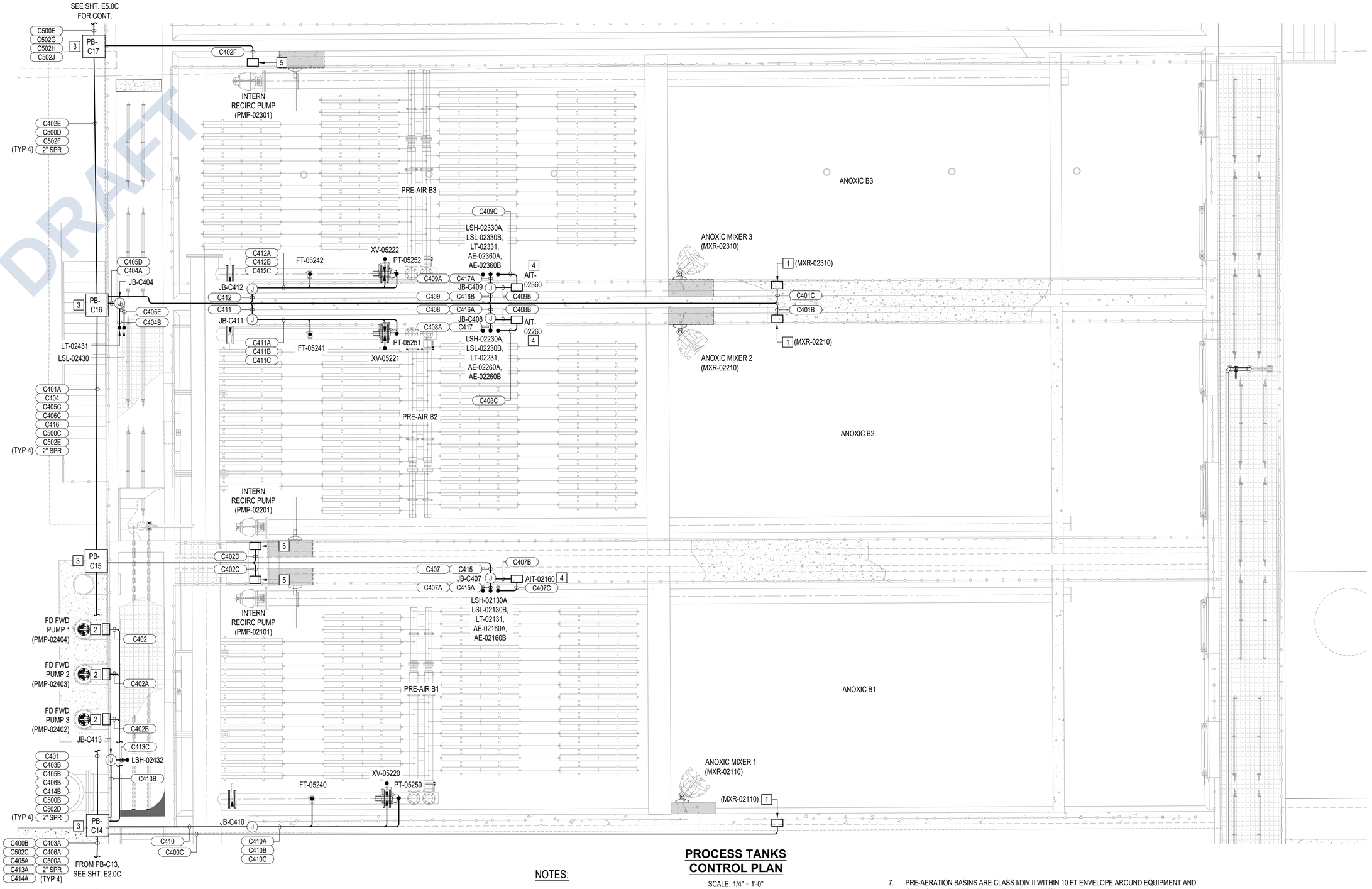

CONSTRUCTION NOTES:

1. FUSED DISCONNECT SWITCH, 480V, 30A, 3Ø-3W, HEAVY-DUTY, NEMA 4X, MF'R: EATON, PN DH361FWK OR APPROVED EQUAL. SEE DETAIL "C" SHEET E11.1.
2. FUSED DISCONNECT SWITCH, 480V, 60A, 3Ø-3W, HEAVY-DUTY, NEMA 4X, MF'R: EATON, PN DH362FWK OR APPROVED EQUAL. SEE DETAIL "C" SHEET E11.1.
3. PULLBOXES LOCATED BENEATH POWER PULLBOXES, WALL-MTD., NEMA 4X.
4. NEMA 4X ENCLOSURES. PANELS TO BE PLACED ABOVE HAZARDOUS LOCATION (MIN 18" ABOVE WATER LEVEL). INSTALL WEATHER PROTECTION HOOD.
5. FUSED DISC SW, 480V, 30A, 3PH-3W, HEAVY-DUTY, NEMA 4X, GUARDRAIL-MTD. GREATER THAN 18" ABOVE MAX WATER LEVEL, EATON OR EQUAL.

PROCESS TANKS CONTROL PLAN

SCALE: 1/4" = 1'-0"

NOTES:

1. GROUND AND BOND ALL EQUIPMENT AND ENCLOSURES PER MANUFACTURER REQUIREMENTS AND NEC 250.
2. CONDUITS ARE SHOWN SCHEMATICALLY. CONTRACTOR SHALL INSTALL PULLPOINTS WHERE REQUIRED FOR PULLING TENSION AND MAINTAINING LESS THEN (4) 90 DEGREE BENDS.
3. MAINTAIN WORKING CLEARANCES IN FRONT OF PANELS AS REQUIRED PER NEC 110.26.
4. LABEL ABOVEGROUND CONDUITS PER DETAIL "H" SHEET E11.0.
5. TYPICAL CONDUIT TRANSITIONS PER DETAILS "D, E, F, G" SHEET E11.0.
6. SUPPORT CONDUITS PER DETAIL 'E' SHEET E11.3.
7. PRE-AERATION BASINS ARE CLASS I/DIV II WITHIN 10 FT ENVELOPE AROUND EQUIPMENT AND OPEN CHANNEL PER NFPA 820 TABLE 5.2.2 (6)(C).
8. CONTRACTOR TO INSTALL EYS SEALS ON ALL CONDUITS ROUTED TO EQUIPMENT BETWEEN CLASSIFIED LOCATION AND NON-CLASSIFIED LOCATIONS PER NEC LOCATIONS PER NEC 500 - 504.
9. INSTALL INTRINSICALLY SAFE WIRING IN ACCORDANCE WITH NEC 504. PROVIDE BARRIERS IN CONDUITS, JUNCTION BOXES, ETC. AS REQUIRED.

LEGEND:

(J) NEMA 4X JUNCTION BOX. TO BE PLACED ABOVE HAZARDOUS LOCATION (MIN 18" ABOVE WATER LEVEL).

NORTH

4 2 0 4 8

NO	BY	DATE	REVISIONS	DATE	APP.

Registered Professional Engineer (Electrical) CERTIFICATE NO. 36508 Basharat Ishaq Date Signed ARIZONA, U.S.A. Expires 03/31/28

PREPARED BY BASHAR ISHAQ
PROJECT ENGINEER
R.C.E. NO. E24590
EXP. DATE
DRAWN NC
DESIGNED NC, BI
CHECKED BI
SCALE
DATE FEB 2026

TITLE: PROCESS TANKS CONTROL PLAN

JOB: CITY OF SAN LUIS WEST WWTP 3.0 MGD MBR UPGRADES — SAN LUIS AZ.

PACE Advanced Water Engineering
8723 E. VIA de COMMERCIO, SUITE A-204 | SCOTTSDALE, CA 85258
P: (408) 991-3595 | www.pacewater.com

SHEET E4.0C
143 OF 209 SHEETS

JOB NO. B777

FINAL PLANS ISSUED FOR BID

THESE DRAWINGS ARE THE PROPERTY OF P.A.C.E. AND SHALL NOT BE REPRODUCED IN ANY MANNER NOR BE USED FOR CONSTRUCTION UNLESS STAMPED "ISSUED FOR CONSTRUCTION".

DRAFT

W:\B777\Engineering\B777 - 3MGD Exp\3MGD FINAL DSN\sheets\B777 - E2.0.dwg - Tab: E4.0C - by rchin on 02/26/26 at 2:28:05 PM

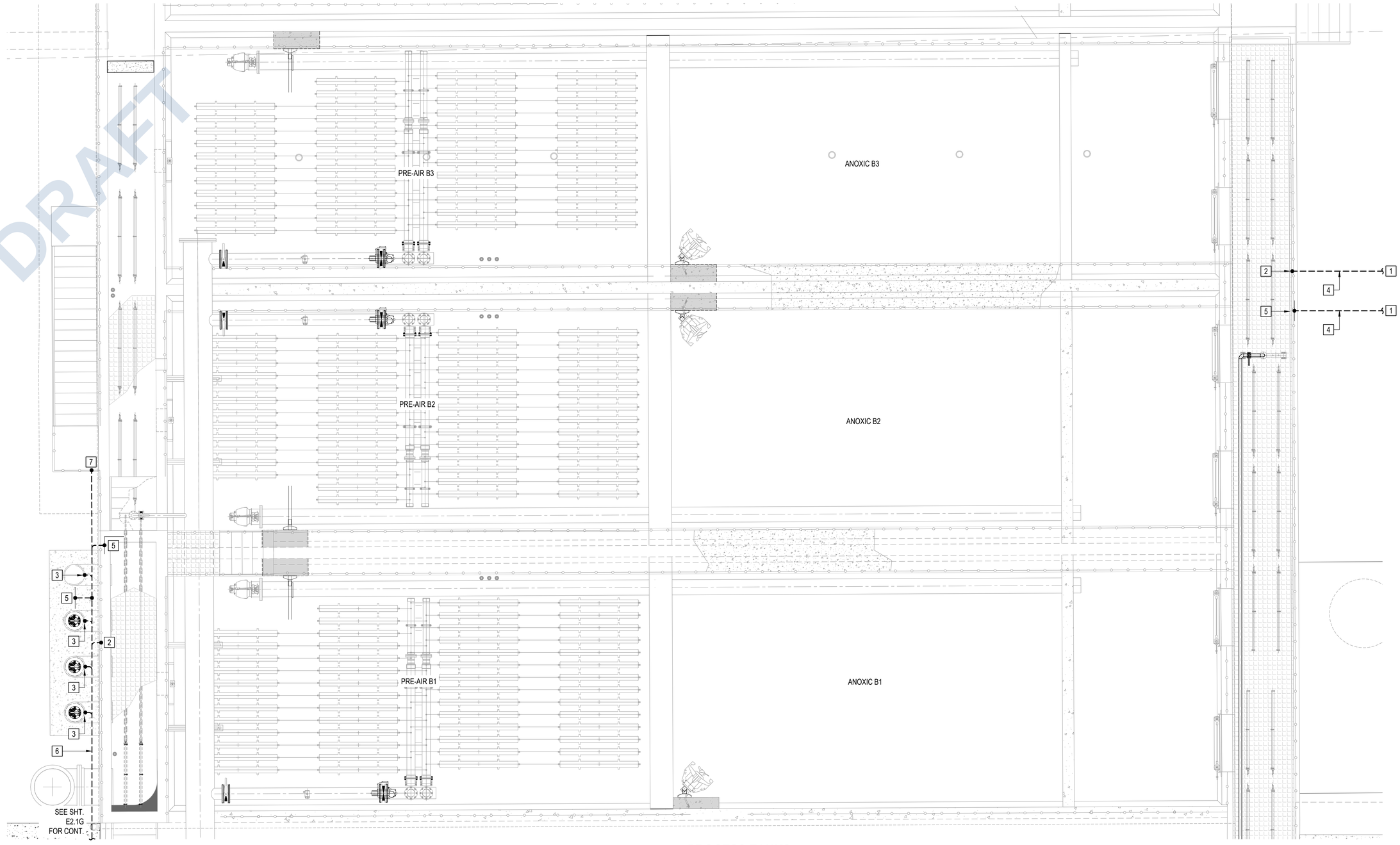

CONSTRUCTION NOTES:

1. TO 4/0 CU CONDUCTOR ROUTED WITHIN DUCT BANK. SEE SHEET E0.50G FOR CONT.
2. GROUND HANDRAILS.
3. GROUND PIPES.
4. 4/0 BARE COPPER, GROUNDING ELECTRODE CONDUCTOR (TYP)
5. GROUND TO REBAR PER DETAIL "C" SHEET E11.5.
6. #2 BARE COPPER, GROUNDING ELECTRODE CONDUCTOR ROUTED WITHIN SCH80 PVC CONDUIT (ABOVEGRADE).
7. BOND TO LADDER.

NOTES:

1. GROUND AND BOND ALL EQUIPMENT AND ENCLOSURES PER MANUFACTURER REQUIREMENTS AND NEC 250.
2. GROUND AND BOND ALL MOTOR FRAMES TO THE GROUND RING.
3. ALL METALLIC ENCLOSURES INCLUDING ROLL UP GATES, RAILINGS, FENCES, STAIR CASES OR OTHER METAL PERSONNEL MAY COME IN CONTACT WITH, SHALL BE EFFECTIVELY GROUNDED.
4. GROUNDING ROUTING IS DIAGRAMMATIC.
5. THE GEC MUST BE INSTALLED WITH SUFFICIENT LENGTH SO THAT REMOVAL OF ONE EQUIPMENT DOES NOT INTERRUPT THE EFFECTIVE GROUND PATH OF ANY OTHER EQUIPMENT.

PROCESS TANKS GROUNDING PLAN

SCALE: 1/4" = 1'-0"

NORTH

4 2 0 4 8

NO	BY	DATE	REVISIONS	DATE	APP.

Registered Professional Engineer (Electrical) CERTIFICATE NO. 82958 Basharat Ishaq Date Signed 03/31/28 ARIZONA, U.S.A. Expires 03/31/28

PREPARED BY BASHAR ISHAQ
PROJECT ENGINEER
R.C.E. NO. E24580
EXP. DATE

DRAWN NC
DESIGNED NC, BI
CHECKED BI
SCALE
DATE FEB 2026

TITLE: **PROCESS TANKS GROUNDING PLAN**

JOB: CITY OF SAN LUIS WEST WWTP
3.0 MGD MBR UPGRADES
SAN LUIS AZ.

PACE
Advanced Water Engineering
8723 E. VIA de COMMERCIO, SUITE A-204 | SCOTTSDALE, CA 85258
P: (408) 991-3595 | www.pacewater.com

SHEET
E4.0G
144 OF 209 SHEETS

JOB NO. B777

FINAL PLANS ISSUED FOR BID

THESE DRAWINGS ARE THE PROPERTY OF P.A.C.E. AND SHALL NOT BE REPRODUCED IN ANY MANNER NOR BE USED FOR CONSTRUCTION UNLESS STAMPED "ISSUED FOR CONSTRUCTION".

DRAFT

W:\B777\Engineering\B777 - 3MGD Exp\3MGD FINAL DSN\sheets\B777 - E2.0.dwg - Tab: E4.0G - by rothin on 02/06/26 at 2:39:05 PM

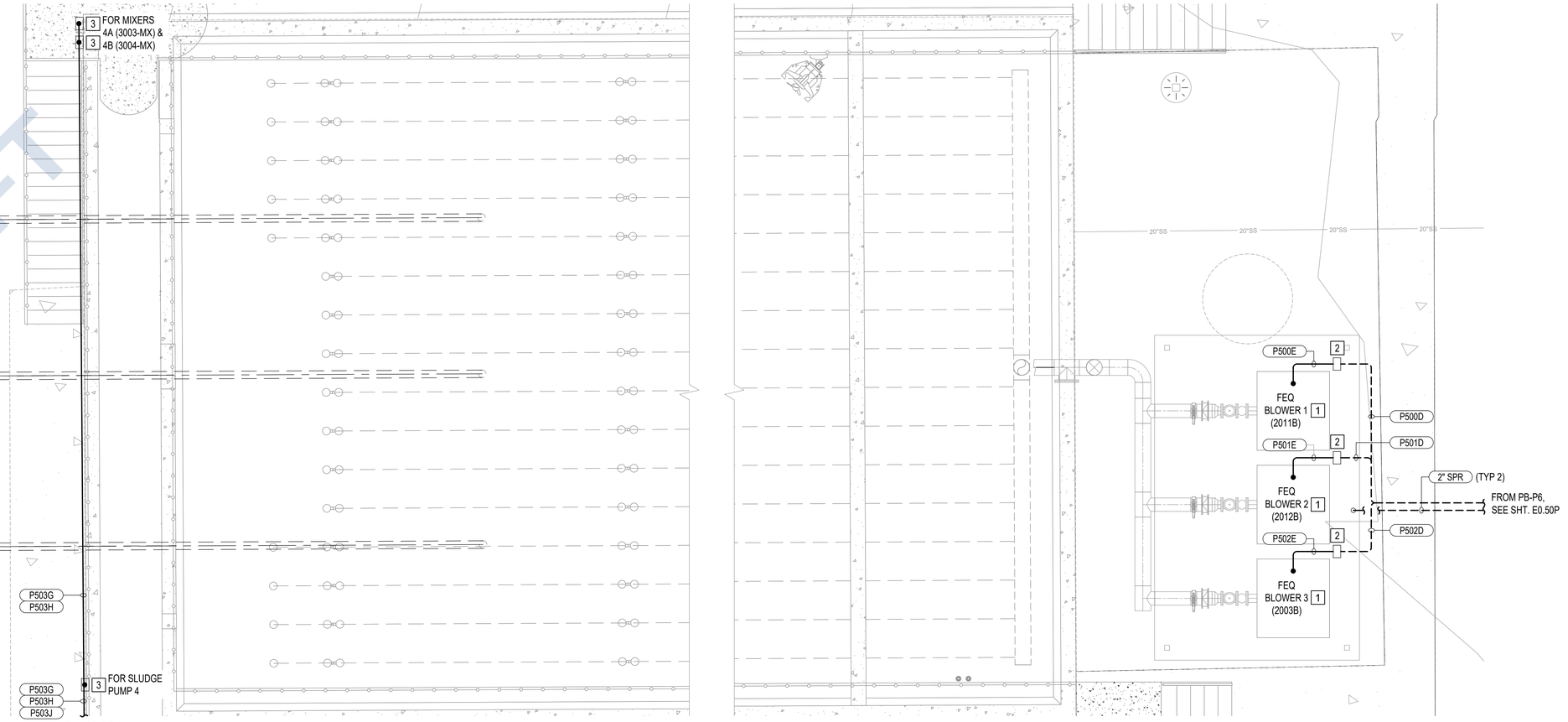

CONSTRUCTION NOTES:

1. EXISTING AERATION BLOWERS TO BE RELOCATED AND NAME CHANGED TO "FEQ" BLOWERS.
2. FUSED DISCONNECT SWITCH, 480V, 200A, 3Ø-3W, HEAVY-DUTY, NEMA 4X, MF'R: EATON OR APPROVED EQUAL. SEE DETAIL "C" SHEET E11.1.
3. FUSED DISCONNECT SWITCH, 480V, 30A, 3Ø-3W, HEAVY-DUTY, NEMA 4X, MF'R: EATON, PN DH361FWK OR APPROVED EQUAL. SEE DETAIL "C" SHEET E11.1. REPLACE EXISTING DISCONNECT SWITCHES IN PLACE.

LEGEND:

EB-# — INDICATES CIRCUIT NUMBER

LINEAR WASHDOWN 8 FT, 100W, 5000K LED, 120-277V, NEMA 4X, 0-10V DIMMER, MF'R: RAB, PN SHARK8-100W/D10 (OR APPROVED EQUAL)

HASH MARKS INDICATING NUMBER OF CURRENT CARRYING CONDUCTORS. GROUND CONDUCTOR(S) NOT SHOWN FOR CLARITY, ALL CONDUITS SHALL HAVE A MINIMUM #12 GROUND AND SIZED PER CODE REQUIREMENTS.

WP — 120V, 20A GFCI DUPLEX TAMPER-WEATHER RESISTANT RECEPTACLE WITH METALLIC WEATHERPROOF WHILE-IN-USE COVER, EXTRA DUTY, POST-MTD.

$WP — 120 VAC, 20 AMP, NEMA 4X LIGHT SWITCH, POST-MTD. @ 42" AFF. (WP = WEATHERPROOF)

NOTES:

1. GROUND AND BOND ALL EQUIPMENT AND ENCLOSURES PER MANUFACTURER REQUIREMENTS AND NEC 250.
2. CONDUITS ARE SHOWN SCHEMATICALLY. CONTRACTOR SHALL INSTALL PULLPOINTS WHERE REQUIRED FOR PULLING TENSION AND MAINTAINING LESS THEN (4) 90 DEGREE BENDS.
3. MAINTAIN WORKING CLEARANCES IN FRONT OF PANELS AS REQUIRED PER NEC 110.26.
4. LABEL ABOVEGROUND CONDUITS PER DETAIL "H" SHEET E11.0.
5. TYPICAL CONDUIT TRANSITIONS PER DETAILS "D, E, F, G" SHEET E11.0.
6. SUPPORT CONDUITS PER DETAIL 'E' SHEET E11.3.
7. FLOW EQUALIZATION BASIN IS CLASS I/DIV II WITHIN 10 FT ENVELOPE AROUND EQUIPMENT AND OPEN CHANNEL PER NFPA 820 TABLE 5.5.2 (4)(C).
8. CONDUCTORS FOR HOME RUN CIRCUITS FOR LIGHTING AND RECEPTACLES SHALL BE #12 AWG MINIMUM SIZE, UNLESS NOTED OTHERWISE.
9. LIGHTING AND RECEPTACLE WIRING SHALL BE TYPE XHHW-2.
10. ALL WIRING SHOWN SHALL BE WITHIN CONDUITS (PVC COATED RGS FOR OUTDOOR EXPOSED CONDUIT).
11. ALL CONDUITS SHALL CONTAIN A PROPERLY SIZED GROUND CONDUCTOR. DE-RATE CONDUCTORS PER NEC 310.15(C)(1).
12. MOUNT AND WIRE ALL EQUIPMENT PER MANUFACTURER REQUIREMENTS.
13. DE-RATE CONDUCTOR AMPACITY BASED ON # OF CURRENT CARRYING CONDUCTORS AS APPLICABLE.
14. RECEPTACLE OUTLETS SHALL BE CLEARLY LABELED WITH THE CIRCUIT PROVIDING POWER. LABEL SHALL BE SUITED FOR ENVIRONMENT RECEPTACLE IS LOCATED IN.
15. INSTALL A PHOTOCELL SENSOR IN A NON-SHADED AREA, 120V, NO/NC CONTACT.

FEQ BASIN POWER PLAN

SCALE: 1/4" = 1'-0"

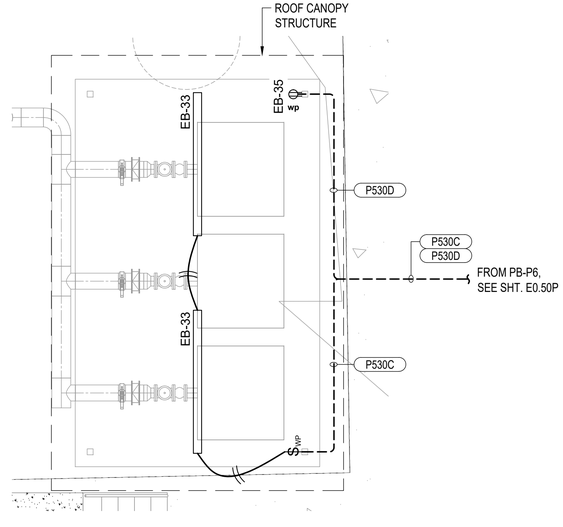

FEQ BLR AREA LIGHTING & RECEPTACLE PLAN

SCALE: 1/4" = 1'-0"

NORTH

4 2 0 4 8

NO	BY	DATE	REVISIONS	DATE	APP.

Registered Professional Engineer (Electrical) CERTIFICATE NO. 35936 Brandon Ivan Stanek ARIZONA U.S.A. Expires 03/31/28

PREPARED BY BASHAR SHAIO
PROJECT ENGINEER
R.C.E. NO. E24580
EXP. DATE

DRAWN NC
DESIGNED NC, BI
CHECKED BI
SCALE
DATE FEB 2026

THESE DRAWINGS ARE THE PROPERTY OF P.A.C.E. AND SHALL NOT BE REPRODUCED IN ANY MANNER NOR BE USED FOR CONSTRUCTION UNLESS STAMPED "ISSUED FOR CONSTRUCTION".

TITLE: FEQ BASIN POWER PLAN

JOB: CITY OF SAN LUIS WEST WWTP 3.0 MGD MBR UPGRADES — SAN LUIS AZ.

PACE Advanced Water Engineering
8723 E. VIA de COMMERCIO, SUITE A-204 | SCOTTSDALE, CA 85258
P: (408) 991-3595 | www.pacewater.com

FINAL PLANS ISSUED FOR BID

SHEET E5.0P
145 OF 209 SHEETS

JOB NO. B777

W:\B777\Engineering\B777 - 3MGD Exp\3MGD FINAL DSN\sheets\B777 - E5.0.dwg - Tab: E5.0P - by rvohn on 01/28/26 at 5:00:58 PM

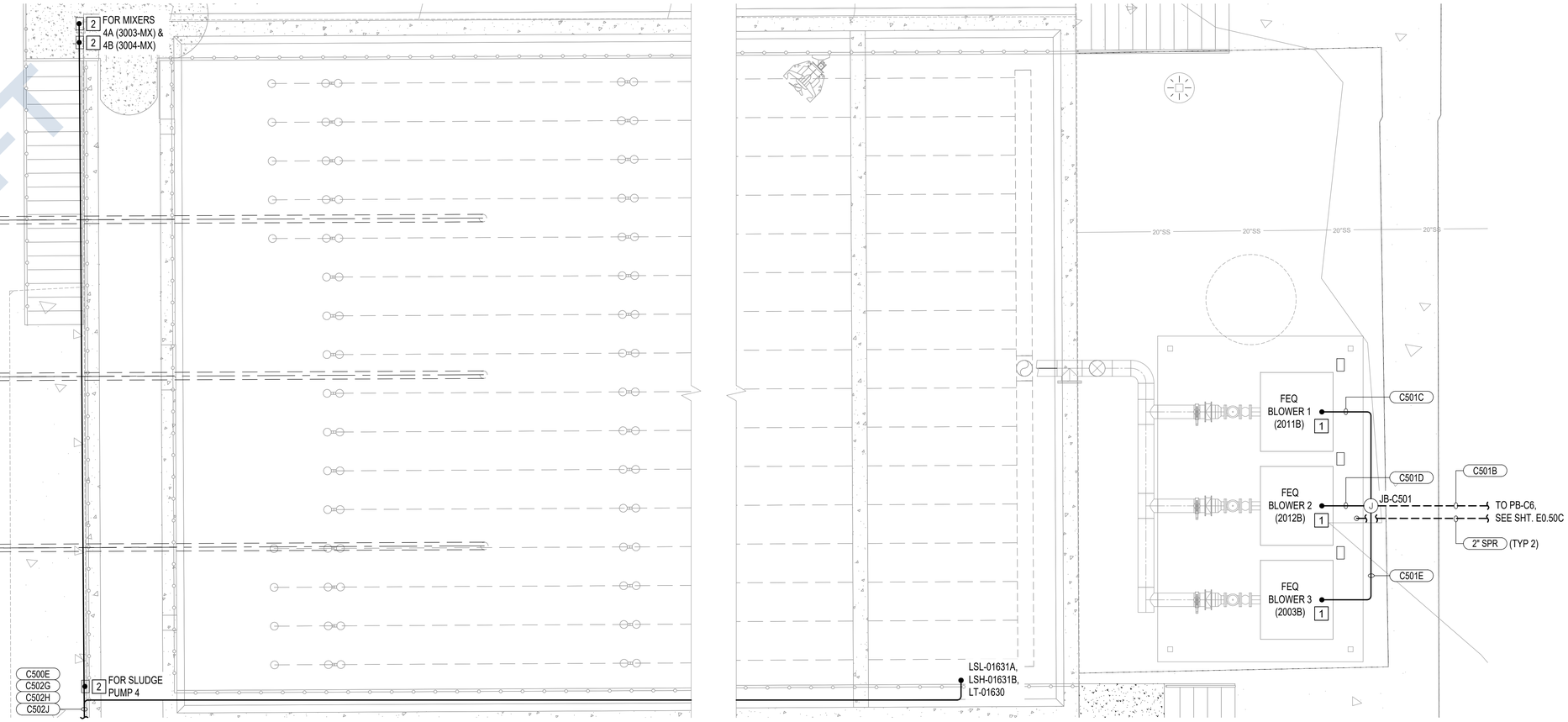

FEQ BASIN CONTROL PLAN

SCALE: 1/4" = 1'-0"

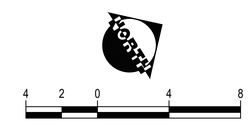

CONSTRUCTION NOTES:

1. EXISTING AERATION BLOWERS TO BE RELOCATED AND NAME CHANGED TO "FEQ" BLOWERS.
2. FUSED DISCONNECT SWITCH, 480V, 30A, 3Ø-3W, HEAVY-DUTY, NEMA 4X, MF'R: EATON, PN DH361FWK OR APPROVED EQUAL. SEE DETAIL "C" SHEET E11.1. REPLACE EXISTING DISCONNECT SWITCHES IN PLACE.

NOTES:

1. GROUND AND BOND ALL EQUIPMENT AND ENCLOSURES PER MANUFACTURER REQUIREMENTS AND NEC 250.
2. CONDUITS ARE SHOWN SCHEMATICALLY. CONTRACTOR SHALL INSTALL PULLPOINTS WHERE REQUIRED FOR PULLING TENSION AND MAINTAINING LESS THEN (4) 90 DEGREE BENDS.
3. MAINTAIN WORKING CLEARANCES IN FRONT OF PANELS AS REQUIRED PER NEC 110.26.
4. LABEL ABOVEGROUND CONDUITS PER DETAIL "H" SHEET E11.0.
5. TYPICAL CONDUIT TRANSITIONS PER DETAILS "D, E, F, G" SHEET E11.0.
6. SUPPORT CONDUITS PER DETAIL 'E' SHEET E11.3.
7. FLOW EQUALIZATION BASIN IS CLASS I/DIV II WITHIN 10 FT ENVELOPE AROUND EQUIPMENT AND OPEN CHANNEL PER NFPA 820 TABLE 5.5.2 (4)(C).

LEGEND:

(J) NEMA 4X JUNCTION BOX

DRAFT

NO	BY	DATE	REVISIONS	DATE	APP.

Registered Professional Engineer (Electrical) CERTIFICATE NO. 82968 Date Signed 8/29/26 ARIZONA, U.S.A. Expires 03/31/28

PREPARED BY BASHAR ISHAQ
PROJECT ENGINEER
R.C.E. NO. -- E24590
EXP. DATE
DRAWN NC
SCALE
DESIGNED NC, BI
CHECKED BI
DATE FEB 2026

TITLE
FEQ BASIN CONTROL PLAN

JOB
CITY OF SAN LUIS WEST WWTP
3.0 MGD MBR UPGRADES
SAN LUIS AZ.

PACE
Advanced Water Engineering
8723 E. VIA de COMMERCIO, SUITE A-204 | SCOTTSDALE, CA 85258
P: (408) 991-3595 | www.pacewater.com

SHEET
E5.0C
146 OF 209 SHEETS
JOB NO. B777

THESE DRAWINGS ARE THE PROPERTY OF P.A.C.E. AND SHALL NOT BE REPRODUCED IN ANY MANNER NOR BE USED FOR CONSTRUCTION UNLESS STAMPED "ISSUED FOR CONSTRUCTION".

FINAL PLANS ISSUED FOR BID

W:\B777\Engineering\B777 - 3MGD Exp\3MGD FINAL DS\Nsheets\B777 - E5.0.dwg - Tab: E5.0C - by rchin on 01/28/26 at 5:00:56 PM

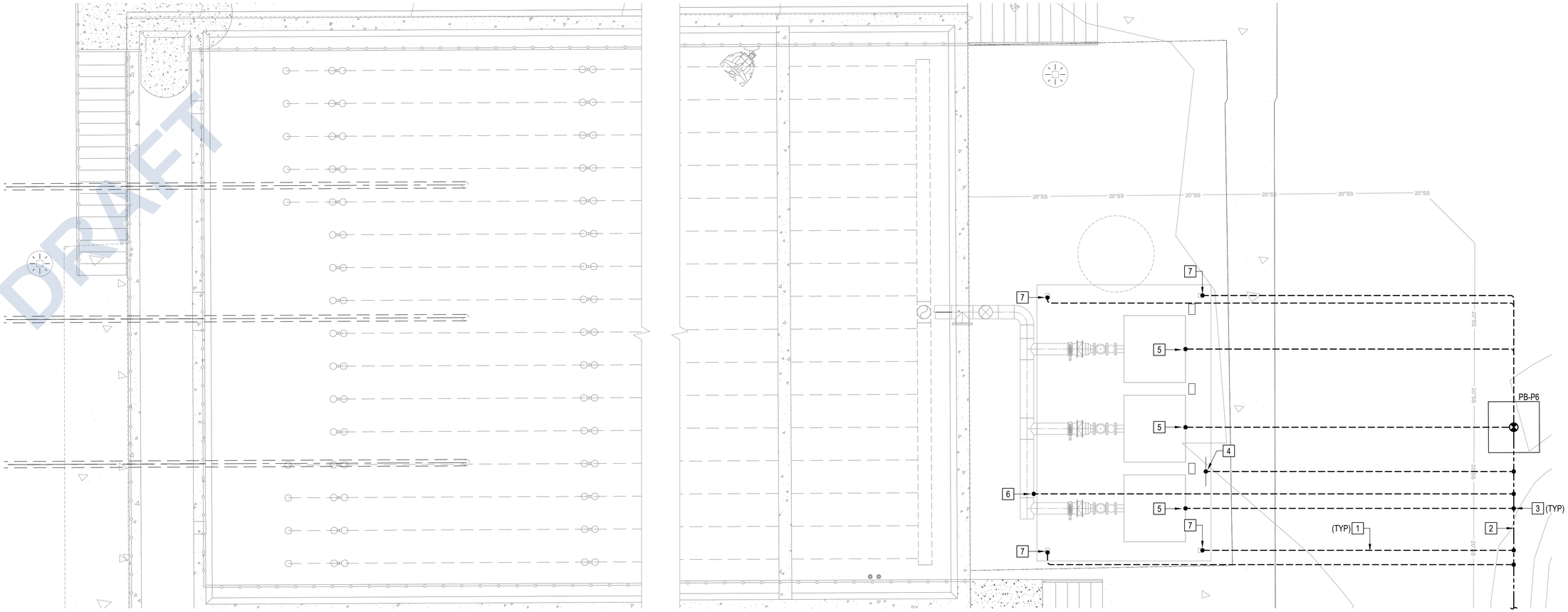

FEQ BASIN GROUNDING PLAN

SCALE: 1/4" = 1'-0"

CONSTRUCTION NOTES:

1. #2 BARE COPPER, GROUNDING ELECTRODE CONDUCTOR (TYP)
2. #4/0 BARE CU CONDUCTOR WITHIN DUCT BANK.
3. EXOTHERMIC WELD PER DETAIL "C" SHEET E11.0.
4. GROUND TO REBAR PER DETAIL "C" SHEET E11.5.
5. GROUND BLOWERS AND BLOWER PADS.
6. GROUND PIPE.
7. GROUND STEEL CANOPY POSTS.

NOTES:

1. GROUND AND BOND ALL EQUIPMENT AND ENCLOSURES PER MANUFACTURER REQUIREMENTS AND NEC 250.
2. GROUND AND BOND ALL MOTOR FRAMES TO THE GROUND RING.
3. ALL METALLIC ENCLOSURES INCLUDING ROLL UP GATES, RAILINGS, FENCES, STAIR CASES OR OTHER METAL PERSONNEL MAY COME IN CONTACT WITH, SHALL BE EFFECTIVELY GROUNDED.
4. GROUNDING ROUTING IS DIAGRAMMATIC.
5. THE GEC MUST BE INSTALLED WITH SUFFICIENT LENGTH SO THAT REMOVAL OF ONE EQUIPMENT DOES NOT INTERRUPT THE EFFECTIVE GROUND PATH OF ANY OTHER EQUIPMENT.

LEGEND:

- POWER PULLBOX WITH INSPECTION GROUND ROD PER DETAIL "A" SHEET E11.2 AND DETAIL "A" SHEET E11.7.

NORTH

4 2 0 4 8

NO	BY	DATE	REVISIONS	DATE	APP.

Registered Professional Engineer (Electrical) CERTIFICATE NO. 82968 BASHAR ISHAQ Date Signed Expires ARIZONA, U.S.A. Expires 03/31/28

PREPARED BY BASHAR ISHAQ
PROJECT ENGINEER
R.C.E. NO. -- E24590
EXP. DATE
DRAWN NC
SCALE
DESIGNED NC, BI
CHECKED BI
DATE FEB 2026

TITLE
FEQ BASIN GROUNDING PLAN

JOB
CITY OF SAN LUIS WEST WWTP
3.0 MGD MBR UPGRADES
SAN LUIS AZ.

PACE
Advanced Water Engineering
8723 E. VIA de COMMERCIO, SUITE A-204 | SCOTTSDALE, CA 85258
P: (408) 991-3595 | www.pacewater.com

SHEET
E5.0G
147 OF 209 SHEETS

JOB NO. B777

THESE DRAWINGS ARE THE PROPERTY OF P.A.C.E. AND SHALL NOT BE REPRODUCED IN ANY MANNER NOR BE USED FOR CONSTRUCTION UNLESS STAMPED "ISSUED FOR CONSTRUCTION".

FINAL PLANS ISSUED FOR BID

W:\B777\Engineering\B777 - 3MGD Exp\3MGD FINAL DS\Nsheets\B777 - E5.0.dwg - Tab: E5.0G - by rchin on 01/28/26 at 5:00:56 PM

DRAFT

CONSTRUCTION NOTES:

1 FUSED DISCONNECT SWITCH, 480V, 60A, 3Ø-3W, HEAVY-DUTY, NEMA 4X, MF'R: EATON, PN DH362FWK OR APPROVED EQUAL. SEE DETAIL "C" SHEET E11.1. REPLACE EXISTING DISCONNECT SWITCHES IN PLACE.

NOTES:

1. GROUND AND BOND ALL EQUIPMENT AND ENCLOSURES PER MANUFACTURER REQUIREMENTS AND NEC 250.
2. CONDUITS ARE SHOWN SCHEMATICALLY. CONTRACTOR SHALL INSTALL PULLPOINTS WHERE REQUIRED FOR PULLING TENSION AND MAINTAINING LESS THEN (4) 90 DEGREE BENDS.
3. MAINTAIN WORKING CLEARANCES IN FRONT OF PANELS AS REQUIRED PER NEC 110.26.
4. LABEL ABOVEGROUND CONDUITS PER DETAIL "H" SHEET E11.0.
5. TYPICAL CONDUIT TRANSITIONS PER DETAILS "D, E, F, G" SHEET E11.0.
6. SUPPORT CONDUITS PER DETAIL 'E' SHEET E11.3.

LEGEND:

- (J) JUNCTION BOX, NEMA 4X
- POWER PULLBOX. SEE DETAIL "A" SHEET E11.7.
- CONTROL PULLBOX. SEE DETAIL "B" SHEET E11.7.

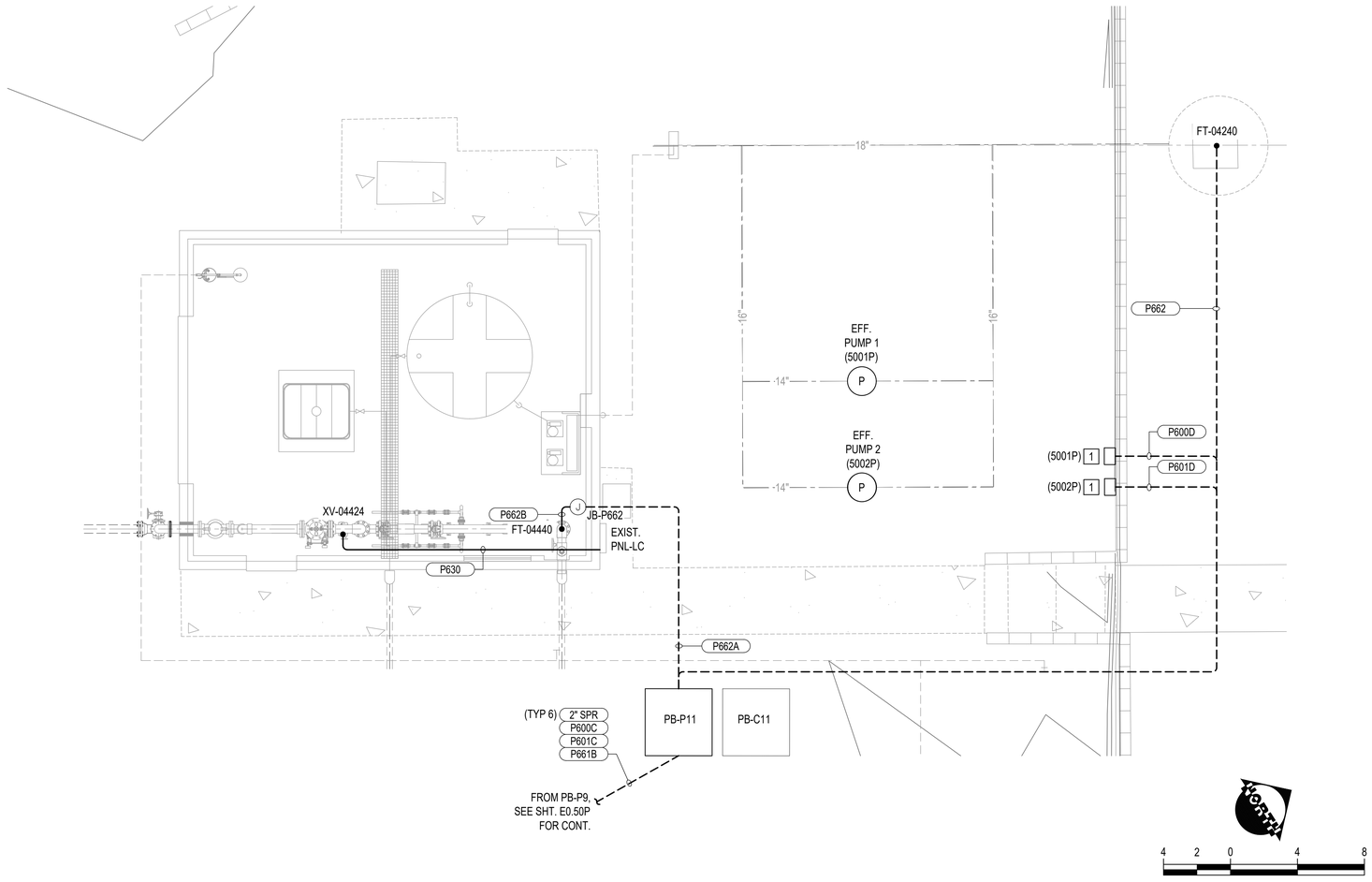

EFF PS & CHLOR BLDG
POWER PLAN

SCALE: 1/4" = 1'-0"

NO	BY	DATE	REVISIONS	DATE	APP.

Registered Professional Engineer (Electrical) CERTIFICATE NO. 35656 Basher Ishaq Shaq ARIZONA, U.S.A. Expires 03/31/28

PREPARED BY BASHAR ISHAQ
PROJECT ENGINEER E24580
R.C.E. NO. —
EXP. DATE
SCALE
DRAWN NC
DESIGNED NC, BI
CHECKED BI
DATE FEB 2026

TITLE: EFF PS & CHLORINE BLDG POWER PLAN

JOB: CITY OF SAN LUIS WEST WWTP 3.0 MGD MBR UPGRADES — SAN LUIS AZ.

PACE Advanced Water Engineering
8723 E. VIA de COMMERCIO, SUITE A-204 | SCOTTSDALE, CA 85258
P: (408) 991-3595 | www.pacewater.com

SHEET E6.0P
148 OF 209 SHEETS

JOB NO. B777

THESE DRAWINGS ARE THE PROPERTY OF P.A.C.E. AND SHALL NOT BE REPRODUCED IN ANY MANNER NOR BE USED FOR CONSTRUCTION UNLESS STAMPED 'ISSUED FOR CONSTRUCTION'.

FINAL PLANS ISSUED FOR BID

W:\B777 Engineering\B777 - 3MGD Exp\3MGD FINAL DS\sheets\B777 - E6.0.dwg - Tab: E6.0P - by rohn on 02/06/26 at 8:37:38 AM

DRAFT

CONSTRUCTION NOTES:

1 FUSED DISCONNECT SWITCH, 480V, 60A, 3Ø-3W, HEAVY-DUTY, NEMA 4X, MF'R: EATON, PN DH362FWK OR APPROVED EQUAL.

NOTES:

1. GROUND AND BOND ALL EQUIPMENT AND ENCLOSURES PER MANUFACTURER REQUIREMENTS AND NEC 250.
2. CONDUITS ARE SHOWN SCHEMATICALLY. CONTRACTOR SHALL INSTALL PULLPOINTS WHERE REQUIRED FOR PULLING TENSION AND MAINTAINING LESS THEN (4) 90 DEGREE BENDS.
3. MAINTAIN WORKING CLEARANCES IN FRONT OF PANELS AS REQUIRED PER NEC 110.26.
4. LABEL ABOVEGROUND CONDUITS PER DETAIL "H" SHEET E11.0.
5. TYPICAL CONDUIT TRANSITIONS PER DETAILS "D, E, F, G" SHEET E11.0.
6. SUPPORT CONDUITS PER DETAIL 'E' SHEET E11.3.

LEGEND:

(J) JUNCTION BOX, NEMA 4X

POWER PULLBOX. SEE DETAIL "A" SHEET E11.7.

CONTROL PULLBOX. SEE DETAIL "B" SHEET E11.7.

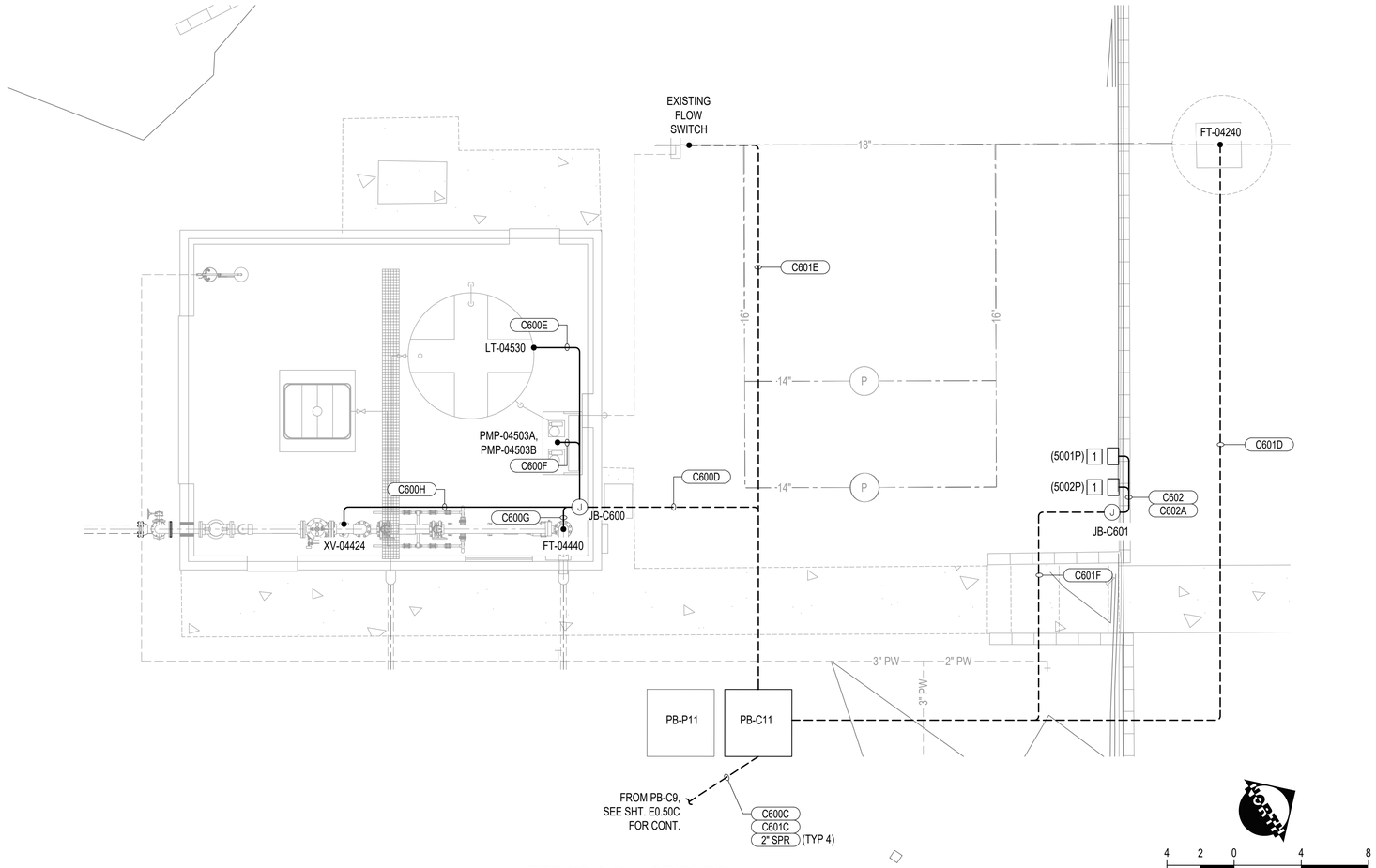

EFF PS & CHLOR BLDG CONTROL PLAN

SCALE: 1/4" = 1'-0"

NO	BY	DATE	REVISIONS	DATE	APP.

Registered Professional Engineer (Electrical) CERTIFICATE NO. 35958 Basharat Ishaq Ishaq State of ARIZONA U.S.A. Expires 03/31/28

PREPARED BY BASHAR ISHAQ
PROJECT ENGINEER E24590
R.C.E. NO. —
EXP. DATE
DRAWN NC
DESIGNED NC, BI
CHECKED BI
SCALE
DATE FEB 2026

THESE DRAWINGS ARE THE PROPERTY OF P.A.C.E. AND SHALL NOT BE REPRODUCED IN ANY MANNER NOR BE USED FOR CONSTRUCTION UNLESS STAMPED 'ISSUED FOR CONSTRUCTION".

TITLE
EFF PS & CHLORINE BLDG CONTROL PLAN

JOB
CITY OF SAN LUIS WEST WWTP
3.0 MGD MBR UPGRADES
SAN LUIS AZ.

PACE
Advanced Water Engineering
8723 E. VIA de COMMERCIO, SUITE A-204 | SCOTTSDALE, CA 85258
P: (408) 991-3595 | www.pacewater.com

FINAL PLANS ISSUED FOR BID

SHEET
E6.0C
149 OF 209 SHEETS

JOB NO. B777

W:\B777\Engineering\B777 - 3MGD Exp\3MGD FINAL DS\Arkitekt\B777 - E6.0.dwg - Tab: E6.0C - by rodrin on 02/06/26 at 9:37:38 AM

DRAFT

LEGEND:

POWER PULLBOX WITH INSPECTION GROUND ROD
PER DETAIL "A" SHEET E11.2 AND DETAIL "A" SHEET E11.7.

CONSTRUCTION NOTES:

1. #2 BARE COPPER, GROUNDING ELECTRODE CONDUCTOR (TYP)
2. #4/0 BARE CU CONDUCTOR WITHIN DUCT BANK.
3. GROUND PIPES.
4. GROUND ROD PER DETAIL "A" SHEET E11.0.
5. #4/0 BARE GROUND RING, MINIMUM 30" BELOW GRADE.
6. GROUND INSPECTION ROD PER DETAIL "A" SHEET E11.2.
7. CONNECT TO GROUND RING PER DETAIL "C" SHEET E11.0.

NOTES:

1. GROUND AND BOND ALL EQUIPMENT AND ENCLOSURES PER MANUFACTURER REQUIREMENTS AND NEC 250.
2. GROUND AND BOND ALL MOTOR FRAMES TO THE GROUND RING.
3. ALL METALLIC ENCLOSURES INCLUDING ROLL UP GATES, RAILINGS, FENCES, STAIR CASES OR OTHER METAL PERSONNEL MAY COME IN CONTACT WITH, SHALL BE EFFECTIVELY GROUNDED.
4. GROUNDING ROUTING IS DIAGRAMMATIC.
5. THE GEC MUST BE INSTALLED WITH SUFFICIENT LENGTH SO THAT REMOVAL OF ONE EQUIPMENT DOES NOT INTERRUPT THE EFFECTIVE GROUND PATH OF ANY OTHER EQUIPMENT.

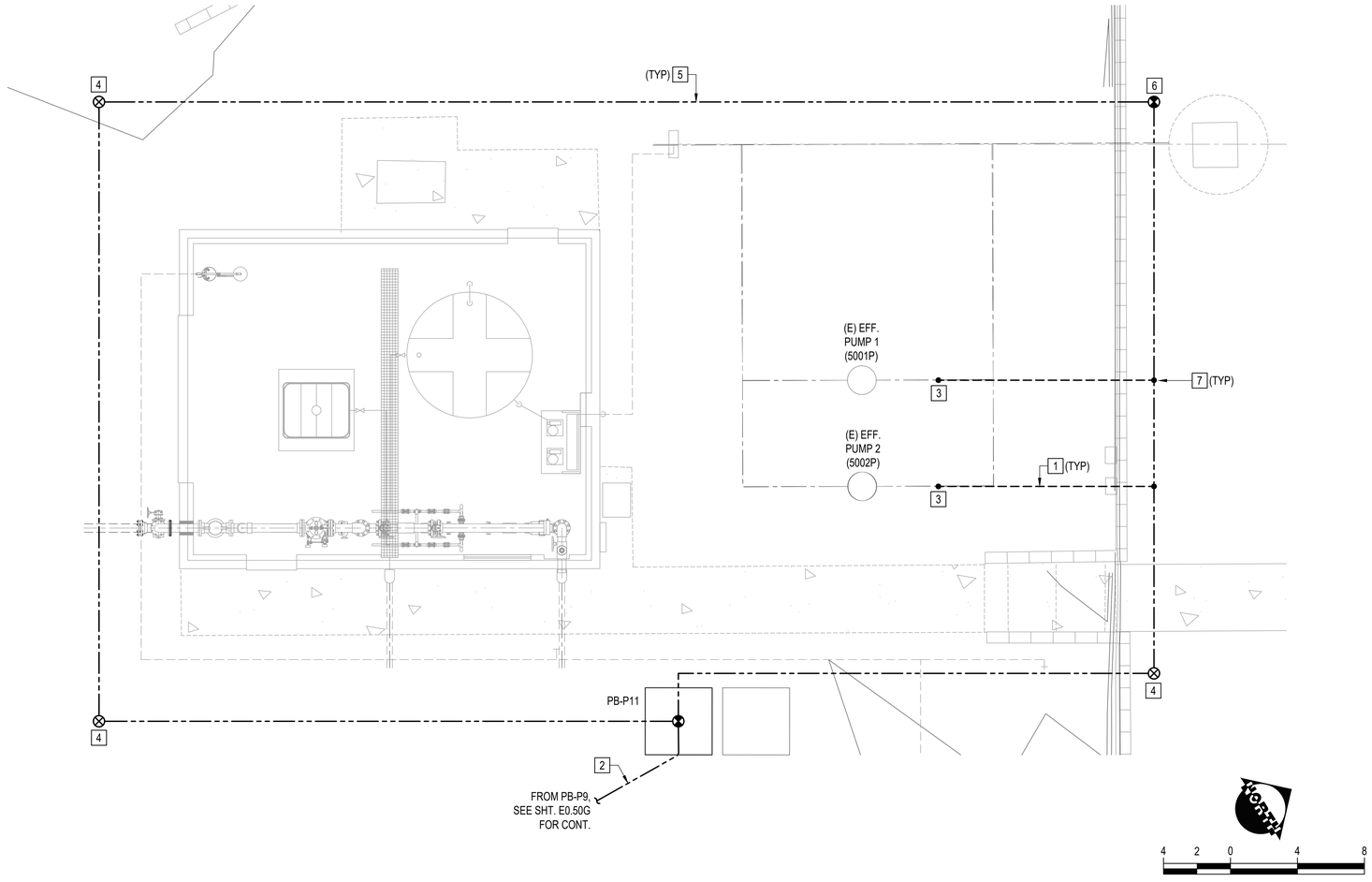

EFF PS & CHLOR BLDG GROUNDING PLAN

SCALE: 1/4" = 1'-0"

NO	BY	DATE	REVISIONS	DATE	APP.

Registered Professional Engineer (Electrical) CERTIFICATE NO. 50356 Bashar Ishaq Shaq ARIZONA, U.S.A. Expires 03/31/28

PREPARED BY: BASHAR ISHAQ
PROJECT ENGINEER
R.C.E. NO. E24590
EXP. DATE

SCALE
DRAWN: NC
DESIGNED: NC, BI
CHECKED: BI
DATE: FEB 2026

THESE DRAWINGS ARE THE PROPERTY OF P.A.C.E. AND SHALL NOT BE REPRODUCED IN ANY MANNER NOR BE USED FOR CONSTRUCTION UNLESS STAMPED "ISSUED FOR CONSTRUCTION".

TITLE: EFF PS & CHLORINE BLDG GROUNDING PLAN

JOB: CITY OF SAN LUIS WEST WWTP
3.0 MGD MBR UPGRADES
AZ.
SAN LUIS

PACE
Advanced Water Engineering
8723 E. VIA de COMMERCIO, SUITE A-204 | SCOTTSDALE, CA 85258
P: (408) 991-3595 | www.pacewater.com

FINAL PLANS ISSUED FOR BID

SHEET
E6.0G
150 OF 209 SHEETS

JOB NO. B777

W:\B777\Engineering\B777 - 3MGD Exp\3MGD FINAL DSN\sheets\B777 - E6.0.dwg - Tab: E6.0G - by rothin on 02/26/26 at 9:07:38 AM

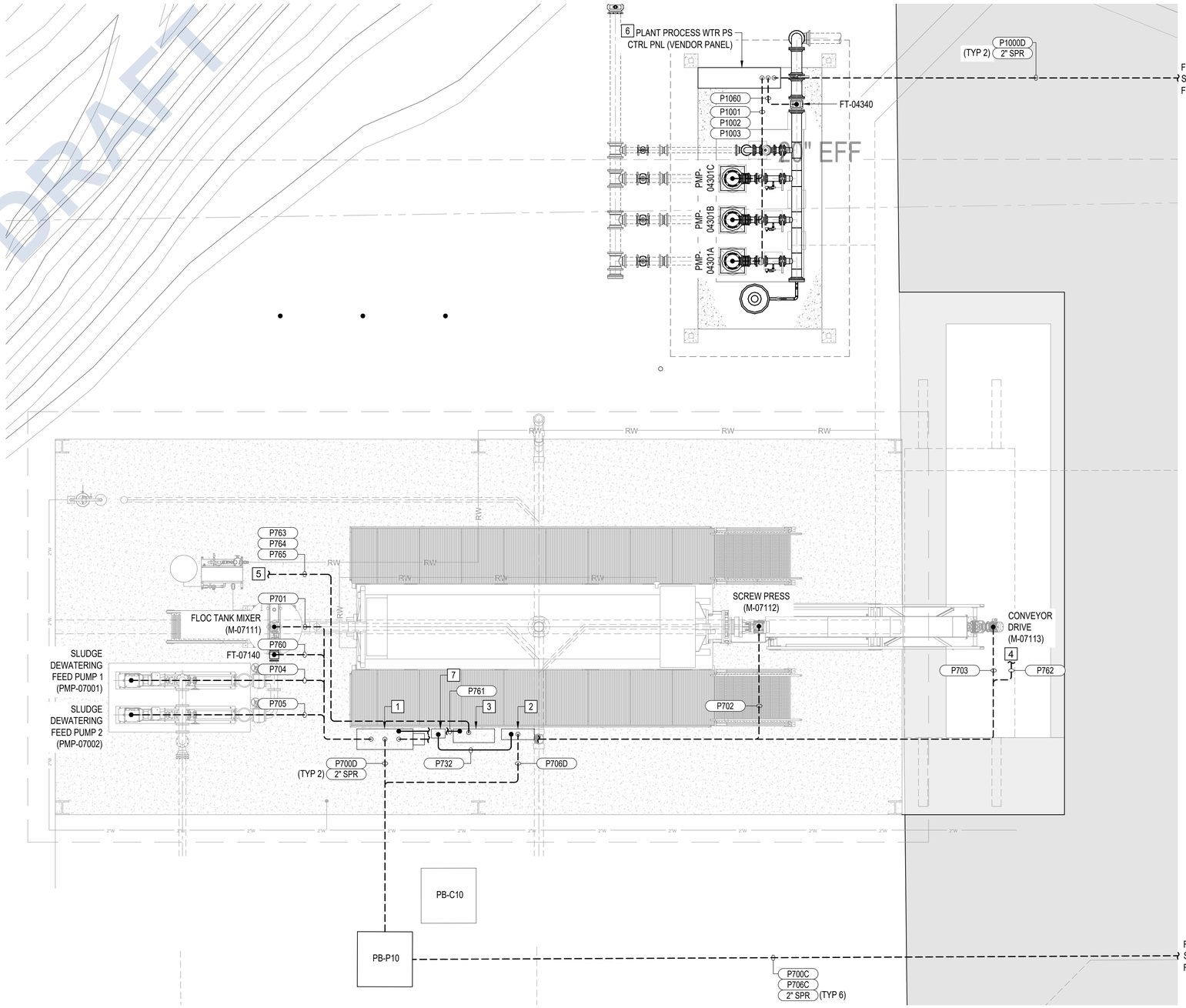

CONSTRUCTION NOTES:

1. DEWATERING CONTROL PANEL (CP-1) (VENDOR PANEL), 480V, 3PH, 60 HZ, STANCHION-MTD.
2. MINI POWER ZONE "DW" (MPZ-DW), 15 KVA, 480-120/208V, 3PH, 4W, 60 HZ, NEMA 4X, MF'R: EATON, PN 48G28T1518 (DIMS: 36.10"H x 28.80"W x 9.40"D) OR APPROVED EQUAL, STANCHION-MTD.
3. POLYMER SYSTEM CONTROL PANEL (PS-CP) (VENDOR PANEL), 120V, 1PH, 60 HZ, STANCHION-MTD.
4. TO CONVEYOR ZERO SPEED SWITCH.
5. TO NEAT POLYMER PUMP, POLYMER MIXER, WATER FEED VALVE.
6. PLANT PROCESS WATER BOOSTER PUMP STATION CONTROL PANEL (VENDOR PANEL) w/INTEGRATED CB, 65 KAIC OR FUSED DISC SW AND A/C UNIT SIZED. INSTALLED BY CONTRACTOR.
7. FIBER PATCH PANEL EQUIPPED WITH UPS AND ETHERNET SWITCH, NEMA 4X, STANCHION-MTD. PROVIDED BY SYSTEM INTEGRATOR, INSTALLED BY CONTRACTOR.

NOTES:

1. GROUND AND BOND ALL EQUIPMENT AND ENCLOSURES PER MANUFACTURER REQUIREMENTS AND NEC 250.
2. CONDUITS ARE SHOWN SCHEMATICALLY. CONTRACTOR SHALL INSTALL PULLPOINTS WHERE REQUIRED FOR PULLING TENSION AND MAINTAINING LESS THEN (4) 90 DEGREE BENDS.
3. MAINTAIN WORKING CLEARANCES IN FRONT OF PANELS AS REQUIRED PER NEC 110.26.
4. LABEL ABOVEGROUND CONDUITS PER DETAIL "H" SHEET E11.0.
5. TYPICAL CONDUIT TRANSITIONS PER DETAILS "D, E, F, G" SHEET E11.0.
6. SUPPORT CONDUITS PER DETAIL 'E' SHEET E11.3.

LEGEND:

POWER PULLBOX. SEE DETAIL "A" SHEET E11.7.

CONTROL PULLBOX. SEE DETAIL "B" SHEET E11.7.

DEWATERING & PLANT PROCESS WATER BOOSTER PS POWER PLAN

SCALE: 1/4" = 1'-0"

4 2 0 4 8

DRAFT

NO	BY	DATE	REVISIONS	DATE	APP.

Registered Professional Engineer (Electrical) CERTIFICATE NO. 35358 Basher Ishaq State of ARIZONA U.S.A. Expires 03/31/28

PREPARED BY BASHAR ISHAQ
PROJECT ENGINEER
R.C.E. NO. E24580
EXP. DATE
SCALE
DRAWN NC
DESIGNED NC, BI
CHECKED BI
DATE FEB 2026

THESE DRAWINGS ARE THE PROPERTY OF P.A.C.E. AND SHALL NOT BE REPRODUCED IN ANY MANNER NOR BE USED FOR CONSTRUCTION UNLESS STAMPED 'ISSUED FOR CONSTRUCTION'.

TITLE
DEWAT & PLNT PROCESS WTR PS POWER PLAN

JOB
CITY OF SAN LUIS WEST WWTP
3.0 MGD MBR UPGRADES
AZ.
SAN LUIS

PACE
Advanced Water Engineering
8723 E. VIA de COMMERCIO, SUITE A-204 | SCOTTSDALE, CA 85258
P: (408) 991-3595 | www.pacewater.com

FINAL PLANS ISSUED FOR BID

SHEET
E7.0P
151 OF 209 SHEETS

JOB NO. B777

W:\B777 Engineering\B777 - 3MGD Exp\3MGD FINAL DS\sheets\B777 - E7.0.dwg - Tab: E7.0P - by rohn on 02/05/26 at 4:32:14 PM

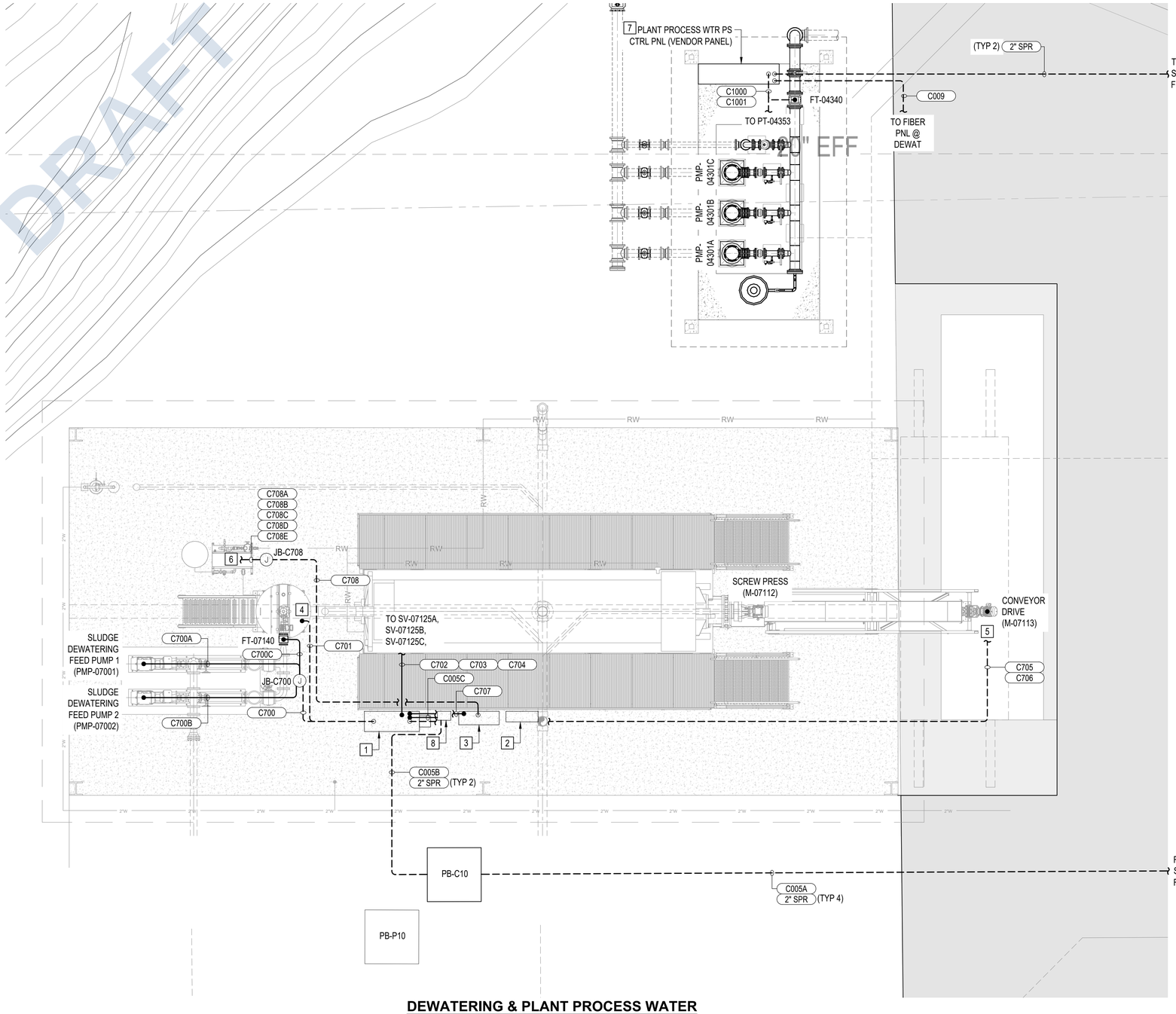

CONSTRUCTION NOTES:

1. DEWATERING CONTROL PANEL (CP-1) (VENDOR PANEL), 480V, 3PH, 60 HZ, STANCHION-MTD.
2. MINI POWER ZONE "DW" (MPZ-DW), 15 KVA, 480-120/208V, 3PH, 4W, 60 HZ, NEMA 4X, MF'R: EATON, PN 48G28T1518 (DIMS: 36.10"H x 28.80"W x 9.40"D) OR APPROVED EQUAL, STANCHION-MTD.
3. POLYMER SYSTEM CONTROL PANEL (PS-CP) (VENDOR PANEL), 120V, 1PH, 60 HZ, STANCHION-MTD.
4. FLOC TANK HIGH PROBE, REFERENCE PROBE.
5. TO CONVEYOR PULL CORD & ZERO SPEED SWITCH.
6. TO POLYMER SYSTEM PRESSURE SWITCH, WATER FEED VALVE/FLOW METER/PRESSURE TRANSDUCER, NEAT POLYMER PUMP DISCHARGE PRESSURE TRANSDUCER.
7. PLANT PROCESS WATER BOOSTER PUMP STATION CONTROL PANEL (VENDOR PANEL) w/INTEGRATED CB, 65 KAIC OR FUSED DISC SW AND A/C UNIT SIZED. INSTALLED BY CONTRACTOR.
8. FIBER PATCH PANEL EQUIPPED WITH UPS AND ETHERNET SWITCH, NEMA 4X, STANCHION-MTD. PROVIDED BY SYSTEM INTEGRATOR, INSTALLED BY CONTRACTOR.

NOTES:

1. GROUND AND BOND ALL EQUIPMENT AND ENCLOSURES PER MANUFACTURER REQUIREMENTS AND NEC 250.
2. CONDUITS ARE SHOWN SCHEMATICALLY. CONTRACTOR SHALL INSTALL PULLPOINTS WHERE REQUIRED FOR PULLING TENSION AND MAINTAINING LESS THEN (4) 90 DEGREE BENDS.
3. MAINTAIN WORKING CLEARANCES IN FRONT OF PANELS AS REQUIRED PER NEC 110.26.
4. LABEL ABOVEGROUND CONDUITS PER DETAIL "H" SHEET E11.0.
5. TYPICAL CONDUIT TRANSITIONS PER DETAILS "D, E, F, G" SHEET E11.0.
6. SUPPORT CONDUITS PER DETAIL 'E' SHEET E11.3.

LEGEND:

- (J) JUNCTION BOX, NEMA 4X
- POWER PULLBOX. SEE DETAIL "A" SHEET E11.7.
- CONTROL PULLBOX. SEE DETAIL "B" SHEET E11.7.

DEWATERING & PLANT PROCESS WATER BOOSTER PS POWER PLAN

SCALE: 1/4" = 1'-0"

NORTH

4 2 0 4 8

NO	BY	DATE	REVISIONS	DATE	APP.

Registered Professional Engineer (Electrical) CERTIFICATE NO. 25356 Basher Shaho ARIZONA, U.S.A. Expires 03/31/28

PREPARED BY: BASHAR ISHAQ
PROJECT ENGINEER
R.C.E. NO. E24590
EXP. DATE

DRAWN: NC
DESIGNED: NC, BI
CHECKED: BI
SCALE
DATE: FEB 2026

THESE DRAWINGS ARE THE PROPERTY OF P.A.C.E. AND SHALL NOT BE REPRODUCED IN ANY MANNER NOR BE USED FOR CONSTRUCTION UNLESS STAMPED 'ISSUED FOR CONSTRUCTION'.

TITLE: DEWAT & PLNT PROCESS WTR PS CONTROL PLAN

JOB: CITY OF SAN LUIS WEST WWTP
3.0 MGD MBR UPGRADES
SAN LUIS AZ.

PACE
Advanced Water Engineering
8723 E. VIA de COMMERCIO, SUITE A-204 | SCOTTSDALE, CA 85258
P: (408) 991-3595 | www.pacewater.com

FINAL PLANS ISSUED FOR BID

SHEET
E7.0C
152 OF 209 SHEETS

JOB NO. B777

W:\B777\Engineering\B777 - 3MGD Exp\3MGD FINAL DSN\sheets\B777 - E7.0.dwg - Tab: E7.0C - by rohn on 02/26/26 at 4:32:14 PM

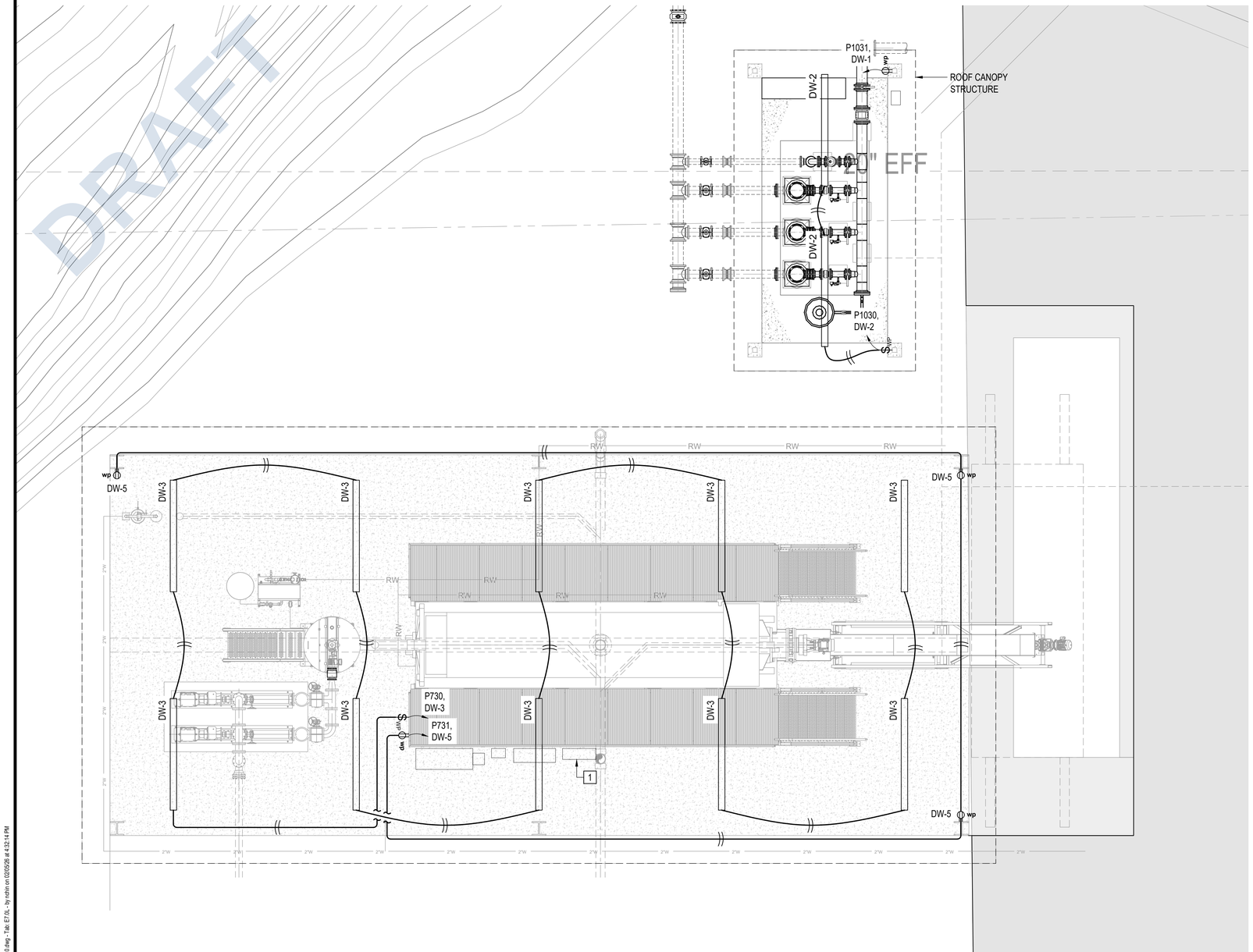

DEWATERING & PLANT PROCESS WATER BOOSTER PS LIGHTING & RECEPTACLE PLAN

SCALE: 1/4" = 1'-0"

CONSTRUCTION NOTES:

1. MINI POWER ZONE "DW" (MPZ-DW), 15 KVA, 480-120/208V, 3PH, 4W, 60 HZ, NEMA 4X, MF'R: EATON, PN 48G28T1518 (DIMS: 36.10"H x 28.80"W x 9.40"D) OR APPROVED EQUAL.

LEGEND:

DW-# — INDICATES CIRCUIT NUMBER

LINEAR WASHDOWN 8 FT, 100W, 5000K LED, 120-277V, NEMA 4X, 0-10V DIMMER, MF'R: RAB, PN SHARK8-100W/D10 (OR APPROVED EQUAL)

HASH MARKS INDICATING NUMBER OF CURRENT CARRYING CONDUCTORS. GROUND CONDUCTOR(S) NOT SHOWN FOR CLARITY, ALL CONDUITS SHALL HAVE A MINIMUM #12 GROUND AND SIZED PER CODE REQUIREMENTS.

wp — 120V, 20A GFCI DUPLEX TAMPER-WEATHER RESISTANT RECEPTACLE WITH METALLIC WEATHERPROOF WHILE-IN-USE COVER, EXTRA DUTY, POST-MTD.

$WP — 120 VAC, 20 AMP, NEMA 4X LIGHT SWITCH, POST-MTD. @ 42" AFF. (WP = WEATHERPROOF)

NOTES:

1. CONDUCTORS FOR HOME RUN CIRCUITS FOR LIGHTING AND RECEPTACLES SHALL BE #12 AWG MINIMUM SIZE, UNLESS NOTED OTHERWISE.
2. LIGHTING AND RECEPTACLE WIRING SHALL BE TYPE XHHW-2.
3. ALL WIRING SHOWN SHALL BE WITHIN CONDUITS (PVC COATED RGS FOR OUTDOOR EXPOSED CONDUIT).
4. ALL CONDUITS SHALL CONTAIN A PROPERLY SIZED GROUND CONDUCTOR. DE-RATE CONDUCTORS PER NEC 310.15(C)(1).
5. MOUNT AND WIRE ALL EQUIPMENT PER MANUFACTURER REQUIREMENTS.
6. DE-RATE CONDUCTOR AMPACITY BASED ON # OF CURRENT CARRYING CONDUCTORS AS APPLICABLE.
7. RECEPTACLE OUTLETS SHALL BE CLEARLY LABELED WITH THE CIRCUIT PROVIDING POWER. LABEL SHALL BE SUITED FOR ENVIRONMENT RECEPTACLE IS LOCATED IN.
8. INSTALL A PHOTOCELL SENSOR IN A NON-SHADED AREA, 120V, NO/NC CONTACT.

4 2 0 4 8

NO	BY	DATE	REVISIONS	DATE	APP.

Registered Professional Engineer (Electrical) CERTIFICATE NO. 82368 Date Signed 8/28/24 ARIZONA, U.S.A. Expires 03/31/28

PREPARED BY BASHAR ISHAQ
PROJECT ENGINEER
R.C.E. NO. -- E24590
EXP. DATE
DRAWN NC
SCALE
DESIGNED NC, BI
CHECKED BI
DATE FEB 2026

TITLE
DEWAT & PLNT PROCESS WTR PS LTG & RECEP PLAN

JOB
CITY OF SAN LUIS WEST WWTP
3.0 MGD MBR UPGRADES
SAN LUIS AZ.

PACE
Advanced Water Engineering
8723 E. VIA de COMMERCIO, SUITE A-204 | SCOTTSDALE, CA 85258
P: (408) 991-3595 | www.pacewater.com

SHEET
E7.0L
153 OF 209 SHEETS

JOB NO. B777

THESE DRAWINGS ARE THE PROPERTY OF P.A.C.E. AND SHALL NOT BE REPRODUCED IN ANY MANNER NOR BE USED FOR CONSTRUCTION UNLESS STAMPED "ISSUED FOR CONSTRUCTION".

FINAL PLANS ISSUED FOR BID

W:\B777\Engineering\B777 - 3MGD Exp\3MGD FINAL DS\Nsheets\B777 - E7.0.dwg - Tab: E7.0L - by nchin on 02/05/26 at 4:32:14 PM

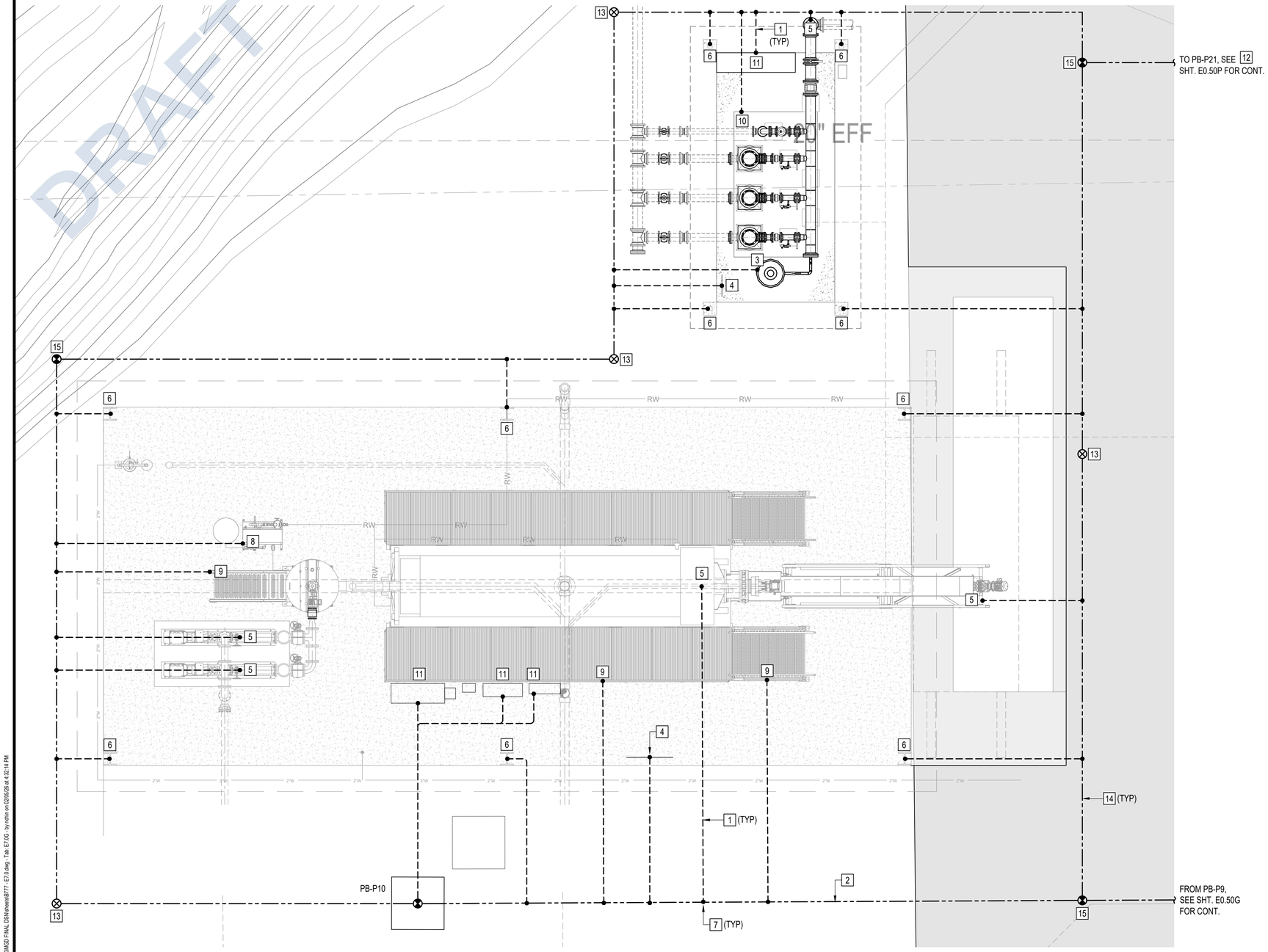

DEWATERING & PLANT PROCESS WATER BOOSTER PS GROUNDING PLAN

SCALE: 1/4" = 1'-0"

CONSTRUCTION NOTES:

1. #2 BARE COPPER, GROUNDING ELECTRODE CONDUCTOR (TYP)
2. #4/0 BARE CU CONDUCTOR WITHIN DUCT BANK.
3. GROUND METAL TANK.
4. GROUND TO REBAR PER DETAIL "C" SHEET E11.5.
5. GROUND PIPES.
6. GROUND STEEL CANOPY POSTS.
7. EXOTHERMIC WELD PER DETAIL "C" SHEET E11.0.
8. GROUND POLYMER SKID PAD (REBAR).
9. GROUND HANDRAILS.
10. GROUND METAL SKID.
11. GROUND PANELS.
12. FROM PB-P21 SHOWN ON E0.50G. CONNECT TO GROUND INSPECTION ROD INSIDE PB-P21.
13. GROUND ROD PER DETAIL "A" SHEET E11.0.
14. #4/0 BARE GROUND RING, MINIMUM 30" BELOW GRADE.
15. GROUND INSPECTION ROD PER DETAIL "A" SHEET E11.2.

NOTES:

1. GROUND AND BOND ALL EQUIPMENT AND ENCLOSURES PER MANUFACTURER REQUIREMENTS AND NEC 250.
2. GROUND AND BOND ALL MOTOR FRAMES TO THE GROUND RING.
3. ALL METALLIC ENCLOSURES INCLUDING ROLL UP GATES, RAILINGS, FENCES, STAIR CASES OR OTHER METAL PERSONNEL MAY COME IN CONTACT WITH, SHALL BE EFFECTIVELY GROUNDED.
4. GROUNDING ROUTING IS DIAGRAMMATIC.
5. THE GEC MUST BE INSTALLED WITH SUFFICIENT LENGTH SO THAT REMOVAL OF ONE EQUIPMENT DOES NOT INTERRUPT THE EFFECTIVE GROUND PATH OF ANY OTHER EQUIPMENT.

LEGEND:

POWER PULLBOX WITH INSPECTION GROUND ROD PER DETAIL "A" SHEET E11.2 AND DETAIL "A" SHEET E11.7.

NO	BY	DATE	REVISIONS	DATE	APP.

Registered Professional Engineer (Electrical) CERTIFICATE NO. 82968 BASHAR ISHAQ Date Signed 03/31/28 ARIZONA, U.S.A. Expires 03/31/28

PREPARED BY BASHAR ISHAQ
PROJECT ENGINEER
R.C.E. NO. -- E24590
EXP. DATE
DRAWN NC
SCALE
DESIGNED NC, BI
CHECKED BI
DATE FEB 2026

TITLE
DEWAT & PLNT PROCESS WTR PS GROUNDING PLAN

JOB
CITY OF SAN LUIS WEST WWTP
3.0 MGD MBR UPGRADES
SAN LUIS AZ.

PACE Advanced Water Engineering
8723 E. VIA de COMMERCIO, SUITE A-204 | SCOTTSDALE, CA 85258
P: (408) 991-3595 | www.pacewater.com

SHEET
E7.0G
154 OF 209 SHEETS
JOB NO. B777

THESE DRAWINGS ARE THE PROPERTY OF P.A.C.E. AND SHALL NOT BE REPRODUCED IN ANY MANNER NOR BE USED FOR CONSTRUCTION UNLESS STAMPED "ISSUED FOR CONSTRUCTION".

FINAL PLANS ISSUED FOR BID

W:\B777\Engineering\B777 - 3MGD Exp\3MGD FINAL DSN\sheets\B777 - E7.0.dwg - Tab: E7.0G - by nchin on 02/05/26 at 4:32:14 PM

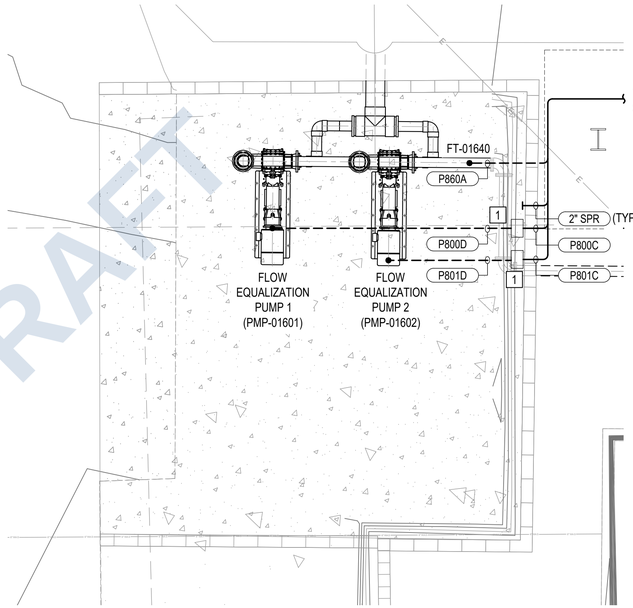

FEB PS POWER PLAN

SCALE: 1/4" = 1'-0"

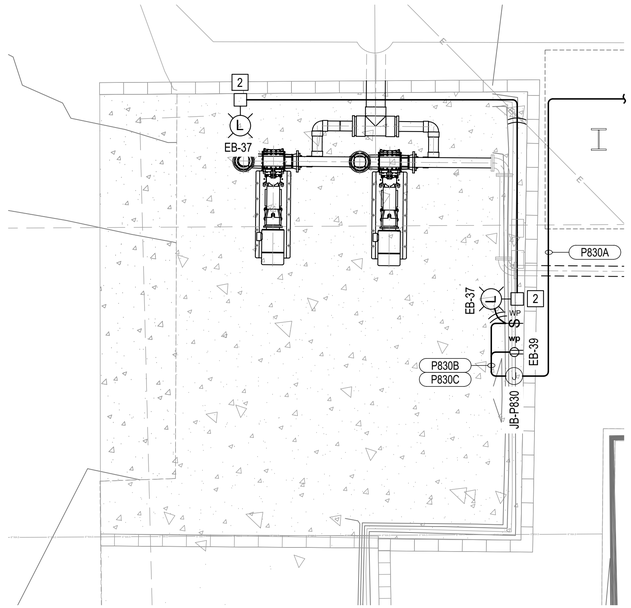

FEB PS LIGHTING & RECEPTACLE PLAN

SCALE: 1/4" = 1'-0"

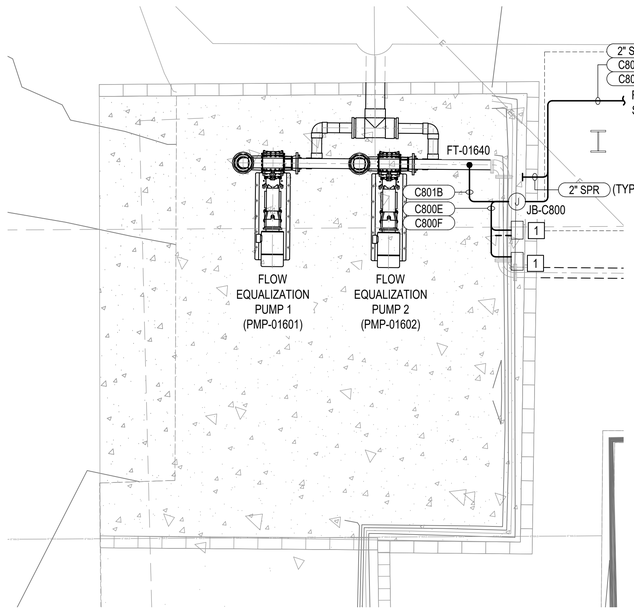

FEB PS CONTROL PLAN

SCALE: 1/4" = 1'-0"

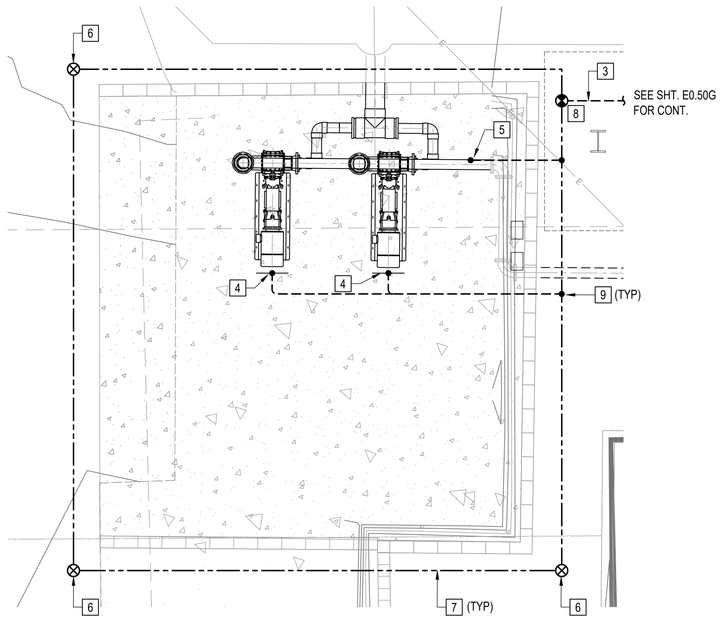

FEB PS GROUNDING PLAN

SCALE: 1/4" = 1'-0"

CONSTRUCTION NOTES:

1. FUSED DISCONNECT SWITCH, 480V, 60A, 3Ø-3W, HEAVY-DUTY, NEMA 4X, MF'R: EATON, PN DH362FWK OR APPROVED EQUAL. SEE DETAIL "C" SHEET E11.1.
2. SECURELY FASTEN LIGHT POSTS TO CMU WALL.
3. 4/0 BARE COPPER, GROUNDING ELECTRODE CONDUCTOR ROUTED WITHIN SCH80 PVC CONDUIT (ABOVEGRADE).
4. GROUND PUMP PAD REBAR.
5. GROUND PIPE.
6. GROUND ROD PER DETAIL "A" SHEET E11.0.
7. #4/0 BARE GROUND RING, MINIMUM 30" BELOW GRADE.
8. GROUND INSPECTION ROD PER DETAIL "A" SHEET E11.2.
9. CONNECT TO GROUND RING PER DETAIL "C" SHEET E11.0.

NOTES:

1. CONDUITS ARE SHOWN SCHEMATICALLY. CONTRACTOR SHALL INSTALL PULLPOINTS WHERE REQUIRED FOR PULLING TENSION AND MAINTAINING LESS THEN (4) 90 DEGREE BENDS.
2. MAINTAIN WORKING CLEARANCES IN FRONT OF PANELS AS REQUIRED PER NEC 110.26.
3. LABEL ABOVEGROUND CONDUITS PER DETAIL "H" SHEET E11.0.
4. TYPICAL CONDUIT TRANSITIONS PER DETAILS "D, E, F, G" SHEET E11.0.
5. SUPPORT CONDUITS PER DETAIL 'E' SHEET E11.3.
6. CONDUCTORS FOR HOME RUN CIRCUITS FOR LIGHTING AND RECEPTACLES SHALL BE #12 AWG MINIMUM SIZE, UNLESS NOTED OTHERWISE.
7. LIGHTING AND RECEPTACLE WIRING SHALL BE TYPE XHHW-2.
8. ALL WIRING SHOWN SHALL BE WITHIN CONDUITS (PVC COATED RGS FOR OUTDOOR EXPOSED CONDUIT).
9. ALL CONDUITS SHALL CONTAIN A PROPERLY SIZED GROUND CONDUCTOR. DE-RATE CONDUCTORS PER NEC 310.15(C)(1).
10. MOUNT AND WIRE ALL EQUIPMENT PER MANUFACTURER REQUIREMENTS.
11. DE-RATE CONDUCTOR AMPACITY BASED ON # OF CURRENT CARRYING CONDUCTORS AS APPLICABLE.
12. RECEPTACLE OUTLETS SHALL BE CLEARLY LABELED WITH THE CIRCUIT PROVIDING POWER. LABEL SHALL BE SUITED FOR ENVIRONMENT RECEPTACLE IS LOCATED IN.
13. INSTALL A PHOTOCELL SENSOR IN A NON-SHADED AREA, 120V, NO/NC CONTACT.
14. GROUND AND BOND ALL EQUIPMENT AND ENCLOSURES PER MANUFACTURER REQUIREMENTS AND NEC 250.
15. GROUND AND BOND ALL MOTOR FRAMES TO THE GROUND RING.
16. ALL METALLIC ENCLOSURES INCLUDING ROLL UP GATES, RAILINGS, FENCES, STAIR CASES OR OTHER METAL PERSONNEL MAY COME IN CONTACT WITH, SHALL BE EFFECTIVELY GROUNDED.
17. GROUNDING ROUTING IS DIAGRAMMATIC.
18. THE GEC MUST BE INSTALLED WITH SUFFICIENT LENGTH SO THAT REMOVAL OF ONE EQUIPMENT DOES NOT INTERRUPT THE EFFECTIVE GROUND PATH OF ANY OTHER EQUIPMENT.

LEGEND:

(J)	JUNCTION BOX, NEMA 4X
(L)	LED AREA LUMINAIRE, 6,060 LUMENS, 45W, 3000K COLOR TEMP, 70 CRI, FORWARD-THROW MEDIUM DISTRIBUTION, 120-277 VAC, NATURAL ALUMINUM, POLE-MTD., MF'R: LITHONIA, PN DSX0-LED-P2-30K-70CRI-TFTM-MVOLT-RPA-DNAXD (OR APPROVED EQUAL)
((	HASH MARKS INDICATING NUMBER OF CURRENT CARRYING CONDUCTORS. GROUND CONDUCTOR(S) NOT SHOWN FOR CLARITY, ALL CONDUITS SHALL HAVE A MINIMUM #12 GROUND AND SIZED PER CODE REQUIREMENTS.
$_{WP}$	120V, 20A GFCI DUPLEX TAMPER-WEATHER RESISTANT RECEPTACLE WITH METALLIC WEATHERPROOF WHILE-IN-USE COVER, EXTRA DUTY, POST-MTD.
$_{WP}$	120 VAC, 20 AMP, NEMA 4X LIGHT SWITCH, WALL-MTD. @ 42" AFF. (WP = WEATHERPROOF)

NORTH

4 2 0 4 8

NO	BY	DATE	REVISIONS	DATE	APP.

Registered Professional Engineer (Electrical) CERTIFICATE NO. 25258 BASHAR SHAIQ Date Signed 1/31/2026 ARIZONA, U.S.A. Expires 03/31/28

PREPARED BY BASHAR SHAIQ
PROJECT ENGINEER
R.C.E. NO. E24580
EXP. DATE
DRAWN NC
DESIGNED NC, BI
CHECKED BI
SCALE
DATE FEB 2026

THESE DRAWINGS ARE THE PROPERTY OF P.A.C.E. AND SHALL NOT BE REPRODUCED IN ANY MANNER NOR BE USED FOR CONSTRUCTION UNLESS STAMPED 'ISSUED FOR CONSTRUCTION'.

TITLE **FLOW EQ PS ELECTRICAL PLAN**

JOB CITY OF SAN LUIS WEST WWTP 3.0 MGD MBR UPGRADES AZ. SAN LUIS

PACE Advanced Water Engineering
8723 E. VIA de COMMERCIO, SUITE A-204 | SCOTTSDALE, CA 85258
P: (408) 991-3595 | www.pacewater.com

SHEET **E8.0**
155 OF 209 SHEETS

JOB NO. B777

FINAL PLANS ISSUED FOR BID

DRAFT

W:\B777\Engineering\B777 - 3MGD Exp\3MGD FINAL DSN\sheets\B777- E8.0.dwg - Tab: E8.0 - by rschin on 01/29/26 at 5:04:48 PM

DRAFT

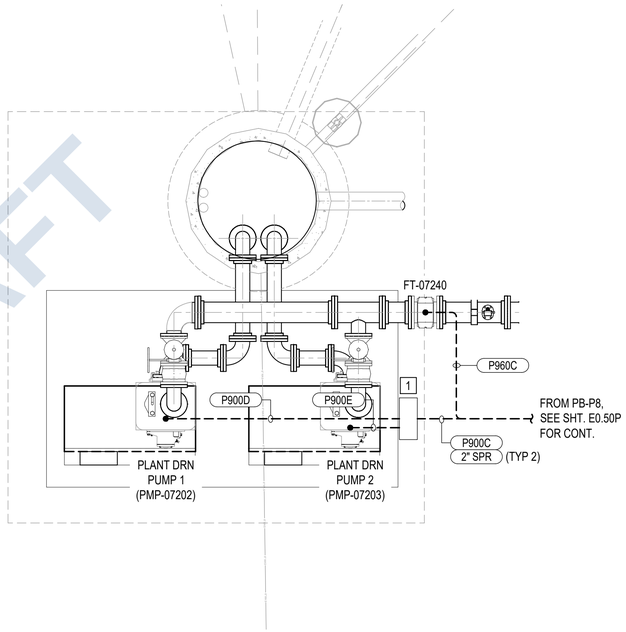

PLANT DRAIN PS POWER PLAN

SCALE: 1/2" = 1'-0"

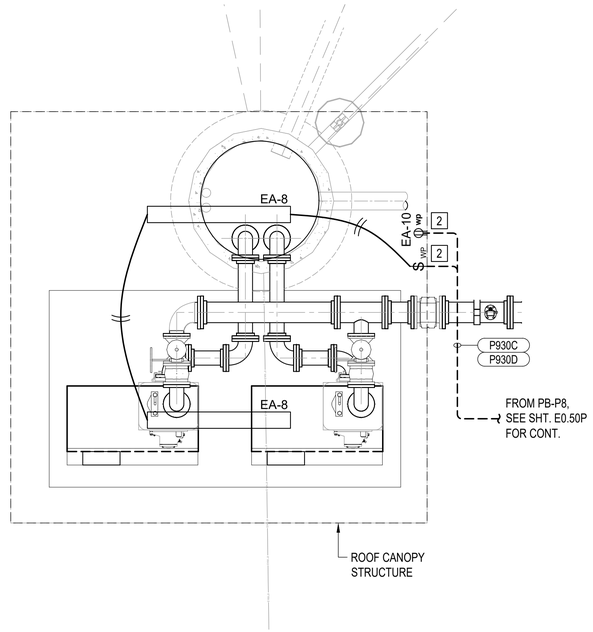

PLANT DRAIN PS LIGHTING & RECEPTACLE PLAN

SCALE: 1/2" = 1'-0"

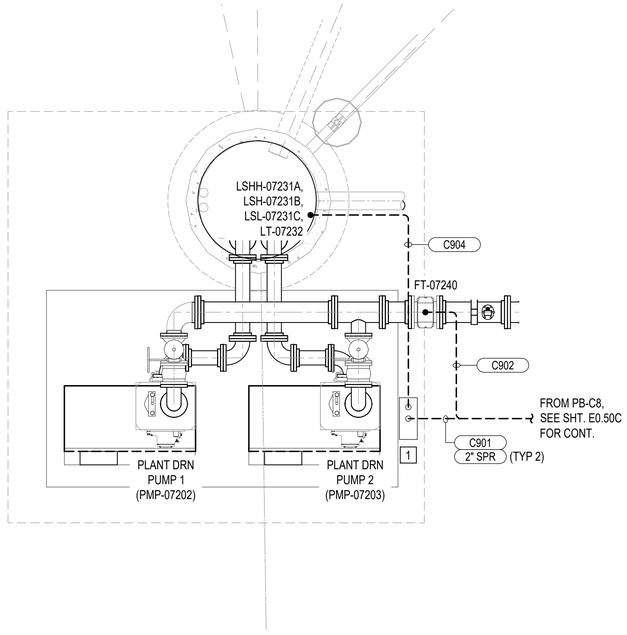

PLANT DRAIN PS CONTROL PLAN

SCALE: 1/2" = 1'-0"

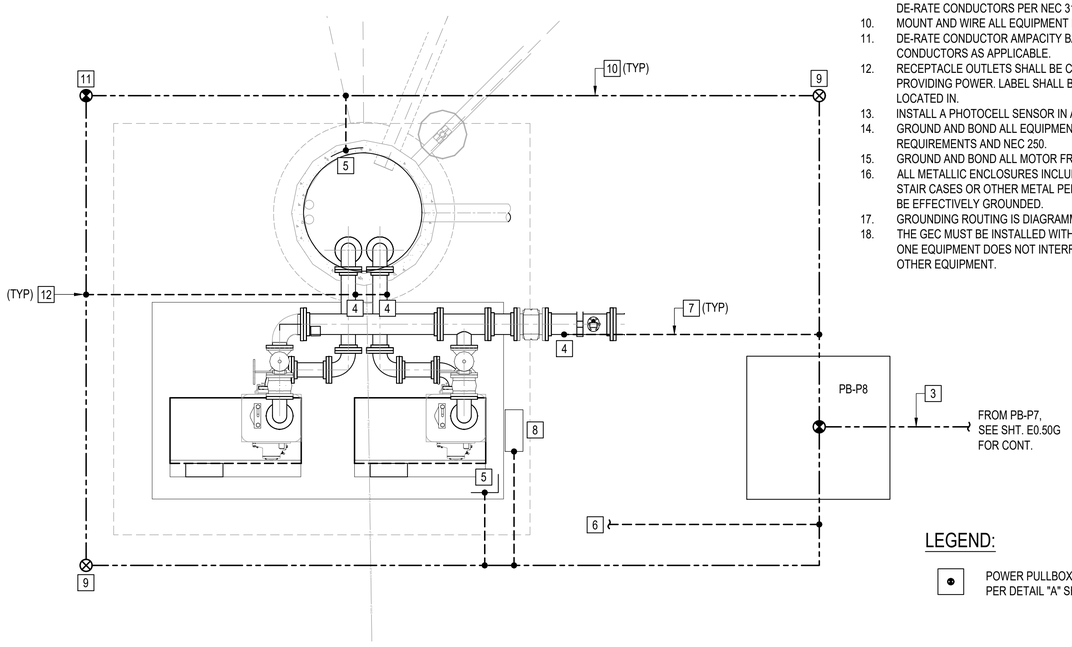

PLANT DRAIN PS GROUNDING PLAN

SCALE: 1/2" = 1'-0"

CONSTRUCTION NOTES:

1. PLANT DRAIN PUMP STATION CONTROL PANEL, 480V, 3PH, 60 HZ, DUPLEX, NEMA 4X, MF'R: SJE RHOMBUS, PN IFN-6-1-W-511 (PANEL DIMS: 16"H X 14"W X 6"D) OR APPROVED EQUAL.
2. LOCATION OF RECEPTACLE AND LIGHT SWITCH IS SHOWN ARBITRARILY. CONTRACTOR TO MOUNT UNITS TO ROOF CANOPY STRUCTURE SUPPORT POSTS.
3. #4/0 BARE CU CONDUCTOR WITHIN DUCT BANK.
4. GROUND PIPE.
5. GROUND TO REBAR PER DETAIL "C" SHEET E11.5.
6. GROUND ALL STEEL ROOF CANOPY POSTS.
7. #2 BARE COPPER, GROUNDING ELECTRODE CONDUCTOR (TYP)
8. GROUND PANEL.
9. GROUND ROD PER DETAIL "A" SHEET E11.0.
10. #4/0 BARE GROUND RING, MINIMUM 30" BELOW GRADE.
11. GROUND INSPECTION ROD PER DETAIL "A" SHEET E11.2.
12. CONNECT TO GROUND RING PER DETAIL "C" SHEET E11.0.

LEGEND:

EA-# — INDICATES CIRCUIT NUMBER
LINEAR WASHDOWN 4 FT, 50W, 5000K LED, 120-277V, NEMA 4X, 0-10V DIMMER, MF'R: RAB, PN SHARK4-50W/D10 (OR APPROVED EQUAL)

((— HASH MARKS INDICATING NUMBER OF CURRENT CARRYING CONDUCTORS. GROUND CONDUCTOR(S) NOT SHOWN FOR CLARITY, ALL CONDUITS SHALL HAVE A MINIMUM #12 GROUND AND SIZED PER CODE REQUIREMENTS.

GFCI WP — 120V, 20A GFCI DUPLEX TAMPER-WEATHER RESISTANT RECEPTACLE WITH METALLIC WEATHERPROOF WHILE-IN-USE COVER, EXTRA DUTY, POST-MTD.

$WP — 120 VAC, 20 AMP, NEMA 4X LIGHT SWITCH, POST-MTD. @ 42" AFF. (WP = WEATHERPROOF)

NOTES:

1. CONDUITS ARE SHOWN SCHEMATICALLY. CONTRACTOR SHALL INSTALL PULLPOINTS WHERE REQUIRED FOR PULLING TENSION AND MAINTAINING LESS THEN (4) 90 DEGREE BENDS.
2. MAINTAIN WORKING CLEARANCES IN FRONT OF PANELS AS REQUIRED PER NEC 110.26.
3. LABEL ABOVEGROUND CONDUITS PER DETAIL "H" SHEET E11.0.
4. TYPICAL CONDUIT TRANSITIONS PER DETAILS "D, E, F, G" SHEET E11.0.
5. SUPPORT CONDUITS PER DETAIL 'E' SHEET E11.3.
6. CONDUCTORS FOR HOME RUN CIRCUITS FOR LIGHTING AND RECEPTACLES SHALL BE #12 AWG MINIMUM SIZE, UNLESS NOTED OTHERWISE.
7. LIGHTING AND RECEPTACLE WIRING SHALL BE TYPE XHHW-2.
8. ALL WIRING SHOWN SHALL BE WITHIN CONDUITS (PVC COATED RGS FOR OUTDOOR EXPOSED CONDUIT).
9. ALL CONDUITS SHALL CONTAIN A PROPERLY SIZED GROUND CONDUCTOR. DE-RATE CONDUCTORS PER NEC 310.15(C)(1).
10. MOUNT AND WIRE ALL EQUIPMENT PER MANUFACTURER REQUIREMENTS.
11. DE-RATE CONDUCTOR AMPACITY BASED ON # OF CURRENT CARRYING CONDUCTORS AS APPLICABLE.
12. RECEPTACLE OUTLETS SHALL BE CLEARLY LABELED WITH THE CIRCUIT PROVIDING POWER. LABEL SHALL BE SUITED FOR ENVIRONMENT RECEPTACLE IS LOCATED IN.
13. INSTALL A PHOTOCELL SENSOR IN A NON-SHADED AREA, 120V, NO/NC CONTACT.
14. GROUND AND BOND ALL EQUIPMENT AND ENCLOSURES PER MANUFACTURER REQUIREMENTS AND NEC 250.
15. GROUND AND BOND ALL MOTOR FRAMES TO THE GROUND RING.
16. ALL METALLIC ENCLOSURES INCLUDING ROLL UP GATES, RAILINGS, FENCES, STAIR CASES OR OTHER METAL PERSONNEL MAY COME IN CONTACT WITH, SHALL BE EFFECTIVELY GROUNDED.
17. GROUNDING ROUTING IS DIAGRAMMATIC.
18. THE GEC MUST BE INSTALLED WITH SUFFICIENT LENGTH SO THAT REMOVAL OF ONE EQUIPMENT DOES NOT INTERRUPT THE EFFECTIVE GROUND PATH OF ANY OTHER EQUIPMENT.

LEGEND:

POWER PULLBOX WITH INSPECTION GROUND ROD PER DETAIL "A" SHEET E11.2 AND DETAIL "A" SHEET E11.7.

NORTH

2 1 0 2 4

NO	BY	DATE	REVISIONS	DATE	APP.

Registered Professional Engineer (Electrical) — CERTIFICATE NO. 35958 — Basher Ishaq — Date Signed 1-5-26 — ARIZONA, U.S.A. — Expires 03/31/28

THESE DRAWINGS ARE THE PROPERTY OF P.A.C.E. AND SHALL NOT BE REPRODUCED IN ANY MANNER NOR BE USED FOR CONSTRUCTION UNLESS STAMPED 'ISSUED FOR CONSTRUCTION'.

PREPARED BY: BASHAR ISHAQ
PROJECT ENGINEER
R.C.E. NO. E24580
EXP. DATE
SCALE
DRAWN: NC
DESIGNED: NC, BI
CHECKED: BI
DATE: FEB 2026

TITLE: PLANT DRAIN PS ELECTRICAL PLAN

JOB: CITY OF SAN LUIS WEST WWTP 3.0 MGD MBR UPGRADES — SAN LUIS AZ.

PACE
Advanced Water Engineering
8723 E. VIA de COMMERCIO, SUITE A-204 | SCOTTSDALE, CA 85258
P: (408) 991-3595 | www.pacewater.com

FINAL PLANS ISSUED FOR BID

SHEET
E9.0
156 OF 209 SHEETS

JOB NO. B777

W:\B777\Engineering\B777 - 3MGD Exp\3MGD FINAL DS\Annette\B777 - E9.0.dwg - Tab: E9.0 - by rchin on 01/28/26 at 5:05:25 PM

DRAFT

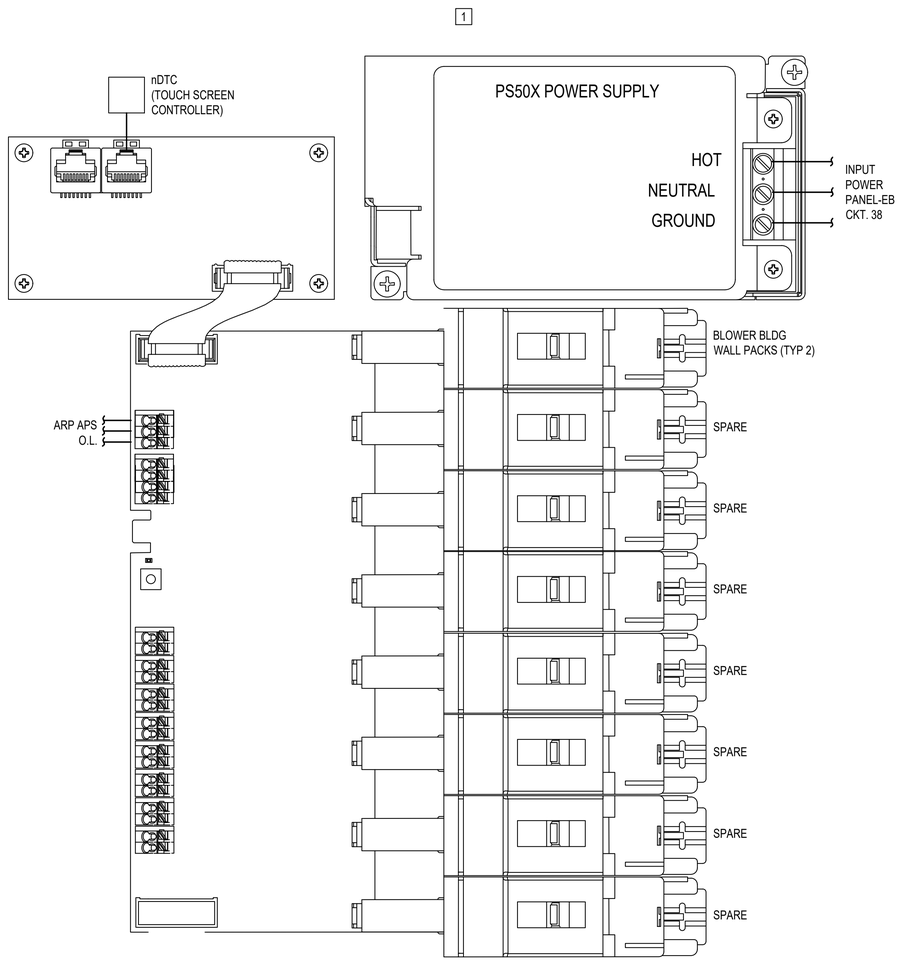

OUTDOOR LIGHTING CONTROL PANEL (LCP-A) WIRING SCHEMATIC AND PANEL LAYOUT (120 VAC)

CONSTRUCTION NOTES

1 OUTDOOR LIGHTING CONTROL PANEL (LCP-A), 120-277 VAC, 1PH, 8 RELAYS, DIGITAL TIME CLOCK, ANALOG PHOTOSENSOR (WIRED TO PANEL MTD. OUTDOOR), PANEL DIMS: 14.41"H x 14.41"W x 4.05"D, MF'R: ACUITY BRANDS, PN ARP INTENC08 NLT-8FCR-MVOLT-SC-SM-DTC-ARPA APS OL (OR APPROVED EQUAL).

NO	BY	DATE	REVISIONS	DATE	APP.

Registered Professional Engineer (Electrical) CERTIFICATE NO. 30936 Basher Ishaq Date Signed 03/31/26 ARIZONA, U.S.A. Expires 03/31/28

PREPARED BY BASHAR ISHAQ
PROJECT ENGINEER
R.C.E. NO. E24590
EXP. DATE

DRAWN NC
DESIGNED NC, BI
CHECKED BI
SCALE
DATE FEB 2026

THESE DRAWINGS ARE THE PROPERTY OF P.A.C.E. AND SHALL NOT BE REPRODUCED IN ANY MANNER NOR BE USED FOR CONSTRUCTION UNLESS STAMPED "ISSUED FOR CONSTRUCTION".

TITLE
ELEMENTARY CONTROL DIAGRAM 1

JOB
CITY OF SAN LUIS WEST WWTP
3.0 MGD MBR UPGRADES
SAN LUIS AZ.

PACE
Advanced Water Engineering
8723 E. VIA de COMMERCIO, SUITE A-204 | SCOTTSDALE, CA 85258
P: (408) 991-3595 | www.pacewater.com

SHEET
E10.0
157 OF 209 SHEETS

JOB NO. B777

FINAL PLANS ISSUED FOR BID

W:\B777\Engineering\B777 - 3MGD Exp\3MGD FINAL DS\sheets\B777 - E10.0.dwg - Tab: E10.0 - by nobin on 01/26/26 at 5:07:23 PM

TYPICAL FVNR CONTROL WIRING - EFFLUENT PUMPS 1-2, MIXERS 4A/4B, SLUDGE PUMP 4, WELL PUMP

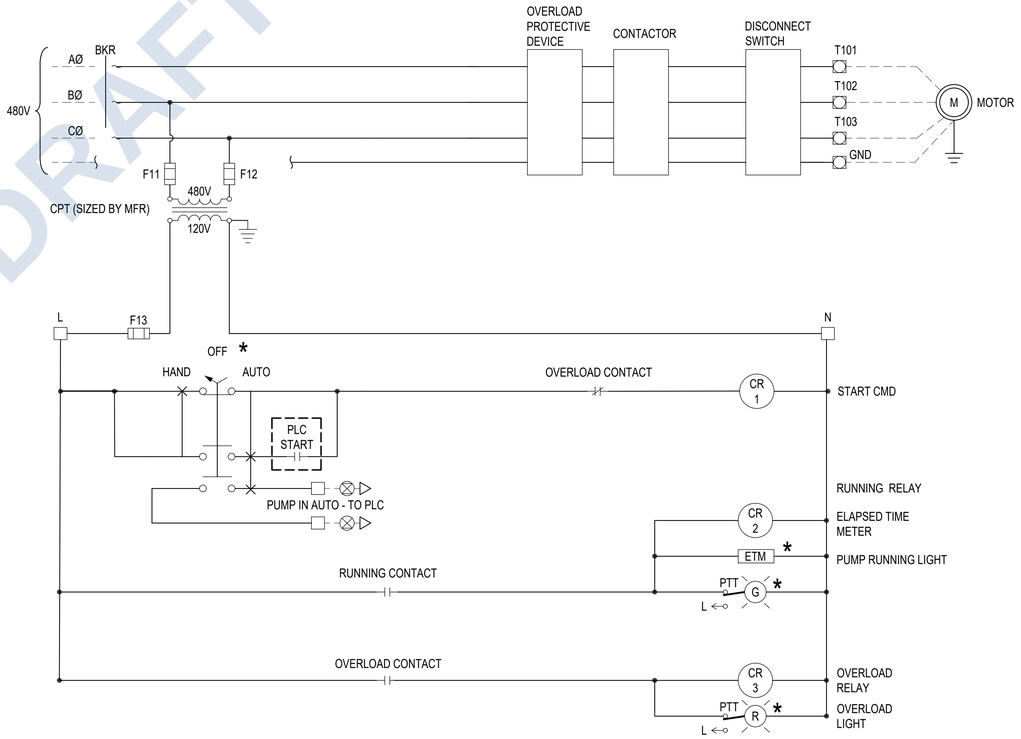

DISCRETE I/O:

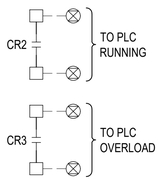

NOTES:

1. ALL WIRING SHALL BE MADE IN ACCORDANCE WITH MANUFACTURER REQUIREMENTS.
2. CONTROL SCHEMATIC SHOWN FOR REFERENCE. CONFIRM PROGRAMMING AND/OR MODULE CARDS REQUIRED TO OPERATE PER CONTROL DESIGN.

TYPICAL VFD CONTROL WIRING FOR PA-BLOWER 1-3, MBR BLOWER-1-2

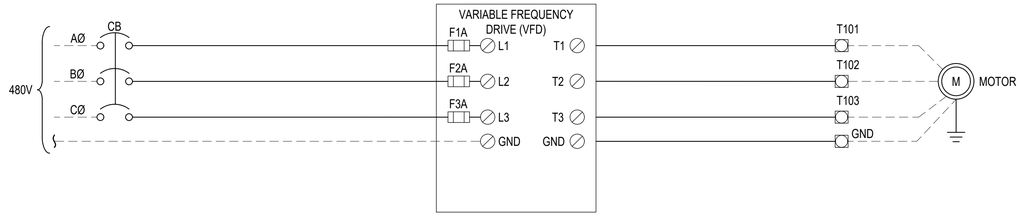

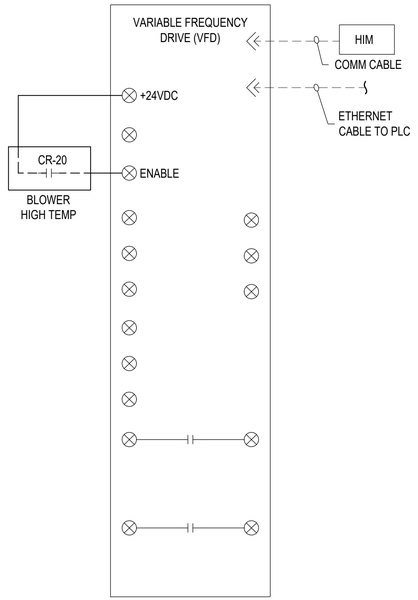

LEGEND:

- * MOUNTED ON MCC BUCKET
- ⊗ TERMINAL IN PLC
- ⊗ TERMINAL ON VFD
- ⊘ TERMINAL IN FIELD
- □ TERMINAL IN MCP
- ⎔ TERMINAL IN MOTOR

NOTES:

1. THE VFD TO BE CONTROLLED VIA ETHERNET DURING AUTO MODE.
2. INSTALL VFD-RATED SHIELDED CABLES FROM VFD TO THE LOAD.
3. ALL VFD WIRING SHALL BE MADE IN ACCORDANCE WITH MANUFACTURER REQUIREMENTS, INTERNAL OR EXTERNAL FUSES (2 SETS OF SPARES), 3% INDUCTION FILTERS AND/OR RECOMMENDATIONS.
4. CONTROL SCHEMATIC SHOWN FOR REFERENCE. CONFIRM PROGRAMMING AND/OR MODULE CARDS REQUIRED FOR VFD TO OPERATE PER CONTROL DESIGN.

DRAFT

NO	BY	DATE	REVISIONS	DATE	APP.

Registered Professional Engineer (Electrical) CERTIFICATE NO. 35958 Basher Shaho Date Signed 1-15-26 ARIZONA, U.S.A. Expires 03/31/28

PREPARED BY BASHAR SHAHO
PROJECT ENGINEER
R.C.E. NO. E24580
EXP. DATE
SCALE
DRAWN NC
DESIGNED NC, BI
CHECKED BI
DATE FEB 2026

THESE DRAWINGS ARE THE PROPERTY OF P.A.C.E. AND SHALL NOT BE REPRODUCED IN ANY MANNER NOR BE USED FOR CONSTRUCTION UNLESS STAMPED "ISSUED FOR CONSTRUCTION".

TITLE
ELEMENTARY CONTROL DIAGRAM 2

JOB
CITY OF SAN LUIS WEST WWTP
3.0 MGD MBR UPGRADES
SAN LUIS AZ.

PACE
Advanced Water Engineering
8723 E. VIA de COMMERCIO, SUITE A-204 | SCOTTSDALE, CA 85258
P: (408) 991-3595 | www.pacewater.com

SHEET
E10.1
158 OF 209 SHEETS

JOB NO. B777

FINAL PLANS ISSUED FOR BID

W:\B777\Engineering\B777 - 3MGD Exp\3MGD FINAL DS\sheets\B777 - E10.1.dwg - Tab: E10.1 - by rubin on 02/02/26 at 5:21:48 PM

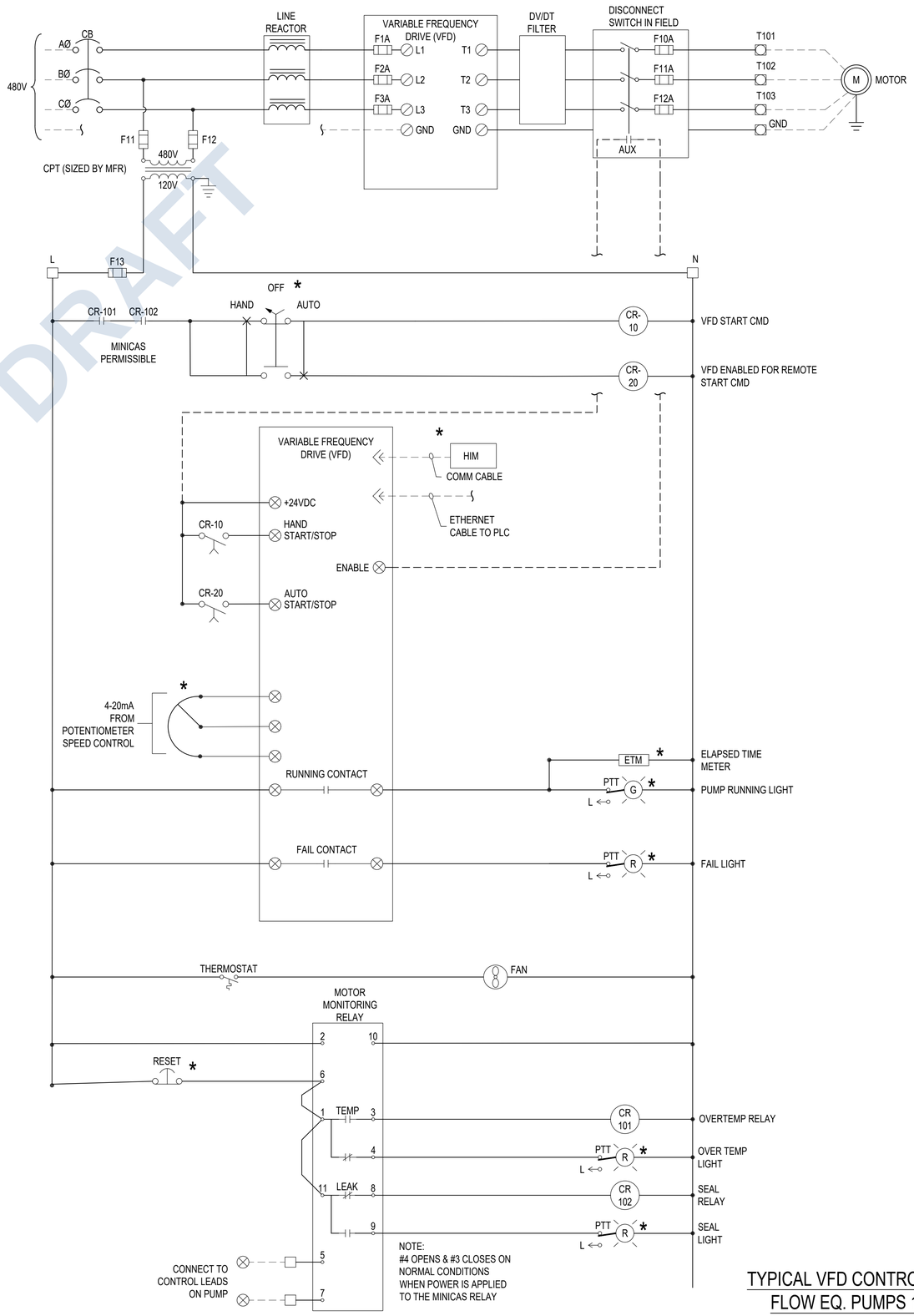

TYPICAL VFD CONTROL WIRING FOR FEED FWD PUMPS 1-3, FLOW EQ. PUMPS 1-2, INTERNAL RECYCLE PUMPS 1-3

NOTES:

1. THE VFD TO BE CONTROLLED VIA ETHERNET DURING AUTO MODE.
2. INSTALL VFD-RATED SHIELDED CABLES FROM VFD TO THE LOAD.
3. ALL VFD WIRING SHALL BE MADE IN ACCORDANCE WITH MANUFACTURER REQUIREMENTS, INTERNAL OR EXTERNAL FUSES (2 SETS OF SPARES), 3% INDUCTION FILTERS AND/OR RECOMMENDATIONS.
4. CONTROL SCHEMATIC SHOWN FOR REFERENCE. CONFIRM PROGRAMMING AND/OR MODULE CARDS REQUIRED FOR VFD TO OPERATE PER CONTROL DESIGN.

DISCRETE I/O:

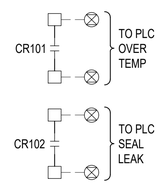

LEGEND:

- * MOUNTED ON MCC BUCKET
- ⊗ TERMINAL IN PLC
- ⊗ TERMINAL ON VFD
- ⊘ TERMINAL IN FIELD
- □ TERMINAL IN MCP
- ⊡ TERMINAL IN MOTOR

DRAFT

NO	BY	DATE	REVISIONS	DATE	APP.

Registered Professional Engineer (Electrical) CERTIFICATE NO. 35958 Basher Ishaq Shaq Signed ARIZONA, U.S.A. Expires 03/31/28

PREPARED BY BASHAR ISHAQ
PROJECT ENGINEER
R.C.E. NO. E24580
EXP. DATE
SCALE
DRAWN NC
DESIGNED NC, BI
CHECKED BI
DATE FEB 2026

THESE DRAWINGS ARE THE PROPERTY OF P.A.C.E. AND SHALL NOT BE REPRODUCED IN ANY MANNER NOR BE USED FOR CONSTRUCTION UNLESS STAMPED 'ISSUED FOR CONSTRUCTION'.

TITLE
ELEMENTARY CONTROL DIAGRAM 3

JOB
CITY OF SAN LUIS WEST WWTP
3.0 MGD MBR UPGRADES
SAN LUIS AZ.

PACE
Advanced Water Engineering
8723 E. VIA de COMMERCIO, SUITE A-204 | SCOTTSDALE, CA 85258
P: (408) 991-3595 | www.pacewater.com

FINAL PLANS ISSUED FOR BID

SHEET
E10.2
159 OF 209 SHEETS

JOB NO. B777

W:\B777\Engineering\B777 - 3MGD Exp\3MGD FINAL DS\Arsheets\B777 - E10.2.dwg - Tab: E10.2 - by rothn on 02/03/26 at 5:21:51 PM

TYPICAL FVNR CONTROL WIRING - ANOXIC MIXERS 1-3

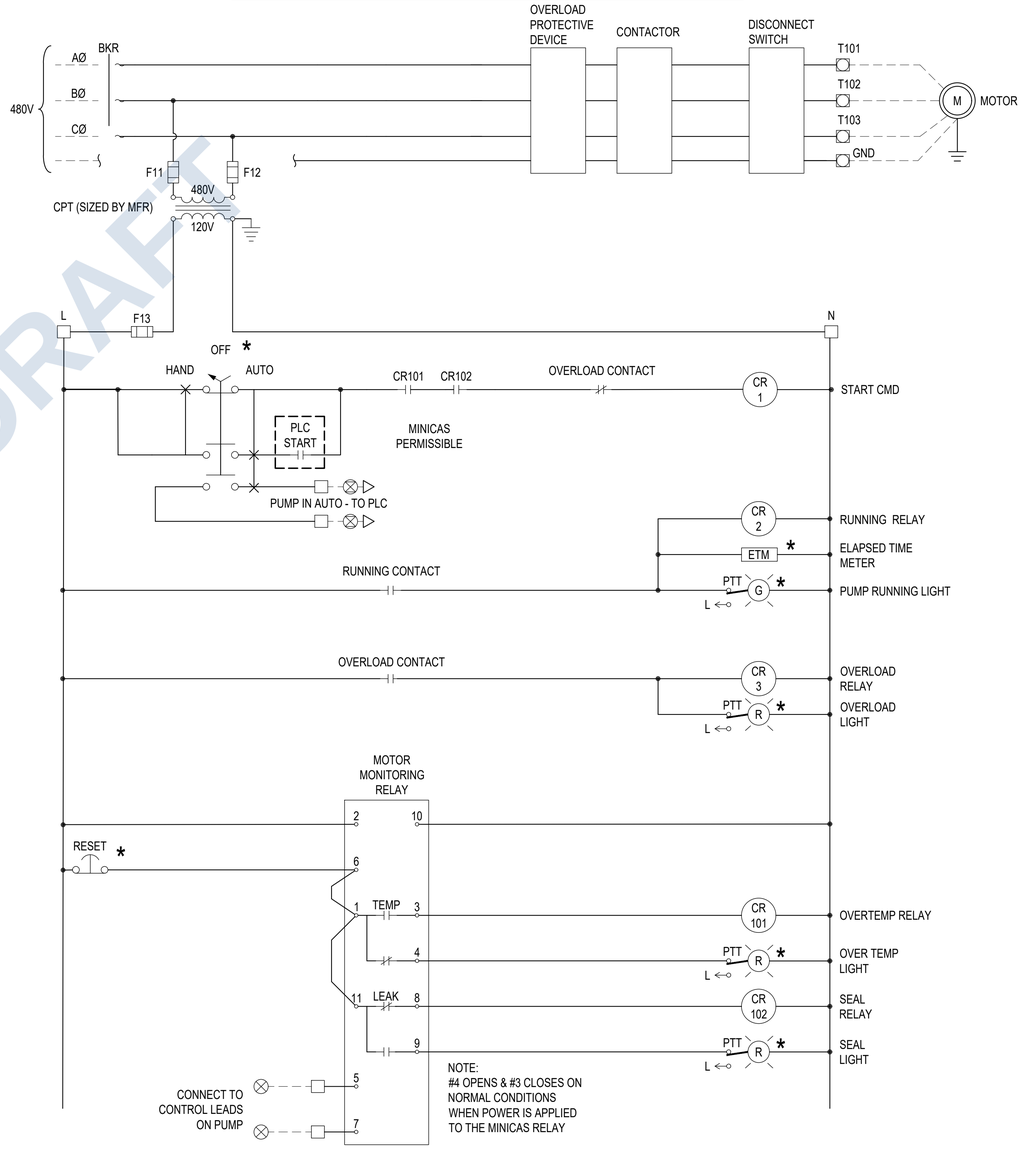

TYPICAL FVNR CONTROL WIRING - FEQ BLOWERS 1, 2, 3; DIGESTER BLOWERS 1-2, 6

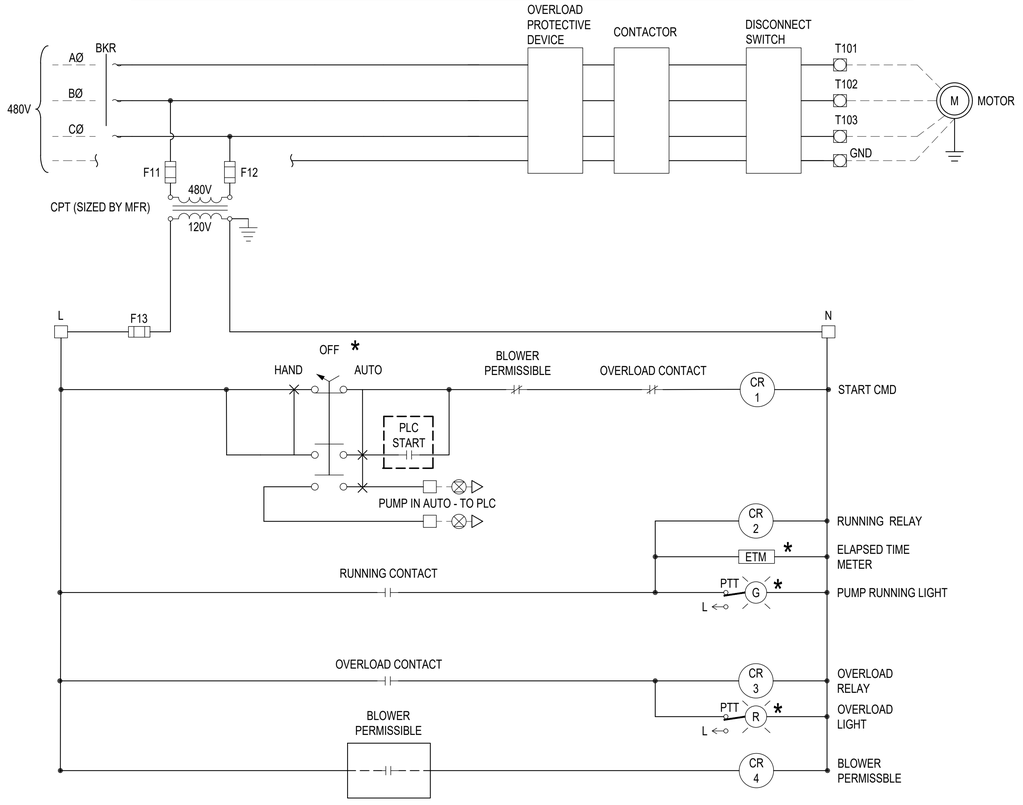

NOTES:

1. ALL WIRING SHALL BE MADE IN ACCORDANCE WITH MANUFACTURER REQUIREMENTS.
2. CONTROL SCHEMATIC SHOWN FOR REFERENCE. CONFIRM PROGRAMMING AND/OR MODULE CARDS REQUIRED TO OPERATE PER CONTROL DESIGN.

DISCRETE I/O:

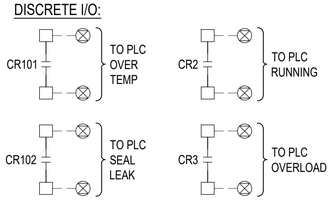

DISCRETE I/O:

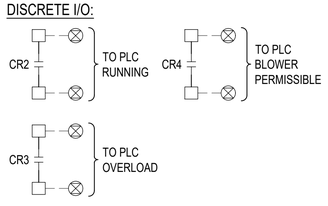

LEGEND:

*	MOUNTED ON MCC BUCKET
⊗	TERMINAL IN PLC
⊗	TERMINAL ON MS
⊘	TERMINAL IN FIELD
□	TERMINAL IN MCP
◯	TERMINAL IN MOTOR

DRAFT

NO	BY	DATE	REVISIONS	DATE	APP.

Registered Professional Engineer (Electrical) CERTIFICATE NO. 35668 Brandon Shaq State of ARIZONA U.S.A. Expires 03/31/28

PREPARED BY BASHAR SHAIQ
PROJECT ENGINEER
R.C.E. NO. E24580
EXP. DATE —
SCALE
DRAWN NC
DESIGNED NC, BI
CHECKED BI
DATE FEB 2026

TITLE
ELEMENTARY CONTROL DIAGRAM 4

JOB
CITY OF SAN LUIS WEST WWTP
3.0 MGD MBR UPGRADES
AZ.
SAN LUIS

PACE
Advanced Water Engineering
8723 E. VIA de COMMERCIO, SUITE A-204 | SCOTTSDALE, CA 85258
P: (408) 991-3595 | www.pacewater.com

SHEET
E10.3
160 OF 209 SHEETS

JOB NO. B777

THESE DRAWINGS ARE THE PROPERTY OF P.A.C.E. AND SHALL NOT BE REPRODUCED IN ANY MANNER NOR BE USED FOR CONSTRUCTION UNLESS STAMPED "ISSUED FOR CONSTRUCTION".

FINAL PLANS ISSUED FOR BID

W:\B777\Engineering\B777 - 3MGD Exp\3MGD FINAL DSN\sheets\B777 - E10.3.dwg - Tab: E10.3 - by rothh on 02/20/26 at 5:22:01 PM

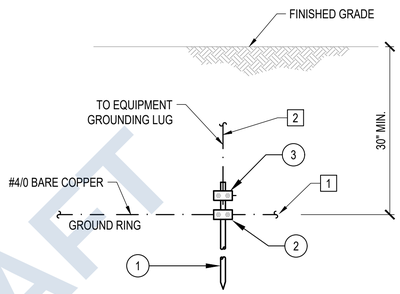

CONSTRUCTION NOTES:

1. TO EXISTING SYSTEM GROUND
2. #2 CU INSUL. GROUND TO EQUIPMENT PER GROUND PLANS

BILL OF MATERIALS		
NO.	DESCRIPTION	QTY
1	GROUND ROD, 3/4" DIA. x 10', COPPER-CLAD STEEL	1
2	GROUND ROD CONNECTOR (5/8"-3/4", 2/0 SOL-250) BURNDY #GAR6429 OR EQUAL.	1
3	GROUND ROD CONNECTOR (5/8"-3/4", #4 SOL-2/0) BURNDY #GAR6426 OR EQUAL.	1

GROUND ROD "A" INSTALLATION NTS **A**

NOT USED NTS **B**

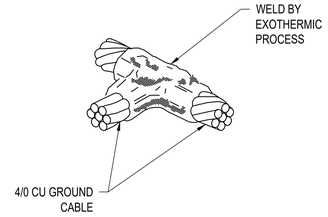

GROUND RING CONNECTION DETAIL NTS **C**

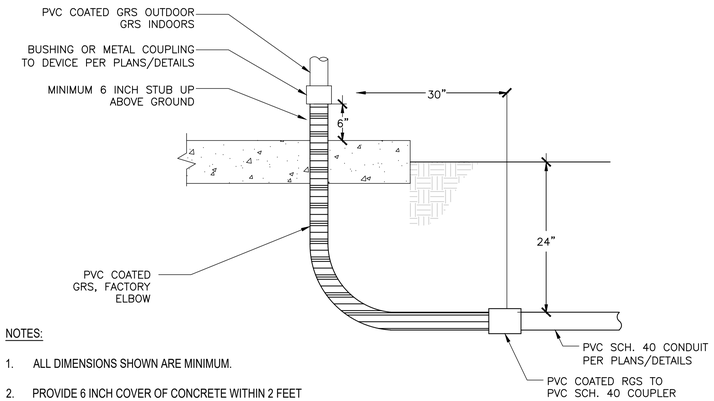

NOTES:

1. ALL DIMENSIONS SHOWN ARE MINIMUM.
2. PROVIDE 6 INCH COVER OF CONCRETE WITHIN 2 FEET OF ALL DRIVABLE AREAS PER DETAILS AND PLAN.

TYPICAL CONDUIT STUB-UP DETAIL NTS **D**

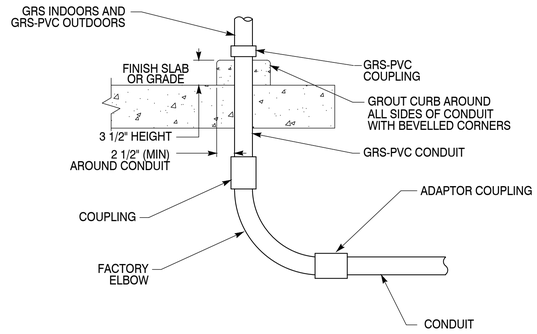

EXPOSED CONDUIT TRANSITION DETAIL NTS **E**

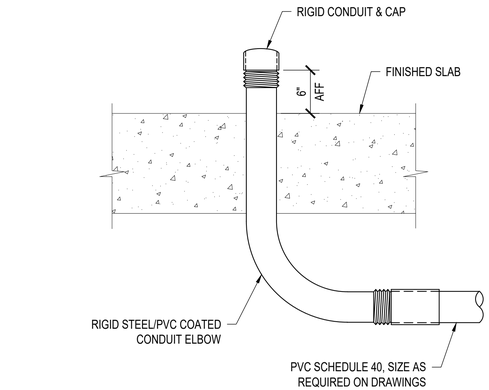

PVC COND. STUB-UP INST. FOR FUTURE EXT. DETAIL NTS **F**

NOTE:

1. PROVIDE CONCRETE ENCASEMENT FOR AERATION VALVE CONDUITS UNDERGROUND.
2. PROVIDE APPROXIMATELY 18" SEPARATION FROM THE CONTROL AND POWER CONDUIT STUB UP FOR THE AERATION VALVES.
3. INSTALL LIQUIDTIGHT FLEXIBLE METAL CONDUIT TO VALVE PER NEC 350.

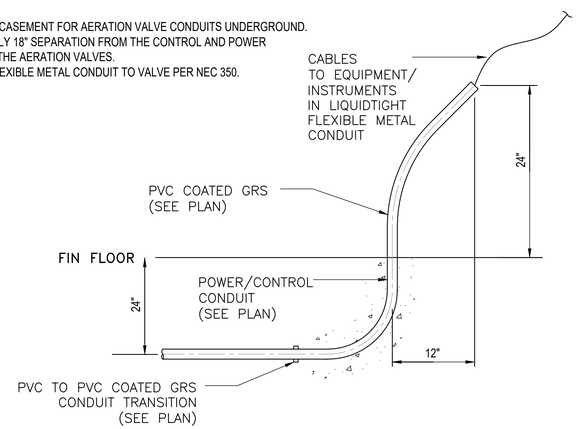

TYPICAL CONDUIT STUB UP DETAIL NTS **G**

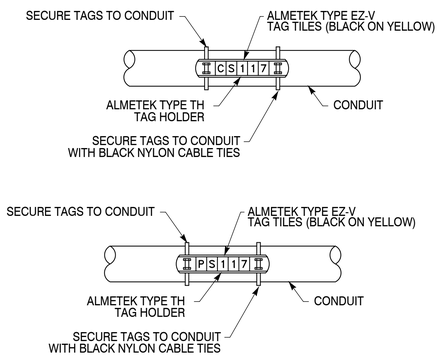

CONDUIT LABELING DETAIL NTS **H**

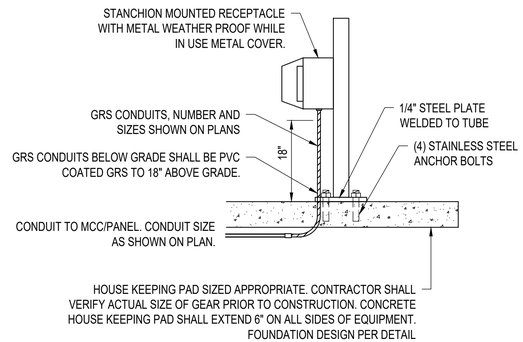

STANCHION MOUNTED RECEPTACLE NTS **J**

DRAFT

NO	BY	DATE	REVISIONS	DATE	APP.

Registered Professional Engineer (Electrical) CERTIFICATE NO. 35958 Basharat Shaiq Shaikh ARIZONA, U.S.A. Expires 03/31/28

THESE DRAWINGS ARE THE PROPERTY OF P.A.C.E. AND SHALL NOT BE REPRODUCED IN ANY MANNER NOR BE USED FOR CONSTRUCTION UNLESS STAMPED "ISSUED FOR CONSTRUCTION".

PREPARED BY: BASHAR SHAIQ
PROJECT ENGINEER
R.C.E. NO. 35958
EXP. DATE 03/31/28

DRAWN: NC
DESIGNED: NC, BI
CHECKED: BI
SCALE:
DATE: FEB 2026

TITLE: **ELECTRICAL DETAILS 1**

JOB: CITY OF SAN LUIS WEST WWTP 3.0 MGD MBR UPGRADES — SAN LUIS AZ.

PACE
Advanced Water Engineering
8723 E. VIA de COMMERCIO, SUITE A-204 | SCOTTSDALE, CA 85258
P: (408) 991-3595 | www.pacewater.com

FINAL PLANS ISSUED FOR BID

SHEET **E11.0**
161 OF 209 SHEETS

JOB NO. B777

W:\B777\Engineering\B777 - 3MGD Exp\3MGD FINAL DSN\sheets\B777 - E11.0.dwg - Tab: E11.0 - by rohin on 01/28/26 at 5:39:34 PM

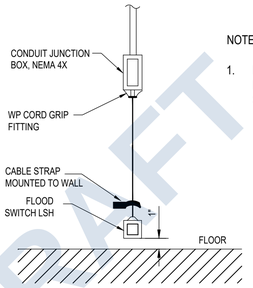

NOTE:

1. INSTALL NARROW ANGLE FLOAT SWITCH, N.C. CONTACT, PER MANUFACTURER SPECIFICATIONS.

VAULT FLOOD SWITCH DETAIL — NTS — A

NOT USED — NTS — B

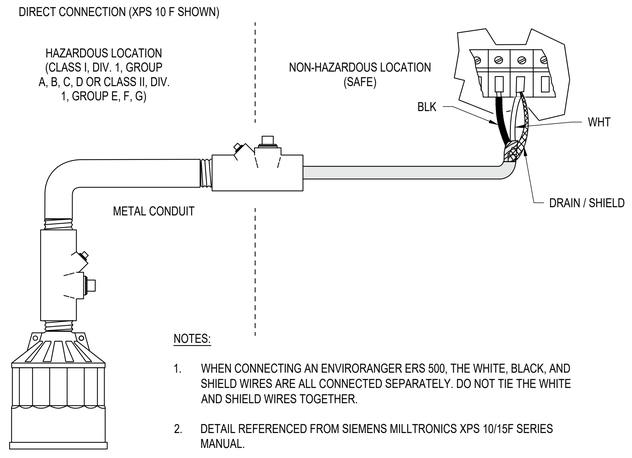

NOTES:

1. WHEN CONNECTING AN ENVIRORANGER ERS 500, THE WHITE, BLACK, AND SHIELD WIRES ARE ALL CONNECTED SEPARATELY. DO NOT TIE THE WHITE AND SHIELD WIRES TOGETHER.
2. DETAIL REFERENCED FROM SIEMENS MILLTRONICS XPS 10/15F SERIES MANUAL.

WET WELL TRANSDUCER INSTALLATION DETAIL — NTS — D

NOTE:

1. ALL CONDUIT TO/FROM JBOXES TO BE PVC COATED GRS. SUPPORT UNISTRUT SHALL BE PVC COATED & HARDWARE STAINLESS STEEL SUPPORT BRACING SHALL BE ADDED AS REQUIRED.
2. CONDUIT SHALL BE ROUTED SUCH THAT THEY DO NOT CONSTITUTE ANY TRIPPING HAZARD.
3. PROVIDE TERMINAL BLOCKS FOR EXTENDING FACTORY CONTROL CABLES AS REQUIRED IN BOX.
4. SEE PLANS FOR CONDUIT TAGS.

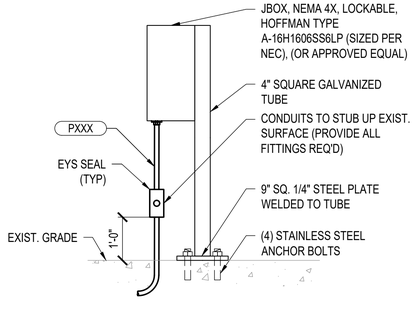

JUNCTION BOX DETAIL — NTS — F

NOTES:

1. DISCONNECT SWITCH OR J-BOX SHALL BE NEMA-4X WHEN OUTSIDE AND NEMA 12 STEEL WHEN INSIDE UNLESS NOTED OTHERWISE.
2. ENCLOSURES SHALL BE LABELED WITH THEIR CIRCUIT LOCATION AND DEVICE NAME WITH PERMANENT WEATHERPROOF LABELS.
3. ATTACH P1000 UNISTRUT SUPPORT TO WALL FOR BRACING, TO BE ADDED AS NECESSARY.
4. MAINTAIN MINIMUM REQUIRED WORKING SPACE PER NEC 110.26.
5. DISCONNECT SWITCHES SHALL BE HEAVY DUTY, 600V AND SIZED FOR HP PER THE SINGLE LINE DIAGRAM.
6. DISCONNECT SWITCHES SHALL BE FUSED WITH LPJ RATED FUSES FOR AIC RATING COMPLIANCE FOR MORE THAN 10 KAIC AND EQUIPMENT PROTECTION, PER THE SINGLE LINE DIAGRAMS.
7. CONDUITS SHALL BE ROUTED AS SUCH THAT THEY DO NOT CREATE A TRIP HAZARD.
8. INSTALL ALL ENCLOSURES PER MANUFACTURER REQUIREMENTS AND GROUND/BOND PER CODE.

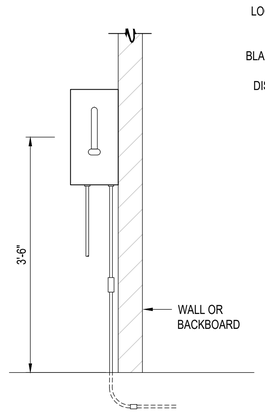

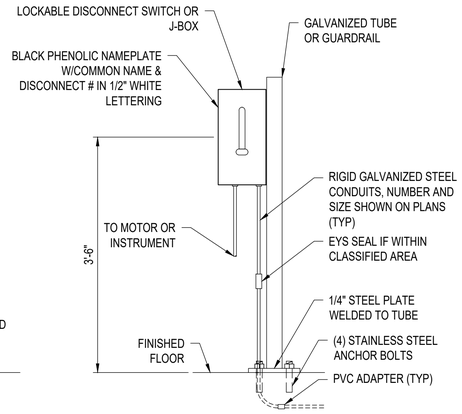

DISCONNECT SWITCH/JBOX DETAIL — NTS — C

NOTES:

1. SEE SHEET E6.0 FOR POWER AND CONTROL CONDUIT DESTINATIONS.
2. SPLICE TO VENDOR CONDUCTORS IN TERMINAL BOX USING RESPECTIVE TERMINAL BLOCKS.
3. REMOVABLE STAINLESS STEEL TC CABLE GLAND BY CMP PRODUCTS, OR APPROVED EQUAL CABLE CONNECTORS.
4. 304 STAINLESS STEEL FABRICATED WIREWAY COVER. BOLT TO UNISTRUT SUPPORTS TO SECURE.
5. TERMINAL BOX, NEMA 4X STAINLESS STEEL (24"HX24"MIN) WITH PADLOCKABLE HINGED DOOR, WITH 20A TERMINAL BLOCKS (QTY AS REQ'D) FOR CONTROL CONDUITS.
6. MANUFACTURE'S CABLE IN VALVE VAULT SHALL BE ROUTED TO AVOID TRIPPING HAZARDS AND IN ACCORDANCE WITH CLEARANCE REQUIREMENTS. IN ADDITION ALL WIRES/CABLES IN VALVE VAULT SHALL BE INSTALLED IN PVC SLEEVES MOUNTED ON WALLS OR CEILING. SEE PLANS.
7. TO INSTRUMENTATION, LEVEL SWITCHES AND/OR TRANSDUCERS.

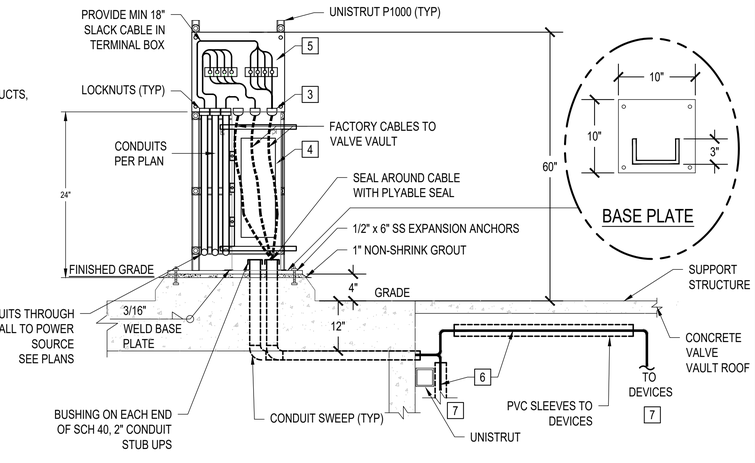

TERMINAL BOX / JUNCTION BOX WITH AIR GAP TYPICAL — NTS — E

NO	BY	DATE	REVISIONS	DATE	APP.

Registered Professional Engineer (Electrical) CERTIFICATE NO. 35258 Brian Scott Isaacs ARIZONA, U.S.A. Expires 03/31/28

PREPARED BY BASHAR SHAIO | PROJECT ENGINEER | R.C.E. NO. E24590 | EXP. DATE | SCALE | DRAWN NC | DESIGNED NC, BI | CHECKED BI | DATE FEB 2026

THESE DRAWINGS ARE THE PROPERTY OF P.A.C.E. AND SHALL NOT BE REPRODUCED IN ANY MANNER NOR BE USED FOR CONSTRUCTION UNLESS STAMPED "ISSUED FOR CONSTRUCTION".

TITLE: **ELECTRICAL DETAILS 2**

JOB: CITY OF SAN LUIS WEST WWTP 3.0 MGD MBR UPGRADES — SAN LUIS AZ.

PACE Advanced Water Engineering
8723 E. VIA de COMMERCIO, SUITE A-204 | SCOTTSDALE, CA 85258
P: (408) 991-3595 | www.pacewater.com

FINAL PLANS ISSUED FOR BID

SHEET E11.1
162 OF 209 SHEETS

JOB NO. B777

DRAFT

W:\B777\Engineering\B777 - 3MGD Exp\3MGD FINAL DS\Annette\B777 - E11.1.dwg - Tab: E11.1 - by robin on 01/26/26 at 5:11:01 PM

DRAFT

A CONCRETE GROUND ROD INSPECTION DETAIL

NTS

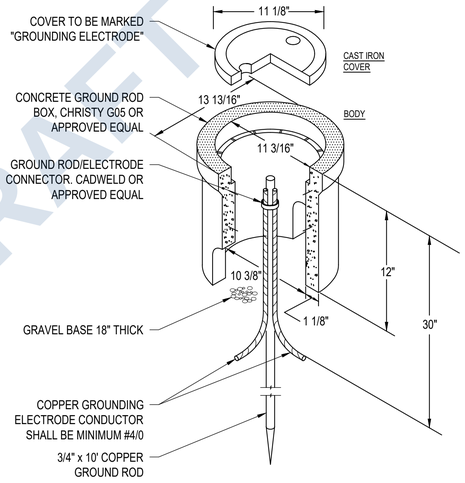

B FLOW METER GROUNDING DETAIL

NTS

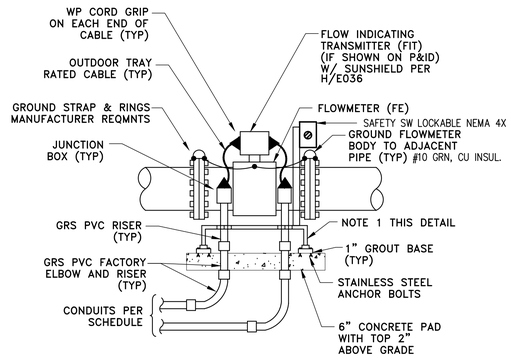

NOTE:

1. STAINLESS STEEL SUPPORT WITH TWO HOLE BASE ON EACH SIDE AND HEIGHT OF HORIZONTAL UNISTRUT SUPPORT SHALL BE 12" MINIMUM.

C LIGHTNING ARRESTOR DETAIL

NTS

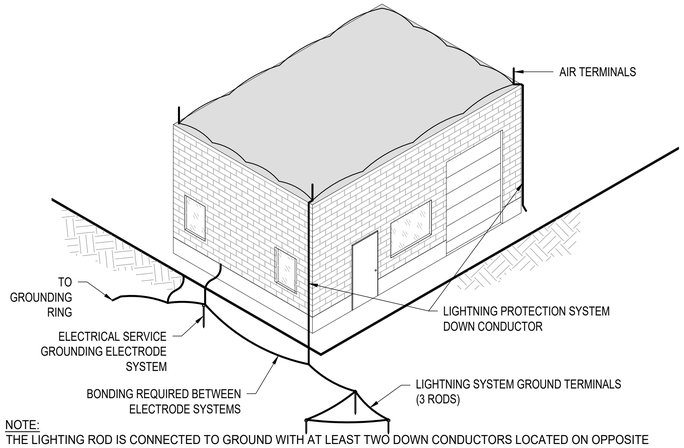

NOTE:
THE LIGHTING ROD IS CONNECTED TO GROUND WITH AT LEAST TWO DOWN CONDUCTORS LOCATED ON OPPOSITE FACADES WHENEVER POSSIBLE. THE DOWN CONDUCTORS MUST BE INSTALLED OUTSIDE THE BUILDING, AVOIDING THE PROXIMITY OF ELECTRICAL CABLES AND GAS. ITS PATH MUST BE AS STRAIGHT AS POSSIBLE, USING THE SHORTEST PATH TO EARTH, AVOIDING ANY SHARP BEND OR LIFT. INSTALL IN ACCORDANCE WITH NFPA 780, NEC 250.60 AND NEC 250.106.

D EQUIPMENT GROUNDING DETAIL

NTS

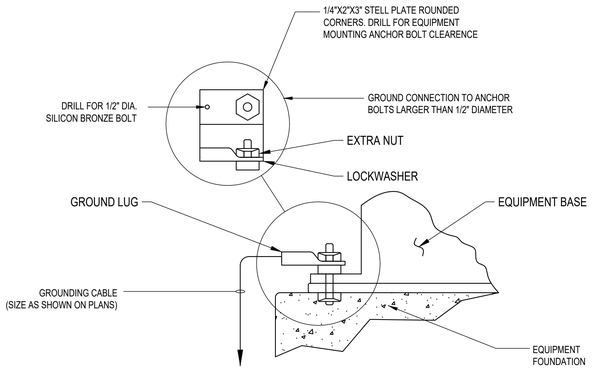

NOTE:

GROUND LUG SHALL BE BOLTED TO THE ANCHOR WITH A SECOND NUT AND LOCKWASHER. WHEN THE ANCHOR BOLT IS TOO LARGE FOR THE GROUND LUG A STEEL PLATE SHALL BE PROVIDED. DRILLED FOR ANCHOR BOLT CLEARANCE AND INSTALLED AS SHOWN WITH GROUND CONNECTOR BOLTED TO THE STEEL PLATE WITH 1/2" SILICONE BRONZE BOLT NUT AND FLAT WASHER.

E GATE CARD ENTRY READER DETAIL

NTS

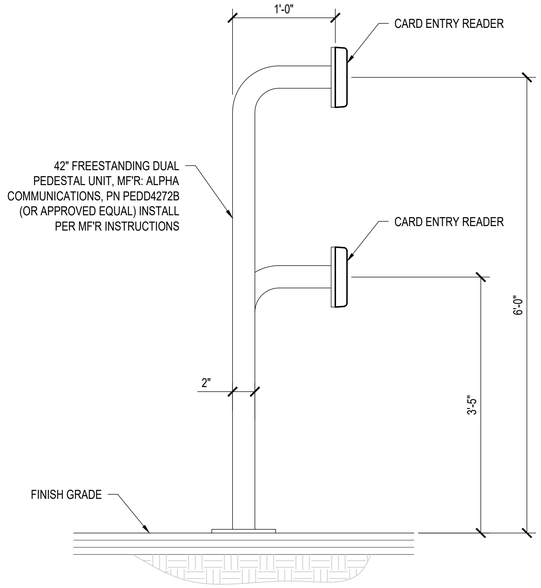

F GROUNDING CONNECTION - EQUIP/STEEL COLUMN

NTS

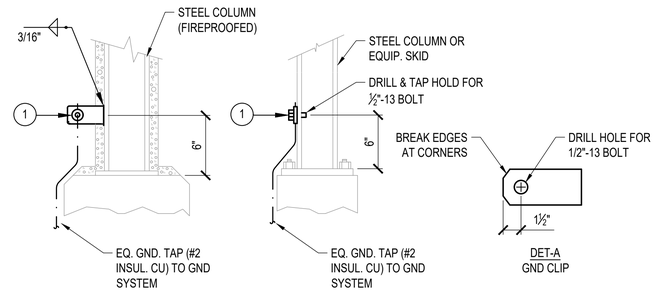

BILL OF MATERIALS		
NO.	DESCRIPTION	QTY
1	SERVIT POST CONNECTOR, 2/C, 1/2"-13 LONG STUD, #2-#2/0 W/ NUT & LOCKWASHER, BURNDY#K2C25B1	1
2	GROUND CLIP, MILD STEEL, 5" x 3" x 1/4" FIELD FABRICATE - SEE DET-A	1

NO	BY	DATE	REVISIONS	DATE	APP.

Registered Professional Engineer (Electrical) CERTIFICATE NO. 35958 Basher Shaiq Ahmad Expires 03/31/28 ARIZONA, U.S.A.

PREPARED BY: BASHAR SHAIQ, PROJECT ENGINEER, R.C.E. NO. E24580, EXP. DATE —
DRAWN: NC | SCALE | DESIGNED: NC, BI | CHECKED: BI | DATE: FEB 2026

THESE DRAWINGS ARE THE PROPERTY OF P.A.C.E. AND SHALL NOT BE REPRODUCED IN ANY MANNER NOR BE USED FOR CONSTRUCTION UNLESS STAMPED 'ISSUED FOR CONSTRUCTION'.

TITLE: ELECTRICAL DETAILS 3

JOB: CITY OF SAN LUIS WEST WWTP 3.0 MGD MBR UPGRADES — SAN LUIS AZ.

PACE Advanced Water Engineering
8723 E. VIA de COMMERCIO, SUITE A-204 | SCOTTSDALE, CA 85258
P: (408) 991-3595 | www.pacewater.com

FINAL PLANS ISSUED FOR BID

SHEET E11.2
163 OF 209 SHEETS

JOB NO. B777

W:\B777\Engineering\B777 - 3MGD Exp\3MGD FINAL ISSN\sheets\B777 - E11.2.dwg - Tab: E11.2 - by rzdin on 01/28/26 at 5:39:40 PM

EXHAUST FAN (BLOWER GALLERY) — NTS — A

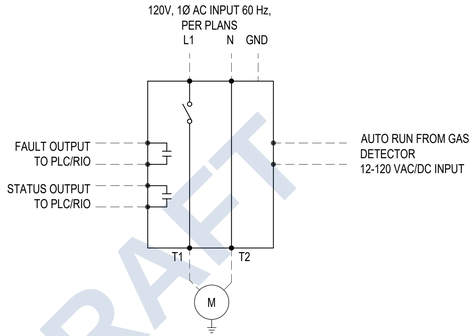

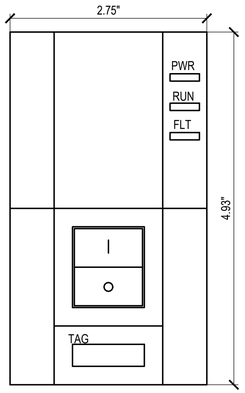

FAN MOTOR STARTER

NOTES:

1. MOTOR STARTER SCHEMATIC IS REFERENCED FROM MANUFACTURER MANUAL GREENHECK MODEL MS-1P.
2. MOUNT MOTOR STARTER TO WALL WALL PER MANUFACTURER REQUIREMENTS.
3. SMOKE ALARM FROM FIRE ALARM PANEL SHALL INHIBIT THE FAN FROM STARTING.
4. INSTALL POWER AND CONTROLS PER INSTRUMENTATION SPECIFICATIONS AND ELECTRICAL PLANS.

DRAFT

EXTERIOR LIGHTING CONTROL PANEL MOUNTING — NTS — B

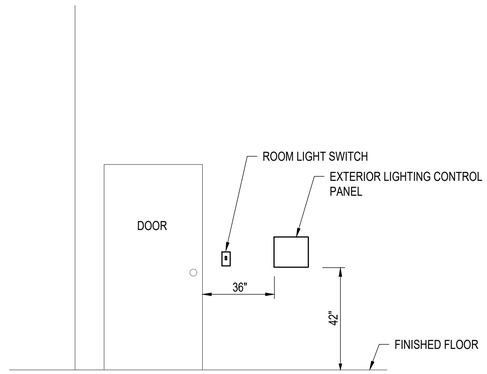

VERTICAL MOTOR CONNECTION DETAIL — NTS — C

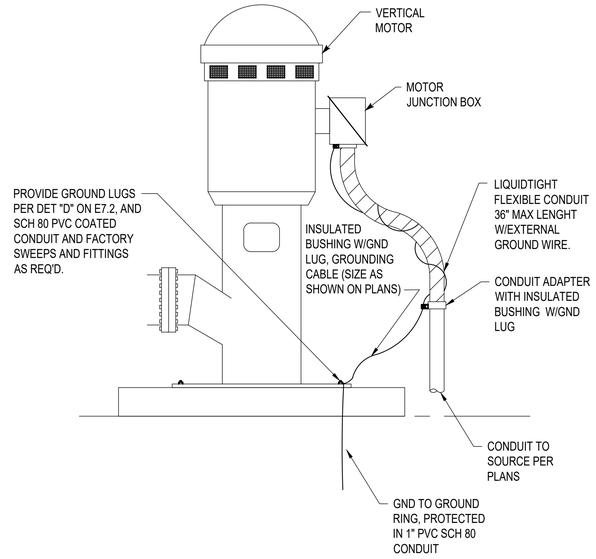

EQUIPMENT ENCLOSURE MOUNTING ON CONCRETE WALL DETAIL — NTS — D

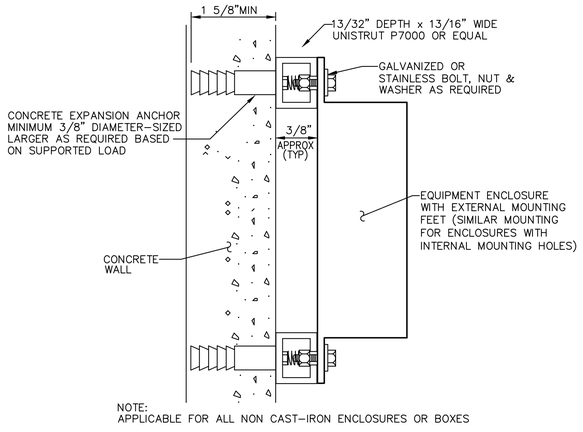

NOTE:
APPLICABLE FOR ALL NON CAST–IRON ENCLOSURES OR BOXES

CONDUIT SUPPORT DETAIL — NTS — E

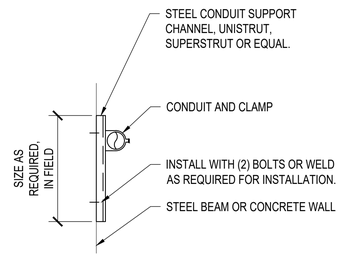

SIDE VIEW

TYPICAL FIELD STANCHION MOUNTED DEVICE DETAIL — F

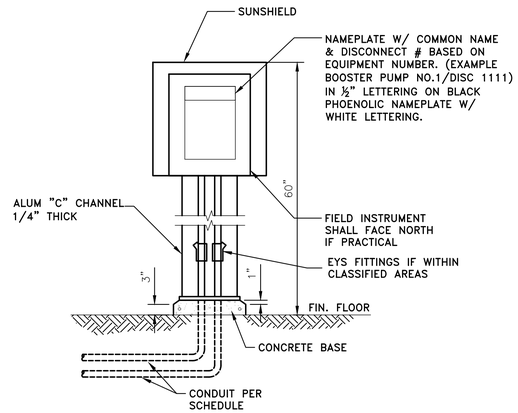

THESE DRAWINGS ARE THE PROPERTY OF P.A.C.E. AND SHALL NOT BE REPRODUCED IN ANY MANNER NOR BE USED FOR CONSTRUCTION UNLESS STAMPED "ISSUED FOR CONSTRUCTION".

NO	BY	DATE	REVISIONS	DATE	APP.

Registered Professional Engineer (Electrical) CERTIFICATE NO. 35958 Bashar Shaho Date Signed 11-5-25 ARIZONA, U.S.A.

Expires 03/31/28

PREPARED BY: BASHAR SHAHO
PROJECT ENGINEER
R.C.E. NO. E24590
EXP. DATE —
DRAWN: NC
SCALE
DESIGNED: NC, BI
CHECKED: BI
DATE: FEB 2026

TITLE: ELECTRICAL DETAILS 4

JOB: CITY OF SAN LUIS WEST WWTP
3.0 MGD MBR UPGRADES
SAN LUIS AZ.

PACE
Advanced Water Engineering
8723 E. VIA de COMMERCIO, SUITE A-204 | SCOTTSDALE, CA 85258
P: (408) 991-3595 | www.pacewater.com

FINAL PLANS ISSUED FOR BID

SHEET
E11.3
164 OF 209 SHEETS

JOB NO. B777

W:\B777\Engineering\B777 - 3MGD Exp\3MGD FINAL ISN\sheets\B777- E11.3.dwg - Tab: E11.3 - by rchin on 02/06/26 at 2:28:53 PM

DRAFT

A — WALL MOUNTED TRANSFORMER — NTS

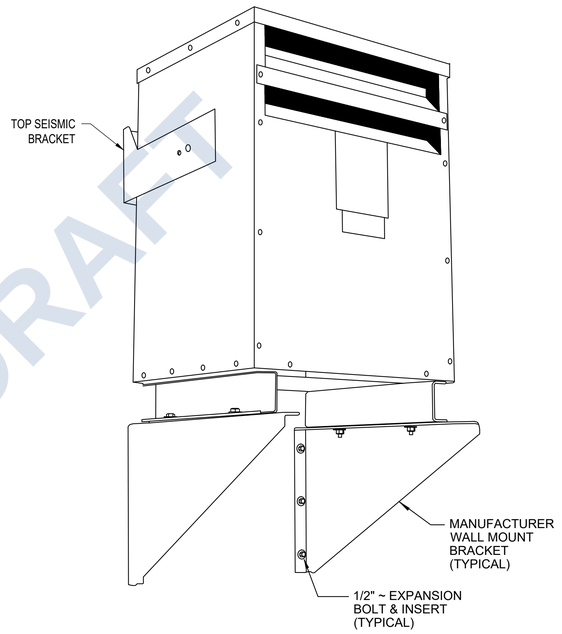

B — NOT USED

C — PULLBOX/VAULT PLAN & SECTION DETAIL — NTS

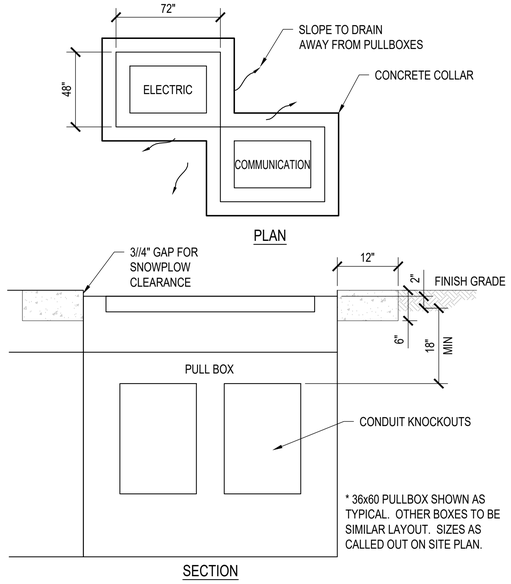

D — SMALL CONCRETE PULLBOX DETAIL — NTS

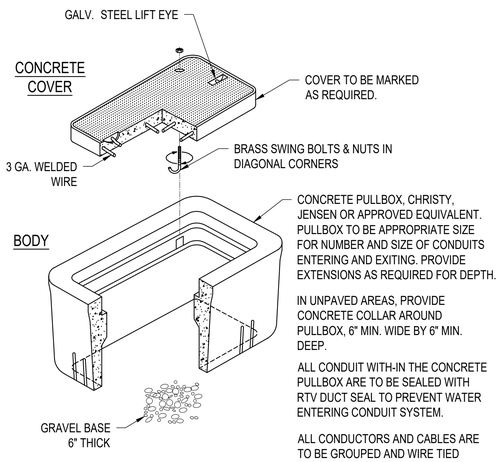

CONCRETE PULLBOX, CHRISTY, JENSEN OR APPROVED EQUIVALENT. PULLBOX TO BE APPROPRIATE SIZE FOR NUMBER AND SIZE OF CONDUITS ENTERING AND EXITING. PROVIDE EXTENSIONS AS REQUIRED FOR DEPTH.

IN UNPAVED AREAS, PROVIDE CONCRETE COLLAR AROUND PULLBOX, 6" MIN. WIDE BY 6" MIN. DEEP.

ALL CONDUIT WITH-IN THE CONCRETE PULLBOX ARE TO BE SEALED WITH RTV DUCT SEAL TO PREVENT WATER ENTERING CONDUIT SYSTEM.

ALL CONDUCTORS AND CABLES ARE TO BE GROUPED AND WIRE TIED EVERY 6" PER CONDUIT FILL.

ALL SPLICES WITH-IN THE CONCRETE PULLBOX ARE TO BE SEALED WITH AN INSULATING AND ENCAPSULATING RESIN PACK, SCOTCHCAST 4 OR EQUAL

E — NOT USED

F — HORIZONTAL MOTOR CONNECTION DETAIL — NTS

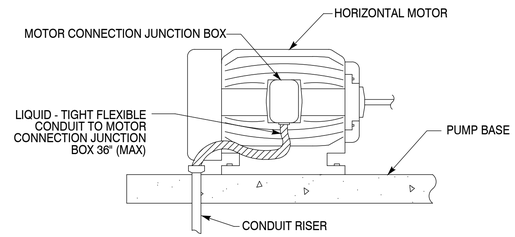

NO	BY	DATE	REVISIONS	DATE	APP.

Registered Professional Engineer (Electrical) CERTIFICATE NO. 35958 Basher Ishaq Expires 03/31/28 ARIZONA U.S.A.

PREPARED BY BASHAR ISHAQ
PROJECT ENGINEER
R.C.E. NO. E24590
EXP. DATE —

DRAWN NC
DESIGNED NC, BI
CHECKED BI
SCALE
DATE FEB 2026

THESE DRAWINGS ARE THE PROPERTY OF P.A.C.E. AND SHALL NOT BE REPRODUCED IN ANY MANNER NOR BE USED FOR CONSTRUCTION UNLESS STAMPED "ISSUED FOR CONSTRUCTION".

TITLE
ELECTRICAL DETAILS 5

JOB
CITY OF SAN LUIS WEST WWTP
3.0 MGD MBR UPGRADES
AZ.
SAN LUIS

PACE
Advanced Water Engineering
8723 E. VIA de COMMERCIO, SUITE 1-204 | SCOTTSDALE, CA 85258
P: (408) 991-3595 | www.pacewater.com

SHEET
E11.4
165 OF 209 SHEETS

JOB NO. B777

FINAL PLANS ISSUED FOR BID

W:\B777\Engineering\B777 - 3MGD Exp\3MGD FINAL ISN\sheets\B777- E11.4.dwg - Tab: E11.4 - by rzohn on 01/30/26 at 3:03:27 PM

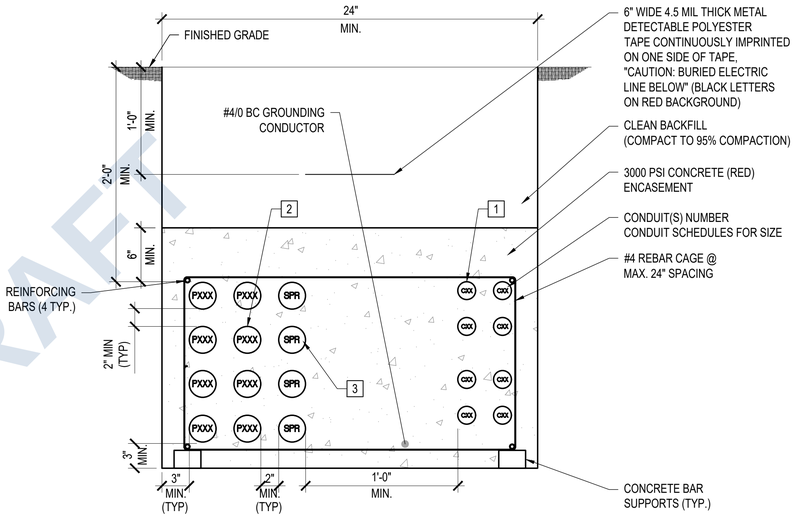

CALLOUT NOTES:

1. CONTROL CONDUITS - SEE ELECTRICAL PLAN FOR QUANTITY AND SIZE
2. POWER CONDUITS - SEE ELECTRICAL PLAN FOR QUANTITY AND SIZE
3. SPR INDICATES SPARE

NOTES:

1. ALL DIMENSIONS ARE MINIMUM. SEE PLANS AND CONDUIT SCHED.
2. BARE COPPER INSTALLED PER NEC 250.52 (A)(3) AND BONDED TO GROUND RING(S) PER GROUNDING PLAN.
3. MAINTAIN 24" MINIMUM CLEARANCE FROM POWER CONDUITS AND GAS/SEWER LINES.
4. MAINTAIN 12" MINIMUM CLEARANCE FROM POWER CONDUITS AND WATER/CONTROL LINES.
5. MAINTAIN 7.5" MINIMUM FROM OTHER POWER CONDUITS, CENTER TO CENTER.
6. INSTALL CONDUIT SUPPORT EVERY 5 FEET MINIMUM.
7. REPLACE SOIL/CONCRETE WITH IN KIND MATERIAL AFTER COMPLETION.
8. TRENCHING SHALL BE DONE IN ACCORDANCE WITH NEC INFORMATIVE ANNEX B.
9. DUCTS SHALL HAVE A MINIMUM SLOPE OF 1/8 INCH PER FOOT TO ALLOW DRAINAGE TO A POINT PROVIDED WITH ACCESS (MANHOLE).

CONDUIT DUCT BANK DETAIL - TYPICAL FOR ALL DUCT BANKS

NTS **A**

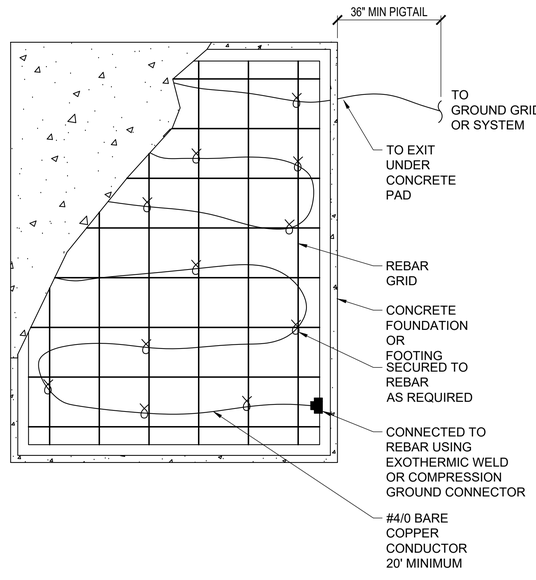

"UFER" GROUNDING DETAIL

NTS **C**

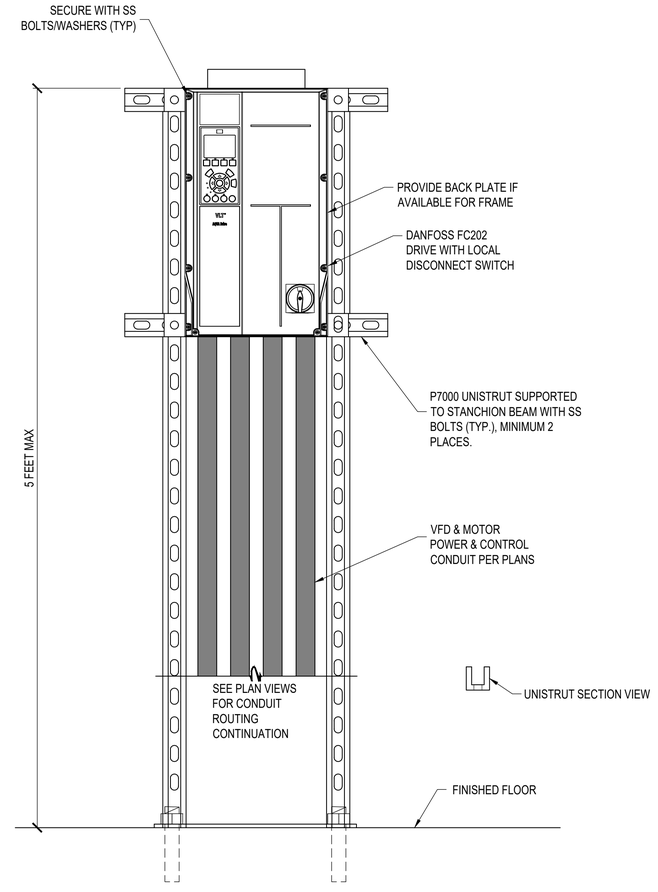

VFD MOUNTING DETAIL - TYPICAL FOR VFD MOTOR PUMPS/BLOWERS

NTS **B**

NO	BY	DATE	REVISIONS	DATE	APP.

Registered Professional Engineer (Electrical) CERTIFICATE NO. 82968 BASHAR ISHAQ Date Signed 4/6/26 ARIZONA, U.S.A. Expires 03/31/28

PREPARED BY BASHAR ISHAQ
PROJECT ENGINEER
R.C.E. NO. -- E24590
EXP. DATE
DRAWN NC
SCALE
DESIGNED NC, BI
CHECKED BI
DATE FEB 2026

TITLE
ELECTRICAL DETAILS 6

JOB
CITY OF SAN LUIS WEST WWTP
3.0 MGD MBR UPGRADES
SAN LUIS AZ.

PACE
Advanced Water Engineering
8723 E. VIA de COMMERCIO, SUITE A-204 | SCOTTSDALE, CA 85258
P: (408) 991-3595 | www.pacewater.com

SHEET
E11.5
166 OF 209 SHEETS
JOB NO. B777

THESE DRAWINGS ARE THE PROPERTY OF P.A.C.E. AND SHALL NOT BE REPRODUCED IN ANY MANNER NOR BE USED FOR CONSTRUCTION UNLESS STAMPED "ISSUED FOR CONSTRUCTION".

FINAL PLANS ISSUED FOR BID

W:\B777\Engineering\B777 - 3MGD Exp\3MGD FINAL DSN\sheets\B777 - E11.5.dwg - Tab: E11.5 - by nchin on 01/28/26 at 5:10:34 PM

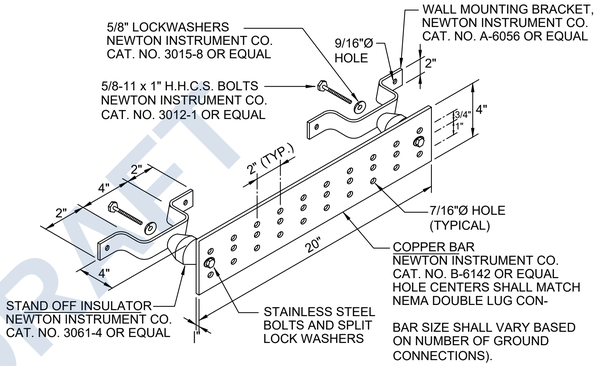

GROUNDING BUSBAR DETAIL NTS **A**



EXISTING ELECTRICAL GEAR **B**

NOT USED **C**

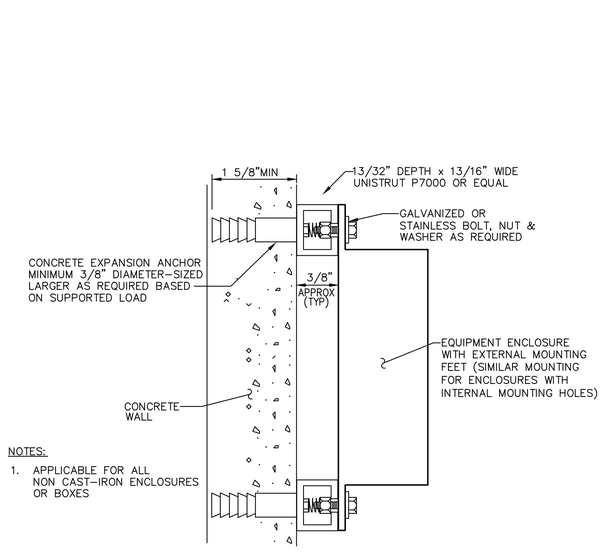

NOTES:

1. APPLICABLE FOR ALL NON CAST-IRON ENCLOSURES OR BOXES

EQUIPMENT ENCLOSURE MOUNTING ON CONCRETE WALL DETAIL NTS **D**

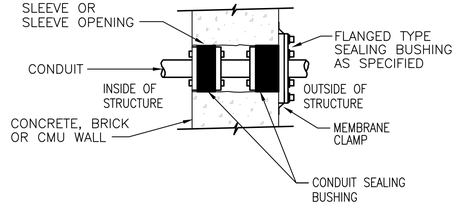

NOTE:

1. FLANGED TYPE CONDUIT PENETRATION SEALANT SHALL BE USED WHERE INDICATED ON THE PLANS.

CONDUIT PENETRATION THROUGH WALL - FLANGE TYPE **E**

NOT USED **F**

NOT USED **G**

NOT USED **H**

DRAFT

NO	BY	DATE	REVISIONS	DATE	APP.

Registered Professional Engineer (Electrical) CERTIFICATE NO. 56556 Bashar Ishaq Stamid ARIZONA, U.S.A. Expires 03/31/28

PREPARED BY BASHAR ISHAQ
PROJECT ENGINEER
R.C.E. NO. E24580
EXP. DATE
DRAWN NC
SCALE
DESIGNED NC, BI
CHECKED BI
DATE FEB 2026

THESE DRAWINGS ARE THE PROPERTY OF P.A.C.E. AND SHALL NOT BE REPRODUCED IN ANY MANNER NOR BE USED FOR CONSTRUCTION UNLESS STAMPED "ISSUED FOR CONSTRUCTION".

TITLE **ELECTRICAL DETAILS 7**

JOB CITY OF SAN LUIS WEST WWTP
3.0 MGD MBR UPGRADES
SAN LUIS AZ.

PACE
Advanced Water Engineering
8723 E. VIA de COMMERCIO, SUITE A-204 | SCOTTSDALE, CA 85258
P.: (408) 991-3595 | www.pacewater.com

SHEET
E11.6
167 OF 209 SHEETS

JOB NO. B777

FINAL PLANS ISSUED FOR BID

W:\B777\Engineering\B777 - 3MGD Exp\3MGD FINAL DSN\sheets\B777 - E11.6.dwg - Tab: E11.6 - by rcohn on 01/28/26 at 5:40:49 PM

DRAFT

REV.	DESCRIPTION	BY	DATE

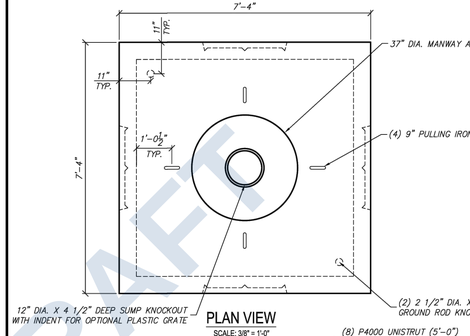

PLAN VIEW
SCALE: 3/8" = 1'-0"

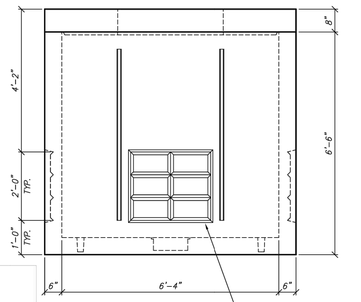

END VIEW
SCALE: 3/8" = 1'-0"

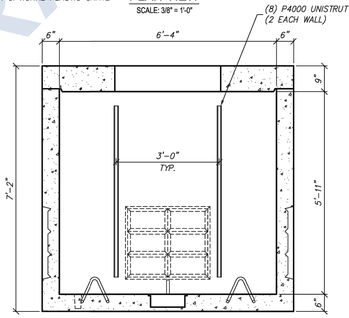

SECTION VIEW
SCALE: 3/8" = 1'-0"

STRUCTURAL NOTES

1. CONCRETE:	28 DAY COMPRESSIVE STRENGTH f'c = 5,000 psi	
2. REBAR:	ASTM A-615 GRADE 60	
3. MESH:	ASTM A-1064 GRADE 65	
4. DESIGN:	ACI 318-14 BUILDING CODE ASTM C-857 "MINIMUM STRUCTURAL DESIGN LOADING FOR UNDERGROUND PRECAST CONCRETE UTILITY STRUCTURES"	
5. LOADS:	HS20-44 W/30% IMPACT PER AASHTO 80 PSF LATERAL LIVE LOAD SURCHARGE - UP TO 8'-0" DEPTH SOIL: 40 PCF LATERAL SOIL PRESSURE ABOVE WATER TABLE 80 PCF LATERAL SOIL PRESSURE BELOW WATER TABLE 120 PCF SOIL DENSITY	
6. SOIL COVER:	0' TO 5' (MAX.)	
7. WATER TABLE:	5'-0" BELOW GRADE	

GENERAL NOTES

1. ALL JOINTS SHALL BE SEALED USING CONSEAL CS-101 BUTYL RUBBER ROPE.

Oldcastle Infrastructure A CRH COMPANY
411 E. FIRYE RD. CHANDLER, AZ 85225
PHONE: (480) 963-3878

THIS DOCUMENT IS THE PROPERTY OF OLDCASTLE INFRASTRUCTURE IT IS CONFIDENTIAL, SUBMITTED FOR REFERENCE PURPOSES ONLY, AND SHALL NOT BE USED IN ANY WAY INJURIOUS TO THE INTERESTS OF, OR WITHOUT THE WRITTEN PERMISSION OF OLDCASTLE INFRASTRUCTURE. COPYRIGHT ©2021 OLDCASTLE INFRASTRUCTURE. ALL RIGHTS RESERVED

6464-LA-S

CUSTOMER: STANDARD

DATE	SALES	DRAWN	ENGINEER	CHECKED	SALES ORDER
10/06/99		JM		—	—

DRAWING NUMBER: 6464 LA-S

REVISION	SHEET
REV DATE: —	1 OF 1

POWER PULLBOX DETAIL

NTS | A

NOT USED

NTS | C

UTILITY CONCRETE PRODUCTS, LLC 2495 W. Bungalow Rd. Morris, IL 60450 telephone 815.416.1000 fax 815.416.1100

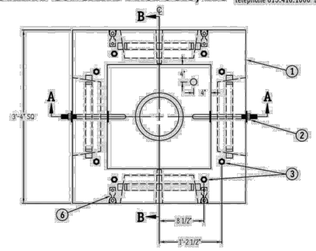

PLAN VIEW
(SHOWN WITHOUT FRAME & COVER)

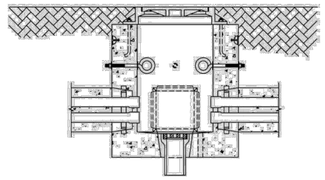

TYPICAL INSTALLATION

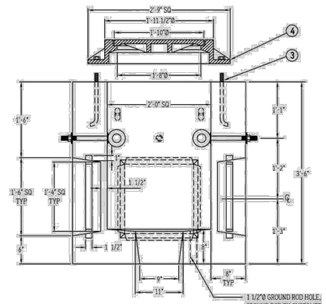

SECTION A-A

REFERENCES:
1. FOR DETAILS ON PULLING IRONS REFERENCE TABLE OF CONTENTS.

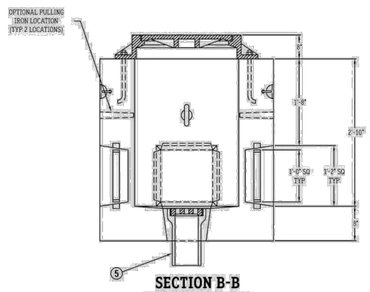

SECTION B-B
(SHOWN WITH FRAME & COVER AS FIELD INSTALLED BY CUSTOMER, OPTIONAL 12" SQUARE WINDOW AND OPTIONAL CLAY TILE WITH GRATE AS FIELD INSTALLED BY CUSTOMER)

ITEM NO	DESCRIPTION
222HH	2'-0" x 2'-0" x 2'-10" HANDHOLE
222HWFC	2'-0" x 2'-0" x 2'-10" HANDHOLE (W/ FRAME & COVER)

BILL OF MATERIALS

Item	Description	Quantity
1	PRECAST CONCRETE HANDHOLE	1
2	PULLING IRONS: 1" Ø STEEL HOT DIPPED GALVANIZED (PROVISIONS FOR TWO ADDITIONAL PULLING IRONS)	2
3	ANCHOR BOLTS: 3/4" Ø STEEL 16" LONG, 2" HOOK	8
4	HEAVY DUTY CAST IRON FRAME & COVER - FIELD INSTALLED BY CUSTOMER - 350#	1
5	OPTIONAL: 6" Ø x 15" CLAY TILE WITH GRATE, FIELD INSTALLED BY CUSTOMER	1
6	4T LIFTING ANCHORS	4

SPECIFICATIONS

CONCRETE:	5,000 psi @ 28 DAYS 5%-8% ENTRAINED AIR
REBAR:	ASTM A-615 GRADE 60, #4 BARS ON 8" CENTERS BOTH WAYS
CAST IRON:	ASTM A48 CL35B
DESIGN CRITERIA:	CONFORMS WITH DESIGN DEVELOPED BY CITY OF CHICAGO FOR AIRPORT LOCATIONS REINFORCING COVER REQUIREMENTS AS PER ACI-318
WEIGHT:	HANDHOLE: 3,360# HANDHOLE W/ FRAME & COVER: 3,710#

OPTIONS:

1. TWO ADDITIONAL PULLING IRONS MAY BE INSTALLED AT LOCATIONS SHOWN
2. STANDARD 16" x 16" WINDOWS OR OPTIONAL 12" x 12" WINDOWS ARE AVAILABLE
3. STANDARD CAST IRON COVER OR OPTIONAL DUCTILE IRON COVER AVAILABLE FOR AIRCRAFT LOADING

2'-0" x 2'-0" x 2'-10" HANDHOLE

Get the Precast Advantage!

CONTROL PULLBOX DETAIL

NTS | B

MANUFACTURER CUTSHEETS SHOWN FOR REFERENCE ONLY. CONTRACTOR SHALL CONFIRM PULLBOX SIZE AND NUMBER OF CONDUIT ENTRIES ON SIDEWALL PRIOR TO PURCHASE.

NO	BY	DATE	REVISIONS	DATE	APP.

Registered Professional Engineer (Electrical) CERTIFICATE NO. 35258 Bashar Shaq Date Signed 03/31/28 ARIZONA, U.S.A.
Expires 03/31/28

THESE DRAWINGS ARE THE PROPERTY OF P.A.C.E. AND SHALL NOT BE REPRODUCED IN ANY MANNER NOR BE USED FOR CONSTRUCTION UNLESS STAMPED 'ISSUED FOR CONSTRUCTION'.

PREPARED BY: BASHAR SHAQ
PROJECT ENGINEER
R.C.E. NO. E24580
EXP. DATE —

DRAWN	DESIGNED	CHECKED	SCALE	DATE
NC	NC, BI	BI		FEB 2026

TITLE: ELECTRICAL DETAILS 8

JOB: CITY OF SAN LUIS WEST WWTP
3.0 MGD MBR UPGRADES
SAN LUIS AZ.

PACE
Advanced Water Engineering
8723 E. VIA de COMMERCIO, SUITE A-204 | SCOTTSDALE, CA 85258
P: (408) 991-3595 | www.pacewater.com

SHEET
E11.7
168 OF 209 SHEETS

JOB NO. B777

FINAL PLANS ISSUED FOR BID

W:\B777\Engineering\B777 - 3MGD Exp\3MGD FINAL ISN\sheets\B777- E11.7.dwg - Tab: E11.7 - by rzohn on 01/26/26 at 5:40:17 PM

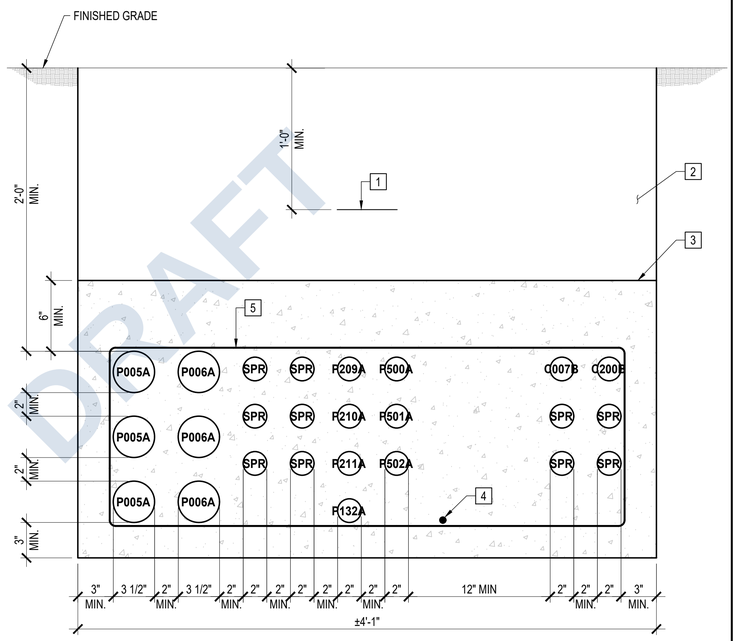

DUCT BANK DETAIL

NTS | A

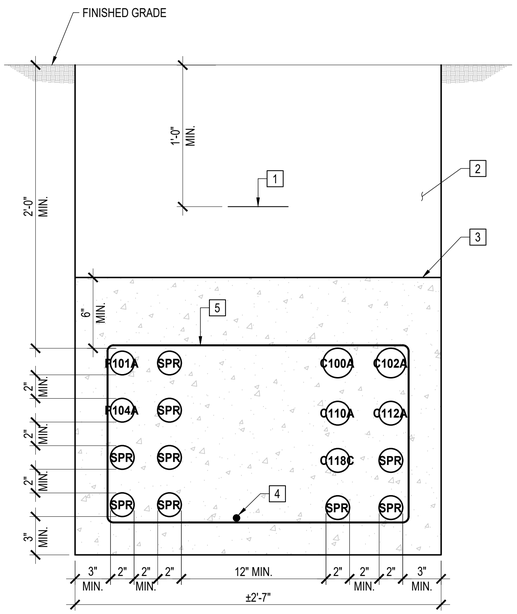

DUCT BANK DETAIL

NTS | B

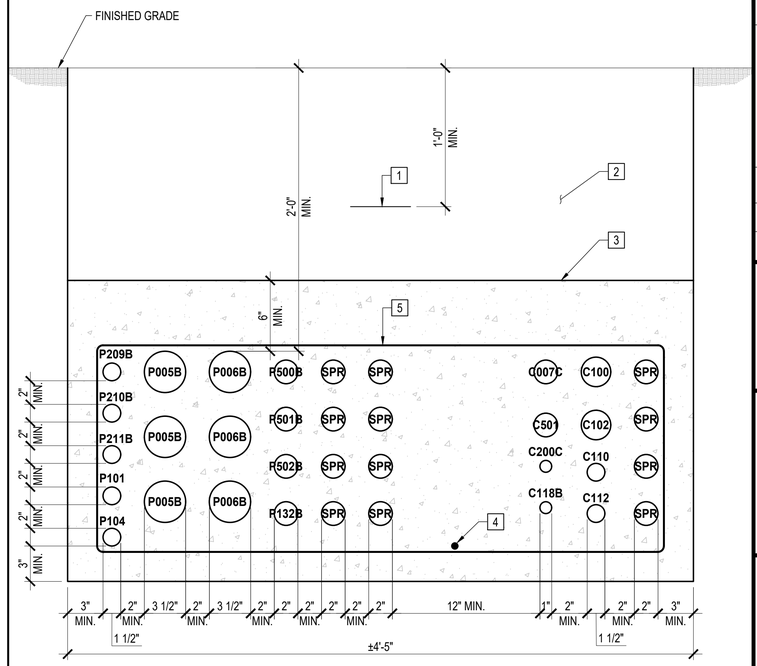

DUCT BANK DETAIL

NTS | C

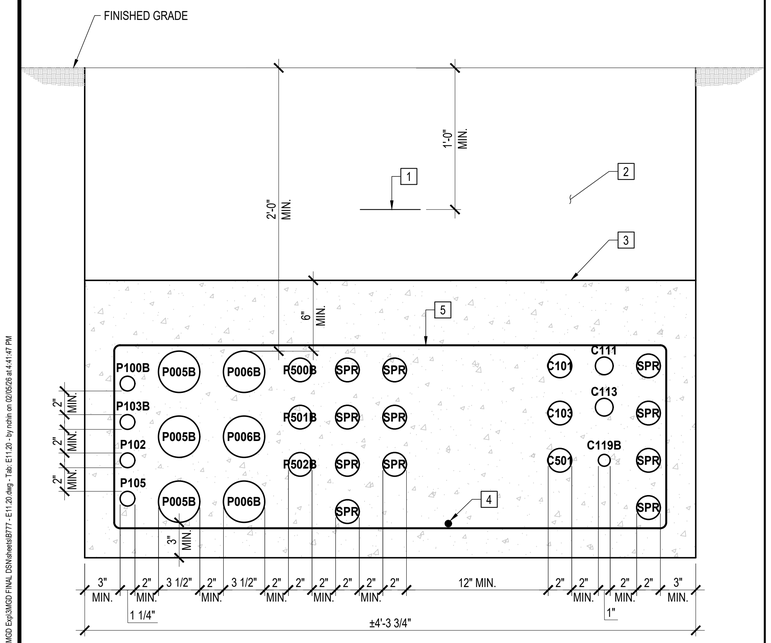

DUCT BANK DETAIL

NTS | D

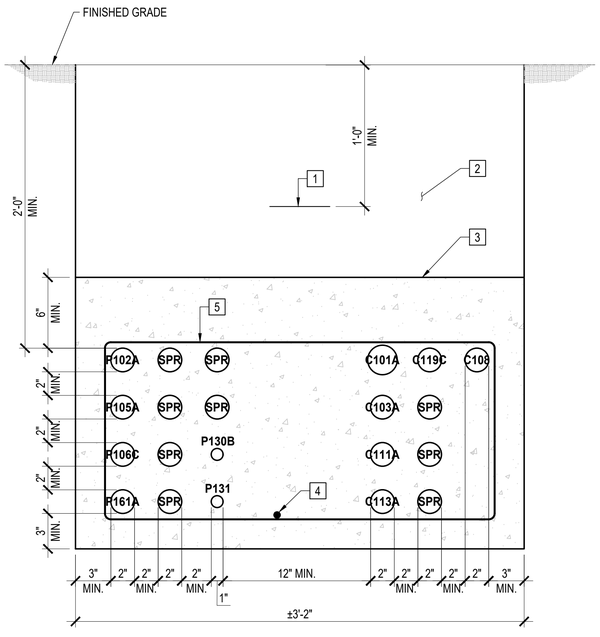

DUCT BANK DETAIL

NTS | E

CONSTRUCTION NOTES:

1. 6" WIDE 4.5 MIL THICK METAL DETECTABLE POLYESTER TAPE CONTINUOUSLY IMPRINTED ON ONE SIDE OF TAPE, "CAUTION: BURIED ELECTRIC LINE BELOW" (BLACK LETTERS ON RED BACKGROUND)
2. CLEAN BACKFILL (COMPACT TO 95% COMPACTION)
3. 2 - SACK CEMENT SLURRY BACKFILL UNDER ALL DRIVABLE AREAS (CLEAN SAND IN NON-DRIVABLE AREAS)
4. ROUTE #4/0 BARE COPPER CONDUCTOR INSIDE DUCT BANK. SECURE TO REBAR TIES EVERY 30' MAX.
5. #4 REBAR CAGE @ MAX. 24" SPACING

NO	BY	DATE	REVISIONS	DATE	APP.

Registered Professional Engineer (Electrical) CERTIFICATE NO. 35958 Kyle Steed ARIZONA U.S.A. Expires 03/31/28

PREPARED BY: BASHAR ISHAQ
PROJECT ENGINEER
R.C.E. NO. --- E24580
EXP. DATE

DRAWN: NC
DESIGNED: NC, BI
CHECKED: BI
SCALE
DATE: FEB 2026

THESE DRAWINGS ARE THE PROPERTY OF P.A.C.E. AND SHALL NOT BE REPRODUCED IN ANY MANNER NOR BE USED FOR CONSTRUCTION UNLESS STAMPED "ISSUED FOR CONSTRUCTION".

TITLE: DUCT BANK DETAILS 1

JOB: CITY OF SAN LUIS WEST WWTP
3.0 MGD MBR UPGRADES
SAN LUIS AZ.

PACE
Advanced Water Engineering
8723 E. VIA de COMMERCIO, SUITE A-204 | SCOTTSDALE, CA 85258
P: (408) 991-3595 | www.pacewater.com

FINAL PLANS ISSUED FOR BID

SHEET
E11.20
169 OF 209 SHEETS

JOB NO. B777

DRAFT

W:\B777\Engineering\B777 - 3MGD Exp\3MGD FINAL DS\Sheets\B777 - E11.20.dwg - Tab: E11.20 - by rohn on 02/05/26 at 4:41:47 PM

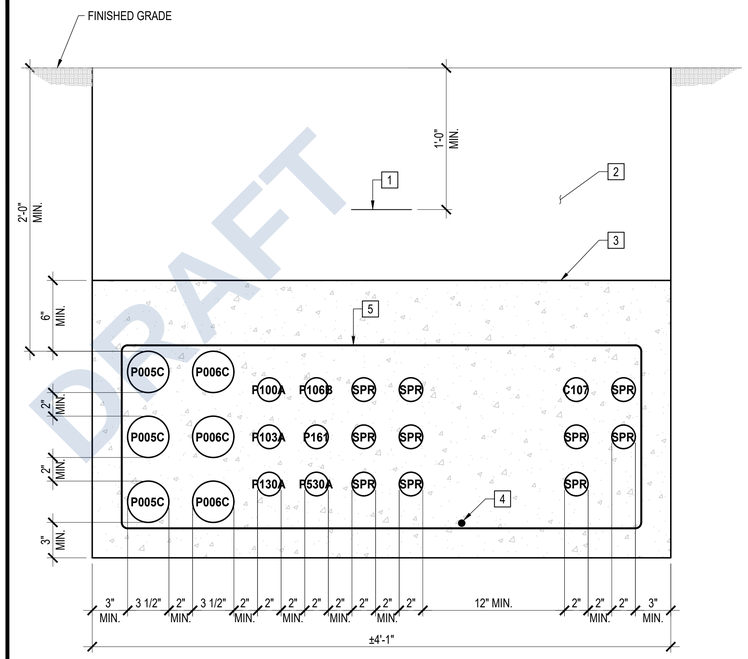

DUCT BANK DETAIL NTS F

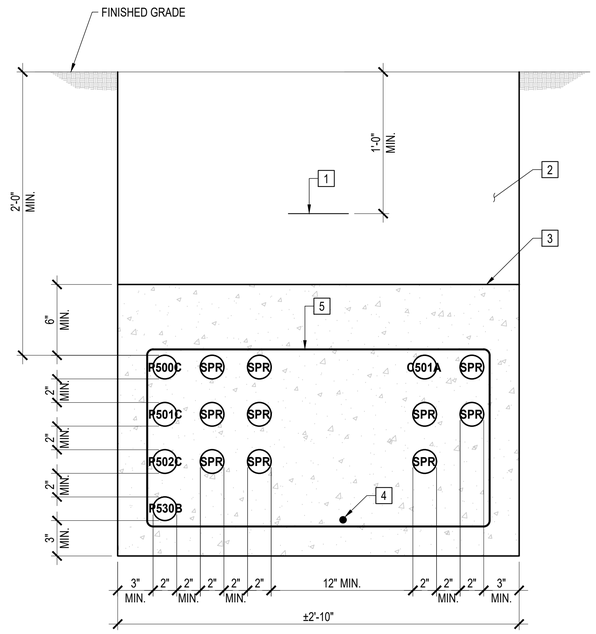

DUCT BANK DETAIL NTS G

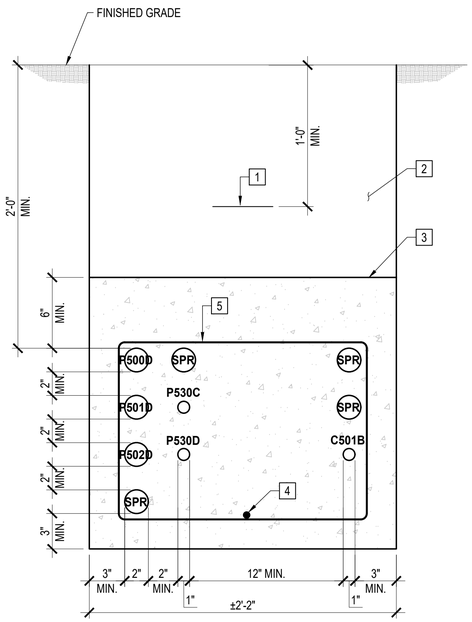

DUCT BANK DETAIL NTS H

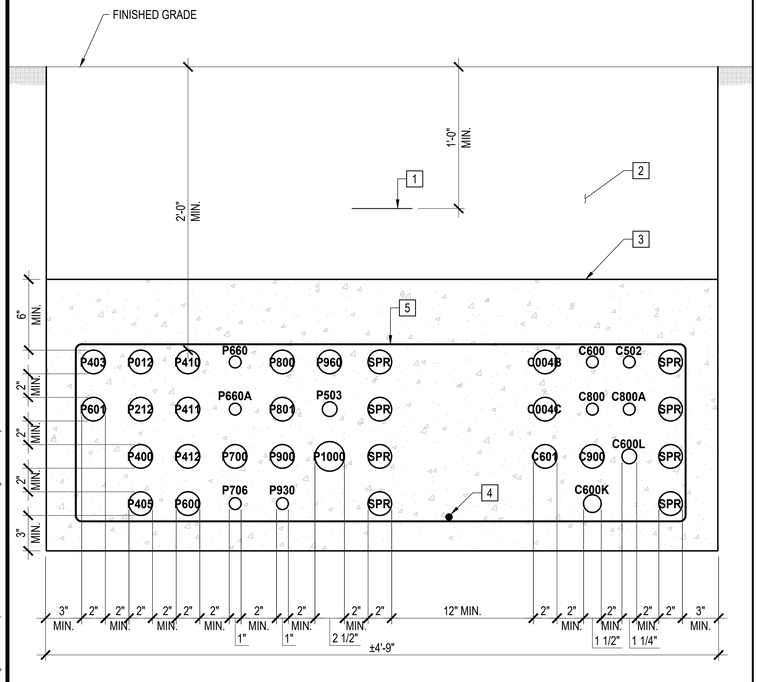

DUCT BANK DETAIL NTS J

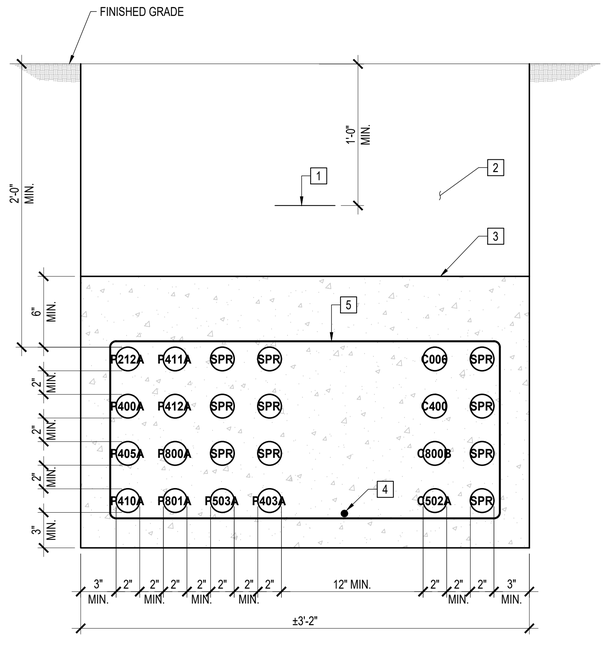

DUCT BANK DETAIL NTS K

CONSTRUCTION NOTES:

1. 6" WIDE 4.5 MIL THICK METAL DETECTABLE POLYESTER TAPE CONTINUOUSLY IMPRINTED ON ONE SIDE OF TAPE, "CAUTION: BURIED ELECTRIC LINE BELOW" (BLACK LETTERS ON RED BACKGROUND)
2. CLEAN BACKFILL (COMPACT TO 95% COMPACTION)
3. 2 - SACK CEMENT SLURRY BACKFILL UNDER ALL DRIVABLE AREAS (CLEAN SAND IN NON-DRIVABLE AREAS)
4. ROUTE #4/0 BARE COPPER CONDUCTOR INSIDE DUCT BANK. SECURE TO REBAR TIES EVERY 30' MAX.
5. #4 REBAR CAGE @ MAX. 24" SPACING

NO	BY	DATE	REVISIONS	DATE	APP.

Registered Professional Engineer (Electrical) CERTIFICATE NO. 82968 BASHAR ISHAQ Date Signed 3/31/28 ARIZONA, U.S.A. Expires 03/31/28

PREPARED BY BASHAR ISHAQ
PROJECT ENGINEER
R.C.E. NO. -- E24590
EXP. DATE
DRAWN NC
SCALE
DESIGNED NC, BI
CHECKED BI
DATE FEB 2026

TITLE
DUCT BANK DETAILS 2

JOB
CITY OF SAN LUIS WEST WWTP
3.0 MGD MBR UPGRADES
SAN LUIS AZ.

PACE
Advanced Water Engineering
8723 E. VIA de COMMERCIO, SUITE A-204 | SCOTTSDALE, CA 85258
P: (408) 991-3595 | www.pacewater.com

SHEET
E11.21
170 OF 209 SHEETS
JOB NO. B777

THESE DRAWINGS ARE THE PROPERTY OF P.A.C.E. AND SHALL NOT BE REPRODUCED IN ANY MANNER NOR BE USED FOR CONSTRUCTION UNLESS STAMPED "ISSUED FOR CONSTRUCTION".

FINAL PLANS ISSUED FOR BID

W:\B777\Engineering\B777 - 3MGD Exp\3MGD FINAL DS\Sheets\B777 - E11.20.dwg - Tab: E11.21 - by nchin on 02/05/26 at 4:41:47 PM

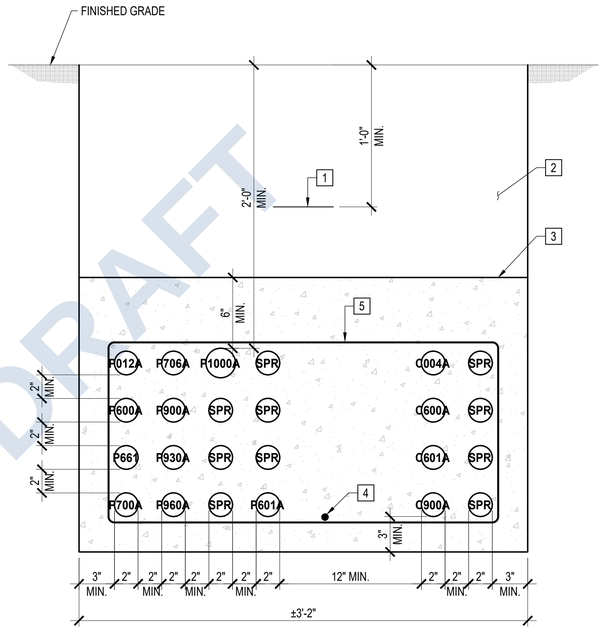

DUCT BANK DETAIL NTS **L**

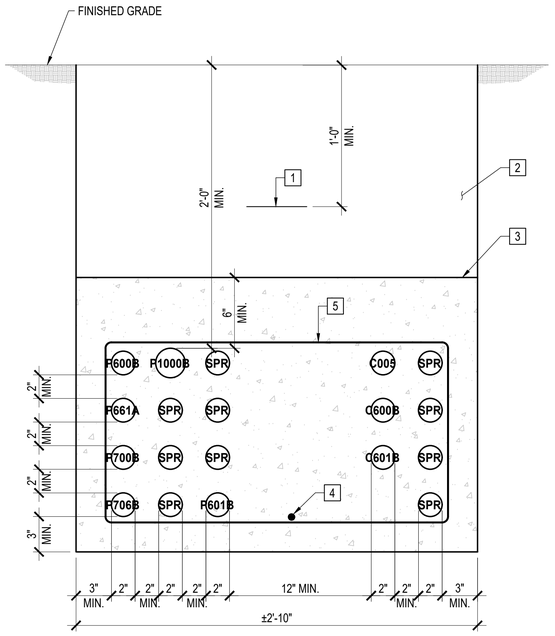

DUCT BANK DETAIL NTS **M**

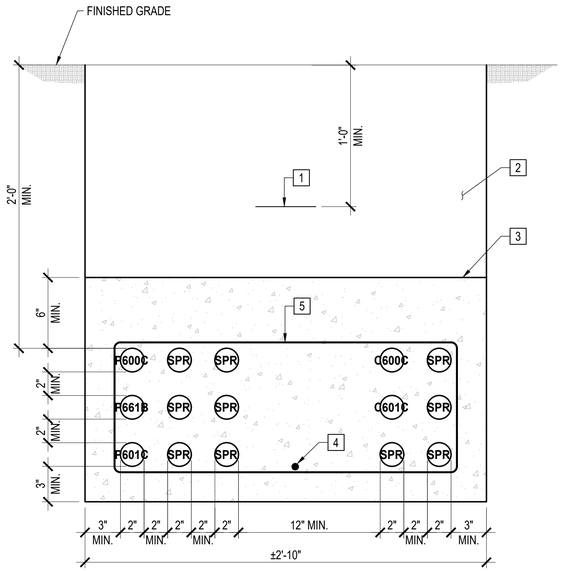

DUCT BANK DETAIL NTS **N**

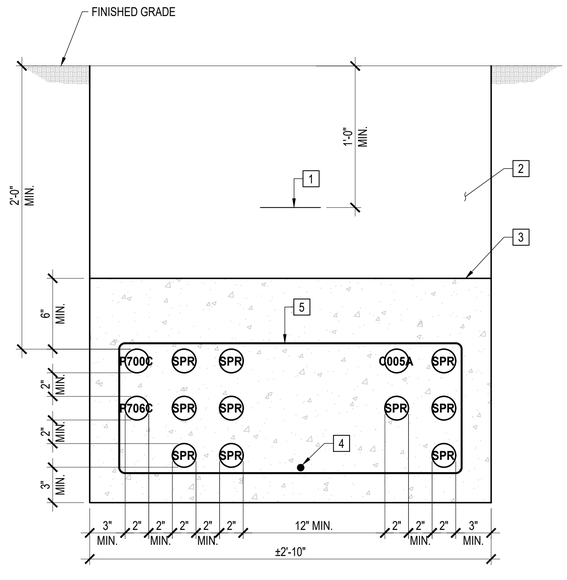

DUCT BANK DETAIL NTS **P**

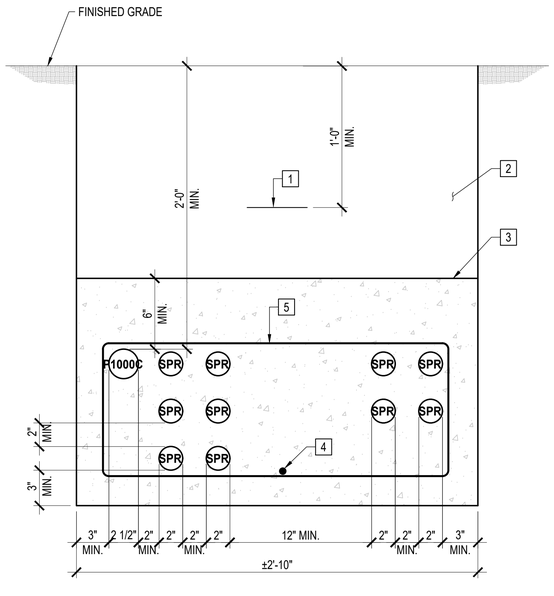

DUCT BANK DETAIL NTS **Q**

CONSTRUCTION NOTES:

1. 6" WIDE 4.5 MIL THICK METAL DETECTABLE POLYESTER TAPE CONTINUOUSLY IMPRINTED ON ONE SIDE OF TAPE, "CAUTION: BURIED ELECTRIC LINE BELOW" (BLACK LETTERS ON RED BACKGROUND)
2. CLEAN BACKFILL (COMPACT TO 95% COMPACTION)
3. 2 - SACK CEMENT SLURRY BACKFILL UNDER ALL DRIVABLE AREAS (CLEAN SAND IN NON-DRIVABLE AREAS)
4. ROUTE #4/0 BARE COPPER CONDUCTOR INSIDE DUCT BANK. SECURE TO REBAR TIES EVERY 30' MAX.
5. #4 REBAR CAGE @ MAX. 24" SPACING

NO	BY	DATE	REVISIONS	DATE	APP.

Registered Professional Engineer (Electrical) CERTIFICATE NO. 35668 BASHAR SHAIO Date Signed 11/21/2025 ARIZONA, U.S.A. Expires 03/31/28

PREPARED BY BASHAR SHAIO PROJECT ENGINEER
R.C.E. NO. E24580
EXP. DATE —
SCALE
DRAWN NC
DESIGNED NC, BI
CHECKED BI
DATE FEB 2026

THESE DRAWINGS ARE THE PROPERTY OF P.A.C.E. AND SHALL NOT BE REPRODUCED IN ANY MANNER NOR BE USED FOR CONSTRUCTION UNLESS STAMPED 'ISSUED FOR CONSTRUCTION'.

TITLE **DUCT BANK DETAILS 3**

JOB CITY OF SAN LUIS WEST WWTP 3.0 MGD MBR UPGRADES — SAN LUIS AZ.

PACE Advanced Water Engineering
8723 E. VIA de COMMERCIO, SUITE A-204 | SCOTTSDALE, CA 85258
P: (408) 991-3595 | www.pacewater.com

SHEET **E11.22**
171 OF 209 SHEETS

JOB NO. B777

FINAL PLANS ISSUED FOR BID

DRAFT

W:\B777\Engineering\B777 - 3MGD Exp\3MGD FINAL DSN\sheets\B777 - E11.22.dwg - Tab: E11.22 - by rothh on 02/05/26 at 4:41:47 PM

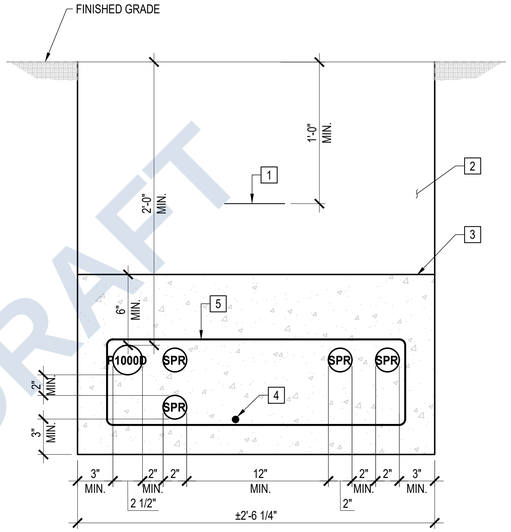

DUCT BANK DETAIL NTS **R**

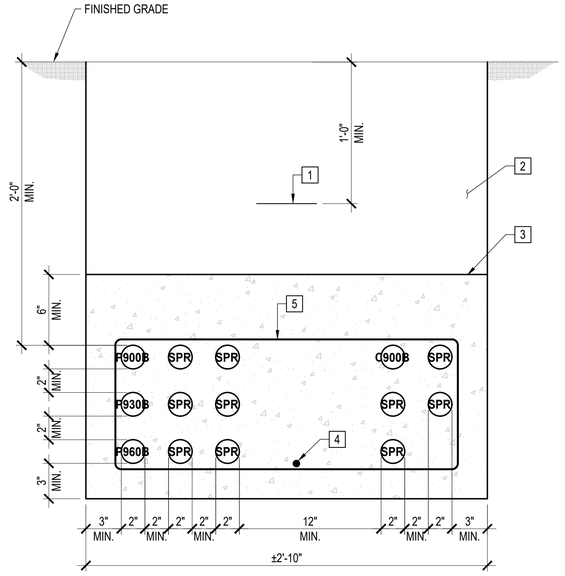

DUCT BANK DETAIL NTS **S**

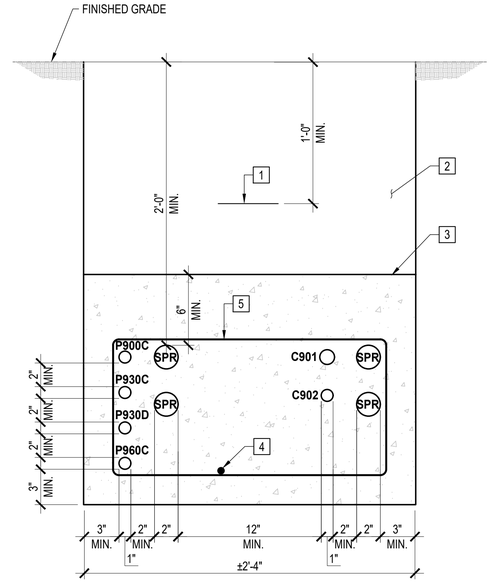

DUCT BANK DETAIL NTS **T**

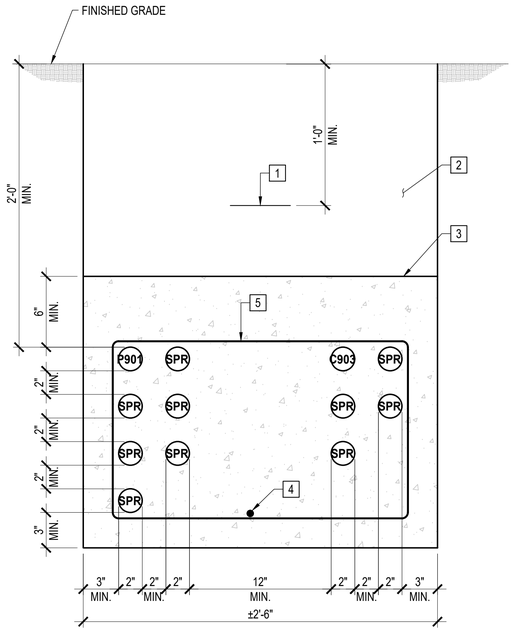

DUCT BANK DETAIL NTS **U**

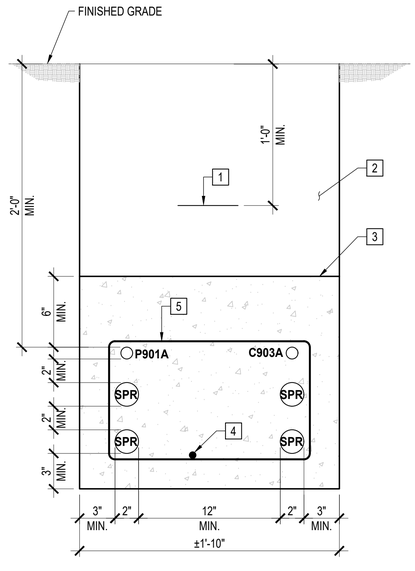

DUCT BANK DETAIL NTS **V**

CONSTRUCTION NOTES:

1. 6" WIDE 4.5 MIL THICK METAL DETECTABLE POLYESTER TAPE CONTINUOUSLY IMPRINTED ON ONE SIDE OF TAPE, "CAUTION: BURIED ELECTRIC LINE BELOW" (BLACK LETTERS ON RED BACKGROUND)
2. CLEAN BACKFILL (COMPACT TO 95% COMPACTION)
3. 2 - SACK CEMENT SLURRY BACKFILL UNDER ALL DRIVABLE AREAS (CLEAN SAND IN NON-DRIVABLE AREAS)
4. ROUTE #4/0 BARE COPPER CONDUCTOR INSIDE DUCT BANK. SECURE TO REBAR TIES EVERY 30' MAX.
5. #4 REBAR CAGE @ MAX. 24" SPACING

DRAFT

NO	BY	DATE	REVISIONS	DATE	APP.

Registered Professional Engineer (Electrical) CERTIFICATE NO. 35936 Nicholas Chan State of ARIZONA U.S.A. Expires 03/31/28

THESE DRAWINGS ARE THE PROPERTY OF P.A.C.E. AND SHALL NOT BE REPRODUCED IN ANY MANNER NOR BE USED FOR CONSTRUCTION UNLESS STAMPED 'ISSUED FOR CONSTRUCTION'.

PREPARED BY: BASHAR SHAIO
PROJECT ENGINEER
R.C.E. NO. --
EXP. DATE

DRAWN: NC
DESIGNED: NC, BI
CHECKED: BI
SCALE
DATE: FEB 2026

TITLE: **DUCT BANK DETAILS 4**

JOB: CITY OF SAN LUIS WEST WWTP
3.0 MGD MBR UPGRADES
SAN LUIS AZ.

PACE
Advanced Water Engineering
8723 E. VIA de COMMERCIO, SUITE A-204 | SCOTTSDALE, CA 85258
P: (408) 991-3595 | www.pacewater.com

SHEET
E11.23
172 OF 209 SHEETS

JOB NO. B777

FINAL PLANS ISSUED FOR BID

W:\B777\Engineering\B777 - 3MGD Exp\3MGD FINAL DS\Arkwest\B777 - E11.20.dwg - Tab: E11.23 - by rothh on 02/05/26 at 4:41:47 PM

DRAFT

DUCT BANK DETAIL

NTS | W

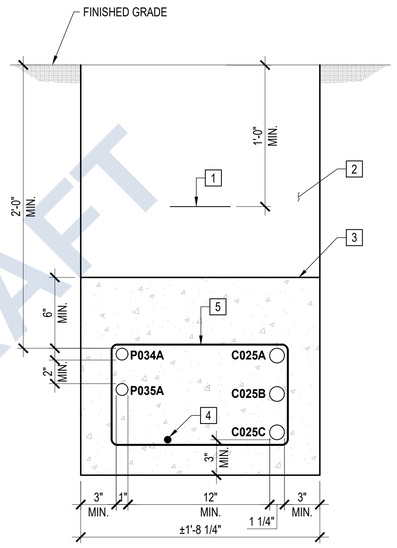

NOT USED

NTS | X

NOT USED

NTS | Y

NOT USED

NTS | Z

NOT USED

NTS | AA

CONSTRUCTION NOTES:

1. 6" WIDE 4.5 MIL THICK METAL DETECTABLE POLYESTER TAPE CONTINUOUSLY IMPRINTED ON ONE SIDE OF TAPE, "CAUTION: BURIED ELECTRIC LINE BELOW" (BLACK LETTERS ON RED BACKGROUND)
2. CLEAN BACKFILL (COMPACT TO 95% COMPACTION)
3. 2 - SACK CEMENT SLURRY BACKFILL UNDER ALL DRIVABLE AREAS (CLEAN SAND IN NON-DRIVABLE AREAS)
4. ROUTE #4/0 BARE COPPER CONDUCTOR INSIDE DUCT BANK. SECURE TO REBAR TIES EVERY 30' MAX.
5. #4 REBAR CAGE @ MAX. 24" SPACING

NO	BY	DATE	REVISIONS	DATE	APP.

Registered Professional Engineer (Electrical) CERTIFICATE NO. 82958 Basher Ishaq Shaq Date Signed ARIZONA, U.S.A. Expires 03/31/28

PREPARED BY: BASHAR ISHAQ
PROJECT ENGINEER
R.C.E. NO. E24580
EXP. DATE
SCALE
DRAWN NC
DESIGNED NC, BI
CHECKED BI
DATE FEB 2026

THESE DRAWINGS ARE THE PROPERTY OF P.A.C.E. AND SHALL NOT BE REPRODUCED IN ANY MANNER NOR BE USED FOR CONSTRUCTION UNLESS STAMPED "ISSUED FOR CONSTRUCTION".

TITLE: DUCT BANK DETAILS 5

JOB: CITY OF SAN LUIS WEST WWTP
3.0 MGD MBR UPGRADES
SAN LUIS AZ.

PACE
Advanced Water Engineering
8723 E. VIA de COMMERCIO, SUITE A-204 | SCOTTSDALE, CA 85258
P: (408) 991-3595 | www.pacewater.com

SHEET
E11.24
173 OF 209 SHEETS

JOB NO. B777

FINAL PLANS ISSUED FOR BID

W:\B777\Engineering\B777 - 3MGD Exp\3MGD FINAL DSN\sheets\B777 - E11.20.dwg - Tab: E11.24 - by rothh on 02/05/26 at 4:41:47 PM

INSTRUMENT IDENTIFICATION LETTERS (FSS)

	FIRST – LETTER (F)		SUCCEEDING – LETTERS (SS)		
	MEASURED OF INITIATING VARIABLE	MODIFIER	READOUT PASSIVE FUNCTION	OUTPUT FUNCTION	MODIFIER
A	ANALYSIS		ALARM		
B	BURNER, COMBUSTION		USER'S CHOICE	USER'S CHOICE	USER'S CHOICE
C	CONDUCTIVITY			CONTROLLER	
D	DENSITY	DIFFERENTIAL			
E	VOLTAGE		SENSOR, PRIMARY ELEMENT		
F	FLOW RATE	RATIO (FRACTION)			
G	GAUGE, GENERAL		GLASS VIEWING DEVICE		
H	HAND				HIGH, OPENED
I	CURRENT (ELEC.)		INDICATING, INDICATOR		
J	POWER		SCAN		
K	TIME, TIME SCHEDULE	TIME RATE OF CHANGE		CONTROL STATION	
L	LEVEL		LIGHT		LOW, CLOSED
M	MOISTURE, MOTION	MOMENTARY			MIDDLE
N	INTRUSION, STATUS	MOMENTARY	STATUS	USER'S CHOICE	USER'S CHOICE
O	OPERATOR, TORQUE		ORIFICE, RESTRICTION		USER'S CHOICE
P	PRESSURE, VACUUM		POINT (TEST) CONNECTION		
Q	QUANTITY	INTEGRATE, TOTALIZE			
R	RESET, RADIATION		RECORD OR PRINT		
S	SPEED, FREQUENCY	SAFETY		SWITCH	SLOW
T	TEMPERATURE			TRANSDUCER, TRANSMITTER	TEST
U	MULTIVARIABLE		MULTIFUNCTION	MULTIFUNCTION	MULTIFUNCTION
V	VIBRATION, MECH. ANALYSIS			VALVE, DAMPER LOUVER	
W	WEIGHT, FORCE		WELL		
X	SWITCH	X AXIS	UNCLASSIFIED	UNCLASSIFIED	UNCLASSIFIED
Y	EVENT, STATE, PRESENCE	Y AXIS	UNCLASSIFIED	RELAY, COMPUTE, CONVERT	
Z	POSITION DIMENSION	Z AXIS		DRIVER, ACTUATOR, UNCLASSIFIED FINAL CONTROL ELEMENT	

LINE NUMBERING

00" – INFLT – 001 (EXAMPLE)
- SEQUENTIAL LINE NO.
- FLUID CODE
- NOMINAL LINE SIZE

EQUIPMENT NUMBERING

F SS – PP T NN (EXAMPLE)
- ITEM NUMBER
- SERIES (TRAIN) LOCATION
- PROCESS LOCATION
- SUCCEEDING LETTERS (INSTRUMENT ID)
- FIRST LETTER (INSTRUMENT ID)

EXAMPLE:
LT–04032 = SBR TANK #2 LEVEL TRANSDUCER

PROCESS LOCATION (PP)		SERIES LOCATION (TT)	
00	GENERAL/MISCELLANEOUS	0	SHEET 0
01	HEADWORKS	1	SHEET 1
02	SECONDARY PROCESS	2	SHEET 2
03	MBR	3	SHEET 3
04	EFFLUENT/DISINFECTION	4	SHEET 4
05	AERATION	5	SHEET 5
06	DIGESTION	6	SHEET 6
07	DEWATERING	7	SHEET 7
08	ODOR CONTROL	8	SHEET 8

FLUID CODE ABBREVIATION		EQUIPMENT NUMBERS	
		EQUIPMENT ABBREVIATIONS	# STARTING AT
BP	BYPASS	PUMPS (PMP)	00-09
BW	BACKWASH	MOTORS (M/MXR/BLR)	10-19
CDS	CHEMICAL DOSING	VALVES (XV/V/SV)	20-29
CIP	CLEAN IN PLACE	LEVEL INST (LT/LS)	30-39
CVR	CONVEYOR	FLOW INST (FT/FS/FE/FIT)	40-49
DR	DRAIN	PRESSURE INST (PT/PS/PG)	50-59
EFFLT	EFFLUENT	ANALYTICAL (AT)	60-69
EXH	EXHAUST/EXHAUST FAN	MEMBRANE (SMU)	70-79
FA	FOUL AIR	BUBBLE DIFFUSER (XBD)	80-85
FLTRT	FILTRATE	MISCELLANEOUS (MISC)	90-99
GRT	GRIT		
INFLT	INFLUENT		
MLSS	MIX LIQUOR		
OF	OVERFLOW		
PA	PROCESS AIR		
PRMT	PERMEATE		
PW	POTABLE WATER		
RAS	RETURN ACTIVATED SLUDGE		
RECYC	RECYCLE		
RET	RETURN		
RNS	RINSE		
RW	RECLAIMED WATER		
SECPR	SECONDARY PROCESS		
SD	SLUDGE DISCHARGE		
SNT	SUPERNATANT		
SWR	SEWER		
TERT	TERTIARY		
TW	TREATED WATER		
WAS	WASTE ACTIVATED SLUDGE		
WTR	WATER		
WW	WASTE WATER		

LINE CODES

- MAJOR PROCESS LINE (00"-XXX) — LINE SIZE & NUMBER
- MINOR PROCESS LINE — PROCESS CONTINUATION WITHIN SCOPE
- AIR
- ELECTRICAL
- PLC TO HMI COMMUNICATION
- (1) AUTO–DIALER AND PRIORITY LEVEL

INSTRUMENT NUMBERING

FSS NPPNNN – xx – DEVICE FUNCTION
- FIRST LETTER (INSTRUMENT ID)
- SUCCEEDING LETTERS (INSTRUMENT ID)
- EQUIPMENT NUMBER

LINE NUMBER GROUPS

000	OVERFLOW/ BYPASS/ DRAIN/ SUPERNATANT/SCNG
100	INFLUENT/ MIX LIQUOR/ SECONDARY EFFLUENT / EFFLUENT
200	TERTIARY/ REUSE WATER/ BACKWASH/ RECYCLE WATER
300	PERMEATE/ FILTRATE/ CENTRATE
400	PROCESS AIR
500	CHEMICAL DOSING/ POLYMER
600	FOUL AIR
700	WATER/ TREATED WATER/ FILTERED WATER
800	RAS/ SOLIDS
900	WAS/ SCUM/ WASTE WATER/ RAW WATER

EQUIPMENT SUPPLIED BY IDENTIFIER

- [K] KUBOTA
- [H] HYDRODYNE
- [F] FKC

GENERAL INSTRUMENT OR FUNCTION SYMBOLS

	FIELD MOUNTED	PRIMARY LOCATION ACCESSIBLE TO OPERATOR	PRIMARY LOCATION INACCESSIBLE TO OPERATOR	AUXILIARY LOCATION ACCESSIBLE TO OPERATOR
DISCRETE INSTRUMENTS	○	○	○	○
SHARED DISPLAY SHARED CONTROL	▢	▢	▢	▢
COMPUTER FUNCTION	⬡	⬡	⬡	⬡
PROGRAMMABLE LOGIC CONTROL	◇	◇	◇	◇

HARDWARE INTERLOCK — I

PLC "SOFT" INTERLOCK — I

VALVE SYMBOLS

NC NO
- GATE VALVE
- GATE VALVE
- BALL VALVE
- DIAPHRAGM VALVE
- PLUG VALVE
- 3–WAY BALL VALVE
- NEEDLE VALVE/KNIFE GATE
- MUD VALVE
- FLANGED BUTTERFLY VALVE
- LUGGED BUTTERFLY VALVE
- CHECK VALVE
- DOUBLE LEAF CHECK VALVE
- WEIR GATE/TELESCOPE VALVE
- STOP LOG/GATE
- SLUICE/SLIDE GATE

VALVE ACTUATORS

- DIAPHRAGM ACTUATOR
- MOTOR ACTUATOR
- SOLENOID ACTUATOR
- CYLINDER ACTUATOR
- LEVER
- HAND WHEEL
- CHAIN WHEEL

RELIEF DEVICES

- AIR/PRESSURE RELIEF
- VACUUM RELIEF
- RUPTURE DISK FOR PRESSURE RELIEF
- RUPTURE DISK FOR VACUUM RELIEF

REGULATORS

- PRESSURE REDUCING
- BACK PRESSURE
- REGULATOR WITH EXTERNAL PILOT
- DIFFERENTIAL PRESSURE

PIPING SYMBOLS

- Y STRAINER
- BLIND FLANGE
- FUNNEL
- CONCENTRIC REDUCER
- ECCENTRIC REDUCER
- EDUCTOR
- WELDED CAP
- WELDED PIPE END
- SCREWED CAP
- UNION
- CAMLOCK FITTING
- FLEXIBLE LINE
- SPECTACLE BLIND
- EXPANSION JOINT
- TP XX — TIE–IN POINT
- FLEX JOINT

MECHANICAL EQUIPMENT

- METERING PUMP
- ULTRA SONIC LEVEL TRANSMITTER
- CENTRIFUGAL PUMP OR BLOWER
- CHEMICAL INJECTOR
- SUBMERSIBLE PUMP
- FLOW METER OR MOTOR
- TURBINE PUMP
- ROTOMETER
- MAZZI INJECTOR
- ROTARY BLOWER
- VORTEX SHEDDING
- SONIC
- MIXER
- GRINDER
- STATIC MIXER
- PROGRESSIVE CAVITY PUMP
- SILENCER
- AERATOR
- RADAR LEVEL TRANSMITTER
- EXHAUST FAN
- AV SENSOR
- VERTICAL MULTI–STAGE PUMP
- H/S HORN/ STROBE LIGHT
- ROTARY LOBE PUMP

NOTE: ALL PRESSURE GAUGES AND OTHER SMALL PROCESS MECHANICAL INSTRUMENT EQUIPMENT SHALL BE SUPPLIED WITH ISOLATION VALVES AND ADDITIONAL APPURTENANCES (E.G. PRESSURE PULSATION DAMPENERS/SNUBBERS) AS REQUIRED FOR PROPER OPERATION

ABBREVIATIONS

ACP	ACCESS CONTROL PANEL	NTU	TURBIDITY
AE	ANALYTICAL SENSOR	OC	ODOR CONTROL
AI	ANALOG INPUT	OCA	OPEN–CLOSE–AUTO
AIT	ANALYTICAL INDICATOR TRANSMITTER	OCR	OPEN–CLOSE–REMOTE
AMP	AMPERE	OFS	OFF SPEC.
AO	ANALOG OUTPUT	OIT	OPERATOR INTERFACE TERMINAL
AT	ANALYTICAL TRANSMITTER	OO	ON/OFF (MAINTAINED)
ATS	AUTOMATIC TRANSFER SWITCH	OOA	ON–OFF–AUTO
AV	AIR VELOCITY	OOR	ON–OFF–REMOTE
BLR	BLOWER	OSC	OPEN–STOP–CLOSE
CB	CIRCUIT BREAKER	PE	PRESSURE SENSOR
CBL	COARSE BUBBLE DIFFUSER	PG	PRESSURE GAUGE
CE	CONDUCTIVITY SENSOR (TDS)	PH	POTENTIAL OF HYDROGEN
CFR	CHEMICAL FEEDER	PI	PRESSURE INDICATOR / PULSE INPUT
CG	COMBUSTIBLE GASES	PID	PROPORTIONAL–INTEGRAL–DERIVATIVE
CHV	CHECK VALVE	PIT	PRESSURE INDICATOR TRANSMITTER
CL2	CHLORINE	PLC	PROGRAMMABLE LOGIC CONTROLLER
CMP	COMPACTOR	PMP	PUMP
CON	CONVEYOR	PNL	PANEL
CWC	COMPACTOR/WASHER/CONVEYOR	PO	PULSE OUTPUT
DCS	DISTRIBUTED CONTROL SYSTEM	PPG	POUNDS PER GALLON
DI	DIGITAL INPUT	PPH	POUNDS PER HOUR
DO	DISSOLVED OXYGEN / DIGITAL OUTPUT	PPM	PARTS PER MILLION
DRY	BIOSOLIDS DRYER	PRESS	PRESSURE
DSS	DISTRIBUTION SWITCHBOARD SECTION	PRV	PRESSURE RELIEF OR REDUCING VALVE
DWG	DRAWING	PSH	PRESSURE SWITCH HIGH
EST	EMERGENCY STOP	PSI	POUNDS PER SQUARE INCH
ETM	ELAPSED TIME METER	PSL	PRESSURE SWITCH LOW
EXIST	EXISTING	PT	PRESSURE TRANSMITTER
FBD	FINE BUBBLE DIFFUSER	PV	PROCESS VARIABLE
FC	FAIL CLOSED	REM	REMOTE
FCV	MODULATING CONTROL VALVE	RF	RADIO FREQUENCY
FE	FLOW SENSOR	RIO	REMOTE INPUT–OUTPUT
FeCL2	FERROUS CHLORIDE	RST	RESET
FI	FLOW INDICATOR	RTU	REMOTE TELEMETRY UNIT
FIT	FLOW INDICATOR TRANSMITTER	SES	SERVICE ENTRANCE SECTION
FR	FORWARD–REVERSE	SG	SLUICE GATE
FS	FINE SCREEN / FULL SPEED	SLC	SINGLE LOOP CONTROLLER
FSL	FLOW SWITCH LOW	SLOS	START–LOCK–OFF–STOP
FT	FLOW TRANSMITTER	SO2	SULFUR D
GDR	GRINDER	SMU	SUBMERGED MEMBRANE UNIT
GPD	GALLONS PER DAY	SP	SETPOINT
GPH	GALLONS PER HOUR	SPD	SPEED
GPM	GALLONS PER MINUTE	SPR	SPARE
GRC	GRIT CLASSIFIER	SS	START/STOP (MAINTAINED)
H_2S	HYDROGEN SULFIDE	SSS	SOLID STATE STARTER (SOFT START)
HMI	HUMAN MACHINE INTERFACE	STG	MANUAL STOP GATE
HOA	HAND–OFF–AUTO	SUG	SLUICE GATE
HOR	HAND–OFF–REMOTE	SV	SOLENOID VALVE
JB	JUNCTION BOX	TC	TABLET CHLORINATOR
KGV	KNIFE GATE VALVE	TDS	TOTAL DISSOLVED SOLIDS
LAN	LOCAL AREA NETWORK	TE	TEMPERATURE SENSOR
LCP	LOCAL CONTROL PANEL	TG	TEMPERATURE GAUGE
LE	LEVEL SENSOR	TI	TEMPERATURE INDICATOR
LIT	LEVEL INDICATOR TRANSMITTER	TIT	TEMPERATURE INDICATOR TRANSMITTER
LOS	LOCK–OFF–STOP	TNK	TANK
LR	LOCAL / REMOTE	TS	TEMPERATURE SWITCH
LSH	LEVEL SWITCH HIGH	TSH	TEMPERATURE SWITCH HIGH
LSHH	LEVEL SWITCH HIGH HIGH	TT	TEMPERATURE TRANSMITTER
LSL	LEVEL SWITCH LOW	TV	TELESCOPING VALVE
LSLL	LEVEL SWITCH LOW LOW	UPS	UNINTERRUPTIBLE POWER SUPPLY
LSM	LEVEL SWITCH MEDIUM	UVU	ULTRAVIOLET UNIT
LT	LEVEL TRANSMITTER	V	MANUAL VALVE
MCAS	MINI CONTROL AND STATUS	VFD	VARIABLE FREQUENCY DRIVE
MCC	MOTOR CONTROL CENTER	WE	WEIR
ME	MOISTURE SENSOR	WEG	WEIR GATE
MGD	MILLION GALLONS PER DAY	WR	ADJUSTABLE WEIR
MGL	MILLIGRAM PER LITER	XV	AUTOMATED OPEN/CLOSE VALVE/GATE
MOT	MOTOR	ZS	SWITCH POSITION
MS	MOTOR STARTER		
MTU	MASTER TELEMETRY UNIT		
MXR	MIXER		
NaHSO3	SODIUM BISULFITE		
NaOCL	SODIUM HYPOCHLORITE		

DRAFT

NO	BY	DATE	REVISIONS	DATE	APP.

Registered Professional Engineer — DUONG T. DO — 40050 — Civil — State of ARIZONA, U.S.A. — One Signed Copy — Expires 12/31/27

PREPARED BY: DUONG DO
PROJECT ENGINEER #40050
R.C.E. NO.: —
EXP. DATE:
SCALE:
DRAWN: WW, MSA
DESIGNED: NT, NE
CHECKED: DD
DATE: FEB 2026

THESE DRAWINGS ARE THE PROPERTY OF P.A.C.E. AND SHALL NOT BE REPRODUCED IN ANY MANNER NOR BE USED FOR CONSTRUCTION UNLESS STAMPED "ISSUED FOR CONSTRUCTION".

TITLE: **P&ID LEGEND**

JOB: CITY OF SAN LUIS WEST WWTP
3.0 MGD MBR UPGRADES
SAN LUIS AZ.

PACE
Advanced Water Engineering
8723 E. VIA de COMMERCIO, SUITE A-204 | SCOTTSDALE, CA 85258
P: (408) 991-3595 | www.pacewater.com

FINAL PLANS ISSUED FOR BID

SHEET **I0.0**
174 OF 209 SHEETS

JOB NO. B777

W:\B777\Engineering\B777 - 3MGD Exp\3MGD FINAL DS\Sheets\B777-I0.0 X GENERAL.dwg - Tab: I0.0 - by nwright on 02/09/26 at 4:05:10 PM

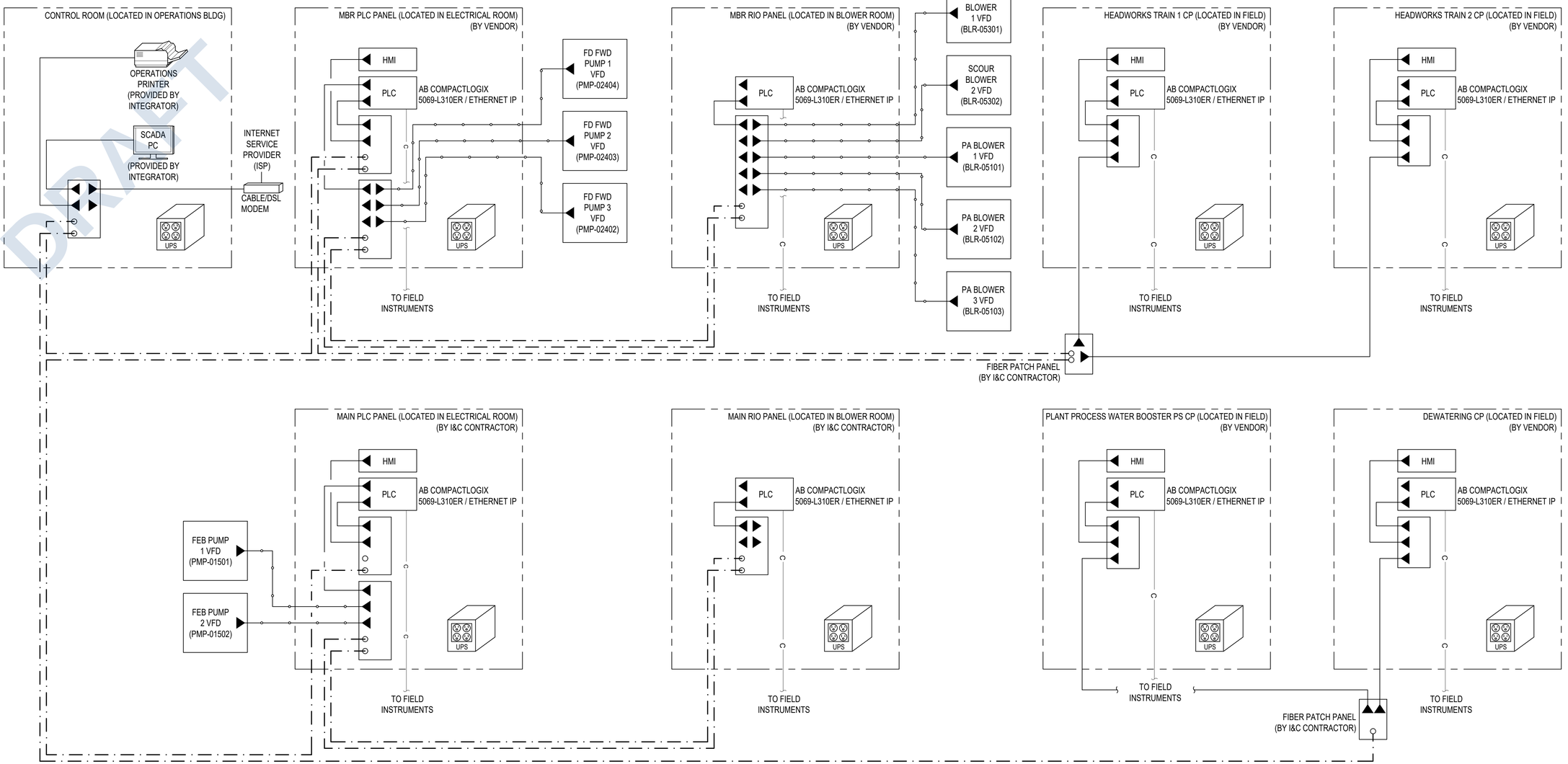

LEGEND:

- CAT6 CONNECTION
- MULTI-MODE FIBER OPTIC CABLE
- CAT6 ETHERNET CABLE
- C — DIGITAL OR ANALOG CONTROL CONDUCTORS
- I&C CONTRACTOR PROVIDED SWITCH PANEL

NETWORK DIAGRAM

DRAFT

NO	BY	DATE	REVISIONS	DATE	APP.

Registered Professional Engineer (Civil) — Nathan Tyler Eaton — 40050 — Date Signed 12/31/27 — Expires 12/31/27

PREPARED BY: DUONG DO
PROJECT ENGINEER: #40050
R.C.E. NO.: —
EXP. DATE:
DRAWN: WW, MSA
DESIGNED: NT, NE
CHECKED: DD
SCALE:
DATE: FEB 2026

THESE DRAWINGS ARE THE PROPERTY OF P.A.C.E. AND SHALL NOT BE REPRODUCED IN ANY MANNER NOR BE USED FOR CONSTRUCTION UNLESS STAMPED "ISSUED FOR CONSTRUCTION".

TITLE: NETWORK DIAGRAM

JOB: CITY OF SAN LUIS WEST WWTP 3.0 MGD MBR UPGRADES — SAN LUIS AZ.

PACE Advanced Water Engineering
8723 E. VIA de COMMERCIO, SUITE A-204 | SCOTTSDALE, CA 85258
P: (408) 991-3595 | www.pacewater.com

SHEET I0.1
175 OF 209 SHEETS

JOB NO. B777

FINAL PLANS ISSUED FOR BID

W:\B777\Engineering\B777 - 3MGD Exp\3MGD FINAL DS\Sheets\B777-I0.X GENERAL.dwg - Tab: I0.1 - by wwright on 02/06/26 at 4:05:10 PM

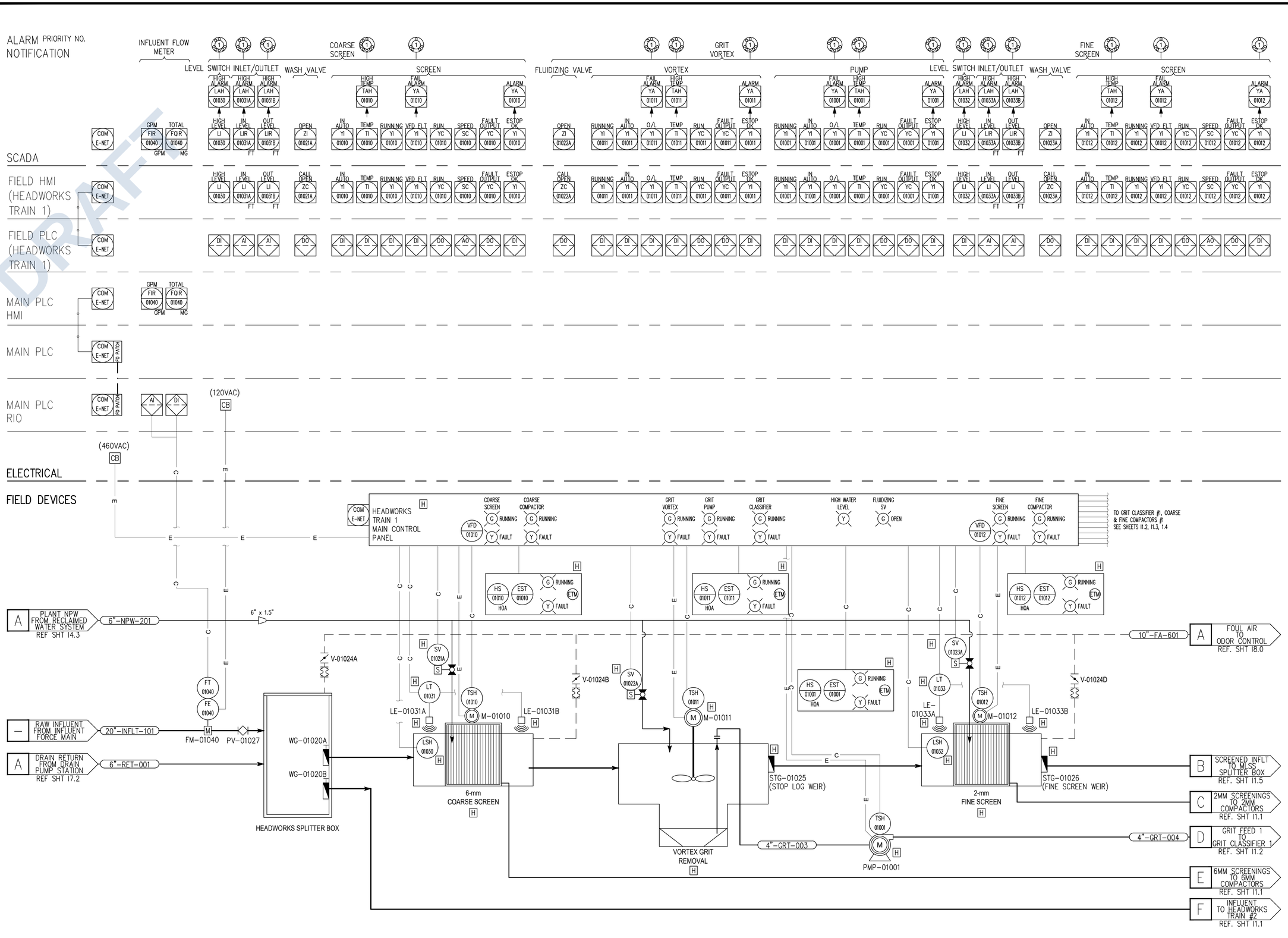

DRAFT

NO	BY	DATE	REVISIONS	DATE	APP.

Registered Professional Engineer (Civil) — DUONG T. DO — 40050 — Arizona, U.S.A. — Expires 12/31/27

PREPARED BY: DUONG DO
PROJECT ENGINEER #40050
R.C.E. NO.: 40050
EXP. DATE: 12/31/27
DRAWN: WW, MSA
DESIGNED: NT, NE
CHECKED: DD
SCALE:
DATE: FEB 2026

THESE DRAWINGS ARE THE PROPERTY OF P.A.C.E. AND SHALL NOT BE REPRODUCED IN ANY MANNER NOR BE USED FOR CONSTRUCTION UNLESS STAMPED 'ISSUED FOR CONSTRUCTION'.

TITLE: HEADWORKS TRAIN #1

JOB: CITY OF SAN LUIS WEST WWTP 3.0 MGD MBR UPGRADES — SAN LUIS, AZ.

PACE Advanced Water Engineering
8723 E. VIA de COMMERCIO, SUITE A-204 | SCOTTSDALE, CA 85258
P: (408) 991-3595 | www.pacewater.com

FINAL PLANS ISSUED FOR BID

SHEET I1.0
176 OF 209 SHEETS

JOB NO. B777

W:\B777\Engineering\B777 - 3MGD Exp\3MGD FINAL DS\sheets\B777-I1.X HEADWORKS.dwg - Tab: I1.0 - by wwright on 01/26/26 at 1:30:39 PM

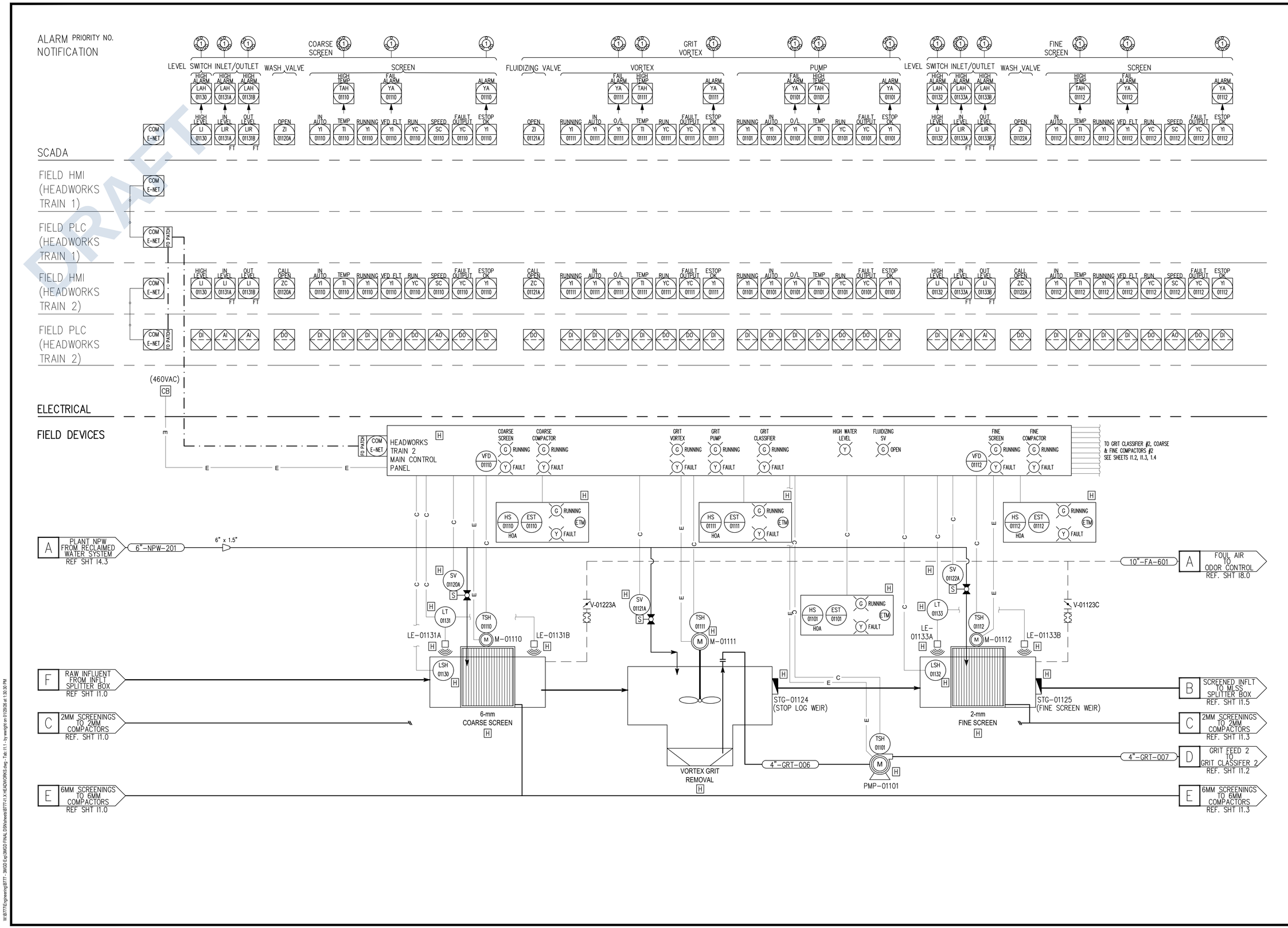

DRAFT

NO	BY	DATE	REVISIONS	DATE	APP.

Registered Professional Engineer (Civil) CERTIFICATE NO. 40050 DUONG T. DO Date Signed 12/31/26 ARIZONA, U.S.A. Expires 12/31/27

PREPARED BY DUONG DO
PROJECT ENGINEER
R.C.E. NO. -- #40050
EXP. DATE
DRAWN WW, MSA
SCALE
DESIGNED NT, NE
CHECKED DD
DATE FEB 2026

THESE DRAWINGS ARE THE PROPERTY OF P.A.C.E. AND SHALL NOT BE REPRODUCED IN ANY MANNER NOR BE USED FOR CONSTRUCTION UNLESS STAMPED "ISSUED FOR CONSTRUCTION".

TITLE
HEADWORKS TRAIN #2

JOB
CITY OF SAN LUIS WEST WWTP
3.0 MGD MBR UPGRADES
SAN LUIS AZ.

PACE
Advanced Water Engineering
8723 E. VIA de COMMERCIO, SUITE A-204 | SCOTTSDALE, CA 85258
P: (408) 991-3595 | www.pacewater.com

FINAL PLANS ISSUED FOR BID

SHEET
I1.1
177 OF 209 SHEETS

JOB NO. B777

W:\B777\Engineering\B777 - 3MGD Exp\3MGD FINAL DSN\sheets\B777-I1.X HEADWORKS.dwg - Tab: I1.1 - by wwright on 01/29/26 at 1:30:30 PM

ALARM PRIORITY NO.
NOTIFICATION

PRIORITY NO. ALARM
NOTIFICATION

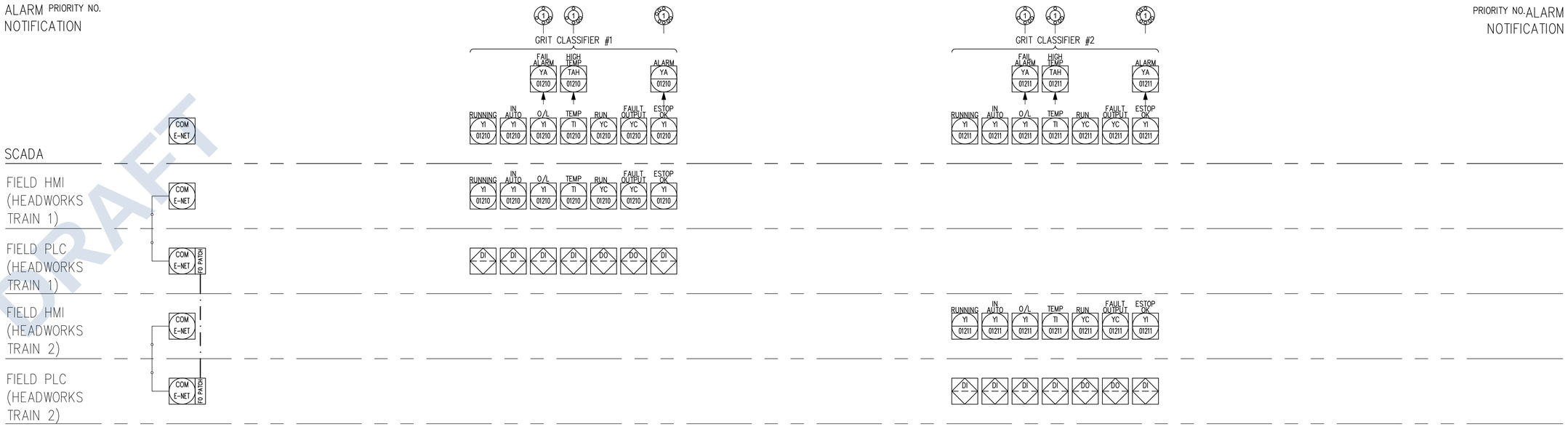

ELECTRICAL

FIELD DEVICES

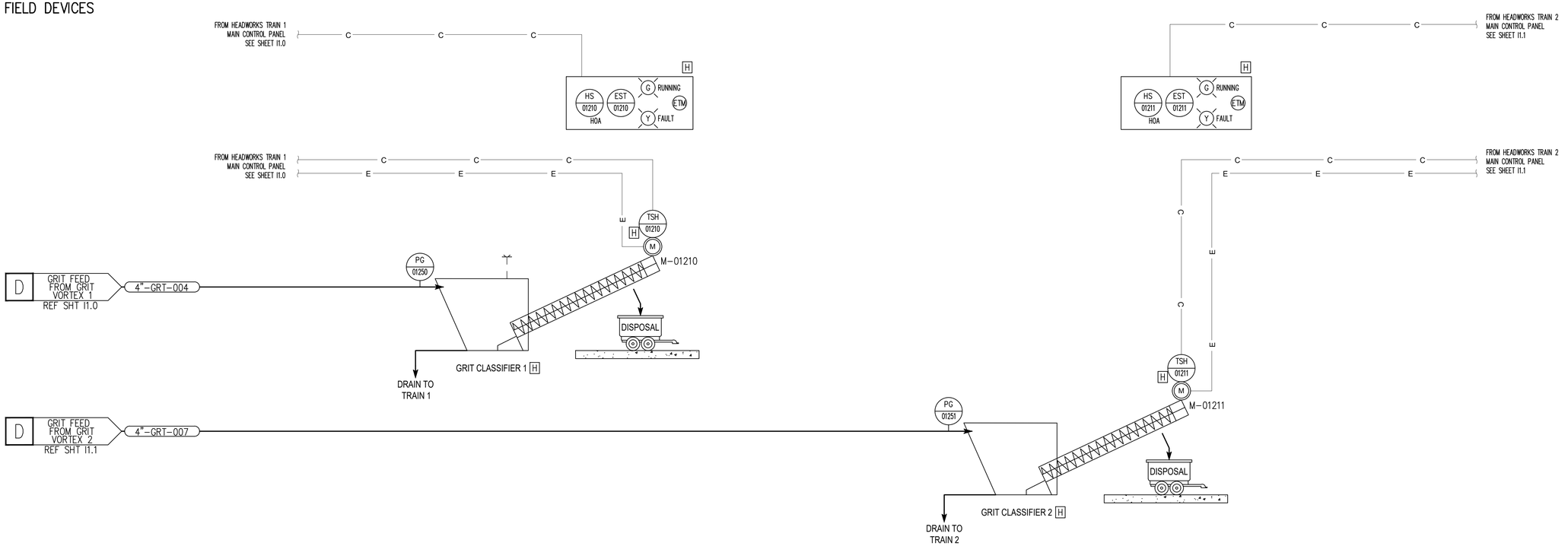

DRAFT

THESE DRAWINGS ARE THE PROPERTY OF P.A.C.E. AND SHALL NOT BE REPRODUCED IN ANY MANNER NOR BE USED FOR CONSTRUCTION UNLESS STAMPED "ISSUED FOR CONSTRUCTION".

NO	BY	DATE	REVISIONS	DATE	APP.

Registered Professional Engineer (Civil) — DUONG T. DO — 40050 — Date Signed 12/31/26 — ARIZONA, U.S.A. — Expires 12/31/27

PREPARED BY: DUONG DO
R.C.E. NO.: 40050
EXP. DATE:
PROJECT ENGINEER: DUONG DO
SCALE:
DRAWN: WW, MSA
DESIGNED: NT, NE
CHECKED: DD
DATE: FEB 2026

TITLE: GRIT CLASSIFIERS

JOB: CITY OF SAN LUIS WEST WWTP
3.0 MGD MBR UPGRADES
SAN LUIS AZ.

PACE
Advanced Water Engineering
8723 E. VIA de COMMERCIO, SUITE A-204 | SCOTTSDALE, CA 85258
P: (408) 991-3595 | www.pacewater.com

SHEET
I1.2
178 OF 209 SHEETS

JOB NO. B777

FINAL PLANS ISSUED FOR BID

W:\B777\Engineering\B777 - 3MGD Expt\3MGD FINAL DS\Sheets\B777-I1.X HEADWORKS.dwg - Tab: I1.2 - by wwright on 01/26/26 at 1:35:35 PM

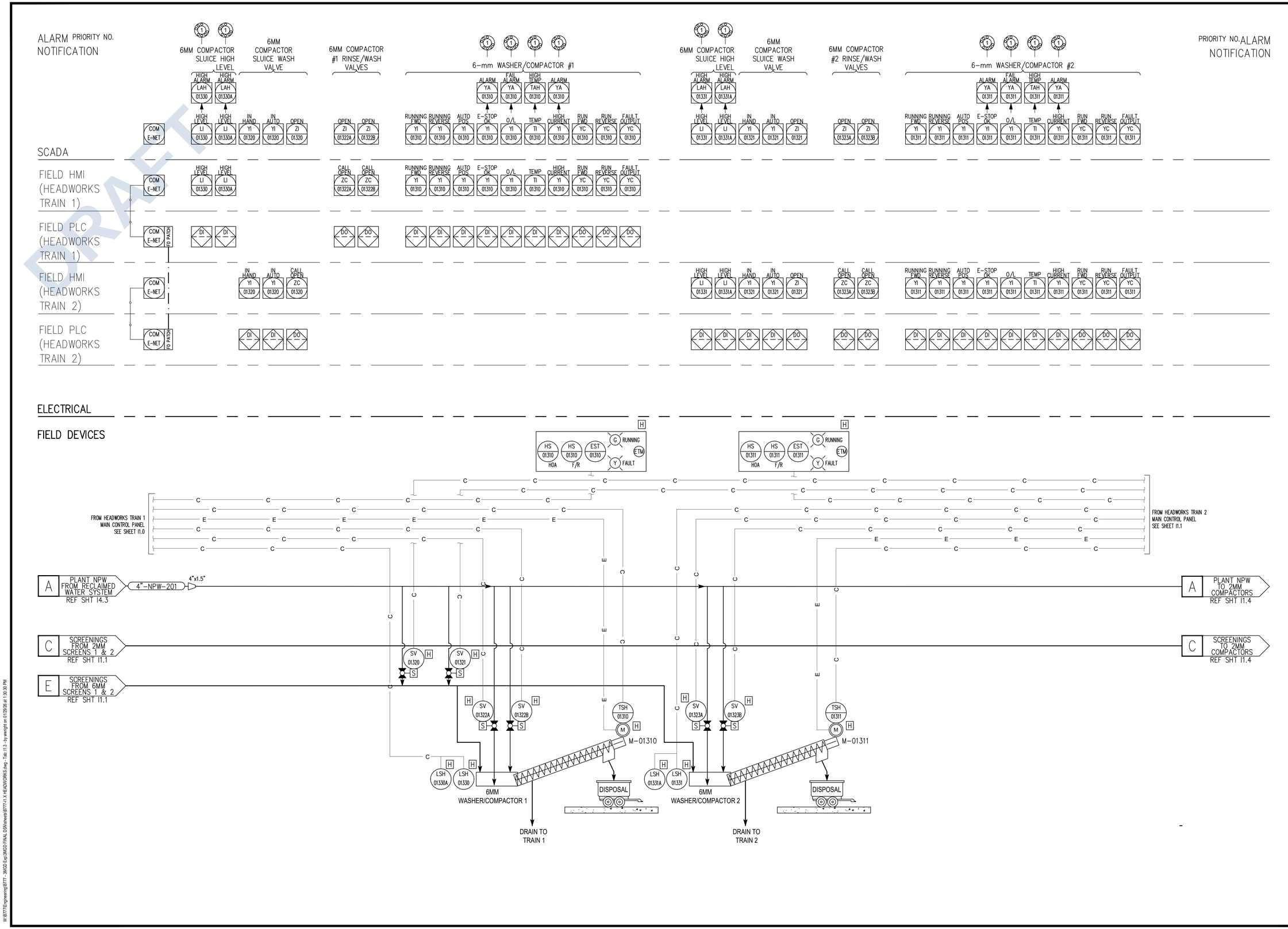

DRAFT

NO	BY	DATE	REVISIONS	DATE	APP.

Registered Professional Engineer (Civil) CERTIFICATE NO. 40050 DUONG T. DO Date Signed 12/31/26 ARIZONA, U.S.A. Expires 12/31/27

PREPARED BY DUONG DO
PROJECT ENGINEER R.C.E. NO. -- #40050
EXP. DATE
DRAWN WW, MSA
SCALE
DESIGNED NT, NE
CHECKED DD
DATE FEB 2026

TITLE
6MM WASHER COMPACTORS

JOB
CITY OF SAN LUIS WEST WWTP
3.0 MGD MBR UPGRADES
SAN LUIS AZ.

PACE
Advanced Water Engineering
8723 E. VIA de COMMERCIO, SUITE A-204 | SCOTTSDALE, CA 85258
P: (408) 991-3595 | www.pacewater.com

SHEET
I1.3
179 OF 209 SHEETS
JOB NO. B777

THESE DRAWINGS ARE THE PROPERTY OF P.A.C.E. AND SHALL NOT BE REPRODUCED IN ANY MANNER NOR BE USED FOR CONSTRUCTION UNLESS STAMPED "ISSUED FOR CONSTRUCTION".

FINAL PLANS ISSUED FOR BID

W:\B777\Engineering\B777 - 3MGD Exp\3MGD FINAL DSN\sheets\B777-I1.X HEADWORKS.dwg - Tab: I1.3 - by wwright on 01/29/26 at 1:30:30 PM

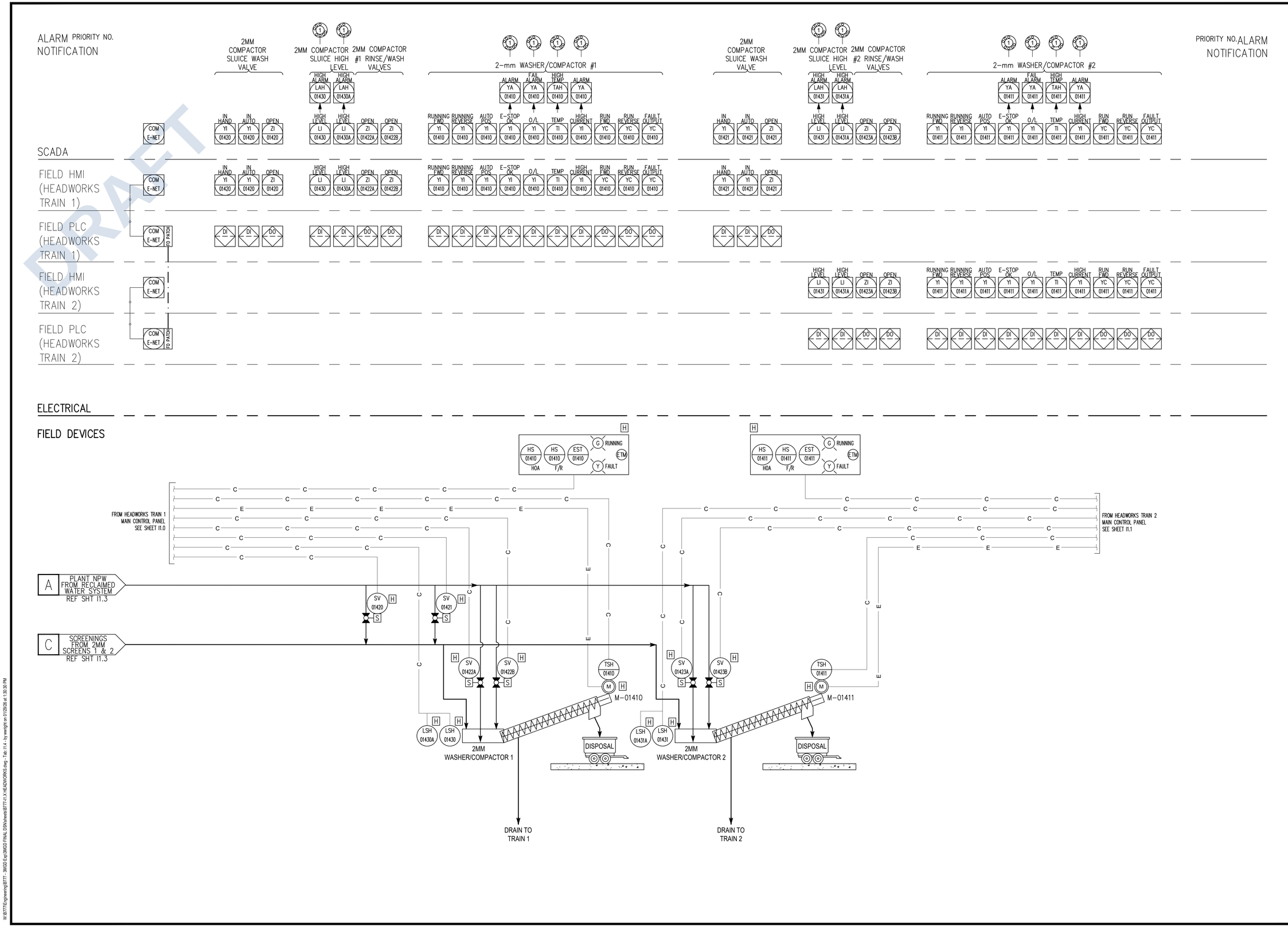

DRAFT

NO	BY	DATE	REVISIONS	DATE	APP.

Registered Professional Engineer (Civil) CERTIFICATE NO. 40050 DUONG T. DO Date Signed 12/31/24 ARIZONA, U.S.A. Expires 12/31/27

PREPARED BY DUONG DO
PROJECT ENGINEER R.C.E. NO. -- #40050
EXP. DATE
DRAWN WW, MSA
SCALE
DESIGNED NT, NE
CHECKED DD
DATE FEB 2026

TITLE
2MM WASHER COMPACTORS

JOB
CITY OF SAN LUIS WEST WWTP
3.0 MGD MBR UPGRADES
SAN LUIS AZ.

PACE Advanced Water Engineering
8723 E. VIA de COMMERCIO, SUITE A-204 | SCOTTSDALE, CA 85258
P: (408) 991-3595 | www.pacewater.com

SHEET
I1.4
180 OF 209 SHEETS
JOB NO. B777

THESE DRAWINGS ARE THE PROPERTY OF P.A.C.E. AND SHALL NOT BE REPRODUCED IN ANY MANNER NOR BE USED FOR CONSTRUCTION UNLESS STAMPED "ISSUED FOR CONSTRUCTION".

FINAL PLANS ISSUED FOR BID

W:\B777\Engineering\B777 - 3MGD Exp\3MGD FINAL DS\Sheets\B777-I1.X HEADWORKS.dwg - Tab: I1.4 - by wwright on 01/29/26 at 1:30:30 PM

DRAFT

ALARM PRIORITY NO.
NOTIFICATION

PRIORITY NO. ALARM
NOTIFICATION

SCADA

MAIN PLC
HMI

MAIN PLC

MAIN PLC
RIO

ELECTRICAL

FIELD DEVICES

COMBUSTIBLE GAS DETECTORS & HORN/STROBE LTS

MLSS CHANNEL FLOW METER

MLSS CHANNEL INLET VALVE

COM E-NET

FO PATCH

LEL ALARM YA 01590

LEL ALARM YA 01591

LEL YI 01590

GAS ALERT YC 01590

LEL YI 01591

GAS ALERT YC 01591

GPM FIR 01540

TOTAL FQI 01540

GPM

MG

LOW ALARM LAL 01523

OPEN YC 01523

OPENED YI 01523

CLOSED YI 01523

DI

DO

AI

(120 VAC) CB

(480 VAC) CB

C

E

CGD 01590

CGD 01591

COMBUSTIBLE GAS DETECTORS AND HORN/STROBE LIGHTS @ HEADWORKS AREA

MLSS SPLITTER BOX

B SCREENED INFLT FROM HEADWORKS TRAIN #1
REF SHT I1.0

B SCREENED INFLT FROM HEADWORKS TRAIN #2
REF SHT I1.1

PV-01521

PV-01522

PV-01523

20" x 16"

16" x 20"

FT 01540

FE 01540

FM-01540

ZSC 01523

ZSO 01523

XV 01523

M

20"-OF-008 A OVERFLOW TO FLOW EQ BASIN
REF. SHT I1.6

20"-MLSS-102 B SCREENED MLSS TO MLSS CHANNEL
REF. SHT I2.0

NO	BY	DATE	REVISIONS	DATE	APP.

Registered Professional Engineer (Civil)
DUONG T. DO
40050
Date Signed 12/31/25
ARIZONA, U.S.A.
Expires 12/31/27

PREPARED BY
DUONG DO
PROJECT ENGINEER
#40050
R.C.E. NO. / EXP. DATE

SCALE

DRAWN
WW, MSA

DESIGNED
NT, NE

CHECKED
DD

DATE
FEB 2026

THESE DRAWINGS ARE THE PROPERTY OF P.A.C.E. AND SHALL NOT BE REPRODUCED IN ANY MANNER NOR BE USED FOR CONSTRUCTION UNLESS STAMPED "ISSUED FOR CONSTRUCTION".

TITLE
MLSS SPLITTER BOX

JOB
CITY OF SAN LUIS WEST WWTP
3.0 MGD MBR UPGRADES
AZ.
SAN LUIS

PACE
Advanced Water Engineering
8723 E. VIA de COMMERCIO, SUITE A-204 | SCOTTSDALE, CA 85258
P: (408) 991-3595 | www.pacewater.com

FINAL PLANS ISSUED FOR BID

SHEET
I1.5
181 OF 209 SHEETS

JOB NO. B777

W:\B777\Engineering\B777 - 3MGD Exp\3MGD FINAL DSN\sheets\B777-I1.X HEADWORKS.dwg - Tab: I1.5 - by wwright on 01/29/26 at 1:30:39 PM

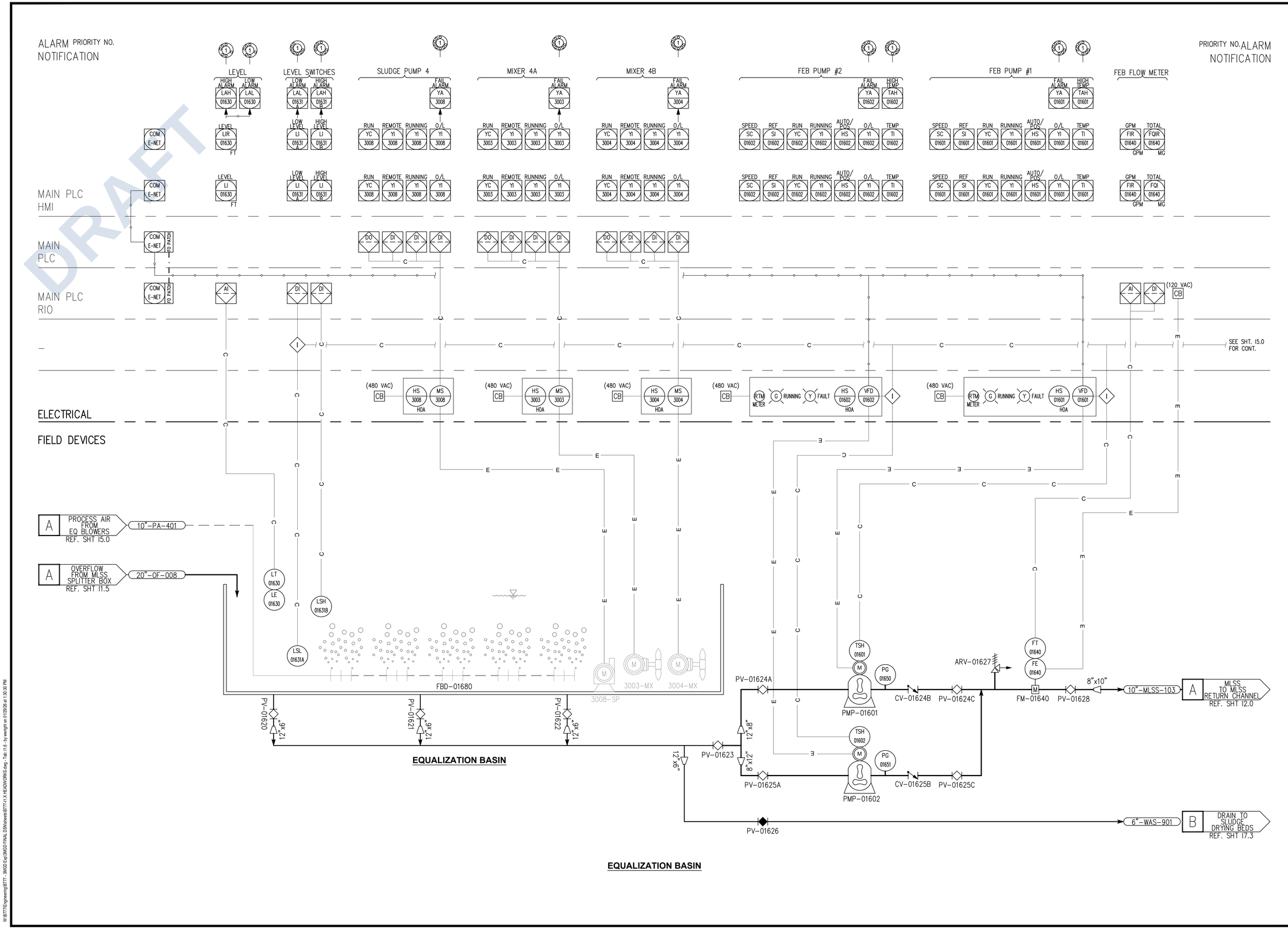

DRAFT

NO	BY	DATE	REVISIONS	DATE	APP.

Registered Professional Engineer (Civil) CERTIFICATE NO. 40050 DUONG T. DO Date Signed 12/31/27 ARIZONA, U.S.A. Expires 12/31/27

PREPARED BY DUONG DO
PROJECT ENGINEER
R.C.E. NO. -- #40050
EXP. DATE
DRAWN WW, MSA
SCALE
DESIGNED NT, NE
CHECKED DD
DATE FEB 2026

TITLE
EQ BASIN

JOB
CITY OF SAN LUIS WEST WWTP
3.0 MGD MBR UPGRADES
SAN LUIS AZ.

PACE
Advanced Water Engineering
8723 E. VIA de COMMERCIO, SUITE A-204 | SCOTTSDALE, CA 85258
P: (408) 991-3595 | www.pacewater.com

SHEET
I1.6
182 OF 209 SHEETS
JOB NO. B777

THESE DRAWINGS ARE THE PROPERTY OF P.A.C.E. AND SHALL NOT BE REPRODUCED IN ANY MANNER NOR BE USED FOR CONSTRUCTION UNLESS STAMPED "ISSUED FOR CONSTRUCTION".

FINAL PLANS ISSUED FOR BID

W:\B777\Engineering\B777 - 3MGD Exp\3MGD FINAL DS\Sheets\B777-I1.X HEADWORKS.dwg - Tab: I1.6 - by wwright on 01/29/26 at 1:30:30 PM

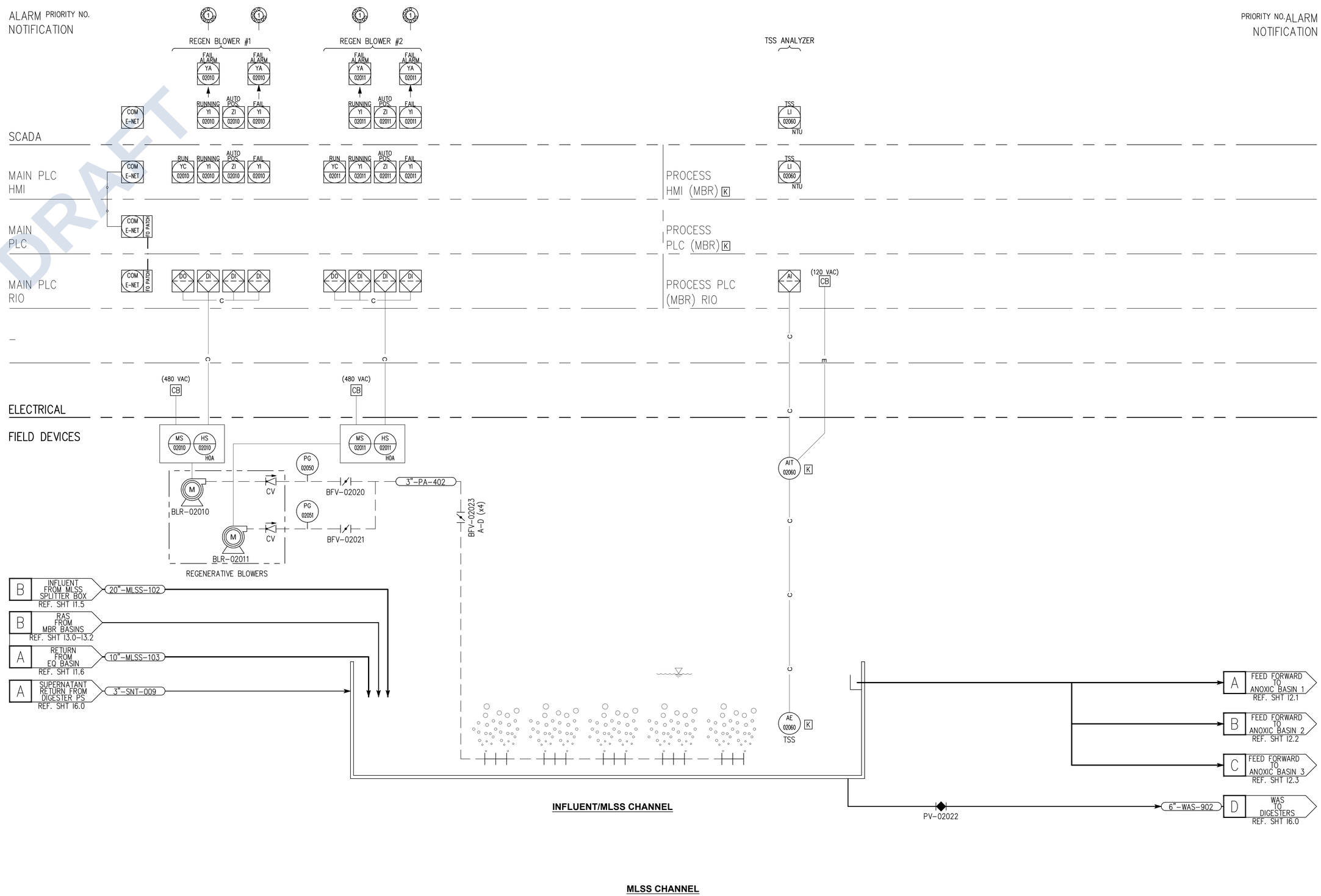

DRAFT

NO	BY	DATE	REVISIONS	DATE	APP.

Registered Professional Engineer (Civil) CERTIFICATE NO. 40050 DUONG T. DO Date Signed 12/31/21 ARIZONA, U.S.A. Expires 12/31/27

PREPARED BY DUONG DO
PROJECT ENGINEER
R.C.E. NO. -- #40050
EXP. DATE
DRAWN WW, MSA
SCALE
DESIGNED NT, NE
CHECKED DD
DATE FEB 2026

TITLE
MLSS CHANNEL

JOB
CITY OF SAN LUIS WEST WWTP
3.0 MGD MBR UPGRADES
SAN LUIS AZ.

PACE
Advanced Water Engineering
8723 E. VIA de COMMERCIO, SUITE A-204 | SCOTTSDALE, CA 85258
P: (408) 991-3595 | www.pacewater.com

SHEET
I2.0
183 OF 209 SHEETS
JOB NO. B777

THESE DRAWINGS ARE THE PROPERTY OF P.A.C.E. AND SHALL NOT BE REPRODUCED IN ANY MANNER NOR BE USED FOR CONSTRUCTION UNLESS STAMPED "ISSUED FOR CONSTRUCTION".

FINAL PLANS ISSUED FOR BID

W:\B777\Engineering\B777 - 3MGD Exp\3MGD FINAL DS\Sheets\B777-I2.X SECONDARY PROCESS.dwg - Tab: I2.0 - by wwright on 02/05/26 at 6:26:07 PM

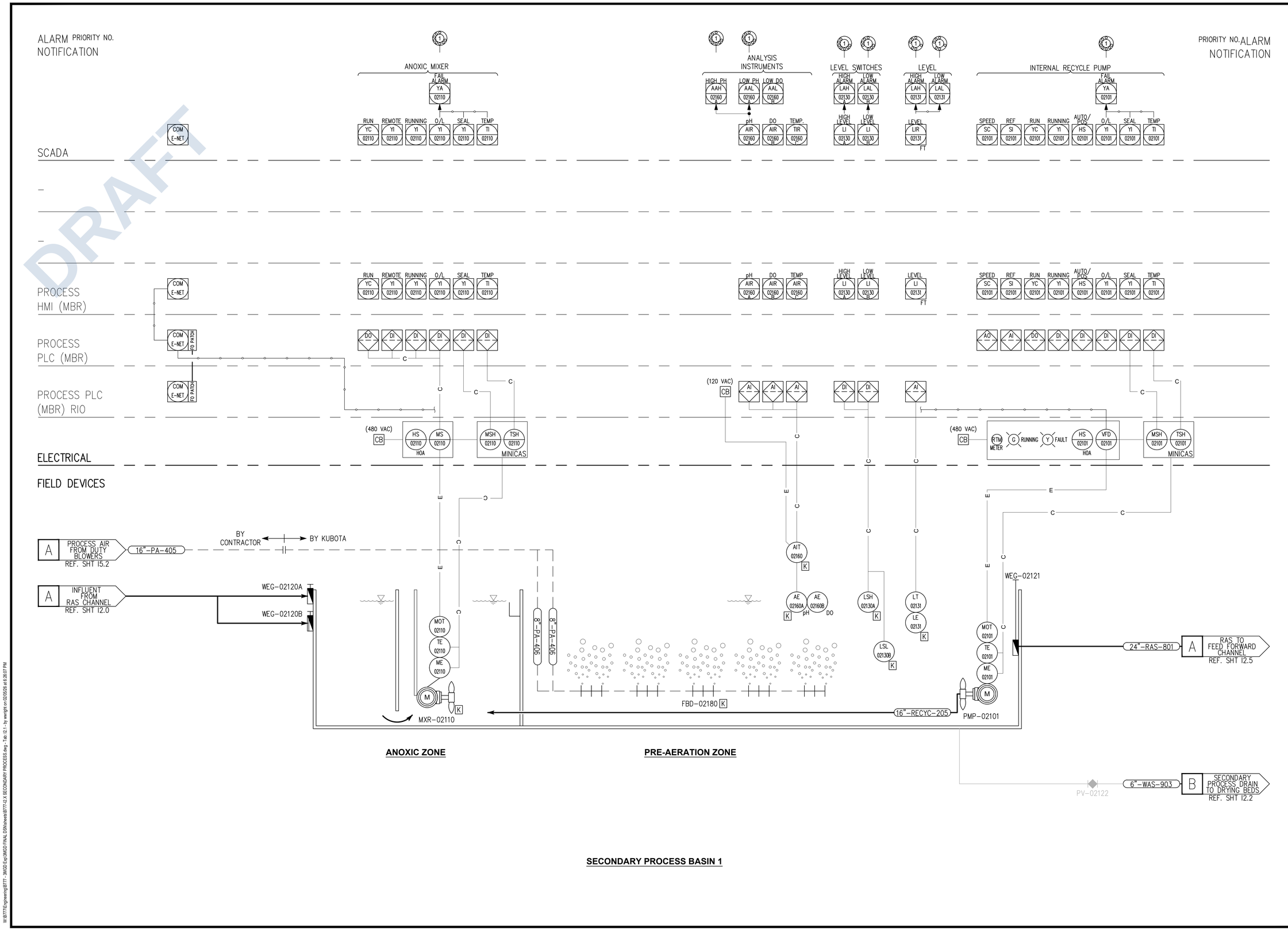

NO	BY	DATE	REVISIONS	DATE	APP.

Registered Professional Engineer (Civil) CERTIFICATE NO. 40050 DUONG T. DO Date Signed 12/31/21 ARIZONA, U.S.A. Expires 12/31/27

PREPARED BY DUONG DO
PROJECT ENGINEER R.C.E. NO. -- #40050
EXP. DATE
DRAWN WW, MSA
SCALE
DESIGNED NT, NE
CHECKED DD
DATE FEB 2026

TITLE
PROCESS BASIN #1

JOB
CITY OF SAN LUIS WEST WWTP
3.0 MGD MBR UPGRADES
SAN LUIS AZ.

PACE
Advanced Water Engineering
8723 E. VIA de COMMERCIO, SUITE A-204 | SCOTTSDALE, CA 85258
P: (408) 991-3595 | www.pacewater.com

SHEET
I2.1
184 OF 209 SHEETS
JOB NO. B777

THESE DRAWINGS ARE THE PROPERTY OF P.A.C.E. AND SHALL NOT BE REPRODUCED IN ANY MANNER NOR BE USED FOR CONSTRUCTION UNLESS STAMPED "ISSUED FOR CONSTRUCTION".

FINAL PLANS ISSUED FOR BID

W:\B777\Engineering\B777 - 3MGD Exp\3MGD FINAL DS\Nsheets\B777-I2.X SECONDARY PROCESS.dwg - Tab: I2.1 - by wwright on 02/05/26 at 6:26:07 PM

DRAFT

ALARM PRIORITY NO.
NOTIFICATION

PRIORITY NO. ALARM
NOTIFICATION

SCADA

PROCESS HMI (MBR)

PROCESS PLC (MBR)

PROCESS PLC (MBR) RIO

ELECTRICAL

FIELD DEVICES

ANOXIC MIXER — FAIL ALARM YA 02210 — RUN YC 02210 — REMOTE YI 02210 — RUNNING YI 02210 — O/L YI 02210 — SEAL YI 02210 — TEMP TI 02210

ANALYSIS INSTRUMENTS — HIGH PH AAH 02260 A — LOW PH AAL 02260 A — LOW DO AAL 02260 B — pH AIR 02260 A — DO AIR 02260 B — TEMP. TIR 02260 C

LEVEL SWITCHES — HIGH ALARM LAH 02230 A — LOW ALARM LAL 02230 A — HIGH LEVEL LI 02230 A — LOW LEVEL LI 02230 B

LEVEL — HIGH ALARM LAH 02231 — LOW ALARM LAL 02231 — LEVEL LIR 02231 FT

INTERNAL RECYCLE PUMP — FAIL ALARM YA 02201 — SPEED SC 02201 — REF SI 02201 — RUN YC 02201 — RUNNING YI 02201 — AUTO/POS HS 02201 — O/L YI 02201 — SEAL YI 02201 — TEMP TI 02201

COM E-NET — FO PATCH

(480 VAC) CB — HS 02210 — MS 02210 — HOA — MSH 02210 — TSH 02210 — MINICAS

(120 VAC) CB — AI — DI — AO

(480 VAC) CB — RTM METER — G RUNNING — Y FAULT — HS 02201 — VFD 02201 — HOA — MSH 02201 — TSH 02201 — MINICAS

B PROCESS AIR FROM DUTY BLOWERS REF. SHT I5.2 — 16"-PA-407 — BY CONTRACTOR ↔ BY KUBOTA

B INFLUENT FROM RAS CHANNEL REF. SHT I2.0 — WEG-02220A — WEG-02220B

MOT 02210 — TE 02210 — ME 02210 — M — K — MXR-02210

8"-PA-408

AIT 02260 K — AE 02260A pH K — AE 02260B DO

LSH 02230A K — LSL 02230B K — LT 02231 — LE 02231 K

WEG-02221

MOT 02201 — TE 02201 — ME 02201 — M — PMP-02201

16"-RECYC-000

FBD-02280 K

24"-RAS-802 — A RAS TO FEED FORWARD CHANNEL REF. SHT I2.5

6"-WAS-904A — PV-02222

6"-WAS-904B — PV-02223

B SECONDARY PROCESS DRAIN LINE REF. SHT I2.1 — 6"-WAS-903 — B SECONDARY PROCESS DRAIN TO DRYING BEDS REF. SHT I2.3

ANOXIC ZONE **PRE-AERATION ZONE**

SECONDARY PROCESS BASIN 2

NO	BY	DATE	REVISIONS	DATE	APP.

Registered Professional Engineer (Civil) — DUONG T. DO — 40050 — Date Signed 12/31/25 — ARIZONA, U.S.A. — Expires 12/31/27

PREPARED BY: DUONG DO — PROJECT ENGINEER — R.C.E. NO.: #40050 — EXP. DATE: —
DRAWN: WW, MSA — DESIGNED: NT, NE — CHECKED: DD — SCALE — DATE: FEB 2026

TITLE: **PROCESS BASIN #2**

JOB: CITY OF SAN LUIS WEST WWTP 3.0 MGD MBR UPGRADES — SAN LUIS AZ.

THESE DRAWINGS ARE THE PROPERTY OF P.A.C.E. AND SHALL NOT BE REPRODUCED IN ANY MANNER NOR BE USED FOR CONSTRUCTION UNLESS STAMPED "ISSUED FOR CONSTRUCTION".

PACE — Advanced Water Engineering — 8723 E. VIA de COMMERCIO, SUITE A-204 | SCOTTSDALE, CA 85258 — P: (408) 991-3595 | www.pacewater.com

SHEET I2.2 — 185 OF 209 SHEETS

JOB NO. B777

FINAL PLANS ISSUED FOR BID

W:\B777\Engineering\B777 - 3MGD Exp\3MGD FINAL DS\Sheets\B777-I2.X SECONDARY PROCESS.dwg - Tab: I2.2 - by kwright on 02/26/26 at 6:28:07 PM

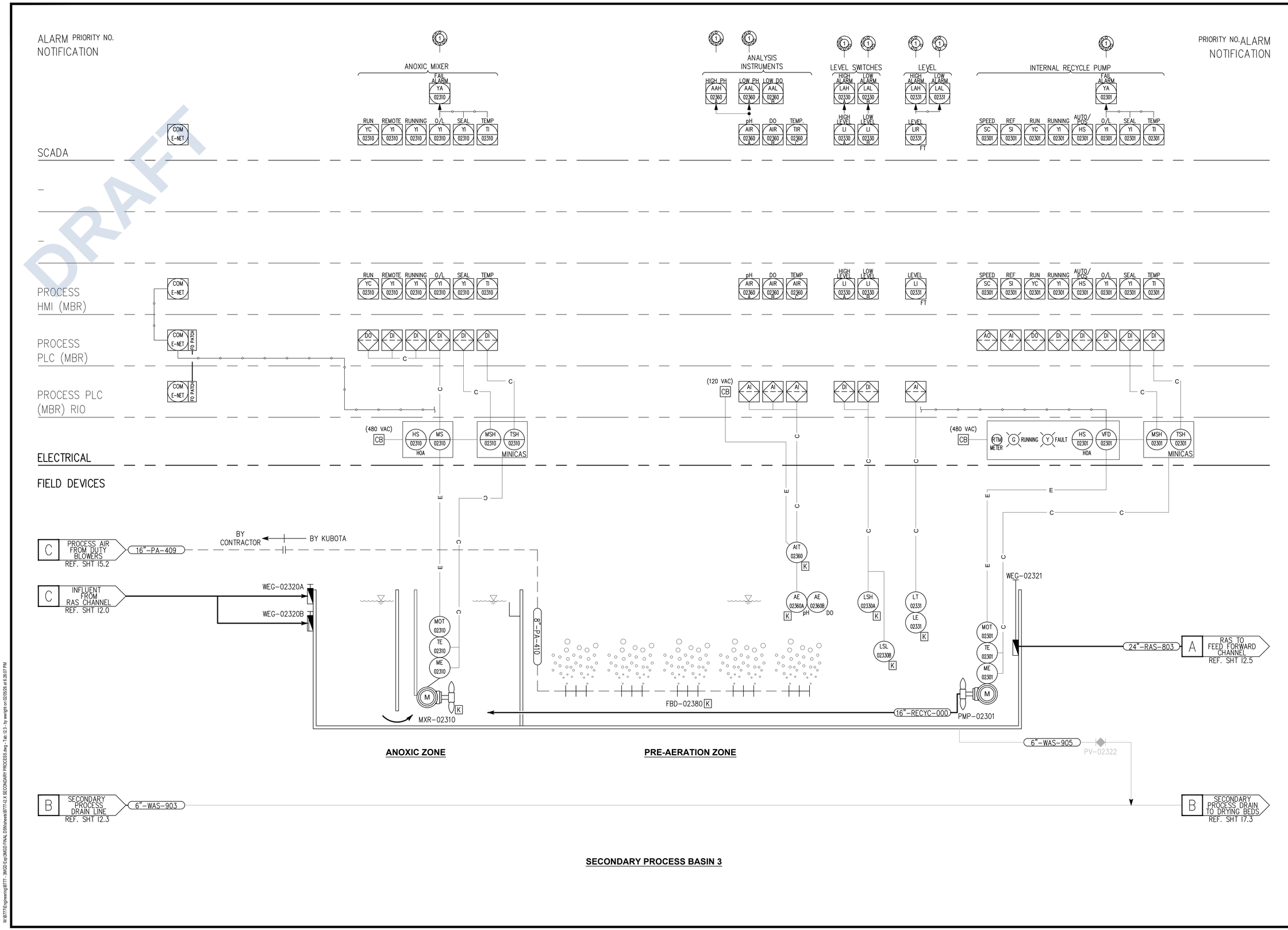

NO	BY	DATE	REVISIONS	DATE	APP.

Registered Professional Engineer (Civil)
CERTIFICATE NO. 40050
DUONG T. DO
Date Signed
ARIZONA, U.S.A.
Expires 12/31/27

PREPARED BY DUONG DO
PROJECT ENGINEER
R.C.E. NO. -- #40050
EXP. DATE
DRAWN WW, MSA
SCALE
DESIGNED NT, NE
CHECKED DD
DATE FEB 2026

TITLE
PROCESS BASIN #3

JOB
CITY OF SAN LUIS WEST WWTP
3.0 MGD MBR UPGRADES
SAN LUIS AZ.

PACE
Advanced Water Engineering
8723 E. VIA de COMMERCIO, SUITE A-204 | SCOTTSDALE, CA 85258
P: (408) 991-3595 | www.pacewater.com

SHEET
I2.3
186 OF 209 SHEETS
JOB NO. B777

THESE DRAWINGS ARE THE PROPERTY OF P.A.C.E. AND SHALL NOT BE REPRODUCED IN ANY MANNER NOR BE USED FOR CONSTRUCTION UNLESS STAMPED "ISSUED FOR CONSTRUCTION".

FINAL PLANS ISSUED FOR BID

W:\B777\Engineering\B777 - 3MGD Exp\3MGD FINAL DS\Nsheets\B777-I2.X SECONDARY PROCESS.dwg - Tab: I2.3 - by wwright on 02/05/26 at 6:26:07 PM

DRAFT

ALARM PRIORITY NO.
NOTIFICATION

PRIORITY NO. ALARM
NOTIFICATION

LEVEL

FUTURE FEED FORWARD PUMP #4

FEED FORWARD PUMP #3

FEED FORWARD PUMP #2

FEED FORWARD PUMP #1

SCADA

MAIN PLC HMI

MAIN PLC

MAIN PLC RIO

PROCESS HMI (MBR)

PROCESS PLC (MBR)

PROCESS PLC (MBR) RIO

ELECTRICAL

FIELD DEVICES

D — PROCESS AIR FROM DUTY BLOWERS — REF. SHT I5.2 — 3"-PA-411

BFV-02423

3"-PA-412

A — RAS FROM SECONDARY PROCESS BASIN 1 — REF. SHT I2.1 — 24"-RAS-801

A — RAS FROM ANOXIC BASIN 3 — REF. SHT I2.2 — 24"-RAS-802

A — RAS FROM ANOXIC BASIN 3 — REF. SHT I2.3 — 24"-RAS-803

FBD-02480

FUTURE PUMP PMP-02401

PMP-02402

PMP-02403

PMP-02404

20"-RAS-804

FEED FORWARD RETURN CHANNEL

36"-RAS-805

24"-RAS-806 — A — FEED FORWARD TO MBR BASIN 1 — REF. SHT I3.0

24"-RAS-807 — B — FEED FORWARD TO MBR BASIN 2 — REF. SHT I3.1

24"-RAS-808 — C — FEED FORWARD TO MBR BASIN 3 — REF. SHT I3.2

GV-02420 — TO FUTURE MBR BASIN 4

GV-02421 — TO FUTURE MBR BASIN 5

GV-02422 — TO FUTURE MBR BASIN 6

FEED FORWARD CHANNEL

NO	BY	DATE	REVISIONS	DATE	APP.

Registered Professional Engineer (Civil)
DUONG T. DO
40050
Date Signed 12/31/25
ARIZONA, U.S.A.
Expires 12/31/27

PREPARED BY
DUONG DO
PROJECT ENGINEER #40050
R.C.E. NO. —
EXP. DATE

DRAWN WW, MSA
DESIGNED NT, NE
CHECKED DD
SCALE
DATE FEB 2026

THESE DRAWINGS ARE THE PROPERTY OF P.A.C.E. AND SHALL NOT BE REPRODUCED IN ANY MANNER NOR BE USED FOR CONSTRUCTION UNLESS STAMPED 'ISSUED FOR CONSTRUCTION'.

TITLE
FEED FORWARD CHANNEL

JOB
CITY OF SAN LUIS WEST WWTP
3.0 MGD MBR UPGRADES
AZ.
SAN LUIS

PACE
Advanced Water Engineering
8723 E. VIA de COMMERCIO, SUITE A-204 | SCOTTSDALE, CA 85258
P: (408) 991-3995 | www.pacewater.com

FINAL PLANS ISSUED FOR BID

SHEET
I2.4
187 OF 209 SHEETS

JOB NO. B777

W:\B777\Engineering\B777 - 3MGD Exp\3MGD FINAL DSN\sheets\B777-I2.X SECONDARY PROCESS.dwg - Tab: I2.4 - by wwright on 02/05/26 at 6:28:07 PM

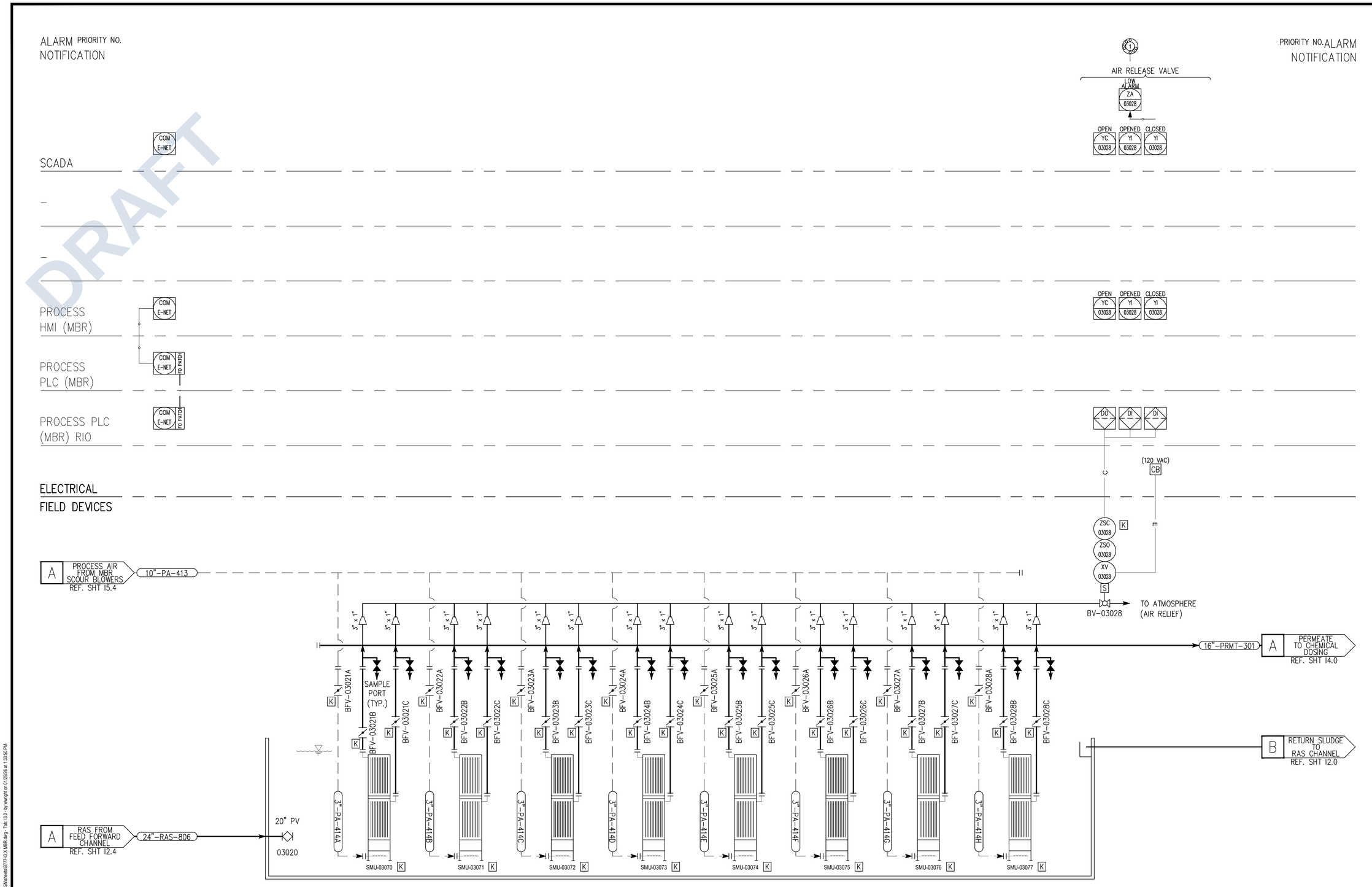

MBR BASIN 1

NO	BY	DATE	REVISIONS	DATE	APP.

Registered Professional Engineer (Civil) CERTIFICATE NO. 40050 DUONG T. DO Date Signed 12/31/24 ARIZONA, U.S.A. Expires 12/31/27

PREPARED BY DUONG DO
PROJECT ENGINEER
R.C.E. NO. -- #40050
EXP. DATE
DRAWN WW, MSA
SCALE
DESIGNED NT, NE
CHECKED DD
DATE FEB 2026

TITLE
MBR BASIN #1

JOB
CITY OF SAN LUIS WEST WWTP
3.0 MGD MBR UPGRADES
SAN LUIS AZ.

PACE
Advanced Water Engineering
8723 E. VIA de COMMERCIO, SUITE A-204 | SCOTTSDALE, CA 85258
P: (408) 991-3595 | www.pacewater.com

SHEET
I3.0
188 OF 209 SHEETS
JOB NO. B777

THESE DRAWINGS ARE THE PROPERTY OF P.A.C.E. AND SHALL NOT BE REPRODUCED IN ANY MANNER NOR BE USED FOR CONSTRUCTION UNLESS STAMPED "ISSUED FOR CONSTRUCTION".

FINAL PLANS ISSUED FOR BID

W:\B777\Engineering\B777 - 3MGD Exp\3MGD FINAL DS\Nsheets\B777-I3.X MBR.dwg - Tab: I3.0 - by wwright on 01/29/26 at 1:33:50 PM

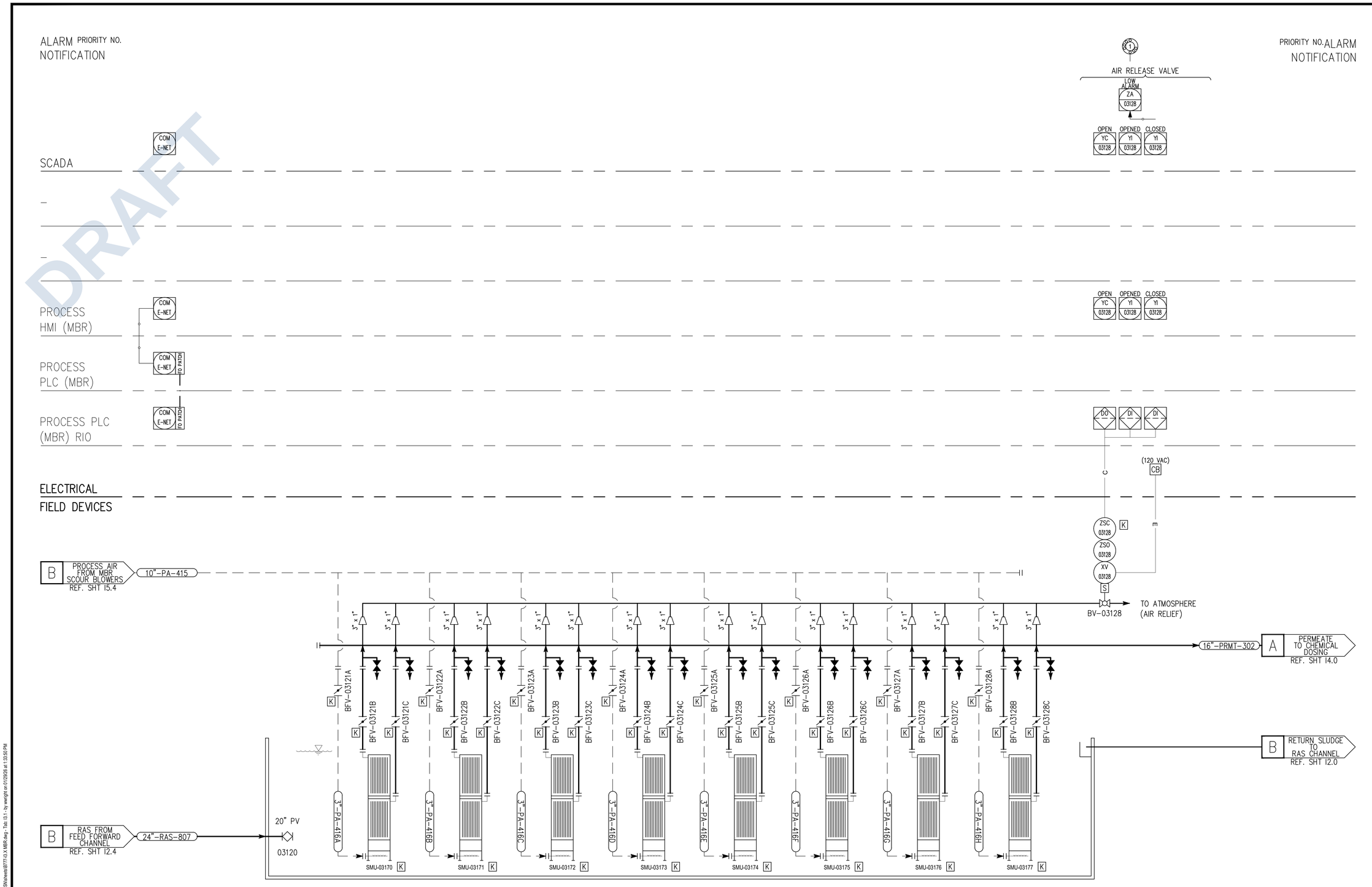

MBR BASIN 2

DRAFT

NO	BY	DATE	REVISIONS	DATE	APP.

Registered Professional Engineer (Civil) CERTIFICATE NO. 40050 DUONG T. DO Date Signed 12/31/24 ARIZONA, U.S.A. Expires 12/31/27

PREPARED BY DUONG DO
PROJECT ENGINEER
R.C.E. NO. -- #40050
EXP. DATE
DRAWN WW, MSA
SCALE
DESIGNED NT, NE
CHECKED DD
DATE FEB 2026

TITLE
MBR BASIN #2

JOB
CITY OF SAN LUIS WEST WWTP
3.0 MGD MBR UPGRADES
SAN LUIS AZ.

PACE
Advanced Water Engineering
8723 E. VIA de COMMERCIO, SUITE A-204 | SCOTTSDALE, CA 85258
P: (408) 991-3595 | www.pacewater.com

SHEET
I3.1
189 OF 209 SHEETS
JOB NO. B777

THESE DRAWINGS ARE THE PROPERTY OF P.A.C.E. AND SHALL NOT BE REPRODUCED IN ANY MANNER NOR BE USED FOR CONSTRUCTION UNLESS STAMPED "ISSUED FOR CONSTRUCTION".

FINAL PLANS ISSUED FOR BID

W:\B777\Engineering\B777 - 3MGD Exp\3MGD FINAL DS\Nsheets\B777-I3.X MBR.dwg - Tab: I3.1 - by wwright on 01/29/26 at 1:33:50 PM

ALARM PRIORITY NO.
NOTIFICATION

PRIORITY NO. ALARM
NOTIFICATION

DRAFT

SCADA

PROCESS HMI (MBR)

PROCESS PLC (MBR)

PROCESS PLC (MBR) RIO

ELECTRICAL

FIELD DEVICES

COM E-NET

FO PATCH

AIR RELEASE VALVE
LOW ALARM ZA 03228

OPEN YC 03228 | OPENED YI 03228 | CLOSED YI 03228

DO | DI | DI

(120 VAC) CB

ZSC 03228 K
ZSO 03228
XV 03228 S

BV-03228 TO ATMOSPHERE (AIR RELIEF)

C PROCESS AIR FROM MBR SCOUR BLOWERS REF. SHT I5.4 — 10"-PA-417

16"-PRMT-303 — A PERMEATE TO CHEMICAL DOSING REF. SHT I4.0

B RETURN SLUDGE TO RAS CHANNEL REF. SHT I2.0

C RAS FROM FEED FORWARD CHANNEL REF. SHT I2.4 — 24"-RAS-808

20" PV 03220

3" x 1"

BFV-03221A | BFV-03221B | BFV-03221C
BFV-03222A | BFV-03222B | BFV-03222C
BFV-03223A | BFV-03223B | BFV-03223C
BFV-03224A | BFV-03224B | BFV-03224C
BFV-03225A | BFV-03225B | BFV-03225C
BFV-03226A | BFV-03226B | BFV-03226C
BFV-03227A | BFV-03227B | BFV-03227C
BFV-03228A | BFV-03228B | BFV-03228C

3"-PA-418A | 3"-PA-418B | 3"-PA-418C | 3"-PA-418D | 3"-PA-418E | 3"-PA-418F | 3"-PA-418G | 3"-PA-418H

SMU-03270 K | SMU-03271 K | SMU-03272 K | SMU-03273 K | SMU-03274 K | SMU-03275 K | SMU-03276 K | SMU-03277 K

MBR BASIN 3

NO	BY	DATE	REVISIONS	DATE	APP.

Registered Professional Engineer (Civil) — DUONG T. DO — 40050 — Arizona, U.S.A. — Date Signed 3-5-26 — Expires 12/31/27

PREPARED BY: DUONG DO
PROJECT ENGINEER: #40050
R.C.E. NO.: 40050
EXP. DATE:
DRAWN: WW, MSA
SCALE:
DESIGNED: NT, NE
CHECKED: DD
DATE: FEB 2026

THESE DRAWINGS ARE THE PROPERTY OF P.A.C.E. AND SHALL NOT BE REPRODUCED IN ANY MANNER NOR BE USED FOR CONSTRUCTION UNLESS STAMPED "ISSUED FOR CONSTRUCTION".

TITLE: **MBR BASIN #3**

JOB: CITY OF SAN LUIS WEST WWTP
3.0 MGD MBR UPGRADES
SAN LUIS AZ.

PACE
Advanced Water Engineering
8723 E. VIA de COMMERCIO, SUITE A-204 | SCOTTSDALE, CA 85258
P: (408) 991-3595 | www.pacewater.com

FINAL PLANS ISSUED FOR BID

SHEET I3.2
190 OF 209 SHEETS

JOB NO. B777

W:\B777\Engineering\B777 - 3MGD Exp\3MGD FINAL DSN\sheets\B777-I3.2 X MBR.dwg - Tab: I3.2 - by wwright on 01/29/26 at 13:50 PM

DRAFT

ALARM PRIORITY NO.
NOTIFICATION

PRIORITY NO. ALARM
NOTIFICATION

SCADA

PROCESS
HMI (MBR)

PROCESS
PLC (MBR)

PROCESS PLC
(MBR) RIO

ELECTRICAL

FIELD DEVICES

COM
E-NET

FO PATCH

PRESSURE TRANSMITTER
LOW ALARM
LAL 04052
PRESSURE PIR 04052

PRESSURE TRANSMITTER
LOW ALARM
LAL 04051
PRESSURE PIR 04051

PRESSURE TRANSMITTER
LOW ALARM
LAL 04050
PRESSURE PIR 04050

PERMEATE FLOW METER
GPM FIR 04042 GPM
TOTAL FQIR 04042 MG

PERMEATE FLOW METER
GPM FIR 04041 GPM
TOTAL FQIR 04041 MG

PERMEATE FLOW METER
GPM FIR 04040 GPM
TOTAL FQIR 04040 MG

CIP CONTROL VALVE
FAIL ALARM
ZA 04027
OPEN YC 04027
OPENED YI 04027
CLOSED YI 04027

CIP CONTROL VALVE
FAIL ALARM
ZA 04028
OPEN YC 04028
OPENED YI 04028
CLOSED YI 04028

CIP CONTROL VALVE
FAIL ALARM
ZA 04029
OPEN YC 04029
OPENED YI 04029
CLOSED YI 04029

PERMEATE CONTROL VALVE
FAIL ALARM
ZA 04024
OPEN YC 04024
OPENED YI 04024
CLOSED YI 04024

PERMEATE CONTROL VALVE
FAIL ALARM
ZA 04025
OPEN YC 04025
OPENED YI 04025
CLOSED YI 04025

PERMEATE CONTROL VALVE
FAIL ALARM
ZA 04026
OPEN YC 04026
OPENED YI 04026
CLOSED YI 04026

AI
DI
DO
(120 VAC) CB

A PERMEATE FROM MBR BASIN 1 REF. SHT I3.0
16"-PRMT-301
16" x 12"
PT 04050 K
BV-04021
BFV-04021
FT 04040
FE 04040 K
FM-04040
ZSC 04024
ZSO 04024
XV 04024 M
BFV-04024
12"-PRMT-301
A PERMEATE REF. SHT I4.1

A PERMEATE FROM MBR BASIN 2 REF. SHT I3.1
16"-PRMT-302
16" x 12"
PT 04051 K
BV-04022
BFV-04022
FT 04041
FE 04041 K
FM-04041
ZSC 04025
ZSO 04025
XV 04025 M
BFV-04025
12"-PRMT-302
B PERMEATE REF. SHT I4.1

A PERMEATE FROM MBR BASIN 3 REF. SHT I3.2
16"-PRMT-303
16" x 12"
PT 04052 K
BV-04023
BFV-04023
FT 04042
FE 04042 K
FM-04042
ZSC 04026
ZSO 04026
XV 04026 M
BFV-04026
12"-PRMT-303
C PERMEATE REF. SHT I4.1

BFV-04020A
BFV-04020B
BFV-04020C
6"x4"

ZSC 04027
ZSO 04027
XV 04027 M
BFV-04027
ZSC 04028
ZSO 04028
XV 04028 M
BFV-04028
ZSC 04029
ZSO 04029
XV 04029 M
BFV-04029
BFV-04027
6"-DR-010
D CIP DRAIN TO PLANT DRAIN REF. SHT I7.2

A CIP FROM CIP SYSTEM REF. SHT I4.4
6"-CIP-501

CIP INJECTION

NO	BY	DATE	REVISIONS	DATE	APP.

Registered Professional Engineer (Civil)
DUONG T. DO
40050
Date Signed 12/31/25
ARIZONA, U.S.A.
Expires 12/31/27

PREPARED BY
DUONG DO
PROJECT ENGINEER
R.C.E. NO. #40050
EXP. DATE

DRAWN WW, MSA
DESIGNED NT, NE
CHECKED DD
SCALE
DATE FEB 2026

THESE DRAWINGS ARE THE PROPERTY OF P.A.C.E. AND SHALL NOT BE REPRODUCED IN ANY MANNER NOR BE USED FOR CONSTRUCTION UNLESS STAMPED "ISSUED FOR CONSTRUCTION".

TITLE
CIP INJECTION

JOB
CITY OF SAN LUIS WEST WWTP
3.0 MGD MBR UPGRADES
AZ.
SAN LUIS

PACE
Advanced Water Engineering
8723 E. VIA de COMMERCIO, SUITE A-204 | SCOTTSDALE, CA 85258
P: (408) 991-3595 | www.pacewater.com

FINAL PLANS ISSUED FOR BID

SHEET
I4.0
191 OF 209 SHEETS

JOB NO. B777

W:\B777\Engineering\B777 - 3MGD Exp\3MGD FINAL DS\Sheets\B777-I4.X EFFLUENT.dwg - Tab: I4.0 - by wwright on 12/26/25 at 2:41:44 PM

DRAFT

ALARM PRIORITY NO.
NOTIFICATION

	TURBIDITY	TURBIDITY	TURBIDITY	EXHAUST FAN #1	EXHAUST FAN #2	EXHAUST FAN #3	EXHAUST FAN #4	COMBUSTIBLE GAS DETECTORS					STROBE LIGHTS						HORN/STROBE LIGHT	MANDOWN SWITCHES				
PRIORITY NO. ALARM NOTIFICATION	2	2	2	1	1	1	1	1	1	1	1	1	1	1	1	1	1	1	1	1	1	1	1	1
SCADA	TURBIDITY LI 04161 NTU	TURBIDITY LI 04163 NTU	TURBIDITY LI 04165 NTU	FAIL ALARM YA 04110	FAIL ALARM YA 04111	FAIL ALARM YA 04112	FAIL ALARM YA 04113	LEL ALARM YA 04190	LEL ALARM YA 04191	LEL ALARM YA 04192	LEL ALARM YA 04193	LEL ALARM YA 04193A	GAS ALERT YC 04194	GAS ALERT YC 04195	GAS ALERT YC 04196	GAS ALERT YC 04197	GAS ALERT YC 04198	GAS ALERT YC 04199	GAS ALERT YC 04199A	MANDWN ALARM YA 04199B	MANDWN ALARM YA 04199C	MANDWN ALARM YA 04199D	MANDWN ALARM YA 04199E	MANDWN ALARM YA 04199F
MAIN PLC HMI	TURBIDITY LI 04161 NTU	TURBIDITY LI 04163 NTU	TURBIDITY LI 04165 NTU	FAIL YI 04110	RUNNING YI 04110 / HOA IN AUTO YI 04110 / FAIL YI 04111	RUNNING YI 04111 / HOA IN AUTO YI 04111 / FAIL YI 04112	RUNNING YI 04112 / HOA IN AUTO YI 04112 / FAIL YI 04113	RUNNING YI 04113 / HOA IN AUTO YI 04113	LEL YI 04190	LEL YI 04191	LEL YI 04192	LEL YI 04193	LEL YI 04193A	GAS ALERT YC 04194	GAS ALERT YC 04195	GAS ALERT YC 04196	GAS ALERT YC 04197	GAS ALERT YC 04198	GAS ALERT YC 04199	GAS ALERT 04199A	MAN–DOWN YI 04199B	MAN–DOWN YI 04199C	MAN–DOWN YI 04199D	MAN–DOWN YI 04199E	MAN–DOWN YI 04199F
MAIN PLC																								
MAIN PLC RIO				DI	DI	DI	DI	DI	DI	DI	DI	DI	DO	DO	DO	DO	DO	DO	DO	DI	DI	DI	DI	DI
PROCESS HMI (MBR)	TSS LI 04161 NTU	TSS LI 04163 NTU	TSS LI 04165 NTU																					
PROCESS PLC (MBR)	AI	AI	AI																					
PROCESS PLC (MBR) RIO	AI (120 VAC) CB	AI (120 VAC) CB	AI (120 VAC) CB	(120 VAC) CB	(120 VAC) CB	(120 VAC) CB	(120 VAC) CB	(120 VAC) CB	CGD 04190	CGD 04191	CGD 04192	CGD 04193	CGD 04193A							MDN 04199B	MDN 04199C	MDN 04199D	MDN 04199E	MDN 04199F

ELECTRICAL

FIELD DEVICES

M–04110 M–04111 M–04112 M–04113 M–04114

LOCATED AT PIPE GALLERIES/BLOWER RM

A — PERMEATE FROM CIP REF SHT I4.0 — 12"–PRMT–301 — BV–04120 — AE 04160 — AIT 04161 — TURBIDITY METER — TO CIP DRAIN

B — PERMEATE FROM CIP REF SHT I4.0 — 12"–PRMT–302 — BV–04121 — AE 04162 — AIT 04163 — TURBIDITY METER — TO CIP DRAIN

C — PERMEATE FROM CIP REF SHT I4.0 — 12"–PRMT–303 — BV–04122 — AE 04164 — AIT 04165 — TURBIDITY METER — TO CIP DRAIN

BFV–04123

BFV–04124

BFV–04125

24"–PRMT–304 — A — PERMEATE TO EFFLUENT PUMP STATION REF. SHT I4.2

CHEMICAL ANALYZERS

NO	BY	DATE	REVISIONS	DATE	APP.

Registered Professional Engineer (Civil) — DUONG T. DO — 40050 — Date Signed 12/31/27 — ARIZONA, U.S.A. — Expires 12/31/27

PREPARED BY: DUONG DO
PROJECT ENGINEER #40050
R.C.E. NO. —
EXP. DATE
DRAWN: WW, MSA
DESIGNED: NT, NE
CHECKED: DD
SCALE
DATE: FEB 2026

THESE DRAWINGS ARE THE PROPERTY OF P.A.C.E. AND SHALL NOT BE REPRODUCED IN ANY MANNER NOR BE USED FOR CONSTRUCTION UNLESS STAMPED "ISSUED FOR CONSTRUCTION".

TITLE: CHEMICAL ANALYZER

JOB: CITY OF SAN LUIS WEST WWTP
3.0 MGD MBR UPGRADES
SAN LUIS AZ.

PACE Advanced Water Engineering
8723 E. VIA de COMMERCIO, SUITE A-204 | SCOTTSDALE, CA 85258
P: (408) 991-3595 | www.pacewater.com

FINAL PLANS ISSUED FOR BID

SHEET I4.1
192 OF 209 SHEETS

JOB NO. B777

W:\B777\Engineering\B777 - 3MGD Exp\3MGD FINAL DS\Revised\B777-I4.X EFFLUENT.dwg - Tab: I4.1 - by wwright on 02/06/26 at 2:41:44 PM

DRAFT

ALARM PRIORITY NO.
NOTIFICATION

PRIORITY NO. ALARM
NOTIFICATION

SCADA

MAIN PLC HMI

MAIN PLC

ELECTRICAL

FIELD DEVICES

EFFLUENT FLOW METER

EFFLUENT PUMP #1

EFFLUENT PUMP #2

COM E-NET

GPM FIR 04240 GPM

TOTAL FQIR 04240 MG

FAIL ALARM YA 5001P

FAIL ALARM YA 5002P

O/L YI 5001P

RUN YC 5001P

RUNNING YI 5001P

AUTO POS ZI 5001P

O/L YI 5002P

RUN YC 5002P

RUNNING YI 5002P

AUTO POS ZI 5002P

AI

DI

DO

(120 VAC) CB

(480 VAC) CB

MA 5001P LEAK

TS 5001P TEMP

HS 5001P

MS 5001P HOA

MA 5002P LEAK

TS 5002P TEMP

HS 5002P

MS 5002P HOA

C

E

FT 04240

FE 04240

M FM-04240

A PERMEATE FROM MBR REF SHT I4.2

24"-PRMT-304

24" x 18"

BFV-04224

CV-04225

BFV-04226

18"-PRMT-305

A EFFLUENT TO WELLTON-MOHAWK BYPASS CANAL REF. SHT I4.3

BFV-04221

BFV-04227

04222A

CV-04222B

BFV-04222C

5001P

BFV-04223A

CV-04223B

BFV-04223C

5002P

B NaOCl FROM CHEM STORAGE REF. SHT I4.5

3/4"-CDS-502

EFFLUENT PUMP STATION

NO	BY	DATE	REVISIONS	DATE	APP.

Registered Professional Engineer (Civil) DUONG T. DO 40050 Date Signed 12/31/25 ARIZONA, U.S.A. Expires 12/31/27

PREPARED BY DUONG DO
PROJECT ENGINEER #40050
R.C.E. NO. 1—
EXP. DATE
DRAWN WW, MSA
DESIGNED NT, NE
CHECKED DD
SCALE
DATE FEB 2026

THESE DRAWINGS ARE THE PROPERTY OF P.A.C.E. AND SHALL NOT BE REPRODUCED IN ANY MANNER NOR BE USED FOR CONSTRUCTION UNLESS STAMPED "ISSUED FOR CONSTRUCTION".

TITLE
EFFLUENT PUMP STATION

JOB
CITY OF SAN LUIS WEST WWTP
3.0 MGD MBR UPGRADES
SAN LUIS AZ.

PACE
Advanced Water Engineering
8723 E. VIA de COMMERCIO, SUITE A-204 | SCOTTSDALE, CA 85258
P: (408) 991-3595 | www.pacewater.com

SHEET
I4.2
193 OF 209 SHEETS

JOB NO. B777

FINAL PLANS ISSUED FOR BID

W:\B777\Engineering\B777 - 3MGD Exp\3MGD FINAL DSN\sheets\B777-I4.X EFFLUENT .dwg - Tab: I4.2 - by wwright on 02/06/26 at 2:41:44 PM

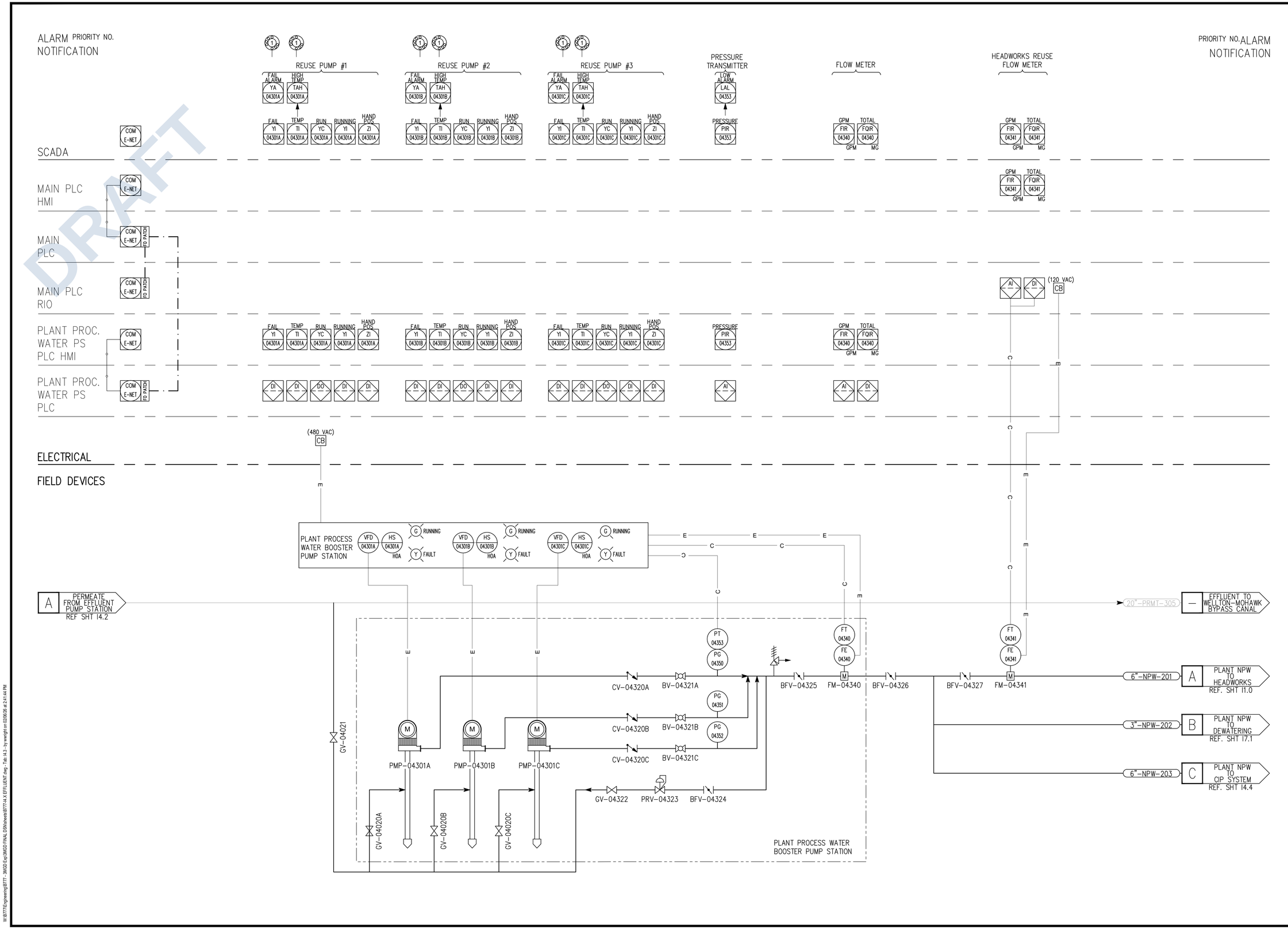

DRAFT

NO	BY	DATE	REVISIONS	DATE	APP.

Registered Professional Engineer (Civil) CERTIFICATE NO. 40050 DUONG T. DO Date Signed 12/31/24 ARIZONA, U.S.A. Expires 12/31/27

PREPARED BY DUONG DO
PROJECT ENGINEER
R.C.E. NO. -- #40050
EXP. DATE
DRAWN WW, MSA
SCALE
DESIGNED NT, NE
CHECKED DD
DATE FEB 2026

TITLE
PLANT PROCESS WATER BOOSTER PUMP STATION

JOB
CITY OF SAN LUIS WEST WWTP
3.0 MGD MBR UPGRADES
SAN LUIS AZ.

PACE
Advanced Water Engineering
8723 E. VIA de COMMERCIO, SUITE A-204 | SCOTTSDALE, CA 85258
P: (408) 991-3595 | www.pacewater.com

SHEET
I4.3
194 OF 209 SHEETS
JOB NO. B777

FINAL PLANS ISSUED FOR BID

THESE DRAWINGS ARE THE PROPERTY OF P.A.C.E. AND SHALL NOT BE REPRODUCED IN ANY MANNER NOR BE USED FOR CONSTRUCTION UNLESS STAMPED "ISSUED FOR CONSTRUCTION".

W:\B777\Engineering\B777 - 3MGD Exp\3MGD FINAL DS\Sheets\B777-I4.X EFFLUENT.dwg - Tab: I4.3 - by wwright on 02/06/26 at 2:41:44 PM

ALARM PRIORITY NO.
NOTIFICATION

PRIORITY NO. ALARM
NOTIFICATION

DILUTION WATER CONTROL VALVE
FAIL ALARM ZA 04424
OPEN YC 04424
OPENED YI 04424

CHEM FLOW METER
GPM FIR 04440 GPM
TOTAL FQIR 04440 MG

SCADA

PROCESS HMI (MBR)
COM E-NET

PROCESS PLC (MBR)
COM E-NET
RS PATCH

OPEN YC 04424
OPENED YI 04424
SCFM FIR 04440 GPM
TOTAL FQIR 04440 MG

DO
DI
AI
DI
(120 VAC) CB

ELECTRICAL

(120VAC) CB

FIELD DEVICES

ZSC 04424 K
ZSO 04424
XV 04424 M

FT 04440 K
FE 04440
M

C PLANT NPW FROM RECLAIMED WATER SYSTEM REF. SHT I4.3
6"-NPW-203
PRV-04424A K
BV-04424
BV-04425
BV-04426
BV-04429
FM-04440
6"-CIP-501
A CIP TO PERMEATE COLLECTION 1 REF. SHT I4.0

3/4"
PG 04450 K
1/2"
6" X 4"
1 1/2" X 3/4"
K
1 1/2" X 3/4"
4" X 6"
PG 04451 K
1/2"
CV-04327
1"
BV-04328
TO CIP DRAIN

BV-04421A K
BV-04421B K

A NaOCl FROM CHEM STORAGE I REF. SHT I4.5
3/4"-CDS-504
BV-04420A K
BV-04422A K
CV-04423A K

A CITRIC ACID FROM CHEM STORAGE II REF. SHT I4.5
3/4"-CDS-505
BV-04420B K
BV-04422B K
CV-04423B K

1" X 3/4"
1" ROTOMETER RM-XX K
1" X 3/4"

PROVIDED BY KUBOTA

CIP SYSTEM

DRAFT

W:\B777\Engineering\B777 - 3MGD Exp\3MGD FINAL DSNsheets\B777-I4.X EFFLUENT.dwg - Tab: I4.4 - by wwright on 02/06/26 at 2:41:44 PM

NO	BY	DATE	REVISIONS	DATE	APP.

Registered Professional Engineer (Civil) — DUONG T. DO — 40050 — Arizona, U.S.A. — Date Signed 12/31/25 — Expires 12/31/27

PREPARED BY: DUONG DO
PROJECT ENGINEER: #40050
R.C.E. NO.: 1—
EXP. DATE:
SCALE:
DRAWN: WW, MSA
DESIGNED: NT, NE
CHECKED: DD
DATE: FEB 2026

THESE DRAWINGS ARE THE PROPERTY OF P.A.C.E. AND SHALL NOT BE REPRODUCED IN ANY MANNER NOR BE USED FOR CONSTRUCTION UNLESS STAMPED "ISSUED FOR CONSTRUCTION".

TITLE: CIP SYSTEM

JOB: CITY OF SAN LUIS WEST WWTP
3.0 MGD MBR UPGRADES
AZ.
SAN LUIS

PACE
Advanced Water Engineering
8723 E. VIA de COMMERCIO, SUITE A-204 | SCOTTSDALE, CA 85258
P: (408) 991-3595 | www.pacewater.com

FINAL PLANS ISSUED FOR BID

SHEET
I4.4
195 OF 209 SHEETS

JOB NO. B777

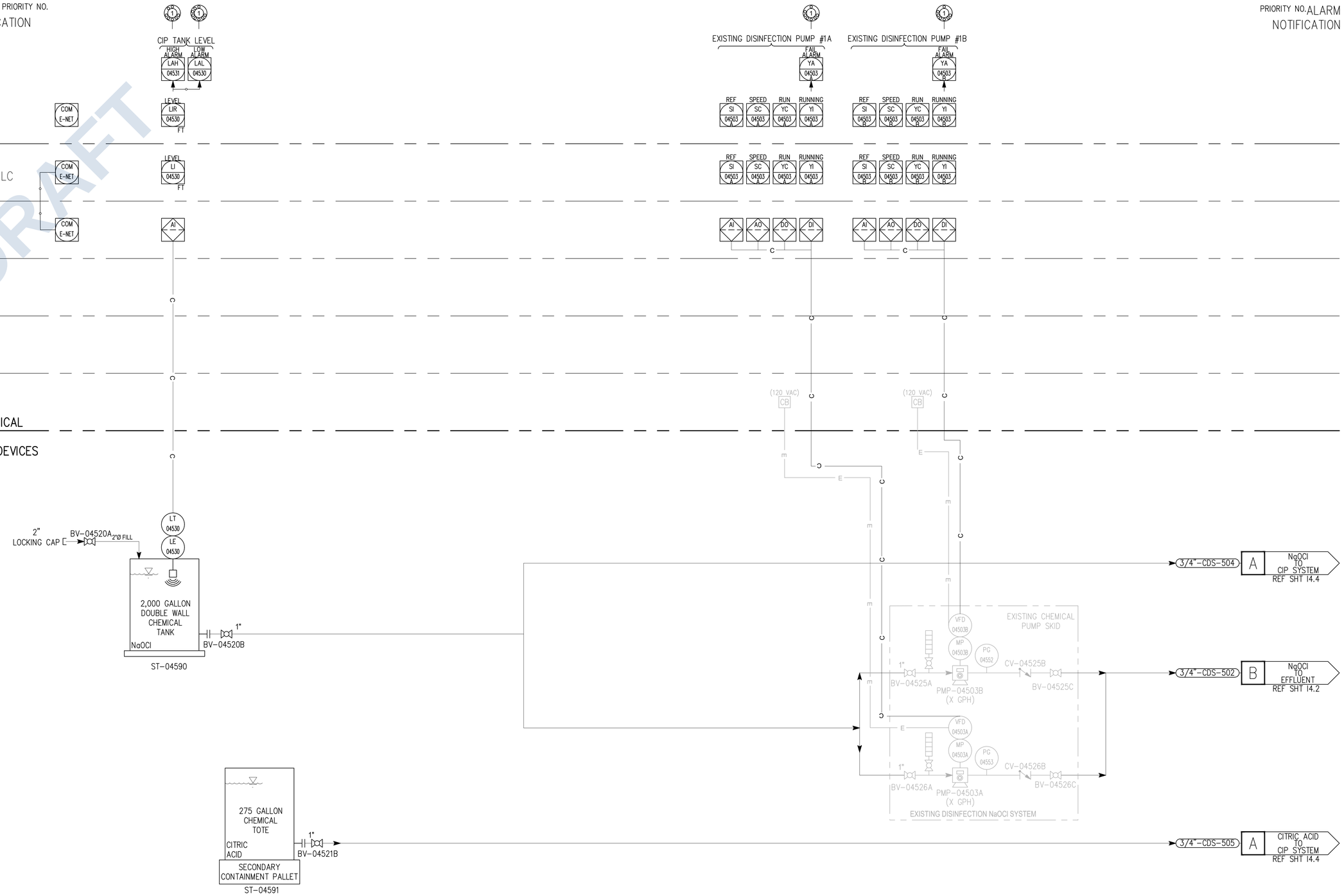

MBR CHEMICAL STORAGE

DRAFT

NO	BY	DATE	REVISIONS	DATE	APP.

Registered Professional Engineer (Civil)
DUONG T. DO
No. 40050
Arizona, U.S.A.
Date Signed 12/31/27
Expires 12/31/27

PREPARED BY
DUONG DO
PROJECT ENGINEER
#40050
R.C.E. NO. —
EXP. DATE

DRAWN WW, MSA
DESIGNED NT, NE
CHECKED DD
SCALE
DATE FEB 2026

THESE DRAWINGS ARE THE PROPERTY OF P.A.C.E. AND SHALL NOT BE REPRODUCED IN ANY MANNER NOR BE USED FOR CONSTRUCTION UNLESS STAMPED "ISSUED FOR CONSTRUCTION".

TITLE
CHEM STORAGE

JOB
CITY OF SAN LUIS WEST WWTP
3.0 MGD MBR UPGRADES
AZ.
SAN LUIS

PACE
Advanced Water Engineering
8723 E. VIA de COMMERCIO, SUITE A-204 | SCOTTSDALE, CA 85258
P: (408) 991-3595 | www.pacewater.com

FINAL PLANS ISSUED FOR BID

SHEET
I4.5
196 OF 209 SHEETS

JOB NO. B777

W:\B777\Engineering\B777 - 3MGD Exp\3MGD FINAL DSN\sheets\B777-I4.X EFFLUENT.dwg - Tab: I4.5 - by wwright on 02/06/26 at 2:41:44 PM

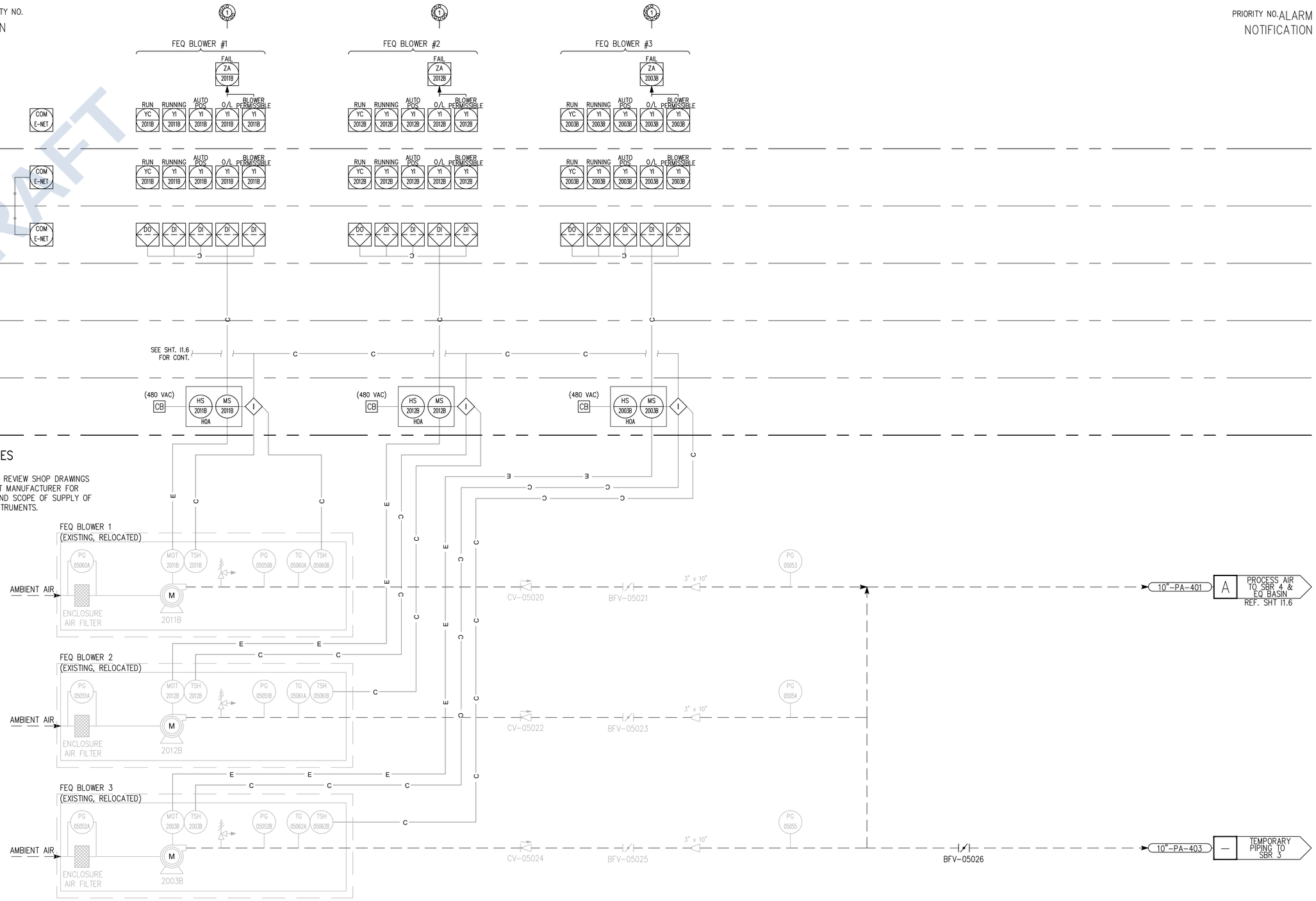

FLOW EQUALIZATION BLOWERS

W:\B777\Engineering\B777 - 3MGD Exp\3MGD FINAL DS\Sheets\B777-I5.X AERATION BLOWERS.dwg - Tab: I5.0 - by wwright on 02/05/26 at 10:31:45 AM

NO	BY	DATE	REVISIONS	DATE	APP.

Registered Professional Engineer (Civil) — DUONG T. DO — 40050 — ARIZONA, U.S.A. — Date Signed 12/31/27 — Expires 12/31/27

PREPARED BY: DUONG DO
PROJECT ENGINEER: DUONG DO #40050
R.C.E. NO.: 40050
EXP. DATE: 12/31/27
DRAWN: WW, MSA
DESIGNED: NT, NE
CHECKED: DD
SCALE:
DATE: FEB 2026

TITLE: EQ BLOWERS

JOB: CITY OF SAN LUIS WEST WWTP
3.0 MGD MBR UPGRADES
SAN LUIS AZ.

PACE
Advanced Water Engineering
8723 E. VIA de COMMERCIO, SUITE A-204 | SCOTTSDALE, CA 85258
P: (408) 991-3595 | www.pacewater.com

SHEET
I5.0
197 OF 209 SHEETS

JOB NO. B777

THESE DRAWINGS ARE THE PROPERTY OF P.A.C.E. AND SHALL NOT BE REPRODUCED IN ANY MANNER NOR BE USED FOR CONSTRUCTION UNLESS STAMPED "ISSUED FOR CONSTRUCTION".

FINAL PLANS ISSUED FOR BID

DRAFT

ALARM PRIORITY NO.
NOTIFICATION

PRIORITY NO. ALARM
NOTIFICATION

PA BLOWER #1 | PA BLOWER #2 | PA BLOWER #3 | PA VALVE | PA VALVE

FAIL ZA 05101 | FAIL ZA 05102 | FAIL ZA 05103 | FAIL ALARM ZA 05123 | FAIL ALARM ZA 05124

SPEED SC 05101 | RUN YC 05101 | RUNNING YI 05101 | REMOTE YI 05101 | HIGH TEMP TI 05101 | HIGH TEMP TI 05101

SPEED SC 05102 | RUN YC 05102 | RUNNING YI 05102 | REMOTE YI 05102 | HIGH TEMP TI 05102 | HIGH TEMP TI 05102

SPEED SC 05103 | RUN YC 05103 | RUNNING YI 05103 | REMOTE YI 05103 | HIGH TEMP TI 05103 | HIGH TEMP TI 05103

OPEN YC 05123 | OPENED YI 05123 | CLOSED YI 05123

OPEN YC 05124 | OPENED YI 05124 | CLOSED YI 05124

COM E-NET

SCADA

PROCESS HMI (MBR)

PROCESS PLC (MBR)

TO PATCH

PROCESS PLC RIO (MBR)

AO | DO | DI | DI | DI | DI

DO | DI | DI

ELECTRICAL

(480 VAC) CB | (480 VAC) CB | (480 VAC) CB | (120VAC) CB | (120VAC) CB

FIELD DEVICES

NOTE:
CONTRACTOR TO REVIEW SHOP DRAWINGS FROM EQUIPMENT MANUFACTURER FOR SIZE, NUMBER AND SCOPE OF SUPPLY OF VALVES AND INSTRUMENTS.

RTM METER | G RUNNING | Y FAULT | HS 05101 HOA | VFD 05101

RTM METER | G RUNNING | Y FAULT | HS 05102 HOA | VFD 05102

RTM METER | G RUNNING | Y FAULT | HS 05103 HOA | VFD 05103

E | C | I

PA BLOWER 1

PG 05150A | MOT 05101 | TSH 05101 | TSH 05160A | TG 05160B | PG 05150B

AMBIENT AIR → ENCLOSURE AIR FILTER → M BLR-05101 → CV → K

PA BLOWER 2

PG 05151A | MOT 05102 | TSH 05102 | TSH 05161A | TG 05161B | PG 05151B

AMBIENT AIR → ENCLOSURE AIR FILTER → M BLR-05102 → CV → K

PA BLOWER 3

PG 05152A | MOT 05103 | TSH 05103 | TSH 05162A | TG 05162B | PG 05152B

AMBIENT AIR → ENCLOSURE AIR FILTER → M BLR-05103 → CV → K

BFV-05120 | BFV-05121 | BFV-05122

10"x30" | 30" | 30"x24" | 10"x24"

ZSC 05123 | ZSO 05123 | XV 05123 | M BFV-05123

ZSC 05124 | ZSO 05124 | XV 05124 | M BFV-05124

30"-PA-404 → A PROCESS AIR TO PRE-AIR BASINS REF. SHT I5.2

24"-SCA-412 → B SCOUR AIR TO MBR BASINS REF. SHT I5.3

PRE-AIR BLOWERS

NO	BY	DATE	REVISIONS	DATE	APP.

Registered Professional Engineer (Civil) — DUONG T. DO — 40050 — ARIZONA, U.S.A. — Date Signed 12/31/27 — Expires 12/31/27

PREPARED BY: DUONG DO
PROJECT ENGINEER: #40050
R.C.E. NO.: 40050
EXP. DATE: 12/31/27
DRAWN: WW, MSA
DESIGNED: NT, NE
CHECKED: DD
SCALE:
DATE: FEB 2026

TITLE: **PA BLOWERS**

JOB: CITY OF SAN LUIS WEST WWTP
3.0 MGD MBR UPGRADES
SAN LUIS AZ.

THESE DRAWINGS ARE THE PROPERTY OF P.A.C.E. AND SHALL NOT BE REPRODUCED IN ANY MANNER NOR BE USED FOR CONSTRUCTION UNLESS STAMPED "ISSUED FOR CONSTRUCTION".

FINAL PLANS ISSUED FOR BID

PACE Advanced Water Engineering
8723 E. VIA de COMMERCIO, SUITE A-204 | SCOTTSDALE, CA 85258
P: (408) 991-3595 | www.pacewater.com

SHEET I5.1
198 OF 209 SHEETS

JOB NO. B777

W:\B777\Engineering\B777 - 3MGD Exp\3MGD FINAL DS\Sheets\B777-I5.X AERATION BLOWERS.dwg - Tab: I5.1 - by wwright on 02/05/26 at 10:31:45 AM

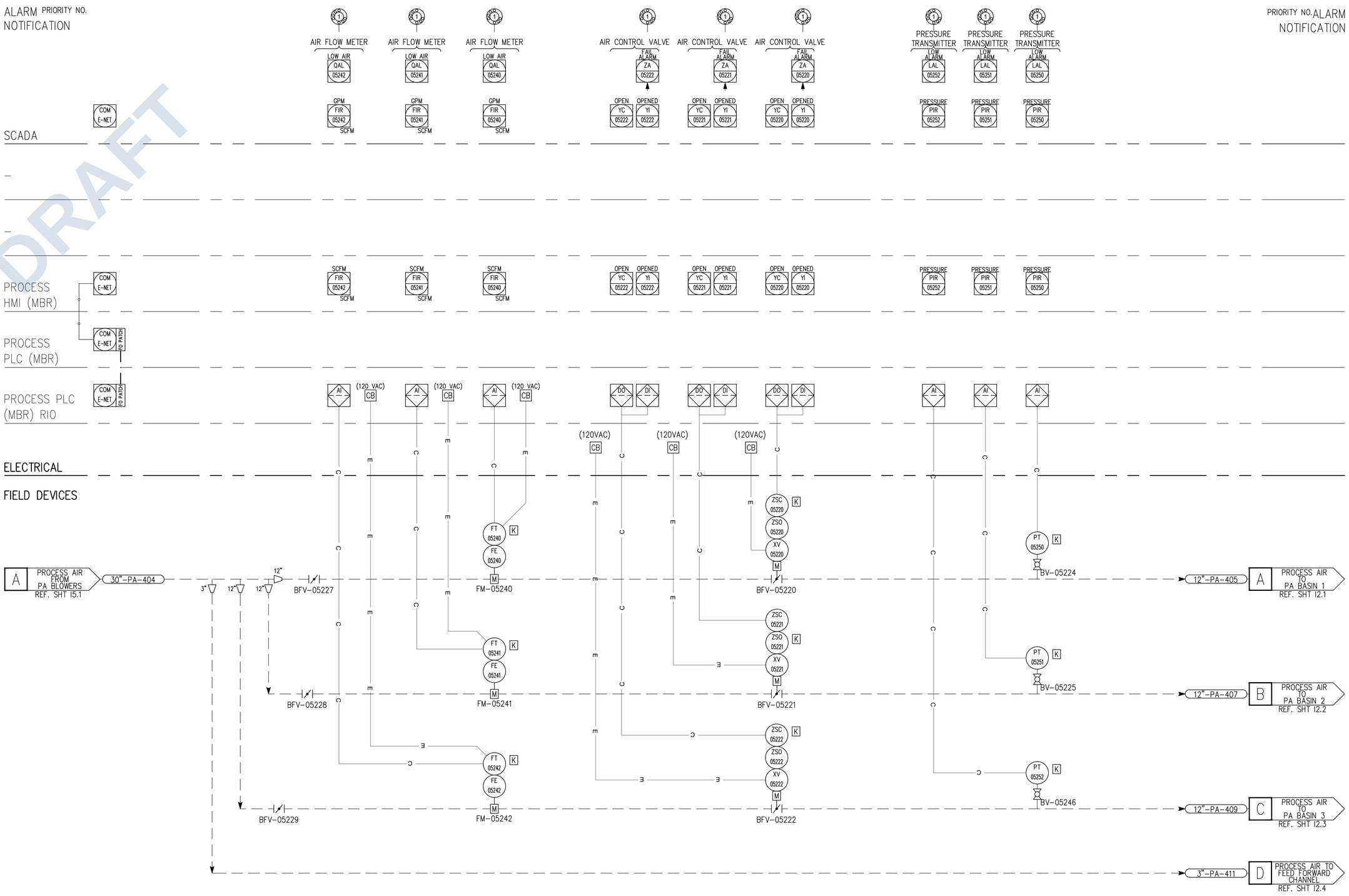

PRE-AIR BASIN AIR PIPING

NO	BY	DATE	REVISIONS	DATE	APP.

Registered Professional Engineer (Civil) CERTIFICATE NO. 40050 DUONG T. DO Date Signed 12/31/24 ARIZONA, U.S.A. Expires 12/31/27

PREPARED BY DUONG DO
PROJECT ENGINEER R.C.E. NO. -- #40050
EXP. DATE
DRAWN WW, MSA
SCALE
DESIGNED NT, NE
CHECKED DD
DATE FEB 2026

TITLE
PA PIPING

JOB
CITY OF SAN LUIS WEST WWTP
3.0 MGD MBR UPGRADES
SAN LUIS AZ.

PACE
Advanced Water Engineering
8723 E. VIA de COMMERCIO, SUITE A-204 | SCOTTSDALE, CA 85258
P: (408) 991-3595 | www.pacewater.com

SHEET
I5.2
199 OF 209 SHEETS
JOB NO. B777

THESE DRAWINGS ARE THE PROPERTY OF P.A.C.E. AND SHALL NOT BE REPRODUCED IN ANY MANNER NOR BE USED FOR CONSTRUCTION UNLESS STAMPED "ISSUED FOR CONSTRUCTION".

FINAL PLANS ISSUED FOR BID

W:\B777\Engineering\B777 - 3MGD Exp\3MGD FINAL DSN\sheets\B777-I5.X AERATION BLOWERS.dwg - Tab: I5.2 - by wwright on 02/05/26 at 10:31:45 AM

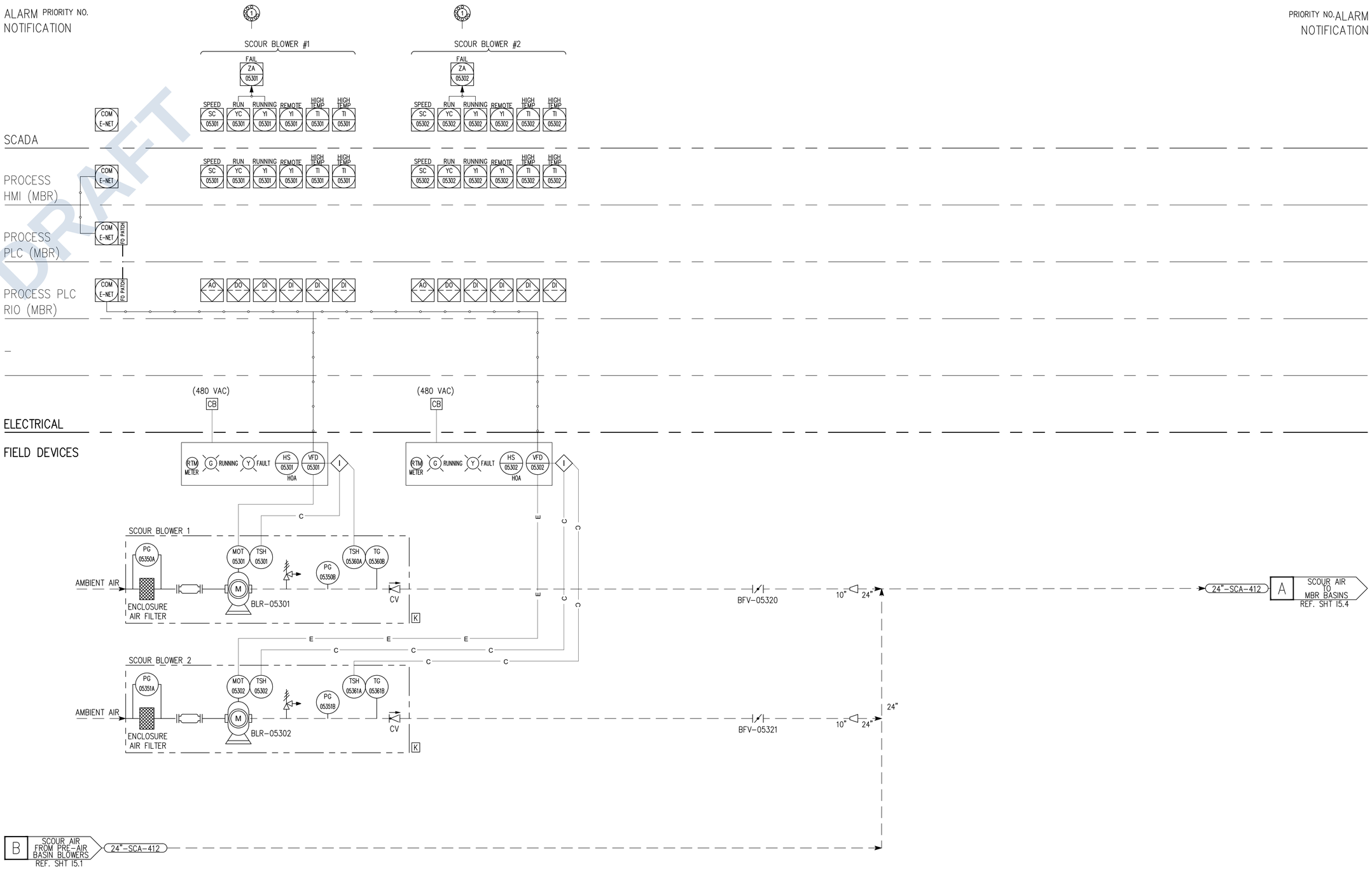

MBR SCOUR BLOWERS

DRAFT

NO	BY	DATE	REVISIONS	DATE	APP.

Registered Professional Engineer (Civil)
CERTIFICATE NO. 40050
DUONG T. DO
Date Signed 12/31/21
ARIZONA, U.S.A.
Expires 12/31/27

PREPARED BY DUONG DO
PROJECT ENGINEER
R.C.E. NO. -- #40050
EXP. DATE
DRAWN WW, MSA
SCALE
DESIGNED NT, NE
CHECKED DD
DATE FEB 2026

TITLE
SCOUR BLOWERS

JOB
CITY OF SAN LUIS WEST WWTP
3.0 MGD MBR UPGRADES
SAN LUIS AZ.

PACE
Advanced Water Engineering
8723 E. VIA de COMMERCIO, SUITE A-204 | SCOTTSDALE, CA 85258
P: (408) 991-3595 | www.pacewater.com

SHEET
I5.3
200 OF 209 SHEETS
JOB NO. B777

THESE DRAWINGS ARE THE PROPERTY OF P.A.C.E. AND SHALL NOT BE REPRODUCED IN ANY MANNER NOR BE USED FOR CONSTRUCTION UNLESS STAMPED "ISSUED FOR CONSTRUCTION".

FINAL PLANS ISSUED FOR BID

W:\B777\Engineering\B777 - 3MGD Exp\3MGD FINAL DS\Nsheets\B777-I5.X AERATION BLOWERS.dwg - Tab: I5.3 - by wwright on 02/05/26 at 10:31:45 AM

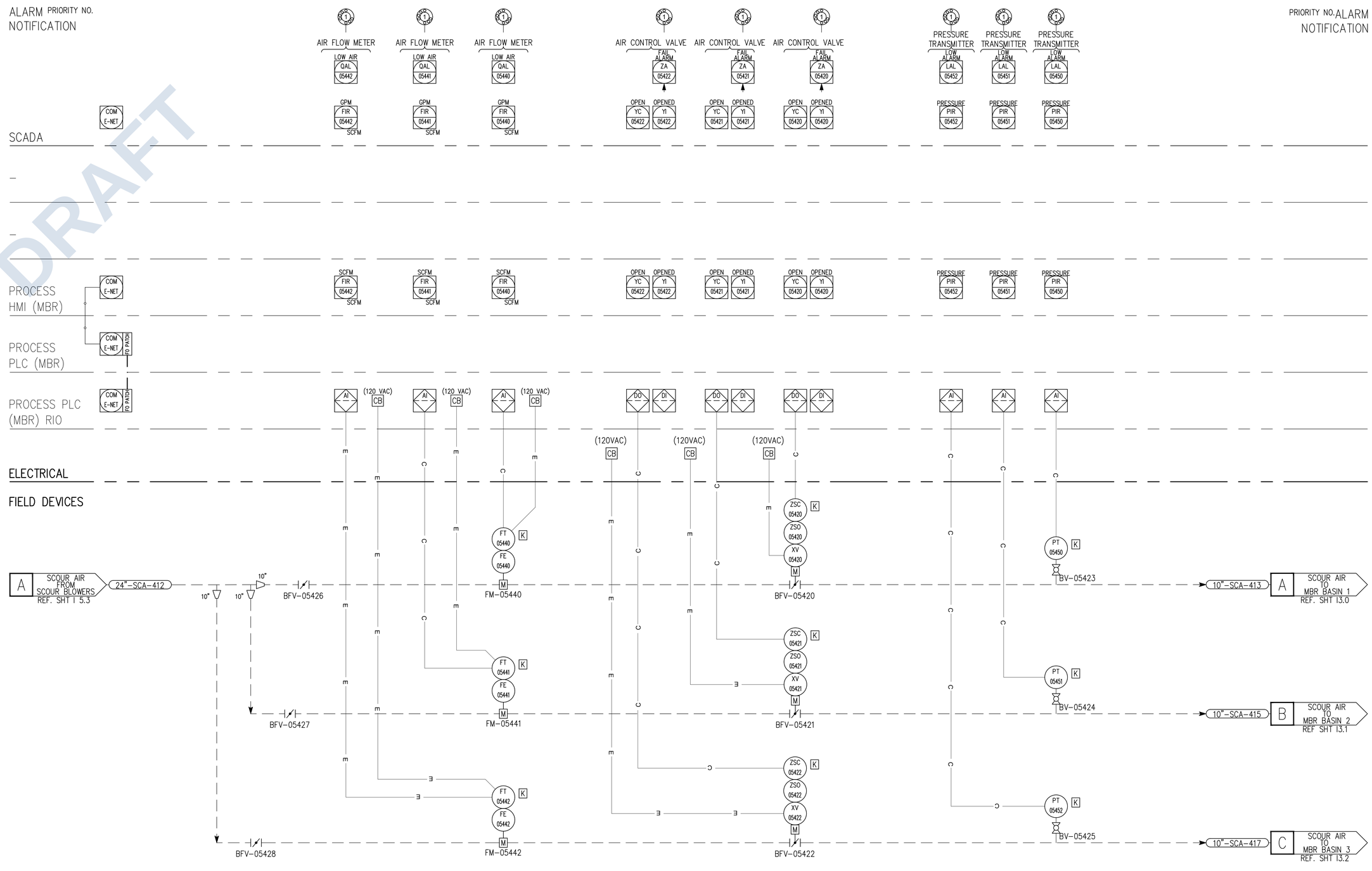

SCOUR AIR PIPING

DRAFT

NO	BY	DATE	REVISIONS	DATE	APP.

Registered Professional Engineer (Civil) CERTIFICATE NO. 40050 DUONG T. DO Date Signed 12/31/21 ARIZONA, U.S.A. Expires 12/31/27

PREPARED BY DUONG DO
PROJECT ENGINEER
R.C.E. NO. -- #40050
EXP. DATE
DRAWN WW, MSA
SCALE
DESIGNED NT, NE
CHECKED DD
DATE FEB 2026

TITLE
SCOUR PIPING

JOB
CITY OF SAN LUIS WEST WWTP
3.0 MGD MBR UPGRADES
SAN LUIS AZ.

PACE
Advanced Water Engineering
8723 E. VIA de COMMERCIO, SUITE A-204 | SCOTTSDALE, CA 85258
P: (408) 991-3595 | www.pacewater.com

SHEET
I5.4
201 OF 209 SHEETS
JOB NO. B777

THESE DRAWINGS ARE THE PROPERTY OF P.A.C.E. AND SHALL NOT BE REPRODUCED IN ANY MANNER NOR BE USED FOR CONSTRUCTION UNLESS STAMPED "ISSUED FOR CONSTRUCTION".

FINAL PLANS ISSUED FOR BID

W:\B777\Engineering\B777 - 3MGD Exp\3MGD FINAL DSN\sheets\B777-I5.X AERATION BLOWERS.dwg - Tab: I5.4 - by wwright on 02/05/26 at 10:31:45 AM

ALARM PRIORITY NO.
NOTIFICATION

PRIORITY NO. ALARM
NOTIFICATION

DIGESTER BLOWER #1 | DIGESTER BLOWER #2 | DIGESTER BLOWER #6 | DIGESTER BLOWER BLOW OFF VALVE

SCADA

MAIN PLC HMI

MAIN PLC

MAIN PLC RIO

ELECTRICAL

FIELD DEVICES

NOTE:
CONTRACTOR TO REVIEW SHOP DRAWINGS FROM EQUIPMENT MANUFACTURER FOR SIZE, NUMBER AND SCOPE OF SUPPLY OF VALVES AND INSTRUMENTS.

DIGESTER BLOWER 1 (EXISTING)
DIGESTER BLOWER 2 (EXISTING)
DIGESTER BLOWER 6 (EXISTING)

AMBIENT AIR
ENCLOSURE AIR FILTER

CV-05520 | BFV-05521 | CV-05522 | BFV-05523 | CV-05524 | BFV-05525 | BFV-05526

BLOWER DISCHARGE PRESSURE BLOW OFF VALVE

8"-PA-419 → A PROCESS AIR TO DIGESTERS REF. SHT I6.0

DIGESTER BLOWERS

DRAFT

FINAL PLANS ISSUED FOR BID

THESE DRAWINGS ARE THE PROPERTY OF P.A.C.E. AND SHALL NOT BE REPRODUCED IN ANY MANNER NOR BE USED FOR CONSTRUCTION UNLESS STAMPED "ISSUED FOR CONSTRUCTION".

NO	BY	DATE	REVISIONS	DATE	APP.

Registered Professional Engineer (Civil) — DUONG T. DO — 40050 — ARIZONA, U.S.A. — Date Signed 12/31/27 — Expires 12/31/27

PREPARED BY: DUONG DO
PROJECT ENGINEER: #40050
R.C.E. NO.: 1—
EXP. DATE:
DRAWN: WW, MSA
DESIGNED: NT, NE
CHECKED: DD
SCALE:
DATE: FEB 2026

TITLE: DIGESTER BLOWERS

JOB: CITY OF SAN LUIS WEST WWTP
3.0 MGD MBR UPGRADES
AZ.
SAN LUIS

PACE
Advanced Water Engineering
8723 E. VIA de COMMERCIO, SUITE A-204 | SCOTTSDALE, CA 85258
P: (408) 991-3595 | www.pacewater.com

SHEET
I5.5
202 OF 209 SHEETS

JOB NO. B777

W:\B777\Engineering\B777 - 3MGD Exp\3MGD FINAL DSN\sheets\B777-I5.X AERATION BLOWERS.dwg - Tab: I5.5 - by wwright on 02/05/26 at 10:31:45 AM

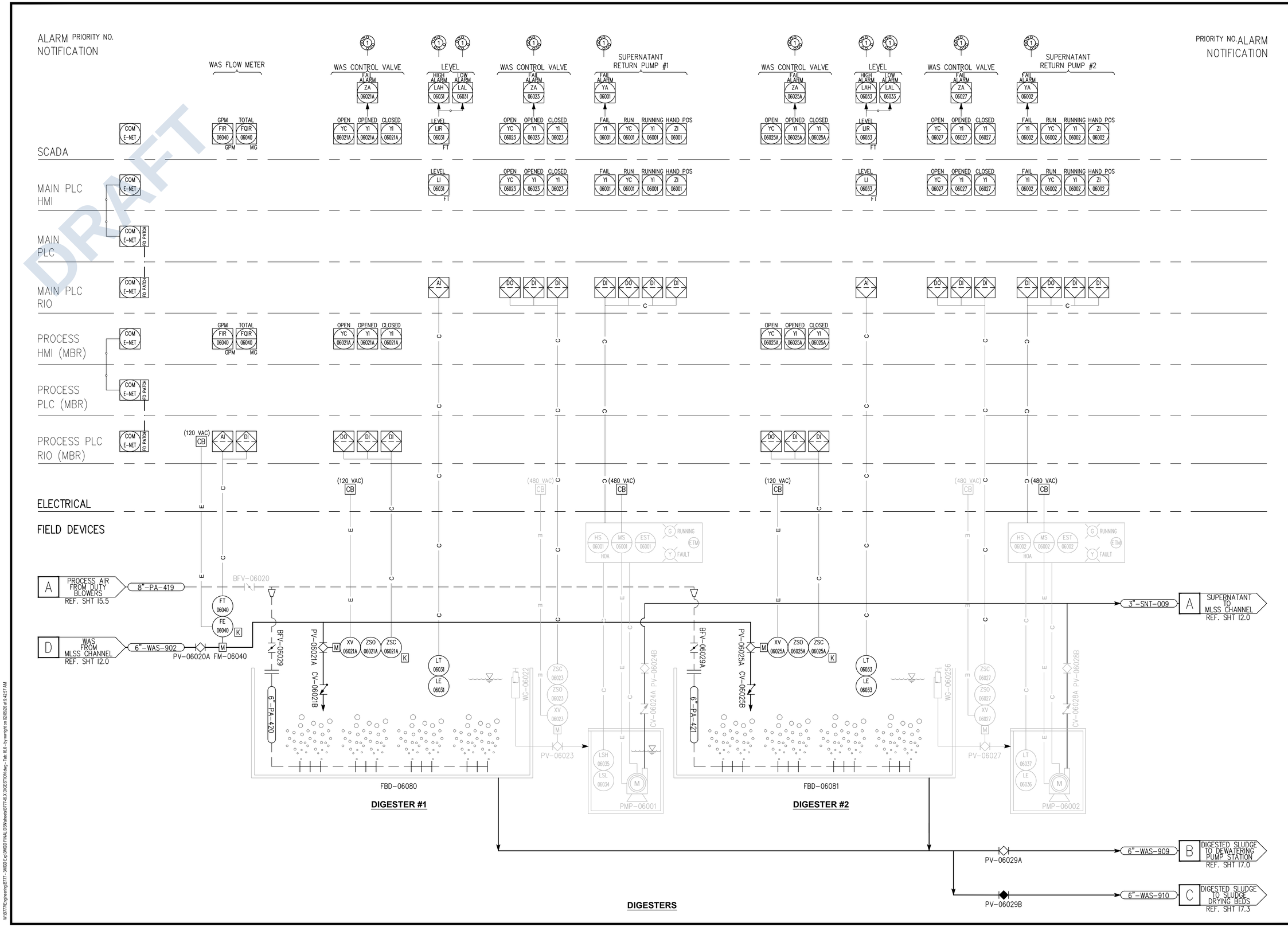

DRAFT

NO	BY	DATE	REVISIONS	DATE	APP.

Registered Professional Engineer (Civil) CERTIFICATE NO. 40050 DUONG T. DO Date Signed 12/31/27 ARIZONA, U.S.A. Expires 12/31/27

PREPARED BY DUONG DO
PROJECT ENGINEER R.C.E. NO. -- #40050
EXP. DATE
DRAWN WW, MSA
SCALE
DESIGNED NT, NE
CHECKED DD
DATE FEB 2026

TITLE
DIGESTERS

JOB
CITY OF SAN LUIS WEST WWTP
3.0 MGD MBR UPGRADES
SAN LUIS AZ.

PACE Advanced Water Engineering
8723 E. VIA de COMMERCIO, SUITE A-204 | SCOTTSDALE, CA 85258
P: (408) 991-3595 | www.pacewater.com

SHEET
I6.0
203 OF 209 SHEETS
JOB NO. B777

THESE DRAWINGS ARE THE PROPERTY OF P.A.C.E. AND SHALL NOT BE REPRODUCED IN ANY MANNER NOR BE USED FOR CONSTRUCTION UNLESS STAMPED "ISSUED FOR CONSTRUCTION".

FINAL PLANS ISSUED FOR BID

W:\B777\Engineering\B777 - 3MGD Exp\3MGD FINAL DS\Sheets\B777-I6.X DIGESTION.dwg - Tab: I6.0 - by wwright on 02/05/26 at 9:42:57 AM

DRAFT

ALARM PRIORITY NO.
NOTIFICATION

PRIORITY NO. ALARM
NOTIFICATION

SLUDGE FEED PUMP #1

FAIL ALARM	HIGH TEMP
YA 07001	TAH 07001

SPEED	REF	RUN	RUNNING	AUTO/ POS	O/L	TEMP
SC 07001	SI 07001	YC 07001	YI 07001	HS 07001	YI 07001	TI 07001

SLUDGE FEED PUMP #2

FAIL ALARM	HIGH TEMP
YA 07002	TAH 07002

SPEED	REF	RUN	RUNNING	AUTO/ POS	O/L	TEMP
SC 07002	SI 07002	YC 07002	YI 07002	HS 07002	YI 07002	TI 07002

SCADA

COM E-NET

FIELD PROCESS HMI (DEWATERING)

COM E-NET

SPEED	REF	RUN	RUNNING	AUTO/ POS	O/L	TEMP
SC 07001	SI 07001	YC 07001	YI 07001	HS 07001	YI 07001	TI 07001

SPEED	REF	RUN	RUNNING	AUTO/ POS	O/L	TEMP
SC 07002	SI 07002	YC 07002	YI 07002	HS 07002	YI 07002	TI 07002

FIELD PROCESS PLC (DEWATERING)

COM E-NET FO PATCH

AO	AI	DO	DI	DI	DI	DI

AO	AI	DO	DI	DI	DI	DI

ELECTRICAL

FIELD DEVICES

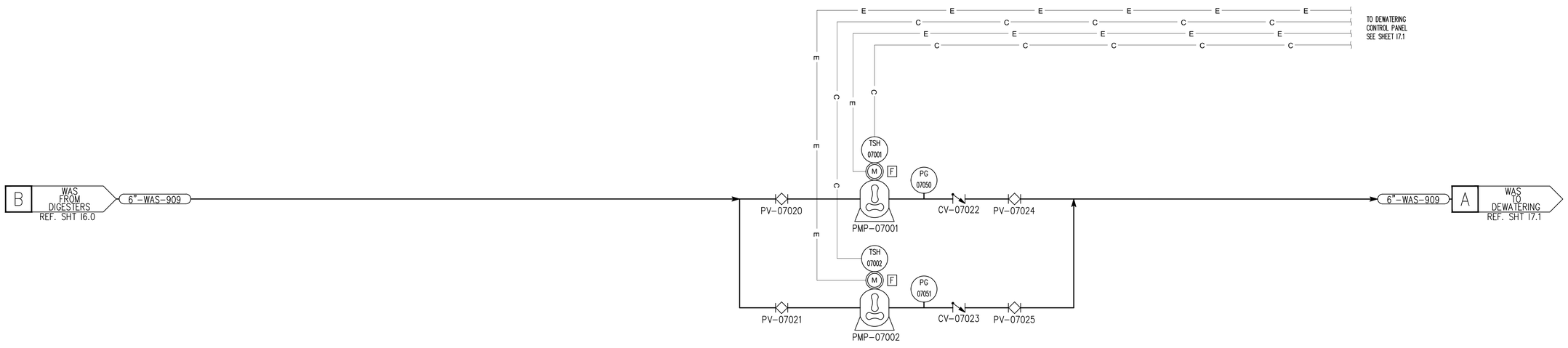

SLUDGE FEED PUMP STATION

NO	BY	DATE	REVISIONS	DATE	APP.

Registered Professional Engineer (Civil)
DUONG T. DO
40050
ARIZONA, U.S.A.
Date Signed 12/31/27
Expires 12/31/27

PREPARED BY
DUONG DO
PROJECT ENGINEER
R.C.E. NO. #40050
EXP. DATE

DRAWN WW, MSA
DESIGNED NT, NE
CHECKED DD
SCALE
DATE FEB 2026

THESE DRAWINGS ARE THE PROPERTY OF P.A.C.E. AND SHALL NOT BE REPRODUCED IN ANY MANNER NOR BE USED FOR CONSTRUCTION UNLESS STAMPED "ISSUED FOR CONSTRUCTION".

TITLE
SLUDGE PUMP STATION

JOB
CITY OF SAN LUIS WEST WWTP
3.0 MGD MBR UPGRADES
AZ.
SAN LUIS

PACE
Advanced Water Engineering
8723 E. VIA de COMMERCIO, SUITE A-204 | SCOTTSDALE, CA 85258
P: (408) 991-3595 | www.pacewater.com

SHEET
I7.0
204 OF 209 SHEETS

JOB NO. B777

FINAL PLANS ISSUED FOR BID

W:\B777\Engineering\B777 - 3MGD Exp\3MGD FINAL DSN\sheets\B777-I7.0 DEWATERING.dwg - Tab: I7.0 - by wwright on 01/29/26 at 1:43:28 PM

AUTO DIALER
PRIORITY No.

PRIORITY NO. ALARM
NOTIFICATION

SCADA

FIELD PROCESS
HMI (DEWATERING)

FIELD PROCESS PLC
(DEWATERING)

ELECTRICAL

FIELD DEVICES

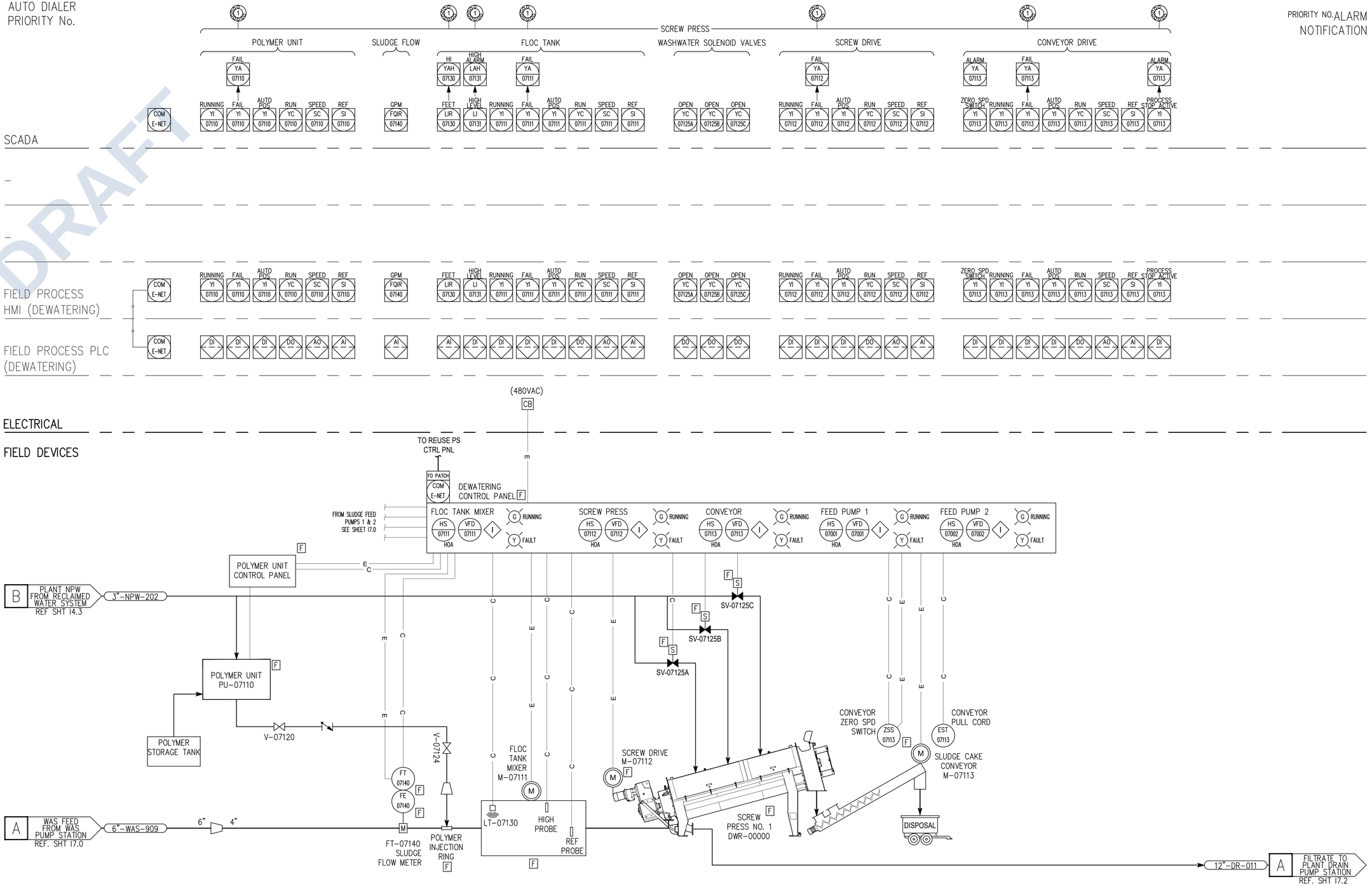

SCREW PRESS

DRAFT

W:\B777\Engineering\B777 - 3MGD Exp\3MGD FINAL DSN\sheets\B777-I7.1 X DEWATERING.dwg - Tab: I7.1 - by wwright on 01/26/26 at 1:43:28 PM

NO	BY	DATE	REVISIONS	DATE	APP.

Registered Professional Engineer (Civil)
DUONG T. DO
40050
Date Signed 1-26-26
ARIZONA, U.S.A.
Expires 12/31/27

PREPARED BY
DUONG DO
PROJECT ENGINEER
R.C.E. NO. #40050
EXP. DATE

DRAWN WW, MSA
DESIGNED NT, NE
CHECKED DD
SCALE
DATE FEB 2026

TITLE
SCREW PRESS

JOB
CITY OF SAN LUIS WEST WWTP
3.0 MGD MBR UPGRADES
SAN LUIS AZ.

PACE
Advanced Water Engineering
8723 E. VIA de COMMERCIO, SUITE A-204 | SCOTTSDALE, CA 85258
P: (408) 991-3595 | www.pacewater.com

SHEET
I7.1
205 OF 209 SHEETS

JOB NO. B777

FINAL PLANS ISSUED FOR BID

THESE DRAWINGS ARE THE PROPERTY OF P.A.C.E. AND SHALL NOT BE REPRODUCED IN ANY MANNER NOR BE USED FOR CONSTRUCTION UNLESS STAMPED "ISSUED FOR CONSTRUCTION".

DRAFT

ALARM PRIORITY NO.
NOTIFICATION

PRIORITY NO. ALARM
NOTIFICATION

SCADA

MAIN PLC HMI

MAIN PLC

ELECTRICAL

FIELD DEVICES

DRYING BED LIFT STATION PUMPS
FAIL ALARM YA 07201
FAIL Y1 07201 | RUN YC 07201 | RUNNING Y1 07201 | HAND POS ZI 07201

DRAIN RETURN LIFT STATION PUMPS
FAIL ALARM YA 07202 | HIGH TEMP TAH 07202
FAIL Y1 07202 | TEMP TI 07202 | RUN YC 07202 | RUNNING Y1 07202 | HAND POS ZI 07202

DRAIN RETURN LIFT STATION PUMPS
FAIL ALARM YA 07203 | HIGH TEMP TAH 07203
FAIL Y1 07203 | TEMP TI 07203 | RUN YC 07203 | RUNNING Y1 07203 | HAND POS ZI 07203

HEADWORKS REUSE FLOW METER
GPM FIR 07240 GPM | TOTAL FQIR 07240 MG

COM E-NET

DI | DO | DI | DI — C

AI | DI — C

(120 VAC) CB — E

(480VAC) CB

LOWER DRYING BED PUMP STATION CONTROL PANEL
MS 07021 | HS 07021 HOA | G RUNNING (ETM) | Y FAULT

PLANT DRAIN PUMP STATION CONTROL PANEL
MS 07202 | HS 07202 HOA | G RUNNING (ETM) | Y FAULT
MS 07203 | HS 07203 HOA | G RUNNING (ETM) | Y FAULT

B — FILTRATE FROM DRYING BEDS — 6"-DR-012 — REF. SHT. 17.3

A — FILTRATE FROM SCREW PRESS — 12"-DR-011 — 12" x 8" — REF. SHT. 17.1

— — OPERATIONS BUILDING SEWER — 6"-SWR-014

C — SUPERNATANT FROM SLUDGE DRYING BEDS — 6"-SNT-015

D — CIP /PLANT DRAIN FROM PROCESS DRAINS — 6"-DR-010 — REF. SHT. 14.0

LSHH 07230A | LSH 07230B | LSL 07230C
V-07221
CV-07220
M
PMP-07201

LOWER DRYING BED PUMP STATION

PV-07223

PV-07222

LSHH 07231A | LSH 07231B | LSL 07231C
LT 07232 | LE 07232

PMP-07202 | PMP-07203

CV-07239A | CV-07239B

PLANT DRAIN PUMP STATION

PG 07250 | PG 07251

CV-07224 | V-07225

CV-07226 | V-07227

FT 07240 | FE 07240
FM-07240

BFV-07228

6"-RET-001 — A — DRAIN RETURN TO HEADWORKS INFLT SPLITTER BOX — REF. SHT I1.0

6"-DR-010 — B — CIP DRAIN TO SLUDGE DRYING BEDS — REF. SHT I7.3

PLANT DRAIN PUMP STATION

NO	BY	DATE	REVISIONS	DATE	APP.

Registered Professional Engineer (Civil)
DUONG T. DO
40050
Date Signed 12/31/27
ARIZONA, U.S.A.
Expires 12/31/27

PREPARED BY
DUONG DO
PROJECT ENGINEER
R.C.E. NO. #40050
EXP. DATE

DRAWN WW, MSA
DESIGNED NT, NE
CHECKED DD
SCALE
DATE FEB 2026

TITLE
PLANT DRAIN PS

JOB
CITY OF SAN LUIS WEST WWTP
3.0 MGD MBR UPGRADES
AZ.
SAN LUIS

PACE
Advanced Water Engineering
8723 E. VIA de COMMERCIO, SUITE A-204 | SCOTTSDALE, CA 85258
P: (408) 991-3995 | www.pacewater.com

SHEET
I7.2
206 OF 209 SHEETS

JOB NO. B777

THESE DRAWINGS ARE THE PROPERTY OF P.A.C.E. AND SHALL NOT BE REPRODUCED IN ANY MANNER NOR BE USED FOR CONSTRUCTION UNLESS STAMPED "ISSUED FOR CONSTRUCTION".

FINAL PLANS ISSUED FOR BID

W:\B777\Engineering\B777 - 3MGD Expt\3MGD FINAL DS\Sheets\B777-I17.X DEWATERING.dwg - Tab: I17.2 - by wwright on 01/26/26 at 1:43:28 PM

ALARM PRIORITY NO.
NOTIFICATION

PRIORITY NO. ALARM
NOTIFICATION

SCADA

MAIN PLC
HMI

MAIN
PLC

–

–

ELECTRICAL

FIELD DEVICES

DRAFT

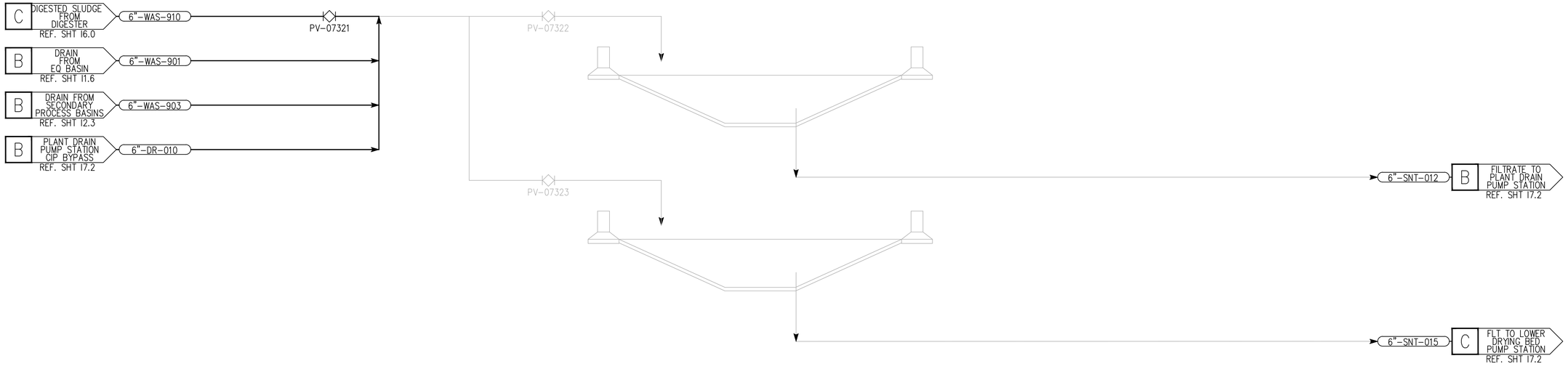

NO	BY	DATE	REVISIONS	DATE	APP.

Registered Professional Engineer (Civil)
DUONG T. DO
40050
Arizona, U.S.A.
Date Signed 12/31/27
Expires 12/31/27

PREPARED BY
DUONG DO
PROJECT ENGINEER
R.C.E. NO. #40050
EXP. DATE
SCALE
DRAWN WW, MSA
DESIGNED NT, NE
CHECKED DD
DATE FEB 2026

THESE DRAWINGS ARE THE PROPERTY OF P.A.C.E. AND SHALL NOT BE REPRODUCED IN ANY MANNER NOR BE USED FOR CONSTRUCTION UNLESS STAMPED "ISSUED FOR CONSTRUCTION".

TITLE
SLUDGE DRYING BEDS

JOB
CITY OF SAN LUIS WEST WWTP
3.0 MGD MBR UPGRADES
AZ.
SAN LUIS

PACE
Advanced Water Engineering
8723 E. VIA de COMMERCIO, SUITE A-204 | SCOTTSDALE, CA 85258
P: (408) 991-3595 | www.pacewater.com

SHEET
I7.3
207 OF 209 SHEETS

JOB NO. B777

FINAL PLANS ISSUED FOR BID

W:\B777\Engineering\B777 - 3MGD Exp\3MGD FINAL DS\sheets\B777-I7.X DEWATERING.dwg - Tab: I7.3 - by wwright on 01/29/26 at 1:43:28 PM

ALARM PRIORITY NO.
NOTIFICATION

PRIORITY NO. ALARM
NOTIFICATION

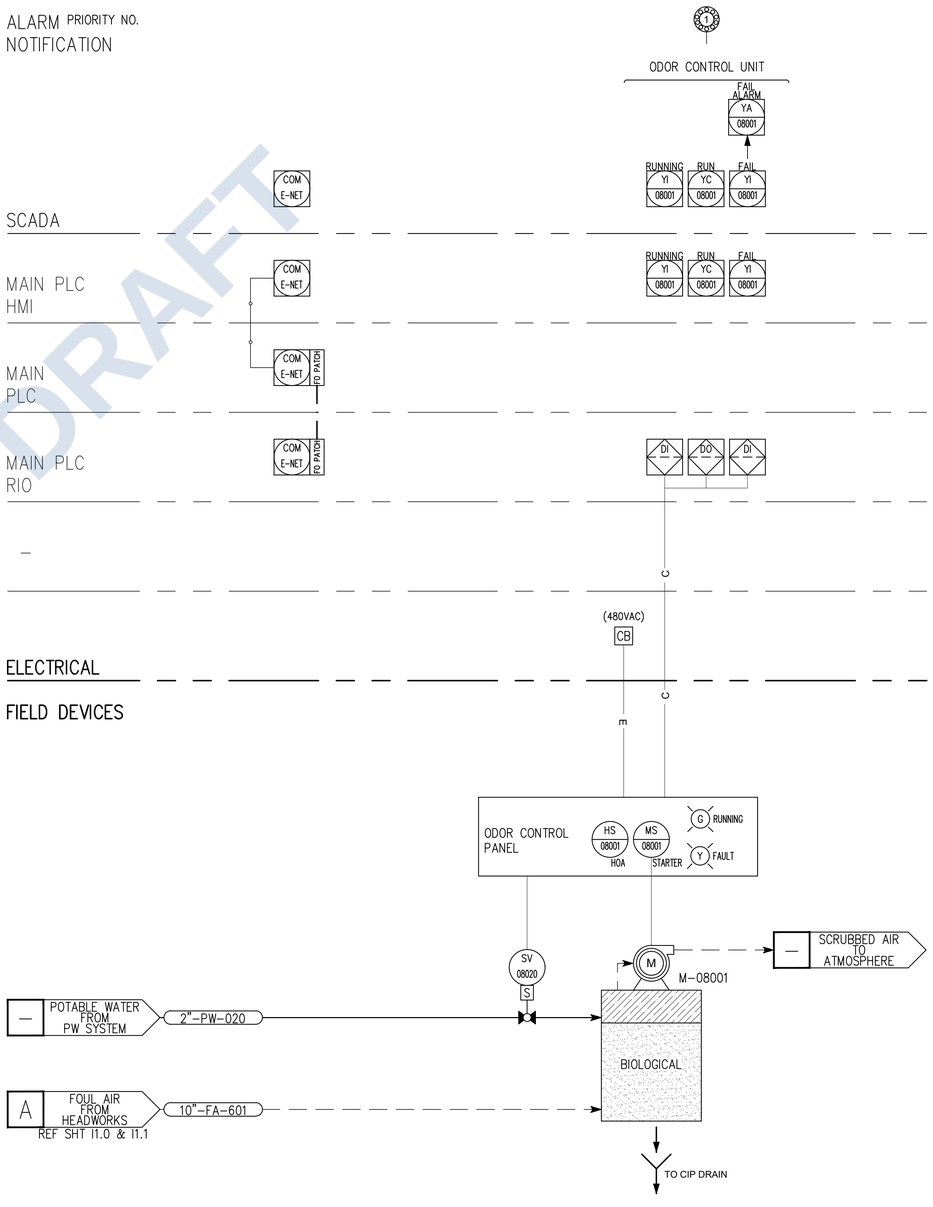

DRAFT

NO	BY	DATE	REVISIONS	DATE	APP.

Registered Professional Engineer (Civil)
DUONG T. DO
40050
Date Signed 12/31/27
ARIZONA, U.S.A.
Expires 12/31/27

PREPARED BY
DUONG DO
PROJECT ENGINEER
#40050
R.C.E. NO. / EXP. DATE
SCALE
DRAWN
WW, MSA
DESIGNED
NT, NE
CHECKED
DD
DATE
FEB 2026

THESE DRAWINGS ARE THE PROPERTY OF P.A.C.E. AND SHALL NOT BE REPRODUCED IN ANY MANNER NOR BE USED FOR CONSTRUCTION UNLESS STAMPED "ISSUED FOR CONSTRUCTION".

TITLE
ODOR CONTROL

JOB
CITY OF SAN LUIS WEST WWTP
3.0 MGD MBR UPGRADES
SAN LUIS AZ.

PACE
Advanced Water Engineering
8723 E. VIA de COMMERCIO, SUITE A-204 | SCOTTSDALE, CA 85258
P: (408) 991-3995 | www.pacewater.com

FINAL PLANS ISSUED FOR BID

SHEET
I8.0
208 OF 209 SHEETS

JOB NO. B777

W:\B777\Engineering\B777 - 3MGD Exp\3MGD FINAL DSN\sheets\B777-I8.X ODOR CONTROL.dwg - Tab: I8.0 - by wwright on 01/29/26 at 1:43:59 PM

ALARM PRIORITY NO.
NOTIFICATION

PRIORITY NO. ALARM
NOTIFICATION

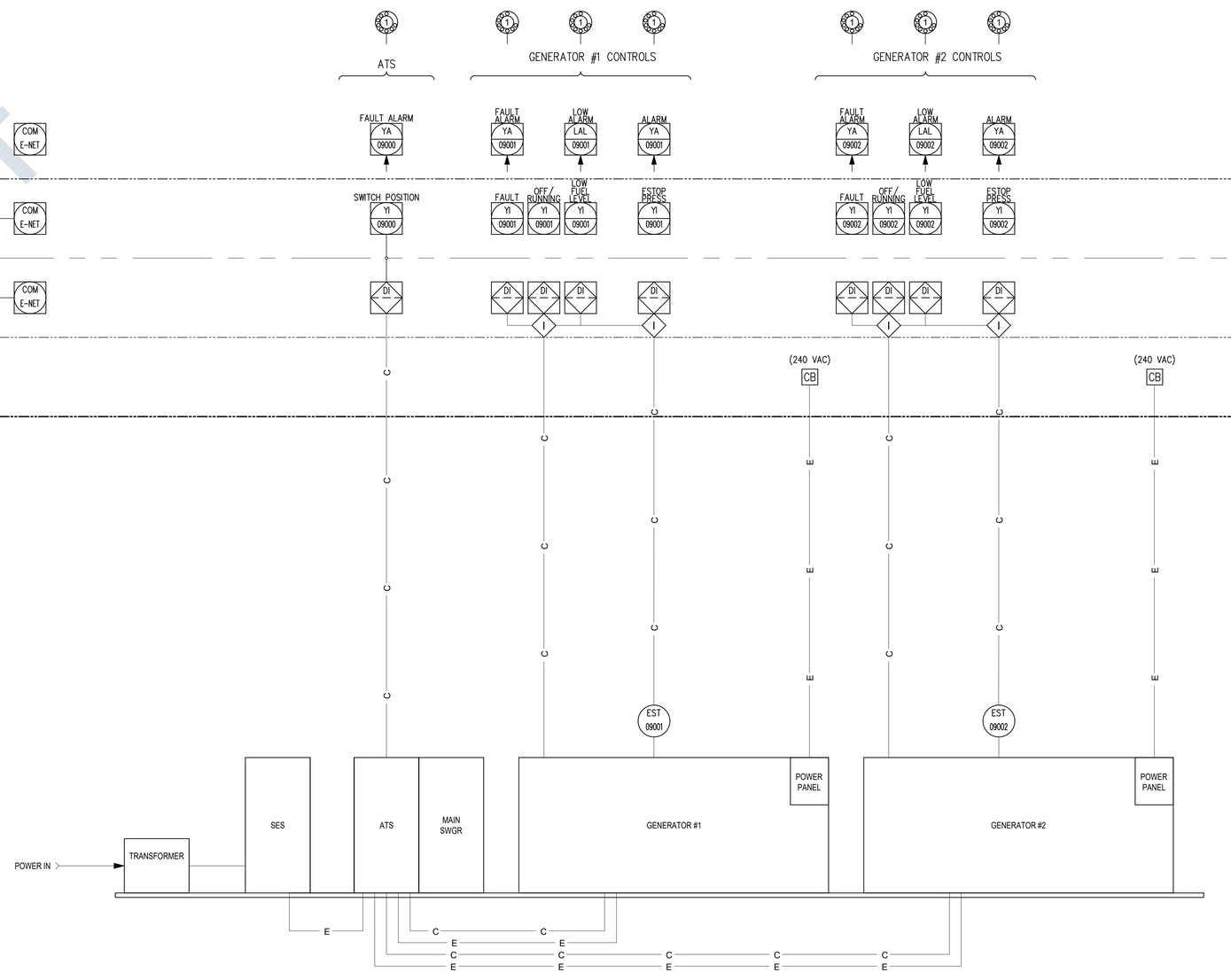

DRAFT

NO	BY	DATE	REVISIONS	DATE	APP.

Registered Professional Engineer (Civil)
DUONG T. DO
40050
ARIZONA, U.S.A.
Date Signed 12/31/27
Expires 12/31/27

PREPARED BY
DUONG DO
PROJECT ENGINEER
R.C.E. NO. #40050
EXP. DATE

DRAWN WW, MSA
DESIGNED NT, NE
CHECKED DD
SCALE
DATE FEB 2026

THESE DRAWINGS ARE THE PROPERTY OF P.A.C.E. AND SHALL NOT BE REPRODUCED IN ANY MANNER NOR BE USED FOR CONSTRUCTION UNLESS STAMPED "ISSUED FOR CONSTRUCTION".

TITLE
GENERATOR

JOB
CITY OF SAN LUIS WEST WWTP
3.0 MGD MBR UPGRADES
SAN LUIS AZ.

PACE
Advanced Water Engineering
8723 E. VIA de COMMERCIO, SUITE A-204 | SCOTTSDALE, CA 85258
P: (408) 991-3595 | www.pacewater.com

SHEET
I9.0
209 OF 209 SHEETS

JOB NO. B777

FINAL PLANS ISSUED FOR BID

W:\B777\Engineering\B777 - 3MGD Exp\3MGD FINAL DSN\sheets\P&ID Sheets.dwg - Tab: I9.0 - by wwright on 02/02/26 at 3:23:53 PM

AGENDA ITEM REVIEW FORM

Regular City Council Meeting **7. C.**

Meeting Date: 06/10/2026

Department Head: Manuel Hernandez, Assistant Director of Public Works, Public Works Department

Submitted By: Xochitl Lopez, Administrative Coordinator, Public Works Department

Action Requested: Motion

ITEM:

Discussion and possible action on any and all matters regarding the electrical distribution and streetlight services from Arizona Public Service (APS) for the Sidewinder Road Streetlight Project - Project No. 2026051. **(Manuel Hernandez, Assistant Director of Public Works)**

SUMMARY:

Public Works is requesting the Mayor and City Council's approval to pay a deposit invoice from Arizona Public Service (APS) in the amount of $62,230.85 for electrical distribution and streetlight-related work associated with the Sidewinder Road Street Light Project - Project No. 2026051.

A total of 13 new streetlights will be installed along the east side right-of-way of Sidewinder Road, from 8th Avenue to County 22nd Street. The charges include streetlight installation along with an advance for project-related electrical infrastructure costs. This deposit is required for APS to initiate scheduling and proceed with construction activities.

APS is the sole provider of electrical utility services in the region; therefore, this work qualifies as an exclusive service (reference City Code 3.05.020 – Exclusive Services).

RECOMMENDATION / SUGGESTED MOTION:

I MOVE TO APPROVE PAYMENT OF A DEPOSIT INVOICE TO APS IN THE AMOUNT OF $62,230.85 FOR THE SIDEWINDER ROAD STREET LIGHT PROJECT.

Fiscal Impact

IS THERE FISCAL IMPACT ASSOCIATED WITH THIS ITEM:	Yes
CITY/STATE/FEDERAL FUNDS:	City / Developer Contribution
TOTAL:	$62,230.85
BUDGETED AMOUNT:	$104,000.00
AVAILABLE AMOUNT TO TRANSFER:	$104,000.00
ACCT NAME & GL#/REMAINING BALANCE BEFORE PURCHASE:	Capital Outlay - Improvement Roads - 200-860-90010 / $104,000.00

FISCAL IMPACT STATEMENT (IF THIS IS A BUDGET TRANSFER, YOU MUST ATTACH THE BUDGET ADJUSTMENT FORM):

No budget transfer is needed for such project. Project #2026051 for Sidewinder Road Streetlights was approved for FY26.

Riedel Construction provided a developer contribution of $33,000.00 toward the installation of the proposed streetlights.

Attachments

WA999587-APPLICANT CHARGES (1)

Image

aps

Schedule 3, Revision 16
Applicant Charges (Non-Refundable)

APS Representative:
Raquel Smith
Customer Project Associate
6700 E 30Th Street
Yuma, AZ. 85365
(928) 390-2939

DATE: 04/17/26
INVOICE #

Work Order #: WA999587

Service Address and City: Co. 22nd. St. and Sidewinder street
Service Zip Code 85349
Description of Work:

Streetlight Investment Cost: Install and serve 13 new APS owned streetlights along Sidewinder Street.. City of San Luis to pay for streetlight investment.

Bill To:
City of San Luis

PO Box 7740
San Luis, Az. 85349
(928) 341-8554

	DESCRIPTION			AMOUNT
1				
2				
5				
6				
7				
8				
9				
10				
11				
12				
13				
14				
15				
16				
17				
18				
19				
20				
21				
22				
23				
24				$ 62,230.85
25				
26	APS Street Lights - Investment Cost Provided by Applicant for Lower Mo. Rate	$	62,230.85	
27				
28				
29				
30		$	-	
31				
32				
33				
38	**TOTAL CHARGES TO APPLICANT (Non-Refundable) (Lines: 1+2+13+18+23+24+27+31+33+34)**			**$62,230.85**
39				
40				
41	**TOTAL DUE AFTER PRE-PAYMENT(S)***			**$62,230.85**

*Additional applicant charges may apply. See invoice for the total amount due.

Sidewinder Road Street Light Project

Project No. 2026051

13 New Street Lights

Sidewinder Road; between 8th Ave & Co. 22nd Street



AGENDA ITEM REVIEW FORM

Regular City Council Meeting **7. D.**

Meeting Date: 06/10/2026
Department Head: Tomas Sanchez, City Engineer, Engineering
Submitted By: Oscar Barnett, Project Manager, Engineering
Action Requested: Motion

ITEM:

Discussion and possible action on any and all matters regarding the City of San Luis Public Works Yard Entrance - Parking Lot Paving. **(Manuel Hernandez, Assistant Director of Public Works)**

SUMMARY:

The Department of Public Works is seeking the Mayor and City Council's approval to accept and award a construction contract to Gutierrez Canales Engineering, PC, Inc. for the Public Works Yard Entrance-Parking Lot Paving Project. Gutierrez Canales Engineering, PC was the lowest responsible bidder for this project, at $61,424.58. Staff evaluated and is recommending awarding the contract to Gutierrez Canales Engineering, PC. This purchase falls under the bidding provisions of our City of San Luis Procurement Code Sections 3.05.030, 3.05.040, and 3.05.050.

RECOMMENDATION / SUGGESTED MOTION:

I MOVE TO AWARD THE CONTRACT TO GUTIERREZ CANALES ENGINEERING, PC FOR THE CONSTRUCTION OF THE PUBLIC WORKS YARD ENTRANCE - PARKING LOT PAVING, IN THE AMOUNT OF $61,424.58, AS PRESENTED.

Fiscal Impact

IS THERE FISCAL IMPACT ASSOCIATED WITH THIS ITEM:	Yes
CITY/STATE/FEDERAL FUNDS:	City
TOTAL:	$61,424.58
BUDGETED AMOUNT:	N/A
AVAILABLE AMOUNT TO TRANSFER:	$62,000 from various acct, see below.

ACCT NAME & GL#/REMAINING BALANCE BEFORE PURCHASE: See below.

FISCAL IMPACT STATEMENT (IF THIS IS A BUDGET TRANSFER, YOU MUST ATTACH THE BUDGET ADJUSTMENT FORM):

Budget Transfer account information: *From Project 2026050 Drainage Improvements Design, Mesa St. & Cesar Chavez Blvd 200-210-90015 $50,000/Project 2026043 Highway Users - 60" Hand Squeeze Roll Applicator 200-210-90000 $9,000/*
Project 2026043 Highway Users - HP Latex 700 W printer200-210-90000 $1,300/Project 2025037 Reoccurring Pavement Preservation program 200-210-89000 $1,700.

Attachments

Bid Advertisement
Bid Documents
Plans
Bid Tabulation
Contract
Budget Adjustment Form

AFFP
YS - 2026-RFP-00000011

Affidavit of Publication

STATE OF AZ } SS
COUNTY OF YUMA }

Lisa Reilly or David Fornof, being duly sworn, says:

That (s)he is Publisher or Director of Operations of the Yuma Sun, a daily newspaper of general circulation, printed and published in Yuma, Yuma County, AZ; that the publication, a copy of which is attached hereto, was in the published said newspaper on the following dates:

05/03/2026 05/10/2026

That said newspaper was regularly issued and circulated on those dates.
SIGNED:

Publisher or Director of Operations

Subscribed to and sworn to me this 10th day of May 2026.

VIRGEN P. PEREZ, Notary, Yuma County, AZ

My commission expires: May 10, 2029

OFFICIAL SEAL
VIRGEN P PEREZ
NOTARY PUBLIC - ARIZONA
YUMA COUNTY
COMM# 683378
My Comm. Expires MAY 10, 2029

38831 588420

CITY OF SAN LUIS - LEGAL
PO BOX 1170/1090 E. UNION ST
SAN LUIS AZ 85349

Ad text :

REQUEST FOR PROPOSALS

CITY OF SAN LUIS, ARIZONA

PUBLIC WORKS YARD ENTRANCE
PARKING LOT PAVING

2026-RFP-00000011

NOTICE IS HEREBY GIVEN THAT sealed proposals or bids for furnishing all labor, materials, equipment, tools and performing all services required for the construction of the Public Works Yard Entrance - Parking Lot Paving project and work incidental thereto.

The scope of works includes the installation of AC paving at the entrance of the Public Works Yard for a new parking lot. The work shall include, but is not limited to, furnishing all labor, materials, equipment, and incidentals necessary to complete the placement of asphalt paving in accordance with the applicable standards.

Project Description: Grading for pavement and placement of approximately 755 square yards of 3" AC pavement and 6" ABC (1/2" AC MAG Mix).

All work shall be completed and ready no later than June 30th, 2026.

Plans, specifications and contract documents may be obtained through the Procurement Portal at https://procurement.opengov.com/portal/sanluisaz.

No Pre-Bid meeting will be held for this project.

All bids must be submitted through the Procurement Portal and be accompanied by a certified or cashier's check or bid bond in the amount of five (5%) percent of the total amount of the bid.

Bids will be publicly opened at the City of San Luis City Hall, Pedro Julian Conference Room, 1090 E. Union St. San Luis, AZ 85349 on Monday, May 18th, 2026, at 1:00 P.M. (M.S.T) and read aloud. Bid opening can also be viewed virtually via the following link: Bid Opening - Public Works Yard Entrance - Parking Lot Paving.

The City of San Luis reserves the right to cancel this procurement, and/or to reject any or all bids, and/or to waive any informality in any bid. No bidder may withdraw their bid for a period of thirty (30) days after the date set for the bid opening thereof:

City of San Luis, Arizona

Jenny Torres, City Manager

Yuma Sun: May 3, 10, 2026 - 588420

REQUEST FOR PROPOSALS
CITY OF SAN LUIS, ARIZONA
PUBLIC WORKS YARD ENTRANCE PARKING LOT PAVING
2026-RFP-00000011

NOTICE IS HEREBY GIVEN THAT sealed proposals or bids for furnishing all labor, materials, equipment, tools and performing all services required for the construction of the Public Works Yard Entrance - Parking Lot Paving project and work incidental thereto.

The scope of works includes the installation of AC paving at the entrance of the Public Works Yard for a new parking lot. The work shall include, but is not limited to, furnishing all labor, materials, equipment, and incidentals necessary to complete the placement of asphalt paving in accordance with the applicable standards.

Project Description: Grading for pavement and placement of approximately 755 square yards of 3" AC pavement and 6" ABC (1/2" AC MAG Mix).

All work shall be completed and ready no later than June 30th, 2026.

Plans, specifications and contract documents may be obtained through the Procurement Portal at https://procurement.opengov.com/portal/sanluisaz.

No Pre-Bid meeting will be held for this project.

All bids must be submitted through the Procurement Portal and be accompanied by a certified or cashier's check or bid bond in the amount of five (5%) percent of the total amount of the bid.

Bids will be publicly opened at the City of San Luis City Hall, Pedro Julian Conference Room, 1090 E. Union St. San Luis, AZ 85349 on Monday, May 18th, 2026, at 1:00 P.M. (M.S.T) and read aloud. Bid opening can also be viewed virtually via the following link: Bid Opening - Public Works Yard Entrance - Parking Lot Paving.

The City of San Luis reserves the right to cancel this procurement, and/or to reject any or all bids, and/or to waive any informality in any bid. No bidder may withdraw their bid for a period of thirty (30) days after the date set for the bid opening thereof.

City of San Luis, Arizona

Jenny Torres, City Manager

Yuma Sun, May 3, 10, 2026 - 588420

CITY OF SAN LUIS

REQUEST FOR PROPOSAL (RFP)

CONTRACT DOCUMENTS

FOR

CITY OF SAN LUIS

PUBLIC WORKS YARD ENTRANCE - PARKING LOT PAVING

2026-RFP-00000011

SEALED REQUEST FOR PROPOSAL DEADLINE

Monday, May 18, 2026, 1:00 pm

CITY OF SAN LUIS
1090 EAST UNION STREET | P.O. BOX 7740 | SAN LUIS, AZ 85349

TABLE OF CONTENTS

CITY OF SAN LUIS

undefined

1. ADVERTISEMENT FOR BIDS
2. INSTRUCTIONS TO BIDDERS
3. SCOPE OF WORK
4. PROPOSAL KIT
5. BID SCHEDULE
6. CITY INSURANCE REQUIREMENTS
7. GENERAL CONDITIONS OF THE CONTRACT
8. ATTACHMENTS

Attachments:

A - Contractor's Affidavit Regarding Settlement of Claims

B - PW Entrance-C1

ADVERTISEMENT FOR BIDS

NOTICE IS HEREBY GIVEN THAT sealed proposals or bids for furnishing all labor, materials, equipment, tools and performing all services required for the construction of the Public Works Yard Entrance – Parking Lot Paving project and work incidental thereto.

The Scope of works includes the installation of AC paving at the entrance of the Public Works Yard for a new parking lot. The work shall include, but is not limited to, furnishing all labor, materials, equipment, and incidentals necessary to complete the placement of asphalt paving in accordance with the applicable standards.

Project Description: Grading for pavement and placement of approximately 755 square yards of 3" AC pavement and 6" ABC (1/2" AC MAG Mix).

All work shall be completed and ready no later than June 30th, 2026.

Plans, specifications and contract documents may be obtained through the Procurement Portal at https://procurement.opengov.com/portal/sanluisaz.

No Pre-Bid meeting will be held for this project.

All bids must be submitted through the Procurement Portal and be accompanied by a certified or cashier's check or bid bond in the amount of five (5%) percent of the total amount of the bid.

Bids will be publicly opened at the City of San Luis City Hall, Pedro Julian Conference Room, 1090 E. Union St. San Luis, AZ 85349 on Monday, May 18th, 2026, at 1:00 P.M. (M.S.T) and read aloud. Bid opening can also be viewed virtually via the following link: Bid Opening - Public Works Yard Entrance - Parking Lot Paving.

The City of San Luis reserves the right to cancel this procurement, and/or to reject any or all bids, and/or to waive any informality in any bid. No bidder may withdraw their bid for a period of thirty (30) days after the date set for the bid opening thereof:

City of San Luis, Arizona

_____

Jenny Torres, City Manager

INSTRUCTIONS TO BIDDERS

1. DEFINITIONS

1.1 All definitions set forth in the General Conditions are applicable to these Instructions to Bidders.

1.2 Bidding Documents include the Advertisement for Bids, Instructions to Bidders, Bid Form, Bid Bond Form, and the proposed Contract Documents, including any addenda issued prior to the receipt of bids.

1.3 Addenda are written or graphic instructions issued prior to the execution of the contract which modify or interpret the Bidding Documents, including Drawings, conditions of the Contract and

Specifications, by additions, deletions, clarifications or corrections. Addenda will become part of the Contract Documents when the Construction Contract is executed.

1.4 The term "Owner" or "City" shall be interpreted to mean City of San Luis, Arizona.

2. BIDDER'S REPRESENTATION

2.1 Before submitting a bid, bidders shall carefully examine the Drawings, Bidding Requirements, Bid Document Contract Forms, General Conditions, Supplementary General conditions, Specifications, and Related Documents, visit the site of the work, and fully inform themselves as to all existing conditions and limitations and shall include in the bid a sum sufficient to cover the cost of all items included in the Contract. The Bidder, if awarded the Contract, shall not be allowed any extra compensation by reason of any matter or thing concerning the Project, which said Bidder might have fully informed himself prior to the building.

3. BIDDING DOCUMENTS

3.1 Bidders may obtain copies of the bidding Documents through the Procurement Portal at https://procurement.opengov.com/portal/sanluisaz.

4. INTERPRETATION OF BIDDING DOCUMENTS

4.1 Should a Bidder find discrepancies, inconsistencies or obscurities in, or omissions from the bidding documents, or should he be in doubt as to their meaning, Bidder shall submit their questions through the Procurement Portal. A written Addendum, clarifying the intent of the documents shall be issued, if needed. Addenda may not be issued less than 48 hours before the time specified for receipt of bids. Questions received less than four calendar days prior to the assigned bid date cannot be answered in writing. Should any discrepancies not be clarified by Addendum, the Contractor shall use the most expensive condition shown or specified in bid.

4.2 Prior to the receipt of bids, each person or firm recorded by the Office of the City Clerk as having received the bidding documents will be notified of any addendum. Addenda will also be available for Inspection wherever the bidding documents are kept available for that purpose.

4.3 All Addenda issued by the City during the time of bidding are to be included in the bid, and shall become a part of the bidding documents (bidder’s responsibility to check for addendums). Acknowledge receipt of Addenda through the Procurement Portal.

4.4 All questions must be submitted through the Procurement Portal no later than 6:00 pm on Tuesday, May 12, 2026.

5. SUBSTITUTIONS

5.1 When a specific manufacturer, trade name or material is specified, or indicated, it is to establish a standard of quality and shall not be construed as limiting competition. However, components of electrical systems shall be standard items and/or interchangeable with specified manufacturer to facilitate repairs and upkeep by the Owner.

5.2 It shall be the Contractor's responsibility to provide materials of equal standards to those specified. The City shall be the sole judge as to whether or not the products meet the established standards. The Contractor MUST request written approval of equal materials from the City prior to, or after the bid date.

6. BIDDING PROCEDURES

6.1 A bid is invalid if it has not been submitted through the Procurement Portal at https://procurement.opengov.com/portal/sanluisaz prior to the time and date for receipt of bids indicated in the Invitation to Submit Proposals, or prior to any extension thereof issued to the bidders.

6.5 Bid Security:

1. Each bidder is required to submit, with his bid, a certified or cashier's check upon a solvent bank, or a surety bond for five percent (5%) of the amount of the Base Bid made payable to the Owner.
    a. If more than one proposal is submitted, only one Bid Security is required for the largest base Bid amount, however, this bond shall apply to any and/or all bids submitted.
2. The Bid Security shall be given as a guarantee that the bidder will enter into a contract to perform the work, if awarded to him, and provide a satisfactory Performance Bond and Payment Bond as required under the provisions of Title 34, Chapter 2, Article 2, Arizona Revised Statutes. Bid Security shall be declared forfeited as liquidated damages if he refuses to enter into said contract upon request to do so by the Owner.
3. Bid Security will be returned to the unsuccessful bidders, and to the successful bidder upon the execution of a satisfactory Performance Bond and Payment Bond and Construction Contract.
4. Bidders may withdraw their bid at any time prior to bid opening, but may not resubmit them. No bid may be modified or withdrawn after the bid opening for a period of 30 days except where the award of the contract has been delayed at least 31 days.

7. SUBCONTRACTOR LIST FORM

7.1 Complete the Subcontractor List Form, listing a single company, firm, or organization name only for each branch of the work. Submit through the vendor PROPOSAL KIT.

7.2 The competency and responsibility of bidders and their proposed subcontractors will be considered in making the award.

7.4 The Contractor shall pay the cost of all permits, changes, meters, connections, fees, etc., directly to governmental agencies having jurisdiction to comply with the law of the place of the Project in order to complete the work. The bidders' attention is directed to the fact that all applicable state laws, municipal ordinances, and the rules and regulations of all authorities having jurisdiction shall apply to the Contract.

8. REJECTION OF BIDS

8.1 The Bidder acknowledges the right of the Owner to reject any or all bids, to waive any informality or irregularity in any bid received, or to withhold the award for any reason he determines. In addition, the Bidder recognizes the right of the Owner to reject a bid if the Bidder failed to furnish any required Bid Security or to submit the data required by the Bidding Documents, or if the bid is in any way incomplete or irregular. Bidders shall understand that the Owner will not be responsible for any errors or omissions in the preparation of the bid.

9. AGREEMENT

9.1 The form of Agreement which the successful Bidder will be required to execute in two (2) original counterparts. Progressed payments will be made to the Contractor by the Owner in an amount equal to 90% of that due until the final payment.

10. WARRANTY

10.1 The Contractor certifies by submitting his bid that he has familiarized himself with all specified products, materials, and systems which are proposed for inclusion in the required work, and that said materials, products, and systems are appropriate for the use(s) intended. He additionally certifies by submitting this bid that he shall, in fact, install said materials, products, and systems in the work properly and in rigid compliance with the terms and conditions of the Contract Documents, and shall issue his written warranty applicable to the work as required by the applicable Supplementary General Conditions. If the Bidder determines that the proposed materials, products, and/or systems are not appropriate for the use(s) intended, he shall submit his written exceptions attached to the Bid Form.

11. PERFORMANCE AND PAYMENT BONDS

11.1 The Contractor is hereby required to provide and pay for Performance and Payment Bonds. Bonds shall secure the faithful performance (100%) of the Contract and the payment of all obligations (100%) arising there under, in such form as the Owner may prescribe and with such sureties that he may approve. Both Bonds shall be active and held by the Owner for duration of the guaranty (warranty).

12. CONTRACTOR LICENSE LAW, ELIGIBILITY & PREFERENCE

12.1 The Contractor shall comply with, and require all subcontractors to comply with State of Arizona and City Contractor's License Laws. Contractor shall comply with the provisions of "an Act to Regulate the Business of Contracting", Title 32, Chapter 10, Arizona Revised Statutes with latest adopted revisions and ‘Contractor's License Laws and Regulations" dated July, 1981, published by the Arizona State Registrar of Contractors, or the latest revision thereof adopted under the provision of AIRS title 32, chapter 10, Articles 2 and 3.

The prime Contractor shall have a State of Arizona Classification “A” Contractor’s license to perform the work. A bid submitted by any Contractor not properly licensed at the time of bid opening shall be considered non-responsive and will be rejected.

13. NONDISCRIMINATION

13.1 In connection with the performance of work under this Contract, the Contractor agrees (as prescribed in A.R.S. Section 23-373) not to discriminate against any employee or applicant for employment because of race, sex, religion, color, or national origin. The aforesaid provision shall include, but not be limited to, the following: employment upgrading, demotion, or transfer, recruitment or recruitment advertising, layoff or termination, rates of pay or other forms of compensations and selection for training, including apprenticeship. The Contractor agrees to post hereafter in conspicuous places, available for employees and applicants for employment, notices setting forth the provisions of the nondiscrimination clauses. The contractor further agrees to insert the foregoing provision in all subcontracts hereunder, except subcontracts for standard commercial supplies or raw materials.

14. COPIES OF DOCUMENTS FURNISHED

14.1 The Contractor shall obtain Construction Documents free of charge through the Procurement Portal.

15. INSURANCE

15.1 The contractor is required to provide and pay for insurances. He shall file, with his Performance and Payment Bonds, all required Certificates of Insurance and endorsements demonstrating that the insurance policy was amended to add City of San Luis, Arizona as an additionally insured.

15.2 The Contractor shall not commence work under this Contract until he has obtained all the insurance required under this paragraph and such insurance has been approved by the Owner, nor shall the Contractor allow any Subcontractor to commence work on his subcontract until the insurance require of the subcontractor has been so obtained and approved.

15.3 The Contractor shall procure and maintain during the life of this contract, Workmen's Compensation Insurance as required by applicable State or Territorial Law for all of his employees to be engaged in work at the site of the project under this contract, and in any such work sublet, the Contractor shall require the Subcontractor similarly to provide Workmen's Compensation Insurance for all of the latter's employees to be engaged in such work unless such employees are covered by the protection afforded by the Contractors Workmen's Compensation Insurance. In case any class of the employees engaged in hazardous work on the project under this contract are not protected under the Workmen's Compensation Statute, the Contractor shall provide and shall cause each subcontractor to provide adequate employer's liability insurance for the protection of such of his employees as are not otherwise protected.

15.4 The Contractor shall provide public liability insurance and show evidence specified in the Contract Documents in the City Insurance Requirements.

16. ADDITIONAL SERVICES

16.1 Contractor agrees to pay for additional testing services, additional Engineering services, and any similar related additional costs as designated in the Contract Documents.

17. SUMMARY OF THE WORK

17.1 Refer to the Overview, Summary and Scope of Work, and Summary of the Work, for description of the work.

18. SUBSTANTIAL COMPLETION

18.1 Substantial Completion will be achieved no later than June 30, 2026.

19. LIQUIDATED DAMAGES

19.1 The liquidated damages for this project shall be determined by the Schedule of Liquidated Damages in City of San Luis Supplemental to the MAG Uniform Standard Specifications.

20. EVALUATION AND AWARD

- Bid opening will take place on Monday, May 18, 2026 immediately after the close of the bidding.
- City staff will convene in the San Luis City Hall, Pedro Julian Conference Room, 1090 E Union St. San Luis, AZ 85349, open the proposals virtually, and read the bids into the record.
- Award will be made to the lowest qualified responsive bidder.
- Formal award of contract will be on the next available Regular City Council meeting.

21. PROTESTS

All responders will receive notification via e-mail regarding their status vis-a-vis the proposed contract award. Responders not selected have two days from e-mail sent date to initiate protest proceedings. To do this, a dissatisfied party must lodge a protest with Angelica Cifuentes, Procurement Coordinator, via receipted e-mail (acifuentes@sanluisaz.gov) or by certified mail (Attn: Angelica Cifuentes/City of San Luis/P.O. Box 7740/San Luis, AZ 85349). The City of San Luis will then hold a hearing within two days of the receipt of the protest and make a determination within two days of the hearing. In the absence of a successful protest, the contract will be awarded to the most responsive qualified bidder.

SCOPE OF WORK

TIMELINE

Advertisement/Release Project Date:	May 3, 2026
Advertisement/Release Project Date:	May 10, 2026
Question Submission Deadline:	May 12, 2026, 6:00pm
Question Response Deadline:	May 13, 2026, 6:00pm
Submission Deadline:	May 18, 2026, 1:00pm

Bid Opening:	May 18, 2026, 1:00pm
Contractor Selection Date:	May 19, 2026

PROJECT NAME, LOCATION, AND OVERVIEW

PROJECT NAME:

The name of this project is **Public Works Yard Entrance - Parking Lot Paving**. All correspondence and documents are to reference "Public Works Yard Entrance - Parking Lot Paving".

PROJECT LOCATION:

The Project is located in Yuma County, Arizona. The proposed work is located within the limits of the City of San Luis, Arizona, on 1311 North 4th Avenue San Luis, AZ 85349.

OVERVIEW:

The **Public Works Yard Entrance - Parking Lot Paving** project is being undertaken by the City of San Luis, Arizona. This bid pertains to those activities described herein under the Scope of Work.

It is especially important that bidders are aware of the following:

A. This solicitation is open to general contractors and subcontractors licensed to operate in the State of Arizona.

B. Davis-Bacon wage rates **NO VALUE** apply.

SCOPE OF WORK

Scope of Work, **Public Works Yard Entrance - Parking Lot Paving**.

The proposed work is located within the limits of the City of San Luis, Arizona. The work consists of, but is not limited to the installation of AC paving at the entrance of the Public Works Yard for a new parking lot, furnishing all labor, materials, equipment, and incidentals necessary to complete the placement of asphalt paving in accordance with the applicable standards.

Project Description: Grading for pavement and placement of approximately 755 square yards of 3" AC pavement and 6" ABC (1/2" AC MAG Mix).

All work shall be completed and ready no later than June 30th, 2026.

Special Conditions of Work:

A. Project to be completed 100% and invoice submitted.

B. Performance Bonding, Taxes and other fees are considered incidental to project overall quote.

C. The City of San Luis reserves the right to modify the project scope of work after the proposals are received and evaluated, and before the successful bidder is awarded the contract.

D. Encroachment permit from the City of San Luis will not be required.

E. Quantities noted above are estimated bases on available existing information. Contractor to verify required quantities and confirm with the City of San Luis prior to proceeding with the work, the City will pay for "as-built" quantities.

F. New pavement preservative seal is not required.

G. The project shall be constructed in accordance with all MAG Uniform Standard Specifications and details for Public Works Construction as adopted by the City of San Luis, except as otherwise required by this special conditions.

PROPOSAL KIT

Proposal*
Project Name: Public Works Yard Entrance - Parking Lot Paving

In compliance with the Advertisement for Bids:

Having examined the contract documents, site of work, and being familiar with the conditions to be met, hereby submits the following Proposal for furnishing the material, equipment, labor and everything necessary for the completion of the work listed and agrees to execute the contract documents and furnish the required CONTRACT AND LABOR AND MATERIAL surety bonds and certificates of insurance for the completion of said work, at the locations and for the prices set forth on the inside pages of this form;

Understands that construction of this project shall be in accordance with all applicable Maricopa Association of Governments (MAG) Uniform Standard Specifications and Details for Public Works Construction as adopted by the City of San Luis, the City of Yuma Construction Standard Detail Drawings – 2009 edition [details], the City of San Luis Supplemental to the MAG Uniform Standard Specifications and Details for Public Works Construction and the City of Yuma Construction Standard Detail Drawings, except as otherwise required by the Plans and Special Provisions;

Understands that this proposal for construction of this project shall be submitted with a proposal guarantee of cash, certified check, cashier's check or bid surety bond for an amount not less than 5 percent of the amount bid;

Agrees that upon receipt of Notice of Award, from the City of San Luis, Arizona, Bidder will execute the contract documents within 5 (Five) calendar days;

Understands that the work shall commence on day 1 of the Contract Time and must be completed on or before June 30, 2026.

☐ Please confirm

*Response required

Bid Surety Bond--NOTE: Attach current power of attorney***
Please download the below documents, complete, and upload.

- Bid_Surety_Bond.pdf

*Response required

Non-Collusion Affidavit*
Please download the below documents, complete, and upload.

- Non-Collusion_Affidavit.pdf

*Response required

Bidders Participation Subcontractors and Suppliers List*
Please download the below documents, complete, and upload.

- Bidders_Participation_Subco...

*Response required

Certificate of Insurance*
The Certificate of Insurance is not required at the time of bid submission; it may be uploaded with contract documents.

*Response required

BID SCHEDULE

Line Item	Description	Quantity	Unit of Measure	Unit Cost	Total
1	Grading for pavement	755	SY		
2	6" ABC Subbase	755	SY		
3	3" AC Pavement, 1/2" MAG AC Mix	755	SY		
4	Material Testing, Base-Subbase	1	LS		
5	Contingency	5	%		
TOTAL					

CITY INSURANCE REQUIREMENTS

The following are the minimum required under the Contract. Greater amounts may be required by law or regulation. Any insurance proceeds in excess of the lmits and coverage required in this Contract and which is applicable to a given loss will be available to the City. These limits required by the Contract do not limit the Contractor's liability under the indemnification provisions of the Contract.

Contractor's Obligation

The Contractor shall secure and maintain, at the Contractor's expense, until the Final Completion of the Project, general liability and property insurance as shall protect the Contractor and the City from claims for bodily injury, personal injury, and property damage which may arise because of the nature of the work or from operations under this Contract. The Contractor's insurance coverage shall be primary insurance with respect to all other available sources. Any coverage maintained by the City shall not contribute to any claims arising from the Contractor's performance of this Contract. The Contractor shall file these certificates with City of San Luis within ten (10) days of execution of this Contract and prior to engaging in any operation or activities set forth in this AGREEMENT. The foregoing insurance policies shall provide that no cancellation, major change in coverage, or expiration by the insurance company or the insured.

General Liability Coverage

Contractor shall have general liability coverage on a per occurrence, and in comprehensive form. General liability coverage shall include Products, Completed Operations, Products Liability, Explosion, Underground and Collapse Hazard, Premises, Operations, Contractual, Independent Contractors, Broad Form Property Damage and Personal Injury. General Liability coverage shall include and eliminate the exclusion for property under the care, custody, and control of the Contractor.

Coverage Amounts

Contractor shall provide general liability and excess general liability coverage in the following amounts, at a minimum:

Employer's Liability

A. Each Accident $100,000

B. Disease for Each Employee $100,000

C. Disease Policy Limit $250,000

Contractors General Liability

A. General Aggregate $6,000,000

B. Products-Completed Operations Aggregate $2,000,000

C. Each Occurrence (Bodily Injury and Property Damage) $6,000,000

D. Personal Injury and Advertising Injury $2,000,000

    1. Property Damage liability insurance will provide Explosion, Collapse, and Underground coverages.

Automobile Liability

A. Bodily Injury:

   1. Each Person $1,000,000

   2. Each Accident $1,000,000

B. Property Damage

   1. Each Accident $1,000,000

C. Combined Single Limit $1,000,000

Contractual Liability

A. Bodily Injury:

   1. Each Accident $2,000,000

   2. Annual Aggregate $2,000,000

B. Property Damage:

   1. Each Accident $2,000,000

   2. Annual Aggregate $2,000,000

   3. Each Accident $2,000,000

   4. Annual Aggregate $2,000,000

Professional Liability Errors and Omissions $1,000,000

Additional Provisions

A. Additional Insured: Contractor shall name the **City of San Luis, Arizona (an Arizona municipal corporation) and its elected officials, officers, agents, as "Additional Insureds**" on all insurance policies, except Worker's Compensation and Errors and Omissions, and this shall be reflected on the Certificate(s) of Insurance, with corresponding endorsement relative to the additionally insured indemnification. Contractor shall name the City of San Luis as certificate holder.

B. Cancellation Notice of Material Change of Coverage: The Contractor shall keep all policies in force for the duration of the Contract and any possible extension thereof. Contractors' required insurance shall be endorsed to provide that the policies will not be canceled, reduced, discontinued, or otherwise materially altered during the period of performance without thirty (30) days prior written notice to the City of San Luis Public Workers Department.

C. Certificate(s) of Insurance: Certificates of Insurance shall be Project-specific. Prior to commencing work under the Contract, Certificates of Insurance shall be submitted and approved by the City. Contractor is responsible for obtaining Certificates of Insurance, establishing that the Contractor and all subcontractors have complied with insurance requirements previously stated. Copies of Certificates of Insurance shall be forwarded to the City Risk Manager for review and filing. Failure of the City to demand such Certificate or other evidence of full compliance with these insurance requirements or failure of the City to identify a deficiency from the evidence that is provided shall not be construed as a waiver of the Contractor's obligation to maintain such insurance. City shall have the right, but not the obligation, to prohibit Contractor or any of its subcontractors from entering the Project Site until such certificates or other evidence that insurance has been placed in complete compliance with these requirements is received and approved by City.

D. Rating of Insurance Companies: Any and all insurance companies supplying coverage to the Contractor shall be approved to write insurance in the State of Arizona and must possess no less than an "A" rating in accordance with the A.M. Best rating guide.

E. Deductible: Contractor shall be solely responsible to satisfy any deductible or self-insured retention with respect to any of the coverages required by the Contract Documents. Such deductibles or self-insured retention shall not be applicable with respect to the policy limits provided to the City of San Luis. The City of San Luis, at its option, may require the Contractor to secure payment of such deductible or self-insured retention by a surety bond or irrevocable and unconditional Letter of Credit.

F. Rental Equipment: In the event that rental of equipment is undertaken to complete and/or perform the Work, the Contractor agrees that it shall be solely responsible for such rental equipment. Such responsibility shall include, but not be limited to, theft, fire, vandalism, and use by unauthorized persons.

G. Personal Property: In the event that materials or any other type of personal property are acquired for the Project or delivered to the Project site, the Contractor agrees that it shall be solely responsible for such property until it becomes a fixture on the Project, or otherwise is installed and incorporated as a final part of the Project. Such responsibility shall include, but not be limited to, theft, fire, vandalism, and use by unauthorized persons. Contractor shall maintain "all risk" insurance on a replacement cost basis, covering loss or damage to personal property (for which it has title and/or risk of loss), which is to become a final part of the Project, during any time such personal property is in transit and while stored or worked upon away from the Project site. City and its officials, officers, employees, and agents shall be named as additional insured under such insurance.

H. Waiver of Subrogation: City and Contractor waive all rights against each other and Architect/Engineer, and separate contractors for damages caused by fire or other perils covered by Builder's Risk or any other property insurance, except such rights as they may have to the proceeds of such insurance.

I. Right to Require Higher Limits: City reserves the right, in its sole discretion, to require higher limits of liability coverage if, in the City's opinion, operations by or on behalf of the Contractor create higher-than-normal hazards and to require the Contractor to name additional parties in interest to be Additional Insureds.

J. Waiver of Requirements: The City Manager, in consultation with the City Risk Manager and/or City Attorney, reserves the right to waive or reduce insurance requirements should it be in the best interest of the City.

GENERAL CONDITIONS OF THE CONTRACT

SECTION 1 - Bidders Participation Subcontractors and Suppliers List

These General Conditions encompass provisions that apply and are incorporated into all construction contracts entered into by the City of San Luis unless otherwise specifically excluded in the executed Contract. Sections 2 through 14 of these General Conditions apply to all construction contracts, in whatever form, including without limitation, Fixed Price, Unit Price, Construction Manager at Risk (CM@Risk), Guaranteed Maximum Price (GMP) Cost-Based, and Job Order Contracts (JOC).

SECTION 2 - GENERAL DEFINITIONS

2.1 The Definitions in the Invitation for Bid (IFB), the Request for Proposals (RFP), the Request for Qualifications (RFQ), and/or the JOC Solicitation (JOC) giving rise to the Contract shall apply to these General Conditions and the Contract for the Project.

2.2 Change Order – A written instrument issued after execution of the Contract Documents signed by City and Contractor, stating their agreement upon all of the following: the addition, deletion, or revision in the scope of services or deliverables; the amount of the adjustment to the Contract Price, the extent of the adjustment to the Contract Time, or modifications of other contract terms. Only a Change Order allows the Contract Price or the Contract Time or both to be changed.

2.3 City – City of San Luis, Arizona, a municipal corporation, with whom the Contractor has entered into the Contract and for whom the Services and/or Work are to be provided pursuant to the Contract(s).

2.4 Contract - The written agreement executed between the City and Contractor, including all of the Contract Documents**.**

2.5 Contract Documents - The documents which together form the Contract between City and Contractor, as identified in Article 2 of the Contract, or are otherwise incorporated into the Contract, including the Contract, the exhibits and attachments to it, these General Conditions, any Notice to Proceed, and any Job Order (if applicable), the Plans and Specifications, Project Schedule, written and properly executed Change Orders, and any other documents so designated in the Contact.

2.6 Contract Price - The agreed-upon price to be paid to the Contractor for full, timely, and acceptable completion of the Services or Work under the terms of the Contract.

2.7 Contract Time(s) - The number of days or the dates related to the Final Completion as stated in Contract Documents. The Contract Time is set forth in the Contract and is based upon the Project Schedule agreed to by the City in writing.

2.8 Contractor - The person or corporation with whom the City has entered into a contract for construction-related work or services related to the Project at issue. As used in these General Conditions, the term Contractor includes CM@Risk and JOC under contract with the City to provide pre-construction and/or construction services.

2.9 Contractor Payment Request - The form that is accepted by the City and used by the Contractor in requesting progress payments or final payment and which shall include such supporting documentation as is required by the Contract Documents and/or City.

2.10 Construction Documents - The plans, specifications, and drawings prepared and issued by the Design Professional and approved by the City for construction, meaning the documents are sealed by the Contractor (as required), acceptable for permitting, and incorporated into the Contract by reference. All amendments and modifications to the Construction Documents must be approved in writing by the City prior to incorporation into the Contract.

2.11 Critical Path - The critical path is the sequence of Project network activities that add up to the longest overall duration. Once established in the Project Schedule, the Critical Path for the Project shall not be changed without prior written approval of the City.

2.12 Day - Calendar day(s) unless otherwise specifically stated in the Contract Documents.

2.13 Final Acceptance - The written notice from the City to the Contractor that Final Completion has occurred.

2.14 Final Completion - The point when all items of the Work, including punch list items, have been completed to the City's satisfaction as reflected in the written Final Acceptance.

2.15 Float - The number of Days by which an activity can be delayed without lengthening the Critical Path and extending the Contract Time. Unless otherwise expressly agreed in writing, all Float belongs to City.

2.16 MAG Specifications – The latest edition adopted by the City of the Uniform Standard Specifications for Public Works Construction published by Maricopa Association of Governments ("MAG"), or the latest revision published by MAG.

2.17 MAG Standard Details – The latest edition adopted by the City of the Uniform Standard Details for Public Works Construction published by Maricopa Association of Governments ("MAG"), or the latest revision published by MAG.

2.18 Notice to Proceed (NTP) - A written notice given by the City to the Contractor fixing the date on which the Contractor will start to perform the Contractor's obligations under the Contract. The Notice to Proceed shall not be issued until the Contract Price is approved and accepted by the City.

2.19 Project – The Project specified in the Contract (including the Job Order).

2.20 Project Manager - The Project Manager designated in Article 1 of the Contract, or any successor Project Manager the City designates. The Project Manager has the authority to act on behalf of the City, as delineated and limited by the Contract Documents and applicable law. The City shall communicate with the Contractor through the Project Manager. However, the Project Manager has no authority to bind the City or City Council in contravention of any City code, State or Federal statute or regulation, or these General Conditions.

2.21 Project Schedule - The schedule for the completion of the Project agreed to and/or required by the City and incorporated into the Contract.

2.22 Project Specific Provisions - Additional conditions that apply to the specific Project and/or Scope of Work.

2.23 Proposal A Proposal submitted to the City by a Contractor in response to an Invitation for Bid (IFB), Request for Qualifications (RFQ), a Request for Proposals (RFP), or other solicitation or request by the City. Bids may be Fixed Price, Guaranteed Maximum Price (GMP), Unit Price, or other form as required or requested by the City in the Bid Schedule.

2.24 Requests for Information (RFIs) - Formal written request from the Contractor to the City and/or Contractor for the Project seeking clarification or additional information needed for the Contractor to properly complete the Work and/or Services under the Contract. The City may require RFI's to be submitted on a specific form or in a specified format.

2.25 Schedule of Values (SOV) - The specified document prepared by the Contractor and approved and accepted by the City, which divides the Contract Price into pay items, such that the sum of all pay items equals the Contract Price for the construction phase Work, or for any portion of the Work having a separate specified Contract Price.

2.26 Scope of Work The scope of work agreed to and/or required by the City and incorporated into the Contract as set forth in the IFB and/or an Exhibit to the Contract.

2.27 Subconsultant A person, firm, or corporation having a Contract with a Consultant/Contractor to furnish services required as its independent professional associate or consultant with respect to the Project.

2.28 Subcontractor - An individual or firm having a direct contract with the Contractor or any other individual or firm having a contract with the aforesaid contractors at any tier, who undertakes to perform a part of the pre-construction services or construction phase Work at the site for which Contractor is responsible. Subcontractors shall be selected through the Subcontractor selection process described in the Contract Documents, if any.

2.29 Supplier. Any person or entity providing materials or property for the Project.

2.30 Total Float. The number of Days by which the pre-construction services or construction phase Work or any part of the same may be delayed without necessarily extending a pertinent Contract Time or schedule milestone in the Project Schedule.

2.31 Work - The entire completion of construction or the various separately identifiable parts thereof, required to be furnished during the construction phase. Work includes and is the result of:

a. performing or furnishing labor;

b. furnishing and incorporating materials, resources, and equipment into the construction; and

c. performing or furnishing services and documents as required by the Contract Documents for the construction phase.

SECTION 3 - STANDARD SPECIFICATIONS AND DETAILS

3.1 The City operates under the 2016 City of San Luis Supplement to the 2015 MAG Uniform Standard Specifications for Public Works Construction.

3.2 The City also operates under the 2009 City of Yuma Construction Standard Detail Drawings.

3.3 The City also operates under the 2006 Yuma County Public Works Standards – Volume III – Storm Drainage Facilities.

3.4 The above standard specifications and details may be viewed and downloaded at the City of San Luis website: https//www.sanluisaz.gov/DocumentCenter/Index/268. **3.5** The City may require particular sections of the revisions of the MAG Specifications and Standard Details after the 2015 revision that the City adopted.

3.6 Current and Historical MAG Specifications and Standard Details may be viewed at the Maricopa Association of Governments website at https://azmag.gov/Programs/Public-Works/Specifications-and-Details.

3.7 The MAG Specifications and Standard Details and the City's amendments to them are incorporated into the Contract.

SECTION 4 - CONTRACTOR'S RESPONSIBILITIES FOR CONSTRUCTION SERVICES

4.1 General

4.1.1 The Contractor shall construct the Work in accordance with the Contract Documents and as outlined in the Contract Documents to the satisfaction of the City, exercising the degree of professional care, skill, diligence, quality, and judgment that a professional Contractor engaged, experienced, and specializing in the construction of facilities of similar scope, function, size, quality, complexity, and detail in urban areas throughout the United States comparable to the City would exercise at such time, under similar conditions. The Contractor shall, at all times, perform the Work in conformance with sound and generally accepted engineering principles and construction management and construction contracting practices.

4.1.2 The Contractor shall comply with, and require all Subcontractors to comply with, the Arizona Contractors' license laws, including all requirements with respect to being duly registered and licensed.

4.1.3 Pursuant to A.R.S. § 41-4401, the Contractor warrants to the City that the Contractor and all its Subcontractors are in compliance and will comply with all Federal Immigration laws and regulations that relate to their employees and with the E-Verify Program under A.R.S. § 23-214(A). The Contractor acknowledges that a breach of this warranty by the Contractor or any of its Subcontractors is a material breach of this Contract subject to penalties up to and including termination of the Contract or any

subcontract. The City retains the legal right to inspect the papers of any employee related to this statute and of the Contractor or any Subcontractor who works on this Contract to ensure compliance with this warranty. The City may conduct random verification of the Contractor's employment records and any of its Subcontractors' employment records to ensure compliance with this warranty. The City will not consider the Contractor or any of its Subcontractors in material breach of the foregoing warranty if the Contractor and its Subcontractors establish that they have complied with the employment verification provisions prescribed by 8 USCA §1324(a) and (b) of the Federal Immigration and Nationality Act and the e-verify requirements prescribed by Arizona Revised Statutes § 23-214(A). The provisions of this Section must be included in any agreement the Contractor enters into with its Subcontractors who provide services under this Contract or any subcontract. "Services" are defined as furnishing labor, time, or effort in the State of Arizona by a contractor or Subcontractor. Services include construction or maintenance of any structure, building, or transportation facility or improvement to real property. Breach of this warranty shall constitute a material breach of the contract and shall subject the Contractor to penalties, including termination of the Contract at the sole discretion of the City.

4.1.4 The Contractor further understands and acknowledges the applicability of the Americans with Disabilities Act, the Immigration Reform and Control Act of 1986, and the Drug-Free Workplace Act of 1989 to the Contract. The Contractor understands and acknowledges that it must also comply with A.R.S. § 34-301, "Employment of Aliens on Public Works Prohibited," and A.R.S. § 34-302, as amended, "Residence Requirements for Employees," and A.R.S. § § 12-2701 through 12-704 "Immigration and Nationality Law Practice Act" as amended.

4.2 Contractor's Pre-Contract and Pre-Work Deliverables

4.2.1 Before beginning any Work under the Contract, the Contractor shall execute the Contract and deliver to the City the items listed in Section 4-2.2 below within seven (7) days after the award of the Contract, and the City must execute the Contract. Failure to do so will be a material breach of the Contract, entitling the City to terminate the Contract for Cause.

4.2.2 When the Contractor delivers the executed Contract to the City, the Contractor shall also deliver to the City such bonds and certificates of insurance with endorsements in such amounts (and other evidence of insurance requested by the City) required under Section 11 - of these General Conditions, and as the Contract requires.

4.2.3 The Contractor shall obtain all necessary permits for the Work and pay all applicable fees unless otherwise noted on the plans and in the specifications. The Contractor is specifically notified of the need to obtain traffic control permits from the Arizona Department of Transportation (ADOT) and the necessary environmental permits or file the necessary environmental and regulatory permit notices. Copies of all permits and the associated notices must be provided to the City prior to starting the permitted activity.

4.3 Pre-Construction Conference

4.3.1 Prior to the commencement of any Work, the City may schedule a Pre-Construction Conference.

4.3.2 Prior to the Pre-construction Conference, the Contractor shall provide the Project Manager with a Schedule of Values reflecting the subcontracts and other categories that will be used to submit pay applications for the Work. The total amount of the Schedule of Values shall not be greater than the Contract Price. The Schedule of Values shall be reviewed at the Pre-Construction Conference and revised in response to comments and questions from the City. Once accepted by the City in writing, the Schedule of Values for the Project will not be changed without the City's prior written approval.

4.4 Performance of the Work (Including Field Measurements, Subcontractors, and Suppliers)

4.4.1 Unless otherwise provided in the Contract Documents to be the responsibility of the City or a separate Contractor, the Contractor shall provide through itself or its Subcontractors the necessary supervision, labor, inspection, testing, start-up, material, equipment, machinery, temporary utilities, and other temporary facilities to permit Contractor to complete the Work consistent with the Contract Documents.

4.4.2 The Contractor's Superintendent shall be present at the Project site at all times that material Work under this Contract is taking place. The Contractor's Superintendent or designee shall be present at the Project site at all times any other Work under this Contract is taking place. All elements of the Work shall be under the direct supervision of a foreman or his designated representative on the Project site, who shall have the authority to take actions required to carry out that particular element of the Work properly.

4.4.3 Before ordering materials or doing work, the Contractor and each Subcontractor shall verify measurements at the Project site and shall be responsible for the correctness of such measurements. No extra charge or compensation will be allowed because of differences between the actual dimensions and the dimensions indicated on the Contract Documents, including the drawings.

4.4.4 If the Contractor observes errors, discrepancies, or omissions in the Contract Documents, it shall promptly notify the Contractor and City and request clarification. The Contractor shall be liable to the City for damages resulting from errors, inconsistencies, or omissions in the Contract Documents or for differences between field measurements or conditions in the Contract Documents. If the Contractor, with the exercise of reasonable care, should have recognized such error, inconsistency, omission, or difference and fails to report it to the City, and if the Contractor proceeds with the Work affected by such observed errors, discrepancies, or omissions, without receiving such clarifications, it does so at its own risk.

4.4.5 In all cases of interconnection of its Work with existing or other work, the Contractor shall verify at the Project site all dimensions relating to such existing or other work. Any errors due to the Contractor's failure to so verify all such grades, elevations, locations, or dimensions shall be promptly rectified by the Contractor without any increase in the Contract Price. Any design errors or omissions noted by the Contractor during this review shall be reported promptly to the City.

4.4.6 The Contractor shall be responsible for the proper performance of the Work of Subcontractors and any acts and omissions in connection with such performance. Nothing in the Contract Documents is

intended or deemed to create any legal or contractual relationship between the City and any Subcontractor or Sub-Subcontractor, including but not limited to any third-party beneficiary rights.

4.4.7 The Contractor will not substitute or change any Subcontractor or Supplier without the City's prior written approval. Any substitute or replacement Subcontractor or Supplier shall be required to meet the same qualifications and selection criteria and process as the original Subcontractor or supplier. If a Subcontract or Supplier selection plan has been approved by the City, the Contractor will follow that plan unless otherwise approved by the City in writing.

4.4.8 The Contractor shall not change or replace the Contractor's Project Manager or Superintendent on this Project without an explanation for the change being given to the City and receiving prior written approval of the change from the City, which approval will not be unreasonably withheld.

4.4.9 Subcontractors whose scope of work has a value greater than fifteen percent (15%) of the total Contract Price may be required to furnish performance and payment bonds to the Contractor if directed in writing by the City.

4.5 Control of the Project Site

Throughout all phases of construction, including suspension of Work, the Contractor shall keep the Project site reasonably free from debris, trash, and construction wastes to permit the Contractor to perform its construction services efficiently, safely, and without interfering with the use of adjacent land areas. Prior to the Final Acceptance of the Work, or a portion of the Work, the Contractor shall remove all debris, trash, construction wastes, materials, equipment, machinery, and tools arising from the Work or applicable portions thereof to permit the City to occupy the Project or a portion of the Project for its intended use.

4.5.1 The Contractor shall take whatever steps, procedures, or means necessary to prevent dust nuisance due to construction operations. The dust control measures shall be maintained at all times to the satisfaction of the City and in accordance with the requirements of the Yuma County dust control regulations.

4.5.2 The Contractor shall be responsible to the City for the acts and omissions of the Contractor's employees, Subcontractors and their agents and employees, and any other person performing any of the Work under a contract with Contractor, or claiming by, through, or under Contractor, for all damages, losses, costs, and expenses resulting from such acts or omissions.

4.6 Project Safety

4.6.1 The Contractor is responsible for the safety of the job site for the Contractor's employees as well as for members of the general public and others who may drive or walk through or be at the Project site.

4.6.2 The Contractor assumes responsibility for implementing and monitoring all safety precautions and programs related to the performance of the Work.

4.6.3 The Contractor shall provide a "competent person" as required by O.S.H.A. regulations. The "competent person" shall be identified at the Pre-Construction Conference, and the City will be advised in writing of any changes.

4.6.4 The Contractor and Subcontractors shall comply with all legal and regulatory requirements relating to safety, as well as any City-specific safety requirements set forth in the Contract Documents, provided that such City-specific requirements do not violate any applicable legal and regulatory requirements.

4.6.5 As between the City and the Contractor, the Contractor is responsible to the City for any and all the safety issues relating to the Work on the Project. The Contractor shall administer and manage the safety program. The safety program will include, but not necessarily be limited to, reviews of the safety programs of each Subcontractor. The Contractor shall monitor the establishment and execution of compliance with all applicable regulatory and advisory agency construction safety standards.

4.6.6 The Contractor shall maintain and have sole responsibility for safety on the job site.

4.7 Materials Quality, Substitutions, and Shop Drawings

4.7.1 All construction materials to be used or incorporated in the Project are subject to inspection, quality control and quality assurance testing, and approval or rejection by the City. Any material rejected by the City shall be removed immediately and replaced in an acceptable manner to the City at no additional cost to the City. When quality control and quality assurance tests indicate noncompliance with the Contract Documents, retesting shall be performed by the same testing laboratory that performed the tests that indicated noncompliance.

4.7.2 A schedule of shop drawing submissions shall be submitted with the Project Schedule for City approval that avoids bulk submissions to the extent reasonably possible. Unless otherwise noted, shop drawings will not be required for items specified or detailed in the Uniform Standard Specifications and Details or the Technical Specifications. The schedule of shop drawing submissions shall include all of the items for which shop drawings are required by the Contract Documents, including the specifications.

4.7.3 Long Lead Time Items. The Contractor shall submit shop drawings, as required by the Project Engineer, on all long lead items to be furnished and installed as part of the Project within ten (10) days after execution of the Contract. In addition, the Contractor shall order all long lead items to be furnished and installed as part of this Project within (3) days after receiving approved shop drawings. For all long lead times for which shop drawings are not required, the Contractor shall order said long lead items within fifteen (15) days after execution of the Contract. Within two (2) days after ordering long lead items, the Contractor shall supply copies of all purchase orders, along with an accurate delivery schedule from the supplier.

4.8 Project Record Documents

The Contractor shall ensure that any and all changes or modifications done as a result of field changes are accurately reflected in red-lined markings. At the completion of construction, all red lines and markings shall be compiled to aid in the creation of "as-built" plans.

4.9 Warranty and Correction of Defect Work

4.9.1 The Contractor warrants to the City that the construction of the Work shall be of good and workmanlike quality and completed in strict conformance with all applicable laws, rules, and regulations and the plans and specifications and all other terms and conditions of the Contract Documents, including all materials and equipment furnished as part of the construction, shall be new unless otherwise specified in the Contract Documents, of good quality, in conformance with the Contract Documents and free of defects in materials and workmanship.

4.9.2 The date of Final Completion shall be the beginning of the Warranty period, regardless of early completion by some Subcontractors of their work.

4.9.3 Unless otherwise specified in the Contract Documents, the Contractor and Subcontractors shall provide to the City all of the following written warranties that apply to the Work in a form acceptable to the City.

(i) General Warranty — Two (2) years
(ii) Mechanical Contractor — Two (2) years
(iii) Plumbing Contractor — Two (2) years
(iv) Electrical Contractor — Two (2) years
(v) Caulking — One (1) year
(vi) Steel Joists, Certificate of Manufacturer
(vii) Exterior Metal Wall System — Five (5) years
(viii) Painting — One (1) year
(ix) Termite — Five (5) years
(x) Sheet Metal: Zinc coating thickness on hot-dipped galvanized Metals — One (1) year

4.9.4 Nothing in the warranties contained in the Contract Documents are intended to limit any manufacturer's warranty, which provides the City with greater warranty rights than set forth in this Section or the Contract Documents. The Contractor will provide the City with all manufacturers' warranties prior to Final Acceptance.

4.9.5 A progress payment, or partial or entire use or occupancy of the Project by the City, shall not constitute Acceptance of Work not in accordance with the Contract Documents.

4.9.6 Without limiting the foregoing or anything in these General Conditions or the Contract to the contrary, the Contractor shall obtain and provide to the City all warranties for any portion of the Project offered by the manufacturer, installer, or provider thereof. The City and the user of the facility shall have the right to the full value and benefit of all such warranties. The Contractor will ensure all such warranties are fully transferrable to facilitate the full value of this Section.

SECTION 5 - CITY'S RESPONSIBILITIES

5.1 City Project Manager The Project Manager is responsible for providing City-supplied information and approvals in a timely manner to assist the Contractor to fulfill its obligations under the Contract Documents.

5.2 Contract Services The City may contract separately with one or more contractors to provide construction administration of the Project. The Contractor's Contract, as well as other firms hired by the City, shall be furnished to the Contractor. The contractor shall not have the right to limit, restrict, or reject any Contract modifications that are mutually acceptable to the City and the Contractor.

SECTION 6 - CONTRACT TIME

6.1 Contract Time

6.1.1 The Contract Time shall start with the Notice to Proceed ("NTP") and end with Final Acceptance, as set forth in Section 6.3 below.

6.1.2 The Contract Time shall be as set forth in the Project Schedule. The Contractor agrees that it will commence the performance of the Work and complete the Project within the Contract Time.

6.1.3 Time is of the essence of this Contract, for the Project, for the Work, and for each phase and/or designated milestone of the Project.

6.2 Project Schedule

6.2.1 The Project Schedule shall be updated and maintained throughout the Contract Time.

6.2.2 The Project Schedule shall be revised as required by conditions and progress of the Work. However, such revisions shall not relieve the Contractor of its obligations to complete the Work within the Contract Time, as adjusted in accordance with the Contract Documents. No modification to the Contract Documents or the Contract Time shall be effective unless approved in advance by the City.

6.2.3 An updated Project Schedule shall be submitted monthly to the City as part of the Payment Request.

6.2.4 The Contractor shall provide the City with a monthly status report with each Project Schedule detailing the progress of the Work, including:

6.2.5 Acceptance of a submitted schedule by the City should in no way be construed as an affirmation or admission that the schedule is reasonable or workable by the Contractor. The responsibility for completing the Work on the Project within the Contract Time remains the obligation of the Contractor. The City's review shall not relieve the Contractor from compliance with the requirements of the Contract Documents or be construed as relieving the Contractor of its complete and exclusive control over the means, methods, sequences, and techniques for executing the Work.

6.2.6 Critical Path Method (CPM)

6.2.6.1 Unless otherwise specified in the Contract, the Project Schedule shall include a Critical Path Method (CPM) diagram schedule showing the sequence of activities, the interdependence of each activity, and identifying the Critical Path.

6.2.6.2 The CPM diagram schedule shall be in calendar Days and indicate duration, earliest and latest start and finish dates for all activities, and total Float Times for all activities except critical

activities. The CPM diagram shall be presented in a time-scaled graphical format for the Project as a whole.

6.2.7 Float Time

6.2.7.1 The total Float time within the overall schedule is for the exclusive use of the City. However, the City may approve the Contractor's use of Float time as needed to meet contract milestones and the Project completion date.

6.2.7.2 The Contractor shall not be allowed to sequence, hide, or reallocate Float time through such strategies as extending activity duration estimates to consume available Float, using preferential logic, or using extensive crew or resource sequencing. No time extensions will be granted nor delay damages paid until a delay occurs which extends the Work beyond the Contract Time.

6.2.7.3 Rain-Related Delays. In preparing the Project Schedule, The Contractor is required to take into account all relevant weather conditions, including normal rainfall and distribution. No additional Compensation shall be given for any rain-related delays or impacts on the Work or the Project Schedule. The burden of documenting normal rainfall, excessive rainfall, and the impact on Critical Path activities is on the Contractor.

6.3 Final Completion and Final Acceptance

6.3.1 Unless otherwise expressly agreed to in writing by the City, Final Completion must be achieved no later than June 30, 2026. Failure to timely obtain Final Completion will be a material breach of the Contract.

6.3.2 Upon receipt of written notice that the Work is ready for final inspection and Acceptance, the City and the Contractor will jointly inspect to verify that the remaining items of Work have been completed. There shall be no partial acceptance. Final Acceptance shall not be issued, and Final Completion shall not occur until all items of Work, including punch list items, have been completed to the City's satisfaction as reflected in the written Final Acceptance.

6.3.3 Final Payment under Section 8.2 below shall not be due, owing, or paid by the City until the Final Completion is obtained.

6.4 Liquidated Damages

6.4.1 The Contractor acknowledges and agrees that if the Contractor fails to obtain Final Completion of the Work within the Contract Time, the City will sustain extensive damages and serious loss as a result of such failure. The exact amount of such damages will be extremely difficult to ascertain. Therefore, the City and the Contractor agree that if Contractor fails to achieve Final Completion of the Work within the Contract Time, the City shall be entitled to retain or recover from the Contractor, as liquidated damages and not as a penalty, the applicable dollar sum amount in Subsection 108.9 of the 2016 City of San Luis Supplement to the 2015 MAG Uniform Standard Specification for Public Works Construction per

calendar day, commencing from the Completion Date required under the Contract until the actual date of the Final Completion of the Work.

6.4.2 The City may deduct liquidated damages described in this Section 6.4 from any unpaid amounts then or thereafter due Contractor under this Contract. Any liquidated damages not so deducted from any unpaid amounts due to the Contractor shall be payable to the City at the demand of the City, together with interest from the date of the demand at the highest lawful rate of interest payable by the Contractor.

6.4.3 Nothing herein shall be deemed to constitute a waiver of any other remedy available to the City in the event of Contractor's default under this Contract prior to the full performance of the Work, including, as applicable, specific performance or completion of the Work on behalf of Contractor, the cost and expense of which shall be offset against any monies then or thereafter due to Contractor (if any) and otherwise immediately reimbursed to City by Contractor.

SECTION 7 - CONTRACT PRICE

7.1 Fixed Price Contracts The Contract Price shall be the amount set forth in the Contract.

7.2 City Sales Tax The Contractor is required to pay Sales Taxes on any contracting activity done for the City, and this cost shall be included in all Contract Prices.

SECTION 8 - PAYMENT

8.1 Payment for Construction Services

8.1.1 Monthly progress payments for certified work and material delivered to the Project site for the preceding month shall be paid on or before fourteen (14) business days after the estimate of the Work is certified and approved. The submittal estimate shall be deemed certified and approved for payment after seven (7) days from the date of submission unless the City's Project Manager issues a written finding setting forth items not approved for payment.

8.1.2 The City shall retain ten percent (10%) of all progress payments as insurance of proper performance of the Contract or, at the option of the Contractor, a substitute security may be provided by the Contractor in an authorized form approved by the City. The Contractor is entitled to all interest from any such substitute security.

8.1.3 When the Contract is fifty percent (50%) completed, one-half of the amount retained or securities substituted shall be paid to the Contractor upon the Contractor's request, provided the Contractor is making satisfactory progress on the Contract. There is no specific cause or claim requiring a greater amount to be retained. After the Contract is fifty percent (50%) completed, no more than five percent (5%) of the amount of any subsequent progress payments made under the Contract shall be retained, providing the Contractor is making satisfactory progress on the Project. If at any time the City determines satisfactory progress is not being made, ten percent (10%) retention shall be reinstated for all progress payments made under the Contract subsequent to the determination.

8.1.4 . Unless the City Project Manager delivers specific written findings of deficiencies and expected cost to cure, any retention shall be paid, or substitute security shall be returned to the Contractor within sixty (60) Days after Final Completion and Acceptance of Work under the Contract. The City may withhold an amount from the progress payment sufficient to pay the expenses the City's Project Manager reasonably expects to incur in correcting the deficiency set forth in the written finding.

8.1.5 The Contractor, and all Subcontractors, shall pay to Subcontractors or material Suppliers within seven (7) days of receipt of each progress payment unless otherwise agreed in writing by the parties, the respective amounts allowed the Contractor or Subcontractor on account of the Work performed or materials delivered to the extent of each such Subcontractor's or material Supplier's interest therein. No agreement for construction may materially alter the rights of any Contractor, Subcontractor, or material Supplier to receive prompt and timely payment as provided under this Section. These monthly progress payments to Subcontractors or material Suppliers shall be passed on payments received pursuant to this Section. Any diversion by the Contractor or Subcontractor of payments received for Work performed or failure to reasonably account for the application or use of such payments constitutes grounds for disciplinary action by the Registrar of Contractors. The Subcontractor or material Supplier shall notify the Registrar of Contractors and the City in writing of any payment less than the amount or percentage approved for the class or item of work as set forth in this Section. The Subcontractor may notify the City's Project Manager in writing, requesting that the City notify the Subcontractor in writing within five (5) days from payment of each progress payment made to the Contractor. The Subcontractor's request remains in effect for the duration of the Subcontractor's work on the Project.

8.1.6 Nothing in this Section 8.1 prevents the Contractor at the time of application/certification to the City from withholding application or certification to the City for payment to the Subcontractor or material Supplier for unsatisfactory job progress, defective work, or materials not remedied, disputed work or materials, third party claims filed or reasonable evidence that claim will be filed, failure of a Subcontractor to make timely payment for labor, equipment and materials.

8.2 Final Payment Subject to all of the City's rights to withhold or offset payment and other rights under the Contract, Final Payment, including remaining retainage, shall be paid only after:

(i) The Work has been fully completed (including completion of all incorrect or incomplete work items), and the City has issued the written Final Acceptance;
(ii) necessary operating manuals, any excess materials and supplies necessary for matching materials and supplies incorporated into the Work, and complete "as-built" drawings (including the Building Information Model, if required by the Contract Documents), plans, and specifications have been delivered to City;
(iii) full and unconditional lien waivers and releases by Contractor and any person performing labor or supplying material, machinery, fixtures, or tools for the Work have been delivered to the City;
(iv) all conditions and requirements imposed by the City or any financing entity for the corresponding disbursement have been met; and

(v) the Contractor delivers to the City a Contractor Payment Request Form requesting Final Payment.

8.3 The City's Right to Withhold Payment The City may withhold payment to such extent as may be necessary in the City's opinion to protect the City from loss for which the Contractor is responsible, including, without limitation:

(i) Defective Work not remedied;
(ii) Third-party claims filed or reasonable evidence indicating probable filing of such claims unless Contractor provides security acceptable to the City;
(iii) Failure of Contractor to make payments properly to Subcontractors or for labor, materials, or equipment;
(iv) Reasonable evidence that the Work cannot be completed for the unpaid balance of the Contract Price;
(v) Damage to the City or another Contractor or any third party for which the Contractor may have an obligation under Article 12 of the General Conditions;
(vi) Reasonable evidence that the Work will not be completed within the Contract Time and that the unpaid balance would not be adequate to cover actual or liquidated damages for the anticipated delay; or
(vii) Persistent failure to carry out the Work in accordance with the Contract Documents.

8.4 Joint/Direct Checks Payments to the Contractor may be made by checks payable jointly to the Contractor and its employees, agents, Subcontractors, and Suppliers, or any of them. When in the sole opinion of the City, it is advisable, payments may be made directly to the Contractor's Subcontractors. Any amount so paid shall be deducted from the amounts owed to the Contractor under this Contract.

8.5 Payment Not A Waiver No payment (nor use or occupancy of the Project by the City) shall be deemed Acceptance or approval of the Work or as a waiver of any claims, rights, or remedies of the City.

8.6 Liens and Bond Claims The Contractor shall make all payments, in the time required, of all labor and materials furnished to the Contractor in the course of the Work and shall promptly furnish evidence of such payments as the City may require. The Contractor shall pay when due all claims arising out of the performance of the Work covered by this Contract for which a lien may be filed either against the real estate or leasehold interest of City, or against payments due from City to Contractor, or for which a claim may be made against any payment or performance bond or both. To the fullest extent permitted by law, Contractor agrees that no liens or other claims in the nature of a lien against the real estate, leasehold, or other interest of City, against payment due from City to Contractor, or against any payment or performance bond, shall be filed or made in connection with the Work by any party who has supplied professional services, labor, materials, machinery, fixtures, tools, or equipment used in or in connection with the performance of this Contract. The Contractor agrees to remove or to cause to be removed any such liens or claims in the nature of a lien or bond claim within ten (10) days upon receiving notice or obtaining actual knowledge of the existence of such liens or claims. In addition, the Contractor agrees to defend, indemnify, and hold harmless the City from and against any and all such liens and claims. This paragraph does not apply to claims and liens of Contractor due to non-

payment for work performed by Contractor. The obligations under this Section 8.4 survive termination of this Contract.

8.7 Financial Record Keeping and City's Audit Right

8.7.1 Records for all Contracts between the City and the Contractor shall, upon reasonable notice, be open to inspection and subject to audit, scanning, and/or reproduction during normal business working hours. The City or its designee may conduct such audits or inspections throughout the term of this Contract and for a period of three years after Final Payment or longer if required by law.

8.7.2 The City, its authorized representative, and/or the appropriate agency reserve the right to audit the Contractor's records in compliance with local, state, or federal policies, statutes, or at the City's discretion within three (3) years of Final Acceptance of the Work.

SECTION 9 - CHANGES TO THE CONTRACT

9.1 Extra Work/Changes in the Work

9.1.1 The City reserves the right to make such changes in the plans and specifications for the Work as it may deem appropriate. Any such change as set forth in a written Change Order or Extra Work Order shall be deemed a part of this Contract as if originally incorporated into this Contract.

9.1.2 The Contractor shall not be entitled to payment for additional work unless a written Change Order or Extra Work Order, in form and content prescribed by the City, has been executed by the City prior to starting the additional work.

9.1.3 Any agreement that modifies the terms of the Contract (including Change Orders) shall be approved in writing by the Project Manager and approved by the San Luis City Council if necessary. Once properly executed by both Parties, these modifications to the Contract shall have the same effect as if they had been included in the original Contract.

9.2 Accuracy of Change Order Pricing Information Signature by the contracting Parties shall constitute full accord and satisfaction between the City and the Contractor for all costs, damages, and expenses of whatever kind of nature, including delay, impact, or acceleration damages, which may be occasioned by a Change Order or other modification of the Contract, the Parties agreed to in writing.

SECTION 10 - TERMINATION

10.1 Termination by the City for Cause

10.1.1 If, for any reason, the Contractor fails to fulfill in a timely and proper manner its obligations under the Contract Documents, or if the Contractor violates any of the covenants, agreements, or stipulations of this Contract, the City shall thereupon have the right to terminate the Contract by giving written notice to the Contractor of such termination and specifying the effective date of the termination. In such event, all finished or unfinished site or structural improvements, as well as all materials or equipment acquired or stored by the Contractor under this Contract, shall, at the option of the City, become the

City's property. The Contractor shall be entitled to receive just and equitable compensation for any Work satisfactorily completed under this Contract.

10.1.2 Notwithstanding Section 10.1.1, the Contractor shall not be relieved of liability to the City for damages sustained by the City by virtue of any breach of this Contract by the Contractor, and the City may withhold any payments to the Contractor for the purpose of set-off until such time as the exact amount of damages due the City from the Contractor is determined.

10.2 Termination by the City for Convenience The City may also terminate the Contract at any time for its convenience upon seven (7) business days' written notice to the Contractor specifying the termination date. In the event of termination, which is not the fault, in whole or in part, of the Contractor, the City shall pay to the Contractor only such compensation, including reimbursable expenses, due for Work properly performed on the Project prior to the termination date. Upon any termination of the Contract, no further payments shall be due from the City to the Contractor.

10.3 A.R.S. § 38-511 and Other Statutory Requirements This Contract is subject to and may be terminated by the City in accordance with the conflict provisions of A.R.S. § 38-511. The Contractor certifies, to the extent permitted by law, that it is not currently engaged in and agrees that for the duration of this Contract, it will not engage in a boycott of Israel, as that term is defined in A.R.S. § 35- 393. The Contractor certifies, to the extent permitted by law, that it does not currently, and agrees for the duration of this Contract, it will not use the forced labor of the ethnic Uyghurs in the People's Republic of China, nor use any goods or services produced by them, nor use any Contractors, Subcontractors, or Suppliers that use them. If the Contractor becomes aware during the term of this Contract that the Contractor is not in compliance with this certification, it shall follow the notice procedures in A.R.S. § 35- 393.

10.4 Non-Appropriation The City is a government agency that relies upon the appropriation of funds by its governing body to satisfy its obligations. If the City determines that it does not have funds to meet its obligations under the Contract, the City shall have the right to terminate the Contract without penalty on the last day of the fiscal period for which funds were legally available for the Project.

10.5 Limited Liability Under no circumstances shall the City have any liability for any costs, expenses, overhead, or profits in relation to any work not actually performed or for any future or anticipated profits, recovery, damages, expenses, or losses.

SECTION 11 - BONDS

11.1 Bonds and Other Performance Security

11.5.1 Prior to the execution of the Contract, the Contractor shall provide a Performance Bond and a Payment Bond, each in an amount equal to the full amount of the Contract Price.

11.5.2 Each such bond shall be executed by a surety company or companies holding a Certificate of Authority to transact surety business in the State of Arizona, issued by the Director of the Arizona Department of Insurance. A copy of the Certificate of Authority shall accompany the bonds.

11.5.3 The bonds shall be made payable and be acceptable to the City. The bond forms for the performance and payment bonds shall be in the forms required under A.R.S. § 34-221, et seq.

11.5.4 All bonds submitted for this Project shall be provided by a company that has been rated AM Best rating of B++6 or better for the prior four (4) quarters by the latest edition of the *Results Best's Key Rating Guide (Property/Casualty)*" published by the A.M. Best Company.

11.5.5 Personal or individual bonds are not acceptable.

SECTION 12 - INDEMNIFICATION

12.1 To the fullest extent permitted by law, the Contractor, its successors, and assigns shall defend, indemnify, and hold harmless the City and its elected officials, officers, employees, and agents from all demands, proceedings, suits, actions, claims, damages, or losses relating to, arising out of, resulting from or alleged to have resulted from the performance of the Work or failure to comply with Contractor's obligations under the Contract Documents or any laws, regulations, or legal requirements. The Contractors' duty to defend, indemnify, and hold harmless the City and its agents, representatives, officers, elected officials, and employees shall arise in connection with all demands, proceedings, suits, actions, claims, workers' compensation claims, unemployment claims, damages, losses or expenses (including but not limited to attorney's fees, expert fees, court costs, and the cost of appellate proceedings) that are attributable to personal or bodily injury, sickness, disease, death or injury to, impairment or destruction of property including loss of use resulting therefrom, caused by any act or omission of Contractor, a Subcontractor, anyone directly or indirectly employed by them or anyone for whose acts they may be liable.

12.2 The Contractor shall also defend, indemnify, and hold harmless the City, any jurisdiction or agency issuing permits for any work involved in the Project and their consultants and each of their officers, officials, employees, representatives, directors, and agents from and against all losses, expenses, damages (including damages to the Work itself), attorney's fees and other costs including costs of defense, which any of them may incur with respect to the failure, neglect, or refusal of Contractor to faithfully perform the Work and all of the Work and all of Contractor's obligations under the Contract. Such costs, expenses, and damages shall include all costs, including attorney's fees, incurred by the indemnified parties in any lawsuit to which they are a party.

12.3 The indemnified party shall have the right to approve the legal counsel selected by the Contractor or the insurer of the liability, which approval shall not be unreasonably withheld.

12.4 The defense, indemnification, hold harmless provisions, and City's Liability Insurance set forth herein shall survive any termination of the Contract.

SECTION 13 - DISPUTE RESOLUTION

13.1 **Informal Dispute Resolution** The Parties to the Contract agree that time is of the essence in relation to the performance of the Contract and completion of the Project. Therefore, any and all disputes in relation to the Contract will initially be referred to the City Project Manager and Contractor Project Manager, as applicable to the dispute, for immediate resolution. If, after good faith efforts to reach a resolution, none is reached, any party to the dispute may submit the dispute to the Dispute Resolution Representative ("DRR") process set forth below, which is intended to be an expedited process.

13.2 Dispute Resolution Representative (DRR) Process 1.2.1 The Parties under the Contract agree that all claims and disputes in relation to the Project that are not resolved in the ordinary course of the Project ("Claim or Claims") shall, as a prerequisite to any mediation or litigation of the Claim, first be submitted for resolution between the designated Dispute Resolution Representatives of the Parties as set forth herein (the "DRR Process").

13.2.2 The DRR Process shall be initiated through the service of a DRR Notice as set forth below:

(i) For claims by the Contractor, the DRR Process shall be initiated by the party asserting the claim serving written notice on the City setting forth in detail:

(a) the basis for the claim;
(b) the effect of the Claim upon the construction of, and/or Project Schedule for, the Project;
(c) the specific relief requested, the amount thereof, and how such was calculated;
(d) the parties involved in the Claim and how they are involved;
(e) the specific contract provisions in the Contract Documents (including, if applicable, drawings and specifications) which apply; and
(f) efforts made to date to resolve the Claim.

(ii) For claims by the City, the DRR process will be initiated by the City providing written notice to the other parties of the basis and amount of its claim, the parties involved in the Claim, and how they are involved, the provisions in the Contract Documents that apply, and the relief requested. (iii) The DRR Notice shall be hand-delivered and e-mailed to the other parties' designated Dispute Resolution Representatives.

13.2.3 The other parties shall respond in writing to the DRR Notice ("DRR Response") within ten (10) calendar days of receipt of the DRR Notice, setting forth those items set forth in the DRR Notice that they agree with, dispute, and/or have questions concerning. The DRR Response shall be hand-delivered and e-mailed to the other parties' Dispute Resolution Representatives.

13.2.4 The designated Dispute Resolution Representatives for the parties to the claim shall then meet as soon as possible and, in any event, within twenty (20) calendar Days of submission of the DRR Notice (regardless of whether a DRR Response has been submitted by all parties involved in the dispute), at a mutually agreed upon time and place, to attempt to resolve the Claim based upon the DRR Notice and DRR Response.

13.2.5 At any time after the first meeting required above, either party may terminate the DRR Process by written notice to the other party.

13.2.6 The parties may agree, in writing, to extend or modify the time limits or other provisions of the DRR process in relation to a specific pending Claim.

13.2.7 Unless otherwise designated in a written notice to the other parties, the Project Manager, the representatives of the Contractor, and of the Design Professional shall act as the parties' designated Dispute Resolution Representatives.

13.2.8 If a resolution of the Claim is reached, that resolution shall be set forth in writing. The resolution shall be signed by the Parties' designated Dispute Resolution Representatives. If the resolution involves a change in any Contract Documents, the Contract Price, the Project Schedule, or any other change requiring a written Change Order or Amendment, the parties shall execute an appropriate written Change Order or Amendment pursuant to the terms of the Contract Documents.

13.3 Mediation

13.3.1 Unless extended by written agreement of the parties involved in the dispute, any Claim not resolved through the DRR process set forth above within five (5) calendar days after the meeting required under 13.2.4 or after the DRR is terminated pursuant to 13.2.5 above, whichever is earlier, shall be submitted to mediation as a condition precedent to litigation by either party.

13.3.2 The mediation shall be commenced by written demand upon the other party for mediation. If the parties cannot agree upon a mediator within ten (10) calendar Days of the written demand, either party may make a request to the Civil Presiding Judge of the Yuma County Superior Court to appoint a mediator. The mediation shall occur within forty (40) calendar Days of the written demand for mediation unless the parties agree, in writing, to a longer period of time.

13.3.3 The qualifications for the mediator shall be that the mediator be:

(i) an experienced mediator, arbitrator, or litigator of construction disputes; and
(ii) having engaged a significant portion of their time involving and/or resolving construction disputes for at least the past five (5) years.

13.3.4 Each party shall provide to the other party and the mediator all of the information and documentation required under 13.2.2 and 13.2.3 above, together with any additional information and documentation that the party believes relevant. In addition, the parties shall exchange and provide to the mediator such additional memoranda, information, and/or documentation, as the mediator may request, and in the form and at such times as the mediator may direct.

13.3.5 The parties shall share the mediator's fee and any filing fees equally. The mediation shall be held in San Luis, Arizona unless another location is mutually agreed upon. Agreements reached in mediation shall be specifically enforceable in any court having jurisdiction over the dispute.

13.4 Arbitration

13.4.1 If the mediation is unsuccessful, the parties shall submit the dispute and/or claim to be resolved through binding arbitration conducted according to the then-current Construction Industry Arbitration Rules of the American Arbitration Association ("AAA") but not administrated or conducted by the AAA. The arbitration shall be held in Yuma County, Arizona, utilizing a single arbitrator selected by the parties unless the parties agree, in writing, to an alternative arbitration procedure.

13.4.2 If: (a) the parties cannot agree on a single arbitrator within two (2) weeks of the demand for arbitration; or (b) the parties at any time prior to the arbitrator being appointed or before the arbitrator has accepted the appointment, cannot agree upon any significant aspect of the arbitration, not already

addressed herein, either party may submit the Claim directly to the AAA to select the arbitrator, and thereafter the arbitration shall be administered by the AAA.

13.4.3 The arbitrator shall be an attorney with at least fifteen (15) years of experience in construction-related practice and whose practice, for at least the last five (5) years, consists of at least 50% construction law.

13.4.4 At the request of either party, the arbitration may include as parties, through joinder, consolidation, or otherwise, additional persons or entities involved in the Project, involving claims and/or disputes with common issues and/or facts. The arbitrator shall promptly rule upon any request for joinder or consolidation.

13.4.5 In relation to claims in which the amount in controversy is less than $250,000, no discovery other than the exchange of documents, designation of witnesses, and detailed disclosure of claims and defenses (including specifically a detailed basis for calculating all claims) and no more than three (3) depositions and one (1) expert per issue per side, shall be allowed, subject to disclosure of such other information as approved by the arbitrator. Otherwise, discovery shall be allowed and/or limited as decided by the arbitrator.

13.4.6 The prevailing party in any arbitration or court proceeding under this Contract shall be entitled to an award of its attorneys' fees, costs, and expenses (including expert witness fees) incurred.

13.4.7 A demand for arbitration shall be made within the time limits specified in the Contract Documents as applicable, and in other cases within a reasonable time after the Claim has arisen, and in no event shall it be made after the date when the applicable statute of limitations would bar institution of legal or equitable proceedings based on such Claim.

13.4.8 The Parties agree to participate as a party, by joinder and/or consolidation, in any arbitration, litigation, or other dispute resolution involving as an issue, claim, or defense, any action, inaction, or service provided under this Contract or in relation to the Project or the Work, or any defect or deficiency in the Work.

13.4.9 The party filing a notice of demand for arbitration, or a counterclaim, must assert in the demand or counterclaim all Claims then known to that party on which arbitration is permitted to be demanded.

13.4.10 Any award by the arbitrator shall not include any consequential or punitive damages.

13.4.11 The award entered by the arbitrator shall be a reasoned award.

13.4.12 The award entered by the arbitrator shall be final, and judgment may be entered upon the award in the Arizona Superior Court.

SECTION 14 - MISCELLANEOUS PROVISIONS

14.1 <u>Assignment</u> Neither the Contractor nor the City shall, without the written consent of the other, assign, transfer, or sublet any portion of this Contract or part of the Work or the obligations required by the Contract

Documents. Any such assignment will be void, will transfer no rights to the purported assignee, and would be a material breach of the Contract.

14.2 Governing Law and Venue. In the performance of the Contract, Contractor shall abide by and conform to any and all laws of the United States, State of Arizona, Yuma County, and the City, including but not limited to federal and state executive orders providing for equal opportunities, the Federal Occupational Safety and Health Act and any other federal, state, county, or local laws applicable to the Contract. This Contract shall be governed by and construed in accordance with the substantive and procedural laws of the State of Arizona, including choice of law and conflict of laws and principles. Exclusive jurisdiction and venue for any action brought to enforce or construe any provision of this Contract shall be proper in the Superior Court of Yuma County, Arizona. Both Parties consent to jurisdiction and venue in such court for such purposes. The Party prevailing in any such action or other proceeding to resolve a dispute shall be paid all reasonable costs, reasonable expert services fees, and reasonable attorney's fees by the other Party. In the event any judgment is secured by said prevailing Party, all such costs, expert fees, and attorney's fees shall be included in the judgment, such fees to be set by the court and not by jury.

14.3 San Luis Business License The General Contractor and sub-contractors shall obtain a San Luis Business License before commencing Work.

14.4 Survival All warranties, representations, and indemnifications by Contractor shall survive the completion or termination of this Contract.

14.5 No Waiver The failure of either Party to enforce any of the provisions of the Contract Documents or to require the performance of the other Party of any of the provisions under this Contract shall not be construed to be a waiver of such provisions, nor shall it affect the validity of the Contract Documents or any part of them, or the right of either Party to thereafter enforce each and every provision. Unless otherwise specifically agreed to in writing by both Parties, any consent to delay in the Contractor's performance of its obligation is applicable only to the particular transaction to which it relates and is not applicable to any other obligation or transaction.

14.6 Project Communications

14.6.1 All communications concerning the performance of the Work or the Project shall be provided to the designated Project Manager and Contractor’s Representative set forth in Article 1 of the Contract.

14.6.2 Project communications may be exchanged by e-mail upon the written agreement of the Project Manager and Contractor Representative. However, e-mail communications are not binding upon the City. E-mail communications cannot change the terms of the Contract or the scope of work or effectuate any change that requires a written change order. The use of e-mails is for information only, and e-mails will have no legal or binding effect.

14.7 Independent Contractor The parties intend that this Contract will create an independent contractor relationship and not an employer-employee relationship. The City is interested only in the results to be achieved, and the conduct and control of the performance of the services contemplated under this Contract will be solely with the Contractor. Contractor’s employees, agents, and Subcontractors shall not be considered

to be employees or agents of the City for any purpose. They shall not be entitled to any of the benefits the City provides for its employees. The Contractor shall furnish at its own expense all materials and equipment necessary to carry out the terms of this Contract.

14.8 No Partnership Nothing in this Contract constitutes a partnership, joint venture or similar arrangement between the Parties. Neither Party is the principal or agent of the other.

14.9 No Third-Party Beneficiaries There are no third-party beneficiaries to this Contract and no person or entity, not a Party, shall have any right or cause of action under this Contract.

14.10 *Force Majeure* If the Contractor or the City or both are prevented or materially restricted from performing any of their obligations under this Contract by an event of *force majeure*, then the obligations of each Party shall be suspended or reduced to the extent made necessary by the event. As used in this section, "*force majeure*" means any act or cause not reasonably within the control of the Party whose ability to perform is impaired and which that Party could not have prevented by the exercise of reasonable diligence. *Force majeure* events include but are not limited to natural disasters, fire, flood, explosions, strikes (or labor disputes) over which the affected Party has no control, sabotage, riots, civil commotion, acts of civil or military authority, wars, public health emergencies, or material changes in applicable business laws (including but not limited to through statutes, regulations, executive orders, or emergency declarations and proclamations).

14.11 Notices The notices under this Contract shall be validly given and fully received when in compliance with all of the following:

(i) In writing,
(ii) Delivered or refused delivery,
(iii) By personal delivery, or by major commercial delivery courier service which requires a signature of the recipient, or by registered or certified United States Postal Service mail, return receipt requested with the signature of the recipient, postage prepaid to the addresses in the first paragraph of this Contract.

14.11.2 Either Party may designate in writing and deliver notice of a different address in the same way as above. Any such change of address notice shall be delivered at least ten (10) Days before the date on which the change is to become effective.

14.11.3 Notices for delivery to the City shall be to the attention of the Public Works Director, copies to the City Manager, City Attorney, and City Clerk.

14.12 Severability If any terms, parts, or provisions of this Contract are for any reason invalid or unenforceable, the remaining terms, parts, or provisions are nevertheless valid and enforceable.

14.13 Entire Agreement This Contract (including the incorporated documents) contains the entire agreement between the Parties, and no oral or written statement, promise, or inducement made by either Party or its agents not contained or specifically referred to in this Contract is valid or binding. All modifications to this Contract must be in writing, signed, and endorsed by the Parties.

14.14 Headings The headings of this Contract are solely for the convenience of the Parties and shall not be used to explain, modify, simplify, or aid in the interpretation of the provisions of this Contract.

14.15 Further Acts Each of the Parties shall execute and deliver all such documents and perform all such acts as reasonably necessary, from time to time, to carry out the matters contemplated by this Contract.

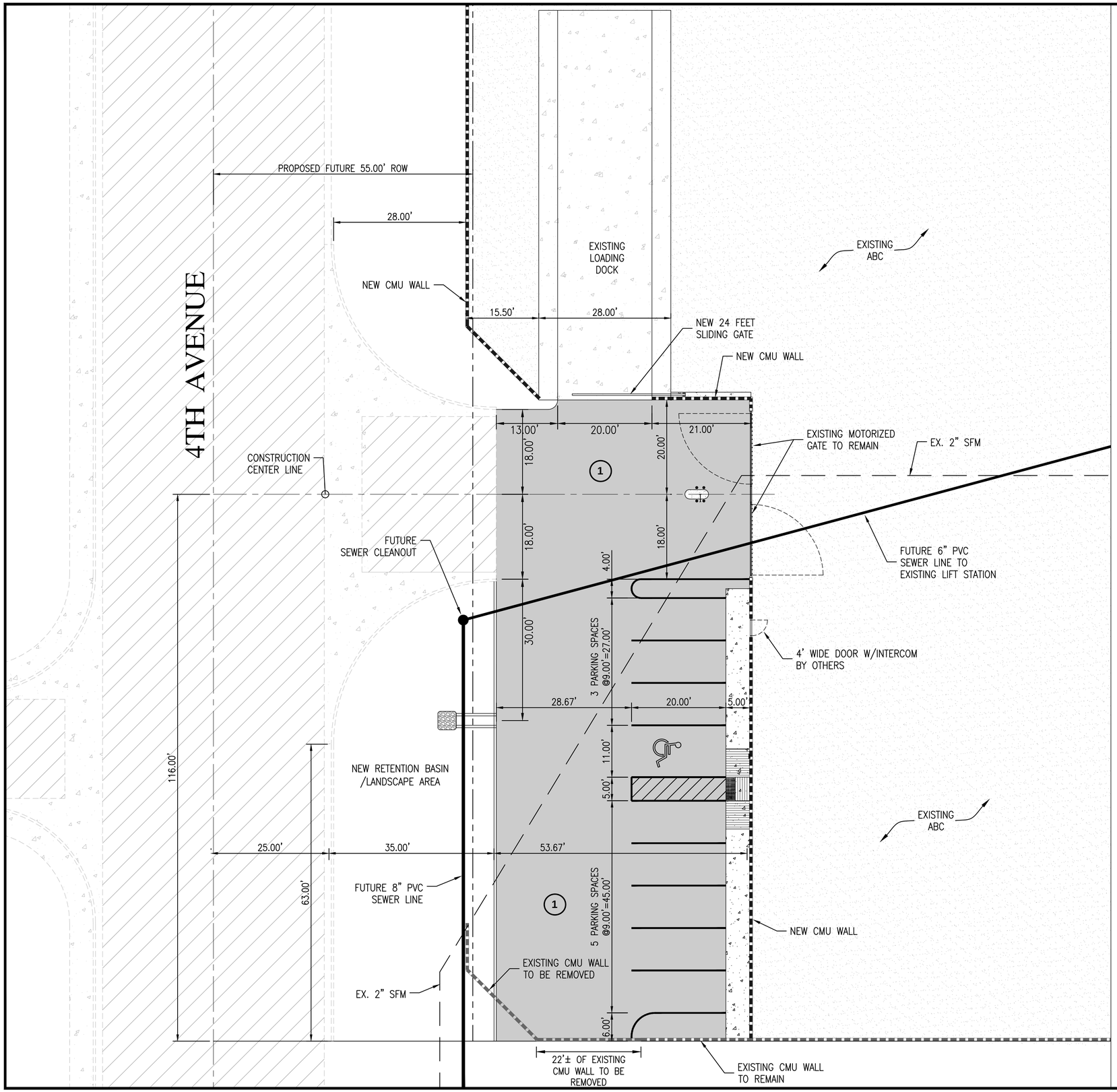

PUBLIC WORKS YARD ENTRANCE

N

SCALE 1"=10'

CONSTRUCTION KEYNOTES

① **NEW 3" AC PAVEMENT OVER 6" ABC (1/2" AC MAG Mix) TOTAL APPROXIMATE 755 SY**

LEGEND

- CENTERLINE
- PROPERTY LINE
- ROW LINE
- EXISTING CURB
- EXISTING CONCRETE
- NEW ASPHALT
- EXISTING ASPHALT
- NEW STRIPING
- EXISTING ABC
- NEW CMU WALL
- NEW CURB
- NEW SEWER LINE
- EXISTING SEWER FORCE MAIN LINE
- NEW CLEANOUT

OWNER

CITY OF SAN LUIS
PO BOX 1170
SAN LUIS, ARIZONA 85349

SITE

CITY OF SAN LUIS PUBLIC WORKS YARD
1311 N 4TH AVENUE
SAN LUIS, ARIZONA 85349
A.P.N. 226-01-003

CITY OF SAN LUIS	
SCALE: 1"=10'	DRAWN BY: JAT
DATE: 2/7/2025	
PUBLIC WORKS YARD ENTRANCE	
SITE PLAN	SHEET NO. C1

Bid Evaluation - Public Works Yard Entrance - F

Line Item	Description	Quantity	Unit
1	Grading for pavement	755	SY
2	6" ABC Subbase	755	SY
3	3" AC Pavement, 1/2" MAG AC Mix	755	SY
4	Material Testing, Base-Subbase	1	LS

Parking Lot Paving

DPE Construction	
DPE Unit Cost	**DPE Total**
$15.00	$11,325.00
$35.00	$26,425.00
$35.00	$26,425.00
$3,825.00	$3,825.00
Subtotal	**$68,000.00**
5% Contingency	**$3,400.00**
Total	**$71,400.00**

Gutierrez Canales Engineering	
GCE Unit Cost	**GCE Total**
$15.06	$11,370.30
$24.33	$18,369.15
$32.53	$24,560.15
$4,200.00	$4,200.00
Subtotal	**$58,499.60**
5% Contingency	**$2,924.98**
Total	**$61,424.58**

CITY OF SAN LUIS

AGREEMENT
FOR THE CONSTRUCTION OF
CITY OF SAN LUIS
Public Works Yard Entrance - Parking Lot Paving

This agreement ("Contract") is made on Wednesday, June 10, 2026, by and between:

Gutierrez Canales Engineering 3136 East 33rd Place Yuma, AZ 85365 Sole Proprietor/Individual ("Contractor") and	City of San Luis 1090 East Union Street [physical address] P.O. Box 7740 [mailing address] San Luis, Arizona 85349 an Arizona municipal corporation ("City" or "City of San Luis")

The Contractor and City may be referred to individually as the "Party" and collectively as the "Parties." All defined words in the document titled "General Conditions of the Contract" ("General Conditions"), which was provided in the City's Request for Proposals ("RFP"), Public Works Yard Entrance - Parking Lot Paving, 2026-RFP-00000011, shall have the same meaning in this Contract unless otherwise specified in this Contract. Any term defined in the General Conditions and used in this Contract shall be interpreted as per the definition provided in the General Conditions.

WHEREAS, the Scope of Work requires the Contractor to furnish any and all labor, materials, equipment, transportation, utilities, services, and facilities required to perform all work for the City of San Luis – Public Works Yard Entrance - Parking Lot Paving ("Project"), per the Contractor's bid of May 18, 2026 ("Proposal") and to completely and totally remove and install the materials therein for the City, in a good workmanlike and substantial manner and to the satisfaction of the City through its engineers ("ENGINEERS"), or the ENGINEERS' properly authorized agents and strictly pursuant to and in conformity with the plans and specification prepared by the ENGINEERS, and with such modifications of the same and other documents that the City may make through the ENGINEERS or the ENGINEERS' properly authorized agents, as provided herein; and

WHEREAS, San Luis City Council, at a properly noticed open meeting, awarded the bid to the Contractor on June 10, 2026;

NOW, THEREFORE, the above recitals are incorporated into this Contract. In consideration of the City paying the sum of $61,424.58 to the Contractor and the Contractor constructing the Public Works Yard Entrance Parking Lot Paving and other work incidental in the manner and at the time provided in

this Contract, and in consideration of the other mutual benefits and obligations contained in this Contract, the Parties agree as follows:

ARTICLE 1 - PARTICIPANTS AND PROJECT

CITY:	Jenny Torres, City Manager City of San Luis, Arizona Telephone: (928) 341-8520 E-mail: jtorres@sanluisaz.gov
CITY PROJECT MANAGER:	Oscar Barnett, Project Manager City of San Luis Telephone: (928) 341-8577 Ext. 2011 E-mail: obarnett@sanluisaz.gov
CONTRACTOR:	Gutierrez Canales Engineering 3136 East 33rd Place Yuma, AZ 85365 Telephone: (928) 317-1401 E-mail: mkelland@gce-pc.com
CONTRACTOR MANAGER:	Reynaldo Angulo Gutierrez Canales Engineering Telephone: (928) 317-1401 E-mail: rangulo@gce-pc.com
PROJECT ENGINEER / DESIGNER:	Tomas Sanchez, PE, RLS City of San Luis Telephone: (928) 341-8577 Ext. 2053 E-mail: tsanchez@sanluisaz.gov
PROJECT DESCRIPTION:	City of San Luis, Public Works Yard Entrance - Parking Lot Paving
PROJECT LOCATION:	1311 North 4th Avenue San Luis, AZ 85349.

ARTICLE 2 - CONTRACT DOCUMENTS

The Contract between the City and the Contractor shall consist of the following items, collectively the "Contract Documents:"

1. Change Orders, written and properly executed (if any), as defined in the General Conditions;
2. Performance bond and payment bond (required by A.R.S. § 41-2574, also known as contract bond and labor & materials bond), warranty bond, bid bond, and other bonds;
3. Project specifications;

4. Construction Documents, as defined in the General Conditions;
5. General Conditions;
6. Special Conditions provided in the RFP Pages SP-1 through SP-8 (which amend Part 100 of the 2016 City of San Luis Supplemental to the 2015 MAG Uniform Standard Specifications);
7. 2016 City of San Luis Supplemental to the 2015 MAG Uniform Standard Specifications and Details for Public Works Construction and City of Yuma Construction Standard Detail Drawings, MAG Uniform Standard Specifications and Details for Public Works Construction, City of Yuma Construction Standard Detail Drawings – Edition 2019;
8. Bid documents {including but not limited to the advertisement for bids, bid schedule, addenda (if any), additive bid items (if any), and the Proposal;
9. Certificates of Insurance;
10. Notice to Proceed, as defined in the General Conditions; and
11. Project Schedule, as defined in the General Conditions

By this reference, the above Contract Documents are incorporated into and made a part of this Contract to the same extent as if set forth in full here.

In the event of a conflict of language between the items listed above, they shall govern in the order listed. The Contract Documents shall govern in all other matters not otherwise specified by the Contract between the Parties. All previous contracts between the Contractor and City are not applicable to this Contract or other resultant contracts.

ARTICLE 3 - CONSTRUCTION SERVICES

4-1 General.

4-1.01 The Contractor agrees, at its own cost and expense, to do all Work (as defined in the General Conditions) necessary and required to fully, timely, and properly complete the construction of the Project in strict accordance with the Contract Documents in a good and workmanlike manner, free and clear of all claims, liens, and charges whatsoever, in the manner and under the conditions specified, within the Project Schedule.

4-1.02 The Contractor shall provide all the labor and materials and perform the Work in accordance with Section 4 of the General Conditions, including but not limitd to the following major components of the construction services and the corresponding subsections of Section 4 of the General Conditions.

4-1.03 At all times relevant to this Contract and performance of the Work, the Contractor shall fully comply with all laws, regulations, or legal requirements applicable to the City, the Project, and the Contract, including, without limitation, those set forth in the General Conditions.

4-1.04 The Contractor shall perform the Work under this Contract using only those firms, team members, and individuals designated by Contractor consistent with the Contractor's accepted bid, or otherwise, approved by the City pursuant to the General Conditions. No other entities or individuals may be used without the prior written approval of the Project Manager.

4-1.05 The Contractor shall comply with all terms and conditions as set forth within the General Conditions.

4-1.06 The terms of this Contract shall govern in the event of a conflict between it and the General Conditions including any exhibit to the Contract or appendix to the General Conditions.

4-1.07 For purposes of this provision, "Work Product" shall include all designs, drawings, plans, specifications, ideas, renderings, and other information or matter in whatever form created (e.g., electronic or printed) and in all media now known or in the future created. All Work Product shall be considered Work Made for Hire as defined in the United States Copyright Act 17 U.S.C. § 101 (Copyright Act). If, for any reason, any such Work is found not to be a Work Made for Hire, the Contractor, by entering into this Contract, transfers and assigns ownership of the copyright in such Work to the City. Notwithstanding anything to the contrary in this Contract, all Work Product prepared or otherwise created in connection with the performance of this Contract, including the Work, are to be and remain the property of the City. The rights in this Section are exclusive to the City in perpetuity.

4-2 The Contractor's Pre-Contract and Pre-Work Deliverables. The Contractor shall provide the deliverables in accordance with Section 4.2 of the General Conditions.

4-3 Pre-Construction Conference. The Contractor shall attend the pre-construction conference in accordance with Section 4.3 of the General Conditions.

4-4 Performance of the Work (Including Field Measurements, Subcontractors, and Suppliers). The Contractor shall control and maintain the Project site in accordance with Section 4.4 of the General Conditions.

4-5 Control of the Project Site. The Contractor shall control and maintain the Project site in accordance with Section 4.5 of the General Conditions.

4-6 Project Safety. The Contractor shall implement and enforce Project safety in accordance with Section 4.6 of the General Conditions.

4-7 Materials Quality, Substitutions, and Shop Drawings. The Contractor shall provide materials testing and submit substitute materials and shop drawings in accordance with Section 4.7 of the General Conditions.

4-8 Project Record Documents. The Contractor shall maintain and make available the Project Record Document in accordance with Section 4.8 of the General Conditions.

4-9 Warranty and Correction of Defect Work. The Contractor shall provide warranties and correct defective Work in accordance with section 4.9 of the General Conditions.

ARTICLE 4 - CITY'S RESPONSIBILITIES

The City shall have the responsibilities and provide the information specified in, and subject to, the conditions set forth in Section 5 of the General Conditions.

ARTICLE 5 - CONTRACT TIME

6-1 Contract Time.

The Contract Time shall start with the Notice to Proceed and end with Final Acceptance, as set forth in Section 6-4 below. The Notice to Proceed cannot be issued prior to the City's approval and acceptance of the Contractor's bid.

6-1.01 The Contract Time shall be as set forth in the Project Schedule. The Contractor agrees that it will commence the performance of the Work and complete the Project within the Contract Time.

6-1.02 Time is of the essence of this Contract, for the Project, and for each phase and designated milestone of the Contract.

6-1.03 Failure on the part of the Contractor to adhere to the approved Project Schedule will be deemed a material breach and sufficient grounds for the City to terminate this Contract.

6-2 Project Schedule. The Project Schedule, as required by Section 6.2 of the General Conditions, shall be updated and maintained throughout the Contractor's performance under this Contract in accordance with Section 6.2 of the General Conditions.

6-3 Final Completion and Final Acceptance.

6-3.01 The Parties expressly agree by this writing that Final Completion (as defined in Section 2.14 of the General Conditions) must be achieved by **no later than June 30th, 2026.** Final Completion will be determined, and Final Acceptance will be issued pursuant to Sections 6.3 and 6.4 of the General Conditions.

6-4 Liquidated Damages.

6-4.01 The Contractor acknowledges and agrees that if the Contractor fails, neglects, or refuses to obtain the Final Completion of the Work within thirty (30) days, the City will sustain extensive damages and serious loss as a result of such failure. The Contractor agrees to pay the City liquidated damages for delay in the sum of **$350.00** for each consecutive calendar Day after the thirty (30) days have expired and the Final Completion of Work is not achieved. The Parties agree that the stated liquidated damages are reasonable to compensate the City and not as punitive damages. (The sum of $350.00 per day is consistent with Section 6.4 of the General Conditions and its reference to Subsection 108.9 of the 2016 City of San Luis Supplement to the 2015 MAG Uniform Standard Specification for Public Works Construction.)

6-4.02 The City may deduct liquidated damages described in Subsection 6-4.01 from any unpaid amounts then or thereafter due to the Contractor under this Contract. Any liquidated damages not so deducted from any unpaid amounts due the Contractor shall be payable to the City at the demand of the City, together with interest from the date of the demand at the highest lawful rate of interest payable by the Contractor.

6-4.03 Nothing in this Contract shall be deemed to constitute a waiver of any other remedy available to the City in the event of the Contractor's default under this Contract prior to full performance of the Work, including, as applicable, specific performance or completion of the Work on behalf of the Contractor, the cost and expense of which shall be offset against any monies then or thereafter due to Contractor (if any) and otherwise immediately reimbursed to City by the Contractor.

ARTICLE 6 - CONTRACT PRICE

7-1 Contract Price.

7-1.01 In exchange for the Contractor's full, timely, and acceptable performance and construction of the Work under this Contract, and subject to all of the terms of this Contract, the City will pay the Contractor the Contract Price (as defined by Section 2.6 of the General Terms), which is $61,424.58.

7-1.02 The Contract Price is all-inclusive and specifically includes all fees, costs, insurance and bond premiums, and taxes of any type necessary to fully, properly, and timely perform and construct the Work.

ARTICLE 7 - PAYMENT

Payments shall be made to the Contractor in accordance with Section 8 of the General Conditions.

ARTICLE 8 - CHANGES TO THE CONTRACT

Changes to the Contract may be made in strict accordance with Section 9 of the General Conditions.

ARTICLE 9 - TERMINATION

The Contract may be terminated in accordance with Section 10 of the General Conditions.

ARTICLE 10 - INSURANCE AND BONDS

11-1 The Contractor shall provide Insurance as provided in the Insurance Requirements and in accordance with Section 11.1 of the General Conditions. The Contractor shall provide proof of such Insurance and all required endorsements in forms acceptable to the City prior to commencing any Work under this Contract.

11-2 The Contractor shall provide performance, payment, and warranty bonds to the City in accordance with Section 11.2 of the General Conditions and A.R.S. § 34-222.

11-3 The Contractor's failure to provide proof of insurance and the required endorsements, or the required bonds, in forms acceptable to the City will be a material breach and grounds for termination for cause under this Contract.

ARTICLE 11 - INDEMNIFICATION

The Contractor shall have and assume the indemnity obligations set forth in Section 12 of the General Conditions.

ARTICLE 12 - DISPUTE RESOLUTION

Any claims or disputes relating to this Contract shall be resolved according to the dispute resolution process set forth in section 13 of the General Conditions.

ARTICLE 13 - MISCELLANEOUS PROVISIONS

14-1 The miscellaneous provisions set forth in section 14 of the General Conditions shall apply to this Contract.

14-2 The Contractor and any subcontractors or agents of the Contractor shall abide by the federal regulations prohibiting discrimination against all individuals based on their race, color, religion, sex, sexual orientation, gender identity, national origin, or for inquiring about, discussing, or disclosing compensation, and take affirmative action to employ and advance in employment individuals without regard to race, color, religion, sex, sexual orientation, gender identity or national origin.

ARTICLE 14 - COUNTERPARTS

This Contract may be executed in one or more counterparts, each of which shall be deemed an original, but all of which together shall constitute one and the same instrument. The signature pages from one or more counterparts may be removed from such counterparts. Such signature pages may all be attached to a single instrument so that the signatures of all Parties may be physically attached to a single document.

ARTICLE 15 - AUTHORITY

Each Party represents and warrants to the other Party: (i) that such Party is duly organized and validly existing under the laws of the State of Arizona and has full corporate power and authority to enter into this Contract and to carry out the provisions of this Contract; (ii) such Party is duly authorized to execute and deliver this Contract and to perform its obligations under this Contract; (iii) the person executing this Contract on such Party's behalf has been duly authorized to do so by all requisite corporate action, and (iv) this Contract is a legal and valid obligation binding upon the Parties and enforceable in accordance with its terms.

The Parties have executed and made effective this Contract in Yuma County, Arizona, on the day and year set forth below, which is the day the last Party signed this Contract. The original Contract will be filed with the City of San Luis Clerk.

Attest:

SIGNATURE

Sonia Cornelio, City Clerk

FULL NAME, TITLE

DATE SIGNED

City of San Luis, Arizona

SIGNATURE

Nieves Riedel, Mayor

FULL NAME, TITLE

DATE SIGNED

Approved As to Form

SIGNATURE

Joseph D. Estes, City Attorney

FULL NAME, TITLE

DATE SIGNED

General Contractor

SIGNATURE

Marisol A. Kelland

FULL NAME

DATE SIGNED

City of San Luis
Budget Adjustment Form

Reason for Budget Adjustment:

Highway Users - Transfer needed to cover expenses for the PW 4th Ave. Entrance Project

Account Number	Account Name	Project ID (Only 89000-90XXX)	Amended Budget FY2026	Budget to be revised (Add to)	Budget to be decreased (taken from)	Available Balance Budget FY 2026
200-210-90015	Capital Outlay - CIP	2026050	$ 141,570.00	$ -	$ 50,000.00	$ 91,570.00
200-210-90000	Captial Outlay - Equipment	2026043	$ 30,500.00		$ 9,000.00	$ 21,500.00
200-210-900000	Captial Outlay - Equipment	2026043	$ 30,500.00		$ 1,300.00	$ 29,200.00
200-210-89000	Non Capital Projects	2025037	$ 200,000.00		$ 1,700.00	$ 198,300.00
200-210-90010	Capital Outlay - Improvement Roads	2025032	$ 1,098,240.00	$ 62,000.00		$ 1,160,240.00
Total				$ 62,000.00	$ 62,000.00	

Department Head _____ Date _____

Finance Department _____ Date _____

City Manager _____ Date _____

AGENDA ITEM REVIEW FORM

Regular City Council Meeting **7. F.**

Meeting Date: 06/10/2026

Department Head: Roula Encinas, Director of Finance, Finance Department

Submitted By: Roula Encinas, Director of Finance, Finance Department

Action Requested: Motion

ITEM:

Discussion and possible action on any and all matters regarding the acceptance and approval of the Tentative Budget for Fiscal Year 2026-2027. **(Roula Encinas, Director of Finance)**

SUMMARY:

Pursuant to state statute, the City Council is required to adopt a tentative budget to establish the maximum expenditure ceiling. Prior to the final adoption of the Fiscal Year 2026-2027 budget, the City Council may reallocate expenditures and revenues among departments differently than set forth in the tentative budget and may decrease expenditures as well.

Budget preparation workshops were held in February 2026, followed by a Budget Retreat in April 2026 and a Work Session in May 2026, during which the City Council provided additional direction and priorities. Administrative staff compiled the information and recommendations from these meetings to prepare the proposed revenues and expenditures/expenses for Fiscal Year 2026-2027. The tentative budget has now been submitted to the City Council for acceptance.

RECOMMENDATION / SUGGESTED MOTION:

I MOVE TO APPROVE THE TENTATIVE BUDGET FOR THE FISCAL YEAR 2026-2027 AS PRESENTED.

Fiscal Impact

IS THERE FISCAL IMPACT ASSOCIATED WITH THIS ITEM:	N/A
CITY/STATE/FEDERAL FUNDS:	N/A
TOTAL:	N/A
BUDGETED AMOUNT:	N/A
AVAILABLE AMOUNT TO TRANSFER:	N/A
ACCT NAME & GL#/REMAINING BALANCE BEFORE PURCHASE:	N/A

FISCAL IMPACT STATEMENT (IF THIS IS A BUDGET TRANSFER, YOU MUST ATTACH THE BUDGET ADJUSTMENT FORM):

There is no fiscal impact associated with this item.

Attachments

Presentation Tentative Budget

City Council Organization Support FY2027
Special Events Budget FY2027
Capital Projects Proposed FY2027
Non-Capital Projects Proposed FY2027
Annual Budget by Organization FY2027

CITY OF SAN LUIS

ARIZONA

WWW.SANLUISAZ.GOV

TENTATIVE BUDGET FY 2026-2027

June 10, 2026

Budget FY 2027



- The FY 2027 budget reflects the City's ongoing commitment to transparency, accountability, and service excellence.
- Budget decisions are aligned with the City Council's strategic priorities.
- With limited resources, we prepared a conservative budget that focuses on essential expenses.
- The gap between revenues and expenses is covered by positive fund balances.
- We continue to maintain healthy reserves to safeguard the City's financial stability in uncertain times.
- FY 2027 budget is $152.3 Million ($152,375,550.)

Arizona Cities & Town Budget Schedule A

City of San Luis

Summary Schedule of Estimated Revenues and Expenditures/Expenses

Fiscal year 2027

Fiscal Year		Sch		Funds						
				General Fund	Special Revenue Fund	Debt Service Fund	Capital Projects Fund	Enterprise Funds Available	Internal Service Funds	Total all funds
2026	Adopted/adjusted budgeted expenditures/expenses*	E	1	36,398,140	32,465,730	26,781,000	1,451,910	41,327,680	4,754,040	143,178,500
2026	Actual expenditures/expenses**	E	2	30,291,803	12,393,680	26,775,600	1,135,010	21,876,820	3,519,260	95,992,173
2027	Beginning fund balance/(deficit) or net position/(deficit) at July 1***		3	51,021,628	1,997,651	3,410,367	2,425,296	6,850,736	4,675,725	70,381,403
2027	Secondary property tax levy	B	5		1,271,660					1,271,660
2027	Estimated revenues other than property taxes	C	6	38,554,260	18,417,310	35,059,000	670,000	23,687,030	6,014,300	122,401,900
2027	Other financing sources	D	7	0	0	0	0	36,890,000	0	36,890,000
2027	Other financing (uses)	D	8	0	0	0	0	0	0	0
2027	Interfund transfers in	D	9	0	5,739,060	1,700,000	0	0	0	7,439,060
2027	Interfund Transfers (out)	D	10	6,077,060	1,362,000	0	0	0	0	7,439,060
2027	Line 11: Reduction for fund balance reserved for future budget year expenditures		11							
	Maintained for future debt retirement					3,410,367	0	3,919,546		7,329,913
	Maintained for future capital projects			11,090,000	2,650,151		2,325,900	17,490,000		33,556,051
	Maintained for future financial stability			18,146,940					3,007,150	21,154,090
										0
										0
2027	Total financial resources available		12	54,261,888	23,413,530	36,759,000	769,396	46,018,220	7,682,875	168,904,909
2027	Budgeted expenditures/expenses	E	13	39,929,500	23,413,530	36,759,000	241,000	46,018,220	6,014,300	152,375,550

	Expenditure limitation comparison	2026	2027
1	Budgeted expenditures/expenses	$ 143,178,500	$ 152,375,550
2	Add/subtract: estimated net reconciling items		
3	Budgeted expenditures/expenses adjusted for reconciling items	143,178,500	152,375,550
4	Less: estimated exclusions	81,027,120	102,537,510
5	Amount subject to the expenditure limitation	$ 62,151,380	$ 49,838,040
6	EEC expenditure limitation	$ 63,446,737	$ 68,711,500

Tentative Budget Summary

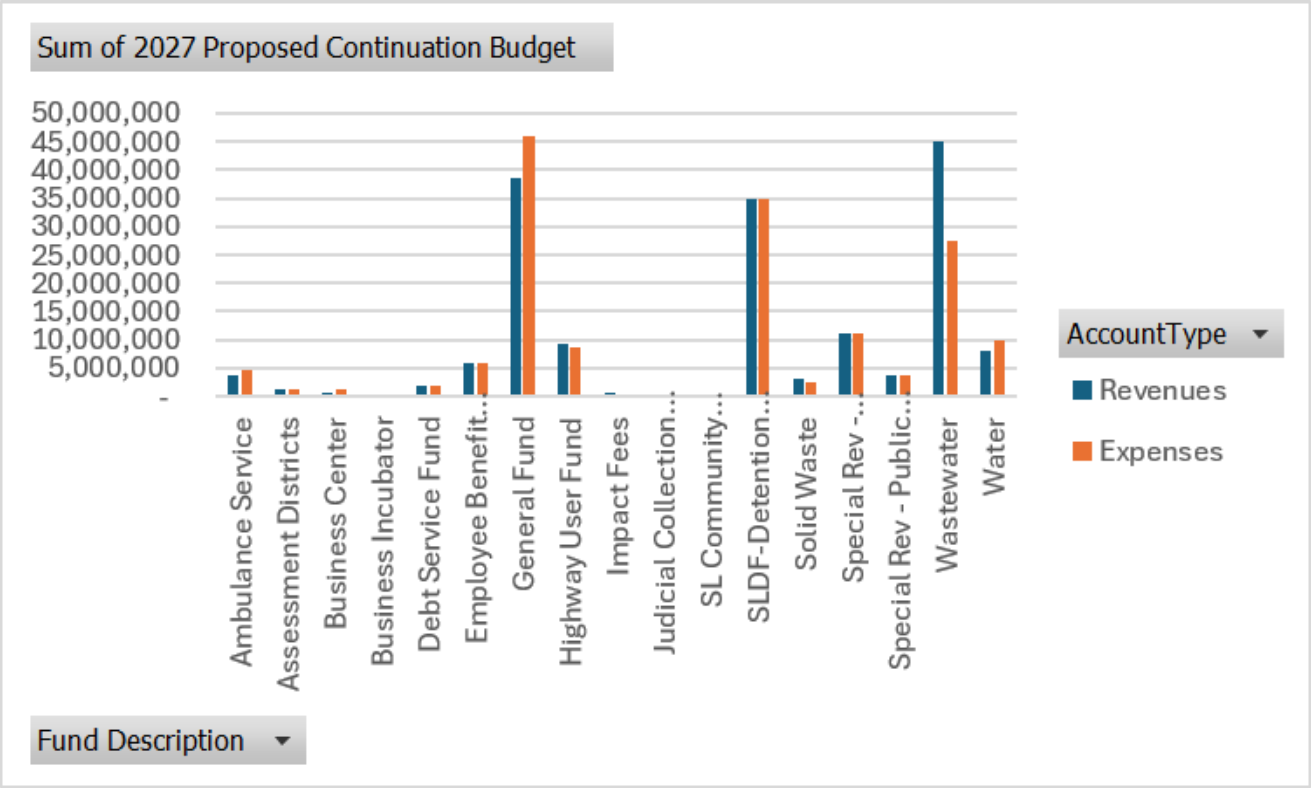

FY2027 Budget Revenues and Expenses by Fund

FUND	Revenues	Expenses	Budget Balance FY2027
Ambulance Service	3,575,000	4,665,750	(1,090,750)
Assessment Districts	1,271,660	1,271,660	-
Business Center	610,000	1,194,510	(584,510)
Business Incubator	131,000	160,610	(29,610)
Debt Service Fund	1,759,000	1,759,000	-
Employee Benefit Trust	6,014,300	6,014,300	-
General Fund	38,554,260	46,006,560	(7,452,300)
Highway User Fund	9,213,410	8,523,410	690,000
Impact Fees	670,000	241,000	429,000
Judicial Collection Enhancement	230,360	270,360	(40,000)
SL Community Facilities District	2,500		2,500
SLDF-Detention Facility Corp	35,000,000	35,000,000	-
Solid Waste	3,098,830	2,598,450	500,380
Special Rev - Comm Development	11,111,850	11,111,850	-
Special Rev - Public Safety	3,598,250	3,598,250	-
Wastewater	45,013,680	27,612,330	17,401,350
Water	8,148,520	9,786,570	(1,638,050)
Grand Total	**168,002,620**	**159,814,610**	**8,188,010**

Personnel Budget $ 40.4 Million

It includes:

1. Option 2 Cost of Living Adjustment (COLA) and Service Salary Increase (SSI) $1.6M

2. Four New Positions $387,500

- Assistant City Attorney
- GIS Technician
- IT Network Administrator
- Building Maintenance

3. Salary Reclassification $9,200

- Reclassification from Admin Coordinator to Business License Coordinator

CAPITAL COSTS FY 2027

$ 43.5 MILLION

Budgeted Funding Source

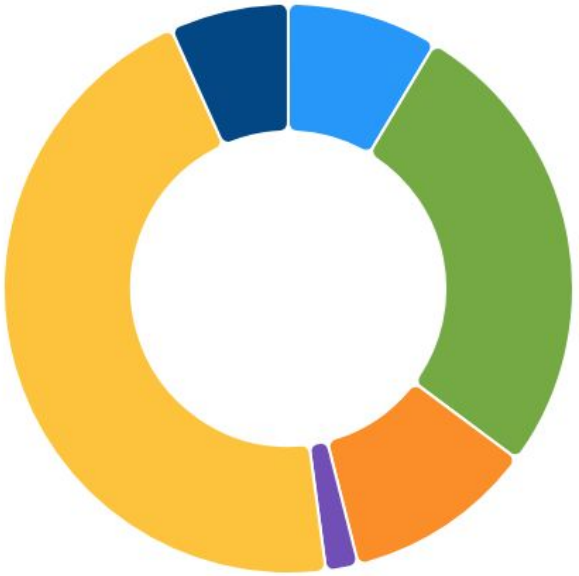

General Fund (9%)	$3,736,630.00
Grant (27%)	$11,566,420.00
Highway User Fund (11%)	$4,722,460.00
Impact Fees (2%)	$800,000.00
Wastewater Fund (45%)	$19,730,000.00
Water Fund (7%)	$2,940,480.00
TOTAL	**$43,495,990.00**



THANK YOU

Questions?

City of San Luis

Budget FY 2027- Contractual Services/Organizations Support

	Organization Budget Request	FY2026 Budget Request	Difference
Council			
GYEDC	$ 64,000.00	$ 57,600.00	$ (6,400.00)
Amberly Place	$ 50,000.00	$ 45,000.00	$ (5,000.00)
Human Society of Yuma	$ 83,500.00	$ 98,400.00	$ 14,900.00
YMPO	$ 14,370.00	$ 16,000.00	$ 1,630.00
YCIPTA	$ 141,950.00	$ 150,000.00	$ 8,050.00
Yuma Community Food Bank	$ 40,000.00	$ 36,000.00	$ (4,000.00)
4FRONTED	$ 18,500.00	$ -	$ (18,500.00)
Grand Total	$ 412,320.00	$ 403,000.00	$ (9,320.00)

City of San Luis

Budget FY 2027- Employee and Community Events

	Department Request Budget	Proposed Continuation Budget	Reduction Amount
Human Resources			
Employee Recognition Event	$ 35,000.00	$ -	$ (35,000.00)
Thanksgiving Luncheon	$ 16,000.00	$ -	$ (16,000.00)
Employee Picnic	$ 10,000.00	$ -	$ (10,000.00)
Cultural Center			
Arte en la Calle	$ 22,000.00	$ -	$ (22,000.00)
Dia de los Muertos	$ 2,000.00	$ -	$ (2,000.00)
Holiday of Lights Parade	$ 3,000.00	$ 3,000.00	$ -
Mercado Swap Meet	$ 2,000.00	$ -	$ (2,000.00)
Miss San Luis	$ 14,500.00	$ -	$ (14,500.00)
Mascota Mania	$ 12,000.00	$ -	$ (12,000.00)
Monthly Activities	$ 3,300.00	$ -	$ (3,300.00)
Noche Mexicana	$ 6,000.00	$ -	$ (6,000.00)
Quarterly Movie Nights	$ 1,400.00	$ -	$ (1,400.00)
Summer Camp	$ 3,000.00	$ -	$ (3,000.00)
Tree Lighting Ceremony	$ 12,000.00	$ 3,000.00	$ (9,000.00)
Winter Recital	$ 900.00	$ -	$ (900.00)
Recreation			
3K / 5K Color Run	$ 2,500.00	$ -	$ (2,500.00)
Baseball Exhibition Games	$ 1,500.00	$ -	$ (1,500.00)
Instructors Gratitude Dinner	$ 5,000.00	$ -	$ (5,000.00)
International Physical Activity event	$ 2,000.00	$ -	$ (2,000.00)
Year Round Sport Clinics	$ 4,000.00	$ -	$ (4,000.00)
Youth Center			
Boxing Exhibition	$ 4,000.00	$ -	$ (4,000.00)
Dia del Niño	$ 13,000.00	$ -	$ (13,000.00)
Spooktacular Festival	$ 25,000.00	$ -	$ (25,000.00)
Easter Egg Hunt	$ 7,000.00	$ -	$ (7,000.00)
Christmas Posada	$ 2,000.00	$ -	$ (2,000.00)
Quarterly Activities	$ 3,500.00	$ -	$ (3,500.00)
Safety Event	$ 9,000.00	$ -	$ (9,000.00)
Youth Center Summer Camp	$ 5,000.00	$ -	$ (5,000.00)
Municipal Pool			
M.P. Summer Opening Event	$ 1,000.00	$ 1,000.00	$ -
M.O. closing event	$ 1,000.00	$ 1,000.00	$ -
Parks			
Parks Ground Week	$ 2,500.00	$ -	$ (2,500.00)
Administration			
4th of July	$ 180,000.00	$ 100,000.00	$ (80,000.00)
Asado & Brew Festival	$ 100,000.00	$ 80,000.00	$ (20,000.00)
Grand Total	$ 511,100.00	$ 188,000.00	$ (323,100.00)

City of San Luis
Capital Budgeting FY2026-2027

Department / Request Title	Account ID	FY2027 Requests	FY2027 Proposed
City Administration			
Administration Vehicle	100-999-90000	46,100.00	-
City Council Vehicle	100-999-90000	65,000.00	-
City Hall Landscape front and back	100-999-90005	40,000.00	-
ADA Compliance - EE Parking Lots Design and Construction	100-999-90015	25,000.00	-
Postal Services Cluster Boxes	100-999-90015	600,000.00	-
Remodel Building on 767 N William Brooks Avenue	100-999-90015	90,000.00	-
Total City Administration		**866,100.00**	**-**
Development Services			
Development Services (GIS) Vehicle	100-999-90000	45,630.00	45,630.00
Vehicle Replacement for Ford Explorer	100-999-90000	46,100.00	-
Permitting and Land Use Software	100-999-90020	120,000.00	-
Total Development Services		**211,730.00**	**45,630.00**
Economic Development			
T Mobile Hometown Grant - Public Art Program	255-135-90015 Grant $50,000 Match $30,000	80,000.00	80,000.00
GM On Main Street Grant Program - Public Art on Main Street	255-135-90015 Grant 100%	60,000.00	60,000.00
Cesar Chavez Boulevard Commercial Development – State Land Acquisition	100-999-90015	4,500,000.00	-
Cesar Chavez Blvd Commercial Land Development –State Land Auction Preparation Study (Carryover)	100-999-90015	28,000.00	28,000.00
Downtown Park and Parking Lot	255-135-90015 Grant 100%	7,405,580.00	7,405,580.00
Land and Water Conservation Fund (LWCF) Grant - East Community Park	255-144-90015 Grant 100%	100,000.00	100,000.00
ESP Grant: Onvida Health Commercial Development Road	255-210-90010 Grant 100%	500,000.00	500,000.00
CDBG SSP: Los Oros Street Improvements Phase III (Los Valles St, Los Portales St, El Chamizal St)	255-210-90010 Grant $466,640 Match $271,060	737,700.00	-
NAD Bank CAP Program - Downtown San Luis Master Drainage Infrastructure	255-210-90015 Grant $750,000 Match $677,000	1,427,000.00	-
CDBG RA - Merrill Avenue Street Improvements Phase II (Carryover)	255-210-90015.219 Grant $467,170 Match $100,000	560,860.00	567,170.00
EDA Grant: USHWY 95 Water and Sewer Line Expansion (FY 2026 Carryover)	300-302-90015 Grant $1,277,920 Match $455,480	1,733,400.00	1,733,400.00
Total Economic Development		**17,132,540.00**	**10,474,150.00**
Parks			
2026 Ford F150 for Parks Grounds Department	100-999-90000	51,800.00	-
Joe Orduño Park Relight Structure System	100-999-90000	260,750.00	-
Maintenance for Assessment Audits	100-999-90015	100,000.00	100,000.00
Renovation of the Joe Orduño Park Artificial Turf Field	100-999-90015	175,000.00	146,000.00
East Community Park - Continuation Budget	806-144-90015 $200,000; 100-999-90015 $125,000	400,000.00	325,000.00
Total Parks		**987,550.00**	**571,000.00**

City of San Luis Capital Budgeting FY2026-2027			
Department / Request Title	**Account ID**	**FY2027 Requests**	**FY2027 Proposed**
Recreation			
Renovation of Recreation Department Indoor Restrooms	100-999-90005	91,700.00	91,700.00
Recreation Department Expansion Project - Continuation	100-999-90005	230,090.00	-
Total Recreation		**321,790.00**	**91,700.00**
Youth Center			
New Gym Equipment for Youth Center	100-999-90000	24,270.00	-
Total Youth Center		**24,270.00**	**-**
Municipal Court			
Network Circuit Upgrade	260-262-90020 Grant 100%	29,360.00	29,360.00
New Courthouse	260-268-90000 $238,000; FY28-31 260-262-90000 $500,000; 100-999-90015 $6,100,000	238,000.00	-
Total Municipal Court		**267,360.00**	**29,360.00**
Police Department			
Police Department Shipping/storage Containers & Canopy Shade	100-999-90000	26,620.00	-
Evidence locker with built in refrigerator unit	100-999-90000	26,050.00	-
Police Department Radios	100-999-90000	150,000.00	150,000.00
AXON Upgrades/Renewals	100-999-90000	164,300.00	164,300.00
Police Trikke Scooter	100-999-90000	14,520.00	-
Police Equipment AZDPS Local Border Support Fund Grant	250-181-90000 Grant 100%	530,910.00	511,390.00
Police Equipment Border Security DEMA Grant	250-181-90000 Grant 100%	265,000.00	265,000.00
Off-site Dispatch Console	806-181-90000	30,000.00	-
Police Motorcycle	806-181-90000	46,070.00	-
Total Police Department		**1,253,470.00**	**1,090,690.00**
Fire Department			
Brush Truck	100-999-90000	300,000.00	-
SCBA Regulators	100-999-90000	50,000.00	50,000.00
SCBA Airpacks	100-999-90000	55,000.00	55,000.00
Rescue Tools	100-999-90000	75,000.00	-
Fire Rescue Truck	100-999-90000	100,000.00	100,000.00
Fire Dispatch Alerting System Upgrade	100-999-90000	460,000.00	680,000.00
Fire Station #3	100-999-90015	150,000.00	150,000.00
Total Fire Department		**1,190,000.00**	**1,035,000.00**
FD Station 2			
Fire Station #2 6ft Extension Barn	100-999-90015	15,000.00	15,000.00
Fire Station #2 Phase 2	100-999-90015	2,000,000.00	-
Total FD Station 2		**2,015,000.00**	**15,000.00**

City of San Luis Capital Budgeting FY2026-2027			
Department / Request Title	**Account ID**	**FY2027 Requests**	**FY2027 Proposed**
Information Technology			
Phone System Cloud Migration	100-999-90000	70,000.00	70,000.00
Financial ERP, HR, Payroll, Licensing, Permits Modernization & Cloud Transformation Initiative	100-999-90020	900,000.00	1,000,000.00
Water Plant to Fleet Building Fiber Optic Link	300-302-90015	30,000.00	30,000.00
Datacenter Perimeter Wall and Electrical Installation	806-181-90000	41,000.00	41,000.00
Total Information Technology		**1,041,000.00**	**1,141,000.00**
Facilities			
Facilites Vehicle 2026 Chevrolet Silverado 1500 Work Truck (4X2)	100-999-90000	81,300.00	40,000.00
Facilities and Communications Building Remodel Project	100-999-90005	500,000.00	500,000.00
Senior Center Building Improvements	100-999-90005	258,900.00	125,000.00
City Hall Admin Wing Reconfiguration	100-999-90015	180,000.00	-
Total Facilities		**1,020,200.00**	**665,000.00**
Billings & Collections			
Work Order Management System	300-302-90015	54,500.00	-
Total Billings & Collections		**54,500.00**	**-**
Highway Users			
Pedestrian Hawk Crossing Relocation	200-210-90000	75,000.00	75,000.00
Highway Users Storage Warehouse	200-210-90000	220,000.00	-
Cesar Chavez Boulevard Widening Project	200-210-90010	1,000,000.00	337,000.00
Co. 25th Street extension to Ave B	200-210-90010	800,000.00	-
Lakin Subsidence issue, Road Improvement Construction Continued	200-210-90010	175,000.00	175,000.00
10th Ave Widening	200-210-90010	2,200,000.00	2,200,000.00
Urtuzuastegui Street drainage Improvements and Beautification from 10th Ave to 6th Ave	200-210-90010	148,500.00	148,500.00
Williams Brooks & Urtuzuastegui Traffic Signal, APS - GSA Improvements	200-210-90010	8,000.00	-
10th Ave/Los Alamos Curve Project Construction Match-T0442	200-210-90010	79,230.00	79,230.00
6th Avenue extension north, from Union Street to Co. 22nd Street Roadway Design (Phase I Design completion from 60% to 100%)	200-210-90010	145,730.00	145,730.00
Union Street and 4th Avenue intersection and Traffic Signal Improvements Design & Construction Phase I Design (YMPO Grant)	255-210-90010 Grant $900,000; Match $1,262,000	2,162,000.00	2,162,000.00
ROW Beautification / Street Lights Projects	200-210-90015	100,000.00	-
Ave F Street Widening Design (between Cesar Chavez Blvd and San Luis Lane) Construction	200-210-90015	200,000.00	200,000.00
4th Ave Public Works Entrance Paving and Improvements	200-210-90015 $35,000; 300-302-90015 $35,000	70,000.00	-
Ave B Shoulder Improvements Construction Match	200-210-90015	66,580.00	-
Total Highway Users		**7,450,040.00**	**5,522,460.00**

City of San Luis Capital Budgeting FY2026-2027			
Department / Request Title	**Account ID**	**FY2027 Requests**	**FY2027 Proposed**
Water Operation			
New 2026 Chevrolet Service Truck	300-302-90000	65,000.00	-
New 2026 Chevrolet Service Truck w/ Crane	300-302-90000	90,000.00	90,000.00
Hydro excavating Truck	300-302-90000	500,000.00	-
Case Construction 588H Forklift 4Wd	300-302-90000	85,000.00	85,000.00
ADWR Assured Water Supply Update - Continuation	300-302-90015	10,000.00	10,000.00
WS7 Operations Building Expansion - Continuation	300-302-90015	100,000.00	100,000.00
New Water Main Loop - San Luis Lane and Avenue D	300-302-90015	220,000.00	-
Well Site #3 - Entire Electrical Upgrade and Civil/Repiping Improvements	300-302-90015	1,000,000.00	300,000.00
Well Site #4 - Water Storage Tank and Pressure Tanks Rehabilitation	300-302-90015	1,000,000.00	1,000,000.00
WS6 Electrical and Booster Station Improvements - Continuation	300-860-90015	2,050,000.00	900,000.00
Total Water Operation		**5,120,000.00**	**2,485,000.00**
Wastewater Operations			
New CAT Backhoe	310-311-90000	180,000.00	-
2026 Ford F-550 Regular Cab DRW 4WD Dump Truck	310-311-90000	110,000.00	-
High School Lift Station Generator	310-311-90000	80,000.00	80,000.00
East WWTP Northside CMU Wall	310-311-90015	80,000.00	-
Sewer Manhole Repairs and Replacements Annual Program	310-311-90015	250,000.00	250,000.00
West Wastewater Treatment Plant Expansion Construction (Inc. Building & FM) - Construction and Design	310-860-90015 $600,000; 310-311-90015.360 $19,400,000	20,000,000.00	20,000,000.00
Total Wastewater Operations		**20,700,000.00**	**20,330,000.00**
Ambulance			
Ambulance	340-341-90000	350,000.00	-
Total Ambulance		**350,000.00**	**-**
Total Departments		**60,005,550.00**	**43,495,990.00**
		Difference	**16,509,560.00**

City of San Luis
Non Capital Budgeting FY2026-2027

Department / Request Title	Account ID	FY2027 Requests	FY2027 Proposed
Economic Development			
Small Business Development Center (SBDC) - Small Business Development Services	100-135-80000	16,000.00	16,000.00
Fuerza Local Cohort 3 (Carry-over)	100-135-80000	5,000.00	5,000.00
Placer.ai Location Analytics Platform – 1 Year Subscription	100-135-80000 $10K 100-149-80000 $10K	20,000.00	-
Economic Development Strategic Plan	100-135-80001	50,000.00	-
Campesinos Sin Fronteras - Nuestra Herencia Grant (Historic Preservation)	100-999-80000	36,000.00	36,000.00
Historic Preservation Heritage Fund Grant	255-135-80000 Grant $54,000 Match $36,000	90,000.00	90,000.00
Public Art Program	100-999-80000	30,000.00	30,000.00
Total Economic Development		**247,000.00**	**177,000.00**
Parks			
Minor Equipment for Dog Parks at PPEP Park	100-144-60035	34,540.00	-
Total Parks		**34,540.00**	**-**
Recreation			
Renovate Recreation Gym Flooring and Addition of Upgrades	100-999-89000	126,000.00	120,000.00
Total Recreation		**126,000.00**	**120,000.00**
Youth Center			
Youth Center Gym Flooring Upgrade	100-999-89000	45,960.00	-
Total Youth Center		**45,960.00**	**-**
Facilities			
Flooring Replacement at Fire Department Administration	100-999-89000	16,500.00	16,500.00
New Signage Installation at Interior Walls of City Hall Lobby Area	100-999-89000	15,000.00	-
Pavement Preservation Project for various City Parking Lots	100-999-89000	58,500.00	58,500.00
Roof Repair at Cultural Center	100-999-89000	62,600.00	62,600.00
Flooring Replacement at City Hall	100-999-89000	460,500.00	-
City Hall Roof Repair	100-999-89000	200,000.00	-
Flooring Replacement at Police Department.	100-999-89000	137,500.00	-
Roof Restoration at San Luis Municipal Court	100-999-89000	13,700.00	13,700.00
Parks & Recreation Admin Building - Restrooms (2) Remodel Project	100-999-89000	13,600.00	6,800.00
Police Department Roof Repair	100-999-89000	168,100.00	-
Refrigeration Units for Various City Buildings - As needed Basis	100-999-89000	90,000.00	90,000.00
Total Facilities		**1,236,000.00**	**248,100.00**
Fleet Services			
A/C Vehicle Service Machine for new refrigerants	100-730-60035	8,000.00	8,000.00
Total Fleet Services		**8,000.00**	**8,000.00**
Engineering			
Water Master Plan	300-302-80000	100,000.00	50,000.00
Wastewater Master Plan	310-311-80000	100,000.00	50,000.00
Total Engineering		**200,000.00**	**100,000.00**
Highway Users			
Reoccurring Pavement Preservation Program	200-210-89000	350,000.00	350,000.00
Bike Lanes Citywide	200-210-89000	100,000.00	-
Total Highway Users		**450,000.00**	**350,000.00**

City of San Luis Non Capital Budgeting FY2026-2027			
Department / Request Title	**Account ID**	**FY2027 Requests**	**FY2027 Proposed**
Water Operation			
Water Valve Replacement Program	300-302-89000	100,000.00	100,000.00
Water Storage Tank #6 (1MG Steel) Demo	300-302-89000	100,000.00	100,000.00
WS5 Well #9 Rehabilitation	300-302-89000	100,000.00	100,000.00
Total Water Operation		**300,000.00**	**300,000.00**
Wastewater Operations			
Collection System Odor Control	310-311-89000	50,000.00	50,000.00
Total Wastewater Operations		**50,000.00**	**50,000.00**
Total Departments		**2,697,500.00**	**1,353,100.00**
		Difference	1,344,400.00

City of San Luis

Annual Budget by Organization Report

Summary

	2024 Actual Amount	2025 Actual Amount	2026 Adopted Budget	2026 Amended Budget	2026 Actual Amount	2027 Proposed Continuation Budget
Fund: 100 General Fund						
Revenue						
100 - General Fund	$36,460,673.30	$37,957,960.08	$35,087,870.00	$35,087,870.00	$29,954,842.31	$38,554,260.00
100-181 - General Fund,Police Department	$0.00	$0.00	$0.00	$0.00	$0.00	$0.00
Revenue Totals	$36,460,673.30	$37,957,960.08	$35,087,870.00	$35,087,870.00	$29,954,842.31	$38,554,260.00
Expenditures						
100-110 - General Fund,City Council	$1,002,993.70	$885,366.52	$1,273,300.00	$1,212,800.00	$914,667.45	$1,326,400.00
100-115 - General Fund,City Administration	$428,226.83	$504,348.43	$791,860.00	$721,860.00	$796,704.21	$784,920.00
100-116 - General Fund,City Clerk	$336,668.54	$282,597.55	$361,460.00	$371,030.00	$436,775.65	$372,540.00
100-117 - General Fund,City Attorney	$321,658.78	$653,172.65	$782,230.00	$789,420.00	$590,075.34	$1,085,200.00
100-118 - General Fund,City Prosecutor	$333,059.18	$339,180.88	$376,970.00	$384,160.00	$306,634.97	$376,340.00
100-120 - General Fund,Finance	$543,891.51	$584,321.64	$759,280.00	$785,580.00	$1,117,920.45	$712,660.00
100-125 - General Fund,Human Resources	$461,060.06	$469,082.04	$733,140.00	$691,140.00	$722,628.24	$721,050.00
100-130 - General Fund,Development Services	$439,961.42	$611,256.98	$774,030.00	$821,030.00	$594,954.70	$877,700.00
100-131 - General Fund,Building Safety	$523,774.25	$477,778.30	$658,530.00	$657,130.00	$476,118.17	$701,760.00
100-135 - General Fund,Economic Development	$422,099.16	$478,809.98	$569,580.00	$580,350.00	$446,812.61	$631,210.00
100-140 - General Fund,Cultural Center	$250,417.07	$271,762.58	$304,150.00	$303,270.00	$180,902.88	$313,680.00
100-144 - General Fund,Parks	$1,666,606.49	$1,805,178.97	$2,200,910.00	$2,240,240.00	$1,585,186.33	$1,970,350.00
100-145 - General Fund,Recreation	$381,970.20	$547,551.10	$476,730.00	$474,800.00	$368,907.07	$513,470.00
100-146 - General Fund,Youth Center	$260,825.20	$284,982.20	$340,880.00	$328,850.00	$222,929.27	$336,830.00
100-147 - General Fund,Municipal Pool	$176,355.42	$150,327.79	$249,930.00	$250,930.00	$142,637.73	$271,440.00
100-149 - General Fund,Parks & Rec. Administration	$369,407.17	$430,532.98	$596,810.00	$621,010.00	$569,868.55	$624,940.00
100-150 - General Fund,Community Center	$0.00	$0.00	$0.00	$0.00	$0.00	$0.00
100-155 - General Fund,Senior Services	$337,847.36	$289,168.91	$432,260.00	$448,170.00	$361,546.16	$462,980.00
100-160 - General Fund,Municipal Court	$766,876.15	$804,467.44	$1,014,890.00	$1,014,890.00	$837,112.97	$1,223,140.00
100-181 - General Fund,Police Department	$7,101,929.44	$7,869,513.45	$10,137,270.00	$9,985,120.00	$8,387,029.50	$10,639,790.00
100-182 - General Fund,Fire Department	$3,242,763.40	$3,547,671.71	$4,830,520.00	$4,803,480.00	$3,806,255.33	$5,127,700.00
100-183 - General Fund,Fire Department East	$947,089.67	$1,177,605.40	$1,240,150.00	$1,236,060.00	$1,074,544.91	$1,487,650.00
100-710 - General Fund,Information Technology	$711,977.55	$849,845.27	$1,005,540.00	$966,040.00	$1,093,619.31	$1,160,710.00
100-720 - General Fund,Facilities	$702,328.47	$829,325.41	$943,130.00	$978,770.00	$1,096,268.33	$1,081,580.00
100-730 - General Fund,Fleet Services	$256,643.04	$278,658.96	$286,820.00	$297,590.00	$554,028.94	$308,350.00
100-740 - General Fund,Risk & Property Management	$460,205.03	$747,931.69	$862,670.00	$867,460.00	$1,294,976.53	$961,950.00
100-750 - General Fund,Billings & Collections	$33,683.38	$35,255.54	$41,820.00	$65,730.00	$847,511.38	$46,530.00
100-760 - General Fund,PW Administration	$235,387.48	$165,255.23	$206,440.00	$181,440.00	$638,471.73	$219,630.00

Annual Budget by Organization Report

Summary

	2024 Actual Amount	2025 Actual Amount	2026 Adopted Budget	2026 Amended Budget	2026 Actual Amount	2027 Proposed Continuation Budget
100-770 - General Fund,Engineering	$0.00	$262,755.85	$482,760.00	$482,760.00	$354,829.28	$510,840.00
100-999 - General Fund,Non Departmental	$6,456,266.74	$4,813,282.71	$7,020,190.00	$7,017,260.00	$1,908,457.77	$11,155,220.00
Revenue Totals:	$36,460,673.30	$37,957,960.08	$35,087,870.00	$35,087,870.00	$29,954,842.31	$38,554,260.00
Expenditure Totals	$29,171,972.69	$30,446,988.16	$39,754,250.00	$39,578,370.00	$31,728,375.76	$46,006,560.00
Fund Total: General Fund	$7,288,700.61	$7,510,971.92	($4,666,380.00)	($4,490,500.00)	($1,773,533.45)	($7,452,300.00)
Fund: 200 Highway User Fund						
Revenue						
200-210 - Highway User Fund,Street Repairs & Maintenance	$5,500,927.51	$5,119,208.21	$5,736,840.00	$5,736,840.00	$3,006,615.55	$8,523,410.00
200-860 - Highway User Fund,Impact Fees	$909,501.83	$506,776.89	$690,000.00	$690,000.00	$491,467.03	$690,000.00
Revenue Totals	$6,410,429.34	$5,625,985.10	$6,426,840.00	$6,426,840.00	$3,498,082.58	$9,213,410.00
Expenditures						
200-210 - Highway User Fund,Street Repairs & Maintenance	$5,249,754.15	$4,989,502.86	$5,760,320.00	$5,424,900.00	$2,688,034.29	$8,523,410.00
200-860 - Highway User Fund,Impact Fees	$6,256.16	$754,282.63	$1,904,000.00	$4,601,460.00	$3,386,764.03	$0.00
Revenue Totals:	$6,410,429.34	$5,625,985.10	$6,426,840.00	$6,426,840.00	$3,498,082.58	$9,213,410.00
Expenditure Totals	$5,256,010.31	$5,743,785.49	$7,664,320.00	$10,026,360.00	$6,074,798.32	$8,523,410.00
Fund Total: Highway User Fund	$1,154,419.03	($117,800.39)	($1,237,480.00)	($3,599,520.00)	($2,576,715.74)	$690,000.00
Fund: 250 Special Rev - Public Safety						
Revenue						
250-020 - Special Rev - Public Safety,Cares ACT	$0.00	$0.00	$0.00	$0.00	$0.00	$0.00
250-135 - Special Rev - Public Safety,Economic Development	$0.00	$0.00	$0.00	$0.00	$0.00	$0.00
250-160 - Special Rev - Public Safety,Municipal Court	$0.00	$0.00	$0.00	$0.00	$0.00	$0.00
250-181 - Special Rev - Public Safety,Police Department	$1,255,396.11	$3,229,811.94	$3,657,620.00	$3,657,620.00	$1,449,916.55	$3,448,250.00
250-182 - Special Rev - Public Safety,Fire Department	$137,898.91	$149,209.78	$335,900.00	$335,900.00	$72,574.21	$150,000.00
250-251 - Special Rev - Public Safety,Opioids	$90,885.45	$51,603.75	$100,000.00	$100,000.00	$19,286.11	$0.00
Revenue Totals	$1,484,180.47	$3,430,625.47	$4,093,520.00	$4,093,520.00	$1,541,776.87	$3,598,250.00
Expenditures						
250-020 - Special Rev - Public Safety,Cares ACT	$0.00	$0.00	$0.00	$0.00	$0.00	$0.00
250-135 - Special Rev - Public Safety,Economic Development	$0.00	$0.00	$0.00	$0.00	$0.00	$0.00
250-160 - Special Rev - Public Safety,Municipal Court	$0.00	$0.00	$0.00	$0.00	$0.00	$0.00

Annual Budget by Organization Report

Summary

	2024 Actual Amount	2025 Actual Amount	2026 Adopted Budget	2026 Amended Budget	2026 Actual Amount	2027 Proposed Continuation Budget
250-181 - Special Rev - Public Safety,Police Department	$1,182,679.27	$2,671,596.26	$3,657,620.00	$3,657,620.00	$2,030,231.35	$3,448,250.00
250-182 - Special Rev - Public Safety,Fire Department	$96,218.79	$187,272.35	$335,900.00	$335,900.00	$226,913.21	$150,000.00
250-251 - Special Rev - Public Safety,Opioids	$0.00	$41,403.50	$100,000.00	$100,000.00	$9,900.00	$0.00
Revenue Totals:	$1,484,180.47	$3,430,625.47	$4,093,520.00	$4,093,520.00	$1,541,776.87	$3,598,250.00
Expenditure Totals	$1,278,898.06	$2,900,272.11	$4,093,520.00	$4,093,520.00	$2,267,044.56	$3,598,250.00
Fund Total: Special Rev - Public Safety	$205,282.41	$530,353.36	$0.00	$0.00	($725,267.69)	$0.00
Fund: 255 Special Rev - Comm Development						
Revenue						
255-019 - Special Rev - Comm Development,Covid-19 -FEMA'S PA program	$0.00	$156,724.97	$0.00	$0.00	$7,042.05	$0.00
255-021 - Special Rev - Comm Development,ARPA	$1,443,251.81	$3,200,000.00	$0.00	$0.00	$0.00	$0.00
255-130 - Special Rev - Comm Development,Development Services	$0.00	$0.00	$0.00	$0.00	$0.00	$0.00
255-135 - Special Rev - Comm Development,Economic Development	$0.00	$30,000.00	$16,475,860.00	$16,475,860.00	$40,000.00	$7,635,580.00
255-144 - Special Rev - Comm Development,Parks	$1,594.62	$0.00	$22,130.00	$22,130.00	$22,130.00	$100,000.00
255-146 - Special Rev - Comm Development,Youth Center	$20,100.00	$37,750.00	$35,770.00	$35,770.00	$94,661.82	$1,000.00
255-155 - Special Rev - Comm Development,Senior Services	$128,967.00	$138,972.85	$127,800.00	$127,800.00	$116,326.00	$146,100.00
255-210 - Special Rev - Comm Development,Street Repairs & Maintenance	$595,748.78	$2,456,028.33	$1,132,130.00	$1,132,130.00	$45,350.85	$3,229,170.00
255-710 - Special Rev - Comm Development,Information Technology	$0.00	$0.00	$0.00	$0.00	$0.00	$0.00
Revenue Totals	$2,189,662.21	$6,019,476.15	$17,793,690.00	$17,793,690.00	$325,510.72	$11,111,850.00
Expenditures						
255-019 - Special Rev - Comm Development,Covid-19 -FEMA'S PA program	$0.00	$0.00	$0.00	$0.00	$0.00	$0.00
255-021 - Special Rev - Comm Development,ARPA	$1,443,251.81	$3,200,000.00	$0.00	$0.00	$0.00	$0.00
255-130 - Special Rev - Comm Development,Development Services	$0.00	$0.00	$0.00	$0.00	$0.00	$0.00

Annual Budget by Organization Report

Summary

	2024 Actual Amount	2025 Actual Amount	2026 Adopted Budget	2026 Amended Budget	2026 Actual Amount	2027 Proposed Continuation Budget
255-135 - Special Rev - Comm Development,Economic Development	$0.00	$30,000.00	$16,475,860.00	$16,475,860.00	$77,500.00	$7,635,580.00
255-144 - Special Rev - Comm Development,Parks	$7,969.27	$0.00	$22,130.00	$22,130.00	$22,130.00	$100,000.00
255-146 - Special Rev - Comm Development,Youth Center	$20,100.00	$37,750.00	$35,770.00	$35,770.00	$64,302.58	$1,000.00
255-155 - Special Rev - Comm Development,Senior Services	$139,041.33	$138,515.10	$134,340.00	$139,380.00	$130,559.44	$146,100.00
255-210 - Special Rev - Comm Development,Street Repairs & Maintenance	$93,231.58	$1,537,432.76	$1,121,710.00	$1,121,710.00	$177,260.34	$3,229,170.00
255-710 - Special Rev - Comm Development,Information Technology	$0.00	$0.00	$0.00	$0.00	$0.00	$0.00
Revenue Totals:	$2,189,662.21	$6,019,476.15	$17,793,690.00	$17,793,690.00	$325,510.72	$11,111,850.00
Expenditure Totals	$1,703,593.99	$4,943,697.86	$17,789,810.00	$17,794,850.00	$471,752.36	$11,111,850.00
Fund Total: Special Rev - Comm Development	$486,068.22	$1,075,778.29	$3,880.00	($1,160.00)	($146,241.64)	$0.00
Fund: 260 Judicial Collection Enhancement						
Revenue						
260-261 - Judicial Collection Enhancement,JCEF Collection	$8,285.80	$7,992.22	$8,000.00	$8,000.00	$6,376.29	$20,000.00
260-262 - Judicial Collection Enhancement,San Luis Court Enhancement	$52,245.74	$53,591.57	$52,000.00	$52,000.00	$81,241.61	$159,360.00
260-263 - Judicial Collection Enhancement,Fill the Gap	$2,153.49	$3,965.83	$2,000.00	$2,000.00	$2,615.92	$10,000.00
260-264 - Judicial Collection Enhancement,Default Fees	$19,024.74	$24,509.83	$19,000.00	$19,000.00	$20,970.20	$30,000.00
260-265 - Judicial Collection Enhancement,Warrant Fees	$4,224.85	$4,452.57	$4,000.00	$4,000.00	$6,394.66	$5,000.00
260-266 - Judicial Collection Enhancement,San Luis Municipal Court Fare	$0.00	$0.00	$0.00	$0.00	$0.00	$0.00
260-268 - Judicial Collection Enhancement,Probation Fees	$0.00	$0.00	$0.00	$0.00	$0.00	$0.00
260-269 - Judicial Collection Enhancement,Deferred Prosecution Fee	$0.00	$2,900.00	$0.00	$0.00	$7,796.21	$6,000.00
260-272 - Judicial Collection Enhancement,Defense Appointment	$0.00	$0.00	$0.00	$0.00	$8,233.62	$0.00
260-273 - Judicial Collection Enhancement,Court Technology	$0.00	$0.00	$0.00	$0.00	$9,869.53	$0.00
260-274 - Judicial Collection Enhancement,Dishonored Check	$0.00	$0.00	$0.00	$0.00	$0.00	$0.00

Annual Budget by Organization Report

Summary

	2024 Actual Amount	2025 Actual Amount	2026 Adopted Budget	2026 Amended Budget	2026 Actual Amount	2027 Proposed Continuation Budget
260-275 - Judicial Collection Enhancement,Smart & Safe AZ Fund	$0.00	$0.00	$0.00	$0.00	$29.72	$0.00
Revenue Totals	$85,934.62	$97,412.02	$85,000.00	$85,000.00	$143,527.76	$230,360.00
Expenditures						
260-261 - Judicial Collection Enhancement,JCEF Collection	$0.00	$21,565.00	$8,000.00	$8,000.00	$0.00	$20,000.00
260-262 - Judicial Collection Enhancement,San Luis Court Enhancement	$7,243.76	$14,513.06	$52,000.00	$52,000.00	$3,055.72	$199,360.00
260-263 - Judicial Collection Enhancement,Fill the Gap	$0.00	$0.00	$2,000.00	$2,000.00	$0.00	$10,000.00
260-264 - Judicial Collection Enhancement,Default Fees	$0.00	$0.00	$19,000.00	$19,000.00	$0.00	$30,000.00
260-265 - Judicial Collection Enhancement,Warrant Fees	$0.00	$0.00	$4,000.00	$4,000.00	$0.00	$5,000.00
260-266 - Judicial Collection Enhancement,San Luis Municipal Court Fare	$0.00	$0.00	$0.00	$0.00	$0.00	$0.00
260-268 - Judicial Collection Enhancement,Probation Fees	$0.00	$0.00	$0.00	$0.00	$0.00	$0.00
260-269 - Judicial Collection Enhancement,Deferred Prosecution Fee	$0.00	$0.00	$0.00	$0.00	$0.00	$6,000.00
Revenue Totals:	$85,934.62	$97,412.02	$85,000.00	$85,000.00	$143,527.76	$230,360.00
Expenditure Totals	$7,243.76	$36,078.06	$85,000.00	$85,000.00	$3,055.72	$270,360.00
Fund Total: Judicial Collection Enhancement	$78,690.86	$61,333.96	$0.00	$0.00	$140,472.04	($40,000.00)
Fund: 280 Employee Benefit Trust						
Revenue						
280-281 - Employee Benefit Trust,Employee Benefit Trust	$3,181,038.24	$3,508,865.75	$4,754,040.00	$4,754,040.00	$3,773,554.04	$6,014,300.00
Revenue Totals	$3,181,038.24	$3,508,865.75	$4,754,040.00	$4,754,040.00	$3,773,554.04	$6,014,300.00
Expenditures						
280-281 - Employee Benefit Trust,Employee Benefit Trust	$2,642,889.85	$3,604,233.55	$4,754,040.00	$4,754,040.00	$3,076,840.64	$6,014,300.00
Revenue Totals:	$3,181,038.24	$3,508,865.75	$4,754,040.00	$4,754,040.00	$3,773,554.04	$6,014,300.00
Expenditure Totals	$2,642,889.85	$3,604,233.55	$4,754,040.00	$4,754,040.00	$3,076,840.64	$6,014,300.00
Fund Total: Employee Benefit Trust	$538,148.39	($95,367.80)	$0.00	$0.00	$696,713.40	$0.00

City of San Luis

Annual Budget by Organization Report

Summary

	2024 Actual Amount	2025 Actual Amount	2026 Adopted Budget	2026 Amended Budget	2026 Actual Amount	2027 Proposed Continuation Budget
Fund: 290 SL Community Facilities District						
Revenue						
290-291 - SL Community Facilities District,SL Community Facilities District	$2,500.00	$2,500.00	$2,500.00	$2,500.00	$2,500.00	$2,500.00
Revenue Totals	$2,500.00	$2,500.00	$2,500.00	$2,500.00	$2,500.00	$2,500.00
Revenue Totals:	$2,500.00	$2,500.00	$2,500.00	$2,500.00	$2,500.00	$2,500.00
Fund Total: SL Community Facilities District	$2,500.00	$2,500.00	$2,500.00	$2,500.00	$2,500.00	$2,500.00
Fund: 300 Water						
Revenue						
300-302 - Water,Water Operation	$8,024,725.14	$10,640,046.82	$7,757,030.00	$7,757,030.00	$6,218,160.78	$7,938,520.00
300-860 - Water,Impact Fees	$277,670.00	$166,562.00	$210,000.00	$210,000.00	$370,913.00	$210,000.00
Revenue Totals	$8,302,395.14	$10,806,608.82	$7,967,030.00	$7,967,030.00	$6,589,073.78	$8,148,520.00
Expenditures						
300-301 - Water,Utility Billing & Collection	$0.00	$0.00	$0.00	$0.00	$0.00	$0.00
300-302 - Water,Water Operation	$4,633,847.08	$4,349,095.92	$8,815,490.00	$8,935,490.00	$2,977,707.19	$8,886,570.00
300-860 - Water,Impact Fees	$6,256.16	$6,197.17	$1,000,000.00	$880,000.00	$99,984.00	$900,000.00
Revenue Totals:	$8,302,395.14	$10,806,608.82	$7,967,030.00	$7,967,030.00	$6,589,073.78	$8,148,520.00
Expenditure Totals	$4,640,103.24	$4,355,293.09	$9,815,490.00	$9,815,490.00	$3,077,691.19	$9,786,570.00
Fund Total: Water	$3,662,291.90	$6,451,315.73	($1,848,460.00)	($1,848,460.00)	$3,511,382.59	($1,638,050.00)
Fund: 310 Wastewater						
Revenue						
310-311 - Wastewater,Operations	$7,549,969.30	$8,678,357.87	$26,785,230.00	$26,785,230.00	$7,389,539.89	$44,713,680.00
310-860 - Wastewater,Impact Fees	$447,177.00	$265,991.00	$300,000.00	$300,000.00	$279,550.00	$300,000.00
Revenue Totals	$7,997,146.30	$8,944,348.87	$27,085,230.00	$27,085,230.00	$7,669,089.89	$45,013,680.00
Expenditures						
310-311 - Wastewater,Operations	$5,750,932.12	$5,591,986.36	$24,673,780.00	$22,044,240.00	$5,294,107.90	$27,012,330.00
310-860 - Wastewater,Impact Fees	$6,256.16	$6,197.17	$1,125,000.00	$1,125,000.00	$335,615.99	$600,000.00
Revenue Totals:	$7,997,146.30	$8,944,348.87	$27,085,230.00	$27,085,230.00	$7,669,089.89	$45,013,680.00
Expenditure Totals	$5,757,188.28	$5,598,183.53	$25,798,780.00	$23,169,240.00	$5,629,723.89	$27,612,330.00
Fund Total: Wastewater	$2,239,958.02	$3,346,165.34	$1,286,450.00	$3,915,990.00	$2,039,366.00	$17,401,350.00
Fund: 320 Solid Waste						
Revenue						
320-321 - Solid Waste,Operations	$2,203,374.18	$2,547,399.47	$2,809,110.00	$2,809,110.00	$3,129,749.64	$3,098,830.00
Revenue Totals	$2,203,374.18	$2,547,399.47	$2,809,110.00	$2,809,110.00	$3,129,749.64	$3,098,830.00

Annual Budget by Organization Report

Summary

	2024 Actual Amount	2025 Actual Amount	2026 Adopted Budget	2026 Amended Budget	2026 Actual Amount	2027 Proposed Continuation Budget
Expenditures						
320-321 - Solid Waste,Operations	$2,302,490.43	$2,252,265.34	$2,223,560.00	$2,417,470.00	$1,380,475.82	$2,598,450.00
Revenue Totals:	$2,203,374.18	$2,547,399.47	$2,809,110.00	$2,809,110.00	$3,129,749.64	$3,098,830.00
Expenditure Totals	$2,302,490.43	$2,252,265.34	$2,223,560.00	$2,417,470.00	$1,380,475.82	$2,598,450.00
Fund Total: Solid Waste	($99,116.25)	$295,134.13	$585,550.00	$391,640.00	$1,749,273.82	$500,380.00
Fund: 330 Business Incubator						
Revenue						
330-331 - Business Incubator,BI	$112,686.06	$121,721.77	$124,300.00	$124,300.00	$117,158.62	$131,000.00
Revenue Totals	$112,686.06	$121,721.77	$124,300.00	$124,300.00	$117,158.62	$131,000.00
Expenditures						
330-331 - Business Incubator,BI	$157,958.54	$170,139.50	$193,090.00	$194,300.00	$74,517.50	$160,610.00
Revenue Totals:	$112,686.06	$121,721.77	$124,300.00	$124,300.00	$117,158.62	$131,000.00
Expenditure Totals	$157,958.54	$170,139.50	$193,090.00	$194,300.00	$74,517.50	$160,610.00
Fund Total: Business Incubator	($45,272.48)	($48,417.73)	($68,790.00)	($70,000.00)	$42,641.12	($29,610.00)
Fund: 340 Ambulance Service						
Revenue						
340-341 - Ambulance Service,AS	$3,657,906.01	$3,805,961.99	$3,781,000.00	$3,781,000.00	$2,546,880.81	$3,575,000.00
Revenue Totals	$3,657,906.01	$3,805,961.99	$3,781,000.00	$3,781,000.00	$2,546,880.81	$3,575,000.00
Expenditures						
340-341 - Ambulance Service,AS	$3,426,162.32	$3,751,859.57	$4,430,490.00	$4,464,240.00	$2,880,799.56	$4,665,750.00
Revenue Totals:	$3,657,906.01	$3,805,961.99	$3,781,000.00	$3,781,000.00	$2,546,880.81	$3,575,000.00
Expenditure Totals	$3,426,162.32	$3,751,859.57	$4,430,490.00	$4,464,240.00	$2,880,799.56	$4,665,750.00
Fund Total: Ambulance Service	$231,743.69	$54,102.42	($649,490.00)	($683,240.00)	($333,918.75)	($1,090,750.00)
Fund: 802 Business Center						
Revenue						
802-820 - Business Center,BC	$620,761.78	$641,650.94	$613,200.00	$613,200.00	$613,812.85	$610,000.00
Revenue Totals	$620,761.78	$641,650.94	$613,200.00	$613,200.00	$613,812.85	$610,000.00
Expenditures						
802-820 - Business Center,BC	$601,314.10	$603,893.87	$1,162,470.00	$1,266,940.00	$1,008,244.28	$1,194,510.00
Revenue Totals:	$620,761.78	$641,650.94	$613,200.00	$613,200.00	$613,812.85	$610,000.00
Expenditure Totals	$601,314.10	$603,893.87	$1,162,470.00	$1,266,940.00	$1,008,244.28	$1,194,510.00
Fund Total: Business Center	$19,447.68	$37,757.07	($549,270.00)	($653,740.00)	($394,431.43)	($584,510.00)

Annual Budget by Organization Report

Summary

	2024 Actual Amount	2025 Actual Amount	2026 Adopted Budget	2026 Amended Budget	2026 Actual Amount	2027 Proposed Continuation Budget
Fund: 803 SLDF-Detention Facility Corp						
Revenue						
803-830 - SLDF-Detention Facility Corp,SLDF - BS 2005	$21,124,263.76	$23,227,533.10	$25,000,000.00	$25,000,000.00	$25,290,866.26	$35,000,000.00
Revenue Totals	$21,124,263.76	$23,227,533.10	$25,000,000.00	$25,000,000.00	$25,290,866.26	$35,000,000.00
Expenditures						
803-830 - SLDF-Detention Facility Corp,SLDF - BS 2005	$23,327,458.69	$26,919,295.27	$25,000,000.00	$25,000,000.00	$24,269,674.10	$35,000,000.00
Revenue Totals:	$21,124,263.76	$23,227,533.10	$25,000,000.00	$25,000,000.00	$25,290,866.26	$35,000,000.00
Expenditure Totals	$23,327,458.69	$26,919,295.27	$25,000,000.00	$25,000,000.00	$24,269,674.10	$35,000,000.00
Fund Total: SLDF-Detention Facility Corp	($2,203,194.93)	($3,691,762.17)	$0.00	$0.00	$1,021,192.16	$0.00
Fund: 804 Debt Service Fund						
Revenue						
804-840 - Debt Service Fund,Debt Service	$2,164,345.73	$1,788,167.55	$1,781,000.00	$1,781,000.00	$83,137.71	$1,759,000.00
Revenue Totals	$2,164,345.73	$1,788,167.55	$1,781,000.00	$1,781,000.00	$83,137.71	$1,759,000.00
Expenditures						
804-840 - Debt Service Fund,Debt Service	$2,160,899.73	$1,788,167.55	$1,781,000.00	$1,781,000.00	$283,143.84	$1,759,000.00
Revenue Totals:	$2,164,345.73	$1,788,167.55	$1,781,000.00	$1,781,000.00	$83,137.71	$1,759,000.00
Expenditure Totals	$2,160,899.73	$1,788,167.55	$1,781,000.00	$1,781,000.00	$283,143.84	$1,759,000.00
Fund Total: Debt Service Fund	$3,446.00	$0.00	$0.00	$0.00	($200,006.13)	$0.00
Fund: 806 Impact Fees						
Revenue						
806-115 - Impact Fees,City Administration	$174,182.29	$109,207.65	$0.00	$0.00	$41,900.76	$0.00
806-144 - Impact Fees,Parks	$429,382.19	$248,856.56	$248,000.00	$248,000.00	$395,052.78	$300,000.00
806-181 - Impact Fees,Police Department	$308,972.83	$185,085.05	$147,000.00	$147,000.00	$397,228.32	$170,000.00
806-182 - Impact Fees,Fire Department	$341,238.40	$191,815.83	$185,000.00	$185,000.00	$449,431.26	$200,000.00
806-860 - Impact Fees,Impact Fees	$0.00	$0.00	$0.00	$0.00	$0.00	$0.00
Revenue Totals	$1,253,775.71	$734,965.09	$580,000.00	$580,000.00	$1,283,613.12	$670,000.00
Expenditures						
806-115 - Impact Fees,City Administration	$0.00	$0.00	$299,510.00	$299,510.00	$0.00	$0.00
806-144 - Impact Fees,Parks	$461,885.27	$439,208.29	$706,200.00	$706,200.00	$501,721.41	$200,000.00
806-181 - Impact Fees,Police Department	$89,259.64	$313,445.50	$240,710.00	$345,710.00	$5,937.68	$41,000.00
806-182 - Impact Fees,Fire Department	$86,051.09	$6,197.16	$400,000.00	$400,000.00	$400,000.00	$0.00

Annual Budget by Organization Report

Summary

	2024 Actual Amount	2025 Actual Amount	2026 Adopted Budget	2026 Amended Budget	2026 Actual Amount	2027 Proposed Continuation Budget
806-860 - Impact Fees,Impact Fees	$0.00	$0.00	$0.00	$0.00	$0.00	$0.00
Revenue Totals:	$1,253,775.71	$734,965.09	$580,000.00	$580,000.00	$1,283,613.12	$670,000.00
Expenditure Totals	$637,196.00	$758,850.95	$1,646,420.00	$1,751,420.00	$907,659.09	$241,000.00
Fund Total: Impact Fees	$616,579.71	($23,885.86)	($1,066,420.00)	($1,171,420.00)	$375,954.03	$429,000.00
Fund: 808 Assessment Districts						
Revenue						
808-880 - Assessment Districts,Assessment Districts	$796,438.61	$990,304.97	$1,121,070.00	$1,121,070.00	$627,209.63	$1,271,660.00
Revenue Totals	$796,438.61	$990,304.97	$1,121,070.00	$1,121,070.00	$627,209.63	$1,271,660.00
Expenditures						
808-880 - Assessment Districts,Assessment Districts	$777,166.04	$971,009.64	$1,121,070.00	$1,121,070.00	$615,850.04	$1,271,660.00
Revenue Totals:	$796,438.61	$990,304.97	$1,121,070.00	$1,121,070.00	$627,209.63	$1,271,660.00
Expenditure Totals	$777,166.04	$971,009.64	$1,121,070.00	$1,121,070.00	$615,850.04	$1,271,660.00
Fund Total: Assessment Districts	$19,272.57	$19,295.33	$0.00	$0.00	$11,359.59	$0.00
Revenue Grand Totals:	$98,047,511.46	$110,251,487.14	$139,105,400.00	$139,105,400.00	$87,190,386.59	$168,002,620.00
Expenditure Grand Totals:	$83,848,546.03	$94,844,013.54	$147,313,310.00	$147,313,310.00	$83,749,646.67	$159,814,610.00
Net Grand Totals:	$14,198,965.43	$15,407,473.60	($8,207,910.00)	($8,207,910.00)	$3,440,739.92	$8,188,010.00

AGENDA ITEM REVIEW FORM

Regular City Council Meeting **7. G.**

Meeting Date: 06/10/2026

Department Head: Jose A. Guzman, Director of Development Services, Development Services

Submitted By: Jose A. Guzman, Director of Development Services, Development Services

Action Requested: Motion
Resolution

ITEM:

Discussion and possible action on any and all matters regarding Resolution No. 2401. A Resolution of the Mayor and City Council of the City of San Luis, Arizona, declaring the following technical code documents public records, including the various tables, appendices and amendments thereto: The 2024 International Building Code; the 2024 International Residential Code; the 2018 International Mechanical Code; the 2018 International Plumbing Code; the 2024 International Property Maintenance Code; the 2020 National Electrical Code; and the 2018 International Fuel Gas Code; which publications shall remain on file with the City Clerk. **(Joaquin Campa, Building Official)**

SUMMARY:

Under A.R.S. § 9-812 and § 39-204, ordinances passed by the City Council must be published in the newspaper. To avoid publishing all the Codes and Amendments to the Codes, A.R.S. § 9-802 allows adoption by reference to three (3) copies of public records in existence and filed with the City Clerk. This Resolution declares the Codes and the Amendments to be public records so that they may be referenced in an ordinance in order to adopt them without publishing the volumes of codebooks in the newspaper and the extraordinary cost that would incur.

RECOMMENDATION / SUGGESTED MOTION:

I MOVE TO APPROVE AND ADOPT RESOLUTION NO. 2401

Fiscal Impact

IS THERE FISCAL IMPACT ASSOCIATED WITH THIS ITEM:	N/A
CITY/STATE/FEDERAL FUNDS:	N/A
TOTAL:	N/A
BUDGETED AMOUNT:	N/A
AVAILABLE AMOUNT TO TRANSFER:	N/A
ACCT NAME & GL#/REMAINING BALANCE BEFORE PURCHASE:	N/A

FISCAL IMPACT STATEMENT (IF THIS IS A BUDGET TRANSFER, YOU MUST ATTACH THE BUDGET ADJUSTMENT FORM):

N/A

Attachments

OFFICE OF THE
MAYOR
CITY OF SAN LUIS

Resolution

No. 2401

A RESOLUTION OF THE MAYOR AND COUNCIL OF THE CITY OF SAN LUIS, ARIZONA, DECLARING THE FOLLOWING TECHNICAL CODE DOCUMENTS PUBLIC RECORDS, INCLUDING THE VARIOUS TABLES, APPENDICES AND AMENDMENTS THERETO: THE 2024 INTERNATIONAL BUILDING CODE; THE 2024 INTERNATIONAL RESIDENTIAL CODE; THE 2018 INTERNATIONAL MECHANICAL CODE; THE 2018 INTERNATIONAL PLUMBING CODE; THE 2024 INTERNATIONAL PROPERTY MAINTENANCE CODE; THE 2020 NATIONAL ELECTRICAL CODE; AND THE 2018 INTERNATIONAL FUEL GAS CODE; WHICH PUBLICATIONS SHALL REMAIN ON FILE WITH THE CITY CLERK.

BE IT RESOLVED by the Mayor and City Council of the City of San Luis, Arizona as follows:

Section 1: Technical Codes Adopted as Public Records.

The following entitled technical code publications, three copies of which are to remain on file in the office of the City Clerk, are hereby declared to be a public record and said copies are to remain on file with the City Clerk:

1) International Building Code, 2024 Edition.
2) International Residential Code, 2024 Edition.
3) International Mechanical Code, 2018 Edition.
4) International Plumbing Code, 2018 Edition.
5) International Property Maintenance Code, 2024 Edition.
6) International Electrical Code, 2020 Edition.
7) International Fuel Gas Code, 2018 Edition.

Section 2: Amendments Adopted as Public Records.

The following entitled amendments, three copies of which are to remain on file in the office of the City Clerk, are hereby declared to be a public record and said copies are to remain on file with the City Clerk:

1) City of San Luis Amendments to 2024 International Building Code.
2) City of San Luis Amendments to 2024 International Residential Code.
3) City of San Luis Amendments to 2018 International Mechanical Code.

4) City of San Luis Amendments to 2018 International Plumbing Code.
5) City of San Luis Amendments to 2024 International Property Maintenance Code.
6) City of San Luis Amendments to 2020 International Electrical Code.
7) City of San Luis Amendments to 2018 International Fuel Gas Code.

Section 3: If a conflict arises between the provisions of this resolution and any other ordinance, resolution, regulation, or policy of the City, the conflicting provisions are amended, superseded, and replaced, and this resolution shall govern.

Section 4: If any section, subsection, sentence, clause, phrase, or a portion of this resolution is held to be invalid or unconstitutional by the final decision of any court of competent jurisdiction, such decision shall not affect the validity of the remaining portion of this resolution.

PASSED, ADOPTED, and APPROVED by the Mayor and City Council of the City of San Luis, Yuma County, Arizona, this 10th day of June, 2026.

_____
Nieves Riedel, Mayor

ATTEST:

_____
Sonia Cornelio, City Clerk

APPROVED AS TO FORM:

_____
Joe Estes, Interim City Attorney

CITY OF SAN LUIS
ADMENDMENTS TO 2024
INTERNATIONAL BUILDING CODE

Section [A] 101.1 Title. These regulations shall be known as the Building Code of the City of San Luis, hereinafter referred to as 'this code.'

(B) **Section [A] 103.1 Creation of enforcement agency.** The Development Services Department, Building Safety Division, is hereby created and the official in charge thereof shall be known as the building official. The function of the agency shall be the implementation, administration and enforcement of the provisions of this code.

Section [A] 104.10.1 Flood hazard areas. Delete section in its entirety in favor of adopted City floodplain ordinances.

Section [A] 105.2 Work exempt from permit. Add the following additional item under the heading, "**Building:"**

14. Window replacements of like size where framing is not altered and any required emergency egress dimensions are not diminished from existing, in Group R3 one-and two-family dwellings and installed by either a licensed contractor or owner-occupant of the residence.

Section [A] 105.3.2 Time limitation of application. An application for a permit for any proposed work shall be deemed to have been abandoned 180 days after the date of filing, unless such application has been pursued in good faith or a permit has been issued; except that the building official is authorized to grant one or more extensions of time for additional periods not exceeding 180 days each. The extension shall be requested in writing and justifiable cause shall be demonstrated.

105.8 Construction Debris. Construction sites shall be kept reasonably clean of construction debris during the course of construction. Construction debris shall be removed or retained on the lot and not be at risk to be displaced from the lot by wind. Debris shall not be allowed to transfer to adjacent lots or City rights-of-way.

If the Building Official determines that the construction site is not in compliance with this section or the debris presents a safety hazard for inspection personnel, inspections shall not be performed until the construction site is cleaned.

Section [A] 107.2.2 Fire protection system shop drawings. Plan submittal documents shall include either a statement of the design criteria for the fire protection system(s) to also include a current fire flow test within the past 12 months, or the complete design, plans, calculations and data for the fire protection system(s). If only the statement of design criteria and fire flow test is initially submitted, the complete design, plans, calculations and data for the fire protection system(s) shall be submitted to indicate conformance to this code and the construction documents and shall be approved in writing by the Fire Department prior to the start of system installation. In addition, where applicable, shop drawings, calculations and data shall be submitted and shall contain all information as required by the referenced installation standards in Chapter 9.

Section [A] 107.2.6.1 Design flood elevations. Delete section in its entirety in favor of adopted City floodplain ordinances.

Section [A] 109.2 Schedule of permit fees. As per City of San Luis Resolution No. 2306

TABLE 1-A: BUILDING PERMIT FEES

Section [A] 109.4 Work commencing before permit issuance. Add to end of section, "An investigation fee, in addition to the permit fee, shall be collected whether or not a permit is then or subsequently issued. The investigation fee shall be determined by the building official, based on the circumstances, nature, and severity of the infraction. The minimum investigation fee shall be $100.00 and the maximum shall be an amount up to the same as the fee set forth in City of San Luis Resolution No. 2306"

Section [A] 109.6 Refunds. The building official shall authorize the refunding of fees as follows:

1. The full amount of any fee paid hereunder that was erroneously paid or collected.
2. Not more than 80 percent of the permit fee paid when no work has been done under a permit issued in accordance with this code.
3. Not more than 80 percent of the plan review fee paid when an application for a permit for which a plan review fee has been paid is withdrawn or canceled before any plan review effort has been expended.

The building official shall not authorize the refunding of any fee paid except upon written application filed by the original permittee not later than 180 days after the date of fee payment.

Section [A] 110.3.6 Lath and gypsum panel product inspection. Delete exception to section.

Section [A] 113.3 Qualifications. Delete section in its entirety.

Section [A] 114.4 Violation penalties. Any person who violates a provision of this code or fails to comply with any of the requirements thereof or who erects, constructs, alters or repairs a building or structure in violation of *the approved construction documents* or directive of the building official, or of a permit or certificate issued under the provisions of this code, shall be subject to the penalty and fine described in resolution 2306 of the City of San Luis

(R) **Section [A] 115.4 Failure to comply.** Any person who shall continue any work after having been served with a stop work order, except such work as that person is directed to perform to remove a violation or unsafe condition, shall be subject to the penalty and fine described in Resolution 2306 of the City of San Luis.

Section [F] 903.2 Where required. Add to end of section, “Requirements in Sections [F] 903.2.1 through [F] 903.2.10 are superseded by the current City of San Luis adopted fire code.”

Section 1102.1 Design. Amend to read, “Buildings and facilities shall be designed and constructed to be *accessible* in accordance with Arizona Revised Statutes, Title 41, Chapter 9, Article 8, Public Accommodations and Services, The Arizonans with Disabilities Act, R10-3-401 through R10-3-404, which includes − 28 CFR 35 and 28 CFR 36 and Americans with Disabilities Act Accessibility Guidelines for Buildings and Facilities (ADAAG), and this code and ICC A117.1.”

Section 1110.10 Elevators. Add to end of section, “Passenger elevators shall be utilized as part of an accessible route in new construction to connect three or more stories (or levels), other than structures with four or more dwelling units.”

> Create new subsection, “**1110.10.1. Lula Elevators.** Lula (Limited-Use/Limited Application) elevators are permitted to be a part of a required accessible route in new construction to connect up to two stories (or levels) in buildings other than offices of health care providers, government buildings and multiple tenant facilities containing five or more tenant spaces used for the sales or rental of goods and where at least one such tenant space is located on a floor level above or below the accessible levels.”

SECTION 1612 FLOOD LOADS. Delete section in its entirety in favor of adopted City floodplain ordinances.

Section 1705.6 Soils. Exception: Where Section 1803 does not require reporting of materials and procedures for fill placement, the special inspector shall verify that the in-place dry density of the compacted fill is not less than 90 percent of the maximum dry density at optimum moisture content determined in accordance with ASTM D 1557, or not less than 95 percent of the maximum dry density at optimum moisture content determined in accordance with ASTM D 698 where approved by the building official.

Section 1804.6 Compacted fill material. Exception: Compacted fill material 12 inches (305 mm) in depth or less need not comply with an approved report, provided that the in-place dry density is not less than 90 percent of the maximum dry density at optimum moisture content determined in accordance with ASTM D 1557, or not less than 95 percent of the maximum dry density at optimum moisture content determined in accordance with ASTM D 698 where approved by the building official. The compaction shall be verified by special inspection in accordance with Section 1705.6.

Section 1807.2.5.1 Where required. Add to end of section. “Guards may be required at other fall hazard conditions were deemed necessary by the Building Official.”

Section 2304.10.6.1 Fasteners and connectors for preservative-treated wood. Add second exception to section and renumber accordingly:

2. Fasteners for preservative-treated wood sill plates to studs in areas not normally subjected to high moisture.

Section 2512.1.2 Weep screeds. Amend second sentence to read, “The weep screed shall be placed not less than 4 inches (102 mm) above the earth or $^{3}/_{4}$ (19 mm) above paved areas and be of a type that will allow trapped water to drain to the exterior of the building.”

Section 2902.6 Small Occupancies. Add to end of section, “In other than Assembly uses and Educational facilities, drinking fountains are not required for an occupant load of 25 or fewer.”

Section 3302.1 Site safety plan. Amend first sentence to read, “When required by the Fire Code Official or the Building Official, the owner or owner's authorized agent shall be responsible for the development, implementation and maintenance of an approved, written site safety plan establishing a fire prevention program at the project site applicable throughout all phases of the construction, repair, alteration or demolition work.”

3304.2 Dust Control. Prior to construction, a plan shall be submitted to the building official outlining the steps that will be taken throughout construction to minimize and control dust associated with the project

CITY OF SAN LUIS ADMENDMENTS TO 2024 INTERNATIONAL RESIDENTIAL CODE

Section R101.1 Title. These provisions shall be known as the *Residential Code for One- and Two-family Dwellings* of the City of San Luis, and shall be cited as such and will be referred to herein as 'this code.'

Section R101.2 Scope. Add to end of **Exception:** "Subject to preemption by Arizona Revised Statutes, Title 9, Chapter 7, Article 1, Section 807, Mandated Sprinklers in Certain Residences Prohibited."

Section R103.1 Creation of agency. Amend first sentence to read, "Development Services Department, Building Safety Division is hereby created and the official in charge thereof shall be known as the *building official*."

Section R104.2.3.1 Flood hazard areas. Delete section in its entirety in favor of adopted City floodplain ordinances.

Section R105.1 Required. Add to end of section, "In addition, Park Models, as defined in Chapter 2 of this Code, shall require a building permit for placement. The required placement permit shall be obtained through the State of Arizona, Arizona Department of Housing. Installation of Park Models shall comply with the minimum installation standards as established and enforced by the Arizona Department of Housing. Proof of compliance with these requirements shall be provided to the City of San Luis, Building Safety Division prior to final approval."

Section R105.2 Work exempt from permit. Add new items #11 and #12, under "**Building**":

11. Window replacements of like size where framing is not altered and any required emergency egress dimensions are not diminished from existing.

12. Replacement of an existing electric water heater in the same location.

Items #11 and #12 apply only to work performed by a licensed contractor or the owner/occupant of the premises.

Section R105.10 Toilet facilities on construction sites. Toilet facilities shall be provided for construction workers and such facilities shall be maintained in a sanitary condition. Construction worker toilets of the non-sewer type shall conform to ANSI Z4.3.

Toilet facilities shall be required at a ratio of at least one toilet for a maximum of 15 lots under construction.

Section R105.11 Construction Debris. Add to end of section, construction sites shall be kept reasonably clean of construction debris during the course of construction. Construction debris shall be removed or retained on the lot and not be at risk to be displaced from the lot by wind. Debris shall not be allowed to transfer to adjacent lots or City Rights of Way.

If the *Building Official* determines that the construction site is not in compliance with this section or the debris presents a safety hazard for inspection personnel, inspections shall not be performed until the construction site is cleaned.

Section R106.1.4 Information for construction in flood hazard areas. Delete item 4 in its entirety.

Section R106.4 Amended Construction documents. Add to end of section, "Changes may be made without resubmittal that are not affecting code-related items, or when otherwise approved by the *building official*."

Section R108.2 Schedule of permit fees. Amend by adding City of San Luis Resolution 2306.

Section R108.2.1 Plan review fees. When submittal documents are required by Section R106.1, a plan review fee shall be paid at the time of submitting the submittal documents for plan review. Site plan review fee shall be 65 percent of the building permit fee as shown in City of San Luis Resolution 2306.

The plan review fees specified in this section are separate fees from the permit fees specified in Section R108.2 and are in addition to the permit fees.

When submittal documents are incomplete or changed so as to require additional plan review, an additional plan review fee shall be charged at the rate shown in City of San Luis Resolution 2306.

Section R108.6 Work commencing before permit issuance. Add to end of section, "An investigation fee, in addition to the permit fee, shall be collected whether or not a permit is then or subsequently issued. The investigation fee shall be determined by the *building official*, based on the circumstances, nature, and severity of the infraction. The minimum investigation fee shall be $100.00 and the maximum shall be an amount up to the same as the fee set forth in City of San Luis Resolution 2306".

Section R109.4 Approval required. Add to end of section, "Inspection comments shall include code section references, when requested."

Section R110.2 Certificate issued. Amend to read, "After the *building official* inspects the building or structure and does not find violations of the provisions of this code or other laws that are enforced by the *jurisdiction*, the *building official* may issue a certificate of occupancy upon request, containing the following:

1. The *permit* number.
2. The address of the structure.
3. The name of the *owner* or the *owner's* authorized agent.
4. A description of that portion of the structure for which the certificate is issued.
5. A statement that the described portion of the structure has been inspected for compliance with the requirements of this code.
6. The edition of the code under which the *permit* was issued.

7. Any special stipulations and conditions of the *building permit*."

Section R113.4 Violation penalties. Any person who violates a provision of this code or fails to comply with any of the requirements thereof or who erects, constructs, alters or repairs a building or structure in violation of the approved construction documents or directive of the building official, or of a permit or certificate issued under the provisions of this code, shall be subject to the penalty and fine described in this ordinance.

Section R114.2 Failure to comply. Any person who shall continue any work in or about the structure after having been served with a stop work order, except such work as that person is directed to perform to remove a violation or unsafe condition, shall be subject to the penalty and fine described in this ordinance.

Section R202 Definitions. Park Model. Any factory assembled portable unit, to which is affixed on Arizona recreational vehicle seal, mounted on a chassis and wheels, not more than 12 feet in width and no greater than 400 square feet nor less than 320 square feet in total area, and permanently connected to utilities that are necessary for the operation of the installed park model with no holding tank.

TABLE R301.2 CLIMATIC AND GEOGRAPHIC DESIGN CRITERIA. Amend table to add values applicable to this jurisdiction

TABLE R301.2
CLIMATIC AND GEOGRAPHIC DESIGN CRITERIA

GROUND SNOW LOAD[o]	WIND DESIGN				SEISMIC DESIGN CATEGORY[f]	SUBJECT TO DAMAGE FROM			ICE BARRIER UNDER-LAYMENT REQUIRED[h]	FLOOD HAZARDS[g]	AIR FREEZING INDEX[i]	MEAN ANNUAL TEMP[j]
	Speed[d] (mph)	Topographic effects[k]	Special Wind Region[l]	Windborne Debris Zone[m]		Weathering[a]	Frost line depth[b]	Termite[c]				
0	99	No	No	No	D_o (in City of San Luis)	Negligible	12”	Negligible	No	1980, 1987, 2004,2006	0	73.9

Manual J Design Criteria[n]						
Elevation	**Altitude correction factor[e]**	**Coincident wet Bulb**	**Indoor winter design relative humidity**	**Indoor winter design dry-bulb temperature**	**Outdoor winter design dry-bulb temperature**	**Heating temperature difference**
207	.9925	73	50%	70	45	25
Latitude	**Daily Range**	**Summer Design Gains**	**Indoor summer design relative humidity**	**Indoor Summer design dry-bulb temperature**	**Outdoor summer design dry-bulb temperature**	**Cooling temperature difference**
33	H	-8	50%	75	109	34

TABLE R301.2 CLIMATIC AND GEOGRAPHIC DESIGN CRITERIA. Add to end of footnote f, “All locations in City of San Luis shall be classified as Seismic Design Category D0.”

Section R301.2.2.6 Irregular buildings. Add exception to Item 6.

Perpendicular shear wall and wall bracing.

> “**Exception:** Angled walls, per provisions of Section R602.10.1.4.”

Section R301.2.2.10.1 Seismic restraint resistance. Add exception to item 1.

> “**Exception:** Tank type water heaters shall be anchored or strapped in the upper one-third and in the lower one-third of the appliance to resist a force equal to one-third of the operating weight of the water heater, acting in a horizontal direction, or in accordance with the appliance manufacturer’s recommendations, using approved seismic straps (and excluding use of ‘plumbers tape’).”

Section R302.3.1 Dwelling unit separation. Add to end of section, “If built on a property line, the separation wall shall be as required for Townhouses, per Section R302.2.”

Section R304.1 Location required. Delete the exception to Item 8 in this section.

Section R304.3.1 Fasteners for preservative-treated wood. Add fourth exception to section:

1. “Fasteners for preservative-treated wood in areas not normally subjected to high moisture.”

Section R305.1 Subterranean termite control methods. Add to end of section, “Method 3 or 4 shall be incorporated per Section R304.1, regardless of other methods or combination of methods utilized.”

Section R306 Flood-resistant construction. Delete section in its entirety in favor of adopted City floodplain ordinances.

Section R309.2 One- and two-family dwellings automatic fire sprinkler systems. Delete section in its entirety. (Preemption by ARS § 9-807).

Section R309.2.1 Design and installation. Clarification: This section is to remain.

Section R312.1 Minimum area. Add to end of section, “Every *dwelling unit* shall have at least one habitable room that shall have not less than 120 square feet (11 m2) of gross floor area.”

Create new Section, **"R312.4 Access from bedrooms.** *Bedrooms* shall not constitute the only means of access to other *bedrooms* or *habitable spaces* and shall not serve as the only means of egress from other *habitable spaces*.

Exception: Units that contain fewer than *two bedrooms*."

Section R319.5. Add to end of section, "Where wall finishes are replaced/altered (other than existing masonry openings), replacement windows shall comply as for new construction."

Section R325.3 Mechanical Ventilation. Add to end of section, "For other than whole house fans and kitchen hoods, local exhaust systems including, but not limited to bathrooms, water closet compartments, laundry rooms, etc., shall be provided with timer switches or automatic shutoff controls."

Section R401.2 Requirements. Add to end of section, "Engineered fill building pads shall be placed in 12-inch lifts, compacted to not less than 95% Maximum Density, per ASTM D698 or D1557. The building pads shall extend a minimum of 3-feet beyond the footprint of the building at an elevation level not less than 10-inches below the finished floor.

Section R401.2 Requirements. Add exception to section:

"**Exception:** Fills depths 12-inches or less may not require testin subject to determination by the *building official*."

Section R403.1.2 Continuous footing in Seismic Design Categories D0, D1 and D2. Add to end of section, "Required interior *braced wall* panels at one-story and two-story buildings located in Seismic Design Categories D0, D1 and D2 shall be supported by continuous solid or fully grouted masonry or concrete footings in accordance with Section R403.1.3.4 at intervals not exceeding 60 feet (18288 mm) in both directions."

Section R403.1.3.4 Interior bearing and braced wall panel footings in Seismic Design Categories D0, D1 and D2. In Seismic Design Categories D0, D1 and D2, interior footings supporting bearing walls or *braced wall panels* with a foundation, and cast monolithically with a slab on *grade*, shall extend to a depth not less than 12 inches (305 mm) below the top of the slab.

Section R403.1.4 Minimum depth. Amend first sentence to read, "All exterior footings shall be placed at least 12 inches (305 mm) below the undisturbed ground surface, or 12 inches (305 mm) into engineered pad."

Section R403.1.6.1 Foundation anchorage in Seismic Design Categories C, D0, D1 and D2. Add item 7 to section:

"7. Interior *braced wall panels* when not supported by a continuous foundation

shall be attached to the concrete slab on ground using ½ inch (12.7 mm) diameter anchor or expansion bolts spaced at not more than 6 feet (1829 mm) on center, or an equivalent method such as approved pneumatic anchor pins as per manufacturer requirements. Cut nails or adhesives shall not be permitted."

Section R408.7 Flood Resistance. Delete section in its entirety in favor of adopted City floodplain ordinances.

Section R506.1 General. Add to end of section, "Control joints in unreinforced concrete slab-on-ground floors shall be provided at maximum 12 feet (3658 mm) on center in both directions."

Section R506.3.3 Vapor retarder. Amend section title to read, **"Section R506.3.3 Vapor retarder (Optional)."**

Section R602.10.1.3 Spacing of braced wall lines. Add exception to section:

"Exception: As an exception to *braced wall line* spacing of Table R602.10.1.3, in detached one- and two-story *dwellings*, for seismic bracing, spacing between *braced wall lines* may be up to 30 feet (9144 mm) x 45 feet (13716 mm) for one single room and one attached garage, each not exceeding 1,350 square feet (125.42 m2) per *dwelling unit*. When this exception is taken all the following shall apply:

1.1 Wall bracing at *braced wall lines* surrounding the single room and one attached garage shall be Method WSP of Section R602.10.4.
1.2 *Braced wall panel* locations shall be as per Sections R602.10.2.2 and R602.10.2.2.1, and length of bracing provided as per Sections R602.10.3 and R602.10.5.
1.3 The entire length of *braced wall lines* surrounding the single room and garage shall be continuously sheathed with wood structural panel sheathing (WSP).
1.4 *Braced wall panel* locations at the single room and garage shall have a maximum 3 1/2:1 height-width ratio, except for methods ABW and PFH of Section R602.10.4.
1.5 *Braced wall lines* surrounding the single room and garage shall be supported by continuous foundations around the entire *braced wall lines*.
1.6 Spacing of all other interior braced wall lines shall not exceed 25 feet."

Section R602.10.2.2.1 Location of braced wall panels in Seismic Design Categories D0, D1 and D2. Add exception 3 and 4 to section:

"3. Interior *braced wall* panels shall begin within 10 feet (3810 mm) from each end of a braced wall line as determined in Section R602.10.1.1.

4. For *braced wall* panel construction Method WSP of Section R602.10.4, the braced wall panel shall be permitted to begin no more than 12.5 feet (3810 mm) from each end of the *braced wall* line, where a designed collector is

provided. See sketches SK1, SK2, and SK3 for designed collectors and applicable conditions."

Section R602.10.4.4 Panel joints. Delete exception 4 to this section.

Section R602.10.7 Ends of braced wall lines with continuous sheathing. Add exception to section:

"**Exception:** The first *braced wall panel* shall be permitted to begin 12.5 feet (3810 mm) from each end of the *braced wall line* in Seismic Design Category D0, where a designed collector is provided. See sketches SK1, SK2, and SK3 for designed collectors and applicable conditions."

Section R602.10.8 Braced wall panel connections. Add to end of section, "This section also applies for connections of interior *braced wall panels* to roof trusses and rafters."

TABLE R702.3.5 MINIMUM THICKNESS AND APPLICATION OF GYPSUM BOARD AND GYPSUM PANEL PRODUCTS. Amend last sentence of footnote "d" of table to read, "Where applying a water-based texture material, the minimum gypsum board thickness shall be increased from 3/8 inch to ½ inch for 16-inch on center framing ceiling."

Section N1101.14 (R401.3) Certificate (Mandatory). Amend section title to read, **"Section N1101.14 (401.3) Certificate (Optional)."**

Section N1102.4 (R402.4) Fenestration. Add exception to section:

"**Exception:** Standard insulated garage doors shall be permitted at conditioned garages in new construction and are not subject to the fenestration air leakage requirements of Section N1102.4.3. For use of this exception the garage conditioning shall be a dedicated mechanical system. Register/diffuser openings at the garage ceiling shall include ceiling radiation dampers or ducts shall be constructed of minimum No. 26 gage (0.48 mm) sheet steel."

Section N1102.5 (R402.5) Air Leakage. Add to end of section, "Building envelope air tightness and insulation installation shall be demonstrated to comply with one of the following options given by Section N1102.5.1.2 or N1102.5.1.4."

Section N1102.5.1.2 (R402.5.1.2) Air leakage testing. Amend section title to read, "N1102.5.1.2 (R402.5.1.2) Air leakage testing optional."

Section N1102.5.1.4 Visual inspection option. The components listed in Table N1102.45.1.1 (R402.5.1.1), applicable to the method of construction, are field verified. Where required by the *building official*, an *approved* party independent from the installer of the insulation, shall inspect the *air barrier* and insulation.

Table N1102.5.1.1 (R402.5.1.1) AIR BARRIER AND INSULATION INSTALLATION. Amend as follows:

a. “COMPONENT, ‘Showers, tubs and fireplaces adjacent to the building thermal envelope.’ Optional.

b. COMPONENT, ‘Electrical, communications and other equipment boxes, housings and enclosures.’ Optional.”

Section N1103.2 (R403.2) Hot water boiler temperature reset. Amend section title to read, “Section N1103.2 (R403.2) Hot water boiler temperature reset (Optional).”

Section N1103.4.1 (R403.4.1) Protection of piping insulation. Amend second sentence to read, “The protection shall provide shielding from solar radiation that can cause degradation of the material.”

Section N1103.5 (R403.5) Service hot water systems. Amend section title to read, “**Service hot water systems (Optional).**”

Section N1103.6 (R403.6) Mechanical Ventilation. Amend to section title to read, “**Section N1103.6 (R403.6) Mechanical ventilation (Optional).**”

Section N1103.6.4 (R403.6.5) Intermittent exhaust control for bathrooms and toilet rooms. Amend section title and first sentence to read,

Section N1103.6.4 (R403.6.5) Intermittent exhaust control for bathrooms, toilet rooms and laundry rooms. “Where an exhaust system serving a bathroom or toilet room or laundry room is designed for intermittent operation, the exhaust system controls shall include one or more of the following:”

Section N1103.6.4 (R403.6.5) Intermittent exhaust control for bathrooms, toilet rooms and laundry rooms. Delete Items 3 and 4 from this section.

Section N1103. 10.3 (R403.10.3) Covers. Amend section title to read, “**Section N1103.10.3 (R403.10.3) Covers (Optional).**”

Section N1103.12 (R403.12) Residential pools and permanent residential spas. Delete section in its entirety.

Section N1104 (R404) Electrical power, lighting and renewable energy systems. Amend section title to read, “**Section N1104 (R404) electrical power, lighting and renewable energy systems (optional)**”

Section N1108 (R408) Additional efficiency requirements. Amend section title to read, “**Additional efficiency requirements (Optional).**”

Section N1109.6 (R501.6) Change in space conditioning. Add to end of section, “Permitted existing garages and accessory structures (excluding patio enclosures) shall

be permitted to be conditioned, by use of approved ductless cooling/heating systems (maximum 2 tons total capacity), where such spaces are not being converted to habitable or livable spaces. Existing enclosed walls that are uninsulated shall be accepted. If accessible, the existing attic space shall be insulated as required for new construction."

Section N1110.2.5 Additional efficiency credit requirements for additions. Amend section title to read, "**Section N1110.2.5 Additional efficiency credit requirements for additions (Optional).**"

Section N1111.1.2.3 (R503.1.2.3) Duct system leakage. Add to end of section, "This section applies to new duct sections only."

Section N1111.1.5 Additional efficiency credit requirements for substantial improvements. Amend section title to read, "**Section N1111.1.5 Additional efficiency credit requirements for substantial improvements (Optional)."**

Section M1602.2 Return Air Openings. Amend Exception 8 to read:

> "8. For other than dedicated HVAC systems, return air shall not be taken from indoor swimming pool enclosures and associated deck areas."

Section G2406.2 (303.3) Prohibited locations. Delete items 3 and 4 in their entirety.

Section G2407.5 (304.5) Indoor combustion air. Add to beginning of section, "Indoor *combustion air* shall not be used in new construction within the building envelope. Garages of minimum 400 square feet in area may use combination of *infiltration* and partial exterior *combustion air* for one standard water heater fuel gas *appliance* up to 50,000 *Btu/h* total input capacity."

Section G2407.7 (304.7) Combination indoor and outdoor combustion air. Add to beginning of section, "Combination indoor and outdoor combustion air shall not be used in new construction within the building envelope. Garages of minimum 400 square feet in area may use combination of *infiltration* and partial exterior *combustion* air for one standard water heater fuel gas *appliance* up to 50,000 *Btu/h* total input capacity."

Section G2413.2 (402.2) Maximum gas demand. Add to end of section, "Where an input rating is not indicated, the gas supplier, *appliance* manufacturer or a qualified agency shall be contacted, or the rating from Table G2413.2 may be used for estimating the volumetric flow of gas to be supplied."

TABLE G2413.2 (402.2)
APPROXIMATE GAS INPUT FOR TYPICAL APPLIANCES

APPLIANCE	INPUT BTU/H (Approx.)
Space Heating Units	
Hydronic boiler	
Single family	100,000
Multifamily, per unit	60,000
Warm-air furnace	
Single family	100,000
Multifamily, per unit	60,000
Space and Water Heating Units	
Hydronic boiler	
Single family	120,000
Multifamily, per unit	75,000
Water Heating Appliances	
Water heater, automatic instantaneous	
Capacity at 2 gal./minute	142,800
Capacity at 4 gal./minute	285,000
Capacity at 6 gal./minute	428,400
Water heater, automatic storage, 30- to 40-gal. tank	35,000 50,000
Water heater, automatic storage, 50-gal. tank	35,000
Water heater, domestic, circulating or side-arm	
Cooking Appliances	
Built-in oven or broiler unit, domestic	25,000
Built-in top unit, domestic	40,000
Range, free-standing, domestic	65,000
Other Appliances	
Barbecue	40,000
Clothes dryer, Type 1 (domestic)	35,000
Gas fireplace, direct-vent	40,000
Gas light	2,500
Gas log	80,000
Refrigerator	3,000

For SL: 1 British thermal unit per hour = 0.293 W, 1 gallon = 3.785 L., 1 gallon per minute = 3.785 L/m.

Section G2414.4.3 (403.4.3) Copper or copper-alloy tubing. Add to end of section, "Copper or copper-alloy tubing shall not be used in natural gas piping systems, due to hydrogen sulfide content which cannot be guaranteed to be delivered from the serving utility provider to meet the code acceptable levels."

Section G2415.12 (404.12) Minimum burial depth. Underground *piping systems* shall be installed at a minimum depth of 12 inches (305 mm) below grade.

Section G2415.12.1 (404.12.1) Individual outdoor appliances. Delete section in its entirety.

Section G2415.17.1 (404.17.1) Limitations. Amend exception 3 to read:

"3. Plastic pipe shall be permitted under uncovered outdoor patio, walkway and driveway slabs provided that the burial depth complies with Section G2415.12."

TABLE G2427.10.2.4 (503.10.2.4) MINIMUM THICKNESS FOR GALVANIZED STEEL VENT CONNECTORS FOR LOW-HEAT APPLIANCES.

"Thickness	**Gauge**
0.019 inch	28 Ga.
0.023 inch	26 Ga.
0.029 inch	24 Ga.
0.034 inch	22 Ga.
0.056 inch	18 Ga."

Section G2445.4 (621.4) Prohibited Locations. Add to end of section, "*Unvented room heaters* shall not be installed in bedrooms or bathrooms."

Section P2503.5.1 Rough plumbing. In Item 1, revise 10 feet (3048 mm) to 5 feet 524 mm).

Section P2603.5.1 Sewer depth. *Building* sewers that connect to private sewage disposal systems shall be at not less than 12 inches (305 mm) below finished *grade* at the point of septic tank connection. *Building sewers* shall be not less than 12 inches (305 mm) *below grade*.

Section P2801.5.3 Appliance, equipment and insulation in pans. Delete section in its entirety.

Section P2804.6.1 Requirements for discharge pipe. Amend Item #5 to read:

"5. Discharge to the floor of the garage (where the garage floor is sloped and below the floor level of the dwelling), to a waste receptor or to the outdoors."

Section P2902.5.3 Lawn irrigation systems. Rename section/title to read, "**Section P2902.5.3 Landscape irrigation systems.**" Add to beginning of section, "A landscape irrigation system shall be provided for all new dwellings, consisting of a stub-out, electric valve (or valves) and backflow protection."

Section P2904.1 General. Add item #5 to end of section:

"5. The system is integral with the domestic water piping system. See Section P2902.5.4 for protection of separate/independent sprinkler piping systems."

Section P2906.5 Water distribution pipe. Add to end of section, "Use of copper at inaccessible water piping under slabs shall be limited to Type K, with no joints."

Section E3406.3 Minimum size of conductors. Amend first sentence to read, "The minimum size of conductors for feeders and branch circuits shall be 12 AWG copper and 1 AWG aluminum or copper-clad aluminum for current carrying conductors (shall not apply for grounding conductor)."

Section E3601.1 Scope. Add to end of section, "Local utility company installation regulations may exceed/supersede installation requirements of this chapter."

Section E3601.7.3 Metering centers. Add to end of section: "Any Residential Service Panel rated up to 400-amps maximum, with a single meter and maximum 2 disconnects, shall be exempt from requirements of this section. This exemption does not apply to multi-meter service panels."

Section E3604.2.2 Vertical clearance from grade. In item 1, amend 10 feet (3048 mm) to 12 feet 6 inches (3810 mm). In item 2, amend 12 feet (3658 mm) to 12 feet 6 inches (3810 mm).

Section E3607.3.2 Grounded conductor, existing premises. Add exception to section:

"**Exception:** If the Load Center or Panel Board does not have provisions for a Main Disconnect and an approved fastening method, the over current protective device shall have a lock-out device installed."

Section E3702.15 Branch-circuit requirement – summary. Amend 1st sentence to delete **TABLE E3702.15(2)** in its entirety.

TABLE E3702.15(1) [TABLE 210.24(1)] BRANCH-CIRCUIT REQUIREMENTS-SUMMARY. Amend table to delete 14 AWG conductors.

TABLE E3803.1 (TABLE 300.5) – MINIMUM COVER REQUIREMENTS, BURIAL IN INCHES. Amend Column 3 of table to delete Electrical metallic tubing (EMT).

Section E3901.4.2 Island and peninsular countertops and work surfaces. Amend to read:

"Receptacle outlets shall be installed in accordance with the following and Section E3901.4.3:

1. At least one receptacle outlet shall be provided for the first 9 square feet (0.84m2), or fraction thereof, of the countertop or work surface. A receptacle outlet shall be provided for every additional 18 square feet (1.7 m2), or fraction hereof, of the countertop or work surface.

2. At least one receptacle outlet shall be located within 2 feet (600 mm) of the outer end of a peninsular countertop or work surface.

A peninsular countertop shall be measured from the connected perpendicular wall."

Section E3901.4.3 Receptacle outlet location. Add item 4 to section:

4. "Required receptacles shall be located not more than 12 inches (305mm) below the countertop or work surface."

Section E3901.12 HVAC outlet. Amend exception to read:

"**Exception:** A receptacle outlet shall not be required for the servicing of evaporative coolers or rooftop HVAC equipment."

Section E3902 – Ground-fault and arc-fault circuit-interrupter protection. Add exception to section:

"**Exception:** Delete requirement for GFCI protection at all 240-volt (nominal) outlets throughout this section. This exception shall not apply to swimming pool, spa or fountain pump motors."

Section E3902.2 Garage and accessory building receptacles. Add exception to section:

"**Exception:** GFCI protection shall not be required for single receptacle outlets dedicated for a specific use (such as a freezer) and single receptacle outlets for garage door openers."

Create new section, "**Section E3902.11.1 Floor receptacles.** Floor receptacle outlets shall have ground-fault circuit-interrupter protection for personnel."

Section E3902.14 Outdoor outlets. Delete last sentence in exception 3.

Section BB106.1 Air Leakage Testing. (Tiny Homes) Add exception to section:

“**Exception:** The building thermal envelope shall be permitted to comply with the applicable provisions of Chapter 11, as amended.”

CITY OF SAN LUIS
ADMENDMENTS TO 2018 INTERNATIONAL MECHANICAL CODE

Section [A] 101.1 Title. These regulations shall be known as the *Mechanical Code* of the City of San Luis, hereinafter referred to as 'this code.'

> Create a new sub-section, "**Section [A] 101.2.2 Other Codes**. Where a section references the *International Fire Code*, amend to read 'current adopted fire code.' Where a section references the *International Energy Conservation Code,* amend to read 'current adopted energy conservation code.' Where a section references accessibility provisions, it shall be taken to reference Arizona Revised Statutes, Title 41, Chapter 9, Article 8, Public Accommodations and Services, The Arizonans with Disabilities Act, R10-3-401 through R10-3-404, which includes - 28 CFR 35 and 28 CFR 36 and Americans with Disabilities Act Accessibility Guidelines for Buildings and Facilities (ADAAG)."

Section [A] 103.1 General. Amend to read, "Development Services Department, Building Safety Division is hereby created and the executive official in charge thereof shall be known as the 'building official.' Amend all sections of this code that reference the 'code official' by replacing to read the 'building official.'"

Section [A] 106.4.4 Extensions. Delete last two sentences of this section.

Section [A] 106.5.1 Work commencing before permit issuance. Any person who commences work on a mechanical system before obtaining the necessary permits shall be subject to the usual permit fee and an additional investigative fee. An investigative fee, in addition to the permit fee, shall be collected whether or not a permit is then or subsequently issued. The investigative fee shall be determined by the building official, based on the circumstances, nature and severity of the infraction. The minimum investigative fee shall be $100 and the maximum shall be an amount up to the same as the fee set forth in City of San Luis Resolution 2306.

Section [A] 106.5.2 Fee Schedule. Amend by adding "As per City of San Luis Resolution 2306"

Section [A] 106.5.3 Fee Refunds. Add to end of section. "The building official shall authorize the refunding of fees as follows:

1. The full amount of any fee paid hereunder which was erroneously paid or collected.

2. Not more than 80 percent of the permit fee paid when no work has been done under a permit issued in accordance with this code.

3. Not more than 80 percent of the plan review fee paid when an application for a permit for which a plan review fee has been paid is withdrawn or canceled before any plan review effort has been expended.

The building official shall not authorize the refunding of any fee except upon written application filed by the original permittee not later than 180 days after the date of fee payment."

Section [A] 106.6 Emergency repairs. Where equipment replacements and repairs must be performed in an emergency situation, the *permit* application shall be submitted within the next working business day to the building official.

Section [A] 108.4 Violation penalties. Any person who shall violate a provision of this code or shall fail to comply with any of the requirements thereof or who shall erect, install, alter, or repair mechanical work in violation of the *approved construction documents* or directive of the building official, or of a permit or certificate issued under the provision of this code, shall be subject to the penalty and fine described in this Ordinance.

Section [A] 108.5 Stop work orders. Any person who shall continue any work on the system after having been served with a stop work order, except such work as that person is directed to perform to remove a violation or unsafe condition, shall be subject to the penalty and fine described in this Ordinance.

Section [A] 109.2 Membership of board. The membership of the Building Advisory Board as prescribed in CH 15.05 – Section 15.05.010 through 15.05.070 of the San Luis City Code will be the Board of Appeals.

Sections [A] 109.2.1 through [A] 109.7. Delete sections in their entirety.

Section [BS] 301.16 Flood hazard. For structures located in flood hazard areas, *mechanical systems*, *equipment and appliances* shall be located at or above the elevation required in the adopted city floodplain Ordinances for utilities and attendant *equipment*.

> **Exception:** *Mechanical systems, equipment and appliances* are permitted to be below the elevation required by the adopted city floodplain Ordinances for utilities and attendant equipment, provided that they are designed and installed to prevent water from entering or accumulating within the components and to resist hydrostatic and hydrodynamic loads and stresses, including the effects of buoyancy, during the occurrence of flooding up to such elevation.

Section 303.3 Prohibited locations. Amend Exception #2 to read, “Solid fuel-fired appliances, provided that the room is not a confined space and as long as outdoor *combustion air* is provided.”

Section 304.11 Guards. Add exception to section to read, “Where due to roof size or other constraints the building official may approve alternate means to achieve compliance.”

Section 306.5.1 Sloped roofs. Amend first sentence to read, "Where *appliances*, *equipment*, fans or other components that require service are installed on a roof having a slope of greater than 4 units vertical in 12 units horizontal (33-percent slope) or greater and having an edge more than 30 inches (762 mm) above grade at such edge, a level platform shall be provided on each side of the *appliance or equipment* to which *access* is required for service, repair, or maintenance.”

Section 307.2.1 Condensate disposal. Amend first sentence to read, “Condensate from all cooling and evaporators shall be conveyed from the drain pan outlet to an *approved* sanitary sewer connection, or other *approved* method of condensate disposal designed by a registered design professional.”

Add exceptions to section:

“Exceptions:

1. Condensate from cooling coils and evaporators up to and including (4) ton units may drain into an *approved* bottom disposal pit. The approved bottom disposal pit shall consist of a pit excavated in the earth not less than 24 inches (61 mm) in any dimension completely filled with coarse gravel. The drainpipe shall extend into the pit not less than 6 inches (15 mm) below grade and shall be securely anchored in place. The drain shall not be covered with sod or earth until it has been inspected.

2. *Equipment* provided with a factory, or other *approved*, condensate evaporation device”

Section 1101.6 General. Add to end of section, “Wind socks shall be installed on all industrial facilities utilizing ammonia refrigerant

CITY OF SAN LUIS ADMENDMENTS TO 2018 INTERNATIONAL PLUMBING CODE

Section [A] 101.1 Title. These regulations shall be known as the *International Plumbing Code* of the City of San Luis, hereinafter referred to as 'this code.'

Create a new sub-section, "**Section [A] 101.2.1 Other Codes.** Where a section references the *International Fire Code*, amend to read 'current adopted fire code.' Where a section references the *International Energy Conservation Code*, amend to read 'current adopted energy conservation code.' Where a section references accessibility provisions, it shall be taken to reference Arizona Revised Statutes, Title 41, Chapter 9, Article 8, Public Accommodations and Services, The Arizonans with Disabilities Act, R10-3-401 through R10-3-404, which includes - 28 CFR 35 and 28 CFR 36 and Americans with Disabilities Act Accessibility Guidelines for Buildings and Facilities (ADAAG)."

Section [A] 103.1 General. Amend to read, "Development Services Department, Building Safety Division is hereby created and the executive official in charge thereof shall be known as the building official. Amend all sections of this code that reference the 'code official' by replacing to read the *building official.*

Section [A] 106.6.1 Work commencing before permit issuance. Any person who commences work on a plumbing system before obtaining the necessary permits shall be subject to the usual permit fee and an additional investigative fee. An investigative fee, in addition to the permit fee, shall be collected whether or not a permit is then or subsequently issued. The investigative fee shall be determined by the building official, based on the circumstances, nature and severity of the infraction. The minimum investigative fee shall be $100 and the maximum shall be an amount up to the same as the fee set forth in City of San Luis Resolution No, 2306

Section [A] 106.6.2 Fee schedule. As per City of San Luis Resolution 2306.

Section [A] 106.6.3 Fee refunds. Add to end of section "The building official shall authorize the refunding of fees as follows:

1. The full amount of any fee paid hereunder which was erroneously paid or collected.

2. Not more than 80 percent of the permit fee paid when no work has been done under a permit issued in accordance with this code.

3. Not more than 80 percent of the plan review fee paid when an application for a permit for which a plan review fee has been paid is withdrawn or canceled before any plan review effort has been expended.

<u>The building official shall not authorize the refunding of any fee paid except upon written application filed by the original permittee not later than 180 days after the date of fee payment."</u>

Section [A] 106.7 Emergency repairs. Where equipment replacements and repairs must be performed in an emergency situation, the *permit* application shall be submitted within the next working business day to the building official.

Section [A] 108.4 Violation penalties. Any person who shall violate a provision of this code or shall fail to comply with any of the requirements thereof or who shall erect, install, alter or repair plumbing work in violation of the *approved construction documents* or directive of the building official, or of a permit or certificate issued under the provision of this code, shall be subject to the penalty and fine described in City of San Luis Resolution 2306.

Section [A] 108.5 Stop work orders. Upon notice from the building official, work on any plumbing system that is being done contrary to the provisions of this code or in a dangerous or unsafe manner shall immediately cease. Such notice shall be in writing and shall be given to the owner of the property, or to the owner's agent, or to the person doing the work. The notice shall state the conditions under which work is authorized to resume. Where an emergency exists, the building official shall not be required to give a written notice prior to stopping the work. Any person who shall continue any work in or about the structure after having been served with a stop work order, except such work as that person is directed to perform to remove a violation or unsafe condition, shall be subject to the penalty and fine described in City of San Luis Resolution 2306.

Section [A] 109.2 Membership of the board. The membership of the Building Board of Appeals, as prescribed in CH 15.05 – Section 15.05.010 through 15.05.070 of City of San Luis Code.

Sections [A] 109.2.1 through [A] 109.7. Delete sections in their entirety.

Section 201.3 Terms defined in other codes. Where terms are not defined in this code and are defined in the *International Building Code*, current adopted Fire Code, *NEC Electrical Code, International Fuel Gas Code or the International Mechanical Code*, such terms shall have the meanings ascribed to them as in those codes.

Section 305.4.1 Sewer depth. Building sewers that connect to private sewage disposal systems shall be a minimum of 12 inches (305 mm) below finished grade at the point of septic tank connection. Building sewers shall be a minimum of 12 inches (305 mm) below grade.

Section 305.8 Tracer wire. Per ARS §40-360, all buried non-metallic piping shall be identified with a minimum #12 gauge solid copper insulated tracer wire securely attached to pipe or wrapped around the pipe. Attachments shall be provided at maximum 20 foot intervals and at each change in direction.

Section [BS] 309.2 Flood hazard. For structures located in flood hazard areas, systems and equipment shall be installed as required by the flood hazard as per City of San Luis floodplain Ordinances.

Section 314.2.1 Condensate disposal. Amend first sentence to read, “Condensate from all cooling and evaporators shall be conveyed from the drain pan outlet to an *approved* sanitary sewer connection, or other *approved* method of condensate disposal designed by a registered design professional.

Add exceptions to section:

Exceptions:

1. Condensate from cooling coils and evaporators up to and including (4) ton units may drain into an *approved* bottom disposal pit. The approved bottom disposal pit shall consist of a pit excavated in the earth not less than 24 inches (61 mm) in any dimension completely filled with coarse gravel. The drainpipe shall extend into the pit not less than 6 inches (15 mm) below grade and shall be securely anchored in place. The drain shall not be covered with sod or earth until it has been inspected.

2. *Equipment* provided with a factory, or other *approved*, condensate evaporation device.”

Section 410.2 Small Occupancies. Amend to read. “In other than Assembly and Educational Occupancies, drinking fountains shall not be required for an occupant load of 25 or fewer.”

Section 605.4 Water Distribution Pipe. Create a new footnote and exception to TABLE 605.4, “a. Copper and copper alloy piping and tubing are prohibited for installation in or on the ground under buildings. Exception: Copper and copper alloy piping and tubing installed in a continuous sleeve consisting of a minimum Schedule 40 ABS or PVC piping.”

Section 608.1 General. Add to end of section, “Where required by the Authority Having Jurisdiction (AHJ), backflow prevention shall comply with City of San Luis requirements.”

Section 712.3.1 Sump pump. “The sump pump capacity and head shall be appropriate to the anticipated use requirements, and for any ‘*public’* or *‘public utilization’* occupancies, as defined in this code, dual pumps or ejectors shall be provided.

Exception: Dual pumps are not required in small, single-tenant buildings where the use of fixtures can be readily restricted or controlled, as determined by the building official”

Section 903.1 Roof extension. Amend to read, “Open vent pipes that extend through a roof shall be terminated not less than 6 inches (153 mm) above the roof. Where a roof is to be used for assembly or as a promenade, observation deck, sunbathing deck or similar purposes, open vent pipes shall terminate not less than 7 feet (2134 mm) above the roof”

Section 1003.2 Approval. Amend first sentence and add sentence, “The size, type, and location of each interceptor and of each separator shall be designed and installed in accordance with the manufacturer's instructions and the requirements of this section based on the anticipated conditions of use, and when located in the City of San Luis jurisdiction, shall also comply with the policies of the Public Works - Waste Water Division. Wastes that do not require treatment or separation shall not be discharged into any interceptor or separator.”

Section 1003.3.1 Grease interceptors and automatic grease removal devices required. Amend to read, “A grease interceptor or automatic grease removal device shall be required to receive the drainage from fixtures and equipment with grease-laden waste located in Food Service Establishments, such as in restaurants, hotel kitchens, hospitals, school kitchens, bars, factory cafeterias and clubs, and multiple mobile food vendor locations. Fixtures and equipment shall include, but not be limited to three-compartment sinks (all three compartments), pot sinks, prerinse sinks; soup kettles or similar devices; wok stations; floor drains or sinks into which kettles are drained; automatic hood wash units and dishwashers without prerinse sinks. Grease interceptors and automatic grease removal devices shall receive waste only from fixtures and equipment that allow fats, oils or grease to be discharged. If a food preparation sink is required by the establishment, a separate sink for this purpose shall be provided, and shall be connected indirectly and shall be connected to the sanitary sewer. Where lack of space or other constraints prevent the installation or replacement of a grease interceptor, one or more grease interceptors shall be permitted to be installed on or above the floor and upstream of an existing grease interceptor.”

Section 1003.3.3 Additives to Grease Interceptors. Dispensing Systems that dispense interceptor performance additives to grease interceptors shall not be installed. Systems that discharge emulsifiers, chemicals or enzymes to grease interceptors shall be prohibited.

Section 1003.3.5 Hydromechanical grease interceptors, fats, oils and greases disposal systems and automatic grease removal devices. Amend first sentence to read, “Hydromechanical grease interceptors: fats, oils and greases disposal systems and automatic grease removal devices shall conform to ASME A112.14.3, ASME A112.14.4, ASME A112.14.6 CSA B481.3 or PDI G101, and when located in the City of San Luis jurisdiction shall also meet the City of San Luis Standards. All new Food Service Establishments shall be required to install at least a 500-gallon outdoor grease interceptor, unless granted a variance by the City of San Luis Utilities Pretreatment Section.”

Section 1003.3.5.1 Grease interceptor capacity. Grease interceptors shall have the volume indicated in TABLE 1003.3.5.1 for the Drainage Fixture Units (DFU) indicated.

Insert TABLE 1003.3.5.1:

TABLE 1003.3.5.1
GREASE INTERCEPTOR SIZING

Drainage Fixture Unit (DFU) (1)	Interceptor Volume (2)
0-8	500 gallons
9-21 (3)	750 gallons
22-35	1,000 gallons
36-90 (3)	1,250 gallons
91-172	1,500 gallons
173-216	2,000 gallons
217-307 (3)	2,500 gallons
308-342	3,000 gallons (4)

Notes:

1. **The maximum allowable DFU's plumbed to the kitchen drain lines that will be connected to the grease interceptor.**
2. **This size is based on: the DFU's, the pipe size; Useful Tables for flow in half-full pipes (ref: Mohinder Nayyar Piping Handbook, 3rd Edition, 1992).**
3. **Based on 30 minutes retention time (ref.) Metcalf & Eddy, Inc. 3rd Ed. Small and Decentralized Wastewater Management Systems, 1998). Rounded up to nominal interceptor volume.**
4. **No Food Service Establishment will be permitted to install a grease interceptor in excess of 3000 gallons. Applications where sizing calculation dictate the installation of a grease interceptor larger than 3000 gallons multiple interceptors shall be installed, in series, of sufficient size, to meet the requirement of the calculated retention volume.**

Section 1003.3.9 Grease Interceptor Variances. Any establishment wishing to seek a variance from the 500-gallon minimum grease interceptor requirement may submit a Variance for Cause Request to the Utilities Pretreatment Section.

Section 1106.1 General. Amend to read, "The size of vertical conductors and leaders. building *storm drains*, building storm *sewers* and any horizontal branches of such drains or *sewers* shall be based on a minimum hourly rainfall rate of two and one-half (2.5) inches per hour."

Section 1106.2 Size of storm drain piping. Add to end of section, "The minimum size storm drain pipe shall be 3 inch pipe size."

Section 1106.3 Vertical leader sizing. Add to end of section, “The minimum size vertical leader shall be 3 inch pipe size.”

Section 1108.3 Sizing of secondary drains. Add to end of section, “The secondary drain or overflow drain inlet shall be 2” (51 mm) above the primary drain inlet.”

Section 1109 Combined Sanitary and Storm System. Delete section in its entirety.

CITY OF SAN LUIS
ADMENDMENTS TO 2024
INTERNATIONAL PROPERTY
MAINTENANCE CODE

Section [A] 101.1 Title. These regulations shall be known as the International Property Maintenance Code of the City of San Luis, hereinafter referred to as 'this code.'

Section [A] 102.3 Application of other codes. Amend "International Zoning Code" in last sentence to "San Luis City Code Title 18 Zoning."

Section [A] 103.1 General. The Development Services Department, Building Safety Division is hereby created and the executive official in charge thereof shall be known as the building official.

Section [A] 103.1.1. Amend All sections of this code to substitute 'building official' for the term 'code official.'

Section [A] 107.3 Prosecution of violation. Amend First sentence to read, "Any person failing to comply with a notice of violation or order served in accordance with Section 107 shall be deemed guilty of a civil infraction [SLCC 15.10.990 (A)]."

Section [A] 107.4 Violation penalties. Any person who shall violate a provision of this code, or fail to comply therewith, or with any of the requirements thereof, shall be prosecuted within the limits provided by state or local laws and shall be subject to the penalty and fine described in this ordinance. Each day that a violation continues after due notice has been served shall be deemed a separate offense.

Section [A] 106.1 Membership of the board. The membership of the Residential and Commercial Advisory Board, as prescribed in Section 15.05.010 of the San Luis City Code, will be the Board of Appeals for both Residential (one-and two-family dwellings) and Commercial appeals.

Delete the following sections in their entirety:

Section [A] 106.2 Limitations of Authority
Section [A] 106.3 Qualifications
Section [A] 106.4 Administration

Section [A] 108.2 Issuance. Insert the following between the first and second sentences, "In absence of anyone present on site, the order shall be conspicuously posted on the *premises.*"

Section [A] 108.4 Failure to comply. Any person who shall continue any work after having been served with a stop work order, except such work as that person is directed to perform to remove a violation or unsafe condition, shall be subject to the penalty and fine as described in this ordinance.

Section 302.4 Weeds. Amend first sentence to read, "All premises and exterior property shall be maintained free from weeds or plant growth not properly controlled."

Section 303.2 Enclosures. Amend first sentence to read, "All swimming pools, hot tubs and spas, containing water more than 24 inches (610 mm) in depth shall be completely

surrounded by a fence or barrier at least 60 inches (1524 mm) in height above the finished ground level measured on the side of the barrier away from the pool."

Section 304.14 Insect Screens. Delete section in its entirety

TABLE 404.5 −MINIMUM AREA REQUIREMENTS. Add exception as footnote "c" to table:

> "c. **Exception.** The minimum area requirements do not apply to immediate family members. Immediate family is defined to include parent or grandparent (including in-law and step); child or grandchild (including adopted, foster, step or legal ward) regardless of age; sibling (including in-law, step, half) and spouse."

Section 602.3 Heat Supply. Amend first sentence to read, "Every owner and operator of any building who rents, leases or lets one or more dwelling units or sleeping units on terms, either expressed or implied, to furnish heat to the occupants thereof shall supply heat to maintain a minimum temperature of 68°F (20°C) in all habitable rooms, bathrooms and toilet rooms."

Section 602.4 Occupiable work spaces. Amend first sentence to read, "Indoor occupiable workspaces shall be supplied with heat to maintain a minimum temperature of 65°F (18°C) during the period the spaces are occupied."

Section 603.1 Mechanical Equipment and appliances. Add sentence at end of section to read, "Existing mechanical cooling unit shall be maintained in proper working order."

Chapter 8 referenced standards. Delete reference to San Luis City Code Title 18 Zoning.

Replace **APPENDIX A** as follows:

APPENDIX A

CITY OF SAN LUIS BOARDING REQUIRMENTS

A101
GENERAL

A102
MATERIALS

A102.2 Boarding framing material. Boarding framing material shall be the clear boarding bracing system (polyethylene) minimum 1-inch (25.4 mm) thick.

A102.3 Boarding fasteners.

Option 1 - Boarding fasteners shall be minimum 3/8-inch (9.5 mm) diameter carriage bolts of such a length as required to penetrate the assembly and as required to adequately attach the washers and nuts. Washers and nuts shall comply with the International Building Code.

Option 2 - Boarding fasteners shall be minimum #8 Torx screw, minimum 2-inch (51 mm) long, alternating every 6 inches (152 mm) on center into existing 2-inch nominal king stud or trimmer (if king studs do not exist, nominal 2x material shall be added around opening.).

A103
INSTALLATION

A103.1 Boarding installation. The boarding installation shall be in accordance with Figures A103.1(1) and A103.1(2) and Sections A103.2 through A103.5.

A103.2 Boarding sheet material. The boarding sheet material shall be cut to fit the door or window opening neatly or shall be cut to provide an equal overlap at the perimeter of the door or window.

A103.3 Windows.

Option 1. The window shall be opened to allow the carriage bolt to pass through or the window sash shall be removed and stored. The 2-inch by 4-inch (51 mm by 102 mm) strong back framing material shall be cut minimum 2 inches (51 mm) wider than the window opening and shall be placed on the inside of the window opening 6 inches (152 mm) minimum above the bottom and below the top of the window opening. The framing and boarding shall be predrilled. The assembly shall be aligned, and the bolts, washers and nuts shall be installed and secured.

Option 2. Boarding material can overlap door opening to be secured with screws to the existing king stud and trimmer. Boarding sheet material shall be secured with screws (min. #8 Torx screw) alternating every 6 inches (152 mm) on center.

A103.4 Door walls.

Option 1 - The door opening shall be framed with minimum 2-inch by 4-inch (51 mm by 102 mm) framing material secured at the entire perimeter and vertical members at a maximum of 24 inches (610 mm) on center. Blocking shall also be secured at a maximum of 48 inches (1219 mm) on center vertically.

Option 2 - Boarding material can overlap door opening to be secured with screws to the existing king stud and trimmer Boarding sheet material shall be secured with screws (min #8 Torx screw) alternating every 6 inches (152 mm) on center.

A103.5 Doors. Doors shall be secured by the same method as for windows or door openings. One door to the structure shall be available for authorized entry and shall be secured and locked in an approved manner.

CITY OF SAN LUIS ADMENDMENTS TO 2020 INTERNATIONAL ELECTRICAL CODE

(A) The requirements of the most current Arizona Public Service (APS) Electrical Service Manual shall supersede the requirements of the NEC when the APS requirements are more restrictive.

(B) Where reference is made to the Fire Code it shall mean the current adopted Fire Code.

(C) Article 210.8 Ground-Fault Circuit-Interrupter for Personnel. (F) Outdoor Outlets. Add 2 additional exceptions to section, as follows:

2. Air conditioning equipment where an approved grounding lug and an additional properly grounding conductor is attached to the equipment chassis

3. Air conditioning equipment located on roofs or within locked and maintained equipment enclosures that are not accessible to the public.

(D) Article 311.12(A) Minimum Size of Conductors. Amend to read, “The minimum size of conductors shall be as shown in TABLE 311.12(A). Whether solid or stranded, conductors, other than signal or control wiring, shall not be smaller than #12 Copper or #1 Aluminum or Copper-Clad Aluminum for current carrying conductors.”

(E) Amend TABLE 311.12(A) as follows:

TABLE 311.12(A) MINIMUM SIZE OF CONDUCTORS

Minimum Conductor Size (AWG)

Conductor Voltage Rating	Aluminum or Copper-Clad	
0-2000	12	1
2001-8000	8	1
8001-15,000	2	1
15,001-28,000	1	1
28,001-35,000	1/0	1/0
(Volts)	Copper	Aluminum

(F) Article 334.10 Uses Permitted. Amend to read, “Type NM and Type NMC, cables shall be permitted to be used in residential Group R-3 and their related U structures. Type NM and Type NMC, cables shall be permitted to be used in Residential Group R--1, Residential Group R-2, Institutional Group I-1, Residential Group R-4 and their related U structures, for branch circuits only. The branch circuits shall serve only one residential unit and shall originate in a panel or junction box located on or within the unit served.”

(G) Article 394.10 Uses Permitted. Use of Concealed knob-and tube wiring shall be limited to the maintenance and repair of existing installation. No knob-and-tube wiring shall be extended or otherwise altered to provide additional points of utilization or used to establish new circuits.

(H) Article 338.10 Uses Permitted (A) Service Entrance conductors. “Type SE and USE cable shall not be used as service-entrance conductors.”

CITY OF SAN LUIS
ADMENDMENTS TO 2018 INTERNATIONAL FUEL AND GAS CODE

Section [A] 101.1 Title. These regulations shall be known as the *Fuel Gas Code* of the City of San Luis, hereinafter referred to as 'this code.'

> Create a new sub-section, "**Section [A] 101.2.6 Other Codes.** Where a section references the *International Fire Code*, amend to read 'current adopted fire code.' Where a section references the *International Energy Conservation Code*, amend to read 'current adopted energy conservation code.' Where a section references accessibility provisions, it shall be taken to reference Arizona Revised Statutes, Title 41, Chapter 9, Article 8, Public Accommodations and Services, The Arizonans with Disabilities Act, R10-3-401 through R10-3-404, which includes - 28 CFR 35 and 28 CFR 36 and Americans with Disabilities Act Accessibility Guidelines for Buildings and Facilities (ADAAG)."

Section [A] 103.1 General. Amend to read, "Development Services Department, Building Safety Division is hereby created and the executive official in charge thereof shall be known as the building official. Amend all sections of this code that reference the 'code official' by replacing to read the 'building official.'"

Section [A] 106.6.1 Work commencing before permit issuance. Any person who commences work on an installation before obtaining the necessary permits shall be subject to the usual permit fee and an additional investigative fee. An investigative fee, in addition to the permit fee, shall be collected whether or not a permit is then or subsequently issued. The investigative fee shall be determined by the building official, based on the circumstances, nature and severity of the infraction. The minimum investigative fee shall be $100 and the maximum shall be an amount up to the same as the fee set forth in City of San Luis Resolution 2306.

Section [A] 106.6.2 Fee schedule. Amend by adding "As per City of San Luis Resolution 2306"

Section [A] 106.6.3 Fee refunds. Add to end of section, "The building official shall authorize the refunding of fees as follows:

1. The full amount of any fee paid hereunder which was erroneously paid or collected.
2. Not more than 80 percent of the permit fee paid when no work has been done under a permit issued in accordance with this code.
3. Not more than 80 percent of the plan review fee paid when an application for a permit for which a plan review fee has been paid is withdrawn or canceled before any plan review effort has been expended.

The building official shall not authorize the refunding of any fee except upon written application filed by the original permittee not later than 180 days after the date of fee payment."

Section [A] 108.4 Violation penalties. Any person who shall violate a provision of this code, fail to comply with any of the requirements thereof or erect, install, alter or repair

work in violation of the *approved construction documents* or directive of the building official, or of a permit or certificate issued under the provision of this code, shall be subject to the penalty and fine described in this Ordinance.

Section [A] 108.5 Stop work orders. Upon notice from the building official that work is being done contrary to the provisions of this code or in a dangerous or unsafe manner, such work shall immediately cease. Such notice shall be in writing and shall be given to the owner of the property, the owner's agent, or to the person doing the work. The notice shall state the conditions under which work is authorized to resume. Where an emergency exists, the building official shall not be required to give a written notice prior to stopping the work. Any person who shall continue any work on the system after having been served with a stop work order, except such work as that person is directed to perform to remove a violation or unsafe condition, shall be subject to the penalty and fine described in this Ordinance.

Section [A] 109.2 Membership of the board. The membership of the Building Advisory Board, as prescribed in CH 15.05 Sections 15.05.010 through 15.05.070 of the San Luis City Code, will be the Board of Appeals.

Sections [A] 109.2.1 through [A] 109.7. Delete sections in their entirety.

Section [BS] 301.11 Flood hazard. For structures located in flood hazard areas, the appliance, equipment and system installations regulated by this code shall be located and installed as required by the adopted city floodplain Ordinances for utilities and attendant equipment.

> **Exception:** The appliance, equipment and system installations regulated by this code are permitted to be located below the elevation required by the city adopted floodplain Ordinances for utilities and attendant equipment provided that they are designed and installed to prevent water from entering or accumulating within the components and to resist hydrostatic and hydrodynamic loads and stresses, including the effects of buoyancy, during the occurrence of flooding to such elevation.

Section [M] 306.5.1 Sloped roofs. Amend first sentence to read, “Where appliances, equipment, fans or other components that require service are installed on a roof having a slope of greater than 4 units vertical in 12 units horizontal (33-percent slope) or greater and having an edge more than 30 inches (762 mm) above grade at such edge, a level platform shall be provided on each side of the *appliance or equipment* to which *access* is required for service, repair, or maintenance.”

Section 307.1 Evaporators and cooling coils. Condensate drainage systems shall be provided for *equipment* and appliances containing evaporators and cooling coils in accordance with the *International Mechanical Code* and its amendments.

Section 402.2 Maximum gas demand. Add to end of section. “Where an input rating is not indicated, the gas supplier, *appliance* manufacturer or a qualified agency shall be

contacted, or the rating from TABLE 402.2 may be used as a general guide for estimating the volumetric flow rate of gas to be supplied."

Insert TABLE 402.2:

TABLE 402.2
Approximate Gas Input For Typical Appliances

APPLIANCE	INPUT BTU/H
Space Heating Units	
Hydronic Boiler	
Single family	100,000
Multifamily, per unit	60,000
Warm-air furnace	
Single family	100,000
Multifamily, per unit	60,000
Space and Water Heating Units	
Hydronic boiler	
Single family	120,000
Multifamily, per unit	75,000
Water Heating Appliances	
Water heater, automatic instantaneous	
Capacity at 2 gal./minute	142,800
Capacity at 4 gal./minute	285,000
Capacity at 6 gal./minute	428,400
Water heater, automatic storage, 30 to 40- gal tank	35,000
Water heater, automatic storage, 50-gal. tank	50,000
Water heater, domestic circulating or sidearm	35,000
Cooking Appliances	
Built-in oven or broiler unit, domestic	25,000
Built-in top unit, domestic	40,000
Range, free-standing, domestic	65,000
Other Appliances	
Barbecue	40,000
Clothes dryer, Type 1 (domestic)	35,000
Gas fireplace, direct-vent	40,000
Gas light	2,500
Gas *log*	80,000
Refrigerator	3,000

Section 403.4.3 Copper and copper alloy. Amend second sentence to read, "Copper and copper alloy pipe shall not be used for natural gas piping, but is permitted for propane gas piping."

Section 403.5.2 Copper and copper alloy tubing. Amend second sentence to read, “Copper and copper alloy pipe shall not be used for natural gas piping. but is permitted for propane gas piping.”

Section 404.5 Fittings in concealed locations. Add to end of section, “Union fittings are not permitted in concealed locations.”

Section 404.17.3 Tracer. Amend last sentence to read, “The tracer wire size shall not be less than #12 gauge solid copper insulated tracer wire securely attached to pipe or wrapped around the pipe. Attachments shall be provided at maximum 20 foot intervals and at each change in direction.”

AGENDA ITEM REVIEW FORM

Regular City Council Meeting **7. H.**

Meeting Date: 06/10/2026

Department Head: Jose A. Guzman, Director of Development Services, Development Services

Submitted By: Jose A. Guzman, Director of Development Services, Development Services

Action Requested: Motion
Ordinance

ITEM:

Discussion and possible action on any and all matters regarding Ordinance No. 485. An Ordinance of the Mayor and City Council of the City of San Luis, Arizona, amending San Luis City Code, Chapter 15.10 Building Regulations to adopt the 2024 International Building Code, 2024 International Residential Code, 2018 International Mechanical Code, 2018 International Plumbing Code, 2024 International Property Maintenance Code, 2020 National Electrical Code, 2018 International Fuel Gas Code and the City of San Luis amendments to each of said Codes; Renumbering Section 15.10.110 "Construction Debris" to 15.10.120; Renumbering Section 15.10.120 "Adminsitrative Authority to 15.10.130; Renumbering Section 15.10.130 "Additional Regulations" to 15.10.140; Renumbering Section 15.10.140 "Conflict" to 15.10.150; providing for a September 14, 2026 effective date; repealing any conflicting provisions; and providing for severability. **(Joaquin Campa, Building Official)**

A. Action on reading of Ordinance No. 485 by title only
B. Action on Ordinance No. 485

SUMMARY:

Building codes are an important part of protecting public health, safety, and welfare. They provide minimum standards for construction, occupancy, property maintenance, electrical work, plumbing, mechanical systems, and related building activities.

This proposed Ordinance will amend Chapter 15.10 of the San Luis City Code to adopt updated construction and property maintenance codes, along with the City of San Luis local amendments to each code.

The proposed Ordinance adopts the following codes:

- 2024 International Building Code
- 2024 International Residential Code
- 2018 International Mechanical Code
- 2018 International Plumbing Code
- 2024 International Property Maintenance Code
- 2020 National Electrical Code
- 2018 International Fuel Gas Code

The adoption of these codes will help ensure that the city's building regulations remain current and consistent with accepted construction, safety, and property maintenance standards. The updates also help keep the city generally aligned with neighboring jurisdictions, which assists contractors, design professionals, and staff when working on projects within the region.

The International Fuel Gas Code was not previously adopted by the city and will be newly adopted as part of this ordinance. The remaining codes are being updated or carried forward as appropriate, with local amendments included to address city-specific needs and procedures. The ordinance provides that September 14, 2026, will be the effective date, giving builders and developers time to adjust.

RECOMMENDATION / SUGGESTED MOTION:

A. I MOVE TO APPROVE THE READING OF ORDINANCE NO. 485 BY TITLE ONLY.
(CITY CLERK TO READ ORDINANCE NO. 485 BY TITLE ONLY)
B. I MOVE TO APPROVE AND ADOPT ORDINANCE NO. 485, AS PRESENTED.

Fiscal Impact

IS THERE FISCAL IMPACT ASSOCIATED WITH THIS ITEM:	N/A
CITY/STATE/FEDERAL FUNDS:	N/A
TOTAL:	N/A
BUDGETED AMOUNT:	N/A
AVAILABLE AMOUNT TO TRANSFER:	N/A
ACCT NAME & GL#/REMAINING BALANCE BEFORE PURCHASE:	N/A

FISCAL IMPACT STATEMENT (IF THIS IS A BUDGET TRANSFER, YOU MUST ATTACH THE BUDGET ADJUSTMENT FORM):

N/A

Attachments

Ordinance No. 485

OFFICE OF THE
MAYOR
CITY OF SAN LUIS

Ordinance

No. 485

AN ORDINANCE OF THE MAYOR AND CITY COUNCIL OF THE CITY OF SAN LUIS, ARIZONA, AMENDING SAN LUIS CITY CODE, CHAPTER 15.10 BUILDING REGULATIONS TO ADOPT THE 2024 INTERNATIONAL BUILDING CODE, 2024 INTERNATIONAL RESIDENTIAL CODE, 2018 INTERNATIONAL MECHANICAL CODE, 2018 INTERNATIONAL PLUMBING CODE, 2024 INTERNATIONAL PROPERTY MAINTENANCE CODE, 2020 NATIONAL ELECTRICAL CODE, 2018 INTERNATIONAL FUEL GAS CODE AND THE CITY OF SAN LUIS AMENDMENTS TO EACH OF SAID CODES; RENUMBERING SECTION 15.10.110 "CONSTRUCTION DEBRIS" TO 15.10.120; RENUMBERING SECTION 15.10.120 "ADMINISTRATIVE AUTHORITY" TO 15.10.130; RENUMBERING SECTION 15.10.130 "ADDITIONAL REGULATIONS" TO 15.10.140; RENUMBERING SECTION 15.10.140 "CONFLICT" TO 15.10.150; PROVIDING FOR A SEPTEMBER 14, 2026 EFFECTIVE DATE; REPEALING ANY CONFLICTING PROVISIONS AND PROVIDING FOR SEVERABILITY.

BE IT ORDAINED by the Mayor and City Council of the City of San Luis, Arizona:

Section 1: Chapter 15.10 Building regulations of the San Luis City Code is hereby amended to read as follows:

Section 15.10.010 Adoption of International Building Code 2024.

That certain document entitled 2024 International Building Code, three copies of which are on file in the office of the City Clerk of the City of San Luis, Arizona, together with that certain document entitled City of San Luis Amendments to the 2024 International Building Code, three copies of which are on file in the office of City Clerk, which documents were made a public record of the City of San Luis, Arizona, are hereby referred to, adopted and made a part hereof as if fully set out in this Code.

Section 15.10.020 Adoption of International Residential Code 2024.

That certain document entitled 2024 International Residential Code for One- and Two-Family Dwellings, three copies of which are on file in the office of the City Clerk of the

City of San Luis together with that certain document entitled City of San Luis Amendments to the 2024 International Residential Code for One- and Two-Family Dwellings, three copies of which are on file in the office of the City Clerk, which documents were made a public record of the City of San Luis, Arizona, are hereby referred to, adopted and made a part hereof as if fully set out in this Code

Section 15.10.040 Adoption of International Mechanical Code 2018.

That certain document entitled 2018 International Mechanical Code, three copies of which are on file in the office of the City Clerk of the City of San Luis, Arizona, together with that certain document entitled City of San Luis Amendments to 2018 International Mechanical Code, three copies of which are on file in the office of the City Clerk, which documents were made a public record of the City of San Luis, Arizona, are hereby referred to, adopted and made a part hereof as if fully set out in this Code.

Section 15.10.050 Adoption of International Plumbing Code 2018.

That certain document entitled 2018 International Plumbing Code, three copies of which are on file in the office of the City Clerk of the City of San Luis, Arizona, together with that document entitled City of San Luis Amendments to 2018 International Plumbing Code, three copies of which are on file in the office of the City Clerk, which documents were made a public record of the City of San Luis, Arizona, are hereby referred to, adopted and made a part hereof as if fully set out in this Code.

Section 15.10.060 Adoption of International Property Maintenance Code 2024.

That certain document entitled 2024 International Property Maintenance Code, three copies of which are on file in the office of the City Clerk of the City of San Luis, Arizona, together with that certain document entitled City of San Luis Amendments to 2024 International Property Maintenance Code, three copies of which are on file in the office of the City Clerk, which documents were made a public record of the City of San Luis, Arizona, are hereby referred to, adopted and made a part hereof as if fully set out in this Code.

Section 15.10.070 Adoption of National Electrical Code 2020.

That certain document entitled National Electrical Code, 2020 Edition, three copies of which are on file in the office of the City Clerk of the City of San Luis, Arizona, together with that certain document entitled City of San Luis Amendments to National Electrical Code, 2020 Edition, three copies of which are on file in the office of the City Clerk,

which documents were made a public record of the City of San Luis, Arizona, are hereby referred to, adopted and made a part hereof as if fully set out in this Code.

Section 15.10.110 Adoption of International Fuel Gas Code 2018

That certain document entitled 2024 International Fuel Gas Code, three copies of which are on file in the office of the City Clerk of the City of San Luis, Arizona, together with that certain document entitled City of San Luis Amendments to 2018 International Fuel Gas Code, three copies of which are on file in the office of the City Clerk, which documents were made a public record of the City of San Luis, Arizona, are hereby referred to, adopted and made a part hereof as if fully set out in this Code.

Section 2: Chapter 15.10 Building Regulations of the San Luis City Code is hereby amended to renumber Section 15.10.110 titled "Construction Debris" to 15.10.120, Section 15.10.120 titled "Administrative Authority" to 15.10.130, Section 15.10.130 titled "Additional Regulations" to 15.10.140, and Section 15.10.140 titled "Conflict" to 15.10.150.

Section 3 The effective date of the Codes adopted herein pursuant to Section 1 above shall become effective on and after September 14, 2026. All building codes and regulations that are currently in force shall remain in force, unless in conflict with the codes adopted hereinabove, and those that are in conflict shall remain in force until September 14, 2026, at which time in the event of a conflict arises between the provisions of this ordinance and any resolution, other ordinance, regulation, or policy of the City of San Luis, the conflicting provisions are repealed, amended, superseded, and replaced, and this Ordinance shall govern.

Section 4: If any section, subsection, sentence, clause, phrase, or portion of this Ordinance is held to be invalid or unconstitutional by the final decision of any court of competent jurisdiction or operation of law by legislation, such decision or law shall not affect the validity of the remaining portion of this Ordinance.

PASSED, ADOPTED, and APPROVED by the Mayor and City Council of the City of San Luis, Yuma County, Arizona, this 10th day of June 2026.

_____
Nieves Riedel, Mayor

ATTEST:

_____
Sonia Cornelio, City Clerk

APPROVED AS TO FORM:

_____
Joe Estes, Interim City Attorney

AGENDA ITEM REVIEW FORM

Regular City Council Meeting **7. I.**

Meeting Date: 06/10/2026

Department Head: Jose A. Guzman, Director of Development Services, Development Services

Submitted By: Jose A. Guzman, Director of Development Services, Development Services

Action Requested: Motion
Resolution

ITEM:

Discussion and possible action on any and all matters regarding Resolution No. 2402 - Aerial Imagery Update. A Resolution of the Mayor and City Council of the City of San Luis, Arizona, approving and adopting an Intergovernmental Agreement with Yuma County for the Yuma Region-Imagery Acquisition Consortium Project. **(Jose A. Guzman, Director of Development Services)**

SUMMARY:

Yuma County has coordinated a regional aerial imagery consortium for several years to provide updated aerial imagery for participating jurisdictions and agencies throughout the region. The City of San Luis has participated in this effort in the past, including the imagery updates completed in 2017 and 2022.

Participation in the consortium allows the city to receive updated, high-quality aerial imagery at a shared regional cost rather than contracting for the service independently. This provides a more cost-effective way for the city to maintain current imagery and mapping resources.

The city continues to experience growth and development. Having current imagery helps staff review existing conditions, identify changes in development patterns, verify infrastructure locations, evaluate properties, and support public safety, planning, and other city operations.

For the current imagery cycle, Yuma County has provided the final Intergovernmental Agreement for the city's participation in the County Region-Imagery Consortium. The aerial imagery flight for this cycle was completed in December 2025.

The city's share for this cycle is $20,204.00, which is a one-time cost for the current imagery update.

This Resolution authorizes approval of the Intergovernmental Agreement with Yuma County and allows the city to proceed with its participation in the current imagery consortium cycle.

RECOMMENDATION / SUGGESTED MOTION:

I MOVE TO APPROVE AND ADOPT RESOLUTION NO. 2402.

Fiscal Impact

IS THERE FISCAL IMPACT ASSOCIATED WITH THIS ITEM: YES

CITY/STATE/FEDERAL FUNDS:	CITY
TOTAL:	$20,204.00
BUDGETED AMOUNT:	Yes
AVAILABLE AMOUNT TO TRANSFER:	N/A
ACCT NAME & GL#/REMAINING BALANCE BEFORE PURCHASE:	Development Services GL 100-130-80000 Balance $ 50,596.25

FISCAL IMPACT STATEMENT (IF THIS IS A BUDGET TRANSFER, YOU MUST ATTACH THE BUDGET ADJUSTMENT FORM):

N/A

Attachments

Resolution No. 2402

OFFICE OF THE
MAYOR
CITY OF SAN LUIS

Resolution

No. 2402

A RESOLUTION OF THE MAYOR AND CITY COUNCIL OF THE CITY OF SAN LUIS, ARIZONA, APPROVING AND ADOPTING AN INTERGOVERNMENTAL AGREEMENT WITH YUMA COUNTY FOR THE YUMA REGION-IMAGERY ACQUISITION CONSORTIUM PROJECT.

WHEREAS, Yuma County coordinates the County Region-Imagery Consortium to obtain updated aerial imagery for participating jurisdictions and agencies; and

WHEREAS, the City of San Luis has previously participated in regional imagery acquisition efforts and continues to benefit from updated aerial imagery; and

WHEREAS, participation in the Consortium allows the City to obtain updated aerial imagery at a shared regional cost; and

WHEREAS, the City is authorized to enter into this Agreement pursuant to A.R.S. Title 11, Chapter 7, Article 3 (A.R.S. § 11-952 et seq.); and

NOW, THEREFORE, BE IT RESOLVED by the Mayor and City Council of the City of San Luis as follows:

SECTION 1: The Intergovernmental Agreement with Yuma County for the County Region-Imagery Consortium, as attached hereto as Exhibit "A", is hereby approved.

SECTION 2: The City Manager, or designee, is hereby authorized and directed to enter into said agreement on behalf of the City of San Luis and take any and all actions as may be necessary to put the agreement into effect.

PASSED, APPROVED AND ADOPTED by the Mayor and City Council of the City of San Luis, Arizona, this **10th** day of **June** 2026.

_____
Nieves Riedel, Mayor

ATTEST:

_____
Sonia Cornelio, City Clerk

APPROVED AS TO FORM:

_____
Joseph Estes, City Attorney

INTERGOVERNMENTAL AGREEMENT
BETWEEN
YUMA COUNTY AND CITY OF YUMA, CITY OF SAN LUIS, CITY OF SOMERTON, AND TOWN OF WELLTON
YUMA REGION – IMAGERY ACQUISITION CONSORTIUM PROJECT

This Intergovernmental Agreement ("Agreement" or "IGA") is entered into this _____ day of _____, _____, ("Effective Date") between Yuma County ("County"), the City of Yuma ("Yuma"), the City of San Luis ("San Luis"), the City of Somerton ("Somerton"), and the Town of Wellton ("Wellton"). The County, Yuma, San Luis, Somerton, and Wellton are hereinafter referred to individually as a "Party" and collectively as the "Parties". Yuma, San Luis, Somerton, and Wellton are hereinafter referred to collectively as the "Participating Agencies" and each individually as a "Participating Agency".

RECITALS

1. In January 2017, the County entered into a Memorandum of Understanding with certain Participating Agencies to form the Yuma Region – Imagery Acquisition Consortium Project ("Project"), to pool resources for the acquisition of updated oblique and orthogonal aerial imagery from Pictometry.

2. On November 17, 2025, the County executed an agreement with Pictometry International Corp., dba EagleView, to acquire digital oblique and orthogonal aerial imagery of specific areas within Yuma County.

3. The Participating Agencies have expressed a continued interest in joining the Project and gaining access to the digital oblique and orthogonal aerial imagery produced by EagleView.

4. The County is authorized to enter into this Agreement pursuant to A.R.S. § 11-951, et. seq. Yuma is authorized to enter into this Agreement pursuant to Article III, Section 12 of the Charter of the City of Yuma. San Luis is authorized to enter into this Agreement pursuant to A.R.S. § § 11-951, et. seq. Somerton is authorized to enter into this Agreement pursuant to Somerton City Code Section 3-5-193. Wellton is authorized to enter into this Agreement pursuant to A.R.S. § 11-951, et. seq.

NOW THEREFORE, in consideration of the mutual promises set forth herein, the County and each Participating Agency agree to the following terms and conditions:

I. PURPOSE OF THE PROJECT. The purpose of the Project is to share the cost of the digital imagery produced by Pictometry amongst the Participating Entities.

II. TERM; TERMINATION. This Agreement shall be for a term of five (5) years starting on the Effective Date ("Initial Term"). This Agreement may be renewed for three (3) additional (5) year periods upon written request by a Participating Agency no less than ninety (90) days prior to the date of expiration of the Initial Term. The decision to renew shall be through mutual written agreement by the County and the Participating Agency.

This Agreement may be terminated by the County or a Participating Agency, with or without cause, upon sixty (60) days' written notice to the other party. Unless this Agreement is terminated as to all Parties by County or by all Participating Agencies, the Agreement shall remain in full force and effect for the remainder of the non-terminated Parties.

III. NON-DISCRIMINATION. The Parties shall comply with the Civil Rights Act of 1964, as amended, the Age Discrimination in Employment Act, and State executive order No. 2009-09 which mandate that all persons, regardless of race, color, religion, sex, age, national origin or political affiliation, shall have equal access to employment opportunities. The Parties shall comply with the Rehabilitation Act of 1973, as amended, which prohibits discrimination in the employment or advancement in employment of qualified persons because of physical or mental handicap, and the Americans with Disabilities Act.

IV. INDEMNIFICATION. Each party (as "Indemnitor") agrees to defend, indemnify, and hold harmless the other parties (as "Indemnitees") from and against any and all claims, losses, liability, costs, or expenses (including reasonable attorney's fees) (hereinafter collectively referred to as "Claims") arising out of bodily injury of any person (including death) or property damage, but only to the extent that such Claims which result in vicarious/derivative liability to an Indemnitee are caused by the act, omission, negligence, misconduct, or other fault of the Indemnitor, its officers, officials, agents, employee, volunteers.

V. ENTIRE AGREEMENT. This Agreement constitutes the entire understanding between the Parties with respect to the subject matter thereof. Any amendment or modification of this Agreement shall be made only by a written instrument executed by authorized representatives of the Parties.

VI. SEVERABILITY. The Parties agree that should any part of this Agreement be held to be invalid or void, the remainder of the Agreement shall remain in full force and effect and shall be binding upon the Parties.

VII. GOVERNING LAW AND VENUE. This Agreement shall be governed by the laws of the State of Arizona, as to validity, interpretation, and performance. Any and all suits for any and every breach of this Agreement, or other judicial proceeding for the enforcement or interpretation of this Agreement shall be instituted and maintained in Superior Court in Yuma County, Arizona. Any action to enforce any provision of this Agreement or to obtain any remedy with respect to this Agreement shall be brought exclusively in the Superior Court in Yuma County, Arizona (or, as may be appropriate, in the United States District Court for the District of Arizona, if, and only if, the Superior Court lacks jurisdiction over

such action). The Parties expressly and irrevocably consent to the exclusive jurisdiction and venue of such courts and expressly waive the right to transfer or remove any such action.

VIII. CONFLICT OF INTEREST. This Agreement is subject to cancellation pursuant to A.R.S. § 38-511, the pertinent provisions of which are incorporated herein.

IX. NOTICES. All notices, requests for payment, or other correspondence between the Parties regarding this Agreement shall be mailed or delivered to the respective Parties at the addresses set forth below or at such alternate address as may be specified in writing:

Yuma County
ITS Chief Information Officer
2717 S. Avenue B
Yuma, Arizona 85364
(928) 373-1000

City of Yuma
Director of Information Technology
One City Plaza
Yuma, Arizona 85364
(928) 373-4900

City of San Luis
Director of Development Services
1090 E. Union Street
P.O. Box 3750
San Luis, Arizona 85349
(928) 341-8568

City of Somerton
Lizandro (Louie) Galaviz
143 N. State Street
P.O. Box 638
Somerton, Arizona 85350
(928) 722-5085

Town of Wellton
Deputy Town Clerk
28634 Oakland Avenue
P.O. Box 67
Wellton, Arizona 85356
(928) 785-3348

X. ASSIGNMENT. This contract is not assignable by the County or any Participating Agency unless all Parties mutually consent otherwise in writing. The requirements of this contract are binding upon the heirs, executors, administrators, successors, and assigns of all Parties.

XI. NO PARTNERSHIP. Nothing in this Agreement constitutes a partnership or joint venture between the Parties and no party is the principal or agent of the other.

XII. RIGHTS/OBLIGATIONS OF PARTIES ONLY. The terms of this Agreement are intended only to define the respective rights and obligations of the Parties. This Agreement shall not create any rights or duties in favor of any potential third-party beneficiary or other person, agency, or organization.

XIII. PROVISIONS REQUIRED BY LAW. Each and every provision of law and any clause required by law to be in the Agreement will be read and enforced as though it were included herein and, if through mistake or otherwise any such provision is not inserted, or is not

correctly inserted, then upon the application of either Party, the Agreement will promptly be physically amended to make such insertion or correction.

XIV. OBLIGATIONS OF THE COUNTY.

a. The County will deliver to each Participating Agency a 3-Terabyte external hard drive containing the 2025 digital imagery library previously purchased by the County from Pictometry immediately upon data availability from Pictometry and the receipt of the payment from the Participating Agencies.

b. The County will individually identify each Participating Agency as an "Authorized user" of EagleView Explorer Web Viewer.

XV. OBLIGATIONS OF THE PARTICIPATING AGENCIES.

a. To obtain possession of and access to the 2025 digital imagery library and supporting EagleView Explorer Web Viewer produced by EagleView and previously delivered to the County, each Participating Agency agrees to pay the County the following sums:

i. Yuma agrees to pay County the sum of $55,361

ii. San Luis agrees to pay County the sum of $20,204

iii. Somerton agrees to pay County the sum of $10,931

iv. Wellton agrees to pay County the sum of $10,842

b. Payment shall be due within thirty (30) days following full execution of this Agreement by the Participating Agency and the County. Prior to receiving access to the digital imagery library, EagleView Explorer Web Viewer, or any associated data or services, each Participating Agency shall deliver payment to Yuma County.

All payments shall be made by check payable to "Yuma County" and delivered to:

Yuma County Information Technology Services – GIS
Attn: Daniel Cruz
2717 South Avenue B
Yuma, Arizona 85364

c. Before any data from the digital imagery libraries is shared with any local or external agency other than the Parties, all Parties must agree in writing. Although it will have access to the data, each Participating Agency agrees that County will act as the data custodian to control and distribute the digital imagery library to any local or external agency upon agreement of all Parties.

d. Each Participating Agency agrees to be bound by the Standard Terms and Conditions as set forth in the November 17, 2025, Master Agreement between Pictometry International Corp. and Yuma County, AZ, as set forth in Appendix 1 hereto, and incorporated herein by this reference.

YUMA COUNTY:

_____ Date: _____
Martin Porchas
Chairman, Board of Supervisors

APPROVED AS TO FORM AND AUTHORITY:

_____ Date: _____
William J. Kerekes
Chief Civil Deputy County Attorney

CITY OF YUMA:

_____ Date: _____
John D. Simonton
City Administrator

ATTESTED:

_____ Date: _____
Linda L. Bushong
City Clerk

APPROVED AS TO FORM AND AUTHORITY:

_____ Date: _____
Richard W. Files
City Attorney

CITY OF SAN LUIS:

_____ Date: _____
Jenny Torres
City Manager

ATTESTED:

_____ Date: _____
Sonia Cornelio
City Clerk

APPROVED AS TO FORM AND AUTHORITY:

_____ Date: _____
Joseph D. Estes
City Attorney

CITY OF SOMERTON:

_____ Date: _____
Lizandro (Louie) Galaviz
City Manager

ATTESTED:

_____ Date: _____
Andrea Moreno
Deputy City Clerk

APPROVED AS TO FORM AND AUTHORITY:

_____ Date: _____
Trish Stuhan
City Attorney

TOWN OF WELLTON:

_____ Date: _____

Richard Marsh
Town Manager

APPROVED AS TO FORM AND AUTHORITY:

_____ Date: _____

Andrew McGuire
Town Attorney

APPENDIX 1

CUSTOMER NAME:	Yuma County- AZ
ATTN:	Daniel CRUZ
CUSTOMER ADDRESS:	2351 W. 26TH STREET Yuma, Arizona 85364
CUSTOMER PHONE:	(928) 817-5151
CUSTOMER E-MAIL:	daniel.cruz@yumacountyaz.gov

MASTER SERVICES AGREEMENT

This Master Services Agreement ("Agreement") is entered into as of the date of last signature below (the "Effective Date") by and between the Customer identified above ("Customer") and Pictometry International Corp. dba EagleView, a corporation formed under the laws of the State of Delaware, with a place of business at 25 Methodist Hill Drive, Rochester, NY 14623 ("EagleView"). Customer and EagleView may be referred to individually as "Party" and, collectively, as "Parties." EagleView will provide the Products and Services in accordance with and subject to the conditions of this Agreement during the applicable Term.

GENERAL TERMS AND CONDITIONS

1. DEFINITIONS

1.1. **"Account"** means an account created for Customer by EagleView for the purpose of providing access to the Products and Services.

1.2. "**Activation**" means the point in time when Customer has access to an Account and the Products and Services are available to Customer.

1.3. **"Authorized User"** means: (i) any employee or elected or appointed official of the Customer authorized by Customer to use the Products and Services; (ii) any additional users as may be defined in an Order Form (such as governmental subdivisions and their employees or elected or appointed officials) all of whom are considered to be agents of Customer for the purposes of Section 1.3; or (iii) a contractor of Customer, so long as Customer gives written notice of its intent to use such contractor to EagleView prior to being granted access to the Products and Services and, unless EagleView expressly waives such requirement for any individual, has entered into a written agreement with EagleView authorizing such access.

1.4. **"Confidential Information"** means any non-public information that is identified as or would be reasonably understood to be confidential and/or proprietary as disclosed by a Party ("Discloser") to another Party ("Recipient"). Confidential Information of EagleView includes, but is not limited to: (a) the Products and Services including any related software code and Documentation; (b) the terms of this Agreement including all Order Forms and statements of work, as applicable, and related pricing, and (c) EagleView's roadmaps, product plans, product designs, architecture, technology and technical information, security audit reviews, business and marketing plans, and business processes, however disclosed. Confidential Information will not include information that was (a) at the time of disclosure, through no fault of the Recipient, already known and generally available to the public; (b) at the time of disclosure to Recipient already rightfully known to the Recipient without any obligation of confidentiality; (c) disclosed to the Recipient by a third party who had the right to make the disclosure without any confidentiality restrictions; or (d) independently developed by the Recipient without access to or use of the Discloser's Confidential Information.

1.5. **"Documentation"** means the materials describing the features and functions of the Products and Services as may be updated from time to time by EagleView.

1.6. **"Fee"** means the fees charged by EagleView for the Products and Services as identified in an Order Form or an invoice issued by EagleView.

1.7. **"Intellectual Property Rights"** means all worldwide intellectual property rights whether registered or unregistered including copyrights, patents, patent applications, trademarks, service marks, trade secrets, and all other proprietary rights.

1.8. **"Malware"** means any software program or code intended to harm, destroy, interfere with, corrupt, or cause undesired effects on program files, data, or other information, executable code, or application software macros.

1.9. **"Order Form"** means a mutually agreeable order signed and dated by both Parties describing the Products and Services purchased by Customer. The Parties may enter into several Order Forms with each Order Form made part of this Agreement. In the event of a conflict between the terms of this Agreement and an Order Form, the Order Form will prevail; provided that notwithstanding anything to the contrary, no Order Form shall exist or be effective except to the extent it is governed by this Agreement.

1.10. **"Products and Services"** means EagleView's proprietary products, services and content, whether or not identified in an Order Form, developed and owned or licensed by EagleView, its Affiliates (defined as its directors, officers, employees, agents, representatives, advisors, and persons or entities which are controlled by or are under common control with EagleView), and/or their licensors.

2. ACCESS AND USE OF THE PRODUCTS AND SERVICES

2.1. **Access to the Products and Services.** Subject to Customer's compliance with the terms of this Agreement, EagleView hereby grants to Customer the right to access and use the Products and Services identified on an Order Form(s) for its internal business purpose on a limited, revocable, non-exclusive, non-transferable basis in accordance with the scope of use identified in the Order Form. Unless a different term of the license grant to Products and Services is set forth in an Order Form, the right to access and use the Products and Services for its internal business purpose during the term of any Order Form(s) is the only right granted to Customer under this Agreement and any Order Form(s). EagleView will have no liability for any loss or damage arising from Customer's failure to comply with the terms of this Agreement. EagleView will provide Customer a primary administrator Account for managing and granting access to its Authorized Users. Customer will be responsible for activating Authorized Users through use of the Account. Customer and its Authorized Users are responsible for maintaining the confidentiality of all passwords.

2.2. **Access Restrictions.** Access by Customer and its Authorized Users to the Products and Services is subject to the following conditions:

2.2.1. Customer will not access the Products and Services or Confidential Information of EagleView in a way that might adversely affect the security, stability, performance, or functions of the Products and Services.

2.2.2. Customer will not directly or indirectly: (a) resell or sublicense the Products and Services, (b) modify, disassemble, decompress, reverse compile, reverse assemble, reverse engineer, or translate any portion of the software related to the Products and Services; (c) create derivative works from the Products and Services; (d) use the Products and Services in violation of applicable law or the rights of others; (e) perform any vulnerability or penetration testing of the Products and Services; (f) cause harm in any way to the Products and Services or cause Malware to harm the Products and Services; (g) work around the Products and Services' technical limitations; (h) remove any proprietary notices from the Products and Services, software related to the Products and Services, documentation or any other EagleView materials furnished or made available hereunder; (i) access the software related to the Products and Services in order to build a competitive product or service; or (j) copy any features, functions or graphics of the software related to the Products and Services.

2.2.3. Customer will not use the Products and Services in connection with any data that: (a) may create a risk of harm or loss to any person or property; (b) constitutes or contributes to a crime or tort; (c) is illegal,

unlawful, harmful, pornographic, defamatory, infringing, or invasive of personal privacy or publicity rights; (d) contains any information that Customer does not have the right to use; or (e) use the Products and Services, or any software or documentation related to the Products and Services, in violation of export control laws and regulations.

2.2.4. Customer and its Authorized Users shall only use the Products and Services for the use and purpose set out in this Agreement, and for no other purpose.

2.2.5. EagleView may suspend the Products and Services if EagleView determines, in its reasonable discretion, that suspension is necessary to protect Customer or the Products and Services from operational, security, or other material risk, or if the suspension is ordered by a court or other tribunal. In such event(s), EagleView will provide notice of suspension to Customer as soon as reasonably practicable.

2.3. Account Use. Customer is responsible for maintaining and keeping confidential its Account information, including passwords, usernames, and email addresses. If Customer becomes aware of: (i) any violation of the terms of this Agreement by an Authorized User or unauthorized access to an Account, or (ii) any compromise to an Account including unauthorized access to or disclosure of any Account information, passwords, usernames or login credentials, then Customer must promptly suspend any relevant access and notify EagleView.

2.4. Reservation of Rights. Except for the limited rights expressly granted herein, EagleView and its Affiliates retain all right, title and interest in all Intellectual Property Rights and technology related to EagleView's proprietary Products and Services. Customer will preserve and keep intact all EagleView copyright, patent, and/or trademark notices presented in connection with the Products and Services. Customer will not assert any implied or other rights in or to any of EagleView's Intellectual Property Rights or Products and Services. From time to time, Customer may provide suggestions, ideas, enhancement requests, or other information on its use of the Products and Services ("Feedback"). Customer agrees that EagleView will have all right, title, and interest to use such Feedback without any restrictions and without any payment or other compensation to Customer.

3. PAYMENT

3.1. Fees. Customer will pay the Fees within thirty (30) days of receipt of invoice. EagleView will have the right to assess a late payment charge on any overdue amounts equal to the lesser of: (i) one and one-half percent (1.5%) per month, or (ii) the maximum rate allowed by applicable law. Additional or different payment terms may be set forth in the Order Form. All Fees paid pursuant to this Agreement and any applicable Order Form are non-refundable and all Products and Services ordered pursuant to an Order Form are non-cancelable, unless expressly stated to the contrary in the Order Form. In the event that EagleView seeks legal recourse for the collection of any unpaid Fees from Customer, Customer will be responsible for all of EagleView's costs of such collection action if EagleView is the prevailing party. If any Fees are overdue by more than thirty (30) days, EagleView may, without limiting its other rights and remedies, suspend the Products and Services until such amounts are paid in full, provided that, EagleView will give Customer at least ten (10) days' prior notice that its account is overdue.

3.2. Pricing Changes. If any Order Form is subject to renewal or extension, automatic or otherwise, EagleView may adjust the pricing for any Products and Services upon any renewal or extension of an Order Form by providing notice thereof at least ninety (90) days prior to the date for such renewal or extension.

3.3. Taxes. The Fees do not include any levies, duties excise, sales, use, value added or other taxes, tariffs, or duties that may apply to the Products and Services ("Taxes"). Customer is responsible for paying all Taxes associated with its purchases hereunder. If EagleView has the legal obligation to collect Taxes from Customer, Customer will pay that amount to EagleView unless Customer provides EagleView with a valid tax exemption certificate authorized by the applicable taxing authority prior to billing. For clarity, EagleView is solely responsible for taxes assessable against it based on its income, property, and employees.

4. TERM AND TERMINATION

4.1. Term. The term of this Agreement will commence on the Effective Date and will remain in effect for so long as there exists an open Order Form and for a period of twelve (12) months thereafter ("Term"). After expiration or early termination, Customer will not have any access to content or any Products and Services.

4.2. Termination; Suspension. Either Party may terminate this Agreement or any Order Form upon written notice to the other Party if: (i) the non-terminating Party materially breaches this Agreement or any Order Form and fails to cure such breach within thirty (30) days of delivery of written notice; or (ii) if the other Party becomes the subject of a petition in bankruptcy or any other proceeding relating to insolvency, receivership, liquidation, or assignment for the benefit of creditors. EagleView may suspend access to the Products and Services in the event Customer is in material breach of this Agreement and such breach has not been cured within thirty (30) days' written notice to Customer. In the event of suspension due to Customer's material breach of this Agreement, Customer will remain liable for all Fees applicable to the Term that would have been paid had access to the Products and Services not been suspended.

4.3. Effect of Termination on Fees: EagleView Breach. In the event this Agreement is terminated by Customer for a material breach by EagleView, (a) where EagleView has fully delivered imagery to Customer, no refund of fees will be made, or (b) where Customer, at the time of termination, is accessing on-line imagery and data access and/or software related to any Products and Services, EagleView will refund any unused prorated, prepaid fees for the Products and Services.

4.4. Effect of Termination on Fees: Customer Breach. In the event this Agreement is terminated by EagleView for a material breach by Customer or due to section 4.2 (ii) applying, Customer will be responsible for all Fees and Taxes under any current Order Form(s).

4.5. Survival. Upon any expiration or termination of any Order Form or this Agreement, the following sections will survive with respect thereto: 2.4 (Reservation of Rights), 3 (Payment), 5 (Confidentiality), 7 (Indemnification), 8 (Limitation of Liability), and 9 (General Provisions).

5. CONFIDENTIALITY

5.1. Obligations. Each Party will hold the other Party's Confidential Information in confidence with at least as much care as it holds its own Confidential Information, and neither Party will disclose any of the other Party's Confidential Information to any third party. Each Party may use the Confidential Information solely for purposes of its performance under this Agreement, and may disclose such information to its employees, subcontractors and professional advisors only on a need-to-know basis, provided that such employees, subcontractors and professional advisors are bound by obligations of confidentiality at least as restrictive as those set forth in this Agreement.

5.2. Required Disclosure. The Recipient may disclose Confidential Information as required by court order, Freedom of Information Act request, or otherwise by law, provided that it gives the Discloser prior written notice of such disclosure (to the extent legally permitted) as well as reasonable assistance if Discloser seeks a protective order to prevent the disclosure. Any disclosure pursuant to this Section 5.2 will be restricted to include the least amount of Confidential Information necessary to comply with the law or order. All costs incurred by the Recipient in connection with complying with such order will be paid solely by the Recipient.

6. WARRANTIES

6.1. Mutual Warranties. Each Party represents and warrants to the other Party that: (i) it is an organization duly organized, validly existing and in good standing under the laws of the jurisdiction of its formation, has all requisite power and authority to carry on its business and to own and operate its properties and assets; and (ii) the individual signing this Master Services Agreement and any Order Forms has the requisite authority to bind the party to this Agreement and the Order Form, respectively.

6.2. EagleView Warranty. EagleView warrants that (i) it will provide the Products and Services with commercially reasonable care and skill; and (ii) the Products and Services will conform to the then-current Documentation in all material respects. In the event of a breach of this warranty, Customer's sole and exclusive remedy will be as described in Section 4.3 Payments Upon Termination.

6.3. Disclaimer. EXCEPT FOR EXPRESS WARRANTIES SET FORTH IN THIS AGREEMENT, EAGLEVIEW MAKES NO ADDITIONAL REPRESENTATION OR WARRANTY OF ANY KIND, WHETHER EXPRESS, IMPLIED IN FACT OR BY OPERATION OF LAW, OR STATUTORY, AS TO ANY MATTER WHATSOEVER. EAGLEVIEW EXPRESSLY DISCLAIMS ALL IMPLIED WARRANTIES OF MERCHANTABILITY, FITNESS FOR A PARTICULAR PURPOSE AND NON-INFRINGEMENT. EAGLEVIEW DOES NOT WARRANT THAT THE PRODUCTS AND SERVICES (INCLUDING ANY SUPPORT SERVICES) WILL BE ERROR FREE, WILL MEET CUSTOMER'S REQUIREMENTS, OR WILL BE TIMELY OR SECURE. CUSTOMER WILL NOT HAVE THE RIGHT TO MAKE OR PASS ON ANY REPRESENTATIONS OR WARRANTY ON BEHALF OF CUSTOMER TO ANY THIRD PARTY. TO THE MAXIMUM EXTENT PERMITTED BY LAW, THE PRODUCTS AND SERVICES AND SUPPORT SERVICES ARE PROVIDED "AS IS."

7. INDEMNIFICATION

7.1. EagleView Indemnification. EagleView will defend Customer against any claim, demand, suit or proceeding made by a third party alleging that the Products and Services infringes the intellectual property rights of such third party and will pay all costs or damages that are finally awarded by a court of competent jurisdiction (including reasonable attorneys' fees) or agreed to in a written settlement signed by EagleView; provided, however, that Customer will: (i) notify EagleView in writing within ten (10) calendar days of its receipt of notice of the claim, (ii) give EagleView sole control of the defense and settlement of the claim (except that EagleView will not settle any claim that results in liability or an admission of liability by Customer without Customer's prior written consent), and (iii) provide EagleView with all reasonable assistance, information, and authority necessary to perform EagleView's obligations under this paragraph. Notwithstanding the foregoing, EagleView will have no liability for any claim of infringement or misappropriation to the extent such claim arises from: (i) use of the Products and Services in combination with materials including software, hardware, or content not furnished by EagleView; or (ii) Customer's breach of this Agreement.

7.2. Remedies. In the event the Products and Services are held or is believed by EagleView to infringe or misappropriate any Intellectual Property Rights of a third party, EagleView will have the option, at its expense, to: (i) replace the Products and Service with a non-infringing equivalent, (ii) modify the Products and Services to be non-infringing, (iii) obtain for Customer a license to continue using the Products and Services; or (iv) terminate this Agreement or any relevant Order Form and refund any prepaid, prorated fees for the remainder of the Term. The foregoing remedies constitute Customer's sole and exclusive remedies and EagleView's sole liability with respect to any third-party infringement claim.

7.3. Customer Indemnification. Customer will, at its expense, defend EagleView from and against all third party claims and will pay any costs, losses or damages that are finally awarded (including reasonable attorneys' fees) or agreed to in settlement to the extent arising out of Customer's breach of this Agreement, provided that (i) EagleView notifies Customer in writing within ten (10) calendar days of its receipt of written notice of the claim, (ii) Customer has sole control of the defense and settlement of the claim (except that Customer will not settle any claim that results in liability or an admission of liability by EagleView without EagleView's prior written consent), and (iii) EagleView provides Customer with all reasonable assistance, information, and authority necessary to perform Customer's obligations under this paragraph.

7.4. Mutual Indemnification. Notwithstanding the foregoing, to the fullest extent permitted by law, each Party agrees to defend, indemnify, and hold harmless the other Party and other Party's officers, agents, and employees from all claims, losses, and causes of actions arising out of, resulting from, or in any manner connected with the

Agreement or an Order Form, but only to the extent such claim, loss, cause of action, damage or injury is caused or contributed to by the negligent acts, errors, or omissions of the indemnifying party. It is the intent of this section to require EagleView to indemnify Yuma County to the extent permitted under Arizona law.

8. LIMITATION OF LIABILITY

8.1. Consequential Damages. TO THE EXTENT PERMITTED BY LAW, IN NO EVENT WILL EITHER PARTY OR ITS AFFILIATES BE LIABLE TO THE OTHER FOR ANY INDIRECT, INCIDENTAL, CONSEQUENTIAL, COVER, BUSINESS INTERRUPTION, SPECIAL, OR PUNITIVE DAMAGES OF ANY KIND OR NATURE, INCLUDING, BUT NOT LIMITED TO, LOSS OF USE, DATA, PROFITS, REVENUE, OR GOODWILL, WHETHER AN ACTION IS BASED IN CONTRACT, TORT, OR OTHERWISE, REGARDLESS OF WHETHER EITHER PARTY HAS BEEN ADVISED OF THE POSSIBILITY OF SUCH DAMAGES.

8.2. Limitation of Liability. EXCLUDING EITHER PARTY'S INDEMNIFICATION OBLIGATIONS PURSUANT TO SECTION 7, TO THE EXTENT PERMITTED BY LAW, THE AGGREGATE AND CUMULATIVE LIABILITY OF EITHER PARTY INCLUDING ALL THEIR AFFILIATES REGARDLESS OF THE FORM OF ACTION, WHETHER IN CONTRACT OR TORT (EXCEPT GROSS NEGLIGENCE) WILL IN NO EVENT EXCEED THE TOTAL AMOUNT OF FEES PAID AND PAYABLE BY CUSTOMER IN THE TWELVE MONTHS PRECEDING THE ACTIONS GIVING RISE TO THE CLAIM.

9. GENERAL PROVISIONS

9.1. Export Laws. The Products and Services and derivatives thereof may be subject to export laws and regulations of the United States and other jurisdictions. EagleView and Customer each represent that it is not named on any U.S. government denied-party list. Customer will not permit any user to access, use, export, reexport, or transfer, directly or indirectly, any Products and Services or content in a U.S.-embargoed country or region (including but not limited to Cuba, Iran, North Korea, Sudan, Syria, Crimea, or Russia) or in violation of any U.S. export law or regulation.

9.2. No Third-Party Beneficiaries. Except as specifically identified in this Agreement, nothing in this Agreement is intended to confer upon any person other than the Parties and their respective successors or permitted assigns, any rights, remedies, obligations, or liabilities whatsoever.

9.3. Independent Contractors. Nothing contained in this Agreement will be deemed or construed as creating a joint venture or partnership between any of the Parties hereto. Neither Party will have the power or authority to control the activities or operations of the other. At all times, the status of the Parties will be that of independent contractors.

9.4. Force Majeure. Except with respect to Customer's payment obligations, each Party will be excused from performance under this Agreement, will not be deemed to be in breach hereof, and will have no liability to the other Party whatsoever if either party is prevented from performing any of its obligations hereunder, in whole or in part, as a result of a Force Majeure Event. A "Force Majeure Event" means an event or occurrence beyond the control of the nonperforming Party, such as an act of God or of the public enemy, embargo or other act of government in either its sovereign or contractual capacity, government regulation, travel ban or request, court order, civil disturbance, terrorism, war, quarantine restriction, epidemic, virus, fire, weather, flood, accident, strike, slowdown, delay in transportation, electrical power outage, interruption or degradation in electronic communications systems, inability to obtain necessary labor, materials or manufacturing facilities, and other similar events. In the event of any delay resulting from a Force Majeure Event, any date of delivery hereunder will be extended for a period equal to the time lost because of the delay.

9.5. Security Assessment. Upon reasonable request, EagleView will assist Customer in its EagleView security risk assessments by completing forms and providing reports that provide Customer with generally available information relating to EagleView's information security practices. Such information will include high level

overviews of implemented security measures, such as access controls, encryption, or other means, where appropriate, and will provide details relating to how Customer's Confidential Information is disclosed, accessed, processed, and stored (as applicable).

9.6. Assignment. Neither Party may assign any of its rights or obligations hereunder, whether by operation of law or otherwise, without the other Party's prior written consent (not to be unreasonably withheld); provided, however, either Party may assign this Agreement in its entirety (including all Order Forms), without the other Party's consent to its Affiliate or in connection with a merger, acquisition, corporate reorganization, or sale of all or substantially all of its assets. Subject to the foregoing, this Agreement will bind and inure to the benefit of the Parties and their respective successors and permitted assigns.

9.7. Governing Law. This Agreement will be governed by the laws of the state the Customer is located in without regard to conflict of law principles. The Parties agree that any claims, legal proceedings, disputes and litigation arising out of or in connection with this Agreement will be brought solely in the state courts located in the jurisdiction in which the Customer is based, unless a claim is based on violation of federal law.

9.8. Severability & Waiver. The failure of either Party to exercise any right or the waiver by either Party of any breach, will not prevent a subsequent exercise of such right or be deemed a waiver of any subsequent breach of the same, or any other provision of this Agreement. All waivers must be in writing and signed by the Party waiving its rights. If any section of this Agreement is held to be invalid or unenforceable, the remaining sections of this Agreement will remain in force to the extent feasible.

9.9. Notices. Notwithstanding anything to the contrary in this Agreement, notices and other communications may be given or made pursuant to this Agreement via electronic mail. Notwithstanding the foregoing, any notice concerning a material breach, violation, or termination hereof must be in writing and will be delivered: (a) by certified or registered mail; or (b) by an internationally recognized express courier or overnight delivery service. All written notices or other written communications to EagleView will be provided to the address listed above and addressed to: ATTENTION: LEGAL DEPARTMENT. All written notices to Customer will be sent to the address identified on the Order Form and addressed to the individual signing said Order Form and will be deemed to have been duly given when delivered personally, when deposited in the U.S. mail, certified or registered mail, or when deposited with an overnight courier or delivery service. With respect to notices and other communications regarding EagleView's privacy policy, support plan, or other similar provisions, such notices will be deemed given when posted to EagleView's website (www.eagleview.com) or e-mailed to the Customer's Account administrator(s).

9.10. Execution in Counterparts. This Agreement may be executed in one or more counterparts, each of which will be deemed to be an original and all of which together will constitute only one agreement. The execution and delivery of counterparts of this Agreement by electronic mail, electronic form (including execution by way of an electronic or other signature stamp), website submission, facsimile, or by original manual signature, regardless of the means or any such variation in pagination or appearance will be binding upon the Parties executing this Agreement.

9.11. Order of Precedence. In the event of any conflict, or inconsistency among the terms and conditions contained in documents comprising the Agreement, such conflict or inconsistency shall be resolved according to the following order of precedence, with the first document listed having the highest precedence: any exhibits in the order of their attachment (for example, Exhibit A, then Exhibit B, etc.), the Order Form, and this Agreement.

9.12. Entire Agreement. This Agreement, along with the Order Form(s), and any attached exhibits, which are all incorporated into this Agreement by reference, contains the entire understanding of the Parties with respect to the subject matter hereof and supersedes all prior agreements, oral or written, and all other communications between the Parties relating to such subject matter. The Parties agree that any term or condition stated in a Customer purchase order is null and void. This Agreement may not be amended or modified except by mutual written agreement. In the event that any court holds any provision of this Agreement as null, void, or otherwise ineffective or invalid, such provision will be deemed to be restated to reflect as nearly as possible the original intentions of the Parties in

accordance with applicable law, and the remaining provisions will remain in full force and effect. The unenforceability of any provision of this Agreement will not affect the validity of the remaining provisions hereof. A waiver by either Party of a breach or failure to perform hereunder will not constitute a waiver of any subsequent breach or failure.

9.13. Nondiscrimination. To the extent applicable under A.R.S. 41-4401, EagleView and its subcontractors, if any, warrant compliance with all federal immigration laws and regulations that relate to their employees and compliance with the E-verify requirements under A.R.S. 23-214(A). EagleView shall further ensure that each subcontractor who performs any work for the County under this agreement likewise complies with State and Federal Immigration laws.

9.14 Cancellation Pursuant to A.R.S. 38-511. The parties acknowledge that this Agreement is subject to cancellation by Customer pursuant to the provisions of Section 38-511, Arizona Revised Statutes.

9.15. Forced Labor. Pursuant to A.R.S. 35-394, if EagleView engages in for-profit activity and has ten (10) or more full-time employees, EagleView hereby certifies that it does not currently, and agrees for the duration of this Agreement and any Order Form that it will not use (1) the forced labor of ethnic Uyghurs in the People's Republic of China, (2) any goods or services produced by the forced labor of ethnic Uyghurs in the People's Republic of China, or (3) any contractors, subcontractors, or suppliers that use the forced labor or any goods or services produced by the forced labor of ethnic Uyghurs in the People's Republic of China. If EagleView becomes aware during the term of this Agreement or any Order Form that EagleView is not in compliance with this certification, EagleView shall notify Customer within five (5) business days after becoming aware of the noncompliance. If EagleView does not provide Customer with a written certification that it has remedied the noncompliance within one hundred eighty (180) days after notifying Customer of the noncompliance, this Agreement and any Order Form shall terminate immediately. In the event that the Agreement and/or any Order Form termination date occurs before the end of the remedy period, this Agreement and any Order Form shall terminate on the termination date.

9.16. Israel Boycott Certification. If EagleView engages in for-profit activity and has ten (10) or more employees, EagleView hereby certifies that it is not currently engaged in, and agrees for the duration of this Agreement to not engage in, a boycott of goods or services from Israel as defined by A.R.S. 35-393.01. This certification does not apply to a boycott prohibited by 50 U.S.C. 4842 or a regulation issued pursuant thereto.

[Signature page follows]

CUSTOMER	EAGLEVIEW
YUMA COUNTY- AZ	PICTOMETRY INTERNATIONAL CORP. DBA EAGLEVIEW
Government	a Delaware corporation
SIGNATURE:	**SIGNATURE:** Robert Locke
NAME: Ian McGaughey	**NAME:** Robert Locke
TITLE: County Administrator	**TITLE:** President, Government
EXECUTION DATE: 11/17/25	**EXECUTION DATE:** 11/26/2025

EXHIBIT A
AGREEMENT NON-STANDARD TERMS AND CONDITIONS

The terms and conditions of this Exhibit A include all mutually agreed upon changes to the terms and conditions of this Agreement. In the event of any conflict, or inconsistency among the terms and conditions contained in documents comprising the Agreement, such conflict or inconsistency shall be resolved according to the following order of precedence, with the first document listed having the highest precedence: any exhibits in the order of their attachment (for example, Exhibit A, then Exhibit B, etc.), the Order Form, and this Agreement.

Not applicable to this Agreement.

[Remainder of page intentionally left blank]

EAGLEVIEW

ORDER FORM

CUSTOMER NAME:	Yuma County- AZ
ORDER FORM TERM (DURATION):	9 year(s)
ORDER FORM EFFECTIVE DATE:	11/26/2025
MASTER SERVICES AGREEMENT EFFECTIVE DATE: This Order Form is governed by the terms and conditions of the Master Services Agreement with the effective date listed between Pictometry International Corp. dba EagleView and Yuma County- AZ.	11/26/2025

ORDER #
LC-10012307

BILL TO
Yuma County- AZ
Daniel CRUZ
2351 W. 26TH STREET Yuma, Arizona 85364
(928) 817-5151
daniel.cruz@yumacountyaz.gov

SHIP TO
Yuma County- AZ
Daniel CRUZ
2351 W. 26TH STREET Yuma, Arizona 85364
(928) 817-5151
daniel.cruz@yumacountyaz.gov

CUSTOMER ID	**SALES REP**	**REFRESH FREQUENCY**
A1225915	Arjun Cardoza	Triennial

REFRESH 1

QTY	PRODUCT NAME	PRODUCT DESCRIPTION
300	EagleView Cloud - Imagery - 3in	Provides entitlement to the EagleView Platform, a secure hosted infrastructure and access to EagleView enabled workflow, analytics, and high-resolution imagery to dramatically improve efficiency for government agencies. Includes regular refreshes of ortho and oblique imagery at the GSD and frequency specified. Target capture season subject to weather and airspace permissions. Services term commences on date of activation.
979	EagleView Cloud - Imagery - 6in	Provides entitlement to the EagleView Platform, a secure hosted infrastructure and access to EagleView enabled workflow, analytics, and high-resolution imagery to dramatically improve efficiency for government agencies. Includes regular refreshes of ortho and oblique imagery at the GSD and frequency specified. Target capture season subject to weather and airspace permissions. Services term commences on date of activation.
1	EagleView Cloud - Physical Delivery - Ortho & Oblique Frames - 3in	Provides an offline copy of the individual ortho and oblique image frames in Pictometry Warehouse format at the GSD specified in imagery refresh. Delivery includes one copy of Pictometry Electronic Field Study (EFS) software, latest version, on the storage media specified herein, and access to download updated versions of the EFS Licensed Software for a period of one years from the initial date of shipment of the EFS software, along with a copy of the updated documentation.

1	EagleView Cloud - Physical Delivery - Ortho & Oblique Frames - 6in	Provides an offline copy of the individual ortho and oblique image frames in Pictometry Warehouse format at the GSD specified in imagery refresh. Delivery includes one copy of Pictometry Electronic Field Study (EFS) software, latest version, on the storage media specified herein, and access to download updated versions of the EFS Licensed Software for a period of one years from the initial date of shipment of the EFS software, along with a copy of the updated documentation.
1	EagleView Cloud - Physical Delivery - Orthomosaic - 3in	Provides an offline copy of the orthomosaic tiles and mosaics at the GSD specified in the EagleView Cloud once per refresh. Files to be provided in industry standard formats selectable by the customer with delivery made via online download or physically via a hard drive media.
1	EagleView Cloud - Physical Delivery - Orthomosaic - 6in	Provides an offline copy of the orthomosaic tiles and mosaics at the GSD specified in the EagleView Cloud once per refresh. Files to be provided in industry standard formats selectable by the customer with delivery made via online download or physically via a hard drive media.
1	Eagleview Cloud - Software - Plus	Provides an unlimited number of authorized users the ability to login and access the EagleView Cloud software and analytics via the web-based EagleView Cloud platform. This software provides a robust compliment of tools for engaging with imagery as well as additional project and collaboration tools, and access to mobile application. Requires the purchase of an EagleView - Imagery entitlement.
1	EagleView Cloud - Authorized Subdivisions	Extends the ability for a contracting county or non-state consortium of counties the ability to authorize access to their EagleView Cloud organization to any political unit or subdivision located totally or substantially within their boundary.
1	EagleView Cloud - Comprehensive Integration Bundle	Provides activation of integrations between the EagleView Cloud platform and compatible customer environments (including compatible CAMA providers, 911/PSAP, Cityworks, and ESRI/GIS) and via the Integrated Web Application.
1	EagleView Cloud - Disaster Response Program	Includes access to the EagleView Disaster Response Program which offers flights after an emergency or disaster. Refer to the attached detailed description of the Disaster Response Program.
1	EagleView Cloud - Early Access	Provides entitlement to imagery from counties neighboring the imagery AOI as part of EagleView Cloud. Also provides entitlement to Early Access to refreshed imagery captures which allows authorized users to use new imagery immediately following its preliminary processing and quality control checks and prior to its final processing. Early Access imagery will become available incrementally as it is processed, and it will remain available until final, fully processed imagery is made available through other means.
12	EagleView Cloud - Capture History	Includes access to historical ortho and oblique frame imagery from the EagleView archive. Quantity represents the number of calendar years of archive imagery available in EagleView Cloud.

96000	EagleView Cloud - Building Outlines	Building outlines are created from the most-nadir single-frame orthogonal image in a specified, EagleView imagery source. EagleView delivers digital building outlines and their attributes in shapefile and geodatabase formats. Coverage includes only locations specified in a single, customer-provided digital parcel shapefile. Parcels in the specified locations must be generally contiguous. All EagleView imagery to be used must be licensed or owned by the customer. Final invoiced amount will be adjusted for the actual quantity of records in the parcel file used for production. *Product Parameters*: Source One: Pictometry Imagery Source One Year 2025 Source Two: N/A Source Two Year: N/A Deck Identification Method: Marked with a Point To Be Used in Connect Assessment: No Modified Technical Specification:

REFRESH 2		
QTY	**PRODUCT NAME**	**PRODUCT DESCRIPTION**
300	EagleView Cloud - Imagery - 3in	Provides entitlement to the EagleView Platform, a secure hosted infrastructure and access to EagleView enabled workflow, analytics, and high-resolution imagery to dramatically improve efficiency for government agencies. Includes regular refreshes of ortho and oblique imagery at the GSD and frequency specified. Target capture season subject to weather and airspace permissions. Services term commences on date of activation.
979	EagleView Cloud - Imagery - 6in	Provides entitlement to the EagleView Platform, a secure hosted infrastructure and access to EagleView enabled workflow, analytics, and high-resolution imagery to dramatically improve efficiency for government agencies. Includes regular refreshes of ortho and oblique imagery at the GSD and frequency specified. Target capture season subject to weather and airspace permissions. Services term commences on date of activation.
1	EagleView Cloud - Physical Delivery - Ortho & Oblique Frames - 3in	Provides an offline copy of the individual ortho and oblique image frames in Pictometry Warehouse format at the GSD specified in imagery refresh. Delivery includes one copy of Pictometry Electronic Field Study (EFS) software, latest version, on the storage media specified herein, and access to download updated versions of the EFS Licensed Software for a period of one years from the initial date of shipment of the EFS software, along with a copy of the updated documentation.
1	EagleView Cloud - Physical Delivery - Ortho & Oblique Frames - 6in	Provides an offline copy of the individual ortho and oblique image frames in Pictometry Warehouse format at the GSD specified in imagery refresh. Delivery includes one copy of Pictometry Electronic Field Study (EFS) software, latest version, on the storage media specified herein, and access to download updated versions of the EFS Licensed Software for a period of one years from the initial date of shipment of the EFS software, along with a copy of the updated documentation.
1	EagleView Cloud - Physical Delivery - Orthomosaic - 3in	Provides an offline copy of the orthomosaic tiles and mosaics at the GSD specified in the EagleView Cloud once per refresh. Files to be provided in industry standard formats selectable by the customer with delivery made via online download or physically via a hard drive media.

1	EagleView Cloud - Physical Delivery - Orthomosaic - 6in	Provides an offline copy of the orthomosaic tiles and mosaics at the GSD specified in the EagleView Cloud once per refresh. Files to be provided in industry standard formats selectable by the customer with delivery made via online download or physically via a hard drive media.
1	Eagleview Cloud - Software - Plus	Provides an unlimited number of authorized users the ability to login and access the EagleView Cloud software and analytics via the web-based EagleView Cloud platform. This software provides a robust compliment of tools for engaging with imagery as well as additional project and collaboration tools, and access to mobile application. Requires the purchase of an EagleView - Imagery entitlement.
1	EagleView Cloud - Authorized Subdivisions	Extends the ability for a contracting county or non-state consortium of counties the ability to authorize access to their EagleView Cloud organization to any political unit or subdivision located totally or substantially within their boundary.
1	EagleView Cloud - Comprehensive Integration Bundle	Provides activation of integrations between the EagleView Cloud platform and compatible customer environments (including compatible CAMA providers, 911/PSAP, Cityworks, and ESRI/GIS) and via the Integrated Web Application.
1	EagleView Cloud - Disaster Response Program	Includes access to the EagleView Disaster Response Program which offers flights after an emergency or disaster. Refer to the attached detailed description of the Disaster Response Program.
1	EagleView Cloud - Early Access	Provides entitlement to imagery from counties neighboring the imagery AOI as part of EagleView Cloud. Also provides entitlement to Early Access to refreshed imagery captures which allows authorized users to use new imagery immediately following its preliminary processing and quality control checks and prior to its final processing. Early Access imagery will become available incrementally as it is processed, and it will remain available until final, fully processed imagery is made available through other means.
12	EagleView Cloud - Capture History	Includes access to historical ortho and oblique frame imagery from the EagleView archive. Quantity represents the number of calendar years of archive imagery available in EagleView Cloud.
96000	EagleView Cloud - ChangeFinder	Building outlines are created from the orthomosaic tiles of a specified newer Pictometry imagery source and classified relative to a specified, older imagery source. EagleView delivers digital building outlines from the newer imagery source and their classification attributes in shapefile and geodatabase formats. Coverage includes only locations specified in a single, customer-provided digital parcel shapefile. Parcels in the specified locations must be generally contiguous. All Pictometry imagery to be used must be licensed or owned by the customer. AccuPLUS or aerotriangulated orthomosaic tiles are used if licensed. Final invoiced amount will be adjusted for the actual quantity of records in the parcel file used for production. Use of older non-Pictometry-sourced imagery requires acceptance in advance. *Product Parameters*: Source One: Pictometry Outlines Source One Year 2025 Source Two: Pictometry Imagery Source Two Year: 2028

		Deck Identification Method: Marked with a Point To Be Used in Connect Assessment: Yes (Must be ordered as a separate line item) Modified Technical Specification:
1	Pictometry CONNECTAssessment	Pictometry CONNECTAssessment allows a user the ability to log in and access Pictometry ChangeFinder data and Pictometry-hosted imagery libraries, which have been licensed to the Customer and specified elsewhere in this Agreement, via a web-based application. The number of concurrent authorized users is specified in Customer's existing Connect agreement. Access runs concurrent with last activation (and scheduled expiration) of the Customer's existing Connect account. This offering requires an active Pictometry CONNECT account.

REFRESH 3		
QTY	**PRODUCT NAME**	**PRODUCT DESCRIPTION**
300	EagleView Cloud - Imagery - 3in	Provides entitlement to the EagleView Platform, a secure hosted infrastructure and access to EagleView enabled workflow, analytics, and high-resolution imagery to dramatically improve efficiency for government agencies. Includes regular refreshes of ortho and oblique imagery at the GSD and frequency specified. Target capture season subject to weather and airspace permissions. Services term commences on date of activation.
979	EagleView Cloud - Imagery - 6in	Provides entitlement to the EagleView Platform, a secure hosted infrastructure and access to EagleView enabled workflow, analytics, and high-resolution imagery to dramatically improve efficiency for government agencies. Includes regular refreshes of ortho and oblique imagery at the GSD and frequency specified. Target capture season subject to weather and airspace permissions. Services term commences on date of activation.
1	EagleView Cloud - Physical Delivery - Ortho & Oblique Frames - 3in	Provides an offline copy of the individual ortho and oblique image frames in Pictometry Warehouse format at the GSD specified in imagery refresh. Delivery includes one copy of Pictometry Electronic Field Study (EFS) software, latest version, on the storage media specified herein, and access to download updated versions of the EFS Licensed Software for a period of one years from the initial date of shipment of the EFS software, along with a copy of the updated documentation.
1	EagleView Cloud - Physical Delivery - Ortho & Oblique Frames - 6in	Provides an offline copy of the individual ortho and oblique image frames in Pictometry Warehouse format at the GSD specified in imagery refresh. Delivery includes one copy of Pictometry Electronic Field Study (EFS) software, latest version, on the storage media specified herein, and access to download updated versions of the EFS Licensed Software for a period of one years from the initial date of shipment of the EFS software, along with a copy of the updated documentation.
1	EagleView Cloud - Physical Delivery - Orthomosaic - 3in	Provides an offline copy of the orthomosaic tiles and mosaics at the GSD specified in the EagleView Cloud once per refresh. Files to be provided in industry standard formats selectable by the customer with delivery made via online download or physically via a hard drive media.
1	EagleView Cloud - Physical Delivery - Orthomosaic - 6in	Provides an offline copy of the orthomosaic tiles and mosaics at the GSD specified in the EagleView Cloud once per refresh. Files to be provided in industry standard formats selectable by the customer with delivery made via online download or physically via a hard drive media.

1	Eagleview Cloud - Software - Plus	Provides an unlimited number of authorized users the ability to login and access the EagleView Cloud software and analytics via the web-based EagleView Cloud platform. This software provides a robust compliment of tools for engaging with imagery as well as additional project and collaboration tools, and access to mobile application. Requires the purchase of an EagleView - Imagery entitlement.
1	EagleView Cloud - Authorized Subdivisions	Extends the ability for a contracting county or non-state consortium of counties the ability to authorize access to their EagleView Cloud organization to any political unit or subdivision located totally or substantially within their boundary.
1	EagleView Cloud - Comprehensive Integration Bundle	Provides activation of integrations between the EagleView Cloud platform and compatible customer environments (including compatible CAMA providers, 911/PSAP, Cityworks, and ESRI/GIS) and via the Integrated Web Application.
1	EagleView Cloud - Disaster Response Program	Includes access to the EagleView Disaster Response Program which offers flights after an emergency or disaster. Refer to the attached detailed description of the Disaster Response Program.
1	EagleView Cloud - Early Access	Provides entitlement to imagery from counties neighboring the imagery AOI as part of EagleView Cloud. Also provides entitlement to Early Access to refreshed imagery captures which allows authorized users to use new imagery immediately following its preliminary processing and quality control checks and prior to its final processing. Early Access imagery will become available incrementally as it is processed, and it will remain available until final, fully processed imagery is made available through other means.
12	EagleView Cloud - Capture History	Includes access to historical ortho and oblique frame imagery from the EagleView archive. Quantity represents the number of calendar years of archive imagery available in EagleView Cloud.
96000	EagleView Cloud - ChangeFinder	Building outlines are created from the orthomosaic tiles of a specified newer Pictometry imagery source and classified relative to a specified, older imagery source. EagleView delivers digital building outlines from the newer imagery source and their classification attributes in shapefile and geodatabase formats. Coverage includes only locations specified in a single, customer-provided digital parcel shapefile. Parcels in the specified locations must be generally contiguous. All Pictometry imagery to be used must be licensed or owned by the customer. AccuPLUS or aerotriangulated orthomosaic tiles are used if licensed. Final invoiced amount will be adjusted for the actual quantity of records in the parcel file used for production. Use of older non-Pictometry-sourced imagery requires acceptance in advance. *Product Parameters*: Source One: Pictometry Outlines Source One Year 2028 Source Two: Pictometry Imagery Source Two Year: 2031 Deck Identification Method: Marked with a Point To Be Used in Connect Assessment: Yes (Must be ordered as a separate line item) Modified Technical Specification:

FEES

Due at Initial Activation of Services – Refresh 1	$237,690.00
Due at Initial Activation of Services – Refresh 2	$237,690.00
Due at Initial Activation of Services – Refresh 3	$237,690.00

Unless either Party gives notice of its intent not to renew this Order Form at least one hundred and twenty (120) days prior to the end of the Term, it will automatically renew.

EagleView acknowledges that Customer is a government entity and the Order Form validity is based upon the availability of public funding under its authority. In the event that public funds are unavailable and not appropriated for the Customer's obligations under this Order Form, then Customer may, upon written notice to EagleView of the unavailability and non-appropriation of public funds, and without penalty to Customer, (1) elect to opt out of Initial Activation Services under Refresh 2 and/or Refresh 3, (2) elect to delay Initial Activation of Services under Refresh 2 and/or Refresh 3, or (3) terminate this Order Form. It is expressly agreed that Customer shall not activate this non-appropriation provision for convenience or to circumvent the requirements of this Order Form, but only as an emergency fiscal measure.

PRODUCT PARAMETERS

Disaster Response Program ("DRP")

If EagleView Cloud - Disaster Response Program is listed in the above product table, then this section applies to this Order Form. If EagleView Cloud - Disaster Response Program is not listed in the above product table, then this section does not apply to this Order Form.

This Order Form includes eligibility for the DRP described below so long as the customer remains under an active services agreement and in good standing with EagleView. Imagery captured through DRP will be captured "as-is".

A. Disaster Coverage Imagery at No Additional Charge – EagleView will, upon request of Customer and at no additional charge, provide standard quality imagery of up to 200 square miles of affected areas (as determined by EagleView) upon the occurrence of any of the following events during any period Customer is eligible for DRP:

- Hurricane: areas affected by hurricanes of Category 2 and higher.
- Tornado: areas affected by tornados rated EF4 and higher.
- Terrorist: areas affected by damage from terrorist attack.
- Earthquake: areas affected by damage to critical infrastructure resulting from earthquakes measured at 6.0 or higher on the Richter scale.
- Tsunami: areas affected by damage to critical infrastructure resulting from tsunamis.

B. Discounted Rate – Coverage for areas affected by the events set forth above exceeding 200 square miles will be, subject to EagleView resource availability, offered to Customer at the then-current DRP rates. Also, coverage for areas affected by hurricanes below Category II, tornadoes below EF4 or earthquakes rated below 6.0 on the Richter scale, flooding meeting or exceeding the major flood stage, wildfires impacting population centers, or other disasters as agreed to between the customer and EagleView, will be, subject to EagleView resource availability, offered to Customer at the then current DRP rates.

AOI(S) IF APPLICABLE

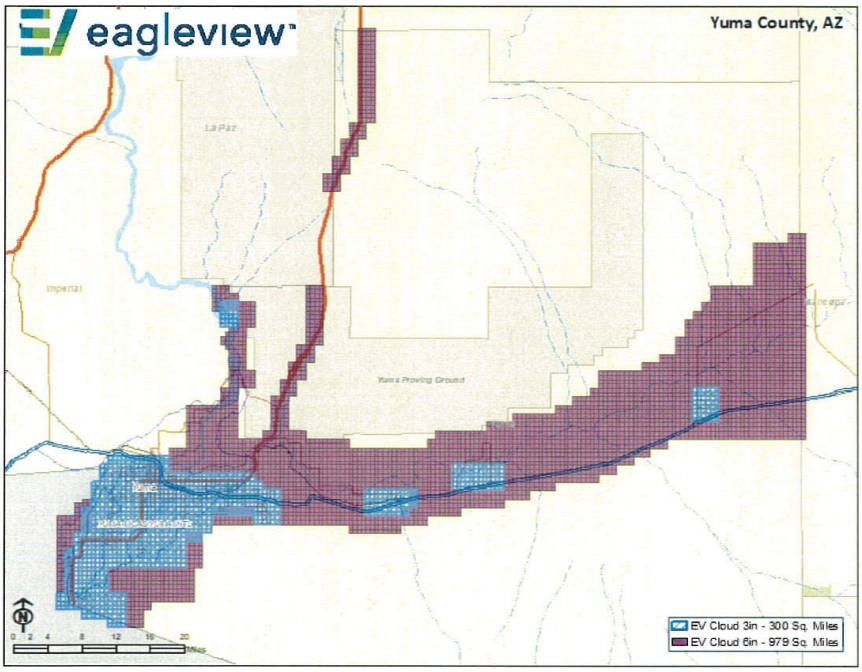

[Signature page follows]

This Order Form is incorporated by reference into the Master Services Agreement between EagleView and Customer.

CUSTOMER	EAGLEVIEW
YUMA COUNTY- AZ	PICTOMETRY INTERNATIONAL CORP. DBA EAGLEVIEW
Government	a Delaware corporation
SIGNATURE:	**SIGNATURE:** Robert Locke
NAME: Ian McGaughey	**NAME:** Robert Locke
TITLE: County Administrator	**TITLE:** President, Government
EXECUTION DATE: 11/19/25	**EXECUTION DATE:** 11/26/2025

AGENDA ITEM REVIEW FORM

Regular City Council Meeting **7. J.**

Meeting Date: 06/10/2026

Department Head: Jose A. Guzman, Director of Development Services, Development Services

Submitted By: Jose A. Guzman, Director of Development Services, Development Services

Action Requested: Motion
Resolution

ITEM:

Discussion and possible action on any and all matters regarding Resolution No. 2403. A Resolution of the Mayor and City Council of the City of San Luis, Arizona, approving and adopting an Intergovernmental Agreement with the City of Yuma for the use of pre-approved residential standard plans. **(Jose A. Guzman, Director of Development Services)**

SUMMARY:

During the 2025 legislative session, Arizona Senate Bill 1529 was approved and signed into law as Chapter 259. The bill requires municipalities to establish either standard pre-approved housing design plans or a pre-approved housing design plan program. The intent of the law is to help streamline the residential permitting process and support the production of additional housing.

Under SB 1529, municipalities may include plans that were developed and pre-approved by other municipalities or agencies in Arizona as part of their local pre-approved housing design plan program. The law also requires municipalities to process these pre-approved housing design plans administratively.

The City of Yuma has prepared pre-approved residential standard plans that include accessory dwelling units, as well as single-family, two-family, and three-family residential units. These plans were prepared under the 2024 IRC and 2024 IBC.

Through this IGA, the City of San Luis would be able to use the City of Yuma's plans for local permitting purposes and to help meet the requirements of SB 1529. The plans would still need to comply with San Luis zoning requirements, development standards, and any site-specific conditions before permits are issued. The agreement also makes clear that the plans are provided "as-is," and the city remains responsible for verifying compliance with its own local requirements.

This agreement provides the city with a practical way to comply with the new State requirement while also giving staff and applicants another tool to make the residential permitting process more efficient.

The proposed agreement includes a one-time compensation amount based on population. According to Exhibit A of the agreement, the City of San Luis' share is $28,549.40, based on a population of 41,409, representing approximately 19% of the total project cost of $150,260.00.

RECOMMENDATION / SUGGESTED MOTION:

I MOVE TO APPROVE AND ADOPT RESOLUTION NO. 2403

Fiscal Impact

IS THERE FISCAL IMPACT ASSOCIATED WITH THIS ITEM:	YES
CITY/STATE/FEDERAL FUNDS:	CITY
TOTAL:	$28,549.40
BUDGETED AMOUNT:	$28,549.40
AVAILABLE AMOUNT TO TRANSFER:	N/A
ACCT NAME & GL#/REMAINING BALANCE BEFORE PURCHASE:	Building Safety - GL 100-131-80000 Balance $30,350.00

FISCAL IMPACT STATEMENT (IF THIS IS A BUDGET TRANSFER, YOU MUST ATTACH THE BUDGET ADJUSTMENT FORM):

N/A

Attachments

Resolution No. 2403

SB1529 - Chapter as A.R.S. 9-461.20

OFFICE OF THE
MAYOR
CITY OF SAN LUIS

Resolution

No. 2403

A RESOLUTION OF THE MAYOR AND CITY COUNCIL OF THE CITY OF SAN LUIS, ARIZONA, APPROVING AND ADOPTING AN INTERGOVERNMENTAL AGREEMENT WITH THE CITY OF YUMA FOR THE USE OF PRE-APPROVED RESIDENTIAL STANDARD PLANS.

WHEREAS, Arizona Senate Bill 1529 requires municipalities to establish standard pre-approved housing design plans or a pre-approved housing design plan program; and

WHEREAS, the City of Yuma has prepared pre-approved residential standard plans for use by participating jurisdictions; and

WHEREAS, the City of San Luis desires to use the City of Yuma's pre-approved residential standard plans to assist with compliance with Senate Bill 1529; and

WHEREAS, the City is authorized to enter into this Agreement pursuant to A.R.S. Title 11, Chapter 7, Article 3 (A.R.S. § 11-952 et seq.); and

NOW, THEREFORE, BE IT RESOLVED by the Mayor and City Council of the City of San Luis as follows:

SECTION 1: The Intergovernmental Agreement with the City of Yuma for the use of pre-approved residential standard plans, attached hereto as Exhibit "A", is hereby approved.

SECTION 2: The City Manager, or designee, is hereby authorized and directed to enter into said agreement on behalf of the City of San Luis and take any and all actions as may be necessary to put the agreement into effect.

PASSED, APPROVED AND ADOPTED by the Mayor and City Council of the City of San Luis, Arizona, this **10th** day of **June** 2026.

_____
Nieves Riedel, Mayor

ATTEST:

_____
Sonia Cornelio, City Clerk

APPROVED AS TO FORM:

_____
Joseph Estes, City Attorney

9-461.20. Municipal housing; standard preapproved housing design plans; indemnification; definition

A. A municipality shall establish standard preapproved housing design plans or a preapproved housing design plan program. The standard preapproved housing design plans developed by the municipality shall include at least three different elevation options for each class of standard preapproved housing design plan. The standard preapproved housing design plan classes are:

1. Class 1. Beginning July 1, 2026, in areas zoned as single-family residential, the municipality shall create at least three standard preapproved housing design plans for single-family homes, which must range in size from eight hundred square feet to two thousand square feet per single-family home, or three single-family home sizes beginning with the minimum single-family home size allowed by the municipality.

2. Class 2. Beginning January 1, 2027, in areas zoned as single-family residential that allow for the development of duplexes, the municipality shall create at least three standard preapproved housing design plans for duplex homes, which must range from four hundred square feet to one thousand square feet per duplex unit.

3. Class 3. Beginning January 1, 2027, in areas zoned as single-family residential that allow for the development of triplexes, the municipality shall create at least three standard preapproved housing design plans for triplex homes, which must range in size from four hundred square feet to one thousand square feet per triplex unit.

4. Class 4. Beginning July 1, 2026, in areas zoned as single-family residential that allow for the development of accessory dwelling units, the municipality shall create at least three standard preapproved housing design plans for accessory dwelling units. The three standard preapproved housing design plans for accessory dwelling units shall be one of the following sizes:

(a) Two hundred square feet.

(b) Six hundred square feet.

(c) One thousand square feet.

B. A preapproved housing design plan program established pursuant to subsection A of this section shall comply with all of the following:

1. A municipality shall accept plan submissions for the preapproved housing design plan program for class 1, class 2, class 3 and class 4 plans prescribed by subsection A of this section.

2. A municipality may not restrict who may submit a preapproved housing design plan pursuant to the preapproved housing design plan program.

3. A municipality shall approve or deny a preapproved housing design pursuant to the preapproved housing design plan program pursuant to section 9-500.49.

4. A municipality may charge an applicant who submits a preapproved housing design plan pursuant to the preapproved housing design plan program the same fees that the municipality would charge an applicant who has submitted a request for approval for the same sized class 1, class 2, class 3 and class 4 plans approved pursuant to subsection A of this section.

5. A municipality shall post plans that are preapproved pursuant to the preapproved housing design plan program on the municipality's official website. Posting by the municipality of a preapproved housing design plan pursuant to the preapproved housing design plan program does not constitute an endorsement by the municipality of the applicant or the applicant's application for a preapproved housing design plan pursuant to the preapproved housing design plan program.

6. A municipality shall post the contact information of the applicant of preapproved housing design plans submitted pursuant to the preapproved housing design plan program. The municipality is not responsible for the accuracy of the applicant's posted contact information.

7. A municipality shall remove a preapproved housing design plan submitted pursuant to the preapproved housing design plan program from the municipality's official website within thirty days after receiving a request from the applicant to remove the preapproved housing design plan.

8. A municipality may include the following class 1, class 2, class 3 and class 4 preapproved housing design plans in the preapproved housing design plan program:

(a) Plans that are developed and approved pursuant to subsection A of this section.

(b) Plans that have been developed and preapproved by other municipalities or agencies in this state.

9. A municipality shall administratively approve or deny an application for a class 1, class 2, class 3 or class 4 preapproved housing design plan submitted pursuant to the preapproved housing design plan program without discretionary review.

C. Notwithstanding any other law, a municipality may require a person or entity to release and indemnify the municipality and the municipality's employees and contractors as a condition of using a standard preapproved housing design plan.

D. For the purposes of this section, "accessory dwelling unit" has the same meaning prescribed in section 9-461.18.