STRUCTURAL NOTES

I. DESIGN DATA

A. BUILDING CODE

1. INTERNATIONAL BUILDING CODE 2006 Edition

B. DESIGN LOADS

1.	Wind Load	Exposure	C	
		Design Wind Speed	90	MPH
2.	Roof Loads	Live Load (L.L.)	20	PSF**
		Dead Load (DESIGN) (D.L.)	20	PSF
3.	Floor Loads	Live Load	80	PSF*
		Dead Load (SUPERIMPOSED)	5	PSF
4.	Seismic Zone 0			

* Reduced per I.B.C. Sec. 1607.4
** Reduced per I.B.C. Sec. 1605.3

C. ALTERNATE DESIGNS

Alternate structural systems & details will only be considered provided they are submitted with calculations certified by a Professional Engineer Registered in the State of the project. The calculations must show the equivalency of the alternate & acceptance of the alternate by the engineer must be in writing.

D. FUTURE EXPANSION

This project is not designed for future expansion.

E. ROOF SLOPE

The roof has not been designed for ponding based on a roof slope of 4" per foot.

F. Contractor to verify all conditions at the jobsite and report any descrepancies to the engineer prior to start of any construction.

II. SPECIAL INSPECTIONS

A. Special inspections are required in accordance w/ Latest Edition IBC, Section 1701 for the following portions of construction :

1. Concrete
2. Bolts installed in concrete
3. Reinforcing steel

III. SITE WORK

A. SOIL REPORT

1. Foundations, retaining & basement walls, foundation drainage, slabs on grade & other items related to the soils are designed & shall be constructed in accordance with the recommendations of RABA KISTNER-BRITTEST CONSULTANTS, INC. REPORT NO. AAA00-0044-00 DATED DEC. 12, 2000.
2. Design net soil bearing capacity is as follows :
   a. Grade beams- 3,200 PSF

BUILDING PAD PREPARATION (Slab-On-Grade Areas):

1. Remove all remaining vegetation, surficial clay soil, uncontrolled fill and obstructions from the existing surface of the site to a minimum of 5'-0" outside the building lines to a minimum depth of 2'-6". All clay pockets within the building area shall be excavated to a maximum depth of 2'-6".
2. Proof roll exposed subgrade and recompact all soft areas.
3. Construct a compacted base of select fill overlaying the existing soil with a minimum thickness of 30 inches below the bottom of the slab. The select fill shall be in compliance with the specifications in item 4 below.
4. Bring building areas to planned grade using off-site fill selected and compacted in accordance with the following:
   a. Gradation
      Shall meet or exceed Texas Crushed Stone 1 1/4" screenings.
   b. Plasticity Index
      Material used for the granular fill shall have a plasticity index between 4 and 15.
   c. No organic matter is permitted.
   d. Compaction
      Compact the material to at least 95% of the maximum dry density as determined ASTM D-698 (Compaction Test. Hold water contents during compaction to -2% to +2% of laboratory optimum and compacted lift thickness to 8 inches maximum.
   e. Approval
      All select fill material shall be approved by the Engineer prior to it being used on the project.

IV. FORMS:

1. Materials:
   A. Lumber: All lumber and plywood used in the construction of forms for concrete shall be sound, clean and free of surface imperfections, and of sufficient size and thickness to rigidly support the loads involved.
   B. Plywood: Form plywood shall be sound and free of surface imperfections, and shall be manufactured with exterior glue suitable for use in forming concrete.
   C. Accessories: Form ties, clamps and other accessories shall be of such type, size, etc. as will safely support the loads to be encountered. Accessories on exposed faces shall be such as will not leave exposed metal on concrete face.
   D. Form Coating: Equal to Sonneborn Formsaver.
2. Application:
   A. The contractor shall employ an experienced surveyor to supply all necessary lines and levels to insure that all finished concrete work is properly located, straight, true and square.
   B. All vertical concrete surfaces shall be formed with wood, including edges of walks, slabs on grade, steps on grade and exposed portions of grade beams. If the earth will stand vertical and firm during excavating and concreting, no forms need be constructed for concrete below grade.
   C. Form construction and removal shall conform to the recommendations and requirements of the appropriate sections of ACI Standard 347 and ACI Code 318, latest versions. All form work shall be placed straight, level, plumb and true to line, sufficiently supported, braced and tied to rigidly support the loads involved without movement, and constructed to maximum resistance to shortening of the member. All joints in form work shall be tight and neat to prevent leakage or irregularities in exposed surfaces.
   D. The contractor shall check with all other trades and make certain that all piping, conduit, sockets, inserts, sleeves, anchors, bolts, etc., required by the various trades are properly placed and supported to prevent movement during concreting.
   E. The contractor shall obtain the Architect's and the Engineer's review and okay before placing any structural concrete, giving at least 48 hours notice before pours are scheduled. Obtain the Architect's approval before pouring non- structural concrete.
   F. The Contractor shall construct formwork to adequately support pressure from the wet concrete. Reinforcing shall be installed to the Engineer's satisfaction before placing concrete.
   G. Thoroughly clean all form surfaces in contact with concrete and coat with approved form coating. Oiled forms shall not be used for exposed concrete surfaces which are later to be plastered or rubbed.
   H. Leave all formwork in place for a time consistent with recommendations of the American Concrete Institute. In general, the perimeter vertical beam forms may be removed within 24-28 hours after concrete is placed. Should inconsistencies and/or irregularities on the lines, levels or plumb of the concrete occur, the contractor shall make such corrections as the Engineer directs, without extra cost to the owner.

V. REINFORCING MATERIAL PROPERTIES

I. REINFORCING PROPERTIES :	FYKSI	ASTM
a. All bars unless noted	60	A615
b. Ties & stirrups	60	A615
c. Welded wire fabric (smooth)	65	A185
d. Post-tensioning strand	270Fpu	A416
e. Prestressing strand	270Fpu	A416
f. Weldable rebar	60	A706

VI. EXPANSION AND CONTROL JOINTS

A. Control joints are to encompass an area not greater than 400 square feet. The minimum distance between control joints is 15'-0". Control joints shall be placed at mid span between grade beams parallel to control joint. Contractor shall submit control joint layout plan for review By Architect and Engineer prior to construction of slab.

VII. CAST IN PLACE CONCRETE

1. Materials:
   A. Cement: Portland Cement shall conform to the standard specifications for Portland Cement, ASTM Designation C-150, latest version Type I or Type III.
   B. Concrete Aggregates: Concrete aggregates shall conform to the specifications for Concrete Aggregates, ASTM C-33, latest version. The maximum size shall be not larger than 1-1/2 inches for slabs on grade and 3/4 inches for concrete fill over formed decks.
   C. Water: Water shall be clean, potable and free of injurious amounts of acids, alkalies or organic materials.
   D. Ready Mixed Concrete: Ready Mixed Concrete shall conform to ASTM Specifications C-494, latest version.
   E. Expansion Joints (fill Shown): Premolded Joint filler shall consist of asphalt vegetable fiber and mineral filler between two sheets of asphalt saturated paper and shall meet the requirements of ASTM Specification D-994, latest version.
   F. Admixtures: Chemical compounds shall be used as an Admixture to control plastic shrinkage, improved workability and entrain 3 to 5% air. The Admixtures shall contain no chlorides, fluorides or nitrates and shall be formulated by the manufacturer for the job area and weather conditions to control setting time. Admixtures shall conform to ASTM Specifications C-260 and C-494, latest version. The admixtures intended for use shall be submitted to the Engineer for approval before any actual mix is made.
2. Place concrete in compliance with practices and recommendations of ACI 304.
   A. Cold Weather Placing: Comply with ACI 306.
   B. Hot Weather Placing: Comply with ACI 305.
   C. Batching, Mixing & Delivery: Comply with ACI 304.
3. ALL CONCRETE SHALL BE CONSOLIDATED BY USE OF A MECHANICAL VIBRATOR.
4. The maximum time interval between the addition of mixing water and/or cement to the batch, and the placing of the last of the concrete batch in the forms shall not exceed ninety (90) minutes for ambient temperatures below 90 degrees and sixty (60) minutes for ambient temperatures of 90 degrees and above.
5. No concrete shall be placed where the concrete temperature exceeds 90 degrees fahrenheit, before any water is added at the jobsite.
6. Reinforcing bars shall be designed, fabricated and placed in accordance with the latest ACI Specifications.
7. Continuous reinforcing bars shall have a minimum lap of 40 diameters or 24", whichever is greater.
8. Provide corner bars for all continuous reinforcing bars at all corners with minimum lap of 40 diameters or 24", whichever is greater.
9. Welded Wire Fabric (WWF) shall conform to ASTM A185.
10. Nonshrink grout shall be ready-to use metallic aggregate product requiring only additions of water at the site, and shall have the following attributes.
    A. Be capable of producing a flowable grouting material having no drying shrinkage or settlement at any age.
    B. The compressive strength of the grout (50mm or 2" cubes) shall be not less than 5,000 psi at age 28 days.
    Store, mix and place nonshrink grout in strict accordance with manufacturer's recommendations as approved by the Engineer.
11. Provide 1/2" premolded expansion joints where new concrete walks abut the building, existing curbs and walks.
12. Deposit concrete continuously or in layers of such thickness that no concrete will be placed on concrete which has hardened sufficiently to form seams or planes of weakness within the section.
13. Where a section cannot be placed continuously, provide construction joints as approved by the Engineer.
14. Place concrete at such a rate that concrete which is being integrated with fresh concrete is still plastic.
15. Deposit concrete as nearly as practicable in its final location to avoid segregation due to rehandling and flowing. Do not subject concrete to any procedure which might cause segregation. Do not use mechanical vibrators to move concrete.
16. Screed concrete which is to receive other construction to the proper level to avoid excessive shimming and grouting.
17. Do not use concrete that has become nonplastic and unworkable, or does not meet the required quality control limits or which has been contaminated by foreign materials.
18. Do not retemper concrete after initially obtaining the proper slump on any load of concrete.
19. All reinforcing shall be supported on metal supports and securely tied to prevent movement during concreting.
20. All concrete shall be designed and constructed in accordance w/ IBC Chapter 19 & ACI-318, latest editions.
21. Provide extra reinforcing on each face around all openings 24" or larger in all slabs & walls equal to one half the interrupted reinforcing bars on each side but not less than 2-#5 bars with Class B lap but not less than 2 feet beyond edge of openings.
22. Provide a 3/4" chamfer on all exposed corners of concrete.
23. The following minimum concrete cover shall be provided for reinforcement :

	MINIMUM COVER IN.
a. Concrete cast against & permanently exposed to earth	3"
b. Concrete exposed to earth or weather : #6 THRU #18 bars	2"
#5 & smaller bars	
c. Concrete not exposed to weather or in contact with ground : #14 & #18 bars	1 1/2"
slabs & walls :	2"
#11 & smaller bars	1"
Beams & Columns : primary reinforcement, ties & stirrups	1"

24. If any ponds, tree wells or abrupt grade changes occur within 5'-0" of perimeter grade beam, the grade beam must be extended a minimum of 12" below the lowest elevation of the grade change.
25. Underslab vapor barrier shall be StegoWrap 15 mil. or equal. Vapor retarder shall be installed in accordance with manufacturer's specifications.
26. All anchor bolts and shearwall hold down bolts are to be "wet set". Do not drill and epoxy set hold down or anchor bolts.

CONCRETE MATERIAL PROPERTIES

I. CONCRETE PROPERTIES :	F'c PSI 28 DAYS	SLUMP INCHES
a. Footings, piers, grade beams & foundation walls	3000	4 ± 1
b. Interior slab on grade	3000	5 ± 1
c. Exterior slab on grade	3000	5 ± 1
d. Topping & concrete over metal deck	3500	5 ± 1

2. All exterior concrete shall be air entrained to give the concrete an air content of 6±1% by volume.
3. Cast-in-Place concrete shall be regular weight with a minimum compressive strength of 3000 PSI at 28 days. The concrete mix design shall have a minimum of 5 sacks of cement for 3000 PSI and 5 1/2 sacks for 3500 PSI per cubic yard of concrete. The mix design shall be prepared by a testing agency and reviewed by the Engineer prior to placing any concrete. All concrete shall be by one supplier unless approved by the Engineer. The use of Fly Ash is not permitted.
4. Concrete shall have a maximum slump of 5" for slabs and 4" for all other concrete.

VIII. STRUCTURAL STEEL

1. Structural Steel design and construction shall conform to IBC Chapter 22, - General design requirements. All steel shall be designed, fabricated and erected in accordance with the latest AISC Specifications for Design, Fabrication and Erection of Structural Steel for Buildings.
2. All welding shall be in accordance with the latest American Welding Society Specifications.
3. All structural steel shall be ASTM A572.
4. All bolts shall be ASTM A307.
5. All steel to be given one shop coat of rust inhibitive primer, after fabrication.
6. Structural Steel Supplier is responsible for & shall submit shop drawings for all structural steel.
7. Structural Steel Supplier shall furnish bolts for OSHA connections (see drawings for details).
8. Provide protective asphaltic coating or equal around structural steel below grade.

STEEL MATERIAL PROPERTIES

I. STEEL PROPERTIES :	FYPSI	ASTM
a. Structural wide flange shapes	50,000	A572
b. Other struct. shapes, etc.	36,000	A36
c. High Strength bolts, U.N.O.	74,000	A325
d. Anchor Bolts (tensile strength)	60,000	A307
e. Welding Electrodes	E70XX	A233
f. Deck Welding Electrodes	E60XX	A233
g. Structural Pipes	36,000	A53, GRADE B
h. Structural Tubes	46,000	A500, GRADE B
i. Headed Studs	50,000	A108

j. Expansion Bolts shall be Epcon Epoxy Anchors or pre-approved equal.

IX. FRAMING:

1. All bolts shall be ASTM A-307.
2. All beam framing lumber shall be No.1 grade Southern Pine Kiln-Dried or better. All column lumber shall be No. 1 Douglas Fir Kiln- Dried or better.
3. All wood connector and hangers shall be as manufactured by Simpson Strong-Tie Co. or equal.
4. All connectors or hangers for pressure treated material shall be stainless steel.
5. All exterior walls and interior shear walls shall be sheathed with a minimum of 7/16-24/48 C-D Exterior Plywood or OSB. Attach to framing with 10d nails @ 6" o.c.
6. All exterior walls and interior shear walls shall be anchored to the foundation with 1/2" x 12" anchor bolts at 48" o.c.
7. All roofs shall be decked with 5/8"-48/24 C-D Exterior Plywood nailed with 6d nails at 6" o.c. at all supports.
8. All wall framing shall be #2 Southern Yellow Pine or better.
9. All roof joists and ceiling joists shall be #2 Southern Yellow Pine or better.
10. No holes, notches or other cuts shall be made in any beam, joist, rafter or other framing member without written approval by the engineer.
11. No hole larger than 1" in diameter will be allowed in any load bearing or exterior wall stud. 1" diameter and smaller holes shall be located on the centerline of the side cuts and spaced no less than 6" o.c. No other holes will be allowed without the written approval of the engineer.

ROOF TRUSSES

LOADING: Top Chord Dead Load = 10 psf
Top Chord Live Load = 20 psf
Bot.Chord Dead Load = 10 psf
Bot Chord Live Load = 0 psf
Uplift = 10 psf
Duration Factor of 125%

Trusses shall be Designed and Manufactured to be Equal to that Manufactured by Alpine Engineered Products, Inc. All trusses shall be engineered for the loading indicated and the manufacturer shall submit sealed engineering drawings for each truss type and length.

X. USE AND/OR RELEASE OF STRUCTURAL ENGINEERING ELECTRONIC FILE

The electronic files for the structural engineering documents will not be released for use during construction or for the preparation of shop drawings or submittals. Each supplier or fabricator is responsible for reproducing the information required for their submittal. The duplicating of any part of these documents for inclusion in shop drawings or submittals is also prohibited.

XI. DETAIL NOTES

Details noted as typical shall apply in all cases unless specifically shown or noted otherwise.

XII. STRUCTURAL REQUIREMENTS FOR SUBMITTALS

The following are submittals required by Engineer. Use plans and spec book for product list.

1. Select fill material.
2. Soil compaction test results.
3. Reinforcement & concrete accessories including vapor barrier.
   4. Concrete mix design.
   5. Anchor bolts.
   6. Wood trusses.
   7. Structural steel.
   8. Concrete test results.

XIII. STRUCTURAL REQUIREMENTS FOR SITE VISITS.

Site visits for construction observation will not be made by Engineer until all submittals and or testing results have been reviewed and accepted by the Engineer. Contractor is responsible for scheduling submittals to allow the Engineer adequate time to review and comment before proceeding with construction.

Representative of FHI will visit the site at the following stages of construction:

A. After forms, rebar, embeds and other accessories are in place and 48 hours prior to placement of concrete.
B. All anchor bolts and embeds are to be set and adequately tied & held in position prior to the start of placing concrete.
C. Framing.
D. After decking is in place and attached to structure, but prior to covering with floor or roof materials.

Please refer to specifications or General Notes for project specific instructions.

Contractor shall issue to the Engineer a complete project schedule with the above site visit noted and notify the Engineer a minimum of 48 hours prior to the scheduled visit to confirm time and date of required visit. Failure of the Contractor to accomplish this notification will not require the Engineer to respond on shorter notice, nor will the Contractor proceed without the Engineer performing appropriate site visit. Additionally if the Contractor requests or schedules a site visit and construction is not at the appropriate stage for the Engineer to perform the proper observations, another site visit will be required and scheduled at the Contractor expense for all time and travel expenses of the Engineer or his representative. Engineer will not issue any type or form of compliance or concurrence statement for construction without performing the above noted site observations.

SCHEDULES

HEADER SCHEDULE

HEADER DES.	HEADER
H-1	(3) 2X6
H-2	(3) 2X8
H-3	(3) 1.75X9.50 LVL
H-4	(3) 2X12

NOTE:
1. ALL DIMENSIONAL LUMBER HEADERS ARE TO HAVE 1/2" PLYWOOD BETWEEN PLIES.
2. ALL LVL'S ARE TO HAVE FOLLOWING PROPERTIES:
   Fb 2650 1.8E

DRAWING SYMBOLS

EARTH/COMPACT FILL
WOOD BLOCKING
WELDED WIRE FABRIC
SPAN DIRECTION OF HOLLOW CORE SLABS
BEAM SPLICE LOCATION
BEAM MOMENT CONNECTION
MASONRY WALL

COLUMN GRID LINE and GRID DESIGNATIONS
GRID DESIGNATION
SECTION CUTS
SECTION NUMBER
SHEET NUMBER
DETAIL TARGETS
DETAIL NUMBER
SHEET NUMBER
ELEVATION TARGET
SECTION NUMBER
SHEET NUMBER
REVISION CLOUDS
REVISED AREA CLOUDED

ABBREVIATIONS

(A)	A.B.	ANCHOR BOLT	(E)	E	EAST	(L)	LLH	LONG LEG HORIZONTAL
	ALT.	ALTERNATE		EA.	EACH		LLV	LONG LEG VERTICAL
	ARCH.	ARCHITECTURAL)		E.S.	EACH SIDE		LL.	LIVE LOAD
(B)	B.S.	BOTH SIDES		ELEV.	ELEVATION	(M)	MIN.	MINIMUM
	BBE.	BOTTOM BEAM ELEVATION		EQ.	EQUAL		MAS.	MASONRY
	BLKG.	BLOCKING		EXIST.	EXISTING		MAX.	MAXIMUM
	BLDG.	BUILDING		EXP.	EXPANSION		MANUF.	MANUFACTURER
	BM.	BEAM		EXT.	EXTERIOR		MEZZ.	MEZZANINE
	BOT.	BOTTOM	(F)	FD.	FLOOR DRAIN		MISC.	MISCELLANEOUS
	BRG.	BEARING		FDN.	FOUNDATION		M.O.	MASONRY OPENING
	BSMT.	BASEMENT		FTG.	FOOTING		MATL.	MATERIAL
	BTWN.	BETWEEN		FUT.	FUTURE		MTL.	METAL
	BLK.	BLOCK		F.S.	FAR SIDE	(N)	N	NORTH
(C)	C.J.	CONTROL JOINT		FAB.	FABRICATE (OR)		NTS	NOT TO SCALE
	CL	CENTER LINE		FLG.	FLANGE		N.S.	NEAR SIDE
	CLR.	CLEAR(ANCE)		F.B.K.	FACE BRICK		N.I.C.	NOT IN CONTRACT
	C.M.U.	CONCRETE MASONRY UNIT	(G)	GA.	GAGE, GAUGE	(O)	O.C.	ON CENTER(S)
	C.B.	CONCRETE BLOCK		GALV.	GALVANIZED		O.S.	OUTSIDE
	COL.	COLUMN		G.C.	GENERAL CONTRACTOR)		OPNG.	OPENING
	CONC.	CONCRETE		G.B.	GRADE BEAM		OPP.	OPPOSITE
	CONN.	CONNECTION	(H)	H.A.	HEADED CONCRETE ANCHOR		O.F.	OUTSIDE FACE
	CONST.	CONSTRUCTION		HORIZ.	HORIZONTAL	(P)	P.C.	PRECAST CONCRETE
	CONT.	CONTINUOUS		HT.	HEIGHT		PERIM.	PERIMETER
	C.I.P.	CAST IN PLACE		H.S.	HEADED STUDS		P.J.	PANEL JOINT
	COMP.	COMPOSITE		HSS	TUBE STEEL		PL	PLATE
(D)	DET.	DETAIL	(I)	INFO.	INFORMATION		PLF	POUNDS PER LINEAR FOOT
	DIA.	DIAMETER		I.F.	INSIDE FACE		PHB	PRE-ENGINEERED METAL BUILDING
	DIAG.	DIAGONAL	(J)	JST.	JOIST		PROJ.	PROJECTION
	DN.	DOWN		JT.	JOINT		PSF.	POUNDS PER SQ. FOOT
	DWG.	DRAWING		J/BRG	JOIST BEARING		PSI.	POUNDS PER SQ. INCH
	DBL.	DOUBLE	(K)	K	KIP		P.T.	PRESSURE TREATED
	D.L.	DEAD LOAD		K.O.	KNOCK-OUT	(Q)	QTY.	QUANTITY
	DO.	DITTO		K.S.I.	KIPS PER SQ. INCH			

(R)	RAD.	RADIUS
	R.D.	ROOF DRAIN
	REV.	REVISION, REVISED(D)
	REINF.	REINFORCED), (ING)
	REF.	REFERENCE
	REQ'D.	REQUIRED
(S)	S	SOUTH
	SCHED.	SCHEDULE
	SIM.	SIMILAR
	SQ.	SQUARE
	STD.	STANDARD
	STL.	STEEL
	STRUCT.	STRUCTURAL
	SPA.	SPACE(S)
	S.L.	SNOW LOAD
(T)	TEMP.	TEMPORARY
	TYP.	TYPICAL
	T.O.	TOP OF
	TBE.	TOP OF BEAM ELEVATION
	TDE.	TOP OF DECK ELEVATION
	TFE.	TOP OF FOOTING ELEVATION
	TSE.	TOP OF SLAB ELEVATION
	T&B	TOP AND BOTTOM
	T&G	TONGUE AND GROOVE
(U)	UNEXC.	UNEXCAVATED
	U.N.O.	UNLESS NOTED OTHERWISE
(V)	VERT.	VERTICAL
(W)	W	WEST
	WITH	WITH
	W.P.	WORK POINT
	W.W.F.	WELDED WIRE FABRIC

DRAWING INDEX

S1.0 - NOTE & SCHEDULE SHEET
S1.1 - FOUNDATION PLAN
S2.0- ROOF FRAMING PLAN
S3.0- FOUNDATION DETAILS
S4.0- FRAMING DETAILS
S4.1- FRAMING DETAILS

Revisions:

FHI
CIVIL & STRUCTURAL ENGINEERING
One Chisholm Trail, Suite 5200
Round Rock, TX 78681
Phone (512) 244-1546
Fax (512) 388-3698
TBPE Registration No. F-295

JOB NO. 29085 © 2009 FHI, Inc.

THE SEAL APPEARING ON THIS DOCUMENT WAS AUTHORIZED BY LARRY J. FISHER, P.E. 50110.
THIS DRAWING IS ISSUED FOR CONSTRUCTION. THIS DRAWING MAY NOT BE MODIFIED WITHOUT THE EXPRESS WRITTEN CONSENT OF THE ENGINEER, AND THEN ONLY IN ACCORDANCE WITH THE RULES OF THE TEXAS ENGINEERING PRACTICE ACT.

STATE OF TEXAS
LAURENCE J. FISHER
50110
REGISTERED
PROFESSIONAL ENGINEER
10-30-09

Consultant(s)

BWMGROUP
planning | landscape architecture
102 E. Main, Suite 200
Round Rock, Tx. 78664
email: tbargainer@bwmgrp.com
ph: (512) 238-8912 Ext. 206
fax: (512) 238-8913
www.bwmgrp.com

Project :

Regional Park Headquarters
ROUND ROCK, TEXAS

Drawn by: MP
Checked by: RT
Approved by: LF
Job Number: 09042
Date: 10/30/2009
Submittal Type:
CONSTRUCTION
Cad File:
Sheet Title:
GENERAL NOTES
Sheet No.:
S1.0

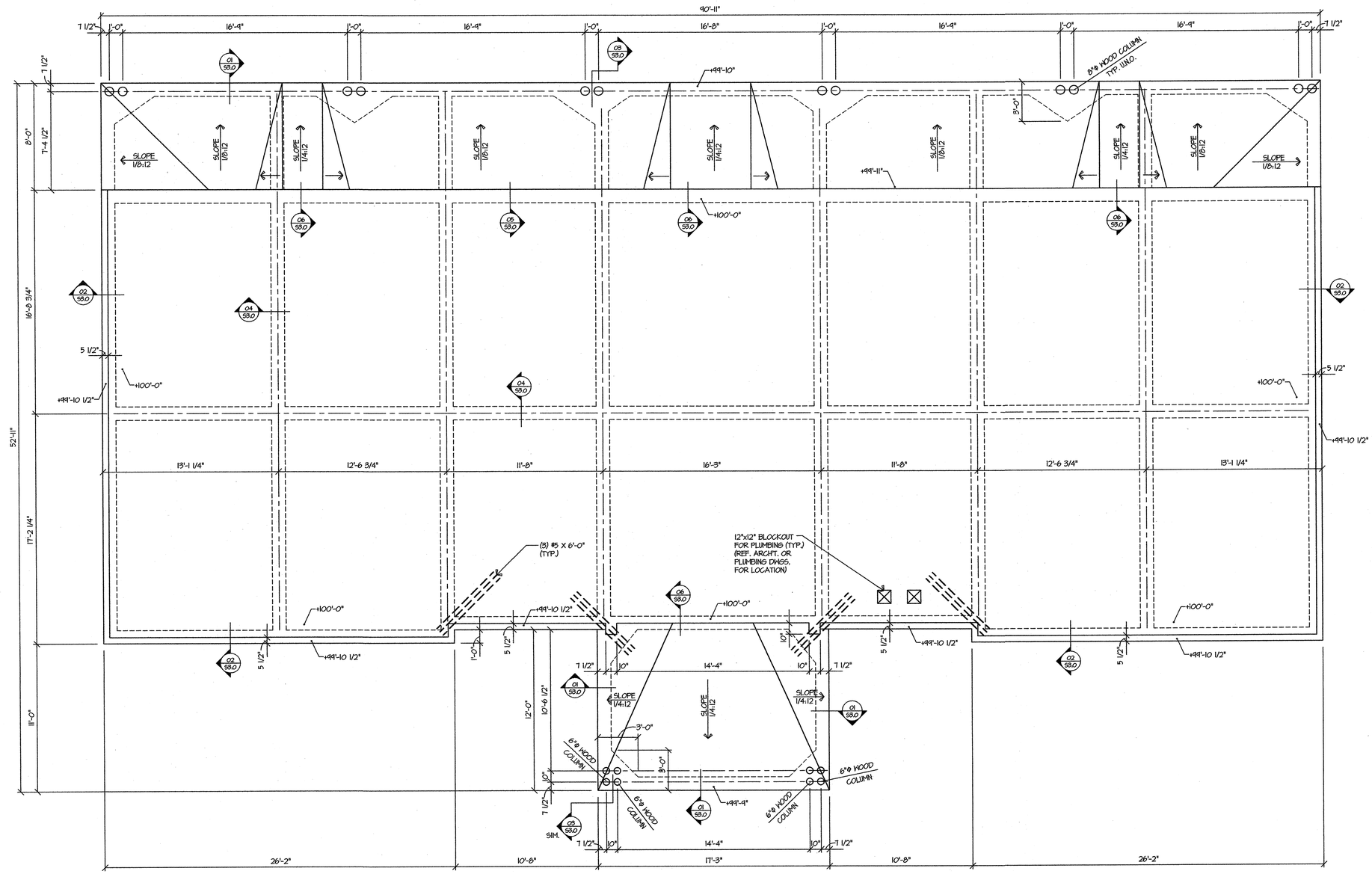

PLAN NOTES

1) REFER TO CIVIL SITE PLANS FOR ACTUAL FINISH FLOOR ELEVATIONS. ASSUMED ELEVATION OF 100'-0" FOR ALL SLAB AREAS UNLESS NOTED ON FOUNDATION PLAN OR IN ARCHITECTURAL PLANS. THE CONTRACTOR IS RESPONSIBLE FOR COORDINATIONS OF SLAB DROPS AND SLOPES AND FOR COORDINATION OF ALL SLAB AND GRADE BEAM PENETRATIONS.

2) PROVIDE CORNER BARS IN GRADE BEAMS PER DETAIL 11/53.0.

3) PLUMBING FIXTURES ARE SHOWN FOR REFERENCE ONLY. REFER ARCHITECTURAL AND PLUMBING PLANS FOR LOCATIONS, TYPE AND QUANTITIES.

4) REFER TO DETAIL 08/53.0 FOR ALL PIPE/CONDUIT IN THE FOUNDATION.

5) REFER TO DETAIL 04 AND 10/53.0 FOR GRADE-BEAM PENETRATIONS.

4" CONCRETE SLAB
FINISH FLOOR ELEVATION = 100'-0"
REINFORCE WITH #3 @ 12" O.C.E.W.
SUPPORTED ON 1 3/4" METAL CHAIRS W/ SAND PLATES AT 48" O.C.E.W.
PROVIDE VAPOR BARRIER.

NORTH

A	FOUNDATION PLAN
1/4" = 1'-0"	-

Revisions:

FHI
CIVIL & STRUCTURAL ENGINEERING

One Chisholm Trail, Suite 5200
Round Rock, TX 78681
Phone (512) 244-1546
Fax (512) 388-3698
TBPE Registration No. F-295

JOB NO. 29085 © 2009 FHI, Inc.

THE SEAL APPEARING ON THIS DOCUMENT WAS AUTHORIZED BY LARRY J. FISHER, P.E. 50110.

THIS DRAWING IS ISSUED FOR CONSTRUCTION. THIS DRAWING MAY NOT BE MODIFIED WITHOUT THE EXPRESS WRITTEN CONSENT OF THE ENGINEER, AND THEN ONLY IN ACCORDANCE WITH THE RULES OF THE TEXAS ENGINEERING PRACTICE ACT.

STATE OF TEXAS
LAURENCE J. FISHER
50110
REGISTERED PROFESSIONAL ENGINEER
10-30-09

Consultant(s):

BWMGROUP
planning | landscape architecture
102 E. Main, Suite 200
Round Rock, Tx. 78664
email: tbargainer@bwmgrp.com
ph: (512) 238-8912 Ext. 206
fax: (512) 238-8913
www. bwmgrp.com

Project :

Regional Park Headquarters
ROUND ROCK, TEXAS

Drawn by: MP
Checked by: RT
Approved by: LF
Job Number: 09042
Date: 10/30/2009
Submittal Type:
CONSTRUCTION
Cad File:
Sheet Title:
FOUNDATION PLAN
Sheet No.:
S1.1

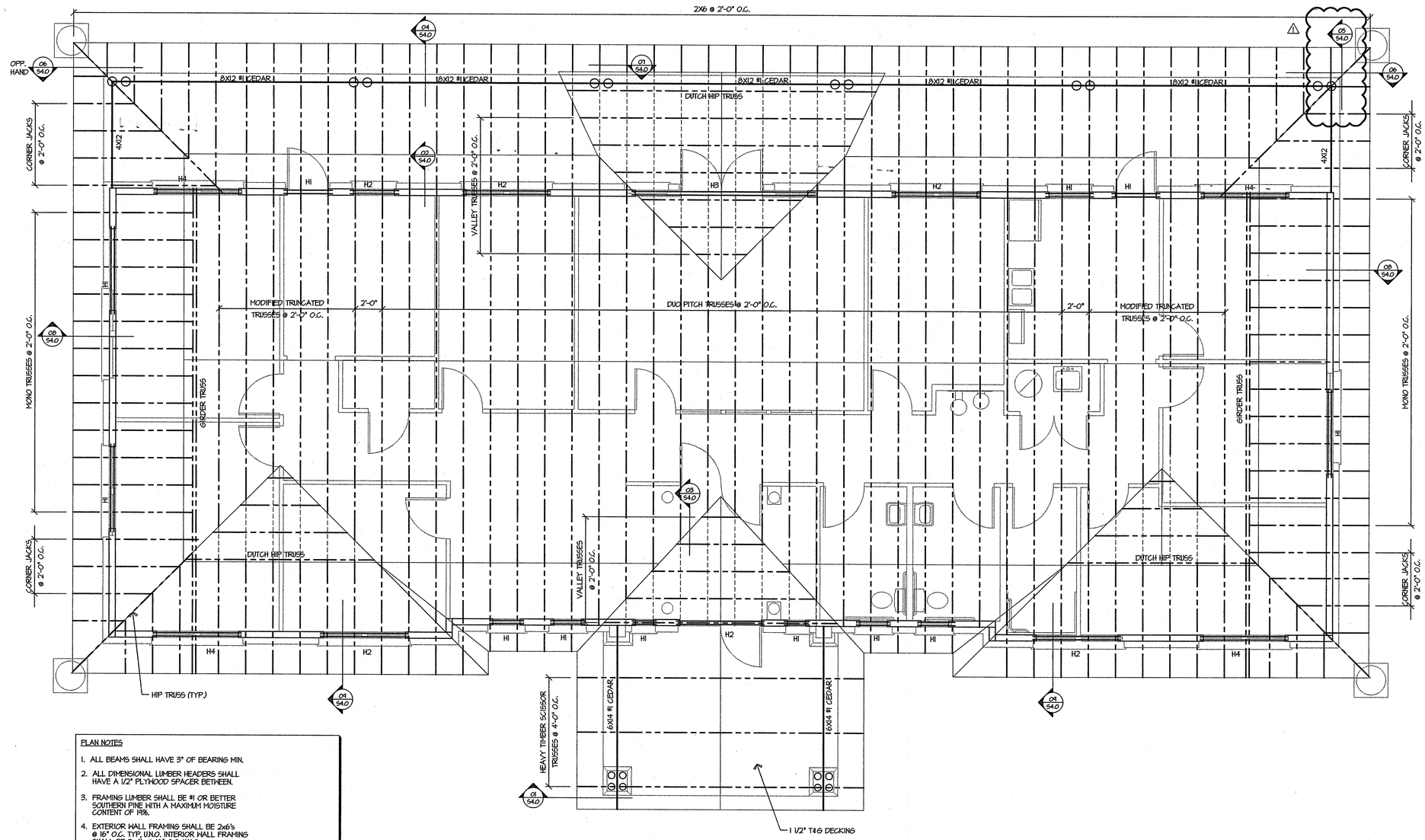

PLAN NOTES

1. ALL BEAMS SHALL HAVE 3" OF BEARING MIN.
2. ALL DIMENSIONAL LUMBER HEADERS SHALL HAVE A 1/2" PLYWOOD SPACER BETWEEN.
3. FRAMING LUMBER SHALL BE #1 OR BETTER SOUTHERN PINE WITH A MAXIMUM MOISTURE CONTENT OF 19%.
4. EXTERIOR WALL FRAMING SHALL BE 2x6's @ 16" O.C. TYP, U.N.O. INTERIOR WALL FRAMING SHALL BE 2x4's @ 16" O.C. U.N.O.
5. NO HOLES, NOTCHES OR OTHER CUTS SHALL BE MADE ON ANY BEAM, JOIST, RAFTER OR OTHER FRAMING MEMBER WITHOUT WRITTEN APPROVAL BY THE ENGINEER.
6. NO HOLE LARGER THAN 1" IN DIAMETER WILL BE ALLOWED IN ANY LOAD BEARING OR EXTERIOR WALL STUD. 1" DIAMETER AND SMALLER HOLES SHALL BE LOCATED ON THE CENTERLINE OF THE WIDE AXIS AND SPACED NO LESS THAN 6" O.C. NO OTHER HOLES WILL BE ALLOWED WITHOUT THE WRITTEN APPROVAL OF THE ENGINEER.
7. ALTERNATE FRAMING - 600S137-33 MIL METAL STUDS @ 16" O.C.

NORTH

A	ROOF FRAMING PLAN
1/4" = 1'-0"	-

Revisions:

1 11-23-09 REVISED AS NOTED

FHI
CIVIL & STRUCTURAL ENGINEERING

One Chisholm Trail, Suite 5200
Round Rock, TX 78681
Phone (512) 244-1546
Fax (512) 388-3698
TBPE Registration No. F-295

JOB NO. 29085 © 2009 FHI, Inc.

THE SEAL APPEARING ON THIS DOCUMENT WAS AUTHORIZED BY LARRY J. FISHER, P.E. 50110.
THIS DRAWING IS ISSUED FOR CONSTRUCTION. THIS DRAWING MAY NOT BE MODIFIED WITHOUT THE EXPRESS WRITTEN CONSENT OF THE ENGINEER, AND THEN ONLY IN ACCORDANCE WITH THE RULES OF THE TEXAS ENGINEERING PRACTICE ACT.

STATE OF TEXAS
LAURENCE J. FISHER
50110
REGISTERED PROFESSIONAL ENGINEER
10-30-09

Consultant(s)

BWMGROUP
planning | landscape architecture
102 E. Main, Suite 200
Round Rock, Tx. 78664
email: tbargainer@bwmgrp.com
ph: (512) 238-8912 Ext. 205
fax: (512) 238-8913
www. bwmgrp.com

Project :

Regional Park Headquarters
ROUND ROCK, TEXAS

Drawn by: MP
Checked by: RT
Approved by: LF
Job Number: 09042
Date: 10/30/2009
Submittal Type:
CONSTRUCTION
Cad File:
Sheet Title:
ROOF FRAMING PLAN
Sheet No.:
S2.0

Z:\Projects-29000\29085 Regional Park Headquarters\Drawings\Structural\29085S2.0.dwg

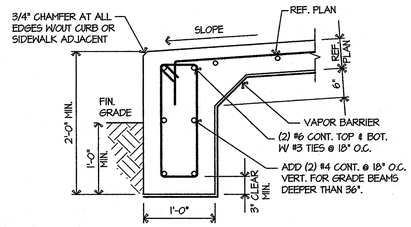

01	SECTION
1"=1'-0"	ST320039

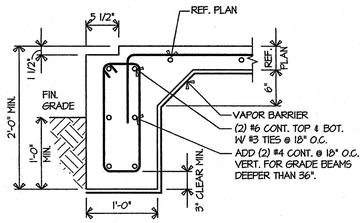

02	SECTION
1"=1'-0"	ST320008

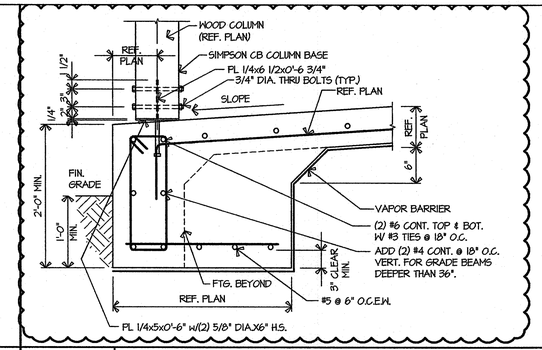

03	SECTION
1"=1'-0"	ST320031

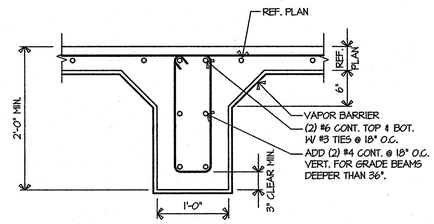

04	SECTION
1"=1'-0"	ST320019

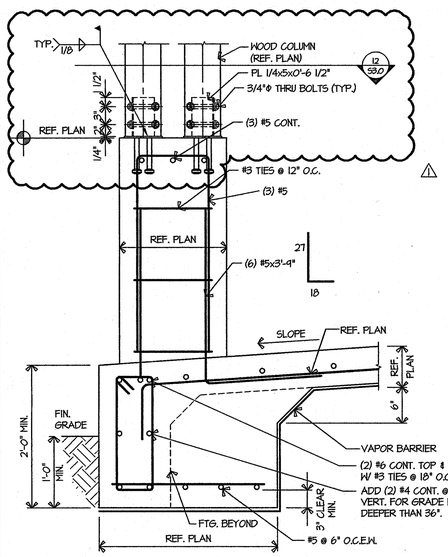

05	SECTION
1"=1'-0"	90855E15

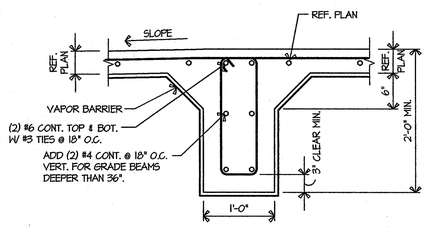

06	SECTION
1"=1'-0"	ST320034

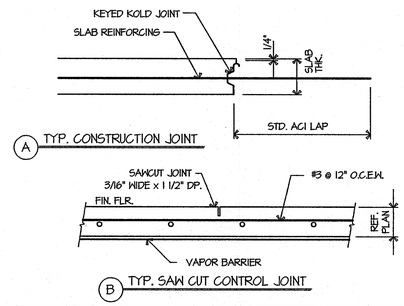

07	TYP. CONTROL JOINT DETAIL
1"=1'-0"	ST320001

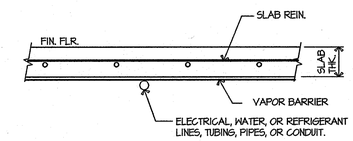

08	TYP. SLAB OVER UTILITIES DETAIL
1"=1'-0"	ST320002

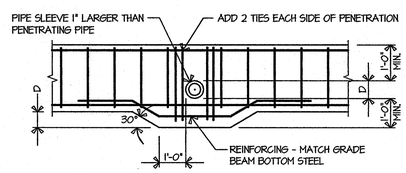

09	TYP. GRADE BM. PENETRATION DETAIL
1"=1'-0"	ST320003

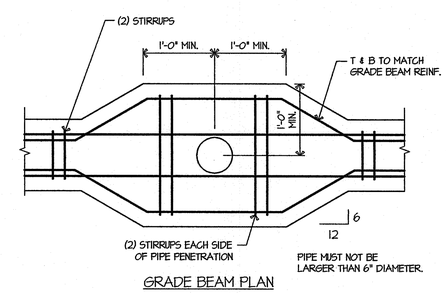

10	TYP. GRADE BM. PENETRATION DETAIL
1"=1'-0"	ST320004

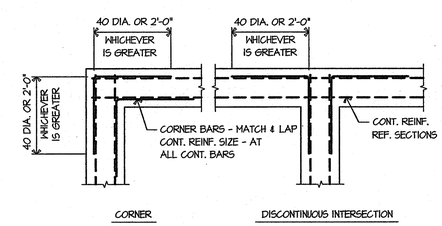

11	TYP. GRADE BEAM REINF. DETAIL
1"=1'-0"	ST320005

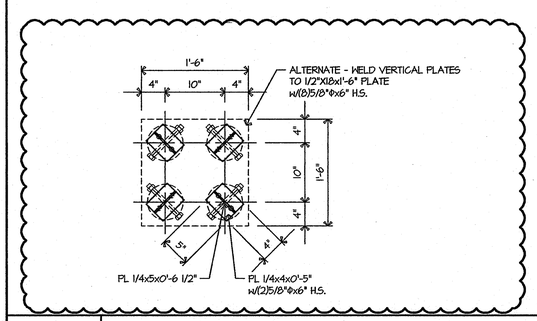

12	SECTION
1"=1'-0"	90855E16

NOT USED

13	SECTION

NOT USED

14	SECTION

NOT USED

15	SECTION

Revisions:

1 11-23-09 REVISED AS NOTED

FHI
CIVIL & STRUCTURAL ENGINEERING

One Chisholm Trail, Suite 5200
Round Rock, TX 78681
Phone (512) 244-1546
Fax (512) 388-3698
TBPE Registration No. F-295

JOB NO. 29085

© 2009 FHI, Inc.

THE SEAL APPEARING ON THIS DOCUMENT WAS AUTHORIZED BY LARRY J. FISHER, P.E. 10-30-09

THIS DRAWING IS ISSUED FOR CONSTRUCTION. THIS DRAWING MAY NOT BE MODIFIED WITHOUT THE EXPRESS WRITTEN CONSENT OF THE ENGINEER, AND THEN ONLY IN ACCORDANCE WITH THE RULES OF THE TEXAS ENGINEERING PRACTICE ACT.

STATE OF TEXAS
LAURENCE J. FISHER
50110
REGISTERED PROFESSIONAL ENGINEER
10-30-09

Consultant(s):

BWMGROUP
planning | landscape architecture
102 E. Main, Suite 200
Round Rock, Tx. 78664
email: tbergsiner@bwmgrp.com
ph: (512) 238-8912 Ext. 206
fax: (512) 238-8913
www. bwmgrp.com

Project :

Regional Park Headquarters
ROUND ROCK, TEXAS

Drawn by: MP
Checked by: RT
Approved by: LF
Job Number: 09042
Date: 10/30/2009
Submittal Type:
CONSTRUCTION
Cad File:

Sheet Title:
FOUNDATION DETAILS

Sheet No.:
S3.0

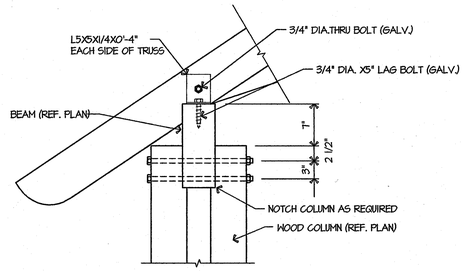

01	SECTION
1"=1'-0"	90855E01

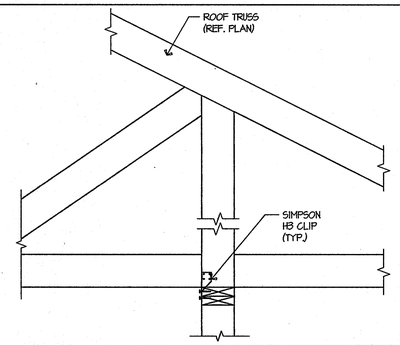

02	SECTION
1"=1'-0"	06130026

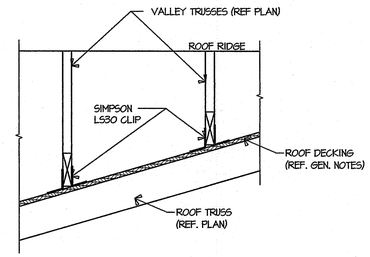

03	SECTION
1"=1'-0"	06130042

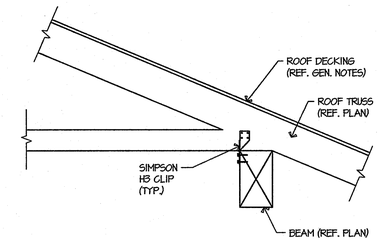

04	SECTION
1"=1'-0"	90855E01

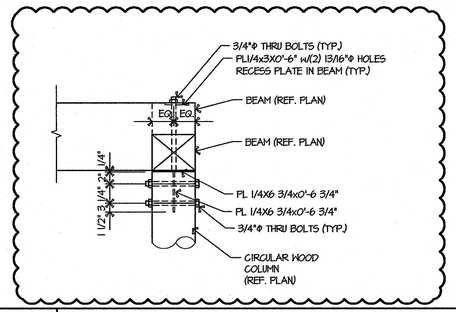

05	SECTION
1"=1'-0"	90855E03

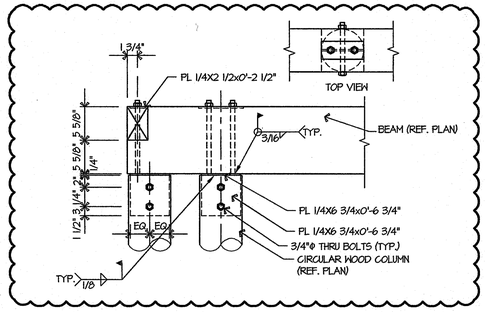

06	SECTION
1"=1'-0"	90855E04

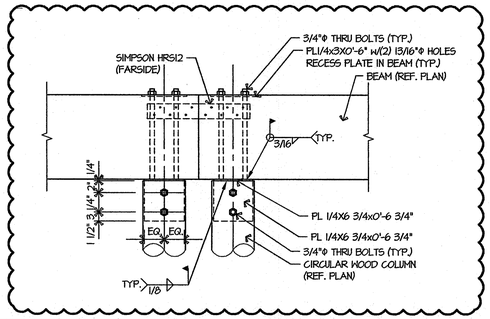

07	SECTION
1"=1'-0"	90855E05

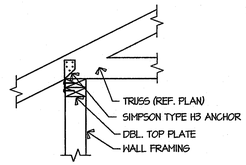

08	SECTION
1"=1'-0"	ST610016

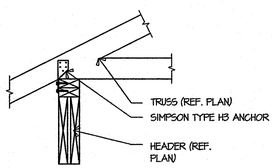

09	SECTION
1"=1'-0"	ST610010

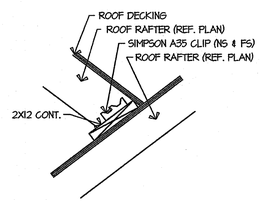

10	TYP. ROOF OVERBUILD DETAIL
1"=1'-0"	ST610008

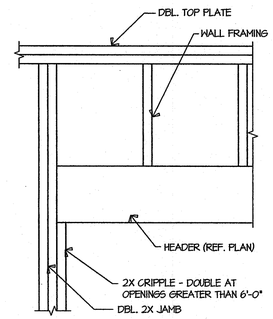

11	TYP. WALL OPENING FRAMING DETAIL
1"=1'-0"	ST610003

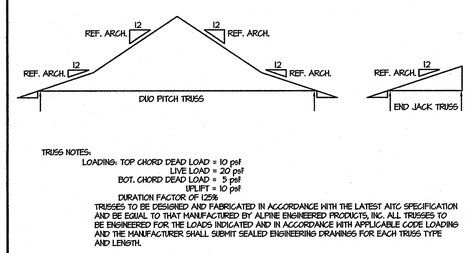

TRUSS NOTES:
LOADING: TOP CHORD DEAD LOAD = 10 psf
LIVE LOAD = 20 psf
BOT. CHORD DEAD LOAD = 5 psf
UPLIFT = 10 psf
DURATION FACTOR OF 125%
TRUSSES TO BE DESIGNED AND FABRICATED IN ACCORDANCE WITH THE LATEST AITC SPECIFICATION AND BE EQUAL TO THAT MANUFACTURED BY ALPINE ENGINEERED PRODUCTS, INC. ALL TRUSSES TO BE ENGINEERED FOR THE LOADS INDICATED AND IN ACCORDANCE WITH APPLICABLE CODE LOADING AND THE MANUFACTURER SHALL SUBMIT SEALED ENGINEERING DRAWINGS FOR EACH TRUSS TYPE AND LENGTH.

12	TYP. ROOF TRUSS PROFILE
1"=1'-0"	ST610022

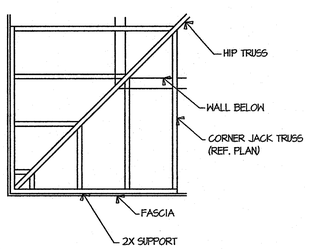

13	TYP. HIP FRAMING DETAIL
1/2"=1'-0"	ST610002

NOT USED

14	SECTION

NOT USED

15	SECTION

NOT USED

16	SECTION

Revisions:
1 11-23-09 REVISED AS NOTED

FHI
CIVIL & STRUCTURAL ENGINEERING
One Chisholm Trail, Suite 5200
Round Rock, TX 78681
Phone (512) 244-1546
Fax (512) 388-3698
TBPE Registration No. F-295

JOB NO. 29085 © 2009 FHI, Inc.

THE SEAL APPEARING ON THIS DOCUMENT WAS AUTHORIZED BY LAURENCE J. FISHER, P.E. 50110.
THIS DRAWING IS ISSUED FOR CONSTRUCTION. THIS DRAWING MAY NOT BE MODIFIED WITHOUT THE EXPRESS WRITTEN CONSENT OF THE ENGINEER, AND THEN ONLY IN ACCORDANCE WITH THE RULES OF THE TEXAS ENGINEERING PRACTICE ACT.

STATE OF TEXAS
LAURENCE J. FISHER
50110
REGISTERED PROFESSIONAL ENGINEER
10-30-09

Consultant(s):

BWMGROUP
planning | landscape architecture
102 E. Main, Suite 200
Round Rock, Tx. 78664
email: tbergsaker@bwmgrp.com
ph: (512) 238-8912 Ext. 206
fax: (512) 238-8913
www. bwmgrp.com

Project :
Regional Park Headquarters
ROUND ROCK, TEXAS

Drawn by: MP
Checked by: RT
Approved by: LF
Job Number: 09042
Date: 10/30/2009
Submittal Type:
CONSTRUCTION
Cad File:

Sheet Title:
FRAMING DETAILS

Sheet No.:
S4.0

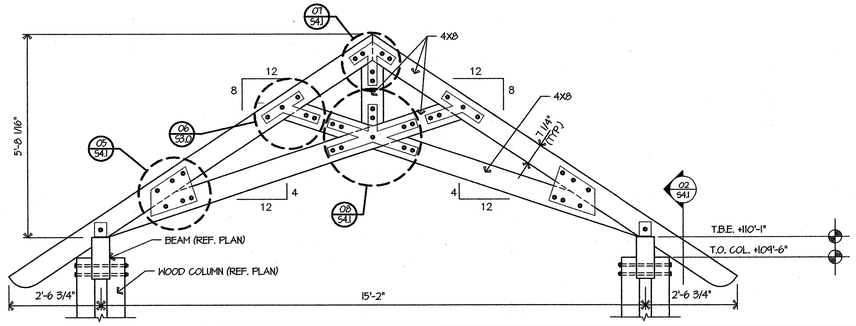

01	HEAVY TIMBER TRUSS ELEVATION
1/2"=1'-0"	90855E06

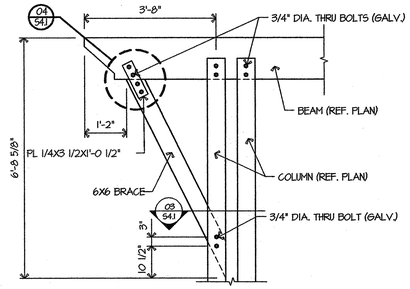

02	SECTION
1/2"=1'-0"	90855E07

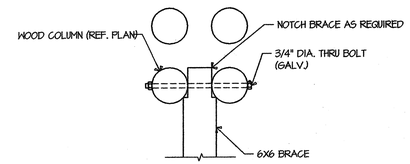

03	SECTION
1"=1'-0"	90855E08

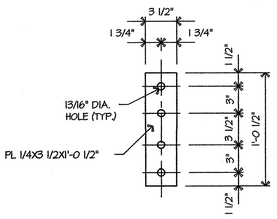

04	TRUSS PLATE DETAIL
1 1/2"=1'-0"	90855E10

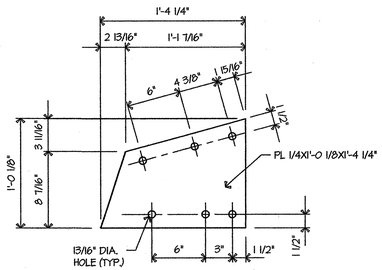

05	TRUSS PLATE DETAIL
1 1/2"=1'-0"	90855E11

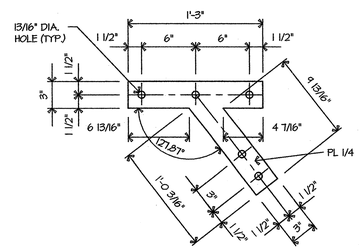

06	TRUSS PLATE DETAIL
1 1/2"=1'-0"	90855E12

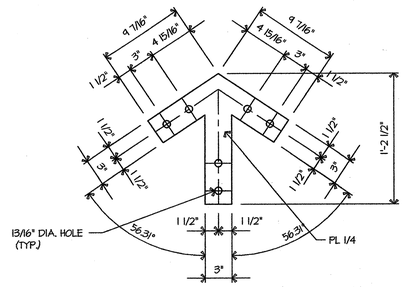

07	TRUSS PLATE DETAIL
1 1/2"=1'-0"	90855E13

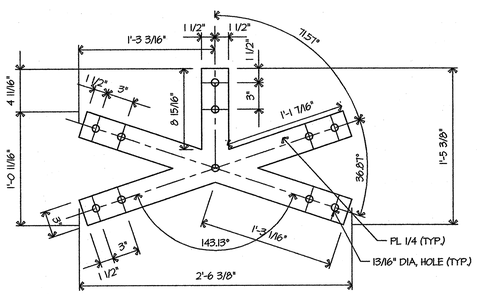

08	TRUSS PLATE DETAIL
1 1/2"=1'-0"	90855E14

NOT USED

09	SECTION

NOT USED

10	SECTION

NOT USED

11	SECTION

NOT USED

12	SECTION

NOT USED

13	SECTION

NOT USED

14	SECTION

NOT USED

15	SECTION

Revisions:

FHI
CIVIL & STRUCTURAL ENGINEERING
One Chisholm Trail, Suite 5200
Round Rock, TX 78681
Phone (512) 244-1546
Fax (512) 388-3698
TBPE Registration No. F-295

JOB NO. 29085 © 2009 FHI, Inc.

THE SEAL APPEARING ON THIS DOCUMENT WAS AUTHORIZED BY LARRY J. FISHER, P.E. 50110.
THIS DRAWING IS ISSUED FOR CONSTRUCTION. THIS DRAWING MAY NOT BE MODIFIED WITHOUT THE EXPRESS WRITTEN CONSENT OF THE ENGINEER, AND THEN ONLY IN ACCORDANCE WITH THE RULES OF THE TEXAS ENGINEERING PRACTICE ACT.

STATE OF TEXAS
LAURENCE J. FISHER
50110
REGISTERED PROFESSIONAL ENGINEER
10-30-09

Consultant(s):

BWMGROUP
planning | landscape architecture
102 E. Main, Suite 200
Round Rock, Tx. 78664
email: tbaigainer@bwmgrp.com
ph: (512) 238-8912 Ext. 206
fax: (512) 238-8913
www. bwmgrp.com

Project :

Regional Park Headquarters
ROUND ROCK, TEXAS

Drawn by: MP
Checked by: RT
Approved by: LF
Job Number: 09042
Date: 10/30/2009
Submittal Type:
CONSTRUCTION
Cad File:
Sheet Title:
FRAMING DETAILS
Sheet No.:
S4.1