NOTICE TO THE PUBLIC
WILLIAMSON COUNTY COMMISSIONER'S COURT
APRIL 17TH, 2018
9:30 A.M.

The Commissioner's Court of Williamson County, Texas will meet in regular session in the Commissioner's Courtroom, 710 Main Street, in Georgetown, Texas to consider the following items:

1. Review and approval of minutes.

2. Consider noting in minutes any off right-of-way work on any County road done by Road & Bridge Division.

3. Hear County Auditor concerning invoices, bills, Quick Check Report, wire transfers and electronic payments submitted for payment and take appropriate action including, but not limited to approval for payment provided said items are found by the County Auditor to be legal obligations of the county.

4. Citizen comments. Except when public hearings are scheduled for later in the meeting, this will be the only opportunity for citizen input. The Court invites comments on any matter affecting the county, whether on the Agenda or not. Speakers should limit their comments to three minutes. Note that the members of the Court may not comment at the meeting about matters that are not on the agenda.

CONSENT AGENDA
The Consent Agenda includes non-controversial and routine items that the Court may act on with one single vote. The Judge or a Commissioner may pull any item from the consent agenda in order that the court discuss and act upon it individually as part of the Regular Agenda.
(Items 5 – 19)

5. Discuss, consider and take appropriate action on a line item transfer for Non Departmental.

Fiscal Impact

From/To	Acct No.	Description	Amount
From	0100-0409-004998	Non Dept/Contingencies	$45,826.36
To	0100-0409-004606	Non Dept/Econ Dev Incentives	$45,826.36

6. Discuss, consider, and take appropriate action on a line item transfer for the County Auditor's Office.

Fiscal Impact

From/To	Acct No.	Description	Amount
From	0100-0495-004100	Professional Services	$2,152.36
To	0100-0495-003005	Office Furniture	$2,152.36

7. Discuss, consider and take appropriate action on approving compensation changes, position titles changes, position grade changes and any corresponding line item transfers.

8. Discuss, consider and take appropriate action on approving property tax collections for the month of March 2018 for the Williamson County Tax Assessor/Collector.

9. Discuss, consider and take appropriate action on approving property tax refunds over $2,500.00 for the month of March 2018 for the Williamson County Tax Assessor/Collector.

10. Discuss, consider and take appropriate action on accepting Commissioners Education Certificate of Completion for Williamson County Commissioner Cynthia Long for successfully completing the continuing education provisions of Article 81.0025 of the Texas Local Government Code.

11. Consider accepting a $1,003.00 donation for the Veteran Treatment Court's Mentor program.

Fiscal Impact

From/To	Acct No.	Description	Amount
TO	0382.0000.367400	Specialty Court Donation	$1,003.00

12. Discuss, consider and take appropriate action on accepting and approving a report on the Texas Avenue Remodel Project; Change Order # 22 in the amount of $12,126.00 for ADA improvements based on the ADA Inspection Report, which was executed by Bob Lubecker, Williamson County Facilities Project Manager, pursuant to the previous grant of authority under Section 262.031 of the Local Government Code. This change order is being funded out of the Owners Contingency.

13. Discuss, consider and take appropriate action on accepting and approving a report on the Williamson County North Campus Project; Change Order #33 in the amount of ($28,265.00) to receive credit for painting scope which was eliminated at Building E and F, which was executed by Dwayne Gossett, Williamson County Facilities Project Manager, pursuant to the previous grant of authority under Section 262.031 of the Local Government Code. This change order is to being credited to the Owners Contingency.

14. Discuss, consider and take appropriate action on accepting and approving a report on the Williamson County North Campus Project; Change Order #50 in the amount of $4,392.00 for additional data layout changes based on submittal 271100-3-0, which was executed by Dwayne Gossett, Williamson County Facilities Project Manager, pursuant to the previous grant of authority under Section 262.031 of the Local Government Code. This change order is to be funded by the Construction Managers Contingency.

15. Discuss, consider and take appropriate action on accepting and approving a report on the Williamson County North Campus Project; Change Order #52 in the amount of ($2,064.00) to receive credit for plumbing equipment changes in Building B, which was executed by Dwayne Gossett, Williamson County Facilities Project Manager, pursuant to the previous grant of authority under Section 262.031 of the Local Government Code. This change order is to be credited to the Owners Contingency.

16. Discuss, consider, and take appropriate action on approval of the preliminary plat for the Sonterra West Section 12 subdivision - Pct 3.

17. Discuss, consider, and take appropriate action on approval of the replat of the Sonterra Commercial Section 1, Lots 1-5, Block A, subdivision – Pct 3.

18. Discuss, consider, and take appropriate action on approval of the revised preliminary plat for the Business Park at Brushy Creek subdivision - Pct 4.

19. Discuss, consider, and take appropriate action on approval of the final plat for the Santa Rita Phase 1 Section 8 subdivision - Pct 3.

REGULAR AGENDA

20. 10:00 AM – Hold Public Hearing regarding the setting of the rate associated with mandatory provider participation payments that Williamson County may require of all local hospitals for fiscal year (FY) 2018 in relation to the Williamson County Health Care Participation Program and establish how the revenue derived from those payments may be spent in accordance with the Chapter 292B of the Texas Health & Safety Code and the Williamson County Health Care Provider Participation Program Rules and Procedures.

21. Discuss, consider and take appropriate action on setting of the rate associated with mandatory provider participation payments that Williamson County may require of all local hospitals for fiscal year (FY) 2018 in relation to the Williamson County Health Care Participation Program and establish how the revenue derived from those payments may be spent in accordance with the Chapter 292B of the Texas Health & Safety Code and the Williamson County Health Care Provider Participation Program Rules and Procedures.

22. Hear a presentation on property tax collections by McCreary, Veselka, Bragg & Allen, P.C..

23. Receive presentation on County Roadway Resurfacing program.

24. Receive and acknowledge the April 2018 Construction Summary Report for the Road Bond Program.

25. Discuss, consider and take appropriate action on the Department of Infrastructure projects and issues update.

26. Discuss, consider, and take appropriate action on approving a variance request to the Manufactured Home Order for Glenwood Park II - Pct 3.

27. Discuss, consider and take appropriate action on a real estate contract with Michael A. Kroeber for right of way needed on the San Gabriel Ranch Rd. dam project. (Parcel 2); Funding Source Road & Bridge (P439)

28. Discuss, consider and take appropriate action on a real estate contract with Ann Pi-Yuan Yang, Yea-Ran Yang and Yea-Tyng Yang for right of way needed on the Seward Junction SE project (Parcel 6). Funding Source- Road Bonds (P271)

29. Discuss, consider and take action setting date, time and place for opening bids and award contract for the sale of approximately 1.761 acres of surplus right of way abutting US 183A.

30. Discuss, consider and take appropriate action to authorize County Judge to execute an Amendment to an Economic Development Agreement with Dana, Ltd.

31. Discuss, consider and take appropriate action authorizing the County Judge to sign a Construction and Maintenance Agreement with the City of Cedar Park and the YMCA of Greater Williamson County for shared use path construction and maintenance.

32. Discuss, consider, and take appropriate action on a burn ban for the areas west of Interstate Highway 35 for a period not to exceed 90 days and to authorize the County Judge the authority to lift the ban when conditions improve.

33. Discuss, consider and take appropriate action on a resolution declaring a need for a regional housing authority that would include Williamson County due to a shortage of safe or sanitary housing in Williamson County available to low-income persons at rents that they can afford and admitting Williamson County, Texas as a member of the Texas Housing Foundation, a Texas Regional Housing Authority.

34. Discuss, consider and take appropriate action on appointing a commissioner for the Texas Housing Foundation Board of Commissioners to represent Williamson County on the Texas Housing Foundation Board to serve a two (2) year term commencing on May 1, 2018 and ending on June 30, 2020, pursuant to Texas Local Government Code Section 392.033.

35. Discuss, consider and take appropriate action on a Use Agreement with Williamson County Emergency Service District No. 4 for use of County owned property located at or near 3414 RR 1869, Liberty Hill, Texas for a term ending February 28, 2019.

36. Discuss, consider and take appropriate action on presentation by the Texas Pace Authority of "Texas PACE Authority 2017 Annual Report".

37. Discuss, consider, and take any appropriate action regarding the approval of the early voting polling locations and voting hours for the 2018 Republican Party and Democratic Party Primary Run Off Elections to be held May 22, 2018

38. Discuss, consider, and take appropriate action on approving the first amendment to the contract between Raba Kistner Consultants, Inc. and Williamson County for engineering services in the original amount of $16,681.60, amending the amount to $19,144.31 and authorizing the execution of the agreement.

39. Discuss, consider, and take appropriate action on authorizing the Purchasing Agent to advertise and receive sealed bids for Asphalt Cement under IFB 1804-223.

40. Discuss, consider and take appropriate action on approving the purchase of two (2) Chevrolet Tahoes in the amount of $95,967.44, from Holiday Chevrolet per Tarrant County Cooperative Contract # 2016-006 to support the operations of Williamson County Constable Precinct 3.

41. Discuss, consider, and take appropriate action on approving service contract between Knight Security Systems and Williamson County for camera installation at the Jester Annex in the amount of $29,990.77, pursuant to DIR cooperative contract DIR-TSO-3430, and authorizing the execution of the agreement.

42. Discuss, consider, and take appropriate action on authorizing the purchase of five (5) ambulances to support the operations of the Williamson County EMS Department from Siddon-Martin Emergency Group in the amount of $1,179,175.00, pursuant to H-GAC contract # AM10-16.

43. Discuss, consider and take appropriate action on approving service contract between Aladdin Carpet & Interiors and Williamson County for carpet installation at the Justice Center in the not-to-exceed-amount of $15,180.00, and authorizing the execution of the agreement.

44. Discuss, consider, and take appropriate action on approving the HVAC Service Contract between MTech and Williamson County for HVAC testing and installation, in the not-to-exceed the amount of $61,000, pursuant to TIPS contract # 1032615 and authorizing the execution of the agreement.

45. Discuss, consider, and take appropriate action on authorizing the Purchasing Agent to advertise and receive sealed bids for Southwest Bypass Segment 2 under IFB # 1802-219.

EXECUTIVE SESSION

"The Commissioners Court for Williamson County reserves the right to adjourn into executive session at any time during the course of this meeting to discuss any of the matters listed above, as authorized by Texas Government Code Sections 551.071 (Consultations with Attorney), 551.072 (Deliberations regarding Real Property), 551.073 (Deliberations regarding Gifts and Donations), 551.074 (Personnel Matters), 551.076 (Deliberations regarding Security Devices) and 551.087 (Deliberations regarding Economic Development Negotiations)."

46. Discussion regarding economic development negotiations pursuant to Texas Government Code, Section 551.087:
a) Business prospect(s) that may locate or expand within Williamson County.
b) Discuss North Woods Road District.
c) Project Amazon
d) Wolf Lakes
e) Project Capston

47. Discuss real estate matters (EXECUTIVE SESSION as per VTCA Govt. Code sec. 551.072 Deliberation Regarding Real Estate Property if deliberation in an open meeting would have a detrimental effect on the position of the governmental body in negotiations with third person.)
A. Real Estate Owned by Third Parties
Preliminary discussions relating to proposed or potential purchase or lease of property owned by third parties
a) Discuss the acquisition of real property for right-of-way for N. Mays St. Extension
b) Discuss the acquisition of real property for SW 183 and SH 29 Loop.
c) Discuss the acquisition of real property for CR 176 at RM 2243
d) Discuss the acquisition of real property: CR 101
e) Discuss the acquisition of real property: CR 200
f) Discuss the acquisition of real property for CR 278 at Bagdad Rd.
g) Discuss the acquisition of real property for SH 29 LTP.
h) Discuss the acquisition of real property for County Facilities.
i) Discuss the acquisition of Easement interests for the Brushy Creek Trail Project.
j) Discuss the acquisition of real property and easements from San Gabriel River Ranch Subdivision.
k) Discuss the acquisition of real property for CR 278 @ Bagdad Rd.
l) Discuss the acquisition of real property for Seward Junction SE Loop.
m) Discuss the acquisition of real property for SH 29 @ DB Wood.
n) Discuss the acquisition of real property for Hairy Man Rd.
o) Discuss the acquisition of real property for SW Bypass.
p) Discuss Somerset Road Districts No. 3 & 4 reimbursements for acquisition & construction of Reagan Blvd.
q) Discuss Cedar Hollow low water crossings and Lost River.
B. Property or Real Estate owned by Williamson County
Preliminary discussions relating to proposed or potential sale or lease of property owned by the County
a) Discuss County owned real estate containing underground water rights and interests.
b) Discuss wastewater easements in Berry Springs Park
c) Discuss sale of County property on Ronald Reagan Blvd.
d) Discuss possible sale of +/- 10 acres located on Chandler Road near the County Sheriff's Office Training Facility

e) Potential governmental uses for 8th Street downtown parking lot
C. Consider intervention in lawsuit regarding de-listing of Bone Cave harvestman.
D. Discuss the possible placement of agricultural-related monuments at the Williamson County Exposition Center with the participation of third parties.
E. Discuss the San Gabriel River trail easements.

48. Discuss pending or contemplated litigation, settlement matters and other confidential attorney-client legal matters (EXECUTIVE SESSION as per VTCA Govt. Code sec. 551.071 consultation with attorney.), including the following:

a) Litigation or claims or potential litigation or claims against the County or by the County
b) Status Update-Pending Cases or Claims;
c) Employee/personnel related matters
d) Other confidential attorney-client matters, including contracts and certain matters related to county defense issues in which the duty of the attorney to the governmental body within the attorney/client relationship clearly conflicts with Chapter 551 of the Texas Government Code.
e) Cause No. 15-0064-C277, Gordon v. Dollahite et al, In The District Court of Williamson County, Texas, 277th District
f) Civil Action No. 1:15-cv-431; Herman Crisp v. Williamson County, et al; In the USDC-WD-Austin Division
g) Appeal of IRS Proposed Worker Classification Changes and Proposed Tax Adjustments 2011 -2013; and Payment of Disputed Employment Taxes Pending Appeal
h) Discuss proposed acquisition of property for SW 183 and SH 29 Loop
i) Civil Action; American Stewards of Liberty, et al. v. Sally Jewell, et al., In the Western District Court, Western District of Texas, Austin Division
j) Berry Springs Park and Preserve pipeline
k) Case No. 1:17-cv-00290, Rodney A. Hurdsman v. Williamson County Sheriff Deputies Pokluda et al, In The Unites States District Court For The Western District of Texas – Austin Division.
l) Civil Action No. 1:17-cv-153-SS, Royce Belcher v. Williamson County, Texas, In The United States District Court for the Western District of Texas, Austin Division.
m) Williamson County Sheriff's Office Training Center construction issues.
n) Application to Obtain New Municipal Solid Waste Permit – Proposed Permit No. 2398 (Applicant - Lealco, Inc.)
o) LCRA TSC Leander-Round Rock 138-Kv Transmission Line Project within the Public Right-Of-Way (Row) of New Hope Road, Ronald Reagan Boulevard, and Hero Way
p) Employment law claims of Michelle Williams, Andrenia McGowen and/or Raphaela Johnson.
q) Civil Action No. 1:17-cv-01114-LY, Elizabeth Saucedo v. Jonathon Hodgkiss, In The United States District Court for the Western District of Texas, Austin Division.
r) Civil Action No. 1:17-cv-01113-LY, Tettus Davis v. Jonathon Hodgkiss, In The United States District Court for the Western District of Texas, Austin Division.
s) Farm and Grazing Lease with Mary Brett Covington dated effective March 29, 2016 on county land near County Road 131
t) Amendment to Interlocal Lease Agreement between Williamson County and City of Georgetown relating to Williamson County's property located near Martin Luther King Boulevard and 8th Streets in Georgetown, Texas
u) Civil Action No. 1:18-CV-49, Troy Mansfield v. Williamson County, In The United States District Court for the Western District of Texas, Austin Division.
v) Discuss law in relation to Williamson County compensation policies.

49. Deliberate the appointment, employment, evaluation, reassignment, duties, discipline and/or dismissal of Williamson County officers, directors, employees and/or positions, including but not limited to conducting deliberation and discussion pertaining to annual reviews of department heads and appointed officials (Executive Session as per Tex. Gov. Code Section 551.074 – Personnel Matters).

50. Discuss the deployment or specific occasions for implementation of security personnel or devices in relation to the Williamson County Justice Center (Executive Session as per Texas Gov't. Code § 551.076).

51. Discuss and take appropriate action concerning economic development.

52. Discuss and take appropriate action concerning real estate.

53. Discuss and take appropriate action on pending or contemplated litigation, settlement matters and other confidential attorney-client legal matters, including the following:

a) Litigation or claims or potential litigation or claims against the County or by the County
b) Status Update-Pending Cases or Claims;
cd) Employee/personnel related matters
d) Other confidential attorney-client matters, including contracts and certain matters related to county defense issues in which the duty of the attorney to the governmental body within the attorney/client relationship clearly conflicts with Chapter 551 of the Texas Government Code.
e) Cause No. 15-0064-C277, Gordon v. Dollahite et al, In The District Court of Williamson County, Texas, 277th District
f) Civil Action No. 1:15-cv-431; Herman Crisp v. Williamson County, et al; In the USDC-WD-Austin Division
g) Discuss, consider and take appropriate action regarding possible appeal of IRS Proposed Worker Classification Changes and Proposed Tax Adjustments 2011 -2013; and approval of payment of disputed employment taxes pending appeal
h) Discuss proposed acquisition of property for SW 183 and SH 29 Loop
i) Civil Action; American Stewards of Liberty, et al. v. Sally Jewell, et al., In the Western District Court, Western District of Texas, Austin Division
j) Berry Springs Park and Preserve pipeline
k) Case No. 1:17-cv-00290, Rodney A. Hurdsman v. Williamson County Sheriff Deputies Pokluda et al, In The Unites States District Court For The Western District of Texas – Austin Division.
l) Civil Action No. 1:17-cv-153-SS, Royce Belcher v. Williamson County, Texas, In The United States District Court for the Western District of Texas, Austin Division.
m) Williamson County Sheriff's Office Training Center construction issues.
n) Application to Obtain New Municipal Solid Waste Permit – Proposed Permit No. 2398 (Applicant - Lealco, Inc.)
o) LCRA TSC Leander-Round Rock 138-Kv Transmission Line Project within the Public Right-Of-Way (Row) of New Hope Road, Ronald Reagan Boulevard, and Hero Way
p) Employment law claims of Michelle Williams, Andrenia McGowen and/or Raphaela Johnson.
q) Civil Action No. 1:17-cv-01114-LY, Elizabeth Saucedo v. Jonathon Hodgkiss, In The United States District Court for the Western District of Texas, Austin Division.
r) Civil Action No. 1:17-cv-01113-LY, Tettus Davis v. Jonathon Hodgkiss, In The United States District Court for the Western District of Texas, Austin Division.
s) Farm and Grazing Lease with Mary Brett Covington dated effective March 29, 2016 on county land near County Road 131
t) Amendment to Interlocal Lease Agreement between Williamson County and City of Georgetown relating to Williamson County's property located near Martin Luther King Boulevard and 8th Streets in Georgetown, Texas
u) Civil Action No. 1:18-CV-49, Troy Mansfield v. Williamson County, In The United States District Court for the Western District of Texas, Austin Division.
v) Discuss law in relation to Williamson County compensation policies.

54. Discuss, consider and take appropriate action regarding the appointment, employment, evaluation, reassignment, duties, discipline and/or dismissal of Williamson County officers, directors or employees, including but not limited to any necessary action pertaining to conducting annual reviews of department heads and appointed officials.

55. Comments from Commissioners.

_____
Dan A. Gattis, County Judge

This notice of meeting was posted in the locked box located on the south side of the Williamson County Courthouse, a place readily accessible to the general public at all times, on the _____ day of _____, 2018 at _____ and remained posted for at least 72 continuous hours preceding the scheduled time of said meeting.

Commissioners Court - Regular Session **5.**

Meeting Date: 04/17/2018

Line Item Transfer

Submitted By: Ashlie Koenig, Budget Office

Department: Budget Office

Agenda Category: Consent

Information

Agenda Item

Discuss, consider and take appropriate action on a line item transfer for Non Departmental.

Background

The Budget Office received an email from the Auditor's Office stating "Oracle's economic development incentive payment ended up being much more than estimated due to their square footage increasing from last year. We are going to be short in line 01.0100.0409.004606 by $45,826.36". This transfer will full fund the obligation for FY 18. FY 19 budget will be adjusted as well.

Fiscal Impact

From/To	Acct No.	Description	Amount
From	0100-0409-004998	Non Dept/Contingencies	$45,826.36
To	0100-0409-004606	Non Dept/Econ Dev Incentives	$45,826.36

Attachments

No file(s) attached.

Form Review

Inbox	Reviewed By	Date
County Judge Exec Asst.	Wendy Coco	04/12/2018 09:18 AM
Form Started By: Ashlie Koenig		Started On: 04/11/2018 04:43 PM
Final Approval Date: 04/12/2018		

Commissioners Court - Regular Session **6.**

Meeting Date: 04/17/2018

Line Item Transfer for County Auditor

Submitted For: Julie Kiley **Submitted By:** Julie Kiley, County Auditor

Department: County Auditor

Agenda Category: Consent

Information

Agenda Item

Discuss, consider, and take appropriate action on a line item transfer for the County Auditor's Office.

Background

Line item transfer is to reconfigure existing cubicle furniture in the accounts payable area to assist with workflow and efficiency.

Fiscal Impact

From/To	Acct No.	Description	Amount
From	0100-0495-004100	Professional Services	$2,152.36
To	0100-0495-003005	Office Furniture	$2,152.36

Attachments

No file(s) attached.

Form Review

Inbox	Reviewed By	Date
County Judge Exec Asst.	Wendy Coco	04/12/2018 09:25 AM
Budget Office	Ashlie Koenig	04/12/2018 10:19 AM
Form Started By: Julie Kiley		Started On: 04/12/2018 08:28 AM
Final Approval Date: 04/12/2018		

Commissioners Court - Regular Session **7.**

Meeting Date: 04/17/2018

Compensation Items

Submitted For: Tara Raymore **Submitted By:** Kristy Grant, Human Resources

Department: Human Resources

Agenda Category: Consent

Information

Agenda Item

Discuss, consider and take appropriate action on approving compensation changes, position titles changes, position grade changes and any corresponding line item transfers.

Background

See attached documentation for details.

Fiscal Impact

From/To	Acct No.	Description	Amount

Attachments

Comp Item

Merit LIT 04.17.18

Merit Details 04.17.18

Form Review

Inbox	Reviewed By	Date
Human Resources (Originator)	Tammy Fennell	04/12/2018 11:14 AM
County Judge Exec Asst.	Wendy Coco	04/12/2018 11:25 AM
Form Started By: Kristy Grant		Started On: 04/12/2018 09:00 AM
Final Approval Date: 04/12/2018		

Department	PCN	EE ID	Current Annual Salary	*New Annual Salary	Current Budget Amount	*New Budget Amount	Reduction to Budget	Increase to Budget	Reason for Change	Earliest Oracle Effective Date
911 Communications	1743	vacant	$0.00	n/a	$38,778.63	$38,778.63	n/a	n/a	Title, Grade change: Telecom Ofcr Trainee (B.20) to Telecom Ofcr II (B.22)	4/13/2018
911 Communications	1746	vacant	$0.00	n/a	$40,766.33	$40,766.33	n/a	n/a	Title update: Telecommunicator I to Telecom Ofcr I	4/13/2018

*Amount may vary slightly due to Oracle rounding

				(TO)	(FROM)
entity	**fund**	**dept**	**object**	**dr**	**cr**
01	0200	0210	001100	900.79	
01	0200	0210	001130		900.79
01	0100	0540	001100	315.91	
01	0100	0540	002010	24.16	
01	0100	0540	002020	44.03	
01	0100	8004	001130		315.91
01	0100	8004	002010		24.16
01	0100	8004	002020		44.03

Department	Position	Emp ID Num	Current Annual Salary	Annual Merit Amt	Merit%	New Annual Salary	Pay Proposal Reason	Effective Date of Change
Emergency Medical Services	EMS Transfer Paramedic.0899.001100	5002	$63,183.33	$315.91	0.50	$63,499.24	MERIT	4/20/2018
Unified Road Systems	Admin Tech III.1494.001100	13247	$42,690.84	$900.79	2.11	$43,591.62	MERIT	4/20/2018

Commissioners Court - Regular Session **8.**

Meeting Date: 04/17/2018

Property Tax Collections - March 2018

Submitted For: Larry Gaddes

Submitted By: Cathy Atkinson, County Tax Assessor Collector

Department: County Tax Assessor Collector

Agenda Category: Consent

Information

Agenda Item

Discuss, consider and take appropriate action on approving property tax collections for the month of March 2018 for the Williamson County Tax Assessor/Collector.

Background

Fiscal Impact

From/To	Acct No.	Description	Amount

Attachments

030118-033118 GWI-RFM

030118-033118 GWI-RFM Graph

Form Review

Inbox	Reviewed By	Date
County Judge Exec Asst.	Wendy Coco	04/09/2018 11:34 AM
Form Started By: Cathy Atkinson		Started On: 04/07/2018 06:26 PM
Final Approval Date: 04/09/2018		

YEAR TO DATE - COLLECTION REPORT
Williamson County - GWI/RFM Property Taxes
March 31, 2018

Williamson County General Fund	Tax Roll	Adjustments	Adjusted Tax Roll	Current Tax Collected	Penalty & Interest Collected	Variance	Uncollected Balance	YTD Collected	YTD Percent Collected	YTD Percent Collected w/P & I	YTD Percent Collected w/P & I & Prior Years
2017	$244,690,088.70	$192,765.47	$244,882,854.17	$1,873,334.92	$89,809.05	$935.15	$4,404,095.49	$240,478,758.68	98.20%	98.30%	98.86%
2016 & Prior	$1,986,312.80	($117,444.48)	$1,868,868.32	$22,864.48	$9,062.21	$2,391.80	$1,519,978.10	$348,890.22	18.67%	25.16%	
Rollbacks	$288,563.47	$658,810.61	$947,374.08	$58,025.20	$0.00	$0.00	$48,469.68	$898,904.40	94.88%	95.05%	
Total All	$246,964,964.97	$734,131.60	$247,699,096.57	$1,954,224.60	$98,871.26	$3,326.95	$5,972,543.27	$241,726,553.30	97.59%	97.74%	

Williamson County RFM	Tax Roll	Adjustments	Adjusted Tax Roll	Current Tax Collected	Penalty & Interest Collected	Variance	Uncollected Balance	YTD Collected	YTD Percent Collected	YTD Percent Collected w/P & I	YTD Percent Collected w/P & I & Prior Years
2017	$22,761,673.50	$21,891.34	$22,783,564.84	$170,973.61	$8,374.34	$87.63	$401,556.92	$22,382,007.92	98.24%	98.34%	98.87%
2016 & Prior	$168,664.29	($9,491.67)	$159,172.62	$2,218.64	$823.71	$208.78	$126,477.72	$32,694.90	20.54%	27.38%	
Rollbacks	$25,120.98	$58,268.36	$83,389.34	$5,071.20	$0.00	$0.00	$4,366.68	$79,022.66	94.76%	94.94%	
Total All	$22,955,458.77	$70,668.03	$23,026,126.80	$178,263.45	$9,198.05	$296.41	$532,401.32	$22,493,725.48	97.69%	97.83%	

2017 COMBINED MONTHLY BREAKDOWN

Oct-17	$269,920,423.74	$553,492.70	$270,473,916.44	$9,831,927.33	$37,739.92	$564.42	$260,641,424.69	$9,832,491.75
Nov-17	$270,473,916.44	$412,042.93	$270,885,959.37	$11,909,015.73	$18,907.00	$570.67	$249,143,881.22	$21,742,078.15
Dec-17	$270,885,959.37	($14,649.56)	$270,871,309.81	$151,714,891.47	$21,384.35	$2,564.36	$97,411,775.83	$173,459,533.98
Jan-18	$270,871,309.81	($124,645.58)	$270,746,664.23	$85,267,049.60	$31,771.61	$6.27	$12,020,074.38	$258,726,589.85
Feb-18	$270,746,664.23	($47,878.57)	$270,698,785.66	$3,403,054.65	$178,516.41	($45,477.13)	$8,614,618.29	$262,084,167.37

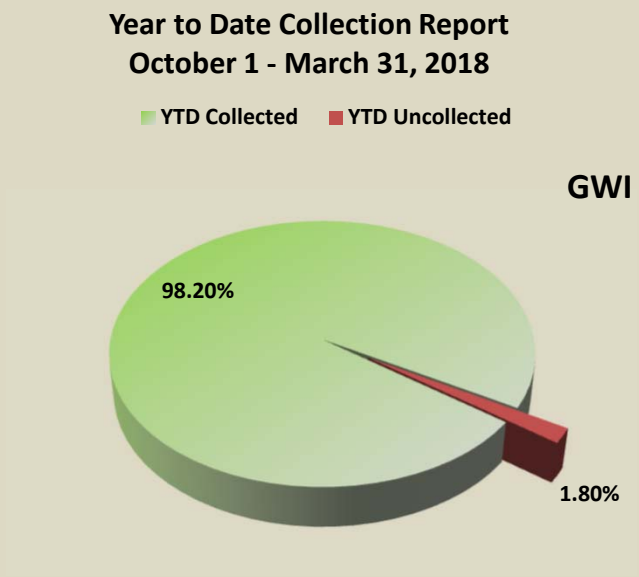
Year to Date Collection Report
October 1 - March 31, 2018
YTD Collected
YTD Uncollected
GWI
98.20%
1.80%

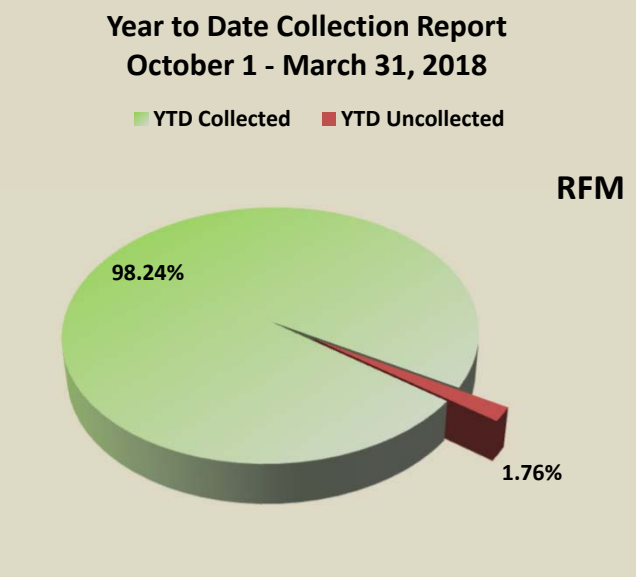
Year to Date Collection Report
October 1 - March 31, 2018
YTD Collected
YTD Uncollected
RFM
98.24%
1.76%

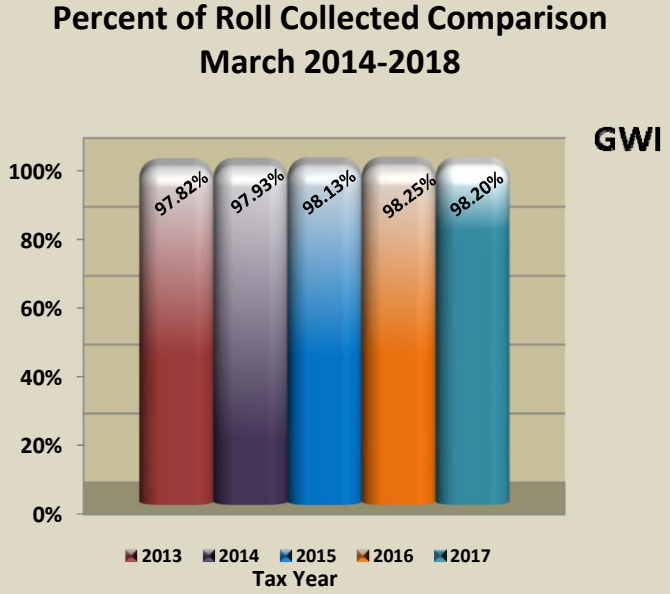
Percent of Roll Collected Comparison
March 2014-2018
GWI
100%
80%
60%
40%
20%
0%
97.82%
97.93%
98.13%
98.25%
98.20%
2013
2014
2015
2016
2017
Tax Year

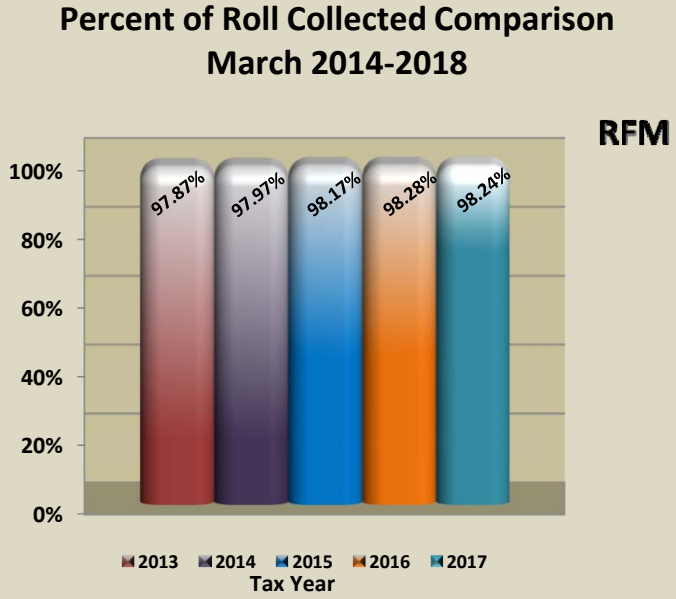
Percent of Roll Collected Comparison
March 2014-2018
RFM
100%
80%
60%
40%
20%
0%
97.87%
97.97%
98.17%
98.28%
98.24%
2013
2014
2015
2016
2017
Tax Year

Commissioners Court - Regular Session **9.**

Meeting Date: 04/17/2018

Property Tax Refunds - Over 2500 - March 2018

Submitted For: Larry Gaddes

Submitted By: Cathy Atkinson, County Tax Assessor Collector

Department: County Tax Assessor Collector

Agenda Category: Consent

Information

Agenda Item

Discuss, consider and take appropriate action on approving property tax refunds over $2,500.00 for the month of March 2018 for the Williamson County Tax Assessor/Collector.

Background

Fiscal Impact

From/To	Acct No.	Description	Amount

Attachments

030118-033118 Refunds Over 2500

Form Review

Inbox	Reviewed By	Date
County Judge Exec Asst.	Wendy Coco	04/09/2018 11:34 AM
Form Started By: Cathy Atkinson		Started On: 04/07/2018 06:30 PM
Final Approval Date: 04/09/2018		

WILLIAMSON COUNTY
1848

Larry Gaddes PCAC, C T A
Tax Assessor/Collector

Date: April 7, 2018

To: Members of the Commissioners Court

From: Larry Gaddes PCAC, CTA

Subject: Property Tax Refunds

In accordance with Section 31.11 of the Property Tax Code, the court needs to approve all refunds in excess of $2,500.00. We are presenting the attached list which includes these property tax refunds for your approval.

Please contact me at (512) 943-1954, if you have any questions.

Thank you.

Main Office and Mailing Address:
904 South Main Street
Georgetown, Texas 78626
Motor Vehicle Telephone: 512.943.1602
Property Tax Telephone: 512.943.1603
www.wilco.org/tax

Annex Locations:

1801 E. Old Settler's Blvd., Ste 115
Round Rock, Texas 78664
Telephone: 512.244.8644

350 Discovery Blvd., Ste. 101
Cedar Park, Texas 78613
Telephone: 512.260.4290

412 Vance St., Ste. 1
Taylor, Texas 76574
Telephone: 512.352.4140

Property Tax
Account QuickReport
As of March 31, 2018

Date	Num	Name	Memo	Amount
Refunds Payable - Taxpayers				
03/06/2018	65305	DEZELLE, JAMES JR & JENNIFER	R372968 - Overpayment	-8,500.00
03/06/2018	65306	MOORE, JERRY T & ANITA L	R388526 - Overpayment	-18,521.00
03/06/2018	65307	VIJAYAKUMAR JAYABALU OR SRIVIDYA JAWAHARI	R529549 - Overpayment	-5,000.00
03/06/2018	65311	APPLE HOUSTON RESTAURANTS INC	R401779 - Overpayment	-36,212.63
03/06/2018	65316	BBVA COMPASS	P394890 - Overpayment	-3,547.49
03/12/2018	65336	CORELOGIC / DITECH	R047206 - Overpayment	-3,649.84
03/12/2018	65340	IBM CREDIT LLC	Multiple Accounts - Overpayments	-52,690.53
03/12/2018	65350	KATRINA SCHOLD AND PAT RAMSEY	R086138 - Overpayment	-7,417.91
03/16/2018	65366	RUSSELL, CRAIG A & ALMA R	R017283 - 2016-2017 Supplements	-9,820.01
03/16/2018	65367	HILL, KRISTI	R518553 - 2017 Supplement #7	-8,082.10
03/16/2018	65370	RAJAT OR SUGANHA HINGAD	R470374 - Overpayment	-10,000.00
03/20/2018	65380	MOAWAD, MARISELA	R412475 - 2016-2017 Supplements	-5,504.97
03/20/2018	65385	GRAVES, HENRY L JR & LINDA S	R072336 - 2015-2016 Supplements	-6,190.32
03/20/2018	65389	HARRIS, CHAUNCEY	R459152 - 2017 Supplement #7	-7,958.28
03/20/2018	65393	LEE, RICHARD D & LUZHILDA P RESTREPO	R417218 - 2017 Supplement #7	-12,362.78
03/20/2018	65395	VELA, JESUS F	R475575 - 2017 Supplement #7	-4,995.88
03/20/2018	65398	LARKSPUR COMMUNITY DEVELOPMENT INC	R405196 - 2017 Supplement #7	-9,282.54
03/20/2018	65400	GARZA, ROY & DONNA	R465963 - 2016-2017 Supplements	-6,925.52
03/20/2018	65435	HARUTUNIAN, TAKOOHY ARDASH	R044496 - 2016-2017 Supplements	-4,634.02
03/20/2018	65464	BARNETT, ERNEST, JR	R360428 - 2016-2017 Supplements	-3,969.91
03/20/2018	65484	AVANT, JIM F & JEFF W & JAMIE DEYHLE	R098911 - 2017 Supplement #7	-13,906.31
03/20/2018	65485	BEN ALLEN MEHARG SURVIVORS TRUST	R368828 - 2017 Supplement #7	-3,033.19
03/20/2018	65486	BOWLES, JEANNINE C	R369313 - 2017 Supplement #7	-3,408.84
03/20/2018	65523	WRIGHT, MICHAEL L & ELIZABETH L	R406961 - 2017 Supplement #7	-3,276.79
03/20/2018	65528	GMITTER, RICHARD C	R461219 - 2016-2017 Supplements	-19,327.47
03/20/2018	65532	LEWIS, ISAAC A	R457988 - 2016-2017 Supplements	-9,799.93
03/20/2018	65547	GERACCI, JAMES J & KRISTIE M	R431327 - 2017 Supplement #7	-2,932.71
03/20/2018	65551	CASTILLO, IRMA & JUAN	R440361 - 2017 Supplement #7	-3,198.92
03/20/2018	65555	SADDLEBACK PARK VALLEY LLC	R491406 - 2015-2016 Agreed Judgment	-28,140.84
03/20/2018	65564	GILLMORE, JAMES D	R475910 - 2017 Supplement #7	-3,910.31
03/20/2018	65579	OLP WYOMING SPRINGS LLC	R511411 - 2016 Agreed Judgment	-35,337.79
03/20/2018	65584	CEDAR PARK HEALTHCARE LLC	R511400 - 2016 Agreed Judgment	-33,202.92
03/20/2018	65613	IVEY, JOSHUA & PAMELA PEREZ	R521438 - 2017 Supplement #7	-4,483.37
03/20/2018	65663	OLIVER, DONALD RALPH, JR	R537868 - 2017 Supplement #7	-10,048.66
03/22/2018	65741	HOLCOMB, MURRAY A OR COLLEEN D	R414989 - Overpayment	-3,436.11
Total Refunds Payable - Taxpayers				-402,709.89
TOTAL				**-402,709.89**

Commissioners Court - Regular Session **10.**

Meeting Date: 04/17/2018

Continuing Education

Submitted For: Cynthia Long **Submitted By:** Kathy Pierce, Commissioner Pct. #2

Department: Commissioner Pct. #2

Agenda Category: Consent

Information

Agenda Item

Discuss, consider and take appropriate action on accepting Commissioners Education Certificate of Completion for Williamson County Commissioner Cynthia Long for successfully completing the continuing education provisions of Article 81.0025 of the Texas Local Government Code.

Background

Fiscal Impact

From/To	Acct No.	Description	Amount

Attachments

Continuing Education 2017

Form Review

Inbox	Reviewed By	Date
County Judge Exec Asst.	Wendy Coco	04/11/2018 10:23 AM
Form Started By: Kathy Pierce		Started On: 04/11/2018 10:06 AM
Final Approval Date: 04/11/2018		

COUNTY JUDGES & COMMISSIONERS ASSOCIATION OF TEXAS

COMMISSIONERS EDUCATION CERTIFICATE OF COMPLETION

This is to certify that

Cynthia Long

Williamson County Commissioner

has successfully completed the continuing education provisions of Article 81.0025 of the Texas Local Government Code

2017

Byron Underwood, Chairman
Commissioners Education Committee

Alma V. Moreno, President
County Judges and Commissioners
Association of Texas

COUNTY JUDGES AND COMMISSIONERS ASSOCIATION OF TEXAS

County Commissioner Continuing Education Transcript

Reporting Period: 1/1/ 2017- 12/31/2017

Hon. Cynthia Long
Williamson County Commissioner, Pct.2
350 Discovery Blvd Ste 201
Cedar Park, TX 78613-2254

Phone: (512) 260-4280
Fax:

Term:
1/1/2007 - 12/31/2018

Last 4 digits of SSN
2508

01/01/2017	Excess hours carried from prior period	8.00
01/11/2017	Urban Counties Education and Policy Developement Conference	8.00
08/23/2017	TAC Annual Conference	8.00

Total Hours Earned: 24.00

You have met your 2017 Commissioner Statutory Continuing Education requirement.

You will carry forward 8.00 hours to the next reporting period.

See Statute: Section 81.0025 Continuing Education, Local Government Code

Because continuing education sponsors are not required by law to report attendance to the Association, this transcript may not be a complete list of continuing education hours earned by the commissioner for this calendar year.

If this report does not agree with your records, please call Administrative Assistant at (512) 482-0701 or (800) 733-0699 or cjca@allison-bass.com

COUNTY JUDGES AND COMMISSIONERS ASSOCIATION OF TEXAS

COMMISSIONERS COURT ADVANCED CURRICULUM TRANSCRIPT

Name: Hon. Cynthia Long
SSN: 2508
County: Williamson County
Term: 01/01/2007 - 12/31/2018
Office: Commissioner, Pct.2
Enrollment: 01/01/2007

Course ID	Course Title	Credits Earned	Date
	Phase I Required: 16.00 Credits Earned to Date: 16		
1.001	Governing Texas Counties	16	01/12/2007
	Phase II Required: 16.00 Credits Earned to Date: 7		
2.004	District Clerk	1	03/11/2009
2.007	County Sheriff	1	06/12/2013
2.008	County Attorney	1	03/11/2009
2.010	Justice of the Peace	1	02/17/2011
2.014	Extension Service	1	06/21/2007
2.015	Juvenile Probation Officer	1	02/17/2011
2.017	County Court at Law Judge	1	03/11/2009
	Phase III Required: 32.00 Credits Earned to Date: 11		
3.001	Open Meetings Act	1	06/13/2013
3.008	Physical and Mental Health Issues	1	06/11/2013
3.011	Councils of Governments	1	06/21/2007
3.013	Working With the Legislature	1	06/21/2007
3.015	Effective Meetings - Parliamentary Procedure	1	02/17/2011
3.018	Environmental Issues	1	06/13/2013
4.003	County Investment Policies	1	03/11/2009
4.008	County Tax Rate	1	06/21/2007
4.010	Financial Accounting: Investments	1	02/17/2011
4.011	Budgeting	1	06/12/2013
4.012	Personnel: County Retirement	1	06/21/2007

Total Credits Earned: 34

If this report does not agree with your records, please call Administrative Assistant at (512) 482-0701 or (800) 733-0699 or cjca@allison-bass.com

COUNTY JUDGES AND COMMISSIONERS ASSOCIATION OF TEXAS

COMMISSIONERS COURT ADVANCED CURRICULUM TRANSCRIPT

CCAC Program Status

	Required	Earned	Status
Phase I	16	16	Completed
Phase II	16	7	9.00 credits needed
Phase III	32	11	21.00 credits needed
	64	34	

If this report does not agree with your reccrds, please call Administrative Assistant at (512) 482-0701 or (800) 733-0699 or cjca@allison-bass.com

COUNTY JUDGES AND COMMISSIONERS ASSOCIATION OF TEXAS

COMMISSIONERS COURT ADVANCED CURRICULUM LIST OF COURSES NOT YET TAKEN

Name: Hon. Cynthia Long

SSN: 2508

County: Williamson County

Term: 01/01/2007 - 12/31/2018

Office: Commissioner, Pct.2

Enrollment: 01/01/2007

The following is a list of CCAC Courses that you have not yet attended. Please use this list to choose the appropriate courses to attend in order to complete a phase.

	Course ID	Course Title	
Phase I	Required: 16	Credits Earned to Date: 16	**Credits Needed: 0**

	Course ID	Course Title	
Phase II	Required: 16	Credits Earned to Date: 7	**Credits Needed: 9**
	2.001	County Judge	
	2.002	County Commissioner	
	2.003	County Clerk	
	2.005	County Treasurer	
	2.006	County Tax Assessor-Collector	
	2.009	District Attorney	
	2.011	Constable	
	2.012	County Auditor	
	2.013	County Health Officer	
	2.016	Community Supervision and Corrections Department	
	2.018	District Judge	

	Course ID	Course Title	
Phase III	Required: 32	Credits Earned to Date: 11	**Credits Needed: 21**
	3.002	Commissions and Committees	
	3.003	Law Making	
	3.004	Regulations and Legal Issues	
	3.005	Justice System	
	3.006	Personnel Policies	
	3.007	Civil Rights Issues	
	3.009	Juvenile Justice System	
	3.010	Building Better Relations	
	3.012	Interlocal Agreements	
	3.014	Specialized Districts	
	3.016	County Roads	
	3.017	Public Information Act	
	3.019	Subdivision Regulations	
	4.001	Bonds and Certificates of Obligation	
	4.002	Personnel Policy: Payroll	

If this report does not agree with your records, please call Administrative Assistant at (512) 482-0701 or (800) 733-0699 or cjca@allison-bass.com

COUNTY JUDGES AND COMMISSIONERS ASSOCIATION OF TEXAS

COMMISSIONERS COURT ADVANCED CURRICULUM LIST OF COURSES NOT YET TAKEN

Name: Hon. Cynthia Long

SSN: 2508

County: Williamson County

Term: 01/01/2007 - 12/31/2018

Office: Commissioner, Pct.2

Enrollment: 01/01/2007

The following is a list of CCAC Courses that you have not yet attended. Please use this list to choose the appropriate courses to attend in order to complete a phase.

	Course ID	Course Title	
Phase III	Required: 32	Credits Earned to Date: 11	**Credits Needed: 21**
	4.004	County Purchasing	
	4.005	Purchasing Applications	
	4.006	Fees and Revenues	
	4.007	Basic Taxation	
	4.009	Financial Accounting: Basics	
	4.013	Risk Management: Safety Issues	
	4.014	Ethics	
	4.015	Records Management	
	4.016	Leadership - Team Building	
	4.017	Phones - Communications	
	4.018	Terrorism Prevention	
	4.019	Voting Machine Issues	
	4.020	Negotiating Technology Contracts	
	4.021	Strategic Planning	
	4.022	Internet	
	4.023	Grantseeking	
	4.024	Redistricting	

CCAC Program Status

	Required	Earned	Status
Phase I	16	16	Completed
Phase II	16	7	9 credits needed
Phase III	32	11	21 credits needed
	64	34	

If this report does not agree with your records, please call Administrative Assistant at (512) 482-0701 or (800) 733-0699 or cjca@allison-bass.com

Commissioners Court - Regular Session **11.**

Meeting Date: 04/17/2018

Veteran Treatment Court Donation

Submitted For: Cynthia Long **Submitted By:** Kathy Pierce, Commissioner Pct. #2

Department: Commissioner Pct. #2

Agenda Category: Consent

Information

Agenda Item

Consider accepting a $1,003.00 donation for the Veteran Treatment Court's Mentor program.

Background

This is a donation to purchase shirts for the mentors who serve veteran participants in County Court at Law 2's Veteran Treatment Court. The shirts are to be worn during court to help identify mentors.

Fiscal Impact

From/To	Acct No.	Description	Amount
TO	0382.0000.367400	Specialty Court Donation	$1,003.00

Attachments

No file(s) attached.

Form Review

Inbox	Reviewed By	Date
County Judge Exec Asst.	Wendy Coco	04/11/2018 10:23 AM
Form Started By: Kathy Pierce		Started On: 04/11/2018 09:29 AM
Final Approval Date: 04/11/2018		

Commissioners Court - Regular Session **12.**

Meeting Date: 04/17/2018

WCCHD Remodel P322; Change Order #22

Submitted By: Gina Wrehsnig, Infrastructure

Department: Infrastructure **Division:** Building Maintenance

Agenda Category: Consent

Information

Agenda Item

Discuss, consider and take appropriate action on accepting and approving a report on the Texas Avenue Remodel Project; Change Order # 22 in the amount of $12,126.00 for ADA improvements based on the ADA Inspection Report, which was executed by Bob Lubecker, Williamson County Facilities Project Manager, pursuant to the previous grant of authority under Section 262.031 of the Local Government Code. This change order is being funded out of the Owners Contingency.

Background

On August 15, 2017, the Williamson County Commissioners Court granted Bob Lubecker, Williamson County Facilities Project Manager, with general authority to approve change orders for the Agreement for Construction Services with Trimbuilt Construction, Inc. in relation to the Williamson County Texas Avenue Facility Remodel (WCCHD Office Renovations) Project for any increase in costs up to a total maximum amount of $30,000.00 in accordance with Section 262.031 of the Local Government Code – Changes in Plans and Specifications. This report is being provided for purposes of notifying the court of such change order and to place it in the minutes of the Commissioners Court.

Fiscal Impact

From/To	Acct No.	Description	Amount

Attachments

WCCHD Change Order 22

WCCHD CO22 Funds

Form Review

Inbox	Reviewed By	Date
County Judge Exec Asst.	Wendy Coco	04/12/2018 09:25 AM
Form Started By: Gina Wrehsnig		Started On: 04/12/2018 07:47 AM
Final Approval Date: 04/12/2018		

P. O. Box 80169
Austin, TX 78708-0169
(512) 832-1979

Trimbuilt Construction, Inc.
On time. Every time.

Change Request

To: Williamson County
710 Main St.
Georgetown, TX 78626

PH: (512) 943-1599 Fax: (512) 930-3313

Number: 22
Date: 3/12/2018
Project: Wilco WCCHD Office Renovations
Job #: 6148E

Description: ADA Improvements

We are pleased to offer the following specifications and pricing to make the following changes:

-ADA Parking Site Concrete
Asphalt Demo, Concrete Demo @ front ramp, Replace front ADA ramp, excavate 4-6" per concrete paving, excavation per thickened edge, import select fill, #4's @ 12" O.C. Reinforcing, drill, and epoxy dowels, chairs, place and finish commercial concrete, light broom finish, formwork removal, ADA compliancy, ADA Signage. Furnish and install 4 car stops. $6,832

-Replace 8 closers on existing restroom doors. $1,920

-Shift existing toilets and install offset flanges where necessary to relocate toilets to 18" o.c. per ADA. $775

-Furnish and install a retractable belt to meet ADA restrictions to block the bottom of the stairs. Qty 2. $238

Description:	Price
Plumbing	775.00
Drywall Acoustical Demo	70.00
Concrete	6,832.00
Supervision	1,080.00
Project Management	250.00
Misc	168.00
Insurance	167.00
Door Frames Hardware	1,920.00
Profit / Fee	581.00
P & P Bond	283.00
Total:	**12,126.00**

If you have any questions, please contact me at 512-832-1979.

Submitted by:

Trimbuilt Construction, Inc.

cc:

Approved By: _____

Date: 4-5-18

HR Marc

Phone (512) 673-0237 Email – brandon@hrmarc.com

March 9, 2018

Attn: Michael Holiman
Trimbuilt
Email: mholiman@trimbuilt.com

RE: Wilco - ADA Parking Site Concrete

The following is a change order per changes in scope at Wilco. The amount of this change order is **$6,832.00**. This change order includes: Asphalt Demo, Concrete Demo @ Front Ramp, Replace Front ADA Ramp, Excavate 4-6" Per Concrete Paving, Excavation Per Thickened Edge, Import Select Fill, #4's @ 12" O.C. Reinforcing, Drill & Epoxy Dowels, Chairs, Place & Finish Commercial Concrete, Light Broom Finish, Formwork Removal, ADA Compliancy, F/I four car stops & ADA Signage. This change order was requested by the field per ADA requirements. These changes were not part of initial scope.

BREAKOUT:

- Labor: $2,909.00
- Materials: $2,150.00
- Equipment: $1,050.00
- Profit & Overhead: $723.00

Thank you, $6,832

Brandon Del Frate

Approved _____

Declined _____

P. O. Box 80169
Austin, TX 78708 - 0169
(512) 832 - 1979

Trimbuilt Construction, Inc.
On time. Every time.

Change Order
Wilco RR closers
6148E

Date 3/19/18

To: **Michael H**

	Amount
Add 8 closers to existing RR doors	$
Regular hours	$
2-3 days ETA	$
	$
	$
	$
	$
	$
	$
TOTAL	$ 1,920.00

If you have any questions, please contact me at (512) 832-1979.

Submitted by:
Trimbuilt Construction, Inc.

Quote expires in 90 days if not accepted, and is subject to escalation rates based on commencement date of project

Michael Holiman

Subject: FW: Need pricing for ADA toilet shift - WCCHD

From: Ismael Maldonado <ismael@nufloplumbing.com>
Sent: Monday, April 02, 2018 12:12 PM
To: Michael Holiman <MHoliman@trimbuilt.com>
Cc: Austin Young <ayoung@trimbuilt.com>
Subject: Re: Need pricing for ADA toilet shift - WCCHD

$775.00

Let me know if you need an actual proposal.

Thanks
Ismael Maldonado
512.970.0626

Po Box 2109
Round Rock Texas, 78680
Lic# M37498

Texas State Board of Plumbing Examiners
929 E. 41st Street, Austin Texas, 78751
Phone: 512.936.5200
Toll Free: 800.845.6584

From: Michael Holiman <MHoliman@trimbuilt.com>
Date: Monday, April 2, 2018 at 8:51 AM
To: Ismael Maldonado <ismael@nufloplumbing.com>
Cc: Austin Young <ayoung@trimbuilt.com>, Michael Holiman <MHoliman@trimbuilt.com>
Subject: RE: Need pricing for ADA toilet shift - WCCHD

Ismael, never received a proposal from you on this...

From: Ismael Maldonado <ismael@nufloplumbing.com>
Sent: Monday, March 26, 2018 9:20 AM
To: Michael Holiman <MHoliman@trimbuilt.com>
Cc: Austin Young <ayoung@trimbuilt.com>
Subject: Re: Need pricing for ADA toilet shift - WCCHD

Do you know how many have to move?

Sent from my iPhone

Industrial & Scientific

Deliver to Michael
PFLUGERVILLE 78660 Departments Browsing History EN Hello, michael Account & Lists Orders Prime 0 Cart

Industrial & Scientific Lab Test & Measurement Safety Janitorial & Facilities Food Service Education Material Handling Materials Metalworking

Get a $15 credit when you buy $50 of Amazon Gift Cards prime now Learn more ›

Industrial & Scientific › Occupational Health & Safety Products › Safety Signs & Signals › Safety Barriers › Rope Barriers



Roll over image to zoom in

Tensabarrier

Tensabarrier 897-15-S-35-NO-YAX-C Standard Wall Mount, Yellow Caps, No Custom Yellow Webbing/Black "Caution - Do Not Enter" Standard Belt End, 15'

1 customer review | 3 answered questions

List Price: ~~$105.00~~
Price: $74.41 FREE Shipping for Prime members
You Save: $30.59 (29%)

Usually ships within 5 to 7 days.
Ships from and sold by Amazon.com. Gift-wrap available.

New (11) from $74.41

Specifications for this item

Brand Name	Tensabarrier	Measurement System	English
Color	yellow with black - Cautic do not enter	Model Number	897-15-S-3 NO-YAX-C
EAN	0094705707	Number of Items	1
Height	5.5 inches	Part Number	897-15-S-3 NO-YAX-C
Included Components	Wall unit (1)	UNSPSC Code	46151505
Length	3.25 inches	UPC	09470570
Material	PVC (Polyvin Chloride)	Width	3.25 inche

See more product details

Share

Qty: 1

Add to Cart

Buy Now

Turn on 1-Click ordering for this browser

Deliver to Michael - PFLUGERVILLE 78660

Add to List

Add to your Dash Buttons

Other Sellers on Amazon

$78.75 Add to Cart
+ $6.80 shipping
Sold by: Tensator Inc.

$87.80 Add to Cart
+ $1.99 shipping
Sold by: DataAlchemy

$98.07 Add to Cart
+ Free Shipping
Sold by: ONLINE DEALZ

New (11) from $74.41

Have one to sell? Sell on Amazon

Frequently bought together

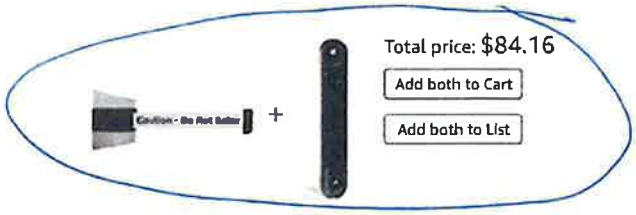

+ install $35 Qty. 2

These items are shipped from and sold by different sellers. Show details

☑ **This item:** Tensabarrier 897-15-S-35-NO-YAX-C Standard Wall Mount, Yellow Caps, No Custom Yellow Webbing/Black... $74.41

☑ Tensabarrier 898CLIP Locking Wall Receptacle $9.75

Williamson County Facilities - Job Cost Tracking Log

Project: WCCHD Remodel # P322 **Change Order #:** 22

Change Order No.	Court Agenda Date	Party of Initiation	Time Ext. (Days)	GMP Breakdown						GMP Total	Total Updated Contract Amount
				Cost of Work	CM Contingency	Owner Contingency	Buyout Savings (Current)	General Conditions	Construction Phase Fee		
Contract				$ 1,440,000.00		$ 250,000.00				$ 1,690,000.00	$ 1,690,000.00
1	Pending										$ 1,690,000.00
2	Denied										$ 1,690,000.00
3	Denied										$ 1,690,000.00
4	9/26/2017	Owner	7	$ 3,113.00		$ (3,113.00)					$ 1,690,000.00
5	11/14/2017	Owner		$ 1,071.25		$ (1,071.25)					$ 1,690,000.00
6	1/9/2018	Architect	0	$ 7,733.00		$ (7,733.00)					$ 1,690,000.00
7	11/14/2017	Architect		$ 7,386.00		$ (7,386.00)					$ 1,690,000.00
8	11/14/2017	Owner		$ 5,987.00		$ (5,987.00)					$ 1,690,000.00
9	1/9/2018	Architect	0	$ 2,376.00		$ (2,376.00)					$ 1,690,000.00
10	1/9/2018	Owner	0	$ 5,236.02		$ (5,236.02)					$ 1,690,000.00
11	1/9/2018	Architect	0	$ 2,071.00		$ (2,071.00)					$ 1,690,000.00
12	1/9/2018	Owner	0	$ 4,755.13		$ (4,755.13)					$ 1,690,000.00
13		Contractor	21	$ 13,788.75		$ (13,788.75)					$ 1,690,000.00
14	Pending										$ 1,690,000.00
15	Pending										$ 1,690,000.00
16	Pending										$ 1,690,000.00
17	1/30/2018	Contractor	0	$ 5,919.97		$ (5,919.97)					$ 1,690,000.00
18	2/20/2018	Contractor	0	$ 29,520.84		$ (29,520.84)					$ 1,690,000.00
19	2/20/2018	Contractor	0	$ 7,548.26		$ (7,548.26)					$ 1,690,000.00
20	2/20/2018	Owner	0	$ 3,024.76		$ (3,024.76)					$ 1,690,000.00
21	4/3/2018	Owner	0	$ 7,177.66		$ (7,177.66)					$ 1,690,000.00
22		Owner	0	$ 12,126.00		$ (12,126.00)					$ 1,690,000.00
			28	**$ 1,558,834.64**	**$ -**	**$ 131,165.36**	**$ -**	**$ -**	**$ -**	**$ 1,690,000.00**	**$ 1,690,000.00**

$ 131,165.36

Commissioners Court - Regular Session **13.**

Meeting Date: 04/17/2018

North Campus Facility P324 - Change Order 33

Submitted By: Gina Wrehsnig, Infrastructure

Department: Infrastructure **Division:** Building Maintenance

Agenda Category: Consent

Information

Agenda Item

Discuss, consider and take appropriate action on accepting and approving a report on the Williamson County North Campus Project; Change Order #33 in the amount of ($28,265.00) to receive credit for painting scope which was eliminated at Building E and F, which was executed by Dwayne Gossett, Williamson County Facilities Project Manager, pursuant to the previous grant of authority under Section 262.031 of the Local Government Code. This change order is to being credited to the Owners Contingency.

Background

On September 6, 2016, the Williamson County Commissioners Court granted Dwayne Gossett, Williamson County Facilities Project Manager, with general authority to approve change orders for the Agreement for Construction Services with J. T. Vaughn Construction, LLC in relation to the Williamson County North Campus Project for any increase in costs up to a total maximum amount of $30,000.00 in accordance with Section 262.031 of the Local Government Code – Changes in Plans and Specifications. This report is being provided for purposes of notifying the court of such change order and to place it in the minutes of the Commissioners Court.

Fiscal Impact

From/To	Acct No.	Description	Amount

Attachments

NCF Change Order 33

NCF CO33 Funds

Form Review

Inbox	Reviewed By	Date
County Judge Exec Asst.	Wendy Coco	04/12/2018 09:25 AM
Form Started By: Gina Wrehsnig		Started On: 04/12/2018 07:48 AM
Final Approval Date: 04/12/2018		

VAUGHN
CONSTRUCTION
3171 SE Inner Loop
Georgetown, TX
78626

T: (512) 663-7461
F: (512) 681-9752

February 15, 2018

Dwayne Gossett
Williamson County, Texas
3101 SE Inner Loop
Georgetown, TX 78620

Re: North Campus Facilities
Job No: 233901

Subj: Change Proposal No. 233901-0033

Dear Sir or Madam:

We respectfully submit our proposal for an increase to our contract in the amount of $0 (zero) dollars to provide Sealing Concrete Floors at Bldg. f & Credit for Painting Structural Steel in Bldg. e for the above referenced project.

Our price is valid for Ten (10) days

Please indicate your acceptance of this change proposal by signing and returning one copy of the attached Form B breakdown of our cost.

Very truly yours,
VAUGHN CONSTRUCTION

Doug Boram

Attachments: Form B, Subcontractor Pricing Back-up

CC: Brody Harris - BLGY
Mark Brown - BLGY

FORM B

PROJECT: **North Campus Facilities**

CHANGE PROPOSAL NO: **233901-0033**

QUOTATION :

Item	Labor	Materials	Subs	Total
Credit for Painting Struct. Steel in Bldg. e	$0.00	$0.00	$(15,852.00)	$(15,852.00)
Credit for Painting CMU in Bldg. e & f	$0.00	$0.00	$(19,193.00)	$(19,193.00)
To Be Credited to Owners Contingency	$0.00	$28,265.00	$0.00	$28,265.00
Sealing of Concrete Floors at Building f	$0.00	$0.00	$6,780.00	$6,780.00
Totals	$0.00	$28,265.00	$(28,265.00)	$0.00

Insurance, Tax, Benefits on Labor	$0.00
Overhead	$0.00
Fee on Subs	$0.00
Fee on JTV	$0.00
Bond	$0.00
Remodel Tax	$0.00
TOTAL	**$0.00**

TIME EXTENSION TO CONTRACT: 0 Days

Submitted Date: **2/15/2018**

Accepted

By: Dwayne Gorrell

Date _____

VAUGHN CONSTRUCTION

By: _____
Doug Boram

Proposal Valid for 10 Days

Williamson County
Williamson County North Campus Facilities
Vaughn Project No. 2339-01

VAUGHN CONSTRUCTION

Funds Tracking Log

Change Proposal No.	Change Type & No.	Time Extension (Days)		GMP Breakdown						GMP #2339.01	Total Updated Contract Amount
		Pending	Approved	Cost of Work	CM Contingency	Owner Contingency	General Conditions	Buyout Savings	Construction Phase Fee		
N/A	GMP	-	-	$18,195,395	$406,771	$406,771	$1,896,522		$625,467	$21,530,926	$21,530,926
1	OCO	0	0	$3,659	$0	($3,659)	$0		$0	$0	$21,530,926
2	OCO	10	10	$114,186	$0	($114,186)	$0		$0	$0	$21,530,926
3	OCO	0	0	$1,727	$0	($1,748)	$21		$0	$0	$21,530,926
4	OCO	0	0	$19,494	$0	($19,494)	$0		$0	$0	$21,530,926
5	OCO	0	0	$19,676	($19,676)	$0	$0		$0	$0	$21,530,926
6	OCO	0	0	$14,465	($14,465)	$0	$0		$0	$0	$21,530,926
7	OCO	0	0	$2,237	$0	($2,237)	$0		$0	$0	$21,530,926
8	OCO	0	0	$3,450	$0	($3,450)	$0		$0	$0	$21,530,926
9	OCO	0	0	$832	$0	($832)	$0		$0	$0	$21,530,926
10	OCO	0	0	$285	$0	($285)	$0		$0	$0	$21,530,926
11	OCO	0	0	$22,415	$0	($22,415)	$0		$0	$0	$21,530,926
12	OCO	0	0	$11,221	$0	($11,221)	$0		$0	$0	$21,530,926
13	OCO	0	0	($5,000)	$0	$5,000	$0		$0	$0	$21,530,926
14	OCO	0	0	$0	$0	$0	$0		$0	$0	$21,530,926
15	OCO	0	0	$79,584	$0	($79,584)	$0		$0	$0	$21,530,926
16	OCO	0	0	$9,930	$0	($9,930)	$0		$0	$0	$21,530,926
17	OCO	0	0	$2,450	($2,450)	$0	$0		$0	$0	$21,530,926
18	OCO	0	0	$1,747	($1,747)	$0	$0		$0	$0	$21,530,926
19	OCO	0	0	($1,763)	$0	$0	$1,763		$0	$0	$21,530,926
20	OCO	0	0	$5,784	$0	($5,856)	$72		$0	$0	$21,530,926
21	OCO	0	0	$10,364	($10,364)	$0	$0		$0	$0	$21,530,926
22	OCO	0	0	$6,410	($6,461)	$0	$51		$0	$0	$21,530,926
23	OCO	0	0	$15,825	($15,825)	$0	$0		$0	$0	$21,530,926
24	OCO	0	0	$33,487	($33,906)	$0	$419		$0	$0	$21,530,926
25	OCO	0	0	$8,854	($8,854)	$0	$0		$0	$0	$21,530,926
26	OCO	0	-	($106)	$0	$106	$0		$0	$0	$21,530,926
27R	OCO	0	-	$2,687	$0	($2,687)	$0		$0	$0	$21,530,926
28	Void	0	0	$0	$0	$0	$0		$0	$0	$21,530,926
29	OCO	0	-	$3,647	($3,647)	$0	$0		$0	$0	$21,530,926
30	OCO	0	0	($30,000)	$0	$30,000	$0		$0	$0	$21,530,926
31	OCO	0	0	$4,434	$0	($4,434)	$0		$0	$0	$21,530,926

32	OCO	0	0	$6,816	$0	($6,816)	$0		$0	$0	$21,530,926
33R	OCO	0	-	($28,265)	$0	$28,265	$0		$0	$0	$21,530,926
Current Amounts		**10**	**10**	**$18,535,927**	**$289,376**	**$181,308**	**$1,898,848**	**$0**	**$625,467**	**$21,530,926**	**$21,530,926**

ACTION DECORATING, INC.

Commercial & Residential Painting

11002 Plains Trail
Austin, Texas 78758
512-491-8900

October 4, 2017

Vaughn Construction

Attn: Thomas Morrill

Re: WILCO - Building F Concrete Floors

Seal Concrete Floors in Bldg. F

Additional Cost	**$ 6,780.00**

Should you have any questions or comments regarding this bid, please contact us. Thank you for considering Action Decorating for this project.

Amy Kirkham

Amy Kirkham for Action Decorating, Inc.

Vaughn Construction

ACTION DECORATING, INC.

Commercial & Residential Painting

11002 Plains Trail
Austin, Texas 78758
512-491-8900

July 13, 2017

Vaughn Construction

Attn: Thomas Morrill

Re: WILCO - Building E Modifications – ASI 14

Delete Painting Structural Steel in Bldg. e

Deduct Amount	**$ - 15,852.00**

Should you have any questions or comments regarding this bid, please contact us. Thank you for considering Action Decorating for this project.

Amy Kirkham

Amy Kirkham for Action Decorating, Inc.

Vaughn Construction

ACTION DECORATING, INC.

Commercial & Residential Painting

11002 Plains Trail
Austin, Texas 78758
512-491-8900

January 19, 2018

Vaughn Construction

Attn: Camille Carpenter

Re: WILCO - Building E & F Modifications

Delete painting CMU in Building E	$ - 9,644.00
Delete painting CMU in Building F	$ - 9,549.00
Deduct Amount	**$ - 19,193.00**

Should you have any questions or comments regarding this bid, please contact us. Thank you for considering Action Decorating for this project.

Amy Kirkham

Amy Kirkham for Action Decorating, Inc.

Vaughn Construction

Williamson County Facilities - Job Cost Tracking Log

Project: North Campus Project # P324 **Change Order #:** 33

Change Order No.	Court Agenda Date	Party of Initiation	Time Ext. (Days)	GMP Breakdown						GMP Total	Total Updated Contract Amount
				Cost of Work	CM Contingency	Owner Contingency	Buyout Savings (Current)	General Conditions	Construction Phase Fee		
Contract				$ 18,027,145.00	$ 406,771.00	$ 406,772.00	$ -	$ 1,896,522.00	$ 625,467.00	$ 21,362,677.00	$ 21,362,677.00
1	03/28/17		0	$ 3,659.00	$ -	$ (3,659.00)	$ -	$ -	$ -	$ -	$ 21,362,677.00
2	03/28/17		10	$ 114,186.00	$ -	$ (114,186.00)	$ -	$ -	$ -	$ -	$ 21,362,677.00
3	05/02/17		0	$ 1,727.00	$ -	$ (1,727.00)	$ -	$ -	$ -	$ -	$ 21,362,677.00
4	05/02/17		0	$ 19,494.00	$ -	$ (19,494.00)	$ -	$ -	$ -	$ -	$ 21,362,677.00
5	05/30/17		0	$ 19,676.00	$ (19,676.00)	$ -	$ -	$ -	$ -	$ -	$ 21,362,677.00
6	05/30/17		0	$ 14,465.00	$ (14,465.00)	$ -	$ -	$ -	$ -	$ -	$ 21,362,677.00
7	05/30/17		0	$ 2,237.00	$ -	$ (2,237.00)	$ -	$ -	$ -	$ -	$ 21,362,677.00
8	05/30/17		0	$ 3,450.00	$ -	$ (3,450.00)	$ -	$ -	$ -	$ -	$ 21,362,677.00
9	06/27/17		0	$ 832.00	$ -	$ (832.00)	$ -	$ -	$ -	$ -	$ 21,362,677.00
10	06/27/17		0	$ 285.00	$ -	$ (285.00)	$ -	$ -	$ -	$ -	$ 21,362,677.00
11	06/27/17		0	$ 22,415.00	$ -	$ (22,415.00)	$ -	$ -	$ -	$ -	$ 21,362,677.00
12	06/27/17		0	$ 11,221.00	$ -	$ (11,221.00)	$ -	$ -	$ -	$ -	$ 21,362,677.00
13	06/27/17		0	$ (5,000.00)	$ -	$ 5,000.00	$ -	$ -	$ -	$ -	$ 21,362,677.00
14	06/27/17		0	$ -	$ -	$ -	$ -	$ -	$ -	$ -	$ 21,362,677.00
15	06/27/17		0	$ 79,584.00	$ -	$ (79,584.00)	$ -	$ -	$ -	$ -	$ 21,362,677.00
16	06/27/17		0	$ 9,930.00	$ -	$ (9,930.00)	$ -	$ -	$ -	$ -	$ 21,362,677.00
17	09/12/17	A&E	0	$ 2,450.00	$ -	$ -	$ (2,450.00)	$ -	$ -	$ -	$ 21,362,677.00
18	09/12/17	A&E	0	$ 1,747.00	$ (1,747.00)	$ -	$ -	$ -	$ -	$ -	$ 21,362,677.00
19	09/12/17	Owner	0	$ 577,128.00	$ -	$ -	$ (577,128.00)	$ -	$ -	$ -	$ 21,362,677.00
20	12/05/17	A&E	0	$ 5,784.00	$ -	$ (5,856.00)	$ -	$ 72.00	$ -	$ -	$ 21,362,677.00
21	10/03/17	A&E	0	$ 10,364.00	$ (10,364.00)	$ -	$ -	$ -	$ -	$ -	$ 21,362,677.00
22	10/03/17	A&E	0	$ 6,461.00	$ (6,461.00)	$ -	$ -	$ -	$ -	$ -	$ 21,362,677.00
23	12/05/17	A&E	0	$ 15,825.00	$ (15,825.00)	$ -	$ -	$ -	$ -	$ -	$ 21,362,677.00
24	10/03/17	A&E	0	$ 33,906.00	$ (33,906.00)	$ -	$ -	$ -	$ -	$ -	$ 21,362,677.00
25	10/03/17	A&E	0	$ 8,854.00	$ (8,854.00)	$ -	$ -	$ -	$ -	$ -	$ 21,362,677.00
26	02/06/18	A&E	0	$ (106.00)	$ -	$ 106.00	$ -	$ -	$ -	$ -	$ 21,362,677.00
27	02/27/18	A&E	0	$ 2,687.00	$ -	$ (2,687.00)	$ -	$ -	$ -	$ -	$ 21,362,677.00
28	PENDING REVIEW										$ 21,362,677.00
29	02/06/18	A&E	0	$ 3,647.00	$ (3,647.00)	$ -	$ -	$ -	$ -	$ -	$ 21,362,677.00
30	10/24/17	Contractor		$ (30,000.00)	$ -	$ 30,000.00	$ -	$ -	$ -	$ -	$ 21,362,677.00
31	10/24/17	A&E		$ 4,434.00	$ -	$ (4,434.00)	$ -	$ -	$ -	$ -	$ 21,362,677.00
32	11/14/17	A&E		$ 6,816.00		$ (6,816.00)	$ -	$ -	$ -	$ -	$ 21,362,677.00
33		Owner	0	$ (28,265.00)	$ -	$ 28,265.00	$ -	$ -	$ -	$ -	$ 21,362,677.00
34	11/14/17	Contractor		$ 5,273.00	$ (5,273.00)	$ -	$ -	$ -	$ -	$ -	$ 21,362,677.00
35	PENDING REVIEW										$ 21,362,677.00
36	12/05/17	A&E	0	$ 1,280.00	$ (1,280.00)	$ -	$ -	$ -	$ -	$ -	$ 21,362,677.00
37	12/05/17	A&E	0	$ 1,601.00	$ (1,601.00)	$ -	$ -	$ -	$ -	$ -	$ 21,362,677.00
38	03/27/18	A&E	0	$ 4,646.00	$ -	$ (4,646.00)	$ -	$ -	$ -	$ -	$ 21,362,677.00
39	02/27/18	Contractor	15	$ -	$ -	$ -	$ -	$ -	$ -	$ -	$ 21,362,677.00
40	02/27/18	Contractor	0	$ (6,292.00)	$ -	$ 6,292.00	$ -	$ -	$ -	$ -	$ 21,362,677.00
41	02/06/18	Owner	0	$ (50,311.00)	$ -	$ 50,311.00	$ -	$ -	$ -	$ -	$ 21,362,677.00
42	02/27/18	Contractor	0	$ (44,494.00)	$ -	$ 44,494.00	$ -	$ -	$ -	$ -	$ 21,362,677.00
43	02/27/18	Owner	0	$ 24,129.00	$ -	$ (24,129.00)	$ -	$ -	$ -	$ -	$ 21,362,677.00
44	02/27/18	Owner	0	$ 4,882.00	$ -	$ (4,882.00)	$ -	$ -	$ -	$ -	$ 21,362,677.00
45	03/20/18	Contractor	0	$ 25,500.00	$ (25,500.00)	$ -	$ -	$ -	$ -	$ -	$ 21,362,677.00
46	03/27/18	Owner	163	$ 1,485,504.00	$ -	$ -	$ (135,504.00)	$ 132,086.00	$ 49,367.00	$ 1,350,000.00	$ 22,712,677.00
47	03/20/18	Owner	0	$ 1,126.00	$ -	$ (1,126.00)	$ -	$ -	$ -	$ -	$ 22,712,677.00
48	03/20/18	Contractor	0	$ 36,181.00	$ -	$ (36,181.00)	$ -	$ -	$ -	$ -	$ 22,712,677.00
49	PENDING REVIEW										$ 22,712,677.00
50		A&E	4	$ 4,392.00	$ (4,392.00)	$ -	$ -	$ -	$ -	$ -	$ 22,712,677.00
51	03/20/18	Owner	4	$ 5,759.00	$ -	$ (5,759.00)	$ -	$ -	$ -	$ -	$ 22,712,677.00
52		Owner	0	$ (2,064.00)	$ -	$ 2,064.00	$ -	$ -	$ -	$ -	$ 22,712,677.00
53	04/10/18	Owner	0	$ 377,829.00	$ -	$ -	$ (425,216.00)	$ 47,387.00	$ -	$ -	$ 22,712,677.00
			196	**$ 20,821,979.00**	**$ 253,780.00**	**$ 207,768.00**	**$ (1,140,298.00)**	**$ 2,076,067.00**	**$ 674,834.00**	**$ 22,712,677.00**	**$ 22,712,677.00**

$ 1,677,412.00

Commissioners Court - Regular Session **14.**

Meeting Date: 04/17/2018

North Campus Facility P324 - Change Order 50

Submitted By: Gina Wrehsnig, Infrastructure

Department: Infrastructure **Division:** Building Maintenance

Agenda Category: Consent

Information

Agenda Item

Discuss, consider and take appropriate action on accepting and approving a report on the Williamson County North Campus Project; Change Order #50 in the amount of $4,392.00 for additional data layout changes based on submittal 271100-3-0, which was executed by Dwayne Gossett, Williamson County Facilities Project Manager, pursuant to the previous grant of authority under Section 262.031 of the Local Government Code. This change order is to be funded by the Construction Managers Contingency.

Background

On September 6, 2016, the Williamson County Commissioners Court granted Dwayne Gossett, Williamson County Facilities Project Manager, with general authority to approve change orders for the Agreement for Construction Services with J. T. Vaughn Construction, LLC in relation to the Williamson County North Campus Project for any increase in costs up to a total maximum amount of $30,000.00 in accordance with Section 262.031 of the Local Government Code – Changes in Plans and Specifications. This report is being provided for purposes of notifying the court of such change order and to place it in the minutes of the Commissioners Court.

Fiscal Impact

From/To	Acct No.	Description	Amount

Attachments

NCF Change Order 50

NCF CO50 Funds

Form Review

Inbox	Reviewed By	Date
County Judge Exec Asst.	Wendy Coco	04/12/2018 09:25 AM
Form Started By: Gina Wrehsnig		Started On: 04/12/2018 07:49 AM
Final Approval Date: 04/12/2018		

VAUGHN
CONSTRUCTION
3171 SE Inner Loop
Georgetown, TX
78626

T: (512) 663-7461
F: (512) 681-9752

March 09, 2018

Dwayne Gossett
Williamson County, Texas
3101 SE Inner Loop
Georgetown, TX 78620

Re: North Campus Facilities
Job No: 233901

Subj: Change Proposal No. 233901-0050

Dear Sir or Madam:

We respectfully submit our proposal for an increase to our contract in the amount of $0 (zero) dollars to provide Data Layout Changes in Reference to Returned Submittal 271100-3-0 for the above referenced project.

Our price is valid for Ten (10) days

Please indicate your acceptance of this change proposal by signing and returning one copy of the attached Form B breakdown of our cost.

Very truly yours,
VAUGHN CONSTRUCTION

Doug Boram

Attachments: Form B, Subcontractor Pricing Back-up

CC: Brody Harris - BLGY
Mark Brown - BLGY

FORM B

PROJECT: North Campus Facilities

CHANGE PROPOSAL NO: 233901-0050

QUOTATION :

Item	Labor	Materials	Subs	Total
Data Layout Changes in Reference to Returned Submittal 271100-3-0	$0.00	$0.00	$4,392.00	$4,392.00
To Be Funded By CM Contingency	$0.00	$(4,392.00)	$0.00	$(4,392.00)
Totals	$0.00	$(4,392.00)	$4,392.00	$0.00
	Insurance, Tax, Benefits on Labor			$0.00
	Overhead			$0.00
	Fee on Subs			$0.00
	Fee on JTV			$0.00
	Bond			$0.00
	Remodel Tax			$0.00
	TOTAL			**$0.00**

TIME EXTENSION TO CONTRACT: 4 Working Days

Submitted Date: 3/9/2018

Accepted

By: _____

Date _____

VAUGHN CONSTRUCTION

By: _____
Doug Boram

Proposal Valid for 10 Days

Williamson County
Williamson County North Campus Facilities
Vaughn Project No. 2339-01

VAUGHN CONSTRUCTION

Funds Tracking Log

Change Proposal No.	Change Type & No.	Time Extension (Days)		GMP Breakdown						GMP #2339.01	Total Updated Contract Amount
		Pending	Approved	Cost of Work	CM Contingency	Owner Contingency	General Conditions	Buyout Savings	Construction Phase Fee		
N/A	GMP	-	-	$18,195,395	$406,771	$406,771	$1,896,522		$625,467	$21,530,926	$21,530,926
1	OCO	0	0	$3,659	$0	($3,659)	$0		$0	$0	$21,530,926
2	OCO	10	10	$114,186	$0	($114,186)	$0		$0	$0	$21,530,926
3	OCO	0	0	$1,727	$0	($1,748)	$21		$0	$0	$21,530,926
4	OCO	0	0	$19,494	$0	($19,494)	$0		$0	$0	$21,530,926
5	OCO	0	0	$19,676	($19,676)	$0	$0		$0	$0	$21,530,926
6	OCO	0	0	$14,465	($14,465)	$0	$0		$0	$0	$21,530,926
7	OCO	0	0	$2,237	$0	($2,237)	$0		$0	$0	$21,530,926
8	OCO	0	0	$3,450	$0	($3,450)	$0		$0	$0	$21,530,926
9	OCO	0	0	$832	$0	($832)	$0		$0	$0	$21,530,926
10	OCO	0	0	$285	$0	($285)	$0		$0	$0	$21,530,926
11	OCO	0	0	$22,415	$0	($22,415)	$0		$0	$0	$21,530,926
12	OCO	0	0	$11,221	$0	($11,221)	$0		$0	$0	$21,530,926
13	OCO	0	0	($5,000)	$0	$5,000	$0		$0	$0	$21,530,926
14	OCO	0	0	$0	$0	$0	$0		$0	$0	$21,530,926
15	OCO	0	0	$79,584	$0	($79,584)	$0		$0	$0	$21,530,926
16	OCO	0	0	$9,930	$0	($9,930)	$0		$0	$0	$21,530,926
17	OCO	0	0	$2,450	($2,450)	$0	$0		$0	$0	$21,530,926
18	OCO	0	0	$1,747	($1,747)	$0	$0		$0	$0	$21,530,926
19	OCO	0	0	($1,763)	$0	$0	$1,763		$0	$0	$21,530,926
20	OCO	0	0	$5,784	$0	($5,856)	$72		$0	$0	$21,530,926
21	OCO	0	0	$10,364	($10,364)	$0	$0		$0	$0	$21,530,926
22	OCO	0	0	$6,410	($6,461)	$0	$51		$0	$0	$21,530,926
23	OCO	0	0	$15,825	($15,825)	$0	$0		$0	$0	$21,530,926
24	OCO	0	0	$33,487	($33,906)	$0	$419		$0	$0	$21,530,926
25	OCO	0	0	$8,854	($8,854)	$0	$0		$0	$0	$21,530,926
26	OCO	0	0	($106)	$0	$106	$0		$0	$0	$21,530,926
27R	OCO	0	0	$2,687	$0	($2,687)	$0		$0	$0	$21,530,926
28	Void	0	0	$0	$0	$0	$0		$0	$0	$21,530,926
29	OCO	0	0	$3,647	($3,647)	$0	$0		$0	$0	$21,530,926
30	OCO	0	0	($30,000)	$0	$30,000	$0		$0	$0	$21,530,926
31	OCO	0	0	$4,434	$0	($4,434)	$0		$0	$0	$21,530,926

32	OCO	0	0	$6,816	$0	($6,816)	$0		$0	$0	$21,530,926
33R	OCO	0	-	($28,265)	$0	$28,265	$0		$0	$0	$21,530,926
34	OCO	0	0	$5,273	($5,273)	$0	$0		$0	$0	$21,530,926
35	OCO	0	0	($168,250)	$0	$0	$0		$0	($168,250)	$21,362,676
36	OCO	0	0	$1,280	($1,280)	$0	$0		$0	$0	$21,362,676
37	OCO	0	0	$1,601	($1,601)	$0	$0		$0	$0	$21,362,676
38R	OCO	0	-	$4,646	($4,646)	$0	$0		$0	$0	$21,362,676
39R	OCO	10	10	$0	$0	$0	$0		$0	$0	$21,362,676
40R	OCO	0	0	($6,292)	$0	$6,292	$0		$0	$0	$21,362,676
41	OCO	0	0	($50,311)	$0	$50,311	$0		$0	$0	$21,362,676
42R	OCO	0	-	($44,494)	$0	$44,494	$0		$0	$0	$21,362,676
43R	OCO	0	0	$24,129	$0	($24,129)	$0		$0	$0	$21,362,676
44R	OCO	0	0	$4,882	$0	($4,882)	$0		$0	$0	$21,362,676
45R	OCO	0	-	$25,500	($25,500)	$0	$0		$0	$0	$21,362,676
46	OCO	120	-	$1,304,051	$0	$0	$132,086	($135,504)	$49,367	$1,350,000	$22,712,676
47	OCO	0	-	$1,112	$0	($1,126)	$14		$0	$0	$22,712,676
48	OCO	0	-	$35,771	$0	($36,181)	$410		$0	$0	$22,712,676
49	OCO	0	0	$2,541	($2,573)	$0	$32		$0	$0	$22,712,676
50	OCO	4	-	$4,392	($4,392)	$0	$0		$0	$0	$22,712,676
Current Amounts		**144**	**20**	**$19,681,758**	**$244,111**	**$216,087**	**$2,031,390**	**($135,504)**	**$674,834**	**$22,712,676**	**$22,712,676**

TITUS REQUEST FOR CHANGE

RFC #	**001**
RFC Date	2/27/2018
Project Name:	Wilco North Campus Facilities
Project Number:	
Page Number:	1

Client Address:

Vaughn Construction
3171 SE Inner Loop
Georgetown, TX 78626

Work Description

We are pleased to offer the following change proposal for your review. Titus Group proposes to furnish labor and material for a complete structured cable installation in accordance with **Bldg H 2 Data Outlets Changing to 6** dated 02/16/2018.

RFC# 001 PRICE: 4,392.00

SCOPE:
This RFC is includes additional costs for material and labor to install, terminate, & test 4 additional CAT6 data cables to 6 outlet locations in Building H Training Room H100A.
1. Install 4 additional data cables from IDF H113 to Training Room H100A outlets - 6 locations as designated on the attached drawing.
2. Install CAT6 jacks at both ends for each cable and terminate.
3. Label jacks & cables at both ends for each newly installed drop.
4. Test each new drop and incorporate results into overall test results that will be provided in closeout deliverables.

EXCLUSIONS:
1. Hoisting or lifting.
2. Cutting or patching of concrete, masonry, brick, etc.
3. Cutting or patching of sheetrock, plaster, etc.
4. Painting or priming of any kind.
5. Overtime, expediting fees.
6. Plywood Backboards
7. Man Lifts.
8. Floor Cores/Sleeves.
9. Fire stopping sleeves/conduits.

CLARIFICATIONS:
1. Pricing is valid for 15 days from date of this change proposal
2. Titus Systems reserves the right to withdraw this proposal upon discovery of information that may alter this proposal's scope and final amount.

If you have any questions regarding this proposal please contact me at (737) 215-1644.

Sincerely,
Titus Systems, LLC.

Brian Elliott
Project Manager

REQUEST FOR CHANGE

Client Address:

Vaughn Construction
3171 SE Inner Loop
Georgetown, TX 78626

RFC # 001
RFC Date 2/27/2018
Project Name: Wilco North Campus Facilities
Project Number:
Page Number: 2

Itemized Breakdown

Description	Qty	Net Price U	Total Mat.	Labor U	Total Hrs.
CAT6 UTP PLENUM	4,380	0.35 E	1,533.00	5.00 M	21.90
CAT6 JACK	48	5.14 E	246.72	0.20 E	9.60
LABEL - PORT	48	0.10 E	4.80	3.00 C	1.44
LABEL - CABLE	48	0.10 E	4.80	3.00 C	1.44
CABLE TEST (4-PAIR) DATA	24	0.10 E	2.40	0.20 E	4.80
Totals	**4,548**		**1,791.72**		**39.18**

Summary

MATERIAL			
Total Material			**1,791.72**
Direct Labor		1,611.47	
Indirect Labor		170.00	
Total Labor			**1,781.47**
General Expenses			64.46
Subtotal			**3,637.65**
Overhead	(@ 15.000 %)	545.65	
Markup	(@ 5.000 %)	209.17	
Subtotal			**4,392.47**
Final Adjustment			-0.47
Final Amount			**$4,392.00**

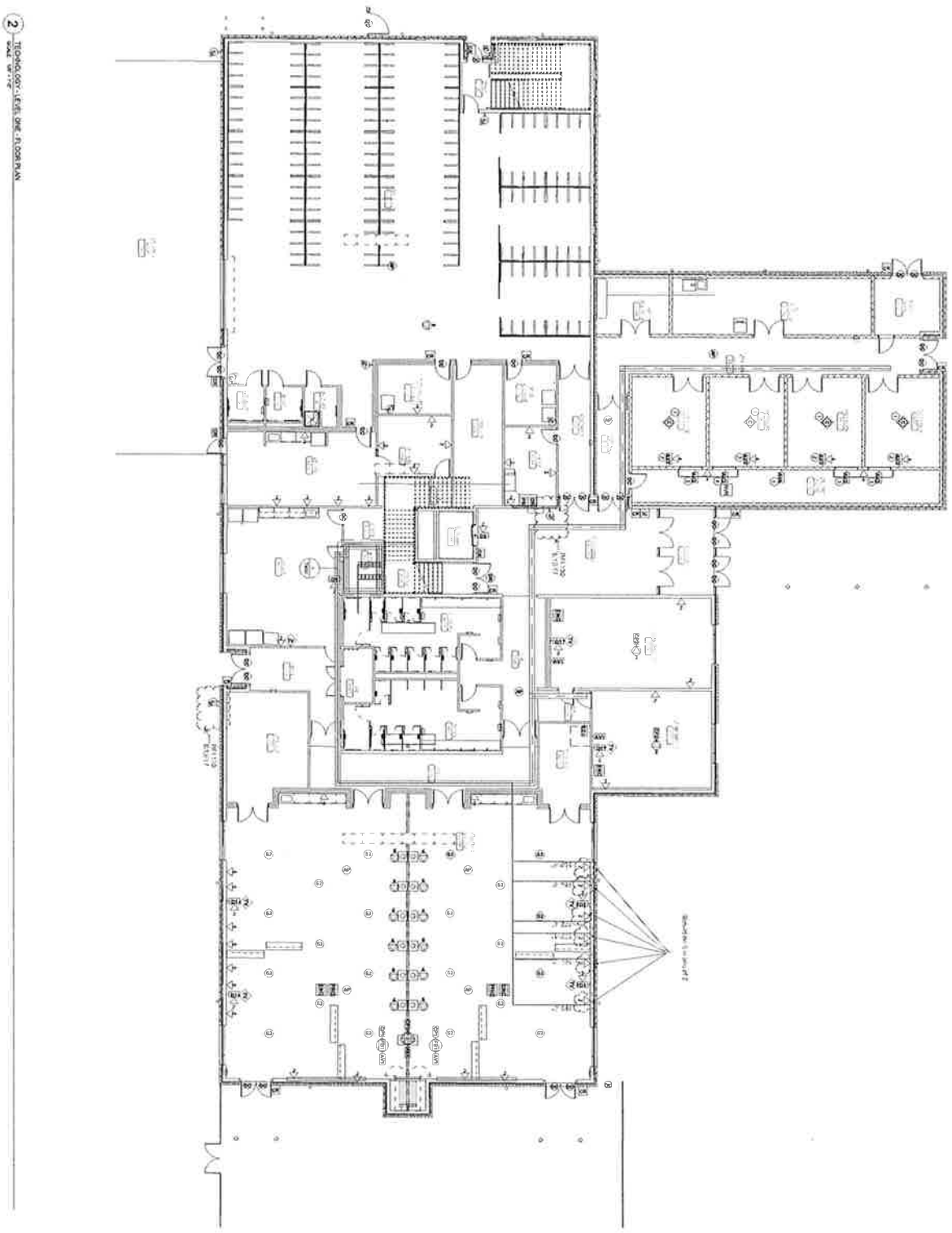

100% CD

Th-1.01

NORTH CAMPUS FACILITY

WILLIAMSON COUNTY

3151 SE INNER LOOP

Williamson County Facilities - Job Cost Tracking Log

Project: North Campus Project # P324 **Change Order #:** 50

Change Order No.	Court Agenda Date	Party of Initiation	Time Ext. (Days)	GMP Breakdown						GMP Total	Total Updated Contract Amount
				Cost of Work	CM Contingency	Owner Contingency	Buyout Savings (Current)	General Conditions	Construction Phase Fee		
Contract				$ 18,027,145.00	$ 406,771.00	$ 406,772.00	$ -	$ 1,896,522.00	$ 625,467.00	$ 21,362,677.00	$ 21,362,677.00
1	03/28/17		0	$ 3,659.00	$ -	$ (3,659.00)	$ -	$ -	$ -	$ -	$ 21,362,677.00
2	03/28/17		10	$ 114,186.00	$ -	$ (114,186.00)	$ -	$ -	$ -	$ -	$ 21,362,677.00
3	05/02/17		0	$ 1,727.00	$ -	$ (1,727.00)	$ -	$ -	$ -	$ -	$ 21,362,677.00
4	05/02/17		0	$ 19,494.00	$ -	$ (19,494.00)	$ -	$ -	$ -	$ -	$ 21,362,677.00
5	05/30/17		0	$ 19,676.00	$ (19,676.00)	$ -	$ -	$ -	$ -	$ -	$ 21,362,677.00
6	05/30/17		0	$ 14,465.00	$ (14,465.00)	$ -	$ -	$ -	$ -	$ -	$ 21,362,677.00
7	05/30/17		0	$ 2,237.00	$ -	$ (2,237.00)	$ -	$ -	$ -	$ -	$ 21,362,677.00
8	05/30/17		0	$ 3,450.00	$ -	$ (3,450.00)	$ -	$ -	$ -	$ -	$ 21,362,677.00
9	06/27/17		0	$ 832.00	$ -	$ (832.00)	$ -	$ -	$ -	$ -	$ 21,362,677.00
10	06/27/17		0	$ 285.00	$ -	$ (285.00)	$ -	$ -	$ -	$ -	$ 21,362,677.00
11	06/27/17		0	$ 22,415.00	$ -	$ (22,415.00)	$ -	$ -	$ -	$ -	$ 21,362,677.00
12	06/27/17		0	$ 11,221.00	$ -	$ (11,221.00)	$ -	$ -	$ -	$ -	$ 21,362,677.00
13	06/27/17		0	$ (5,000.00)	$ -	$ 5,000.00	$ -	$ -	$ -	$ -	$ 21,362,677.00
14	06/27/17		0	$ -	$ -	$ -	$ -	$ -	$ -	$ -	$ 21,362,677.00
15	06/27/17		0	$ 79,584.00	$ -	$ (79,584.00)	$ -	$ -	$ -	$ -	$ 21,362,677.00
16	06/27/17		0	$ 9,930.00	$ -	$ (9,930.00)	$ -	$ -	$ -	$ -	$ 21,362,677.00
17	09/12/17	A&E	0	$ 2,450.00	$ -	$ -	$ (2,450.00)	$ -	$ -	$ -	$ 21,362,677.00
18	09/12/17	A&E	0	$ 1,747.00	$ (1,747.00)	$ -	$ -	$ -	$ -	$ -	$ 21,362,677.00
19	09/12/17	Owner	0	$ 577,128.00	$ -	$ -	$ (577,128.00)	$ -	$ -	$ -	$ 21,362,677.00
20	12/05/17	A&E	0	$ 5,784.00	$ -	$ (5,856.00)	$ -	$ 72.00	$ -	$ -	$ 21,362,677.00
21	10/03/17	A&E	0	$ 10,364.00	$ (10,364.00)	$ -	$ -	$ -	$ -	$ -	$ 21,362,677.00
22	10/03/17	A&E	0	$ 6,461.00	$ (6,461.00)	$ -	$ -	$ -	$ -	$ -	$ 21,362,677.00
23	12/05/17	A&E	0	$ 15,825.00	$ (15,825.00)	$ -	$ -	$ -	$ -	$ -	$ 21,362,677.00
24	10/03/17	A&E	0	$ 33,906.00	$ (33,906.00)	$ -	$ -	$ -	$ -	$ -	$ 21,362,677.00
25	10/03/17	A&E	0	$ 8,854.00	$ (8,854.00)	$ -	$ -	$ -	$ -	$ -	$ 21,362,677.00
26	02/06/18	A&E	0	$ (106.00)	$ -	$ 106.00	$ -	$ -	$ -	$ -	$ 21,362,677.00
27	02/27/18	A&E	0	$ 2,687.00	$ -	$ (2,687.00)	$ -	$ -	$ -	$ -	$ 21,362,677.00
28	PENDING REVIEW										$ 21,362,677.00
29	02/06/18	A&E	0	$ 3,647.00	$ (3,647.00)	$ -	$ -	$ -	$ -	$ -	$ 21,362,677.00
30	10/24/17	Contractor		$ (30,000.00)	$ -	$ 30,000.00	$ -	$ -	$ -	$ -	$ 21,362,677.00
31	10/24/17	A&E		$ 4,434.00	$ -	$ (4,434.00)	$ -	$ -	$ -	$ -	$ 21,362,677.00
32	11/14/17	A&E		$ 6,816.00		$ (6,816.00)	$ -	$ -	$ -	$ -	$ 21,362,677.00
33		Owner	0	$ (28,265.00)	$ -	$ 28,265.00	$ -	$ -	$ -	$ -	$ 21,362,677.00
34	11/14/17	Contractor		$ 5,273.00	$ (5,273.00)	$ -	$ -	$ -	$ -	$ -	$ 21,362,677.00
35	PENDING REVIEW										$ 21,362,677.00
36	12/05/17	A&E	0	$ 1,280.00	$ (1,280.00)	$ -	$ -	$ -	$ -	$ -	$ 21,362,677.00
37	12/05/17	A&E	0	$ 1,601.00	$ (1,601.00)	$ -	$ -	$ -	$ -	$ -	$ 21,362,677.00
38	03/27/18	A&E	0	$ 4,646.00	$ -	$ (4,646.00)	$ -	$ -	$ -	$ -	$ 21,362,677.00
39	02/27/18	Contractor	15	$ -	$ -	$ -	$ -	$ -	$ -	$ -	$ 21,362,677.00
40	02/27/18	Contractor	0	$ (6,292.00)	$ -	$ 6,292.00	$ -	$ -	$ -	$ -	$ 21,362,677.00
41	02/06/18	Owner	0	$ (50,311.00)	$ -	$ 50,311.00	$ -	$ -	$ -	$ -	$ 21,362,677.00
42	02/27/18	Contractor	0	$ (44,494.00)	$ -	$ 44,494.00	$ -	$ -	$ -	$ -	$ 21,362,677.00
43	02/27/18	Owner	0	$ 24,129.00	$ -	$ (24,129.00)	$ -	$ -	$ -	$ -	$ 21,362,677.00
44	02/27/18	Owner	0	$ 4,882.00	$ -	$ (4,882.00)	$ -	$ -	$ -	$ -	$ 21,362,677.00
45	03/20/18	Contractor	0	$ 25,500.00	$ (25,500.00)	$ -	$ -	$ -	$ -	$ -	$ 21,362,677.00
46	03/27/18	Owner	163	$ 1,485,504.00	$ -	$ -	$ (135,504.00)	$ 132,086.00	$ 49,367.00	$ 1,350,000.00	$ 22,712,677.00
47	03/20/18	Owner	0	$ 1,126.00	$ -	$ (1,126.00)	$ -	$ -	$ -	$ -	$ 22,712,677.00
48	03/20/18	Contractor	0	$ 36,181.00	$ -	$ (36,181.00)	$ -	$ -	$ -	$ -	$ 22,712,677.00
49	PENDING REVIEW										$ 22,712,677.00
50		A&E	4	$ 4,392.00	$ (4,392.00)	$ -	$ -	$ -	$ -	$ -	$ 22,712,677.00
51	03/20/18	Owner	4	$ 5,759.00	$ -	$ (5,759.00)	$ -	$ -	$ -	$ -	$ 22,712,677.00
52		Owner	0	$ (2,064.00)	$ -	$ 2,064.00	$ -	$ -	$ -	$ -	$ 22,712,677.00
53	04/10/18	Owner	0	$ 377,829.00	$ -	$ -	$ (425,216.00)	$ 47,387.00	$ -	$ -	$ 22,712,677.00
			196	**$ 20,821,979.00**	**$ 253,780.00**	**$ 207,768.00**	**$ (1,140,298.00)**	**$ 2,076,067.00**	**$ 674,834.00**	**$ 22,712,677.00**	**$ 22,712,677.00**

$ 1,677,412.00

Commissioners Court - Regular Session **15.**

Meeting Date: 04/17/2018

North Campus Facility P324 - Change Order 52

Submitted By: Gina Wrehsnig, Infrastructure

Department: Infrastructure **Division:** Building Maintenance

Agenda Category: Consent

Information

Agenda Item

Discuss, consider and take appropriate action on accepting and approving a report on the Williamson County North Campus Project; Change Order #52 in the amount of ($2,064.00) to receive credit for plumbing equipment changes in Building B, which was executed by Dwayne Gossett, Williamson County Facilities Project Manager, pursuant to the previous grant of authority under Section 262.031 of the Local Government Code. This change order is to be credited to the Owners Contingency.

Background

On September 6, 2016, the Williamson County Commissioners Court granted Dwayne Gossett, Williamson County Facilities Project Manager, with general authority to approve change orders for the Agreement for Construction Services with J. T. Vaughn Construction, LLC in relation to the Williamson County North Campus Project for any increase in costs up to a total maximum amount of $30,000.00 in accordance with Section 262.031 of the Local Government Code – Changes in Plans and Specifications. This report is being provided for purposes of notifying the court of such change order and to place it in the minutes of the Commissioners Court.

Fiscal Impact

From/To	Acct No.	Description	Amount

Attachments

NCF Change Order 52

NCF CO52 Funds

Form Review

Inbox	Reviewed By	Date
County Judge Exec Asst.	Wendy Coco	04/12/2018 09:25 AM
Form Started By: Gina Wrehsnig		Started On: 04/12/2018 07:50 AM
Final Approval Date: 04/12/2018		

VAUGHN
CONSTRUCTION
3171 SE Inner Loop
Georgetown, TX
78626

T: (512) 663-7461
F: (512) 681-9752

March 27, 2018

Dwayne Gossett
Williamson County, Texas
3101 SE Inner Loop
Georgetown, TX 78620

Re: North Campus Facilities
Job No: 233901

Subj: Change Proposal No. 233901-0052

Dear Sir or Madam:

We respectfully submit our proposal for an increase to our contract in the amount of $0 (zero) dollars to provide Credit for Gas Water Heater in Bldg. b for the above referenced project.

Our price is valid for Ten (10) days

Please indicate your acceptance of this change proposal by signing and returning one copy of the attached Form B breakdown of our cost.

Very truly yours,
VAUGHN CONSTRUCTION

Doug Boram

Attachments: Form B, Subcontractor Pricing Back-up

CC: Brody Harris - BLGY
Mark Brown - BLGY

FORM B

PROJECT: **North Campus Facilities**

CHANGE PROPOSAL NO: **233901-0052**

QUOTATION :

Item	Labor	Materials	Subs	Total
Credit for Gas Water Heater in Bldg. b	$0.00	$0.00	$(2,064.00)	$(2,064.00)
To Be Credited to Owners Contingency	$0.00	$2,064.00	$0.00	$2,064.00
Totals	$0.00	$2,064.00	$(2,064.00)	$0.00
	Insurance, Tax, Benefits on Labor			$0.00
	Overhead			$0.00
	Fee on Subs			$0.00
	Fee on JTV			$0.00
	Bond			$0.00
	Remodel Tax			$0.00
	TOTAL			**$0.00**

TIME EXTENSION TO CONTRACT: 0 Days

Submitted Date: **3/27/2018**

Accepted

By: Dwayne Dorroff

Date

VAUGHN CONSTRUCTION

By: DBM

Doug Boram

Proposal Valid for 10 Days

Williamson County
Williamson County North Campus Facilities
Vaughn Project No. 2339-01

VAUGHN CONSTRUCTION

Funds Tracking Log

Change Proposal No.	Change Type & No.	Time Extension (Days)		GMP Breakdown						GMP #2339.01	Total Updated Contract Amount
		Pending	Approved	Cost of Work	CM Contingency	Owner Contingency	General Conditions	Buyout Savings	Construction Phase Fee		
N/A	GMP	-	-	$18,195,395	$406,771	$406,771	$1,896,522		$625,467	$21,530,926	$21,530,926
1	OCO	0	0	$3,659	$0	($3,659)	$0		$0	$0	$21,530,926
2	OCO	10	10	$114,186	$0	($114,186)	$0		$0	$0	$21,530,926
3	OCO	0	0	$1,727	$0	($1,748)	$21		$0	$0	$21,530,926
4	OCO	0	0	$19,494	$0	($19,494)	$0		$0	$0	$21,530,926
5	OCO	0	0	$19,676	($19,676)	$0	$0		$0	$0	$21,530,926
6	OCO	0	0	$14,465	($14,465)	$0	$0		$0	$0	$21,530,926
7	OCO	0	0	$2,237	$0	($2,237)	$0		$0	$0	$21,530,926
8	OCO	0	0	$3,450	$0	($3,450)	$0		$0	$0	$21,530,926
9	OCO	0	0	$832	$0	($832)	$0		$0	$0	$21,530,926
10	OCO	0	0	$285	$0	($285)	$0		$0	$0	$21,530,926
11	OCO	0	0	$22,415	$0	($22,415)	$0		$0	$0	$21,530,926
12	OCO	0	0	$11,221	$0	($11,221)	$0		$0	$0	$21,530,926
13	OCO	0	0	($5,000)	$0	$5,000	$0		$0	$0	$21,530,926
14	OCO	0	0	$0	$0	$0	$0		$0	$0	$21,530,926
15	OCO	0	0	$79,584	$0	($79,584)	$0		$0	$0	$21,530,926
16	OCO	0	0	$9,930	$0	($9,930)	$0		$0	$0	$21,530,926
17	OCO	0	0	$2,450	($2,450)	$0	$0		$0	$0	$21,530,926
18	OCO	0	0	$1,747	($1,747)	$0	$0		$0	$0	$21,530,926
19	OCO	0	0	($1,763)	$0	$0	$1,763		$0	$0	$21,530,926
20	OCO	0	0	$5,784	$0	($5,856)	$72		$0	$0	$21,530,926
21	OCO	0	0	$10,364	($10,364)	$0	$0		$0	$0	$21,530,926
22	OCO	0	0	$6,410	($6,461)	$0	$51		$0	$0	$21,530,926
23	OCO	0	0	$15,825	($15,825)	$0	$0		$0	$0	$21,530,926
24	OCO	0	0	$33,487	($33,906)	$0	$419		$0	$0	$21,530,926
25	OCO	0	0	$8,854	($8,854)	$0	$0		$0	$0	$21,530,926
26	OCO	0	0	($106)	$0	$106	$0		$0	$0	$21,530,926
27R	OCO	0	0	$2,687	$0	($2,687)	$0		$0	$0	$21,530,926
28	Void	0	0	$0	$0	$0	$0		$0	$0	$21,530,926
29	OCO	0	0	$3,647	($3,647)	$0	$0		$0	$0	$21,530,926
30	OCO	0	0	($30,000)	$0	$30,000	$0		$0	$0	$21,530,926
31	OCO	0	0	$4,434	$0	($4,434)	$0		$0	$0	$21,530,926

32	OCO	0	0	$6,816	$0	($6,816)	$0		$0	$0	$21,530,926
33R	OCO	0	-	($28,265)	$0	$28,265	$0		$0	$0	$21,530,926
34	OCO	0	0	$5,273	($5,273)	$0	$0		$0	$0	$21,530,926
35	OCO	0	0	($168,250)	$0	$0	$0		$0	($168,250)	$21,362,676
36	OCO	0	0	$1,280	($1,280)	$0	$0		$0	$0	$21,362,676
37	OCO	0	0	$1,601	($1,601)	$0	$0		$0	$0	$21,362,676
38R	OCO	0	0	$4,646	($4,646)	$0	$0		$0	$0	$21,362,676
39R	OCO	15	15	$0	$0	$0	$0		$0	$0	$21,362,676
40R	OCO	0	0	($6,292)	$0	$6,292	$0		$0	$0	$21,362,676
41	OCO	0	0	($50,311)	$0	$50,311	$0		$0	$0	$21,362,676
42R	OCO	0	0	($44,494)	$0	$44,494	$0		$0	$0	$21,362,676
43R	OCO	0	0	$24,129	$0	($24,129)	$0		$0	$0	$21,362,676
44R	OCO	0	0	$4,882	$0	($4,882)	$0		$0	$0	$21,362,676
45R	OCO	0	0	$25,500	($25,500)	$0	$0		$0	$0	$21,362,676
46	OCO	168	168	$1,304,051	$0	$0	$132,086	($135,504)	$49,367	$1,350,000	$22,712,676
47	OCO	0	0	$1,112	$0	($1,126)	$14		$0	$0	$22,712,676
48	OCO	0	-	$35,771	$0	($36,181)	$410		$0	$0	$22,712,676
49	OCO	0	0	$2,541	($2,573)	$0	$32		$0	$0	$22,712,676
50	OCO	4	-	$4,392	($4,392)	$0	$0		$0	$0	$22,712,676
51	OCO	4	4	$5,759	$0	($5,759)	$0		$0	$0	$22,712,676
52	OCO	0	-	($2,064)	$0	$2,064	$0		$0	$0	$22,712,676
Current Amounts		**201**	**197**	**$19,685,453**	**$244,111**	**$212,392**	**$2,031,390**	**($135,504)**	**$674,834**	**$22,712,676**	**$22,712,676**

LOCHRIDGE PRIEST
HEATING • AIR CONDITIONING • PLUMBING

TACLA28343C

M-41036

Price Change Order # 020

Date: March 27, 2018

To: **Vaughn Construction**
3920 N. IH-35
Austin, Texas 78751

Attn: **Doug Boram**

Job Name: **Williamson County North Campus Facility**

Job Location: 3171 SE Inner Loop
Georgetown, Texas 78626

LP Job #: **HC16-651**

Reference: **Building B Gas Water Heater- Deduct**

Please (deduct) the amount below per the items listed in the breakout sheet. This change proposal is for returning gas water heater in Building B.

Base Bid Total: **($2,064.00)**

Inclusions: Gas water heater (Deduct)

Exclusions: **Bond, overtime and original contract exclusions.**

By:

Mark Veselka
Project Manager

Please Note: Lochridge Priest has the right to reprice this change order in the event that the supplied information is incorrect or differs from the actual field situation.

HVAC & PLUMBING SHORT RECAP

JOB NAME: Williamson County NCF
LOCATION: Building B Gas Water Heater-Deduct

PRINT TIME: 3/27/2018 7:27
BID DATE: 3/27/2018
EST. NO.: LPPCO-020

LABOR RATE: $ 40.00
MCA %: 100%

PLUMBING

QUAN	DESCRIPTION		UNIT HRS	EXT HRS	EQUIP $	MAT'L $	LABOR $	SUB-MISC
1	Water Heater		0	0	$ (1,693)	$ -	$ -	$ -
1			0	0	$ -	$ -	$ -	$ -
1			0	0	$ -	$ -	$ -	$ -
1			0	0	$ -	$ -	$ -	$ -
1			0	0	$ -	$ -	$ -	$ -
1			0	0	$ -	$ -	$ -	$ -
1			0	0	$ -	$ -		$ -
1			0	0	$ -	$ -	$ -	$ -
1	20% ADD FOR MED. GAS. PIP		0	0	$ -	$ -	$ -	$ -
1	10% ADD FOR DOM. WTR. PI		0	0	$ -	$ -	$ -	$ -
-	TAG & ID		-	0		$ -	$ -	$ -
-	TESTING	10.0%	-	0			$ -	$ -
-	SUPERVISION	10.0%	-	0			$ -	$ -
	PLUMBING TOTALS			0	$ (1,693)	$ -	$ -	$ -

PIPING

QUAN	DESCRIPTION		UNIT HRS	EXT HRS	EQUIP $	MAT'L $	LABOR $	SUB-MISC
1			0	0	$ -	$ -	$ -	$ -
1			0	0	$ -	$ -	$ -	$ -
1	-		0	0	$ -	$ -	$ -	$ -
1	-		0	0	$ -	$ -	$ -	$ -
1	-		0	0	$ -	$ -	$ -	$ -
1	-		0	0	$ -	$ -	$ -	$ -
1	-		0	0	$ -	$ -	$ -	$ -
1	10% ADD FOR 1" & DOWN PIP		0	0	$ -	$ -	$ -	$ -
-	TAG & ID		-	0	$ -	$ -	$ -	$ -
-	SUPERVISION	10.0%	-	0	$ -	$ -	$ -	$ -
	PIPING TOTALS			0	0	0	0	0

SHEETMETAL

#'S OF DUCT:

LABOR RATES

$	40.00	SHOP	-	0		$ -	$ -	
$	40.00	HANDLING	-	0		$ -	$ -	
$	40.00	FIELD	-	0		$ -	$ -	

QUAN	DESCRIPTION							
	Sheetmetal Shop Expense							$ -
1	20% FIELD CORR. FACTOR		0	0	$ -	$ -	$ -	$ -
1			0	0	$ -	$ -	$ -	$ -
1			0	0	$ -	$ -	$ -	$ -
1			0	0	$ -	$ -	$ -	$ -
1			0	0	$ -	$ -	$ -	$ -
1	-		0	0	$ -	$ -	$ -	$ -
1	-		0	0	$ -	$ -	$ -	$ -
1	-		0	0	$ -	$ -	$ -	$ -
1			0	0	$ -	$ -	$ -	$ -
1	-		0	0	$ -	$ -	$ -	$ -
-	SUPERVISION	10.0%		0	$ -	$ -	$ -	$ -
	SHEETMETAL TOTALS			0	$ -	$ -	$ -	$ -
	HVAC TOTALS			0	$ -	$ -	$ -	$ -

SUB & MISC

LINE	DESCRIPTION	VENDOR					SUBCONTRACTOR
1	INSULATION			$ -	$ -	$ -	$ -
2	TEMP CONTROLS			$ -	$ -	$ -	
3				$ -	$ -	$ -	$ -
4				$ -	$ -	$ -	$ -
5	-			$ -	$ -	$ -	$ -
6	-			$ -	$ -	$ -	$ -
7	CLEAN UP CREW	2.0%		$ -	$ -	$ -	$ -
8	EQUIPMENT RENTAL						$ -
9	SU; T & B ; G & A					$ -	$ 55
-	SMALL TOOL/MISC MTL/WARRANTY				$ -		$ (68)
	SUB & MISC. TOTALS			$ -	$ -	$ -	$ (13)

MISC

STARTUP LABOR RATE: $ 90.00
EQUIPMENT ADJUSTMENT: $ -
WARRANTY %: 4%
MISC. MATERIAL %: 17%

DESCRIPTION:

SUMMARY

	HVAC	SUB & MISC.	PLUMBING	TOTALS
EQUIP	$ -	$ -	$ (1,693)	$ (1,693)
MATL	$ -	$ -	$ -	$ -
LABOR	$ -	$ -	$ -	$ -
S/M	$ -	$ (13)	$ -	$ (13)
0.00% TAX	$ -	$ -	$ -	$ -
COST	$ -	$ (13)	$ (1,693)	$ (1,706)
10% GEN. COND.	$ -	$ (1)	$ (169)	$ (171)
SUBTOTAL	$ -	$ (14)	$ (1,862)	$ (1,876)
10% FEE	$ -	$ (1)	$ (186)	$ (188)
BID W/O BOND	$ -	$ (15)	$ (2,048)	$ (2,064)
PERF. BOND			→	$ -
JOB TOTAL BID			→	$ (2,064)
% M/U v LABOR	0.0%	0.0%	0.0%	0.0%

Lochridge Priest

GENERAL ADMININSTRATIVE & MISCELLANEOUS SUMMARY

JOB NAME: Williamson County NCF
LOCATION: Building B Gas Water Heater-Deduct

PRINT TIME: 3/27/2018 7:27
BID DATE: 3/27/2018
EST. NO.: LPPCO-020

	GEN & ADMIN DESCRIPTION	UNIT COST	UNIT MEASURE	QUANTITY	TOTAL COST
1	PROJECT MANAGER	$ 75	Hr	0.50	$ 38
2	ASSISTANT PROJECT MANAGER	$ 10,700	Month	0.00	$ -
3	SUPERINTENDENT	$ 15,500	Month	0.00	$ -
4	SECRETARIES	$ 35	Hr	0.50	$ 18
5	PROJECT OFFICE	$ 2,062	Month	0.00	$ -
6	ENGINEERING	$ 99	Hour	0.00	$ -
7	TELEPHONE/FAX/OFFICE SUPPLIES	$ 1,000	Month	0.00	$ -
8	SHEET METAL CARTAGE	$ 700	Trip	0.00	$ -
9	PICK-UP & DELIVERIES	$ 375	Each	0.00	$ -
10	NEW HIRE COSTS/SAFETY TRAINING	$ 500	Each	0.00	$ -
11	ESTIMATING	$ 80	Hour	0.00	$ -
12	SHOP & RECORD DRAWINGS - 8% OF LABOR	$ 45	Hour	0.00	$ -
	GENERAL ADMINISTRATIVE SUMMARY TOTAL →				**$ 55**

EQUIPMENT RENTAL

DESCRIPTION	UNIT COST	UNIT MEASURE	QUAN.	TOTAL COST
185 CFM AIR COMP W/HOSES	$ 2,174.00	MONTH	0	$ -
SCISSOR LIFT -- 15 FT ELEC	$ 300.00	Week	0	$ -
GENERATOR - 4000 WATT	$ 457.00	MONTH	0	$ -
FORK LIFT -- WAREHOUSE 5000LB	$ 1,716.00	MONTH	0	$ -
SKYTRACK	$ 3,457.00	MONTH	0	$ -
WELDING MACHINE - GASOLINE	$ 692.00	MONTH	0	$ -
BACKHOE -- 12 FT	$ 3,082.00	MONTH	0	$ -
TRACKHOE -- 13-15 FT	$ 5,102.00	MONTH	0	$ -
COMPACTOR	$ 500.00	MONTH	0	$ -
TRENCHER	$ 9,500.00	Week	0	$ -
TRENCHER DELIVERY/PICKUP	$ 750.00	LOT	0	$ -
FUEL	$ 1,073.00	LOT	0	$ -
RENTAL EQUIPMENT INSURANCE	$ -		0	$ -
RENTAL EQUIPMENT TAX				$ -
TOTAL EQUIP RENTAL →				$ -

BALANCE -- STARTUP AIR & WATER

QUAN	DESCRIPTION	PIPING STRTUP UNIT	PIPING BAL UNIT	SHEETMETAL STRTUP UNIT	SHEETMETAL BAL UNIT	PIPING STRTUP EXT	PIPING BAL EXT	SHEETMETAL STRTUP EXT	SHEETMETAL BAL EXT
1		0.00	0.00	0.00	0.00	0	0	0	0
0	-	0.00	0.00	0.00	0.00	0	0	0	0
0	-	0.00	0.00	0.00	0.00	0	0	0	0
0	-	0.00	0.00	0.00	0.00	0	0	0	0
0	-	0.00	0.00	0.00	0.00	0	0	0	0
0	-	0.00	0.00	0.00	0.00	0	0	0	0
0	-	0.00	0.00	0.00	0.00	0	0	0	0
0	-	0.00	0.00	0.00	0.00	0	0	0	0
0	G/R/D	0.00	0.00	0.00	0.50	0	0	0	0
	SUB-TOTALS					**0**	**0**	**0**	**0**
						PIPING		SHT MTL	
	START UP TOTALS					**0** MANHRS		**0** MANHRS	
	BALANCE TOTALS					**0** MANHRS		**0** MANHRS	

	MNHRS	COST
STARTUP - PIPING	**0**	$ -
STARTUP - SHEETMETAL	**0**	$ -
BALANCE - PIPING	**0**	$ -
BALANCE - SHEETMETAL	**0**	$ -
TOTAL	0	$ -

"SURPASSING EXPECTATIONS"
EPIC SUPPLY
2441 MINNIS DRIVE
HALTOM CITY, TX 76117
817-288-8891
Fax 817-288-8897

Credit Memo

INVOICE DATE	INVOICE NUMBER
03/05/2018	S100175273.001

REMIT TO:
EPIC SUPPLY
2441 MINNIS DRIVE
HALTOM CITY, TX 76117

PAGE NO.
1 of 1

BILL TO:

LOCHRIDGE PRIEST INC.
PO BOX 154187
WACO, TX 76715

SHIP TO:

WILLIAMSON CO NORTH CAMPUS FACILITI
3171 SE INNER LOOP
C/O LOCHRIDGE-PRIEST
GEORGETOWN, TX 78626

CUSTOMER NUMBER	CUSTOMER PO NUMBER	JOB NAME / RELEASE NUMBER	SALESPERSON
7037	1634MV	HC16651	BEN ARTERBURN

WRITER	SHIP VIA	SHIP DATE	ORDER DATE
CAMERON BEGLEY	RETURN	03/05/2018	02/01/2018

ORDER QTY	SHIP QTY	DESCRIPTION	UNIT PRICE	EXT PRICE
-1ea	-1ea	SHE50-100NE STATE GAS W/HTR 50 GAL, 100,000 BTU ** Original Sale : S100156565.006 ** ** Vendor RGA Number: 8400017890 ** ** Cus PO: 1634MV HC16651 **	1946.701/ea	-1946.70

Invoice is due by 04/04/2018

Past Due invoices may be subject to 0% late charge.

Subtotal	-1946.70
S&H Charges	253.89
Tax	0.00
Payments	0.00
Amount Due	-1692.81

Printed By: CHUSSEY on 3/14/2018 6:12:30 PM

Williamson County Facilities - Job Cost Tracking Log

Project: North Campus Project # P324 **Change Order #:** 52

Change Order No.	Court Agenda Date	Party of Initiation	Time Ext. (Days)	GMP Breakdown						GMP Total	Total Updated Contract Amount
				Cost of Work	CM Contingency	Owner Contingency	Buyout Savings (Current)	General Conditions	Construction Phase Fee		
Contract				$ 18,027,145.00	$ 406,771.00	$ 406,772.00	$ -	$ 1,896,522.00	$ 625,467.00	$ 21,362,677.00	$ 21,362,677.00
1	03/28/17		0	$ 3,659.00	$ -	$ (3,659.00)	$ -	$ -	$ -	$ -	$ 21,362,677.00
2	03/28/17		10	$ 114,186.00	$ -	$ (114,186.00)	$ -	$ -	$ -	$ -	$ 21,362,677.00
3	05/02/17		0	$ 1,727.00	$ -	$ (1,727.00)	$ -	$ -	$ -	$ -	$ 21,362,677.00
4	05/02/17		0	$ 19,494.00	$ -	$ (19,494.00)	$ -	$ -	$ -	$ -	$ 21,362,677.00
5	05/30/17		0	$ 19,676.00	$ (19,676.00)	$ -	$ -	$ -	$ -	$ -	$ 21,362,677.00
6	05/30/17		0	$ 14,465.00	$ (14,465.00)	$ -	$ -	$ -	$ -	$ -	$ 21,362,677.00
7	05/30/17		0	$ 2,237.00	$ -	$ (2,237.00)	$ -	$ -	$ -	$ -	$ 21,362,677.00
8	05/30/17		0	$ 3,450.00	$ -	$ (3,450.00)	$ -	$ -	$ -	$ -	$ 21,362,677.00
9	06/27/17		0	$ 832.00	$ -	$ (832.00)	$ -	$ -	$ -	$ -	$ 21,362,677.00
10	06/27/17		0	$ 285.00	$ -	$ (285.00)	$ -	$ -	$ -	$ -	$ 21,362,677.00
11	06/27/17		0	$ 22,415.00	$ -	$ (22,415.00)	$ -	$ -	$ -	$ -	$ 21,362,677.00
12	06/27/17		0	$ 11,221.00	$ -	$ (11,221.00)	$ -	$ -	$ -	$ -	$ 21,362,677.00
13	06/27/17		0	$ (5,000.00)	$ -	$ 5,000.00	$ -	$ -	$ -	$ -	$ 21,362,677.00
14	06/27/17		0	$ -	$ -	$ -	$ -	$ -	$ -	$ -	$ 21,362,677.00
15	06/27/17		0	$ 79,584.00	$ -	$ (79,584.00)	$ -	$ -	$ -	$ -	$ 21,362,677.00
16	06/27/17		0	$ 9,930.00	$ -	$ (9,930.00)	$ -	$ -	$ -	$ -	$ 21,362,677.00
17	09/12/17	A&E	0	$ 2,450.00	$ -	$ -	$ (2,450.00)	$ -	$ -	$ -	$ 21,362,677.00
18	09/12/17	A&E	0	$ 1,747.00	$ (1,747.00)	$ -	$ -	$ -	$ -	$ -	$ 21,362,677.00
19	09/12/17	Owner	0	$ 577,128.00	$ -	$ -	$ (577,128.00)	$ -	$ -	$ -	$ 21,362,677.00
20	12/05/17	A&E	0	$ 5,784.00	$ -	$ (5,856.00)	$ -	$ 72.00	$ -	$ -	$ 21,362,677.00
21	10/03/17	A&E	0	$ 10,364.00	$ (10,364.00)	$ -	$ -	$ -	$ -	$ -	$ 21,362,677.00
22	10/03/17	A&E	0	$ 6,461.00	$ (6,461.00)	$ -	$ -	$ -	$ -	$ -	$ 21,362,677.00
23	12/05/17	A&E	0	$ 15,825.00	$ (15,825.00)	$ -	$ -	$ -	$ -	$ -	$ 21,362,677.00
24	10/03/17	A&E	0	$ 33,906.00	$ (33,906.00)	$ -	$ -	$ -	$ -	$ -	$ 21,362,677.00
25	10/03/17	A&E	0	$ 8,854.00	$ (8,854.00)	$ -	$ -	$ -	$ -	$ -	$ 21,362,677.00
26	02/06/18	A&E	0	$ (106.00)	$ -	$ 106.00	$ -	$ -	$ -	$ -	$ 21,362,677.00
27	02/27/18	A&E	0	$ 2,687.00	$ -	$ (2,687.00)	$ -	$ -	$ -	$ -	$ 21,362,677.00
28	PENDING REVIEW										$ 21,362,677.00
29	02/06/18	A&E	0	$ 3,647.00	$ (3,647.00)	$ -	$ -	$ -	$ -	$ -	$ 21,362,677.00
30	10/24/17	Contractor		$ (30,000.00)	$ -	$ 30,000.00	$ -	$ -	$ -	$ -	$ 21,362,677.00
31	10/24/17	A&E		$ 4,434.00	$ -	$ (4,434.00)	$ -	$ -	$ -	$ -	$ 21,362,677.00
32	11/14/17	A&E		$ 6,816.00		$ (6,816.00)	$ -	$ -	$ -	$ -	$ 21,362,677.00
33		Owner	0	$ (28,265.00)	$ -	$ 28,265.00	$ -	$ -	$ -	$ -	$ 21,362,677.00
34	11/14/17	Contractor		$ 5,273.00	$ (5,273.00)	$ -	$ -	$ -	$ -	$ -	$ 21,362,677.00
35	PENDING REVIEW										$ 21,362,677.00
36	12/05/17	A&E	0	$ 1,280.00	$ (1,280.00)	$ -	$ -	$ -	$ -	$ -	$ 21,362,677.00
37	12/05/17	A&E	0	$ 1,601.00	$ (1,601.00)	$ -	$ -	$ -	$ -	$ -	$ 21,362,677.00
38	03/27/18	A&E	0	$ 4,646.00	$ -	$ (4,646.00)	$ -	$ -	$ -	$ -	$ 21,362,677.00
39	02/27/18	Contractor	15	$ -	$ -	$ -	$ -	$ -	$ -	$ -	$ 21,362,677.00
40	02/27/18	Contractor	0	$ (6,292.00)	$ -	$ 6,292.00	$ -	$ -	$ -	$ -	$ 21,362,677.00
41	02/06/18	Owner	0	$ (50,311.00)	$ -	$ 50,311.00	$ -	$ -	$ -	$ -	$ 21,362,677.00
42	02/27/18	Contractor	0	$ (44,494.00)	$ -	$ 44,494.00	$ -	$ -	$ -	$ -	$ 21,362,677.00
43	02/27/18	Owner	0	$ 24,129.00	$ -	$ (24,129.00)	$ -	$ -	$ -	$ -	$ 21,362,677.00
44	02/27/18	Owner	0	$ 4,882.00	$ -	$ (4,882.00)	$ -	$ -	$ -	$ -	$ 21,362,677.00
45	03/20/18	Contractor	0	$ 25,500.00	$ (25,500.00)	$ -	$ -	$ -	$ -	$ -	$ 21,362,677.00
46	03/27/18	Owner	163	$ 1,485,504.00	$ -	$ -	$ (135,504.00)	$ 132,086.00	$ 49,367.00	$ 1,350,000.00	$ 22,712,677.00
47	03/20/18	Owner	0	$ 1,126.00	$ -	$ (1,126.00)	$ -	$ -	$ -	$ -	$ 22,712,677.00
48	03/20/18	Contractor	0	$ 36,181.00	$ -	$ (36,181.00)	$ -	$ -	$ -	$ -	$ 22,712,677.00
49	PENDING REVIEW										$ 22,712,677.00
50		A&E	4	$ 4,392.00	$ (4,392.00)	$ -	$ -	$ -	$ -	$ -	$ 22,712,677.00
51	03/20/18	Owner	4	$ 5,759.00	$ -	$ (5,759.00)	$ -	$ -	$ -	$ -	$ 22,712,677.00
52		Owner	0	$ (2,064.00)	$ -	$ 2,064.00	$ -	$ -	$ -	$ -	$ 22,712,677.00
53	04/10/18	Owner	0	$ 377,829.00	$ -	$ -	$ (425,216.00)	$ 47,387.00	$ -	$ -	$ 22,712,677.00
			196	**$ 20,821,979.00**	**$ 253,780.00**	**$ 207,768.00**	**$ (1,140,298.00)**	**$ 2,076,067.00**	**$ 674,834.00**	**$ 22,712,677.00**	**$ 22,712,677.00**

$ 1,677,412.00

Commissioners Court - Regular Session **16.**

Meeting Date: 04/17/2018

Discuss consider and take appropriate action on approval of the preliminary plat for the Sonterra West Sec 12 subdivision - Pct 3

Submitted For: Terron Evertson **Submitted By:** Adam Boatright, Infrastructure

Department: Infrastructure **Division:** Road & Bridge

Agenda Category: Consent

Information

Agenda Item

Discuss, consider, and take appropriate action on approval of the preliminary plat for the Sonterra West Section 12 subdivision - Pct 3.

Background

This proposed subdivision consists of 263 residential lots, 5 non-residential lots, 2 condominium developments and 9,865 feet of new public roads.

Fiscal Impact

From/To	Acct No.	Description	Amount

Attachments

Prelim Plat - Sonterra West Sec 12

Form Review

Inbox	Reviewed By	Date
County Judge Exec Asst.	Wendy Coco	04/12/2018 11:09 AM
Form Started By: Adam Boatright		Started On: 04/12/2018 10:52 AM
Final Approval Date: 04/12/2018		

Commissioners Court - Regular Session **17.**

Meeting Date: 04/17/2018

Discuss consider and take appropriate action on approval of the replat of the Sonterra Commercial Sec 1 Lots 1-5 Block A subdivision – Pct 3

Submitted For: Terron Evertson **Submitted By:** Adam Boatright, Infrastructure

Department: Infrastructure **Division:** Road & Bridge

Agenda Category: Consent

Information

Agenda Item

Discuss, consider, and take appropriate action on approval of the replat of the Sonterra Commercial Section 1, Lots 1-5, Block A, subdivision – Pct 3.

Background

This subdivision consists of two commercial lots and no new public roads. It is a replat of Lots 1-5, Block A, of the previously approved Sonterra Commercial Section 1 subdivision.

Fiscal Impact

From/To	Acct No.	Description	Amount

Attachments

Replat - Sonterra Comm Sec 1 Lots 1-5

Form Review

Inbox	Reviewed By	Date
County Judge Exec Asst.	Wendy Coco	04/12/2018 11:25 AM
Form Started By: Adam Boatright		Started On: 04/05/2018 12:39 PM
Final Approval Date: 04/12/2018		

REPLAT OF LOTS 1-5, BLOCK A
SONTERRA COMMERCIAL SUBDIVISION
SECTION ONE

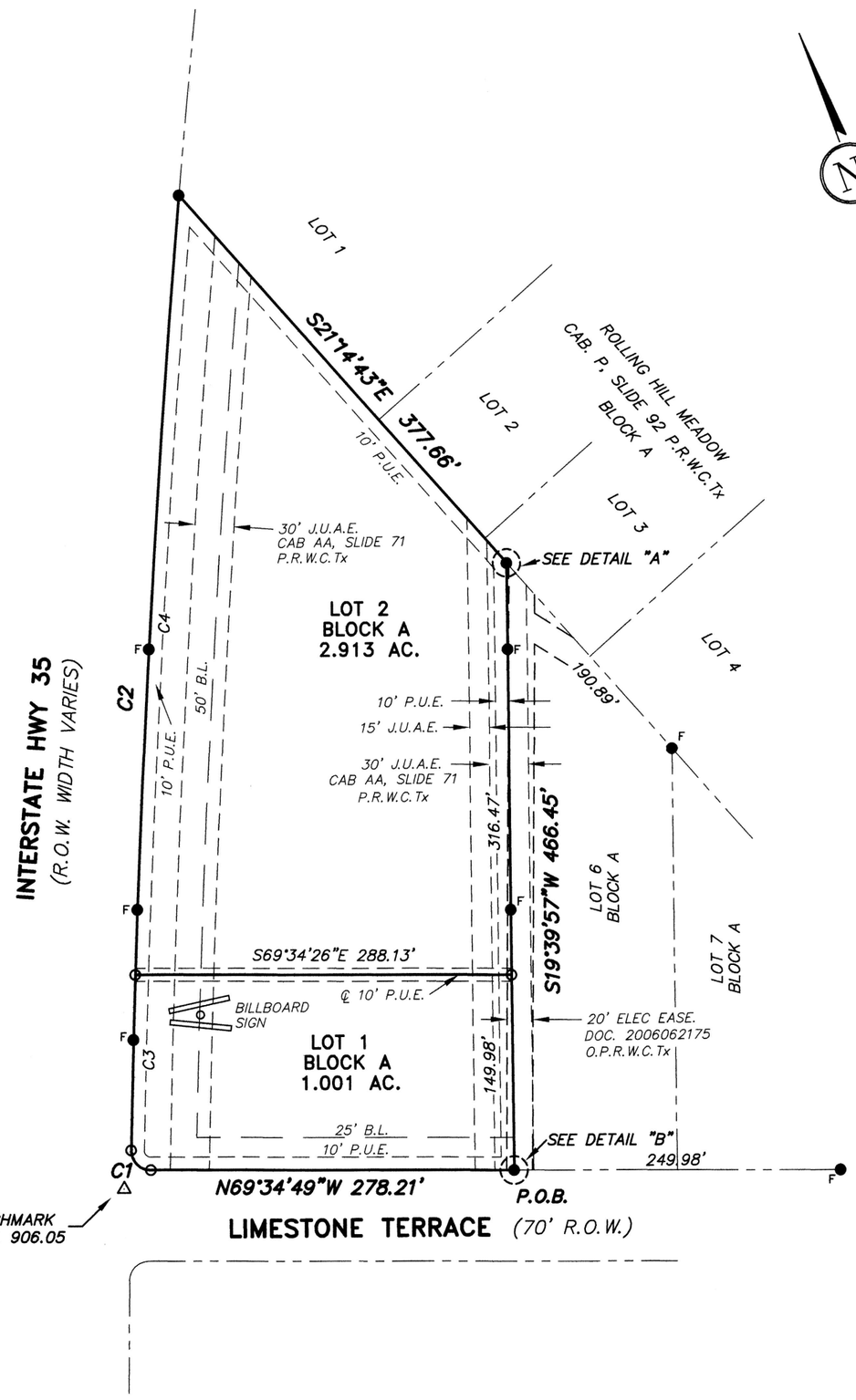

BEARING BASIS: TEXAS COORDINATE SYSTEM OF 1983 (NAD83) CENTRAL ZONE.

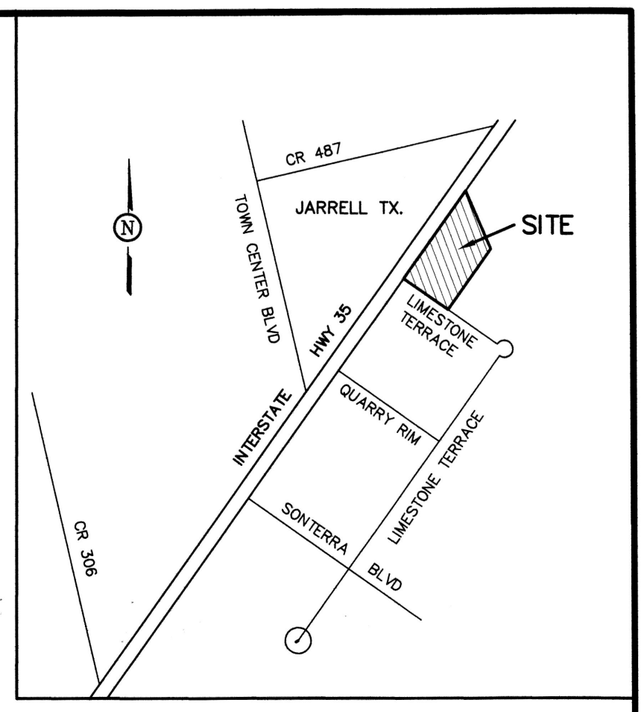

LOCATION MAP
NOT TO SCALE

LEGEND

- □ CONCRETE MONUMENT
- ● 1/2" STEEL PIN FOUND (SPF) (UNLESS NOTED)
- F ● 1/2" STEEL PIN FOUND W/CAP MARKED "FOREST"
- ○ 1/2" STEEL PIN SET W/CAP MARKED 'LENZ & ASSOC.'
- ⊙ PIPE FOUND
- ▲ NAIL FOUND
- △ COMPUTED POINT
- ✸ COTTON SPINDLE FOUND
- P.U.E. PUBLIC UTILITY EASEMENT
- W.L.E. WATERLINE EASEMENT
- D.E. DRAINAGE EASEMENT
- B.L. BUILDING LINE
- J.U.A.E. JOINT USE ACCESS EASEMENT
- P.R.W.C.Tx PLAT RECORDS WILLIAMSON COUNTY, TEXAS
- O.P.R.W.C.Tx OFFICIAL PUBLIC RECORDS WILLIAMSON COUNTY, TEXAS
- PP○ POWER POLE
- —OU— OVERHEAD UTILITY LINE
- (BRG.~DIST.) RECORD CALL CABINET AA SLIDE 71
- [BRG.~DIST.] RECORD CALL DOC. 2007067872
- P.O.B. POINT OF BEGINNING
- ℄ CENTERLINE

GRAPHIC SCALE

100 0 50 100 200 400

(IN FEET)
1 inch = 100 ft.

LOTS SUBJECT TO A BLANKET TYPE WATER PIPELINE EASEMENT TO BE 10' WIDE CENTERED ON THE PIPELINE AS INSTALLED. VOL. 524, PG. 781, DEED RECORDS OF WILLIAMSON COUNTY, TEXAS.

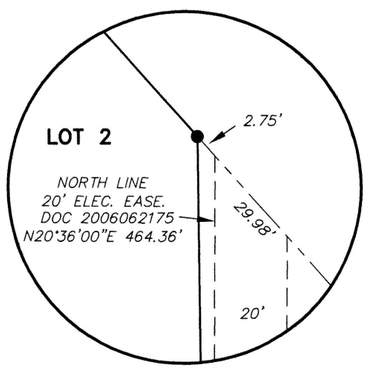

DETAIL 'A"
(NOT TO SCALE)

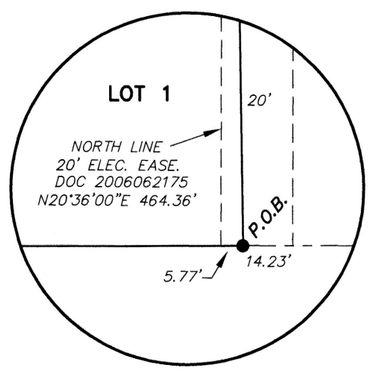

DETAIL 'B"
(NOT TO SCALE)

FIELD NOTE DESCRIPTION

FIELD NOTE DESCRIPTION OF 3.914 ACRES OUT OF THE ISAAC BUNKER SURVEY, ABSTRACT 54, BEING ALL OF LOTS 1 THROUGH 5, BLOCK A, SONTERRA COMMERCIAL SUBDIVISION SECTION ONE, A SUBDIVISION OF RECORD IN CABINET AA, SLIDE 71 OF THE PLAT RECORDS OF WILLIAMSON COUNTY, TEXAS. THE SAID 3.914 ACRES OF LAND BEING MORE PARTICULARLY DESCRIBED BY METES AND BOUNDS AS FOLLOWS:

BEGINNING, at a ½ inch diameter steel pin found on the north right-of-way line of Limestone Terrace at the southeast corner of the said Lot 5, the same being the southwest corner of Lot 6, Block A;

THENCE, N 69°34'49" W, a distance of 278.21 feet along the north right-of-way line of Limestone Terrace to a ½ inch diameter steel pin set with cap marked Lenz & Assoc;

THENCE, with a curve to the right, having a central angle of 90°59'04", a radius of 15.00 feet, an arc of 23.82 feet and a chord bearing and distance of N 24°05'17" W, 21.39 feet to a ½ inch diameter steel pin set with cap marked Lenz & Assoc. on the east right-of-way line of Interstate Highway 35;

THENCE, with a curve to the right, along the east right-of-way line of Interstate Highway 35, having a central angle of 03°39'17", a radius of 11511.66 feet, an arc of 734.28 feet and a chord bearing and distance of N 23°13'53" E, 734.16 feet to a ½ inch diameter steel pin found at the northwest corner of the said Lot 1, Block A;

THENCE, S 21°14'43" E, a distance of 377.66 feet along the north line of the said Lot 1, the same being the south line of Rolling Hill Meadow, a subdivision of record in Cabinet P, Slide 92, Plat Records of Williamson County, Texas, to a ½ inch diameter steel pin found at the northeast corner of the said lot 1, the same being the northwest corner of the said Lot 6;

THENCE, S 19°39'57" W, a distance of 466.45 feet to the PLACE OF BEGINNING, containing 3.914 acres of land, more or less.

LEGAL DESCRIPTION:
3.914 ACRES OUT OF THE ISAAC BUNKER SURVEY, ABSTRACT NO. 54, WILLIAMSON COUNTY, TEXAS, BEING LOTS 1-5, BLOCK A, SONTERRA COMMERCIAL SUBDIVISION SECTION ONE, CABINET AA, SLIDE 71, PLAT RECORDS OF WILLIAMSON COUNTY, TEXAS.

OWNER: RVEST, LP
3939 BEE CAVE ROAD, SUITE C-100
AUSTIN, TEXAS 78746
512-368-4000

SURVEYOR:
TIMOTHY A. LENZ, R.P.L.S.
LENZ & ASSOCIATES, INC.
FIRM NO. 100290-00
4303 RUSSELL DRIVE
AUSTIN, TEXAS 78704
PHONE (512) 443-1174
FAX (512) 443-1550

BENCHMARK - MAG NAIL SET LIP OF CURB GUTTER S.W. CORNER OF LOT 1.
ELEV. - 906.05 NAVD88 (GEOID 12A)

LAND USE SUMMARY:

COMMERCIAL LOTS	2
TOTAL LOTS	2

BUILDING SETBACKS:

FRONT STREET	25'
SIDE STREET	15'
REAR	15'
SIDE	5'

CURVE TABLE

CURVE	DELTA	RADIUS	TANGENT	ARC	CHORD	BEARING
C1	90°59'04"	15.00	15.26	23.82	21.39	N24°05'17"W
C2	03°39'17"	11511.66	367.27	734.28	734.16	N23°13'53"E
C3	0°40'15"	11511.66	67.39	134.78	134.77	N21°44'22"E
C4	02°59'02"	11511.66	299.82	599.51	599.44	N23°34'00"E

LENZ & ASSOCIATES, INC.
FIRM No. 100290-00
COMPLETE PROFESSIONAL LAND SURVEYING SERVICES
(512) 443-1174
4303 RUSSELL DRIVE
AUSTIN, TEXAS 78704

SURVEY #: 2005-0363QQ-1 F.B. 1050/66

REPLAT OF LOTS 1-5, BLOCK A
SONTERRA COMMERCIAL SUBDIVISION
SECTION ONE

STATE OF TEXAS }
COUNTY OF WILLIAMSON }

KNOWN ALL PERSONS BY THESE PRESENTS:

THAT RVEST, LP, ACTING BY AND THROUGH ANDREW BILGER, OWNER OF THAT CERTAIN 3.914 ACRES OUT OF THE ISAAC BUNKER SURVEY, ABSTRACT NO. 54, WILLIAMSON COUNTY, TEXAS, BEING LOTS 1 THROUGH 5, BLOCK A, SONTERRA COMMERCIAL SUBDIVISION SECTION ONE, A SUBDIVISION OF RECORD IN CABINET AA, SLIDE 71 OF THE PLAT RECORDS OF WILLIAMSON COUNTY, TEXAS, THE SAID 3.914 ACRES, BEING SAID LOTS 1 THROUGH 5, BLOCK A, BEING CONVEYED TO RVEST, LP BY DEED RECORDED IN DOCUMENT NUMBER 2012074806 OF THE OFFICIAL PUBLIC RECORDS OF WILLIAMSON COUNTY, TEXAS, DOES HEREBY REPLAT THE SAID 3.914 ACRES IN ACCORDANCE WITH THE PLAT AS SHOWN HEREON TO BE KNOWN AS "REPLAT OF LOTS 1-5, BLOCK A SONTERRA COMMERCIAL SUBDIVISION SECTION ONE" AND DO HEREBY DEDICATE TO THE PUBLIC THE USE OF THE STREETS AND EASEMENTS AS SHOWN HEREON. SAID TRACT IS SUBJECT TO ANY EASEMENTS AND/OR RESTRICTIONS HERETOFORE GRANTED AND NOT RELEASED. IT IS THE RESPONSIBILITY OF THE OWNER, NOT THE COUNTY, TO ASSURE COMPLIANCE WITH THE PROVISIONS OF ALL APPLICABLE STATE, FEDERAL, AND LOCAL LAWS AND REGULATIONS TO THE ENVIRONMENT, INCLUDING (BUT NOT LIMITED TO) THE ENDANGERED SPECIES ACT, STATE AQUIFER REGULATIONS AND MUNICIPAL WATERSHED ORDINANCES.

WITNESS MY HAND THIS THE 2nd DAY OF April, 2018 A.D.

RVEST, LP,
BY: ANDREW BILGER
3939 BEE CAVE ROAD, SUITE C-100
AUSTIN, TEXAS 78746

STATE OF TEXAS }
COUNTY OF WILLIAMSON }

THIS INSTRUMENT WAS ACKNOWLEDGED BEFORE ME ON THE 2nd DAY OF April, 2018, A.D. BY ANDREW BILGER, ACTING IN THE CAPACITY HEREIN STATED.

NOTARY PUBLIC IN AND FOR THE STATE OF TEXAS

MY COMMISSION EXPIRES 11/28/2020

ASMITA PATEL
NOTARY PUBLIC
STATE OF TEXAS
MY COMM. EXP. 11/28/2020
NOTARY ID 12825308-5

SURVEYOR'S CERTIFICATE

I, TIMOTHY A LENZ, AM AUTHORIZED UNDER THE LAWS OF THE STATE OF TEXAS TO PRACTICE THE PROFESSION OF SURVEYING AND HEREBY CERTIFY THAT THIS PLAT IS TRUE AND CORRECT AND WAS PREPARED FROM AN ACTUAL SURVEY OF THE PROPERTY HEREON MADE ON THE GROUND BY ME OR UNDER MY SUPERVISION. ALL CORNER MONUMENTS WERE FOUND OR SET AS SHOWN HEREON.

NO PORTION OF THIS SUBDIVISION IS WITHIN THE 100 YEAR FLOOD PLAIN AS IDENTIFIED ON THE FEDERAL EMERGENCY MANAGEMENT AGENCY (FEMA) FLOOD INSURANCE RATE MAP, COMMUNITY PANEL NUMBER 48491C0150E, EFFECTIVE DATE SEPTEMBER 26, 2008. THE ZONE CLASSIFICATION IS "X".

3/26/2018
TIMOTHY A. LENZ DATE
REGISTERED PROFESSIONAL LAND SURVEYOR NO. 4393
LENZ & ASSOCIATES, INC.
FIRM NO. 100290-00
4303 RUSSELL DRIVE
AUSTIN, TEXAS 78704

STATE OF TEXAS
REGISTERED
TIMOTHY A. LENZ
4393
PROFESSIONAL
LAND SURVEYOR

NOTES:

1) ALL SIDEWALKS ARE TO BE MAINTAINED BY EACH OF THE ADJACENT PROPERTY OWNERS.

2) ALL PUBLIC ROADWAYS AND EASEMENTS AS SHOWN ON THIS PLAT ARE FREE OF LIENS.

3) RURAL MAILBOXES SHALL BE SET THREE FEET FROM THE EDGE OF THE PAVEMENT OR BEHIND CURBS WHEN USED. ALL MAILBOXES WITHIN COUNTY ARTERIAL RIGHT-OF-WAY SHALL MEET THE CURRENT TXDOT STANDARDS. ANY MAILBOX THAT DOES NOT MEET THIS REQUIREMENT MAY BE REMOVED BY WILLIAMSON COUNTY.

4) THIS REPLAT IS SUBJECT TO ALL APPLICABLE RECORDED EASEMENTS AND RESTRICTIONS AS SET FORTH IN THE ORIGINAL PLAT OF SONTERRA COMMERCIAL SUBDIVISION SECTION ONE, AS RECORDED IN CABINET AA, SLIDE 71 OF THE PLAT RECORDS OF WILLIAMSON COUNTY, TEXAS.

5) THE 30 FOOT WIDE JOINT USE ACCESS EASEMENT DEDICATED BY THE PREVIOUS PLAT OF SONTERRA COMMERCIAL SUBDIVISION SECTION ONE, RECORDED IN CABINET AA, SLIDE 71 OF THE PLAT RECORDS OF WILLIAMSON COUNTY, TEXAS, HAS BEEN RELOCATED PER THE EASEMENT DOCUMENT RECORDED IN DOCUMENT NUMBER _____ OF THE OFFICIAL PUBLIC RECORDS OF WILLIAMSON COUNTY, TEXAS.

6) THIS SUBDIVISION IS SUBJECT TO STORM-WATER MANAGEMENT CONTROLS AS REQUIRED BY WILLIAMSON COUNTY SUBDIVISION REGULATIONS, SECTION B11.1, ON NEW DEVELOPMENT THAT WOULD EVOKE SUCH CONTROLS BEYOND EXISTING CONDITIONS.

7) A DE FACTO CERTIFICATE OF COMPLIANCE IS HEREBY ISSUED FOR ALL LOTS WITHIN THIS SUBDIVISION. THIS CERTIFICATE IS VALID UNTIL SUCH TIME AS FEMA REVISES OR NEWLY ADOPTS FLOODPLAIN BOUNDARIES IN THIS AREA.

8) THE MINIMUM FINISHED FLOOR ELEVATION SHALL BE ONE FOOT HIGHER THAN THE HIGHEST SPOT ELEVATION THAT IS LOCATED WITHIN FIVE FEET OUTSIDE THE PERIMETER OF THE BUILDING, OR ONE FOOT ABOVE THE BFE, WHICHEVER IS HIGHER.

9) WATER AND WASTEWATER SERVICE WILL BE PROVIDED BY SONTERRA MUNICIPAL UTILITY DISTRICT.

10) IMPROVEMENTS WITHIN THE COUNTY RIGHT-OF-WAY INCLUDING, BUT NOT LIMITED TO, LANDSCAPING, IRRIGATION, LIGHTING AND CUSTOM SIGNS, IS PROHIBITED WITHOUT FIRST OBTAINING AN EXECUTED LICENCE AGREEMENT WITH WILLIAMSON COUNTY.

APPROVED FOR 911 SERVICE THIS THE 2nd DAY OF April, 2018, A.D.

Cindy Bridges
WILLIAMSON COUNTY ADDRESS COORDINATOR
Cindy Bridges

IN APPROVING THIS PLAT BY THE COMMISSIONERS COURT OF WILLIAMSON COUNTY, TEXAS, IT IS UNDERSTOOD THAT THE BUILDING OF ALL STREETS, ROADS OR OTHER PUBLIC THOROUGHFARES AND AND ANY BRIDGES OR CULVERTS NECESSARY TO BE CONSTRUCTED OR PLACED, IS THE RESPOSIBILITY OF THE OWNER OF THIS TRACT OF LAND COVERED BY THIS PLAT IN ACCORDANCE WITH THE PLANS AND SPECIFICATIONS PRESCRIBED BY THE COMMISSIONERS COURT OF WILLIAMSON COUNTY, TEXAS. SAID COMMISSIONERS COURT ASSUMES NO OBLIGATION TO BUILD ANY OF THE STREETS, ROADS OR OTHER PUBLIC THOROUGHFARES SHOWN ON THIS PLAT, OR IN CONSTRUCTING ANY BRIDGES OR DRAINAGE IMPROVEMENTS IN CONNECTION THEREWITH. THE COUNTY WILL ASSUME NO RESPONSIBILITY FOR DRAINAGE WAYS OR EASEMENTS IN THE SUBDIVISION, OTHER THAN THOSE DRAINING OR PROTECTING THE ROAD SYSTEM AND STREETS.

THE COUNTY ASSUMES NO RESPONSIBILITY FOR THE ACCURACY OF REPRESENTATIONS BY OTHER PARTIES ON THIS PLAT. FLOOD PLAIN DATA IN PARTICULAR MAY CHANGE DEPENDING ON SUBSEQUENT DEVELOPMENT. IT IS FURTHER UNDERSTOOD THAT THE OWNERS OF THE TRACT OF LAND COVERED BY THIS PLAT MUST INSTALL AT THEIR OWN EXPENSE ALL TRAFFIC CONTROL DEVICES AND SIGNAGE THAT MAY BE REQUIRED BEFORE THE STREETS IN THE SUBDIVISION HAVE FINALLY BEEN ACCEPTED FOR MAINTENANCE BY THE COUNTY.

STATE OF TEXAS }
COUNTY OF WILLIAMSON }

I, DAN A. GATTIS, COUNTY JUDGE OF WILLIAMSON COUNTY, TEXAS, DO HEREBY CERTIFY THAT THIS MAP OR PLAT, WITH WRITTEN FIELD NOTES SHOWN HEREON, AND THE SURVEYOR'S CERTIFICATE APPEARING HEREON, KNOWN AS SONTERRA WEST SECTION 8-I, HAVING BEEN DULY PRESENTED TO THE COMMISSIONERS COURT OF WILLIAMSON COUNTY, TEXAS AND BY SAID COURT WAS DULY CONSIDERED, WAS ON THIS DAY APPROVED, AND SAID PLAT IS AUTHORIZED TO BE REGISTERED AND RECORDED IN THE PROPERTY RECORDS OF THE COUNTY CLERK OF WILLIAMSON COUNTY, TEXAS.

_____
DAN A. GATTIS DATE
COUNTY JUDGE, WILIAMSON COUNTY, TEXAS

STATE OF TEXAS }
COUNTY OF WILLIAMSON }

KNOWN ALL MEN BY THESE PRESENTS:

I, NANCY RISTER, COUNTY CLERK OF WILLIAMSON COUNTY, TEXAS, DO HEREBY CERTIFY THAT THE FOREGOING INSTRUMENT IN WRITING WITH ITS CERTIFICATE OF AUTHENTICATION WAS FILED FOR RECORD IN MY OFFICE ON THE ___ DAY OF _____, 20__, A.D. AT ___ O'CLOCK ___.M. AND DULY RECORDED THIS THE ___ DAY OF _____, 20__, A.D., AT _____ O'CLOCK __.M., IN THE PLAT RECORDS OF WILLIAMSON COUNTY, TEXAS, IN DOCUMENT NUMBER _____.

TO CERTIFY WHICH, WITNESS MY HAND AND SEAL AT THE COUNTY COURT OF SAID COUNTY, AT MY OFFICE IN GEORGETOWN, TEXAS, THE DATE LAST SHOWN ABOVE WRITTEN.

NANCY RISTER, COUNTY CLERK, WILLIAMSON COUNTY, TEXAS

BY _____ DEPUTY

LENZ & ASSOCIATES, INC.
FIRM No. 100290-00
COMPLETE PROFESSIONAL LAND SURVEYING SERVICES
(512) 443-1174
4303 RUSSELL DRIVE
AUSTIN, TEXAS 78704

SURVEY #: 2005-0363QQ-1 F.B. 1050/66

Commissioners Court - Regular Session **18.**

Meeting Date: 04/17/2018

Discuss consider and take appropriate action on approval of the revised preliminary plat for the Business Park at Brushy Creek subdivision - Pct 4

Submitted For: Terron Evertson **Submitted By:** Adam Boatright, Infrastructure

Department: Infrastructure **Division:** Road & Bridge

Agenda Category: Consent

Information

Agenda Item

Discuss, consider, and take appropriate action on approval of the revised preliminary plat for the Business Park at Brushy Creek subdivision - Pct 4.

Background

This preliminary plat was last approved on June 27, 2017. This revision corrects notes on the preliminary plat regarding the construction of North Star Ranch Boulevard south of Benelli Drive.

Fiscal Impact

From/To	Acct No.	Description	Amount

Attachments

Preliminary Plat - Business Park at Brushy Creek

Form Review

Inbox	Reviewed By	Date
County Judge Exec Asst.	Wendy Coco	04/12/2018 11:25 AM
Form Started By: Adam Boatright		Started On: 04/12/2018 11:15 AM
Final Approval Date: 04/12/2018		



Commissioners Court - Regular Session **19.**

Meeting Date: 04/17/2018

Discuss consider and take appropriate action on approval of the final plat for the Santa Rita Phase 1 Section 8 subdivision - Pct 3

Submitted For:	Terron Evertson	**Submitted By:**	Adam Boatright, Infrastructure
Department:	Infrastructure	**Division:**	Road & Bridge

Agenda Category: Consent

Information

Agenda Item

Discuss, consider, and take appropriate action on approval of the final plat for the Santa Rita Phase 1 Section 8 subdivision - Pct 3.

Background

This is the next section of the Santa Rita Phase 1 development. It consists of 68 single family lots, 2 open space lots and 1,124 feet of new public roads. There are also 2,600 feet of new privately maintained roads that will be maintained by the Homeowners Association. Roadway and drainage construction has been completed.

Fiscal Impact

From/To	Acct No.	Description	Amount

Attachments

Final Plat - Santa Rita Ranch Ph 1 Sec 8

Form Review

Inbox	Reviewed By	Date
County Judge Exec Asst.	Wendy Coco	04/12/2018 01:04 PM
Form Started By: Adam Boatright		Started On: 04/12/2018 11:53 AM
Final Approval Date: 04/12/2018		

Commissioners Court - Regular Session **20.**

Meeting Date: 04/17/2018

LPPF Public Hearing 2

Submitted For: Dan Gattis **Submitted By:** Hal Hawes, County Judge

Department: County Judge

Agenda Category: Regular Agenda Items

Information

Agenda Item

10:00 AM – Hold Public Hearing regarding the setting of the rate associated with mandatory provider participation payments that Williamson County may require of all local hospitals for fiscal year (FY) 2018 in relation to the Williamson County Health Care Participation Program and establish how the revenue derived from those payments may be spent in accordance with the Chapter 292B of the Texas Health & Safety Code and the Williamson County Health Care Provider Participation Program Rules and Procedures.

Background

This Public Hearing was advertised in the Williamson County Sun in accordance with Chapter 292B of the Texas Health & Safety Code.

Pursuant to Chapter 292B of the Texas Health & Safety Code, as amended, the Commissioners Court will conduct a Public Hearing to discuss the setting of the rate associated with mandatory provider participation payments that Williamson County may require of all local hospitals for fiscal year (FY) 2018 in relation to the Williamson County Health Care Participation Program pursuant to Chapter 292B of the Texas Health & Safety Code. Representatives of local nonpublic hospitals wishing to be heard on these matters may appear before the Commissioners Court at the public meeting. The public hearing will be held in conjunction with the regular public meeting of the Williamson County Commissioners Court. At the public meeting, the Williamson County Commissioners Court may discuss, consider, and take appropriate action to approve a rate associated with mandatory provider participation payments that Williamson County may require of all local hospitals for fiscal year (FY) 2018 in relation to the Williamson County Health Care Participation Program pursuant to Chapter 292B of the Texas Health & Safety Code.

Fiscal Impact

From/To	Acct No.	Description	Amount

Attachments

No file(s) attached.

Form Review

Inbox	Reviewed By	Date
County Judge Exec Asst.	Wendy Coco	04/05/2018 02:11 PM
Form Started By: Hal Hawes		Started On: 04/05/2018 12:36 PM
Final Approval Date: 04/05/2018		

Commissioners Court - Regular Session **21.**

Meeting Date: 04/17/2018

LPPF Rate FY 2018 no 2

Submitted For: Dan Gattis **Submitted By:** Hal Hawes, County Judge

Department: County Judge

Agenda Category: Regular Agenda Items

Information

Agenda Item

Discuss, consider and take appropriate action on setting of the rate associated with mandatory provider participation payments that Williamson County may require of all local hospitals for fiscal year (FY) 2018 in relation to the Williamson County Health Care Participation Program and establish how the revenue derived from those payments may be spent in accordance with the Chapter 292B of the Texas Health & Safety Code and the Williamson County Health Care Provider Participation Program Rules and Procedures.

Background

Fiscal Impact

From/To	Acct No.	Description	Amount

Attachments

No file(s) attached.

Form Review

Inbox	Reviewed By	Date
County Judge Exec Asst.	Wendy Coco	04/05/2018 02:11 PM
Form Started By: Hal Hawes		Started On: 04/05/2018 12:56 PM
Final Approval Date: 04/05/2018		

Commissioners Court - Regular Session **22.**

Meeting Date: 04/17/2018

property tax

Submitted For: Dan Gattis **Submitted By:** Rebecca Clemons, County Judge

Department: County Judge

Agenda Category: Regular Agenda Items

Information

Agenda Item

Hear a presentation on property tax collections by McCreary, Veselka, Bragg & Allen, P.C..

Background

Fiscal Impact

From/To	Acct No.	Description	Amount

Attachments

No file(s) attached.

Form Review

Inbox	Reviewed By	Date
County Judge Exec Asst. (Originator)	Wendy Coco	04/11/2018 10:23 AM
Form Started By: Rebecca Clemons		Started On: 04/10/2018 04:15 PM
Final Approval Date: 04/11/2018		

Commissioners Court - Regular Session **23.**

Meeting Date: 04/17/2018

Receive presentation on County Roadway Resurfacing program

Submitted For: Terron Evertson **Submitted By:** Daribel Texidor, Infrastructure

Department: Infrastructure **Division:** Road & Bridge

Agenda Category: Regular Agenda Items

Information

Agenda Item

Receive presentation on County Roadway Resurfacing program.

Background

The Roadway resurfacing program was initiated in 2011. A presentation will be provided to update the Court on what has transpired since its inception.

Fiscal Impact

From/To	Acct No.	Description	Amount

Attachments

No file(s) attached.

Form Review

Inbox	Reviewed By	Date
County Judge Exec Asst.	Wendy Coco	04/12/2018 11:25 AM
Form Started By: Daribel Texidor		Started On: 04/12/2018 11:09 AM
Final Approval Date: 04/12/2018		

Commissioners Court - Regular Session **24.**

Meeting Date: 04/17/2018

Road Bond Construction Summary Report

Submitted By: Dawn Haggard, Road Bond

Department: Road Bond

Agenda Category: Regular Agenda Items

Information

Agenda Item

Receive and acknowledge the April 2018 Construction Summary Report for the Road Bond Program.

Background

Fiscal Impact

From/To	Acct No.	Description	Amount

Attachments

April 2018 CSR

Form Review

Inbox	Reviewed By	Date
County Judge Exec Asst.	Wendy Coco	04/12/2018 09:18 AM
Form Started By: Dawn Haggard		Started On: 04/11/2018 03:10 PM
Final Approval Date: 04/12/2018		

ROAD BOND PROGRAM

Construction Summary Report

County Judge
Dan Gattis

Commissioners
Terry Cook
Cynthia Long
Valerie Covey
Larry Madsen

April 2018

WWW.ROADBOND.ORG

Volume XVII - Issue No.04

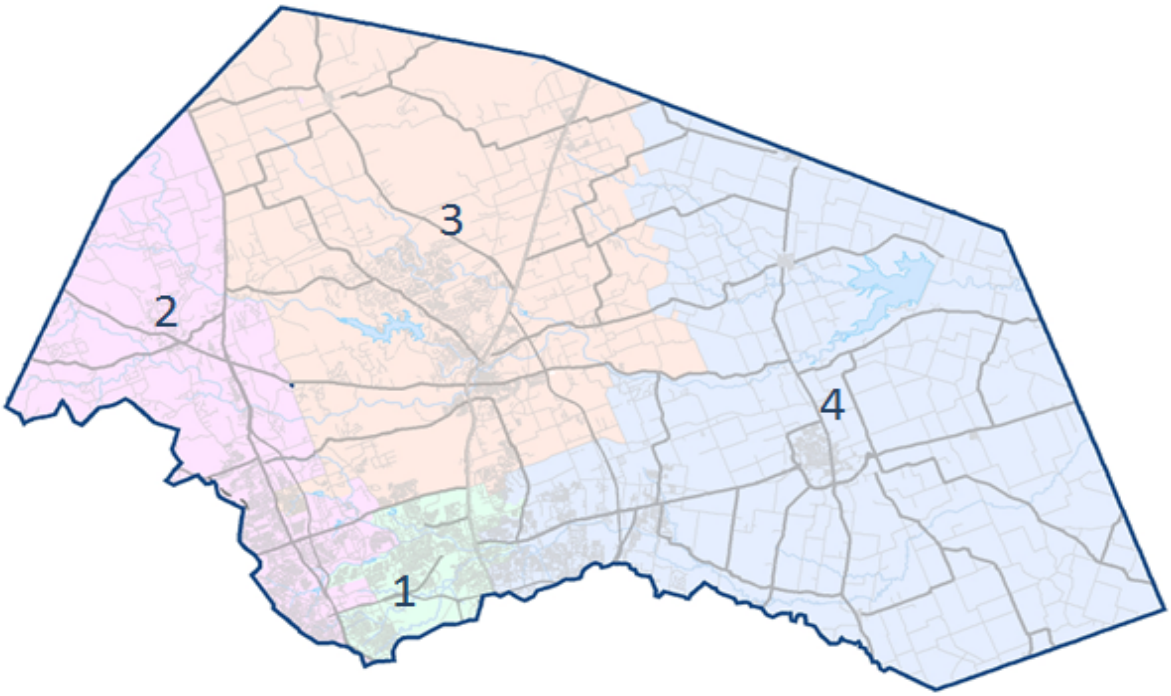

Presented By:

PRIME STRATEGIES, INC.

HNTB

Table of Contents



Completed Projects 1

PRECINCT No. 1 – Commissioner Terry Cook 4

Forest North Drainage Phase 2 6

Pearson Ranch Road (Iveans to SH 45 ROW) 8

RM 620 Phase 2 (Wyoming Springs to Deep Wood) 9

Neenah Avenue Widening (Olive Hill Dr to end of roadway) 11

PRECINCT No. 2 – Commissioner Cynthia Long 13

CR 258 (Sunset Ridge to Ronald Reagan Blvd) 15

PRECINCT No. 3 – Commissioner Valerie Covey 17

Arterial H Ph 1 (Sam Bass Road to existing Arterial H) 19

Southwest Bypass Segment 1 (Southbound IH 35 to .5 miles west) 20

Inner Loop mprovements (WilCo Way to Belmont Dr.) 22

Williamson County Regional Raw Water Line 24

PRECINCT No. 4 – Commissioner Larry Madsen 26

CR 110 South (US 79 to Limmer Loop) 28

CR 119 (Limmer Loop to Chandler Rd) 30

WILLIAMSON COUNTY
ROAD BOND PROGRAM

COMPLETED PROJECTS

CONSTRUCTION SUBSTANTIALLY COMPLETE/OPEN TO TRAFFIC - AS OF MARCH 2018

Precinct 1

- **Pond Springs Road (signal) – Apr 2002**
- **McNeil Road, Phase 1 – Jan 2005**
- **McNeil Road, Phase 2 – Feb 2007**
- **RM 620, Phase 1 – Jan 2009**
- **Pond Springs Road – Sep 2010**
- **County Road 174 at Brushy Creek – Jun 2011**
- **O'Connor Drive Extension – Apr 2012**
- **King of Kings Crossing – Aug 2012**
- **RM 620 Safety Improvements – Dec 2014**
- **Pearson Ranch Road – Oct 2017**
- **Forest North Phase 2 – Oct 2017**

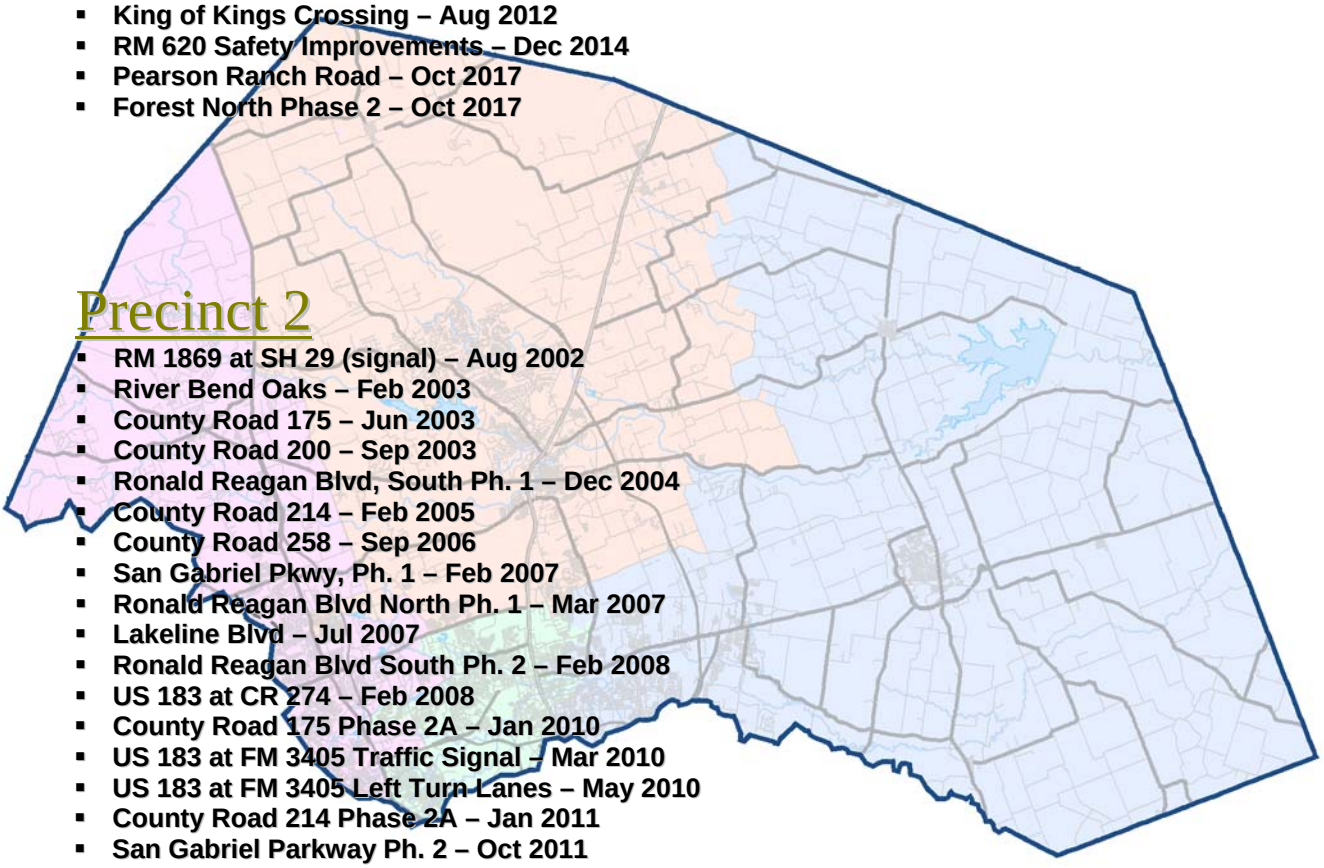

Precinct 2

- **RM 1869 at SH 29 (signal) – Aug 2002**
- **River Bend Oaks – Feb 2003**
- **County Road 175 – Jun 2003**
- **County Road 200 – Sep 2003**
- **Ronald Reagan Blvd, South Ph. 1 – Dec 2004**
- **County Road 214 – Feb 2005**
- **County Road 258 – Sep 2006**
- **San Gabriel Pkwy, Ph. 1 – Feb 2007**
- **Ronald Reagan Blvd North Ph. 1 – Mar 2007**
- **Lakeline Blvd – Jul 2007**
- **Ronald Reagan Blvd South Ph. 2 – Feb 2008**
- **US 183 at CR 274 – Feb 2008**
- **County Road 175 Phase 2A – Jan 2010**
- **US 183 at FM 3405 Traffic Signal – Mar 2010**
- **US 183 at FM 3405 Left Turn Lanes – May 2010**
- **County Road 214 Phase 2A – Jan 2011**
- **San Gabriel Parkway Ph. 2 – Oct 2011**
- **US 183 (PTF) – Apr 2012**
- **SH 29 TWLTL Liberty Hill – Dec 2012**
- **Hero Way – Feb 2013**
- **County Roads 260/266 – Apr 2013**
- **County Road 277 – Jul 2014**
- **Lakeline Blvd at US 183 – Nov 2014**
- **Lakeline Blvd Ph. 2 – Apr 2015**
- **County Road 258 – Jul 2017**
- **Arterial H – Feb 2018**

WILLIAMSON COUNTY
ROAD BOND PROGRAM

COMPLETED PROJECTS

CONSTRUCTION SUBSTANTIALLY COMPLETE/OPEN TO TRAFFIC - AS OF MARCH 2018

Precinct 3

- **Cedar Hollow at SH 29 (signal) – Aug 2002**
- **Georgetown Inner Loop Project 2 – Aug 2003**
- **Georgetown Inner Loop Project 1 – Jun 2004**
- **Georgetown Inner Loop East Extension – Sep 2004**
- **County Road 152 Bridge Replacement – Sep 2004**
- **Inner Loop East (CR 151 to Bus 35) – Oct 2005**
- **Ronald Reagan Blvd North, Ph. 2 – May 2008**
- **12" Water Main Relocation for SH 29 Widening – Jun 2008**
- **SH 29 / CR 104, Ph. 1 – Jul 2008**
- **IH 35 at SH 29 Turnarounds (PTF) – Aug 2008**
- **SE Inner Loop at FM 1460 – Nov 2009**
- **County Road 111 (Westinghouse Road) – Jun 2010**
- **Williams Drive – Apr 2011**
- **County Road 104, Phase 2 – May 2011**
- **RM 2338 (PTF) – Jul 2011**
- **SH 29 at Park Pl and Jack Nicklaus – May 2012**
- **Ronald Reagan Blvd. North Phase 3 – Jun 2013**
- **Ronald Reagan Blvd. North Phase 4 – Mar 2014**
- **Madrid Drive Extension – Sep 2014**
- **CR 245 – Sep 2015**
- **IH 35 Northbound Frontage Road (PTF) – Oct 2015**
- **Ronald Reagan North Phase 4 Fencing – Jan 2016**
- **IH 35 Northbound Frontage Road Driveway (PTF) – Mar 2016**
- **Southwest Bypass Driveways – Aug 2016**
- **RM 2243 at Escalera Right Turn Lane – Aug 2016**
- **SH 29 at Cedar Hollow Right Turn Lane – Aug 2016**
- **Southwest Bypass Access Route – Jul 2017**

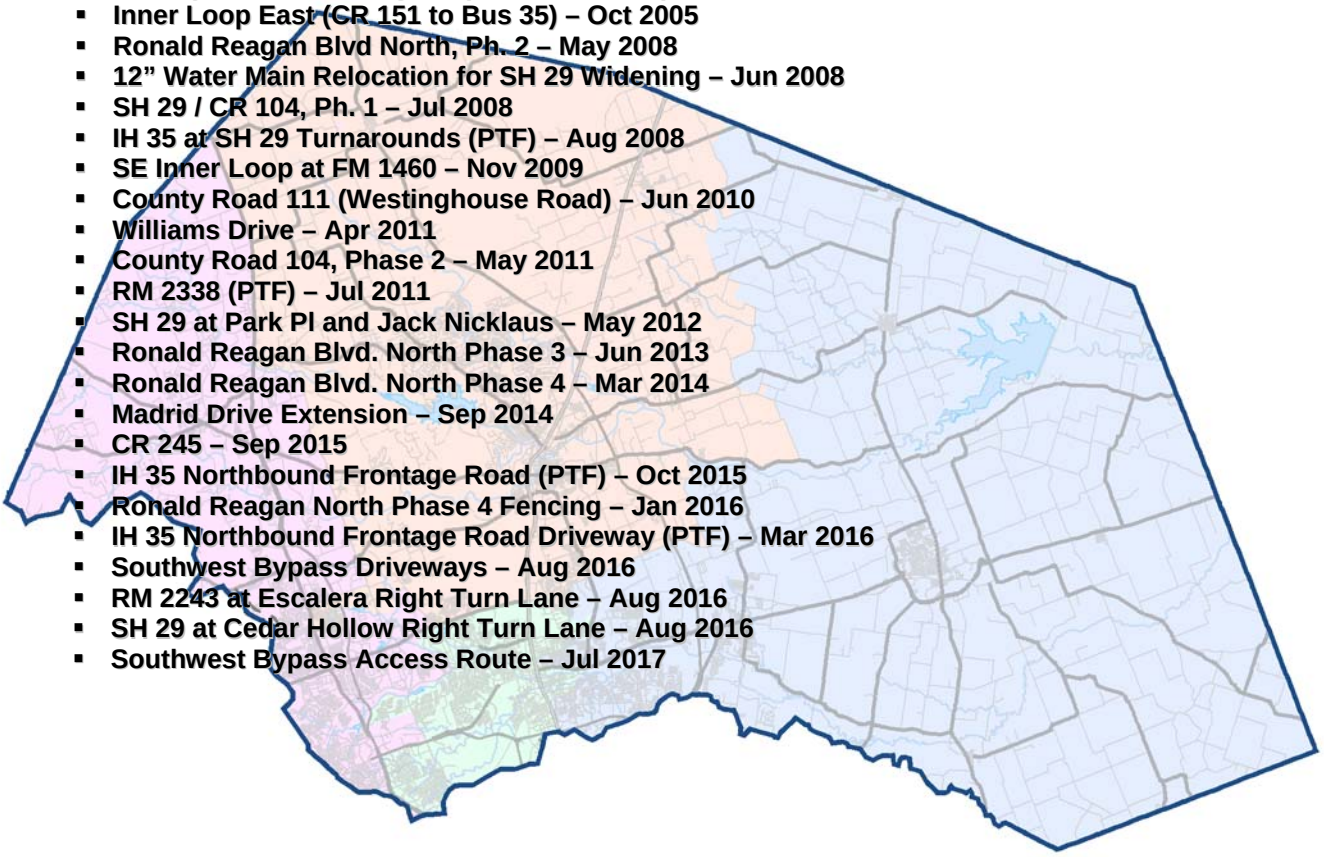

WILLIAMSON COUNTY
ROAD BOND PROGRAM

COMPLETED PROJECTS

CONSTRUCTION SUBSTANTIALLY COMPLETE/OPEN TO TRAFFIC - AS OF MARCH 2018

Precinct 4

- **Bridge Replacements (CR 390, 406 & 427) – Nov 2002**
- **County Road 368 and 369 – Nov 2002**
- **County Road 412 – Aug 2003**
- **County Road 300 and 301 – Dec 2003**
- **County Road 424 Bridge Replacement – Jan 2004**
- **Chandler Rd. Extension, Ph. 1 – Mar 2005**
- **County Road 112, Ph. 1 – Aug 2005**
- **County Road 137 – Oct 2005**
- **Limmer Loop, Ph. 1A – Jul 2006**
- **Chandler Rd, Ph. 2 – Dec 2007**
- **Limmer Loop, Ph. 1B – Mar 2008**
- **Limmer Loop, Ph. 1C – Oct 2008**
- **US 79, Section 5B (PTF) – Aug 2010**
- **Chandler Rd, Ph. 3B – Oct 2010**
- **US 79, Section 5A (PTF) – May 2011**
- **FM1660 at Landfill Rd. – Sep 2011**
- **Second Street Drainage Improvements – Dec 2011**
- **US 79 Section 3 (PTF) – Jul 2012**
- **Chandler Rd, Ph. 3A – Dec 2012**
- **Second Street Roadway Improvements – Feb 2013**
- **County Road 138 – Jun 2013**
- **County Road 108 – Nov 2013**
- **County Road 170 – Feb 2015**
- **Multi Site Traffic Signals – Jun 2016**
- **Bill Pickett Trail (East Williamson County Expo Center Access Road) – Nov 2016**

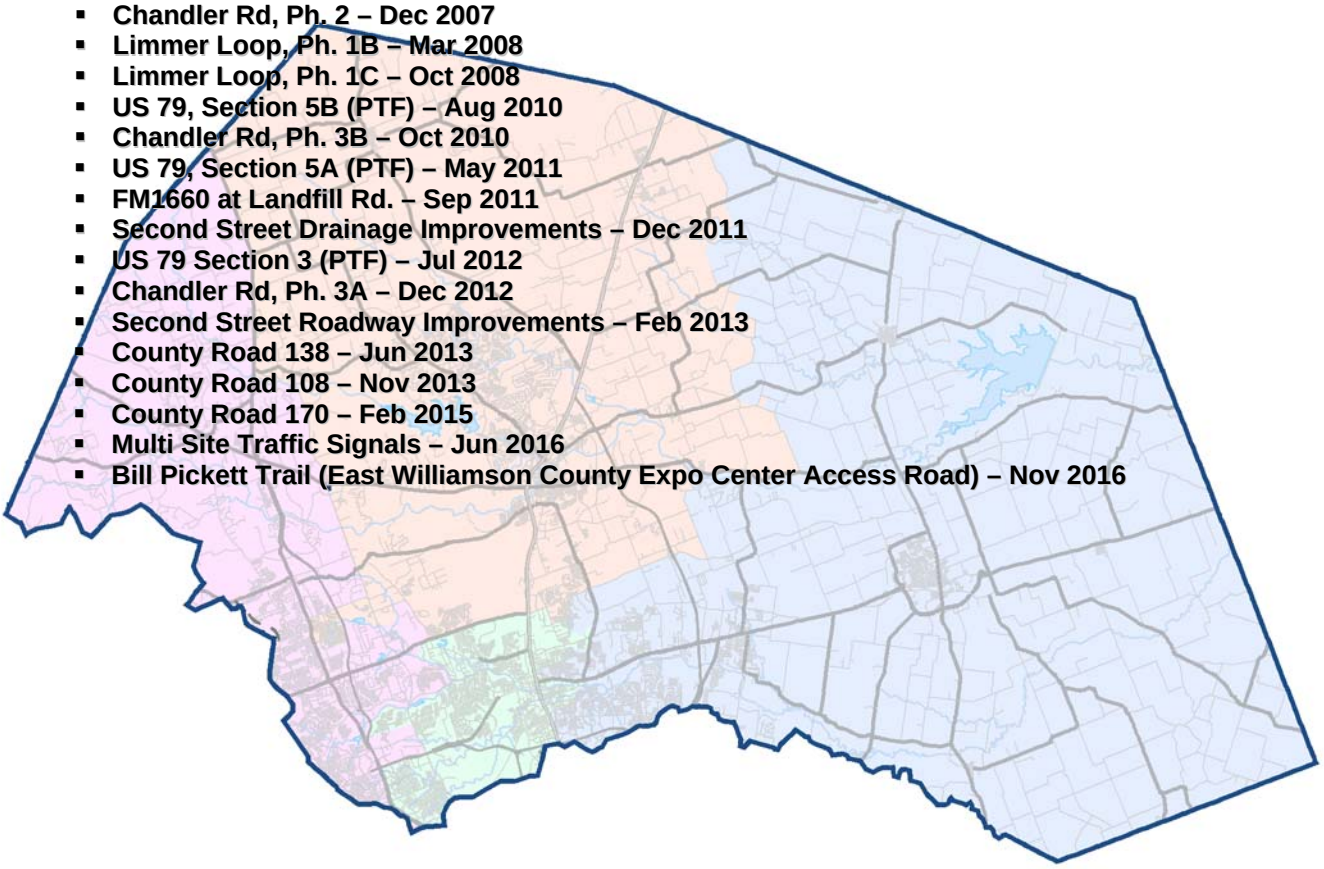

2006 Road Bond Program Projects
Precinct 1 - Commissioner Cook

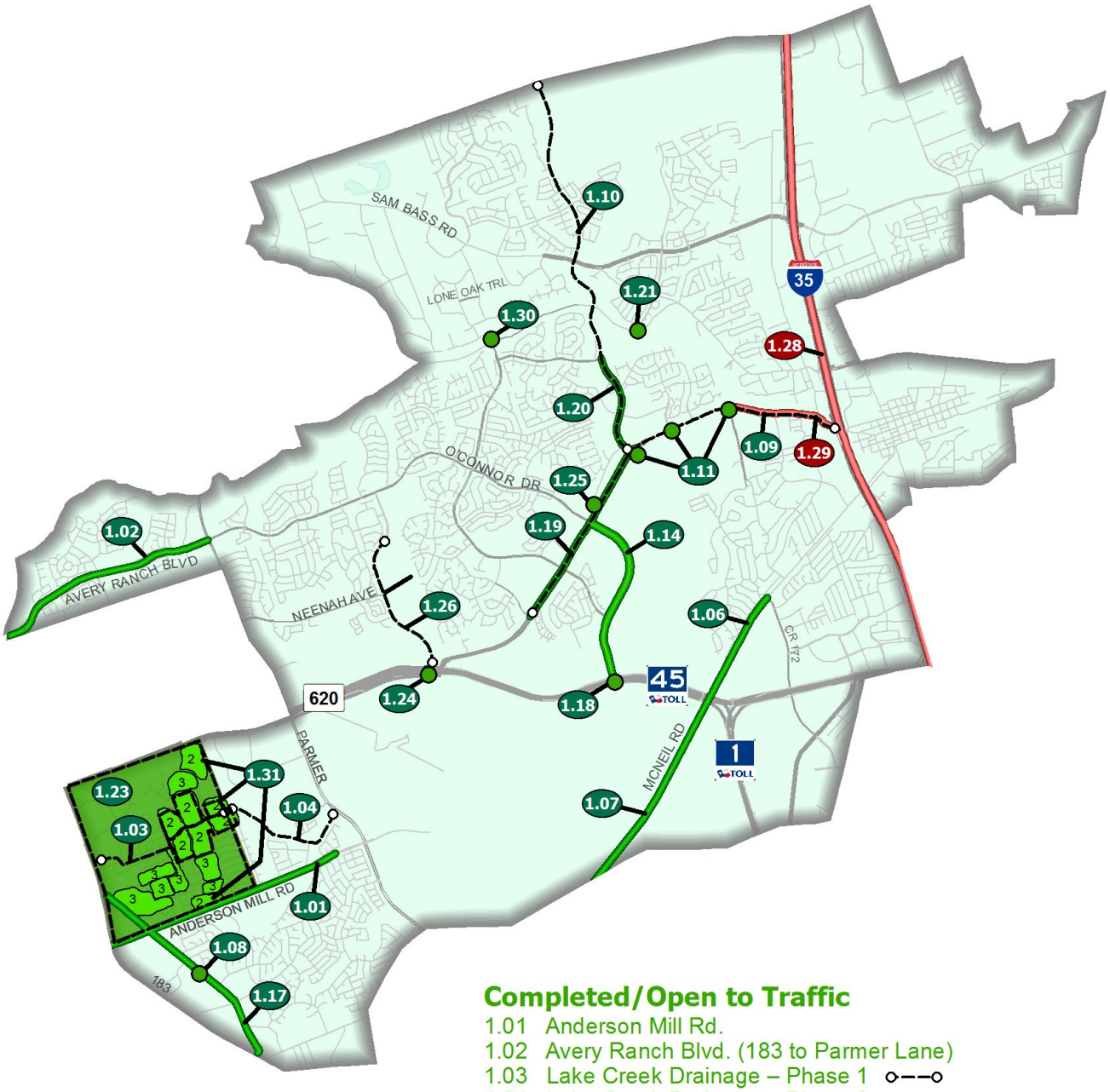

Completed/Open to Traffic

1.01 Anderson Mill Rd.
1.02 Avery Ranch Blvd. (183 to Parmer Lane)
1.03 Lake Creek Drainage – Phase 1
1.04 Lake Creek Drainage – Phase 2
1.06 McNeil Road - Phase 1
1.07 McNeil Road - Phase 2
1.08 Pond Springs at Turtle Rock Signal
1.09 RM 620 Feasibility Study
1.10 Wyoming Springs North Study
1.11 RM 620 Interim Improvements – Phase 1
1.14 O'Connor Extension
1.17 Pond Springs Road
1.18 O'Connor Overpass at SH 45
1.19 RM 620 (Cornerwood Dr. to Wyoming Springs)
1.20 Wyoming Springs (620 to Brightwater Blvd.)
1.21 CR 174 (Hairy Man Rd.) Bridge Rail Rehab
1.23 Forest North Drainage Study - Phase 1
1.25 King of Kings Crossing
1.26 Pearson Ranch Road (Design)
1.24 Pearson Ranch Underpass at SH 45/ RM 620
1.30 Great Oaks at Brushy Creek (design)
1.31 Forest North Drainage Improvements - Phase 2 (design)
1.31 Forest North Drainage Improvements - Phase 3 (design)

In Design

1.28 IH 35 Operational Analysis
1.29 RM 620 (IH 35 to Deep Wood Dr.)

2013 Road Bond Program Projects
Precinct 1 - Commissioner Cook

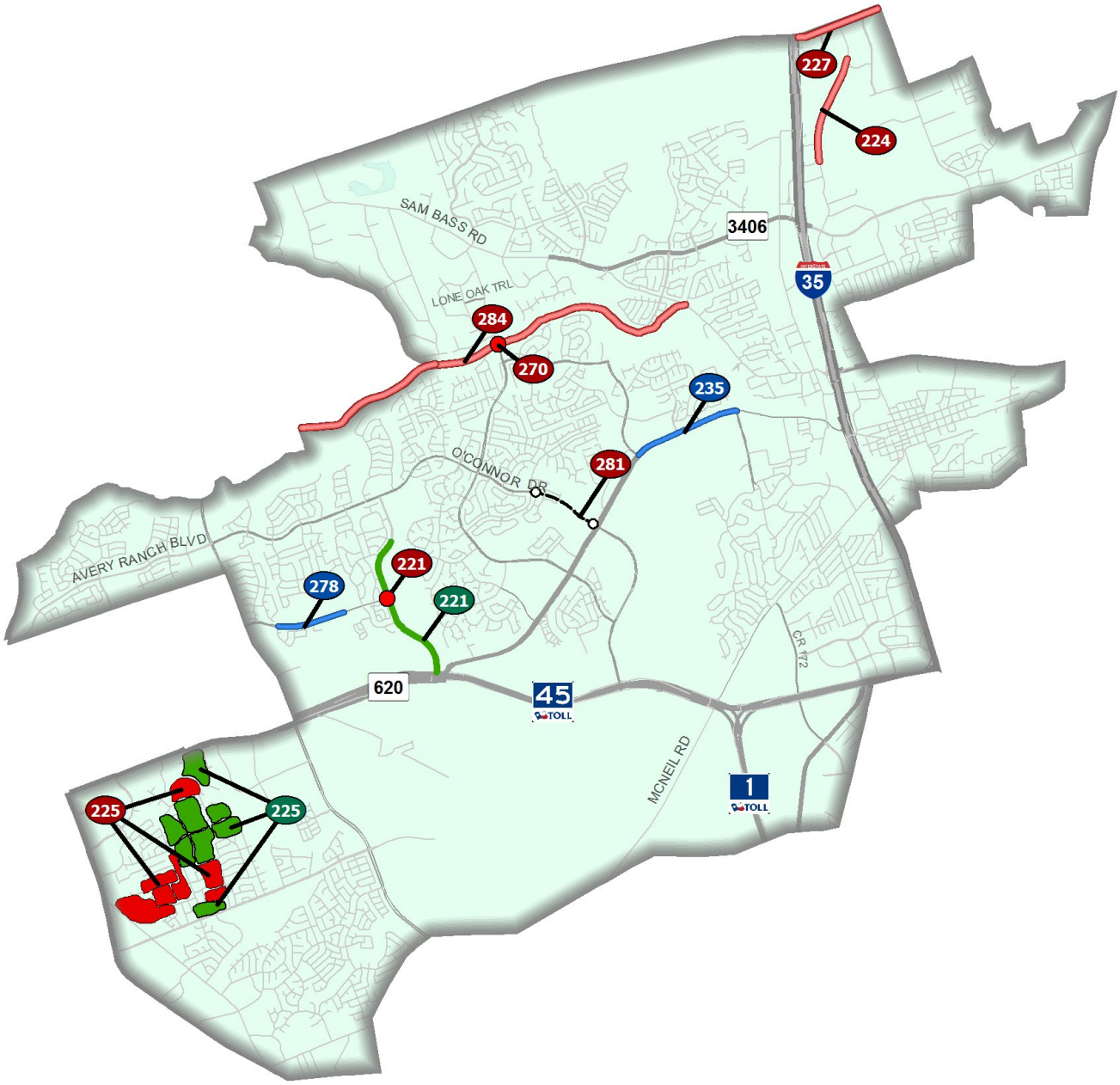

Completed/Open to Traffic

221 Pearson Ranch Road
225 Forest North Drainage Improvements - Phase 2

Under Construction/Bidding

235 RM 620 Phase 2 (Wyoming Springs to Deep Wood Drive)
278 Neenah Avenue Widening (Olive Hill Drive to end)

In Design

221 Pearson Ranch Road (Signal)
224 North Mays Street Extension (La Paloma to Oakmont Dr.)
225 Forest North Drainage Improvements - Phase 3
227 University Blvd Widening (IH 35 to Sunrise Rd.)
270 Great Oaks at Brushy Creek
281 O'Connor Drive North of RM 620 (Traffic Study) ○—○
284 Hairy Man Rd/Brushy Creek Rd Safety Improvements (Arrowhead Trail to Sam Bass Road)

Forest North Drainage Ph 1
Project No. 1604-068

Original Contract Price = $3,556,659.50

Letting	Award	Notice To Proceed	Begin Work	Substantial Completion	Work Accepted		Total Bid Days	Days Added	Total Days
6/9/2016	7/1/2016	8/1/2016	8/11/2016	10/18/2017			600	35	635

Invoice Number	Beginning Date	Ending Date	Days Charged	Current Invoice	Invoice Total	Current Retainage	Total Retainage	% ($) Used	% Time Used
1	8/11/2016	8/31/2016	21	$152,734.50	$152,734.50	$16,970.50	$16,970.50	5	3
2	9/1/2016	9/30/2016	30	$208,685.70	$361,420.20	$23,187.30	$40,157.80	11	8
3	10/1/2016	10/31/2016	31	$266,921.68	$628,341.88	$29,657.96	$69,815.76	19	13
4	11/1/2016	12/2/2016	32	$182,471.22	$810,813.10	$20,274.58	$90,090.34	24	18
5	12/3/2016	12/31/2016	29	$177,314.98	$988,128.08	$19,701.67	$109,792.01	29	23
6	1/1/2017	1/31/2017	31	$231,302.70	$1,219,430.78	$25,700.30	$135,492.31	36	27
7	2/1/2017	2/28/2017	28	$304,664.67	$1,524,095.45	$33,851.63	$169,343.94	45	32
8	3/1/2017	3/31/2017	31	$191,005.20	$1,715,100.65	$21,222.80	$190,566.74	51	37
9	4/1/2017	4/30/2017	30	$172,795.55	$1,887,896.20	$19,199.50	$209,766.24	56	41
10	5/1/2017	5/31/2017	31	$229,295.63	$2,117,191.83	$25,477.30	$235,243.54	63	46
11	6/1/2017	6/30/2017	30	$317,805.27	$2,434,997.10	$35,308.69	$270,552.23	73	51
12	7/1/2017	7/31/2017	31	$387,533.28	$2,822,530.38	$43,062.26	$313,614.49	84	56
13	8/1/2017	8/31/2017	31	$284,111.91	$3,106,642.29	$31,567.98	$345,182.47	93	61
14	9/1/2017	9/30/2017	30	$329,371.39	$3,436,013.68	-$164,339.65	$180,842.82	97	66
15	10/1/2017	10/18/2017	18	$98,274.32	$3,534,288.00	$5,172.34	$186,015.16	100	68
16	11/1/2017	4/10/2018		$189,015.16	$3,723,303.16	-$186,015.16	$0.00	100	68

3/30/2018 Comments - The Certificate of Acceptance is being processed.

Change Order Number	Approved	Cost This CO	Total COs
01	3/21/2017	31,806.00	31,806.00

1A: Design Error or Omission. Incorrect PS&E . This Change Order revises work along Broadmeade Ave., between Sherbrooke St. and Meadowheath Dr in the Sherbrooke zone. The original plans called for a ditch in this location but, due to the depth of the original planned ditch, which created slopes steeper than 3:1, the ditch was replaced with an underground storm sewer system with inlets. 3F: County Convenience. Additional work desired by the County. New pay items have been added to the contract to reimburse the contractor for removal of trees larger than what was called out in the original contract.

Change Order Number	Approved	Cost This CO	Total COs
02	5/23/2017	58,006.83	89,812.83

2G: Differing Site Conditions (unforseeable). Unadjusted utility (unforseeable). This Change Order compensates the Contractor for the removal and relocation of an existing water line that is in conflict with the proposed storm sewer line BB1 at the corner of Broadmeade Avenue and Braeburn Glen. 4B: Third Party Accommodation. Third party requested work. This change order also compensates the Contractor for completed trench repair of the asbestos line that is being removed. A portion of the trench repair quantity has been added to this change order. The remaining quantity will be added to a future change order. The City of Austin has agreed to compensate the Contractor for these costs.

Change Order Number	Approved	Cost This CO	Total COs
03	8/22/2017	91,734.95	181,547.78

3F: County Convenience. Additional work desired by the County. This Change Order revises drainage work in the Braeburn, Stillforest and Wisterwood Zones. The cost of the additional work was paid by overruning existing pay items where possible or for work not covered by an existing pay item, the cost of the work was tracked by force account (time and materials).

Change Order Number	Approved	Cost This CO	Total COs
04	8/22/2017	59,124.65	240,672.43

3F: County Convenience. Additional work desired by the County. This Change Order revises drainage work at the corner of Broadmeade and Sherbrooke Street in the Sherbrooke Zone. After review, the County requested that the open ditch design be changed to an underground pipe system due the the depth of the ditches.

Change Order Number	Approved	Cost This CO	Total COs
05	9/26/2017	65,103.79	305,776.22

3F: County Convenience. Additional work desired by the County. This Change Order revises drainage work in the Braeburn, Stillforest and Wisterwood Zones. The cost of the additional work was paid by overruning existing pay items where possible or for work not covered by an existing pay item, the cost of the work was tracked by force account (time and materials).

Change Order Number	Approved	Cost This CO	Total COs
06	9/26/2017	29,148.01	334,924.23

3F: County Convenience. Additional work desired by the County. This Change Order revises drainage work at the corner of Broadmeade and Sherbrooke Street in the Sherbrooke Zone. After review, the County requested that the open ditch design be changed to an underground pipe system due the the depth of the ditches.

Change Order Number	Approved	Cost This CO	Total COs
07	1/16/2018	-55,044.67	279,879.56

2E: Differing Site Conditions (unforeseeable). Miscellaneous difference in site conditions (unforeseeable) (Item 9). This Change Order provides the final balancing for the overrun/underrun of Contract quantities for the portion of the items paid for by Williamson County. Changes to final quantities on the project were the result of addressing field conditions not accounted for in the original plans.

Change Order Number	Approved	Cost This CO	Total COs
08	1/16/2018	-108,905.22	170,974.34

2E: Differing Site Conditions (unforeseeable). Miscellaneous difference in site conditions (unforeseeable) (Item 9). This Change Order provides the final balancing for the overrun/underrun of Contract quantities for the items paid for by the City of Austin. Changes to the final quantities on the project were the result of addressing field conditions not accounted for in the original plans. All final pay quantities were reviewed and approved by the City of Austin.

Adjusted Price = $3,727,633.84

Pearson Ranch Road (Iveans Way to RM 620)
Project No. 1607-102

Original Contract Price = $4,516,178.77

Letting	Award	Notice To Proceed	Begin Work	Substantial Completion	Work Accepted		Total Bid Days	Days Added	Total Days
9/20/2016	10/11/2016	11/18/2016	11/28/2016	10/13/2017			330	0	330

Invoice Number	Beginning Date	Ending Date	Days Charged	Current Invoice	Invoice Total	Current Retainage	Total Retainage	% ($) Used	% Time Used
1	11/28/2016	11/30/2016	3	$195,710.04	$195,710.04	$21,745.56	$21,745.56	5	1
2	12/1/2016	12/31/2016	31	$243,555.13	$439,265.17	$27,061.68	$48,807.24	11	10
3	1/1/2017	1/31/2017	31	$202,139.71	$641,404.88	$22,459.97	$71,267.21	16	20
4	2/1/2017	2/28/2017	28	$508,271.85	$1,149,676.73	$56,474.65	$127,741.86	28	28
5	3/1/2017	3/31/2017	31	$369,038.84	$1,518,715.57	$41,004.32	$168,746.18	37	38
6	4/1/2017	4/30/2017	30	$330,336.72	$1,849,052.29	$36,704.08	$205,450.26	45	47
7	5/1/2017	5/31/2017	31	$492,086.42	$2,341,138.71	-$82,232.43	$123,217.83	54	56
8	6/1/2017	6/30/2017	30	$372,704.74	$2,713,843.45	$19,616.04	$142,833.87	62	65
9	7/1/2017	7/31/2017	31	$813,710.22	$3,527,553.67	$42,826.85	$185,660.72	81	75
10	8/1/2017	8/31/2017	31	$188,607.77	$3,716,161.44	$9,926.71	$195,587.43	85	84
11	9/1/2017	9/30/2017	30	$125,552.68	$3,841,714.12	$6,608.03	$202,195.46	88	93
12	10/1/2017	10/31/2017	14	$169,295.90	$4,011,010.02	$8,910.31	$211,105.77	92	97
13	11/1/2017	11/30/2017	0	$27,717.20	$4,038,727.22	$1,458.80	$212,564.57	93	97
14	12/1/2017	2/28/2017	0	$439,298.15	$4,478,025.37	-$121,176.30	$91,388.27	100	97

3/30/2018 Comments - The Certificate of Acceptance is being processed.

Change Order Number	Approved	Cost This CO	Total COs
01	5/16/2017	-92,621.70	-92,621.70

4B: Third Party Accommendation. Third party requested work (reduction in scope). This Change Order revises the City of Austin (COA) water and wastewater (W&WW) work shown in the original plans. The COA requested that the installation of the 8" and 24" pipe and related items be deleted from the contract. The COA funded the water and wastewater work shown in the plans and will get the credit for the reduction in cost to the contract.

Change Order Number	Approved	Cost This CO	Total COs
02	6/13/2017	11,553.00	-81,068.70

2C: Differing Site Conditions (unforeseeable). New development (conditions changing after PS&E completed). This Change Order revises the pay items for the intersection tie-in work at Neenah Avenue and Pearson Ranch Road. The tie-in location was adjusted 25' to provide a smooth profile through the intersection. This change extends the limits of Neenah reconstruction west of Pearson Ranch Road.

Change Order Number	Approved	Cost This CO	Total COs
03	10/3/2017	921.34	-80,147.36

3H: County Convenience. Cost savings opportunity discovered during construction. This Change Order revises the method of pavement marking elimination that results in a cost savings to the project. 1A: Design Error or Omission. Incorrect PS&E. Changes to plan quantities are documented for various pay items.

Change Order Number	Approved	Cost This CO	Total COs
04	2/27/2018	154,700.48	74,553.12

2E: Differing Site Conditions (unforeseeable). Miscellaneous difference in site conditions (unforeseeable). This Change Order provides the final balancing for the overrun/underrun of Contract quantities. Changes to final quantities on the project were the result of addressing field conditions not accounted for in the original plans, including additional boring due to unknown utility conflict. 1A. Design Error or Omission. Incorrect PS&E. This Change Order corrects multiple discrepancies in quantities between the plans and Quantity Summaries. 3F County Convenience. Additional work desired by the County. This Change Order pays for a road to the water quality pond for maintenance access, removal of existing bollards within the ROW, additional signs and object markers

Change Order Number	Approved	Cost This CO	Total COs
05	2/27/2018	-2,831.05	71,722.07

Insert Reason 2E: Differing Site Conditions (unforeseeable). Miscellaneous difference in site conditions (unforeseeable). This Change Order provides the final balancing for the overrun/underrun of Contract quantities.

Adjusted Price = $4,587,900.84



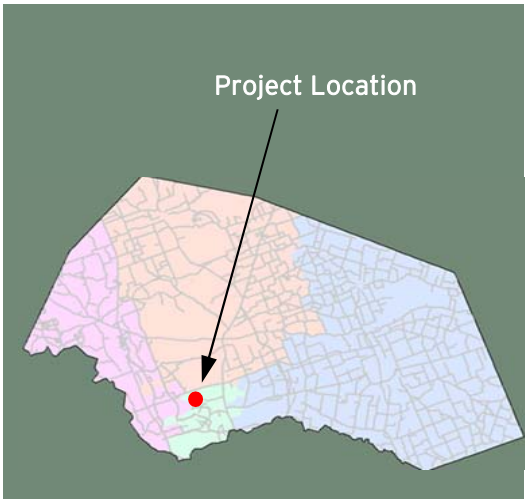

RM 620 Phase 2
(Wyoming Springs to Deep Wood Drive)

Project Length: .9 Miles
Roadway Classification: Urban Principal Arterial

Project Schedule: January 2017-June 2018
Estimated Construction Cost: $6.1 Million



MARCH 2018 IN REVIEW

3/02/2018: Subcontractor Greater Austin formed and placed the pedestrian ramp east of the Hospital Entrance. Subcontractor Austin Materials placed asphalt at the turn lanes and on Oaklands, Oakwoods and the Hospital Entrance. Subcontractor Flasher striped westbound RM 620 and switched westbound traffic from Deep Wood to west of Wyoming Springs.

3/09/2018: An 18" reinforced concrete pipe was installed in the median west of Deep Wood. A median inlet west of the Hospital Entrance was installed.

3/16/2018: Curb and gutter were removed from the median at the west end of project. Subcontractor ESSI placed 18" riprap between box culverts near Driveway 8. Subcontractor Austin Material milled asphalt pavement from west of Deep Wood to the Hospital Entrance in the median of the roadway.

3/23/2018: Subgrade was placed, graded and compacted from Driveway 10 to Oaklands. Subcontractor Austin Traffic Signal placed traffic signal wiring at Oaklands and the Hospital Entrance.

3/30/2018: Flexible base was placed on the eastbound lanes between Oaklands and Oakwood.



Design Engineer: Halff Associates
Contractor: Cox Commercial Construction
Construction Observation: Clayton Weber, HNTB

Williamson County Road Bond Program

HNTB

PRIME STRATEGIES, INC.

RM 620 Safety Improvements (Wyoming Springs to Deep Wood)
Project No. 1608-108

Original Contract Price = $6,082,225.70

Letting	Award	Notice To Proceed	Begin Work	Substantially Complete	Work Accepted		Total Bid Days	Days Added	Total Days
9/28/2016	11/30/2016	1/3/2017	1/13/2017				425	0	425

Invoice Number	Beginning Date	Ending Date	Days Charged	Current Invoice	Invoice Total	% ($) Used	% Time Used
1	1/13/2017	1/31/2017	19	$459,169.50	$459,169.50	7	4
2	2/1/2017	2/28/2017	28	$280,194.00	$739,363.50	12	11
3	3/1/2017	3/31/2017	31	$389,047.00	$1,128,410.50	18	18
4	4/1/2017	4/30/2017	30	$516,962.84	$1,645,373.34	27	25
5	5/1/2017	5/31/2017	31	$285,725.66	$1,931,099.00	31	33
6	6/1/2017	6/30/2017	30	$313,267.57	$2,244,366.57	37	40
7	7/1/2017	7/31/2017	31	$274,834.20	$2,519,200.77	41	47
8	8/1/2017	8/31/2017	31	$285,281.13	$2,804,481.90	46	54
9	9/1/2017	9/30/2017	30	$368,485.34	$3,172,967.24	52	61
10	10/1/2017	10/31/2017	31	$299,932.60	$3,472,899.84	57	69
11	11/1/2017	11/30/2017	30	$234,228.72	$3,707,128.56	60	76
12	12/1/2017	12/31/2017	31	$154,371.19	$3,861,499.75	63	83
13	1/1/2018	1/31/2018	31	$349,918.70	$4,211,418.45	69	90
14	2/1/2018	2/28/2018	28	$331,786.31	$4,543,204.76	74	97
15	3/1/2018	3/31/2018	31	$171,318.93	$4,714,523.69	77	104

Change Order Number	Approved	Cost This CO	Total COs
01	10/3/2017	7,495.80	7,495.80

2E: Differing Site Conditions (unforeseeable). Miscellaneous difference in site conditions (unforeseeable). This change order adds revisions to the drainage system along Oaklands Drive, and the west end connection to the existing box culvert. 3H: County Convenience. Cost savings opportunity discovered during construction. This Change Order changed the full depth reconstruction on the east end of the project to level up with hot mix on the existing pavement which eliminated traffic control phases that results in a cost savings for the County.

Change Order Number	Approved	Cost This CO	Total COs
02	1/30/2018	49,456.20	56,952.00

2E: Differing Site Conditions (unforeseeable). Miscellaneous difference in site conditions (unforeseeable). This Change Order revises the drainage inlets along Oaklands Drive. 3E: County Convenience. Reduction of future maintenance. This Change Order revises the signal conduits and controller cabinet at Oaklands Drive and RM 620.

Adjusted Price = $6,139,177.70



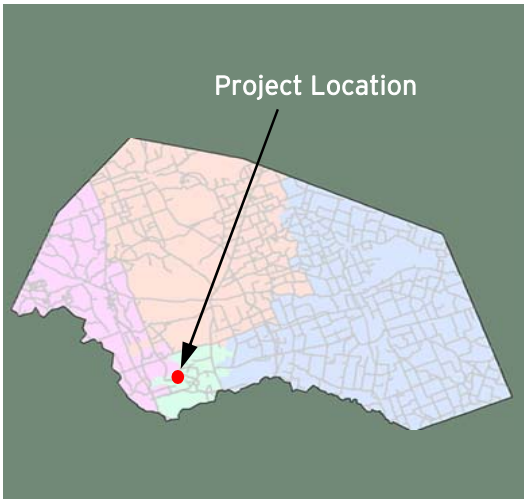

Neenah Avenue Widening
(Olive Drive to the end of the road)

Project Length: .56 miles
Roadway Classification: Minor Arterial

Project Schedule: February 2018 - December 2018
Estimated Construction Cost: $2.5 Million





MARCH 2018 IN REVIEW

3/02/2018: Smith Contracting continued embanking material for the culvert widening and began excavating for the proposed Shared Use Path (SUP) between Altona Way and Solera Drive. Excavation began for the pond improvements.

3/09/2018: Embankment for the culvert extension and for the pond improvements continued. The concrete floor for the 5'x4' culvert extension was poured. Pot-holing continued to verify existing COA utilities for proposed adjustments.

3/16/2018: Excavation continued for the retaining wall footing east of Solera Drive. Concrete was poured for the 5'x4' box culvert walls. New connections were made to the existing pipe for the church irrigation line.

3/23/2018: Embankment was completed for the SUP and flexible base was placed. Concrete was formed and steel tied for the deck for the 5'x4' box extension. Excavation began for 36" RCP placement for Line D.

3/30/2018: The SUP between Altona Way and Pond 2 began to be formed. Excavation continued for the 36" RCP placement for Line D.

Design Engineer: Stantec Consulting
Contractor: Smith Contracting
Construction Observation:
Ryan River, HNTB

Williamson County
Road Bond Program

HNTB

PRIME STRATEGIES, INC.

Neenah Avenue Widening (Olive Drive to end of road)
Project No. 1710-194

Original Contract Price = $2,529,398.54

Letting	Award	Notice To Proceed	Begin Work	Substantial Completion	Work Accepted		Total Bid Days	Days Added	Total Days
10/17/2017	12/6/2017	1/26/2018	2/5/2018				350	0	350

Invoice Number	Beginning Date	Ending Date	Days Charged	Current Invoice	Invoice Total	Current Retainage	Total Retainage	% ($) Used	% Time Used
1	2/5/2018	2/28/2018	24	$125,365.50	$125,365.50	$13,929.50	$13,929.50	5.5	7
2	3/1/2018	3/31/2018	31	$150,775.20	$276,140.70	$16,752.80	$30,682.30	12.1	16

Adjusted Price = $2,529,446.54

2006 Road Bond Program Projects
Precinct 2 - Commissioner Long

Completed/Open to Traffic

2.01 Vista Ridge Blvd.
2.03 Brushy Creek Road
2.05 Cypress Creek Road
2.06 Lakeline Blvd. (Crystal Falls Pkwy to New Hope Dr)
2.07 River Bend Oaks Subdivision
2.08 Ronald W. Reagan South – Phase 1
2.09 Ronald W. Reagan North – Phase 1
2.10 CR 175 (RM 1431 to Regional Park)
2.11 CR 185
2.12 CR 200 (CR 201 to Lackey Creek)
2.13 CR 214 (SH 29 to Rolling Hills Dr.)
2.14 CR 258 (US 183 to Sunset Ridge)
2.15 RM 1869 at SH 29
2.16 Lakeline Blvd. (Lyndhurst to Parmer)
2.17 San Gabriel Parkway – Phase 1
2.18 US 183 Widening at CR 274
2.19 Ronald W. Reagan South – Phase 2
2.20 Kauffman Loop
2.21 CR 175 Extension – Phase 2A
2.22 CR 179
2.23 San Gabriel Parkway – Phase 2
2.24 CR 214 – Phase 2A
2.25 CR 214 – Phase 2B Schematic
2.26 SH 29 Improvements Study & Schematic
2.27 US 183 (PTF)
2.28 CR 272
2.31 Brushy Creek Road
2.32 RM 1431
2.34 Hero Way
2.35 US 183 at FM 3405 Traffic Signal
2.36 US 183 at FM 3405 Left Turn Lane
2.37 SH 29 TWLTL in Liberty Hill
2.38 CR 260 / CR 266 at SH 29
2.40 Lakeline Blvd. Phase 2 (Old Quarry Rd. to Old 2243)
2.41 Seward Junction Improvements Study
2.42 San Gabriel Parkway West
2.44 US 183 at RM 1869
2.45 Lakeline Blvd. at US 183
2.46 CR 258 (Sunset Ridge to Reagan Blvd) (Design)
2.47 Lakeline Blvd. Phase 3 (Crystal Falls Pkwy. to Old Quarry Rd.)
2.48 Seward Junction Schematic (SE and SW)
2.50 Bagdad Rd. North Phase 2 Schematic (CR 280 to SH 29)
2.52 RM 1431 at Parmer/ Reagan CFI
2.53 Cypress Creek Road at US 183
2.54 CR 272 Overlay
2.55 Brushy Creek East Overlay
2.56 Cypress Creek Road at Lakeline
2.57 Brushy Creek Road at Parmer Lane

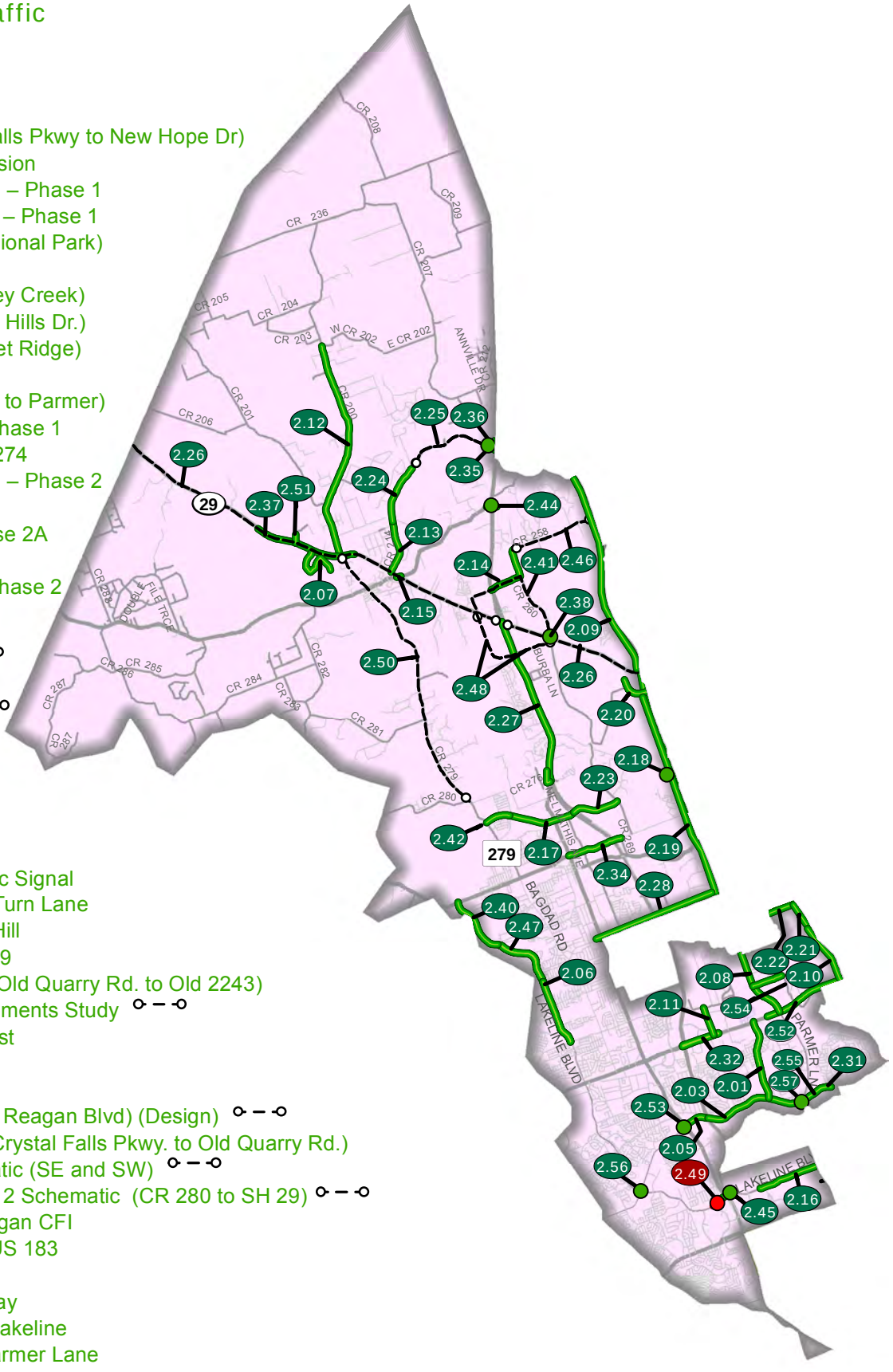

In Design

2.49 Lakeline Blvd. Right Turn Lanes

2013 Road Bond Program Projects
Precinct 2 - Commissioner Long

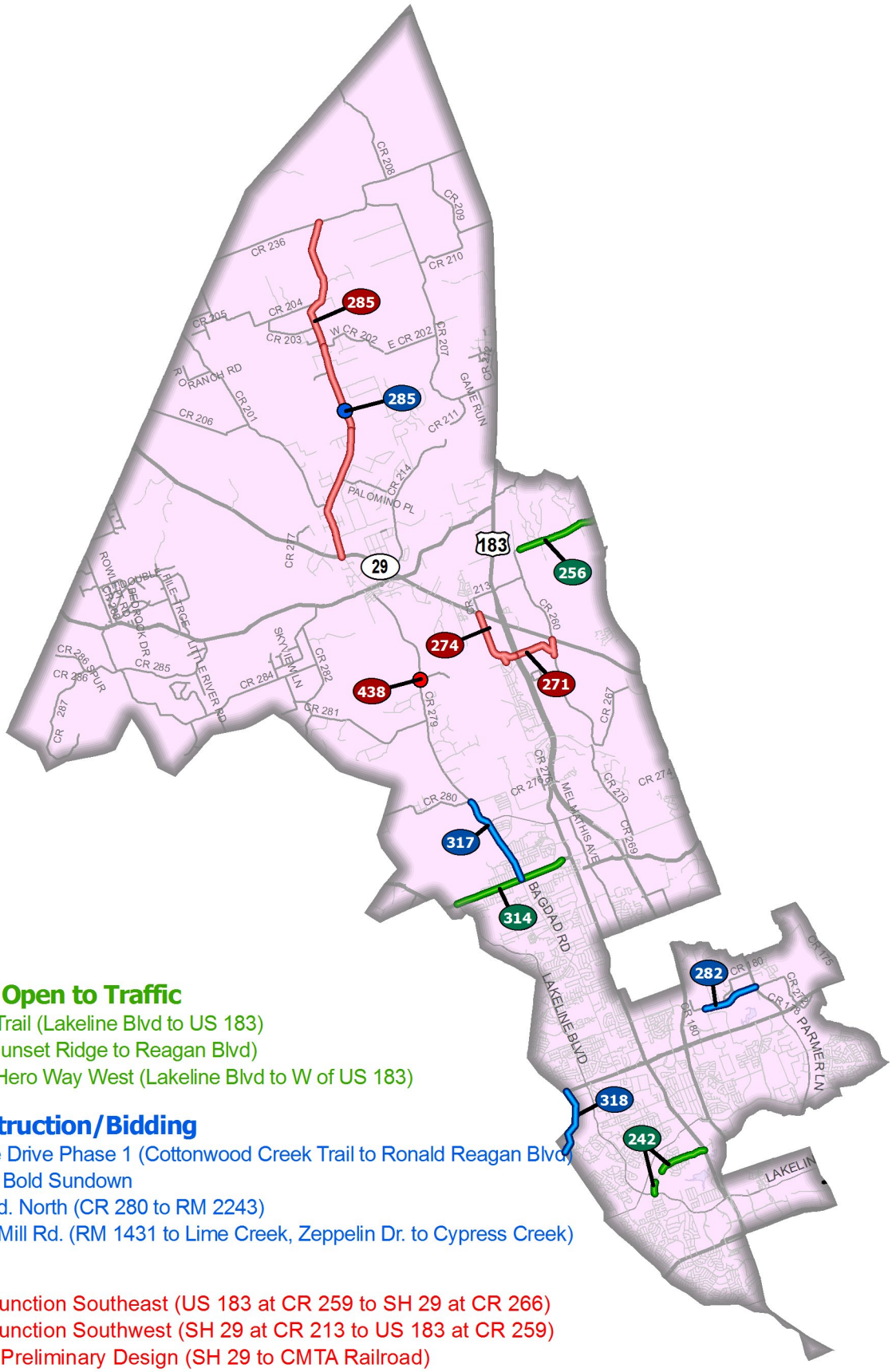

Completed/Open to Traffic

242 Little Elm Trail (Lakeline Blvd to US 183)
256 CR 258 (Sunset Ridge to Reagan Blvd)
314 Old 2243/Hero Way West (Lakeline Blvd to W of US 183)

Under Construction/Bidding

282 New Hope Drive Phase 1 (Cottonwood Creek Trail to Ronald Reagan Blvd)
285 CR 200 at Bold Sundown
317 Bagdad Rd. North (CR 280 to RM 2243)
318 Anderson Mill Rd. (RM 1431 to Lime Creek, Zeppelin Dr. to Cypress Creek)

In Design

271 Seward Junction Southeast (US 183 at CR 259 to SH 29 at CR 266)
274 Seward Junction Southwest (SH 29 at CR 213 to US 183 at CR 259)
285 CR 200 - Preliminary Design (SH 29 to CMTA Railroad)
285 CR 200 - Preliminary Design (CMTA Railroad to Stagecoach)
438 Bagdad Road at CR 278

CR 258 (Sunset Ridge to Ronald Reagan)
Project No. 1603-062 Original Contract Price = $5,808,856.58

Letting	Award	Notice To Proceed	Begin Work	Substantial Completion	Work Accepted		Total Bid Days	Days Added	Total Days
4/20/2016	5/10/2016	7/29/2016	8/8/2016	7/25/2017			360	4	364

Invoice Number	Beginning Date	Ending Date	Days Charged	Current Invoice	Invoice Total	Current Retainage	Total Retainage	% ($) Used	% Time Used
1	7/1/2016	7/31/2016	0	$204,692.63	$204,692.63	$22,743.63	$22,743.63	4	0
2	8/8/2016	8/31/2016	24	$647,625.15	$852,317.78	$71,958.35	$94,701.98	16	7
3	9/1/2016	9/30/2016	30	$768,046.95	$1,620,364.73	$85,338.55	$180,040.53	31	15
4	10/1/2016	10/31/2016	31	$523,476.94	$2,143,841.67	$58,164.10	$238,204.63	41	23
5	11/1/2016	11/30/2016	30	$98,689.54	$2,242,531.21	$10,965.50	$249,170.13	42	32
6	12/1/2016	12/31/2016	31	$38,127.37	$2,280,658.58	$4,236.38	$253,406.51	43	40
7	1/1/2017	1/31/2017	31	$636,301.80	$2,916,960.38	$70,700.20	$324,106.71	55	49
8	2/1/2017	2/28/2017	28	$395,763.89	$3,312,724.27	$43,973.76	$368,080.47	63	56
9	3/1/2017	3/31/2017	31	$456,281.18	$3,769,005.45	$50,697.91	$418,778.38	71	65
10	4/1/2017	4/30/2017	30	$317,257.62	$4,086,263.07	$35,250.85	$454,029.23	77	73
11	5/1/2017	5/31/2017	31	$325,276.60	$4,411,539.67	$36,141.84	$490,171.07	84	82
12	6/1/2017	6/30/2017	30	$382,942.21	$4,794,481.88	$42,549.14	$532,720.21	91	90
13	7/1/2017	7/25/2017	25	$732,546.03	$5,527,027.91	-$241,824.00	$290,896.21	99	97
14	7/26/2017	8/31/2017	0	$153,724.56	$5,680,752.47	-$174,962.49	$115,933.72	99	97
15	9/1/2017	9/30/2017	0	$1,997.73	$5,682,750.20	$40.77	$115,974.49	99	97
16	10/1/2017	10/31/2017	0	$33,430.15	$5,716,180.35	$682.25	$116,656.74	99	97
17	11/1/2017	11/30/2017	0	$1,011.36	$5,717,191.71	$20.64	$116,677.38	99	97
18	12/1/2017	12/31/2017	0	$493.92	$5,717,685.63	$9.93	$116,687.31	99	97
19	1/1/2018	1/31/2018	0	$31,113.85	$5,748,799.48	$634.98	$117,322.29	100	97

3/30/2018 Comments - The Contractor is working on Close-Out Documents.

Change Order Number	Approved	Cost This CO	Total COs
01	10/4/2016	9,660.00	9,660.00

4B: Third Party Accommodation. Third Party Requested Work. This Change Order adds an encasement pipe crossing for a future waterline under CR 258 at Station 160+50. The installation of the additional encasement pipe was requested by the Property owner for future water service. The additional cost of the encasement pipe will be deducted from the Right of Way acquisition agreement with the property owner.

Change Order Number	Approved	Cost This CO	Total COs
02	1/31/2017	33,848.00	43,508.00

3B: County Convenience. Public relations improvement. 3F: County Convenience. Additional work desired by the County. This Change Order changes the hot mix pavement section on CR 258 from one 3" lift of Type C HMAC PG 70-22 to one 2" lift of Type C HMAC PG 64-22 and one 1.5" lift of Type D HMAC PG 64-22 and deletes the one course surface treatment on Ronald Reagan.

Change Order Number	Approved	Cost This CO	Total COs
03	2/28/2017	38,765.00	82,273.00

2C: Differing Site Conditions (Unforseeable). New development (conditions changing after PS&E completed). 4B: Third Party Accommodation. Third part requested work. This change order reflects multiple driveway changes including, extending a driveway culvert to accommodate a new driveway location, relocating a proposed driveway, extending a driveway culvert to save a heritage oak tree, adding a driveway to the project and shortening the guardrail at a proposed driveway location.

Change Order Number	Approved	Cost This CO	Total COs
04	3/21/2017	14,907.69	97,180.69

6C: Untimely ROW/Utilities Utilities Not Clear: This Change Order compensates the Contractor for additional costs to locate and avoid impacts to the AT&T line and to ensure uninterrupted service to adjacent properties. Utilities AT&T and PEC were scheduled to be clear by August 31, 2016, but were not clear until February 2017. The Contractor worked to avoid impacts to the existing AT&T line during the installation of the new City of Georgetown water line.

Change Order Number	Approved	Cost This CO	Total COs
05	3/21/2017	51,199.00	148,379.69

2J: Differing Site Conditions. (unforeseeable) Other. This change order revises various erosion control measures on the project, including the addition of soil retention blanket to the contract to prevent erosion and help to establish vegetation quicker on the slopes and in the ditches. 3H: County Convenience. Cost savings opportunity discovered during construction. This change order replaces the 12" Gabion mattresses with Flexamat. The use of this product was approved by the County Road and Bridge Department. The 3' x 3' gabions were deleted due to changes at the downstream end of Culvert #2.

Change Order Number	Approved	Cost This CO	Total COs
06	5/16/2017	23,780.00	172,159.69

1A: Design Error or Omission. Incorrect PS&E. This Change Order documents the quantity/cost overrun to existing bid Item 508 Constructing Detours. 2C: Differing Site Conditions. New development (conditions changing after PS&E). This change order also includes the deletion of existing bid items; Item 403 Temporary Shoring, Item 552 Wire Fencing and Gate because these items will not be used on the project and a reduction in quantity for Item 512 Port Concrete Traffic Barrier, Ty 1 and 2.

Change Order Number	Approved	Cost This CO	Total COs
07	6/6/2017	48,426.44	220,586.13

2F: Differing Site Conditions (unforeseeable). Site conditions altered by an act of nature. Ground water was encountered at the east end of the project while excavating to subgrade on the proposed eastbound half of the project. After several days of pumping, cutting trenches, excavating, and reworking subgrade to try and dry it out a French drain was installed to relieve the ground water that was causing the issues with the subgrade.

Change Order Number	Approved	Cost This CO	Total COs
08	11/7/2017	47,221.90	267,808.03

2E: Miscellaneous difference in site conditions (unforeseeable)(Item 9). This Change Order documents payment to the Contractor for various items of additional work that include adding pipe at a driveway. 2F: Differing Site Conditions. Site conditions altered by an act of nature. Repair of storm damage on the project. 6C: Untimely ROW/Utilities. Utilities not clear. Added monthly barricades. 3F: County Convenience. Additional work desired by the County. Removal of a sign on the right of way.

Change Order Number	Approved	Cost This CO	Total COs
09	3/20/2018	-211,017.73	56,790.30

2E: Differing Site Conditions (unforeseeable). Miscellaneous difference in site conditions (Item 9). This Change Order provides the final balancing for the overrun/underrun of Contract quantities on the project as a result of addressing field conditions not accounted for in the original plans.

Adjusted Price = $5,865,646.88

2006 Road Bond Program Projects
Precinct 3 - Commissioner Covey

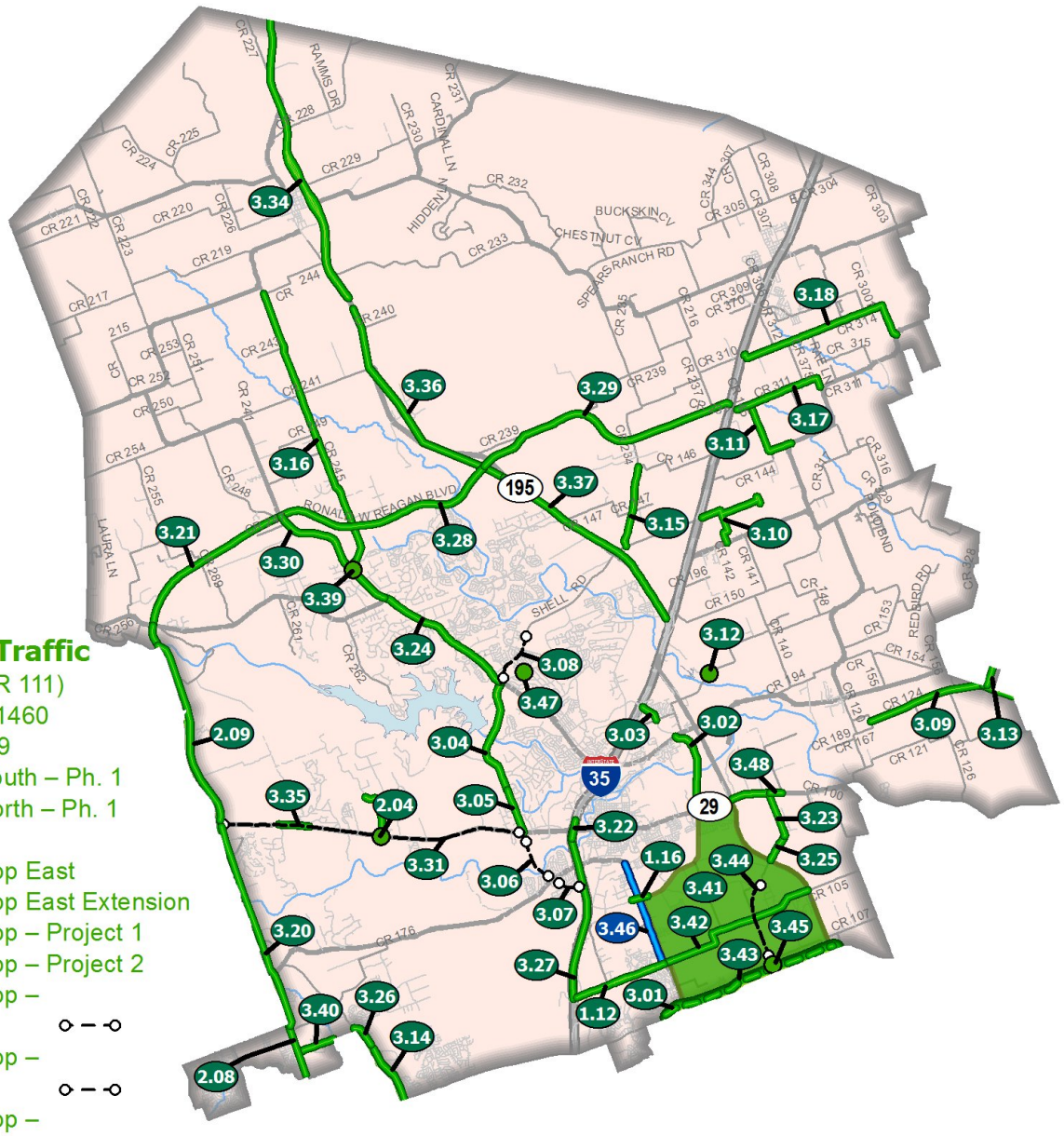

Completed/Open to Traffic

1.12 Westinghouse Rd. (CR 111)
1.16 SE Inner Loop at FM 1460
2.04 Cedar Hollow at SH 29
2.08 Ronald W. Reagan South – Ph. 1
2.09 Ronald W. Reagan North – Ph. 1
3.01 FM 1460 to CR 110
3.02 Georgetown Inner Loop East
3.03 Georgetown Inner Loop East Extension
3.04 Georgetown Inner Loop – Project 1
3.05 Georgetown Inner Loop – Project 2
3.06 Georgetown Inner Loop – Project 3 Study ○ – ○
3.07 Georgetown Inner Loop – Project 4 Study ○ – ○
3.08 Georgetown Inner Loop – Project 5 Study ○ – ○
3.09 CR 124
3.10 CR 142
3.11 CR 145
3.12 CR 152 Bridge Replacement
3.13 CR 157
3.14 CR 175
3.15 CR 234
3.16 CR 245
3.17 CR 311
3.18 CR 314
3.20 Ronald W. Reagan South - Phase 2
3.21 Ronald W. Reagan North - Phase 2
3.22 IH-35 at SH 29 Turnarounds (PTF)
3.48 SH 29 Widening - 12" Water Main Relocation
3.23 SH 29/CR 104 – Phase 1
3.24 Williams Drive (RM 2338)
3.25 CR 104 – Phase 2
3.26 CR 175 Extension - Phase 2A
3.27 IH 35 Northbound Frontage Rd. and Ramps
3.28 Ronald W. Reagan North - Phase 3
3.29 Ronald W. Reagan North - Phase 4
3.30 RM 2338 (PTF)
3.31 SH 29 Improvements Study & Schematic ○ – ○
3.34 SH 195 Project 1
3.35 SH 29 at Park Place Dr. & Jack Nicklaus Blvd.
3.36 SH 195 Project 2
3.37 SH 195 Project 3
3.39 CR 245 Realignment
3.40 CR 179
3.41 CR 110 / Arterial A Study (design)
3.42 CR 111 / CR 105 Westinghouse Rd. (FM 1460 to SH 130) (design)
3.43 University Blvd. (Chandler Rd) Expansion (Design)
3.44 CR 110 North ○ – ○ (North of CR 107 to North of Sam Houston) (Design)
3.45 CR 110 Middle (North of Limmer Loop to CR 107)
3.47 Madrid Drive Extension

Under Construction/Bidding

3.46 FM 1460 North

2013 Road Bond Program Projects
Precinct 3 - Commissioner Covey

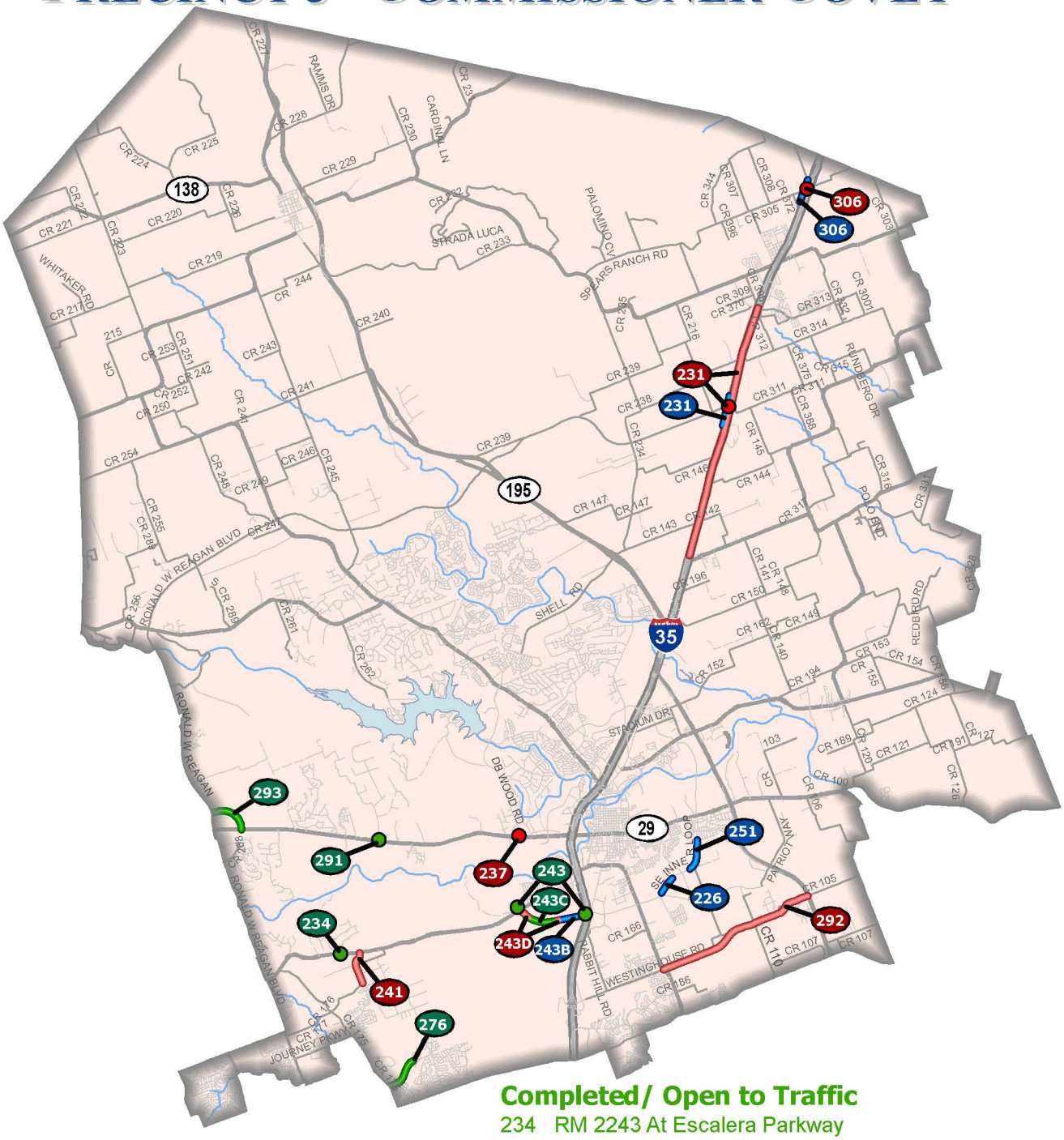

Completed / Open to Traffic

234 RM 2243 At Escalera Parkway
243 Southwest Bypass Driveways
243c Southwest Bypass Access Route
276 Arterial H Extension Phase 1 (CR 175 to Massey Way)
291 SH 29 At Cedar Hollow
293 Kauffman Loop Phase 1 (NE quadrant of Reagan at SH 29)

Under Construction/Bidding

226 Inner Loop Safety Improvements (Rockride Lane to Wilco Way)
231 Relocation of 48" Williamson County Regional Raw Waterline - Line B
243b Southwest Bypass Segment 1
251 Inner Loop Safety Improvements (Belmont Drive to Rockride Lane)
306 Relocation of 48" Williamson County Regional Raw Waterline - Line A

In Design

231 Ronald Reagan at IH 35 (Bridge Replacement)
231 IH 35 Ramp Reversal and Frontage Road Conversion (FM 972 to CR 312)
237 DB Wood At SH 29
241 CR 176 at RM 2243 (Safety Improvements)
243d Southwest Bypass Segment 2
292 CR 111 / CR 105 Westinghouse Rd.(FM 1460 to SH 130)
306 CR 305 At IH 35 - Design (Bridge Replacement)

Arterial H Phase 1 (Sam Bass Rd to existing Arterial H)
Project No. 1603-064

Original Contract Price = $3,210,934.80

Letting	Award	Notice To Proceed	Begin Work	Substantial Completion	Work Accepted		Total Bid Days	Days Added	Total Days
4/20/2016	5/16/2016	2/17/2017 (Limited) 5/26/2017	6/5/2017				150	120	270

Invoice Number	Beginning Date	Ending Date	Days Charged	Current Invoice	Invoice Total	Current Retainage	Total Retainage	% ($) Used	% Time Used
1	6/1/2016	6/30/2016	0	$134,198.10	$134,198.10	$14,910.90	$14,910.90	4	0
2	7/1/2016	7/31/2016	0	$182,746.89	$316,944.99	$20,305.21	$35,216.11	10	0
3	8/1/2016	8/31/2016	0	$93,893.40	$410,838.39	$10,432.60	$45,648.71	13	0
4	9/1/2016	9/30/2016	0	$206,817.21	$617,655.60	$22,979.69	$68,628.40	20	0
5	6/4/2017	6/30/2017	27	$47,340.00	$664,995.60	$5,260.00	$73,888.40	22	10
6	7/1/2017	8/31/2017	62	$587,022.75	$1,252,018.35	$65,224.75	$139,113.15	41	33
7	9/1/2017	9/30/2017	30	$320,055.75	$1,572,074.10	$35,561.75	$174,674.90	51	44
8	10/1/2017	10/31/2017	31	$158,107.95	$1,730,182.05	$17,567.55	$192,242.45	57	56
9	11/1/2017	11/30/2017	30	$140,265.17	$1,870,447.22	$15,585.02	$207,827.47	61	67
10	12/1/2017	12/31/2017	31	$186,341.94	$2,056,789.16	$20,704.66	$228,532.13	67	78
11	1/1/2018	1/31/2018	31	$412,576.91	$2,469,366.07	$45,841.88	$274,374.01	81	90
12	2/1/2018	2/28/2018	28	$600,971.37	$3,070,337.44	-$211,714.06	$62,659.95	92	100

3/30/2018 Comments - Substantial Completion was granted as of February 28, 2018

Change Order Number	Approved	Cost This CO	Total COs
01	8/29/2017	132,771.00	132,771.00

4C: Third Party Accommodation. Compliance requirements of new laws and/or policies (impacting third party). Project delayed, due to TCEQ approval process for Water Quality pond design changes. 2C: Differing Site Conditions (unforeseeable). New development (conditions changing after PS&E completed). Design changes were necessary, due to unknown elevation of existing water table

Change Order Number	Approved	Cost This CO	Total COs
02	1/23/2018	58,143.87	190,914.87

3E. County Convenience. Reduction of future maintenance. This change order adds soil retention blanket to the contract to prevent erosion and to establish vegetation on the slopes and along the roadway. 1B. Design Error or Omission. This change order also adds items to the contract for work shown in the plans but not included in the summary of items and quantities. 2E: Differing Site Conditions. (unforeseeable) Miscellaneous difference in site conditions (unforeseeable)(Item 9). This Change Order deletes lime treated subgrade items due to the quality of the material encountered at subgrade elevation.

Adjusted Price = $3,401,849.67



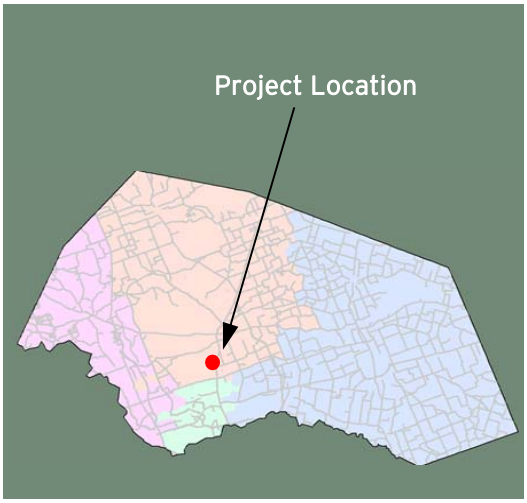

Southwest Bypass Segment One
(IH 35 Southbound to .5 miles west)

Project Length: .5 Mile
Roadway Classification: Collector

Project Schedule: August 2017 - July 2018
Estimated Construction Cost: $5.7 Million



MARCH 2018 IN REVIEW

3/02/2018: Jordan Foster Construction placed concrete bridge columns at Abutment 9 and formed and placed concrete for the downstream and upstream footings and headwall at Culvert 2. Embankment continued to be placed along Wall 1 and on the roadway east of the railroad tracks.

3/09/2018: Concrete was placed for the bridge columns at Bent 8, the upstream headwall at Culvert 2, and the spread footing at Bent 2.

3/16/2018: Concrete was placed for the bridge columns at Bent 1 spread footing. Embankment continued to be placed along Wall 1 and on the roadway east of the railroad tracks.

3/23/2018: Concrete was placed for the bridge columns at Bent 5 and 6. Embankment continued to be placed along Wall 1 and on the roadway east of the railroad tracks. Subcontractor Texas Highway Walls placed concrete on Retaining Wall 3 and began setting panels on Retaining Walls 2, 3, and 4.

3/30/2018: The Cap at Bent 8 was completed. Subcontractor Texas Highway Walls placed concrete for leveling pad on Retaining Wall 3 and continued to set panels, gravel, and straps on Retaining Wall 2.



Design Engineer: HDR Engineering
Contractor: Jordan Foster Construction
Construction Observation:
Steven Shull, HNTB

Williamson County
Road Bond Program

HNTB

PRIME STRATEGIES, INC.

Southwest Bypass Segment 1 (southbound IH 35 to .5 miles west)
2017-0065-CIP

Original Contract Price = $5,599,200.86

Letting	Award	Notice To Proceed	Begin Work	Substantial Completion	Work Accepted		Total Bid Days	Days Added	Total Days
6/27/2017	7/26/2017	8/21/2017	8/21/2017				337	0	337

Invoice Number	Beginning Date	Ending Date	Days Charged	Current Invoice	Invoice Total	Current Retainage	Total Retainage	% ($) Used	% Time Used
1	8/21/2017	9/30/2017	41	$481,587.30	$481,587.30	$25,346.70	$25,346.70	9	12
2	10/1/2017	10/31/2017	31	$939,731.93	$1,421,319.23	$24,112.88	$49,459.58	26	21
3	11/1/2017	11/30/2017	30	$165,940.58	$1,587,259.81	$8,733.71	$58,193.29	29	30
4	12/1/2017	12/31/2017	31	$175,883.70	$1,763,143.51	$9,257.04	$67,450.33	32	39
5	1/1/2018	1/31/2018	31	$568,442.13	$2,331,585.64	$29,918.01	$97,368.34	43	49
6	2/1/2018	2/28/2018	28	$282,226.98	$2,613,812.62	$14,854.05	$112,222.39	48	57
7	3/1/2017	3/31/2017	31	$696,211.29	$3,310,023.91	$36,642.70	$148,865.09	61	66

Change Order Number	Approved	Cost This CO	Total COs
01	12/12/2017	114,077.58	114,077.58

Additional work desired by the City. This Change Order adds a stub-out of 380 feet to the east end of the Southwest Bypass for future connection to the Southeast Inner Loop at the IH-35 frontage road. All related items and quantities will be overruns or underruns of current Contract items.

Adjusted Price = $5,713,278.44



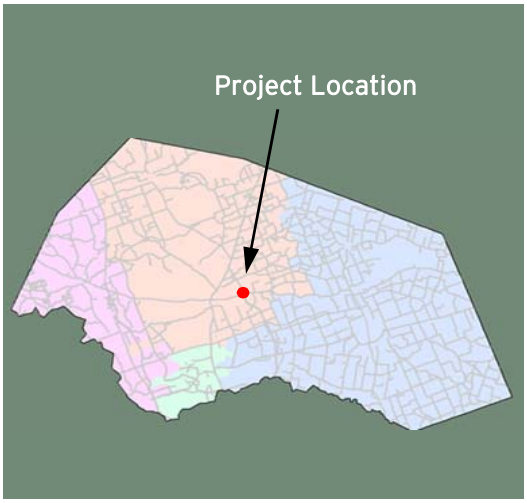

Inner Loop Improvements
(WilCo Way to Belmont Drive)

Project Length: 4.4 Miles
Roadway Classification: Urban Arterial

Project Schedule: September 2017 - June 2018
Estimated Construction Cost: $5.3 Million



MARCH 2018 IN REVIEW

3/02/2018: Chasco Contractors completed concrete placement for the safety end treatments (SETs) for both power plant driveways. Concrete riprap continued to be formed and poured between Culvert 1 and the southern County driveway. Parking lot excavation continued for the County offices.

3/09/2018: Flexible base was placed for the southbound lane widening between the County's south driveway and the north end of the project.

3/16/2018: Concrete riprap was placed at Culvert 1. Concrete for sidewalk was placed from the south County driveway to Culvert 1. Parking lot excavation continued and excavation began for Retention Pond B near the Animal Shelter.

3/23/2018: Flexible base was processed between the County's south driveway and the north end of the project. Concrete was placed for sidewalk between the County's driveways. Concrete was placed for SETs at the culvert pipe under the connector driveway and for curb at the tie-in of Wey Hill Dr.

3/30/2018: Concrete was placed for the SETs at the culvert pipe at Culvert 3. Sleeves were installed under the driveway connector. Subcontractor G Carter installed conduits for the future signals at Inner Loop and Belmont.



Design Engineer: Rodriguez Transportation Group / Bridgefarmer
Contractor: Chasco Contractors
Construction Observation: Seth Turvey, HNTB

Williamson County Road Bond Program

HNTB

PRIME STRATEGIES, INC.

Inner Loop Improvements (WilCo Way to Belmont Dr.)
Project No. 1706-168

Original Contract Price = $5,352,969.00

Letting	Award	Notice To Proceed	Begin Work	Substantial Completion	Work Accepted		Total Bid Days	Days Added	Total Days
8/9/2017	8/30/2017	9/18/2017	9/28/2017				300	0	300

Invoice Number	Beginning Date	Ending Date	Days Charged	Current Invoice	Invoice Total	Current Retainage	Total Retainage	% ($) Used	% Time Used
1	9/28/2017	10/31/2017	34	$324,036.00	$324,036.00	$36,004.00	$36,004.00	6.7	11
2	11/1/2017	11/30/2017	30	$429,129.00	$753,165.00	$47,681.00	$83,685.00	15.6	21
3	12/1/2017	1/31/2018	62	$460,398.44	$1,213,563.44	$51,155.38	$134,840.38	25.2	42
4	2/1/2018	2/28/2018	28	$52,007.22	$1,265,570.66	$5,778.58	$140,618.96	26	51
5	3/1/2018	3/31/2018	31	$388,670.88	$1,654,241.54	$43,185.66	$183,804.62	34	62

Change Order Number	Approved	Cost This CO	Total COs
01	12/5/2017	6,050.40	6,050.40

3E: County Convenience. Reduction of future maintenance. This Change Order revises the hot mix asphalt (HMAC) pavement section on the Inner Loop from one 2” lift of Type C HMAC to one 2” lift of Type D HMAC.

Adjusted Price = $5,359,019.40



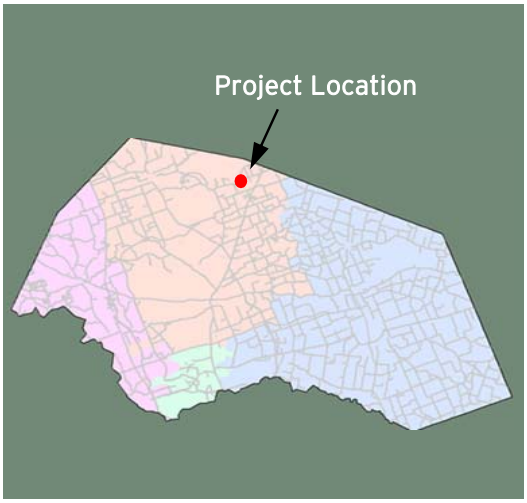

Williamson County Regional Raw Water Line Relocation
(Ronald Reagan Blvd at IH 35 and CR 305 at IH 35)

Project Length: .2 Miles
Roadway Classification: Water Line Relocation

Project Schedule: January 2018 - April 2018
Estimated Construction Cost: $1.2 Million



MARCH 2018 IN REVIEW

3/02/2018: Santa Clara Construction completed placing the casing spacers on the 48" ductile iron pipe at both sites and installed the 48" ductile iron pipe inside the 66" casing pipe under Ronald Reagan. The 48" ductile iron pipe installation began inside the 66" casing pipe at the CR 305 site.

3/09/2018: The placement of the 48" ductile iron pipe was completed in all three sections of the casing pipe, including two at the Ronald Reagan site and one at the CR 305 site.

3/16/2018: The 48" ductile iron pipe placement was completed in all three sections of the casing pipe. Pressure testing has been rescheduled.

3/23/2018: Pressure testing of the lines passed. The casing pipe sections at both sites were backfilled.

3/30/2018: The Contractor hauled off some of their equipment. A conference call with Brazos River Authority is anticipated to be held 4/6/18.



Design Engineer: Cobb Fendley
Contractor: Santa Clara Construction
Construction Observation:
Ryan River, HNTB

Williamson County
Road Bond Program

HNTB

PRIME STRATEGIES, INC.

Williamson County Regional Raw Water Line
Project No. 1708-187

Original Contract Price = $1,232,539.10

Letting	Award	Notice To Proceed	Begin Work	Substantial Completion	Work Accepted		Total Bid Days	Days Added	Total Days
10/3/2017	11/14/2017	1/12/2018	1/22/2018				60	0	60

Invoice Number	Beginning Date	Ending Date	Days Charged	Current Invoice	Invoice Total	Current Retainage	Total Retainage	% ($) Used	% Time Used
1	1/22/2018	2/6/2018	16	$145,027.80	$145,027.80	$16,114.20	$16,114.20	13.1	27
2	2/7/2018	3/5/2018	27	$611,849.99	$756,877.79	$67,983.34	$84,097.54	68.2	72

Adjusted Price = $1,232,587.10

2006 Road Bond Program Projects
Precinct 4 - Commissioner Madsen

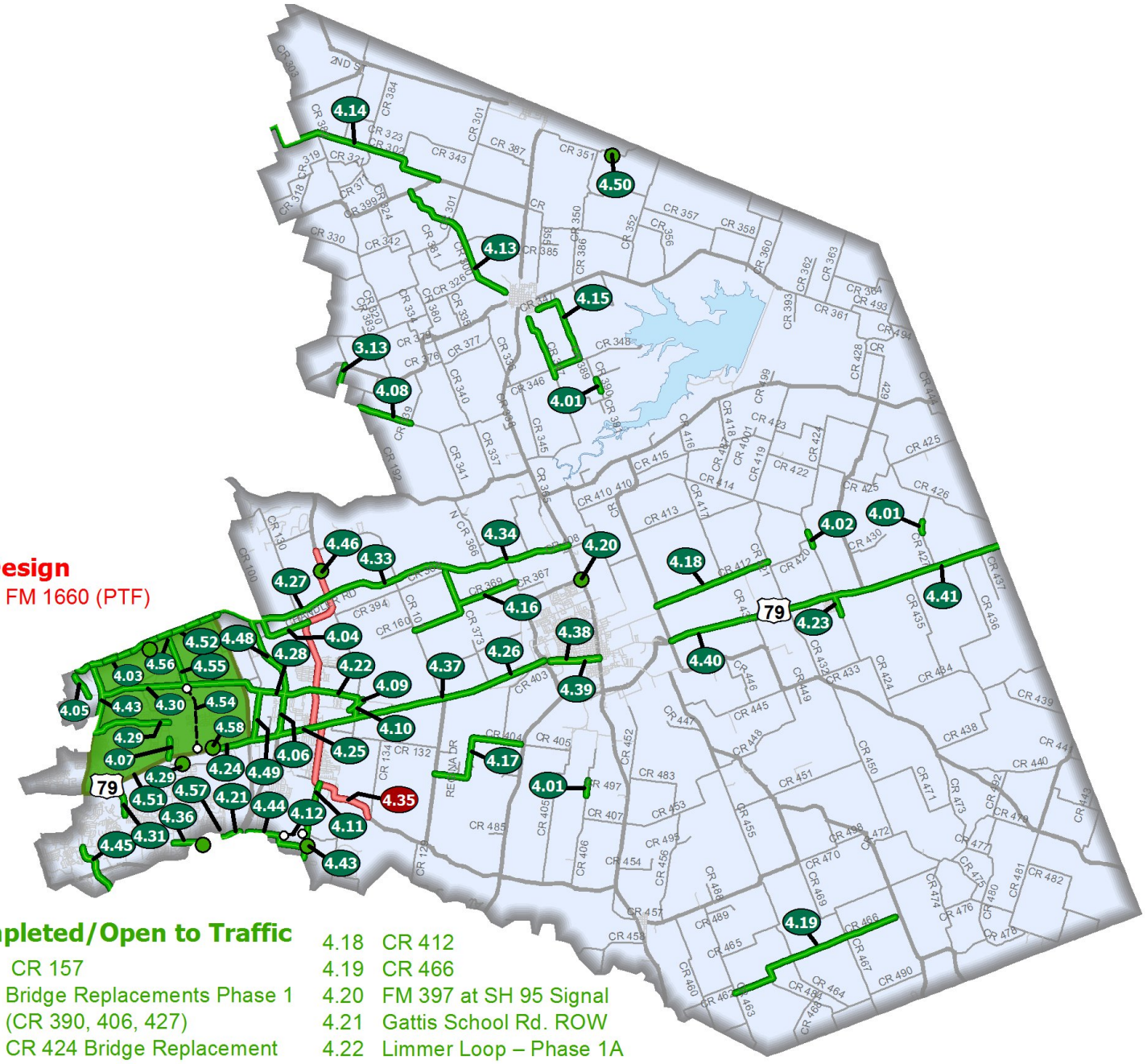

In Design

4.35 FM 1660 (PTF)

Completed/Open to Traffic

3.13 CR 157
4.01 Bridge Replacements Phase 1 (CR 390, 406, 427)
4.02 CR 424 Bridge Replacement
4.03 Chandler Rd. – Phase 1
4.04 CR 100
4.05 CR 112 – Phase 1
4.06 CR 119
4.07 CR 122 at US 79
4.08 CR 124
4.09 CR 132
4.10 CR 136
4.11 CR 137
4.12 CR 138 & CR 139 Alignment Study
4.13 CR 300 & CR 301
4.14 CR 302
4.15 CR 347 & CR 348
4.16 CR 368 & CR 369 (CR 101 to CR 366)
4.17 CR 404
4.18 CR 412
4.19 CR 466
4.20 FM 397 at SH 95 Signal
4.21 Gattis School Rd. ROW
4.22 Limmer Loop – Phase 1A
4.23 Thrall School Zone
4.24 US 79 – Section 1
4.25 US 79 – Section 2
4.26 US 79 – Section 3A
4.27 Chandler Rd. – Phase 2
4.28 Limmer Loop – Phase 1B
4.29 CR 113 / Old Settlers Blvd.
4.30 Limmer Loop – Phase 1C
4.31 Kenney Fort Boulevard – Phase 1
4.33 Chandler Rd. – Phase 3A
4.34 Chandler Rd. – Phase 3B
4.36 Gattis School Road
4.37 US 79 - Section 3 (PTF)
4.38 2nd Street Improvements
4.39 2nd Street Drainage Improvements
4.40 US 79 Section 5A (PTF)
4.41 US 79 Section 5B (PTF)
4.43 FM 1460 Section 2
4.44 CR 138
4.45 CR 170
4.46 FM 1660 at Landfill Rd. (CR 128)
4.48 CR 119
4.49 CR 108
4.50 CR 351 at Donahoe Creek
4.51 CR 110/ Arterial A Study Area
4.52 University Blvd. (Chandler Rd.) Expansion
4.54 CR 110 South - (Design) (US 79 to Limmer Lp)
4.55 CR 110 Middle (North of Limmer Loop to CR 107)
4.56 CR 110 at University Blvd. (Signal)
4.57 Gattis School Rd. at Winterfield Dr. (Signal)
4.58 Tradesman Park Crossing

2013 Road Bond Program Projects
Precinct 4 - Commissioner Madsen

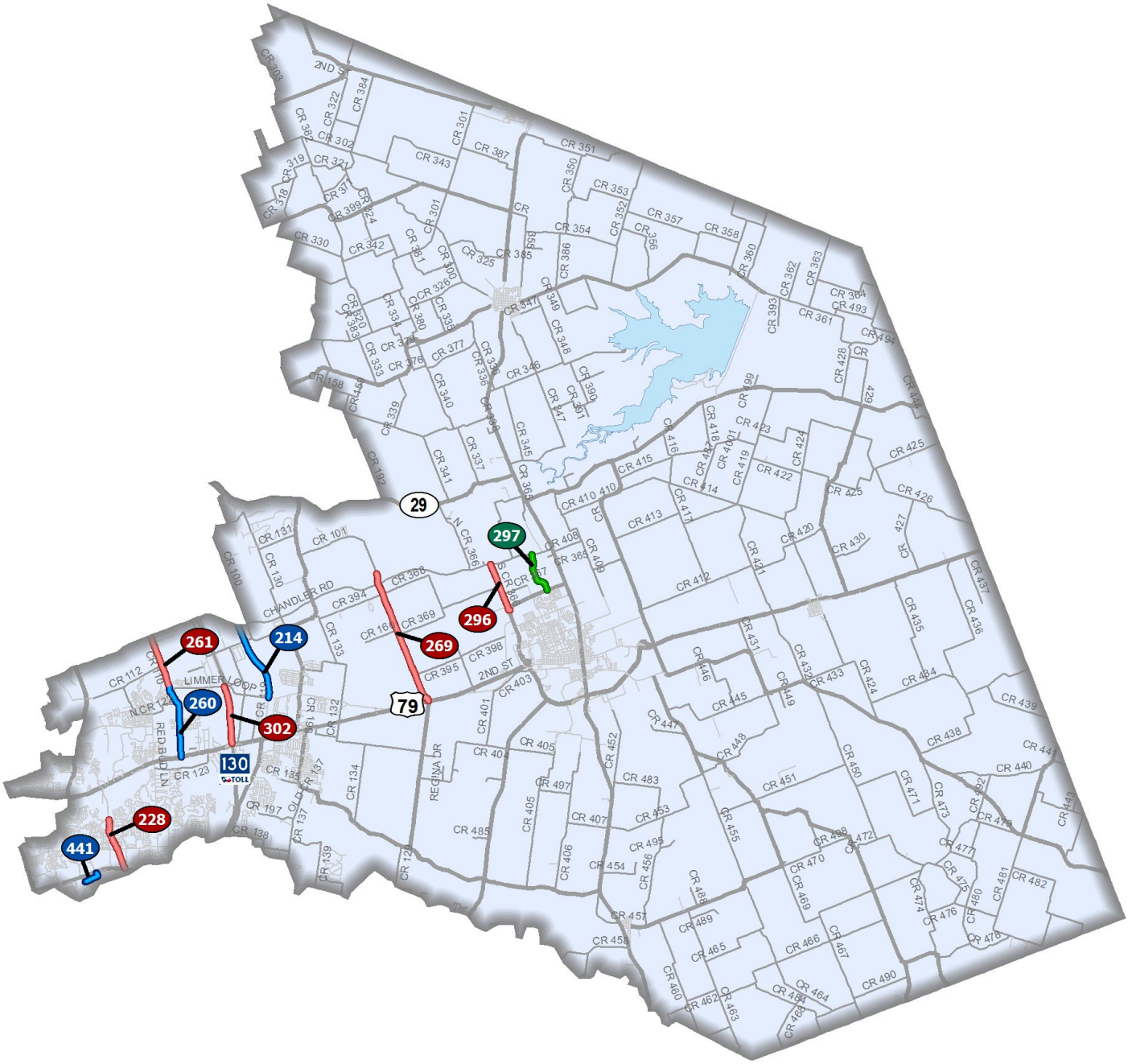

Completed/Open to Traffic

297 Bill Pickett Trail (Carlos Parker Blvd to Chandler Road)

Under Construction/Bidding

214 CR 119
260 CR 110 South (US 79 to Limmer Loop)
441 Roundville Lane (A.W. Grimes Blvd. to EBFR of SH 45)

In Design

228 Kenney Fort Blvd. Ph. 1 (Forest Creek Blvd. to Gattis School Rd.)
261 CR 110 Middle (N Limmer Loop to CR 107)
269 CR 101 (US 79 to North of Chandler Rd.)
296 CR 366 Widening - Chandler Rd. to Carlos G. Parker Blvd.
302 SH 130 Frontage Roads Phase 3 (SBFR US 79 to Limmer Loop)



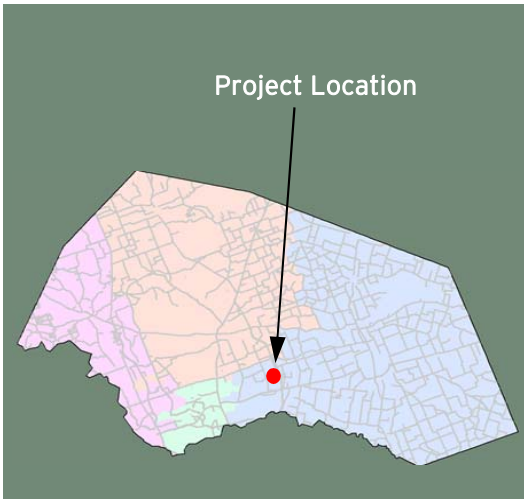

County Road 110 South
(US 79 to Limmer Loop)

Project Length: 2.25 Miles
Roadway Classification: Minor Urban Arterial

Project Schedule: January 2017-June 2018
Estimated Construction Cost: $11.2 Million



MARCH 2018 IN REVIEW

3/02/2018: Chasco Constructors continued placing flexible base for residential driveways between Parma and CR 122. Concrete was formed and placed for the headwall south of Parma.

3/09/2018: Subcontractor Flasher installed temporary pavement markings at Limmer Loop for a traffic shift. Concrete riprap was formed and poured on the northwest slope of McNutt Creek.

3/16/2018: Flexible base continue to be placed on the west side of CR 110 between Sofia Lane and Porano Circle. Concrete riprap continued to be poured on the northwest and southwest slopes of McNutt Creek. Flexible base was placed on the west side of CR 110 near the US 79 intersection.

3/23/2018: Concrete riprap continued to be formed and poured on the southwest slope of McNutt Creek. Flexible base was placed on the west side of CR 110 near the US 79 intersection and on Limmer Loop at the CR 110 tie-in.

3/30/2018: Flexible base continued to be placed on the west side of CR 110 near US 79 and on Limmer Loop. Concrete curb was placed between Sofia Lane and Porano Circle. The Porano Circle intersection was closed.



Design Engineer: Dannenbaum
Contractor: Chasco Constructors
Construction Observation:
David Boone, HNTB

Williamson County
Road Bond Program

HNTB

PRIME STRATEGIES, INC.

CR 110 South (US 79 to Limmer Loop)
Project No. 1604-075

Original Contract Price = $11,224,589.02

Letting	Award	Notice To Proceed	Begin Work	Substantial Completion	Work Accepted		Total Bid Days	Days Added	Total Days
9/27/2016	10/17/2016	1/3/2017	1/13/2017				510	0	510

Invoice Number	Beginning Date	Ending Date	Days Charged	Current Invoice	Invoice Total	Current Retainage	Total Retainage	% ($) Used	% Time Used
1	1/13/2017	3/31/2017	78	$1,644,069.60	$1,644,069.60	$182,674.40	$182,674.40	16	15
2	4/1/2017	4/30/2017	30	$393,511.50	$2,037,581.10	$43,723.50	$226,397.90	20	21
3	5/1/2017	5/31/2017	31	$582,730.20	$2,620,311.30	$64,747.80	$291,145.70	26	27
4	6/1/2017	6/30/2017	30	$630,479.66	$3,250,790.96	$70,053.30	$361,199.00	32	33
5	7/1/2017	7/31/2017	31	$803,057.63	$4,053,848.59	$89,228.62	$450,427.62	40	39
6	8/1/2017	8/31/2017	31	$1,287,965.24	$5,341,813.83	$143,107.25	$593,534.87	53	45
7	9/1/2017	9/30/2017	30	$469,097.52	$5,810,911.35	$52,121.95	$645,656.82	57	51
8	10/1/2017	10/31/2017	31	$875,490.26	$6,686,401.61	$97,276.69	$742,933.51	66	57
9	11/1/2017	11/30/2017	30	$435,997.94	$7,122,399.55	$48,444.22	$791,377.73	70	63
10	12/1/2017	12/31/2017	31	$176,721.48	$7,299,121.03	$19,635.72	$811,013.45	72	69
11	1/1/2018	1/31/2018	31	$408,025.00	$7,707,146.03	$45,336.11	$856,349.56	76	75
12	2/1/2018	2/28/2018	28	$269,828.24	$7,976,974.27	$29,980.92	$886,330.48	79	81
13	3/1/2018	3/31/2018	31	$356,056.48	$8,333,030.75	$39,561.82	$925,892.30	82	87

Change Order Number	Approved	Cost This CO	Total COs
01	6/15/2017	-5,837.31	-5,837.31

1A: Design Error or Omission. Incorrect PS&E. The proposed flow of water from Box Culvert 6 went through the middle of a downstream property; therefore, a redesign and relocation of Culvert 6 was necessary. 4B: Third Party Accommodation. Third party requested work. The property owner at the downstream end of the proposed culvert requested that the water flow around his property limits, as it does in the current conditions. 2C: Differing Site Conditions. New development (conditions changing after PS&E completed). The Mozart Street connection to CR 110 South was permitted and built after the completion of the CR 110 South roadway plans and plan revisions were required to tie-in properly

Change Order Number	Approved	Cost This CO	Total COs
02	9/19/2017	2,840.00	-2,997.31

2E: Differing Site Conditions (unforeseeable). Miscellaneous difference in site conditions (unforeseeable) (Item 9). This Change Order substitutes a wingwall with a special drop inlet due to safety slope reasons. The proposed culvert upstream flowline was approximately 4’ below ditch profile grades, which would have resulted in an extremely steep backslope at the end of the culvert. 4B: Third Party Accommodation. Third party requested work. This Change Order also addresses over-runs and under-runs for various waterline components and includes substituting the HDPE bore pipe for steel encasement pipe at the request of Seminole Pipeline.

Change Order Number	Approved	Cost This CO	Total COs
03	12/12/2017	31,812.74	28,815.43

3E: County Convenience. Reduction of future maintenance. This Change Order replaces surface hot mix Type C to Type D, supplements the Type 4 seeding mix with Type 11 (Bermuda), and adds additional concrete pipe and end treatment items at utility poles. 3H: County Convenience. Cost savings opportunity discovered during construction. This Change Order also substitutes single-slope portable concrete barrier with low profile concrete barrier (LPCB).

Adjusted Price = $11,253,404.45



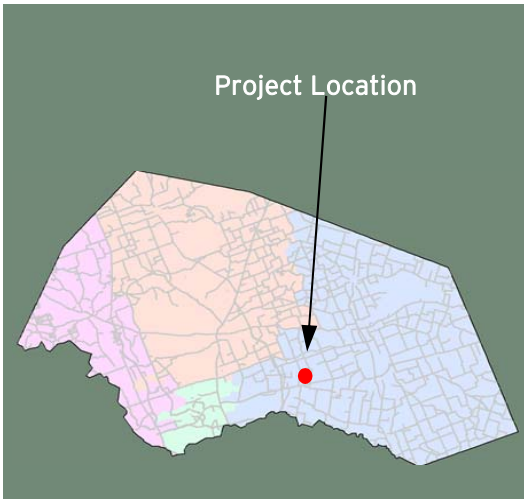

County Road 119
(Limmer Loop to Chandler Rd)

Project Length: 2.35 Miles
Roadway Classification: Suburban Collector

Project Schedule: December 2017-March 2019
Estimated Construction Cost: $6.6 Million



MARCH 2018 IN REVIEW

3/02/2018: Joe Bland Construction continued cutting subgrade between Limmer Loop and CR 118. Excavation for the drainage ditches between Limmer Loop and CR 118 continued. Subcontractor Austin Traffic Signal bored the new traffic signal conduits under Limmer Loop.

3/09/2018: Excavation began for the drainage ditches between CR 118 and Chandler Road. Excavation/embankment began at Abutment 3 on the north side of Cottonwood Creek.

3/16/2018: Excavation continued for the drainage ditches between CR 118 and Chandler Road. Embankment began at Culverts A & B. Subcontractor BMP installed rock berms at Drainage Easements A, B, C, D & Cottonwood Creek.

3/23/2018: Subgrade cutting continued between Limmer Loop and CR 118. Subcontractor Beaird Drilling installed the drilled shafts for the proposed Cottonwood Creek Bridge.

3/30/2018: Precast concrete boxes were placed at Culvert A. Subcontractor Beaird Drilling continued to install the drilled shafts for the proposed Cottonwood Creek Bridge.



Design Engineer: Stantec Consulting
Contractor: Joe Bland Construction
Construction Observation:
Seth Turvey, HNTB

Williamson County
Road Bond Program

HNTB

PRIME STRATEGIES, INC.

CR 119 (Limmer Loop to Chandler Rd)
Project No. 1708-186

Original Contract Price = $6,640,302.71

Letting	Award	Notice To Proceed	Begin Work	Substantial Completion	Work Accepted		Total Bid Days	Days Added	Total Days
10/25/2017	11/15/2017	12/8/2017	12/18/2017				450		450

Invoice Number	Beginning Date	Ending Date	Days Charged	Current Invoice	Invoice Total	Current Retainage	Total Retainage	% ($) Used	% Time Used
1	12/1/2017	12/31/2017	31	$65,613.60	$65,613.60	$7,290.40	$7,290.40	1	7
2	1/1/2018	1/31/2018	31	$473,860.64	$539,474.24	$52,651.18	$59,941.58	9	14
3	2/1/2018	2/28/2018	28	$323,428.91	$862,903.15	$35,936.55	$95,878.13	14	20
4	3/1/2018	3/31/2018	31	$229,232.44	$1,092,135.59	$25,470.27	$121,348.40	18	27

Adjusted Price = $6,640,302.71

Commissioners Court - Regular Session **25.**

Meeting Date: 04/17/2018

Discuss consider and take appropriate action on the Department of Infrastructure projects and issues update

Submitted For: Robert Daigh **Submitted By:** Lydia Linden, Infrastructure

Department: Infrastructure

Agenda Category: Regular Agenda Items

Information

Agenda Item

Discuss, consider and take appropriate action on the Department of Infrastructure projects and issues update.

Background

Fiscal Impact

From/To	Acct No.	Description	Amount

Attachments

No file(s) attached.

Form Review

Inbox	Reviewed By	Date
County Judge Exec Asst.	Wendy Coco	03/19/2018 08:59 AM
Form Started By: Lydia Linden		Started On: 03/16/2018 02:32 PM
Final Approval Date: 03/19/2018		

Commissioners Court - Regular Session **26.**

Meeting Date: 04/17/2018

Discuss consider and take appropriate action on approving a variance request to the Manufactured Home Order for Glenwood Park II - Pct 3

Submitted For: Terron Evertson **Submitted By:** Adam Boatright, Infrastructure

Department: Infrastructure **Division:** Road & Bridge

Agenda Category: Regular Agenda Items

Information

Agenda Item

Discuss, consider, and take appropriate action on approving a variance request to the Manufactured Home Order for Glenwood Park II - Pct 3.

Background

Pinnacle Building Company, Inc., developer of the Glenwood Park II manufactured home rental community, is requesting a variance to the Williamson County Order Adopting Minimum Infrastructure Requirements for Manufactured Home Communities in their attached letter. Staff recommends approval.

Fiscal Impact

From/To	Acct No.	Description	Amount

Attachments

Variance Request Letter - Glenwood Park II

Form Review

Inbox	Reviewed By	Date
County Judge Exec Asst.	Wendy Coco	04/12/2018 01:04 PM
Form Started By: Adam Boatright		Started On: 04/12/2018 11:34 AM
Final Approval Date: 04/12/2018		

April 11th, 2018

From:
Brett Lester
Pinnacle Building Co., Inc.
1102 S. Austin Ave., Ste. 110-292
Georgetown, TX. 78626
Blesterscb@gmail.com
512-863-8502

To:
J. Terron Evertson, PE, CFM, DR
County Engineer
Williamson County, TX
tevertson@wilco.org
(512) 943-3330

Terron,

As previously discussed, PINNACLE BUILDING CO., INC., is requesting a variance(s) to the Williamson County Order Adopting Minimum Infrastructure Requirements for Manufactured Home Communities (Adopted November 16, 1999), under Section IV (e) (3), titled Infrastructure Requirements. This variance(s) is required to relieve the economic hardship due to past County direction concerning the process of County Review and Approval of manufactured home developments within Williamson County and satisfies the spirit of 'unusual hardship' within the Williamson County Order Adopting Minimum Infrastructure Requirements for Manufactured Home Communities.

We request specific variance(s) to issues as discussed in the Williamson County Engineers Letter, dated April 10th, 2018, now attached as Exhibit A, for GLENWOOD PARK II, including but not limited to all variances and waivers addressed within the letter we specifically request the following variances from the Sections of the Williamson County Subdivision Regulations:

- Variance to Section B3.2
- Variance to Section B3.6.2
- Variance to Section B3.6.4
- Variance to Section B4.1
- Variance to Section B4.2
- Variance to Section B4.4
- Variance to Section B5.1
- Variance to Section B5.2
- Variance to Section B6.1
- Variance to Section B6.2
- Variance to Section B6.3
- Variance to Section B11.9

PINNACLE BUILDING CO., INC. hereby acknowledges and represents to Williamson County that it understands that:

1. In the event the herein requested variances are granted, that such variances will only be applicable to the GLENWOOD PARK II development and that all regulations of the Williamson County Order Adopting Minimum Infrastructure Requirements for Manufactured Home Communities will apply to all other developments developed by PINNACLE BUILDING CO., INC. in Williamson County unless the Williamson County Commissioners Court should otherwise grant specific a variance for a particular development in accordance with the Williamson County Order Adopting Minimum Infrastructure Requirements for Manufactured Home Communities. In the event the herein requested variances are granted, Williamson County will not be obligated or liable for the maintenance of any roadways, drainage or other improvements within the GLENWOOD PARK II development and that such obligations shall rest solely on PINNACLE BUILDING CO., INC, its successor, other governmental entity and/or the development's property/unit owner's association but, in on event, on Williamson County. Furthermore, PINNACLE BUILDING CO., INC. will place signs at each entrance to GLENWOOD PARK II notifying property owners and the public that all roadways within the development are not maintained by Williamson County; and
2. All other Manufactured Home Communities (other than a development which is granted a variance) in Williamson County constitute a Community that shall comply in all respects with Williamson County Order Adopting Minimum Infrastructure Requirements for Manufactured Home Communities and the Williamson County Engineering Guidelines, and an infrastructure development plan for approval of the such proposed subdivision shall be prepared and submitted to the Williamson County Engineer's Office in accordance with the terms and procedures set forth in the regulations.

PINNACLE BUILDING CO., INC requests to be on the APRIL 17TH, 2018 Commissioners Court Agenda. We appreciate the County's work on this issue.

Regards,

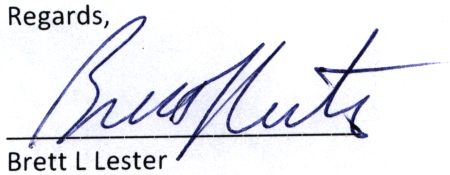

Brett L Lester

Exhibit "A"

From: **Adam Boatright** adam.boatright@wilco.org
Subject: Glenwood Park - Minimum Infrastructure Requirements for Manufactured Home Communities
Date: April 10, 2018 at 4:11 PM
To: Brett Lester blesterscb@gmail.com
Cc: Terron Evertson tevertson@wilco.org

Brett,

Attached is our review letter for the Glenwood Park manufactured home development. Below are the County Road Standards that would require a variance request to be approved, prior to approval of the Infrastructure Development Plan. There is also a template attached for the variance request. Let me know if you have any questions.

Comment:
Minimum centerline horizontal curve radius: 25 mph (local) Design Speed, Minimum Allowable Radius (AASHTO Fig 3-17) is 180 ft
Radii on Redondo Drive are currently 40'R, 40'R and 65'R. Meets a 14-18 mph design speed.
Roadway centerlines must meet at 90 degrees +/- 10 degrees at intersections. See the intersection of Allegria Drive and Cerca Run.
B3.2
Unless otherwise stated in the Williamson County Subdivision Regulations, all roads shall be designed in accordance with the latest version of the Institute of Transportation Engineers "Urban Street Geometric Design Handbook", the latest version of the American Association of State Highway and Transportation Officials (AASHTO) "A Policy on Geometric Design of Highways and Streets" and the edition of the City of Austin's Transportation Criteria Manual (TCM) in effect as of the date of these regulations. Should there be a conflict between these publications, the more stringent value shall overrule. All references to "mountainous terrain" shall not apply to the County.

Comment:
Local roads (RURAL): Typically, w/ ditches, >100' driveway spacing. Roadway cross section: 20 feet travel way with 4' paved shoulders or 18" ribbon curb.
Allegria Drive is currently 30 feet wide (12-18" of flex base)
Redondo Drive is currently 22-23 feet wide (8-12" of flex base)
Cerca Run is currently 24 feet wide (4-12" of flex base)
Pony Cove is currently 23-28 feet wide (4" of flex base)
B3.6.2
The pavement cross section in a rural residential subdivision shall be 20 feet of travel way with four foot paved shoulders or a ribbon curb on both sides

Comment:
For local roads, a minimum design speed 25 mph is required. Horizontal curves currently meet a 14-18 mph design speed.
B3.6.4
The minimum design speed shall be 25 MPH.

Comment:
Include the following Williamson County roadway construction requirements in the general notes on the construction plans.
B4.1
A preconstruction meeting shall be scheduled prior to the start of construction. The Design Engineer, Owner, Contractor, Subcontractors, and County Engineer shall attend this meeting.

All roads are to be constructed in accordance with the construction documents as approved by the County Engineer and in accordance with the specifications found in the current version of the "Texas Department of Transportation Manual Standard Specifications for Construction of Highways, Streets, and Bridges" unless otherwise stated on the construction documents approved by the County Engineer.

B4.2

All materials shall be sampled and tested by an Independent Testing Laboratory in accordance with the construction documents approved by the County Engineer. The Owner shall pay for all testing services and shall furnish the County Engineer with certified copies of these test results. The County Engineer must approve the test results prior to constructing the next course of the roadway structure. Any material which does not meet the minimum required test specifications shall be removed and recompacted or replaced unless alternative remedial action is approved in writing from the County Engineer.

B5.2

The subgrade shall be inspected and approved by an Independent Testing Laboratory and a certified copy of all inspection reports furnished to the County Engineer, who must approve the report prior to application of the base material. All density test reports shall include a copy of the work sheet showing the percentage of the maximum dry (Proctor) density. The number and location of all subgrade tests shall be determined by the County Engineer.

B6.1

Base material shall conform to Item 247 of the current edition of the TxDOT Standard Specifications for Construction, "Flexible Base". The base material shall be Type A Grade 1, Type A Grade 2, or as approved by the County Engineer.

B6.2

Each layer of base course shall be tested for in-place dry density and measured for compacted thickness. The number and location of all base test samples shall be determined by the County Engineer.

B6.3

The base shall be prepared and compacted to achieve a minimum of 98% of the maximum (Proctor) dry density or as approved by the County Engineer upon recommendation by the testing laboratory. The maximum lift shall not exceed six inches. The base must be inspected and approved by an Independent Testing Laboratory and a certified copy of the test results furnished to the County Engineer for approval. Prior to the placement of the first lift of base, the stockpile shall be tested for the specifications found in Item 247 Table 1 and the result furnished to the County Engineer for approval.

Comment:

All pavements are to be designed by a Registered Professional Engineer. The design shall be based on a 20-year design life and in conjunction with recommendations based upon a soils report of samples taken along the proposed roadways. Pavements are to be designed by a Registered Professional Engineer. The design shall be based on a 20-year design life and in conjunction with recommendations based upon a soils report of samples taken along the proposed roadways.

B4.4

All pavements are to be designed by a Registered Professional Engineer. The design shall be based on a 20-year design life and in conjunction with recommendations based upon a soils report of samples taken along the proposed roadways. Test borings shall be placed at a maximum spacing of 500 feet or other sampling frequency approved by the County Engineer based on recommendations provided by the geotechnical engineer. The soils report and pavement design shall be submitted to the County Engineer for review. The pavement design must be approved by the County Engineer prior to or concurrently with the review and approval of the construction plans. In addition to the basis of the pavement design, the soils report shall

contain the results of sampled and tested subgrade for plasticity index, pH, sulfate content, and maximum density.

Comment:
Include the following in the general notes on the construction plans. "WHEN THE PLASTICITY INDEX (PI) OF THE SUBGRADE IS GREATER THAN 20, A SUFFICIENT AMOUNT OF LIME SHALL BE ADDED AS DESCRIBED IN ITEM 260 OF THE CURRENT EDITION OF THE TXDOT STANDARD SPECIFICATIONS FOR CONSTRUCTION UNTIL THE PI IS LESS THAN 20. IF THE ADDITION OF LIME AS DESCRIBED IN ITEM 260 IS NOT FEASIBLE, AN ALTERNATE STABILIZING DESIGN SHALL BE PROPOSED AND SUBMITTED TO THE COUNTY ENGINEER FOR APPROVAL."
B5.1
The preparation of the subgrade shall follow good engineering practices as directed by the County Engineer in conjunction with recommendations outlined in the geotechnical report. When the Plasticity Index (PI) is greater than 20, a sufficient amount of lime shall be added as described in Item 260 of the current edition of the TxDOT Standard Specifications for Construction until the PI is less than 20. If the addition of lime as described in Item 260 is not feasible, an alternate stabilizing design shall be proposed and submitted to the County Engineer for approval. The subgrade shall be prepared and compacted to achieve a dry density per TxDOT Item 132. In addition, proof rolling may be required by the County Engineer.

Comment:
Provide roadside ditches or revise the road cross section to comply with App. B11.9.
B11.9
Roadside ditches may be eliminated within a rural subdivision provided that the road has 18-inch ribbon curbs, the roadway surface has an adequate cross slope, and the overall drainage patterns throughout the subdivision remain as in an undeveloped state

Please contact this office with any questions regarding this review.

Thanks,

Adam D. Boatright, PE
Williamson County Road & Bridge
office: 512–943–3374
adam.boatright@wilco.org



Commissioners Court - Regular Session **27.**

Meeting Date: 04/17/2018

San Gabriel Ranch Rd.

Submitted For: Charlie Crossfield **Submitted By:** Charlie Crossfield, Road Bond

Department: Road Bond

Agenda Category: Regular Agenda Items

Information

Agenda Item

Discuss, consider and take appropriate action on a real estate contract with Michael A. Kroeber for right of way needed on the San Gabriel Ranch Rd. dam project. (Parcel 2); Funding Source Road & Bridge (P439)

Background

Fiscal Impact

From/To	Acct No.	Description	Amount

Attachments

Kroeber Contract

Form Review

Inbox	Reviewed By	Date
County Judge Exec Asst.	Wendy Coco	04/12/2018 09:25 AM
Form Started By: Charlie Crossfield		Started On: 04/12/2018 09:11 AM
Final Approval Date: 04/12/2018		

REAL ESTATE CONTRACT

San Gabriel Ranch Road Dam – Parcel 2

THIS REAL ESTATE CONTRACT ("Contract") is made by MICHAEL A. KROEBER a/k/a MICHAEL ANTHONY KROEBER (collectively referred to in this Contract as "Seller") and WILLIAMSON COUNTY, TEXAS (referred to in this Contract as "Purchaser"), upon the terms and conditions set forth in this Contract.

ARTICLE I
PURCHASE AND SALE

By this Contract, Seller sells and agrees to convey, and Purchaser purchases and agrees to pay for, the tract(s) of land described as follows:

Fee simple interest in and to all of that certain 0.313 acre (13,631 square feet) of land in the John F. Webber Survey, Abstract No. 654, Williamson County, Texas; being more fully described by metes and bounds in Exhibit "A", attached hereto and incorporated herein (**Parcel 2**); and

Temporary Drainage Easement interest in and across that certain 0.01 acre of land in the John F. Webber Survey, Abstract No. 654, Williamson County, Texas; said tract being more particularly described in Exhibit "B" attached hereto and incorporated herein (**Parcel 3DE**); and

Temporary Workspace and Staging Easement interest in and across that certain 0.12 acre of land in the John F. Webber Survey, Abstract No. 654, Williamson County, Texas; said tract being more particularly described in Exhibit "B" attached hereto and incorporated herein (**Parcel 3TCE**); and

Slope and Lateral Support Easement interest in and across that certain 0.016 acre (676 square feet) of land in the John F. Webber Survey, Abstract No. 654, Williamson County, Texas; said tract being more particularly described by metes and bounds in Exhibit "C" attached hereto and incorporated herein (**Parcel 3SE**);

together with all and singular the rights and appurtenances pertaining to the property, including any right, title and interest of Seller in and to adjacent streets, alleys or rights-of-way (all of such real property, rights, and appurtenances being referred to in this Contract as the "Property"), and any improvements situated on and attached to the Property described in Exhibit "A" not otherwise agreed herein to be retained by Seller, for the consideration and upon and subject to the terms, provisions, and conditions set forth below.

ARTICLE II
PURCHASE PRICE

Purchase Price

2.01. The Purchase Price for the Property interests described in Exhibits "A-C" and any improvements thereon, along with any damage to the remaining property of Seller as a result of this transaction, shall be the sum of FIVE THOUSAND ONE HUNDRED EIGHTY-EIGHT and 00/100 Dollars ($5,188.00).

Payment of Purchase Price

2.02. The Purchase Price shall be payable in cash at the Closing.

ARTICLE III
PURCHASER'S OBLIGATIONS

Conditions to Purchaser's Obligations

3.01. The obligations of Purchaser hereunder to consummate the transactions contemplated hereby are subject to the satisfaction of each of the following conditions (any of which may be waived in whole or in part by Purchaser at or prior to the Closing).

Miscellaneous Conditions

3.02. Seller shall have performed, observed, and complied with all of the covenants, agreements, and conditions required by this Contract to be performed, observed, and complied with by Seller prior to or as of the closing.

ARTICLE IV
REPRESENTATIONS AND WARRANTIES OF SELLER

Seller hereby represents and warrants to Purchaser as follows, which representations and warranties shall be deemed made by Seller to Purchaser also as of the Closing Date, to the best of Seller's current actual knowledge:

(1) There are no parties in possession of any portion of the Property as lessees, tenants at sufferance, or trespassers, other than as previously disclosed to Purchaser;

(2) Seller has complied with all applicable laws, ordinances, regulations, statutes, rules and restrictions relating to the Property, or any part thereof;

The Property is being conveyed to Purchaser under threat of condemnation.

ARTICLE V
CLOSING

Closing Date

5.01. The Closing shall be held at the office of Independence Title Company on or before April 30, 2018, or at such time, date, and place as Seller and Purchaser may agree upon, or within 10 days after the completion of any title curative matters if necessary for items as shown on the Title Commitment or in the contract (which date is herein referred to as the "Closing Date").

Seller's Obligations at Closing

5.02. At the Closing Seller shall:

(1) Deliver to Purchaser a duly executed and acknowledged Deed conveying good and indefeasible title to Williamson County, Texas in fee simple to all of the Property described in Exhibit "A", and deliver to Purchaser a duly executed and acknowledged Slope and Lateral Support Easement conveying such interest in and across all of the Property described in Exhibit "C", both free and clear of any and all liens and restrictions, except for the following:

(a) General real estate taxes for the year of closing and subsequent years not yet due and payable;

(b) Any exceptions approved by Purchaser pursuant to Article III hereof; and

(c) Any exceptions approved by Purchaser in writing.

The Deed shall be in the form as shown in Exhibit "D", attached hereto and incorporated herein. The Slope and Lateral Support Easement shall be in the form as shown in Exhibit "E" attached hereto and incorporated herein.

(2) Deliver to Purchaser a duly executed and acknowledged Temporary Drainage Easement and Temporary Workspace and Staging Easement, conveying such interests in and to all of the Property Described in Exhibit "B". The Drainage Easement shall be in the form as shown in Exhibit "F", attached hereto and incorporated herein. The Temporary Workspace and Staging Easement and Grading License shall be in the form as shown in Exhibit "G".

(3) Deliver to Purchaser a Texas Owner's Title Policy at Purchaser's sole expense, issued by Title Company, in Grantee's favor in the full amount of the Purchase Price, insuring Purchaser's contracted interests in and to the Property subject only to those title exceptions listed herein, such other exceptions as may be approved in writing by Purchaser, and the standard printed exceptions contained in the usual form of Texas Owner's Title Policy, provided, however:

(a) The boundary and survey exceptions shall be deleted;

(b) The exception as to restrictive covenants shall be endorsed "None of Record", if applicable; and

(c) The exception as to the lien for taxes shall be limited to the year of Closing and shall be endorsed "Not Yet Due and Payable".

(d) Deliver to Purchaser possession of the Property if not previously done.

Purchaser's Obligations at Closing

5.03. At the Closing, Purchaser shall:

(a) Pay the cash portion of the Purchase Price.

Prorations

5.04. General real estate taxes for the then current year relating to the Property shall be prorated as of the Closing Date and shall be adjusted in cash at the closing. If the Closing shall occur before the tax rate is fixed for the then current year, the apportionment of taxes shall be upon the basis of the tax rate for the next preceding year applied to the latest assessed valuation. Agricultural roll-back taxes, if any, shall be paid by Purchaser.

Closing Costs

5.05. All costs and expenses of closing in consummating the sale and purchase of the Property shall be borne and paid as follows:

(1) Owner's Title Policy and survey to be paid by Purchaser.

(2) Deed, tax certificates, and title curative matters, if any, paid by Purchaser.

(3) All other closing costs shall be paid by Purchaser.

(4) Attorney's fees paid by each respectively.

ARTICLE VI
BREACH BY SELLER

In the event Seller shall fail to fully and timely perform any of its obligations hereunder or shall fail to consummate the sale of the Property for any reason, except Purchaser's default, Purchaser may: (1) enforce specific performance of this Contract; or (2) request that the Escrow Deposit, if any, shall be forthwith returned by the title company to Purchaser.

ARTICLE VII
BREACH BY PURCHASER

In the event Purchaser should fail to consummate the purchase of the Property, the conditions to Purchaser's obligations set forth in Article III having been satisfied and Purchaser being in default and Seller not being in default hereunder, Seller shall have the right to receive the Escrow Deposit, if any, from the title company, the sum being agreed on as liquidated damages for the failure of Purchaser to perform the duties, liabilities, and obligations imposed upon it by the terms and provisions of this Contract, and Seller agrees to accept and take this cash payment as its total damages and relief and as Seller's sole remedy hereunder in such event. If no Escrow Deposit has been made then Seller shall receive the amount of $500 as liquidated damages for any failure by Purchaser.

ARTICLE VIII
MISCELLANEOUS

Notice

8.01. Any notice required or permitted to be delivered hereunder shall be deemed received when sent by United States mail, postage prepaid, certified mail, return receipt requested, addressed to Seller or Purchaser, as the case may be, at the address set forth opposite the signature of the party.

Texas Law to Apply

8.02. This Contract shall be construed under and in accordance with the laws of the State of Texas, and all obligations of the parties created hereunder are performable in Williamson County, Texas.

Parties Bound

8.03. This Contract shall be binding upon and inure to the benefit of the parties and their respective heirs, executors, administrators, legal representatives, successors and assigns where permitted by this Contract.

Legal Construction

8.04. In case any one or more of the provisions contained in this Contract shall for any reason be held to be invalid, illegal, or unenforceable in any respect, this invalidity, illegality, or unenforceability shall not affect any other provision hereof, and this Contract shall be construed as if the invalid, illegal, or unenforceable provision had never been contained herein.

Prior Agreements Superseded

8.05. This Contract constitutes the sole and only agreement of the parties and supersedes any prior understandings or written or oral agreements between the parties respecting the within subject matter.

Time of Essence

8.06. Time is of the essence in this Contract.

Gender

8.07. Words of any gender used in this Contract shall be held and construed to include any other gender, and words in the singular number shall be held to include the plural, and vice versa, unless the context requires otherwise.

Memorandum of Contract

8.08. Upon request of either party, the parties shall promptly execute a memorandum of this Contract suitable for filing of record.

Compliance

8.09 In accordance with the requirements of Section 20 of the Texas Real Estate License Act, Purchaser is hereby advised that it should be furnished with or obtain a policy of title insurance or Purchaser should have the abstract covering the Property examined by an attorney of Purchaser's own selection.

Effective Date

8.10 This Contract shall be effective as of the date it is approved by Williamson County, Texas which date is indicated beneath the County Judge's signature below.

Counterparts

8.11 This Contract may be executed in any number of counterparts, which may together constitute the Contract. Signatures transmitted by facsimile or electronic mail may be considered effective as originals for purposes of this Contract.

SELLER:

Michael A. Kroeber a/k/a
Michael Anthony Kroeber

Address: 1309 San Gabriel Ranch Rd.
Liberty Hill TX 78642

Date: 4-4-2018

PURCHASER:

WILLIAMSON COUNTY, TEXAS

By: _____
Dan A. Gattis
County Judge

Address: 710 Main Street, Suite 101
Georgetown, Texas 78626

Date: _____

EXHIBIT A

County: Williamson
Parcel No.: 2
Highway: San Gabriel Ranch Road
Limits: From: South of Remuda Drive
To: North of Mustang Circle

DESCRIPTION FOR PARCEL 2

DESCRIPTION OF A 0.313 ACRE (13,631 SQ. FT.) PARCEL OF LAND, LOCATED IN THE JOHN F. WEBBER SURVEY, ABSTRACT 654, WILLIAMSON COUNTY, TEXAS, BEING A PORTION OF LOT 38, SAN GABRIEL RIVER RANCH, A SUBDIVISION OF RECORD IN CABINET B, SLIDE 94, PLAT RECORDS OF WILLIAMSON COUNTY, TEXAS (P.R.W.C.TX.), DESCRIBED AS A CALLED 1.670 ACRE TRACT OF LAND IN A DEED TO MICHAEL A. KROEBER, RECORDED IN DOCUMENT NO. 2015029207 OF THE OFFICIAL PUBLIC RECORDS OF WILLIAMSON COUNTY, TEXAS (O.P.R.W.C.TX.), SAID 0.313 ACRE (13,631 SQ. FT.) PARCEL, AS SHOWN ON A RIGHT-OF-WAY (ROW) SKETCH PREPARED BY SAM, LLC, BEING MORE PARTICULARLY DESCRIBED BY METES AND BOUNDS AS FOLLOWS:

COMMENCING at a 1/2-inch iron rod found at the centerline intersection of a 50-foot wide road easement (San Gabriel Ranch Road and Mustang Circle), per said plat of San Gabriel River Ranch subdivision, said point being the east corner of Lot 37, of said San Gabriel River Ranch subdivision, described as a called 1.09 acre tract of land in a deed to Toni M. Baugh, recorded in Document No. 9723441, of the Official Records of Williamson County, Texas, (O.R.W.C.TX.), same being the north corner of Lot 40, of said San Gabriel River Ranch subdivision, described as a called 0.76 acre tract of land in a deed to Carl Thompson, recorded in Document No. 9915763, O.R.W.C.TX.;

THENCE N 38°17'56" W, with the centerline of said San Gabriel Ranch Road, a distance of 146.38 feet to a 5/8-inch iron rod with an aluminum cap stamped "Williamson County" set on the proposed south ROW line of said San Gabriel Ranch Road, same being the north line of said Lot 37, for the west corner of Lot 39, of said San Gabriel River Ranch subdivision, described as a called 0.77 acre tract of land in a deed to Jeff Dean Case, recorded in Document No. 2002002270, O.P.R.W.C.TX., the south corner of said Lot 38, and the **POINT OF BEGINNING** and the most southerly southeast corner of the parcel described herein;

THENCE departing the proposed north ROW line of said San Gabriel Ranch Road, continuing with the centerline of said San Gabriel Ranch Road, the following two (2) courses and distances numbered 1-2:

1) N 38°17'56" W, a distance of 77.54 feet to a calculated point, and

2) N 61°00'13" W, a distance of 84.87 feet to a calculated point, for the north corner of said Lot 37, the east corner of Lot 133, of said San Gabriel River Ranch subdivision, described as a called 0.78 acre tract of land in a deed to Joe E. Mireles, Jr., recorded in Document No. 2015108075, O.P.R.W.C.TX., the south corner of Lot 132, of said San Gabriel River Ranch subdivision, described as a called 1.280 acre tract of land in a deed to Joshua Joe Solis, recorded in Document No, 2013015102, O.P.R.W.C.TX., and the west corner of said Lot 38 and the southwest corner of the parcel described herein, from which a cotton spindle found, bears N 61°00'13" W, a distance of 1.07 feet;

3) **THENCE** N 20°14'47" E, departing the centerline of said San Gabriel Ranch Road, with the common line of said Lot 132 and said Lot 38, a distance of 108.99 feet to a calculated point, the east corner of said Lot 132, and the south corner of Lot 131, of said San Gabriel River Ranch subdivision, described as a called 1.41 acre tract of land in said deed to Joshua Joe Solis;

4) **THENCE** N 39°45'37" E, with the common line of said Lot 131 and said Lot 38, a distance of 66.85 feet to a 5/8-inch iron rod with an aluminum cap stamped "Williamson County" set on the proposed north right-of-way line of said San Gabriel Ranch Road, for the north corner of the parcel described herein;

THENCE departing the common line of said Lot 131 and said Lot 38, with the proposed north right-of-way line of said San Gabriel Ranch Road, over and across said Lot 38, the following three (3) courses and distances numbered 5-7:

5) S 46°36'13" E, a distance of 21.75 feet to a 5/8-inch iron rod with an aluminum cap stamped "Williamson County" set,

6) S 01°05'13" W, a distance of 163.50 feet to a 5/8-inch iron rod with an aluminum cap stamped "Williamson County" set, and on the north line of said San Gabriel Ranch Road easement,

7) S 38°17'56" E, with said San Gabriel Ranch Road easement, a distance of 78.27 feet to a 5/8-inch iron rod with an aluminum cap stamped "Williamson County" set on the common line of said Lot 38 and said Lot 39, for the most easterly southeast corner of the parcel described herein;

8) **THENCE** S 50°49'40" W, continuing with the proposed north right-of-way line of said San Gabriel Ranch Road, same being the common line of said Lot 38 and said Lot 39, a distance of 25.01 feet to the **POINT OF BEGINNING**, and containing 0.313 acres (13,631 sq. ft.) of land, more or less.

This property description is accompanied by a plat of even date.

All bearings are based on the Texas State Plane Coordinate System, Central Zone, NAD83. All distances shown hereon are adjusted to the surface by dividing by a combined scale factor of 0.99985472. Units: U.S. Survey Feet.

THE STATE OF TEXAS §
§ KNOW ALL MEN BY THESE PRESENTS:
COUNTY OF TRAVIS §

That I, William R. Herring, a Registered Professional Land Surveyor, do hereby certify that the above description is true and correct to the best of my knowledge and belief and that the property described herein was determined by a survey made on the ground under my direction and supervision.

WITNESS MY HAND AND SEAL at Austin, Travis County, Texas this the 22nd day of January, 2018.

1/22/2018

William R. Herring
Registered Professional Land Surveyor
No. 6355-State of Texas

SURVEYING AND MAPPING, LLC.
4801 Southwest Parkway
Parkway Two, Suite 100
Austin, Texas 78735
Texas Firm Registration No. 10064300

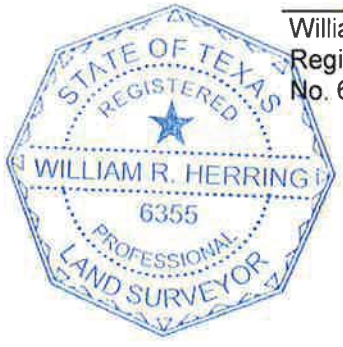

LEGEND

○	5/8" IRON ROD SET WITH ALUMINUM CAP STAMPED "WILLIAMSON COUNTY"
●	1/2" IRON ROD FOUND UNLESS NOTED
⊛	COTTON SPINDLE FOUND
△	CALCULATED POINT
ℙ	PROPERTY LINE
( )	RECORD INFORMATION
P.O.B.	POINT OF BEGINNING
P.O.C.	POINT OF COMMENCING
P.O.R.	POINT OF REFERENCE
N.T.S.	NOT TO SCALE
P.R.W.C.TX.	PLAT RECORDS OF WILLIAMSON COUNTY, TEXAS
D.R.W.C.TX.	DEED RECORDS OF WILLIAMSON COUNTY, TEXAS
O.R.W.C.TX.	OFFICIAL RECORDS OF WILLIAMSON COUNTY, TEXAS
O.P.R.W.C.TX.	OFFICIAL PUBLIC RECORDS OF WILLIAMSON COUNTY, TEXAS
	DISTANCE NOT TO SCALE
	DEED LINE (COMMON OWNERSHIP)

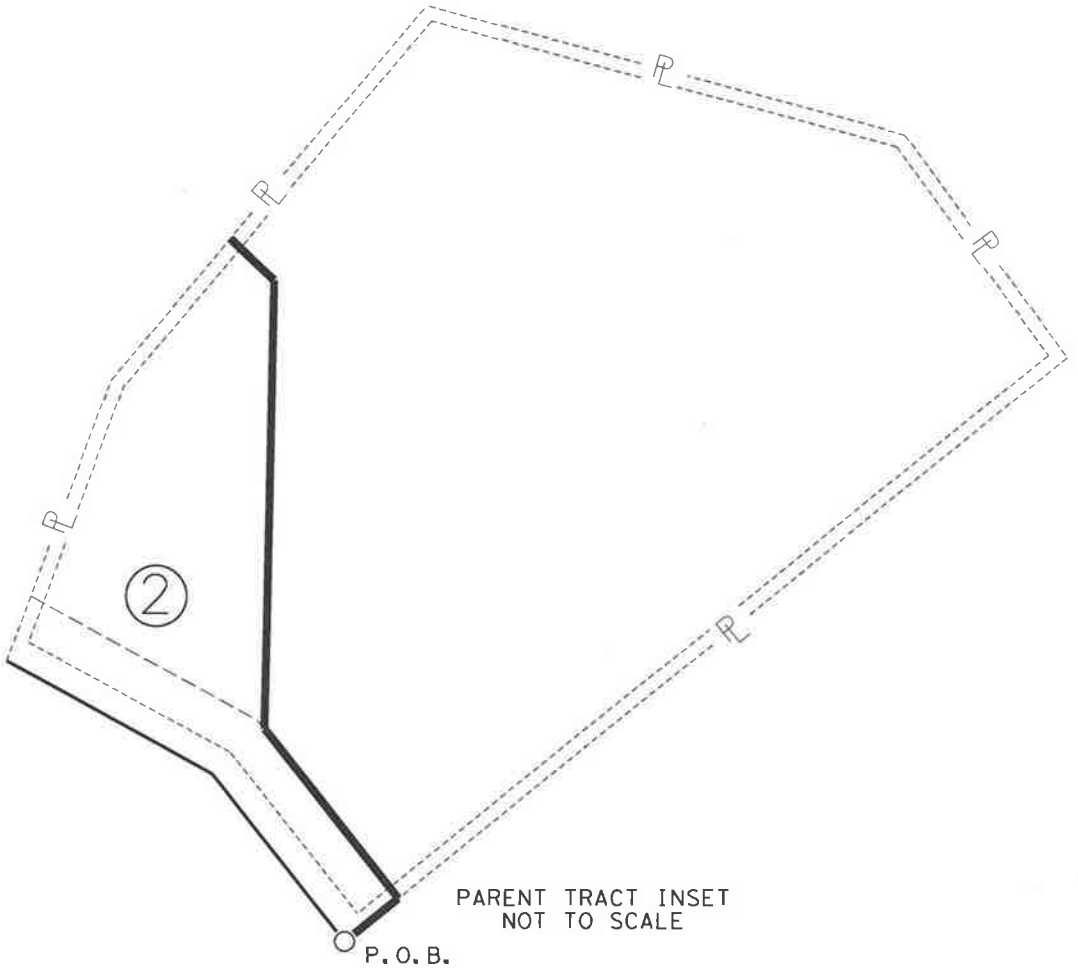

PARENT TRACT INSET
NOT TO SCALE



NOT TO SCALE

NOTES:

1. ALL PROJECT COORDINATES ARE BASED ON THE TEXAS STATE PLANE COORDINATE SYSTEM, TEXAS CENTRAL ZONE, NAD83(2011) (EPOCH 2010)/NAVD88(GEOID03). ALL COORDINATES SHOWN HEREIN ARE ADJUSTED TO SURFACE BY DIVIDING BY A COMBINED SCALE FACTOR OF 0.99985472. UNITS: U.S. SURVEY FEET
2. THIS SURVEY WAS COMPLETED WITHOUT THE BENEFIT OF TITLE REPORT. THERE MAY BE EASEMENTS OR OTHER MATTERS, RECORDED OR UNRECORDED, THAT ARE NOT SHOWN.
3. THIS PLAT IS ACCOMPANIED BY A PROPERTY DESCRIPTION OF EVEN DATE.

REF. FIELD NOTE NO. 33839

FILE:J:\1016037466\100\Survey\02Base\V8i\Parcels\SGRR_Parcel 2_01_R2.dgn

EXISTING	1.670 AC.	ACQUIRE	0.313 AC.	REMAINING	1.357 AC. LEFT

SAM
SURVEYING·AERIAL MAPPING·ENGINEERING
4801 Southwest Parkway
Building Two, Suite 100
Austin, Texas 78735
(512) 447-0575
Fax: (512) 326-3029
Texas Firm Registration No. 10064300

RIGHT-OF-WAY SKETCH
SHOWING PROPERTY OF
MICHAEL A. KROEBER
PARCEL 2
0.313 AC. (13,631 SQ. FT.)

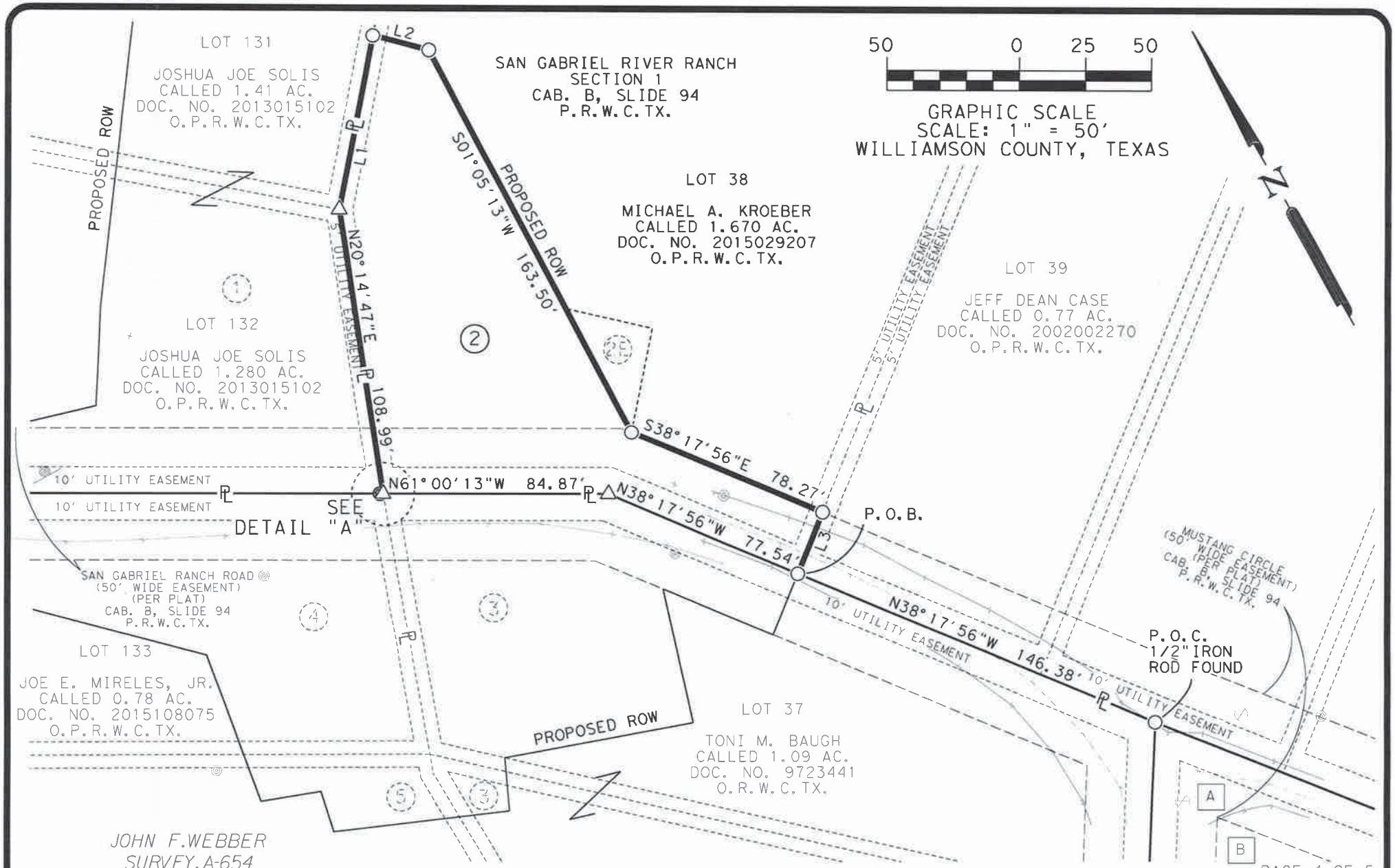

REF. FIELD NOTE NO. 33839

FILE: J:\1016037466\100\Survey\02Base\V8i\Parcels\SGRR_Parcel 2_02_R2.dgn

EXISTING	1.670 AC.	ACQUIRE	0.313 AC.	REMAINING	1.357 AC. LEFT

SAM
SURVEYING · AERIAL MAPPING · ENGINEERING
4801 Southwest Parkway
Building Two, Suite 100
Austin, Texas 78735
(512) 447-0575
Fax: (512) 326-3029
Texas Firm Registration No. 10064300

RIGHT-OF-WAY SKETCH
SHOWING PROPERTY OF
MICHAEL A. KROEBER
PARCEL 2
0.313 AC. (13,631 SQ. FT.)

LINE TABLE

LINE NO.	BEARING	DISTANCE
L1	N39°45'37"E	66.85'
L2	S46°36'13"E	21.75'
L3	S50°49'40"W	25.01'

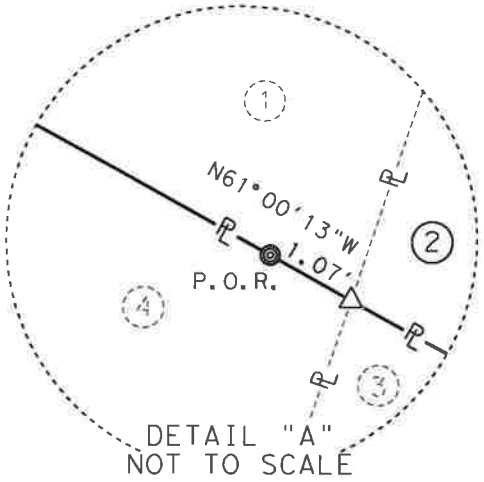

DETAIL "A"
NOT TO SCALE

A

SAN GABRIEL RANCH ROAD
(50' WIDE EASEMENT)
(PER PLAT)
CAB. B, SLIDE 94
P.R.W.C.TX.

B

LOT 40

CARL THOMPSON
CALLED 0.76 AC.
DOC. NO. 9915763
O.R.W.C.TX.



I HEREBY CERTIFY THAT THIS SURVEY WAS MADE ON THE GROUND UNDER MY DIRECTION AND SUPERVISION AND THAT THIS PLAT IS TRUE AND CORRECT TO THE BEST OF MY KNOWLEDGE AND BELIEF.

WILLIAM R. HERRING
REGISTERED PROFESSIONAL LAND SURVEYOR
NO. 6355, STATE OF TEXAS

1/22/2018
DATE

REF. FIELD NOTE NO. 33839
FILE:J:\1016037466\100\Survey\02Base\V8i\Parcels\SGRR_Parcel 2_02_R2.dgn

EXISTING	1.670 AC.	ACQUIRE	0.313 AC.	REMAINING	1.357 AC. LEFT

SAM
SURVEYING·AERIAL MAPPING·ENGINEERING
4801 Southwest Parkway
Building Two, Suite 100
Austin, Texas 78735
(512) 447-0575
Fax: (512) 326-3029
Texas Firm Registration No. 10064300

RIGHT-OF-WAY SKETCH
SHOWING PROPERTY OF
MICHAEL A. KROEBER
PARCEL 2
0.313 AC. (13,631 SQ. FT.)

EXHIBIT "B"

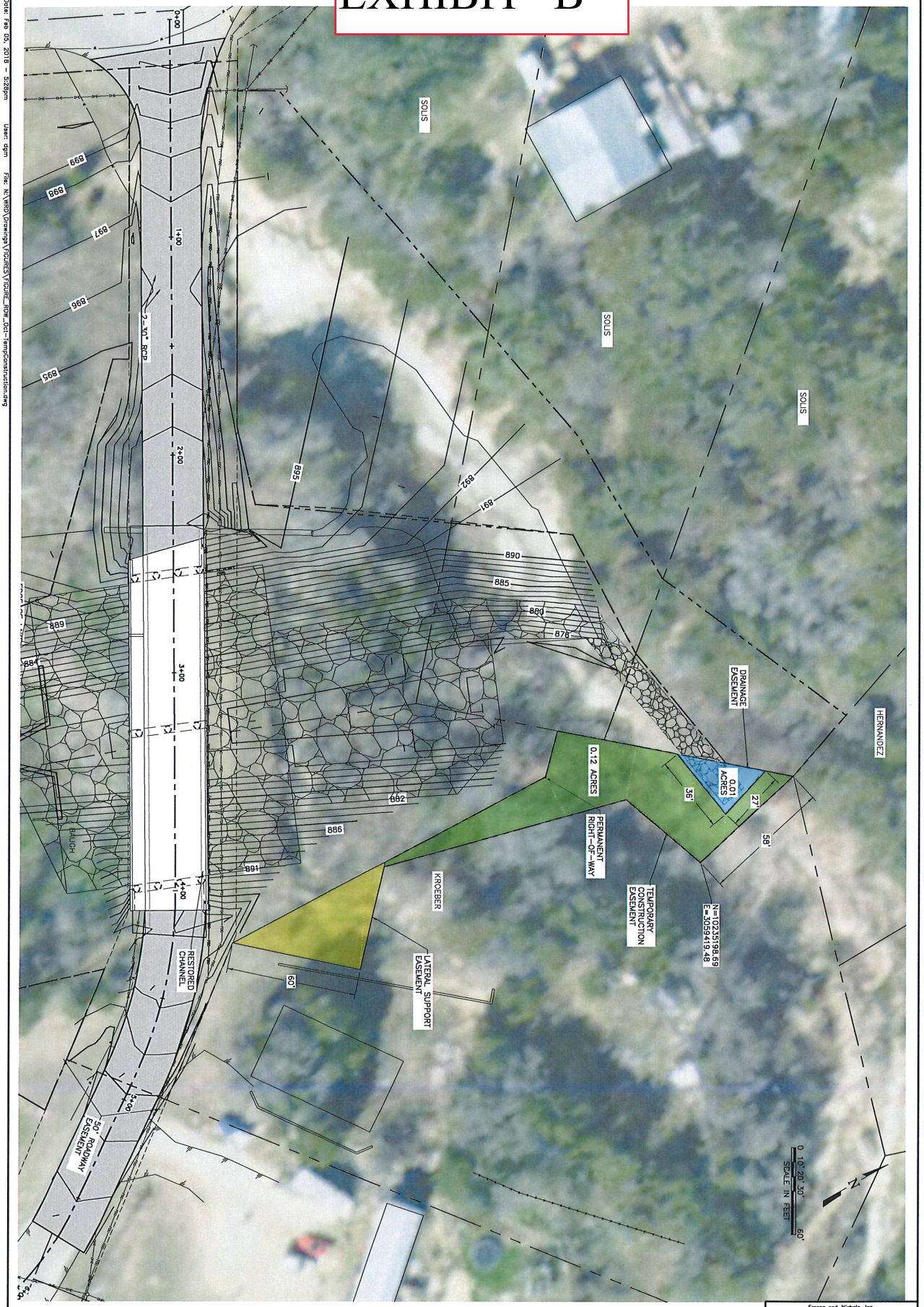

Date: Feb 05, 2018 - 5:28pm User: dgm File: N:\WRD\Drawings\FIGURES\FIGURE_ROW_Oct-TempConstruction.dwg

Freese and Nichols, Inc.
Texas Registered Engineering Firm F-2144

SEQ.	SHEET	NO.	ISSUE	BY	DATE	F&N JOB NO. WIC16278
	2					DATE 8/29/2017
						DESIGNED: SV
						DRAWN: MDB
						REVISED:
						CHECKED: AD

VERIFY SCALE 0 1 Bar is one inch on original drawing. If not one inch on this sheet, adjust scale.

FILE NAME FIGURE_ROW_Oct-TempConstruction.dwg

WILLIAMSON COUNTY, TEXAS

SAN GABRIEL RANCH ROAD DAM

KROEBER TEMPORARY CONSTRUCTION AND DRAINAGE EASEMENTS

FREESE AND NICHOLS
10431 Morado Circle, Suite 300
Austin, Texas 78759
Phone - (512) 617-3100
Fax - (512) 617-3101

NOT FOR CONSTRUCTION

THIS DOCUMENT IS RELEASED FOR THE PURPOSE OF INTERIM REVIEW UNDER THE AUTHORITY OF DERRIN.GRAMMITTENSEN, P.E. TEXAS NO: 100000 ON DATE: 8/28/2017 IT IS NOT TO BE USED FOR CONSTRUCTION, BIDDING OR PERMIT PURPOSES.

EXHIBIT C

County: Williamson
Easement No.: 2E
Highway: San Gabriel Ranch Road
Limits: From: South of Remuda Drive
To: North of Mustang Circle

DESCRIPTION FOR EASEMENT 2E

DESCRIPTION OF A 0.016 ACRE (676 SQ. FT.) EASEMENT, LOCATED IN THE JOHN F. WEBBER SURVEY, ABSTRACT 654, WILLIAMSON COUNTY, TEXAS, BEING A PORTION OF LOT 38, SAN GABRIEL RIVER RANCH, SECTION 1, A SUBDIVISION OF RECORD IN CABINET B, SLIDE 94, PLAT RECORDS OF WILLIAMSON COUNTY, TEXAS (P.R.W.C.TX.), DESCRIBED AS A CALLED 1.670 ACRE TRACT OF LAND IN A DEED TO MICHAEL A. KROEBER, RECORDED IN DOCUMENT NO. 2015029207 OF THE OFFICIAL PUBLIC RECORDS OF WILLIAMSON COUNTY, TEXAS (O.P.R.W.C.TX.), SAID 0.016 ACRE (676 SQ. FT.) EASEMENT, AS SHOWN ON AN EASEMENT SKETCH PREPARED BY SAM, LLC, BEING MORE PARTICULARLY DESCRIBED BY METES AND BOUNDS AS FOLLOWS:

COMMENCING at a 1/2-inch iron rod found at the centerline intersection of a 50-foot wide road easement (San Gabriel Ranch Road and Mustang Circle), per said plat of San Gabriel River Ranch subdivision, said point being the east corner of Lot 37, of said San Gabriel River Ranch subdivision, described as a called 1.09 acre tract of land in a deed to Toni M. Baugh, recorded in Document No. 9723441, of the Official Records of Williamson County, Texas, (O.R.W.C.TX.), same being the north corner of Lot 40, of said San Gabriel River Ranch subdivision, described as a called 0.76 acre tract of land in a deed to Carl Thompson, recorded in Document No. 9915763, O.R.W.C.TX.;

a) **THENCE** N 38°17'56" W, with the centerline of said San Gabriel Ranch Road, a distance of 146.38 feet to a 5/8-inch iron rod with an aluminum cap stamped "Williamson County" set on the right-of-way line of said San Gabriel Ranch Road, same being the north line of said Lot 37, for the west corner of Lot 39, of said San Gabriel River Ranch subdivision, described as a called 0.77 acre tract of land in a deed to Jeff Dean Case, recorded in Document No. 2002002270, O.P.R.W.C.TX., and the south corner of said Lot 38,

b) **THENCE** N 50°49'40" E, with the common line of said Lots 38 and 39, a distance of 25.01 feet to a 5/8-inch iron rod with an aluminum cap stamped "Williamson County" set on the proposed right-of-way line of San Gabriel Ranch Road, same being the existing north easement line of said San Gabriel Ranch Road (a 50 foot wide easement), as recorded in Cabinet B, Slide 94, P.R.W.C.TX., and

c) **THENCE** N 38°17'56" W, departing the common line of Lots 38 and 39, over and across Lot 38, with the existing north easement line of San Gabriel Ranch Road, same being the north proposed right-of-way line of said San Gabriel Ranch Road, a distance of 78.27 feet to a 5/8-inch iron rod with an aluminum cap stamped "Williamson County" set for the south corner of the easement described herein and the **POINT OF BEGINNING**;

THENCE over and across said Lot 38, the following three (3) courses and distances numbered 1 – 3:

1) N 01°05'14" E, with the proposed north right-of-way line of San Gabriel Ranch Road, a distance of 53.10 feet to a 5/8-inch iron rod with an aluminum cap stamped "Williamson County" set for the northwest corner of the easement described herein,

2) S 48°18'15" E, departing the proposed north right-of-way line of San Gabriel Ranch Road, a distance of 33.52 feet to a 5/8-inch iron rod with an aluminum cap stamped "Williamson County" set for the northeast corner of the easement described herein, and

3) S 40°12'47" W, a distance of 40.32 feet to the **POINT OF BEGINNING**, and containing 0.016 acres (676 sq. ft.) of land, more or less.

This property description is accompanied by a plat of even date.

All bearings are based on the Texas Coordinate System, Central Zone, NAD83. All distances shown hereon are adjusted to the surface by dividing by a combined scale factor of 0.99985472. Units: U.S. Survey Feet.

THE STATE OF TEXAS §
§ KNOW ALL MEN BY THESE PRESENTS:
COUNTY OF TRAVIS §

That I, William R. Herring, a Registered Professional Land Surveyor, do hereby certify that the above description is true and correct to the best of my knowledge and belief and that the property described herein was determined by a survey made on the ground under my direction and supervision.

WITNESS MY HAND AND SEAL at Austin, Travis County, Texas this the 22nd day of January, 2018.

SURVEYING AND MAPPING, LLC.
4801 Southwest Parkway
Parkway Two, Suite 100
Austin, Texas 78735
Texas Firm Registration No. 10064300

William R. Herring
Registered Professional Land Surveyor
No. 6355-State of Texas



LEGEND

○	5/8" IRON ROD SET WITH ALUMINUM CAP STAMPED "WILLIAMSON COUNTY"
●	1/2" IRON ROD FOUND UNLESS NOTED
⊙	COTTON SPINDLE FOUND
△	CALCULATED POINT
℄	PROPERTY LINE
( )	RECORD INFORMATION
P.O.B.	POINT OF BEGINNING
P.O.C.	POINT OF COMMENCING
P.O.R.	POINT OF REFERENCE
N.T.S.	NOT TO SCALE
P.R.W.C.TX.	PLAT RECORDS OF WILLIAMSON COUNTY, TEXAS
D.R.W.C.TX.	DEED RECORDS OF WILLIAMSON COUNTY, TEXAS
O.R.W.C.TX.	OFFICIAL RECORDS OF WILLIAMSON COUNTY, TEXAS
O.P.R.W.C.TX.	OFFICIAL PUBLIC RECORDS OF WILLIAMSON COUNTY, TEXAS
~~	DISTANCE NOT TO SCALE
——1——	DEED LINE (COMMON OWNERSHIP)

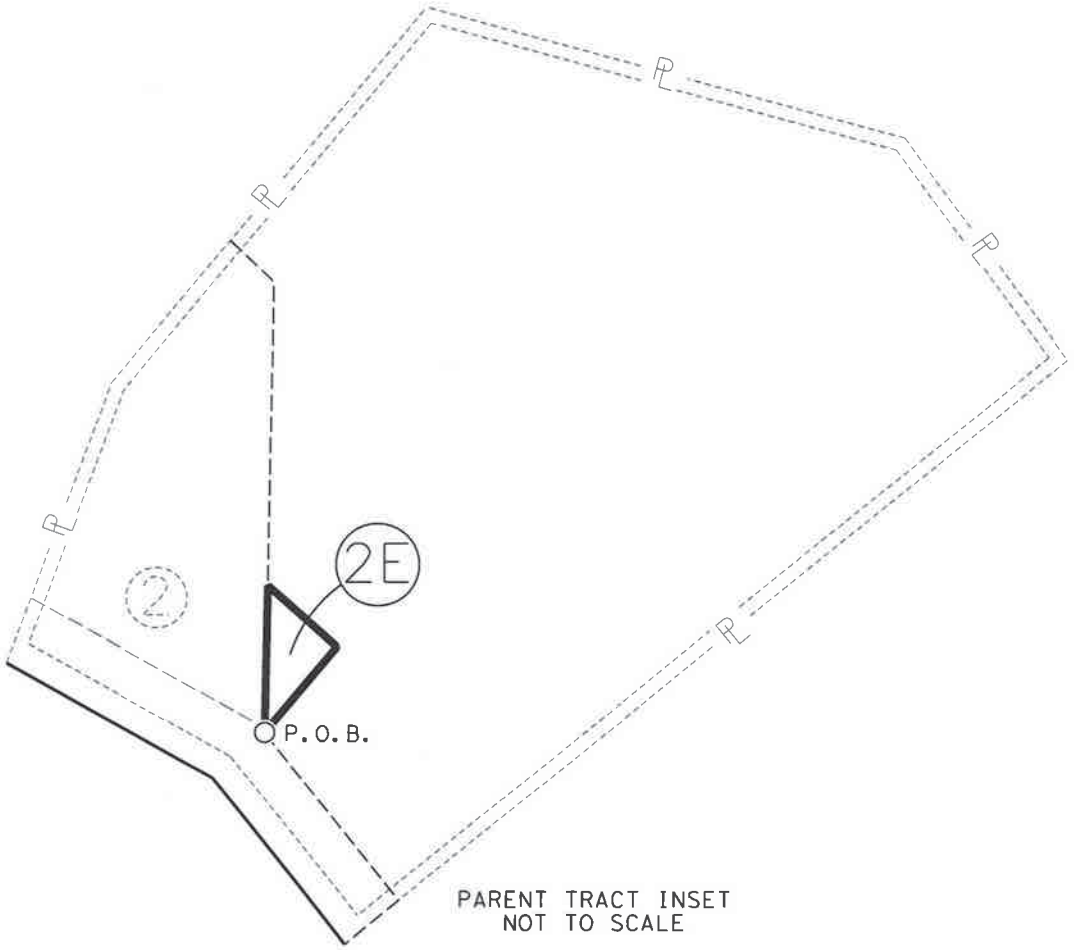

PARENT TRACT INSET
NOT TO SCALE



NOT TO SCALE

NOTES:

1. ALL PROJECT COORDINATES ARE BASED ON THE TEXAS STATE PLANE COORDINATE SYSTEM, TEXAS CENTRAL ZONE, NAD83(2011) (EPOCH 2010)/NAVD88(GEOID03). ALL COORDINATES SHOWN HEREIN ARE ADJUSTED TO SURFACE BY DIVIDING BY A COMBINED SCALE FACTOR OF 0.99985472. UNITS: U.S. SURVEY FEET
2. THIS SURVEY WAS COMPLETED WITHOUT THE BENEFIT OF TITLE REPORT. THERE MAY BE EASEMENTS OR OTHER MATTERS, RECORDED OR UNRECORDED, THAT ARE NOT SHOWN.
3. THIS PLAT IS ACCOMPANIED BY A PROPERTY DESCRIPTION OF EVEN DATE.

REF. FIELD NOTE NO. 39417

FILE:J:\1016037466\100\Survey\02Base\V8i\Parcels\SGRR_Parcel 2E_01.dgn

EXISTING	1.670 AC.	ACQUIRE	0.000 AC.	REMAINING	1.670 AC. LEFT

SAM
SURVEYING·AERIAL MAPPING·ENGINEERING
4801 Southwest Parkway
Building Two, Suite 100
Austin, Texas 78735
(512) 447-0575
Fax: (512) 326-3029
Texas Firm Registration No. 10064300

EASEMENT SKETCH
SHOWING PROPERTY OF
MICHAEL A. KROEBER
EASEMENT 2E
0.016 AC. (676 SQ. FT.)

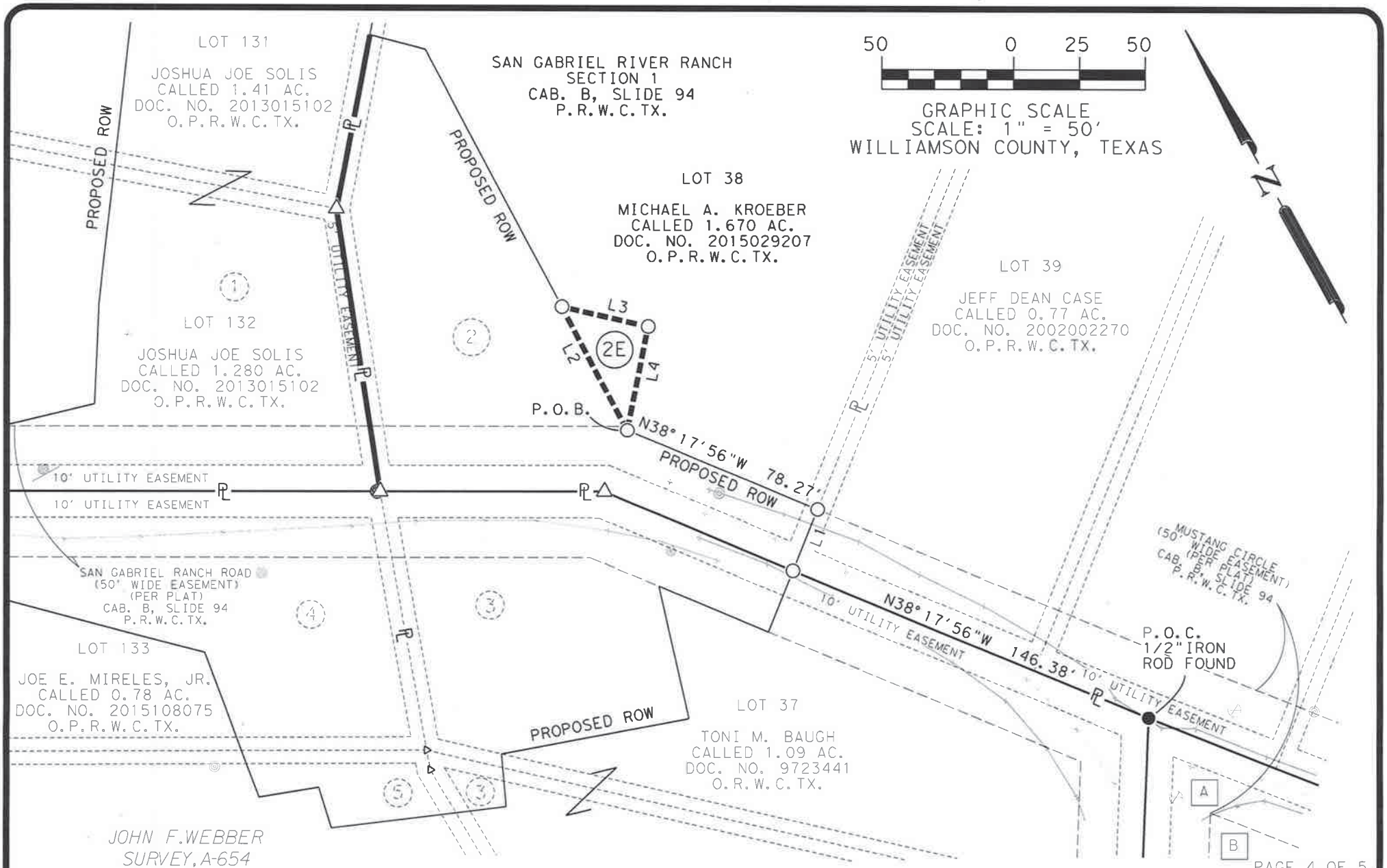

REF. FIELD NOTE NO. 39417

FILE: J:\1016037466\100\Survey\02Base\V8i\Parcels\SGRR_Parcel 2E_02.dgn

EXISTING	1.670 AC.	ACQUIRE	0.000 AC.	REMAINING	1.670 AC. LEFT

SAM
SURVEYING · AERIAL MAPPING · ENGINEERING
4801 Southwest Parkway
Building Two, Suite 100
Austin, Texas 78735
(512) 447-0575
Fax: (512) 326-3029
Texas Firm Registration No. 10064300

EASEMENT SKETCH
SHOWING PROPERTY OF
MICHAEL A. KROEBER
EASEMENT 2E
0.016 AC. (676 SQ. FT.)

LINE TABLE

LINE NO.	BEARING	DISTANCE
L1	N50°49'40"E	25.01'
L2	N01°05'14"E	53.10'
L3	S48°18'15"E	33.52'
L4	S40°12'47"W	40.32'

A

SAN GABRIEL RANCH ROAD
(50' WIDE EASEMENT)
(PER PLAT)
CAB. B, SLIDE 94
P.R.W.C.TX.

B

LOT 40

CARL THOMPSON
CALLED 0.76 AC.
DOC. NO. 9915763
O.R.W.C.TX.

STATE OF TEXAS
REGISTERED
WILLIAM R. HERRING
6355
PROFESSIONAL
LAND SURVEYOR

I HEREBY CERTIFY THAT THIS SURVEY WAS MADE ON THE GROUND UNDER MY DIRECTION AND SUPERVISION AND THAT THIS PLAT IS TRUE AND CORRECT TO THE BEST OF MY KNOWLEDGE AND BELIEF.

WILLIAM R. HERRING
REGISTERED PROFESSIONAL LAND SURVEYOR
NO. 6355, STATE OF TEXAS

1/22/2018
DATE

REF. FIELD NOTE NO. 39417

FILE:J:\1016037466\100\Survey\02Base\V8i\Parcels\SGRR_Parcel 2E_02.dgn

EXISTING	1.670 AC.	ACQUIRE	0.000 AC.	REMAINING	1.670 AC. LEFT

SAM
SURVEYING·AERIAL MAPPING·ENGINEERING
4801 Southwest Parkway
Building Two, Suite 100
Austin, Texas 78735
(512) 447-0575
Fax: (512) 326-3029
Texas Firm Registration No. 10064300

EASEMENT SKETCH
SHOWING PROPERTY OF
MICHAEL A. KROEBER
EASEMENT 2E
0.016 AC. (676 SQ. FT.)

EXHIBIT "D"

Parcel 2

DEED
San Gabriel Ranch Road Bridge

THE STATE OF TEXAS §
§
COUNTY OF WILLIAMSON §

NOTICE OF CONFIDENTIALITY RIGHTS: IF YOU ARE A NATURAL PERSON, YOU MAY REMOVE OR STRIKE ANY OF THE FOLLOWING INFORMATION FROM THIS INSTRUMENT BEFORE IT IS FILED IN THE PUBLIC RECORDS: YOUR SOCIAL SECURITY NUMBER OR YOUR DRIVER'S LICENSE NUMBER.

NOW, THEREFORE, KNOW ALL BY THESE PRESENTS:

That MICHAEL A. KROEBER a/k/a MICHAEL ANTHONY KROEBER, hereinafter referred to as Grantor, whether one or more, for and in consideration of the sum of Ten Dollars ($10.00) and other good and valuable consideration to Grantor in hand paid by Williamson County, Texas, the receipt and sufficiency of which is hereby acknowledged, and for which no lien is retained, either expressed or implied, have this day Sold and by these presents do Grant, Bargain, Sell and Convey unto WILLIAMSON COUNTY, TEXAS, all that certain tract or parcel of land lying and being situated in the County of Williamson, State of Texas, along with any improvements thereon, being more particularly described as follows:

> All of that certain 0.313 acre (13,631 Sq. Ft.) of land in the John F. Webber Survey, Abstract No. 654, Williamson County, Texas; being more fully described by metes and bounds in Exhibit "A", attached hereto and incorporated herein (**Parcel 2**).

SAVE AND EXCEPT, HOWEVER, it is expressly understood and agreed that Grantor is retaining title to the following improvements located on the property described in said Exhibit "A" to wit: NONE

RESERVATIONS FROM AND EXCEPTIONS TO CONVEYANCE AND WARRANTY:

Visible and apparent easements not appearing of record;

Any discrepancies, conflicts, or shortages in area or boundary lines or any encroachments or any overlapping of improvements which a current survey would show;

Easements, restrictions, reservations, covenants, conditions, oil and gas leases, mineral severances, and encumbrances for taxes and assessments (other than liens and conveyances) presently of record in the Official Public Records of Williamson County, Texas, that affect the property, but only to the extent that said items are still valid and in force and effect at this time.

Grantor reserves all of the oil, gas and other minerals in and under the land herein conveyed but waives all rights of ingress and egress to the surface thereof for the purpose of exploring, developing, mining or drilling or pumping the same; provided, however, that operations for exploration or recovery of any such minerals shall be permissible so long as all surface operations in connection therewith are located at a point outside the acquired parcel and upon the condition that none of such operations shall be conducted so near the surface of said land as to interfere with the intended use thereof or in any way interfere with, jeopardize, or endanger the facilities of Williamson County, Texas or create a hazard to the public users thereof; it being intended, however, that nothing in this reservation shall affect the title and the rights of Grantee to take and use without additional compensation any, stone, earth, gravel, caliche, iron ore, gravel or any other road building material upon, in and under said land for the construction and maintenance of San Gabriel Ranch Road.

TO HAVE AND TO HOLD the property herein described and herein conveyed together with all and singular the rights and appurtenances thereto in any wise belonging unto Williamson County, Texas and its assigns forever; and Grantor does hereby bind itself, its heirs, executors, administrators, successors and assigns to Warrant and Forever Defend all and singular the said premises herein conveyed unto Williamson County, Texas and its assigns against every person whomsoever lawfully claiming or to claim the same or any part thereof.

This deed is being delivered in lieu of condemnation.

IN WITNESS WHEREOF, this instrument is executed on this the ___ day of _____, 2018.

GRANTOR:

_____
Michael A. Kroeber a/k/a
Michael Anthony Kroeber

ACKNOWLEDGMENT

STATE OF TEXAS §
§
COUNTY OF _____ §

This instrument was acknowledged before me on this the ___ day of _____, 2018, by Michael A. Kroeber, in the capacity and for the purposes and consideration recited therein.

_____
Notary Public, State of Texas

PREPARED IN THE OFFICE OF:

Sheets & Crossfield, P.C.
309 East Main
Round Rock, Texas 78664

GRANTEE'S MAILING ADDRESS:

Williamson County, Texas
Attn: County Auditor
710 Main Street, Suite 101
Georgetown, Texas 78626

AFTER RECORDING RETURN TO:

EXHIBIT "E"

SLOPE AND LATERAL SUPPORT EASEMENT
San Gabriel Ranch Road

THE STATE OF TEXAS §
§ **KNOW ALL BY THESE PRESENTS:**
COUNTY OF WILLIAMSON §

That MICHAEL A. KROEBER a/k/a MICHAEL ANTHONY KROEBER, his successors and assigns ("Grantor"), for and in consideration of the sum of One and no/100th DOLLARS ($1.00) and other good and valuable consideration paid by WILLIAMSON COUNTY, TEXAS, ("Grantee"), receipt of which is hereby acknowledged, does hereby Grant, Sell, Donate and Convey, unto Grantee a permanent easement and right-of-way to construct, install, operate, maintain, inspect, reconstruct, enlarge, relocate, rebuild, repair, and remove materials for slope and lateral support of the adjacent roadway facility and related appurtenances and improvements, in, on, under and across the following real property ("Property"), to wit:

> See Exhibit "A" attached hereto and incorporated herein for all purposes, being a parcel of land containing approximately 0.016 acre (676 square feet); said area described in further detail by metes and bounds in Exhibit "A" attached hereto and incorporated herein (**Parcel 2SE)**.

This conveyance is made and accepted subject to any and all conditions and restrictions, if any, relating to the hereinabove described property, to the extent, and only to the extent, that the same may still be in force and effect, shown of record in the office of the County Clerk of Williamson County, Texas.

The Easement, rights, and privileges granted herein are non-exclusive, however, Grantor covenants that it will not convey any future easement or conflicting rights within the area covered by this grant, without the express written consent of Grantee, which consent shall not be unreasonably withheld. Prior to granting its consent for other easements Grantee may require reasonable safeguards to protect the integrity of the adjacent road system improvements.

Grantor shall be specifically prohibited from removing any earth, fill, or other materials from the Property, whether existing or installed by Grantee, and Grantor shall not otherwise impact, alter, or take any action to affect or reduce the lateral support of the adjacent roadway facilities and related appurtenances and improvements, without Grantee's prior written consent.

To the extent allowed by law, Grantee shall indemnify Grantor against any loss and damage which shall be caused by the exercise of the rights of ingress and egress or by any wrongful or negligent act or omission of Grantee's agents or employees in the course of their employment.

The Easement, rights, privileges and obligations granted in this Easement shall be appurtenant to and shall run with Grantor's property, and shall be binding upon and inure to the benefit of the parties to this Easement, their successors, assigns, mortgagees, tenants, guests, employees, representatives, servants and invitees, subject to all matters of record or in existence affecting the Property.

TO HAVE AND TO HOLD the rights and interests described unto Grantee and its successors and assigns, forever, and Grantor does hereby bind himself, his heirs, successors and assigns, and legal representatives, to warrant and forever defend, all and singular, the above-described Easement and rights and interests unto Grantee, its successors and assigns, against every person whomsoever lawfully claiming, or to claim same, or any part thereof.

IN WITNESS WHEREOF, Grantor has caused this instrument to be executed this _____ day of _____, 2018.

GRANTOR:

_____
Michael A. Kroeber a/k/a
Michael Anthony Kroeber

ACKNOWLEDGMENT

STATE OF TEXAS **§**
§
COUNTY OF WILLIAMSON **§**

This instrument was acknowledged before me on this the _____day of _____, 2018, by Michael A. Kroeber in the capacity and for the purposes and consideration therein expressed.

_____
Notary Public, State of Texas

ACCEPTED AND AGREED:

WILLIAMSON COUNTY, TEXAS

By:_____
Dan A. Gattis, County Judge

ACKNOWLEDGMENT

STATE OF TEXAS §
§
COUNTY OF WILLIAMSON §

This instrument was acknowledged before me on this the _____day of _____, 2018, by Dan A. Gattis, in the capacity and for the purposes and consideration therein expressed.

_____
Notary Public, State of Texas

PREPARED IN THE OFFICE OF:
Sheets & Crossfield, P.C.
309 East Main
Round Rock, Texas 78664

GRANTEE'S MAILING ADDRESS:
Williamson County, Texas
Attn: County Auditor
710 Main Street, Suite 101
Georgetown, Texas 78626

AFTER RECORDING RETURN TO:

EXHIBIT "F"

Parcel 2

TEMPORARY DRAINAGE EASEMENT
San Gabriel Ranch Road Channel Improvements

THE STATE OF TEXAS '
' KNOW ALL BY THESE PRESENTS:
COUNTY OF WILLIAMSON '

That MICHAEL A. KROEBER a/k/a MICHAEL ANTHONY KROEBER, and their successors and assigns, hereinafter referred to as "Grantor" (whether one or more), for and in consideration of the sum of Ten and No/100 ($10.00) Dollars cash in hand paid and other good and valuable consideration paid to Grantor by WILLIAMSON COUNTY, TEXAS, its agents and assigns, hereinafter referred to as "Grantee", receipt of which consideration is hereby acknowledged, has GRANTED, SOLD and CONVEYED, and by these premises does hereby GRANT, SELL and CONVEY unto Grantee a temporary easement (the "Easement") interest in, on, over, upon, above and across the following property ("Property"):

> Two tracts of land totaling 0.01 acre in the John F. Webber Survey, Abstract No. 654, Williamson County, Texas; said tract being more particularly described in Exhibit "A" attached hereto and incorporated herein (**Parcel 2DE**).

The temporary easement, rights and privileges herein granted shall be used for the purposes of opening, constructing and maintaining a trapezoidal channel, bank stabilization, erosion control, topsoil, seeding, irrigation, in-stream vegetative habitat creation and installation of cobbles, limestone blocks and other necessary or related material and cross vane drop structures, in the general locations and according to the plan and specifications as shown in Exhibit "B" attached hereto and incorporated herein, together with the right and privilege at all times during the grant of this Easement of the Grantee herein, its agents, employees and representatives of ingress and egress to and from said premises for the purpose of making any improvements, modifications or repairs which Grantee deems necessary for the purposes described herein.

The temporary easement, rights and privileges shall also be used for post-construction monitoring, maintenance and modification of the improvements described herein and any ecological uplift within the Easement area pursuant to the requirements of Grantee's proposed U.S. Army Corps of Engineers' Nationwide Permit 14: Linear Transportation Project, and Nationwide Permit 27: Aquatic Habitat Restoration for dam removal and stream restoration at the San Gabriel Ranch Road Dam, Liberty Hill.

This Temporary Drainage Easement shall expire and automatically terminate and be of no further force and effect after the expiration of five (5) years from the date of substantial completion of the proposed removal of the San Gabriel Ranch Road Dam, proposed construction of replacement bridge, and proposed Lackey Creek channel realignment restoration.

GRANTEE shall be allowed to extend the duration of the Temporary Drainage Easement identified herein for up to two (2) additional periods of one year each upon: (1) notification to Grantor in writing of the requested extension period, and (2) tendering the additional sum of $1500 for each additional extension period used.

Grantor hereby retains and shall continue to enjoy the surface of such Temporary Drainage Easement for all such rights and privileges as may be used without interfering with or abridging the rights and purposes of the Easement herein acquired by Grantee. Provided, however, that Grantor shall specifically be prohibited from mowing, trimming, or otherwise modifying, removing or altering any vegetation or rip rap cobbles within the Property during the term of the Easement unless otherwise authorized by Grantee in writing.

To the extent allowed by law, Grantee shall indemnify Grantor against any loss and damage which shall be caused by the exercise of the rights of ingress and egress or by any wrongful or negligent act or omission of Grantee's agents or employees in the course of their employment. Grantee shall be responsible for the correction of, or compensation for, any damage to Grantor's property which is the result of actions outside the granted purposes of this Easement.

And Grantor does hereby bind his heirs, executors, administrators and assigns to WARRANT AND FOREVER DEFEND, all and singular, the said premises unto Williamson County, Texas, its successors and assigns, against every person whomsoever lawfully claiming or to claim the same or any part thereof.

This grant is subject to any easements, restrictions, reservations, covenants, conditions, oil and gas leases, mineral severances, and encumbrances for taxes and assessments (other than liens and conveyances) presently of record in the Official Public Records of Williamson County, Texas, that affect the Property, but only to the extent that said items are still valid and in force and effect at this time. The temporary easement, right-of-way, rights and privileges granted herein are non-exclusive, however Grantor covenants not to convey any other easement or conflicting rights within the premises covered by this grant that interfere with the purpose or function of any improvements or modifications placed thereon, or the maintenance of the surface of the Property for the conveyance of storm water drainage or channel and aquatic habitat restoration as described herein, without the express written consent of Grantee, which consent shall not be unreasonably withheld.

This easement is being delivered in lieu of condemnation.

EXECUTED on this the ____day of _____, 2018.

[signature pages follow]

GRANTOR:

_____

Michael A. Kroeber a/k/a
Michael Anthony Kroeber

ACKNOWLEDGMENT

STATE OF TEXAS §
§
COUNTY OF _____ §

This instrument was acknowledged before me on this the ___ day of _____, 2018 by Michael A. Kroeber, in the capacity and for the purposes and consideration recited therein.

_____

Notary Public, State of Texas

PREPARED IN THE OFFICE OF:

Sheets & Crossfield, P.C.
309 East Main
Round Rock, Texas 78664

GRANTEE'S MAILING ADDRESS:

Williamson County, Texas
Attn: County Auditor
710 Main Street, Suite 101
Georgetown, Texas 78626

AFTER RECORDING RETURN TO:

EXHIBIT "G"

TEMPORARY WORKSPACE AND STAGING EASEMENT

San Gabriel Ranch Road Dam and Channel Improvements

THE STATE OF TEXAS §
§
COUNTY OF WILLIAMSON § **KNOW ALL MEN BY THESE PRESENTS:**

That MICHAEL A. KROEBER a/k/a MICHAEL ANTHONY KROEBER, referred to as "Grantor", in consideration of $10.00 and other good and valuable consideration paid by WILLIAMSON COUNTY, TEXAS, ("County") does hereby grant to County, its agents, contractors, successors and assigns, hereinafter referred to as "GRANTEE", a temporary workspace and staging easement for the purpose of additional workspace and storage of material and equipment to allow construction of roadway and/or bridge improvements, opening, constructing and maintaining a trapezoidal channel, bank stabilization, erosion control, in-stream vegetative habitat creation and installation of cobbles and other necessary or related material and cross vane drop structures and related appurtenance construction, all to be located within adjacent easements or right of way owned or possessed by GRANTEE ("Project"), in, along, upon and across the property ("Property") located in the County of Williamson, State of Texas, more fully described in Exhibit "A" attached hereto and made a part hereof for any and all purposes.

For the consideration above recited and the mutual covenants and conditions herein contained the parties further agree as follows: None.

Following completion of work within the temporary workspace and staging easement area described in Exhibit "A", if GRANTEE has removed or damaged improvements, herbage, or landscaping within said easement area or otherwise on Grantor's property, GRANTEE shall at its expense restore properties injured by GRANTEE's activities as closely as commercially possible to substantially the same condition as existed previous to GRANTEE's entry upon the particular property, taking into account the proposed modifications as described herein.

To the extent allowed by law, Grantee shall indemnify Grantor against any loss and damage which shall be caused by the exercise of the rights of ingress and egress or by any wrongful or negligent act or omission of Grantee's agents or employees in the course of their employment.

This Easement and License shall be in full force and effect at all times during the accomplishment and completion of the construction Project activities described above. Said Easement shall terminate and all use rights within land area shall revert to the Grantor, their heirs, and assigns, and all interest conveyed herein shall cease on the expiration of twenty-four (24) months from the date of first entry upon the property described in Exhibit "A" for the purposes set out herein, or on the date of completion of construction of the bridge, roadway and channel facility Project activities described above, whichever occurs first. Grantee shall only remove any hardwood trees larger than 6 (six) inches in diameter from the temporary workspace and staging areas if approved and determined by the County Engineer in advance to be necessary and required for reasonable access to the Property to carry out the purposes identified herein.

GRANTEE shall be allowed to extend the duration of the Temporary Workspace and Staging Easement identified herein for up to twelve (12) additional thirty (30) day periods upon: (1) notification to Grantor in writing of the requested extension period, and (2) tendering the additional sum of $250 for each additional extension period used.

IN WITNESS WHEREOF, the parties hereto have executed this instrument this ____day of _____, 2018.

GRANTOR:

_____
Michael A. Kroeber a/k/a
Michael Anthony Kroeber

Acknowledgement

State of Texas
County of _____

This instrument was acknowledged before me on _____ by Michael A. Kroeber, in the capacity and for the purposes and consideration recited herein.

_____
Notary Public—State of Texas

AGREED:

WILLIAMSON COUNTY, TEXAS

By:_____
Dan A. Gattis, County Judge

Acknowledgement

State of Texas
County of Williamson

This instrument was acknowledged before me on _____ by Dan A. Gattis, in the capacity and for the purposes and consideration recited herein.

_____
Notary Public—State of Texas

After recording return to:

Commissioners Court - Regular Session **28.**

Meeting Date: 04/17/2018

Seward Junction SE Contract

Submitted For: Charlie Crossfield **Submitted By:** Charlie Crossfield, Road Bond

Department: Road Bond

Agenda Category: Regular Agenda Items

Information

Agenda Item

Discuss, consider and take appropriate action on a real estate contract with Ann Pi-Yuan Yang, Yea-Ran Yang and Yea-Tyng Yang for right of way needed on the Seward Junction SE project (Parcel 6). Funding Source- Road Bonds (P271)

Background

Fiscal Impact

From/To	Acct No.	Description	Amount

Attachments

Yang Contract

Form Review

Inbox	Reviewed By	Date
County Judge Exec Asst.	Wendy Coco	04/12/2018 09:25 AM
Form Started By: Charlie Crossfield		Started On: 04/12/2018 09:14 AM
Final Approval Date: 04/12/2018		

REAL ESTATE CONTRACT

Seward Junction SE – Parcel 6

THIS REAL ESTATE CONTRACT ("Contract") is made by ANN PI-YUAN YANG, YEA-RAN YANG, AND YEA-TYNG YANG (collectively referred to in this Contract as "Seller") and WILLIAMSON COUNTY, TEXAS (referred to in this Contract as "Purchaser"), upon the terms and conditions set forth in this Contract.

ARTICLE I
PURCHASE AND SALE

By this Contract, Seller sells and agrees to convey, and Purchaser purchases and agrees to pay for, the tract(s) of land described as follows:

> All of that certain 5.7658 acre (251,160 square feet) of land in the Noah Smithwick Survey, Abstract No. 590, Williamson County, Texas; being more fully described by metes and bounds in Exhibit "A", attached hereto and incorporated herein (**Parcel 6**); and
>
> Drainage Easement interest in and across those certain 1.1249 acre (49,000 square feet) and 0.6977 acre (30,393 square feet) tracts of land in the Noah Smithwick Survey, Abstract No. 590, Williamson County, Texas; said tract being more particularly described by metes and bounds in Exhibit "B" attached hereto and incorporated herein (**Parcel 6DE—Tract 1 and 2**);

together with all and singular the rights and appurtenances pertaining to the property, including any right, title and interest of Seller in and to adjacent streets, alleys or rights-of-way (all of such real property, rights, and appurtenances being referred to in this Contract as the "Property"), and any improvements situated on and attached to the Property described in Exhibit "A" not otherwise agreed herein to be retained by Seller, for the consideration and upon and subject to the terms, provisions, and conditions set forth below.

ARTICLE II
PURCHASE PRICE

Purchase Price

2.01. The Purchase Price for the Property described in Exhibit "A" and any improvements thereon, together with the Drainage Easement interest described in Exhibit "B", and any damage to the remaining property of Seller as a result of this transaction, shall be the sum of THREE HUNDRED FIFTY-SIX THOUSAND FOUR HUNDRED EIGHT and 00/100 Dollars ($356,408.00).

Payment of Purchase Price

2.02. The Purchase Price shall be payable in cash at the Closing.

Special Provisions

2.03. As an obligation which shall survive the Closing of this transaction, Seller agrees that within 30 days after Closing it shall cause to be constructed any replacement fencing along the new Property boundary lines which is necessary to sufficiently contain livestock or other animals within the remaining property of Seller upon removal by Purchaser of any existing fencing upon the Property acquired herein.

ARTICLE III
PURCHASER'S OBLIGATIONS

Conditions to Purchaser's Obligations

3.01. The obligations of Purchaser hereunder to consummate the transactions contemplated hereby are subject to the satisfaction of each of the following conditions (any of which may be waived in whole or in part by Purchaser at or prior to the Closing).

Miscellaneous Conditions

3.02. Seller shall have performed, observed, and complied with all of the covenants, agreements, and conditions required by this Contract to be performed, observed, and complied with by Seller prior to or as of the closing.

ARTICLE IV
REPRESENTATIONS AND WARRANTIES
OF SELLER

Seller hereby represents and warrants to Purchaser as follows, which representations and warranties shall be deemed made by Seller to Purchaser also as of the Closing Date, to the best of Seller's current actual knowledge:

(1) There are no parties in possession of any portion of the Property as lessees, tenants at sufferance, or trespassers, other than as previously disclosed to Purchaser;

(2) Seller has complied with all applicable laws, ordinances, regulations, statutes, rules and restrictions relating to the Property, or any part thereof;

The Property is being conveyed to Purchaser under threat of condemnation.

ARTICLE V
CLOSING

Closing Date

5.01. The Closing shall be held at the office of Independence Title Company on or before March 31, 2018, or at such time, date, and place as Seller and Purchaser may agree upon, or within 10 days after the completion of any title curative matters if necessary for items as shown on the Title Commitment or in the contract (which date is herein referred to as the "Closing Date").

Seller's Obligations at Closing

5.02. At the Closing Seller shall:

(1) Deliver to Purchaser a duly executed and acknowledged Deed conveying good and indefeasible title to Williamson County, Texas in fee simple to all of the Property described in Exhibit "A", free and clear of any and all liens and restrictions, except for the following:

(a) General real estate taxes for the year of closing and subsequent years not yet due and payable;

(b) Any exceptions approved by Purchaser pursuant to Article III hereof; and

(c) Any exceptions approved by Purchaser in writing.

The Deed shall be in the form as shown in Exhibit "C", attached hereto and incorporated herein.

(2) Deliver to Purchase a duly executed and acknowledged Drainage Easement conveying such interest in and to all of the Property Described in Exhibit "B." The Drainage Easement shall be in the form as shown in Exhibit "D", attached hereto and incorporated herein.

(3) Deliver to Purchaser a Texas Owner's Title Policy at Purchaser's sole expense, issued by Title Company, in Grantee's favor in the full amount of the Purchase Price, insuring Purchaser's contracted interests in and to the Property subject only to those title exceptions listed herein, such other exceptions as may be approved in writing by Purchaser, and the standard printed exceptions contained in the usual form of Texas Owner's Title Policy, provided, however:

(a) The boundary and survey exceptions shall be deleted;

(b) The exception as to restrictive covenants shall be endorsed "None of Record", if applicable; and

(c) The exception as to the lien for taxes shall be limited to the year of Closing and shall be endorsed "Not Yet Due and Payable".

(d) Deliver to Purchaser possession of the Property if not previously done.

Purchaser's Obligations at Closing

5.03. At the Closing, Purchaser shall:

(a) Pay the cash portion of the Purchase Price.

Prorations

5.04. General real estate taxes for the then current year relating to the Property shall be prorated as of the Closing Date and shall be adjusted in cash at the closing. If the Closing shall occur before the tax rate is fixed for the then current year, the apportionment of taxes shall be upon the basis of the tax rate for the next preceding year applied to the latest assessed valuation. Agricultural roll-back taxes, if any, shall be paid by Purchaser.

Closing Costs

5.05. All costs and expenses of closing in consummating the sale and purchase of the Property shall be borne and paid as follows:

(1) Owner's Title Policy and survey to be paid by Purchaser.

(2) Deed, tax certificates, and title curative matters, if any, paid by Purchaser.

(3) All other closing costs shall be paid by Purchaser.

(4) Attorney's fees paid by each respectively.

ARTICLE VI
BREACH BY SELLER

In the event Seller shall fail to fully and timely perform any of its obligations hereunder or shall fail to consummate the sale of the Property for any reason, except Purchaser's default, Purchaser may: (1) enforce specific performance of this Contract; or (2) request that the Escrow Deposit, if any, shall be forthwith returned by the title company to Purchaser.

ARTICLE VII
BREACH BY PURCHASER

In the event Purchaser should fail to consummate the purchase of the Property, the conditions to Purchaser's obligations set forth in Article III having been satisfied and Purchaser being in default and Seller not being in default hereunder, Seller shall have the right to receive the Escrow Deposit, if any, from the title company, the sum being agreed on as liquidated damages for the failure of Purchaser to perform the duties, liabilities, and obligations imposed upon it by the terms and provisions of this Contract, and Seller agrees to accept and take this cash payment as its total damages and relief and as Seller's sole remedy hereunder in such event. If no Escrow Deposit has been made then Seller shall receive the amount of $500 as liquidated damages for any failure by Purchaser.

ARTICLE VIII
MISCELLANEOUS

Notice

8.01. Any notice required or permitted to be delivered hereunder shall be deemed received when sent by United States mail, postage prepaid, certified mail, return receipt requested, addressed to Seller or Purchaser, as the case may be, at the address set forth opposite the signature of the party.

Texas Law to Apply

8.02. This Contract shall be construed under and in accordance with the laws of the State of Texas, and all obligations of the parties created hereunder are performable in Williamson County, Texas.

Parties Bound

8.03. This Contract shall be binding upon and inure to the benefit of the parties and their respective heirs, executors, administrators, legal representatives, successors and assigns where permitted by this Contract.

Legal Construction

8.04. In case any one or more of the provisions contained in this Contract shall for any reason be held to be invalid, illegal, or unenforceable in any respect, this invalidity, illegality, or unenforceability shall not affect any other provision hereof, and this Contract shall be construed as if the invalid, illegal, or unenforceable provision had never been contained herein.

Prior Agreements Superseded

8.05. This Contract constitutes the sole and only agreement of the parties and supersedes any prior understandings or written or oral agreements between the parties respecting the within subject matter.

Time of Essence

8.06. Time is of the essence in this Contract.

Gender

8.07. Words of any gender used in this Contract shall be held and construed to include any other gender, and words in the singular number shall be held to include the plural, and vice versa, unless the context requires otherwise.

Memorandum of Contract

8.08. Upon request of either party, the parties shall promptly execute a memorandum of this Contract suitable for filing of record.

Compliance

8.09 In accordance with the requirements of Section 20 of the Texas Real Estate License Act, Purchaser is hereby advised that it should be furnished with or obtain a policy of title insurance or Purchaser should have the abstract covering the Property examined by an attorney of Purchaser's own selection.

Effective Date

8.10 This Contract shall be effective as of the date it is approved by Williamson County, Texas which date is indicated beneath the County Judge's signature below.

Counterparts

8.11 This Contract may be executed in any number of counterparts, which may together constitute the Contract. Signatures transmitted by facsimile or electronic mail may be considered effective as originals for purposes of this Contract.

[signature pages follow]

SELLER:

Ann Pi-Yuan Yang

Ann Pi-Yuan Yang

Address: 4501 Balcones Woods Dr

Austin, Tx. 78759

Date: 4/5/2018

Yea-Ran Yang

Yea-Ran Yang

Address: 4501 Balcones Woods Dr

Austin Tx 78759

Date: 4/5/2018

Yea-Tyng Yang

Yea-Tyng Yang

Address: 4501 Balcones Woods Dr.

Austin, Tx 78759

Date: 4/5/2018

PURCHASER:

WILLIAMSON COUNTY, TEXAS

By: _____
Dan A. Gattis
County Judge

Address: 710 Main Street, Suite 101
Georgetown, Texas 78626

Date:_____

\

EXHIBIT "A"

FIELD NOTES DESCRIPTION – PARCEL 6

DESCRIPTION OF 5.7658 ACRES (251,160 SQUARE FEET) OF LAND IN THE NOAH SMITHWICK SURVEY, ABSTRACT NO. 590, WILLIAMSON COUNTY, TEXAS, BEING A PORTION OF THAT CERTAIN CALLED 83.54 ACRE TRACT OF LAND DESCRIBED IN THE DEED TO JAW-CHING YANG AND ANN PI-YUAN YANG OF RECORD IN VOLUME 983, PAGE 68, OFFICIAL RECORDS OF WILLIAMSON COUNTY, TEXAS, AND FURTHER DESCRIBED IN CAUSE NO. 81456, PROBATE COURT NO. 1, TRAVIS COUNTY, TEXAS, OF RECORD IN DOCUMENT NO. 2005042516, OFFICIAL PUBLIC RECORDS OF WILLIAMSON COUNTY, TEXAS; SAID 5.7658 ACRES AS SURVEYED BY BOWMAN CONSULTING GROUP, LTD. AND SHOWN ON THE ACCOMPANYING SKETCH, BEING MORE PARTICULARLY DESCRIBED BY METES AND BOUNDS AS FOLLOWS:

BEGINNING at a 1/2-inch iron rod found, 29.45 feet right of Williamson County Road 266 Baseline Station 263+82.82, at the intersection of the existing south right-of-way line of County Road 259, a varying width right-of-way, with the existing west right-of-way line of County Road 266, a varying width right-of-way, same being an angle point in the east line of the said 83.54 acre tract, for the northeast corner and **POINT OF BEGINNING** of the tract described herein;

THENCE with the existing west right-of-way line of County Road 266, same being the east line of the said 83.54 acre tract and with the east line of the tract described herein, the following three (3) courses and distances:

1. S 07° 32' 54" E, a distance of 503.75 feet to a 1/2-inch iron rod found, 17.07 feet right of County Road 266 Baseline Station 258+73.57, for an angle point,

2. S 09° 29' 09" E, a distance of 170.34 feet to a 1/2-inch iron rod found, 0.82 feet right of County Road 266 Baseline Station 257+04.00, for an angle point, and

3. S 10° 26' 20" E, a distance of 699.14 feet to a 1/2-inch iron rod with plastic cap stamped "BCG" set, 23.54 feet left of County Road 266 Baseline Station 250+03.70, for the southeast corner of the tract described herein, from which a 1/2-inch iron rod found at an angle point in the west right-of-way line of County Road 266, same being the east line of the said 83.54 acre tract bears S 10° 26' 20" E, a distance of 458.79 feet;

THENCE leaving the existing west right-of-way line of County Road 266 and crossing the said 83.54 acre tract, with the proposed west right-of-way line of County Road 266 and the proposed south right-of-way line of County Road 259, and with the west and south lines of the tract described herein, the following seven (7) courses and distances:

1. N13° 10' 16" W, a distance of 443.16 feet to a 1/2-inch iron rod with plastic cap stamped "BCG" set, 40.00 feet left of County Road 266 Baseline Station 254+48.73, for a point of curvature,

2. with the arc of a curve to the left, having a radius of 960.00 feet, an arc distance of 132.47 feet and a chord which bears N 17° 07' 27" W, a distance of 132.36 feet to a 1/2-inch iron rod with plastic cap stamped "BCG" set 45.46 feet left of County Road 266 Baseline Station 255+82.25, for a point of tangency,

3. N 21° 04' 38" W, a distance of 171.50 feet to a 1/2-inch iron rod with plastic cap stamped "BCG" set, 63.73 feet left of County Road 266 Baseline Station 257+52.77 and 121.29 feet right of County Road 259 Baseline Station 219+84.65, for an angle point,

4. N 57° 06' 39" W, a distance of 73.00 feet to a 1/2-inch iron rod with plastic cap stamped "BCG" set, 112.72 feet left of County Road 266 Baseline Station 258+06.90 and 75.00 feet right of County Road 259 Baseline Station 219+31.68, for an angle point,

5. with the arc of a curve to the right, having a radius of 750.00 feet, an arc distance of 616.59 feet and a chord which bears N 71° 14' 04" W, a distance of 599.37 feet to a 1/2-inch iron rod with plastic cap stamped "BCG" set, 75.00 feet right of County Road 259 Baseline Station 213+76.76, for a point of tangency,

6. N 47° 40' 56" W, a distance of 259.58 feet to a 1/2-inch iron rod with plastic cap stamped "BCG" set, 75.00 feet right of County Road 259 Baseline Station 211+17.18, for a point of curvature, and

7. with the arc of a curve to the left, having a radius of 600.00 feet, an arc distance of 449.30 feet and a chord which bears N 69° 08' 05" W, a distance of 438.87 feet to a 1/2-inch iron rod with plastic cap stamped "BCG" set, 75.00 feet right of County Road 259 Baseline Station 206+11.72, in the existing south right-of-way line of County Road 259, same being the north line of the said 83.54 acre tract, for a western northwest corner of the tract described herein, from which a 1/2-inch iron rod found at an angle point in the south right-of-way line of County Road 259, being the northerly northwest corner of the said 83.54 acre tract, same being the northeast corner of that certain called 6.67 acre tract of land described in the deed to The Union Hall Baptist Church, of record in Document No. 2007098519, Official Public Records of Williamson County, Texas, bears S 85° 21' 27" W, a distance of 83.43 feet;

THENCE N 85° 21' 27" E, with the existing south right-of-way line of County Road 259, same being the north line of the said 83.54 acre tract, and with the north line of the tract described herein, a distance of 409.56 feet to a 1/2-inch iron rod with plastic cap stamped "BCG" set, 75.00 feet left of County Road 259 Baseline Station 210+00.55, for an angle point in the north line of the tract described herein, from which a 1/2-inch iron rod found at an angle point in the south right-of-way line of County Road 259, same being the north line of the said 83.54 acre tract bears N 85° 21' 27" E, a distance of 336.49 feet;

THENCE leaving the existing south right-of-way line of County Road 259 and re-crossing the said 83.54 acre tract, with the proposed north right-of-way line of County Road 259 and the proposed west right-of-way line of County Road 266, and with the north and west lines of the tract described herein, the following six (6) courses and distances:

1. with the arc of a curve to the right, having a radius of 750.00 feet, an arc distance of 129.58 feet and a chord which bears S 52° 37' 55" E, a distance of 129.42 feet to a 1/2-inch iron rod with plastic cap stamped "BCG" set, 75.00 feet left of County Road 259 Baseline Station 211+17.18, for a point of tangency,

2. S 47° 40' 56" E, a distance of 259.58 feet to a 1/2-inch iron rod with plastic cap stamped "BCG" set, 75.00 feet left of County Road 259 Baseline Station 213+76.76, for a point of curvature,

3. with the arc of a curve to the left, having a radius of 600.00 feet, an arc distance of 441.20 feet and a chord which bears S 68° 44' 53" E, a distance of 431.33 feet to a 1/2-inch iron rod with plastic cap stamped "BCG" set, 75.00 feet left of County Road 259 Baseline Station 218+73.10 and 137.01 feet left of County Road 266 Baseline Station 259+65.95, for an angle point,

4. N 37° 31' 09" E, a distance of 78.30 feet to a 1/2-inch iron rod with plastic cap stamped "BCG" set, 135.17 feet left of County Road 259 Baseline Station 219+32.55 and 75.00 feet left of County Road 266 Baseline Station 260+12.66, for an angle point,

5. with the arc of a curve to the right, having a radius of 1075.00 feet, an arc distance of 182.76 feet and a chord which bears N 09° 20' 54" W, a distance of 182.54 feet to a 1/2-inch iron rod with plastic cap stamped "BCG" set, 75.00 feet left of County Road 266 Baseline Station 261+82.67, for a point of tangency, and

6. N 04° 28' 41" W, a distance of 229.31 feet to a 1/2-inch iron rod with plastic cap stamped "BCG" set, 75.00 feet left of County Road 266 Baseline Station 264+11.98, in the existing south right-of-

way line of County Road 259, same being the north line of the said 83.54 acre tract, for a northern northwest corner of the tract described herein, from which the previously referenced 1/2-inch iron rod found at an angle point in the south right-of-way line of County Road 259, same being the north line of the said 83.54 acre tract bears S 84° 38' 12" W, a distance of 363.12 feet;

THENCE with the existing south right-of-way line of County Road 259, same being the north line of the said 83.54 acre tract and with the north line of the tract described herein, the following two (2) courses and distances:

1. N 84° 38' 12" E, a distance of 76.87 feet to a 1/2-inch iron rod found, 1.86 feet right of County Road 266 Baseline Station 264+13.17, for an angle point, and

2. S 46° 44' 42" E, a distance of 41.01 feet to the **POINT OF BEGINNING** and containing 5.7658 acres (251,160 square feet) of land, more or less.

BEARING BASIS: Texas Coordinate System, Central Zone, NAD83, Grid.

BOWMAN WORD FILE: FN1786(gt)

THE STATE OF TEXAS §
§ KNOW ALL MEN BY THESE PRESENTS
COUNTY OF TRAVIS §

That I, John D. Barnard, a Registered Professional Land Surveyor, do hereby certify that the above description is true and correct to the best of my knowledge and belief and that the property described herein was determined by a survey made on the ground during the months of January through June 2015 under my direction and supervision.

WITNESS MY HAND AND SEAL at Austin, Travis County, Texas, on this 24th of August, 2016 A.D.

Bowman Consulting Group, Ltd.
Austin, Texas 78746

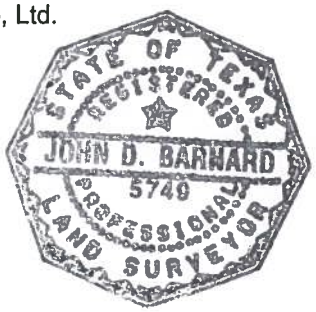

John D. Barnard
Registered Professional Land Surveyor
No. 5749 – State of Texas

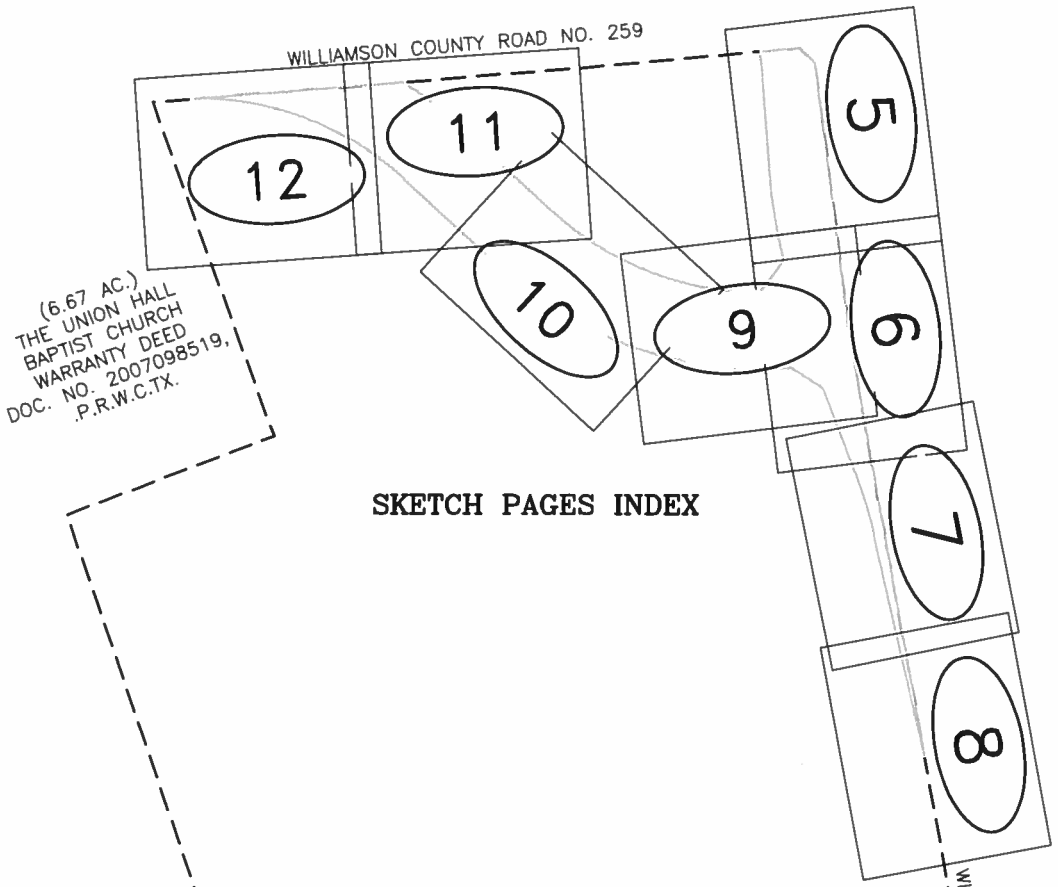

SKETCH PAGES INDEX

(83.54 AC.)
YEA-RAN YANG & YEA-TYING YANG
AND PI-YUAN YANG (AKA ANN PI-YUAN YANG)
EXECUTOR IN THE ESTATE OF JAW-CHING YANG (DECEASED)
CAUSE NO. 81456, PROBATE COURT NO. 1, TRAVIS COUNTY, TEXAS
DOC. 2005042516, O.P.R.W.C.TX.

AND DESCRIBED IN VOL. 983 / PG. 68, O.R.W.C.TX.

Bowman CONSULTING
Bowman Consulting Group, Ltd.
3101 Bee Cave Road, Suite 100, Austin, Texas 78746
Phone: (512) 327-1180 Fax: (512) 327-4062
www.bowmanconsulting.com © Bowman Consulting Group, Ltd.
TBPE Firm No. F-14309 | TBPLS Firm No. 101206-00

EXHIBIT TO ACCOMPANY
FIELD NOTES DESCRIPTION
FN1786

FILE: \\Longhorn\new_projects\005569 - Seward Junction\005569-02-001 (SUR) - SE WA 1\Survey\Working\FN-Parcels\ROW\SK1786(gt)_CR259-CR266 ROW Parcel 6_Yang Estate.dwg
DATE: Aug 23,2016-4:57pm

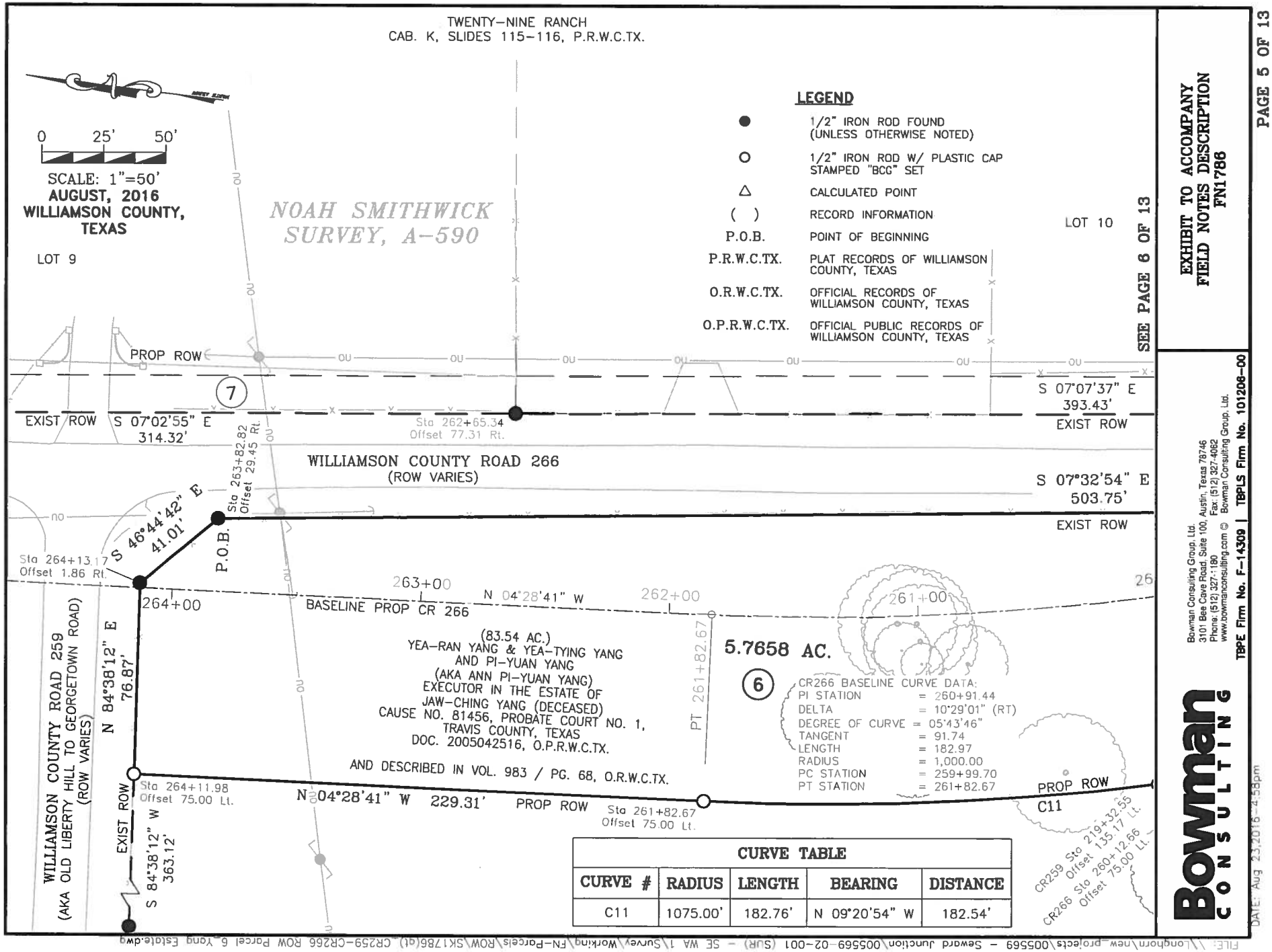

CURVE TABLE				
CURVE #	RADIUS	LENGTH	BEARING	DISTANCE
C11	1075.00'	182.76'	N 09°20'54" W	182.54'

EXHIBIT TO ACCOMPANY
FIELD NOTES DESCRIPTION
FN1786

PAGE 5 OF 13

Bowman Consulting Group, Ltd.
3101 Bee Cave Road, Suite 100, Austin, Texas 78746
Phone: (512) 327-1180 Fax: (512) 327-4062
www.bowmanconsulting.com © Bowman Consulting Group, Ltd.
TBPE Firm No. F-14309 | TBPLS Firm No. 101206-00

Bowman CONSULTING

DATE: Aug 23,2016 - 4:58pm

FILE: \\Longhorn\new_projects\005569 - Seward Junction\005569-02-001 (SUR) - SE WA 1\Survey\Working\FN-Parcels\ROW\SK1786(qt)_CR259-CR266 ROW Parcel 6_Yang Estate.dwg

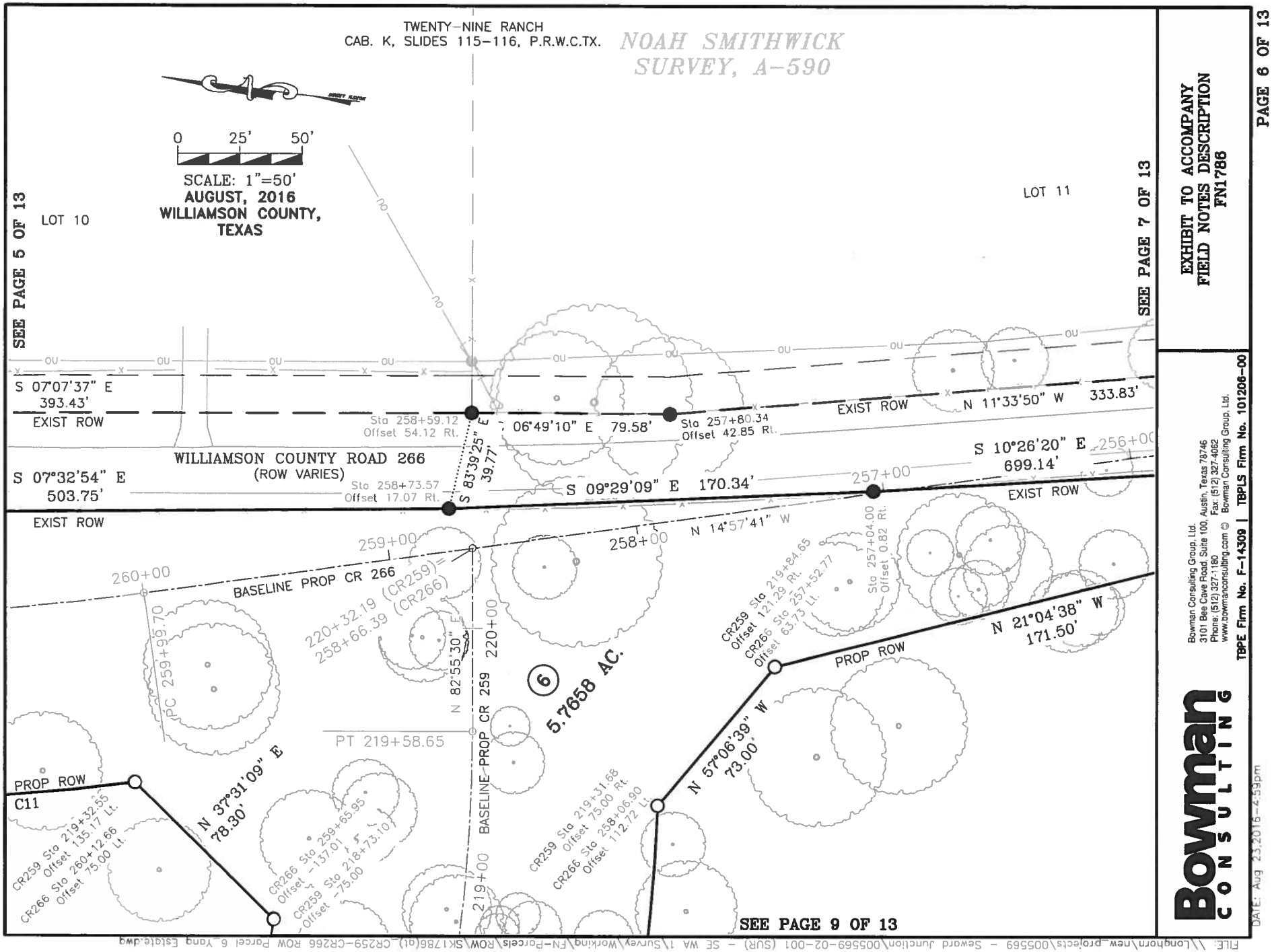
TWENTY-NINE RANCH
CAB. K, SLIDES 115-116, P.R.W.C.TX.
NOAH SMITHWICK SURVEY, A-590
0 25' 50'
SCALE: 1"=50'
AUGUST, 2016
WILLIAMSON COUNTY, TEXAS
LOT 10
LOT 11
SEE PAGE 5 OF 13
SEE PAGE 7 OF 13
S 07°07'37" E
393.43'
EXIST ROW
Sta 258+59.12
Offset 54.12 Rt.
S 83°39'25" E
39.77'
S 06°49'10" E 79.58'
Sta 257+80.34
Offset 42.85 Rt.
EXIST ROW
N 11°33'50" W 333.83'
WILLIAMSON COUNTY ROAD 266
(ROW VARIES)
S 07°32'54" E
503.75'
Sta 258+73.57
Offset 17.07 Rt.
S 09°29'09" E 170.34'
257+00
S 10°26'20" E
699.14'
EXIST ROW
EXIST ROW
259+00
258+00
N 14°57'41" W
260+00
BASELINE PROP CR 266
220+32.19 (CR259)=
258+66.39 (CR266)
PC 259+99.70
N 82°55'30" E
220+00
BASELINE-PROP CR 259
219+00
6
5.7658 AC.
PT 219+58.65
CR259 Sta 219+84.65
Offset 121.29 Rt.
CR266 Sta 257+52.77
Offset 63.73 Lt.
Sta 257+04.00
Offset 0.82 Rt.
PROP ROW
N 21°04'38" W
171.50'
N 57°06'39" W
73.00'
PROP ROW
C11
N 37°31'09" E
78.30'
CR259 Sta 219+32.55
Offset 135.17 Lt.
CR266 Sta 260+12.66
Offset 75.00 Lt.
CR266 Sta 259+65.95
Offset -137.01
CR259 Sta 218+73.10
Offset -75.00
CR259 Sta 219+31.66
Offset 75.00 Rt.
CR266 Sta 258+06.90
Offset 112.72 Lt.
SEE PAGE 9 OF 13
EXHIBIT TO ACCOMPANY
FIELD NOTES DESCRIPTION
FN1786
PAGE 6 OF 13
Bowman CONSULTING
Bowman Consulting Group, Ltd.
3101 Bee Cave Road, Suite 100, Austin, Texas 78746
Phone: (512) 327-1180 Fax: (512) 327-4062
www.bowmanconsulting.com © Bowman Consulting Group, Ltd.
TBPE Firm No. F-14309 | TBPLS Firm No. 101206-00
DATE: Aug 23,2016-4:59pm
FILE: \\Longhorn\new_projects\005569 - Seward Junction\005569-02-001 (SUR) - SE WA 1\Survey\Working\FN-Parcels\ROW\SK1786(a)_CR259-CR266 ROW Parcel 6_Yang Estate.dwg

EXHIBIT TO ACCOMPANY FIELD NOTES DESCRIPTION FN1786

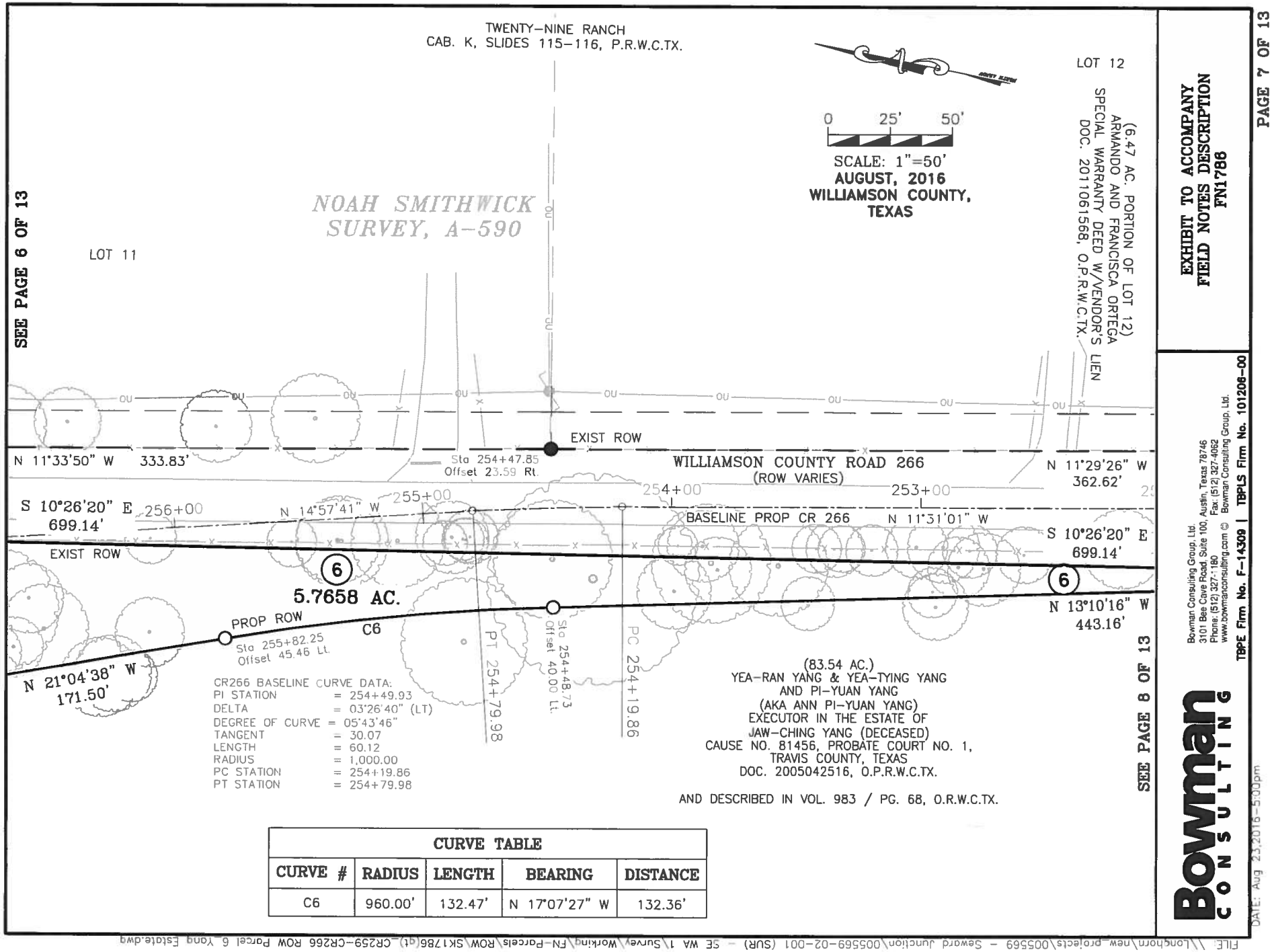

CURVE TABLE				
CURVE #	RADIUS	LENGTH	BEARING	DISTANCE
C6	960.00'	132.47'	N 17°07'27" W	132.36'

Bowman Consulting Group, Ltd.
3101 Bee Cave Road, Suite 100, Austin, Texas 78746
Phone: (512) 327-1180 Fax: (512) 327-4062
www.bowmanconsulting.com © Bowman Consulting Group, Ltd.
TBPE Firm No. F-14309 | TBPLS Firm No. 101206-00

Bowman CONSULTING

DATE: Aug 23,2016-5:00pm

FILE: \\Longhorn\new projects\005569 - Seward Junction\005569-02-001 (SUR) - SE WA 1\Survey\Working\FN-Parcels\ROW\SK1786(01)_CR259-CR266 ROW Parcel 6 Yang Estate.dwg

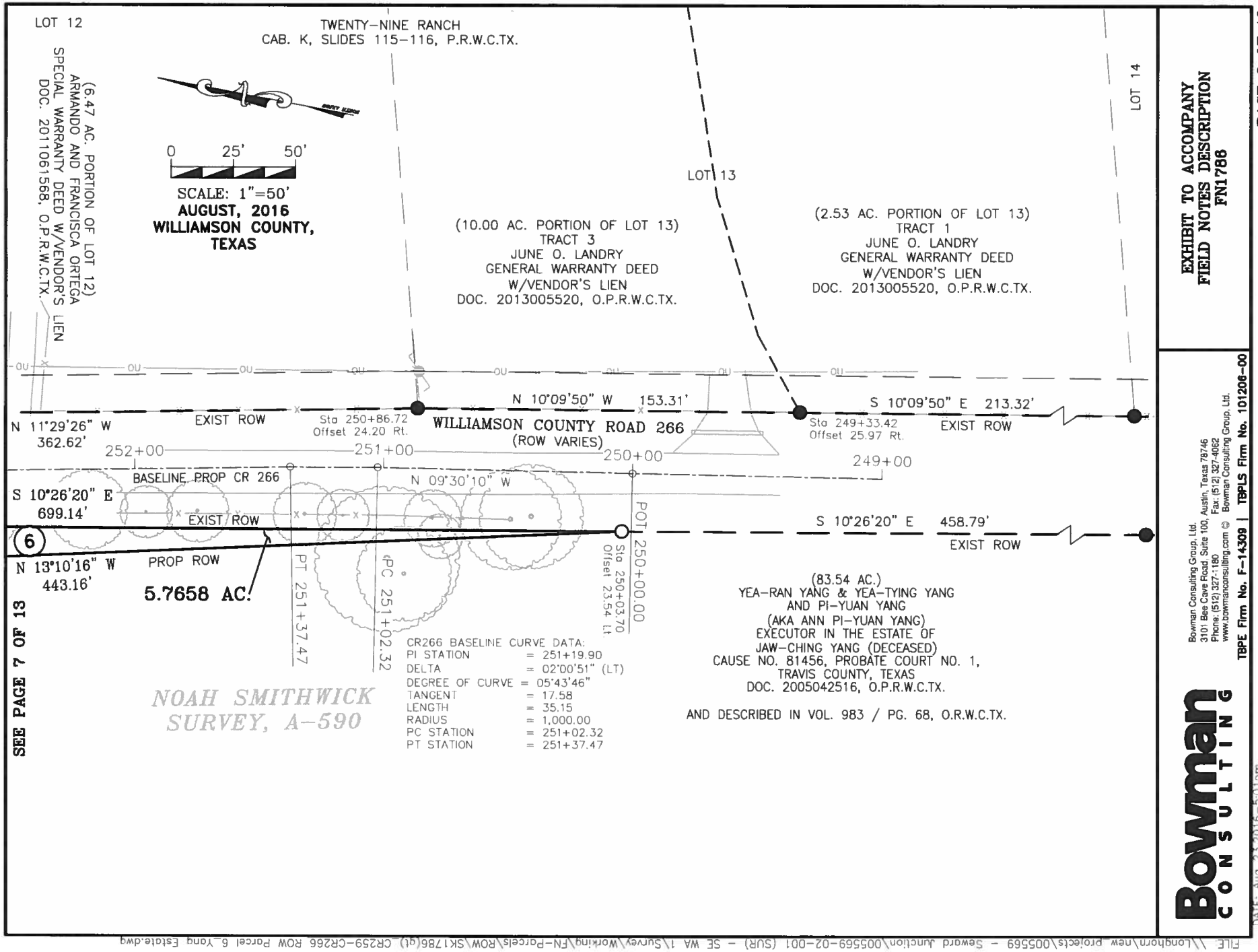

SEE PAGE 7 OF 13

EXHIBIT TO ACCOMPANY
FIELD NOTES DESCRIPTION
FN1786

Bowman Consulting Group, Ltd.
3101 Bee Cave Road, Suite 100, Austin, Texas 78746
Phone: (512) 327-1180 Fax: (512) 327-4062
www.bowmanconsulting.com © Bowman Consulting Group, Ltd.
TBPE Firm No. F-14309 | TBPLS Firm No. 101206-00

Bowman CONSULTING

DATE: Aug 23,2016-5:01pm

FILE: \\Longhorn\new projects\005569 - Seward Junction\005569-02-001 (SUR) - SE WA 1\Survey\Working\FN-Parcels\ROW\SK1786(gt)_CR259-CR266 ROW Parcel 6_Yang Estate.dwg

FILE \\Longhorn\new_projects\005569 - Seward Junction\005569-02-001 (SUR) - SE WA 1\Survey\Working\FN-Parcels\ROW\SK1786(at)_CR259-CR266 ROW Parcel 6_Yang Estate.dwg

DATE: Aug 23,2016-5:01pm

Bowman CONSULTING

Bowman Consulting Group, Ltd.
3101 Bee Cave Road, Suite 100, Austin, Texas 78746
Phone. (512) 327-1180 Fax. (512) 327-4062
www.bowmanconsulting.com Bowman Consulting Group, Ltd.

TBPE Firm No. F-14309 | TBPLS Firm No. 101208-00

EXHIBIT TO ACCOMPANY FIELD NOTES DESCRIPTION FN1786

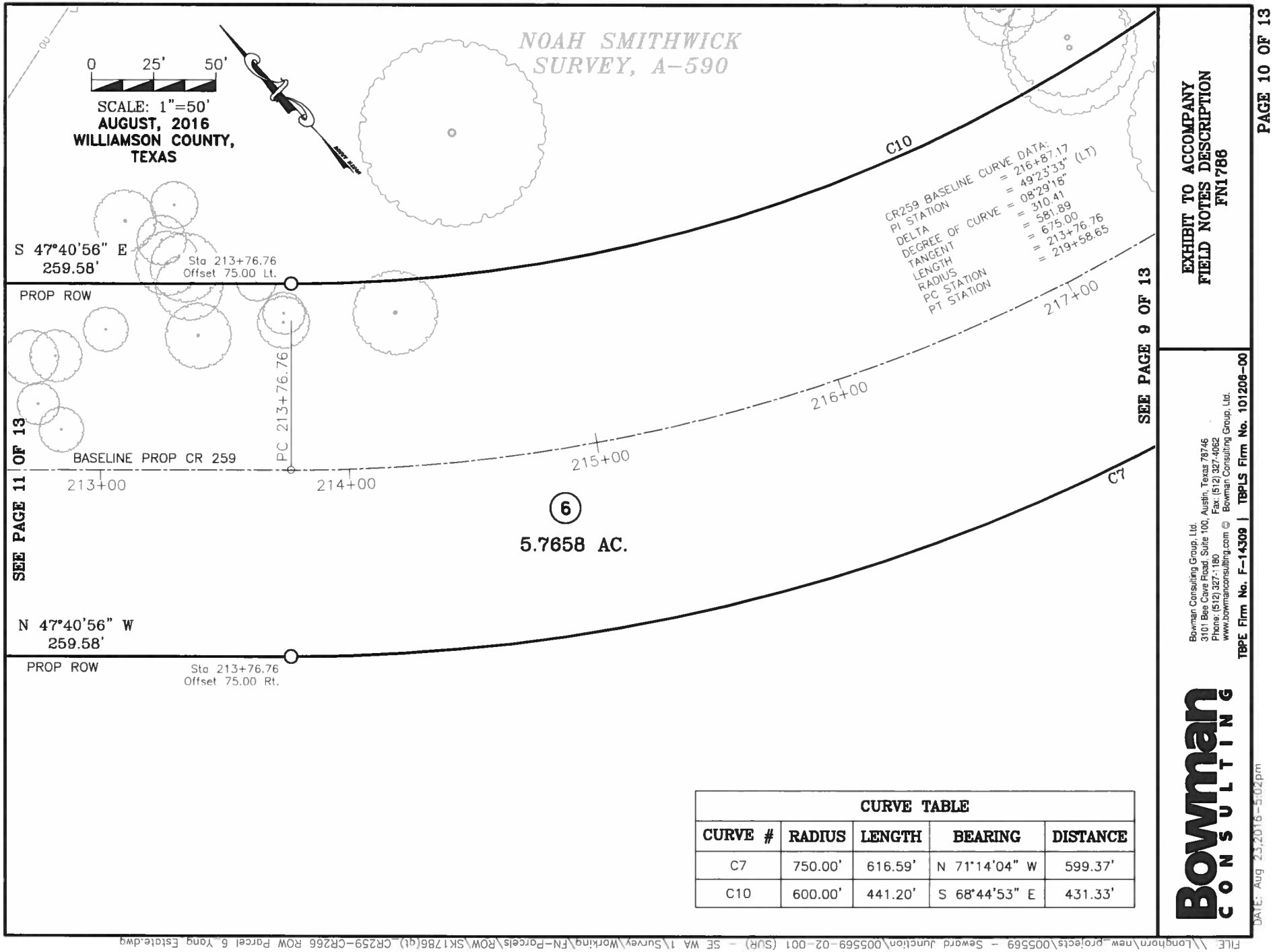

CURVE TABLE				
CURVE #	RADIUS	LENGTH	BEARING	DISTANCE
C7	750.00'	616.59'	N 71°14'04" W	599.37'
C10	600.00'	441.20'	S 68°44'53" E	431.33'

EXHIBIT TO ACCOMPANY
FIELD NOTES DESCRIPTION
FN1786

PAGE 10 OF 13

Bowman Consulting Group, Ltd.
3101 Bee Cave Road, Suite 100, Austin, Texas 78746
Phone: (512) 327-1180 Fax: (512) 327-4062
www.bowmanconsulting.com © Bowman Consulting Group, Ltd.
TBPE Firm No. F-14309 | TBPLS Firm No. 101206-00

Bowman CONSULTING

DATE: Aug 23,2016-5:02pm

FILE \\Longhorn\new_projects\005569 - Seward Junction\005569-02-001 (SUR) - SE WA 1\Survey\Working\FN-Parcels\ROW\SK1786(gt)_CR259-CR266 ROW Parcel 6_Yang Estate.dwg

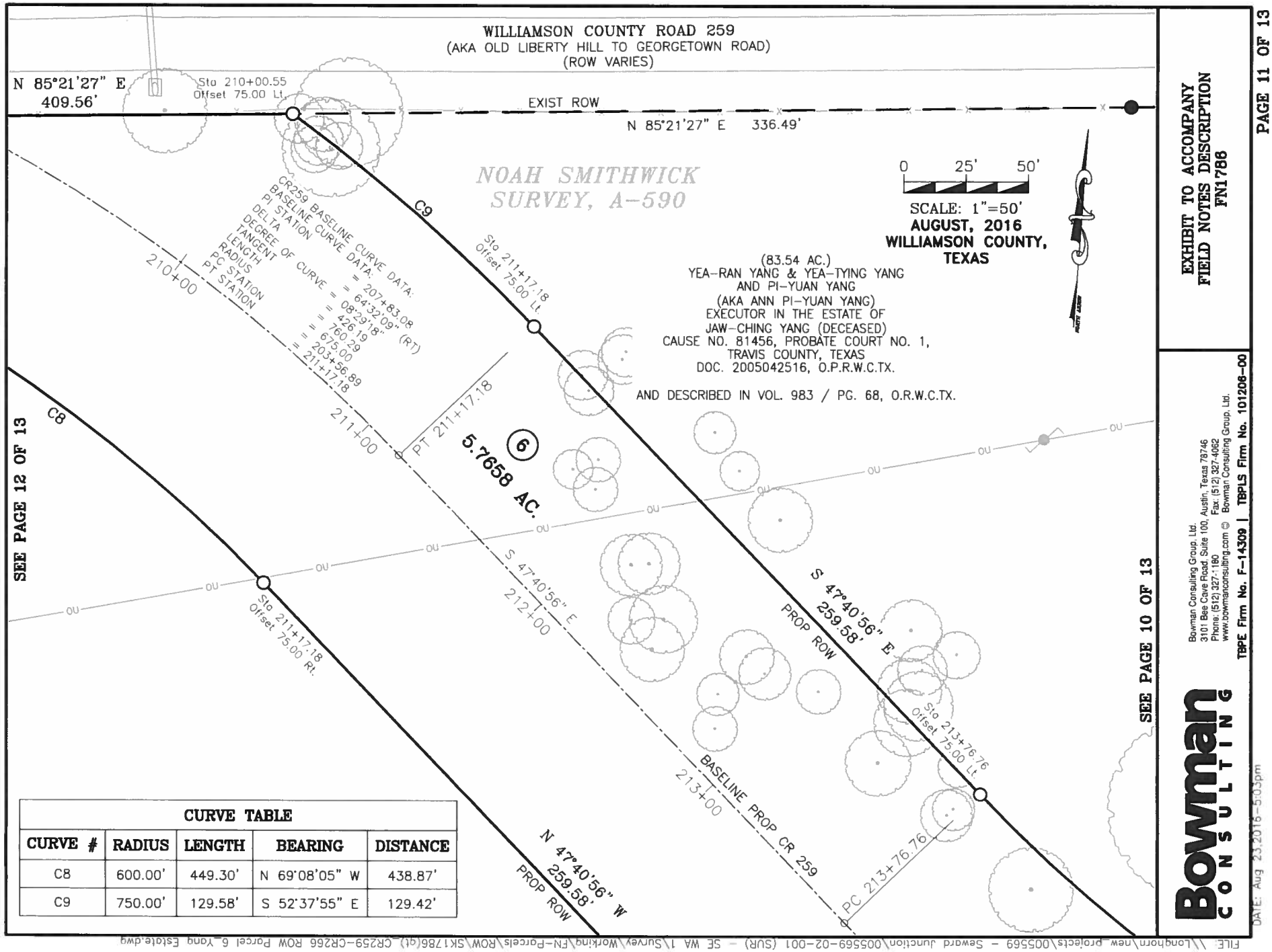

CURVE TABLE				
CURVE #	RADIUS	LENGTH	BEARING	DISTANCE
C8	600.00'	449.30'	N 69°08'05" W	438.87'
C9	750.00'	129.58'	S 52°37'55" E	129.42'

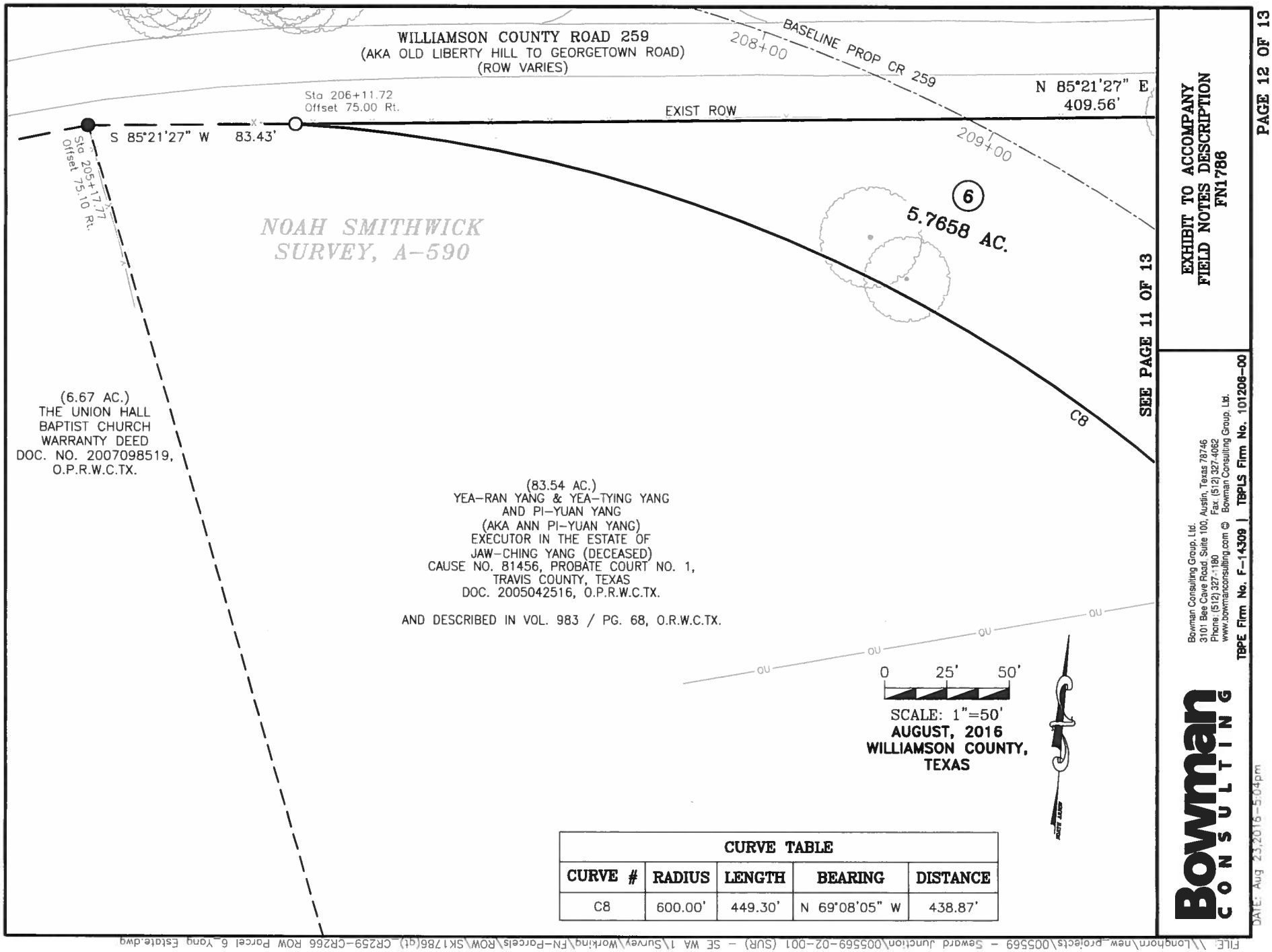

CURVE TABLE				
CURVE #	RADIUS	LENGTH	BEARING	DISTANCE
C8	600.00'	449.30'	N 69°08'05" W	438.87'

NOTES:

1. BEARING BASIS IS TEXAS COORDINATE SYSTEM, CENTRAL ZONE (4204), NAD83, GRID, BASED ON SURVEY TIES MADE TO CONTROL MONUMENTS SAM3, SAM4, SAM5 & SAM6 AS SHOWN ON CONTROL SHEETS FOR THE US 183: CR213 TO RIVA RIDGE DRIVE PROJECT (CSJ: 0151-04-063/064); LOWER COLORADO RIVER AUTHORITY (LCRA) CONTROL MONUMENTS AZF9 AND X622; AND TEXAS DEPARTMENT OF TRANSPORTATION (TxDOT) CONTROL MONUMENT N2463018.

2. DISTANCES SHOWN HEREON ARE BASED ON SURFACE MEASUREMENTS, TO CONVERT SURFACE DISTANCES TO GRID, MULTIPLY BY THE COMBINED SCALE FACTOR.

3. THE COMBINED SCALE FACTOR FOR THIS PROJECT IS 1.000115 (GRID TO SURFACE).

4. IMPROVEMENTS SHOWN HEREON ARE BASED ON AN ENGINEERING DESIGN SURVEY PERFORMED BY BOWMAN CONSULTING, DURING THE MONTHS OF JANUARY THROUGH JUNE, 2015.

5. COUNTY ROAD 259 STATIONS AND OFFSETS SHOWN HEREON ARE BASED ON THE THE PROJECT BASELINES (269011AL01.DGN), AS PROVIDED BY AGUIRRE & FIELDS, LP ON 08-26-2015.

6. THE ACREAGE CALCULATED AND SHOWN HEREON IS DERIVED FROM RECORD INFORMATION, AND IS FOR INFORMATIONAL PURPOSES ONLY. THIS DOES NOT IN ANY WAY REPRESENT A BOUNDARY SURVEY OF THE PARENT TRACT.

7. THIS SURVEY WAS COMPLETED WITHOUT THE BENEFIT OF AN ABSTRACT OF TITLE. THERE MAY BE EASEMENTS OR OTHER MATTERS OF RECORD NOT SHOWN.

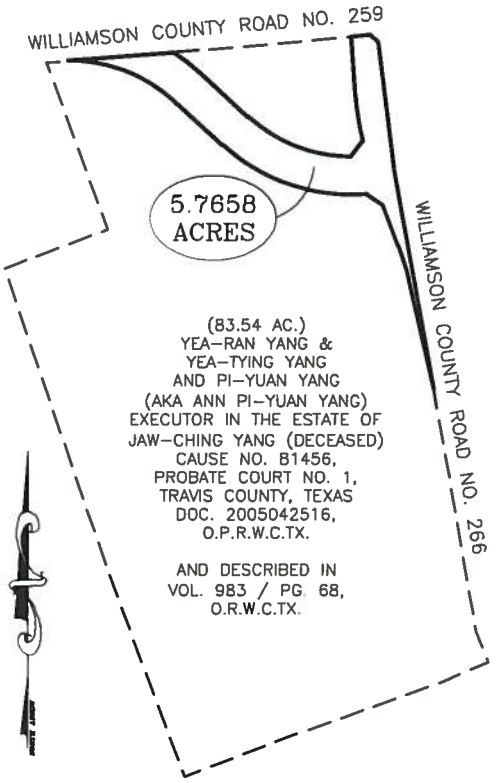

WHOLE PROPERTY INSET
(NOT TO SCALE)

PROPOSED PARCEL ACQUISITION TABLE

RECORD PROPERTY AREA = 83.54 ACRES
PROPOSED ROW ACQUISITION AREA = 5.7658 ACRES
CALCULATED REMAINDER AREA = 77.7742 ACRES



SURVEYOR CERTIFICATION

I HEREBY CERTIFY THAT THIS SURVEY WAS MADE ON THE GROUND UNDER MY DIRECTION AND SUPERVISION AND THAT THIS PLAT IS TRUE AND CORRECT TO THE BEST OF MY KNOWLEDGE AND BELIEF.

JOHN D. BARNARD
REGISTERED PROFESSIONAL LAND
SURVEYOR NO. 5749,
STATE OF TEXAS

8/24/2016
DATE

Bowman CONSULTING

Bowman Consulting Group, Ltd.
3101 Bee Cave Road Suite 100, Austin, Texas 78746
Phone: (512) 327-1180 Fax: (512) 327-4062
www.bowmanconsulting.com Bowman Consulting Group, Ltd.

TBPE Firm No. F-14309 | TBPLS Firm No. 101206-00

EXHIBIT TO ACCOMPANY FIELD NOTES DESCRIPTION FN1786

FILE: \\Longhorn\new projects\005569 - Seward Junction\005569-02-001 (SUR) - SE WA 1\Survey\Working\FN-Parcels\ROW\SK1786(gt) CR259-CR266 ROW Parcel 6 Yang Estate.dwg

DATE: Aug 23,2016-5:05pm

EXHIBIT "B"

FIELD NOTES DESCRIPTION – 6DE

DESCRIPTION OF A TOTAL OF 1.8226 ACRES OF LAND DESCRIBED HEREIN AS TRACT 1 CONTAINING 1.1249 ACRES (49,000 SQUARE FEET) AND TRACT 2 CONTAINING 0.6977 ACRE (30,393 SQUARE FEET) OF LAND IN THE NOAH SMITHWICK SURVEY, ABSTRACT NO. 590, WILLIAMSON COUNTY, TEXAS, BEING A PORTION OF THAT CERTAIN CALLED 83.54 ACRE TRACT OF LAND DESCRIBED IN THE DEED TO JAW-CHING YANG AND ANN PI-YUAN YANG OF RECORD IN VOLUME 983, PAGE 68, OFFICIAL RECORDS OF WILLIAMSON COUNTY, TEXAS, AND FURTHER DESCRIBED IN CAUSE NO. 81456, PROBATE COURT NO. 1, TRAVIS COUNTY, TEXAS, OF RECORD IN DOCUMENT NO. 2005042516, OFFICIAL PUBLIC RECORDS OF WILLIAMSON COUNTY, TEXAS; SAID 5.7658 ACRES AS SURVEYED BY BOWMAN CONSULTING GROUP, LTD. AND SHOWN ON THE ACCOMPANYING SKETCH, BEING MORE PARTICULARLY DESCRIBED BY METES AND BOUNDS AS FOLLOWS:

TRACT 1

COMMENCING at a 1/2-inch iron rod with plastic cap stamped "BCG" set, 75.00 feet right of Williamson County Road 259 Baseline Station 206+11.72, in the existing south right-of-way line of County Road 259, a varying width right-of-way, and being the north line of said 83.54 acre tract, from which a 1/2-inch iron rod found bears S 85° 21' 27" W a distance of 83.43 feet;

THENCE N 85° 21' 27" E, with the existing south right-of-way line of said County Road 259, same being the north line of said 83.54 acre tract, a distance of 409.56 feet to a 1/2-inch iron rod with plastic cap stamped "BCG" set for the western northwest corner of proposed right-of-way Parcel 6, a 5.7658 acre portion of said 83.54 acre tract, and being the northwest corner and **POINT OF BEGINNING** of the tract described herein;

THENCE N 85° 21' 27" E, continuing with the existing south right-of-way line of said County Road 259, same being the north line of said 83.54 acre tract, a distance of 40.37 feet to a calculated point for the northeast corner of the tract described herein;

THENCE leaving said right-of-way line and crossing said 83.54 acre tract with the northern line of the herein described tract, the following seven (7) courses and distances:

1. with the arc of a curve to the right, having a radius of 775.00 feet, an arc distance of 101.68 feet and a chord which bears S 51° 26' 27" E, a distance of 101.60 feet to a calculated point of tangency;

2. S 47° 40' 56" E a distance of 259.58 feet to a calculated point of curvature;

3. with the arc of a curve to the left, having a radius of 575.00 feet, an arc distance of 70.21 feet and a chord which bears S 51° 10' 49" E a distance of 70.17 feet to a calculated point for a reentrant corner;

4. N 16° 04' 03" E a distance of 257.36 feet to a calculated point for a reentrant corner;

5. S 74° 51' 37" E a distance of 100.01 feet to a calculated point for a reentrant corner;

6. S 16° 04' 03" W a distance of 279.05 feet to a calculated point for a reentrant corner; and

7. with the arc of a curve to the left, having a radius of 570.00 feet, an arc distance of 271.23 feet, and a chord which bears S 78° 31' 09" E a distance of 268.68 feet to a calculated point in a northeastern line of said Parcel 6 for the most eastern corner of the tract described herein, from which a 1/2-inch iron rod with plastic cap stamped "BCG" set for an angle point corner of said Parcel 6, being 135.17 feet left of Williamson County Road 259 Baseline Station 219+32.55 and

75.00 feet left of Williamson County Road 266 Baseline Station 260+12.66 bears N 37° 31' 09" E a distance of 78.30 feet;

THENCE S 37° 31' 09" W, with the line of said Parcel 6, a distance of 38.33 feet to a 1/2-inch iron rod with plastic cap stamped "BCG" set for a corner of said Parcel 6, being 75.00 feet left of Williamson County Road 259 Baseline Station 218+73.10 and 137.01 left feet of Williamson County Road 266 Baseline Station 259+65.95;

THENCE continuing across said 83.54 acre tract with the north line of said Parcel 6, the following three (3) courses and distances:

1. with the arc of a curve to the right having a radius of 600.00 feet, an arc distance of 441.20 feet, and a chord which bears N 68° 44' 53" W a distance of 431.33 feet to a 1/2-inch iron rod with plastic cap stamped "BCG" set for a point of tangency,

2. N 47° 40' 56" W a distance of 259.58 to a 1/2-inch iron rod with plastic cap stamped "BCG" set for a point of curvature, and

3. with the arc of a curve to the left a radius of 750.00 feet, an arc distance of 129.58 feet, and a chord which bears N 52° 37' 55" W a distance of 129.42 feet to the **POINT OF BEGINNING** and containing 1.1249 acres of land, more or less.

TRACT 2

COMMENCING at a 1/2-inch iron rod with plastic cap stamped "BCG" set, 75.00 feet right of Williamson County Road 259 Baseline Station 206+11.72, in the existing south right-of-way line of County Road 259, a varying width right-of-way, and being the north line of said 83.54 acre tract, from which a 1/2-inch iron rod found bears S 85° 21' 27" W a distance of 83.43 feet;

THENCE leaving the existing west right-of-way line of County Road 259, and crossing said 83.54 acre tract with the south line of said Parcel 6, same being the proposed south right-of-way line of said County Road 259, the following three (3) courses and distances:

1. with the arc of a curve to the right having a radius of 600.00 feet, an arc distance of 449.30 feet and a chord which bears S 69° 08' 05" E a distance of 438.87 feet to a 1/2-inch iron rod with plastic cap stamped "BCG" set 75.00 feet right of County Road 259 Baseline Station 211+17.18, for a point of tangency,

2. S 47° 40' 56" E, a distance of 259.58 feet to a 1/2-inch iron rod with plastic cap stamped "BCG" set 75.00 feet right of County Road 259 Baseline Station 213+76.76, for a point of curvature, and

3. with the arc of a curve to the left, having a radius of 750.00 feet, an arc distance of 151.92 feet, and a chord which bears S 53° 29' 07" E, a distance of 151.66 feet to a calculated point for the north corner and **POINT OF BEGINNING** of the tract described herein

THENCE continuing across said 83.54 acre tract with the south line of said Parcel 6, with said curve to the left having a radius of 750.00 feet, an arc distance of 101.87 feet, and a chord which bears S 63° 10' 45" E a distance of 101.79 feet to a calculated point for the east corner of the tract described herein;

THENCE leaving the south line of said Parcel 6, continuing across said 83.54 acre tract, the following five (5) courses and distance:

1. S 16° 04' 03" W, a distance of 225.83 feet to a calculated angle point,

2. S 26° 37' 47" E a distance of 30.68 feet to a calculated point for the southeast corner of the tract described herein,

3. S 63° 22' 13" W, a distance of 100.00 feet to a calculated angle point for the southwest corner of the tract described herein,

4. N 26° 37' 47" W a distance of 69.77 feet to a calculated angle point, and

5. N 16° 04' 03" E, a distance of 283.91 feet to the **POINT OF BEGINNING** and containing 0.6977 acres (30,393 square feet) of land, more or less.

BEARING BASIS: Texas Coordinate System, Central Zone, NAD83, Grid.

BOWMAN WORD FILE: FN1872-R1(gt)

THE STATE OF TEXAS §
§ KNOW ALL MEN BY THESE PRESENTS
COUNTY OF TRAVIS §

That I, John D. Barnard, a Registered Professional Land Surveyor, do hereby certify that the above description is true and correct to the best of my knowledge and belief and that the property described herein was determined by a survey made on the ground during the months of January through June 2015 under my direction and supervision.

WITNESS MY HAND AND SEAL at Austin, Travis County, Texas, on this 2nd of August, 2016 A.D.

Bowman Consulting Group, Ltd.
Austin, Texas 78746



John D. Barnard
Registered Professional Land Surveyor
No. 5749 – State of Texas

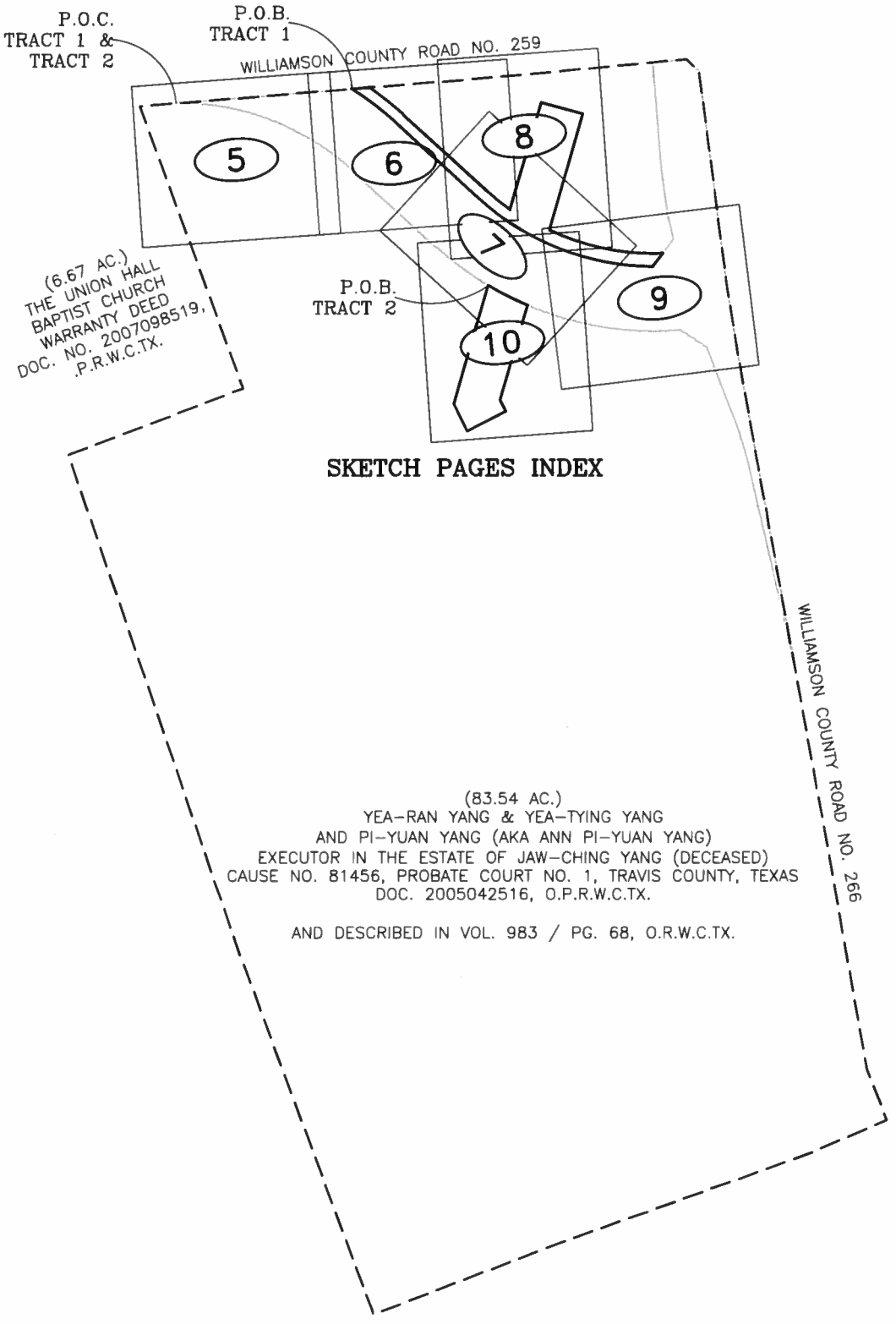

FILE: \\Longhorn\new_projects\005569 - Seward Junction\005569-02-001 (SUR) - SE WA 1\Survey\Working\FN-Parcels\Easement\SK1872-R1(gt)_CR259-CR266 DE Parcel 6 Yang Estate.dwg

DATE: Aug 23,2016-6:40pm

Bowman CONSULTING
Bowman Consulting Group, Ltd.
3101 Bee Cave Road, Suite 100, Austin, Texas 78746
Phone: (512) 327-1180 Fax: (512) 327-4062
www.bowmanconsulting.com © Bowman Consulting Group, Ltd.
TBPE Firm No. F-14309 | TBPLS Firm No. 101206-00

EXHIBIT TO ACCOMPANY
FIELD NOTES DESCRIPTION
FN1872-R1

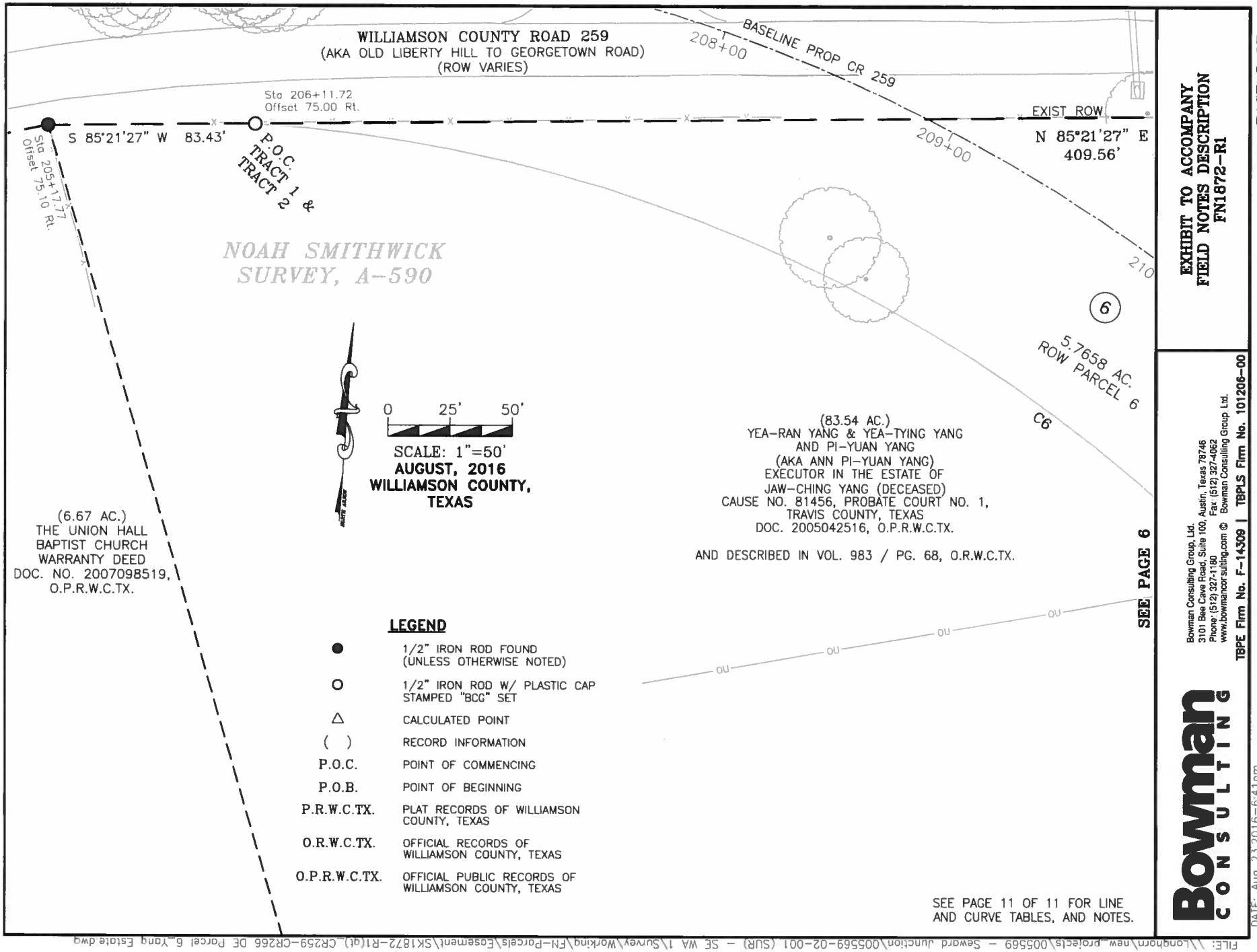
WILLIAMSON COUNTY ROAD 259
(AKA OLD LIBERTY HILL TO GEORGETOWN ROAD)
(ROW VARIES)
BASELINE PROP CR 259
208+00
209+00
210
Sta 206+11.72
Offset 75.00 Rt.
EXIST ROW
N 85°21'27" E
409.56'
S 85°21'27" W 83.43'
P.O.C.
TRACT 1 &
TRACT 2
Sta 205+17.77
Offset 75.10 Rt.
NOAH SMITHWICK
SURVEY, A-590
6
5.7658 AC.
ROW PARCEL 6
C6
0 25' 50'
SCALE: 1"=50'
AUGUST, 2016
WILLIAMSON COUNTY,
TEXAS
(6.67 AC.)
THE UNION HALL
BAPTIST CHURCH
WARRANTY DEED
DOC. NO. 2007098519,
O.P.R.W.C.TX.
(83.54 AC.)
YEA-RAN YANG & YEA-TYING YANG
AND PI-YUAN YANG
(AKA ANN PI-YUAN YANG)
EXECUTOR IN THE ESTATE OF
JAW-CHING YANG (DECEASED)
CAUSE NO. 81456, PROBATE COURT NO. 1,
TRAVIS COUNTY, TEXAS
DOC. 2005042516, O.P.R.W.C.TX.
AND DESCRIBED IN VOL. 983 / PG. 68, O.R.W.C.TX.
SEE PAGE 6
LEGEND
1/2" IRON ROD FOUND (UNLESS OTHERWISE NOTED)
1/2" IRON ROD W/ PLASTIC CAP STAMPED "BCG" SET
CALCULATED POINT
( ) RECORD INFORMATION
P.O.C. POINT OF COMMENCING
P.O.B. POINT OF BEGINNING
P.R.W.C.TX. PLAT RECORDS OF WILLIAMSON COUNTY, TEXAS
O.R.W.C.TX. OFFICIAL RECORDS OF WILLIAMSON COUNTY, TEXAS
O.P.R.W.C.TX. OFFICIAL PUBLIC RECORDS OF WILLIAMSON COUNTY, TEXAS
SEE PAGE 11 OF 11 FOR LINE AND CURVE TABLES, AND NOTES.
EXHIBIT TO ACCOMPANY
FIELD NOTES DESCRIPTION
FN1872-R1
PAGE 5 OF 11
Bowman CONSULTING
Bowman Consulting Group, Ltd.
3101 Bee Cave Road, Suite 100, Austin, Texas 78746
Phone: (512) 327-1180 Fax: (512) 327-4062
www.bowmanconsulting.com © Bowman Consulting Group, Ltd.
TBPE Firm No. F-14309 | TBPLS Firm No. 101206-00
DATE: Aug 23,2016-6:41pm
FILE: \\Longhorn\new_projects\005569 - Seward Junction\005569-02-001 (SUR) - SE WA 1\Survey\Working\FN-Parcels\Easement\SK1872-R1(gt)_CR259-CR266 DE Parcel 6_Yang Estate.dwg

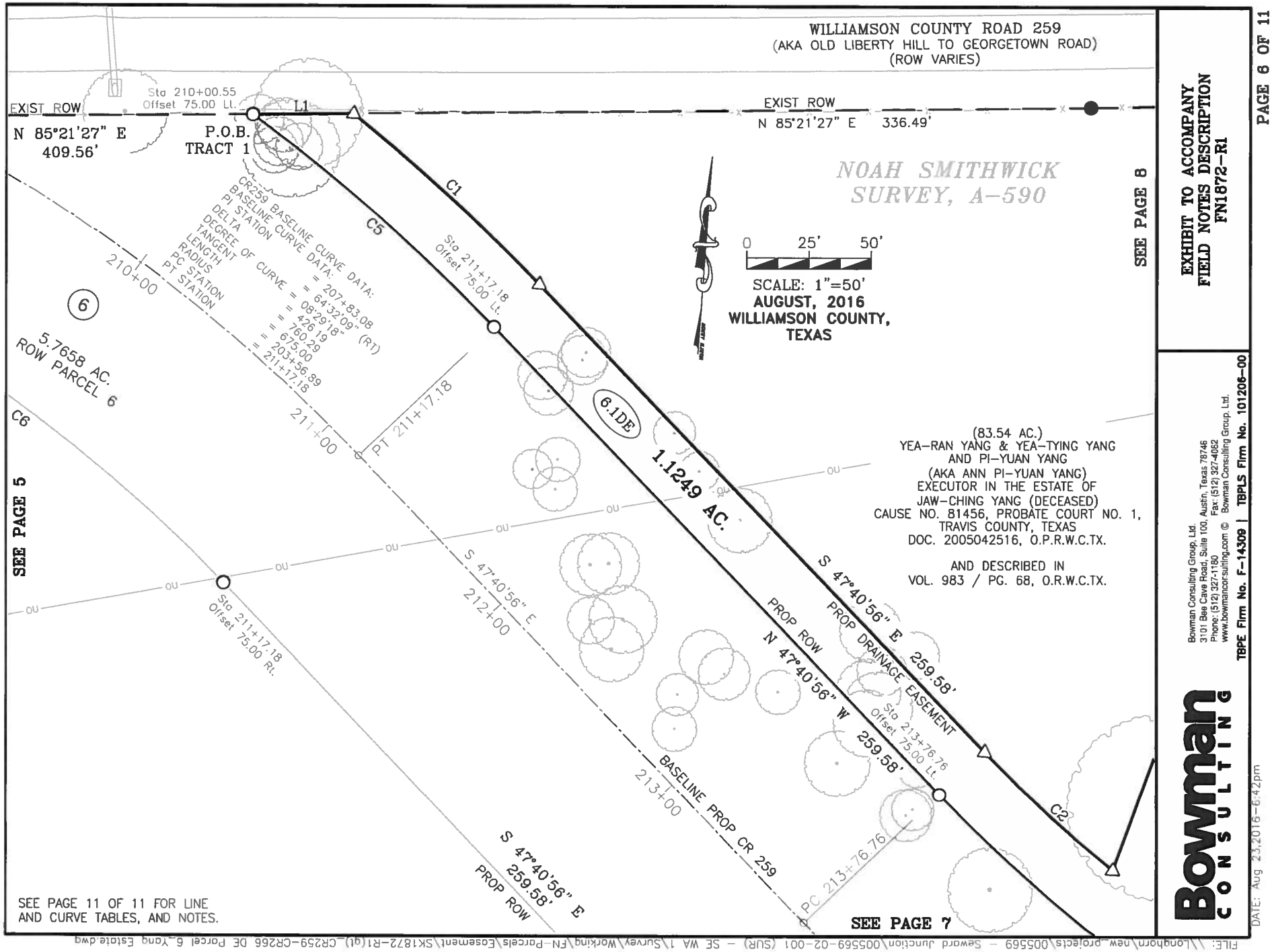

EXHIBIT TO ACCOMPANY
FIELD NOTES DESCRIPTION
FN1872-R1

PAGE 6 OF 11

Bowman Consulting Group, Ltd.
3101 Bee Cave Road, Suite 100, Austin, Texas 78746
Phone: (512) 327-1180 Fax: (512) 327-4062
www.bowmanconsulting.com © Bowman Consulting Group, Ltd.
TBPE Firm No. F-14309 | TBPLS Firm No. 101206-00

Bowman CONSULTING

DATE: Aug 23,2016-6:42pm

FILE: \\Longhorn\new_projects\005569 - Seward Junction\005569-02-001 (SUR) - SE WA 1\Survey\Working\FN-Parcels\Easement\SK1872-R1(ql)_CR259-CR266 DE Parcel 6_Yang Estate.dwg

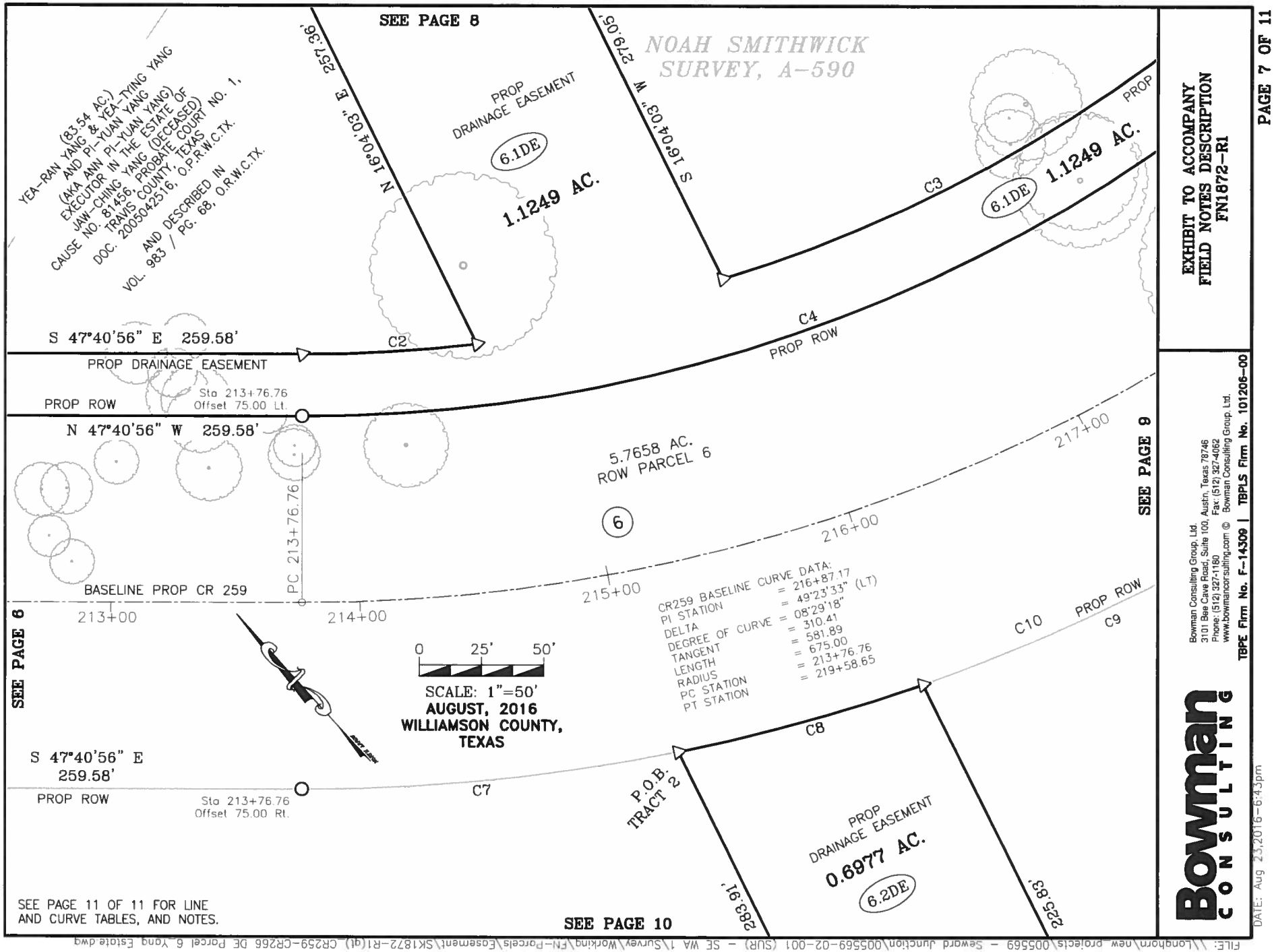

EXHIBIT TO ACCOMPANY
FIELD NOTES DESCRIPTION
FN1872-R1

Bowman Consulting Group, Ltd.
3101 Bee Cave Road, Suite 100, Austin, Texas 78746
Phone: (512) 327-1180 Fax: (512) 327-4062
www.bowmancor.sulting.com © Bowman Consulting Group, Ltd.
TBPE Firm No. F-14309 | TBPLS Firm No. 101206-00

Bowman CONSULTING

DATE: Aug 23,2016-6:43pm

FILE: \\Longhorn\new_projects\005569 - Seward Junction\005569-02-001 (SUR) - SE WA 1\Survey\Working\FN-Parcels\Easement\SK1872-R1(ql) CR259-CR266 DE Parcel 6 Yang Estate.dwg

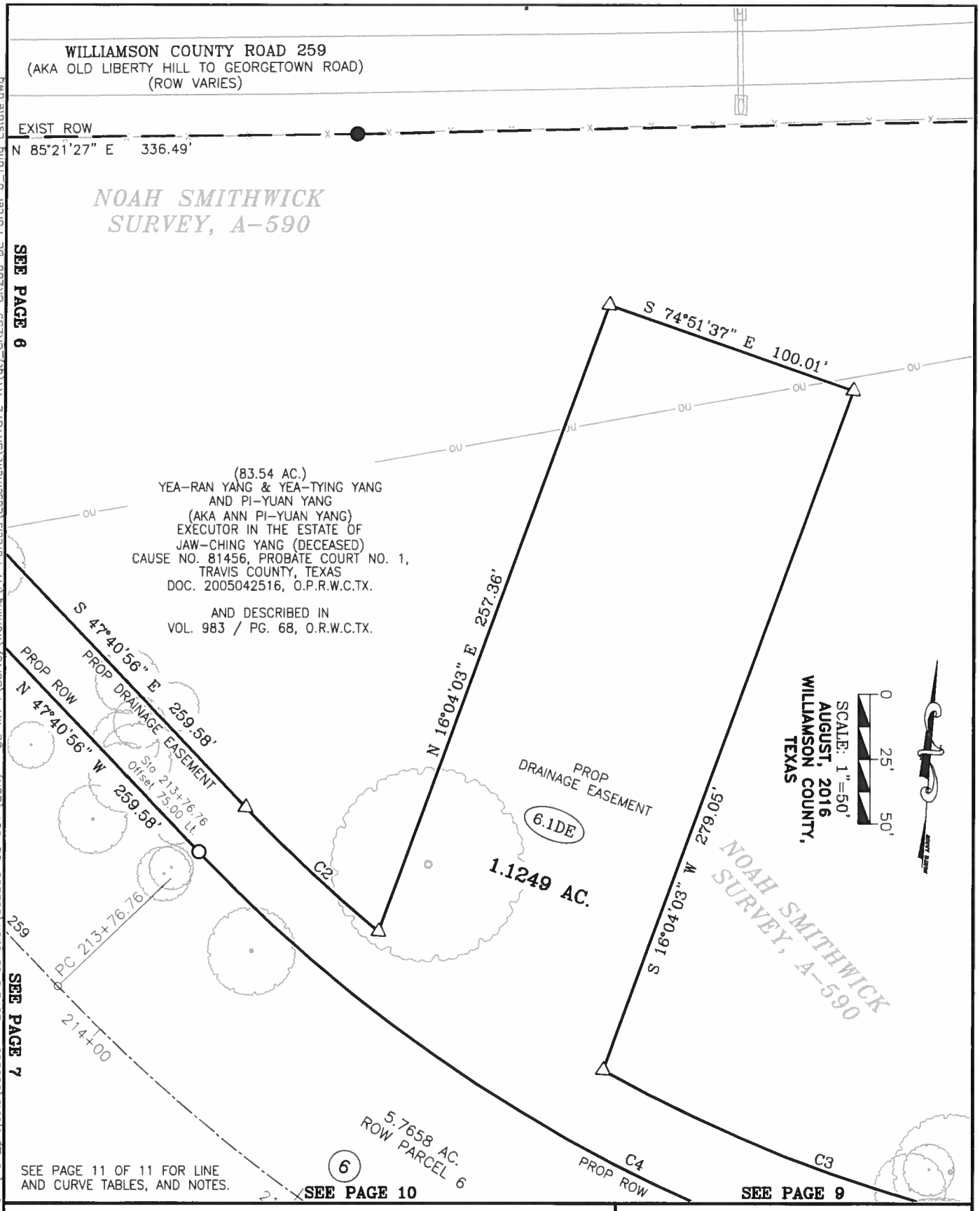

FILE: \\Longhorn\new_projects\005569 - Seward Junction\005569-02-001 (SUR) - SE WA 1\Survey\Working\FN-Parcels\Easement\SK1872-R1(at)_CR259-CR266 DE Parcel 6_Yang Estate.dwg

DATE: Aug 23,2016-6:44pm

Bowman CONSULTING

Bowman Consulting Group, Ltd.
3101 Bee Cave Road, Suite 100, Austin, Texas 78746
Phone: (512) 327-1180 Fax: (512) 327-4062
www.bowmanconsulting.com © Bowman Consulting Group, Ltd.
TBPE Firm No. F-14309 | TBPLS Firm No. 101206-00

EXHIBIT TO ACCOMPANY
FIELD NOTES DESCRIPTION
FN1872-R1

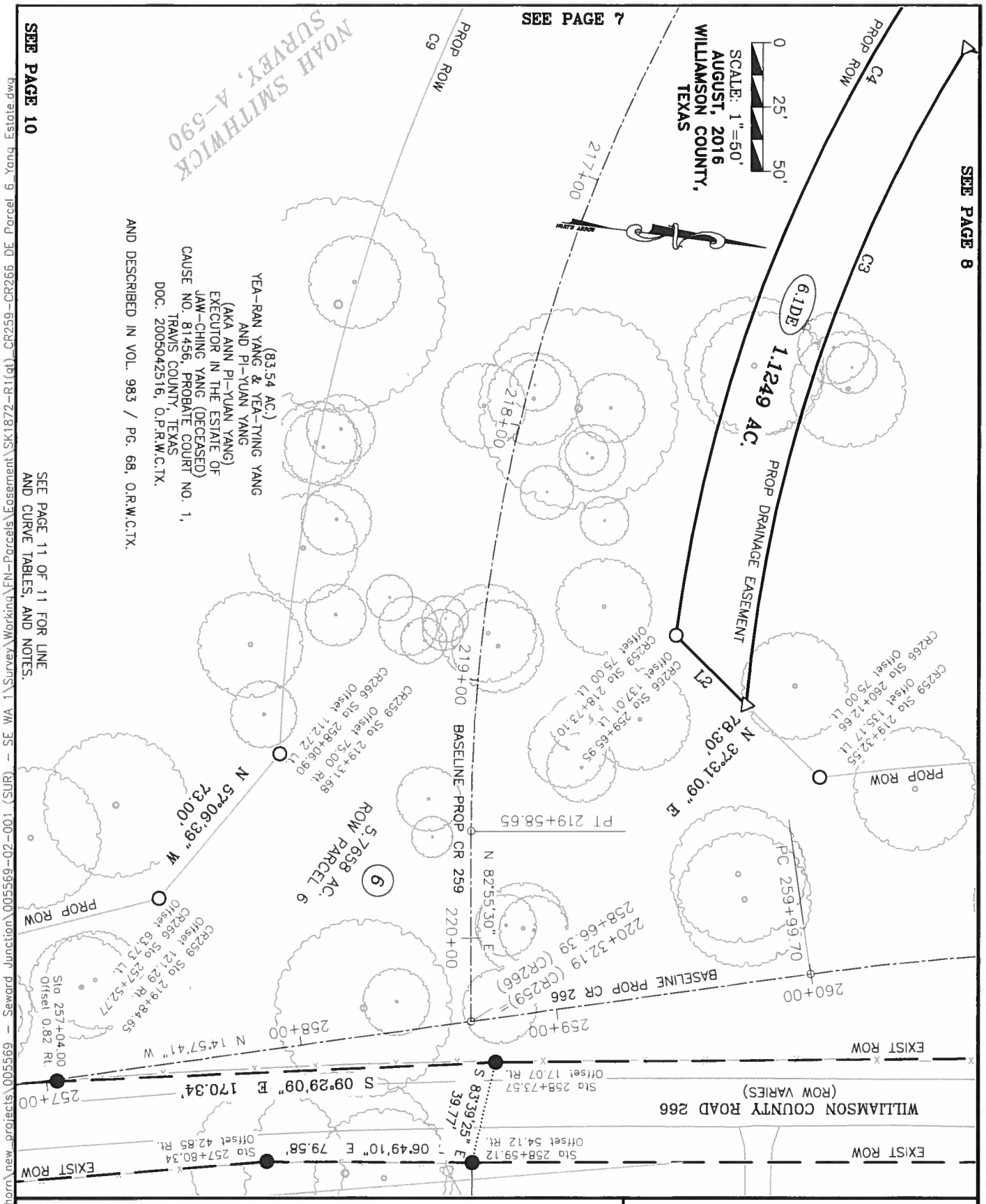

Bowman CONSULTING

Bowman Consulting Group, Ltd.
3101 Bee Cave Road, Suite 100, Austin, Texas 78746
Phone: (512) 327-1180 Fax: (512) 327-4062
www.bowmanconsulting.com © Bowman Consulting Group, Ltd.
TBPE Firm No. F-14309 | TBPLS Firm No. 101206-00

EXHIBIT TO ACCOMPANY FIELD NOTES DESCRIPTION FN1872-R1

FILE: \\Longhorn\new_projects\005569 - Seward Junction\005569-02-001 (SUR) - SE WA 1\Survey\Working\FN-Parcels\Easement\SK1872-R1(gt)_CR259-CR266 DE Parcel 6_Yang Estate.dwg

DATE: Aug 23,2016-6:44pm

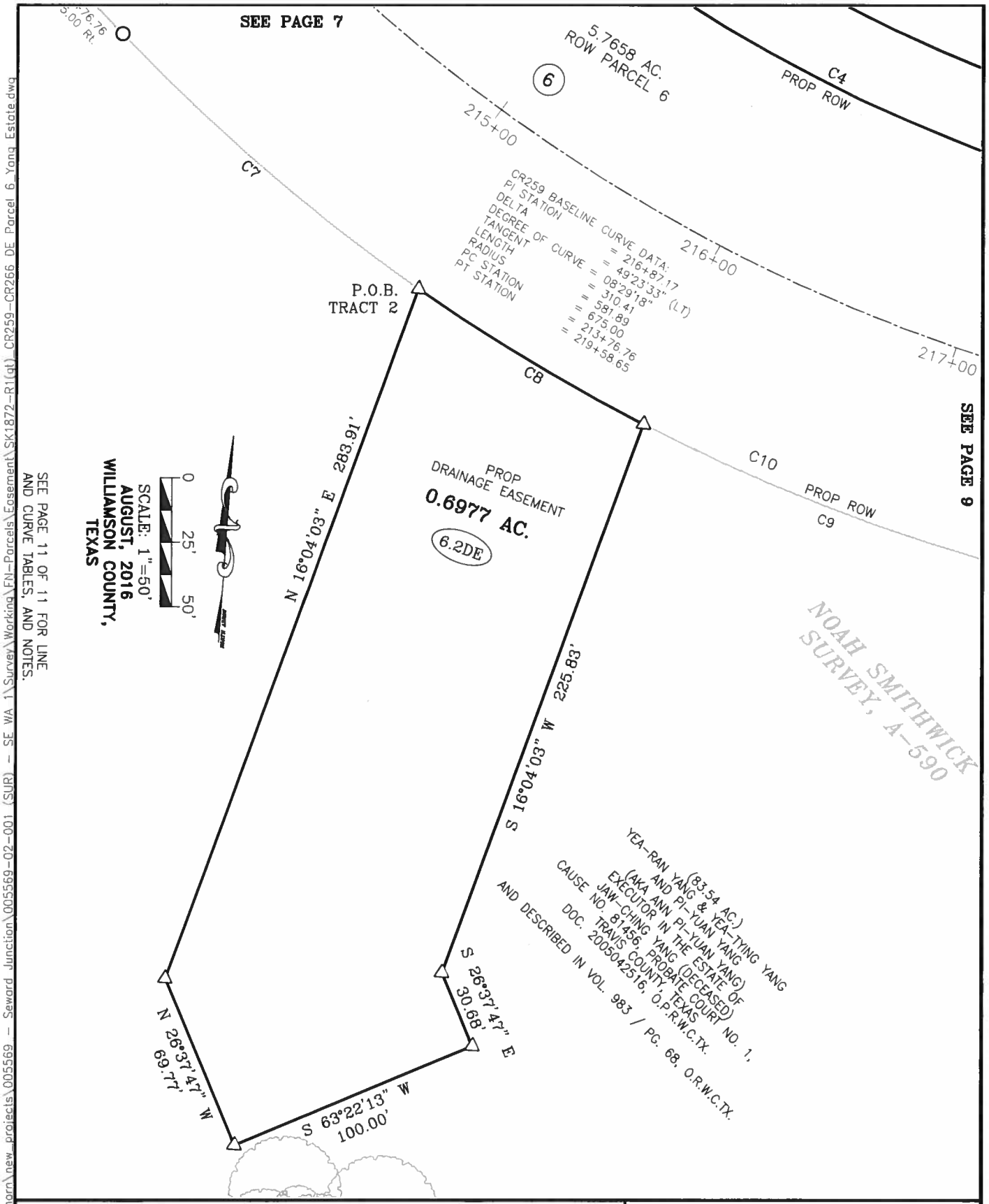

FILE: \\Longhorn\new_projects\005569 - Seward Junction\005569-02-001 (SUR) - SE WA 1\Survey\Working\FN-Parcels\Easement\SK1872-R1(gt)_CR259-CR266 DE Parcel 6_Yang Estate.dwg

DATE: Aug 23,2016-6:45pm

Bowman CONSULTING

Bowman Consulting Group, Ltd.
3101 Bee Cave Road, Suite 100, Austin, Texas 78746
Phone: (512) 327-1180 Fax: (512) 327-4062
www.bowmanconsulting.com © Bowman Consulting Group, Ltd.
TBPE Firm No. F-14309 | TBPLS Firm No. 101206-00

EXHIBIT TO ACCOMPANY
FIELD NOTES DESCRIPTION
FN1872-R1

NOTES:

1. BEARING BASIS IS TEXAS COORDINATE SYSTEM, CENTRAL ZONE (4204), NAD83, GRID, BASED ON SURVEY TIES MADE TO CONTROL MONUMENTS SAM3, SAM4, SAM5 & SAM6 AS SHOWN ON CONTROL SHEETS FOR THE US 183: CR213 TO RIVA RIDGE DRIVE PROJECT (CSJ: 0151-04-063/064); LOWER COLORADO RIVER AUTHORITY (LCRA) CONTROL MONUMENTS AZF9 AND X622; AND TEXAS DEPARTMENT OF TRANSPORTATION (TxDOT) CONTROL MONUMENT N2463018.

2. DISTANCES SHOWN HEREON ARE BASED ON SURFACE MEASUREMENTS, TO CONVERT SURFACE DISTANCES TO GRID, MULTIPLY BY THE COMBINED SCALE FACTOR.

3. THE COMBINED SCALE FACTOR FOR THIS PROJECT IS 1.000115 (GRID TO SURFACE).

4. IMPROVEMENTS SHOWN HEREON ARE BASED ON AN ENGINEERING DESIGN SURVEY PERFORMED BY BOWMAN CONSULTING, DURING THE MONTHS OF JANUARY THROUGH JUNE, 2015.

5. COUNTY ROAD 259 STATIONS AND OFFSETS SHOWN HEREON ARE BASED ON THE THE PROJECT BASELINES (269011AL01.DGN), AS PROVIDED BY AGUIRRE & FIELDS, LP ON 08-26-2015; PROPOSED DRAINAGE EASEMENT LINEWORK PROVIDED ON 03-06-2016.

6. THE ACREAGE CALCULATED AND SHOWN HEREON IS DERIVED FROM RECORD INFORMATION, AND IS FOR INFORMATIONAL PURPOSES ONLY. THIS DOES NOT IN ANY WAY REPRESENT A BOUNDARY SURVEY OF THE PARENT TRACT.

7. THIS SURVEY WAS COMPLETED WITHOUT THE BENEFIT OF AN ABSTRACT OF TITLE. THERE MAY BE EASEMENTS OR OTHER MATTERS OF RECORD NOT SHOWN.

CURVE TABLE				
CURVE #	RADIUS	LENGTH	BEARING	DISTANCE
C1	775.00'	101.68'	S 51°26'27" E	101.60'
C2	575.00'	70.21'	S 51°10'49" E	70.17'
C3	570.00'	271.23'	S 78°31'09" E	268.68'
C4	600.00'	441.20'	N 68°44'53" W	431.33'
C5	750.00'	129.58'	N 52°37'55" W	129.42'
C6	600.00'	449.30'	S 69°08'05" E	438.87'
C7	750.00'	151.92'	S 53°29'07" E	151.66'
C8	750.00'	101.87'	S 63°10'45" E	101.79'
C9	750.00'	362.80'	S 80°55'42" E	359.28'
C10	750.00'	616.59'	S 71°14'04" E	599.37'

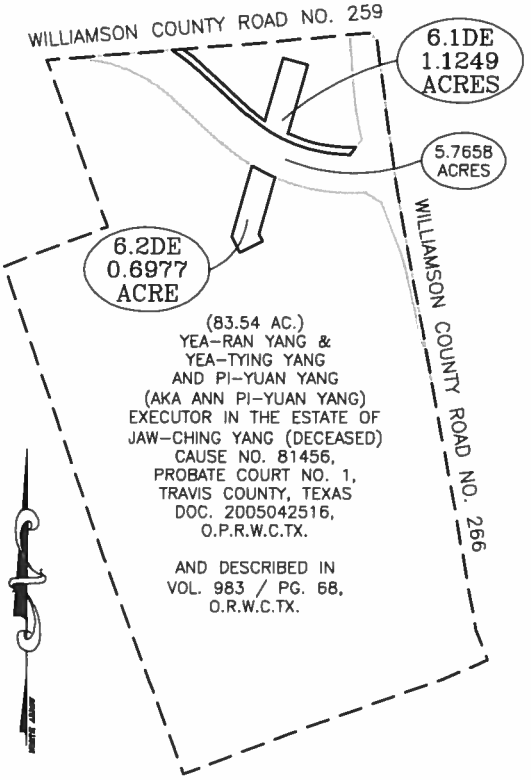

WHOLE PROPERTY INSET
(NOT TO SCALE)

PROPOSED PARCEL ACQUISITION TABLE

RECORD PROPERTY AREA = 83.54 ACRES
PROPOSED ROW ACQUISITION AREA = 5.7658 ACRES
CALCULATED REMAINDER AREA = 77.7742 ACRES

PROPOSED DRAINAGE EASEMENT(S) AREA = 1.8226 ACRES

LINE TABLE		
LINE #	BEARING	DISTANCE
L1	N 85°21'27" E	40.37'
L2	S 37°31'09" W	38.33'

SURVEYOR CERTIFICATION

I HEREBY CERTIFY THAT THIS SURVEY WAS MADE ON THE GROUND UNDER MY DIRECTION AND SUPERVISION AND THAT THIS PLAT IS TRUE AND CORRECT TO THE BEST OF MY KNOWLEDGE AND BELIEF.

_____ _____

JOHN D. BARNARD
REGISTERED PROFESSIONAL LAND
SURVEYOR NO. 5749,
STATE OF TEXAS

DATE

Bowman CONSULTING

Bowman Consulting Group, Ltd.
3101 Bee Cave Road, Suite 100, Austin, Texas 78746
Phone: (512) 327-1180 Fax: (512) 327-4062
www.bowmanconsulting.com © Bowman Consulting Group, Ltd.

TBPE Firm No. F-14309 | TBPLS Firm No. 101206-00

EXHIBIT TO ACCOMPANY FIELD NOTES DESCRIPTION FN1872-R1

EXHIBIT "C"

Parcel 6

DEED

Seward Junction Southeast (CR 259/266) Right of Way

THE STATE OF TEXAS §
§
COUNTY OF WILLIAMSON §

NOTICE OF CONFIDENTIALITY RIGHTS: IF YOU ARE A NATURAL PERSON, YOU MAY REMOVE OR STRIKE ANY OF THE FOLLOWING INFORMATION FROM THIS INSTRUMENT BEFORE IT IS FILED IN THE PUBLIC RECORDS: YOUR SOCIAL SECURITY NUMBER OR YOUR DRIVER'S LICENSE NUMBER.

NOW, THEREFORE, KNOW ALL BY THESE PRESENTS:

That ANN PI-YUAN YANG, YEA-RAN YANG, and YEA-TYNG YANG, hereinafter referred to as Grantor, whether one or more, for and in consideration of the sum of Ten Dollars ($10.00) and other good and valuable consideration to Grantor in hand paid by Williamson County, Texas, the receipt and sufficiency of which is hereby acknowledged, and for which no lien is retained, either expressed or implied, have this day Sold and by these presents do Grant, Bargain, Sell and Convey unto WILLIAMSON COUNTY, TEXAS, all that certain tract or parcel of land lying and being situated in the County of Williamson, State of Texas, along with any improvements thereon, being more particularly described as follows:

> All of that certain 5.7658 acre (251,160 Sq. Ft.) of land in the Noah Smithwick Survey, Abstract No. 590, Williamson County, Texas; being more fully described by metes and bounds in Exhibit "A", attached hereto and incorporated herein (**Parcel 6**).

SAVE AND EXCEPT, HOWEVER, it is expressly understood and agreed that Grantor is retaining title to the following improvements located on the property described in said Exhibit "A" to wit: NONE

RESERVATIONS FROM AND EXCEPTIONS TO CONVEYANCE AND WARRANTY:

Visible and apparent easements not appearing of record;

Any discrepancies, conflicts, or shortages in area or boundary lines or any encroachments or any overlapping of improvements which a current survey would show;

Easements, restrictions, reservations, covenants, conditions, oil and gas leases, mineral severances, and encumbrances for taxes and assessments (other than liens and conveyances) presently of record in the Official Public Records of Williamson County, Texas, that affect the property, but only to the extent that said items are still valid and in force and effect at this time.

Grantor reserves all of the oil, gas and other minerals in and under the land herein conveyed but waives all rights of ingress and egress to the surface thereof for the purpose of exploring, developing, mining or drilling or pumping the same; provided, however, that operations for exploration or recovery of any such minerals shall be permissible so long as all surface operations in connection therewith are located at a point outside the acquired parcel and upon the condition that none of such operations shall be conducted so near the surface of said land as to interfere with the intended use thereof or in any way interfere with, jeopardize, or endanger the facilities of Williamson County, Texas or create a hazard to the public users thereof; it being intended, however, that nothing in this reservation shall affect the title and the rights of Grantee to take and use without additional compensation any, stone, earth, gravel, caliche, iron ore, gravel or any other road building material upon, in and under said land for the construction and maintenance of CR 259/CR 266.

TO HAVE AND TO HOLD the property herein described and herein conveyed together with all and singular the rights and appurtenances thereto in any wise belonging unto Williamson County, Texas and its assigns forever; and Grantor does hereby bind itself, its heirs, executors, administrators, successors and assigns to Warrant and Forever Defend all and singular the said premises herein conveyed unto Williamson County, Texas and its assigns against every person whomsoever lawfully claiming or to claim the same or any part thereof.

This deed is being delivered in lieu of condemnation.

IN WITNESS WHEREOF, this instrument is executed on this the ___ day of _____, 2018.

[signature pages follow]

GRANTOR:

_____
Ann Pi-Yuan Yang

ACKNOWLEDGMENT

STATE OF TEXAS §
§
COUNTY OF _____ §

This instrument was acknowledged before me on this the ____ day of _____, 2018, by Ann Pi-Yuan Yang, in the capacity and for the purposes and consideration recited therein.

_____
Notary Public, State of Texas

GRANTOR:

_____
Yea-Ran Yang

ACKNOWLEDGMENT

STATE OF TEXAS §
§
COUNTY OF _____ §

This instrument was acknowledged before me on this the ____ day of _____, 2018, by Yea-Ran Yang, in the capacity and for the purposes and consideration recited therein.

_____
Notary Public, State of Texas

GRANTOR:

_____
Yea-Tyng Yang

ACKNOWLEDGMENT

STATE OF TEXAS §
§
COUNTY OF _____ §

This instrument was acknowledged before me on this the ____ day of _____, 2018, by Yea-Tyng Yang, in the capacity and for the purposes and consideration recited therein.

_____
Notary Public, State of Texas

PREPARED IN THE OFFICE OF:

Sheets & Crossfield, P.C.
309 East Main
Round Rock, Texas 78664

GRANTEE'S MAILING ADDRESS:

Williamson County, Texas
Attn: County Auditor
710 Main Street, Suite 101
Georgetown, Texas 78626

AFTER RECORDING RETURN TO:

EXHIBIT "D"

DRAINAGE EASEMENT
Seward Junction Loop

THE STATE OF TEXAS '
' KNOW ALL BY THESE PRESENTS:
COUNTY OF WILLIAMSON '

That ANN PI-YUAN YANG, YEA-RAN YANG, and YEA-TYNG YANG, and their successors and assigns, hereinafter referred to as Grantor (whether one or more), for and in consideration of the sum of One and No/100 ($1.00) Dollars cash in hand paid and other good and valuable consideration paid to Grantor by WILLIAMSON COUNTY, TEXAS, its agents and assigns, hereinafter referred to as Grantee, receipt of which consideration is hereby acknowledged, has GRANTED, SOLD and CONVEYED, and by these premises does hereby GRANT, SELL and CONVEY unto Grantee a perpetual easement interest in, on, over, upon, above and across the below-described Property:

> All of that certain 1.8226 (79,393 square feet) of land in the Noah Smithwick Survey, Abstract No. 590, Williamson County, Texas; said tract being more particularly described by metes and bounds in Exhibit "A" attached hereto and incorporated herein (**Parcel 6DE**).

The perpetual easement, right-of-way, rights and privileges herein granted shall be used for the purposes of opening, constructing and maintaining a permanent drainage easement and channel, along with any structures, materials, improvements, pipes, culverts, storm sewer, grading and related appurtenances and equipment which may be necessary to facilitate the proper drainage of the adjacent property and roadway facilities (the "Benefitted Tract"), in, along, upon, under and across said premises described in Exhibit "A" together with the right and privilege at all times of the Grantee herein, its agents, employees and representatives of ingress and egress from to and from said premises from the adjacent right of way for the purpose of making any improvements, modifications or repairs which the Grantee deems necessary.

The perpetual easement, right-of-way, rights and privileges herein granted shall also encompass the right of Grantee to trim, cut, fell and remove therefrom all trees, underbrush, vegetation, and obstructions, structures or obstacles within the limits of the Property, but only such as necessary to carry out the purposes of the easement; reserving to the landowners and their heirs and assigns, however, all such rights and privileges as may be used without interfering with or abridging the rights and purposes of the easement herein acquired by Grantee. Any such trees or vegetation cut by Grantee shall promptly be removed from the Property.

Grantee shall be responsible for maintaining the easement area described herein and any improvements constructed by Grantee and located in, across or upon the easement area. Grantee, by acceptance of this easement acknowledges and agrees that Grantor hereby expressly reserves the right to relocate, modify and reduce the easement area described herein and alter any improvements or facilities located in, across or upon the easement area, at Grantor's sole cost and expense, provided that such relocation, reduction and/ or alteration shall not cause any use or development of

the Benefited Tract to be out of compliance with any regulation of any governmental entity having jurisdiction over the Benefited Tract, and shall not cause the diversion, encroachment, impoundment or increase in the amount of surface water on or across the Benefited Tract in excess of the drainage conditions existing prior to such relocation, reduction or alteration. The Grantor may execute and file in the appropriate public records a replacement easement for any such reduction, alteration and/ or relocation of the easement area, provided such reduction, alteration or relocation of the easement area is in conformance with the terms of this paragraph and such replacement easement is conveyed to the Grantee, its successors or assigns by replacement easement recorded in the appropriate public records. Concurrent with or after the recording of such replacement easement, the Grantee, its successors or assigns shall execute any document presented by the Grantor reasonably necessary or convenient for the release or re-conveyance to Grantor of any easement area not included in the replacement easement.

To the extent allowed by law, Grantee shall indemnify Grantor against any loss and damage which shall be caused by the exercise of the rights of ingress and egress or by any wrongful or negligent act or omission of Grantee's agents or employees in the course of their employment. Grantee shall be responsible for the correction of, or compensation for, any damage to Grantor's property which is the result of actions outside the granted purposes of this easement.

TO HAVE AND TO HOLD the same, in perpetuity, in and to Grantee, and its successors and assigns, together with all and singular all usual and customary rights thereto in anywise belonging, and together with the right and privilege at any and all times to enter said premises, or any part thereof, for the purpose of constructing or maintaining said drainage and for making connections therewith.

Grantor does hereby bind its heirs, executors, administrators and assigns to WARRANT AND FOREVER DEFEND, all and singular, the said premises unto Williamson County, Texas, its successors and assigns, against every person whomsoever lawfully claiming or to claim the same or any part thereof by, through, or under Grantors, but not otherwise. This conveyance is made subject to any validly existing matters of record affecting this Property which are recorded in the Official Records of Williamson County, Texas.

The perpetual easement, right-of-way, rights and privileges granted herein are non-exclusive, however Grantor covenants not to convey any other easement or conflicting rights within the premises covered by this grant that interfere with the purpose or function of any improvements placed thereon, or the maintenance of the Property for the conveyance of stormwater drainage without the express written consent of Grantee, which consent shall not be unreasonably withheld.

EXECUTED on this the _____day of _____, 2018.

[signature page follows]

GRANTOR:

_____

Ann Pi-Yuan Yang

ACKNOWLEDGMENT

STATE OF TEXAS §
§
COUNTY OF _____ §

This instrument was acknowledged before me on this the ___ day of _____ , 2018, by Ann Pi-Yuan Yang, in the capacity and for the purposes and consideration recited therein.

_____

Notary Public, State of Texas

GRANTOR:

_____

Yea-Ran Yang

ACKNOWLEDGMENT

STATE OF TEXAS §
§
COUNTY OF _____ §

This instrument was acknowledged before me on this the ___ day of _____ , 2018, by Yea-Ran Yang, in the capacity and for the purposes and consideration recited therein.

_____

Notary Public, State of Texas

GRANTOR:

_____

Yea-Tyng Yang

ACKNOWLEDGMENT

STATE OF TEXAS §
§
COUNTY OF _____ §

This instrument was acknowledged before me on this the ___ day of _____ , 2018, by Yea-Tyng Yang, in the capacity and for the purposes and consideration recited therein.

_____

Notary Public, State of Texas

ACCEPTED:

WILLIAMSON COUNTY, TEXAS

By:_____
Dan A. Gattis, County Judge

ACKNOWLEDGMENT

STATE OF TEXAS §
§
COUNTY OF _____ §

This instrument was acknowledged before me on this the ___ day of _____, 2018, by Dan A. Gattis, Williamson County Judge, in the capacity and for the purposes and consideration recited therein.

_____
Notary Public, State of Texas

PREPARED IN THE OFFICE OF:

Sheets & Crossfield, P.C.
309 East Main
Round Rock, Texas 78664

GRANTEE'S MAILING ADDRESS:

Williamson County, Texas
Attn: County Auditor
710 Main Street, Suite 101
Georgetown, Texas 78626

AFTER RECORDING RETURN TO:

Commissioners Court - Regular Session **29.**

Meeting Date: 04/17/2018

Surplus ROW

Submitted For: Charlie Crossfield **Submitted By:** Charlie Crossfield, Road Bond

Department: Road Bond

Agenda Category: Regular Agenda Items

Information

Agenda Item

Discuss, consider and take action setting date, time and place for opening bids and award contract for the sale of approximately 1.761 acres of surplus right of way abutting US 183A.

Background

Fiscal Impact

From/To	Acct No.	Description	Amount

Attachments

Surplus ROW survey 1.748 AC

Surplus ROW survey 0.013 AC

Form Review

Inbox	Reviewed By	Date
County Judge Exec Asst.	Wendy Coco	04/12/2018 09:25 AM
Form Started By: Charlie Crossfield		Started On: 04/12/2018 09:17 AM
Final Approval Date: 04/12/2018		

EXHIBIT_____

County: Williamson
Parcel No.: 133
Highway: U.S. 183A
Limits: From: The South Fork of the San Gabriel River
To: Avery Ranch Boulevard

PROPERTY DESCRIPTION FOR PARCEL 133

DESCRIPTION OF A 1.748 ACRE TRACT OF LAND, LOCATED IN THE WILLIAM MANSIL SURVEY, ABSTRACT NO. 437, BEING A PORTION OF A CALLED 77.484 ACRE TRACT OF LAND DESCRIBED AS TRACT TWO IN THE DEED TO JEAN BAPTISTE LTD. AS RECORDED IN DOCUMENT NO. 9926686, OFFICIAL RECORDS WILLIAMSON COUNTY, TEXAS (O.R.W.C.TX.), SAID 1.748 ACRE TRACT, AS SHOWN ON A RIGHT-OF-WAY SKETCH PREPARED BY SAM, INC. FOR THIS PARCEL, BEING MORE PARTICULARLY DESCRIBED BY METES AND BOUNDS AS FOLLOWS:

BEGINNING at a ½-inch iron rod with SAM Inc. cap set on the curving proposed westerly right-of-way line of U.S. Highway 183A, on the north line of said 77.484 acre tract, being the south line of a called 77.49 acre tract as described as Tract One in the deed to Jean Baptiste and recorded in Document No. 9926686, O.R.W.C.TX., also being the northeast corner of the tract described herein, from which a ½-inch iron rod found at the common east corner of said Tract One and said Tract Two, bears N69°23'27"E, a distance of 3462.98 feet;

1) **THENCE** through the interior of said Tract Two, with said curving proposed westerly right-of-way line of U.S. Highway 183A, a distance of 929.07 feet along the arc of a curve to the left, through a central angle of 08° 58' 38", having a radius of 5929.58 feet and a chord which bears S 10° 37' 48" E, a distance of 928.12 feet to a calculated point on the south line of said Tract Two, being the north line of a called 17.46 acre tract described as Tract I in the deed to West Texas Trading Retirement, Ltd. and recorded in Volume 2058, Page 119, O.R.W.C.TX., from which a ½-inch iron rod found for the northeast corner of said 17.46 acre tract, being the northwest corner of a called 5.96 acre tract as described in the deed to Gary G. Bonnet and recorded in Volume 2697, Page 599, O.R.W.C.TX., bears, N 70° 52' 38" E, a distance of 37.93 feet;

2) **THENCE** S 70°52'38" W, at a distance of 170.52 feet, passing a ½-inch iron rod found, continuing for a total distance of 170.73 feet with the south line of said Tract Two, being the north line of said 17.46 acre tract, to a calculated point on the curving easterly right-of-way line of U.S. Highway 183, as described in the deed to the State of Texas, recorded in Volume 295, Page 131, Deed Records Williamson County, Texas (D.R.W.C.TX.), for the southwest corner of the tract described herein, from which a concrete highway monument found for the southerly terminus of said curving easterly right-of-way line, bears an arc distance of 602.44 feet along the arc of a curve to the left, through a central angle of 12° 15' 44", having a radius of 2814.93 feet, and a chord which bears S 10° 00' 11" E, a distance of 601.29 feet;

THENCE with said easterly right-of-way line of U.S. Highway 183, the following 3 calls numbered 3 through 5:

3) northerly, along the arc of a curve to the right, an arc distance of 118.67 feet through a central angle of 02° 24' 56", having a radius of 2814.93 feet, and a chord which bears N 02° 39' 51" W, a distance of 118.67 feet to a calculated point, from which a concrete highway monument found, bears N 12° 46' 34" W, a distance of 0.45 feet,

4) N 01° 26' 17" W, a distance of 689.56 feet to a concrete highway monument found for the beginning of a curve to the right, and

5) along the arc of said curve to the right, an arc distance of 155.54 feet through a central angle of 03° 11' 31", having a radius of 2792.05 feet, and a chord which bears N 00° 08' 17" E, a distance of 155.52 feet to a calculated point for the northwest corner of said Tract Two, being the southwest corner of said Tract One, from which a concrete highway monument found for the northerly terminus of said curve to the right, bears an arc distance of 307.19 feet through a central angle of 06° 18' 14", having a radius of 2792.05 feet, and a chord which bears N 04° 53' 09" E, a distance of 307.04 feet;

6) **THENCE** N 69° 23' 27" W, with the north line of said Tract Two, being the south line of said Tract One a distance of 13.40 feet, to the **POINT OF BEGINNING** and containing 1.748 acres of land, more or less.

This property description is accompanied by a separate plat of even date.

All bearings are based on the Texas State Plane Coordinate System, Central Zone, NAD 83 (93).

THE STATE OF TEXAS §

KNOW ALL MEN BY THESE PRESENTS:

COUNTY OF TRAVIS §

That I, Paul L. Easley, a Registered Professional Land Surveyor, do hereby certify that the above description is true and correct to the best of my knowledge and belief and that the property described herein was determined by a survey made on the ground under my direction and supervision.

WITNESS MY HAND AND SEAL at Austin, Travis County, Texas this the 16h day of July, 2004 A.D.

SURVEYING AND MAPPING, Inc.
5508 West Highway 290
Building B
Austin, Texas 78735

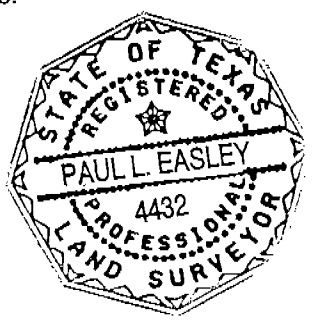

Paul L. Easley
Registered Professional Land Surveyor
No. 4432 – State of Texas

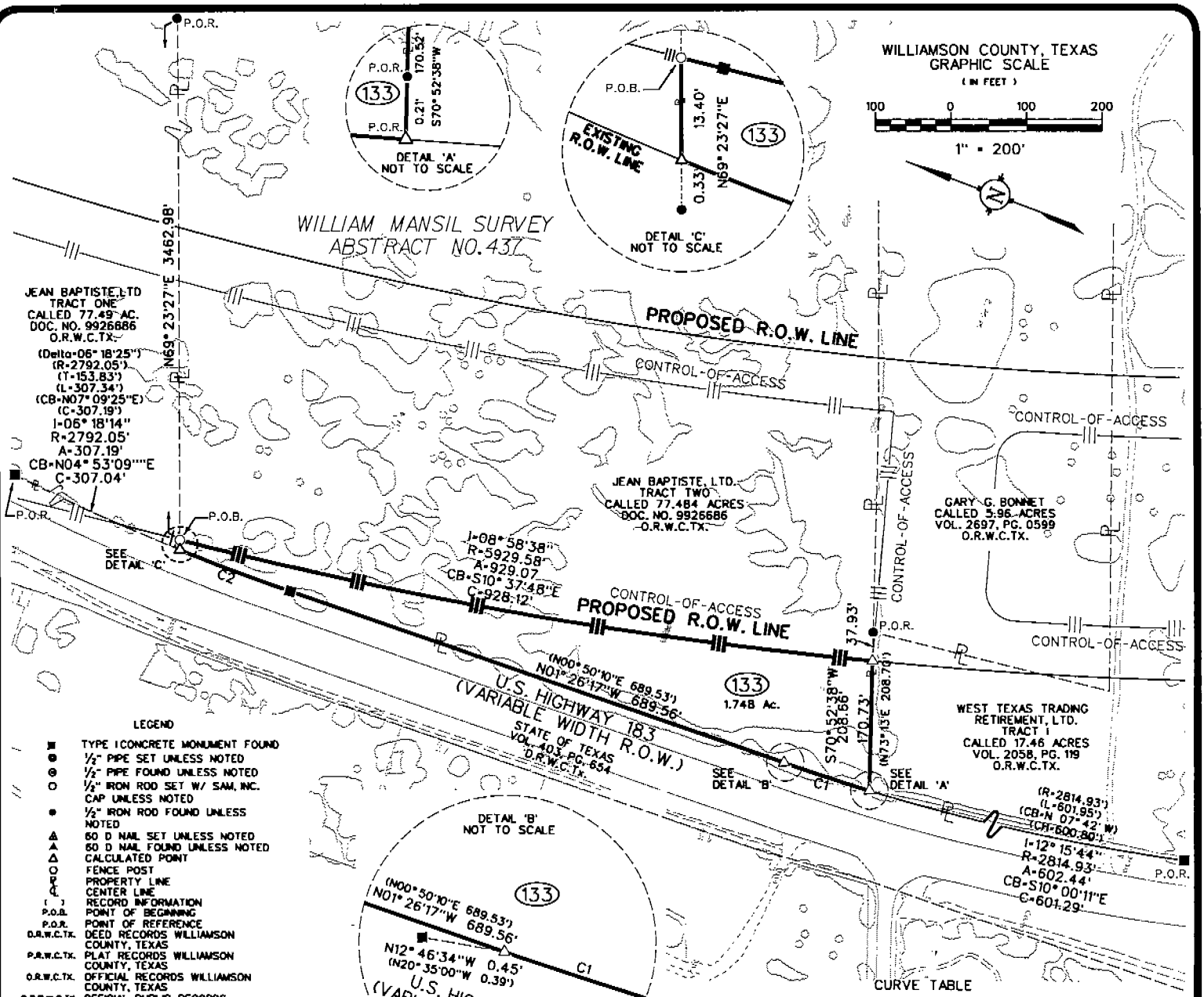

LEGEND

■	TYPE I CONCRETE MONUMENT FOUND
●	½" PIPE SET UNLESS NOTED
⊖	½" PIPE FOUND UNLESS NOTED
○	½" IRON ROD SET W/ SAM, INC. CAP UNLESS NOTED
●	½" IRON ROD FOUND UNLESS NOTED
▲	60 D NAIL SET UNLESS NOTED
▲	60 D NAIL FOUND UNLESS NOTED
△	CALCULATED POINT
○	FENCE POST
℄	PROPERTY LINE
℄	CENTER LINE
( )	RECORD INFORMATION
P.O.B.	POINT OF BEGINNING
P.O.R.	POINT OF REFERENCE
D.R.W.C.Tx.	DEED RECORDS WILLIAMSON COUNTY, TEXAS
P.R.W.C.Tx.	PLAT RECORDS WILLIAMSON COUNTY, TEXAS
O.R.W.C.Tx.	OFFICIAL RECORDS WILLIAMSON COUNTY, TEXAS
O.P.R.W.C.Tx.	OFFICIAL PUBLIC RECORDS WILLIAMSON COUNTY, TEXAS

CURVE TABLE

NO.	DELTA	RADIUS	LENGTH	CHORD	CHORD BEARING
C1	02° 24'56"	2814.93'	118.67'	118.67'	N02° 39'51"W
(C1)	(02° 39'10")	(2561.15')	(118.58')	(118.57')	(N00° 29'25"W)
C2	03° 11'31"	2792.05'	155.54'	155.52'	N00° 08'17"E
(C2)	(3° 11'15")	(2792.05')	(155.33')	(155.31')	(S02° 24'35"W)

NOTES:

1. THIS SURVEY WAS PERFORMED WITHOUT THE BENEFIT OF A TITLE REPORT. RECORD INFORMATION ON THIS DRAWING IS BASED ON A PUBLIC RECORDS SEARCH BY THE SURVEYOR AND MAY NOT INCLUDE ALL EASEMENTS OR INSTRUMENTS PERTAINING TO THIS PROPERTY.
2. ALL BEARINGS ARE BASED ON THE TEXAS STATE PLANE COORDINATE SYSTEM, CENTRAL ZONE, NAD 83 (93), ALL DISTANCES AND COORDINATES ARE ADJUSTED TO SURFACE USING THE PROJECT SURFACE ADJUSTMENT FACTOR OF 1.00012.
3. THIS PLAT IS ACCOMPANIED BY A PROPERTY DESCRIPTION OF EVEN DATE.
4. ACCESS IS PROHIBITED ACROSS THE CONTROL OF ACCESS LINE TO THE TRANSPORTATION FACILITY FROM THE ADJOINING PROPERTY.
5. PLANIMETRICS SHOWN HEREON ARE FROM AERIAL MAPPING PERFORMED BY SAM, INC. IN FEBRUARY 2004.

I HEREBY CERTIFY THAT THIS SURVEY WAS MADE ON THE GROUND UNDER MY DIRECTION AND SUPERVISION AND THAT THIS PLAT IS TRUE AND CORRECT TO THE BEST OF MY KNOWLEDGE AND BELIEF.

STATE OF TEXAS
REGISTERED
PAUL L. EASLEY
4432
PROFESSIONAL
LAND SURVEYOR

PAUL L. EASLEY
REGISTERED PROFESSIONAL LAND SURVEYOR
NO. 4432, STATE OF TEXAS

JULY 16, 2004
DATE

SAM INC.
SURVEYING • AERIAL MAPPING • ENGINEERING
5508 West Highway 290
Building B
Austin, Texas 78735
(512) 447-0575
Fax: (512) 326-3029

RIGHT-OF-WAY SKETCH SHOWING PROPERTY OF JEAN BAPTISTE, LTD

EXHIBIT_____

County: Williamson
Parcel No.: 132
Highway: U.S. 183A
Limits: From: The South Fork of the San Gabriel River
To: Avery Ranch Boulevard

PROPERTY DESCRIPTION FOR PARCEL 132

DESCRIPTION OF A 0.013 ACRE (560 SQUARE FEET) TRACT OF LAND, LOCATED IN THE WILLIAM MANSIL SURVEY, ABSTRACT NO. 437, BEING A PORTION OF A CALLED 77.49 ACRE TRACT OF LAND DESCRIBED AS TRACT ONE IN THE DEED TO JEAN BAPTISTE LTD. AS RECORDED IN DOCUMENT NO. 9926686, OFFICIAL RECORDS OF WILLIAMSON COUNTY, TEXAS (O.R.W.C.TX.), SAID 0.013 ACRE TRACT, AS SHOWN ON A RIGHT-OF-WAY SKETCH PREPARED BY SAM, INC. FOR THIS PARCEL, BEING MORE PARTICULARLY DESCRIBED BY METES AND BOUNDS AS FOLLOWS:

BEGINNING at a ½-inch iron rod with SAM Inc. cap set on the curving proposed westerly right-of-way line of U.S. Highway 183A, at its intersection with the curving existing easterly right-of-way line of U.S. Highway 183 as described in the deed to the State of Texas, recorded in Volume 295, Page 131, Deed Records Williamson County, Texas (D.R.W.C.TX.), and being on the west line of said Tract One, from which a concrete highway monument found for the northerly terminus of said curving easterly right-of-way line of U.S. Highway 183, bears an arc distance of 218.30 feet through a central angle of 04° 28' 47", having a radius of 2792.05 feet, and a chord which bears N 05° 47' 53" E, a distance of 218.25 feet;

1) **THENCE** through the interior of said Tract One, with said curving proposed right-of-way line, a distance of 84.50 feet along the arc of a curve to the left, through a central angle of 00° 48' 59"", having a radius of 5929.58 feet, and a chord which bears S 05°43' 59"E, a distance of 84.50 feet to a ½-inch iron rod with SAM Inc. cap set on the south line of said Tract One, being the north line of a called 77.484 acre tract of land described as Tract Two in said deed to Jean Baptiste Ltd., from which a ½-inch iron rod found for the common easterly corner of said Tract One and said Tract Two bears, N 69° 23' 27" E, a distance of 3462.98 feet;

2) **THENCE** S 69°23'27" W, with the south line of said Tract One, being the north line of said Tract Two, a distance of 13.40 feet to a calculated point for the common west corner of same, and being on said curving easterly right-of-way line of U.S. Highway 183, from which a ½-inch iron rod found, bears S 69° 23' 27" W, a distance of 0.33 feet;

3) **THENCE** with said curving easterly right-of-way line of U.S. Highway 183, a distance of 88.89 feet along the arc of a curve to the right, through a central angle of 01° 49' 27", having a radius of 2792.05 feet, and a chord which bears N 02° 38' 46"E, a distance of 88.89 feet to the **POINT OF BEGINNING** and containing 0.013 acre (560 square feet) of land more or less.

This property description is accompanied by a separate plat of even date.

All bearings are based on the Texas State Plane Coordinate System, Central Zone, NAD 83 (93).

THE STATE OF TEXAS §

KNOW ALL MEN BY THESE PRESENTS:

COUNTY OF TRAVIS §

That I, Paul L. Easley, a Registered Professional Land Surveyor, do hereby certify that the above description is true and correct to the best of my knowledge and belief and that the property described herein was determined by a survey made on the ground under my direction and supervision.

WITNESS MY HAND AND SEAL at Austin, Travis County, Texas this the 16th day of July 2004 A.D.

SURVEYING AND MAPPING, Inc.
5508 West Highway 290
Building B
Austin, Texas 78735

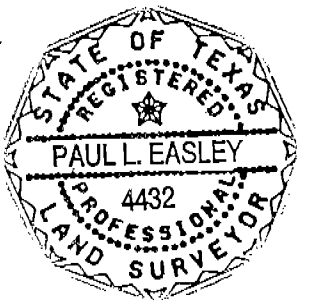

Paul L. Easley
Registered Professional Land Surveyor
No. 4432 – State of Texas

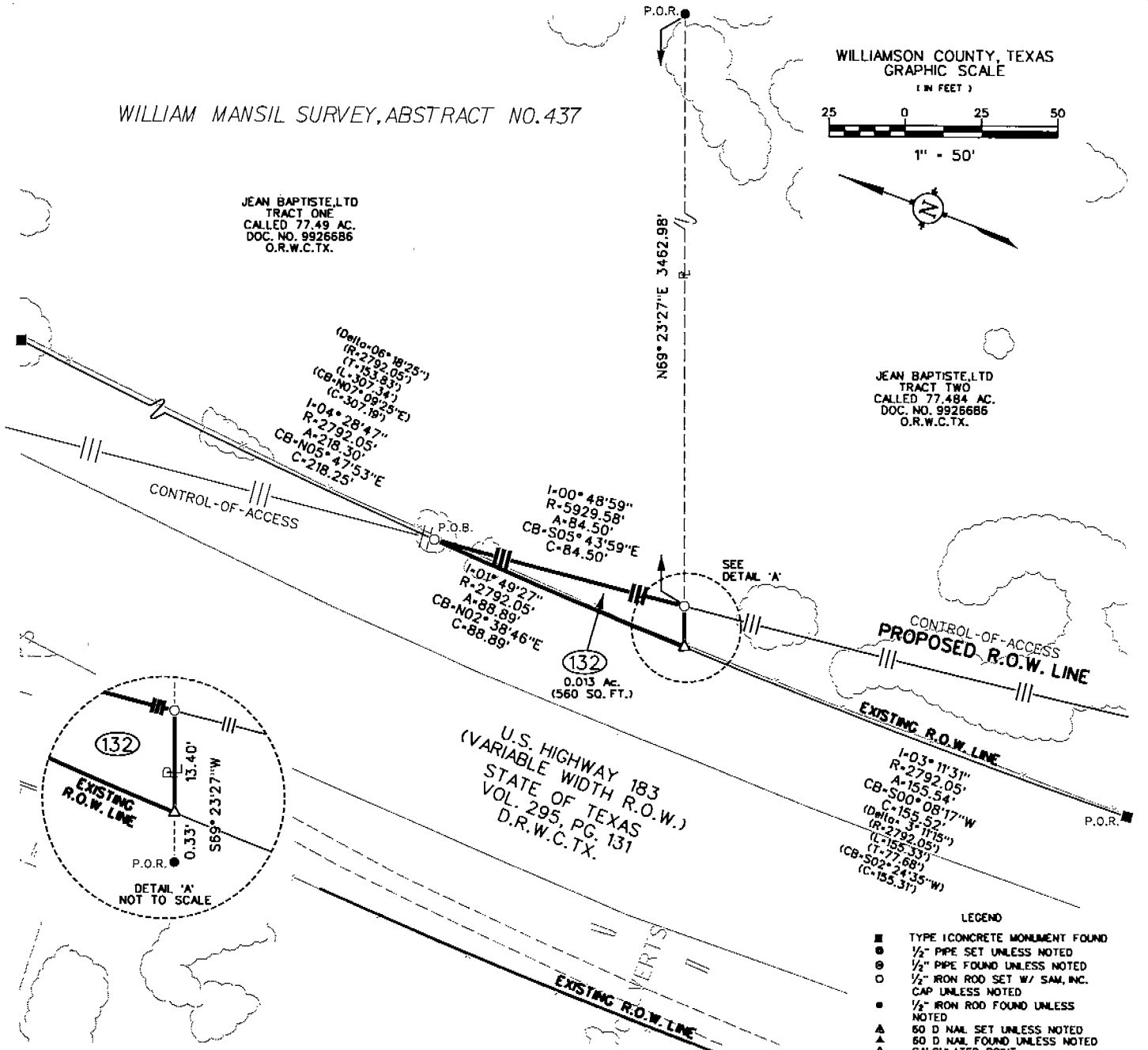

LEGEND

■	TYPE I CONCRETE MONUMENT FOUND
●	½" PIPE SET UNLESS NOTED
⊖	½" PIPE FOUND UNLESS NOTED
○	½" IRON ROD SET W/ SAM, INC. CAP UNLESS NOTED
•	½" IRON ROD FOUND UNLESS NOTED
▲	60 D NAIL SET UNLESS NOTED
▲	60 D NAIL FOUND UNLESS NOTED
△	CALCULATED POINT
○	FENCE POST
P	PROPERTY LINE
℄	CENTER LINE
( )	RECORD INFORMATION
P.O.B.	POINT OF BEGINNING
P.O.R.	POINT OF REFERENCE
D.R.W.C.TX.	DEED RECORDS WILLIAMSON COUNTY, TEXAS
P.R.W.C.TX.	PLAT RECORDS WILLIAMSON COUNTY, TEXAS
O.R.W.C.TX.	OFFICIAL RECORDS WILLIAMSON COUNTY, TEXAS
O.P.R.W.C.TX.	OFFICIAL PUBLIC RECORDS WILLIAMSON COUNTY, TEXAS

NOTES:

1. THIS SURVEY WAS PERFORMED WITHOUT THE BENEFIT OF A TITLE REPORT. RECORD INFORMATION ON THIS DRAWING IS BASED ON A PUBLIC RECORDS SEARCH BY THE SURVEYOR AND MAY NOT INCLUDE ALL EASEMENTS OR INSTRUMENTS PERTAINING TO THIS PROPERTY.
2. ALL BEARINGS ARE BASED ON THE TEXAS STATE PLANE COORDINATE SYSTEM, CENTRAL ZONE, NAD 83 (93), ALL DISTANCES AND COORDINATES ARE ADJUSTED TO SURFACE USING THE PROJECT SURFACE ADJUSTMENT FACTOR OF 1.00012.
3. THIS PLAT IS ACCOMPANIED BY A PROPERTY DESCRIPTION OF EVEN DATE.
4. ACCESS IS PROHIBITED ACROSS THE CONTROL OF ACCESS LINE TO THE TRANSPORTATION FACILITY FROM THE ADJOINING PROPERTY.
5. PLANIMETRICS SHOWN HEREON ARE FROM AERIAL MAPPING PERFORMED BY SAM, INC. IN FEBRUARY 2004.

I HEREBY CERTIFY THAT THIS SURVEY WAS MADE ON THE GROUND UNDER MY DIRECTION AND SUPERVISION AND THAT THIS PLAT IS TRUE AND CORRECT TO THE BEST OF MY KNOWLEDGE AND BELIEF.

PAUL L. EASLEY
REGISTERED PROFESSIONAL LAND SURVEYOR
NO. 4432, STATE OF TEXAS

JULY 16, 2004
DATE

STATE OF TEXAS
REGISTERED
PAUL L. EASLEY
4432
PROFESSIONAL
LAND SURVEYOR

SAM INC.
SURVEYING • AERIAL MAPPING • ENGINEERING
5508 West Highway 290
Building B
Austin, Texas 78735
(512) 447-0575
Fax: (512) 326-3029

RIGHT-OF-WAY SKETCH SHOWING PROPERTY OF JEAN BAPTISTE, LTD

Commissioners Court - Regular Session **30.**

Meeting Date: 04/17/2018

Economic Development Agreement

Submitted For: Charlie Crossfield **Submitted By:** Charlie Crossfield, Road Bond

Department: Road Bond

Agenda Category: Regular Agenda Items

Information

Agenda Item

Discuss, consider and take appropriate action to authorize County Judge to execute an Amendment to an Economic Development Agreement with Dana, Ltd.

Background

Fiscal Impact

From/To	Acct No.	Description	Amount

Attachments

Amendment to Economic Development Agreement

Form Review

Inbox	Reviewed By	Date
County Judge Exec Asst.	Wendy Coco	04/12/2018 09:38 AM
Form Started By: Charlie Crossfield		Started On: 04/12/2018 09:28 AM
Final Approval Date: 04/12/2018		

WILLIAMSON COUNTY AND DANA LIMITED

AMENDMENT TO CHAPTER 381 ECONOMIC DEVELOPMENT PROGRAM AND AGREEMENT

This **AMENDMENT TO CHAPTER 381 ECONOMIC DEVELOPMENT PROGRAM AND AGREEMENT** (this "Amendment") is made and entered into by and between **WILLIAMSON COUNTY** ("hereinafter referred to as *"*County*"),* a Texas political subdivision, and **DANA LIMITED**, (hereinafter *"*Company*"),* for the purposes and considerations stated below:

WHEREAS, the County and the Company (hereinafter collectively referred to as the "Parties") entered into a Chapter 381 Economic Development Program and Agreement on January 8, 2014, which the Parties now desire to amend;

NOW, THEREFORE, in consideration of tine mutual benefits and promises contained herein and for other good and valuable consideration, the receipt and sufficiency of which are hereby acknowledged, the parties agree as follows:

Section 3(b) shall be amended as follows:

(d) Company agrees that it shall create and maintain by February 1 of each year, Full-Time Employment Positions for the Project over a five (5) year period from the Effective date as follows:

2015	10 Full-Time Employees
2016	20 Full-Time Employees
2017	30 Full-Time Employees
2018	35 Full-Time Employees
2019	40 Full-Time Employees

IN WITNESS WHEREOF, the parties have executed this Amendment on this the ____ day of _____, 2018.

(signatures on following page)

COMPANY:

DANA LIMITED

By: _____
Name: Timothy R. Kraus
Title: Sr. Vice President + Treasurer
Date: 3-21-18

COUNTY:

COUNTY OF WILLIAMSON, TEXAS

By: _____
Dan A. Gattis, County Judge

Attest:

By: _____
County Clerk

Commissioners Court - Regular Session **31.**

Meeting Date: 04/17/2018

Construction and Maintenance Agreement

Submitted For: Randy Bell **Submitted By:** Randy Bell, Parks

Department: Parks

Agenda Category: Regular Agenda Items

Information

Agenda Item

Discuss, consider and take appropriate action authorizing the County Judge to sign a Construction and Maintenance Agreement with the City of Cedar Park and the YMCA of Greater Williamson County for shared use path construction and maintenance.

Background

The City of Cedar Park is managing a project to construct an eight foot wide shared use path of approximately 200 feet connecting the restrooms at Twin Lakes Park to the Brushy Creek Regional Trail. The project will better serve the residents of the City and the County and visitors to Twin Lakes Park. The YMCA will maintain the path once constructed.

Fiscal Impact

From/To	Acct No.	Description	Amount

Attachments

Construction and Maintenance Agreement

Design Document

Form Review

Inbox	Reviewed By	Date
Hal Hawes	Hal Hawes	04/12/2018 11:43 AM
County Judge Exec Asst.	Wendy Coco	04/13/2018 10:53 AM
Form Started By: Randy Bell		Started On: 04/12/2018 11:08 AM
Final Approval Date: 04/13/2018		

AGREEMENT

This Agreement (this "**Agreement**"), dated effective as of _____ __, 2018, is entered into by the CITY OF CEDAR PARK, TEXAS, a home-rule municipal corporation situated in Williamson and Travis Counties, Texas (the "**City**"), WILLIAMSON COUNTY (the "**County**"), and the YMCA OF GREATER WILLIAMSON COUNTY (the "**YMCA**"), each a "**Party**" and collectively the "**Parties**".

WHEREAS, the City of Cedar Park is managing a project that will extend up to an eight foot sidewalk/shared use path for up to 200 feet to close a gap between the Brushy Creek Regional Trail and the outdoor restrooms located at the Twin Lakes Park, which is located adjacent to the lake at 204 East Little Elm Trail and that is currently being leased by the YMCA, as depicted on **Exhibit A** ("**Project**");

WHEREAS, the Project will better serve the residents of the City and the County and visitors to the YMCA and the region by allowing easier access between the Brushy Creek Reginal Trail and the restrooms located at the Twin Lakes Park;

WHEREAS, the City of Cedar Park is managing the construction of the Project, which will be funded with the City of Cedar Park Type B Community Development funds and Transportation Alternative Funds ("**TAP**") through the Capital Area Metropolitan Planning Organization ("**CAMPO**");

WHEREAS, the property upon which the Project will be constructed is owned by the Texas Parks and Wildlife Department ("TPWD"), leased to the County and subleased to the YMCA for maintenance and operations of Twin Lakes Park;

WHEREAS, TPWD and the Parties wish to have assurances that all Parties agree to the location and development of the Project.

NOW, THEREFORE, in consideration of the foregoing, and the covenants and agreements set forth below, the Parties hereby covenant and agree as follows:

1. Consent to Project. All Parties understand the nature, purpose, and extent of the Project and consent to the location and development of the Project.

2. Construction and Access. The City agrees to manage and cause the construction of the Project. The County and the YMCA agree to allow the City access to construct the Project.

3. Maintenance of Project. The Parties agree that the YMCA will maintain the Project once constructed to a level that allows the Project to be used for its intended purpose in perpetuity or until the County no longer has a leasehold or other property interest to the property.

4. No Waiver of Immunity. Nothing in this Agreement shall be deemed to waive, modify or amend any legal defense available at law or in equity to the Parties, their past or present officers, employees, or agents or employees, nor to create any legal rights or claim on behalf of any third Party. The City does not waive, modify, or alter to any extent whatsoever the availability of the defense of governmental immunity under the laws of the State of Texas and of the United States.

5. Governing Law. This Agreement shall be deemed to be a contract made under the laws of the State of Texas and for all purposes shall be governed by and construed in accordance with the laws of such state applicable to contracts to be made and performed entirely within such state.

6. Binding Effect. This Agreement shall be binding upon and inure to the benefit of each of the Parties and their respective successors and assigns.

7. Descriptive Headings. Descriptive headings of the sections of this Agreement are inserted for convenience only and shall not control or affect the meaning or construction of any of the provisions hereof.

8. Entire Agreement. This Agreement constitutes the sole and entire agreement of the Parties with respect to the subject matter contained herein and supersedes all prior and contemporaneous understandings, agreements, representations, and warranties, both written and oral, with respect to such subject matter.

9. Representation of Authority. Each Party represents and warrants to Commercial Owner that each Party is duly authorized and empowered to enter into this Agreement without any further action or approval of any person or governing body of the respective Party.

10. Signature Warranty. The signatories to this Agreement represent and warrant that by executing this Agreement, this Agreement shall be binding upon the Parties and their respective successors and assigns for all purposes under the Agreement.

[*signature page follows*]

IN WITNESS WHEREOF, the Parties have executed this Agreement to be effective as of the Effective Date.

THE CITY OF CEDAR PARK, TEXAS:

By: Brenda Eivens
Name: Brenda Eivens
Title: City Manager

WILLIAMSON COUNTY, TEXAS

By: _____
Name: _____
Title: _____

YMCA OF GREATER WILLIAMSON COUNTY

By: _____
Name: Jeff Andresen
Title: Pres/CEO

Exhibit A: Brushy Creek Regional Trail Connection to YMCA Restroom

Brushy Creek Regional Trail – Restroom Connection

- Trail access to drinking fountain and restrooms
- Up to 200' ft. long
- May require ADA ramp with handrail
- Obtained YMCA and Williamson County support



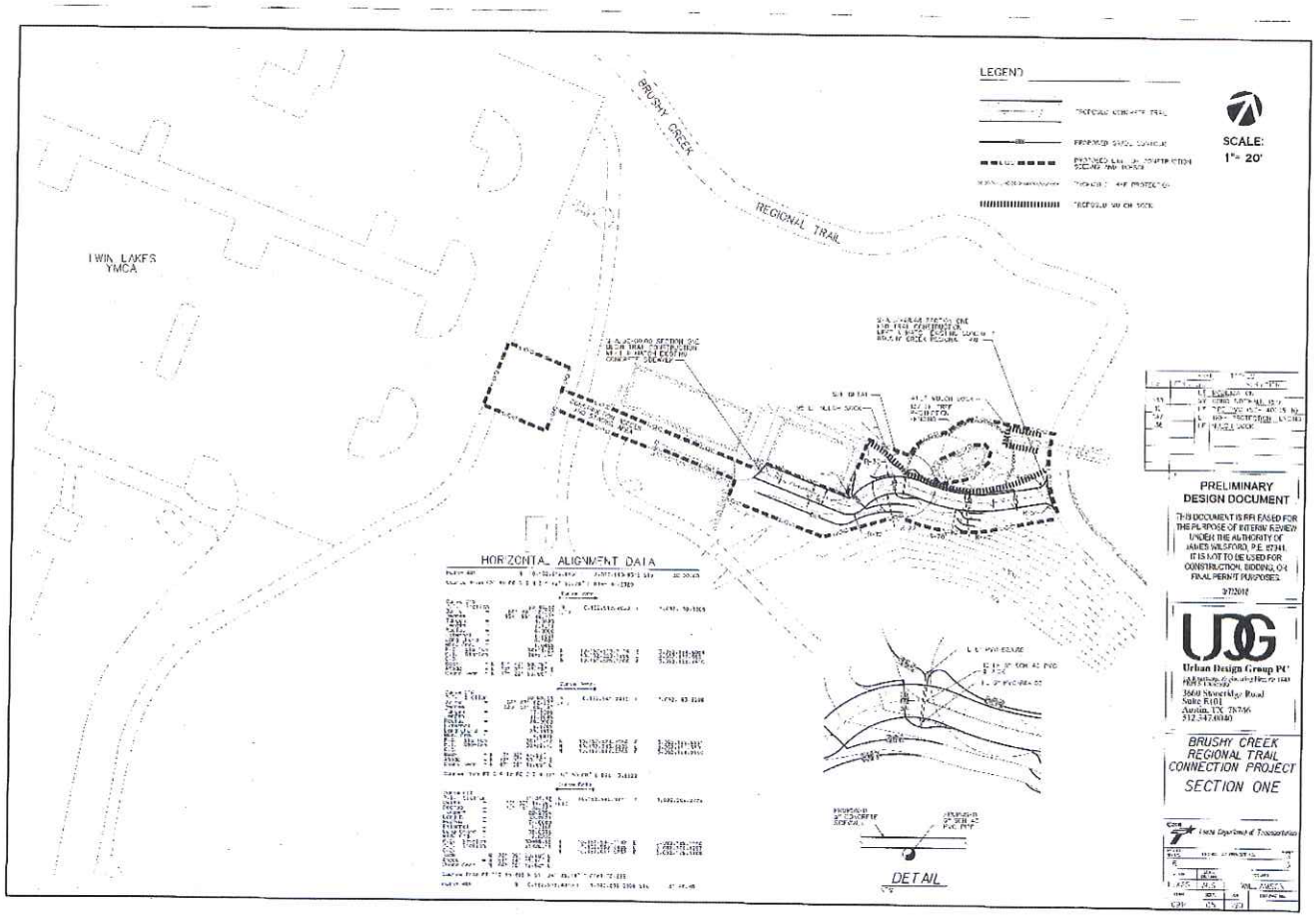

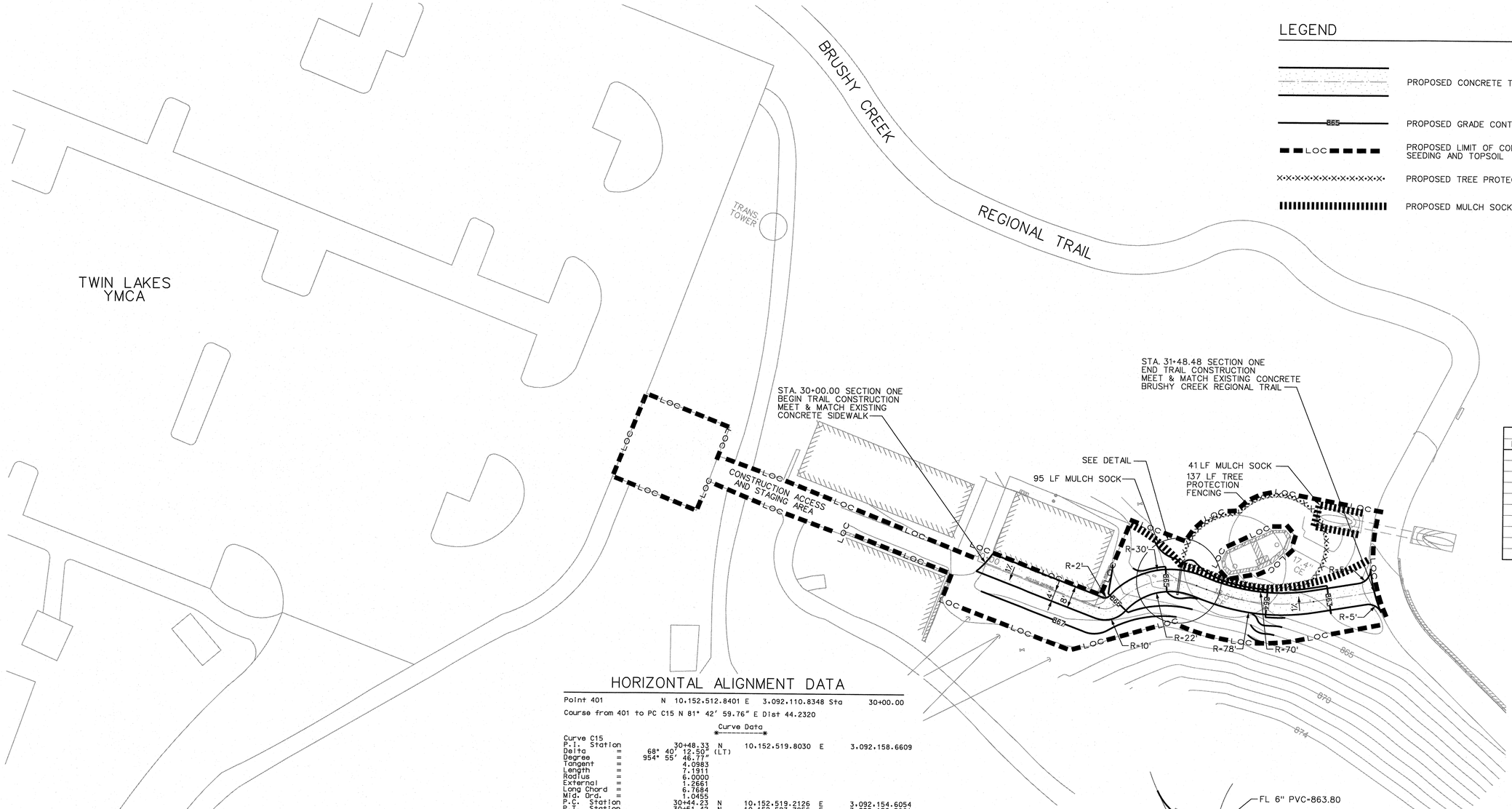

HORIZONTAL ALIGNMENT DATA

Point 401 N 10,152,512.8401 E 3,092,110.8348 Sta 30+00.00

Course from 401 to PC C15 N 81° 42′ 59.76″ E Dist 44.2320

Curve Data

Curve C15				
P.I. Station	30+48.33	N	10,152,519.8030	E 3,092,158.6609
Delta =	68° 40′ 12.50″ (LT)			
Degree =	954° 55′ 46.77″			
Tangent =	4.0983			
Length =	7.1911			
Radius =	6.0000			
External =	1.2661			
Long Chord =	6.7684			
Mid. Ord. =	1.0455			
P.C. Station	30+44.23	N	10,152,519.2126	E 3,092,154.6054
P.T. Station	30+51.42	N	10,152,523.7956	E 3,092,159.5861
C.C.		N	10,152,525.1500	E 3,092,153.7410
Back = N	81° 42′ 59.75″ E			
Ahead = N	13° 02′ 47.25″ E			
Chord Bear = N	47° 22′ 53.50″ E			

Curve Data

Curve C16				
P.I. Station	30+69.33	N	10,152,541.2419	E 3,092,163.6288
Delta =	69° 07′ 02.83″ (RT)			
Degree =	220° 22′ 06.18″			
Tangent =	17.9086			
Length =	31.3645			
Radius =	26.0000			
External =	5.5708			
Long Chord =	29.4970			
Mid. Ord. =	4.5878			
P.C. Station	30+51.42	N	10,152,523.7956	E 3,092,159.5861
P.T. Station	30+82.79	N	10,152,543.6835	E 3,092,181.3701
C.C.		N	10,152,517.9263	E 3,092,184.9150
Back = N	13° 02′ 47.27″ E			
Ahead = N	82° 09′ 50.10″ E			
Chord Bear = N	47° 36′ 18.69″ E			

Course from PT C16 to PC C17 N 82° 09′ 50.08″ E Dist 3.8922

Curve Data

Curve C17				
P.I. Station	31+06.92	N	10,152,546.9731	E 3,092,205.2725
Delta =	30° 35′ 14.96″ (LT)			
Degree =	77° 25′ 36.22″			
Tangent =	20.2354			
Length =	39.5051			
Radius =	74.0000			
External =	2.7168			
Long Chord =	39.0376			
Mid. Ord. =	2.6206			
P.C. Station	30+86.68	N	10,152,544.2142	E 3,092,185.2260
P.T. Station	31+26.18	N	10,152,559.5488	E 3,092,221.1257
C.C.		N	10,152,617.5232	E 3,092,175.1369
Back = N	82° 09′ 50.10″ E			
Ahead = N	51° 34′ 35.14″ E			
Chord Bear = N	66° 52′ 12.62″ E			

Course from PT C17 to 408 N 51° 34′ 35.14″ E Dist 22.2991

Point 408 N 10,152,573.4070 E 3,092,238.5956 Sta 31+48.48

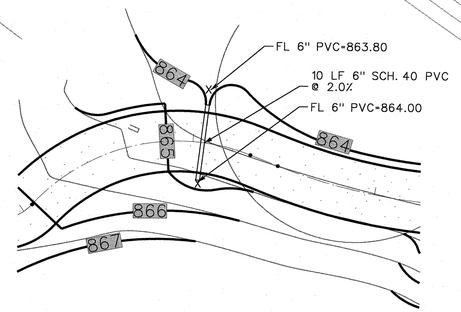

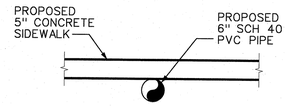

DETAIL
NTS

SHEET TOTALS

EST.	FINAL	UNIT	DESCRIPTION
1		LS	MOBILIZATION
133		SY	CONC SIDEWALK (5")
10		LF	PIPE PVC (SCH 40) (6 IN)
137		LF	TREE PROTECTION FENCING
136		LF	MULCH SOCK

PRELIMINARY DESIGN DOCUMENT

THIS DOCUMENT IS RELEASED FOR THE PURPOSE OF INTERIM REVIEW UNDER THE AUTHORITY OF JAMES WILSFORD, P.E. 87941. IT IS NOT TO BE USED FOR CONSTRUCTION, BIDDING, OR FINAL PERMIT PURPOSES.

3/7/2018

Urban Design Group PC
TX Registered Engineering Firm #F-1843
TBPLS 10065900
3660 Stoneridge Road
Suite E101
Austin, TX 78746
512.347.0040

BRUSHY CREEK REGIONAL TRAIL CONNECTION PROJECT

SECTION ONE

©2018 Texas Department of Transportation

FED.RD. DIV.NO.	FEDERAL AID PROJECT NO.	SHEET NO.
6		3

STATE	STATE DIST.NO.	COUNTY
TEXAS	AUS	WILLIAMSON

CONT.	SECT.	JOB	HIGHWAY NO.
0914	05	190	

Commissioners Court - Regular Session **32.**

Meeting Date: 04/17/2018

Burn Ban

Submitted For: Jarred Thomas **Submitted By:** Jarred Thomas, Emergency Management

Department: Emergency Management

Agenda Category: Regular Agenda Items

Information

Agenda Item

Discuss, consider, and take appropriate action on a burn ban for the areas west of Interstate Highway 35 for a period not to exceed 90 days and to authorize the County Judge the authority to lift the ban when conditions improve.

Background

In response to recent wildlfires, requiring significant resources to control, the Williamson County Fire Chief's Association has requested a burn ban for the western section of the county. Additionally, recent storm fronts have brought high winds and lower humidity creating the chance for wildfires.

Fiscal Impact

From/To	Acct No.	Description	Amount

Attachments

No file(s) attached.

Form Review

Inbox	Reviewed By	Date
County Judge Exec Asst.	Wendy Coco	04/12/2018 10:29 AM
Form Started By: Jarred Thomas		Started On: 04/12/2018 07:40 AM
Final Approval Date: 04/12/2018		

Commissioners Court - Regular Session **33.**

Meeting Date: 04/17/2018

THF Resol Action

Submitted For: Dan Gattis **Submitted By:** Hal Hawes, County Judge

Department: County Judge

Agenda Category: Regular Agenda Items

Information

Agenda Item

Discuss, consider and take appropriate action on a resolution declaring a need for a regional housing authority that would include Williamson County due to a shortage of safe or sanitary housing in Williamson County available to low-income persons at rents that they can afford and admitting Williamson County, Texas as a member of the Texas Housing Foundation, a Texas Regional Housing Authority.

Background

A public hearing was held on April 10, 2018 in the Williamson County Commissioners Courtroom pursuant to Texas Local Government Code Chapter 392 regarding a resolution to declare a need for a regional housing authority that would include Williamson County due to a shortage of safe or sanitary housing in the county available to low-income persons at rents that they can afford and admitting Williamson County, Texas as a member of the Texas Housing Foundation, a Texas Regional Housing Authority. This item is to take action on the proposed resolution.

Fiscal Impact

From/To	Acct No.	Description	Amount

Attachments

Resolution

Form Review

Inbox	Reviewed By	Date
County Judge Exec Asst.	Wendy Coco	03/29/2018 10:06 AM
Form Started By: Hal Hawes		Started On: 03/29/2018 09:12 AM
Final Approval Date: 03/29/2018		

RESOLUTION OF THE WILLIAMSON COUNTY COMMISSIONERS COURT ADMITTING WILLIAMSON COUNTY, TEXAS AS A MEMBER OF THE TEXAS HOUSING FOUNDATION, A TEXAS REGIONAL HOUSING AUTHORITY

RECITALS

WHEREAS, the Texas Housing Foundation is a Texas regional housing authority authorized under state law to provide affordable housing to lower income residents at rentals they can afford;

WHEREAS, there exists in Williamson County, Texas (the "County") a shortage of safe and sanitary housing in the County available to persons of low income at rentals they can afford;

WHEREAS, the Texas Housing Foundation ("THF") has significant experience in providing, developing, financing, and managing safe and sanitary housing developments that are affordable to lower income residents and the THF is currently active in providing affordable housing within the County;

WHEREAS, a county housing authority does not exist within the County;

WHEREAS, the THF is currently comprised of Bastrop, Burnet, Blanco and Llano Counties and now proposes to admit Williamson County, Texas into the THF for the purpose of planning, developing, financing, rehabilitating, operating and managing safe and sanitary affordable housing in Williamson County for low-income families, the elderly, and the disabled;

WHEREAS, there is a need to expand the area of operation of the THF into Williamson County and a regional housing authority would be a more efficient and economical administrative unit than a county housing authority if the County is included in the area of operation of the THF, to carry out the purposes of Chapter 392 of the Texas Local Government Code and THF purposes of providing safe and sanitary housing in the County available to persons of low income at rentals they can afford;

WHEREAS, the Texas Local Government Code, Sections 392.018 and 392.033, require the commissioners of a regional housing authority, the commissioners of each county within a regional housing authority and the commissioners of a county outside the regional housing authority to each adopt a resolution declaring a need to include the county that is outside the authority to enter into the regional housing authority; and

WHEREAS, the THF Board of Commissioners has adopted a resolution allowing Williamson County to be admitted into the THF, excluding the parts of the county that are within the territorial boundaries of a municipality pursuant to Section 392.016 of the Texas Local Government Code, for the purpose of planning, developing, financing, rehabilitating, operating and managing affordable housing and allowing the THF to exercise its powers within the County; and

WHEREAS, resolutions are or will be placed on the agendas of the County Commissioners' Courts of Bastrop, Burnet, Blanco and Llano Counties to approve the admission of Williamson County into the THF.

NOW, THEREFORE, BE IT RESOLVED BY THE COUNTY COMMISSIONERS COURT OF WILLIAMSON COUNTY, TEXAS:

That all of the recitals hereinabove stated are found to be true and correct and are incorporated herein and made a part of this resolution;

That the County Commissioners Court for each county is the governing body of Bastrop County, Burnet
County, Blanco County, Llano County, and Williamson County respectively;

That the County Commissioners Courts of Bastrop, Burnet, Blanco and Llano Counties and the County Commissioners Court of Williamson County declare that there is a shortage of and a need for safe and sanitary housing that is affordable for lower income residents of Williamson County and that there is a need for the THF to expand its area of operation into Williamson County and, subject to the reservations set out herein, to exercise its powers in Williamson County, excluding the parts of the county that are within the territorial boundaries of a municipality pursuant to Section 392.016 of the Texas Local Government Code, to provide said housing and related services to lower income residents of Williamson County at rentals they can afford;

That in accordance with the purposes of THF bylaws and associated organizational documents, as well as the laws of the State of Texas, the THF Board of Commissioners is authorized to add additional member counties to the regional housing authority in order to further its purpose of making safe and sanitary housing available to lower income residents at rentals they can afford and that pursuant to Texas Local Government Code, Section 392.018, the THF Board of Commissioners, by resolution Number 2012-0305, approved the admission of Williamson County into the THF;

That the THF has significant experience in providing, developing, financing, rehabilitating, and managing housing developments that are affordable to lower income residents and because THF is currently active in Williamson County, the County Commissioners Court hereby finds that it is in the best interest of the THF and Williamson County residents and is most efficient and economical to admit Williamson County, pursuant to Texas Local Government Code, Section 392.018, into the THF and resolve to amend THF bylaws to the extent necessary to add a representative member from Williamson County, Texas to the THF Board and to expedite this process in any other manner necessary;

That this County Commissioners Court hereby resolves to admit Williamson County into the THF, thereby expanding the area of operation of the THF into Williamson County and authorizing THF to exercise its powers in Williamson County, subject to the reservations set out herein and excluding the parts of the county that are within the territorial boundaries of a municipality, for the purpose of providing safe and sanitary housing that is affordable for lower income residents in the County;

That, pursuant to Texas Local Government Code, Section 392.033, the Williamson County Commissioners Court shall appoint a commissioner for the THF Board of Commissioners to represent Williamson County on the THF Board that is not an officer or employee of Williamson County and the Williamson County Commissioners Court shall appoint any successors to that commissioner;

That THF is hereby authorized to exercise its powers under the Texas Housing Authorities Law, Texas Local Government Code, Chapter 392, to assist in the planning, developing, financing, and rehabilitating of affordable housing and to operate and otherwise manage affordable housing within Williamson County for low-income families, the elderly, and the disabled of the County at rentals they can afford;

That the Williamson County Commissioners Court's resolution and authorization for Williamson County to be admitted into the THF is subject to and conditioned on the THF not being authorized to exercise any power of eminent domain to acquire an interest in any Williamson County real property that is located outside of the territorial boundaries of a municipality pursuant to Section 392.016 of the Texas Local Government Code for any purpose of the THF;

That the Williamson County Commissioners Court's resolution and authorization for Williamson County to be admitted into the THF is also subject to and conditioned on Williamson County maintaining a right to withdraw from the THF, for any reason, upon 90 days advance written notice to the THF Board of Commissioners;

That any member of this County Commissioners Court and the THF president are authorized to execute all necessary documents between the THF and the County for the purposes stated in this resolution and may take any reasonable and necessary action to effectuate and implement the direction and intention of this resolution, subject to the authorizing resolutions approved by the remaining County Commissioners Courts representing members of the THF;

That a public hearing was held before the 10th day before the date of this hearing and that the county clerk published notice of the time, place, and purpose of the hearing in a newspaper published in the county or, if no newspaper is published in the county, in a newspaper published in the state with general circulation in the county; and at the hearing, the Williamson County Commissioners Court shall grant an opportunity to be heard to residents of the County and other interested persons. These actions were taken in addition to required notice provisions of the Open Meetings Act; and

That this County Commissioners Court resolves and authorizes Williamson County to be admitted into the THF and to allow for a Commissioner residing in Williamson County who is not an officer or employee of Williamson County to be appointed by the Williamson County Commissioners Court to sit as a commissioner of the THF.

PASSED AND APPROVED this ___ day of _____, 20__.

_____
Williamson County Judge
Honorable Dan A. Gattis

TEXAS HOUSING FOUNDATION

By: _____
Mark Mayfield, President

ATTEST:
By: _____

Commissioners Court - Regular Session **34.**

Meeting Date: 04/17/2018

THF Appointment

Submitted For: Dan Gattis **Submitted By:** Hal Hawes, County Judge

Department: County Judge

Agenda Category: Regular Agenda Items

Information

Agenda Item

Discuss, consider and take appropriate action on appointing a commissioner for the Texas Housing Foundation Board of Commissioners to represent Williamson County on the Texas Housing Foundation Board to serve a two (2) year term commencing on May 1, 2018 and ending on June 30, 2020, pursuant to Texas Local Government Code Section 392.033.

Background

The county's appointee cannot be an officer or employee of Williamson County.

Fiscal Impact

From/To	Acct No.	Description	Amount

Attachments

John Moman Bio

Niki Brennan Resume

Form Review

Inbox	Reviewed By	Date
County Judge Exec Asst.	Wendy Coco	03/29/2018 10:06 AM
Form Started By: Hal Hawes		Started On: 03/29/2018 09:19 AM
Final Approval Date: 03/29/2018		

JOHN MOMAN, AIA
Resume



Education

1978	Bachelor of Architecture, Texas Tech University

Architectural Registration

State of Texas	Architectural Registration No: 11013
State of Texas	Interior Design Registration No: 4972
NCARB	Certification No: 52,850

Born and raised in Odessa, TX, (and a "Friday Night Lights" guy), this West Texas boy learned about the importance of hard work and personal relationships at an early age. What else is there in Odessa, other than football, golf and lots of very fine people?

His father was a business owner and loved to build things on the weekends. John's favorite toy was the Etch-a-sketch and he would get in trouble at night for not going to sleep, using a flashlight under the covers and drawing picture after picture. Instead of going into business with his father selling insurance and real estate, he went to Lubbock to study Architecture at Texas Tech.

Relationships

John started his own architectural firm on November 1, 2000. His success was primarily driven by developing, fostering and maintaining personal relationships. At the end of the day or at the ribbon cutting of a new project, having a client that is pleased with the final outcome of the design is important but the most important thing is how that client feels about our relationship. Seventy percent of the new work that comes into the office is either repeat clients or referrals.

Public Service

Since moving to Williamson County in 1984 John has served on numerous local and regional committees, boards, and commissions. Motivated to maintain and better the quality of life and business in his community, John was elected to the Round Rock City Council, Place 5, in 2009 and served in that capacity until 2015.

Professional Work History

2000-present	Moman Design, Round Rock, Texas (formerly Moman Architects)

Organizations and Activities

2009-2015	City Council Member, Place 5, Round Rock, Texas
2012-2014	CAMPO Board of Directors
1998-1999	Chairman of Round Rock Chamber of Commerce Board of Directors
1994-2006	Member of Zoning Board of Adjustment, City of Round Rock
1994-2000	Board Member of Round Rock Chamber of Commerce Board of Directors
1988	President of Dove Creek Neighborhood Association
1986-1994	Planning & Zoning Commission City of Round Rock
1985-present	Member of American Institute of Architects

Awards & Publications

April 2017	Texas CEO Magazine – *Permit Me: A Primer on Permit Approval*
2007	AGC Outstanding Construction Award for Central Baptist Church, Round Rock, Texas
2003	Austin Energy Two Star Green Building for Wells Branch Library, Austin, Texas
2002	ABC Certificate for Excellence for FSB Central Texas, Round Rock, Texas

moman design

(512) 771-0596
409 W Main St.
Round Rock, TX 78664

NIKKI BRENNAN

PRESENT ADDRESS
211 East Esparada Drive
Georgetown, Texas 78628

Cell) 512-843-9821

PERSONAL DATA
Marital Status: Married

ACADEMIC

Southwest Texas State University - Marketing
Relevant Courses: Promotional Strategy, Marketing Research, Advertising, Consumer Purchasing and Motivation, Strategic Mgmt, & Business Policy, Retailing, Sales And Sales Mgmt, Computer Information Systems, Business Law I, & Business Law II, Small Business Mgmt., Real Estate Law.

SUMMARY

Seasoned Executive Director of Georgetown Housing Authority, offering extensive supervisory and administrative experience. Manage all functions for agency and all internal departments. Staffing, payroll, and all related human resources functions. Accounting, budgeting, banking, and investing of all financial accounts. Procure, contracting, and oversight of contractors, subs and vendors for new construction and modernization. Write policies and procedural manuals, interpret regulations. Report to federal, state and local entities. Develop and maintain partnerships with community organizations, businesses, city, county and state officials. Manage Housing Choice Voucher, Section 8 New Construction, Public Housing, Low Income Housing Tax Credit and Capital Fund programs. Apply for and administer various grants and funds such as Community Development Block Grant to rehabilitate properties. Identify, create and implement new programs. Identify and develop new opportunities to further GHA's mission, vision and goals.

EXPERIENCE

Housing Authority of the City of Georgetown
Executive Director
October, 2009 – Present

Housing Authority of the City of Georgetown
Housing Manager
October, 2003 – September, 2009

Brennan Property Management
Owner
Managed fourplexes, duplexes and homes for individual owners.
January, 1993 – October, 2003
Georgetown, TX. Cedar Park, TX

Housing Authority of the City of Austin
Housing Manager
August, 1998 – June, 2000
Austin, TX

O'Connor Property Management
May 1989 – January 1993
Spring Hollow Duplexes, Georgetown, TX.
Mallard Run Apts, Taylor, TX.
Briarwood Fourplexes, Georgetown, TX.

VOLUNTEER EXPERIENCE

Board Member- Boys & Girls Clubs of America
2009 – Present

Board Member- TXNAHRO (Texas Chapter of the National Assn. of Housing and Redevelopment
2014 – Present

Board Member- City of Georgetown Housing Advisory Board
2015 – Present

Board Member- Opportunities for Williamson & Burnet Counties
2016 – Present

Board Member- Texas Homeless Network (TX BoS CoC)
2016 – Present

UTMB Parent's Council
2015 – Present

Commissioners Court - Regular Session **35.**

Meeting Date: 04/17/2018

Use Agreement ESD 4

Submitted For: Cynthia Long **Submitted By:** Kathy Pierce, Commissioner Pct. #2

Department: Commissioner Pct. #2

Agenda Category: Regular Agenda Items

Information

Agenda Item

Discuss, consider and take appropriate action on a Use Agreement with Williamson County Emergency Service District No. 4 for use of County owned property located at or near 3414 RR 1869, Liberty Hill, Texas for a term ending February 28, 2019.

Background

The Emergency Service District No. 4 (ESD 4) is in the process of constructing a new fire station located at 22799 Ronald Reagan Boulevard. The final plat for the station was approved by the Commissioners Court on April 10, 2018. ESD 4 has requested to use the covered equipment storage area (County barn) at the County's Road Maintenance Utility Yard located 3414 RR 1869 to protect their Spartan/Luverne Engine until the construction has been completed. ESD 4 is responsible for all safety precautions and will use the barn at their own risk. The Sr. Director of Infrastructure has agreed to the use of the barn by ESD 4. Hal Hawes drafted the Use Agreement. The ESD 4 Board of Directors is approved the Use Agreement on March 29, 2018. A copy of the signed agreement is attached to this agenda item.

Fiscal Impact

From/To	Acct No.	Description	Amount

Attachments

Use Agreement

Form Review

Inbox	Reviewed By	Date
County Judge Exec Asst.	Wendy Coco	04/12/2018 09:16 AM
Form Started By: Kathy Pierce		Started On: 04/11/2018 10:25 AM
Final Approval Date: 04/12/2018		

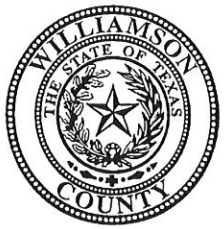

USE AGREEMENT

I. PARTIES

This document constitutes an agreement ("Agreement") between Williamson County, Texas, a political subdivision of the State of Texas ("County"), and Williamson County Emergency Service District No. 4, being a Texas Emergency Service District ("ESD #4") relating to the ESD #4's use of County's real property, as more fully described herein below.

II. PURPOSE

County owns property located at or near 3414 RR 1869, Liberty Hill, Texas. The said property is generally described as a road maintenance utility yard and equipment storage area containing a covered building that is used, from time to time, to store County's road maintenance equipment ("Property").

ESD #4 wants to use one of the 12'x37' covered bay areas that is located in the covered building on the Property in conjunction with storing ESD #4's 2002 Spartan/Luverne Engine while ESD #4 is constructing a new station, in which such apparatus will be maintained and stored once completed.

In consideration of cooperatively working together to provide governmental functions in the form of fire prevention and fire services within Williamson County, Texas, County hereby agrees and consents to such use of the Property by ESD #4 pursuant to the terms, covenants and conditions set out herein.

ESD #4 agrees to restore the Property to the condition in which the same was found before ESD #4 used such area. The County shall always have the right to use the Property for its own purposes and the ESD #4 hereby agrees to allow the County to use the Property for such purposes.

III. LIABILITY AND SAFETY

ESD #4, IN USING THE PROPERTY, DOES SO AT ITS OWN RISK. COUNTY SHALL NOT BE LIABLE FOR ANY DAMAGES TO PROPERTY OR DAMAGES ARISING FROM PERSONAL INJURIES SUSTAINED BY ESD #4 OR ANY OF ITS AGENTS, CONTRACTORS, EMPLOYEES, OFFICIALS, REPRESENTATIVES OR ANY OTHER ENTITY OR INDIVIDUAL THAT MAY CLAIM BY, THROUGH OR UNDER ESD #4, FOR MATTERS ARISING IN, ON OR ABOUT THE PROPERTY, OR OF ANY OTHER PORTION OF THE PROPERTY, INCLUDING BUILDINGS, PARKING AREAS OR WALKWAYS OF THE PROPERTY, UNLESS SUCH DAMAGE OR INJURY IS CAUSED BY THE COUNTY'S NEGLIGENCE OR WILLFUL MISCONDUCT. ESD #4 ASSUMES FULL RESPONSIBILITY FOR ANY PROPERTY DAMAGE OR INJURY WHICH MAY OCCUR TO ESD #4, ITS AGENTS, CONTRACTORS, EMPLOYEES, OFFICIALS, REPRESENTATIVES OR ANY OTHER ENTITY OR INDIVIDUAL MAY CLAIM BY, THROUGH OR UNDER ESD #4, THAT MAY BE IN, ON OR ABOUT THE PROPERTY OR OTHER PORTION OF THE PROPERTY, UNLESS SUCH DAMAGE OR INJURY IS CAUSED BY THE COUNTY'S NEGLIGENCE OR WILLFUL MISCONDUCT. ESD #4 SHALL CONDUCT ITS ACTIVITIES UPON THE PROPERTY SO AS NOT TO ENDANGER ANY PERSON THEREON.

ESD #4 shall be responsible for initiating, maintaining and supervising all safety precautions and programs in connection with the ESD #4's use of the Property. ESD #4 shall take all reasonable precautions for the safety of and shall provide all reasonable protection to prevent damage, injury or loss to ESD #4 and/or its agents, contractors, employees, officials, representatives or any other entity or individual may claim by, through or under ESD #4, in, on or around the Property and all other property placed in, on or around the Property.

The terms of this provision shall survive any termination of this Agreement.

IV. TERM OF USE AND TERMINATION

The ESD #4 shall be allowed to use the Property for the purposes set out herein from **March 27, 2018** until **February 28, 2019**. Either party may terminate this Agreement, without cause, upon thirty (30) days written notice to the other party.

Executed by the parties below to be effective as of the date of the last party's execution hereof.

Williamson County, Texas

Date: _____ _____, 20___

By: _____
Dan A. Gattis, County Judge

Williamson County Emergency Service District No. 4

Date: March 29, 2018

By: _____

Printed Name: Dan H. Clark

Representative Capacity: President

Commissioners Court - Regular Session **36.**

Meeting Date: 04/17/2018

PACE Program Report

Submitted For: Cynthia Long **Submitted By:** Kathy Pierce, Commissioner Pct. #2

Department: Commissioner Pct. #2

Agenda Category: Regular Agenda Items

Information

Agenda Item

Discuss, consider and take appropriate action on presentation by the Texas Pace Authority of "Texas PACE Authority 2017 Annual Report".

Background

The Texas Legislature enacted the Property Assessed Clean Energy Act, Texas Local Government Code Chapter 399 (the "PACE Act") during the 83rd Regular Session. The Williamson County PACE program began in March 2016. This agenda item is to provide the Commissioners Court with an update from the President of the Texas PACE Authority on the Williamson County PACE program.

Fiscal Impact

From/To	Acct No.	Description	Amount

Attachments

2017 PACE Annual Report

Form Review

Inbox	Reviewed By	Date
County Judge Exec Asst.	Wendy Coco	04/12/2018 09:18 AM
Form Started By: Kathy Pierce		Started On: 04/11/2018 02:00 PM
Final Approval Date: 04/12/2018		

TEXAS PACE AUTHORITY

2017 Annual Report

TEXAS PACE AUTHORITY

JANUARY 2018

TABLE OF CONTENTS

I. Executive Summary 4

II. Program and Project Growth in 2017 8
- Local Governments with PACE in a Box Model Programs 8
- Completed Projects in 2017 10
- PACE in a Box Updates 11

III. Community Outreach 13
- Community Engagement 13
- Program Website and Database 17
- Marketing Plan 18
- Stakeholder Inquiries 21
- Technical Standards Manual 21
- Helping Property Owners Identify PACE Capital Providers 21
- Service Provider Training 21
- Helping Property Owners Identify PACE Service Providers 22
- Quality Assurance and Antifraud Measures 23

IV. Application & Approval Process 24
- Technical Standards 24
- Financial Standards 24
- Legal Standards 25
- Fees 25
- Application Process 26

V. Management and Reporting 28
- Annual Notices of Assessment Lien 28
- Economic and Environmental Results 28

VI. Outcomes 29
- Project Closings 29
- Servant Leadership 29
- Capital Provider Expansion 30
- Mortgagee Consent Success 30
- Lessons Learned 30
- Recognition 30
- Remaining Objectives 31
- Next Steps 31

VII. Texas PACE Authority Leadership 32
- Board of Directors 32
- Texas PACE Authority Team 32
- Advisory Committee 32

VIII. Conclusion 33

TEXAS ★ PACE AUTHORITY

Appendix A 34
Outreach Presentations and Conferences – Statewide 34
Local Engagement - Presentations 35
Local Engagement - Outreach Meetings 37
Appendix B 41
Flyers 41
Case Studies 41

TEXAS ★ PACE AUTHORITY

I. EXECUTIVE SUMMARY

This annual report describes the program administration activities for the 2017 commercial and industrial Property Assessed Clean Energy (TX-PACE) programs in Texas. Texas PACE Authority (TPA) submits this report to describe the current state of the commercial and industrial (C&I) PACE market in Texas and to document its performance of the requirements described in its professional services agreements.

Texas PACE Authority continues to build a growing PACE network among capital providers, engineers, architects, contractors, property owners and managers, local lenders, and other stakeholders. As anticipated, the start-up of TX-PACE programs using the uniform, user-friendly, sustainable, and scalable PACE in a Box model requires herculean outreach, education, and patience. The investment in this model created for Texans by Texans is beginning to show economic and environmental benefits for the communities establishing the program.

In 2017, a total of 7 PACE projects were completed for a total investment in Texas of just under $30 million – a 700% increase over the previous year.

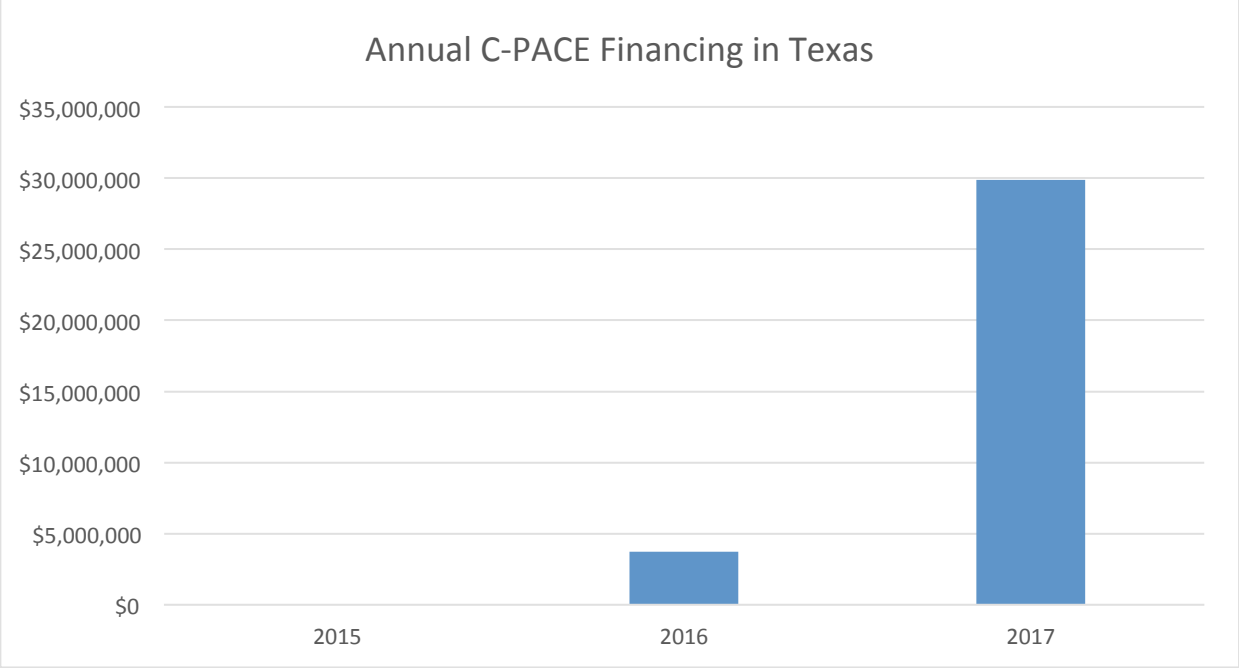

TEXAS ★ PACE AUTHORITY

Projects completed in 2017 included Texas' first industrial project (Corsicana, Navarro County), the first mixed-use project (City of Dallas), the first office building project (City of Houston), and the first hotel project (City of Houston). Project sizes ranged from $135,000 to $24 million.

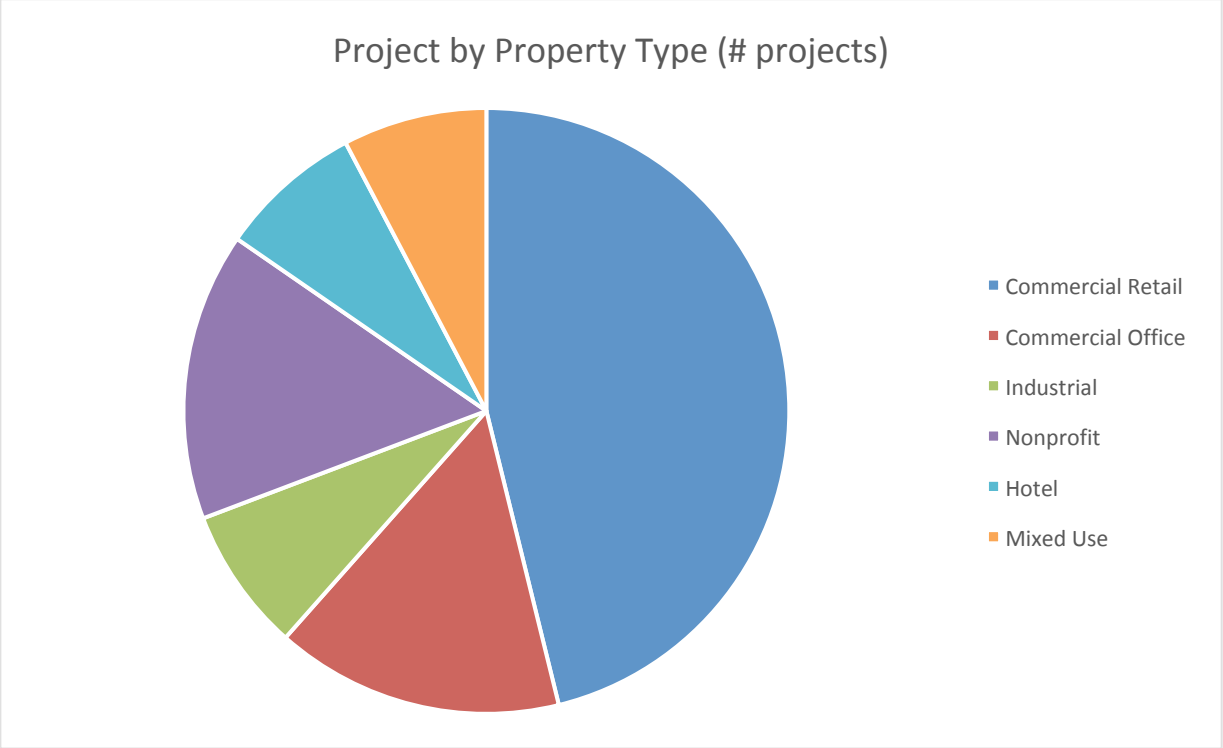

The first TX-PACE program established by Travis County in March 2015 is now joined by 12 other counties and four municipalities. Combined, these uniform programs reach 42% of the Texas population. Each selected Texas PACE Authority, a nonprofit, to administer the TX-PACE programs as a public service. The local governments that chose to establish the public service-oriented TX-PACE program with best practices to achieve the maximum amount of economic and environmental benefit for their communities are:

> Brazos, Cameron, El Paso, Fort Bend, Hays, Hidalgo, Jefferson, Navarro, Nueces, Tarrant, Travis, Willacy and Williamson counties; and
> The cities of Amarillo, Dallas, Farmers Branch, and Houston.

The commitment of these local governments to the fundamental principles of the PACE in a Box model are enabling the program to thrive. These Texas jurisdictions' patience and appreciation for the multi-year effort necessary to build a comprehensive, transparent public service model program provide the time necessary to achieve the goals of the program. This foundation enables TPA to serve large and small property owners with best practices, and to allow for the development of the high-volume, low cost

business model that will bring about economic and environmental results for these communities. There is no short cut to these desired outcomes.

Thus, it is with great appreciation for the trust and commitment of these local governments that enabled the significant success in the laying of the foundation for the TX-PACE programs in 2017.

Education and training was a main focus for 2017. Education and training took a multifaceted effort. Contractors learned a new way to serve customers, providing a financial solution in an industry that is often accustomed to quick-turn, cash projects. Capital providers had to learn new processes, requirements, and paperwork; and ultimately, property owners had to learn the opportunity was available. This education and training focus built a framework that is evident in the completed projects of 2017 with varying sizes and markets. The project pipelines in existing programs indicate an increase in PACE projects and evidence that the foundation has been established.

2017 was a year marked by hard work in continued foundation building and program growth. This investment will pay significant dividends in the PACE regions throughout the state in 2018 as property owners continue to learn about and take advantage of the program and as the program continues to spread in a uniform manner. The value and success of the PACE in a Box program goals were evidenced in 2017:

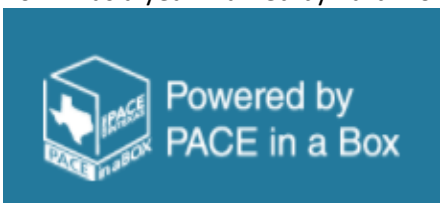

- Uniform: All local governments establishing TX-PACE programs used the PACE in a Box model and selected Texas PACE Authority to administer these programs. The result has benefited property owners in these areas. For example, Simon Property Group completed 5 PACE projects on malls in Austin, Cedar Park, Houston, Round Rock, and San Marcos using uniform documents with one lender. They plan to close an additional two mall projects in 2018.

  In contrast, California and Florida have multiple administrators operating in the same jurisdictions with differing programs, processes, and documents. PACE in a Box was intentionally designed to avoid this Byzantine system with limited competition. Uniformity will in turn promote investor confidence in project performance and returns, ultimately enabling local banks to become PACE capital providers and unlocking true scalability with PACE financing. Since the creation of the PACE in a Box model, every state across the country establishing a commercial PACE program has fostered the single-administrator model in order to realize the benefits of program uniformity. This would not be possible without the long-term commitment of Texas local governments to the building of the PACE in a Box infrastructure.

- User-friendly: The ability to work with uniform documents and one process reduces project transaction costs and administrative overhead. A singular user-friendly program is a significant advantage to local governments and all participants. The program is designed to foster economic and environmental benefits with best practices, consumer protection, minimal impact to local government, and complete transparency. Texas PACE Authority provides uncompromised oversight and does not compete with or in the marketplace it is designed to oversee. Instead, TPA serves the local government, provides education, outreach, and training and is committed to ensuring that TX-

PACE is available to all local businesses and organizations regardless of size. This model enables TPA to focus on underserved communities, affordable housing, border communities and other important sectors. The PACE in a Box model was designed to avoid the conflict of interest evidenced in early adaptor programs where the government-selected, vertically integrated administrator-lenders cherry-pick the most exclusive projects, charge many hidden fees, have different documents and processes, and play favorites among lenders and other competitors in the marketplace.

Texas PACE Authority has among the lowest administrative rates in the nation and does not charge additional undisclosed, non-administration fees. TPA's fiscal sustainability plan is based on high uniform project volume at low cost and has committed to lower its rates once the program is self-sufficient based on volume. Other states allow administrator-lenders to charge many additional types of fees besides administrative fees for services regardless of whether the property owners require those services or prefer to obtain those services in the marketplace. Some administrator-lenders require the property owners to use their capital provider(s) or pay even more fees to use their own capital providers in order to participate in that program.

- Sustainable: TPA provides only those services required of the local government so that the property owner has the ability to control the project and participating parties, and to negotiate the best possible PACE project. This enables the PACE in a Box program administration to reflect a small government role with best practices while affording the highest amount of free market flexibility for the property owners.

- Scalable: The ability of the Texas PACE Authority to use one overhead to serve 17 local governments significantly reduces costs by avoiding unnecessary duplication of services. This scalability enables TPA to control costs and to eventually lower fees. The use of uniform process and documents furthers TPA's efficiency and effectiveness throughout the state. TPA offers training programs throughout the state on a regular basis. Once contractors, capital providers, architects, property managers and other stakeholders understand their local program, their knowledge base can be applied to all other TX-PACE programs. Texas state-wide uniformity has significant value for businesses and other organizations with property and service providers with customers throughout the state of Texas and for all other Texas PACE stakeholders.

The collaborative effort to develop the PACE in a Box model throughout Texas enjoys generous additional support. Administrative support to TPA during this time of program development was provided by the Meadows Foundation in the form of a $95,000 grant. The Rockefeller Brothers Fund granted TPA $50,000 and the Environmental Defense Fund issued a grant of $50,000 to TPA to develop the PACE in a Box model program in service to Texas and as an example to other states. The State Energy Conservation Office (SECO) and the Meadows Foundation provided additional funding to other nonprofit organizations to provide TX-PACE education and outreach to local governments. The Mitchell Foundation provided a $50,000 grant to the Houston Advanced Research Center (HARC) to establish a tool for recording the environmental benefits of TX-PACE projects. This financial support enabled the significant TX-PACE work in 2017 without requiring expenditures from the local governments establishing TX-PACE programs and demonstrates significant support for and investment in the TX-PACE model program.

II. PROGRAM AND PROJECT GROWTH IN 2017

Local Governments with PACE in a Box Model Programs

Thirteen Counties and four municipalities have established PACE in a Box model programs. Combined, these uniform programs reach 42% of the Texas population.

The following jurisdictions have adopted the PACE in a Box model program:



Amarillo, City of, September 5, 2017
Brazos County, October 18, 2016
Cameron County, January 12, 2016*
Dallas, City of, May 11, 2016
El Paso County, August 29, 2016
Farmers Branch, City of, December 12, 2017
Fort Bend County, September 6, 2016
Hays County, January 17, 2017
Hidalgo County, November 22, 2016*
Houston, City of, November 4, 2015
Jefferson County, March 20, 2017
Navarro County, August 14, 2017
Nueces County, December 14, 2016
Tarrant County, November 21, 2017
Travis County, March 24, 2015
Willacy County, January 14, 2016*
Williamson County, April 5, 2016

*The Lower Rio Grande Valley Development Council (LRGVDC) has an interlocal agreement with the three counties in the regional council of government to participate in a single PACE program administered for the LRGVDC by Texas PACE Authority.

Service Areas

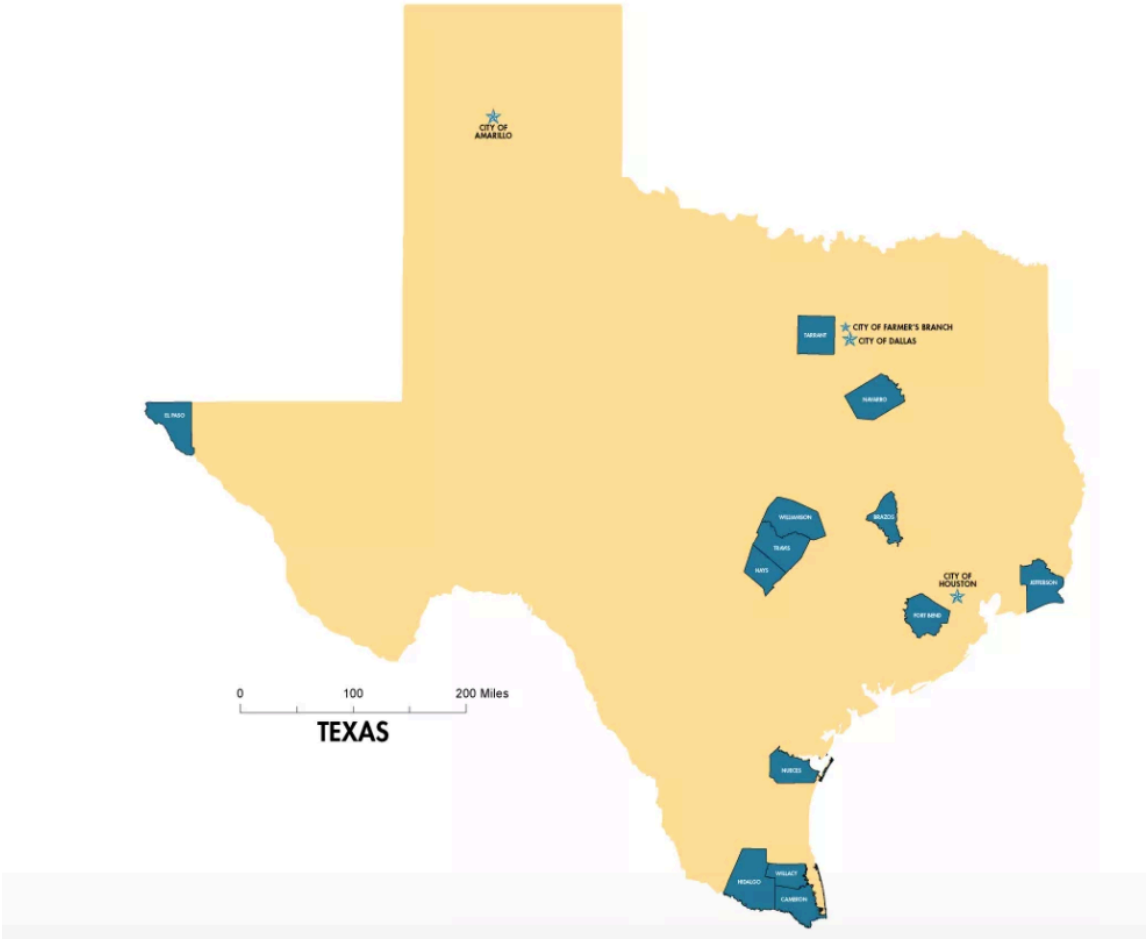

To help additional local governments establish PACE programs, the Houston Advanced Research Center (HARC) was funded by SECO to develop a guidance document providing local governments with in-depth information on creating a TX-PACE program. This document, How to Create a TX-PACE Region: A Guide for Local Government, identifies barriers and recommendations to overcoming obstacles, as well as outlining regional program creation best practices; https://comptroller.texas.gov/programs/seco/funding/pace.php. Two companion webinars, TX-PACE: An overview for local government officials; https://vimeo.com/250351065/868cdc5e25 and How to establish a TX-PACE Program; https://vimeo.com/250351396/25d7ccd6e2 are available for on-demand viewing.

Completed Projects in 2017



In 2017, a total of 7 PACE projects were completed for a total investment in Texas of just under $30 million – a 700% increase over projects completed in 2016. Completed projects included Texas' first industrial project (Corsicana), the first mixed-use project (Dallas), the first hotel project (Houston) and the first office building project (Houston). Project sizes ranged from $135,000 to $24 million, demonstrating that the PACE in a Box model can support projects of all sizes.

PACE financing was provided for the following projects in 2017:

January 2017 – Brazos County
: First small business PACE project, $130,000 (HVAC, LED Lighting, Cool Roof, Controls, Solar PV)

June 2017 – Houston, City of
: Outlet Mall, $2.185 million (LED Lighting with Controls, Smart Glass, Awnings, HVAC, Water Feature Renovation, Water Faucets, Water Conserving Irrigation Technologies)

June 2017 – Hays County
: Outlet Mall, $1.88 million (Exterior LED Lighting, HVAC, Water faucet, Water Conserving Irrigation technologies)

July 2017 – Dallas, City Of
: First Historic building, mixed-use, $24 million (HVAC, Lighting, Insulation, Roofing, Glazing, Envelope, Wall Insulation, Plumbing Fixtures, Irrigation Systems)

August 2017 – Navarro County
: First Industrial facility, $324,000 (HVAC, LED Lighting)

November 2017 – Houston, City of
: First Office Building, $1.3 million (HVAC, LED Lighting, Controls)

December 2017 – Houston, City of
: First hotel, $135,000 (Solar PV)

Hurricane Harvey unexpectedly impacted several pending PACE projects in the Houston and Corpus Christi areas. TPA was set to close a solar project in Houston the week after the Hurricane hit. However, in the aftermath of the storm, the owner decided to delay.

A broad spectrum of project measures is reflected in these projects:

Energy Efficiency:
Interior and Exterior LED lighting, HVAC, Cool Roof, Controls, Smart Glass, Awnings, Insulation, and glazing;

Water Efficiency:
Water feature renovation, faucets, water conserving irrigation technologies, plumbing fixtures

Distributed Generation:
Solar PV

On average, the PACE projects completed have reduced energy use and operating costs for targeted Energy Conservation Measures (ECMs) by 20% - 30%.

PACE in a Box Updates

One of the benefits of a large collaborative process of stakeholders is the ability to receive feedback and guidance on best practices. The ability to access the working groups that established PACE in a Box provides access to expertise and guidance throughout the process of establishing and improving the application of the PACE in a Box model taking into account experience and information gained in the development and completion of PACE projects using the PACE in a Box model. Beginning June 2017, the chairs of the PACE in a Box working groups held conference calls to receive feedback on the PACE in a Box programs in Texas. We wanted to hear from stakeholders about what's working, what needs improvement, and what additional information would be valuable. There was outstanding participation in the conference calls.

Information shared in those calls was used by the chairs, the working groups, and the team of outstanding volunteer lawyers to research and develop additional guidance that was first approved by the working groups and then sent to the call participants for their feedback.

The guidance can be found in the Keeping PACE in Texas Document Library.

December 31, 2017: Further Guidance regarding PACE in a Box from the Underwriting, Technical, and Financial Platform Working Groups and the Education, Training, and Marketing Working Group:

- Guidance Regarding PACE in a Box Section 6, Guide to PACE Project Underwriting and Technical Standards:
    - Further Underwriting Working Group guidance regarding the Scope of the Statutory Prohibition of the use of PACE Assessments for Undeveloped Lots and Lots Undergoing Development
    - Further Technical Standards Working Group Guidance for Measuring Savings for New Construction on Developed Lots
    - Further Underwriting Working Group Guidance Regarding the Savings To Investment Ratio Calculation
    - Further Underwriting Working Group Guidance regarding the PACE in a Box "Look Back" Policy

- Guidance from the Financial Platform Working Group and the Education, Training, and Marketing Group regarding Lender Education and Outreach

March 23, 2017 Additional Guidance from the Underwriting Working Group regarding PACE in a Box section 6, Guide to Underwriting and Technical Standards regarding the interpretation of the loan to assessed value ratio.

This guidance would not be possible without the large stakeholder group and the continued commitment of so many volunteers to the PACE in a Box model program.

III.COMMUNITY OUTREACH

Community Engagement

Texas PACE Authority continues to be committed to community outreach. In 2017 the following engagement was completed for the communities we serve:

- 30 statewide outreach presentations and conferences
- 49 local engagement presentations
- 98 local engagement outreach meetings
- 4 webinars
- Numerous individual company and project specific meetings that are not included for respect of privacy
-

Outlined in Appendix A is a more detailed list of the outreach events completed by geography.

Training Workshops

- Dallas: Oak Cliff Chamber PACE Service Provider Training Workshop – 1/11/17
- Weslaco: PACE Service Provider Training Workshop – 2/24/17
- San Marcos: PACE Service Provider Training Workshop – 3/7/17
- Katy: PACE Service Provider Training Workshop – 3/15/17
- Corpus Christi: PACE Service Provider Training Workshop – 4/18/17
- Dallas: Service Provider Training Workshop, 5/19/17
- Austin: SEIA Solar Power in Texas Conference, Training Workshop – 6/12/17
- Dallas: Service Provider Training Workshop, 9/7/17
- El Paso: PACE Service Provider Training Workshop – 10/17/17
- Plano: Texas A&M Energy Systems Lab, Clean Air Through Energy Efficiency Conference (CATEE), PACE Training Workshop – 11/13/17

PACE Webinars

TPA leadership presented in the following webinars in 2017:

- DOE Webinar for Lower Rio Grande Valley Development Council, 1/12/17
- TPA PACE Technical Standards Webinar – 5/24/17
- Water conservation Webinar – 6/7/17
- National Association of State Energy Officials – 12/21/17

Servant Leadership

Affordable Housing

Given the growth of population in Texas, maintaining the existing stock of multifamily affordable housing is critical. Aging structures and increasing utility costs threaten both the quality and affordability of these properties. PACE can improve both challenges, and TPA is committed to making PACE a genuinely useful tool in multifamily housing and to navigating the unique challenges in the affordable multifamily sector.

TPA engaged in a study of using PACE for affordable housing that resulted in a white paper, http://www.texaspaceauthority.org/Documents/PACE-for-Affordable-Housing.pdf?dl=0 and a webinar, https://www.youtube.com/watch?v=j4i7DIYuI4I&t=30s.

On January 17, 2017, the US Department of Housing and Urban Development (HUD) issued guidelines for obtaining HUD and Federal Housing Authority (FHA) consent for multifamily properties wishing to utilize PACE financing. TPA is preparing documentation to qualify the Texas "PACE in a Box" program to apply for a ruling that the program requirements for consent from HUD and the FHA have been satisfied.

Post-Hurricane Harvey Recovery and Resiliency Efforts

Four local governments with established PACE programs were negatively affected by Hurricane Harvey: Fort Bend County, the City of Houston, Jefferson County, and Nueces County. As many owners searched for financial solutions to fix properties damaged by Hurricane Harvey, TPA worked with local governments to help communicate Texas PACE as an effective recovery and resiliency tool. TPA posted information on each of the affected region webpages; reached out to public and private sector members of each community to learn how we might best engage and share information about the program including providing information to be posted to various websites, presenting to local government officials, chambers, and economic development groups.

TPA's collaborative approach to TX-PACE also resulted in extended outreach through new joint efforts after Hurricane Harvey. TPA participated in the Corpus Christi Regional Economic Recovery Forum in October and has connected with the Texas A&M AgriLife Extension Service, which is leading to additional opportunities to serve the agriculture sector in areas damaged by the hurricane.

PACE can be used for storm damage replacement and to upgrade lighting, roofing, insulation, windows, heating and cooling systems. It can be used for solar panels and other technologies to produce your own energy on-site. It can also be used to install water saving measures such as irrigation, rainwater collection systems and greywater collection technology. Many of these upgrades not only save energy or water, but can also make not only the property, but also the community, more resilient and disaster-proof. A flyer providing information on the use of the PACE program as a recovery and resiliency tool was prepared and posted on local government websites.

Industrial Sector Outreach

Targeted outreach to educate the industrial community about the PACE program is an emphasis for Texas PACE Authority. Through the Industrial Ambassador Network, subject matter experts have collaborated with TPA to develop tools and resources targeted to the specific needs of this vertical market. TPA will work with HARC to develop additional tools in 2018.

TPA also received a grant from the University of Texas, Texas Industries of the Future, to develop two case studies (South Texas Cold Storage and R.J. Liebe Athletic Lettering Company) showing how the program works in the industrial market. These materials are posted on the homepage of Texas Industries of the Future.

TPA is working with other SECO grantees to collaborate on outreach and education regarding energy and water efficiency to the industrial sector. TPA made a presentation to these grantees regarding PACE funding at a meeting hosted by Texas Industries of the Future in September 2017 and to the Texas A&M University Industrial Assessment Center participants in College Station in November 2017.

Meeting the needs of underserved communities

Meeting the needs of underserved communities is part of TPA's core objective. TX-PACE can help owners within these communities access private, affordable financing to make updating property and lowering operating expenses a reality. As indicated above, TX-PACE can also be used to upgrade multifamily housing. Projects providing energy and water savings for landlords and tenants help address the shortage of affordable housing across many parts of the state. TX-PACE enables property owners to make much needed building upgrades while keeping lease rates and utility costs reasonable. These updated structures can become catalysts for thoughtful investment within the community.

Outreach, training, and education are essential to creating and sustaining community partnerships. Through collaboration with community development partners, Texas PACE Authority is providing leadership, data, support, tools, and resources along with program orientation and service provider trainings to property owners, managers, industry organizations and the industry professionals who update the buildings (contractors, architects, engineers, etc.) in the regions it serves. Service provider training workshops will continue to build capacity and foster economic growth as the TX-PACE program retrofits create additional demand for local jobs that will not need to be outsourced.

PACE Along the Border

TPA administers PACE programs on each end of the Texas-Mexican border: El Paso County to the west and Cameron, Hidalgo, and Willacy Counties on the eastern end of the border. Outreach efforts in 2017 included presentations in Del Rio and Laredo. TPA also met with the Border Environmental Cooperation Commission in April 2017 and presented at a PACE on the Border panel at the TCEQ Environmental Trade Fair and Conference in May 2017. Several PACE lenders are working with the North American Development Bank to access funding for PACE projects within 62 miles of the Texas-Mexico border.

Agricultural Sector

The gulf coast agricultural sector was severely damaged by Hurricane Harvey and subsequent flooding. TPA reached out to these sectors and will continue to build ties and connections leading to presentations and collaborative efforts in the coming years to farmers, ranchers, and food processors throughout the state. TPA will focus on tools that will reduce costs and result in water and energy efficiency for this critical economic sector in Texas in collaboration with the Texas A&M AgriLIfe Extension and the USDA.

National Impact

The PACE in a Box model is being copied in other states, and TPA is increasingly asked to participate in efforts to improve and standardize commercial and industrial PACE best practices. TPA leadership participated in PACENation Summit panels in February 2017 regarding the PACE in a Box model programs in Texas: "Local Legislation and Ordinances" and "PACE Administration Models."

TPA provided information on the TX-PACE program to the US Secretary of Energy's office and to the policy staff of the American Legislative Exchange Council. TPA provided interviews and comments to two studies in development:

- A report being written for local governments called *Lessons in Commercial Leadership: The Path from Legislation to Launch*, by the Energy Analysis and Environmental Impact Division Laurence Berkley National Laboratory under a grant from the Department of Energy; and
- A report for local governments establishing commercial PACE programs in Maryland, Virginia, and the District of Columbia being prepared by the Mid-Atlantic PACE Alliance under a grant from the Department of Energy.

In addition, TPA was asked to present the TX-PACE program at the Young Conservatives for Energy Reform and Christian Coalition's Energy Summit, Washington, DC in October 2017 and as the keynote presentation at the Mid-Atlantic PACE Alliance First Annual Summit, in Washington, DC in October. TPA also presented the TX-PACE program in a webinar for National Association of State Energy Officials in December 2017.

International Impact

TPA presented the TX-PACE program at a Data Center Impact conference in Costa Rica in August 2017.

Program Website and Database

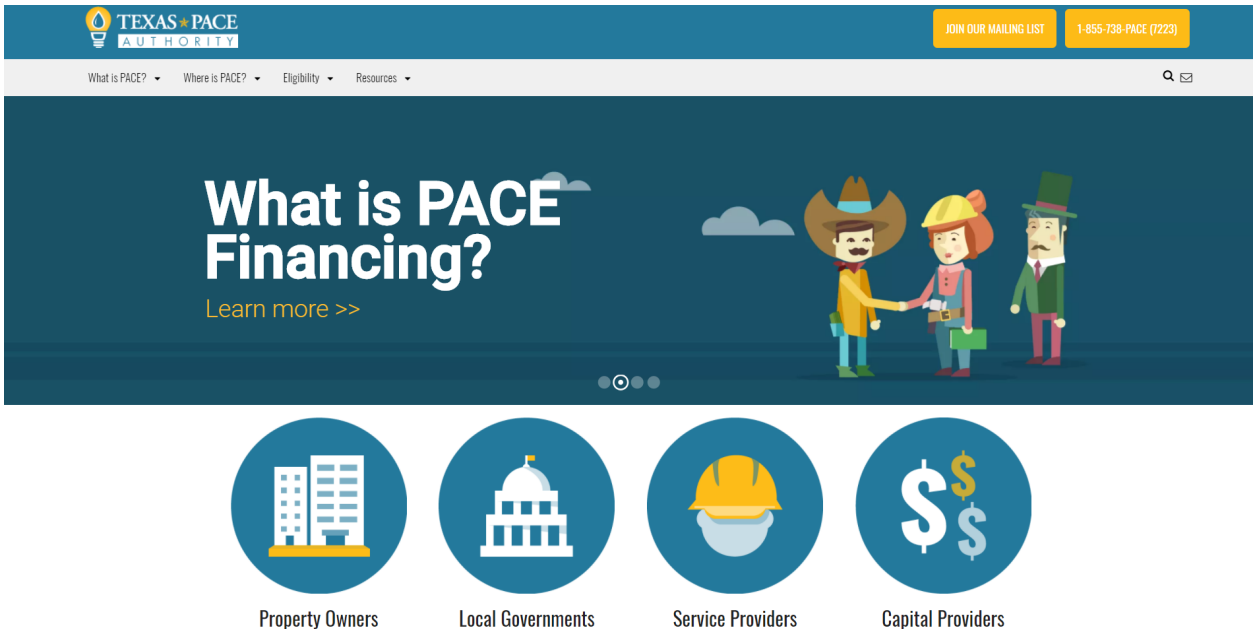

TPA continues to develop a more user-friendly and organized website by improving the appearance, effectiveness, and streamlining the availability of stakeholder resources and the application process. Texas Pace Authority's website hosts hundreds of unique visitors each month. (http://www.texaspaceauthority.org/).

The website includes a local program page for each county and municipality highlighting the benefits of PACE projects to that community: https://www.texaspaceauthority.org/service-areas. In programs with completed projects, the website displays the cumulative number of projects completed, total local PACE investment, jobs created (using DoE formula), tonnes of Co2 reduced annually, kilowatts of energy saved annually, and gallons of water saved annually. This example is from the Travis County PACE page on the TPA website:



TPA is establishing content and will be reaching out to each local government to make these pages and corresponding pages on the local government's website more informative and helpful.

Eligibility Assessment Tool

An eligibility assessment tool on the TPA website allows prospective stakeholders to quickly vet project eligibility. Using this tool, the contractor or owner answers a series of basic questions about the property, project, and owner, and receives instant feedback on whether the project is likely to be eligible for PACE financing.
(http://www.texaspaceauthority.org/eligibility/eligibility-check/)

Calculator

Texas Pace Authority has developed a PACE project pro formula model to quickly demonstrate the benefits of a PACE loan to property owners by comparing the impact of benefits of PACE financing with self-funding and traditional loan financing. This model allows a user to take project inputs (namely, cost and savings assumptions) and prepare a consolidated financial report for presentation to the property owner. One must be able to accurately produce such a report in order to properly evaluate a project. In addition, this tool helps contractors and project developers present projects using metrics that property owners want to see. It is also used to demonstrate the benefits of PACE financing to a mortgage holder.
(http://calculator.texaspaceauthority.org/)

Project Inputs	
Project Cost	$1100000
Annual Savings	$125000
Cap Rate (Discount Rate)	5%
PACE Loans Inputs	
Term (years)	20
PACE Interest Rate	6.5%
Conventional Loan Inputs	
Loan Term (years)	5
Loan Interest Rate	4%
Down Payment	20%
Self-Funded Inputs	
Include Opportunity Cost?	no
Opportunity Cost	3%

Summary of Results			
	Self-Funded	Conventional Loan	PACE
Out-of-Pocket Investment	($1100000)	($220000)	$0
Average Annual Savings	$125000	$125000	$125000
Annual Payment	$0	($247090)	($99832)
Cash Flow Impact Year 1	($975000)	($342090)	$25168
Net Project Cash Flow Year 2	($850000)	($464180)	$50336
Years to Positive Project Cashflow	8.8	11.64	IMMEDIATE
Debt Service Over Finance Term	$0	($1235449)	($1996641)
10-Year Project NPV	($134783)	($324553)	$194340
20-Year NPV	$457776	$268007	$313648

Marketing Plan

TPA informs and engages the market about the PACE program based on the marketing strategies outlined in Section 5 of PACE in a Box. Texas PACE Authority has a promotional video: https://www.youtube.com/watch?v=1zybcEAwYoQ&t=5s.



https://www.youtube.com/watch?v=5gnN72buvw4

Logo:

Building Infrastructure

TPA continues to build community awareness of the TX-PACE program and establish a complete local TX-PACE community – one that includes all the necessary participants to provide property owners with competitive choices for each of the services necessary to successfully establish a successful PACE project. This ongoing effort to build infrastructure is a necessary first and ongoing step in the education, outreach, and marketing effort to establish a vibrant PACE community and a positive, efficient, user-friendly experience for property owners interested in the PACE program.

TPA continues the ongoing outreach and education to the stakeholders necessary to serve property owners interested in utilizing the Texas PACE program. Capital providers, mortgagees, project originators and others working to provide the necessary capital for TX-PACE improvements need to be familiar with and understand the program in order to serve the property owners and prospective property owners interested in utilizing TX-PACE. Contractors, architects, engineers, manufacturers of energy and water saving equipment and their service organizations need to know about the program and understand the underwriting and technical requirements, so they can advise property owners on how to put together a successful PACE project in an efficient manner.

Flyers

Texas PACE Authority produced six general flyers:

- Commercial: https://www.texaspaceauthority.org/wp-content/uploads/Commercial-Flyer.pdf;
- Industrial: https://www.texaspaceauthority.org/wp-content/uploads/Industrial-Flyer.pdf;
- Nonprofit: http://www.texaspaceauthority.org/wp-content/uploads/NonProfit-Flyer-17-03-24.pdf;
- TX-PACE For Local Governments: https://www.texaspaceauthority.org/wp-content/uploads/Public-Sector-Flyer-092617.pdf
- TX-PACE For the Business Community: https://www.texaspaceauthority.org/wp-content/uploads/Private-Sector-092617.pdf
- TX-PACE for Recovery/Resiliency: https://www.texaspaceauthority.org/wp-content/uploads/Texas-PACE-Program-Provides-Businesses-another-Tool-for-Disaster-Recovery_final.pdf

Case Studies

Successful projects are superb advertisements for the PACE program. To help distribute information about these successful projects, TPA has created the following case studies that are available on the website's resources page: https://www.texaspaceauthority.org/resources/case-studies-marketing:

R.J. Liebe Athletic Lettering Company, Navarro County (First industrial project)

Butler Brothers Building, City of Dallas (First mixed-use project, first use of PACE in a capital stack at purchase)

Congregation Beth Israel, Travis County (First PACE project in Texas, nonprofit), and video case study

Family Eldercare, Travis County (First solar project, nonprofit)

1225 N Loop, Houston (First office building)

Social Media

TPA uses WordPress to effectively connect with target market and online community. Information and content is shared via Twitter, Facebook, and a TPA website blog. TPA is expanding to LinkedIn to engage business professionals who primarily use one form of social media. Measures are in place to increase traffic to website and social media sites.

Constant Contact Email Distribution List and Blasts

More than 4,000 people signed up to receive emails from Texas PACE Authority. In 2017, subscribers received 32 email blasts that included updates about new programs, project closings, TPA's trainings and workshops, as well as industry news and events.

Stakeholder Inquiries

The complexities of PACE for the various stakeholders created a need for an accessible repository of Frequently Asked Questions. The 65 questions listed on the TPA website are broken into categories to apply to property owners, service providers, capital providers, and local governments. https://www.texaspaceauthority.org/resources/faqs/.

A toll-free number was established to encourage inquiries: 1-855-738-PACE (7223). In addition, stakeholders are able to submit email inquiries by using the 'Contact Us' webpage link to the TPA Administrator account: admin@texaspaceauthority.org.

Technical Standards Manual

TPA uses a Technical Standards Manual which was designed by one of the PACE in a Box stakeholder working groups, chaired by Dub Taylor, Director of the State of Texas Energy Conservation Office. It relies primarily on the Investor Confidence Project (ICP) Energy Performance Protocols (EPP) for standard and large commercial facilities contributing to the ICP nationwide effort to standardize the technical review of energy efficiency. The manual is a key component of the TPA Program Guide and service provider training. The Program Guide and Technical Standards Manual have been updated to include additional guidance from the PACE in a Box working groups as it becomes available (March 23 and December 31, 2017).

Helping Property Owners Identify PACE Capital Providers

The following link provides a list of interested and qualified capital providers which can enable property owners to easily identify potential sources of private third-party financing. Texas PACE Authority neither recommends nor endorses any particular PACE capital provider. Under the TPA's open market model, property owners are free to use financing of their choice. Thus, this directory is by no means an exclusive list of available capital providers. It is provided solely for convenience in consolidating a list of PACE capital providers.
http://www.texaspaceauthority.org/home/capital-provider-list



Service Provider Training

The Texas PACE Authority's Service Provider Training sessions are designed to inform contractors, capital providers, and other stakeholders about the financial intricacies of PACE and introduce them to a suite of tools, resources, and reports designed to generate owner enthusiasm for a specific project. The traditional contractor focus is on quick payback projects. This is a result of property owner requirements that projects meet a two to three-year simple payback. Energy and water efficiency projects rarely meet this requirement without PACE.

Few, if any contractors have the existing knowledge, experience, and tools to fully integrate the compelling reasons to use PACE financing in a business proposal. To address this problem, TPA regularly conducts service provider training sessions throughout the state. Continued outreach, education, training, tools, and

ongoing support services to both the energy efficiency (EE) and distributed generation (DG), e.g. solar photovoltaic contractor and water efficiency contractor, communities are critical.

Training workshops were conducted in the following Texas PACE Regions in 2017:

- Oak Cliff Chamber PACE Service Provider Training Workshop, Dallas – 1/11/17
- PACE Service Provider Training Workshop, Weslaco – 2/24/17
- PACE Service Provider Training Workshop, San Marcos – 3/7/17
- PACE Service Provider Training Workshop, Katy – 3/15/17
- PACE Service Provider Training Workshop, Corpus Christi – 4/18/17
- PACE Service Provider Training Workshop, Dallas – 5/19/17
- SEIA Solar Power in Texas Conference Service Provider Training, Austin – 6/12/17
- PACE Service Provider Training Workshop, Dallas – 9/7/17
- PACE Service Provider Training Workshop, El Paso – 10/17/17
- Texas A&M Energy Systems Lab, Clean Air Through Energy Efficiency Conference (CATEE), PACE Training Workshop, Plano – 11/13/17

The service provider training sessions run about 4-5 hours and include lunch and a spiral bound PACE Program Guide and Technical Standards Manual. A rotating panel of PACE capital providers participates in the service provider training sessions.

The sessions typically cover in-depth PACE topics, such as:

- Introduction to PACE ("How to Market PACE")
- Overview of steps in a PACE Project
- Available Energy and Solar Rebates and Commercial Incentives
- Available Water Commercial Rebates
- Technical Standards as part of a PACE Project
- The Role of the Independent Reviewer
- Financial Modeling: PACE Project Report
- PACE Network and Project Development
- Current ICP Protocol and its use in PACE

Helping Property Owners Identify PACE Service Providers

Texas PACE Authority partnered with the US Green Building Council's (USGBC) Texas Green Building Marketplace (TGBM) to develop a directory of PACE service providers, including contractors, attorneys, engineers, capital providers, and other PACE stakeholders. Participants of TPA's service provider training workshops are eligible to be listed on the PACE page: http://texasgreenbuildingmarketplace.org/listing/guide/pace-related. The USGBC waives the registration cost for one year, below is a screenshot of the TGBM PACE section. At the time of this report, 98 participants are listed.

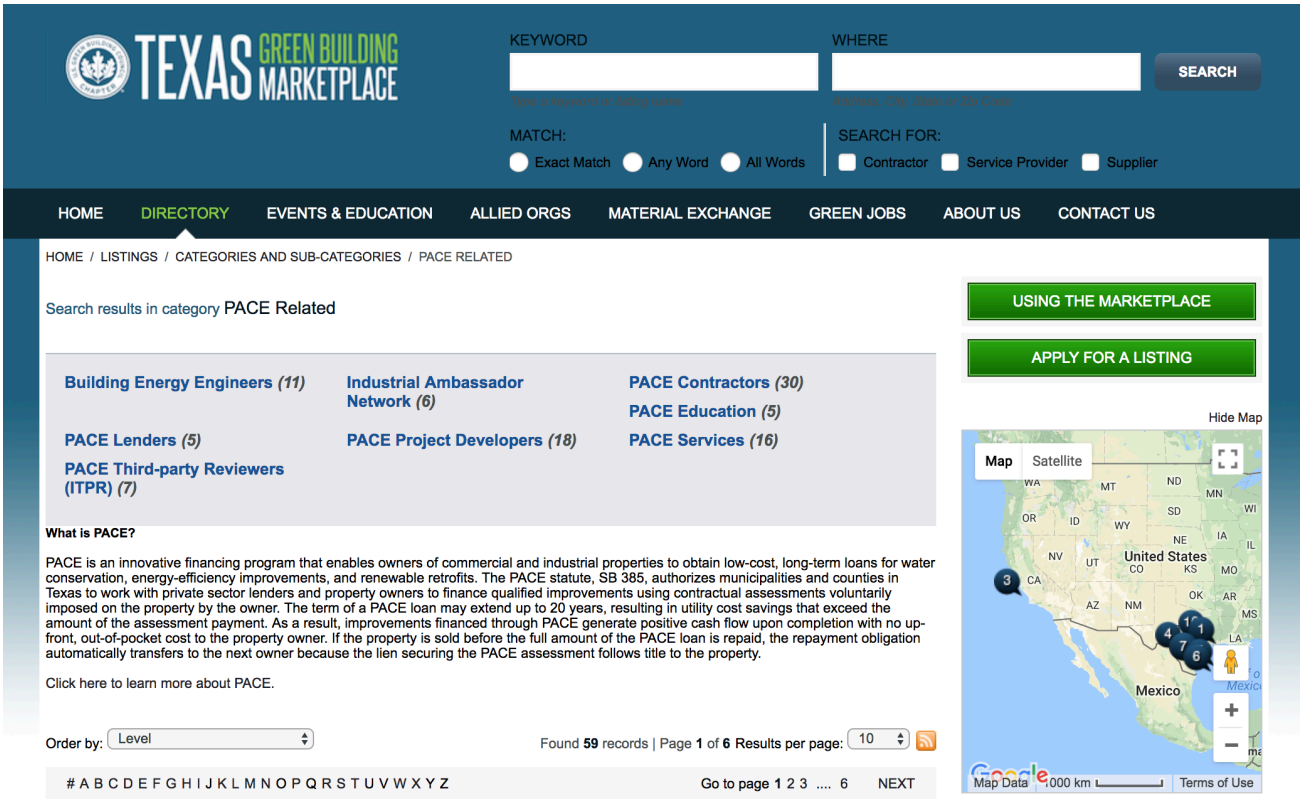

Quality Assurance and Antifraud Measures

TPA reviews each PACE application for completeness and supporting documents through independent review and verification procedures. TPA uses checklists and a legal review of required documents supplied by the capital provider to ensure that all statutory and PACE in a Box best practices are satisfied. The application and required documents identify and supply the information necessary to ensure that the property owner, the property itself, and the proposed project all satisfy PACE program underwriting and technical standard requirements.

TPA also reviews the report submitted by an independent third-party reviewer (ITPR), who must be a registered professional engineer, before the project can proceed. The report confirms that the energy and water savings baseline and projected savings are in compliance with the Technical Standards Manual. The ITPR performs an initial site visit, and then issues a report and a letter certifying that he or she has no financial interest in the project and is an independent reviewer. After the construction of the project is complete, an ITPR conducts a final site inspection and determines whether the project was properly installed and operating as intended. The reviewer's certification for this 2nd review also includes a statement that the reviewer is qualified and has no financial interest in the project.

IV. APPLICATION & APPROVAL PROCESS

The Texas Pace Authority application form is based on the PACE in a Box model application form. Upon invitation from Texas PACE Authority, property owners can use the website to submit applications. This platform provides a confidential forum for the submission and review of required materials. Texas PACE Authority reviews the forms for completeness and notifies applicants of any missing information. When applications are complete, Texas PACE Authority makes a preliminary determination of eligibility explained in the process below and informs owners whether, subject to verification of all requirements at closing, the information submitted indicates that the proposed project meets all program requirements. TPA then performs closing verification reviews and schedules assessment transaction closings when all requirements are met.

Technical Standards

Texas PACE Authority:

- Requires independent third-party reviewer verification (ITPR), according to the PACE in a Box Technical Standards Manual and the PACE statute;
    - Requires ITPR verification of the property's baseline and expected energy or water savings resulting from a project, according to the PACE in a Box Technical Standards Manual; and
    - Requires ITPR verification that each project was properly completed and is operating as intended;
- Assumes an oversight role over the ITPR on each project. Texas PACE Authority is available to discuss the technical standards that apply and provide insight into how a project should be reviewed. TPA reviews the findings of each ITPR to verify that a project meets technical standards and that the ITPR has no financial or personal connection to the project under review; and
- Performs closing verification reviews and schedules assessment transaction closings when all requirements are met.

Financial Standards

Texas PACE Authority certifies:

- A preliminary determination of eligibility when applications are complete and issues preliminary letters to owners and capital providers indicating whether, subject to verification of all requirements at closing, the information submitted indicates that the proposed project meets program requirements;
- The capital provider has determined, based on appropriate underwriting factors, that the owner has demonstrated the financial ability to repay financial obligations through PACE assessments; and
- The qualification of each approved project for PACE financing to the property owner and capital provider.

Legal Standards

Texas PACE Authority:

- Reviews and finalizes the terms of every owner contract and lender contract prior to execution;
- Ensures the recording of a Notice of Contractual Assessment Lien for each approved project in the Official Public Records of the County;
- Requires the owner to notify the holder of any mortgage lien on the property of the owner's intention to participate in the program and obtain the mortgage lienholder's written consent prior to the imposition of the PACE assessment; and
- Coordinates and participates in assessment transaction closings.

Fees

The goal of TPA is to have a well-funded, quality, and financially healthy organization, while keeping administrative costs to a minimum by operating in an efficient and cost-effective fashion. To that end, initially TPA charges two types of fees as part of administration: an application fee and an ongoing interest rate residual. These fees cover the basic administrative service to complete a PACE project as well as the ongoing reporting program to municipalities that enact a PACE district.

- Application Fee amounting to 1% of total project cost:
  - Initial $500 to be paid at application
  - Balance to be paid at closing
- Ongoing Residual Fee amounting to 10 basis point interest rate adder paid as part of annual assessment. Note: This fee can be capitalized and paid in full at closing.
- On March 14, 2017, the TPA board of directors voted to limit the 1% application fee in the following manner:

Project Size:	Admin. Fee:
Up to $5,000,000	1% of loan amount
Above $5,000,000	1% of first $5,000,000, then 0.5% of marginal amount above $5 million

- TPA publicly commits to lower fees when it is self-sufficient without dependence on foundations and with the proper reserves.

Application Process

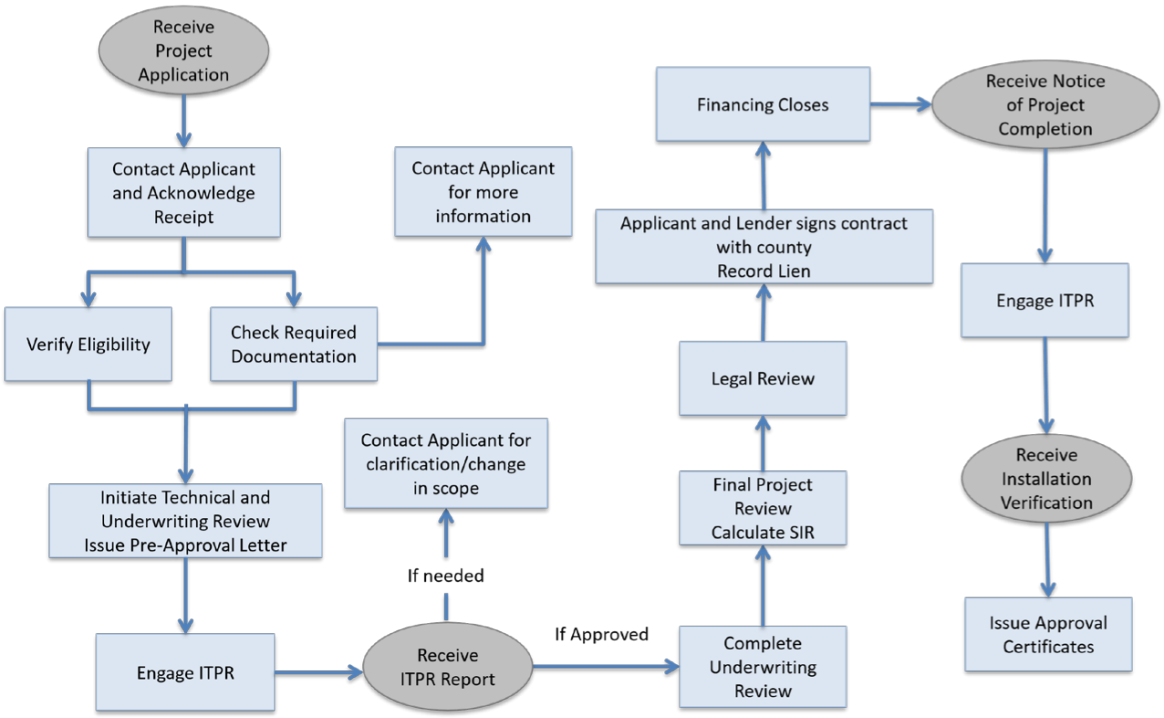

The above diagram shows the typical flow of a project application. TPA's review is designed to ensure that all requirements from the PACE statute and the County PACE Report are being met. Broadly, the application review consists of a technical review and a financial/legal review. The following main issues are vetted for compliance with the PACE statute and the TX-PACE program requirements.

TECHNICAL REVIEW

- Project Scope – TPA first reviews the scope of the project to verify the eligibility of all Utility Cost Reduction Measures (UCRMs), and internally evaluates the project's cost/benefit analysis.
- Savings Analysis – TPA reviews the Savings to Investment Ratio (SIR) and corroborates the Cost/Benefit analysis as submitted by the contractor.
- SIR and Cost vs. Benefit Validation by ITPR – TPA ensures that the cost/benefit analysis has been appropriately vetted by a qualified Independent Third-Party Reviewer (ITPR). The ITPR must submit a signed and sealed "Project Verification Certificate" and a summary table of savings.

LEGAL/FINANCIAL REVIEW

- Required Documents Checklist - TPA confirms that all documents in the TPA required documents list have been submitted. That list can be found in the TPA Program User Guide – https://www.texaspaceauthority.org/Documents/Program Guide.pdf?dl=0

- Verify Property Ownership and Assessed Value – TPA verifies the property ownership, improvements, and value listed in the publicly available County Appraisal District database.
- TPA requires proof that the owner is a legal entity able to do business in Texas. Primarily this verification comes from certificates issued by the Texas Secretary of State and the Texas Comptroller.
- Signatory Authority – TPA confirms that the persons signing on behalf of the owner and capital provider have legal authority to do so. This is commonly known as a Certificate of Incumbency.
- Property Title Report – All properties must submit an updated title report, detailing all liens on the property and confirming the ownership structure of the property.
- Lender Consent Form – Any existing mortgage holder is required to submit a written form of consent to the PACE lien.
- No undeveloped lots – As PACE is not statutorily eligible for undeveloped lots or lots undergoing development at the time of the assessment, TPA requires at its discretion a Certificate of Occupancy.
- Confirm Underwriting –TPA confirms that proper financial underwriting has been performed by the capital provider.
- Prepare PACE Contracts – TPA prepares the form PACE contracts to be executed at closing. TPA acts as the closing agent and completes the PACE process by filing a Notice of Contractual Assessment Lien at the County Clerk's Office to be recorded in the County land records.

V. MANAGEMENT AND REPORTING

Annual Notices of Assessment Lien

Each participating local government program has established a procedure for the sending of a notice of annual assessment for the coming year to be sent by the appropriate local government authority. TPA prepares and provides these notices to the local government, which sends the notices for properties with PACE assessments according to the Owner Contract and financing documents. This process is being adopted in other PACE regions.

Economic and Environmental Results

Texas PACE Authority has agreed to certain management and reporting standards with local governments and will perform these tasks once PACE projects close in the PACE jurisdiction. Owners will be required to submit annual reports during the life of the assessment. Reports will be filed using EPAs ENERGY STAR ®Portfolio Manager Account to make reporting a user-friendly experience for property owners.

The Houston Advanced Research Center (HARC), with a grant from the Mitchell Foundation, is designing the process for collecting the project data from property owners in a user-friendly, uniform manner for input into a statewide database that will enable the data to be available on a county-wide and statewide basis in aggregated manner (not project specific). The tracking website, which will be further expanded in 2018, can be viewed at: http://pace.harcresearch.org.

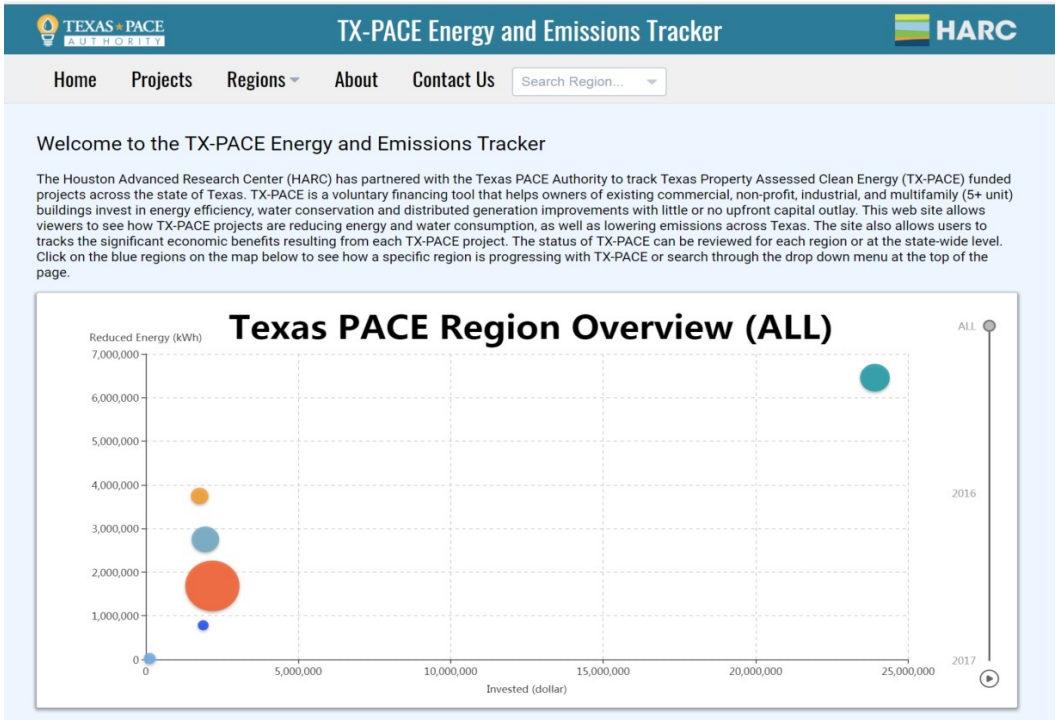

TEXAS ★ PACE AUTHORITY

VI. OUTCOMES

Project Closings

Seven TX-PACE projects closed in 2017 for a total investment of just under $30 million.

1. Brazos County - Small Business Building - $130,000 - LED, HVAC, Roof, Solar
2. City of Houston - Outlet Mall - $1.185 million - LED, HVAC, Water Efficiency
3. Hays County - Outlet Mall - $1.88 million - LED, HVAC, Water Efficiency
4. City of Dallas - Historic Office Building - LED, HVAC, Water Efficiency, Building Envelope, Roof - $23.9 million
5. Navarro County – Industrial Manufacturing facility – $324,000 – HVAC, LED, Roof
6. City of Houston – Office Building – $1.3 million – HVAC, lighting
7. City of Houston – Hotel – $135,000 – Solar

PACE projects typically take 12+ months for design, savings calculations, third-party review, applications, and financing. Texas PACE Authority is currently in the late stages of several additional PACE projects which are expected to close in the first quarter of 2018.

Hurricane Harvey unexpectedly impacted several of our projects in the Houston and Corpus Christi areas. TPA was even set to close a solar project in Houston the week after the Hurricane hit. However, in the aftermath of the storm, the owner decided to delay.

Servant Leadership

Texas PACE Authority is committed to serve all of Texas businesses and communities while setting a nationwide example for administrative transparency and public service. Reaching out to underserved communities is a fundamental element of Texas PACE Authority's outreach, education, and training effort.

Building the foundation of the Texas PACE in a Box program - providing only the services required of the local government and leaving the competition to those in the marketplace requires commitment and patience. Fortunately, 2017 began proving the model with significant program expansion and record project completion. Although an increased number of projects would please everyone, a race to close projects for its own sake would be short sighted and short-lived resulting in short-shifting consumer protections and retarding the development of a larger competitive field. Texas PACE Authority will continue its education, outreach, and training efforts for projects of all sizes in all communities. Giving the private sector time to design the highest and best use of the TX-PACE program will ultimately result in the greatest use of TX PACE with lower risk than models from early adopter states.

Capital Provider Expansion



Texas PACE Authority neither recommends nor endorses any particular PACE capital provider. Under the TPA's open market model, property owners are free to use financing of their choice. Over the last year, Texas PACE Authority successfully added 6 private capital providers to its network and is working with several additional capital providers who have not yet decided to be listed on the capital provider page, but are actively working with property owners to develop TX-PACE projects. These capital providers represent a wide range of institutions from traditional banks to private equity funds to PACE-specific investment vehicles. All capital providers have certified that they are ready to loan on PACE projects and conduct business in Texas. Together, they represent upwards of $3B of capital ready to invest. Two capital providers will consider loans for projects as small as $50,000.

Mortgagee Consent Success

The development of a business case is required to gain written mortgagee consent for PACE financing from an existing mortgagee. Mortgage consent has been granted in a significant percentage of closed projects. Mortgagee consent is a common bottleneck to PACE projects because of the nature of a PACE senior lien and the unfamiliarity with the new commercial PACE program in Texas. However, despite initial objections, consent can often be obtained once the advantages have been explained. Education and outreach to mortgage lenders continues to be a priority.

Lessons Learned

A successful commercial PACE marketplace requires an intricate network of educated capital providers, property owners, and contractors. Creating this educated network through outreach and providing successful examples are keys to alleviating property owners' and mortgage lenders' initial apprehensions.

Texas PACE Authority has learned several other valuable lessons.

- "If you build it, they will come" is not a viable aphorism for Texas PACE. In other words, a system and infrastructure must be built;
- PACE projects have long sales cycles, so persistence is key;
- Operating an open market program in which the administrator performs as a public servant leaving the property owners, capital providers, and contractors to operate in the free market provides the basis for programmatic trust from stakeholders, including local lenders; and
- Transparency about fees, structure and cost is critical to building trust in PACE as a new financing tool.

Recognition

Texas PACE Authority was named the Outstanding Nonprofit Organization of 2016 at the Texas A&M Energy Systems Laboratory at the 2016 CATEE (Clean Air Through Energy Efficiency) conference.

Remaining Objectives

- To continue education and outreach with property owners, service providers, and local lenders to increase awareness of the TX-PACE program;
- To promote the TX-PACE program throughout the commercial, industrial, and multifamily sectors in rural and urban areas;
- To promote the TX-PACE program to commercial, industrial, and multifamily property owners of all sizes;
- To develop a vibrant TX-PACE network of local banks and capital providers, property owners, and contractors; and
- To continue to support the development and completion of TX-PACE projects.

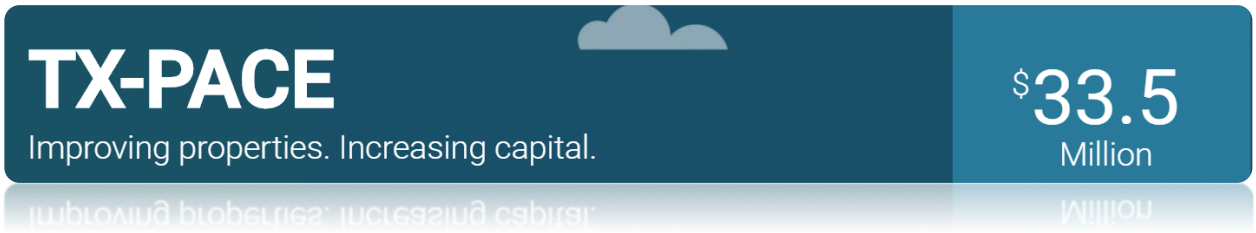

Next Steps

After working to build a network of trained service provider professionals, the Texas PACE Authority's 2018 outreach efforts will expand to include workshops and networking opportunities for owners, developers, and local lenders. This focus is based on successful events in El Paso County in October and the City of Amarillo in December.

Texas PACE Authority will be hosting a webinar for the local lending community and publishing an article in an upcoming issue of the *Texas Independent Banker*. In addition, TPA staff will be reengaging organizations across the state that received presentations in the last two years before projects began to close. The 2018 meetings provide an opportunity to highlight program successes, drawing examples from the industrial, office building, nonprofit, multi-use historical projects ranging in size from $24 million to $125 thousand. With these examples, TPA can fully demonstrate the advantages of PACE financing in the capital stack at purchase of property and the calculated savings of using TX-PACE to renovate existing facilities. As projects close and continue to prove the PACE in a Box model, TPA will redouble its efforts to capture the attention of key stakeholders that have resisted engaging in PACE until program success was demonstrated.

Texas PACE Authority staff will be reaching out to elected officials, economic development staff, and other public servants for recommendations for outreach throughout the PACE regions.

VII. TEXAS PACE AUTHORITY LEADERSHIP

Board of Directors

Charlene Heydinger, President
Steve Block, Secretary
Michael Gromacki
John Hall
Hon. Penny Redington

Texas PACE Authority Team

Charlene Heydinger, President
Jonathon Blackburn, Managing Director
Amy Vanderbilt, Operations and Compliance Manager
Bridget Branch, Regional Program Manager (North Texas)
Marina Badoian-Kriticos, Regional Program Advisor (Southeast Texas)
Calley Pace, Marketing and Communications Manager
Craig Smith, Counsel
Deborah Camp, Creative Manager

Advisory Committee

Hon. Kip Averitt
Tony Bennett
Hon. Warren Chisum
Kathey Ferland
Debbie Kimberly
Luke Legate
Steve Minick
Terrie Salinas
Carlton Schwab

VIII. CONCLUSION

The work completed in 2017 laid the foundation for the creation of a holistic TX-PACE program. In 2018, education of contractors, local lenders, and capital providers remains key to achieving the goals of this unprecedented collaboration, and outreach to property owners, developers, and real estate experts will be elevated. The successful project closures in Texas in 2017 are already paving the way to a new level of PACE project activity in 2018.

The expertise refined over the past year will serve as the cornerstone of the program's use in the coming years.

Texas PACE Authority's focus on uniformity, property owner autonomy, and open market financing has been uniquely adapted from other states' PACE programs to suit Texas' needs. As TX-PACE programs are established by more local governments, the network of providers and increase in project completions will eventually result in measurable economic benefits for individual property owners and their communities.

Thank you for your continued support for the PACE in a Box model program and the Texas PACE Authority's efforts to administer it consistently throughout Texas as a nonprofit public service.

Respectfully submitted,



Charlene Heydinger
President
charlene.heydinger@keeppace.org

APPENDIX A

Outreach Presentations and Conferences – Statewide

Arlington:

- High Performance Buildings and Workspaces, presentation and booth – 5/16/17

Austin:

- Water Conference, presentation – 2/22/17
- Rural Rental Housing Conference, PACE presentation – 7/20/17
- TCEQ Environmental Trade Fair and Conference, PACE on the Border panel – 5/17/17
- SEIA Solar Power in Texas Conference, PACE presentation – 6/13/17
- SEIA Solar Power in Texas Conference, Training Workshop – 6/13/17
- Rural Rental Housing Conference, PACE presentation, Austin – 7/20/17
- Texas Renewable Energy Summit, presentation, Austin – 9/20/17
- Solar Business Festival, Booth 11/29/17

College Station:

- Texas A&M University Industrial Assessment Center, presentation to students – 11/10/17
- Texas A&M AgriLife Extension Service, presentation – 12/8/17

Corpus Christi:

- PACE Service Provider Training Workshop – 4/18/17

Dallas:

- Oak Cliff Chamber PACE Service Provider Training Workshop – 1/11/17
- Service Provider Training Workshop, 5/19/17
- Metrocon Conference, PACE panel presentation – 8/9/17
- Service Provider Training Workshop, 9/7/17
- North Texas Facilities Expo, booth – 10/11/17
- Dallas County Community College District, Sustainability Summit, presentation 11/3/17

El Paso:

- PACE Service Provider Training Workshop – 10/17/17

Georgetown:

- Texas Renewable Energy Industry Alliance GridNext Conference, presentation – 10/23/17

Haltom

- NE Tarrant County Chamber of Commerce's Economic Summit, presentation – 1/5/17

Houston

- Service Provider Training Workshop, 3/15/17
- Modern Absorption Chillers Seminar – 5/24/17
- Texas Tax Assessor-Collector Association Annual Meeting, PACE presentation – 6/7/17
- USGBC Energy Summit, Booth – 10/12/17
- SPEER City Efficiency Leadership Council, presentation – 12/13/17

Katy:

- PACE Service Provider Training Workshop – 3/15/17

Plano:

- Texas A&M Energy Systems Lab, Clean Air Through Energy Efficiency Conference (CATEE), PACE Training Workshop – 11/13/17
- CATEE Conference, PACE Panels (3), 11/14-15/17
    - PACE 101
    - PACE in Practice
    - PACE for Local Governments
- CATEE Conference, booth – 11/14 – 15/17
- CATEE Conference Plenary Session, Post Hurricane Harvey Resilience, panelist – 11/15/17

Weslaco:

- PACE Service Provider Training Workshop – 2/24/17

Local Engagement - Presentations

Addison:

- International Facilities Managers Association (IFMA), presentation – 2/23/17

Amarillo:

- Economic Development PACE outreach and networking reception, presentation – 12/6/17

Arlington:

- Oncor Rebates Event, presentation – 1/12/17

Austin:

- UT Energy Week Start-up Competition, 2/6/17
- SEIA Solar Power in Texas Conference, Training Workshop – 6/13/17
- Texas Industries of the Future, SECO industrial grantee presentations 9/28/17
- Capital Area Council of Governments, Water Committee, presentation – 11/16/17

Beaumont:

- Jefferson County Commissioners Court PACE Workshop, 1/30/17
- Jefferson County Commissioners Court, Hearing, PACE presentation, 3/20/17
- Jefferson County Commissioners Court presentation, PACE after Hurricane Harvey – 10/7/17

Bryan:

- Brazos County Chamber of Commerce, presentation – 2/8/17

Corpus Christi:

- PACE Service Provider Training Workshop – 4/18/17
- Nueces County Commissioners Court presentation, PACE after Hurricane Harvey – 9/20/17

Dallas:

- Oak Cliff Chamber PACE Service Provider Training Workshop – 1/11/17
- Greater Dallas Planning Council, presentation, 2/9/17
- IFMA presentation, 2/23/17
- South Dallas Faith Coalition, presentation – 3/21/17
- Earth Day – Booth, 4/20-22/17
- Dallas 2030 PACE Greenworks Presentation, 4/26/17
- Service Provider Training Workshop, 5/9/17
- Dallas 2030 Meeting & ONCOR Incentives presentation – 8/16/17
- Service Provider Training Workshop, 9/7/17
- ULI tour of Butler Brothers Building, 9/12/17

Del Rio:

- Val Verde County Commissioners Court Meeting, PACE presentation – 11/1/17

El Paso:

- PACE stakeholder Networking Event – 4/2/17
- PACE Service Provider Training Workshop – 10/17/17
- Reception and presentation for Property Owners – 10/17/17

Farmers Branch:

- Mayor and City staff, PACE presentation – 10/16/17
- City Council, PACE presentation – 11/14/17

Fort Worth:

- Tarrant County Commissioners Court, PACE Workshop presentation, 10/17/17

Haltom

- NE Tarrant Economic Summit, presentation – 1/5/17
- USGBC Energy Summit, Booth – 10/12/17

Houston

- Greater Houston Black Chamber of Commerce – 7/29/17
- Rice Energy Venture Forum – 9/13/17
- SPEER City Efficiency Leadership Council, presentation – 12/13-14/17

Katy:

- PACE Service Provider Training Workshop – 3/15/17

Laredo

- Laredo City Council PACE Presentation – 5/1/17

Lubbock

- Lubbock County Commissioners Court PACE hearing, presentation – 12/11/17

McAllen:

- South Texas Manufacturers Association, presentation – 3/28/17
- Valley Environmental Summit, presentation – 10/29/17

Orange:

- County Commissioners Court, Workshop presentation – 3/8/17

Portland:

- Corpus Christi EDC Economic Development Forum, PACE Post Hurricane Harvey – 10/11/17

San Antonio:

- Bexar Counties Facilities Dept., presentation – 10/13/17
- Gulf Coast Authority, Board of Directors retreat, presentation – 10/20/17

San Marcos:

- PACE Service Provider Training Workshop – 3/7/17

Weslaco:

- PACE Service Provider Training Workshop – 2/24/17

Local Engagement - Outreach Meetings

The extensive list of individual company introductory and project specific meetings are not included in this list for privacy reasons:

Amarillo:

- Multiple individual outreach meetings with specific companies, 12/6-7/17

Arlington

- North Central Texas Council of Governments, 5/12/17
- North Central Texas Council of Government, 10/5/17

Austin:

- Environment Texas meeting, Austin – 1/4/17

- Texas Association of Oil and Gas Association meeting – 1/4/17
- Travis County Commissioner Brigid Shea and Real Estate Council of Austin, 1/20/17
- Mitchell Foundation stakeholder meeting re: Energy Efficiency for Underserved Communities, 1/26/17
- USGBC Advocacy Day Networking Event, 2/28/17
- Independent Bankers Association of Texas, 3/24/17
- Environmental Defense Fund, 3/30/17
- Public Citizen Networking Event, 4/12/17
- Border Environmental Cooperation Commission 4/13/17
- Texas Industries of the Future, 4/17/17
- Texas Facilities Commission meeting, 4/20/17
- CATTEE planning meeting, 4/28/17
- USGBC board meeting, 5/1/17
- Texas State Energy Conservation Office, 6/1/17
- USGBC Networking Event, 6/5/17
- St. David's Foundation, 6/22/17
- Environmental Superconference, Thompson & Knight networking Event, 8/3/17
- Cleantech Open South Central Business Clinic, 8/5/17
- Independent Bankers of Texas, 8/8/17
- R Street Institute, 8/8/17
- Texas Economic Development Council, 8/16/17
- SPEER Member Workshop, 9/11/17
- Austin Energy Women's Networking Event, 9/12/17
- Texas Public Policy Foundation, 9/26/27
- EDF State Clean Energy meeting - PACE update presentation, 10/11/17
- Ozone SIP Coalition, 11/20/17
- EDF – Industrial PACE, 11/27/17
- Sierra Club - Texas Chapter, 12/15/17

Brownsville:

- Brownsville Housing Authority, 3/29/17
- Main Street Brownsville, 3/29/27

Corpus Christi:

- Corpus Christi EDC Economic Development Forum, 10/11/17

Dallas:

- South Dallas Faith Coalition, 3/21/17
- Dallas 2030 District, Sustainable Energy Management, 3/21,17
- Dallas Metropolitan Small Business Development Corporation, 6/7/17
- Oak Cliff Chamber of Commerce, 6/8/17
- Urban Land Institute Monthly Breakfast w/City Eco Devo staff, 6/8/17
- Dallas 2030 meeting 6/14/17

- Dallas 2030 Lunch & Learn, 6/22/17
- Dallas 2030 Meeting & Bank of America Tour, 7/19/17
- Good Faith Impact, 8/9/17
- Dallas 2030 Meeting & ONCOR Incentives presentation, 8/16/17
- Dallas Earth Day Kickoff event, 9/6/17
- Service Provider Training Workshop, 9/7/17
- Dallas 2030 Leadership meeting, 9/20/17
- ONCOR Energy Efficiency Breakfast, 9/28/17
- BOMA Dallas, 9/28/17
- Dallas 2030 Leadership Meeting, 10/19/17
- USGBC Networking Event, 10/19/17
- 2017 Green Source DFW Sustainable Awards, 11/19/17
- 2030 District Leadership meeting – 11/29/17
- USGBC Networking Event – 12/14/17
- North Texas Energy Engineers Networking Event – 12/19/17
- Dallas Real Estate Ministries networking luncheon – 12/20/17

Denton:

- Tax Assessor Collector Association – process meeting, 9/27/17

Dripping Springs

- Dripping Springs Chamber of Commerce introductory meeting, 2/6/17

El Paso

- County Economic Development Office and City Tax Assessor/Collector, 4/3/17

Fort Worth:

- Fort Worth Chamber of Commerce, 1/5/17
- USGBC, 6/15/17
- Meeting with Fort Worth Better Buildings Challenge leadership, 12/12/17

Houston:

- City of Houston, Tax Increment Reinvestment Zone (TIRZ) meeting, 1/12/17
- City of Houston hearing re: PACE ordinance updates, 2/9/17
- Houston Advanced Research Center, 4/6/17
- Greater Northside Houston Management District, 5/2/17
- ASHRAE, 5/9/17
- Greater Houston Black Chamber of Commerce, 5/5 & 31/17
- Global Renewable Energy Association, 5/17/17
- Urban Land Institute, 6/12/17
- Citizen Environmental Coalition, 6/20/17
- Greater Houston Black Chamber of Commerce, 8/2/17
- Houston Housing Working Group, 8/7/17

- Port of Houston, introductory meeting – 10/20/17
- World Business Council for Sustainable Development, 11/7/17
- USGBC meeting, 12/6/17

Laredo:

- Webb County Economic Development Office, 5/1/17

McAllen:

- Hidalgo County Attorney's Office, 3/28/17
- Mayor, South Padre Island, 10/29/17

New Braunfels

- New Braunfels Chamber of Commerce, 2/20/27

Pasadena:

- Chamber of Commerce, 8/8/17

Plano:

- Plano Sustainability Office, 5/12/17
- Plano Sustainability Office, 8/14/17

Port Aransas:

- Chamber of Commerce, 9/20/17

Port Arthur:

- Texas Gulf Coast Small Business Development Center Network, 10/2/17

Taylor Texas:

- Presentation to ERCOT, 11/10/17

Weslaco:

- Lower Rio Grande Valley District, SBA Office, 3/29/27
- Rio Grande Valley Chapter, Associated General Contractors of America, 3/29/27

APPENDIX B

Flyers

Private Sector TX-PACE
Public Sector TX-PACE
Commercial TX-PACE
Industrial TX-PACE
Nonprofit TX-PACE
Tool for Disaster Recovery

Case Studies

Industrial: Liebe, Navarro County
Mixed Use: Butler Brothers Building, City of Dallas
Office Building: 1225 N. Loop, City of Houston
Nonprofit: Congregation Beth Israel, Travis County
Solar: Family Eldercare, Travis County

All flyers and case studies can be found at www.texaspaceauthority.org.

TX-PACE FOR THE PRIVATE SECTOR

TEXAS ★ PACE AUTHORITY

WHAT IS THE TEXAS PACE PROGRAM?

Texas Property Assessed Clean Energy (TX-PACE) is a proven financial tool that incentivizes Texas' property owners to upgrade facility infrastructure with little or no capital outlay. Approved by state legislation and established by your local governments, TX-PACE programs enable owners to lower their operating costs and use the savings to pay for eligible water conservation, energy efficiency, resiliency, and distributed generation projects. Owners gain access to affordable, long-term, private financing that is not available through traditional funding avenues.

Owners of eligible commercial, industrial, agricultural, nonprofit, and multifamily facilities can use TX-PACE to pay for property improvements including new heating and cooling systems, lighting, solar panels, water pumps, insulation, roofs, windows, and more. This program accelerates upgrade investments in existing facilities, preserving capital and credit lines and empowering owners to retain their available capital for revenue-generating items including employees, technology, products, and growth.

TX-PACE was identified by Scientific American as one of the top 20 "world changing" ideas, because it provides a new source of property-secured financing for property retrofits that does not affect conventional lending sources and does not compete for capital with other investment opportunities.

TX-PACE answers the question, "How are we going to pay for it?" and is transforming how developers, owners, and contractors look at projects, proving that there is a clear path forward for energy efficiency, distributed generation, and water use reduction measures.

HOW DOES TX-PACE WORK?

TX-PACE is a simple and effective program that allows owners to see an immediate increase to net operating income and find investing in efficiency a business-savvy proposition. Owners choose a private sector capital provider and voluntarily request that the local government place a senior lien on the property for the total cost of the project. The owner commits to the local government that he/she will pay the TX-PACE assessment installments. TX-PACE is not a personal or business loan. It is a voluntary land-secured assessment that is paid off over time. The energy and/or water savings are structured to exceed the cost of the assessment, resulting in projects that are cash flow positive. As the assessment is tied to the property, the repayment obligation transfers to the next owner if the property is sold.

Texas PACE Authority administers the uniform "PACE in a Box" model program on behalf of local governments. This successful model is market-based and flexible, providing the lowest possible administrative cost and highest level of consumer protection, allowing owners to do business with the parties of their choosing.

How It Works

A Building Owner:

finds a contractor → selects a project → identifies a capital provider → applies to PACE program

If the owner, building, and project all meet PACE requirements:

the owner signs a contract with the PACE program, which places a senior lien on the property

capital provider signs a contract with the county in exchange for the assessment payments

the capital provider supplies funding

contractors complete the project

the PACE program bills assessments to the owner and forwards the payments to the capital provider

WHAT ARE THE BENEFITS OF TX-PACE?

Property Owner Benefits:
Cash flow positive projects • 100% financing • Automatic transfer upon sale • Long-term financing (up to 20 years or more) • Lower energy and water costs • No personal guarantees • Competitive rates and terms • Owner retains all tax incentives • Increase property value • Preserve capital for core business • Healthier and more comfortable facilities • Reduce environmental impacts

Service Provider Benefits:
Increase local hiring • Accelerate project timelines • New market penetration • Best practices • Technology advancement improvements

Capital Provider Benefits:
Steady and stable process • Fully collateralized • Tax assessment lien position • Improve asset value • Mortgage-holder consent • Enhance customer finance position

Local Government Benefits:
Workforce and economic development • No local government obligation • Minimal staff support • Improve building stock • Business retention and expansion • Better air quality • Water and energy conservation

WHERE IN TEXAS IS TX-PACE?

Counties:

Brazos
Cameron
El Paso
Fort Bend
Hays
Hidalgo
Jefferson
Navarro
Nueces
Tarrant
Travis
Willacy
Williamson

Cities:

Amarillo
Dallas
Farmers Branch
Houston
...and more on the way!

WHAT PROPERTY TYPES AND IMPROVEMENTS ARE ELIGIBLE?

Eligible Property Types:
- Commercial
- Industrial/Manufacturing
- Multifamily housing (5+ units)
- Hospitality
- Agricultural
- Nonprofit

Eligible Improvements:
Chillers, boilers, and furnaces • HVAC, BMS, BAS, EMS controls • Lighting • Water heating systems • Energy management systems and controls • Roofing • Windows • Doors • Insulation • Elevator modernization • Pool equipment • Cogeneration or combined heat and power • Heat recovery and steam traps • Solar panels • Wind turbines • Water management systems and controls • Irrigation equipment • Rainwater collection systems • Toilets • Faucets • Greywater systems... and more!

SPOTLIGHT ON SUCCESS

The City of Dallas' TX-PACE program was utilized to finance $23.9M in energy & water conservation measures within the redevelopment of the Butler Brothers historic building. TX-PACE enabled the inclusion of these sustainable improvements with significant savings in the cost of capital over the cost of traditional mezzanine financing or equity partner financing in the capital stack of this renovation.

PICK UP THE TX-PACE IN YOUR REGION!

TX-PACE programs are being launched all over the state and are currently available in more than a dozen regions. TX-PACE can help you create jobs, promote economic development, and protect the environment.

Contact Texas PACE Authority to learn how to develop a TX-PACE program for your community.

admin@texaspaceauthority.org
855-738-PACE (7223)
www.TexasPACEAuthority.org

Texas PACE Authority administers the uniform "*PACE in a Box*" model as a public service on behalf of local governments and is funded through user fees and grants.

TX-PACE FOR THE PUBLIC SECTOR

TEXAS ★ PACE AUTHORITY

WHAT IS THE TEXAS PACE PROGRAM?

Texas Property Assessed Clean Energy (TX-PACE) is a voluntary program that creates jobs, improves the environment, and saves Texas companies money on their utility bills. Local governments across the state are taking advantage of the Texas PACE statute and establishing programs to further provide quality and valuable services to their constituencies, stakeholders, and taxpayers. Local PACE programs have already enabled over $30 million of new private investment in local building stock in urban and rural Texas in just two years.

The Texas PACE Act, Chapter 399 of the Local Government Code, is a local adoption model. The Texas "PACE in a Box" model was created by over 130 PACE stakeholders to facilitate a consistent, user-friendly approach to TX-PACE design and implementation. The model has been unanimously adopted by every local government establishing a TX-PACE program in Texas.

The model plug and play program contains consumer protection underwriting and technical best practices and model documents. "PACE in a Box" has minimal impact on government staff, adds no additional cost to the general taxpayer or burden to the treasury, and is administered by a nonprofit that does not compete with the private sector. Texas PACE Authority administers the uniform "PACE in a Box" model as a public service on behalf of local governments and is funded through user fees and grants.

This successful "PACE in a Box" model is market-based and flexible, providing the lowest possible administrative cost and highest level of consumer protection, allowing owners to do business with the parties of their choosing.

HOW DOES TX-PACE WORK?

TX-PACE facilitates the use of private capital to finance water conservation, energy efficiency, resiliency, and distributed generation projects to eligible commercial, industrial, agricultural, nonprofit, and multifamily properties. Owners choose a private sector capital provider and request that the local government place a voluntary senior lien on the property for the total cost of the project. The owner agrees to pay the TX-PACE assessment until it is paid in full, similar to that of a sidewalk or sewer assessment.

Property owners can lower operating costs and use the savings to pay for eligible projects. Since the assessment is tied to the property and transfers upon sale, TX-PACE makes it easier for owners to invest in facility upgrades and modernization, with little or no upfront capital. The widespread benefits impact the property owner, tenants, environment, and community, resulting in lower operating costs, more local jobs, and a concerted effort to conserve energy and water.

How It Works

A Building Owner:

finds a contractor → selects a project → identifies a capital provider → applies to PACE program

If the owner, building, and project all meet PACE requirements:

the owner signs a contract with the PACE program, which places a senior lien on the property → capital provider signs a contract with the county in exchange for the assessment payments → the capital provider supplies funding → contractors complete the project → the PACE program bills assessments to the owner and forwards the payments to the capital provider

WHAT ARE THE BENEFITS OF PACE?

Local Government Benefits:
Workforce and economic development • No local government obligation • Minimal staff support • Improve building stock • Business retention and expansion • Better air quality • Water and energy conservation

Property Owner Benefits:
Cash flow positive projects • 100% financing • Automatic transfer upon sale • Long-term financing (up to 20 years or more) • Lower energy and water costs • No personal guarantees • Competitive rates and terms • Owner retains all tax incentives • Increase property value • Preserve capital for core business • Healthier and more comfortable facilities • Reduce environmental impacts

Service Provider Benefits:
Increase local hiring • Accelerate project timelines • New market penetration • Best practices • Technology advancement improvements

Capital Provider Benefits:
Steady and stable process • Fully collateralized • Tax assessment lien position • Improve asset value • Mortgage-holder consent • Enhance customer finance position

WHERE IN TEXAS IS TX-PACE?

Counties:

Brazos	Hidalgo	Travis
Cameron	Jefferson	Willacy
El Paso	Navarro	Williamson
Fort Bend	Nueces	
Hays	Tarrant	

Cities:

Amarillo	Dallas	Farmers Branch
Houston	...and more on the way!	

WHAT PROPERTY TYPES AND IMPROVEMENTS ARE ELIGIBLE?

Eligible Property Types:
- Commercial
- Industrial/Manufacturing
- Multifamily housing (5+ units)
- Hospitality
- Agricultural
- Nonprofit

Eligible Improvements:
Chillers, boilers, and furnaces • HVAC, BMS, BAS, EMS controls • Lighting • Water heating systems • Energy management systems and controls • Roofing • Windows • Doors • Insulation • Elevator modernization • Pool equipment • Cogeneration or combined heat and power • Heat recovery and steam traps • Solar panels • Wind turbines • Water management systems and controls • Irrigation equipment • Rainwater collection systems • Toilets • Faucets • Greywater systems... and more!

PICK UP THE TX-PACE IN YOUR REGION!

TX-PACE programs are being launched all over the state and are currently available in more than a dozen regions. TX-PACE can help you create jobs, promote economic development, and protect the environment.

Contact Texas PACE Authority to learn how to develop a TX-PACE program for your community.

TEXAS ★ PACE AUTHORITY

admin@texaspaceauthority.org
855-738-PACE (7223)
www.TexasPACEAuthority.org

Texas PACE Authority administers the uniform "*PACE in a Box*" model as a public service on behalf of local governments and is funded through user fees and grants.

TEXAS ★ PACE AUTHORITY

COMMERCIAL CASE STUDIES

Commercial Properties Benefit from TX-PACE

Texas Property Assessed Clean Energy (TX-PACE) enables commercial property owners to obtain affordable, long-term financing covering up to 100 percent of the cost for energy efficiency, water conservation, and on-site generation technologies. TX-PACE secures private financing for a term as long as the projected useful life of the improvements, resulting in utility cost savings that exceed the amount of the repayment. Owners can modernize commercial properties without fear of over-investment, transferring the TX-PACE repayment obligation to new ownership if the property is sold.

TX-PACE – SERVING URBAN AND RURAL TEXAS WITH PROJECTS BIG AND SMALL



BUTLER BROTHERS BUILDING $23.9 MILLION - DALLAS, TEXAS

The City of Dallas' first PACE project is now the largest in Texas. The inclusion of $23.9 million in energy and water-saving measures in the redevelopment capital stack of the historic Butler Brothers Building demonstrates that there is a low-cost, long-term replacement to expensive equity-partner financing. The 20-year term covers improvements for HVAC, lighting, insulation, roofing, glazing, exterior waterproofing and plaster, plumbing fixtures, and irrigation systems. The project will save almost 700,000 gallons of water a year, reduce energy consumption by 40%, and contribute to the creation of over 100 jobs in the Dallas area.



1225 NORTH LOOP WEST $1.3 MILLION - HOUSTON, TEXAS

1225 North Loop Investments, Inc. utilized the City of Houston's PACE program to invest $1.3M in property upgrades, making 1225 North Loop West the first commercial office building to implement a TX-PACE project. The improvements will be financed over 20 years and include two new chillers, a building automation system, and a complete LED fixture upgrade. The project will reduce utility consumption by 38% and provide $3.66 million in savings over the 20-year term. The lasting benefits of steadier budgets, more comfortable work environments, and diminished equipment emergencies will positively impact both ownership and tenants.



ALMOST $10 MILLION INVESTED IN MALLS ACROSS TEXAS

A global leader in retail real estate ownership has completed 6 projects in Texas for almost $10 million in improvements. Using the uniform TX-PACE program, 3 of these projects closed in 2 counties with 1 lender on the same day. Improvements include HVAC, lighting, and water saving measures for a combined savings of 5,600,000 kWh in electricity and 14,950,000 gallons of water per year.

TYPICAL EXAMPLES OF QUALIFIED IMPROVEMENTS:

Chillers, boilers, and furnaces • HVAC, BMS, BAS, EMS controls • Lighting • Water heating systems • Energy management systems and controls • Roofing • Windows • Doors • Insulation • Elevator modernization • Pool equipment • Cogeneration • Heat recovery and steam traps • Solar panels • Wind turbines • Water management systems and controls • Irrigation equipment • Rainwater collection systems • Toilets • Faucets • Greywater systems... and more!

"TX-PACE pairs incredibly well with historic buildings that are typically energy inefficient and require additional capital in order to renovate the property to modern energy efficiency standards. I am beginning to see greater interest in the utilization of this program for historic and non-historic renovation projects because of its flexibility, relative low-cost and nonrecourse nature."

– Phill Geheb, Munsch Hardt
Dallas, TX

BUTLER BROTHERS BUILDING CAPITAL STACK

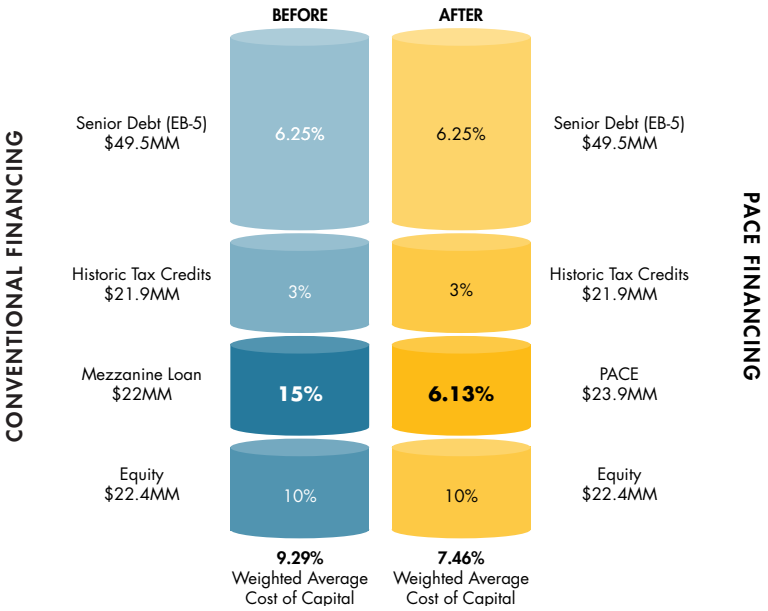

1225 NORTH LOOP FINANCING SCENARIO COMPARISON SUMMARY			
	Self-Funded	Conventional Loan	TX-PACE Loan
Out-of-Pocket Investment	($1,300,000)	($260,000)	$0
Savings (First Year)	$200,000	$200,000	$200,000
Annual Payment	$0	($282,803)	($118,437)
Cash Flow Impact Year 1	($1,100,000)	($342,803)	$81,563
Net Project Cash Flow Year 2	($900,000)	($425,607)	$163,126
Years to Positive Project Cashflow	6.5	8.4	IMMEDIATE
Debt Service Over Finance Term	0	(1,414,017)	(2,368,742)
10-Year Project NPV	$172,017	$20,747	$600,310
Property Value Increase (20-Year NPV)	$993,984	$842,714	$935,520

- The project does not pass the company's hurdle rate for investment in energy efficiency (i.e. the ROI is probably not high enough)
- Conventional funding for 5 years at 4.0% (20% down payment)
- TX-PACE funding available for 20 years at 7.0%.
- Energy prices held constant. NPV discount rate at 8%.

YOUR TX-PACE ASSESSMENT CAN INCLUDE:

- Materials and labor costs
- Permit, lender and inspection fees
- Program application and administration fees
- Project development and engineering fees
- Independent third party review and verification fees
- Legal, consulting and other fees
- Incidental installation, modification or improvement costs

admin@texaspaceauthority.org
855-738-PACE (7223)
www.TexasPACEAuthority.org

Texas PACE Authority administers the uniform "*PACE in a Box*" model as a public service on behalf of local governments and is funded through user fees and grants.

TEXAS ★ PACE AUTHORITY

INDUSTRIAL CASE STUDIES

Industrial Facilities Benefit from PACE

Texas Property Assessed Clean Energy (TX-PACE) enables industrial site owners to obtain affordable, long-term financing covering up to 100 percent of the cost for energy efficiency, water conservation, and on-site generation technologies. TX-PACE secures private financing for a term as long as the projected useful life of the improvements, resulting in utility cost savings that exceed the amount of the repayment.



R.J. LIEBE ATHLETIC LETTERING COMPANY NAVARRO COUNTY, TEXAS

Liebe is the first manufacturing plant to complete a TX-PACE project. The TX-PACE assessment financed over 20 years provided the Missouri-based company a financially viable way to restore an aging, inefficient facility and relocate much of its operations to the new site. The flexible financing tool allowed Liebe to bypass the significant capital investment needed, retrofitting the lighting to LEDs, and installing HVAC for the first time in the plant's history. Reopening this facility will create 60-80 permanent manufacturing jobs in Corsicana and will save approximately 187,177 kWh of electricity annually.



PACIFIC ETHANOL, MADERA CA

Pacific Ethanol, Inc. (NASDAQ:PEIX), a leading US producer and marketer of low-carbon renewable fuels, used $10 million in PACE funding to purchase and install a 5 MW photovoltaic (PV) power system at its ethanol plant. This project is the first ever commercial solar electricity system at a US ethanol plant and the largest solar PV system to be funded through PACE.

Pacific Ethanol's PACE project is saving the facility more than $1 million annually and is cash flow positive from year one. The system also qualified for the Energy Investment Tax Credit, displaces more than 30% of the grid electricity previously used, and drives premium pricing at the plant due to improvements in its carbon-intensity core.



Photo Credit: PRLog http://bit.ly/2caf5xC

HELLER MACHINE TOOLS, TROY MI

Heller Machine Tools, a world-leading manufacturer producing state-of-the-art machine tools and production systems for metal cutting processes, used PACE to finance $978,607 in deep energy retrofits for its 100,000 sq ft production facility. Energy consumption and related costs were reduced by 23% - a savings of $1.6 million over 15 years.

Measures included:

• HVAC • Networked building controls • Compressed air upgrades • Partial roof replacement • Lighting replacement • Server room cooling

TYPICAL EXAMPLES OF QUALIFIED IMPROVEMENTS:

Chillers, boilers, and furnaces • HVAC, BMS, BAS, EMS controls • Lighting • Water heating systems • Energy management systems and controls • Roofing • Windows • Doors • Insulation • Elevator modernization • Pool equipment • Cogeneration • Heat recovery and steam traps • Solar panels • Wind turbines • Water management systems and controls • Irrigation equipment • Rainwater collection systems • Toilets • Faucets • Greywater systems... and more!

"As we work with more and more large brands, being environmentally friendly is a prerequisite to conducting business. In fact, we are graded on it. As a result, Liebe has strategically positioned all of our facilities to be as green as possible."

- Mike Bernhagen, General Manager of Liebe

THE FINANCIAL IMPACT OF INDUSTRIAL TX-PACE

This example compares self-funding and conventional funding with TX-PACE financing:

- Industrial Facility
- Project involves a $2.5M 1.3MW CHP system
- Annual net savings of $473,000 (5.3 yrs simple payback)
- The project does not pass the company's hurdle rate for investment in energy efficiency (i.e. the ROI is probably not high enough)
- Conventional funding for 5 years at 4.0% (20% down payment)
- TX-PACE funding available for 20 years at 6.0%.
- Energy prices held constant. NPV discount rate at 8%.



FINANCING SCENARIO COMPARISON SUMMARY

	Self-Funded	Conventional Loan	TX-PACE Loan
Out-of-Pocket Investment	($2,500,000)	($500,000)	$0
Savings (First Year)	$473,000	$473,000	$473,000
Annual Payment	$0	($561,568)	($217,961)
Cash Flow Impact Year 1	($2,027,000)	($588,568)	$255,039
Net Project Cash Flow Year 2	($1,554,000)	($677,136)	$510,077
Years to Positive Project Cashflow	5.3	7.0	IMMEDIATE
Debt Service Over Finance Term	0	(2,807,839)	(2,368,742)
10-Year Project NPV	$673,869	$431,691	$1,711,330
Property Value Increase (20-Year NPV)	$2,143,984	$1,901,806	$2,504,007

YOUR TX-PACE ASSESSMENT CAN INCLUDE:

- Materials and labor costs
- Permit, lender and inspection fees
- Program application and administration fees
- Project development and engineering fees
- Independent third party review and verification fees
- Legal, consulting and other fees
- Incidental installation, modification or improvement costs

admin@texaspaceauthority.org
855-738-PACE (7223)
www.TexasPACEAuthority.org

Texas PACE Authority administers the uniform "*PACE in a Box*" model as a public service on behalf of local governments and is funded through user fees and grants.

TEXAS PACE AUTHORITY

NEW FINANCING OPTION FOR NONPROFIT PROPERTY OWNERS

Interested in upgrading your nonprofit property with energy/water efficiency and distributed generation technologies but lack the needed capital?

The Texas PACE program (Property Assessed Clean Energy), enables nonprofit property owners to obtain affordable, long-term financing covering up to 100 percent of the cost for energy efficiency, water conservation, and on site generation technologies. PACE secures private financing for a term as long as the projected useful life of the improvements, resulting in utility cost savings that exceed the amount of the repayment.

Typical examples of qualified improvements:

- High efficiency chillers, boilers, and furnaces
- Mechanical system modernization
- Energy system sensors and controls
- Systems to capture, treat and use other on-site sources of water (condensate, rainwater, etc.)
- High efficiency lighting
- Water conservation equipment
- Building enclosure/envelope improvements (insulation, new windows, cool roofs, etc.)
- On site generation such as solar and CHP (resiliency benefits)
- Fuel switching
- Wastewater onsite reuse systems





CASE STUDIES:



CONGREGATION BETH ISRAEL SYNAGOGUE, AUSTIN, TX

The nonprofit financed a $460,000 project which included major chiller replacements and other holistic energy saving improvements. The synagogue experienced several air conditioning outages last summer, and was continuing to expend money into cooling an uninsulated and inefficient area. Through PACE financing, the facilities have new mechanical systems and reduced their energy consumption by 9,000 kilowatt hours in the first month of operation and an annual utility savings of approximately $15,000.



FAMILY ELDERCARE, AUSTIN, TX

Family Eldercare is a Central Texas nonprofit organization that has been serving seniors and adults with disabilities for more than 30 years. It needed to increase net operating income and lower business expenses in order to provide for clients. Long term PACE financing enabled Family Eldercare to complete comprehensive energy efficient upgrades including a new cool roof and solar panels without compromising its operating budget. This resulted in an energy reduction of approximately 20% and 140,000 kWh in electricity savings annually, leading to a positive cash flow.

"Reducing our congregation's carbon footprint and living with a lightened impact on God's earth through the vision and ingenuity of the PACE program not only makes economic sense, but also represents a sacred act of both responsibility and hope in the future"
–Rabbi Steven Folberg of Congregation Beth Israel

THE FINANCIAL IMPACT OF NONPROFIT PACE
This example compares self funding and conventional funding with PACE financing:

- Church
- Project involves a $450,000 replacement of chillers, boilers, controls and window film
- Annual energy and maintenance savings of $45,000 (11.3 years simple payback)
- PACE funding available for 20 years at 6.0%.
- Conventional Funding for 5 years at 4.0% (with 20% down payment).



Financing Scenario Comparison Summary			
	Self-Funded	Conventional Loan	PACE
Out-of-Pocket Investment	($450,000)	($90,000)	$0
Savings (First Year)	$45,000	$45,000	$45,000
Annual Payment	$0	($101,082)	($39,233)
Cash Flow Impact Year 1	($405,000)	($146,082)	$5,767
Net Project Cash Flow Year 2	($360,000)	($202,164)	$11,534
Years to Positive Project Cashflow	10.0	13.2	IMMEDIATE
Debt Service Over Finance Term	0	(505,411)	(784,661)

YOUR CONVENIENT PACE LOAN ASSESSMENT CAN INCLUDE:

- Cost of materials and labor necessary for the installation of a qualified improvement
- Permit fees
- Inspection fees
- Lender fees
- Program development and engineering fees
- Independent third party reviewer audit fees, including verification fees
- Any other fees or cost that may be incurred by the property owner incidental to the installation, modification or improvement
- Legal, consulting and other fees on an actual cost basis
- Changes to the existing property incidental to the installation

Contact us to discuss your potential PACE project or to learn more about establishing a PACE program in your community.

TEXAS ★ PACE AUTHORITY

Toll Free: 1-855-738-PACE (7223)
Visit our website: www.TexasPACEAuthority.org
Email us at Admin@TexasPACEAuthority.org

New Local Program Provides Businesses another Tool for Disaster Recovery

Before Hurricane Harvey damaged countless businesses across the Gulf Coast, the State Legislature approved a financial tool that assists Texas property owners in improving and upgrading their communities. In 2013, Texas Property Assessed Clean Energy (TX-PACE) was passed motivating owners to make property improvements that would increase resiliency, sustainability and efficiency. As a result, this unique program is generating economic activity across the State, providing enormous benefits for property owners, contractors and service providers.

The Texas PACE program enables owners to upgrade their properties with little to no capital outlay by using operational savings that are generated by the improvements made. Owners gain access to affordable, long-term, private financing that is not available through traditional funding avenues.

Owners of eligible commercial, industrial, agricultural, non-profit and multi-family facilities can use TX-PACE to finance new heating and cooling systems, lighting improvements, water pumps, insulation, roofs, windows, and more. Additionally, cogeneration or combined heat and power, solar panels and wind generation are eligible improvements that are becoming more prevalent as owners focus on creating resilient, disaster-proof properties.

Texas PACE is not a personal or business loan. It is a voluntary land-secured assessment that is paid off over time. The energy and/or water savings are structured to exceed the cost of the assessment, resulting in projects that are cash flow-positive. As the assessment is tied to the property, the repayment obligation transfers to the next owner if the property is sold.

TX-PACE answers the question, "How are we going to pay for it?" and is transforming how developers, owners, and contractors look at projects, proving that there is a clear path forward for disaster recovery, energy efficiency, distributed generation, and water-use reduction measures.

As the demand for disaster-recovery and future-proof upgrades continue to rise, this program empowers contractors and service providers to offer their customers a financial solution, answering the question, "How are we going to pay for it?" This voluntary financing tool preserves capital and credit lines and allows owners to retain their available capital for revenue-generating items including employees, technology, products and growth.

Charlene Heydinger, President of Texas PACE Authority, a nonprofit that administers TX-PACE programs on behalf of local governments, explains, "We have always believed that this dynamic program would assist properties in a variety of different ways. We want people to know that TX-PACE can be used as a recovery tool."

Local regions must opt into the program in order for building owners to be able to take advantage of TX-PACE. The program is currently available in 14 regions across Texas, including many of the areas with the most recent storm damage – Fort Bend, Jefferson, and Nueces counties and the City of Houston, including its ETJ. To date, the counties of Brazos, Cameron, El Paso, Hays, Hidalgo, Navarro, Travis, Willacy and Williamson, as well as the cities of Amarillo and Dallas have also established TX-PACE programs. All are market-based and flexible, allowing property owners to do business with the parties of their choosing at the lowest possible administrative cost. Additionally, a high level of consumer protection is embedded in the program to ensure that the projects will deliver the anticipated savings.

TX-PACE is transforming how developers, owners and contractors look at projects, proving that there is a clear path forward to disaster recovery, energy efficiency, distributed generation, water use reduction and resiliency improvements.

Texas PACE Authority currently administers the uniform "PACE in a Box" model program for all of the active programs as a public service at no cost to local governments.

Visit www.texaspaceauthority.org for more information.

TEXAS ★ PACE AUTHORITY

CASE STUDY

R. J. Liebe Athletic Lettering Company
Navarro County, Texas



Liebe is the first manufacturing plant to complete a PACE project in Texas and the first project for Navarro County. Reopening this facility will create 60-80 permanent manufacturing jobs in Corsicana, Texas.

THE PROBLEM:

The sewing manufacturing plant in southeast Corsicana has experienced increasing degradation and obsolescence since opening its doors in 1979. The lack of modern amenities, including air conditioning, contributed to the plant's 10-year vacancy. For many manufacturing companies, the focus on recruitment, safety, and productivity means that providing air-conditioned facilities is no longer a luxury but an operational necessity.

The R.J. Liebe Athletic Lettering Company, based out of Missouri, began looking for a Texas site to relocate much of its operations. Liebe management was attracted to the 36,000 square-foot plant because of the space and location, but knew that it was in need of a significant capital investment to meet the company's operational needs and efficiency standards.

Mike Bernhagen, General Manager of Liebe, explains, "As we work with more and more large brands, being environmentally friendly is a prerequisite to conducting business. In fact, we are graded on it. As a result, Liebe has strategically positioned all of our facilities to be as green as possible."

THE PACE SOLUTION:

The availability of the TX-PACE program in Navarro County provided Liebe a financially viable way to restore the facility. Upgrades included the installation of high-efficient HVAC systems and LED lighting. Without the use of a long-term, flexible financing tool that could cover the entire cost of the project, the substantial capital investment would not have been financially feasible, preventing Liebe from choosing Corsicana as its newest site.

COMMUNITY IMPACT:

Scott Jones, Economic Development Director for Navarro County, said, "The TX-PACE program allows Navarro County an added incentive to offer prospective businesses. This is a beneficial program for all involved."

The Liebe plant will create 60 - 80 new permanent manufacturing jobs. Operations will be moved to the Corsicana facility by year-end 2017.

PROJECT OVERVIEW

PROJECT FINANCING

Total Assessment: $324,559
Term: 20 years

PROJECT PARTNERS

Lender: Greenworks Lending
Contractor: Prism Tech Systems
Foxconn LED

IMPACT

- 60-80 new manufacturing jobs
- Approximately 187,177 kWh in annual electric savings

BUILDING

Size: 36,000 Square Feet
Built: 1979

IMPROVEMENTS

- Installation of high-efficiency HVAC, LED lighting

PACE IN TEXAS

Texas PACE answers the question, "How are we going to pay for it?" and is transforming how developers, owners, and contractors look at projects, proving that there is a clear path forward for energy efficiency, distributed generation, water use reduction, and resiliency projects in existing buildings.

CONTACT

Texas PACE Authority
admin@texaspaceauthority.org
1-855-738-PACE (7223)
www.texaspaceauthority.org

HOW DOES TX-PACE WORK?

Texas Property Assessed Clean Energy (TX-PACE) is an innovative financing program that offers commercial, industrial, and large multifamily property owners a voluntary program to obtain up to 100% financing for water conservation, energy-efficiency, resiliency, and distributed generation retrofits. TX-PACE has great potential to directly affect a business' bottom line; a project's savings in utility costs offsets the cost of installing the project. In most instances, this will result in immediate positive cash flow.

NAVARRO COUNTY

Navarro County established Texas' 14th PACE region in August 2017 and is the first Dallas - Fort Worth county to establish a PACE program. Navarro County's TX-PACE program is based on the PACE in a Box model, created by over 130 volunteer stakeholders for Texas. The market-based, flexible TX-PACE program enables property owners to do business with the parties of their choosing at the lowest possible administrative cost. The program includes a high level of consumer protection to ensure that the projects will deliver the anticipated savings.

www.texaspaceauthority.org/navarro

R.J. LIEBE ATHLETIC LETTERING COMPANY

The R. J. Liebe Athletic Lettering Company began in 1923 in the basement of a modest St. Louis home. Robert Liebe and his wife started out with a pair of Singer sewing machines embroidering letters and sewing them onto athletic jerseys. By 1935, the small business had attracted so much attention that he signed a contract with Rawlings Sporting Goods to handle lettering for their uniforms. The company now partners with major sports franchises and manufacturers of athletic clothing and gear worldwide.

www.liebe.com

GREENWORKS LENDING

Greenworks Lending is an energy efficiency and clean energy financing company that invests in commercial real estate with the goal of improving cost and energy performance. Greenworks Lending finances 100 percent of the hard and soft costs for qualifying projects through the Property Assessed Clean Energy (PACE) program.

www.greenworkslending.com

PRISM TECH SYSTEMS|FOXCONN LED

Prism Tech Systems is the direct representative of Foxconn commercial LED products in America. Specialties include commercial LED lighting, finance, electronic manufacturing, and LED screens. As a new service for customers, Prism Tech Systems now includes any energy saving system, such as new HVAC, roofing, windows, process machinery and more.

www.prismtechsystems.com
www.foxconnled.com

TEXAS PACE AUTHORITY

The nonprofit organization, Texas PACE Authority, administers the uniform PACE in a Box model on behalf of Navarro County. This model approach ensures local governments can establish an effective program quickly and economically, providing a tool for property owners to invest in more efficient infrastructure.

www.texaspaceauthority.org

Produced with the support of: SECO State Energy Conservation Office

TEXAS ★ PACE AUTHORITY

CASE STUDY
Butler Brothers Building, Dallas, Texas



Dallas' first PACE project is now the largest in Texas. $23.9 million in PACE financing enabled the inclusion of energy and water-saving measures in the redevelopment capital stack of the historic Butler Brothers Building.

THE PROBLEM:

Originally constructed in 1910, the nine-story, 600,000 square-foot historic mercantile warehouse, known as the Butler Brothers Building, had long been an empty eyesore across from City Hall. The abandoned building, purchased by Alterra International, a Dallas-based global real estate development company, had deteriorated, with walls covered in graffiti and warping hardwoods soaked from rain leaking into the building. However, redeveloping a historic building could be a costly, complicated venture. Nathan Whigham, VP Business Development at CleanFund, explains one of the common hurdles with redevelopment projects, "A typical real estate capital stack falls short of the funds necessary to cover the additional up-front cost of more expensive energy and water-saving equipment that lowers the property's operating costs." Accessing future operating savings rarely justifies the diversion of significant existing sources of capital from the core business or company growth.

THE PACE SOLUTION:

The utilization of the TX-PACE program to finance energy and water conservation measures has renewed the Butler Brothers Building and demonstrated that there is a low-cost, long-term replacement to expensive equity partner financing.

Alterra International, a Dallas-based global real estate development company, acquired the historic facility in 2011 with the goal of redeveloping the former warehouse and adding to the revitalization underway at the eastern end of downtown. "The TX-PACE financing allowed us to increase the building's energy-efficiency, attracting more interest and appealing to residents and tenants that look for high-efficiency facilities with low maintenance costs, said Mike Sarimsakci, President of Alterra International. "Additionally, we are able to satisfy the sustainability preference of hotel guests, building greater retention and loyalty."

Apartment residents now relish the restored original hardwoods, the exposed brick and concrete columns, and the layers of charm that have been brought back to life.

"PACE loans pair incredibly well with historic buildings that are typically energy inefficient and require additional capital in order to renovate the property to modern energy efficiency standards," Phill Geheb with Munsch Hardt stated. "I am beginning to see greater interest in the utilization of this program for historic and nonhistoric renovation projects because of its flexibility, relative low-cost and non-recourse nature."

COMMUNITY IMPACT:

This project will contribute to the creation of over 100 jobs in the Dallas area, reduce annual electricity use by more than 6.6 million kilowatt hours, remove over 3.500 metric tons of CO_2e each year, and save almost 700,000 gallons of water per year.

"It is great to see Dallas' first PACE deal make it across the finish line. Hopefully this financial model will serve as an example for the other PACE transactions in the Dallas pipeline," said Robin Bentley, Interim Director of the City's Office of Economic Development.

The redevelopment into 238 apartments, a 270-room dual-branded Fairfield Inn/TownePlace Suites by Marriott, and retail and office space is expected to spur additional revitalization in the area.

PROJECT OVERVIEW

PROJECT FINANCING

Lender: CleanFund Commercial PACE Capital, Inc.
Total Assessment: $23.9 million
Incentives:
- Historic Tax Credits: $21million

Term: 20 years
Lender Consent Granted

IMPACT

- Approximately 6,600,000 kWh in electricity savings annually
- Almost 700,000 gallons of annual water savings
- Approximate annual energy use reduction of 40%

BUILDING

Size: 600,000 Square Feet
Built: 1910

IMPROVEMENTS

HVAC, lighting, insulation, roofing, glazing, exterior waterproofing and plaster, plumbing fixtures, and irrigation systems

PACE IN TEXAS

Texas PACE answers the question, "How are we going to pay for it?" and is transforming how developers, owners, and contractors look at projects, proving that there is a clear path forward for energy efficiency, distributed generation, water use reduction, and resiliency projects in existing buildings.

CONTACT

Texas PACE Authority
admin@texaspaceauthority.org
1-855-738-PACE (7223)
www.texaspaceauthority.org

CAPITAL STACK COMPARISON

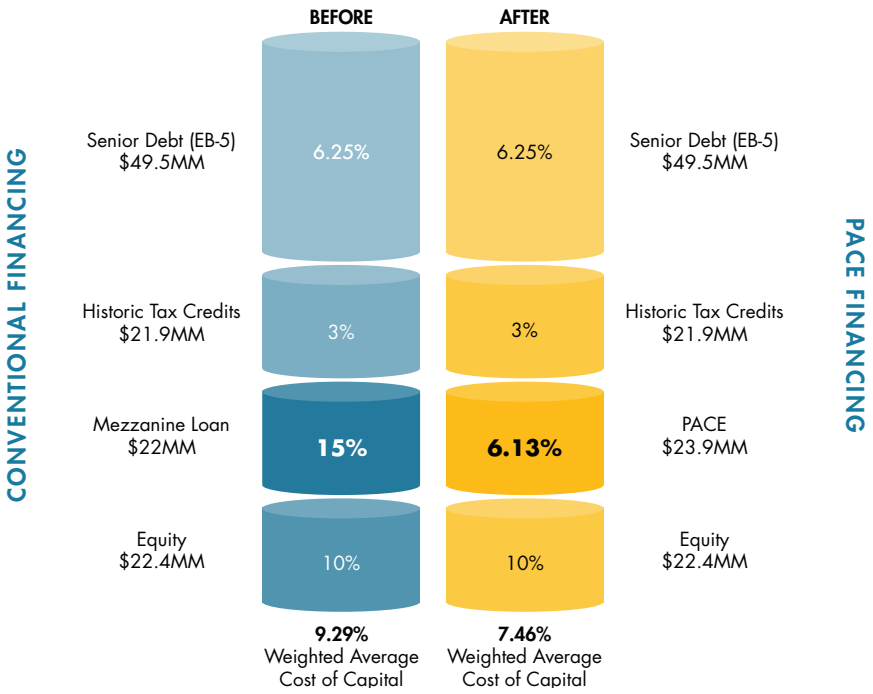

HOW DOES TX-PACE WORK?

Texas Property Assessed Clean Energy (TX-PACE) is an innovative financing program that offers commercial, industrial, and large multi-family property owners a voluntary program to obtain up to 100% financing for water conservation, energy-efficiency, resiliency, and distributed generation retrofits. TX-PACE has great potential to directly affect a business' bottom line; a project's savings in utility costs offsets the cost of installing the project. In most instances, this will result in an immediate positive cash flow.

CITY OF DALLAS

The City's TX-PACE program is based on the Texas PACE in a Box model program created by over 130 stakeholders. The City of Dallas provides a market-based, flexible TX-PACE program that enables property owners to do business with the parties of their choosing at the lowest possible administrative cost. The program includes a high level of consumer protection to ensure that the projects will deliver the anticipated savings.

dallas.texaspaceauthority.org

City of Dallas

TEXAS PACE AUTHORITY

The nonprofit organization, Texas PACE Authority, administers the uniform "PACE in a Box" model on behalf of the City of Dallas. This model approach ensures local governments can establish an effective program quickly and economically, providing a tool for building owners to invest in more efficient infrastructure.

www.texaspaceauthority.org

TEXAS ★ PACE AUTHORITY

CLEANFUND COMMERCIAL PACE CAPITAL

CleanFund Commercial PACE Capital is the leading direct provider of long-term financing for energy efficiency, water conservation, renewable energy and seismic improvements to commercial, multifamily and other nonresidential properties in the U.S. With significant expertise in commercial real estate, finance, renewable energy and PACE policy, CleanFund offers PACEDirect™ and SolarPACE™ financing programs, which enable property owners to upgrade their properties with no up-front cost, increasing property cash flows and value.

www.CleanFund.com

CLEANFUND Commercial PACE Capital

TEXAS ★ PACE AUTHORITY

CASE STUDY
1225 North Loop West
Houston, Texas

1225 North Loop Investments, Inc. utilized the City of Houston's PACE program to invest $1.3M in property upgrades, making 1225 North Loop West the first commercial office building to implement a TX-PACE project.

THE PROBLEM:



The 1984 commercial office high-rise had 35-year-old chillers, an antiquated control system, and inefficient lighting. The chiller replacement parts were costly and difficult to find and the ongoing reliability issues of the aging equipment were haunting for staff and ownership. Management explored replacement options but hesitated at the substantial upfront capital outlay.

According to the US Energy Information Administration, the average office building spends $1.51 per square foot on energy costs. Just slightly above the nationwide average, the property's management initiated a preliminary energy analysis and concluded that upgrading the aging equipment using operational savings created a realistic opportunity.

THE PACE SOLUTION:

John Myers, President of Peloton Commercial Real Estate, introduced the TX-PACE concept to General Manager Alessandro Clerici at 1225 North Loop Investments. As a Keeping PACE in Texas member who helped create the PACE in a Box toolkit, Myers suggested utilizing TX-PACE to redirect current utility expenses and eliminate the need for diverting core capital. The savings report indicated that the priority mechanical equipment would qualify for the program if it was paired with the inclusion of LED lighting throughout the entire facility. By grouping together efficiency measures with short and long-term paybacks, the projected energy savings would exceed the cost of the project over the 20-year term.

The project includes two new chillers, variable speed drives, air handlers, interior and exterior LED lighting, and building controls. The project will reduce utility consumption by 38% and provide $3.66 million in savings over the 20-year term. The lasting benefits of steadier budgets, more comfortable work environments, and diminished equipment emergencies will positively impact both ownership and tenants.

Property Manager Seth Eslami explains, "Our priority was the mechanical equipment upgrade. The efficiency component was just an added benefit. I am hopeful that this project will help more people see that TX-PACE is not a typical 'green' program focused solely on saving the environment, but instead has a focus on improving the financial side of a business. TX-PACE can upgrade a building and can pay for itself."

COMMUNITY IMPACT:

"Houston is the energy capital of the world and has a responsibility to lead by example and use our energy resources as efficiently as possible," said Houston Mayor Sylvester Turner.

PROJECT OVERVIEW

PROJECT PARTNERS
Financial Lender: Petros PACE Finance
Advisor: PACE Houston
Project Manager: Stellar International

PROJECT FINANCING
Total Assessment: $1,304,352
Utility Incentives: $30,000
Term: 20 years

BUILDING DETAILS
Square footage: 200,418
Year Built: 1984

IMPACT
Anticipated annual utility use reduction of 38%

IMPROVEMENTS
Two Chillers, Building Automation System, Complete LED Fixture Upgrade

PACE IN TEXAS

Texas PACE answers the question, "How are we going to pay for it?" and is transforming how developers, owners, and contractors look at projects, proving that there is a clear path forward for energy efficiency, distributed generation, water use reduction, and resiliency projects in existing buildings.

CONTACT

Texas PACE Authority
admin@texaspaceauthority.org
1-855-738-PACE (7223)
www.texaspaceauthority.org

FINANCING SCENARIO COMPARISON SUMMARY			
	Self-Funded	Conventional Loan	TX-PACE Loan
Out-of-Pocket Investment	($1,300,000)	($260,000)	$0
Savings (First Year)	$200,000	$200,000	$200,000
Annual Payment	$0	($282,803)	($118,437)
Cash Flow Impact Year 1	($1,100,000)	($342,803)	$81,563
Net Project Cash Flow Year 2	($900,000)	($425,607)	$163,126
Years to Positive Project Cashflow	6.5	8.4	IMMEDIATE
Debt Service Over Finance Term	0	(1,414,017)	(2,368,742)
10-Year Project NPV	$172,017	$20,747	$600,310
Property Value Increase (20-Year NPV)	$993,984	$842,714	$935,520

CITY OF HOUSTON

The City of Houston's TX-PACE program is based on the PACE in a Box model, created by over 130 volunteer stakeholders for Texas. The market-based, flexible TX-PACE program enables property owners to do business with the parties of their choosing at the lowest possible administrative cost. The program includes a high level of consumer protection to ensure that the projects will deliver the anticipated savings.

www.texaspaceauthority.org/houston-pace

1225 NORTH LOOP INVESTMENTS, INC.

1225 North Loop Investments, Inc., a privately held real estate investment group, owns 1225 North Loop West. The 11-story, Class A property that offices up to 400 people is managed by Stellar International and is the first office building to complete a TX-PACE project. 1225 North Loop West is an Energy Star designated building, Cleaner & Greener Program participant, and EPA Green Power Partner. Additional environmental amenities include a building-wide recycling program, and free premium hybrid vehicle parking.

www.1225northloopwest.com

STELLAR INTERNATIONAL COMMERCIAL REAL ESTATE

Stellar International Commercial Real Estate LLC is a privately held commercial real estate company in Houston, Texas that manages 1225 North Loop West and approached property ownership with the opportunity of a TX-PACE project. It focuses on providing a fresh approach towards ownership and tenant needs, in addition to maintaining and improving the asset through cost-effective measures and ensuring tenant retention remains in the forefront.

www.stellaricre.com

PETROS PACE FINANCE

Petros PACE Finance, LLC is a leader in providing energy efficiency, renewable energy, and water conservation financing to the commercial PACE market nationwide. Petros PACE Finance has significant institutional backing and was founded by a team with a collective 60+ years of experience in structured finance and lending. Petros is a legacy member of Keeping PACE in Texas.

www.petros-pace.com

PACE HOUSTON

PACE Houston is a private energy efficiency project development company that testified in support of the Houston PACE program in October 2015. It served as a PACE advisor assisting with the process and development of the Houston PACE program and the 1225 North Loop West project, including proposing vendors, evaluating lender proposals, and managing the underwriting document submittal.

www.pacehouston.com

TEXAS PACE AUTHORITY

The nonprofit organization, Texas PACE Authority, administers the uniform PACE in a Box model program on behalf of the City of Houston. This model approach ensures local governments can establish an effective program quickly and economically, providing a tool for property owners to invest in more efficient infrastructure. Program administration is provided at no cost to the local government with best practices in underwriting and technical consumer protections.

www.texaspaceauthority.org

TEXAS ★ PACE AUTHORITY

CASE STUDY
Congregation Beth Israel, Austin
The First PACE Project in Texas



The first PACE beneficiary in Texas is Congregation Beth Israel in Austin. PACE financing enables the synagogue to address critical HVAC failures without diverting charitable dollars from its core mission.

THE PROBLEM:
After years of spending $15 to $20k annually for chiller and boiler repairs with obsolete chiller and boiler parts becoming difficult to locate, Congregation Beth Israel (CBI) was finally forced to replace them. When the chiller failed last summer, children in the child development center were moved several times to nap and play in the chapel and sanctuary. On many mornings, The Way Companies' trucks were the first to arrive at CBI to get the chillers back online before the children arrived to school. Even when the chillers were working, they couldn't keep up with the Texas heat in the rooms facing the sun.

THE PACE SOLUTION:
Long term PACE financing with no out-of-pocket expenses enabled the synagogue to solve several critical issues. An energy audit was used to analyze all aspects of the building and identify potential energy savings. The final PACE project enabled CBI to finance new chillers and boilers, controls, and window film from a cash flow positive position. Through the PACE program, CBI is able to solve major energy, mechanical reliability, and comfort issues in a financially responsible way.

COMMUNITY IMPACT:
A well-known Jewish quote from the Babylonian Talmud asserts that, "You're not required to complete the work, but neither are you free to abstain from it." While no single individual, organization or community can complete the task of Tikkun Olam, mending and transforming the world, we all must take responsibility and play our part. Reducing our congregation's carbon footprint and living with lightened impact on God's earth through the vision and ingenuity of the PACE program not only makes economic sense, but also represents a sacred act of both responsibility and hope in the future.

– Rabbi Steven Folberg

PROJECT OVERVIEW

PROJECT FINANCING
Lender: Petros PACE Finance
Total Assessment: $452,105
Utility Provider Incentives: $11,000
Term: 20 years
- Lender Consent Granted

IMPACT
- Approximately 135,000 kWh in electricity savings annually
- Energy use reduction of approximately 20%

BUILDING
Buildings' Size: 126,000 Square Feet
Built: 1950, 2001

IMPROVEMENTS
Contractor: The Way Companies
- Two air-cooled chilled water machines
- Two heating water boilers
- The application of window film
- BAS controls

PACE IN TEXAS
PACE is an innovative program enabling 100% financing for energy and water efficiency projects on commercial property.

FOR MORE INFO CONTACT
The Texas PACE Authority
admin@texaspaceauthority.org
www.texaspaceauthority.org



"Panda Room" Congregation Beth Israel, Austin

HOW DOES PACE WORK?

Property Assessed Clean Energy (PACE) is an innovative financing program that offers commercial, industrial, and large multi-family property owners a voluntary program to obtain up to 100% financing for water conservation, energy-efficiency, and distributed generation retrofits. PACE has great potential to directly affect a business' bottom line; a project's savings in utility costs offsets the cost of installing the project. In most instances, this will result in an immediate positive cash flow.

TRAVIS COUNTY

Travis County established Texas' first PACE program in March 2015. The economic development tool is a voluntary program that allows property owners to obtain long-term financing from private lenders without the use of taxpayer dollars or risk to the county treasury. Loans are repaid to private lenders through an assessment and senior lien placed on the improved property. The Travis County Tax Assessor Collector oversees the PACE program and projects.

www.traviscountytx.gov/pace

TEXAS PACE AUTHORITY

The Travis County program is administered by the Texas PACE Authority (TPA), a non-profit organization that administers Texas' new PACE statute by taking a market-based approach to energy finance and economic development. TPA works with all parties – property owners, contractors, and lenders to bring energy and water improvements that are both economically sound and environmentally friendly.

www.texaspaceauthority.org

LENDER CONSENT GRANTED

The Texas PACE statute requires that if the property has a mortgage, then the property owner must obtain the written consent of the mortgagee in order to use PACE financing. CBI received lender consent from its mortgagee.

AUSTIN ENERGY

Austin Energy's Commercial Energy Efficiency Rebate program provides energy efficiency consultation and rebates for Austin Energy's mid-to-large sized commercial customers and nonprofits in the Austin Energy service area. These incentives enhance PACE project cash flow.

PETROS PACE FINANCING

Petros PACE Finance, LLC is the first specialty finance firm in the U.S. to dedicate all of its resources to the commercial PACE market nationwide. Petros PACE has projects in Michigan and Texas, and is working on projects in California and Florida as well. The principals of Petros PACE Finance have substantial experience in structured finance and lending, and bring significant value to all parties involved in the transactions in which they participate.

www.petros-pace.com

THE WAY COMPANIES

Founded in 1918, the Way Companies retain in-house design, engineering, and field service personnel specializing in operational cost reduction, comfort control, and infrastructure renewal. Since the 1980s, Way develops and implements building retrofits paid for with reductions in owning & operating costs. Way's customers range from a university in North Texas to the Statue of Liberty and the Ellis Island Museum. Retrofits include, but are not limited to, HVAC & Lighting Upgrades, Water Conservation and Building Envelope Upgrades.

www.thewaycompanies.com

TEXAS PACE AUTHORITY

PETROS PACE Finance

Way Holding Ltd.

AUSTIN ENERGY

COUNTY OF TRAVIS STATE OF TEXAS

PACE in a BOX

KEEPING PACE IN TEXAS

FOR MORE INFO CONTACT

The Texas PACE Authority
admin@texaspaceauthority.org
www.texaspaceauthority.org

TEXAS ★ PACE AUTHORITY

CASE STUDY
Family Elder Care, Austin
The First Solar PACE Project in Texas



Family Eldercare is the first solar beneficiary of PACE financing in Texas. PACE financing enabled Eldercare to fund its new cool roof and add solar panels without diverting funds from its core mission.

THE PROBLEM:
Family Eldercare is a Central Texas nonprofit organization that has been serving seniors and adults with disabilities for more than 30 years. It needed to increase net operating income and lower business expenses to provide for clients. "With hundreds of people waiting for services, any operational efficiencies we can find allow us to serve more clients," said Kent Herring, CEO of Family Eldercare. "Our region has the fastest growing population in the country – and the fastest growing senior population as well." After talks with Circular Energy about adding solar panels it learned that its building needed a new roof to support the distributed generation system. This additional expenditure exceeded the project budget.

THE PACE SOLUTION:
Long term PACE financing allowed Family Eldercare to build a new roof without any out of pocket spending in order to achieve its solar panel goal. Family Eldercare used an energy audit to analyze many efficiency aspects of its facility and get a baseline for potential energy savings. The final PACE project enabled Family Eldercare to finance comprehensive energy efficient upgrades including a new cool roof and solar panels without compromising its operating budget. Using PACE financing on these upgrades actually produced a positive cash flow for the nonprofit.

COMMUNITY IMPACT:
Family Eldercare is a community mission-based organization serving Central Texas since 1982 by ensuring that older adults receive the care they need to remain independent and living in the comfort of their own homes for as long as possible. Today, Family Eldercare provides a wide range of services to older individuals and adults with disabilities and their caregivers. Family Eldercare's PACE project enables Family Eldercare to stretch every charitable dollar a little further for its clients.

PROJECT OVERVIEW

PROJECT FINANCING
Lender: Petros PACE Finance
Total Assessment: $262,000
Utility Provider Incentives: $11,000
- 7c/kwh PBI Incentives offered

Term: 20 years
- Lender Consent Granted

IMPACT
- Approximately 140,000 kWh in electricity savings annually
- Energy use reduction of approximately 20%

BUILDING
Building Size: 126,000 Square Feet
Built: 2000

IMPROVEMENTS
Contractors: Circular Energy, KENTEX Roofing
- Cool Roof
- Solar Panels

PACE IN TEXAS
PACE is an innovative program enabling 100% financing for energy and water efficiency projects on commercial property.

FOR MORE INFO CONTACT
The Texas PACE Authority
admin@texaspaceauthority.org
www.texaspaceauthority.org

HOW DOES PACE WORK?

Property Assessed Clean Energy (PACE) is an innovative financing program that offers commercial, industrial, and large multi-family property owners to participate in a voluntary program to obtain up to 100% financing for water conservation, energy-efficiency, and distributed generation retrofits. PACE has great potential to directly affect a business' bottom line; a project's savings in utility costs offsets the cost of installing the project. In most instances, this will result in an immediate positive cash flow.

TRAVIS COUNTY

Travis County established Texas' first PACE program in March 2015. The economic development tool is a voluntary program that allows property owners to obtain long-term financing from private lenders without the use of taxpayer dollars or risk to the county treasury. Loans are repaid to private lenders through an assessment and senior lien placed on the improved property. The Travis County Tax Assessor Collector oversees the PACE program and projects.

www.traviscountytx.gov/pace

TEXAS PACE AUTHORITY

The Travis County program is administered by the Texas PACE Authority (TPA), a non-profit organization that administers Texas' new PACE statute by taking a market-based approach to energy finance and economic development. TPA works with all parties – property owners, contractors, and lenders to bring energy and water improvements that are both economically sound and environmentally friendly.

www.texaspaceauthority.org

LENDER CONSENT GRANTED

The Texas PACE Statute requires that if the property has a mortgage, the property owner must obtain the written consent of the mortgagee in order to use PACE Financing. Family Eldercare received lender consent from its mortgagee for this project.

PETROS PACE FINANCING

Petros PACE Finance, LLC is the first specialty finance firm in the US to dedicate all of its resources to the commercial PACE market nationwide. Petros PACE Finance has projects in Michigan and Texas, and is working on projects in California and Florida as well. The principles of Petros PACE Finance have substantial experience in structured finance and lending, and bring significant value to all parties involved in the transactions in which they participate.

www.petros-pace.com

AUSTIN ENERGY

Austin Energy provides a number of commercial rebates and incentives that synergize with the PACE financing package. In this specific instance, AE added roof rebates of $11,000 dollars to immediately add to the cash flow model for Eldercare. In addition, AE added a production based incentive that is paid as the system produces power, in this case 7cents/kwh produced. For more information about Austin Energy Incentives with PACE projects, go to:

www.powersaver.austinenergy.com

KENTEX ROOFING

KENTEX Roofing Systems, LLC is a diversified commercial roofing contractor specializing in reroofing, new construction and all aspects of leak repair and preventive maintenance. KENTEX ownership and upper management combine over forty years of experience with an unmatched reputation for quality work and customer service. They provide state of the art equipment and a total dedication to safety. For more information go to

http://kentexroofing.com/

CIRCULAR ENERGY

With headquarters in Austin, Texas, Circular Energy brings years of combined energy expertise focused on building energy assets and providing innovative electricity products and energy intelligence to help clients manage energy differently. Since 2009, Circular Energy has been dedicated to helping American businesses with high-quality, affordable, resilient and sustainable energy solutions.

http://www.circularenergy.com

FOR MORE INFO CONTACT

The Texas PACE Authority

Toll Free: 1-855-738-PACE (7223)
admin@texaspaceauthority.org
www.texaspaceauthority.org

TEXAS ★ PACE AUTHORITY

INFO@TEXASPACEAUTHORITY.ORG

1-855-738-7223

Commissioners Court - Regular Session **37.**

Meeting Date: 04/17/2018

Early Voting locations and schedule for 2018 Primary Run Off Elections

Submitted For: Chris Davis **Submitted By:** Kay Proud, Elections

Department: Elections

Agenda Category: Regular Agenda Items

Information

Agenda Item

Discuss, consider, and take any appropriate action regarding the approval of the early voting polling locations and voting hours for the 2018 Republican Party and Democratic Party Primary Run Off Elections to be held May 22, 2018

Background

Fiscal Impact

From/To	Acct No.	Description	Amount

Attachments

Early Voting Schedule

Form Review

Inbox	Reviewed By	Date
County Judge Exec Asst.	Wendy Coco	04/12/2018 09:18 AM
Form Started By: Kay Proud		Started On: 04/11/2018 02:31 PM
Final Approval Date: 04/12/2018		

Williamson County Early Voting Schedule

Horario de la Votación Adelantada del Condado de Williamson

Primary Run Off Elections – May 22, 2018

Elecciónes primarias de desempate – 22 de mayo del 2018

Dates and Times for Full-Time Locations: *Fechas y horarios para localidades de tiempo completo*

Monday, May 14 through Friday, May 18 — *Del lunes 14 de mayo al viernes 18 de mayo*
7:00 am to 7:00pm — *7:00 am – 7:00 pm*

Williamson County Inner Loop Annex, 301 SE Inner Loop, **Georgetown**

Georgetown ISD Administration Building, 603 Lakeway Drive, **Georgetown**

Georgetown Parks and Recreation Administration Building, 1101 N. College Street, **Georgetown**

Cowan Creek Amenity Center, 1433 Cool Spring Way, **Georgetown**

Baca Senior Center, 301 W. Bagdad Avenue, **Round Rock**

Brushy Creek Community Center, 16318 Great Oaks Drive, **Round Rock**

Round Rock Randalls, 2051 Gattis School Road, **Round Rock**

JB and Hallie Jester Annex, 1801 E. Old Settlers Boulevard, **Round Rock**

Anderson Mill Limited District, 11500 El Salido Parkway, **Austin**

Cedar Park Public Library, 550 Discovery Boulevard, **Cedar Park**

Cedar Park Randalls, 1400 Cypress Creek Road, **Cedar Park**

Pat Bryson Municipal Hall, 201 N Brushy Street, **Leander**

Hutto ISD Administration Building, 200 College Street, **Hutto**

Taylor City Hall, 400 Porter Street, **Taylor**

Mobile-Temporary Locations, Dates and Times

Fechas y horario de las Localidades móviles temporales:

Tuesday, May 15 and Wednesday, May 16 — 10:00 am – 7:00 pm
Del martes 15 de mayo al miercoles 16 de mayo

Tuesday, May 15 *Martes, 15 de mayo*	Florence City Hall, 106 S Patterson Street, **Florence**
Wednesday, May 16 *Miercoles, 16 de mayo*	St. Peter's Church of Coupland, 108 Wathen Street, **Coupland**

Commissioners Court - Regular Session **38.**

Meeting Date: 04/17/2018

Contract Amendment No. 1 to River Ranch Phase I Improvements

Submitted For: Randy Barker **Submitted By:** Melissa Gurka, Purchasing

Department: Purchasing

Agenda Category: Regular Agenda Items

Information

Agenda Item

Discuss, consider, and take appropriate action on approving the first amendment to the contract between Raba Kistner Consultants, Inc. and Williamson County for engineering services in the original amount of $16,681.60, amending the amount to $19,144.31 and authorizing the execution of the agreement.

Background

Amendment to original contract includes additional scope of work for engineering services required for the River Ranch County project. New scope was identified after execution of original contract. Original contract was awarded from RFQ # 1602-057-2. This expenditure will be charged to P315.

Fiscal Impact

From/To	Acct No.	Description	Amount

Attachments

Signed Contract Amendment

Proposal

Form Review

Inbox	Reviewed By	Date
Purchasing (Originator)	Randy Barker	04/12/2018 08:34 AM
County Judge Exec Asst.	Wendy Coco	04/12/2018 09:16 AM
Form Started By: Melissa Gurka		Started On: 04/05/2018 08:53 AM
Final Approval Date: 04/12/2018		

CONTRACT AMENDMENT NO. 1
TO
WILLIAMSON COUNTY CONTRACT FOR ENGINEERING SERVICES

PROJECT: River Ranch Park Phase I Improvements

This Contract Amendment No. 1 to Williamson County Contract for Engineering Services is by and between Williamson County, Texas, a political subdivision of the State of Texas, (the "County") and Raba Kistner Consultants, Inc. (the "Engineer") and becomes effective as of the date of the last party's execution below.

WHEREAS, the County and the Engineer executed the Williamson County Contract for Engineering Services dated effective December 1, 2016 (the "Contract");

WHEREAS, pursuant to Article 14 of the Contract, the terms of the Contract may be modified by a written fully executed Contract Amendment;

WHEREAS, the "Compensation Cap" under Article 5 of the Contract limits the maximum amount payable under the Contract to $16,681.60 and there is a need to increase the Compensation Cap to $19,144.31 to fund Additional Engineering Services; and,

WHEREAS, Article 12 of the Contract provides that County and Engineer may add Additional Engineering Services pursuant to a written contract amendment; and,

WHEREAS, it has become necessary to amend the Contract.

AGREEMENT

NOW, THEREFORE, premises considered, the County and the Engineer agree that the Contract is amended as follows:

I. Compensation Cap

The Compensation Cap under Article 5 of the Contract is hereby increased from $16,681.60 to $19,144.31.

II. Scope of Additional Engineering Services

ENGINEER hereby agrees to provide the following Additional Engineering Services (the "Additional Engineering Services"):

Geotechnical Engineering Services for the referenced project. The broad objectives of Engineer's study will be to determine soil conditions at the Project site and to develop foundation design recommendations for a new interpretive center at River Ranch County Park in Williamson County, Texas.

Project Description

Under consideration is a new, single story Interpretive Center facility to be located within the existing River Ranch County Park in Williamson County, Texas. Based on information provided by the structural engineer, Mr. Vic Winter, P.E., with Winter Engineering, Engineer understands shallow foundations are preferred provided expansive soil-related movements do not pose a concern. Engineer also understands building pad preparation for the proposed 5,500 square foot building should result in a potential vertical rise (PVR) of 1 inch or less.

Field Study

To explore subsurface conditions in the vicinity of the new Interpretive Center, Engineer will perform one (1) soil boring to a depth of 15 ft below the existing ground surface. Samples will be taken using conventional split-spoon, Shelby-tube and/or NX rock core sampling techniques. The boring will be located in the field utilizing a recreation grade hand-held GPS device and/or tape and right- angle measurements from existing benchmarks. Engineer's scope of Additional Engineering Services does not include surveying in the boring location.

Upon completion of drilling, the boring will be backfilled utilizing auger cuttings and bentonite hole plug.

Deliverables

The field and laboratory phases of the study will be reviewed by Engineer's staff of engineers and geologists. The results of Engineer's review, together with the supporting field and laboratory data, will be presented in a written engineering letter with attachments to include the following:

- Boring Location Map;
- Log of Boring;
- Estimated PVR;
- Required building pad preparation to reduce RVR to 1 in.; and
- Shallow foundation recommendations.

Since site grading plans can result in changes in the foundation subgrade conditions, final site grading plans will be helpful information in the preparation of engineering recommendations. In the absence of site grading information, Engineer will prepare recommendations based on the existing topography.

The final letter will be reproduced in an electronic PDF will be delivered via email.

III. Additional Engineering Services Fee

The Additional Engineering Services shall be performed for lump sum fee of **$2,462.71**.

IV. Schedule

Engineer will begin the field exploration phase of the Additional Engineering Services within 4 working days of receiving County's written authorization to proceed. The field exploration and laboratory testing phase of the Additional Engineering Services is expected to take approximately 1-1/2 weeks to complete. Engineering analyses and preparation of the engineering letter is expected to take an additional 2 weeks to complete. Engineer will provide the design team with verbal design information as the data becomes available.

V. Terms of Contract Control and Extent of Contract Amendment No. 1

All Additional Engineering Services described herein will be performed in accordance with the terms and conditions of the Contract. All other terms of the Contract and any prior amendments thereto which have not been specifically amended herein shall remain the same and shall continue in full force and effect.

IN WITNESS WHEREOF, the County and the Engineer have executed this Contract Amendment, in duplicate, to be effective as of the date of the last party's execution below.

ENGINEER:

Raba Kistner Consultants, Inc.

By: Gabriel Ornelas
Signature

Gabriel Ornelas, Jr
Printed Name

Senior Vice President
Title

April 4th, 2018
Date

COUNTY:

Williamson County, Texas

By: _____
Dan A. Gattis, County Judge

_____ _____, 20___
Date

RABA KISTNER CONSULTANTS

Raba Kistner
Consultants, Inc.
8100 Cameron Road, Suite B-150
Austin, TX 78754
www.rkci.com

P 512 :: 339 :: 1745
F 512 :: 339 :: 6174
TBPE Firm F-3257

[Delivery by Email: dbutler@wilco.org]

Proposal No. PAA18-034-00
February 27, 2018

Mr. Dale Butler
Project Manager
Williamson County Facilities
3101 SE Inner Loop
Georgetown, Texas 78626

RE: Geotechnical Engineering Study
River Ranch County Park Interpretive Center
Williamson County, Texas

In accordance with your request, RABA KISTNER Consultants Inc. (RKCI) is pleased to submit this proposal for Geotechnical Engineering Services for the referenced project. The broad objectives of our study will be to determine soil conditions at the site and to develop foundation design recommendations for a new interpretive center at River Ranch County Park in Williamson County, Texas. Described in this letter are:

- our understanding of pertinent project characteristics;
- our proposed scope for field and laboratory study;
- our proposed scope for engineering evaluation and reporting;
- our tentative project schedule; and
- our lump sum study cost.

Project Description

Under consideration in this study is a new, single story Interpretive Center facility to be located within the existing River Ranch County Park in Williamson County, Texas. Based on information provided by the structural engineer, Mr. Vic Winter, P.E., with Winter Engineering, we understand shallow foundations are preferred provided expansive soil-related movements do not pose a concern. We also understand building pad preparation for the proposed 5,500 square foot building should result in a potential vertical rise (PVR) of 1 in. or less.

Field Study

To explore subsurface conditions in the vicinity of the new Interpretive Center, RKCI recommends one (1) soil boring to a depth of 15 ft below the existing ground surface.

Samples will be taken using conventional split-spoon, Shelby-tube and/or NX rock core sampling techniques. The boring will be located in the field utilizing a recreation grade hand-held GPS device and/or tape and right angle measurements from existing benchmarks. Our scope of service does not include surveying in the boring location.

Upon completion of drilling, the boring will be backfilled utilizing auger cuttings and bentonite hole plug.

Engineering Deliverable

The field and laboratory phases of the study will be reviewed by our staff of engineers and geologists. The results of our review, together with the supporting field and laboratory data, will be presented in a written engineering letter with attachments to include the following:

- Boring Location Map;
- Log of Boring;
- Estimated PVR;
- Required building pad preparation to reduce RVR to 1 in.; and
- Shallow foundation recommendations.

Since site grading plans can result in changes in the foundation subgrade conditions, final site grading plans will be helpful information in the preparation of engineering recommendations. In the absence of site grading information, we will prepare recommendations based on the existing topography.

The final letter will be reproduced in an electronic PDF will be delivered via email.

Tentative Project Schedule

Based on our present workload, we anticipate that we could begin the field exploration phase of this study within 3 to 4 working days of receiving your written authorization. The field exploration and laboratory testing phase of the study is expected to take approximately 1 to 1-1/2 weeks to complete. Engineering analyses and preparation of the engineering letter is expected to take an additional 1 to 2 weeks to complete. We will be pleased to provide the design team with verbal design information as the data becomes available.

Project Cost

The cost plus max for the base study scope outlined herein is **$2,462.71**.

Should unusual soil conditions be encountered in the field that indicates the desirability of significantly broadening the scope of the study, we will contact you to receive authorization before proceeding with any additional work.

Any additional professional time or travel expenses for participation in design team meetings, if required, will be billed at our approved billing rates for professional time plus expenses.

Acceptance

We appreciate the opportunity of submitting this proposal and look forward to working with you, which will be carried out in accordance with the *ON CALL GEOTECHNICAL AND LAB TESTING SERVICES* contract between Williamson County and Raba Kistner Consultants, Inc., executed on February 5, 2016.

Proposal No. PAA18-034-00
February 27, 2018

Please return one signed copy of this letter proposal to provide written authorization for our firm to complete work on the services outlined herein.

RKCI considers the data and information contained in this proposal to be proprietary. This statement of qualifications and any information contained herein shall not be disclosed and shall not be duplicated or used in whole or in part of any purpose other than to evaluate this proposal.

Very truly yours,

RABA KISTNER CONSULTANTS, INC.



Yvonne Garcia Thomas, P.E.
Associate

YGT: tlc

Copies Submitted: Above (1)

Accepted By:

_____
Signature

_____
Typed or Printed Name

_____
Title

_____
Date

Commissioners Court - Regular Session **39.**

Meeting Date: 04/17/2018

Asphalt Cement Bid Advertisement Approval IFB 1804-223

Submitted For: Randy Barker **Submitted By:** Melissa Gurka, Purchasing

Department: Purchasing

Agenda Category: Regular Agenda Items

Information

Agenda Item

Discuss, consider, and take appropriate action on authorizing the Purchasing Agent to advertise and receive sealed bids for Asphalt Cement under IFB 1804-223.

Background

Williamson County is seeking qualified suppliers for the purchase and delivery of Asphalt Cement (AC-10) per Item 300, Texas Department of Transportation, Standard Specifications for Construction and Maintenance of Highways, Streets and Bridges 2014. This expenditure will be charged to 01.0200.0210.003550. Funding was approved in the FY2018 budget.

Fiscal Impact

From/To	Acct No.	Description	Amount

Attachments

IFB 1804-223 Bid Packet

Form Review

Inbox	Reviewed By	Date
Purchasing (Originator)	Randy Barker	04/12/2018 08:36 AM
County Judge Exec Asst.	Wendy Coco	04/12/2018 09:16 AM
Form Started By: Melissa Gurka		Started On: 04/06/2018 11:45 AM
Final Approval Date: 04/12/2018		

Solicitation 1804-223

Asphalt Cement

Bid Designation: Public

Williamson County, Texas

Bid 1804-223
Asphalt Cement

Bid Number	1804-223
Bid Title	Asphalt Cement
Bid Start Date	In Held
Bid End Date	May 10, 2018 3:00:00 PM CDT
Question & Answer End Date	May 4, 2018 5:00:00 PM CDT
Bid Contact	Melissa Gurka Purchasing Specialist II 512-943-3860 melissa.gurka@wilco.org
Contract Duration	**365 days**
Contract Renewal	2 annual renewals
Prices Good for	**90 days**
Bid Comments	**Williamson County is seeking qualified suppliers for the purchase and delivery of Asphalt Cement (AC-10) per Item 300, Texas Department of Transportation, Standard Specifications for Construction and Maintenance of highways, Streets and Bridges 2014.**

Item Response Form

Item	**1804-223-01-01 -** Please attach all documents to this line
Quantity	**1 each**

Prices are not requested for this item.

Delivery Location **Williamson County, Texas**

No Location Specified

Qty 1

Description
Please attach all documents to this line

PUBLIC ANNOUNCEMENT AND GENERAL INFORMATION

WILLIAMSON COUNTY PURCHASING DEPARTMENT
SOLICITATION 1804-223
Asphalt Cement

BIDS MUST BE RECEIVED ON OR BEFORE:
May 10, 2018 3:00:00 PM CDT

BIDS WILL BE PUBLICLY OPENED:
May 10, 2018 3:00:00 PM CDT

Notice is hereby given that sealed Bids for the above-mentioned goods and/or services will be accepted by the Williamson County Purchasing Department. Williamson County uses BidSync to distribute and receive bids. Specifications for this IFB may be obtained by registering at www.bidsync.com.

Williamson County prefers and requests electronic submittal of this Bid.

All electronic bids must be submitted via: www.bidsync.com

Electronic bids are requested, however paper bids will currently still be received, until further notice and may be mailed or delivered to the address listed below.

Bidders are strongly encouraged to carefully read this entire IFB.

All interested Bidders are invited to submit a Bid in accordance with the Instructions and General Requirements, Bid Format, Bid Specifications, and Definitions, Terms and Conditions stated in this IFB.

Please note that a complete package must be submitted choosing one of the above two methods. Split packages submitted will be considered "unresponsive" and will not be accepted or evaluated.

Williamson County will not accept any Bids received after the submittal deadline, and shall return such Bids unopened to the Bidder.

General Information:

- If mailed or delivered in person, Bids and Bid addenda are to be delivered in sealed envelope on or before the submittal deadline, as noted in the Public Announcement and General Information listed above for this IFB, to:

  Williamson County Purchasing Department
  Attn: **BID NAME AND NUMBER**
  901 South Austin Avenue
  Georgetown, Texas 78626

  - Bidders should list the Bid Number, Bid Name, Name and Address of Bidder, and the Date of the Bid opening on the outside of the box or envelope and note "Sealed Bid Enclosed."
  - Bidder should submit one (1) original.
  - Williamson County will NOT be responsible for unmarked or improperly marked envelopes.
  - Williamson County will not accept any responsibility for Bids being delivered by third party carriers.
  - Facsimile transmittals will NOT be accepted.

- Bids will be opened publicly in a manner; however, to avoid public disclosure of contents only the names and of Bidders and prices will be read aloud.

- All submitted questions with their answers will be posted and updated on www.bidsync.com.

- It is the Bidder's responsibility to review all documents in BidSync, including any Addenda that may have been added after the document packet was originally released and posted.

  - Any Addenda and/or other information relevant to the IFB will be posted on www.bidsync.com.

  - The Williamson County Purchasing Department takes no responsibility to ensure any interested Bidder has obtained any outstanding addenda or additional information.

Williamson County – Invitation for Bid (IFB)

SECTION 1 - DEFINITIONS

Addendum/Addenda – means any written or graphic instruments issued by the County prior to the consideration of Bids which modify or interpret the Bid Documents by additions, deletions, clarifications, or corrections.

Agreement/Ensuing Agreement(s) – means the Successful Bidder may be required by the County to sign an additional Agreement containing terms necessary to ensure compliance with the IFB and the Bidder's Bid. Such Ensuing Agreement(s) shall contain the Bid specifications, terms and conditions that are derived from the IFB.

Bid Documents – means the Legal Notice, IFB including attachments, and any Addenda issued by the County prior to the consideration of any Bids.

Bid – means the completed and signed bid form, (sometimes referred to as the Price Sheet), and ALL required forms and documentation listed in the IFB package which have been submitted in accordance with the terms and conditions described in the IFB package. A Bid submitted in accordance with this IFB is irrevocable during the specified period for evaluation and acceptance of Bids unless a waiver is obtained from the Williamson County Purchasing Agent.

Bidder – means a person or entity who submits a Bid in response to this IFB.

Contract – means this IFB and the Bid of the Successful Bidder shall become a Contract between the Successful Bidder and the County once the Successful Bidder's Bid is properly accepted by the Williamson County Commissioners Court.

Commissioner's Court – means the Williamson County Commissioners Court.

County – means Williamson County, a political subdivision of the State of Texas.

Invitation for Bid (IFB) – means this document, together with the attachments thereto and any future Addenda issued by the County.

Successful Bidder – means the liable Bidder to whom the County intends to award the Contract.

SECTION 2 - BID FORMAT AND SUBMISSION

2.1 ORGANIZATION OF BID CONTENTS FOR SUBMITTAL

Each Bid should be organized and items submitted in the order described below:

A. Transmittal Letter. Please see Section 2.3, Transmittal Letter, for more information.

B. Price Sheet.

C. Conflict of Interest Questionnaire. Please see Section 2.2, Conflict of Interest, for more information in regards to this. Please note that even if you deem there to be no Conflict of Interest, this signed questionnaire must be included in your package.

D. References. Please see Section 3.15, References, for more information.

E. Bid Affidavit.

F. Form 1295. Please see Section 2.4, Certificate of Interested Parties – Form 1295.

2.2 CONFLICT OF INTEREST

No public official shall have interest in a Contract, in accordance with Vernon's Texas Codes Annotated, Local Government Code, Title 5, Subtitle C, Chapter 171, as amended.

As of January 1, 2006, all Bidders are responsible for complying with Local Government Code, Title 5, Subtitle C, Chapter 176. Additional information may be obtained from the County's website at the following link:

http://www.wilco.org/CountyDepartments/Purchasing/ConflictofInterestDisclosure/tabid/689/language/en US/Default.aspx

Each Bidder must disclose any existing or potential conflict of interest relative to the performance of the requirements of this IFB. **Examples of potential conflicts of interest may include an existing business or personal relationship between the Bidder, its principal, or any affiliate or subcontractor with the County or any other entity or person involved in any way with the project that is subject to this IFB**. Similarly, any personal or business relationship between the Bidder, the principals, or any affiliate or subcontractor with any employee, or official of the County or its suppliers must be disclosed. Any such relationship that might be perceived or represented as a conflict must be disclosed. Failure to disclose any such relationship or reveal personal relationships with the County employees or officials may be cause for termination.

The County will decide if an actual or perceived conflict should result in Bid disqualification.

By submitting a Bid in response to this IFB, all Bidders affirm they have not given, nor intend to give, at any time hereafter, any economic opportunity, future employment, gift, loan, gratuity, special discount, trip, favor, or service to a the County public servant or any employee, official or representative of same, in connection with this procurement.

Each Bidder must provide a Conflict of Interest Statement with their Bid Package. Package may be deemed incomplete without this form.

2.3 TRANSMITTAL LETTER

The Bidder should submit a Transmittal Letter that provides the following information:

A. Name and address of individual or business entity submitting the Bid.

B. Name, physical address, email address, business and fax number of the Bidder's principal contact person regarding all contractual matters relating to this IFB.

C. The Bid's Federal Employer Identification Number.

D. If the Proposal being submitted will have an effect on air quality for the County (as it relates to any state, federal, or voluntary air quality standard), then the Respondent is encouraged to provide information in narrative indicating the anticipated air quality impact. See Section 4.36, Air Quality for more information.

2.4 CERTIFICATE OF INTERESTED PARTIES – FORM 1295

As of January 1, 2016, all Successful Bidders are responsible for complying with the Texas Government Code, Section 2252.908. The law states that the County may not enter into certain contracts with a Bidder unless the Bidder submits a disclosure of interested parties to the County at the time the Bidder submits the signed Contract. The law applies only to a Contract of the County on or after January 1, 2016 that either:

A. Requires an action or vote by the Commissioners Court before the Contract may be signed (all contracts that fall under the jurisdiction of the Commissioners Court approval, such as contracts resulting from an Initiation for Bid (IFB), RFP, Request for Qualifications (RFQ), etc., excluding, but not limited to, certain Juvenile Service contracts, contracts funded with Sheriff's seized fun monies, etc.); or
B. Has a value of at least $1,000,000.

By January 1, 2016, the Texas Ethics Commission will make available on its website, a new filing application that must be used to file Form 1295. Information regarding how to use the filing application is available on the Texas Ethics Commission website at the following link:

https://www.ethics.state.tx.us/whatsnew/elf_info_form1295.htm

A Respondent must:

A. Use the online application to process the required information on Form 1295.

B. Print a copy of the form which will contain a unique certification number.

C. An authorized agent of the Bidder must sign the printed copy of the form.

D. Have the form notarized.

E. File the completed Form 1295 and certification of filing (scanning and emailing form is sufficient) with Williamson County Purchasing Agent at the time the signed Contract is submitted for approval.

After the Commissioners Court award of the Contract, the County shall notify the Texas Ethics Commission, using the Texas Ethics Commission's filing application, of the receipt of the filed Form 1295 and certification of filing not later than the 30th day after the date the Contract binds all parties to the Contract. The Texas Ethics Commission will post the completed Form 1295 to its website within seven business days after receiving notice from the County.

2.5 ETHICS

The Bidder shall not accept or offer gifts or anything of value nor enter into any business arrangement with any employee, official or agent of the County.

2.6 BID SUBMITTAL DEADLINE

The Bid is due no later than the submittal date and time set forth in the Public Announcement and General Information listed in this IFB package. Contents of each Bid shall be submitted in accordance with this IFB.

2.7 DELIVERY OF BIDS

The County uses BidSync to distribute and receive Bids and proposals. It is preferred that Bids submitted electronically through BidSync; however, Bidders can submit a hard copy.

Refer to www.bidsync.com for further information on how to submit electronically.

If mailed or delivered in person, Bids and Bid Addenda are to be delivered in sealed envelope on or before the submittal deadline, as noted in the Public Announcement and General Information listed in this IFB package, to:

Williamson County Purchasing Department
Attn: **Bid Name and Number**
901 South Austin Avenue
Georgetown, Texas 78626

Also, all Bidders should list their Name and Address, and the Date of the Bid opening on the outside the box or envelope and note "Sealed Bid Enclosed." The County will not accept any Bids received after the submittal deadline, and shall return such Bids unopened to the Bidder. The County will not accept any responsibility for Bids being delivered by third party carriers.

Bids will be opened publically and the names of Bidders and pricing will be read aloud.

SECTION 3 - INSTRUCTIONS AND GENERAL REQUIREMENTS

3.1 INSTRUCTIONS

Read this document carefully, and follow all instructions and requirements. All Bidders are responsible for fulfilling all requirements and specifications. Be sure to have a clear understanding of this IFB.

General requirements apply to all advertised IFBs; however, these may be superseded, in whole or in part, by the bid specifications, Addenda and modifications issued as a part of this IFB. Be sure your Bid package is complete.

3.2 AMBIGUITY, CONFLICT, OR OTHER ERRORS IN THIS IFB

If a Bidder discovers any ambiguity, conflict, discrepancy, omission or other error in this IFB, the Bidder shall immediately notify the County Purchasing Department of such error in writing and request modification or clarification of the document.

Modifications will be made by issuing Addenda. If the Bidder fails to notify the County prior to the date and time fixed for submission of Bids of an error or ambiguity in the IFB known to the Bidder, or an error or ambiguity that reasonably should have been known to the Bidder, then the Bidder shall be deemed to have waived the error or ambiguity or its later resolution.

The County may also modify the IFB, no later than forty-eight (48) hours prior to the date and time fixed for submission of Bids, by issuance of an Addendum. All Addenda will be numbered consecutively, beginning with one (1).

3.3 NOTIFICATION OF MOST CURRENT ADDRESS

All Bidders in receipt of this IFB shall notify the Williamson County Purchasing Department of any address changes, contact person changes, and/or telephone number changes no later than forty-eight (48) hours prior to the date and time fixed for submission of Bids.

3.4 SIGNATURE OF BIDDER

A. If the Bidder is a Corporation or Limited Liability Company, the legal name of the Corporation Limited Liability Company shall be provided together with the signature of the officer or officers authorized to sign on behalf of such entity.

B. If the Bidder is a General Partnership, the true name of the firm shall be provided with the signature of each partner authorized to sign.

C. If the Bidder is a Limited Partnership, the name of the Limited Partner's General Partner shall provided with the signature of the officer authorized to sign on behalf of the General Partner.

D. If the Bidder is a Sole Proprietor(s) (individual), each Sole Proprietor(s) shall sign.

E. If signature is by an agent, other than the Sole Proprietor(s) or an officer of a Corporation, Limited Liability Company, General Partner or a member of a General Partnership, a power of attorney equivalent document must be submitted to the Williamson County Purchasing Department.

3.5 ASSUMED BUSINESS NAME

If the Bidder operates business under an Assumed Business Name, the Bidder must have on file with the Williamson County Clerk a current Assumed Name Certificate and provide a file marked copy of same.

3.6 BID OBLIGATION

The contents of the IFB, Bid, and any clarification thereof submitted by the Successful Bidder shall become part of the contractual obligation and incorporated by reference into the Contract and any Ensuing Agreement(s).

3.7 COMPLIANCE WITH IFB SPECIFICATIONS

It is intended that this IFB describe the requirements and the Bid format in sufficient detail to secure comparable Bids. Failure to comply with all provisions of the IFB may, at the sole discretion of the County, result in disqualification.

3.8 WITHDRAWAL OF BID

The Bidder may withdraw its Bid by submitting a written request with the company letterhead and the signature of an authorized individual, as described in Section 3.4, Signature of Bidder, to the Williamson County Purchasing Department any time prior to the submission deadline.

The Bidder may submit a new Bid prior to the deadline. Alterations of the Bid in any manner will not be considered if submitted after the deadline. Withdrawal of a Bid after the deadline will be subject to written approval of the Williamson County Purchasing Agent.

3.9 EVALUATION AND AWARD

The County reserves the right to use all pertinent information (also learned from sources other than disclosed in the Bid process) that might affect the County's judgment as to the appropriateness of award to the lowest and best evaluated Bid. This information may be appended to the Bid evaluation process results. Information on a Bidder from reliable sources, and not within the Bidder's Bid, may also be noted and made part of the evaluation file. The County shall have sole discretion for determining the reliability of the source.

To ensure the proper and fair evaluation of a solicitation, the County prohibits unsolicited communication initiated by the Bidder to the County Official or Employee evaluating or considering the Bids prior to the time an award has been made. Unsolicited communication may be ground for disqualifying the offending Bidder from consideration or award of the solicitation, or any future solicitation.

Communication between the Bidder and the County will be initiated by the appropriate County Official Employee in order to obtain information or clarification needed to develop a proper and accurate evaluation of the solicitation.

The County intends to award a Contract to the most responsible and responsive Bidder whose Bid will be most advantageous to the County. In accordance with Texas Government Code and Local Government Code, the County may consider, to the extent allowed by law, the following:

A. Price;
B. The Bidder's experience and reputation;
C. Quality of the Bidder's goods and/or services;
D. The Bidder's safety record;
E. The Bidder's proposed personnel;
F. The Bidder's financial capabilities; and
G. Any other relevant factors specifically listed in this IFB or authorized by law.

3.10 CONDISERATION OF LOCATION OF PRINCIPAL OFFICE

Pursuant to Texas Local Government Code, Section 271.905, in purchasing any real property or personal property that is not affixed to real property, if the County receives one or more Bids from a Bidder whose principal place of business is in Williamson County and whose Bid is within three (3) percent of the lowest Bid price received by the County from a Bidder who is not a resident of Williamson County, the County may enter into a contract with:

A. The lowest Bidder; or the Bidder whose principal place of business is in Williamson County if the Commissioners Court determines, in writing, that the local Bidder offers the County the best combination of contract price and additional economic development opportunities Williamson County created by the contract award, including the employment of residents Williamson County and increased tax revenues to Williamson County.

3.11 REJECTION OR ACCEPTANCE.

It is understood that the Commissioners Court of Williamson County, Texas, reserves the right to accept or reject any and/or all Bids for any or all goods and/or services covered in this IFB, and to waive informalities or defects in the Bid or to accept such Bid, if it shall deem to be in the best interest of the County.

Awards should be made approximately sixty (60) business days after the Bid opening date. Results may be obtained by viewing the Williamson County vendor portal at the following link:

http://www.wilco.org/CountyDepartments/Purchasing/SearchforaPastBid/tabid/5213/language/en-US/Default.aspx

3.12 RESPONSIBILITY

It is expected that a prospective Bidder will be able to affirmatively demonstrate responsibility. A prospective Bidder should be able to meet the following requirements:

A. Have adequate financial resources, or the ability to obtain such resources as required;
B. Be able to comply with the required or proposed delivery schedule;
C. Have a satisfactory record of performance that can be determined thru references provided; and
D. Be otherwise qualified and eligible to receive an award.

The County may request representation and other information sufficient to determine the Bidder's ability to meet these minimum standards listed above.

3.13 FIRM PRICING

For unit price items, all of the items listed are to be on a “per unit” basis, stating a firm price per unit or unit quantity of each item. The Bidder must submit a firm price that must be good from the date of Bid opening for the fixed period of time set out in this IFB. Unless the IFB expressly states otherwise, this period shall be until the end of the Initial Contract Period.

Bids which do not state a fixed price, or which are subject to change without notice, will not be considered. The Court may award a Contract for the period implied or expressly stated in the lowest and best Bid.

3.14 PURCHASE ORDERS

If required by the Williamson County Purchasing Department, a purchase order(s) may be generated to the Successful Bidder for goods and/or services. If a purchase order is issued, the purchase order number must appear on all itemized invoices and/or requests for payment.

3.15 SILENCE OF SPECIFICATIONS

The apparent silence of these specifications as to any detail or to the apparent omission from it of a detailed description concerning any point, shall be regarded as meaning that only the best practices are to prevail. All interpretations of these specifications shall be made on the basis of this statement.

3.16 REFERENCES

The County may require the Bidder to supply a list of at least three (3) references where like services and/or goods have been supplied by their firm within the past five (5) years, to include names, titles, phone numbers and email addresses of key personnel, and dates of performance.

The County may contact some or all of the references in order to determine the Respondent performance record on work similar to that described in this RFP. The County reserves the right to contact references other than those provided in the response and to use the information gained from them in the evaluation process.

References, if requested, should be provided in accordance with this IFB. Bid may not be deemed complete without the inclusion of requested references.

SECTION 4 - TERMS AND CONDITIONS

4.1 VENUE AND GOVERNING LAW

The Bidder hereby agrees and acknowledges that venue and jurisdiction of any suit, right, or cause of action arising out of or in connection with this IFB, the Contract and any Ensuing Agreement(s), shall lie exclusively in either Williamson County, Texas or in the Austin Division of the Western Federal District of Texas, and the parties hereto expressly consent and submit to such jurisdiction. Furthermore, except to the extent that this IFB, the Contract and any Ensuing Agreement(s) is governed by the laws of the United States, this IFB, the Contract and any Ensuing Agreement(s) shall be governed by and construed in accordance with the laws of the State of Texas, excluding, however, its choice of law rules.

4.2 INCORPORATION BY REFERENCE AND PRECEDENCE

A. The Contract shall be derived from the IFB and its Addenda (if applicable), and the Bidder's Bid. In the event of a dispute under the Contract, applicable documents will be referred to for the purpose of clarification or for additional detail in the following order of precedence:

   1. The IFB and its Addenda (if applicable); and

   2. The Bidder's Bid.

B. In the event the County requires that an Ensuing Agreement be executed following award and a dispute arises between the terms and conditions of the Ensuing Agreement, the IFB and its Addenda (if applicable), and the Bidder's Bid, applicable documents will be referred to for the purpose of clarification or for additional detail in the following order of precedence:

   1. Terms and conditions of the Ensuing Agreement;

   2. The IFB its Addenda; and

   3. The Bidder's Bid.

4.3 OWNERSHIP OF BID

Each Bid shall become the property of the County upon submittal and will not be returned to Bidders unless received after the submittal deadline.

4.4 DISQUALIFICATION OF BIDDER

Upon signing and submittal of the Bid, a Bidder offering to sell supplies, materials, services, or equipment to the County, certifies that the Bidder has not violated the antitrust laws of the State of Texas codified in Business & Commerce Code, Section 15.01, or the Federal Antitrust Laws, and has not communicated directly or indirectly the offer made to any competitor or any other person engaged in such line of business. Any or all Bids may be rejected if the County believes that collusion exists among the Bidders.

4.5 FUNDING

The County intends to budget and make sufficient funds available and authorize funds for expenditure to finance the costs of the Contract. All Bidders understand and agree that the County's payment of amounts under the Contract shall be contingent on the County receiving appropriations or other expenditure authority sufficient to allow the County, in the exercise of reasonable administrative discretion, to make payments under this Contract.

4.6 ASSIGNMENT, SUCCESSORS AND ASSIGNS

The Successful Bidder may not assign, sell, or otherwise transfer the Contract or any other rights or interests obtained under the Contract without written permission of the Commissioners Court. The Contract and any Ensuing Agreement(s) shall be binding upon and inure to the benefit of the contracting parties hereto and their respective successors and permitted assigns.

4.7 IMPLIED REQUIREMENTS

Products or services not specifically described or required in the IFB, but are necessary to provide the functional capabilities described by the Bidder, shall be implied and deemed to be included in the Bid.

4.8 TERMINATION

A. **Termination for Cause:** The County reserves the right to terminate the Contract and/or any Ensuing Agreement(s) for default if the Successful Bidder breaches any of the Bid specifications, terms and conditions, including warranties of the Bidder, if any, or if the Successful Bidder becomes insolvent or commits acts of bankruptcy. Such right of termination is in addition to and not in lieu of any other remedies the County may have at law or in equity or as may otherwise provided hereunder. Default may be construed as, but not limited to, failure to deliver the proper goods and/or services within the proper amount of time, and/or to properly perform any and all other requirements to the County's satisfaction, and/or to meet all other obligations and requirements.

B. **Termination for Convenience:** The County may terminate the Contract and/or any Ensuing Agreement(s) for convenience and without cause or further liability, upon no less than thirty (30) calendar days written notice to the Successful Bidder. The County reserves the right to extend this period if it is in the best interest of the County. In the event the County exercises its right to terminate without cause, it is understood and agreed that only the amounts due to the Successful Bidder for goods, commodities and/or services provided and expenses incurred to and including the date of termination, will be due and payable. No penalty will be assessed for the County termination for convenience.

4.9 NON-PERFORMANCE

It is the objective of the County to obtain complete and satisfactory performance of the requirements set forth herein. In addition to any other remedies available at law, in equity or that may be set out herein, failure to perform may result in a deduction of payment equal to the amount of the goods and/or services that were not provided and/or performed to the County's satisfaction.

In the event of such non-performance, the County shall have the right, but shall not be obligated, to complete the services itself or by others and/or purchase the goods from other sources. If the County elects to acquire the goods or perform the services itself or by others, pursuant to the foregoing, the Successful Bidder shall reimburse the County, within ten (10) calendar days of demand, for all costs incurred by the County (including, without limitation, applicable, general, and administrative expenses, and field overhead, and the cost of necessary equipment, materials, and field labor) in correcting the nonperformance which the Successful Bidder fails to meet pursuant to the requirements set out herein. In the event the Successful Bidder refuses to reimburse the County as set out in this provision, the County shall have the right to deduct such reimbursement amounts from any amounts that may be then owing or that may become owing in the future to the Successful Bidder.

4.10 PROPRIETARY INFORMATION AND THE TEXAS PUBLIC INFORMATION ACT

All material submitted to the County shall become public property and subject to the Texas Public Information Act upon receipt. If a Bidder does not desire proprietary information in the Bid to be disclosed, each page must be clearly identified and marked proprietary at time of submittal or, more preferably, all proprietary information may be placed in a folder or appendix and be clearly identified and marked as being proprietary. Failure to clearly identify and mark information as being proprietary as set forth under this provision will result in all unmarked information being deemed non-proprietary and available to the public. For all information that has not been clearly identified and marked as proprietary by the Bidder, the County may choose to place such information on the County's website and/or a similar public database without obtaining any type of prior consent from the Bidder.

The County will, to the extent allowed by law, endeavor to protect from public disclosure the information that has been identified and marked as proprietary. The final decision as to what information must be disclosed, however, lies with the Texas Attorney General.

To the extent, if any, that any provision in this IFB or in the Bidder's Bid is in conflict with Texas Government Code, Chapter 552, as amended (the "Public Information Act"), the same shall be of no force or effect. Furthermore, it is expressly understood, and agreed, that the County, and its officers and employees, may request advice, decisions and opinions of the Attorney General of the State of Texas in regard to the application of the Public Information Act to any items or data furnished to the County as to whether or not the same are available to the public. It is further understood that the County, and its officers and employees, shall have the right to rely on the advice, decisions and opinions of the Attorney General, and that the County, its officers and employees shall have no liability or obligation to any party hereto for the disclosure to the public, or to any person or persons, of any items or data furnished to the County by a party hereto, in reliance of any advice, decision or opinion of the Attorney General of the State of Texas.

4.11 RIGHT TO AUDIT

The Successful Bidder agrees that the County or its duly authorized representatives shall, until the expiration of three (3) years after termination or expiration of the services to be performed, have access to and the right to examine and photocopy any and all books, documents, papers and records of the Successful Bidder, which are directly pertinent to the services to be performed or goods to be delivered for the purposes of making audits, examinations, excerpts and transcriptions. The Successful Bidder agrees that the County shall have access during normal working hours to all necessary facilities and shall be provided adequate and appropriate work space in order to conduct audits in compliance with the provisions of this section. The County shall give the Successful Bidder reasonable advance notice of intended audits.

4.12 TESTING AND INSPECTIONS

The County reserves the right to inspect and test equipment, supplies, materials and goods for quality and compliance with this IFB, and ability to meet the needs of the user. Demonstration units must be available for review. Should the goods or services fail to meet requirements and/or be unavailable for evaluation, the County can deem the Bidder to be in breach and terminate the Contract and/or any Ensuing Agreement(s).

4.13 BID PREPARATION COSTS

The cost of developing Bids is the sole responsibility of the Bidders and shall not be charged to the County. There is no expressed or implied obligation for the County to reimburse the Bidders for any expense incurred in preparing a Bid in response to this IFB and the County will not reimburse the Bidders for such expenses.

4.14 INDEMNIFICATION

The Successful Bidder shall indemnify, defend and save harmless, the County, its officials, employees, agents and agent's employees from, and against, all claims, liability, and expenses including reasonable attorneys' fees, arising from activities of the Bidder, its agents, servants or employees, performed hereunder that result from the negligent act, error, or omission of the Bidder or any of the Bidder agents, servants or employees, as well as all claims of loss or damage to the Bidder's and the County property, equipment, and/or supplies.

Furthermore, the County, its officials, employees, agents and agents' employees shall not be liable for damages to the Successful Bidder arising from any act of any third party, including, but not limited to, theft. The Successful Bidder further agrees to indemnify, defend and save harmless, the County from its officials, employee, agents and agents' employees against all claims of whatever nature arising from any accident, injury, or damage whatsoever, caused to any person, or the property of any person, occurring in relation to the Successful Bidder's performance of any services requested hereunder during the term of the Contract and/or any Ensuing Agreement(s).

The Successful Bidder shall timely report all claims, demands, suits, actions, proceedings, liens or judgements to the County and shall, upon the receipt of any claim, demand, suit, action, proceeding, lien or judgement, not later than the fifteenth (15th) day of each month; provide the County with a written report on each such matter, setting forth the status of each matter, the schedule or planned proceedings with respect to each matter and the cooperation or assistance, if any, of the County required by the Successful Bidder in the defense of each matter. The Successful Bidder's duty to defend, indemnify and hold the County harmless shall be absolute. It shall not abate or end by reason of the expiration or termination of the Contract and/or any Ensuing Agreement(s), unless otherwise agreed by the County in writing. The provisions of this section shall survive the termination of the Contract and shall remain in full force and effect with respect to all such matters no matter when they arise.

In the event of any dispute between the parties, as to whether a claim, demand, suit, action, proceeding, lien or judgement, that appears to have been caused by or appears to have arisen out of or in connection with acts or omissions of the County, the Bidder shall nevertheless fully defend such claim, demand, suit or action, proceeding, lien or judgement, until and unless there is a determination by a court of competent jurisdiction that the acts and omissions of the Bidder are not an issue in the matter.

The Successful Bidder's indemnification shall cover, and the Successful Bidder agrees to, indemnify the County, in the event the County is found to have been negligent for having selected the Successful Bidder to perform the work described in this request. The provision by the Successful Bidder of insurance shall not limit the liability of the Successful Bidder under the Contract and/or any Ensuing Agreement(s).

4.15 WAIVER OF SUBROGATION

The Successful Bidder and the Successful Bidder's insurance carrier waive any and all rights whatsoever with regard to subrogation against the County as an indirect party to any suit arising out of personal or property damages resulting from the Bidder's performance under this Contract and any Ensuing Agreement(s).

4.16 RELATIONSHIP OF THE PARTIES

The Successful Bidder shall be an independent contractor and shall assume all of the rights, obligations, liabilities, applicable to it as such independent contractor hereunder and any provisions herein which may appear to give the County the right to direct the Successful Bidder as to details of doing work herein covered, or to exercise a measure of control over the work, shall be deemed to mean that the Successful Bidder shall follow the desires of the County in the results of the work only. The County shall not retain or have the right to control the Successful Bidder's means, methods or details pertaining to the Successful Bidder's performance of the work. The County and the Successful Bidder hereby agree and declare that the Successful Bidder is an independent contractor and as such meets the qualifications of an "Independent Contractor" under Texas Workers Compensation Act, Texas Labor Code, Section 406.141, that the Successful Bidder is not an employee of the County, and that the Successful Bidder and its employees, agents and subcontractors shall not be entitled to workers compensation coverage or any other type of insurance coverage held by the County.

4.17 SOLE PROVIDER

The Successful Bidder agrees and acknowledges that it shall not be considered a sole provider of the goods and/or services described herein and that the County may contract with other providers of such goods and/or services if the County deems, at its sole discretion, that multiple providers of the same goods and/or services will serve the best interest of the County.

4.18 FORCE MAJEURE

If the party obligated to perform is prevented from performance by an act of war, order of legal authority, act of God, or other unavoidable cause not attributable to the fault or negligence of said party, the other party shall grant such party relief from the performance. The burden of proof for the need of such relief shall rest upon the party obligated to perform. To obtain release based on force majeure, the party obligated to perform shall file a written request with the other party.

4.19 SEVERABILITY

If any provision of this IFB, the Contract or any Ensuing Agreement(s) shall be held invalid or unenforceable by any court of competent jurisdiction, such holding shall not invalidate or render unenforceable any other provision thereof, but rather the entire IFB, Contract or any Ensuing Agreement (s) will be construed as if not containing the particular invalid or unenforceable provision or provisions, and the rights and obligation of the parties shall be construed and enforced in accordance therewith. The parties acknowledge that if any provision of this IFB, the Contract or any Ensuing Agreement(s) is determined to be invalid or unenforceable, it is the desire and intention of each that such provision be reformed and construed in such a manner that it will, to the maximum extent practicable, give effect to the intent of this IFB, the Contract or any Ensuing Agreement(s) and be deemed to be validated and enforceable.

4.20 EQUAL OPPORTUNITY

Neither party shall discriminate against any employee or applicant for employment because of race, color, sex, religion or national origin.

4.21 NOTICE

Any notice to be given shall be in writing and may be distributed by personal delivery, or by registered or certified mail, return receipt requested, addressed to the proper party, at the following address:

The County: Williamson County Purchasing Department
Attn: Purchasing Agent
901 South Austin Avenue
Georgetown, Texas 78626

The Bidder: Address set out in Bidder's Transmittal Letter.

Notices given in accordance with this provision shall be effective upon (1) receipt by the party to which notice is given, or (2) on the third (3rd) calendar day following mailing, whichever occurs first.

4.22 SALES AND USE TAX EXEMPTION

The County is a body, corporate and politic, under the laws of the State of Texas and claims exemption from sales and use taxes under Texas Tax Code, Section 151.309, as amended, and the services and/or goods subject hereof are being secured for use by the County.

4.23 COMPLIANCE WITH LAWS

The County and the Successful Bidder shall comply with all federal, state, and local laws, statutes, ordinances, rules and regulations, and the orders and decrees of any courts or administrative bodies or tribunals in any matter affecting the performance of the Contract and any Ensuing Agreement(s), including, without limitation, Workers' Compensation laws, salary and wage statutes and regulations, licensing laws and regulations. When required, the Successful Bidder shall furnish the County with certification of compliance with said laws, statues, ordinances, rules, regulations, orders, and decrees above specified.

4.24 INCORPORATION OF EXHIBITS, APPENDICES AND ATTACHMENTS

All of the Exhibits, Appendices and Attachments referred to herein are incorporated by reference as if set forth verbatim herein. Any conflicting terms in the Contract documents will be resolved at the sole discretion of the Commissioners Court.

4.25 NO WAIVER OF IMMUNITIES

Nothing herein shall be deemed to waive, modify or amend any legal defense available at law or in equity to the County, its past or present officers, employees, or agents, nor to create any legal rights or claim on behalf of any third party. The County does not waive, modify, or alter to any extent whatsoever the availability of the defense of governmental immunity under the laws of the State of Texas and of the United States.

4.26 NO WAIVER

The failure or delay of any party to enforce at any time or any period of time any of the provisions of this IFB, the Contract or any Ensuing Agreement(s) shall not constitute a present or future waiver of such provisions nor the right of either party to enforce each and every provision. Furthermore, no term or provision hereof shall be deemed waived and no breach excused unless such waiver or consent shall be in writing and signed by the party claimed to have waived or consented. Any consent by any party to, or waiver of, a breach by the other, whether expressed or implied, shall not constitute a consent to, waiver of or excuse for any other, different or subsequent breach.

4.27 CURRENT REVENUES

The obligations of the parties under the Contract and any Ensuing Agreement(s) do not constitute a general obligation or indebtedness of the County for which the County is obligated to levy, pledge, or collect any of taxation. It is understood and agreed that the County shall have the right to terminate the Contract and any Ensuing Agreement(s) at the end of any the County fiscal year if the governing body of the County does not appropriate sufficient funds as determined by the County's budget for the fiscal year in question. The County may effect such termination by giving written notice of termination to t Successful Bidder at the end of its then-current fiscal year.

4.28 FOB DESTINATION

To the extent applicable to this IFB, all of the items listed are to be Free On Board to final destination (FOB Destination) with all transportation charges if applicable to be included in the Bid, unless otherwise specified in the Invitation for Bids. The title and risk of loss of the goods shall not pass to the County until receipt and acceptance takes place at the FOB Destination point.

4.29 BINDING EFFECT

This Contract and any Ensuing Agreement(s) shall be binding upon and inure to the benefit of the parties and their respective permitted assigns and successors.

4.30 ASSIGNMENT

The Successful Bidder's interest and duties hereunder may not be assigned or delegated to a third party without the express written consent of the County.

4.31 SAFETY

The Successful Bidder is responsible for initiating, maintaining, and supervising all safety precautions and programs in connection with any services to be provided hereunder. The safety program shall comply with all applicable requirements of the current federal Occupational Safety and Health Act and all other applicable federal, state and local laws and regulations.

4.32 GENERAL OBLIGATIONS AND RELIANCE

The Successful Bidder shall perform all services and/or provide all goods, as well as those reasonably inferable and necessary for completion and provision of services and/or goods required hereunder. The Successful Bidder shall keep the County informed of the progress and quality of the services. The Successful Bidder agrees and acknowledges that the County is relying on the Successful Bidder's represented expertise and ability to provide the goods and/or services described herein. The Successful Bidder agrees to use its best efforts, skill, judgment, and abilities to perform its obligations in accordance with the highest standards used in the profession and to further the interests of the County accordance with the County's requirements and procedures. The Successful Bidder's duties, set forth herein, shall at no time be in any way diminished by reason of any approval by the County, n shall the Successful Bidder be released from any liability by reason of such approval by the County, it being understood that the County at all times is ultimately relying upon the Successful Bidder's skill and knowledge in performing the services and providing any goods required hereunder.

4.33 ESTIMATED QUANTITIES

To the extent applicable to this IFB, the estimated quantity of each item listed in this IFB is only estimate; the actual quantity to be purchased may be more or less. The County is not obligated purchase any minimum amount, and the County may purchase any reasonable amount greater than t estimate for the same unit price. Any limit on quantities available must be stated expressly in the Bid.

4.34 CONTRACTUAL DEVELOPMENT

The contents of the IFB and the Successful Bidder's Bid will become an integral part of the Contract, but may be modified, at the County's sole discretion, by provisions of an Ensuing Agreement. Therefore, the Bidder must agree to an inclusion of an Ensuing Agreement of the Bid specifications, terms and conditions of this IFB. If an Ensuing Agreement is required under this IFB, information relative to t Agreement will be located in the Special Provisions Section of this IFB.

4.35 SURVIVABILITY

All applicable agreements that were entered into between the Successful Bidder and the County, under the terms and conditions of the Contract and/or any Ensuing Agreement(s), shall survive the expiration or termination thereof for ninety (90) days unless a new contract has been awarded.

The County may exercise, by written notice to the Successful Bidder no later than ten (10) calendar days of the Contract expiration, this clause for emergencies only.

4.36 AIR QUALITY

In determining the overall best Bid, the County may, to the extent applicable, exercise the option granted to local governments under the Texas Local Government Code, Section 271.907.

This option allows the County to evaluate Bids and give preference to goods and/or services of a Bidder that demonstrates that the Bidder meets or exceeds any and all state or federal environmental standards, including voluntary standards, relating to air quality. If the Bid being submitted will have an effect on air quality for the County (as it relates to any state, federal, or voluntary air quality standard), then the Bidder is encouraged to provide information in narrative indicating the anticipated air quality impact. All Bidders are expected to meet all mandated state and federal air quality standards.

4.37 ENTIRE AGREEMENT

The Contract and any Ensuing Agreement(s) shall supersede all prior Agreements, written or oral between the Successful Bidder and the County and shall constitute the entire Agreement and understanding between the parties with respect to the services and/or goods to be provided. Each of the provisions herein shall be binding upon the parties and may not be waived, modified, amended or altered, except by writing signed by the Successful Bidder and the County.

4.38 PAYMENT

The County's payment for goods and services shall be governed by the Texas Government Code, Chapter 2251. An invoice shall be deemed overdue the thirty-first (31st) day after the later of the following:

A. The date the County receives the goods under the Contract;
B. The date the performance of the service under the Contract is completed; or
C. The date the Williamson County Auditor receives an invoice for the goods or services.

Interest charges for any overdue payments shall be paid by the County in accordance with Texas Government Code, Section 2251.025. More specifically, the rate of interest that shall accrue on a late payment is the rate in effect on September 1 of the County's fiscal year in which the payment becomes due. The said rate in effect on September 1 shall be equal to the sum of one (1) percent, and the prime rate published in the Wall Street Journal on the first (1st) day of July of the preceding fiscal year that does not fall on a Saturday or Sunday.

In the event that an error appears in an invoice submitted by the Successful Bidder, the County shall notify the Successful Bidder of the error not later than the twenty-first (21st) day after the date the County receives the invoice. If the error is resolved in favor of the Successful Bidder, the Successful Bidder shall be entitled to receive interest on the unpaid balance of the invoice submitted by the Successful Bidder beginning on the date that the payment for the invoice became overdue. If the error is resolved in favor of the County, the Successful Bidder shall submit a corrected invoice that must be paid in accordance within the time set forth above. The unpaid balance accrues interest as provided by the Texas Government Code, Chapter 2251, if the corrected invoice is not paid by the appropriate date.

As a minimum, invoices shall include:

A. Name, address, and telephone number of the Successful Bidder and similar information in the event the payment is to be made to a different address.

B. The County Contract, Purchase Order.

C. Identification of items or service as outlined in the Contract.

D. Quantity or quantities, applicable unit prices, total prices and total amount.

E. Any additional payment information which may be called for by the Contract.

Payment inquiries should be directed to the following address:

Williamson County Auditor's Office, Accounts Payable Department
Email: accountspayable@wilco.org
Phone: 512-943-1500

4.39 CONTRACTUAL FORMATION AND ENSUING AGREEMENT

The IFB and the Bidder's Bid, when properly accepted by the Commissioners Court, shall constitute a Contract equally binding between the Successful Bidder and the County.

If an Ensuing Agreement is required by this IFB, that information will be provided in Special Provisions section of this IFB. The Successful Bidder shall be required to execute the Agreement at the Williamson County Purchasing Department approximately ten (10) calendar days after the Successful Bidder is notified of award. The Ensuing Agreement shall be in the same form as the Agreement which is attached to the end of this IFB. The only anticipated changes in the Ensuing Agreement will be to include additional exhibits, to fill in blanks to identify the Successful Bidder, and terms relating to the compensation, or to revise the Agreement to accommodate corrections, changes in the scope of services, or changes pursuant to Addenda issued. **Bidders should raise any questions regarding the terms of the Agreement in the form of written questions or submittals as described in the Public Announcement and General Information portion of this IFB.** Because the signed Ensuing Agreement will be substantively and substantially derived from the attached Agreement, each Bidder is urged to seek independent legal counsel as to any questions about the terms, conditions or provisions contained in the Agreement *before* submitting a Bid. Again, the attached Agreement, if applicable, contains important legal provisions and is considered part and parcel of this IFB. Failure or refusal to sign aforesaid Agreement shall be grounds for the County to revoke any award which has been issued, forfeit Bid security, if applicable, and select another Bidder.

4.40 COOPERATIVE PURCHASING PROGRAM

During the term of the Contract resulting from this IFB, the County would like to afford the same prices, terms and conditions to other political subdivisions or public entities. Another entity's participation in the Contract resulting from this IFB is subject to a properly authorized Purchasing Cooperative Inter-local Agreement with the County. Any liability created by purchase orders issued against the Contract shall be the sole responsibility of the governmental agency placing the order.

4.41 INSURANCE REQUIREMENTS

To the extent applicable Insurance information will appear in the Additional Stipulations section that is in this IFB Package.

4.42 BIDDERS BOND, WARRANTY BOND, PERFORMANCE AND PAYMENT BONDS

To the extent applicable Bond information will appear in the Additional Stipulations section that is in this IFB Package.

4.43 LEGAL LIABILITY INFORMATION

The Successful Bidder shall disclose all legal liability information by listing any pending litigation anticipated litigation that your firm is involved in including, but not limited to, potential or actual legal matters with private parties and any local, state, federal or international governmental entities. The County reserves the right to consider legal liability information in the recommendation of any proposed contract to the Commissioners Court.

4.44 INCLEMENT WEATHER

In case of inclement weather or any other unforeseen event causing the County to close for business on the date of a Bid submission deadline, the Bid closing will automatically be postponed until the next business day the County is open. If inclement weather conditions or any other unforeseen event causes delays in carrier service operations, the County may issue an Addendum to all known Bidders interested in the project to extend the deadline. It will be the responsibility of the Bidder to notify the County of their interest in the project if these conditions are impacting their ability to turn in a submission within the stated deadline. The County reserves the right to make the final judgement call to extend any deadline.

4.45 CONFIDENTIALITY

The Bidder expressly agrees that it will not use any direct or incidental confidential information that may be obtained while working in a governmental setting for its own benefit, and agrees that it will not access unauthorized areas or confidential information and it will not disclose any information to unauthorized third parties, and will take care to guard the security of the information at all times.

Additional Stipulations

1 Additional Stipulations

1.1 Introduction

The Bid evaluation and selection process is detailed in this section, as are other factors, and the format in which the Price Bid of each Bid should be submitted.

1.2 Technical Contact

J. Terron Evertson, P.E. (or successor), County Engineer, Williamson County 3151 South East Inner Loop, Suite B, Georgetown, Texas shall serve as the County's Technical Contact with designated responsibility to ensure compliance with the requirements of the Contract and any Ensuing Agreement, such as, but not limited to, acceptance, inspection and delivery. The Technical Contact together with the Purchasing Department will serve as a liaison between the Williamson County Commissioners Court and the Successful Bidder.

1.3 Contract Term

The Successful Bidder shall provide the goods and/or services described herein for an initial term of twelve (12) months, from date of formal award.

1.4 Contract Extensions

At the end of the current fiscal year, the Commissioners Court reserves the right to extend this contract, by mutual agreement of both parties, as it deems to be in the best interest of the County. This extension will be in twelve (12) months increments for up to an additional twenty-four (24) months, with the terms and conditions remaining the same unless if requested by the successful bidder and approved be the Commissioners Court, a price escalation at renewal time is awarded of no more than the consumer price index, All urban consumers (CPI-U), US City Average, all items, as published by the United States department of Labor, Bureau of Labor Statistics.

The yearly increase in the CPI shall be the latest index published one hundred and eighty (180) days prior to the end of the contract year. The total period of this contract, including all extension will not exceed a maximum combined period of thirty-six (36) months. The extension of this contract is contingent on the appropriation of necessary funds by Commissioners Court for the fiscal year in question. Upon the failure of Commissioners Court to so appropriate in any year, the successful bidder may elect to terminate this agreement, with no additional liability to the County. The County and successful bidder agree that termination shall be the successful bidder's sole remedy under this circumstance.

1.5 Economic Adjustment

To the extent applicable to this IFB, the Successful Bidder may submit a request for a contract pricing adjustment for approval by the County if the Bidder can show just cause substantiating an adjustment. The requested adjustment must be for goods and/or services and in no way represent an increase in the Bidder's profits, labor or other overhead. The Bidder's request must include evidence in the form of a certified statement or affidavit from the supplier or manufacturer detailing the price adjustment, the effective date for the adjustment, and any other information requested by the Purchasing Department to verify the adjustment.

An adjustment request will not become effective until after approval of the Williamson County Commissioners Court. Until then, the original contract pricing will remain unchanged. If an issue regarding an adjustment request is not resolved, the Purchasing Department reserves the right to seek competition from other sources.

Any goods or services delivered by the Successful Bidder at a not agreed upon price are done so at the Successful Bidder's risk.

Pricing must remain firm for the first three (3) months of the initial contract period. A minimum period of three (3) months must elapse between adjustment requests.

1.6 Insurance Requirements

By signing its Bid, the Bidder agrees to maintain at all times during any term of the Contract and any ensuing Agreement at Bidder's cost, insurance in accordance with this provision.

Bidder will be required to submit Certificates of Insurance **prior to contract award and any renewals.**

All certificates of insurance coverage as specified below must be provided to the following location:

Williamson County Purchasing Department
901 S Austin Ave
Georgetown, Texas 78626

Failure to comply with these Insurance Requirements may result in the termination of the Contract and any ensuing Agreement(s) between the Successful Bidder and County.

The following coverage limits shall be required at a minimum:

A. Worker's Compensation — Statutory – Texas Law

B. Employer's Liability:

Bodily Injury by Accident	$500,000 Ea. Accident
Bodily Injury by Disease	$500,000 Ea. Employee
Bodily Injury by Disease	$500,000 Policy Limit

C. Comprehensive general liability including completed operations and contractual liability insurance for bodily injury, death, or property damages in the following amounts:

COVERAGE	PER PERSON	PER OCCURRENCE
Comprehensive General Liability	$1,000,000	$1,000,000
Aggregate policy limits:	$1,000,000	

Successful Bidder's property will not be covered by any insurance that may be carried by Williamson County. Successful Bidder assumes the risk of loss on its contents and property that are situated on/in/around Williamson County property. The Successful Bidder is strongly encouraged to obtain insurance on its property to the extent deemed necessary by the Successful Bidder.

The deductible for an insurance policy required hereunder shall not exceed $100,000. **Williamson**

County shall be named as an additional insured under any policy of insurance required hereunder.

Successful Bidder shall not commence any work until it has obtained all required insurance and such insurance has been approved by County. Successful Bidder shall not allow any subcontractor(s) to commence work to be performed until all required insurance has been obtained by such subcontractor(s) and approved by County. Approval of the insurance by County shall not relieve or decrease the liability of Successful Bidder or its subcontractor(s) hereunder.

The required insurance must be written by a company approved to do business in the State of Texas with a financial standing of at least an A- rating, as reflected in Best's insurance ratings or by a similar rating system recognized within the insurance industry at the time the policy is issued. Successful Bidder shall furnish County with a certificate of coverage issued by the insurer. Successful Bidder shall not cause any insurance to be canceled nor permit any insurance to lapse. ALL INSURANCE CERTIFICATES SHALL INCLUDE A CLAUSE TO THE EFFECT THAT THE POLICY SHALL NOT BE CANCELED OR REDUCED, RESTRICTED OR LIMITED UNTIL TEN (10) CALENDAR DAYS AFTER COUNTY HAS RECEIVED WRITTEN NOTICE AS EVIDENCED BY RETURN RECEIPT OF REGISTERED OR CERTIFIED LETTER.

It is the intention of the County, and agreed to and hereby acknowledged by the Successful Bidder, that no provision of this Contract or any ensuing Agreement shall be construed to require the County to submit to mandatory arbitration or mediation in the settlement of any claim, cause of action or dispute, except as specifically required in direct connection with an insurance claim or threat of claim under an insurance policy required hereunder which absolutely requires arbitration or mediation of such claim, or as otherwise required by law or a court of law with jurisdiction over the provisions of this Contract or any ensuing Agreement.

GENERAL NOTES AND TECHNICAL SPECIFICATIONS

General Information

Williamson County is seeking qualified suppliers for the purchase and delivery of Asphalt Cement (AC-10) per Item 300, Texas Department of Transportation, Standard Specifications for Construction and Maintenance of Highways, Streets and Bridges 2014.

Quantities shown are **estimated quantities**. The actual quantity purchased may be more or less. The County is not obligated to purchase any minimum amount and the County may purchase any reasonable amount greater than the estimate for the same unit price. Items will be ordered on an "As Needed" basis.

Williamson County reserves the right to award the bid in whole to one Successful Bidder or to award a contract on each separate item or combination of items as may be most advantageous to the County. A primary, secondary, tertiary, and/or subsequent award may be made for this bid by the County.

It is expressly understood and agreed that in case Williamson County should need any item(s) not available within the time frame needed from the successful vendor(s) during the term of this contract, the County reserves the right to purchase the item(s) vendors from other than the successful vendor(s) and shall not be in violation of any terms or conditions of said contract.

Provide three (3) references where like services have been performed by your firm. Include name of firm, address, telephone number and name of representative.

Definition of Terms

County: Williamson County Road and Bridge Division

Successful Bidder: The responsible Bidder to whom Williamson County intends to award the contract.

Engineer: Director of Road and Bridge Division, or designee.

Inspector: Employee of Williamson County supplied full time to the contractor's crew for the selection, prosecution, and quality control of the work. Should the work, as well as the geographical location, allow, the County may supply one foreman for multiple crews.

Specifications: Texas Department of Transportation Standard Specifications for Construction and Maintenance of Highways, Streets, and Bridges 2014.

Department: Road and Bridge Division

Control of Materials

Source Control. Use only materials that meet Contract requirements. Unless otherwise specified or approved, use new materials for the work. Secure the Engineer's approval of the proposed source of materials to be used before their delivery. Materials can be approved at a supply source or staging area but may be re-inspected.

The Successful Bidder shall submit, with the bid, the following test reports from an approved independent testing laboratory, providing the proposed materials compliance and adequacy. Emulsions and Specialty Emulsions:

Viscosity, Saybolt Furol
Distillation Test
Tests on Residue from Distillation

Material Quality. Correct or remove materials that fail to meet the contract requirements, for cost incurred if additional sampling and testing is required by a change of source.

Materials not meeting Contract requirements will be rejected, unless the Engineer approves corrective actions. Upon rejection, immediately remove and replace rejected materials.
If the Successful Bidder does not comply with this Article, the County may remove and replace defective material. The cost of testing, removal, and replacement will be deducted from invoice.

Manufacturer Warranties. Transfer to the County warranties and guarantees required by the Contract or received as part of normal trade practice.

Plant Inspection and Testing. The Engineer may but is not obligated to inspect materials at the acquisition or manufacturing source. Material samples will be obtained and tested for compliance with quality requirements. Materials produced under County inspection are for County use only unless released in writing by the Engineer.
If inspection is at the plant, meet the following conditions unless otherwise specified:

- Cooperate fully and assist the Engineer during the inspection
- Ensure the Engineer has full access to all parts of the plant used to manufacture or produce materials.
- In accordance with pertinent items and the Contract, provide a facility at the plant for use by the Engineer as an office or laboratory.
- Provide and maintain adequate safety measures and restroom facilities.
- Furnish and calibrate scales, measuring devices, and other necessary equipment.

The Engineer may provide inspection for periods other than daylight hours if:

- Continuous production of materials for County use is necessary due to the production volume being handled at the plant and
- The lighting is adequate to allow satisfactory inspection.

General Notes

All work performed and all products furnished under the provision of the Contract shall comply with requirements which pertain to the various items of work included herein as *Standard Specifications for Construction of Highways, Streets and Bridges* of the Texas Department of Transportation 2014, and as amended and/or updated, which is incorporated herein by reference for all purposes. In the event that any specification set out herein conflicts with the said TxDOT specifications, the specification set out herein shall control and govern.

Successful Bidder shall comply with insurance requirements dictated within this contract.

Do not park vehicles where driver sight distance to businesses and side street intersections is obstructed. If it is necessary to park where drivers' views are blocked, Successful Bidder shall make every effort to flag traffic accordingly. Give the travelling public first priority.

Successful Bidder's vehicles shall not be maintained on-site during construction, except at designated maintenance sites as approved by the Foreman.

Care shall be exercised to prevent damage to all property in and around the construction zone. The Successful Bidder shall be liable for the repair and restoration of any property damaged as a result of the Successful Bidder's prosecution of the work.

This shall include, but is not limited to, re-vegetation of all areas damaged or destroyed by transporting operation. Successful Bidder will be held liable and responsible for such areas until growth is reestablished to the satisfaction of the County.

Ornamental landscape plantings of trees, shrubs and grasses that are damaged or destroyed during transporting operation shall be replaced with plant material of comparable size and quality approved by the County.

ITEM 300 – Asphalts, Oils and Emulsions

Demurrage costs do not begin until two hours past delivery time, or two hours after the County begins unloading the transport, whichever event happens first.

County will pay no more than $80 per hour for Demurrage

All bids should be based on fully loaded transport (approximately 5000 – 5500 gal).

WILLIAMSON COUNTY BID FORM

ASPHALT CEMENT (AC-10)

BID NUMBER: IFB18XX-XXX

NAME OF BIDDER: _____

Mailing Address: _____

City: _____ State: _____ Zip:_____

Email Address: _____

Telephone: (_____) _____ Fax: (_____) _____ _____

Mobile Phone: (_____) _____

ITEM #	DESCRIPTION	ESTIMATED QUANTITY	UNIT	UNIT PRICE
1	Asphalt Cement (AC-10)	100,000	GAL	

The undersigned, by his/her signature, represents that he/she is authorized to bind the bidder to fully comply with the terms and conditions of the attached Invitation for Bid, Specifications, and Special Provisions for the amount(s) shown on the accompanying bid sheet(s).

_____ Date of Bid: _____
Signature of Person Authorized to Sign Bid

Printed Name and Title of Signer:_____

BID AFFIDAVIT

This form must be completed, signed, notarized and returned with Bid package

The undersigned attests that the company named below, under the provisions of Subtitle F, Title 10, Texas Government Code Chapter 2270:

1. Does not boycott Israel currently; and
2. Will not boycott Israel during the term of the contract.

Pursuant to Section 2270.001, Texas Government Code:

1. "Boycott Israel" means refusing to deal with, terminating business activities with, or otherwise taking any action that is intended to penalize, inflict economic harm on, or limit commercial relations specifically with Israel, or with a person or entity doing business in Israel or in an Israeli-controlled territory, but does not include an action made for ordinary business purposes; and
2. "Company" means a for-profit sole proprietorship, organization, association, corporation, partnership, joint venture, limited partnership, or any limited liability company, including a wholly owned subsidiary, majority-owned subsidiary, parent company or affiliate of those entities or business associations that exist to make a profit.

The undersigned certifies that the IFB and the Bidder's Bid have been carefully reviewed and are submitted as correct and final. Bidder further certifies and agrees to furnish any and/or all goods and/or services upon which prices are extended at the price Bid, and upon the conditions contained in the IFB.

I hereby certify that the foregoing Bid has not been prepared in collusion with any other Bidder or other person or persons engaged in the same line of business prior to the official opening of this Bid. Further, I certify that the Bidder is not now, nor has been for the past six (6) months, directly or indirectly concerned in any pool or agreement or combination, to control the price of services/commodities Bid on, or to influence any person or persons to submit a Bid or not to submit a Bid thereon."

Name of Bidder:	
Address of Bidder:	
Email:	
Telephone:	
Printed Name of Person Submitting Affidavit:	
Signature of Person Submitting Affidavit:	

Cooperative Purchasing Program

Check one of the following options below. A non-affirmative Bid will in no way have a negative impact on the County's evaluation of the Bid.

☐	I will offer the quoted prices to all authorized entities during the term of the County's Contract.
☐	I will not offer the quoted prices to all authorized entities.

If no box is checked, the Bidder agrees to make best efforts in good faith to offer the quoted prices to all authorized entities.

BEFORE ME, the undersigned authority, a Notary Public, personally appeared _____ (*Name of Signer*), who after being by me duly sworn, did depose and say: "I, _____, (*Name of Signer*) am a duly authorized officer of/agent for _____ (*Name of Bidder*) and have been duly authorized to execute the foregoing on behalf of the said _____ (*Name of Bidder*).

SUBSCRIBED AND SWORN to before me by the above-named _____

on this the _____ day of _____, 20_____.

_____

Notary Public in and for

The State of _____

The County of _____

SIGNATURE AND NOTARY NOT REQUIRED IF COMPLETING IN BIDSYNC ELECTRONICALLY.

CONFLICT OF INTEREST QUESTIONNAIRE

For vendor or other person doing business with local governmental entity

Form CIQ

This questionnaire is being filed in accordance with chapter 176 of the Local Government Code by a person doing business with the governmental entity.

By law this questionnaire must be filed with the records administrator of the local government not later than the 7th business day after the date the person becomes aware of facts that require the statement to be filed. See Section 176.006, Local Government Code.

A person commits an offense if the person violates Section 176.006, Local Government Code. An offense under this section is a Class C misdemeanor.

OFFICE USE ONLY

Date Received

1 **Name of person doing business with local governmental entity.**

2 ☐ **Check this box if you are filing an update to a previously filed questionnaire.**

(The law requires that you file an updated completed questionnaire with the appropriate filing authority not later than September 1 of the year for which an activity described in Section 176.006(a), Local Government Code, is pending and not later than the 7th business day after the date the originally filed questionnaire becomes incomplete or inaccurate.)

3 **Describe each affiliation or business relationship with an employee or contractor of the local governmental entity who makes recommendations to a local government officer of the local governmental entity with respect to expenditure of money.**

4 **Describe each affiliation or business relationship with a person who is a local government officer and who appoints or employs a local government officer of the local governmental entity that is the subject of this questionnaire.**

CONFLICT OF INTEREST QUESTIONNAIRE
For vendor or other person doing business with local governmental entity

Form CIQ
Page 2

5 **Name of local government officer with whom filer has affiliation or business relationship.**
(Complete this section only if the answer to A, B, or C is YES.)

This section, item 5 including subparts A, B, C & D, must be completed for each officer with whom the filer has affiliation or other relationship. Attach additional pages to this Form CIQ as necessary.

A. Is the local government officer named in this section receiving or likely to receive taxable income from the filer of the questionnaire?

☐ Yes ☐ No

B. Is the filer of the questionnaire receiving or likely to receive taxable income from or at the direction of the local government officer named in this section AND the taxable income is not from the local governmental entity?

☐ Yes ☐ No

C. Is the filer of this questionnaire affiliated with a corporation or other business entity that the local government officer serves as an officer or director, or holds an ownership of 10 percent or more?

☐ Yes ☐ No

D. Describe each affiliation or business relationship.

6. Describe any other affiliation or business relationship that might cause conflict of interest:

7

Signature of person doing business with the governmental entity	Date

Signature not required if completing in BIDSYNC electronically.

Bidder References

List the last (3) companies or governmental agencies, where the same or similar goods and/or services as contained in this IFB package, were recently provided by Bidder.

Reference 1

Client Name: Location:

Contact Name: Title:

Phone: E-mail

Contract Date To: Contract Date From: Contract Value: $

Scope of Work:

Reference 2

Client Name: Location:

Contact Name: Title:

Phone: E-mail

Contract Date To: Contract Date From: Contract Value: $

Scope of Work:

Reference 3

Client Name: Location:

Contact Name: Title:

Phone: E-mail

Contract Date To: Contract Date From: Contract Value: $

Scope of Work:

Question and Answers for Bid #1804-223 - Asphalt Cement

Overall Bid Questions
There are no questions associated with this bid.

Commissioners Court - Regular Session **40.**

Meeting Date: 04/17/2018

Purchase of Vehicles for Constable Precinct 3

Submitted For: Randy Barker **Submitted By:** Erica Smith, Purchasing

Department: Purchasing

Agenda Category: Regular Agenda Items

Information

Agenda Item

Discuss, consider and take appropriate action on approving the purchase of two (2) Chevrolet Tahoes in the amount of $95,967.44, from Holiday Chevrolet per Tarrant County Cooperative Contract # 2016-006 to support the operations of Williamson County Constable Precinct 3.

Background

This purchase is for Williamson County Constable Precinct 3. See attached quote for vehicle specifications; quotes include upfitting and equipment as specified. Funding from General Fund 01.0100.0553.005700 as approved in FY 2018 Budget.

Fiscal Impact

From/To	Acct No.	Description	Amount

Attachments

Vehicle Quote Constable Pct 3

Form Review

Inbox	Reviewed By	Date
Purchasing (Originator)	Randy Barker	04/11/2018 10:05 AM
County Judge Exec Asst.	Wendy Coco	04/11/2018 10:23 AM
Form Started By: Erica Smith		Started On: 04/09/2018 09:54 AM
Final Approval Date: 04/11/2018		

DEFENDER SUPPLY

845 West FM 407
Argyle, TX 76226

Date	4/6/2018
Estimate By	George Severe
	george@defendersupply.com
	(903) 564-5641



Bill To
Kevin Stofle Williamson Co TX PCT3 - Constable 301 SE Inner Loop, Suite 102 Georgetown, TX 78626 512-943-1434

Customer Contact	Kevin Stofle
Customer Phone	512-943-1434
Customer E-mail	kstofle@wilco.org
Estimate #	20416

2018 Chevrolet Tahoe RWD 9C1

Vehicle Base Color - Black

Description	Location	Qty.	Cost	Total
2018 Chevrolet Tahoe RWD 9C1 with EcoTec3 5.3-liter, Direct-Injection V8, 355 hp/383 pound-feet of torque, FlexFuel1 capability & Active Fuel Management, External Engine Oil Cooler, 660-CCA Primary Battery with Standard 730-CCA Isolated Auxiliary Battery, 170-Amp Alternator, Hydra-Matic 6L80 6-Speed Auto Overdrive Trans with Tow/Haul Mode, Rear Axle, 3.08 Ratio, Auxiliary Transmission Oil Cooler, Heavy Duty Locking Differential, Heavy-Duty Police-Rated Suspension, StabiliTrak Stability Control System, Engine Skid Plate, High Out-Put Alternator, High Capacity Air Cleaner, Power Windows / Door Locks, Power Heated Mirrors, Dual Climate Control, Front & Rear Air Conditioning, 6-Way Power Driver & Passenger Seats, 4.2" Diagonal Display with AM/FM stereo, CD player & SD Card Slot. OnStar with Bluetooth Connectivity, Rear-Vision Camera System, Tilt Steering, Cruise Control, Cloth Front & Vinyl Rear Seats, Heavy-Duty Vinyl Flooring, 140-mph Certified Speedometer & Driver Information Center, Compass, Outside Temperature, Projector-Beam Headlamps, Engine Hour Meter, Tilt-Adjustable Steering Column, Electric Power Steering, Intermittent Wet-Arm Wiper/Washers, Rear Wiper / Washer, Rear-Passenger Conversation Mirror, Remote Keyless Key FOB Entry, Rear Park Assist with Audible Warning, Heavy-Duty 4-wheel disc Antilock Brake System with Power Assist, V-Rated All Season Police Pursuit P265/60R17 Tires, 17" Steel Wheels with Bolt-on Center Caps, Full Size Matching Spare Tire with Inactive Tire Pressure Monitor, Front Tow Hooks, Driver's Side Spotlight. Purchased Through Holiday Chevrolet Using Tarrant County Cooperative Contract # 2016-006. Options: GBA - Color of Vehicle - Black AMF - 6 Additional Key FOB's 5HP - 6 Additional Keys BTV - Remote Start 5T5 - Rear Seat V76 Recovery Hooks Vin # Customer PO # Make Payment to Holiday Chevrolet - Customer Must Have by September 30, 2018 Purchased Through Holiday Chevrolet Using The Tarrant County Cooperative Contract # 2016-006. Vehicle titles should be in the name & address of: Williamson County 301 SE Inner Loop, Suite 102 Georgetown, TX 78626	Vehicle Description	1	32,709.00	32,709.00
2 Year State Inspection Certificate		1	7.00	7.00

Vehicle and Emergency Equipment Total

Quantity Ordered 1

Total Vehicle Order Cost $49,148.52

Final sale amount may be subject to state and local sales tax. PLEASE NOTE: Once this estimate has been approved, either by signature on this form, written approval referencing the estimate number or the issuance of purchase order, any changes or cancellations of parts made by the customer are subject to a 25% restocking fee. Any addtional customer-requested parts/services will be added to the total amount of the sale.

SIGNATURE

DEFENDER SUPPLY

845 West FM 407
Argyle, TX 76226

Date	4/6/2018
Estimate By	George Severe
	george@defendersupply.com
	(903) 564-5641



Bill To
Kevin Stofle Williamson Co TX PCT3 - Constable 301 SE Inner Loop, Suite 102 Georgetown, TX 78626 512-943-1434

Customer Contact	Kevin Stofle
Customer Phone	512-943-1434
Customer E-mail	kstofle@wilco.org
Estimate #	20416

2018 Chevrolet Tahoe RWD 9C1

Vehicle Base Color - Black

Description	Location	Qty.	Cost	Total
Unity driver side halogen spotlight, shaft, handle and mount for a 2015+ Tahoe (LED replacement bulb sold separately) - (for Silverado 2500 and above please include part #)		1	233.30	233.30
Whelen LED 8 Degree Spotlight Replacement		1	115.00	115.00
Troy Products Contour Console for 2015+ Chevrolet Tahoe - Includes 2" USB plate, Arm Rest, Dual Cup Holder & Mic Clip.		1	367.57	367.57
Troy Computer Stand (console mounted), Height Adjustable with Swing Arm & 360 Degree Platform Rotate		1	285.12	285.12
3 Additional 12Volt DC Heavy Duty Electrical Power Socket w/moisture covers - Mounted on Right Side of Console		3	3.85	11.55
Compartment Light, Split Red/White Mounted in Cabin Ceiling Mount & (2) on Rear Tailgate with 3-Way Switches		3	47.52	142.56
Stringer DS LED 120V AC/12V DC Steady Charge Piggyback - Mounted on Prisoner Partition		1	128.34	128.34
Make & Model of Customer Supplied Police Radio - Motorola XTL 2500 Is Customer Supplied Police Radio a One or Two Piece Unit - One - Hot all the Time. What is the Frequency of Customer Supplied Police Radio - 800MHz				
Make & Model of Customer Supplied Laptop - Panasonic Toughbook CF33 Does the of Customer Supplied Laptop have Docking Capabilities - Yes				
Two Way 800 MHZ Radio Antenna & Coax Cable		1	32.66	32.66
Whelen Legacy 54" Light Bar Package with Siren, Siren Speaker, Speaker Bracket & Strap Kits. Light Bar includes Take Downs, Alleys and R/W/B/W Front Configuration with Red/Amber/Blue/Amber Rear Configuration with Siren Mounted behind Grill.		1	2,971.96	2,971.96
Whelen Alpha™ Siren Series Separate Siren Driver		1	152.96	152.96
Whelen Low Frequency Howler Siren System		1	482.34	482.34
Whelen Howler Bracket		1	30.00	30.00
Whelen Tahoe Headlight / Taillight Flasher for 2015 Chevrolet Tahoe 9C1.		1	63.63	63.63
Whelen Vertex LED Light - Red - Mounted in Front Daytime Running Lights		1	80.01	80.01
Whelen Vertex LED Light - Blue - Mounted in Front Daytime Running Lights		1	80.01	80.01
M4 Red and Blue light heads with fog light mounting brackets for 2015+ Tahoe				253.46

Vehicle and Emergency Equipment Total

Quantity Ordered 1

Total Vehicle Order Cost $49,148.52

Final sale amount may be subject to state and local sales tax. PLEASE NOTE: Once this estimate has been approved, either by signature on this form, written approval referencing the estimate number or the issuance of purchase order, any changes or cancellations of parts made by the customer are subject to a 25% restocking fee. Any addtional customer-requested parts/services will be added to the total amount of the sale.

SIGNATURE

DEFENDER SUPPLY

845 West FM 407
Argyle, TX 76226

Date	4/6/2018
Estimate By	George Severe
	george@defendersupply.com
	(903) 564-5641



Bill To
Kevin Stofle Williamson Co TX PCT3 - Constable 301 SE Inner Loop, Suite 102 Georgetown, TX 78626 512-943-1434

Customer Contact	Kevin Stofle
Customer Phone	512-943-1434
Customer E-mail	kstofle@wilco.org
Estimate #	20416

2018 Chevrolet Tahoe RWD 9C1

Vehicle Base Color - Black

Description	Location	Qty.	Cost	Total
Whelen ION™ Series LED, Red/Blue Split Head with Universal Clip Mounts - Mounted in Front Grill		4	106.92	427.68
Whelen ION™ Grille Mount Brackets for (2) Two ION's Mounted Side by Side for 2015+ Chevy Tahoe 9C1		2	16.445	32.89
HG2 68" Running Board Light for 2015+ Chevrolet Tahoe 9C1 in Red/Blue - Please include a small Trigger Programming Switch on the back side of the console # HG2-HG2ZPC68-BR		1	795.00	795.00
HG2 61" Rear Hatch Bumper Lighting Kit in Red/Blue for 2015+ Chevrolet Tahoe 9C1 # HG2-HG2ZDTAH-BR		1	899.00	899.00
HG2 10.5" Rear Side Glass Red/Blue Split Head Lighting Kit for 2015+ Chevrolet Tahoe 9C1 (Pair) # HG2-HG2ZDM1-BR		1	265.00	265.00
HG2-Bracket for Rear Side Glass Lighting Kit for 2015+ Chevrolet Tahoe 9C1 # HG2-HG2-Bracket		1	40.00	40.00
Whelen Eight Lamp TIR3™ Super-LED® Traffic Advisor™with Two End Flashing LEDs - Red/Amber/Blue with On/Off Override Kill Switch		1	428.40	428.40
Whelen Dominator 4" Brackets		1	19.95	19.95
Whelen 360 Degree LED Side Emitter Light Head - Red/Blue Split - Mounted in Reverse Lights		2	79.38	158.76
Recessed Prisoner Partition w/Center Slider - Includes Recessed Panel & Lower Kick Panels for 2015+ Tahoes		1	489.51	489.51
Single T Rail Weapon system with universal handcuff lock and handcuff key - Mounted on Prisoner Partition.		1	240.74	240.74
Charcoal Grey ABS, Standard Transport Seat (straight back) w/ 7 Ga. Steel Screen Window Cargo Barrier & Seat Mount Kit (2015+ Tahoe)		1	670.12	670.12
Go Industries Single Level Law Enforcement Storage System Constructed of Black Powder Coat 16 Gauge Steel for Chevrolet Tahoe 9C1, PPV & SSV- 43" W X 32" D X 12" H		1	800.00	800.00
Paint Scheme - All Four Doors Painted White - Tahoe - See Pictures		1	995.00	995.00
Custom Reflective Vehicle Graphic Kit w Reflective Chevrons for the Rear of Tahoe Bumpers by Mike Glass and Professional Installation		1	495.00	495.00
Defender Supply Wiring Harness, Power Distribution Block and Battery Management System		1	335.00	335.00
Dealer Prep		1	130.00	130.00

Vehicle and Emergency Equipment Total

Quantity Ordered 1

Total Vehicle Order Cost $49,148.52

Final sale amount may be subject to state and local sales tax. PLEASE NOTE: Once this estimate has been approved, either by signature on this form, written approval referencing the estimate number or the issuance of purchase order, any changes or cancellations of parts made by the customer are subject to a 25% restocking fee. Any addtional customer-requested parts/services will be added to the total amount of the sale.

SIGNATURE

DEFENDER SUPPLY

845 West FM 407
Argyle, TX 76226

Date	4/6/2018
Estimate By	George Severe
	george@defendersupply.com
	(903) 564-5641



Bill To
Kevin Stofle Williamson Co TX PCT3 - Constable 301 SE Inner Loop, Suite 102 Georgetown, TX 78626 512-943-1434

Customer Contact	Kevin Stofle
Customer Phone	512-943-1434
Customer E-mail	kstofle@wilco.org
Estimate #	20416

2018 Chevrolet Tahoe RWD 9C1

Vehicle Base Color - Black

Description	Location	Qty.	Cost	Total
Misc. Shop Supplies		1	30.00	30.00
Shipping of Above Emergency Parts for Upfit		1	150.00	150.00
Installation of Above Equipment plus Customer Supplied Police Radio, Police Speaker, Radio Wiring Harness, Docking Station, Laptop Power Supply & Panasonic Camera System.		40	90.00	3,600.00
Customer to Pick Up Vehicle				

Vehicle and Emergency Equipment Total **$49,148.52**

Quantity Ordered 1

Total Vehicle Order Cost **$49,148.52**

Final sale amount may be subject to state and local sales tax. PLEASE NOTE: Once this estimate has been approved, either by signature on this form, written approval referencing the estimate number or the issuance of purchase order, any changes or cancellations of parts made by the customer are subject to a 25% restocking fee. Any addtional customer-requested parts/services will be added to the total amount of the sale.

SIGNATURE _____

DEFENDER SUPPLY

845 West FM 407
Argyle, TX 76226

Date	4/6/2018
Estimate By	George Severe
	george@defendersupply.com
	(903) 564-5641



Bill To
Kevin Stofle Williamson Co TX PCT3 - Constable 301 SE Inner Loop, Suite 102 Georgetown, TX 78626 512-943-1434

Customer Contact	Kevin Stofle
Customer Phone	512-943-1434
Customer E-mail	kstofle@wilco.org
Estimate #	20419

2018 Chevrolet Tahoe RWD 9C1

Vehicle Base Color - Black

Description	Location	Qty.	Cost	Total
2018 Chevrolet Tahoe RWD 9C1 with EcoTec3 5.3-liter, Direct-Injection V8, 355 hp/383 pound-feet of torque, FlexFuel1 capability & Active Fuel Management, External Engine Oil Cooler, 660-CCA Primary Battery with Standard 730-CCA Isolated Auxiliary Battery, 170-Amp Alternator, Hydra-Matic 6L80 6-Speed Auto Overdrive Trans with Tow/Haul Mode, Rear Axle, 3.08 Ratio, Auxiliary Transmission Oil Cooler, Heavy Duty Locking Differential, Heavy-Duty Police-Rated Suspension, StabiliTrak Stability Control System, Engine Skid Plate, High Out-Put Alternator, High Capacity Air Cleaner, Power Windows / Door Locks, Power Heated Mirrors, Dual Climate Control, Front & Rear Air Conditioning, 6-Way Power Driver & Passenger Seats, 4.2" Diagonal Display with AM/FM stereo, CD player & SD Card Slot. OnStar with Bluetooth Connectivity, Rear-Vision Camera System, Tilt Steering, Cruise Control, Cloth Front & Vinyl Rear Seats, Heavy-Duty Vinyl Flooring, 140-mph Certified Speedometer & Driver Information Center, Compass, Outside Temperature, Projector-Beam Headlamps, Engine Hour Meter, Tilt-Adjustable Steering Column, Electric Power Steering, Intermittent Wet-Arm Wiper/Washers, Rear Wiper / Washer, Rear-Passenger Conversation Mirror, Remote Keyless Key FOB Entry, Rear Park Assist with Audible Warning, Heavy-Duty 4-wheel disc Antilock Brake System with Power Assist, V-Rated All Season Police Pursuit P265/60R17 Tires, 17" Steel Wheels with Bolt-on Center Caps, Full Size Matching Spare Tire with Inactive Tire Pressure Monitor, Front Tow Hooks, Driver's Side Spotlight. Purchased Through Holiday Chevrolet Using Tarrant County Cooperative Contract # 2016-006. Options: GBA - Color of Vehicle - Black AMF - 6 Additional Key FOB's 5HP - 6 Additional Keys BTV - Remote Start 5T5 - Rear Seat V76 Recovery Hooks Vin # Customer PO # Make Payment to Holiday Chevrolet - Customer Must Have by September 30, 2018 Purchased Through Holiday Chevrolet Using The Tarrant County Cooperative Contract # 2016-006. Vehicle titles should be in the name & address of: Williamson County 301 SE Inner Loop, Suite 102 Georgetown, TX 78626	Vehicle Description	1	32,709.00	32,709.00
2 Year State Inspection Certificate		1	7.00	7.00

Vehicle and Emergency Equipment Total

Quantity Ordered 1

Total Vehicle Order Cost $46,818.92

Final sale amount may be subject to state and local sales tax. PLEASE NOTE: Once this estimate has been approved, either by signature on this form, written approval referencing the estimate number or the issuance of purchase order, any changes or cancellations of parts made by the customer are subject to a 25% restocking fee. Any addtional customer-requested parts/services will be added to the total amount of the sale.

SIGNATURE

DEFENDER SUPPLY

845 West FM 407
Argyle, TX 76226

Date	4/6/2018
Estimate By	George Severe
	george@defendersupply.com
	(903) 564-5641



Bill To
Kevin Stofle Williamson Co TX PCT3 - Constable 301 SE Inner Loop, Suite 102 Georgetown, TX 78626 512-943-1434

Customer Contact	Kevin Stofle
Customer Phone	512-943-1434
Customer E-mail	kstofle@wilco.org
Estimate #	20419

2018 Chevrolet Tahoe RWD 9C1

Vehicle Base Color - Black

Description	Location	Qty.	Cost	Total
Troy Products Contour Console for 2015+ Chevrolet Tahoe - Includes 2" USB plate, Arm Rest, Dual Cup Holder & Mic Clip.		1	367.57	367.57
Havis Power Supply - 120 Watts		1	127.60	127.60
Troy Computer Stand (console mounted), Height Adjustable with Swing Arm & 360 Degree Platform Rotate		1	285.12	285.12
3 Additional 12Volt DC Heavy Duty Electrical Power Socket w/moisture covers - Mounted on Right Side of Console		3	3.85	11.55
Compartment Light, Split Red/White Mounted in Cabin Ceiling Mount & (2) on Rear Tailgate with 3-Way Switches		3	47.52	142.56
Stringer DS LED 120V AC/12V DC Steady Charge Piggyback - Mounted on Prisoner Partition		1	128.34	128.34
Make & Model of Customer Supplied Police Radio - Motorola XTL 2500 Is Customer Supplied Police Radio a One or Two Piece Unit - One - Hot all the Time. What is the Frequency of Customer Supplied Police Radio - 800MHz				
Make & Model of Customer Supplied Laptop - Panasonic Toughbook CF33 - Does the of Customer Supplied Laptop have Docking Capabilities - Yes				
Two Way 800 MHZ Radio Antenna & Coax Cable		1	32.66	32.66
Whelen Inner Edge for 2015+ Chevy Tahoe 9C1, Twelve 6-LED DUO™ Lamps, Upper Front Unit, Two Piece, Individual Driver and Passenger Side Units		1	1,006.52	1,006.52
Whelen Cencon Sapphire Siren System		1	810.00	810.00
Whelen 100 Watt All Weather Heavy Duty Composite Siren Speaker		2	105.00	210.00
Whelen Behind the Grill Siren Speaker Bracket – 2017+ Chevrolet Tahoe 9C1, Driver Side		1	26.98	26.98
Whelen Behind the Grill Siren Speaker Bracket – 2017+ Chevrolet Tahoe 9C1, Passenger Side		1	26.98	26.98
Whelen Alpha™ Siren Series Separate Siren Driver		1	152.96	152.96
Whelen Low Frequency Howler Siren System		1	482.34	482.34
Whelen Howler Bracket		1	30.00	30.00
Whelen Tahoe Headlight / Taillight Flasher for 2015 Chevrolet Tahoe 9C1.		1	63.63	63.63
Whelen Vertex LED Light - Red - Mounted in Front Daytime Running Lights		1	80.01	80.01
Whelen Vertex LED Light - Blue - Mounted in Front Daytime Running Lights		1	80.01	80.01
M4 Red and Blue light heads with fog light mounting brackets for 2015+ Tahoe				253.46

Vehicle and Emergency Equipment Total

Quantity Ordered 1

Total Vehicle Order Cost $46,818.92

Final sale amount may be subject to state and local sales tax. PLEASE NOTE: Once this estimate has been approved, either by signature on this form, written approval referencing the estimate number or the issuance of purchase order, any changes or cancellations of parts made by the customer are subject to a 25% restocking fee. Any addtional customer-requested parts/services will be added to the total amount of the sale.

SIGNATURE

DEFENDER SUPPLY

845 West FM 407
Argyle, TX 76226

Date	4/6/2018
Estimate By	George Severe
	george@defendersupply.com
	(903) 564-5641



Bill To
Kevin Stofle Williamson Co TX PCT3 - Constable 301 SE Inner Loop, Suite 102 Georgetown, TX 78626 512-943-1434

Customer Contact	Kevin Stofle
Customer Phone	512-943-1434
Customer E-mail	kstofle@wilco.org
Estimate #	20419

2018 Chevrolet Tahoe RWD 9C1

Vehicle Base Color - Black

Description	Location	Qty.	Cost	Total
Whelen ION™ Series LED, Red/Blue Split Head with Universal Clip Mounts - Mounted in Front Grill		4	106.92	427.68
Whelen ION™ Grille Mount Brackets for (2) Two ION's Mounted Side by Side for 2015+ Chevy Tahoe 9C1		2	16.445	32.89
HG2 68" Running Board Light for 2015+ Chevrolet Tahoe 9C1 in Red/Blue - Please include a small Trigger Programming Switch on the back side of the console # HG2-HG2ZPC68-BR		1	795.00	795.00
HG2 61" Rear Hatch Bumper Lighting Kit in Red/Blue for 2015+ Chevrolet Tahoe 9C1 # HG2-HG2ZDTAH-BR		1	899.00	899.00
HG2 10.5" Rear Side Glass Red/Blue Split Head Lighting Kit for 2015+ Chevrolet Tahoe 9C1 (Pair) # HG2-HG2ZDM1-BR		1	265.00	265.00
HG2-Bracket for Rear Side Glass Lighting Kit for 2015+ Chevrolet Tahoe 9C1 # HG2-HG2-Bracket		1	40.00	40.00
Whelen Eight Lamp TIR3™ Super-LED® Traffic Advisor™with Two End Flashing LEDs - Red/Amber/Blue with On/Off Override Kill Switch		1	428.40	428.40
Whelen Dominator 4" Brackets		1	19.95	19.95
Whelen ION™ Surface Mount LED Lighting – Red/Blue Split Head - Mounted at Rear License Plate		2	107.10	214.20
Whelen ION™ License Plate Bracket		1	18.43	18.43
Whelen 360 Degree LED Side Emitter Light Head - Red/Blue Split - Mounted in Reverse Lights		2	79.38	158.76
Recessed Prisoner Partition w/Center Slider - Includes Recessed Panel & Lower Kick Panels for 2015+ Tahoes		1	489.51	489.51
Single T Rail Weapon system with universal handcuff lock and handcuff key - Mounted on Prisoner Partition.		1	240.74	240.74
Charcoal Grey ABS, Standard Transport Seat (straight back) w/ 7 Ga. Steel Screen Window Cargo Barrier & Seat Mount Kit (2015+ Tahoe)		1	670.12	670.12
Go Industries Single Level Law Enforcement Storage System Constructed of Black Powder Coat 16 Gauge Steel for Chevrolet Tahoe 9C1, PPV & SSV- 43" W X 32" D X 12" H		1	800.00	800.00
Window Tint - Front Eyebrow on Top Part of Front Windshield - Make tint light enough so InnerEdge Lights are Visible		1	39.95	39.95
Defender Supply Wiring Harness, Power Distribution Block and Battery Management System		1	335.00	335.00

Vehicle and Emergency Equipment Total

Quantity Ordered 1

Total Vehicle Order Cost $46,818.92

Final sale amount may be subject to state and local sales tax. PLEASE NOTE: Once this estimate has been approved, either by signature on this form, written approval referencing the estimate number or the issuance of purchase order, any changes or cancellations of parts made by the customer are subject to a 25% restocking fee. Any addtional customer-requested parts/services will be added to the total amount of the sale.

SIGNATURE

DEFENDER SUPPLY

845 West FM 407
Argyle, TX 76226

Date	4/6/2018
Estimate By	George Severe
	george@defendersupply.com
	(903) 564-5641



Bill To
Kevin Stofle Williamson Co TX PCT3 - Constable 301 SE Inner Loop, Suite 102 Georgetown, TX 78626 512-943-1434

Customer Contact	Kevin Stofle
Customer Phone	512-943-1434
Customer E-mail	kstofle@wilco.org
Estimate #	20419

2018 Chevrolet Tahoe RWD 9C1

Vehicle Base Color - Black

Description	Location	Qty.	Cost	Total
Dealer Prep		1	130.00	130.00
Misc. Shop Supplies		1	30.00	30.00
Shipping of Above Emergency Parts for Upfit		1	150.00	150.00
Installation of Above Equipment plus Customer Supplied Police Radio, Police Speaker, Radio Wiring Harness, Docking Station, Laptop Power Supply & Panasonic Camera System.		40	90.00	3,600.00
Customer to Pick Up Vehicle				

Vehicle and Emergency Equipment Total $46,818.92

Quantity Ordered 1

Total Vehicle Order Cost $46,818.92

Final sale amount may be subject to state and local sales tax. PLEASE NOTE: Once this estimate has been approved, either by signature on this form, written approval referencing the estimate number or the issuance of purchase order, any changes or cancellations of parts made by the customer are subject to a 25% restocking fee. Any addtional customer-requested parts/services will be added to the total amount of the sale.

SIGNATURE _____

Commissioners Court - Regular Session **41.**

Meeting Date: 04/17/2018

Knight Security Camera Installation

Submitted For: Randy Barker **Submitted By:** Melissa Gurka, Purchasing

Department: Purchasing

Agenda Category: Regular Agenda Items

Information

Agenda Item

Discuss, consider, and take appropriate action on approving service contract between Knight Security Systems and Williamson County for camera installation at the Jester Annex in the amount of $29,990.77, pursuant to DIR cooperative contract DIR-TSO-3430, and authorizing the execution of the agreement.

Background

As per request by the IT Department, the services include providing and installing additions to existing Genetec Video Surveillance System at the Williamson County Jester Annex. System installation includes hardware, system licenses, programming, and configuration. Department contact is Richard Semple. This expenditure will be charged to 01.0100.0503.004509. Funding was approved in the FY2018 budget.

Fiscal Impact

From/To	Acct No.	Description	Amount

Attachments

Knight Security Contract

Secure Plan Document

Site Report

Form Review

Inbox	Reviewed By	Date
Purchasing (Originator)	Randy Barker	04/12/2018 08:39 AM
County Judge Exec Asst.	Wendy Coco	04/12/2018 09:16 AM
Form Started By: Melissa Gurka		Started On: 04/11/2018 10:17 AM
Final Approval Date: 04/12/2018		

Proposal: 8712-1-0

Wilco-RR Annex Cameras v4

Proposal Issued:
3/14/2018

Proposal Valid To:
4/13/2018

Prepared for:
Chris Ball

Williamson County - Round Rock Annex
1801 E Old Settlers Bldg
Round Rock TX, 78634

E cball@wilco.org
W (512) 565-6869
M

DESCRIPTION

CLIENT INFORMATION

Name: Williamson County - Round Rock Annex

Site	**Billing**	**Contact**
1801 E Old Settlers Bldg Round Rock, TX 78634	1801 E Old Settlers Bldg Suite 105 Round Rock, TX 78634	Chris Ball, IT **P** (512) 565-6869 **E** cball@wilco.org

PROJECT NAME: Wilco-RR Annex Cameras v4

PROJECT SCOPE

DIR-TSO-3430

Knight Security Systems (KSS) will provide and install additions to existing Genetec Video Surveillance System. System installation includes hardware, system licenses, programming, and configuration unless otherwise stated.

Video Surveillance System

KSS will furnish and install the following:

- Twenty Genetec camera licenses
- One AXS-M2026LE exterior camera
- Two AXS-P1405LE exterior camera
- Three AXS-P3225V interior cameras
- Fourteen AXS-M3046V interior cameras
- Initial programming will include:
  - Camera enrollment
  - 1080p at H.264 and 7 FPS
  - Motion detection zones

Each device will include the necessary mounting hardware, license and one year manufacturer software license support.

The NVR storage capacity is an approximate estimate based on general conditions that KSS does not guarantee. Each device will include the necessary mounting hardware, license and one year manufacturer software license support.

Customer Provided Items

- Electronic drawing files of the plans and approval of device layout
- Individual logins for personnel at each location for each system
- PoE switches and patch panels
- Existing recording server with storage space to accommodate the new devices
- Existing client workstations that meet the system minimal requirements
- Rack space and uninterruptible power supply in the MDF room for rack mount units
- Wall space and 3/4" plywood backboard for wall mount units
- Network configurations for connection of devices to Customer's network
- 120VAC by a certified electrician for all security devices where needed
- Exterior and fire partition penetrations where needed
- Installation of conduit with a pull string to security devices where needed

Finance
Purchaser hereby agrees to pay KSS the following terms:
The Customer is required to pay every invoice in full within 30 days of receiving the invoice.

Project Milestones and Invoicing Procedures

- The initial project invoice is due and payable upon delivery of materials and services rendered
- The remaining balance is due and payable in monthly progress payments based upon material delivered or work completed

Refer to the Standard Terms and Conditions sections 8H, 8I, and 8J.

Any changes from the base price will be adjusted with approved change orders from the Customer. The as-built plans will be submitted along with the final submittal package to the Customer.

Engineering
KSS shall provide system design and operational documentation to ensure proper installation and efficient servicing of the system. KSS will provide submittal plans that will show where each device is located at each site. The submittal plans will also include a system matrix, which includes the schedule of each device and the programming setup into the security system software.

Cabling & Wiring
KSS will be responsible to install all the wiring and connections providing communication and/or control between KSS supplied devices and central control equipment. All wires will be dressed in a neat and professional matter.
KSS will not provide any conduit or trenching required to reach each device. It is the Customer's responsibility to provide a pathway for all wiring required for each device. KSS is not responsible for any existing wiring being used. A quote will be provided to the Customer for any wiring that is found to be unusable

Field Devices
KSS will provide all necessary devices and hardware included on the equipment list attached. The devices on the security plans will be installed and programmed into the system according to the system matrix.
KSS is not responsible for any existing devices being reused. If any existing devices are found to be unusable then a quote will be provided to the Customer to replace the device. KSS is not responsible for any damages done from the existing devices being removed. The Customer is responsible to patch and repair any damages done from existing devices removed.

Programming
KSS trained personnel will program the security system to provide a functioning operational system. KSS will support Customer programming personnel and set up remote field panels consistent with manufacturer standards. KSS will program each device according to the system matrix provided in the security plans. If any additional programming or special programming outside the system matrix is needed then an approved change order from the Customer is required.
Customer to furnish IP addressing scheme for all devices requiring an IP address on the network. KSS will provide a list of devices that need IP addresses to the Customer.

Rental Equipment
Lift rental is not included in this proposal and shall be provided by the Customer if required.

Testing
KSS will perform acceptance testing in the presence of the appointed Customer representative to ensure proper operation and communication of all integrated systems. A test sheet with a check list for each device will be provided by KSS and signed by the Customer representative upon successful completion of a system acceptance test. The final system test report will be sent to all parties.
A punch list detailing items requiring a follow up that is within this scope of work will be created. KSS will correct the punch list items in a mutually agreed upon time. If the Customer wants something changed after the test sheet has been signed then additional charges will be applied.
Upon system acceptance, a KSS job completion form shall be signed and sent to all parties. It is the Customer's responsibility to ensure proper periodic testing per the manufacturer's recommendation.

Standard Proposal Notes:

1. This proposal will follow the guidelines stated in DIR contract number DIR-TSO-3430 Standard Terms and Conditions.
2. This proposal is valid for 60 days. After the 60 days the quote is no longer valid and a new quote needs to be regenerated and prices may vary.
3. A standard 1 year warranty applies on all newly installed equipment..
4. Final Location of all equipment to be approved by owner prior to start of installation.
5. Work provided by KSS is assumed to be continuous, unhindered and without the need for escorts. Additional costs will be incurred if work is slowed by denial or delay of access to the work areas without three days' notice, or if escorts are required at any time. Any cessation of work by the customer or delays in the project construction schedule will result in additional mobilization and project management charges.
6. The quantities of materials noted above scope of work are intended to be descriptive. Should there be any discrepancy between the scope of work and the equipment list, the equipment list will supersede the scope of work stated above.
7. All work will be done following federal, state, and local laws and requirements for the above scope of work.

Knight Security Systems Excludes the Following:

1. All 120 VAC connections are to be performed by customer or customer's designated licensed Electrical contractor.
2. Fire alarm interface, cabling, connection, input/output, testing and certification.
3. Any city or other governmental permits, not associated with this scope of work, required for the use and operation of the system.
4. Access to device location, penetrations, required access panels for concealed areas.
5. If not stated above wire mold, conduit, trenching, wireless devices or aerial cabling necessary to connect any remote locations or gates, computer workstations to operate the system, and network equipment to provided power and data communication for devices.
6. Overtime required due to schedule revisions, work stoppages, delays caused by others, or circumstances beyond Knight Security Systems control.
7. Final terminations and connections to equipment other than provided by Knight Security Systems.
8. Any trade installation that Knight Security Systems is not licensed to perform.
9. Painting, patching or landscaping required as a result of the installation of equipment associated with this scope of work.
10. Technical assistance or the setup of the customer's network for connection to the security control systems. The customer is required to provide static IP addresses and support personnel for assistance in setting up the network connections.

Roles & Responsibilities

Essential activities conducted in the course of project by the Customer, Knight Security Systems (KSS), and the General Contractor (GC).

Project Administration Tasks	Customer	KSS	GC
General project management & administration		X	
Designate primary customer point of contact and site supervisor		X	
Host initial site orientation and kick-off meeting	X		
Pre-installation walk-through and design verification	X		
Pre-construction utility assessment	X		
System design and engineering		X	
System design and engineering approval	X		
Develop master project schedule		X	
Approval of master project schedule	X		
System design acceptance within overall master plan of larger facility	X		
Provide lists of existing equipment and building drawing backgrounds	X		
Develop and maintain drawings and equipment schedules		X	
Provide written communication regarding work site conditions	X		

Coordinate monthly in-progress reviews for active sites		X	
Change order management		X	

Project Installation Tasks	Customer	KSS	GC
Provide locations for materials staging	X		
Materials pre-installation configuration and delivery		X	
Pre-installation testing of existing equipment		X	
120VAC at each device location where needed		X	
Building penetrations to exterior	X		
Fire partition penetrations and sealing	X		
Installation of conduit to security system devices where needed	X		
Installation of cables to security system devices	X		
Network cables from security system devices to copper patch panels		X	
Patch cables between patch panels and network switches		X	
Create panel, cable, and equipment labeling scheme		X	
Install cable labels per labeling scheme	X		
		X	

Network Tasks	Customer	KSS	GC
Rack and rack space for rack mount equipment	X		
Network PoE switches and configuration	X		
Patch panels and uninterruptible power supply	X		
IP address assignment for security system equipment and workstations	X		
Configure client workstations to the security system		X	

Programming Tasks	Customer	KSS	GC
Create custom security system programming matrix		X	
Program initial security system configuration		X	
Import initial cardholder database from Owner provided information	N/A		
Develop and implement database update procedure	X		

Testing and Acceptance Tasks	Customer	KSS	GC
System test forms and checklists		X	
Full system test		X	
Customer on-site system acceptance	X		
As-built drawings and final engineering document submittal		X	

Termination for Convenience: This agreement may be terminated at any time at the option of either party, without future or prospective liability for performance upon giving thirty (30) days written notice thereof. In the event of termination, Williamson County will only be liable for its pro rata share of services rendered and goods actually received.

Texas Prompt Payment Act Compliance: Payment for goods and services shall be governed by Chapter 2251 of the Texas Government Code. An invoice shall be deemed overdue the 31st day after the later of (1) the date licensee receives the goods under the contract; (2) the date the performance of the service under the contract is completed; or (3) the date the Williamson County Auditor receives an invoice for the goods or services. Interest charges for any overdue payments shall be paid by licensee in accordance with Texas Government Code Section 2251.025. More specifically, the rate of interest that shall accrue on a late payment is the rate in effect on September 1 of licensee's fiscal year in which the payment becomes due. The said rate in effect on

September 1 shall be equal to the sum of one percent (1%); and (2) the prime rate published in the Wall Street Journal on the first day of July of the preceding fiscal year that does not fall on a Saturday or Sunday.

Mediation: The parties agree to use mediation for dispute resolution prior to and formal legal action being taken on this Contract.

Venue and Governing Law: Venue of this contract shall be Williamson County, Texas, and the law of the State of Texas shall govern.

Right to Audit: Knight Security Systems, LLC agrees that licensee or its duly authorized representatives shall, until the expiration of three (3) years after final payment under this Agreement, have access to and the right to examine and photocopy any and all books, documents, papers and records of Knight Security Systems, LLC which are directly pertinent to the services to be performed under this Agreement for the purposes of making audits, examinations, excerpts, and transcriptions. Knight Security Systems, LLC agrees that licensee shall have access during normal working hours to all necessary Knight Security Systems, LLC facilities and shall be provided adequate and appropriate work space in order to conduct audits in compliance with the provisions of this section. licensee shall give Knight Security Systems, LLC reasonable advance notice of intended audits.

PROJECT INVESTMENT

Materials $26,638.92

QTY	Manufacturer	Part #	Description	Unit Price	Ext.Price
3.00	AIMETIS	AIMAIMA10D	Thin Client able to decode up to 60 fps	$549.00	$1,647.00
3.00	AIMETIS	AIMAIMA10DVESA	A10D Thin Client VESA Mount Bracket	$39.00	$117.00
14.00	AXIS	DIR-0806-001	M3046-V 2.4MM ULTRA-COMPACT CA	$289.96	$4,059.44
1.00	AXIS	DIR-01049-001	M2026-LE MK II HD BULLET CAM	$313.53	$313.53
2.00	AXIS	DIR-0961-001	P1405-LE MK II CAMERA 1080P	$470.69	$941.38
3.00	AXIS	DIR-0952-001	P3225-V MK II DOM CAMERA 1080P	$392.11	$1,176.33
20.00	Genetec	DIR-ADV-CAM-E-1Y	Genetec Advantage for 1 Omnicast Enterprise Camera	$36.02	$720.40
5.00	Genetec	DIR-GSC-1U	1 Genetec Security Desk client connection (incl. W	$216.12	$1,080.60
20.00	Genetec	DIR-GSC-Om-E-1C	1 camera connection	$180.10	$3,602.00
1.00	Knight Security Systems	KSS-PROJKIT	Project Install Kit	$459.60	$459.60
21.00	PANDUIT	AXE-699967	PANDUIT Category 6A Netkey Punchdown Module - Yell	$11.26	$236.46
21.00	PANDUIT	AXE-MM01PA7SD05	PANDUIT CBL ASSY MOD 28-4PR STRANDED 1ft thin Cat6	$8.13	$170.73
1.00	TrippLite	P568-003	3ft HDMI Gold Digital Video Cable 3'	$8.30	$8.30
3.00	Windy City Wire	5566030	23-4P UNS SOL CMP C6 Ylw Jkt	$322.65	$967.95

Labor:

QTY	Description	Ext.Price
8.00	SYSDESIGN	$1,148.40
8.00	PROJECTMGR	$1,382.40
16.00	SYSTECH	$2,217.60
24.00	INSTALL	$2,635.20
37.00	INSTALLCABLE	$4,062.60

Discounts and Misc. Items:

QTY	Description	Ext.Price
14.00	Discount-Install-Parts	($308.00)

Investment Summary

Total Equipment	**$15,500.72**
Total Labor	**$11,446.20**
Total Discounts & Misc. Items	**($308.00)**
Total Proposal Amount	**$26,638.92**

Note: Sales tax, if applicable, is not included on this proposal and will be added to the total upon invoicing.

Investment Total

Knight Security Systems will provide the proposed system as described in this proposal for the sum of: **$26,638.92**

The price above includes: material, equipment and labor as described within this proposal.

Client Initials:_____

KNIGHT SECURITY SYSTEMS HONOR, INTEGRITY, SERVICE

TERMS & CONDITIONS

Limited Warranty.

A. What is Covered. For one (1) year after System Acceptance, Knight will repair or replace any defective part of the System without charge to Purchaser. Knight may use new or used parts of the same quality. Knight may keep all replaced components.

B. How To Get Service. Call or e-mail Knight at the e-mail address and telephone number at the top of this agreement and tell Knight what is wrong with the System. Knight will provide service as soon as possible during Knight's normal business hours which are 8:00AM to 5:00PM Monday through Friday, excluding holidays Knight observes. A responsible adult must be at the premises at the time Knight visits. Emergency repair service is available at other times for an additional charge. SecurePlan customers should follow the exclusive SecurePlan service request procedure.

C. What Is Not Included. Repair of the System is Knight's only duty. This warranty does not include disposable batteries. Knight makes no other express warranty including any warranty of merchantability of the System or its fitness for any special purpose. Knight does not warrant that the System cannot be defeated or compromised or that it will always operate. This warranty does not cover repairs that are needed because of an accident, acts of God, misuse or abuse of the System, Purchaser's failure to properly use the System, or any other reason except a defect in the equipment or Knight's installation. **Knight is not liable for consequential or incidental damages. Purchaser agrees that this is Knight's only warranty and that Knight has given Purchaser no other warranty for the System. All implied warranties are limited in duration to the one year term of this express warranty.** Repairs not covered by this warranty will be charged to Purchaser at Knight's standard rates for labor and materials and Purchaser agrees to pay the same.

D. State Law. Some states do not allow the exclusion or the limitation of consequential or incidental damages, or a limitation on the duration of implied warranties, so the above limitations or exclusions may not apply. The warranty gives you specific legal rights and you may also have other rights, which may vary from state to state.

After Warranty Service. If Purchaser has subscribed to SecurePlan, Knight will continue to service the System in accordance with the provisions of the SecurePlan program. If Purchaser has not subscribed to SecurePlan, then at the end of Knight's one (1) year limited warranty, Knight will continue to repair the System on a time and material basis. Purchaser will pay Knight's standard parts and labor charges for all repair calls. There will be a one (1) hour minimum visit charge for each repair call. See Knight's Limited Warranty on how to request repair service. Payment is due upon completion of the work.

Regulatory Agencies. Knight operates under the regulatory authority of the following State of Texas agencies: Department of Public Safety, Texas Private Security Board, P.O. Box 4087, Austin, Texas 78773-0001, 512/463-5545, License # B-3566: Texas Department of Insurance, Office of the State Fire Marshal; P.O.Box 149221, Austin, Texas 78714-9221, 512/463-6169, License # ACR-84110-647.

Document Conflict. It is understood and agreed by and between the parties hereto, that if there is any conflict in this agreement and any other document, this agreement will govern, whether such other document is prior, coincident or subsequent to this agreement.

Taxes, Fees, Permits, Fines. In addition to the charges set forth herein, Purchaser agrees to pay any and all false alarm assessments, taxes, fees or other charges relating to the System installation, System use or services provided under this agreement which are authorized or imposed by any governmental body or other organization to whose facilities the System is connected. In addition Purchaser agrees to have the System licensed, permitted, registered or the like when required by any governmental agency and to pay any and all required fees for same.

Knight Not An Insurer And Limitation Of Liability. Purchaser acknowledges that Knight has not represented or warranted that the System may not be compromised or circumvented, that the System will prevent any loss by burglary, theft, robbery, fire or otherwise or that the System will in all cases provide the detection for which it is installed or intended. Purchaser does further acknowledge that Purchaser assumes all risk for loss or damage to Purchaser's premises, property or contents and that Knight has made no representations or warranties, nor has the Purchaser relied on any representation or warranties, expressed or implied, including any warranty of merchantability or fitness for any particular use, except as set forth herein. Purchaser acknowledges that Knight is not an insurer and that insurance if any shall be obtained by the Purchaser and that the payments stipulated hereinbefore are based solely upon the value of the System and services herein described and are unrelated to the value of Purchaser's premises, property or contents. It is not the intention of the parties of this agreement that Knight assume responsibility for any loss occasioned by malfeasance or misfeasance in the performance of the System or services under this agreement or for any loss or damage sustained through burglary, theft, robbery, fire or other cause by virtue of this agreement or because of the relation herein established. Purchaser further agrees to not subrogate with any person or insurer against Knight. From the nature of the System to be installed and/or the services to be performed, it is impractical and extremely difficult to fix the actual damages, if any, which may proximately result from the failure of the System, installation, monitoring or other services or on the part of Knight to perform any of its obligations hereunder. If there shall, notwithstanding the provisions herein, at any time be or arise any liability on the part of Knight by virtue of this agreement or because of the relation hereby established, whether due to Knight's breach of this agreement, negligence of Knight, Knight's failure to perform any of its obligations hereunder, including installation, monitoring or service, or otherwise, such liability is and shall be limited to a sum equal in amount to the annual monitoring fee, five percent (5%) of the total sale and installation amount or five hundred dollars ($500.00), whichever is the greater. This liability shall be complete and exclusive. Purchaser may obtain from Knight a higher limitation of liability for an additional periodic charge. If Purchaser elects this option, Knight will attach a rider to this agreement, which will set forth the amount of the higher limitation of liability and the amount of the additional charge. Agreeing to the higher limitation of liability does not mean that Knight is an insurer.

Indemnification. Purchaser agrees to and shall indemnify and save Knight harmless, its employees and agents, for and against all third party claims, lawsuits and losses alleged to be caused by Knight's performance, negligent performance or failure to perform its obligations under this agreement except that this indemnity clause shall not extend to damage, loss, liability or injuries which occur while an employee or agent of Knight is on the premises of the Purchaser and which damage, loss, liability or injuries are solely and directly caused by the acts of said employee or agent.

System Acceptance. Purchaser agrees to inspect and provide written acceptance of the system installation within (30) days within of the notice of completion by Knight, or within 30 days of the commencement of beneficial use of the system or system elements provided, whichever is earlier. Errors or omissions in the installation of System, including but not limited to failure to install or wire detection devices, shall be called to the attention of Knight by Purchaser in writing within thirty (30) days of final billing of installation charges stipulated in paragraph 2.A of this agreement. Upon the expiration of the said thirty (30) day period, the

Client Initials:_____

installation and the System provided shall be deemed complete and acceptable to Purchaser.

Increase Of Monitoring/Service Fees. Notwithstanding the terms and conditions set forth herein, after the term for monitoring service, Knight may at any time, increase the monthly System monitoring fee and/or service fee upon giving the Purchaser notice in writing. In the event Purchaser is unwilling to pay the increased fee(s), Purchaser may terminate the System monitoring and/or System service upon giving notice in writing to Knight within thirty (30) days from receipt of Knight's notice, provided Purchaser shall not be in default of any provisions, terms or conditions of this agreement. Failure to notify Knight within said thirty (30) days will constitute Purchaser's consent to the increased fee(s) and all other provisions, terms and conditions of this agreement shall remain in full force and effect.

System Use And Testing. To obtain proper results from the operation of the System, Purchaser agrees to perform weekly tests and inspections of the entire System and to notify Knight as soon as practical to have System repaired if a failure is detected with the System. Purchaser will instruct all other persons who may use the System on its proper use. If the System includes interior detection (e.g., motion detectors, glass break detectors, smoke detectors, heat detectors or other such detectors), Purchaser agrees to turn off, control or remove all things such as air conditioning systems, insect fogging products and pets that might interfere with such devices.

False Alarm & Warranty Service Calls. In the event Purchaser or any user of the System shall cause an excessive number of false alarms or service calls through carelessness, the malicious or accidental use of the System or in the event Purchaser shall in any manner misuse or abuse the System, it shall constitute a material breach of contract on the part of Purchaser and Knight may, at its option, in addition to other legal remedies, be excused from further performance upon the giving of ten (10) days notice to Purchaser. Knight's excuse from performance shall not affect Knight's right to recover damages from Purchaser. In the event a fine, penalty, fee or the like is assessed against Knight by any governmental or municipality agency as a result of any false alarm or misuse of Purchaser's System, Purchaser agrees to forthwith reimburse Knight upon Knight giving notice to Purchaser.

Telephone Line. Purchaser understands that all System monitoring signals are transmitted over regular telephone lines, which are wholly beyond the control and jurisdiction of Knight. Purchaser will pay for all telephone company charges. Knight requires the use of a RJ31X or equivalent telephone jack to give the System priority over telephones on Purchaser's premises; however, when the System is activated, other calls (such as calls to the 911 emergency operator) cannot be made, and therefore, Purchaser may wish to have the System connected to a second telephone line. If Purchaser's telephone service is out of order, placed on vacation status or otherwise not working, signals cannot be transmitted and Knight will not know of the telephone service problem or outage. Purchaser acknowledges that Knight has advised Purchaser of the availability of wireless radio transmission of System monitoring signals in the event of telephone service interruption.

Additional Detection Equipment. Purchaser acknowledges that additional fire, intrusion, robbery or supervisory detection devices are available at additional cost.

Installation Or Service Of System. Purchaser authorizes Knight to install and/or service or cause to be installed and/or serviced, the devices specified in the schedule of devices including instruments, appliances and all necessary connections, wires, conduits and other materials associated herewith. Knight may, at its sole discretion, subcontract all or part of the installation or service of the System. Purchaser will make premises available during Knight's normal working hours of 8:00 A.M. through 5:00 P.M., Monday through Friday exclusive of Knight's scheduled holidays unless an alternative time has been arranged and agreed to by both Knight and Purchaser. Purchaser has the affirmative duty to inform Knight, prior to beginning of installation, of every location at the premises where Knight should not (because of concealed obstructions or hazards such as pipes, wires or asbestos) enter or drill holes. If asbestos or other health hazardous material is encountered during installation, Knight will cease work until Purchaser has, at Purchaser's sole expense, obtained clearance from a licensed asbestos removal or hazardous material contractor that continuation of work will not pose any danger to Knight's personnel. In no case shall Knight be liable for discovery or exposure of hidden asbestos or other hazardous material, and Purchaser shall indemnify and hold Knight and its employees harmless from any claims brought against Knight and/or its employees by third parties for damages, personal injury, death, emotional injury, whether actual or prospective allegedly caused by the presence, spread, ingestion or inhalation of any substance/vapor on or originating from Purchaser's premises. Purchaser understands that the installation will necessitate drilling into various parts of the premises. Knight generally intends to conceal wiring in the finished areas of the premises; however, in areas which, due to construction, decoration, or furnishing of the premises, Knight determines, in its sole discretion, that it would be impractical to conceal the wiring, in such cases wire will be exposed. To facilitate the installation and operation of the System, Purchaser will repair any broken or loose doors, windows or other parts of the premises as Knight may reasonably request. Purchaser agrees to provide 110 volt AC electrical outlets (dedicated circuits when required) at the designated locations for devices requiring such power.

Delay/Interruption Of Installation, Monitoring Or Service. Purchaser hereby agrees that Knight assumes no liability for delays or interruption in installation, monitoring or service of System whether due to heavy workload, labor disputes of any nature, strikes, riots, storms, natural disasters, fires, power failures, insurrection, interruption of or unavailability of telephone service, or any other cause beyond the control of Knight and will not be required to furnish installation, monitoring or service while any such cause shall continue.

Default Or Termination. If Purchaser fails to pay any amounts agreed herein or provided for herein within ten (10) days after the same is due and payable or if Purchaser fails to observe, keep or perform any other provision, term or condition of this agreement, Purchaser hereby agrees that Knight shall have the right to exercise any of the following remedies: (a) to declare the entire amount of moneys due hereunder, immediately due and payable upon notice or demand to Purchaser; (b) to initiate any legal proceedings and recover all moneys due hereunder, accrued and thereafter accruing, including without limitation, reasonable attorney's fees; (c) to enter Purchaser's premises and take possession of any and all devices of System not paid for, without any court order or other process of law, and any said taking of possession shall not constitute a termination of this agreement unless Knight expressly so notifies Purchaser in writing; (d) to terminate this agreement; (e) to pursue any other remedy at law or in equity. Notwithstanding any said removal or any other action which Knight may take, Purchaser shall be and remain liable for the full performance of all provisions, terms and conditions on the part of Purchaser under this agreement. All such remedies are cumulative and may be exercised concurrently or separately. Purchaser shall be liable for all expenses Knight may incur in connection with the enforcement of any of its remedies herein, including without limitation, reasonable attorney's fees and any amounts established by state or federal statute or regulation. If Knight elects to exercise any or all of the above provisions, it shall not be considered to constitute a breach by Knight of this agreement or waiver of Knight's rights to which it may be entitled under the law. Purchaser further agrees that Knight shall not be liable for any damage caused to the Purchaser's premises by the removal of System or devices.

Title Of System. Knight retains title to the System and all components and devices until such time as Purchaser shall pay for said System in full.

Pre-Existing Equipment And Devices. Knight assumes no liability and gives no warranty, limited or otherwise, for equipment, devices, wiring, services or the like not installed or provided by Knight pursuant to this agreement.

Authorized Users And Emergency Contact List. Purchaser agrees to furnish to Knight forthwith a written list of names, necessary telephone numbers and verbal passcodes of all System users and emergency contact persons authorized to enter the Purchaser's premises. In addition Purchaser shall notify Knight in writing of all changes, revisions and modifications of the above stated users and emergency contact persons or changes to the Purchaser's premises address, telephone, or the like.

Client Initials:_____

Monitoring Service. If Purchaser has subscribed to monitoring service, Knight, upon receipt of a signal from the System shall, without warranty and when permissible by law, make a reasonable effort to do the following: (a) Upon receipt of an intrusion alarm signal, call the Purchaser's premises to verify an authorized user. If unable to verify an authorized user at the Purchaser's premises, notify the Public Police Department of the respective jurisdiction of the Purchaser's premises and notify the emergency contact person by calling the emergency contact person's telephone number. (b) Upon receipt of a holdup, duress or panic alarm signal, notify the Public Police Department of the respective jurisdiction of the Purchaser's premises and notify the emergency contact person by calling the emergency contact person's telephone number. (c) Upon receipt of a fire alarm signal, notify the Public Fire Department of the respective jurisdiction of the Purchaser's premises, notify the Purchaser's premises and if unable to notify Purchaser, notify the emergency contact person by calling the emergency contact person's telephone number. (d) Upon receipt of a System supervisory, trouble or failed System test signal or the like, call the Purchaser's premises during Knight's normal business hours to notify Purchaser and if unable to notify Purchaser, notify the emergency contact person by calling the emergency contact person's telephone number. The above listed procedures may be altered by Purchaser, when allowed by law, only upon Purchaser's written request of Knight. Monitoring may be provided by Knight or an independent monitoring facility selected by Knight.

Late/Interest Fees & Attorney's Fees. Purchaser shall pay late fees and interest in amounts allowable by Texas law for all moneys not paid to Knight when due and payable. Additionally, in the event it shall become necessary for Knight to institute legal proceedings to collect any amount due Knight under this agreement, Purchaser shall pay Knight reasonable attorney's fees when permitted by law. Both Knight and Purchaser agree that no demand for arbitration, lawsuit or any other legal proceeding connected with this agreement shall be brought or filed more than one year after the incident giving rise to the claim occurred. In addition any such legal proceeding shall not be heard before a jury. Each party gives up any right to a jury trial.

Assignees And Subcontractors. Knight may transfer or assign this agreement to any other entity including an alarm company or lender. Purchaser may not transfer this agreement to someone else (including someone who purchases or rents Purchaser's premises) unless Knight approves the transfer in writing. Knight may use subcontractors to provide installation, repair or monitoring services, and this agreement, shall apply to the work or services they provide, and shall apply to them and protect them in the same manner as it applies to and protects Knight.

Client Initials:_____

KNIGHT SECURITY SYSTEMS
HONOR, INTEGRITY, SERVICE

SecurePlan™ Options

Date: March 14, 2018
Proposal #: 22406

Bill To:

Chris Ball
Williamson County - Round Rock Annex
1801 E old Settlers Blvd
Round Rock, TX 78634

Phone:

Site:

Chris Ball
Williamson County - Round Rock Annex
1801 E old Settlers Blvd
Round Rock, TX 78634

Phone:

Representative: Kevin Garlick
Summary: prop8712-1-Wilco RR annex V4

Sales Tax Rate: 0.00 %

Five Year Agreement	Annual Pricing	Annual Pricing (with tax)
SecurePlan Health	**$437.20**	**$437.20**
SecurePlan	**$3,351.85**	**$3,351.85**
SecurePlan24	**$4,809.17**	**$4,809.17**

SecurePlan includes 5 system inspection(s) annually.

SecurePlan Benefits:

- *All plans include system health monitoring (with customer consent)*
- *Priority Dispatch with GUARANTEED Same Day Service if the service call is placed before noon on a regular business day. SecurePlan24 provides 4 hour response, 24 hrs/day, all year!*
- *Labor and travel cost during normal business hours is included.*
- *10% discount on labor rates (Not applicable to DIR)*
- *Device repair or replacement for normal wear and tear.*
- *System software upgrades and license fees included.*
- *Free Loaner Equipment.*
- *Annual Functional Tests.*

Please circle selected services.

Signed: _____ Date: _____

If declining SecurePlan, please sign below:

SecurePlan program has been explained to me and I have elected to decline these services.

Signed: _____ Date: _____

System Health Monitoring Consent Form

Knight Security Systems, LLC (Knight) is committed to providing the highest level of service possible to our clients. One means of accomplishing this objective is by providing a KnightSentryTM a network appliance ("Sentry") for purposes of System Health Monitoring and remote support activities. By signing below, you authorize Knight Security Systems, LLC ("Knight") to install the Sentry appliance with network access to the system components to be monitored, as well as the necessary outbound communication to the Internet. Sentry unit will remain the exclusive property of Knight and will be returned to Knight upon request or upon cessation of System Health Monitoring at your location.

System Health Monitoring applies to the technical operating state of the system components. System Health Monitoring does NOT capture or report any alarms notifications or events pertaining to the physical security of your facility or network related security breaches. Alarm monitoring services for the physical facility intrusion or fire detection or other alarms that may require a response of law enforcement authorities are available from Knight Security Systems at an additional charge.

You are responsible for backing up your systems and for taking all other measures appropriate to adequately protect your systems, and all data and other information contained therein. Knight shall not be liable for any loss of, or damage to, any data, materials and/or other information contained on or accessed through your systems.

These services are being provided to you in accordance with and subject to the terms and conditions of your services agreements with Knight, as well as company policies pertaining to this service.

Initial Selection:

____ I ACCEPT System Health Monitoring _____ I DECLINE System Health Monitoring

Company / Organization	Williamson County - Round Rock Annex
Address of site to be monitored	Williamson County - Round Rock Annex 1801 E old Settlers Blvd Round Rock, TX 78634
Authorizing Person (Print)	
Authorizing Person's Title	
Authorizing Signature	
Date:	
If Declined, Reason:	

Knight Security Systems

Kevin Garlick

Mar 14, 2018

Site: Williamson County - Round Rock annex

1801 Old Settlers Blvd Round Rock,TX,78634

RR Annex security

RR Annex security

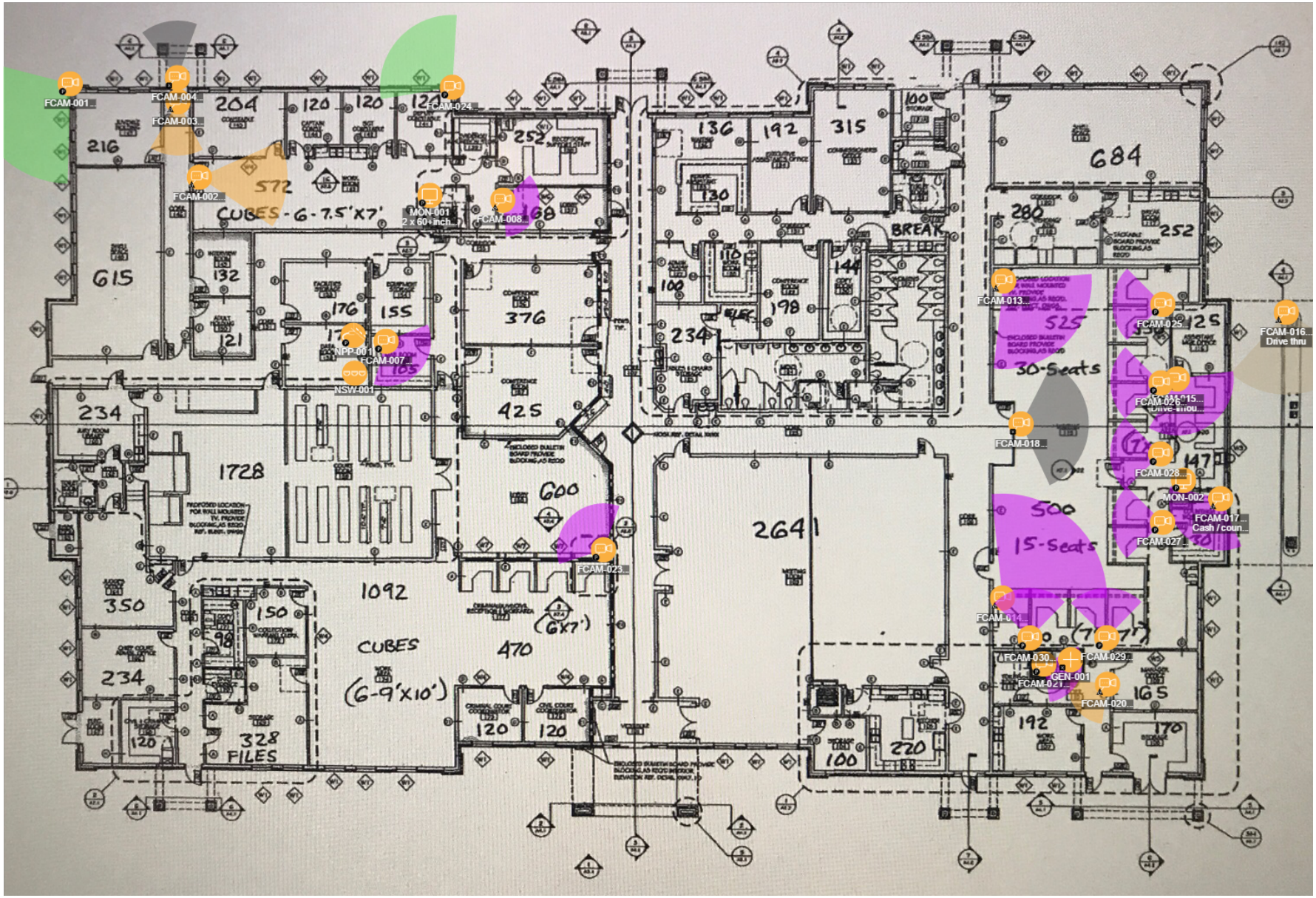

[Survey Layout]

Totals by Element Type

	Element Name	Quantity
	Fixed Camera	22
	Video Monitor	2
	Network Switch	1
	Network Patch Panel	1
	General Component	1

Totals by Element Detail

	Element Name	Total Count
	Fixed Camera	22

	Element Name	Element ID	Survey	Description	Location
	Fixed Camera	FCAM-001	RR Annex security		
	Fixed Camera	FCAM-002	RR Annex security		
	Fixed Camera	FCAM-003	RR Annex security		
	Fixed Camera	FCAM-004	RR Annex security		
	Fixed Camera	FCAM-007	RR Annex security		
	Fixed Camera	FCAM-008	RR Annex security		
	Fixed Camera	FCAM-013	RR Annex security		
	Fixed Camera	FCAM-014	RR Annex security		
	Fixed Camera	FCAM-015	RR Annex security	Drive-through teller window	
	Fixed Camera	FCAM-016	RR Annex security	Drive thru	
	Fixed Camera	FCAM-017	RR Annex security	Cash / count room	
	Fixed Camera	FCAM-018	RR Annex security		
	Fixed Camera	FCAM-020	RR Annex security		
	Fixed Camera	FCAM-021	RR Annex security		
	Fixed Camera	FCAM-023	RR Annex security		
	Fixed Camera	FCAM-024	RR Annex security		
	Fixed Camera	FCAM-025	RR Annex security		
	Fixed Camera	FCAM-026	RR Annex security		
	Fixed Camera	FCAM-027	RR Annex security		

	Fixed Camera	FCAM-028	RR Annex security		
	Fixed Camera	FCAM-029	RR Annex security		
	Fixed Camera	FCAM-030	RR Annex security		
			Video Monitor		2
	Element Name	**Element ID**	**Survey**	**Description**	**Location**
	Video Monitor	MON-001	RR Annex security	2 x 60+inch tvs	
	Video Monitor	MON-002	RR Annex security		
			Network Switch		1
	Element Name	**Element ID**	**Survey**	**Description**	**Location**
	Network Switch	NSW-001	RR Annex security		
			Network Patch Panel		1
	Element Name	**Element ID**	**Survey**	**Description**	**Location**
	Network Patch Panel	NPP-001	RR Annex security		
			General Component		1
	Element Name	**Element ID**	**Survey**	**Description**	**Location**
	General Component	GEN-001	RR Annex security		

Commissioners Court - Regular Session **42.**

Meeting Date: 04/17/2018

Approval of Siddon-Martin Emergency Group quote through HGAC contract

Submitted For: Randy Barker **Submitted By:** Melissa Gurka, Purchasing

Department: Purchasing

Agenda Category: Regular Agenda Items

Information

Agenda Item

Discuss, consider, and take appropriate action on authorizing the purchase of five (5) ambulances to support the operations of the Williamson County EMS Department from Siddon-Martin Emergency Group in the amount of $1,179,175.00, pursuant to H-GAC contract # AM10-16.

Background

This is an H-GAC Cooperative quote for EMS ambulances. This expenditure will be charged to 01.0100.0540.005700 and was requested by the Williamson County EMS Department. Funding was approved in the FY2018 budget.

Fiscal Impact

From/To	Acct No.	Description	Amount

Attachments

Quote

Options Sheet

Form Review

Inbox	Reviewed By	Date
Purchasing (Originator)	Randy Barker	04/12/2018 08:42 AM
County Judge Exec Asst.	Wendy Coco	04/12/2018 09:16 AM
Form Started By: Melissa Gurka		Started On: 04/11/2018 10:36 AM
Final Approval Date: 04/12/2018		

HGACBuy	CONTRACT PRICING WORKSHEET For MOTOR VEHICLES Only	Contract No.:	AM10-16	Date Prepared:	04/03/18

This Worksheet is prepared by Contractor and given to End User. If a PO is issued, both documents MUST be faxed to H-GAC @ 713-993-4548. Therefore please type or print legibly.

Buying Agency:	Williamson County	**Contractor:**	Siddon-Martin Emergency Group
Contact Person:	Mike Knipstein	**Prepared By:**	Gretchen Peters
Phone:	512-943-1224	**Phone:**	210-823-9584
Fax:		**Fax:**	210-247-6179
Email:	mknipstein@wilco.org	**Email:**	gpeters@siddons-martin.com

Product Code:	**CCA02**	**Description:**	**Type I Custom Series, Ford F450 DRW**

A. Product Item Base Unit Price Per Contractor's H-GAC Contract:	$138,142.00

B. Published Options - Itemize below - Attach additional sheet(s) if necessary - Include Option Code in description if applicable.
(Note: Published Options are options which were submitted and priced in Contractor's bid.)

Description	Cost	Description	Cost
Please see Attached			
		Subtotal From Additional Sheet(s):	$85,589.00
		Subtotal B:	$85,589.00

C. Unpublished Options - Itemize below / attach additional sheet(s) if necessary.
(Note: Unpublished options are items which were not submitted and priced in Contractor's bid.)

Description	Cost	Description	Cost
Please see Attached			
		Subtotal From Additional Sheet(s):	$25,904.00
		Subtotal C:	$25,904.00

Check: Total cost of Unpublished Options (C) cannot exceed 25% of the total of the Base Unit Price plus Published Options (A+B).	**For this transaction the percentage is:**	11.58%

D. Total Cost Before Any Applicable Trade-In / Other Allowances / Discounts (A+B+C)

Quantity Ordered:	5	**X Subtotal of A + B + C:**	249635	=	**Subtotal D:**	$1,248,175.00

E. H-GAC Order Processing Charge (Amount Per Current Policy)	**Subtotal E:**	$1,000.00

F. Trade-Ins / Other Allowances / Special Discounts / Freight / Installation

Description	Cost	Description	Cost
2012 Ford F450 WC type I	**-$16,000.00**	**2014 Ford F450 WC type I**	**-$18,500.00**
2013 Ford F450 WC type I	**-$17,000.00**		
2014 Ford F450 WC type I	**-$18,500.00**	**Subtotal F:**	-$70,000.00

Delivery Date:	**90-120 days aft rcpt of chassis**	**G. Total Purchase Price (D+E+F):**	$1,179,175.00

Pulse Number	Qty	Description	Published Options	Unpublished Options
27	1	Rear Suspension - Liquid Spring	$10,250.00	
29	1	Grill Guard Rhino Black	$2,675.00	
54	1	Power Door Locks - Module Entry Doors,W/Hidden Switch	$1,100.00	
59	1	Super Loop Entry Step - CS entry door	$525.00	
59	2	Super Loop Entry Step - (1) each side on cab	$1,050.00	
79	1	Pass Through Opening	$1,250.00	
81	1	exterior compartment modification (each) F compt	$1,150.00	
81	1	exterior compartment modification (each) E compt	$1,150.00	
85	1	Power Door Locks - Exterior Compartments	1125	
87	1	Compartment Lights - LED, Flexible Strip	1356	
104	1	Color - Gunmetal 164 flooring	488	
166	2	interior modification (each) Fr bulkhead S cabinets (S1 and S2)	1990	
166	1	interior modification (each) Fr bulkhead Mermaid cabinet	995	
166	1	Interior modification (each) O cabinet	995	
166	1	interior modification (each) M cabinet	995	
166	1	interior modification (each) Upper R cabinet on CS	995	
166	1	interior modification (each) Under SB cabinet	995	
166	1	interior modification (each) J/K Cabint combined	995	
166	1	'interior modification (each) Head of SB cabinet	995	
260	1	Utility Net - Head of Squad Bench , (BLACK NET)	809	
262	1	Slide-Out Drawer, At Head of Squad Bench	615	
273	1	Glove Butler (3) Total - Over Curbside Entry, Drop down Door	668	
333	1	Attendant Seat - EVS Vac Form, 3-Point Belt W/ Child Seat, Swivel Base - Gunmetal	862	
428	1	Additional Rear Control Panel Curbside	948	
434	1	Upgrade to M9 LED Warning Lights	5689	
439	1	LED Scene and Load Lights	3850	
474	1	Air Horns - Buell 12", (2) Thru Bumper,F-Series,W/Tank & Compressor	1978	
486	1	Dome Lights - Whelen 8" ,White Flng, LED	2595	
497	1	Shore Inlet - Kussmaul Super Auto-Eject, 20Amp	567	
498	1	Additional Kussmaul Super Auto-Eject, 20Amp	777	
502	1	Inverter Charger - Vanner 1050W, Indicator on Console	$2,679.00	
531	1	Stryker Power Load System	$24,500.00	
578	1	Module and Cab - Lower Half, Different Color, Includes Jambs	$2,975.00	
601	1	Custom Graphics	$4,450.00	
PENNEX	2	Pennex Sign holders, (2)	$553.00	
MERMAID	1	Mermaid installed in LF cabinet		3856
Stry Cot	1	Stryker Power Pro Cot		19936
Kool Kat AC	1	Kool Kat AC Unit		$2,112.00

Base Bid	$138,142.00	
Published Options	$85,589.00	
Total Published Options	$223,731.00	
Unpublished Options	$25,904.00	11.58%
Total Options w/o HGAC Fee	$249,635.00	

Commissioners Court - Regular Session **43.**

Meeting Date: 04/17/2018

Williamson County Justice Center Carpet Installation

Submitted For: Randy Barker **Submitted By:** Melissa Gurka, Purchasing

Department: Purchasing

Agenda Category: Regular Agenda Items

Information

Agenda Item

Discuss, consider and take appropriate action on approving service contract between Aladdin Carpet & Interiors and Williamson County for carpet installation at the Justice Center in the not-to-exceed-amount of $15,180.00, and authorizing the execution of the agreement.

Background

Three (3) quotes were requested and two (2) were received. The Facilities Department is recommending award to the lowest bidder, Aladdin Carpet & Interiors. The services include removal of old carpet, floor prep, trim moldings and installation of new carpet at the Williamson County Justice Center. This expenditure will be charged to 01.0100.1009.004509. Funding was approved in the FY2018 budget.

Fiscal Impact

From/To	Acct No.	Description	Amount

Attachments

Quote

Service contract

Form Review

Inbox	Reviewed By	Date
Purchasing (Originator)	Randy Barker	04/12/2018 08:56 AM
County Judge Exec Asst.	Wendy Coco	04/12/2018 09:16 AM
Form Started By: Melissa Gurka		Started On: 04/11/2018 11:02 AM
Final Approval Date: 04/12/2018		

Aladdin
CARPET & INTERIORS
"Where Quality Is Higher Than Price"

GARY & ANNETTE MARUSKA

306 WEST FOURTH
TAYLOR, TEXAS 76574

PHONE: (512) 352-9200
FAX: (512) 352-9797

BID FOR JUSTICE CENTER- CSCD
WILLIAMSON COUNTY - GEORGETOWN, TEXAS
1. CARPET- 24X24 CARPET TILE- PATCRAFT
DAZZLE- # 00714 BEWITCHING
(BID INCLUDES DEMO OLD & INSTALL NEW)
$ 10,235
2. LUXURY VINYL PLANK- 9"X36" PATCRAFT
WOOD PLANX- # 00540 AGED MAPLE
(BID INCLUDES ALL FLOOR PREP & TRIM MOLDINGS)
$ 2835
3. COVE BASE-ROPPE- RUBBER 4 INCH ,1/8 GAUGE, HIGH GLOSS(COLOR TO BE DETERMINED,INCLUDES MATCHING OUTSIDE CORNERS)
$ 2110
TOTAL BID: $ 15,180
SUBMITTED BY:
ALADDIN CARPET & INTERIORS
306 WEST 4 th.
TAYLOR, TEXAS 76574
512-352-9200
GARY & ANNETTE MARUSKA
ESTABLISHED 1986 !!!

QUOTE

Quality Carpets & Floors

5840 Williams Dr.
Georgetown, Texas 78633
(512)930-1339 (512)863-7979
qcfdhill@verizon.net

DATE **February 27, 2018**

TO: Wilco- Old Probation Area
78633
Attn: Dwayne

QUANTITY	DESCRIPTION	UNIT PRICE	LINE TOTAL
2555 Ft.	Carpet P/C Dazzle Bewitching Carpet Tiles	$4.50/ Ft.	$11,497.50
275 Ft.	Vinyl Plank P/C Wood Plank 1336V LVT-00540- Aged Maple	$7.50/ Ft.	$2,062.50
810 Lf.	Roppe 760 Series Cove Base (Color to be Decided,)	$2.00/ Lf.	$1,620.00
	Transition Strips (Carpet to Vinyl Plank)		$45.00
4 Bags	Floor Leveler Subject to Change	$47.52/ Ea.	$190.00
		SUBTOTAL	
		SALES TAX	
		TOTAL	**$15,415.00**

THANK YOU FOR YOUR BUSINESS!

THE STATE OF TEXAS §

COUNTY OF WILLIAMSON §

SERVICES CONTRACT
FOR CARPET INSTALL
(Williamson County Justice Center - CSCD)

THIS SERVICES CONTRACT (hereinafter "Contract") is made and entered into by and between **Williamson County, Texas** (hereinafter "The County"), a political subdivision of the State of Texas, acting herein by and through its governing body, and **Gary & Annette Maruska d/b/a Aladdin Carpet & Interiora**, 306 W. 4th, Taylor, TX 76574 (hereinafter "Service Provider"). The County agrees to engage Service Provider as an independent contractor, to assist in providing certain operational services pursuant to the following terms, conditions, and restrictions:

I.

Services: Service Provider shall provide services *as an independent contractor* pursuant to terms and policies of the Williamson County Commissioners Court. Service Provider expressly acknowledges that he, she or it is not an employee of The County. The services include, but are not limited to the following items in order to complete the project:

A. As described in the attached Statement of Work/Quotation, which is marked Exhibit "A" and incorporated herein as if copied in full.

Should The County choose to add services in addition to those described in Exhibit "A," such additional services shall be described in a separate written amendment to this Contract wherein the additional services shall be described and the parties shall set forth the amount of compensation to be paid by The County for the additional services. Service Provider shall not begin any additional services and The County shall not be obligated to pay for any additional services unless a written amendment to this Contract has been signed by both parties.

II.

Effective Date and Term: This contract shall be in full force and effect when signed by all parties and shall continue for a reasonable time for the specific project and

shall terminate upon project completion or when terminated pursuant to paragraph X below.

III.

Consideration and Compensation: Service Provider will be compensated based on a fixed sum for the specific project herein. **The not-to-exceed amount under this agreement is $15,180.00, unless amended by a change order and approved by the Williamson County Commissioners Court.** Payment for goods and services shall be governed by Chapter 2251 of the Texas Government Code. An invoice shall be deemed overdue the 31st day after the later of (1) the date The County receives the goods under the contract; (2) the date the performance of the service under the contract is completed; or (3) the date the Williamson County Auditor receives an invoice for the goods or services. Interest charges for any overdue payments shall be paid by The County in accordance with Texas Government Code Section 2251.025. More specifically, the rate of interest that shall accrue on a late payment is the rate in effect on September 1 of The County's fiscal year in which the payment becomes due. The said rate in effect on September 1 shall be equal to the sum of one percent (1%); and (2) the prime rate published in the Wall Street Journal on the first day of July of the preceding fiscal year that does not fall on a Saturday or Sunday.

IV.

Insurance: Service Provider shall provide and maintain, until the services covered in this Contract is completed and accepted by The County, the minimum insurance coverage in the minimum amounts as described below. Coverage shall be written on an occurrence basis by companies authorized and admitted to do business in the State of Texas and rated A- or better by A.M. Best Company or otherwise acceptable to The County and name The County as an additional insured.

	Type of Coverage	**Limits of Liability**
a.	Worker's Compensation	Statutory
b.	Employer's Liability	
	Bodily Injury by Accident	$500,000 Ea. Accident
	Bodily Injury by Disease	$500,000 Ea. Employee
	Bodily Injury by Disease	$500,000 Policy Limit

c. Comprehensive general liability including completed operations and contractual liability insurance for bodily injury, death, or property damages in the following amounts:

COVERAGE	PER PERSON	PER OCCURRENCE
Comprehensive General Liability (*including premises, completed operations and contractual*)	$ 500,000	$ 500,000
Aggregate policy limits:		$1,000,000

Service Provider, as an independent contractor, meets the qualifications of an "Independent Contractor" under Texas Worker's Compensation Act, Texas Labor Code, Section 406.141, and must provide its employees, agents and sub-subcontractors worker's compensation coverage. Contactor shall not be entitled to worker's compensation coverage or any other type of insurance coverage held by The County.

Upon execution of this Contract, Service Provider shall provide The County with insurance certificates evidencing compliance with the insurance requirements of this Contract.

V.

Entire Contract & Incorporated Documents: This Contract constitutes the entire Contract between the parties and may not be modified or amended other than by a written instrument executed by both parties. Documents expressly incorporated (as if copied in full) into this Contract include the following:

As described in the attached Statement of Work/Quotation, which is marked Exhibit "A" and incorporated herein as if copied in full.

A. Any required insurance certificates evidencing required coverages.

The County reserves the right and discretion (pursuant to public policy and Texas Constitutional principles) to determine applicable provisions where there is any conflict between this Contract and any of the above-referenced contract documents/exhibits or incorporated documents.

VI.

No Agency Relationship & Indemnification: It is understood and agreed that Service Provider shall not in any sense be considered a partner or joint venturer with The County, nor shall Service Provider hold himself out as an agent or official representative of The County unless expressly authorized to do so by a majority of the Williamson County Commissioners Court. Service Provider shall be considered an independent contractor for the purpose of this Contract and shall in no manner incur any expense or liability on behalf of The County other than what may be expressly allowed under this

information at all times.

XV.

Good Faith Clause: Service Provider agrees to act in good faith in the performance of this Contract.

XVI.

No Assignment: Service Provider may not assign this Contract.

XVII.

Confidentiality: Service Provider expressly agrees that he or she will not use any incidental confidential information that may be obtained while working in a governmental setting for his or her own benefit, and agrees that he or she will not enter any unauthorized areas or access confidential information and he or she will not disclose any information to unauthorized third parties, and will take care to guard the security of the information at all times.

XVIII.

County Judge or Presiding Officer Authorized to Sign Contract: The presiding officer of The County's governing body who is authorized to execute this instrument by order duly recorded may execute this Contract on behalf of The County.

WITNESS that this Contract shall be effective as of the date of the last party's execution below.

WILLIAMSON COUNTY:

_____
Authorized Signature

_____
Printed Name

Date: _____, 2018

SERVICE PROVIDER:

Daryl W. Maruska
Authorized Signature

Gary W. Maruska
Printed Name

Date: 4 - 6 -, 2018

Commissioners Court - Regular Session **44.**

Meeting Date: 04/17/2018

Sheriff's Office HVAC Services Contract

Submitted For: Randy Barker **Submitted By:** Melissa Gurka, Purchasing

Department: Purchasing

Agenda Category: Regular Agenda Items

Information

Agenda Item

Discuss, consider, and take appropriate action on approving the HVAC Service Contract between MTech and Williamson County for HVAC testing and installation, in the not-to-exceed the amount of $61,000, pursuant to TIPS contract # 1032615 and authorizing the execution of the agreement.

Background

This service is for the Williamson County Sheriff's Office. The services provided include HVAC testing and balancing, as well as disconnecting old makeup air unit and installing new makeup air unit. The department point of contact is Dale Butler. This expenditure will be charged to 01.0100.1008.005300. Funding was approved in the FY2018 budget.

Fiscal Impact

From/To	Acct No.	Description	Amount

Attachments

Quote

service contract

Form Review

Inbox	Reviewed By	Date
Purchasing (Originator)	Randy Barker	04/12/2018 08:50 AM
County Judge Exec Asst.	Wendy Coco	04/12/2018 09:18 AM
Form Started By: Melissa Gurka		Started On: 04/11/2018 02:13 PM
Final Approval Date: 04/12/2018		

COMFORT SYSTEMS USA
Mtech-Icon

1720 Royston Lane
Round Rock, TX 78664
Phone: (512) 929-7090
Fax: (512) 929-7197
TACLA20760C / M 16472 / TECL 29725
ITBs to: mtech-itb@csusa.us

QUOTE TO: **WilCo Facilities Maintenance** **DATE:** **March 12, 2018**
FOR THE PROJECT: **WilCo Sheriff's Office RTU**
ATTENTION: **Toby Bonnet**
EMAIL: tbonnet@wilco.org

TIPS # 1032615

TXMAS-15-03FAC01

WILCO SHERIFF'S OFFICE MAKEUP AIR UNIT – HVAC QUOTE

We offer the following proposal for your consideration for the HVAC scope of work on the above referenced project. Subject to the following scope narrative, exclusions & clarifications.

HVAC PRICING: **$ 61,000 + tax**

INCLUDED IN HVAC PRICE:

1. Disconnect (1) makeup air unit
2. Install (1) new makeup air unit – AAON or McQuay same price
3. Reconnect (1) makeup air unit
4. Reconnect condensate drain
5. New curb or curb adapter as required
6. Disposal of equipment
7. Equipment hoisting
8. Shut down and start-up of equipment
9. Test & balance
10. One-year standard warranty

NOT INCLUDED IN PRICE:

1. Equipment service or maintenance, except for warranty purposes
2. Smoke detectors
3. Electrical / line voltage wiring (above 24v) / motor starters and/or disconnects unless specifically noted above
4. Lightening or ground protection
5. Controls
6. Weatherproofing curbs
7. Delays beyond Mtech's control
8. Structural engineering or structural supports / angle iron framing / structural steel
9. Painting of equipment or material beyond factory finishes
10. Patching of other trades work as required for installation of Mtech work
11. Repairs to existing material or equipment not specifically noted above
12. Temporary controls for HVAC systems
13. Engineering work of any kind
14. 3rd Party testing of any kind not specifically noted above
15. 3rd Party commissioning agent fees

Bart Hoover
Chief Estimator
512-908-1069
bart.hoover@csusa.us

THE STATE OF TEXAS §

COUNTY OF WILLIAMSON §

SERVICES CONTRACT
FOR HVAC UNITS
WILLIAMSON COUNTY SHERIFF'S OFFICE
(MTech-Icon)
(TIPS #1032615, TXMAS-15-03FAC01)

Important Notice: County Purchase Orders and Contracts constitute expenditures of public funds, and all vendors are hereby placed on notice that any quotes, invoices or any other forms that seek to unilaterally impose contractual or quasicontractual terms are subject to the extent authorized by Texas law, including but not limited to Tex. Const. art. XI, § 7, the Texas Government Code, the Texas Local Government Code, the Texas Transportation Code, the Texas Health & Safety Code, and Opinions of the Texas Attorney General relevant to local governmental entities.

THIS CONTRACT is made and entered into by and between **Williamson County, Texas** (hereinafter "The County"), a political subdivision of the State of Texas, acting herein by and through its governing body, and **Mtech Comfort Systems USA** (hereinafter "Service Provider"), 1720 Royston Ln, Round Rock, TX 78664. The County agrees to engage Service Provider as an independent contractor, to assist in providing certain operational services pursuant to the following terms, conditions, and restrictions:

I.

No Agency Relationship & Indemnification: It is understood and agreed that Service Provider shall not in any sense be considered a partner or joint venturer with The County, nor shall Service Provider hold himself out as an agent or official representative of The County unless expressly authorized to do so by a majority of the Williamson County Commissioners Court. Service Provider shall be considered an independent contractor for the purpose of this agreement and shall in no manner incur any expense or liability on behalf of The County other than what may be expressly allowed under this agreement. The County will not be liable for any loss, cost, expense or damage, whether indirect, incidental, punitive, exemplary, consequential of any kind whatsoever for any acts by Service Provider or failure to act relating to the services being provided. Service Provider agrees to indemnify, hold harmless, and defend The County against any claim,

demand, loss, injury, damages, action, or liability of any kind against The County resulting from any services Service Provider perform on behalf of The County.

II.

No Waiver of Sovereign Immunity or Powers: Nothing in this agreement will be deemed to constitute a waiver of sovereign immunity or powers of The County, the Williamson County Commissioners Court, or the Williamson County Judge.

III.

No Assignment: Service Provider may not assign this contract.

IV.

Compliance with All Laws: Service Provider agrees and will comply with any and all local, state or federal requirements with respect to the services rendered.

V.

Consideration and Compensation: Service Provider will be compensated based on the attached Fee Proposal, dated **March 12, 2018**, which is marked as Exhibit "A" and incorporated herein as if copied in full. **The not-to-exceed amount under this agreement is $61,000.00, unless amended by a change order and approved by the Williamson County Commissioners Court.** Payment for goods and services shall be governed by Chapter 2251 of the Texas Government Code. An invoice shall be deemed overdue the 31st day after the later of (1) the date The County receives the goods under the contract; (2) the date the performance of the service under the contract is completed; or (3) the date the Williamson County Auditor receives an invoice for the goods or services. Interest charges for any overdue payments shall be paid by The County in accordance with Texas Government Code Section 2251.025. More specifically, the rate of interest that shall accrue on a late payment is the rate in effect on September 1 of The County's fiscal year in which the payment becomes due. The said rate in effect on September 1 shall be equal to the sum of one percent (1%); and (2) the prime rate published in the Wall Street Journal on the first day of July of the preceding fiscal year that does not fall on a Saturday or Sunday.

VI.

Insurance: Service Provider shall provide and maintain, until the services covered in this Contract is completed and accepted by The County, the minimum insurance coverage in the minimum amounts as described below. Coverage shall be written on an occurrence basis by companies authorized and admitted to do business in

the State of Texas and rated A- or better by A.M. Best Company or otherwise acceptable to The County and name The County as an additional insured.

	Type of Coverage	**Limits of Liability**
a.	Worker's Compensation	Statutory
b.	Employer's Liability	
	Bodily Injury by Accident	$500,000 Ea. Accident
	Bodily Injury by Disease	$500,000 Ea. Employee
	Bodily Injury by Disease	$500,000 Policy Limit

c. Comprehensive general liability including completed operations and contractual liability insurance for bodily injury, death, or property damages in the following amounts:

COVERAGE	PER PERSON	PER OCCURRENCE
Comprehensive General Liability (*including premises, completed operations and contractual*)	$1,000,000	$1,000,000
Aggregate policy limits:		$2,000,000

d. Comprehensive automobile and auto liability insurance (covering owned, hired, leased and non-owned vehicles):

COVERAGE	PER PERSON	PER OCCURRENCE
Bodily injury (including death)	$1,000,000	$1,000,000
Property damage	$1,000,000	$1,000,000
Aggregate policy limits	No aggregate limit	

Service Provider, as an independent contractor, meets the qualifications of an "Independent Contractor" under Texas Worker's Compensation Act, Texas Labor Code, Section 406.141, and must provide its employees, agents and sub-subcontractors worker's compensation coverage. Contactor shall not be entitled to worker's compensation coverage or any other type of insurance coverage held by The County.

Upon execution of this Contract, Service Provider shall provide The County with insurance certificates evidencing compliance with the insurance requirements of this Contract.

VII.

INDEMNIFICATION - EMPLOYEE PERSONAL INJURY CLAIMS: TO THE FULLEST EXTENT PERMITTED BY LAW, THE SERVICE PROVIDER SHALL INDEMNIFY, DEFEND (WITH COUNSEL OF THE COUNTY'S CHOOSING), AND HOLD HARMLESS THE COUNTY, AND THE COUNTY'S EMPLOYEES, AGENTS, REPRESENTATIVES, PARTNERS, OFFICERS, AND DIRECTORS (COLLECTIVELY, THE "INDEMNITEES") AND SHALL ASSUME ENTIRE RESPONSIBILITY AND LIABILITY (OTHER THAN AS A RESULT OF INDEMNITEES' GROSS NEGLIGENCE) FOR ANY CLAIM OR ACTION BASED ON OR ARISING OUT OF THE PERSONAL INJURY, OR DEATH, OF ANY EMPLOYEE OF THE SERVICE PROVIDER, OR OF ANY SUBCONTRACTOR, OR OF ANY OTHER ENTITY FOR WHOSE ACTS THEY MAY BE LIABLE, WHICH OCCURRED OR WAS ALLEGED TO HAVE OCCURRED ON THE WORK SITE OR IN CONNECTION WITH THE PERFORMANCE OF THE WORK. SERVICE PROVIDER HEREBY INDEMNIFIES THE INDEMNITEES EVEN TO THE EXTENT THAT SUCH PERSONAL INJURY WAS CAUSED OR ALLEGED TO HAVE BEEN CAUSED BY THE SOLE, COMPARATIVE OR CONCURRENT NEGLIGENCE OF THE STRICT LIABILITY OF ANY INDEMNIFIED PARTY. THIS INDEMNIFICATION SHALL NOT BE LIMITED TO DAMAGES, COMPENSATION, OR BENEFITS PAYABLE UNDER INSURANCE POLICIES, WORKERS COMPENSATION ACTS, DISABILITY BENEFITS ACTS, OR OTHER EMPLOYEES BENEFIT ACTS.

INDEMNIFICATION - OTHER THAN EMPLOYEE PERSONAL INJURY CLAIMS: TO THE FULLEST EXTENT PERMITTED BY LAW, SERVICE PROVIDER SHALL INDEMNIFY, DEFEND (WITH COUNSEL OF THE COUNTY'S CHOOSING), AND HOLD HARMLESS THE COUNTY, AND THE COUNTY'S EMPLOYEES, AGENTS, REPRESENTATIVES, PARTNERS, OFFICERS, AND DIRECTORS (COLLECTIVELY, THE "INDEMNITEES") FROM AND AGAINST CLAIMS, DAMAGES, LOSSES AND EXPENSES, INCLUDING BUT NOT LIMITED TO ATTORNEYS' FEES, ARISING OUT OF OR ALLEGED TO BE RESULTING FROM THE PERFORMANCE OF THIS AGREEMENT OR THE WORK DESCRIBED HEREIN, TO THE EXTENT CAUSED BY THE NEGLIGENCE, ACTS, ERRORS, OR OMISSIONS OF SERVICE PROVIDER OR ITS SUBCONTRACTORS, ANYONE EMPLOYED BY THEM OR ANYONE FOR WHOSE ACTS THEY MAY BE LIABLE, REGARDLESS OF WHETHER OR NOT SUCH CLAIM, DAMAGE, LOSS OR EXPENSE IS CAUSED IN WHOLE OR IN PART BY A PARTY INDEMNIFIED HEREUNDER.

VIII.

Services: Service Provider shall provide services *as an independent contractor* pursuant to terms and policies of the Williamson County Commissioners Court. Service Provider expressly acknowledges that he or she is not an employee of The County. The

services include, but are not limited to the following items in order to complete the project:

As described in the Fee Proposal with Scope of Work for Installation, dated **March 12, 2018**, which is incorporated herein as if copied in full.

IX.

Good Faith Clause: Service Provider agrees to act in good faith in the performance of this agreement.

X.

Confidentiality: Service Provider expressly agrees that he or she will not use any incidental confidential information that may be obtained while working in a governmental setting for his or her own benefit, and agrees that he or she will not enter any unauthorized areas or access confidential information and he or she will not disclose any information to unauthorized third parties, and will take care to guard the security of the information at all times.

XI.

Termination: This agreement may be terminated at any time at the option of either party, without *future or prospective* liability for performance upon giving thirty (30) days written notice thereof. In the event of termination, The County will only be liable for its pro rata share of services rendered and goods actually received.

XII.

Venue and Applicable Law: Venue of this contract shall be Williamson County, Texas, and the laws of the State of Texas shall govern all terms and conditions.

XIII.

Effective Date and Term: This contract shall be in full force and effect when signed by all parties and shall continue for a reasonable time period for the specific project and shall terminate upon project completion or when terminated pursuant to paragraph XI above.

XIV.

Severability: In case any one or more of the provisions contained in this agreement shall for any reason be held to be invalid, illegal, or unenforceable in any

respect, such invalidity, illegality, or unenforceability shall not affect any other provision in this agreement and this agreement shall be construed as if such invalid, illegal, or unenforceable provision had never been contained in it.

XV.

Right to Audit: Service Provider agrees that The County or its duly authorized representatives shall, until the expiration of three (3) years after final payment under this Agreement, have access to and the right to examine and photocopy any and all books, documents, papers and records of Service Provider which are directly pertinent to the services to be performed under this Agreement for the purposes of making audits, examinations, excerpts, and transcriptions. Service Provider agrees that The County shall have access during normal working hours to all necessary Service Provider facilities and shall be provided adequate and appropriate work space in order to conduct audits in compliance with the provisions of this section. The County shall give Service Provider reasonable advance notice of intended audits.

XVI.

County Judge or Presiding Officer Authorized to Sign Contract: The presiding officer of The County's governing body who is authorized to execute this instrument by order duly recorded may execute this contract on behalf of The County.

WITNESS the signatures of all parties in duplicate originals this the _____ day of _____, 2018.

WILLIAMSON COUNTY:

_____
Authorized Signature

SERVICE PROVIDER:

Authorized Signature

Exhibit “A”
Quote Dated March 12, 2018, which is incorporated herein as if copied in full.

COMFORT SYSTEMS USA
Mtech-Icon

1720 Royston Lane
Round Rock, TX 78664
Phone: (512) 929-7090
Fax: (512) 929-7197
TACLA20760C / M 16472 / TECL 29725
ITBs to: mtech-itb@csusa.us

QUOTE TO: **WilCo Facilities Maintenance** **DATE:** **March 12, 2018**
FOR THE PROJECT: **WilCo Sheriff's Office RTU**
ATTENTION: **Toby Bonnet**
EMAIL: tbonnet@wilco.org

TIPS # 1032615

TXMAS-15-03FAC01

WILCO SHERIFF'S OFFICE MAKEUP AIR UNIT – HVAC QUOTE

We offer the following proposal for your consideration for the HVAC scope of work on the above referenced project. Subject to the following scope narrative, exclusions & clarifications.

HVAC PRICING: **$ 61,000 + tax**

INCLUDED IN HVAC PRICE:

1. Disconnect (1) makeup air unit
2. Install (1) new makeup air unit – AAON or McQuay same price
3. Reconnect (1) makeup air unit
4. Reconnect condensate drain
5. New curb or curb adapter as required
6. Disposal of equipment
7. Equipment hoisting
8. Shut down and start-up of equipment
9. Test & balance
10. One-year standard warranty

NOT INCLUDED IN PRICE:

1. Equipment service or maintenance, except for warranty purposes
2. Smoke detectors
3. Electrical / line voltage wiring (above 24v) / motor starters and/or disconnects unless specifically noted above
4. Lightening or ground protection
5. Controls
6. Weatherproofing curbs
7. Delays beyond Mtech's control
8. Structural engineering or structural supports / angle iron framing / structural steel
9. Painting of equipment or material beyond factory finishes
10. Patching of other trades work as required for installation of Mtech work
11. Repairs to existing material or equipment not specifically noted above
12. Temporary controls for HVAC systems
13. Engineering work of any kind
14. 3rd Party testing of any kind not specifically noted above
15. 3rd Party commissioning agent fees

Bart Hoover
Chief Estimator
512-908-1069
bart.hoover@csusa.us

Commissioners Court - Regular Session **45.**

Meeting Date: 04/17/2018

Invitation For Bid 1803-219 Southwest Bypass Segment 2

Submitted For: Randy Barker **Submitted By:** Johnny Grimaldo, Purchasing

Department: Purchasing

Agenda Category: Regular Agenda Items

Information

Agenda Item

Discuss, consider, and take appropriate action on authorizing the Purchasing Agent to advertise and receive sealed bids for Southwest Bypass Segment 2 under IFB # 1802-219.

Background

Williamson County is seeking qualified contractors to widen the existing roadway, which includes grading, drainage improvements, flexible base, HMAC, striping and signing. Estimated time of completion is 420 calendar days to substantial completion and 30 calendar days to final completion, with an estimated cost of $10,840,000.00. The point of contact is HNTB and Road Bonds will be utilized

---

Fiscal Impact

From/To	Acct No.	Description	Amount

Attachments

1803-219 BID PACKET

Form Review

Inbox	Reviewed By	Date
Purchasing (Originator)	Randy Barker	04/12/2018 09:13 AM
County Judge Exec Asst.	Wendy Coco	04/12/2018 09:25 AM
Form Started By: Johnny Grimaldo		Started On: 04/12/2018 07:58 AM
Final Approval Date: 04/12/2018		

Solicitation 1803-219

Southwest Bypass Segment 2

Bid Designation: Public

Williamson County, Texas

Bid 1803-219
Southwest Bypass Segment 2

Bid Number	1803-219
Bid Title	Southwest Bypass Segment 2
Bid Start Date	In Held
Bid End Date	May 9, 2018 10:30:00 AM CDT
Question & Answer End Date	May 4, 2018 3:00:00 PM CDT
Bid Contact	Johnny Grimaldo Purchasing Specialist II 512-**943**-1553 johnny.grimaldo@wilco.org
Contract Duration	**One Time Purchase**
Contract Renewal	Not Applicable
Prices Good for	**365 days**
Pre-Bid Conference	**May 2, 2018 10:30:00 AM CDT** **Attendance is optional** **Location: 901 S. Austin Avenue, Georgetown, TX 78626**
Bid Comments	**Williamson County is seeking qualified contractors to widen the existing roadway, which includes grading, drainage improvements, flexible base, HMAC, striping and signing.** **Estimated time of completion is 420 calendar days to substantial completion, and 30 calendar days to final completion, with an estimated cost of $10,840,000.00.**

Item Response Form

Item	**1803-219--01-01 -** Total Bid Price
Quantity	**1 each**
Unit Price	
Delivery Location	**Williamson County, Texas** No Location Specified

Qty 1

Description
TOTAL BID PRICE

Item	**1803-219--01-02 -** Please attach all documents to this line
Quantity	**1 each**

Prices are not requested for this item.

Delivery Location	**Williamson County, Texas** No Location Specified

Qty 1

Description
Please Attach all Documents to this line

PUBLIC ANNOUNCEMENT AND GENERAL INFORMATION

WILLIAMSON COUNTY PURCHASING DEPARTMENT
SOLICITATION 1803-219
Southwest Bypass Segment 2

BIDS MUST BE RECEIVED ON OR BEFORE:
May 9, 2018 10:30:00 AM CDT

BIDS WILL BE PUBLICLY OPENED:
May 9, 2018 10:30:00 AM CDT

Notice is hereby given that sealed Bids for the above-mentioned goods and/or services will be accepted by the Williamson County Purchasing Department. Williamson County uses BidSync to distribute and receive bids. Specifications for this IFB may be obtained by registering at www.bidsync.com.

Williamson County prefers and requests electronic submittal of this Bid.

All electronic bids must be submitted via: www.bidsync.com

Electronic bids are requested, however paper bids will currently still be received, until further notice and may be mailed or delivered to the address listed below.

Bidders are strongly encouraged to carefully read this entire IFB.

All interested Bidders are invited to submit a Bid in accordance with the Instructions and General Requirements, Bid Format, Bid Specifications, and Definitions, Terms and Conditions stated in this IFB.

Please note that a complete package must be submitted choosing one of the above two methods. Split packages submitted will be considered "unresponsive" and will not be accepted or evaluated.

Williamson County will not accept any Bids received after the submittal deadline, and shall return such Bids unopened to the Bidder.

General Information:

- If mailed or delivered in person, Bids and Bid addenda are to be delivered in sealed envelope on or before the submittal deadline, as noted in the Public Announcement and General Information listed above for this IFB, to:

  Williamson County Purchasing Department
  Attn: **BID NAME AND NUMBER**
  901 South Austin Avenue
  Georgetown, Texas 78626

  - Bidders should list the Bid Number, Bid Name, Name and Address of Bidder, and the Date of the Bid opening on the outside of the box or envelope and note "Sealed Bid Enclosed."
  - Bidder should submit one (1) original.
  - Williamson County will NOT be responsible for unmarked or improperly marked envelopes.
  - Williamson County will not accept any responsibility for Bids being delivered by third party carriers.
  - Facsimile transmittals will NOT be accepted.

- Bids will be opened publicly in a manner; however, to avoid public disclosure of contents only the names and of Bidders and prices will be read aloud.

- All submitted questions with their answers will be posted and updated on www.bidsync.com.

- It is the Bidder's responsibility to review all documents in BidSync, including any Addenda that may have been added after the document packet was originally released and posted.

  - Any Addenda and/or other information relevant to the IFB will be posted on www.bidsync.com.

  - The Williamson County Purchasing Department takes no responsibility to ensure any interested Bidder has obtained any outstanding addenda or additional information.

Bidder References

List the last (3) companies or governmental agencies, where the same or similar goods and/or services as contained in this IFB package, were recently provided by Bidder.

Reference 1

Client Name: Location:

Contact Name: Title:

Phone: E-mail

Contract Date To: Contract Date From: Contract Value: $

Scope of Work:

Reference 2

Client Name: Location:

Contact Name: Title:

Phone: E-mail

Contract Date To: Contract Date From: Contract Value: $

Scope of Work:

Reference 3

Client Name: Location:

Contact Name: Title:

Phone: E-mail

Contract Date To: Contract Date From: Contract Value: $

Scope of Work:

CONFLICT OF INTEREST QUESTIONNAIRE

For vendor or other person doing business with local governmental entity

Form CIQ

This questionnaire is being filed in accordance with chapter 176 of the Local Government Code by a person doing business with the governmental entity.

By law this questionnaire must be filed with the records administrator of the local government not later than the 7th business day after the date the person becomes aware of facts that require the statement to be filed. See Section 176.006, Local Government Code.

A person commits an offense if the person violates Section 176.006, Local Government Code. An offense under this section is a Class C misdemeanor.

OFFICE USE ONLY

Date Received

1 **Name of person doing business with local governmental entity.**

2 ☐ **Check this box if you are filing an update to a previously filed questionnaire.**

(The law requires that you file an updated completed questionnaire with the appropriate filing authority not later than September 1 of the year for which an activity described in Section 176.006(a), Local Government Code, is pending and not later than the 7th business day after the date the originally filed questionnaire becomes incomplete or inaccurate.)

3 **Describe each affiliation or business relationship with an employee or contractor of the local governmental entity who makes recommendations to a local government officer of the local governmental entity with respect to expenditure of money.**

4 **Describe each affiliation or business relationship with a person who is a local government officer and who appoints or employs a local government officer of the local governmental entity that is the subject of this questionnaire.**

CONFLICT OF INTEREST QUESTIONNAIRE

For vendor or other person doing business with local governmental entity

Form CIQ
Page 2

5 **Name of local government officer with whom filer has affiliation or business relationship.**
(Complete this section only if the answer to A, B, or C is YES.)

This section, item 5 including subparts A, B, C & D, must be completed for each officer with whom the filer has affiliation or other relationship. Attach additional pages to this Form CIQ as necessary.

A. Is the local government officer named in this section receiving or likely to receive taxable income from the filer of the questionnaire?

☐ Yes ☐ No

B. Is the filer of the questionnaire receiving or likely to receive taxable income from or at the direction of the local government officer named in this section AND the taxable income is not from the local governmental entity?

☐ Yes ☐ No

C. Is the filer of this questionnaire affiliated with a corporation or other business entity that the local government officer serves as an officer or director, or holds an ownership of 10 percent or more?

☐ Yes ☐ No

D. Describe each affiliation or business relationship.

6. Describe any other affiliation or business relationship that might cause conflict of interest:

7

Signature of person doing business with the governmental entity	Date

Signature not required if completing in BIDSYNC electronically.

BID AFFIDAVIT

This form must be completed, signed, notarized and returned with Bid package

The undersigned attests that the company named below, under the provisions of Subtitle F, Title 10, Texas Government Code Chapter 2270:

1. Does not boycott Israel currently; and
2. Will not boycott Israel during the term of the contract.

Pursuant to Section 2270.001, Texas Government Code:

1. "Boycott Israel" means refusing to deal with, terminating business activities with, or otherwise taking any action that is intended to penalize, inflict economic harm on, or limit commercial relations specifically with Israel, or with a person or entity doing business in Israel or in an Israeli-controlled territory, but does not include an action made for ordinary business purposes; and
2. "Company" means a for-profit sole proprietorship, organization, association, corporation, partnership, joint venture, limited partnership, or any limited liability company, including a wholly owned subsidiary, majority-owned subsidiary, parent company or affiliate of those entities or business associations that exist to make a profit.

The undersigned certifies that the IFB and the Bidder's Bid have been carefully reviewed and are submitted as correct and final. Bidder further certifies and agrees to furnish any and/or all goods and/or services upon which prices are extended at the price Bid, and upon the conditions contained in the IFB.

I hereby certify that the foregoing Bid has not been prepared in collusion with any other Bidder or other person or persons engaged in the same line of business prior to the official opening of this Bid. Further, I certify that the Bidder is not now, nor has been for the past six (6) months, directly or indirectly concerned in any pool or agreement or combination, to control the price of services/commodities Bid on, or to influence any person or persons to submit a Bid or not to submit a Bid thereon."

Name of Bidder:	
Address of Bidder:	
Email:	
Telephone:	
Printed Name of Person Submitting Affidavit:	
Signature of Person Submitting Affidavit:	

Cooperative Purchasing Program

Check one of the following options below. A non-affirmative Bid will in no way have a negative impact on the County's evaluation of the Bid.

☐	I will offer the quoted prices to all authorized entities during the term of the County's Contract.
☐	I will not offer the quoted prices to all authorized entities.

If no box is checked, the Bidder agrees to make best efforts in good faith to offer the quoted prices to all authorized entities.

BEFORE ME, the undersigned authority, a Notary Public, personally appeared _____ (*Name of Signer*), who after being by me duly sworn, did depose and say: "I, _____, (*Name of Signer*) am a duly authorized officer of/agent for _____ (*Name of Bidder*) and have been duly authorized to execute the foregoing on behalf of the said _____ (*Name of Bidder*).

SUBSCRIBED AND SWORN to before me by the above-named _____

on this the _____ day of _____, 20_____.

_____

Notary Public in and for

The State of _____

The County of _____

SIGNATURE AND NOTARY NOT REQUIRED IF COMPLETING IN BIDSYNC ELECTRONICALLY.

BID FORM
WILLIAMSON COUNTY, TEXAS

PROJECT: 1803-219 Southwest Bypass: Segment 2 **BIDDER:** _____

Full compensation for compliance with each and every provision of the Request for Bids, the Bid, the Specifications, and the Contract will be considered as included in the unit prices for the work set forth below, and no separate payment will be made for compliance with each and every provision of the Request for Bids, the Bid, the Specifications, and the Contract, unless separate payment is expressly provided for therein.

BID ITEM	TECH SPEC[1]	DESCRIPTION	BID QUANTITY	UNIT MEASURE	UNIT COST	AMOUNT BID
1	100-6002	PREPARING ROW	94	STA		$ -
2	104-6001	REMOVING CONC (PAV)	5	SY		$ -
3	104-6013	REMOVING CONC (FOUNDATIONS)	582	SY		$ -
4	105-6011	REMOVING STAB BASE AND ASPH PAV (2"-6")	715	SY		$ -
5	110-6001	EXCAVATION (ROADWAY)	171,443	CY		$ -
6	132-6005	EMBANKMENT (FINAL)(ORD COMP)(TY C)	123,229	CY		$ -
7	132-6006	EMBANKMENT (FINAL)(DENS CONT)(TY C)	37,034	CY		$ -
8	160-6005	FURNISHING AND PLACING TOPSOIL	4,393	CY		$ -
9	161-6017	COMPOST MANUF TOPSOIL (4")	42,306	SY		$ -
10	164-6009	BROADCAST SEED (TEMP) (WARM)	21,154	SY		$ -
11	164-6011	BROADCAST SEED (TEMP) (COOL)	21,154	SY		$ -
12	164-6023	CELL FBR MLCH SEED(PERM) (RURAL)(CLAY)	42,306	SY		$ -
13	168-6001	VEGETATIVE WATERING	6,982	MG		$ -
14	169-6001	SOIL RETENTION BLANKETS (CL 1) (TY A)	17,219	SY		$ -
15	247-6041	FL BS (CMP IN PLC) (TYA GR1&2) (FNAL POS)	9,838	CY		$ -
16	310-6027	PRIME COAT(MC-30 OR AE-P)	5,455	GAL		$ -

[1]Refer to the Technical Specifications section for a description of the specific reference number.

BID FORM
WILLIAMSON COUNTY, TEXAS

PROJECT: **1803-219 Southwest Bypass: Segment 2** **BIDDER:** _____

Full compensation for compliance with each and every provision of the Request for Bids, the Bid, the Specifications, and the Contract will be considered as included in the unit prices for the work set forth below, and no separate payment will be made for compliance with each and every provision of the Request for Bids, the Bid, the Specifications, and the Contract, unless separate payment is expressly provided for therein.

BID ITEM	TECH SPEC[1]	DESCRIPTION	BID QUANTITY	UNIT MEASURE	UNIT COST	AMOUNT BID
17	340-6242	D-GR HMA(SQ)TY-B OR D PG64-22(LVL-UP)	829	TON		$ -
18	341-6008	D-GR HMA TY-B PG64-22	4,672	TON		$ -
19	341-6042	D-GR HMA TY-D SAC-B PG70-22	5,941	TON		$ -
20	354-6021	PLANE ASPH CONC PAV(0" TO 2")	4,175	SY		$ -
21	400-6005	CEM STABIL BKFL	224	CY		$ -
22	401-6001	FLOWABLE BACKFILL	167	CY		$ -
23	416-6001	DRILL SHAFT (18 IN)	119	LF		$ -
24	416-6005	DRILL SHAFT (42 IN)	672	LF		$ -
25	416-6029	DRILL SHAFT (RDWY ILL POLE) (30 IN)	32	LF		$ -
26	416-6032	DRILL SHAFT (TRF SIG POLE) (36 IN)	52	LF		$ -
27	420-6007	CL A CONC (FLUME)	1	CY		$ -
28	420-6013	CL C CONC (ABUT)	74.1	CY		$ -
29	420-6029	CL C CONC (CAP)	135	CY		$ -
30	420-6037	CL C CONC (COLUMN)	148.4	CY		$ -
31	420-6074	CL C CONC (MISC)	86.4	CY		$ -
32	422-6001	REINF CONC SLAB	35,280	SF		$ -

[1]Refer to the Technical Specifications section for a description of the specific reference number.

BID FORM
WILLIAMSON COUNTY, TEXAS

PROJECT: **1803-219 Southwest Bypass: Segment 2** **BIDDER:** _____

Full compensation for compliance with each and every provision of the Request for Bids, the Bid, the Specifications, and the Contract will be considered as included in the unit prices for the work set forth below, and no separate payment will be made for compliance with each and every provision of the Request for Bids, the Bid, the Specifications, and the Contract, unless separate payment is expressly provided for therein.

BID ITEM	TECH SPEC[1]	DESCRIPTION	BID QUANTITY	UNIT MEASURE	UNIT COST	AMOUNT BID
33	422-6015	APPROACH SLAB	75.4	CY		$ -
34	423-RW05	RETAINING WALL 5 (MSE) (ASHLAR STONE FIN)	2,690	SF		$ -
35	423-RW06	RETAINING WALL 6 (MSE) (ASHLAR STONE FIN)	2,416	SF		$ -
36	425-6040	PRESTR CONC GIRDER (TX62)	3,587.05	LF		$ -
37	431-8001	PNEUMATICALLY PLACED CONC (ROCK FACIA)	625	SY		$ -
38	432-6001	RIPRAP (CONC)(4 IN)	82	CY		$ -
39	432-6033	RIPRAP (STONE PROTECTION)(18 IN)	184	CY		$ -
40	432-6045	RIPRAP (MOW STRIP)(4 IN)	33	CY		$ -
41	432-8001	RIPRAP (STONE PROTECTION)(8 IN) (TY I)	877	CY		$ -
42	432-8002	RIPRAP (STONE PROTECTION)(8 IN) (TY II)	9,178	CY		$ -
43	450-6023	RAIL (TY SSTR)	1,782	LF		$ -
44	454-6001	SEALED EXPANSION JOINT (4 IN) (SEJ - A)	144	LF		$ -
45	464-6005	RC PIPE (CL III)(24 IN)	84	LF		$ -
46	464-6007	RC PIPE (CL III)(30 IN)	168	LF		$ -
47	464-6008	RC PIPE (CL III)(36 IN)	360	LF		$ -
48	464-6018	RC PIPE (CL IV)(24 IN)	310	LF		$ -

[1]Refer to the Technical Specifications section for a description of the specific reference number.

BID FORM
WILLIAMSON COUNTY, TEXAS

PROJECT: 1803-219 Southwest Bypass: Segment 2 **BIDDER:** _____

Full compensation for compliance with each and every provision of the Request for Bids, the Bid, the Specifications, and the Contract will be considered as included in the unit prices for the work set forth below, and no separate payment will be made for compliance with each and every provision of the Request for Bids, the Bid, the Specifications, and the Contract, unless separate payment is expressly provided for therein.

BID ITEM	TECH SPEC[1]	DESCRIPTION	BID QUANTITY	UNIT MEASURE	UNIT COST	AMOUNT BID
49	464-6026	RC PIPE (CL V)(24 IN)	264	LF		$ -
50	466-6005	HEADWALL (CH - FW - 0) (DIA= 24 IN)	1	EA		$ -
51	466-6130	HEADWALL (CH - PW - S) (DIA= 24 IN)	1	EA		$ -
52	467-6001	SET (PIPE RUNNER ASSEMBLY)	1	EA		$ -
53	467-6388	SET (TY II) (24 IN) (RCP) (3: 1) (C)	1	EA		$ -
54	467-6390	SET (TY II) (24 IN) (RCP) (4: 1) (C)	1	EA		$ -
55	467-6394	SET (TY II) (24 IN) (RCP) (6: 1) (C)	2	EA		$ -
56	467-6419	SET (TY II) (30 IN) (RCP) (4: 1) (C)	2	EA		$ -
57	467-6422	SET (TY II) (30 IN) (RCP) (6: 1) (C)	2	EA		$ -
58	467-6448	SET (TY II) (36 IN) (RCP) (3: 1) (C)	3	EA		$ -
59	467-6453	SET (TY II) (36 IN) (RCP) (6: 1) (C)	3	EA		$ -
60	496-6039	REMOV STR (BUILDING)	2	EA		$ -
61	496-6043	REMOV STR (SMALL FENCE)	1,566	LF		$ -
62	500-6001	MOBILIZATION	1	LS		$ -
63	502-6001	BARRICADES, SIGNS AND TRAFFIC HANDLING	14	MO		$ -
64	506-6002	ROCK FILTER DAMS (INSTALL) (TY 2)	200	LF		$ -

[1]Refer to the Technical Specifications section for a description of the specific reference number.

BID FORM
WILLIAMSON COUNTY, TEXAS

PROJECT: **1803-219 Southwest Bypass: Segment 2** **BIDDER:** _____

Full compensation for compliance with each and every provision of the Request for Bids, the Bid, the Specifications, and the Contract will be considered as included in the unit prices for the work set forth below, and no separate payment will be made for compliance with each and every provision of the Request for Bids, the Bid, the Specifications, and the Contract, unless separate payment is expressly provided for therein.

BID ITEM	TECH SPEC[1]	DESCRIPTION	BID QUANTITY	UNIT MEASURE	UNIT COST	AMOUNT BID
65	506-6011	ROCK FILTER DAMS (REMOVE)	387	LF		$ -
66	506-6020	CONSTRUCTION EXITS (INSTALL) (TY 1)	160	SY		$ -
67	506-6024	CONSTRUCTION EXITS (REMOVE)	160	SY		$ -
68	506-6038	TEMP SEDMT CONT FENCE (INSTALL)	5,297	LF		$ -
69	506-6039	TEMP SEDMT CONT FENCE (REMOVE)	8,539	LF		$ -
70	506-8002	REMOVE ROCK	7,383	SY		$ -
71	512-6005	PORT CTB (FUR & INST)(F-SHAPE)(TY 1)	1,440	LF		$ -
72	529-6007	CONC CURB & GUTTER (TY I)	4,940	LF		$ -
73	529-6008	CONC CURB & GUTTER (TY II)	429	LF		$ -
74	531-6017	CURB RAMPS (TY 22)	4	EA		$ -
75	540-6001	MTL W-BEAM GD FEN (TIM POST)	237.5	LF		$ -
76	540-6006	MTL BEAM GD FEN TRANS (THRIE-BEAM)	4	EA		$ -
77	540-6016	DOWNSTREAM ANCHOR TERMINAL SECTION	1	EA		$ -
78	544-6001	GUARDRAIL END TREATMENT (INSTALL)	3	EA		$ -
79	550-6001	CHAIN LINK FENCE (INSTALL) (6')	116	LF		$ -
80	550-6006	GATE (REMOVE)	2	EA		$ -

[1]Refer to the Technical Specifications section for a description of the specific reference number.

BID FORM
WILLIAMSON COUNTY, TEXAS

PROJECT: **1803-219 Southwest Bypass: Segment 2** **BIDDER:** _____

Full compensation for compliance with each and every provision of the Request for Bids, the Bid, the Specifications, and the Contract will be considered as included in the unit prices for the work set forth below, and no separate payment will be made for compliance with each and every provision of the Request for Bids, the Bid, the Specifications, and the Contract, unless separate payment is expressly provided for therein.

BID ITEM	TECH SPEC[1]	DESCRIPTION	BID QUANTITY	UNIT MEASURE	UNIT COST	AMOUNT BID
81	552-8001	WIRE FENCE	15,416	LF		$ -
82	552-8002	GALVANIZED TUBE GATE	5	EA		$ -
83	556-6006	PIPE UNDERDRAINS (TY 6) (6")	215	LF		$ -
84	610-6105	IN RD IL (U/P) (TY 1) (250W EQ) LED	8	EA		$ -
85	610-6290	IN RD IL (TY SA) 50T-12 (400W EQ) LED	2	EA		$ -
86	610-6291	IN RD IL (TY SA) 50T-12-12(400W EQ)LED	2	EA		$ -
87	618-6023	CONDT (PVC) (SCH 40) (2")	9,808	LF		$ -
88	618-6024	CONDT (PVC) (SCH 40) (2") (BORE)	778	LF		$ -
89	618-6025	CONDT (PVC) (SCH 40) (2") (CONC ENCSE)	398	LF		$ -
90	618-6046	CONDT (PVC) (SCH 80) (2")	400	LF		$ -
91	618-6047	CONDT (PVC) (SCH 80) (2") (BORE)	335	LF		$ -
92	618-6053	CONDT (PVC) (SCH 80) (3")	130	LF		$ -
93	618-6054	CONDT (PVC) (SCH 80) (3") (BORE)	740	LF		$ -
94	618-6066	CONDT (RM) (1 1/4")	161	LF		$ -
95	620-6007	ELEC CONDR (NO.8) BARE	2,964	LF		$ -
96	620-6008	ELEC CONDR (NO.8) INSULATED	5,048	LF		$ -

[1]Refer to the Technical Specifications section for a description of the specific reference number.

BID FORM
WILLIAMSON COUNTY, TEXAS

PROJECT: **1803-219 Southwest Bypass: Segment 2** **BIDDER:** _____

Full compensation for compliance with each and every provision of the Request for Bids, the Bid, the Specifications, and the Contract will be considered as included in the unit prices for the work set forth below, and no separate payment will be made for compliance with each and every provision of the Request for Bids, the Bid, the Specifications, and the Contract, unless separate payment is expressly provided for therein.

BID ITEM	TECH SPEC[1]	DESCRIPTION	BID QUANTITY	UNIT MEASURE	UNIT COST	AMOUNT BID
97	621-6002	TRAY CABLE (3 CONDR) (12 AWG)	860	LF		$ -
98	624-6002	GROUND BOX TY A (122311) W/APRON	12	EA		$ -
99	624-6010	GROUND BOX TY D (162922)W/APRON	5	EA		$ -
100	628-6044	ELC SRV TY A 240/480 060(NS)SS(E)PS(U)	2	EA		$ -
101	628-6164	ELC SRV TY D 120/240 070(NS)AL(E)PS(U)	1	EA		$ -
102	644-6001	IN SM RD SN SUP&AM TY10BWG(1) SA(P)	16	EA		$ -
103	644-6004	IN SM RD SN SUP&AM TY10BWG(1) SA(T)	20	EA		$ -
104	644-6012	IN SM RD SN SUP&AM TY10BWG(1)SB(T)	1	EA		$ -
105	644-6030	IN SM RD SN SUP&AM TYS80(1)SA(T)	10	EA		$ -
106	644-6066	IN SM RD SN SUP&AM (RAIL MOUNT)	5	EA		$ -
107	644-6076	REMOVE SM RD SN SUP&AM	10	EA		$ -
108	658-6004	INSTL DEL ASSM (D-SW)SZ 1(FLX)SRF	37	EA		$ -
109	658-6005	INSTL DEL ASSM (D-SW)SZ 1(FLX)SRF(BI)	31	EA		$ -
110	658-6014	INSTL DEL ASSM (D-SW)SZ (BR)CTB (BI)	112	EA		$ -
111	658-6047	INSTL OM ASSM (OM-2Y)(WC)GND	7	EA		$ -
112	658-6061	INSTL DEL ASSM (D-SW)SZ 1(BRF)GF2	29	EA		$ -

[1]Refer to the Technical Specifications section for a description of the specific reference number.

BID FORM
WILLIAMSON COUNTY, TEXAS

PROJECT: **1803-219 Southwest Bypass: Segment 2** **BIDDER:** _____

Full compensation for compliance with each and every provision of the Request for Bids, the Bid, the Specifications, and the Contract will be considered as included in the unit prices for the work set forth below, and no separate payment will be made for compliance with each and every provision of the Request for Bids, the Bid, the Specifications, and the Contract, unless separate payment is expressly provided for therein.

BID ITEM	TECH SPEC[1]	DESCRIPTION	BID QUANTITY	UNIT MEASURE	UNIT COST	AMOUNT BID
113	666-6006	REFL PAV MRK TY I (W)4"(DOT) (100MIL)	56	LF		$ -
114	666-6036	REFL PAV MRK TY I (W)8"(SLD) (100MIL)	3,806	LF		$ -
115	666-6048	REFL PAV MRK TY I (W)24"(SLD) (100MIL)	202	LF		$ -
116	666-6054	REFL PAV MRK TY I (W)(ARROW) (100MIL)	28	EA		$ -
117	666-6078	REFL PAV MRK TY I (W)(WORD) (100MIL)	28	EA		$ -
118	666-6102	REF PAV MRK TY I(W)36"(YLD TRI)(100MIL)	20	EA		$ -
119	666-6147	REFL PAV MRK TY I (Y) 24"(SLD) (100MIL)	164	LF		$ -
120	666-6168	REFL PAV MRK TY II (W) 4" (DOT)	56	LF		$ -
121	666-6170	REFL PAV MRK TY II (W) 4" (SLD)	4,130	LF		$ -
122	666-6178	REFL PAV MRK TY II (W) 8" (SLD)	422	LF		$ -
123	666-6184	REFL PAV MRK TY II (W) (ARROW)	7	EA		$ -
124	666-6192	REFL PAV MRK TY II (W) (WORD)	7	EA		$ -
125	666-6207	REFL PAV MRK TY II (Y) 4" (SLD)	3,466	LF		$ -
126	666-6214	REFL PAV MRK TY II (Y) 24" (SLD)	89	LF		$ -
127	666-6282	REF PROF PAV MRK TY I(W)4"(SLD)(060MIL)	15,518	LF		$ -
128	666-6287	REF PROF PAV MRK TY I(Y)4"(SLD)(090MIL)	16,301	LF		$ -

[1]Refer to the Technical Specifications section for a description of the specific reference number.

BID FORM
WILLIAMSON COUNTY, TEXAS

PROJECT: **1803-219 Southwest Bypass: Segment 2** **BIDDER:** _____

Full compensation for compliance with each and every provision of the Request for Bids, the Bid, the Specifications, and the Contract will be considered as included in the unit prices for the work set forth below, and no separate payment will be made for compliance with each and every provision of the Request for Bids, the Bid, the Specifications, and the Contract, unless separate payment is expressly provided for therein.

BID ITEM	TECH SPEC[1]	DESCRIPTION	BID QUANTITY	UNIT MEASURE	UNIT COST	AMOUNT BID
129	666-6303	RE PM W/RET REQ TY I (W)4"(SLD) (100MIL)	3,103	LF		$ -
130	666-6315	RE PM W/RET REQ TY I (Y)4"(SLD) (100MIL)	5,434	LF		$ -
131	672-6007	REFL PAV MRKR TY I-C	95	EA		$ -
132	672-6009	REFL PAV MRKR TY II-A-A	582	EA		$ -
133	672-6010	REFL PAV MRKR TY II-C-R	547	EA		$ -
134	677-6001	ELIM EXT PAV MRK & MRKS (4")	4,381	LF		$ -
135	677-6007	ELIM EXT PAV MRK & MRKS (24")	199	LF		$ -
136	680-6002	INSTALL HWY TRF SIG (ISOLATED)	1	EA		$ -
137	685-6004	INSTL RDSD FLSH BCN ASSM (SOLAR PWRD)	4	EA		$ -
138	686-6040	INS TRF SIG PL AM(S)1 ARM(36')LUM&ILSN	1	EA		$ -
139	686-6044	INS TRF SIG PL AM(S)1 ARM(40')LUM&ILSN	1	EA		$ -
140	686-6048	INS TRF SIG PL AM(S)1 ARM(44')LUM&ILSN	2	EA		$ -
141	740-6005	ANTI - GRAFFITI COATNG (PERMNENT-TY III)	2,690	SF		$ -
142	6090-6002	ILSN (LED) (8 D)	4	EA		$ -
143	S2-BD	BOULDER DELINEATION	8,051	LF		$ -
144	S2-GA	GATE ATTENDANT	5,600	HR		$ -

[1]Refer to the Technical Specifications section for a description of the specific reference number.

BID FORM
WILLIAMSON COUNTY, TEXAS

PROJECT: **1803-219 Southwest Bypass: Segment 2** **BIDDER:** _____

Full compensation for compliance with each and every provision of the Request for Bids, the Bid, the Specifications, and the Contract will be considered as included in the unit prices for the work set forth below, and no separate payment will be made for compliance with each and every provision of the Request for Bids, the Bid, the Specifications, and the Contract, unless separate payment is expressly provided for therein.

BID ITEM	TECH SPEC[1]	DESCRIPTION	BID QUANTITY	UNIT MEASURE	UNIT COST	AMOUNT BID
145	S2-RC	ROCK CUT	56,312	SF		$ -

NON-BID ITEMS TO BE INCLUDED IN BID AND CONTRACT AMOUNT. DO NOT MAKE CHANGES TO THIS SECTION.

146	999-WC01	FORCE ACCOUNT	100,000	DOL	$ 1.00	$ 100,000.00
147	341-WC01	FORCE ACCOUNT - ESTIMATED PLACEMENT AND PRODUCTION BONUS/PENALTY (TY B)	30,000	DOL	$ 1.00	$ 30,000.00
148	341-WC02	FORCE ACCOUNT - ESTIMATED PLACEMENT AND PRODUCTION BONUS/PENALTY (TY D SURFACE)	40,000	DOL	$ 1.00	$ 40,000.00
149	585-WC01	FORCE ACCOUNT - ESTIMATED RIDE QUALITY BONUS/PENALTY	10,000	DOL	$ 1.00	$ 10,000.00

TOTAL AMOUNT OF BID

_____ **Dollars and** _____ **Cents** $ 180,000.00

NOTE: THE COURT MAY EITHER REJECT ALL BIDS OR AWARD A CONTRACT TO THE LOWEST AND BEST BID.

[1]Refer to the Technical Specifications section for a description of the specific reference number.

WILLIAMSON COUNTY
1848

WILLIAMSON COUNTY

PROJECT CONSTRUCTION MANUAL

FOR

SOUTHWEST BYPASS: SEGMENT 2

SOLICITATION 1803-219

WILLIAMSON COUNTY, TEXAS
PURCHASING DEPARTMENT
901 SOUTH AUSTIN AVENUE
GEORGETOWN, TEXAS 78626

April 2018



The enclosed Specifications, Special Specifications, Special Provisions, General Notes, and Specification Data in this document have been selected by me, or under my responsible supervision as being applicable to this project. Alteration of a sealed document without proper notification to the responsible engineer is an offense under the Texas Engineering Practice Act.

TABLE OF CONTENTS

CONTENTS	SECTION
Addenda	1
Invitation for Bids	2
Bid Instructions/Requirements	3
Bid Form, Bid Affidavit, Bidder References, & Conflict of Interest Questionnaire	4
Standard Form of Agreement	5
Wage Rates	6
Performance Bond	7
Payment Bond	8
Maintenance Bond	9
Certificate of Insurance	10
General Conditions of Agreement	11
Special Conditions of Agreement	12
Technical Specifications	13
Plan Drawings	(Bound Separately)
Geotechnical Report	(If Applicable, Bound Separately)

Appendices

Appendix A – Quality Control/Quality Assurance Program

Appendix B – Guide Schedule of Sampling and Testing

Appendix C – AASHTO Accredited Laboratories

SECTION 1
ADDENDA

ADDENDUM NO. __

Date:

Owner: **Williamson County, Texas**

Project Name:

Project No:

This Addendum forms a part of the Contract and clarifies, corrects or modifies the original Construction Documents, dated _____. Acknowledge receipt of this addendum in space provided on Bid Form. Failure to do so may subject bidder to disqualification.

DESCRIPTION OF ADDITION OR CHANGE:

This addendum consists of __ page(s).

_____
Approved by ENGINEER

END

EXAMPLE

SECTION 2
INVITATION FOR BIDS

PUBLIC NOTICE WILLIAMSON COUNTY
INVITATION FOR BIDS

Williamson County Commissioner's Court invites the submission of sealed bids for:

1803-219 SOUTHWEST BYPASS SEGMENT 2

Williamson County is seeking qualified contractors to widen the existing roadway, which includes grading, drainage improvements, flexible base, HMAC, striping and signing. Estimated time of completion is 420 calendar days to substantial completion, and 30 calendar days to final completion, with an estimated cost of $10,840,000.00.

Sealed bids will be publicly opened and read aloud in the Williamson County Purchasing Department, 901 South Austin Avenue, Georgetown, Texas on WEDNESDAY, MAY 9, 2018 AT 10:30 AM.

Bids must be received on or before WEDNESDAY, MAY 9, 2018 AT 10:30 AM. Bid documents and plans may be viewed and responded to by registering with BIDSYNC at www.bidsync.com.

No fee is required to register with Bidsync as a Williamson County Supplier, or to participate in the County's solicitation process. The receipt of electronic bids will be registered in Bidsync.

The Time-Date Stamp Clock located at the Williamson County Purchasing Department will serve as the official clock for the purpose of verifying the date and time of receipt of Paper Bids.

There will be a Non-Mandatory Pre-Bid Conference on WEDNESDAY, MAY 2, 2018 AT 10:30 AM at Williamson County Purchasing Department, 901 South Austin Avenue, Georgetown, Texas.

BID BOND REQUIRED
A Cashier's Check, Certified Check, or acceptable Bidder's Bond in the amount of five percent (5%) of the Bid must accompany each Bid. Performance, Payment and Warranty Bonds will be required as designated in the bidding documents.

The Williamson County Commissioners' Court reserves the right to accept the lowest and best Bid as deemed by the Court, or reject any and/or all bids.

Bidder shall use per unit pricing. Payments will be made by check.

The designated Purchasing Agent for this Bid is Johnny Grimaldo, Senior Purchasing Specialist, under the direction of Randy Barker, Purchasing Agent for Williamson County, 512-943-1553.

This notice is issued by order of the Williamson County Commissioners' Court on APRIL 17, 2018; Dan A. Gattis, County Judge.

SECTION 3
BID INSTRUCTIONS/REQUIREMENTS

BID INSTRUCTIONS/REQUIREMENTS
All Bids must be received in the Williamson County Purchasing Department either hardcopy or electronically through BidSync.

Williamson County prefers and requests electronic submittal of this bid.

All electronic bids must be submitted via: www.bidsync.com

All interested Respondents are invited to submit a Bid in accordance with the Instructions and General Requirements, Bid Format, Bid Specifications, and Definitions, Terms and Conditions stated in this BID.

Electronic bids are requested, however paper bids will currently still be received, until further notice and may be mailed or delivered to the address listed below.

Please note that a complete package must be submitted choosing one of the above two methods.

Split packages submitted will be considered "unresponsive" and will not be accepted or evaluated.

If mailed or delivered in person, Bids are to be delivered in sealed envelope on or before the submittal deadline to:

Williamson County Purchasing Department
Attn: **1803-219 Southwest Bypass Segment 2**
901 South Austin Avenue
Georgetown, Texas 78626

Respondents should list the Bid Number, Bid Name, Name and Address of Respondent, and the Date of the Bid opening on the outside of the box or envelope.

Respondent should submit one (1) original; **AND** (2) two copies and (1) CD **OR** (1) USB copy of the Bid.

Williamson County will not accept any Bids received after the submittal deadline.
Williamson County will not accept any responsibility for Bids being delivered by third party carriers. Facsimile transmittals will NOT be accepted.

All questions should be submitted on the Bidsync site. Questions with their answers will be posted and updated on www.bidsync.com.

Any addenda and/or other information relevant to the Bid will be posted on: www.bidsync.com.

ALL BIDS MUST BE SUBMITTED ON THE FORMS PROVIDED IN THIS BID DOCUMENT. (May be replaced with a computer generated printout, if submitted in an identical format to the proposal).

FACSIMILE AND ELECTRONIC MAIL TRANSMITTALS SHALL NOT BE ACCEPTED.

1. All of the items listed are to be on a "per unit" basis, stating a firm price per unit or unit quantity of each item. **This price must be good from the date of Bid opening through the completion of the project. Bids which do not state a fixed price will not be considered.** The Court may award a contract for the period implied or expressly stated in the lowest and best Bid.

2. All of the items listed are to be Free On Board to final destination **(FOB DESTINATION)** with all transportation charges if applicable to be included in the price, unless otherwise specified in the Invitation for Bids. The title and risk of loss of the goods shall not pass to the County until receipt and acceptance takes place at the FOB point.

3. It is understood that the Commissioners Court of Williamson County, Texas, reserves the right to accept or reject any and/or all Bids for any or all materials and/or services covered in this Bid request, and to waive informalities or defects in the Bid or to accept such Bid it shall deem to be in the best interest of Williamson County.

4. Funding: Funds for payment have been provided through the Williamson County budget approved by Commissioners Court for the 2013 Road Bond Program.

5. Late Bid: Bids received after submission deadline will be considered VOID AND UNACCEPTABLE and will be returned to the bidder unopened. Williamson County is not responsible for lateness or non-delivery of mail, carrier, etc. The date and time stamp of the Williamson County Purchasing Department shall be the official date and time of receipt.

6. Altering Bid: Bidders **cannot alter or amend bid** after submission deadline.

7. Sales Tax: Williamson County is by statute, exempt from the State Sales Tax and Federal Excise Tax.

8. Contract: This Bid, when properly accepted by Williamson County, shall constitute a contract equally binding between the successful bidder and Williamson County. No different or additional terms will become part of this contract.

9. Changes: No oral statement of any person shall modify or otherwise change, or affect the terms, conditions, plans and/or specifications stated in the Bid Package and or Bid Instructions/Requirements.

10. Delivery Times and Locations: The commodity and/or service covered by this Bid shall be as stated in the Bid Package.

11. Payments: The Construction Inspector will manage the Contractor payments. Invoices for the work specified in the Contract Documents will be submitted to the Construction Inspector. Upon satisfactory completion and acceptance of these invoices, the Construction Inspector will forward the invoices to the County via the GEC. County's payment for goods and services shall be governed by Chapter 2251 of the Texas Government Code. An invoice shall be deemed overdue the 31st day after the later of (1) the date County receives the goods under the Contract; (2) the date the performance of the service under the Contract is completed; or (3) the date the Williamson County Auditor receives an invoice for the goods or services. Interest charges for any overdue payments shall be paid by County in accordance with Texas Government Code Section 2251.025. More specifically, the rate of interest that shall accrue on a late payment is the rate in effect on September 1 of County's fiscal year in which the payment becomes due. The said rate in effect on September 1 shall be equal to the sum of one percent (1%); and (2) the prime rate published in the Wall Street Journal on the first day of July of the preceding fiscal year that does not fall on a Saturday or Sunday.

    In the event that an error appears in an invoice submitted by Successful Bidder, County shall notify Successful Bidder of the error not later than the twenty first (21st) day after the date County receives the invoice. If the error is resolved in favor of Successful Bidder, Successful Bidder shall be entitled to receive interest on the unpaid balance of the invoice submitted by Successful Bidder beginning on the date that the payment for the invoice became overdue. If the error is resolved in favor of the County, Successful Bidder shall submit a corrected invoice that must be paid in accordance within the time set forth above. The unpaid balance accrues interest as provided by Chapter 2251 of the Texas Government Code if the corrected invoice is not paid by the appropriate date. As a minimum, invoices shall include:

    (1) Name, address, and telephone number of Contractor and similar information in the event the payment is to be made to a different address

    (2) County contract, Purchase Order, and/or delivery order number

    (3) Identification of items or service as outlined in the contract

    (4) Quantity or quantities, applicable unit prices, total prices, and total amount

    (5) Any additional payment information which may be called for by the Contract

    Payment inquiries should be directed to the Williamson County Auditor's Office, Accounts Payable Department:
    512-943-1573
    accountspayable@wilco.org

12. Conflict of Interest: No public official shall have interest in a contract, in accordance

with Vernon's Texas Codes Annotated, Local Government Code Title 5, Subtitle C, Chapter 171. As of January 1, 2006 Vendors are responsible for complying with Local Government Code Title 5, Subtitle C, Chapter 176. Additional information may be obtained from the County website at the following link: http://www.wilco.org/CountyDepartments/Purchasing/ConflictofInterestDisclosure/tabid/689/language/en-US/Default.aspx. The Williamson County Conflict of Interest Questionnaire is attached as a fillable form. This form must be completed, signed, and submitted with your bid (attached to the first Line Item of this bid) or completed electronically and signed electronically when entering your password in Bidsync.

13. Ethics: The bidder shall not accept or offer gifts or anything of value nor enter into any business arrangement with any employee, official or agent of Williamson County.

14. Minimum Standards for Responsible Bidders: A prospective bidder must affirmatively demonstrate bidder's responsibility. A prospective bidder must meet the following requirements:

    a. have adequate financial resources, or the ability to obtain such resources as required;

    b. be able to comply with the required or proposed delivery schedule;

    c. have a satisfactory record of performance;

    d. be otherwise qualified and eligible to receive an award.

    Williamson County may request representation and other information sufficient to determine bidder's ability to meet these minimum standards listed above.

15. References: Williamson County **REQUIRES** bidder to supply with this Bid, a list of at least **three (3) references** where like services have been supplied by their firm. The Bidder References Form is attached as a fillable form in this bid document. This form must be completed and attached to the first line item on your bid or included with an all paper bid.

16. Bidder shall provide with this Bid response, all documentation required by this Bid. Failure to provide this information may result in rejection of the Bid.

17. Termination for Default: Williamson County reserves the right to enforce the performance of this contract in any manner prescribed by law or deemed to be in the best interest of the County in the event of breach or default of this contract. Non-Performance of the bidder in terms of specifications shall be a basis for the termination of the contract by the County. The County shall not pay for commodities/services which are unsatisfactory. Contractors will be given a reasonable opportunity before termination to correct the deficiencies. This, however, shall in no way be construed as negating the basis for termination for non-performance.

18. Contract Administration: Under this contract, Robert Daigh, Williamson County Sr. Director of Infrastructure or designee, shall be the contract administrator with designated responsibility to ensure compliance with contract requirements, such as but not limited to, acceptance, inspection and delivery. The contract administrator will serve as liaison between Williamson County Commissioners Court and the successful bidder or the Construction Inspector.

19. Purchase Order: Williamson County may generate a purchase order(s) to the successful bidder as products and/or services are required. The purchase order number must appear on all itemized invoices and/or request for payment.

20. Silence of Specifications: The apparent silence of these specifications as to any detail or to the apparent omission from it of a detailed description concerning any point, shall be regarded as meaning that only the best practices are to prevail. All interpretations of these specifications shall be made on the basis of this statement.

21. Contract Times and Liquidated Damages - Bidders must agree to commence work on or before a date to be specified in a written "Notice to Proceed" of the County, and to fully complete the project within the specified time stated in the proposal. Bidders must agree to pay liquidated damages in accordance with Special Provision 000-001 per day to County for every day past the specified completion date stated in the proposal.

22. BIDS MUST BE: legible and of a quality that can be reproduced.

23. Bid forms that are included in the Bid package shall be used. **CHANGES to Bid forms made by bidders shall DISQUALIFY THE BID.** Exceptions to the Bid forms and or specifications shall be made on an **attachment** to the Bid package.

24. Workers Compensation Coverage Requirements: The Texas Labor Code, §406.096, requires workers' compensation insurance coverage for all persons providing services on a building or construction project for a governmental entity. The rule requires a governmental entity to timely obtain certificates of coverage and retain them for the duration of the project. The rule also sets out the language to be included in bid specifications and in contracts awarded by a governmental entity and the information required to be in the posted notice to employees. The rule is adopted under the Texas Labor Code, §402.061. The information provided below is a result of this rule. By submitting your bid to the county, you are acknowledging that this rule is a part of these bid specifications, and that you will observe and abide by all of the requirements outlined in the rule. You are further agreeing that should your bid or proposal be accepted by the Williamson County Commissioners' Court, the necessary certificates of coverage showing workers' compensation coverage, will be provided to the following name and address, prior to beginning work:

    Williamson County Purchasing Department
    901 South Austin Avenue
    Georgetown, Texas 78626

If you have any questions related to this ruling and/or requirement, you are encouraged to contact either the Williamson County Purchasing Department at (512) 943-1553, or you may call the Texas Workers' Compensation Commission at (512) 804-4000.

A. Definitions: The following words and terms, when used in this provision, shall have the following meanings. Terms not defined in this rule shall have the meaning defined in the Texas Labor Code, if so defined.

(1) Certificate of coverage ("certificate")-A copy of a certificate of insurance, a certificate of authority to self-insure issued by the commission, or a coverage agreement (TWCC-81, TWCC-82, TWCC-83, or TWCC-84), showing statutory workers' compensation insurance coverage for the person's or entity's employees (including those subject to a coverage agreement) providing services on a project, for the duration of the project.

(2) Building or construction – Has the meaning defined in the Texas Labor Code, §406.096(e)(1).

(3) Contractor--A person bidding for or awarded a building or construction project by Williamson County.

(4) Coverage--Workers' compensation insurance meeting the statutory requirements of the Texas Labor Code, §401.011(44).

(5) Coverage agreement--A written agreement on form TWCC-81, form TWCC-82, form TWCC-83, or form TWCC-84, filed with the Texas Workers' Compensation Commission which establishes a relationship between the parties for purposes of the Texas Workers' Compensation Act, pursuant to the Texas Labor Code, Chapter 406, Subchapters F and G, as one of employer/employee and establishes who will be responsible for providing workers' compensation coverage for persons providing services on the project.

(5) Duration of the project - includes the time from the beginning of the work on the project until the contractor's/person's work on the project has been completed and accepted by the governmental entity.

(6) Persons providing services on the project ("subcontractor" in §406.096) - includes all persons or entities performing all or part of the services the contractor has undertaken to perform on the project, regardless of whether that person contracted directly with the contractor and regardless of whether that person has employees. This includes, without limitation, independent contractors, subcontractors, leasing companies, motor carriers, owner-operators, employees of any such entity, or employees of any entity which furnishes persons to provide services on the project. "Services" include, without limitation, providing, hauling, or delivering equipment or materials, or providing labor, transportation, or other service related to a project. "Services" does not include activities unrelated to the project, such as food/beverage vendors, office supply deliveries, and delivery of portable toilets.

(8) Project--Includes the provision of all services related to a building or construction contract for Williamson County.

B. The contractor shall provide coverage, based on proper reporting of classification codes and payroll amounts and filing of any coverage agreements, which meets the statutory requirements of Texas Labor Code, Section 401.011(44) for all employees of the contractor providing services on the project, for the duration of the project.

C. The Contractor must provide a certificate of coverage to the governmental entity prior to being awarded the contract.

D. If the coverage period shown on the contractor's current certificate of coverage ends during the duration of the project, the contractor must, prior to the end of the coverage period, file a new certificate of coverage with the governmental entity showing that coverage has been extended.

E. The contractor shall obtain from each person providing services on a project, and provide to the governmental entity:

(1) a certificate of coverage, prior to that person beginning work on the project, so the governmental entity will have on file certificates of coverage showing coverage for all persons providing services on the project;

(2) no later than seven (7) days after receipt by the contractor, a new certificate of coverage showing extension of coverage, if the coverage period shown on the current certificate of coverage ends during the duration of the project.

F. The contractor shall retain all required certificates of coverage for the duration of the project and for one year thereafter.

G. The contractor shall notify Williamson County in writing by certified mail or personal delivery, within ten (10) days after the contractor knew or should have known, of any change that materially affects the provision of coverage of any person providing services on the project.

H. The contractor shall post on each project site a notice, in the text, form and manner prescribed by the Texas Workers' Compensation Commission, informing all persons providing services on the project that they are required to be covered, and stating how a person may verify coverage and report lack of coverage.

I. The contractor shall contractually require each person with whom it contracts to provide services on a project, to:

(1) provide coverage, based on proper reporting of classification codes and payroll amounts and filing of any coverage agreements, which meets the statutory requirements of Texas Labor Code, Section 401.011(44) for all of its employees providing services

on the project, for the duration of the project;

(2) provide to the contractor, prior to that person beginning work on the project, a certificate of coverage showing that coverage is being provided for all employees of the person providing services on the project, for the duration of the project;

(3) provide the contractor, prior to the end of the coverage period, a new certificate of coverage showing extension of coverage, if the coverage period shown on the current certificate of coverage ends during the duration of the project;

(4) obtain from each other person with whom it contracts, and provide to the contractor:

(a) a certificate of coverage, prior to the other person beginning work on the project; &

(b) a new certificate of coverage showing extension of coverage, prior to the end of the coverage period, if the coverage period shown on the current certificate of coverage ends during the duration of the project;

(5) retain all required certificates of coverage on file for the duration of the project and for one year thereafter;

(6) notify the governmental entity in writing by certified mail or personal delivery, within ten(10) days after the person knew or should have known, of any change that materially affects the provision of coverage of any person providing services on the project; and

(7) contractually require each person with whom it contracts, to perform as required by paragraphs (1) - (7), with the certificates of coverage to be provided to the person for whom they are providing services.

J. By signing this contract or providing or causing to be provided a certificate of coverage, the contractor is representing to the governmental entity that all employees of the contractor who will provide services on the project will be covered by workers' compensation coverage for the duration of the project, that the coverage will be based on proper reporting of classification codes and payroll amounts, and that all coverage agreements will be filed with the appropriate insurance carrier or, in the case of a self-insured, with the commission's Division of Self-Insurance Regulation. Providing false or misleading information may subject the contractor to administrative penalties, criminal penalties, civil penalties, or other civil actions.

K. The contractor's failure to comply with any of these provisions is a breach of contract by the contractor which entitles the governmental entity to declare the contract void if the contractor does not remedy the breach within ten (10) days after receipt of notice of breach from Williamson County.

25. **PERFORMANCE AND PAYMENT BONDS:** Chapter 262.032 and Chapter 2253.021 of the Texas Government Code governs the requirements for performance bonds and payment bonds for government entities making public work contracts. A performance bond is required if the contract is in excess of $50,000 and is to be made for the full amount of the contract. A payment bond is required if the contract is in excess of $25,000 and is to be made for the full amount of the contract. The bonds are to be executed within ten (10) days after receipt of written notification of award of contract prior to beginning work on the project and must be executed by a corporate surety or sureties in accordance with the Texas Insurance Code. In the event the bond exceeds $100,000.00, the surety must also (1) hold a certificate of authority from the United States secretary of the treasury to qualify as a surety on obligations permitted or required under federal law; or (2) have obtained reinsurance for any liability in excess of $100,000.00 from a reinsurer that is

authorized and admitted as are insurer in this state and is the holder of a certificate of authority from the United States secretary of the treasury to qualify as a surety or reinsurer on obligations permitted or required under federal law.

In determining whether the surety or reinsurer holds a valid certificate of authority the County may rely on the list of companies holding certificates of authority as published in the Federal Register covering the date on which the bond is to be executed. If the public works contract is less than $50,000 the performance bond will not be required as long as the contract provides that payment is not due until the work is completed and accepted by the county. The purpose of a performance bond is for the protection of the government entity and is conditioned on the faithful performance of the work being done in accordance with the plans, specifications and contract documents. The payment bond is for the protection of persons supplying labor and materials to the contractor to ensure payment.

26. **BIDDERS BOND:** All bids shall be accompanied by a certified cashier's check upon a National or State bank in an amount not less than five percent (5%) of the total maximum bid price, payable without recourse to Williamson County, or a bid bond in the same amount from a reliable surety company, as a guarantee that the bidder will enter into a contract and execute performance and payment bonds, as stipulated by item 25 above, within ten (10) days after notice of award of contract to him. Bid guarantees must be submitted in the same sealed envelope with the bid. Bids submitted without check or bid bonds will not be considered.
    Bidders are not required to use Surety 2000 for your Bid Bond supplier, however; when bidding electronically in Bidsync and using Surety 2000, you may import your bid bond directly from the Surety 2000 web site.
    To use a different bond provider you MUST:

    1. Scan the completed bond
    2. Download the completed bond to the line item of this bid with your other required documents.

    Bid bonds must be attached to the line item of the electronic bid OR submitted in the same sealed envelope with a paper Bid.

27. All bid securities will be returned to the respective bidders within twenty-five (25) days after bids are opened, except those which the County elects to hold until the successful bidder has executed the contract. Thereafter, all remaining securities, including security of the successful bidder, will be returned within sixty (60) days.

28. Prior to submitting any bid, bidders are required to read the plans, specifications, bid, contract and bond forms carefully; to inform themselves by their independent research, test and investigation of the difficulties to be encountered and judge for themselves of the accessibility of the work and all attending circumstances affecting the cost of doing the work and the time required for its completion and obtain all information required to make an intelligent bid.

29. Should the bidder find discrepancies in, or omissions from the plans, specifications, or other documents, or should he/she be in doubt as to their meaning, he/she should notify at once the Project Engineer and may obtain clarification or addendum prior to submitting any bid.

30. In case of ambiguity or lack of clarity in the statement of prices in the bids, the county reserves the right to consider the most favorable analysis thereof, or to reject the bid. Unreasonable (or unbalanced) prices submitted in a bid may result in rejection of such bid or other bids.

31. Award of the contract, if awarded, will be made within sixty (60) days after opening of the bids and no bidder may withdraw his bid within said sixty (60) day period of time unless a prior award is made.

32. Within ten (10) days of written notification of award of the contract, the bidder shall execute and furnish to the County the performance bond, or letter of credit if applicable, and payment bond as required by item 25 above; and the Certificate of Insurance showing coverages in

accordance with contract documents. Failure to execute contract, Bonds and Certificate of Insurance shall be just cause for the annulment of the award. In case of the annulment of the award, the bid guarantee shall become the property of Williamson County, not as a penalty, but as a liquidated damage.

33. Any quantities given in any portion of the contract documents, including the plans, are estimates only, and the actual amount of work required may differ somewhat from the estimates. The basis for the payment shall be the actual amount of work done and/or material furnished.

34. **THE TEXAS HAZARD COMMUNICATION ACT**, Chapter 502 of the Health and Safety Code, Sec. 502.006, states that a chemical manufacturer or distributor shall provide appropriate Material Safety Data Sheets (MSDS) to employers who acquire hazardous chemicals in this state with each initial shipment and with the first shipment after a MSDS is updated. The MSDS must conform to the most current requirements of the OSHA standard in 29 CFR 1910.1200. By submitting your bid to the County you are acknowledging that this regulation is a part of this bid and that you will provide appropriate MSDS with each initial shipment and with the first shipment after a MSDS is updated.

35. **THE WILLIAMSON COUNTY HAZARD COMMUNICATION PROGRAM POLICY** Under Revised Texas Hazard Communication Act (THCA) of 1993 states that it is the responsibility of all contractor/sub-contractors who bring hazardous chemicals onto county property to provide appropriate MSDS to the county at the work site. When exposure to a hazardous chemical is expected each contractor/sub-contractor shall be responsible for the appropriate training of their employees. For a copy of the Williamson County Hazard Communication Program Policy contact the Williamson County Unified Road & Bridge System Safety/Training Coordinator at 512/930-3330. By submitting your bid to the County you are acknowledging that this policy is a part of this bid and that you will provide appropriate MSDS to the county work site and provide for appropriate training as applicable.

36. **CERTIFICATE OF INTERESTED PARTIES TEXAS ETHICS COMMISSION (FORM 1295)** As of January 1, 2016, Bidders are responsible for complying with the Texas Government Code Section 2252.908. The law states that the County may not enter into certain contracts with a Bidder unless the Bidder submits a disclosure of interested parties to the County at the time the Bidder submits the signed contract to Williamson County.
On January 1, 2016, the Texas Ethics Commission made available on its website a new filing application that must be used to file Form 1295. Information regarding how to use the filing application is available on the Texas Ethics Commission website at the following link:
https://www.ethics.state.tx.us/whatsnew/elf_info_form1295.htm
The Low Bidder must:
    1. Use the online application to process the required information on Form 1295
    2. Print a copy of the form which will contain a unique certification number
    3. An authorized agent of the Bidder must sign the printed copy of the form
    4. and have the form notarized
    5. the completed Form 1295 and certification of filing must be filed (scanning and emailing form is sufficient) with Williamson County prior to award of the contract by Commissioners Court.

37. Ambiguity, Conflict, or other Errors in the IFB If Bidder discovers any ambiguity, conflict, discrepancy, omission or other error in this IFB, Bidder shall immediately notify Williamson County Purchasing Department of such error in writing and request modification or clarification of the document. Modifications will be made by issuing Addenda. If the Bidder fails to notify Williamson County prior to the date and time fixed for submission of Bids of an error or ambiguity in the IFB known to Bidder, or an error or ambiguity that reasonably should have been known to

Bidder, then Bidder shall be deemed to have waived the error or ambiguity or its later resolution. Williamson County may also modify the IFB, no later than 48 hours prior to the date and time fixed for submission of Bids, by issuance of an Addendum. All addenda will be numbered consecutively, beginning with 1.

SECTION 4
BID FORM, BID AFFIDAVIT, BIDDER REFERENCES, & CONFLICT OF INTEREST QUESTIONNAIRE

ALL REQUIRED DOCUMENTS MUST BE FILLED OUT AND SUBMITTED WITH BID

www.bidsync.com

FOLLOWING CONTRACT AWARD REQUIRED DOCUMENTS WILL BE INSERTED IN THIS SECTION

SECTION 5
STANDARD FORM OF AGREEMENT

STANDARD FORM OF AGREEMENT

STATE OF TEXAS

WILLIAMSON COUNTY

THIS STANDARD FORM OF AGREEMENT (the "Agreement") is by and between WILLIAMSON COUNTY, TEXAS, a political subdivision of the State of Texas (hereinafter called "County") and _____ (hereinafter called "Contractor").

The County and Contractor, in consideration of the mutual covenants hereinafter set forth, agree as follows:

Article 1. Work

Contractor shall complete all Work as specified or indicated in the Contract Documents. The "Project" is generally described as follows:

Project No. 1803-219 – Southwest Bypass Segment 2

Article 2. Engineer of Record

The Project has been designed by HDR Engineering, Inc. who is hereinafter called the "Engineer of Record" and who is to act as the County's design professional.

Article 3. Contract Time

The Work shall be Substantially Completed in 420 calendar days (the "Contract Time"). Following Substantial Completion, the Contractor shall proceed expeditiously with adequate forces and shall achieve Final Completion within the time specified in the Special Conditions.

Article 4. Contract Price

County shall pay Contractor for completion of the Work in accordance with the Contract Documents an amount in current funds equal to the sum of the amounts determined pursuant to paragraph 4.1 below (the "Contract Price"):

4.1 For all Unit Price Work, an amount equal to the sum of the established unit price for each separately identified item of Unit Price Work times the estimated quantity of that item as indicated in the Bid Form, and as totaled below:

TOTAL OF ALL UNIT PRICES_____ $_____(dollars)
(insert words)

As provided in the General Conditions, estimated quantities are not guaranteed, and determinations of actual quantities and classification are to be made by the Engineer of Record.

Article 5. Contractor's Representations

In order to induce County to enter into this Agreement, Contractor makes the following representations:

5.1 Contractor has examined and carefully studied the Contract Documents and the other related data identified in the Bidding Documents including the "technical data".

5.2 Contractor has visited the site and become familiar with and is satisfied as to the general, local and site conditions that may affect cost, progress, performance or furnishing of the Work.

5.3 Contractor is familiar with and is satisfied as to all federal, state and local Laws and Regulations that may affect cost, progress, performance and furnishing of the Work.

5.4 Contractor has carefully studied all reports of explorations and tests of subsurface conditions at or contiguous to the site and all drawings of physical conditions in or relating to existing surface or subsurface structures at or contiguous to the site which have been identified. Contractor acknowledges that such reports and drawings are not Contract Documents and may not be complete for Contractor's purposes. Contractor acknowledges that the County and Engineer of Record do not assume responsibility for the accuracy or completeness of information and data shown or indicated in the Contract Documents with respect to Underground Facilities at or contiguous to the site.

5.5 Contractor has correlated the information known to Contractor, information and observations obtained from visits to the site, reports and drawings identified in the Contract Documents and all additional examinations, investigations, explorations, tests, studies and data with the Contract Documents.

5.6 Contractor has given Engineer of Record written notice of all conflicts, errors, ambiguities or discrepancies that Contractor has discovered in the Contract Documents and the written resolution thereof by Engineer of Record is acceptable to Contractor, and the Contract Documents are generally sufficient to indicate and convey understanding of all terms and conditions for performance and furnishing of the Work.

5.7 Contractor represents and agrees that there are no obligations, commitments, or impediments of any kind that will limit or prevent performance of its obligations under the Contract Documents.

5.8 Contractor warrants, represents, and agrees that if (i) it is a corporation or limited liability company, then it is a corporation duly organized, validly existing and in good standing under the laws of the State of Texas, or a foreign corporation or limited liability company duly authorized and in good standing to conduct business in the State of Texas, that it has all necessary corporate power and has received all necessary corporate approvals to execute and deliver this Agreement, and the individual executing the Agreement on behalf of Contractor has been duly authorized to act for and bind Contractor; or (ii) if it is a partnership, limited partnership, or limited liability partnership, then it has all necessary partnership power and has secured all necessary approvals to execute and deliver this Agreement and perform all its obligations under the Contract Documents; and the individual executing this Agreement on behalf of Contractor has been duly authorized to act for and bind Contractor.

5.9 Neither the execution and delivery of this Agreement by Contractor nor the performance of its obligations under the Contract Documents will result in the violation of any provision, if a corporation, of its articles of incorporation or by-laws, if a limited liability company, of its articles of organization or regulations, or if a partnership, by any partnership agreement by which Contractor is bound, or any agreement by which Contractor is bound or to the best of the Contractor's knowledge and belief, will conflict with any order or decree of any court or governmental instrumentality relating to Contractor.

5.10 Except for the obligation of the County to pay Contractor the Contract Price pursuant to the terms of the Contract Documents, and to perform certain other obligations pursuant to the terms and conditions explicitly set forth in the Contract Documents, County shall have no liability to Contractor or to anyone claiming through or under Contractor by reason of the execution or performance of this Agreement. Notwithstanding any obligation or liability of County to Contractor, no present or future partner or affiliate of County or any agent, officer, director, or employee of County, or of the various departments comprising Williamson County, or anyone claiming under County has or shall have any personal liability to Contractor or to anyone claiming through or under Contractor by reason of the execution or performance of this Agreement.

Article 6. Contract Documents

The "Contract Documents," which comprise the entire agreement between the County and Contractor concerning the Work, consist of the following:

6.1 This Standard Form of Agreement

6.2 Performance Bond

6.3 Payment Bond

6.4 Maintenance Bond

6.5 Certificate of Insurance

6.6 Wage Rates

6.7 General Conditions

6.8 Special Conditions

6.9 Technical Specifications

6.10 Plan Drawings

6.11 Addenda numbers _____ to _____, inclusive

6.12 Contractor's Bid Affidavit and Bid Form

6.13 Documentation submitted by Contractor prior to Notice of Award.

6.14 The following which may be delivered or issued after the Effective Date of the Agreement and are not attached hereto: All Written Amendments and other documents amending, modifying or supplementing the Contract Documents pursuant to applicable sections in the General Conditions.

The documents listed in paragraphs 6.2 et seq. above are attached to this Agreement (except as expressly noted otherwise above).

There are no Contract Documents other than those listed above in this Article 6. The Contract Documents may only be amended, modified or supplemented as provided in the General Conditions.

Article 7. Miscellaneous

7.1 Terms used in this Agreement, which are defined in the General Conditions, will have the meanings indicated in the General Conditions.

7.2 No assignment by a party hereto of any rights under or interests in the Contract Documents will be binding on another party hereto without the written consent of the party sought to be bound; and, specifically but without limitation, moneys that

may become due and moneys that are due may not be assigned without such consent (except to the extent that the effect of this restriction may be limited by law), and unless specifically stated to the contrary in any written consent to an assignment no assignment will release or discharge the assignor from any duty or responsibility under the Contract Documents.

7.3 The County and Contractor each binds itself, its partners, successors, assigns and legal representatives to the other party hereto, its partners, successors, assigns and legal representatives in respect to all covenants, agreements and obligations contained in the Contract Documents.

7.4 Any provision or part of the Contract Documents held to be void or unenforceable under any Law or Regulation shall be deemed stricken, and all remaining provisions shall continue to be valid and binding upon the County and Contractor, who agree that the Contract Documents shall be reformed to replace such stricken provision or part thereof with a valid and enforceable provision that comes as close as possible to expressing the intention of the stricken position.

7.5 Each party to this Agreement hereby agrees and acknowledges that venue and jurisdiction of any suit, right, or cause of action arising out of or in connection with this Agreement shall lie exclusively in Williamson County, Texas. Furthermore, this Agreement shall be governed by and construed in accordance with the laws of the State of Texas, excluding, however, its choice of law rules.

7.6 The parties to this Agreement agree that during the performance of the services under this Agreement they will not discriminate against any employee or applicant for employment because of race, color, religion, sex, or national origin. The parties to this Agreement will take affirmative action to ensure that applicants are employed, and that employees are treated during employment, without regard to their race, color, religion, sex or national origin. Such action shall include, but not be limited to the following: employment, upgrading, demotion, or transfer; termination; rates of pay or other forms of compensation, and selection for training, including apprenticeship.

7.7 This Agreement is for the sole and exclusive benefit of the parties hereto, and nothing in this Agreement, express or implied, is intended to confer or shall be construed as conferring upon any other person any rights, remedies or any other type or types of benefits.

7.8 Each party to this Agreement acknowledges that it and its counsel have reviewed this Agreement and that the normal rules of construction are not applicable and there will be no presumption that any ambiguities will be resolved against the drafting party in the interpretation of this Agreement.

7.9 Each party to this Agreement, in the performance of this Agreement, shall act in an individual capacity and not as agents, employees, partners, joint ventures or

associates of one another. The employees or agents of one party shall not be deemed or construed to be the employees or agents of the other party for any purposes whatsoever.

7.10 Nothing in this Agreement shall be deemed to waive, modify or amend any legal defense available at law or in equity to County, its past or present officers, employees, or agents or employees, nor to create any legal rights or claim on behalf of any third party. County does not waive, modify, or alter to any extent whatsoever the availability of the defense of governmental immunity under the laws of the State of Texas and of the United States.

7.11 To the extent, if any, that any provision in this Agreement is in conflict with Tex. Gov't Code 552.001 et seq., as amended (the "Public Information Act"), the same shall be of no force or effect. Furthermore, it is expressly understood and agreed that County, its officers and employees may request advice, decisions and opinions of the Attorney General of the State of Texas in regard to the application of the Public Information Act to any items or data furnished to County as to whether or not the same are available to the public. It is further understood that County's officers and employees shall have the right to rely on the advice, decisions and opinions of the Attorney General, and that County, its officers and employees shall have no liability or obligation to any party hereto for the disclosure to the public, or to any person or persons, of any items or data furnished to County by a party hereto, in reliance of any advice, decision or opinion of the Attorney General of the State of Texas.

7.12 County and Contractor have signed this Agreement in triplicate. One counterpart each has been delivered to the County, Contractor and Engineer of Record. All portions of the Contract Documents have been signed, initialed or identified by County and Contractor or identified by Engineer of Record on their behalf.

7.13 This Agreement and the Contract Documents represent the entire and integrated agreement between the parties hereto and supersedes all prior negotiations, representations, or agreements, either oral or written. This Agreement may be amended only by written instrument signed by each party to this Agreement. NO OFFICIAL, EMPLOYEE, AGENT, OR REPRESENTATIVE OF THE COUNTY HAS ANY AUTHORITY, EITHER EXPRESS OR IMPLIED, TO AMEND THIS CONTRACT, EXCEPT PURSUANT TO SUCH EXPRESS AUTHORITY AS MAY BE GRANTED BY THE WILLIAMSON COUNTY COMMISSIONERS COURT.

This Agreement will be effective on _____, 20_____ (which is the "Effective Date" of the Agreement).

COUNTY_____ CONTRACTOR_____

By:_____ By: _____

Dan A. Gattis,
Williamson County Judge Title: _____

[CORPORATE SEAL]

Attest_____ Attest_____

SECTION 6
WAGE RATES

WAGE RATES

Contractor must pay all workers not less than the prevailing wage rate for Williamson County, Texas.

General Decision Number: TX180016 01/05/2018 TX16

Superseded General Decision Number: TX20170016

State: Texas

Construction Types: Heavy and Highway

Counties: Atascosa, Bandera, Bastrop, Bell, Bexar, Brazos, Burleson, Caldwell, Comal, Coryell, Guadalupe, Hays, Kendall, Lampasas, McLennan, Medina, Robertson, Travis, Williamson and Wilson Counties in Texas.

HEAVY (excluding tunnels and dams, not to be used for work on Sewage or Water Treatment Plants or Lift / Pump Stations in Bell, Coryell, McClennon and Williamson Counties) and HIGHWAY Construction Projects

Note: Under Executive Order (EO) 13658, an hourly minimum wage of $10.35 for calendar year 2018 applies to all contracts subject to the Davis-Bacon Act for which the contract is awarded and any solicitation was issued) on or after January 1, 2015. If this contract is covered by the EO, the contractor must pay all workers in any classification listed on this wage determination at least $10.35 per hour (or the applicable wage rate listed on this wage determination, if it is higher)for all hours spent performing on the contract in calendar year 2018. The EO minimum wage rate will be adjusted annually. Please note that this EO applies to the above-mentioned types of contracts entered into by the federal government that are subject to the Davis-Bacon Act itself, but it does not apply to contracts subject only to the Davis-Bacon Related Acts, including those set forth at 29 CFR 5.1(a)(2)-(60). Additional information on contractor requirements and worker protections under the EO is available at www.dol.gov/whd/govcontracts.

Modification Number	Publication Date
0	01/05/2018

* SUTX2011-006 08/03/2011

	Rates	Fringes
CEMENT MASON/CONCRETE FINISHER (Paving and Structures)	$ 12.56	
ELECTRICIAN	$ 26.35	
FORM BUILDER/FORM SETTER		

Paving & Curb.....$ 12.94
Structures.....$ 12.87

LABORER
Asphalt Raker.....$ 12.12
Flagger.....$ 9.45
Laborer, Common.....$ 10.50
Laborer, Utility.....$ 12.27
Pipelayer.....$ 12.79
Work Zone Barricade
Servicer.....$ 11.85

PAINTER (Structures).....$ 18.34

POWER EQUIPMENT OPERATOR:
Agricultural Tractor.....$ 12.69
Asphalt Distributor.....$ 15.55
Asphalt Paving Machine.....$ 14.36
Boom Truck.....$ 18.36
Broom or Sweeper.....$ 11.04
Concrete Pavement
Finishing Machine.....$ 15.48
Crane, Hydraulic 80 tons
or less.....$ 18.36
Crane, Lattice Boom 80
tons or less.....$ 15.87
Crane, Lattice Boom over
80 tons.....$ 19.38
Crawler Tractor.....$ 15.67
Directional Drilling
Locator.....$ 11.67
Directional Drilling
Operator.....$ 17.24
Excavator 50,000 lbs or
Less.....$ 12.88
Excavator over 50,000 lbs...$ 17.71
Foundation Drill, Truck
Mounted.....$ 16.93
Front End Loader, 3 CY or
Less.....$ 13.04
Front End Loader, Over 3 CY.$ 13.21
Loader/Backhoe.....$ 14.12
Mechanic.....$ 17.10
Milling Machine.....$ 14.18
Motor Grader, Fine Grade....$ 18.51
Motor Grader, Rough.....$ 14.63
Pavement Marking Machine....$ 19.17
Reclaimer/Pulverizer.....$ 12.88
Roller, Asphalt.....$ 12.78
Roller, Other.....$ 10.50
Scraper.....$ 12.27
Spreader Box.....$ 14.04
Trenching Machine, Heavy....$ 18.48

Servicer.....$ 14.51

Steel Worker
Reinforcing.....$ 14.00
Structural.....$ 19.29

TRAFFIC SIGNAL INSTALLER
Traffic Signal/Light Pole
Worker.....$ 16.00

TRUCK DRIVER
Lowboy-Float.....$ 15.66
Off Road Hauler.....$ 11.88
Single Axle.....$ 11.79
Single or Tandem Axle Dump
Truck.....$ 11.68
Tandem Axle Tractor w/Semi
Trailer.....$ 12.81

WELDER.....$ 15.97

WELDERS - Receive rate prescribed for craft performing operation to which welding is incidental.

==========

Note: Executive Order (EO) 13706, Establishing Paid Sick Leave for Federal Contractors applies to all contracts subject to the Davis-Bacon Act for which the contract is awarded (and any solicitation was issued) on or after January 1, 2017. If this contract is covered by the EO, the contractor must provide employees with 1 hour of paid sick leave for every 30 hours they work, up to 56 hours of paid sick leave each year.

Employees must be permitted to use paid sick leave for their own illness, injury or other health-related needs, including preventive care; to assist a family member (or person who is like family to the employee) who is ill, injured, or has other health-related needs, including preventive care; or for reasons resulting from, or to assist a family member (or person who is like family to the employee) who is a victim of, domestic violence, sexual assault, or stalking. Additional information on contractor requirements and worker protections under the EO is available at www.dol.gov/whd/govcontracts.

Unlisted classifications needed for work not included within the scope of the classifications listed may be added after award only as provided in the labor standards contract clauses(29CFR 5.5 (a) (1) (ii)).

The body of each wage determination lists the classification and wage rates that have been found to be prevailing for the cited type(s) of construction in the area covered by the wage determination. The classifications are listed in alphabetical order of "identifiers" that

indicate whether the particular rate is a union rate (current union negotiated rate for local), a survey rate (weighted average rate) or a union average rate(weighted union average rate).

Union Rate Identifiers

A four letter classification abbreviation identifier enclosed in dotted lines beginning with characters other than "SU" or "UAVG" denotes that the union classification and rate were prevailing for that classification in the survey. Example: PLUM0198-005 07/01/2014. PLUM is an abbreviation identifier of the union which prevailed in the survey for this classification, which in this example would be Plumbers. 0198 indicates the local union number or district council number where applicable, i.e., Plumbers Local 0198. The next number,005 in the example, is an internal number used in processing the wage determination. 07/01/2014 is the effective date of the most current negotiated rate, which in this example is July 1, 2014.

Union prevailing wage rates are updated to reflect all rate changes in the collective bargaining agreement (CBA) governing this classification and rate.

Survey Rate Identifiers

Classifications listed under the "SU" identifier indicate that no one rate prevailed for this classification in the survey and the published rate is derived by computing a weighted average rate based on all the rates reported in the survey for that classification. As this weighted average rate includes all rates reported in the survey, it may include both union and non-union rates. Example: SULA2012-007 5/13/2014. SU indicates the rates are survey rates based on a weighted average calculation of rates and are not majority rates. LA indicates the State of Louisiana. 2012 is the year of survey on which these classifications and rates are based. The next number, 007 in the example, is an internal number used in producing the wage determination. 5/13/2014 indicates the survey completion date for the classifications and rates under that identifier.

Survey wage rates are not updated and remain in effect until a new survey is conducted.

Union Average Rate Identifiers

Classification(s) listed under the UAVG identifier indicate that no single majority rate prevailed for those classifications; however, 100% of the data reported for the classifications was union data. EXAMPLE: UAVG-OH-0010 08/29/2014. UAVG indicates that the rate is a weighted union average rate. OH indicates the state. The next number, 0010 in the example, is an internal number used in producing the wage determination. 08/29/2014 indicates the survey completion date for the classifications and rates under that identifier.

A UAVG rate will be updated once a year, usually in January of each year, to reflect a weighted average of the current negotiated/CBA rate of the union locals from which the rate is based.

WAGE DETERMINATION APPEALS PROCESS

1.) Has there been an initial decision in the matter? This can be:

* an existing published wage determination
* a survey underlying a wage determination
* a Wage and Hour Division letter setting forth a position on a wage determination matter
* a conformance (additional classification and rate) ruling

On survey related matters, initial contact, including requests for summaries of surveys, should be with the Wage and Hour Regional Office for the area in which the survey was conducted because those Regional Offices have responsibility for the Davis-Bacon survey program. If the response from this initial contact is not satisfactory, then the process described in 2.) and 3.) should be followed.

With regard to any other matter not yet ripe for the formal process described here, initial contact should be with the Branch of Construction Wage Determinations. Write to:

Branch of Construction Wage Determinations
Wage and Hour Division
U.S. Department of Labor
200 Constitution Avenue, N.W.
Washington, DC 20210

2.) If the answer to the question in 1.) is yes, then an interested party (those affected by the action) can request review and reconsideration from the Wage and Hour Administrator (See 29 CFR Part 1.8 and 29 CFR Part 7). Write to:

Wage and Hour Administrator
U.S. Department of Labor
200 Constitution Avenue, N.W.
Washington, DC 20210

The request should be accompanied by a full statement of the interested party's position and by any information (wage payment data, project description, area practice material, etc.) that the requestor considers relevant to the issue.

3.) If the decision of the Administrator is not favorable, an interested party may appeal directly to the Administrative Review Board (formerly the Wage Appeals Board). Write to:

Administrative Review Board
U.S. Department of Labor
200 Constitution Avenue, N.W.
Washington, DC 20210

4.) All decisions by the Administrative Review Board are final.

==========

END OF GENERAL DECISION

SECTION 7
PERFORMANCE BOND

PERFORMANCE BOND

STATE OF TEXAS
COUNTY OF _____

KNOW ALL MEN BY THESE PRESENTS: That _____

_____of the City of _____

County of _____, and State of _____, as principal, and

_____

authorized under the laws of the State of Texas to act as surety on bonds for principals, are held and firmly bound unto Williamson County (County), in the penal sum of

_____Dollars

($_____) for the payment whereof, the said Principal and Surety bind themselves, their heirs, administrators, executors, successors, jointly and severally, by these presents:

WHEREAS, the Principal has entered into a certain written Agreement with the County, dated the _____day of _____, 20_____(the "Agreement"), to which the said Agreement, along with the Contract Documents referenced therein are hereby referred to and made a part hereof as fully and to the same extent as if copied at length herein.

NOW, THEREFORE, THE CONDITION OF THIS OBLIGATION IS SUCH, that if the said Principal shall faithfully perform said Agreement and shall in all respects duly and faithfully observe and perform all and singular the covenants, conditions and agreements in and by the Agreement agreed and covenanted by the Principal to be observed and performed, and according to the true intent and meaning of said Agreement and the Contract Documents hereto annexed, then this obligation shall be void; otherwise to remain in full force and effect.

PROVIDED, HOWEVER, that this bond is executed pursuant to the provisions of Chapter 2253 of the Texas Government Code, as amended and all liabilities on this bond shall be determined in accordance with the provisions of said Chapter to the same extent as if it were copied at length herein.

SURETY, for value received, stipulates and agrees that no change, extension of time, alteration or addition to the terms of the Agreement or to the work performed thereunder, or to the Contract Documents referenced therein, shall in anyway affect the obligations on this bond, and it does hereby waive notice of such change, extension of time, alteration or addition to the terms on the Agreement, or to the work to be performed thereunder.

IN WITNESS WHEREOF, the said Principal and Surety have signed and sealed this instrument this _____ day of _____, 20___.

_____	_____
PRINCIPAL	SURETY
_____	_____
SIGNATURE	SIGNATURE
_____	_____
NAME & TITLE	NAME & TITLE
_____	_____
ADDRESS	ADDRESS
_____	_____
(_____) _____	(_____) _____
PHONE NUMBER	PHONE NUMBER

The name and address of the Resident Agency of Surety is:

_____

_____

(_____) _____	_____
PHONE NUMBER	SIGNATURE OF LICENSED LOCAL RECORDING AGENT appointed to countersign on behalf of Surety (Required by Art. 21.09 of the Insurance Code)

****

I,_____, having executed Bonds
SIGNATURE

for _____ do hereby affirm I have
NAME OF SURETY

verified that said Surety is now certified with Authority from either: (a) the Secretary of the Treasury of the United States if the project funding includes Federal monies; or (b) the State of Texas if none of the project funding is from Federal sources; and further, said Surety is in no way limited or restricted from furnishing Bond in the State of Texas for the amount and under conditions stated herein.

SECTION 8
PAYMENT BOND

PAYMENT BOND

STATE OF TEXAS
COUNTY OF _____

KNOW ALL MEN BY THESE PRESENTS: That _____

_____of the City of _____

County of _____, and State of _____, as Principal (hereinafter referred to as the "Principal"), and

_____
authorized under the laws of the State of Texas to act as Surety on bonds for principals (hereinafter referred to as the "Surety"), are held and firmly bound unto Williamson County, (hereinafter referred to as the "County"), in the penal sum of

_____Dollars

($_____) for the payment whereof, the said Principal and Surety bind themselves, their heirs, administrators, executors, successors and assigns, jointly and severally, by these presents:

WHEREAS, the Principal has entered into a certain written agreement with the County, dated the _____ day of _____, 20_____, to _____

_____ (hereinafter referred to as the "Agreement"), which said Agreement and the Contract Documents incorporated therein are hereby referred to and made a part hereof as fully and to the same extent as if copied at length herein.

NOW, THEREFORE, THE CONDITION OF THIS OBLIGATION IS SUCH, that if the said Principal shall pay all claimants supplying labor and material to him or a subcontractor in the prosecution of the Work provided for in said Agreement, then, this obligation shall be void; otherwise to remain in full force and effect.

PROVIDED, HOWEVER, that this bond is executed pursuant to the provisions of Chapter 2253 of the Texas Government Code, as amended and all liabilities on this bond shall be determined in accordance with the provisions of said Chapter to the same extent as if it were copied at length herein.

SURETY, for value received, stipulates and agrees that no change, extension of time, alteration or addition to the terms of the Agreement or to the Work performed thereunder, or to the other Contract Documents accompanying the same, shall in anyway affect its obligation on this bond, and it does hereby waive notice of such change, extension of time, alteration or addition to the terms of the Agreement, or to the work to be performed thereunder or to the other Contract Documents accompanying the same.

IN WITNESS WHEREOF, the said Principal and Surety have signed and sealed this instrument this _____ day of _____, 20___.

_____	_____
PRINCIPAL	SURETY
_____	_____
SIGNATURE	SIGNATURE
_____	_____
NAME & TITLE	NAME & TITLE
_____	_____
ADDRESS	ADDRESS
_____	_____
(_____) _____	(_____) _____
PHONE NUMBER	PHONE NUMBER

The name and address of the Resident Agency of Surety is:

_____

_____

(_____) _____	_____
PHONE NUMBER	SIGNATURE OF LICENSED LOCAL RECORDING AGENT appointed to countersign on behalf of Surety (Required by Art. 21.09 of the Insurance Code)

SECTION 9
MAINTENANCE BOND

MAINTENANCE BOND

KNOW ALL MEN BY THESE PRESENTS: That _____
(NAME OF CONTRACTOR)

_____

as principal, hereinafter called "CONTRACTOR" and _____

_____
(NAME OF SURETY)

a corporation organized under the laws of _____
as Surety, hereinafter called "SURETY", do hereby expressly acknowledge themselves to be held and bound to pay unto WILLIAMSON COUNTY as Obligee, a political subdivision of the State of Texas, hereinafter called "COUNTY", the sum of (20% of total construction contract amount)

_____
(INSERT WORDS)
_____ Dollars ($_____) for the payment of which sum well and truly to be made unto said COUNTY and its successors, said principal and sureties do hereby bind themselves, their assigns, and successors jointly and severally.

This obligation is conditioned, however, that whereas said CONTRACTOR has by written Agreement dated _____ , 20 _____ , entered into an agreement with said COUNTY to build and construct _____

_____
which said Agreement and the Contract Documents therein mentioned and adopted by the COUNTY are hereby expressly made a part thereof as though the same were written and embodied herein.

WHEREAS, under the terms and conditions of the Agreement, specifications and other Contract Documents, it is provided that the CONTRACTOR shall maintain and keep in good repair the Work constructed and/or equipment furnished by it as contemplated by the plan drawings, specifications, and other Contract Documents, and perform for a period of 2 years from the date of acceptance as shown on the "Certificate of Completion" issued by the ENGINEER, or the date of Final Payment by the COUNTY if a separate Certificate of Completion is not issued, all necessary repairs, reconstruction and renewal of any part of said construction, and to furnish the labor and materials to make good and to repair any defective condition growing out of or on account of the breakage or failure of any substance or the improper function of any part of the construction work. The CONTRACTOR shall reimburse the COUNTY for the costs of all engineering and special services required to be furnished by the COUNTY which are directly attributable to the restoration of the constructed work. Said maintenance contemplates the complete restoration of the constructed work to a functional use during the said period as set forth above. It is the intended purpose of this section to require the correction of all defective conditions resulting from materials furnished or work and labor performed by the CONTRACTOR under the conditions prescribed by the Agreement, plans and specifications and other Contract Documents; and in case the CONTRACTOR shall fail or refuse to commence and actively pursue such corrections within ten (10) days after proper written notifications have been furnished to it by the COUNTY, it is agreed that the COUNTY may do said work and supply such materials and the said CONTRACTOR and SURETY herein shall be liable for the payment of all costs thereby incurred.

NOW THEREFORE, if the said CONTRACTOR shall keep and perform its said agreement to maintain said work and keep the same in good repair for the said maintenance period as provided above, then these presents shall be null and void and have no further effect, but if default shall be made by the

CONTRACTOR in the performance of its Agreement to maintain and repair said work, then these presents shall have full force and effect and the COUNTY shall have and recover from the said CONTRACTOR and its sureties damages in the premises, as provided, and it is further understood and agreed that this obligation shall be a continuing one against the principal and sureties hereon, and that successive recoveries may be had hereon for successive breaches until the full amount shall have been exhausted; and it is further understood that the obligation herein to maintain said work shall continue throughout said maintenance period, and the same shall not be changed, diminished, or in any manner affected from any cause during said time.

IN WITNESS WHEREOF, this instrument is executed this _____ day of _____, 20 ____

_____ _____

PRINCIPAL PHONE NO.

_____

SIGNATURE (SEAL)

_____ _____

NAME & TITLE WITNESS OR ATTEST TO SEAL

_____ _____

SURETY PHONE NO.

_____

SIGNATURE (SEAL)

_____ _____

NAME & TITLE WITNESS OR ATTEST TO SEAL

_____

SIGNATURE OF LICENSED LOCAL RECORDING AGENT
appointed to countersign on behalf of Surety

SECTION 10
CERTIFICATE OF INSURANCE

CERTIFICATE OF INSURANCE

TO: DATE:_____

_____ Project No.:_____
(COUNTY)

_____ Type of _____

_____ Project:_____
(ADDRESS)

THIS IS TO CERTIFY THAT _____
(Name and address of insured)

is, at the date of this certificate, insured by this Company with respect to the business operations hereinafter described for the types of Insurance and in accordance with the provisions of the standard policies used by this Company, and further hereinafter described. Exceptions to the standard policy noted on reverse side hereof.

TYPE OF INSURANCE	POLICY NO.	EFFECTIVE	EXPIRES	LIMITS OF LIABILITY	
Workmen's Compensation					
				1 Person	$
Public Liability				1 Accident	$
Contingent				1 Person	$
Liability				1 Accident	$
Property Damage					
Builder's Risk					
Automobile					
Other					

The foregoing Policies (do) (do not) cover all sub-contractors.

Locations Covered:_____

Descriptions of Operations Covered:_____

The above policies either in the body thereof or by appropriate endorsement provide that they may not be changed or canceled by the insurer in less than five days after the insured has received written notice of such change or cancellation.

Where applicable local laws or regulations require more than five days actual notice of change or cancellation to the assured, the above policies contain such special requirements, either in the body thereof or by appropriate endorsement thereto attached.

_____
(Name of Insurer)

By:_____

Phone No. (___) _____ Title:_____

SECTION 11
GENERAL CONDITIONS OF AGREEMENT

Table of Contents

1. Definition of Terms
1.01 The Agreement
1.02 County
1.03 Department
1.04 Contractor
1.05 Engineer
1.06 General Engineering Consultant (GEC)
1.07 Construction Observer
1.08 Construction Representative
1.09 Engineer of Record
1.10 Contract Documents
1.11 Subcontractor
1.12 Sub-Subcontractor
1.13 Written Notice
1.14 Work
1.15 Extra Work
1.16 Working Day
1.17 Calendar Day
1.18 Substantially Completed
1.19 Notice of Substantial Completion
1.20 Certificate of Completion
1.21 Certificate of Acceptance
1.22 Project
1.23 Contract Time
1.24 Contract Price

2. Responsibilities of the Engineer and the Contractor
2.01 County-Observer Relationship
2.02 Professional Observation by the Construction Observer
2.03 Payments for Work
2.04 Initial Determinations
2.05 Objections
2.06 Lines and Grades
2.07 Contractor's Duty and Superintendence
2.08 Contractor's Understanding
2.09 Character of Workers
2.10 Shop Drawings
2.11 Preliminary Approval
2.12 Defects and Their Remedies
2.13 Changes and Alterations

3. General Obligations and Responsibilities

3.01 Keeping of Plans and Specifications Accessible and Keeping a Superintendent on the Project Site
3.02 Ownership of Documents
3.03 Adequacy of Design
3.04 Contractor's Responsibility for Work
3.05 Protection Against Accident to Employees and the Public
3.06 Performance and Payment Bonds
3.07 Protection of Adjoining Property
3.08 Protection Against Claims of Subcontractors, Laborers, Materialmen and Furnishers of Machinery, Equipment and Supplies
3.09 Protection Against Royalties or Patented Invention
3.10 Laws and Ordinances
3.11 Assignment and Subletting
3.12 Indemnification
3.13 Insurance
3.14 Final Clean-up

4. Prosecution and Progress

4.01 Time and Order of Completion
4.02 Extension of Time
4.03 Hindrances and Delays

5. Measurement and Payment

5.01 Quantities and Measurements
5.02 Estimated Quantities
5.03 Price of Work
5.04 Partial Payments
5.05 Punch List
5.06 Final Completion and Acceptance
5.07 Final Payment
5.08 Payments Withheld
5.09 Delayed Payments

6. Extra Work and Claims

6.01 Change Orders
6.02 Minor Changes
6.03 Extra Work
6.04 Time of Filing Claims
6.05 Continuing Performance

7. Abandonment of Contract
7.01 Abandonment by Contractor
7.02 Abandonment by the County

8. Subcontractors
8.01 Award of Subcontracts for Portions of the Work
8.02 Subcontractual Relations
8.03 Payments to Subcontractors

9. Protection of Persons and Property
9.01 Safety Precautions and Programs
9.02 Safety of Persons and Property
9.03 Location and Protection of Utilities

10. Termination
10.01 Termination by the County for Cause
10.02 Termination for Convenience
10.03 Obligations of Contractor Following Termination

11. Inspection and Audit

General Conditions of Agreement

1. Definition of Terms

For purposes of the Contract Documents, the following terms shall have the meanings set forth herein:

1.01 The Agreement

The term the "Agreement" shall mean Standard Form of Agreement by and between County and Contractor relating to the Work and the construction of the Project.

1.02 County

Williamson County, Texas, being a political subdivision of the State of Texas, is the entity identified in the Agreement and hereinafter referred to as the "County." Nothing contained in the Contract Documents shall create any contractual or agency relationship between any parties other than the County and the Contractor.

1.03 Department

The "Department" shall mean the Texas Department of Transportation (TxDOT).

1.04 Contractor

The term the "Contractor" shall mean the successful bidder that enters into the Agreement with the County for the construction of the Work and the Project defined by the Contract Documents.

1.05 Engineer

The term the "Engineer" shall mean the County Engineer or the authorized representative of the County Engineer.

1.06 General Engineering Consultant (GEC)

The term the "General Engineering Consultant" or "GEC" shall mean the consulting engineering firm representing and assisting the County in the design, review, and coordination of the design and construction phases of the Project. The GEC shall be responsible for the construction oversight of the Project.

1.07 Construction Observer

The "Construction Observer" or the "Observer" shall mean the County's employee or a contracted consultant who performs construction engineering and inspection services for the Project.

1.08 Construction Representative

The "Construction Representative" shall mean the GEC's designated field representative

during construction of the Project which shall provide for coordination and assistance of the construction observation effort.

1.09 Engineer of Record

The term "Engineer of Record" shall mean the County's design professional, who shall provide professional engineering design services for the Project.

1.10 Contract Documents

The "Contract Documents" shall consist of the Special Conditions, Notice for Bidders, Proposal, the fully executed Agreement, Performance and Payment Bonds, Maintenance Bond, Special Bonds (when required), General Conditions, Technical Specifications or Specifications, Plans and all modifications thereof incorporated in any such documents before the execution of the Agreement and all modifications that are made, in accordance with the Contract Documents, following the execution of the Agreement.

The Contract Documents are complementary, and what is called for by any one shall be as binding as if called for by all. In case of conflict between any of the Contract Documents, priority of interpretation shall be in the following order: Fully Executed Agreement, Performance and Payment Bonds, Maintenance Bond, Special Bonds (if any), Proposal, General Conditions, Special Conditions, Technical Specifications or Specifications, and Plans.

1.11 Subcontractor

The term "Subcontractor", as employed herein, includes only those having a direct contract with the Contractor. It includes one who furnishes material worked to special design according to the plans or specifications of this work, but does not include one who merely furnishes material not so worked.

1.12 Sub-Subcontractor

The term "Sub-Subcontractor" means one who has a direct or indirect contract with a Subcontractor to perform any of the Work at the site. It includes one who furnishes material worked to a special design according to the plans or specifications of this work, but does not include one who merely furnishes material not so worked.

1.13 Written Notice

Written notice shall be deemed to have been duly served if delivered in person to the individual or to an officer of the entity for whom it is intended, or if delivered to or sent by registered mail to the last business address known to it who gives the notice.

1.14 Work

The Contractor shall provide and pay for all materials, machinery, equipment, tools, superintendence, labor, services, insurance, and all water, light, power, fuel, transportation and other facilities necessary for the execution and completion of the work covered by the Contract Documents (collectively known as the "Work"). Unless otherwise specified, all materials shall be new and both workmanship and materials shall be of a good quality. The

Contractor shall, if required, furnish satisfactory evidence as to the kind and quality of materials. Materials or work described in words which, when so applied, have a well-known technical or trade meaning shall be held to refer to such recognized standards.

1.15 Extra Work

The term "Extra Work" as used in the Contract Documents shall be understood to mean and include all work that may be required by the County to be done by the Contractor to accomplish any change, alteration or addition to the Work shown upon the plans, or reasonably implied by the specifications, and not covered by the Contractor's Proposal, except as provided under Section 2.13 "Changes and Alterations" herein.

1.16 Working Day

The term "Working Day" is defined as any day not including Saturdays, Sundays or any legal holidays, in which weather or other conditions, not under the control of the Contractor, will permit construction of the principal units of the Work for a period of not less than seven (7) hours between 7:00 a.m. and 6:00 p.m.

1.17 Calendar Day

The term "Calendar Day" is defined as any day of the week or month, no days being excepted.

1.18 Substantially Completed

The term "Substantially Completed" or "Substantial Completion" shall be understood to mean that all Project Work (or the work for a specified phase of the Project) requiring lane or shoulder closures or obstructions is completed, and traffic is following the lane arrangement as shown on the plans for the finished roadway (or the specified phase of work). Additionally, all pavement construction, resurfacing, traffic control devices, and pavement markings shall be in their final position (or as called for on the plans for the specified phase of work) at such time; provided, however, the Engineer may make an exception as to the permanent pavement markings being in their final position provided that, in the Engineer's sole discretion, the lack of markings does not cause a disruption to traffic flow or an unsafe condition for the traveling public, and work zone pavement markings are in place.

1.19 Notice of Substantial Completion

Notice issued to the Contractor by the Observer or County's Representative acknowledging Substantial Completion of the Project, signifying the end of time charges.

1.20 Certificate of Completion

Certificate issued to the Contractor by the Observer acknowledging "Final Completion" of the Project, as determined by completion of the Punch List, from which time the warranty period for the Project shall begin. The issuance of the Certificate of Completion shall serve as evidence of "Final Completion" and such certificate shall relieve the Contractor of ownership responsibilities for the Project, except for repair of damage caused by the Contractor or by the Contractor's operations to existing facilities or completed and substantially accepted work.

1.21 Certificate of Acceptance

Certificate issued to the Contractor by the County acknowledging final acceptance and purchase of the Project.

1.22 Project

The "Project" shall mean and include the Project defined, described and set forth in the Agreement.

1.23 Contract Time

The "Contract Time" shall mean the amount of time in which the Work shall be Substantially Completed. The number of days allotted for the Contract Time shall be specifically set forth in the Agreement.

1.24 Contract Price

The "Contract Price" shall mean the amount that the County shall pay the Contractor for completion of the Work in accordance with the Contract Documents. The specific amount of the Contract Price shall be determined pursuant to the terms of the Contract Documents.

2. Responsibilities of the Engineer and the Contractor

2.01 County-Observer Relationship

The Observer will be the County's contracted consultant during construction. The duties, responsibilities and limitations of authority of the Observer as the County's representative during construction are as set forth in the Contract Documents and/or the Agreement for Construction Engineering and Inspection Services and shall not be extended or limited without written consent of the County or the Observer. The Observer will advise and consult with the County and the GEC, and all of the County's instructions to the Contractor shall be issued through the Observer.

2.02 Professional Observation by the Construction Observer

The Observer shall be on the jobsite when work is being performed to provide construction engineering inspections of the Work performed by the Contractor. In addition to performing material testing on behalf of the County, the Observer shall review the progress of the executed Work and to determine if such Work meets the essential performance and design features and the technical and functional engineering requirements of the Contract Documents; provided and except, however, that the Observer shall not be responsible, directly or indirectly, for the Contractor's construction means, methods, techniques, sequences, quality, procedures, programs, safety precautions or lack of same incident thereto or in connection therewith. Notwithstanding any other provision of the Contract Documents, the Engineer and the Observer shall not be responsible or liable for any acts, errors, omissions or negligence of the Contractor, any Subcontractor or any of the Contractor's or Subcontractor's agents, servants or employees or any other person, firm or corporation performing or attempting to perform any of the Work.

2.03 Payments for Work

The Observer shall review the Contractor's applications for payment and supporting data, determine the amount owed to the Contractor and recommend, in writing to the GEC for review, payment to the Contractor in such amounts; such recommendation of payment to the Contractor constitutes a representation to the County of the Observer's professional judgment that the Work has progressed to the point indicated to the best of its knowledge, information and belief, but such recommendation of an application for payment to the Contractor shall not be deemed as a representation by the Observer that the Observer has made any examination to determine how or for what purpose the Contractor has used the monies paid on account of the Contract Price.

2.04 Initial Determinations

The Observer initially shall determine all claims, disputes and other matters in question between the Contractor and the County relating to execution or progress of the Work or interpretation of the Contract Documents. The Observer's decision shall be rendered in writing to the GEC for review within a reasonable time, which shall not be construed to be less than ten (10) days.

2.05 Objections

In the event the Observer renders any decision which, in the opinion of either party hereto, is not in accordance with the meaning and intent of the Contract Documents, either party may file with the Observer its written objection to the decision within thirty (30) days of such decision by the Observer, and by such action may reserve the right to submit the question so raised to litigation as hereinafter provided.

2.06 Lines and Grades

Unless otherwise specified, all lines and grades shall be furnished by the Contractor at its own expense. Whenever necessary, construction work shall be suspended to permit performance of this work, but such suspension will be as brief as practicable and the Contractor shall be allowed no extra compensation therefore.

2.07 Contractor's Duty and Superintendence

The Contractor shall give adequate attention to the faithful prosecution and completion of the Work subject of the Contract Documents and shall keep on the Project site, at all times during its progress, a competent Superintendent and any necessary assistants to supervise and direct the Work. The Superintendent shall represent the Contractor in its absence and all directions given to the Superintendent shall be as binding as if given to the Contractor.

The Contractor is and at all times shall remain an independent contractor, solely responsible for the manner and method of completing its work under the Contract Documents, with full power and authority to select the means, method and manner of performing such work, so long as such methods do not adversely affect the completed improvements, the County and the Observer being interested only in the result obtained and conformity of such completed improvements with the Contract Documents.

Likewise, the Contractor shall be solely responsible for the safety of itself, its employees and other persons, as well as for the protection and safety of the improvements being erected and its property or any other person's property, as a result of its operations under the Contract Documents. Engineering construction drawings and specifications, as well as any additional information concerning the Work to be performed passing from or through the Observer, shall not be interpreted as requiring or allowing the Contractor to deviate from the Contract documents, the plans and specifications; the intent of such drawings, specifications and any other such information being to define with specificity the agreement of the parties as to the Work the Contractor is to perform.

Any review of work in process, or any visit or observation and inspection during construction, or any clarification of plans and specifications, by the Observer or the County, or any agent, employee, or representative of either of them, whether through personal observation or inspection on the Project site or by means of approval of shop drawings for temporary construction or construction processes, or by other means or methods, is agreed by the Contractor to be for the purpose of observing the extent and nature of work completed or being performed, as measured against the drawings and specifications constituting the Contract Documents, or for the purpose of enabling the Contractor to more fully understand the plans and specifications so that the completed construction work will conform thereto, and shall in no way relieve the Contractor from full and complete responsibility for the proper performance of its work on the Project, including but not limited to the propriety of means and methods of the Contractor in performing in accordance with the Contract Documents, and the adequacy of any designs, plans or other facilities for accomplishing such performance. Deviation by the Contractor from plans and specifications that may have been in evidence during any such visitation or observation by the Observer, the Engineer, or any of their representatives, whether called to the Contractor's attention or not, shall in no way relieve the Contractor from its responsibility to complete all work in accordance with the Contract Documents.

2.08 Contractor's Understanding

It is understood and agreed that the Contractor has, by careful examination, satisfied itself as to the nature and location of the Work, the conformation of the ground, the character, quality and quantity of the materials to be encountered, the character of equipment and facilities needed preliminary to and during the prosecution of the Work, the general and local conditions, and all other matters which can in any way affect the Work under the Contract Documents.

2.09 Character of Workers

The Contractor agrees to employ only orderly and competent workers, skillful in the performance of the type of work required under the Contract Documents, to do the Work; and agrees that whenever the Observer shall inform it in writing that any workers on the Work are, in its opinion, incompetent, unfaithful or disorderly, or refuse instructions from the Observer in the absence of the Superintendent, such worker shall be discharged from the Work and shall not again be employed on the Work without the Observer's written consent. No illegal alien may be employed by any Contractor for work on this Project, and a penalty

of $500.00 per day will be assessed for each day and for each illegal alien who works for the Contractor at this Project.

2.10 Shop Drawings

The Contractor shall submit to the Observer, with such promptness as to cause no delay in its own work or in that of any other contractor, a minimum of four (4) stamped/reviewed copies, unless otherwise specified, of all shop and/or setting drawings and schedules required for the work of the various trades, and the Engineer of Record shall pass upon them with reasonable promptness, making desired corrections. Note: A single copy of the reviewed drawings shall be retained by the reviewer, the County, and the County's Representative for their records. The Contractor may not submit more than four different shop drawing plans for review in any one week. The Engineer of Record shall return the shop drawings to the Contractor, via the GEC, within three (3) weeks of its having received them, with appropriate comments. The Contractor shall make any corrections required by the Engineer of Record, file with it two (2) corrected copies and furnish such other copies as may be needed. The Engineer of Record's approval of such drawings or schedules shall not relieve the Contractor from responsibility for deviations from drawings or specifications, unless the Contractor has in writing called the Engineer of Record's attention to such deviations at the time of submission, nor shall it relieve Contractor from responsibility for errors of any sort in shop drawings or schedules. It shall be the Contractor's responsibility to fully and completely review all shop drawings to ascertain their effect on its ability to perform the required work in accordance with the Contract Documents and within the time for completion thereof. Any shop drawings which are required for temporary supports must be signed and sealed by an Engineer registered in the State of Texas.

Such review by the Engineer of Record shall be for the sole purpose of determining the sufficiency of said shop drawings or schedules to result in finished improvements in conformity with the plans and specifications, and shall not relieve the Contractor of its duties and obligations, as an independent contractor, set forth in the Contract Documents. It is hereby expressly understood and agreed that the Engineer of Record does not assume any duty to pass upon the propriety or adequacy of such drawings or schedules, or any means or methods reflected thereby, in relation to the safety of either person or property during the Contractor's performance hereunder.

2.11 Preliminary Approval

The Observer shall not have the power to waive the obligations of the Contract Documents for the furnishing by the Contractor of good material, and of its performing good work as herein described, and in full accordance with the Contract Documents. No failure or omission of the Observer to discover, object to or condemn any defective work or material shall release the Contractor from the obligations to fully and properly perform in full accordance with the Contract Documents, including without limitation, the obligation to at once tear out, remove and properly replace any defective work or material at any time prior to final acceptance upon the discovery of said defective work or material; provided, however, that the Observer shall, upon request of the Contractor, inspect and accept or reject any material furnished, and in the event the material has been once accepted by the Observer,

such acceptance shall be binding on the County unless it can be clearly shown that such material furnished does not meet the specifications for this work.

Any questioned work may be ordered to be taken up or removed for re-examination by the Observer, prior to final acceptance, and if found not in accordance with the plans and/or specifications for said work, all expenses relating to the removing, re-examination and replacement shall be solely borne by the Contractor. Otherwise, if the questioned work is found to be in accordance with the plans and/or specifications for said work, the expense thus incurred shall be allowed as Extra Work and shall be paid for by the County; provided, however, where inspection or approval is specifically required by the specifications prior to performance of certain work, should the Contractor proceed with such work without requesting prior inspection or approval, the Contractor shall bear all expense of taking up, removing, and replacing this work if so directed by the Observer.

2.12 Defects and Their Remedies

It is further agreed that if the Work or any part thereof, or any material brought on the site of the Work for use in the Work or selected for the same, shall be deemed by the Observer as unsuitable or not in conformity with the Contract Documents, or the intent thereof, the Contractor shall, after receipt of notice thereof from the Observer, forthwith remove such material and rebuild or otherwise remedy such work so that it shall be in full accordance with the Contract Documents.

2.13 Changes and Alterations

The Contractor further agrees that the County may make such changes and alterations as the County may see fit in the line, grade, form, dimensions, plans or materials for the Work herein contemplated, or any part thereof, either before or after the beginning of the construction, without affecting the validity of the Contract Documents.

If such changes or alterations diminish the quantity of the Work to be done, they shall not constitute the basis for a claim for damages or anticipated profits on the Work that may be dispensed with, except as provided for unit price items under Section 5 “Measurement and Payment”. If the amount of work is increased, and the Work can fairly be classified under the specifications, such increase shall be paid for according to the quantity actually done and at the unit price, if any, established for such work under the Contract Documents, except as provided for unit price items under Section 5 “Measurement and Payment”. Otherwise, such additional work shall be paid for as provided under Extra Work. In the event the County makes such changes or alterations as shall make useless any work already done or material already furnished or used in said work, then the County shall compensate the Contractor for any material or labor so used, and for any actual loss occasioned by such change, due to actual expense incurred in preparation for the Work as originally planned.

3. General Obligations and Responsibilities

3.01 Keeping of Plans and Specifications Accessible and Keeping a Superintendent on the Project Site

The Contractor shall keep one (1) copy of the plans and specifications constantly accessible on the Work, with the latest revisions noted thereon. The Contractor shall give the Work its constant attention to facilitate the progress thereof and shall cooperate with the Construction Observer in every way possible. The Contractor shall designate, to the Construction Observer in writing, the name of a Superintendent, employed by the firm, regardless of how much of the Work may be sublet. The Superintendent will be available at all time. In the event a competent superintendent is not available, the Construction Observer may suspend work until one is available.

3.02 Ownership of Documents

All drawings, specifications and copies thereof furnished by the Engineer of Record shall not be reused on other work, and, with the exception of the signed contract sets, are to be returned to the Engineer of Record on request, at the completion of the work. All models, drawings, specifications and copies thereof are the property of the County.

3.03 Adequacy of Design

It is understood that the County believes it has employed competent engineers and designers. It is therefore agreed that the County and Engineer shall be responsible for the adequacy of the design, sufficiency of the Contract Documents, the safety of the structure and the practicability of the operations of the completed project provided that the Contractor has complied with the requirements of the said Contract Documents, all approved modifications thereof, and additions and alterations thereto approved in writing by the County. The burden of proof of such compliance shall be upon the Contractor to show that it has complied with the said requirements of the Contract Documents, approved modifications thereof, and all approved additions and alterations thereto.

The paper copies of the Contract Documents are considered to be the official contract documents. Any request by the Contractor and use thereof of electronic or digital information, including engineering design and survey files, shall be at the sole risk and legal responsibility of the Contractor. Neither the County nor the Engineer of Record makes any warranty or representation as to the compatibility of the files provided with other software programs, nor shall they be held responsible for subsequent uses of the data by the Contractor or anyone who may obtain the data from the Contractor. **THE CONTRACTOR SHALL, TO THE FULLEST EXTENT PERMITTED BY LAW, INDEMNIFY AND HOLD THE COUNTY ITS AGENTS, EMPLOYEES, OR REPRESENTATIVES AND THE ENGINEER OF RECORD HARMLESS FROM ANY AND ALL CLAIMS, SUITS, LIABILITY, DEMANDS OR COSTS ARISING OUT OF OR RESULTING FROM SUCH USE.** Because data stored on electronic media can deteriorate undetected or be modified undetected, neither the County nor the Engineer of Record can be held liable for the completeness or correctness of the electronic data once in possession of the Contractor.

3.04 Contractor's Responsibility for Work

Until the issuance of the Certificate of Completion for the Project, the Contractor shall have the charge and care thereof and shall take every precaution against injury or damage to any part thereof by the action of the elements or from any other cause, whether arising from the execution or from the non execution of the Work.

In case of suspension of work for any cause, the Contractor shall be responsible for the preservation of all materials. The Contractor shall provide suitable drainage of the roadway in good and passable condition until Final Completion, except as outlined below for opening the roadway to traffic.

Whenever, in the opinion of the Observer, any roadway or portion thereof is in suitable condition for travel, it shall be opened to traffic; provided, however, such opening shall not be held to be, in any way, the final acceptance of the roadway or any part thereof or be held as a waiver of any of the provisions of the Contract Documents. Where it is considered by the Observer to be in the public interest and so ordered in writing by the Observer, any Substantially Completed roadway or portion thereof may be opened to traffic as follows:

(1) When both required by plans, job sequence or the approved traffic control plan, and when the County accepts responsibility for maintaining such portion of the roadway opened to traffic.
(2) When work is suspended for a period of time at the convenience of the County, the County will assume the responsibility for maintaining the entire roadway during the period of suspension; or
(3) When the roadway or portion thereof is opened to traffic during construction operations at the convenience of the County, the County will assume responsibility for the maintenance of the traveled way and shoulders during the period in which it is opened to traffic.

The County, in assuming responsibility for maintenance under this provision, may require the Work to be done in accordance with Section 6, "Extra Work and Claims".

Except for damage by the Contractor or damage caused by the Contractor's operations, the Contractor will not be responsible for repair of damage to existing facilities or damage to completed and accepted work such as guard fence, bridge wings, railing, illumination assemblies, underpass structure, traffic barriers, delineator assemblies, signs, sign bridges, changeable message signs, vehicle impact attenuators (crash cushions and guardrail end treatments) and traffic signals, where such damage is caused by (a) motor-vehicle, seacraft or aircraft that are not being operated by Contractor; (b) railroad-train collision (c) vandalism: (d) Acts of God, such as earthquake, tidal wave, tornado, hurricane, or other cataclysmic phenomena of natures: or (e) Acts of Governmental Authorities.

Upon completion of all work provided for in the Contract Documents for any individual limits, control or project, the Observer may make an inspection, and if the Work is found to be satisfactory, the Contractor will be released from further maintenance on that portion of

the Work, except for damage caused by the Contractor or its operations. Such partial acceptance must be made in writing and shall in no way void or alter any terms of the Contract Documents. Other specific units of the Project will be accepted on an individual basis when shown on the plans or as approved, in writing, by the Observer.

3.05 Protection Against Accident to Employees and the Public

The Contractor shall at all times exercise reasonable precautions for the safety of employees and others on or near the Work and shall comply with all applicable provisions of federal, state, and municipal safety laws and building and construction codes. All machinery and equipment and other physical hazards shall, except where incompatible with federal, state, or municipal laws or regulations, be guarded in accordance with the "Manual of Accident Prevention in Construction" of the Associated General Contractors of America. The Contractor shall provide such machinery guards, safe walkways, ladders, bridges, gangplanks, and other safety devices. The safety precautions actually taken and their adequacy shall be the sole responsibility of the Contractor, acting at its discretion as an independent contractor.

Within 24 hours after Contractor becomes aware of the occurrence of any accident or other event which results in, or might result in, injury to the person or property of anyone, whether or not it results from or involves any action or failure to act by the Contractor or any employee or agent of the Contractor and which arises in any manner from the performance of the Work, the Contractor shall send a written report of such accident or other event to the County and the Observer, setting forth a full and concise statement of the facts pertaining thereto. Such statement shall include a written recordation of the location of the event and the circumstances surrounding the event through photographs, interviewing witnesses, obtaining of medical reports and other documentation that defines the event. The Contractor shall also provide to the County a copy of any and all accident reports received from safety officials or agencies. Copies of such documentation shall be provided to the County and the Observer for their records. The Contractor shall also immediately send the County and the Observer a copy of any summons, subpoena, notice, or other documents served upon the Contractor, its agents, employees, or representatives, or received by it or them, in connection with any matter before any court arising in any manner from the Contractor's performance of the Work.

3.06 Performance and Payment Bonds

Unless otherwise specified, it is further agreed by the parties to the Contract Documents that the Contractor will execute separate performance and payment bonds, each in the sum of one hundred (100%) percent of the total Contract Price, on forms acceptable to County, guaranteeing faithful performance of the Work and the fulfillment of any guarantee required, and further guaranteeing payment to all persons supplying labor and materials or furnishing Contractor with any equipment in the execution of the Work subject of the Contract Documents. It is agreed that the Contractor shall have no rights under the Contract Documents until such performance and payment bonds are furnished to and approved by the County.

Unless otherwise specified, the cost of the premium for the performance and payment bonds shall be included in the price bid by the Contractor for the Work subject of the Contract Documents, and no extra payment for such bonds will be made by the County.

Each bond shall be executed by a corporate surety or corporate sureties, with an A.M. Best rating of "B" or better, duly authorized to do business and to issue surety bonds in the State of Texas. If any surety upon any bond furnished in connection herewith becomes insolvent, or otherwise not authorized to do business in this state, the Contractor shall promptly furnish equivalent security to protect the interests of the County and of persons supplying labor, materials and equipment in the prosecution of the Work subject of the Contract Documents. Furthermore, the surety company underwriting the bonds must be acceptable to the County.

Each bond shall be accompanied by a valid Power of Attorney (issued by the surety company and attached, signed and sealed, with the corporate embossed seal, to the bond) authorizing the agent who signs the bond to commit the company to the terms of the bond, and stating on the face of the Power of Attorney the limit, if any, in the total amount for which such agent is empowered to issue a single bond.

3.07 Protection of Adjoining Property

The Contractor shall take proper means to protect the adjacent or adjoining property or properties, in any way encountered, which might be injured or seriously affected by any process of construction to be undertaken pursuant to the Contract Documents, from any damage or injury by reason of said process of construction; and the Contractor shall be liable for any and all claims for such damage on account of its failure to fully protect all adjoining property. **THE CONTRACTOR AGREES TO INDEMNIFY, SAVE AND HOLD HARMLESS THE COUNTY, THE OBSERVER THE GEC AND THE ENGINEER OF RECORD, AS WELL AS ANY OF THEIR AGENTS, REPRESENTATIVES, OFFICERS OR EMPLOYEES AGAINST ANY CLAIM OR CLAIMS FOR DAMAGES DUE TO ANY INJURY TO ANY ADJACENT OR ADJOINING PROPERTY, ARISING OR GROWING OUT OF THE PERFORMANCE OF THE WORK, BUT ANY SUCH INDEMNITY SHALL NOT APPLY TO ANY CLAIM OF ANY KIND ARISING SOLELY OUT OF THE EXISTENCE OR CHARACTER OF THE WORK.**

3.08 Protection Against Claims of Subcontractors, Laborers, Materialmen and Furnishers of Machinery, Equipment and Supplies

THE CONTRACTOR AGREES THAT IT WILL INDEMNIFY, DEFEND AND SAVE HARMLESS THE COUNTY, THE OBSERVER, THE GEC AND THE ENGINEER OF RECORD, AS WELL AS ANY OF THEIR AGENTS, REPRESENTATIVES, OFFICERS OR EMPLOYEES FROM ALL CLAIMS GROWING OUT THE LAWFUL DEMANDS OF SUBCONTRACTORS, LABORERS, WORKERS, MECHANICS, MATERIALMEN AND FURNISHERS OF MACHINERY, MACHINERY PARTS, EQUIPMENT, POWER TOOLS, AND ALL SUPPLIES, INCLUDING COMMISSARY, INCURRED IN THE FURTHERANCE OF THE PERFORMANCE OF THE WORK SUBJECT OF THE CONTRACT DOCUMENTS. When so desired by the County, the Contractor shall furnish satisfactory evidence that all obligations of the nature hereinabove designated have been paid, discharged or waived. If the Contractor fails to furnish such evidence to County's complete satisfaction, then the County may either pay directly any unpaid bills of which the County has written notice of, or may withhold from

the Contractor's unpaid compensation a sum of money deemed reasonably sufficient to liquidate any and all such lawful claims. When satisfactory evidence is furnished that all liabilities have been fully discharged, payments to the Contractor shall be resumed in full in accordance with the terms of the Contract Documents, but in no event shall the provisions of this sentence be construed to impose any obligation upon the County by either the Contractor or its surety.

3.09 Protection Against Royalties or Patented Invention

The Contractor shall pay all royalties and license fees, and shall provide for the use of any design, device, material or process covered by letter patent or copyright by suitable legal agreement with the patentee or owner. **THE CONTRACTOR SHALL DEFEND ALL SUITS OR CLAIMS FOR INFRINGEMENT OF ANY PATENT OR COPYRIGHT RIGHTS AND SHALL INDEMNIFY AND SAVE HARMLESS THE COUNTY, THE OBSERVER THE GEC AND THE ENGINEER OF RECORD, AS WELL AS ANY OF THEIR AGENTS, REPRESENTATIVES, OFFICERS OR EMPLOYEES FROM ANY LOSS ON ACCOUNT THEREOF, EXCEPT THAT THE COUNTY SHALL DEFEND ALL SUCH SUITS AND CLAIMS AND SHALL BE RESPONSIBLE FOR ALL SUCH LOSS WHEN A PARTICULAR DESIGN, DEVICE, MATERIAL OR PROCESS OR THE PRODUCT OF A PARTICULAR MANUFACTURER OR MANUFACTURERS IS SPECIFIED OR REQUIRED BY THE COUNTY; PROVIDED, HOWEVER, IF CHOICE OF ALTERNATE DESIGN, DEVICE, MATERIAL OR PROCESS IS ALLOWED TO THE CONTRACTOR, THEN THE CONTRACTOR SHALL INDEMNIFY AND SAVE THE COUNTY HARMLESS FORM ANY LOSS ON ACCOUNT THEREOF.** If the material or process specified or required by the County is known by the Contractor to be an infringement, the Contractor shall be responsible for such loss unless it promptly gives such information to the County.

3.10 Laws and Ordinances

The Contractor shall at all times observe and comply with all federal, state and local laws, ordinance and regulations, which in any manner affect the Contract Documents or the Work, and **SHALL INDEMNIFY AND SAVE HARMLESS THE COUNTY, THE OBSERVER THE GEC AND THE ENGINEER OF RECORD, AS WELL AS ANY OF THEIR AGENTS, REPRESENTATIVES, OFFICERS OR EMPLOYEES AGAINST ANY CLAIM ARISING FROM THE VIOLATION OF ANY SUCH LAWS, ORDINANCES, AND REGULATIONS WHETHER BY THE CONTRACTOR OR ITS EMPLOYEES, EXCEPT WHERE SUCH VIOLATIONS ARE CALLED FOR BY THE PROVISIONS OF THE CONTRACT DOCUMENTS.** If the Contractor observes that the plans and specifications are at variance therewith, it shall promptly notify the Observer, in writing, and any necessary changes shall be prepared as provided in the Contract Documents for changes in the Work. If the Contractor performs any work knowing it to be contrary to such laws, ordinances, rules and regulations, and without such notice to the Observer, the Contractor shall bear all costs arising therefrom.

In case the County is a body politic and corporate, the law from which it derives its powers, insofar as the same regulates the objects for which, or the manner in which, or the conditions under which the County may enter into contract, shall be controlling and shall be considered as part of the Contract Documents to the same effect as though embodied herein.

3.11 Assignment and Subletting

The Contractor further agrees that it will retain personal control and will give its personal attention to the fulfillment of the Work strictly in accordance with the Contract Documents and that Contractor will not assign, by Power of Attorney or otherwise, or sublet any right or interest it may have under the Contract Documents without the written consent of the Observer, and that no part or feature of the Work will be sublet to anyone objectionable to the Observer or the County. The Contractor further agrees that the subletting of any portion or feature of the Work, or materials required in the performance of the Work, shall not relieve the Contractor from its full obligations to the County as provided in the Contract Documents.

3.12 Indemnification

THE CONTRACTOR SHALL DEFEND, INDEMNIFY AND HOLD HARMLESS THE COUNTY, THE OBSERVER, THE GEC AND THE ENGINEER OF RECORD AND THEIR RESPECTIVE OFFICERS, AGENTS AND EMPLOYEES, FROM AND AGAINST ALL DAMAGES, CLAIMS, LOSSES, DEMANDS, SUITS, JUDGMENTS AND COSTS, INCLUDING REASONABLE ATTORNEYS' FEES AND EXPENSES, ARISING OUT OF OR RESULTING FROM THE PERFORMANCE OF THE WORK, PROVIDED THAT ANY SUCH DAMAGE, CLAIM, LOSS, DEMAND, SUIT, JUDGMENT, COST OR EXPENSE:

(1) IS ATTRIBUTABLE TO BODILY INJURY, SICKNESS, DISEASE OR DEATH OF ANY PERSON INCLUDING CONTRACTOR'S EMPLOYEES AND ANY SUBCONTRACTOR'S EMPLOYEES AND ANY SUB-SUBCONTRACTOR'S EMPLOYEES, OR TO INJURY TO OR DESTRUCTION OF TANGIBLE PROPERTY INCLUDING CONTRACTOR'S PROPERTY (OTHER THAN THE WORK ITSELF) AND THE PROPERTY OF ANY SUBCONTRACTOR OF SUB-SUBCONTRACTOR INCLUDING THE LOSS OF USE RESULTING THEREFROM; AND,

(2) IS CAUSED IN WHOLE OR IN PART BY ANY INTENTIONAL OR NEGLIGENT ACT OR OMISSION OF THE CONTRACTOR, ANY SUBCONTRACTOR, ANY SUB-SUBCONTRACTOR OR ANYONE DIRECTLY OR INDIRECTLY EMPLOYED BY ANY ONE OF THEM OR ANYONE FOR WHOSE ACTS ANY OF THEM MAY BE LIABLE.

THE OBLIGATION OF THE CONTRACTOR UNDER THIS PARAGRAPH SHALL NOT EXTEND TO THE LIABILITY OF THE OBSERVER, THE ENGINEER, THE GEC, THE ENGINEER OF RECORD THEIR AGENTS OR EMPLOYEES ARISING OUT OF THE PREPARATION OF MAPS, PLANS, REPORTS, SURVEYS, CHANGE ORDERS, DESIGNS OR SPECIFICATIONS, OR THE APPROVAL OF MAPS, PLANS, REPORTS, SURVEYS, CHANGE ORDERS, DESIGNS OR SPECIFICATIONS OR THE ISSUANCE OF OR THE FAILURE TO GIVE DIRECTIONS OR INSTRUCTIONS BY THE OBSERVER, ITS AGENTS OR EMPLOYEES, PROVIDED SUCH IS THE SOLE CAUSE OF THE INJURY OR DAMAGE.

IN ANY AND ALL CLAIMS AGAINST THE COUNTY, THE OBSERVER THE GEC OR THE ENGINEER OF RECORD OR ANY OF THEIR AGENTS OR EMPLOYEES BY ANY EMPLOYEE OF THE CONTRACTOR, ANY SUBCONTRACTOR, ANY SUB-SUBCONTRACTOR, ANYONE DIRECTLY OR INDIRECTLY EMPLOYED BY ANY OF THEM, OR ANYONE FOR WHOSE ACTS ANY OF THEM MAY BE LIABLE, THE INDEMNIFICATION OBLIGATION UNDER SECTION 3.12 SHALL NOT BE

LIMITED IN ANY WAY BY ANY LIMITATION ON THE AMOUNT OR TYPE OF DAMAGES, COMPENSATION OR BENEFITS PAYABLE BY OR FOR THE CONTRACTOR OR ANY SUBCONTRACTOR OR SUB-SUBCONTRACTOR UNDER WORKERS' COMPENSATION ACTS, DISABILITY BENEFIT ACTS OR OTHER EMPLOYEE BENEFIT ACTS.

3.13 Insurance

The Contractor at its own expense shall purchase, maintain and keep in force such insurance as will protect Contractor from claims set forth below which may arise out of or result from the Contractor's operations under the Contract Documents, whether such operations be by itself or by any Subcontractor or by anyone directly or indirectly employed by any of them, or by anyone for whose acts any of them may be liable.

(1) Workman's compensation claims, disability benefits and other similar employee benefit acts;

(2) Claims for damages because of body injury, occupational sickness or disease, or death of its employees, and claims insured by usual bodily injury liability coverages;

(3) Claims for damages because of bodily injury, sickness or disease, or death of any person other than its employees, and claims insured by usual bodily injury liability coverages; and

(4) Claims for damages because of injury to or destruction of tangible property, including loss of use resulting therefrom.

CERTIFICATE OF INSURANCE. Before commencing any of the Work, Contractor shall file with the County valid Certificates of Insurance acceptable to the County and the Observer. Such Certificates shall contain a provision that coverages afforded under the policies will not be canceled until at least thirty (30) days prior written notice has been given to the County.

The Contractor shall also file with the County valid Certificates of Insurance covering all Sub-contractors of the Contractor.

3.14 Final Clean-up

Upon the completion of the Work and before acceptance and Final Payment will be made, the Contractor shall clean and remove from the site of the Work all surplus and discarded materials, temporary structures and debris of every kind. The Contractor shall leave the site of the Work in a neat and orderly condition at least equal to that which originally existed. Surplus and waste materials removed from the site of the Work shall be disposed of at locations that are both satisfactory to the Observer and in accordance with the laws pertaining to the disposal of such surplus, debris and waste materials.

In the event the Contractor fails or refuses to clean and remove surplus materials and debris as provided above, the County or the Observer may do so, or cause same to be done, at the

Contractor's expense, and the reasonable cost thereof shall be deducted from any amounts that are owing to the Contractor.

4. Prosecution and Progress

4.01 Time and Order of Completion

It is the meaning and intent of the Contractor Documents, unless otherwise specifically provided, that the Contractor shall be allowed to prosecute its work at such times and seasons, in such order of precedence, and in such manner as shall be most conducive to the economy of construction; provided, however, that the order and the time of prosecution shall be such that the Work shall be substantially completed, as a whole and in part, in accordance with the Contract Documents and within the time of completion designated in the Contractor's bid or proposal; provided, however, when the County is having other work done on the same Project or an adjoining project, either by contract or by its own force, the Observer may direct the time and manner of constructing the Work done under the Contract Documents, so that conflict will be avoided and the construction of the various works and projects being performed for the County shall be harmonized.

Unless otherwise specified, the Contractor shall plan to begin work 10 calendar days from the authorization date to begin work as designated by the Notice to Proceed.

The Contractor shall submit, at such times as may reasonably be requested by the Observer, schedules which shall show the order in which the Contractor proposes to carry on the Work, the dates at which the Contractor will start the several parts of the Work, and estimated dates of completion of the several parts.

Nighttime work is allowed only when shown on the plans or directed or allowed by the Engineer. Nighttime work is defined as work performed from 30 min. after sunset to 30 min. before sunrise.

4.02 Extension of Time

Should the Contractor be delayed in the completion of the Work by any act or neglect of the County, the Observer or the Engineer of Record, or of any employee of either, or by other contractors employed by the County, or by changes ordered in the Work, or by strikes, lockouts, fires, and unusual delays by common carriers, or unavoidable cause or causes beyond the Contractor's control, or by any cause which the Observer shall decide justifies the delay, then an extension of time shall be allowed for completing the Work, sufficient to compensate for the delay, the amount of the extension to be determined by the Observer; provided, however, before the Observer may decide whether or not to allow such an extension of time, the Contractor must tender a prompt written request for an extension of time wherein the Contractor shall give the Observer a written description of the cause of such delay. Adverse weather conditions will not be justification for extension of time on "Calendar Days" contracts.

4.03 Hindrances and Delays

No claims shall be made by the Contractor for damages resulting from hindrances or delays from any cause (except where the Work is stopped by order of and for the convenience of the County) during the progress of any portion of the Work embraced in the Contract Documents. In case said work shall be stopped by the act of the County, then such expense, as in the sole judgment of the Observer is caused by such stoppage of said work, shall be paid by the County to the Contractor.

5. Measurement and Payment

5.01 Quantities and Measurements

No extra or customary measurements of any kind will be allowed. Rather the actual measured and/or computed length, area, solid contents, number and weight only shall be considered, unless otherwise specifically provided otherwise in the Contract Documents.

5.02 Estimated Quantities

The Contract Documents are intended to show clearly all work to be done and material to be furnished hereunder. Where the estimated quantities are shown for the various classes of work to be done and material to be furnished under the Contract Documents, they are approximate and are to be used only as a basis for estimating the probable cost of the Work and for comparing the proposals offered for the Work. It is understood and agreed that the actual amount of work to be done and material to be furnished under the Contract Documents may differ somewhat from these estimates.

Plans quantities may or may not represent the exact quantity of work performed or material moved, handled, or placed during the execution of the Work. For plans quantity measurement items, the estimated bid quantities are designated as final payment quantities, unless revised by the governing specifications. If the actual quantity measured as outlined under “Measurement” varies by more than 5% (or as stipulated under “Measurement” for specific Items) from the total estimated quantity for an individual Item originally shown in the Contract Documents, an adjustment may be made to the quantity of authorized work done for payment purposes. The party requesting the adjustment will provide field measurements and calculations showing the revised quantity. When approved, this revised quantity will constitute the final quantity for which payment will be made. Payment for revised quantity will be made at the unit price bid for that Item, except as provided for in the Contract Documents. When quantities are revised by a change in design approved by the County, by change order, or to correct an error on the plans, the plans quantity will be increased or decreased by the amount involved in the change, and the 5% variance will apply to the new plans quantity.

Where payment is based on the unit price method, the Contractor agrees that it will make no claim for damages, anticipated profits or otherwise on account of any differences which may be found between the quantities of work actually done, the material actually furnished under the Contract Documents and the estimated quantities contemplated and contained in the proposal; provided, however, that in case the actual quantity of any major item should

become as much as twenty-five percent (25%) more than or twenty-five percent (25%) less than the estimated or contemplated quantity for such items, then either party to the Agreement, upon demand, shall be entitled to revised consideration upon the portion of the Work above or below twenty-five percent (25%) of the estimated quantity.

A "Major Item" shall be construed to be any individual bid item incurred in the proposal that has a total cost equal to or greater that five percent (5%) of the total contract cost, computed on the basis of the proposal quantities and the contract unit prices.

Any revised consideration is to be determined by agreement between the parties, otherwise by the terms of the Contract Documents, as provided under Section 6.03 "Extra Work".

5.03 Price of Work

In consideration of the furnishing of all the necessary labor, equipment and material, and the completion of all of the Work by the Contractor, and on the completion of all of the Work and on the delivery of all material in full conformity with the specifications and stipulations contained in the Contract Documents, the County agrees to pay the Contractor the Contract Price that is set forth in the Agreement. The Contractor hereby agrees to receive such Contract Price in full for furnishing all material and all labor required for the Work, also for all expense incurred by Contractor, and for well and truly performing the same and the whole thereof in the manner with and in accordance to the Contract Documents.

5.04 Partial Payments

On or before the first Wednesday of each month, the Contractor shall submit to the Observer a statement showing the total value of the Work performed up to and including the last day of the preceding month. The statement shall also include the value of all sound materials delivered on the job site and to be included in the Work and all partially completed work whether bid as a lump sum or a unit item which, in the opinion of the Observer, is acceptable. The Observer shall either examine and approve by signature or modify and approve such modified statement.

The County shall then pay the Contractor, within 30 days of the statement submittal, the total amount of the approved statement, less ten percent (10%) of the amount thereof, which ten percent (10%) shall be retained until Final Payment, and further less all previous payments and all further sums that may by retained by the County under the terms of the Contract Documents and/or under state or federal law. It is understood, however, that in case the whole work be near to completion and some unexpected and unusual delay occurs due to no fault or neglect on the part of the Contractor, then the County may, upon written recommendation of the Observer, pay a reasonable and equitable portion of the retained percentage to the Contractor; or the Contractor, at the County's option, may be relieved of the obligation to fully complete the Work and, thereupon, the Contractor shall receive payment of the balance due Contractor under the contract subject to the terms and conditions stated in the Contract Documents.

(1) When work progress is fifty percent (50%) complete, as determined by the value of the work completed to date against the original or revised contract amount, whichever is greater, the County may reduce the amount retained to five percent (5%) of the value of all work satisfactorily complete to date, including the value paid for materials on hand, provided, in the sole opinion of the Observer, the Contractor is making satisfactory progress toward completion of the project in a timely manner and there is no other cause to retain a greater percentage.
(2) Upon issuance of the NOTICE OF SUBSTANTIAL COMPLETION and agreement to final project quantities, the percent retained may be further reduced, at the discretion of the Engineer and the Observer, to two percent (2%) of the total value of all work completed to date. This amount shall be retained until Final Payment and close out of the project.

5.05 Punch List

The Contractor shall notify the Observer in writing when, in the Contractor's opinion, the Work has been "Substantially Completed" and when so notifying the Observer, the Contractor shall furnish to the Observer, in writing, a detailed list of unfinished work, also known as the Punch List. The Observer will review the Punch List and will add any items that the Contractor failed to include on said list. The fact that a structure or facility has been "Substantially Completed" shall not excuse the Contractor from performing all of the Work undertaken, whether such work is of a minor or major nature. Furthermore, the Contractor shall remain obligated to fully complete the Work and perform its obligations under the Contract Documents after the Work has been Substantially Completed.

5.06 Final Completion and Acceptance

The Contractor shall have a specified time period for completion of the Punch List items, as set forth in Section XI of the Special Conditions, "Completion of Work on Time." Within ten (10) days after the Contractor has given the Observer written notice that the Punch List has been completed, the Observer shall inspect the Work and within said time, if the Work is found to be completed in accordance with the Contact Documents, the Observer shall issue to the Contractor its Certificate of Completion. In the event the Punch List has not been completed, the Observer shall advise the Contractor, in writing, of the Observer's basis for deeming the Punch List incomplete. Following the Contractor's receipt of the Observer's notice that the Punch List is incomplete, the Contractor shall complete the remaining items prior to the expiration of the above referenced specified time period for completion of the Punch List items. Upon satisfactory completion of the Punch List and the issuance of the Certificate of Completion, it shall be the Contractor's responsibility to submit the contract close-out documents, which shall include the record drawings, maintenance bond and Affidavit of All Bills Paid, and thereupon it shall be the duty of the County to issue a Certificate of Acceptance (Final Acceptance) to the Contractor.

5.07 Final Payment

Upon the issuance of the Notice of Substantial Completion, the Observer shall proceed to make final measurements and prepare final statement for the value of all work performed and materials furnished under the terms of the Contract Documents and shall certify same to the

County, and, then, Final Payment shall be made to the Contractor. At the County's sole discretion, this payment may include payment for work remaining to be performed in association with the removal of temporary erosion controls or the establishment of permanent stabilization measures. On or after the 30th day, and before the 35th day after the date of the Certificate of Acceptance, the balance due the Contractor under the terms of the Contract Documents shall be paid. Neither the Certificate of Acceptance nor the Final Payment, nor any provision in the Contract Documents, shall relieve the Contractor of the obligation for fulfillment of any warranty which may be required.

5.08 Payments Withheld

The County may, on account of subsequently discovered evidence, withhold or nullify the whole or part of any certificate to such extent as may be necessary to protect itself from loss on account of:

(a) Defective work not remedied or other obligations hereunder not completed.
(b) Claims filed or reasonable evidence indicating the probable or potential filing of claims.
(c) Failure of the Contractor to make payments properly to Subcontractors or for material or labor.
(d) Damage to the County or another contractor's work, material or equipment.
(e) Reasonable doubt that the Work can be completed for the unpaid balance of the contract amount or Contract Price.
(f) Reasonable indication that the Work will not be completed within the contract time.
(g) Other causes affecting the performance of the Work subject of the Contract Documents.

When the above grounds are removed or the Contractor provides a surety bond satisfactory to the County, which will protect the County in the amount withheld, payment shall be made for amounts withheld because of them.

5.09 Delayed Payments

Should the County fail to make payment to the Contractor of the sum named in any partial or final statement, when such payment is due, then the County shall pay to the Contractor, in addition to the sum shown as due by such statement, interest thereon in accordance with Texas Government Code Section 2251.025. More specifically, the rate of interest that shall accrue on a late payment is the rate in effect on September 1 of County's fiscal year in which the payment becomes due. The said rate in effect on September 1 shall be equal to the sum of one percent (1%); and (2) the prime rate published in the Wall Street Journal on the first day of July of the preceding fiscal year that does not fall on a Saturday or Sunday. County's payment of the amount due plus said interest shall fully liquidate any injury to the Contractor growing out of such delay in payment. It is expressly agreed that delay by the County in making payment to the Contractor of the sum named in any partial or final statement shall not constitute, on the part of the County, a breach under the Contract Documents, nor shall it serve as an abandonment by the County. Furthermore, any delay by the County in making payment to the Contractor of the sum named in any partial or final statement shall not, to any

extent or for any time, relieve the Contractor of its obligations to fully and completely perform pursuant to the terms of the Contract Documents.

6. Extra Work and Claims

6.01 Change Orders

Without invalidating the Agreement or any terms of the Contract Documents, the County may, at any time or from time to time, order additions, deletions or revisions to the Work. Any such additions, deletions or revisions to the Work may only be effectuated and authorized by written Change Order. The said written Change Order shall be prepared by the GEC for execution by the County and the Contractor. The Change Order shall set forth the basis for any change in Contract Price, as hereinafter set forth in Section 6.03, Extra Work, and for any change in contract time which may result from the change.

In the event the Contractor shall refuse to execute a Change Order which has been prepared by the GEC and executed by the County, the GEC may, in writing, instruct the Contractor to proceed with the Work as set forth in the Change Order and the Contractor shall thereafter proceed with such work. The Contractor may make claim against the County for Extra Work involved under the Change Order, as hereinafter provided.

6.02 Minor Changes

The Observer may authorize minor changes in the Work which are not inconsistent with the overall intent of the Contract Documents and which do not involve an increase in Contract Price. If the Contractor believes that any minor change or alteration authorized by the Observer involves Extra Work which entitles it to an increase in the Contract Price, the Contractor shall make written request to the Observer for a written Field Order. For purposes of this section, a "Field Order" shall mean the Contractor's cost proposal for the Extra Work that the Contractor believes would increase the Contract Price.

In such case, the Contractor, by copy of its communication to the Observer or by separate writing, shall advise the County of its request to the Observer for a written Field Order. The Contractor's notice to the County shall inform the County that the work subject of the written Field Order may result in an increase in the Contract Price.

Any request by the Contractor for a change in Contract Price shall be made prior to commencing the work covered by the proposed change.

6.03 Extra Work

It is agreed that the basis of compensation to the Contractor for work either added or deleted by a change order or for which a claim for Extra Work is made shall be determined by the unit prices upon which the Work and Project was bid to the extent such work can be fairly classified within the various work item descriptions. For work that cannot be fairly classified within the said various work item descriptions, the basis of compensation to the Contractor

for work either added or deleted by a change order or for which a claim for Extra Work is made shall be determined by one or more of the following methods:

Method (A)
By agreed unit prices; or

Method (B)
By agreed lump sum; or

Method (C)
If neither Method (A) nor Method (B) is agreed upon before the Extra Work is commenced, then the Contractor shall be paid the "actual field cost" of the Work, plus fifteen percent (15%).

In the event said Extra Work is performed and paid for under Method (C), then the provisions of this paragraph shall apply and the "actual field cost" is hereby defined to include the cost to the Contractor of all workmen, such as foremen, timekeepers, mechanics and laborers, and materials, supplies, trucks, rentals on machinery and equipment, for the time actually employed or used on such Extra Work, plus actual equipment, for the time actually employed or used on such Extra Work, plus actual transportation charges necessarily incurred, together with all power, fuel, lubricants, water and similar operating expenses, also all necessary incidental expenses incurred directly on account of such Extra Work, including Social Security, Old Age Benefits and other payroll taxes, and a rateable proportion of premiums on performance and payment bonds and maintenance bonds, public liability and property damage and workers' compensation, and all other insurance as may be required by any law or ordinance, or directed or agreed to by the County. The Observer may direct the form in which accounts of the "actual field cost" shall be kept and the records of these accounts shall be made available to the Observer. The Observer or the County may also specify, in writing before the Extra Work commences, the method of doing the Extra Work and the type and kind of machinery and equipment to be used; otherwise these matters shall be determined by the Contractor. Unless otherwise agreed upon, the prices for the use of machinery and equipment shall be determined by using one hundred percent (100%), unless otherwise specified, of the latest schedule of Equipment ownership Expense adopted by the Associated General Contractors of America. Where practicable the terms and prices for the use of machinery and equipment shall be incorporated in the written Extra Work order. The fifteen percent (15%) of the "actual field cost" to be paid the Contractor shall cover and compensate Contractor for its profit, overhead, general superintendence and field office expense, and all other elements of cost and expense not embraced within the "actual field cost" as herein defined, save that where the Contractor's camp or field office must be maintained primarily on account of such Extra Work; then the cost to maintain and operate the same shall be included in the "actual field cost."

No claim for Extra Work of any kind will be allowed unless ordered, in writing, by the Observer. In case any orders or instructions, either oral or written, appear to the Contractor to involve Extra Work for which Contractor should receive compensation or an adjustment in

the construction time, Contractor shall make written request to the Observer for written order authorizing such Extra Work. Should a difference of opinion arise as to what does or does not constitute Extra Work, or as to the payment therefor, and the Observer insists upon its performance, the Contractor shall proceed with the Work after making written request for written order and shall keep an accurate account of the "actual field cost" thereof, as provided under Method (C).

6.04 Time of Filing Claims

The County and Contractor hereby agree and acknowledge that all questions of dispute or adjustment presented by the Contractor shall be in writing and filed with the Observer within thirty (30) days after the Observer has given any directions, order or instruction to which the Contractor desires to take exception. The Observer shall reply within thirty (30) days to such written exceptions by the Contractor and render the Observer's final decision in writing. In case the Contractor should appeal from the Observer's decision, the Contractor may file with the County its objection. It is further agreed that the acceptance by the Contractor of the Final Payment shall serve as a bar to any claims that the Contractor may have for matters arising prior to or after the Contractor's acceptance of the Final Payment.

6.05 Continuing Performance

The Contractor shall continue performance of the Work during all disputes or disagreements with the County. The production or delivery of goods, the furnishing of services and the construction of projects or facilities shall not be delayed, prejudiced or postponed pending resolution of any disputes or disagreements, except as the County may otherwise agree in writing.

7. Abandonment of Contract

7.01 Abandonment by Contractor

In case the Contractor should abandon and fail or refuse to resume work within ten (10) days after written notification from either the County or the Observer, or if the Contractor fails to comply with the orders of the Observer when such orders are consistent with the Contract Documents, then and in such case where performance bonds exist, the appropriate sureties on these bonds shall be provided with a notice of abandonment and notice for completion whereby (i) the sureties are notified of the Contractor's abandonment or Contractor's failure or refusal to resume work; and (ii) the sureties are directed to complete the Work. A copy of the notice of abandonment and notice for completion shall be delivered to the Contractor.

After receiving a copy of the above described notice of abandonment and notice for completion, the Contractor shall not remove from the Project any machinery, equipment, tools, materials or supplies that then currently exist on the Project site, but the same, together with any materials and equipment under contract for the Work, may be held for use on the Project by the County or the surety on the performance bond, or another contractor in completion of the Work; and the Contractor shall not receive any rental or credit therefor (except when used in connection with Extra Work, where credit shall be allowed as provided for under Section 6, Extra Work and Claims, herein), it being understood that the use of such

equipment and materials will ultimately reduce the cost to complete the Work and be reflected in the final settlement.

Where there is no performance bond provided or in case the surety should fail to commence compliance within ten (10) days after service of the herein above provided notice of abandonment and notice for completion, then the County may provide for completion of the Work in either of the following elective manners:

(1) The County may thereupon employ such force of men and use such machinery, equipment, tools, materials and supplies as the County may deem necessary to complete the Work and charge the expense of such labor, machinery, equipment, tools, materials and supplies to the Contractor, and expense so charged shall be deducted and paid by the County out of such monies as may be due, or that may thereafter at any time become due to the Contractor under and by virtue of the Contract Documents. In case such expense is less than the sum which would have been payable under the Contract Documents if the same had been completed by the Contractor, then the Contractor shall receive the difference. In case such expense is greater than the sum which would have been payable under the Contract Documents if the same had been completed by the Contractor, then the Contractor and/or its surety shall pay the amount of such excess to the County, or
(2) The County, under sealed bids, after five (5) days notice published one or more times in a newspaper having general circulation in the area of the location of the Project, may let a contract for the completion of the Work under substantially the same terms and conditions which are provided in the Contract Documents. In case there is any increase in cost to the County under the new contract as compared to what would have been the cost under the Contract Documents, such increase shall be charged to the Contractor and the surety shall be and remain bound therefor. However, should the cost to complete any such contract prove to be less than what would have been the cost to complete under the Contract Documents, the Contractor and/or its surety shall be credited therewith.

When the Work shall have reached Final Completion, the Contractor and its surety shall be so notified and Certificates of Completion and Acceptance, as provided in Section 5.06 herein above, shall be issued. A complete itemized statement of the contract accounts, certified by the Observer as being correct, shall then be prepared and delivered to the Contractor and its surety, whereupon the Contractor and/or its surety, or the County as the case may be, shall pay the balance due as reflected by said statement within fifteen (15) days after the date of such Certificate of Completion.

In the event the statement of accounts shows that the cost to complete the Work is less than that which would have been the cost to the County had the Work been completed by the Contractor under the terms of the Contract Documents, or when the Contractor and/or its surety shall pay the balance shown to be due by them to the County, then all machinery, equipment, tools, materials or supplies left on the site of the Project shall be turned over to the Contractor and/or its surety.

Should the cost to complete the Work exceed the exceed the amount the County would have been obligated to pay the Contractor had the Work been completed by the Contractor under the terms of the Contract Documents, and should the Contractor and/or its surety fail to pay the amount due the County within the time designated hereinabove, and should there remain any machinery, equipment, tools, materials or supplies on the site of the Project, notice thereof, together with an itemized list of such equipment and materials, shall be mailed to the Contractor and its surety at the respective addresses designated in the Contract Documents. After properly tendering such notice, such property shall be held at the risk of the Contractor and its surety subject only to the duty of the County to exercise ordinary care to protect such property. After fifteen (15) days from the date of said notice, the County may sell such machinery, equipment, tools, materials or supplies and apply the net sum derived from such sale to the credit of the Contractor and its surety. Such sale may be made at either public or private sale, with or without notice, as the County may elect. The County shall release, to their proper owners, any machinery, equipment, tools, materials, or supplies, which remain on the Project and which belong to persons other than the Contractor or its surety. The books on all operations provided herein shall be opened to the Contractor and its surety.

7.02 Abandonment by the County

In the event that the County should fail, within ten (10) days after receiving written notification from the Contractor, to comply with the terms of the Contract Documents, then the Contractor may suspend or wholly abandon the Work, and may remove therefrom all machinery, tools and equipment, and all materials on the Project site that have not been included in payments to the Contractor and have not been wrought into the Work. Thereupon, the Observer shall make an estimate of the total amount earned by the Contractor, which estimate shall include the value of all work actually completed by said Contractor (at the prices stated in the Contract Documents), the value of all partially completed work at a fair and equitable price, and the amount of all Extra Work performed at the prices agreed upon, or provided for by the terms of the Contract Documents. The Observer shall then make a final statement of the balance due the Contractor by deducting from the above estimate all previous payments by the County and all other sums that may be retained by the County under the terms of the Agreement and the Contract Documents and the Observer shall certify same to the County who shall pay to the Contractor on or before thirty (30) days after the date of the Observer's certification.

8. Subcontractors

8.01 Award of Subcontracts for Portions of the Work

Unless otherwise specified in the Contract Documents or in the Instructions to Bidders, the Contractor, as soon as practicable after the award of the contract, shall furnish to the Observer, in writing for acceptance by the County, a list of the names of the Subcontractors proposed for the principal portions of the Work. The Observer shall promptly notify the Contractor, in writing, if the County, after due investigation, has objection to any Subcontractor on such list and does not accept such Subcontractor.

The Contractor shall not contract with any Subcontractor or any person or organization (including those who are to furnish materials or equipment fabricated to a special design) proposed for portions of the Work designated in the Contract Documents or in the Instructions to Bidders or, if none is so designated, with any Subcontractor proposed for the principal portions of the Work who has been rejected by the County. The Contractor will not be required to contract with any Subcontractor or person or organization against whom the Contractor has a reasonable objection.

If the County refuses to accept any Subcontractor or person or organization on a list submitted by the Contractor in response to the requirements of the Contract Documents or the Instructions to Bidders, the Contractor shall submit an acceptable substitute and the Contract Price shall be increased or decreased by the difference in cost occasioned by such substitution and an appropriate change order shall be issued; however, no increase in the Contract Price shall be allowed for any such substitution unless the Contractor has acted promptly and responsively in submitting for acceptance any list or lists of names as required by the Contract Documents or the Instructions to Bidders.

If the County requires a change of any proposed Subcontractor or person or organization previously accepted by them, the Contract Price shall be increased or decreased by the difference in cost occasioned by such change and an appropriate change order shall be issued.

The Contractor shall not make any substitution for any Subcontractor or person or organization that has been accepted by the County, unless the substitution is acceptable to the County.

8.02 Subcontractual Relations

All work performed for the Contractor by a Subcontractor shall be pursuant to an appropriate written agreement between the Contractor and the Subcontractor (and where appropriate between Subcontractors and Sub-subcontractors) which shall contain provisions that:

(1) preserve and protect the rights of the County, the Observer, the GEC and the Engineer of Record under the contract with respect to the Work to be performed under the subcontract so that the subcontracting thereof will not prejudice such rights;
(2) require that such work be performed in accordance with the requirements of the Contract Documents;
(3) require submission to the Contractor of the applications for payment under each subcontract to which the Contractor is a party, in reasonable time to enable the Contractor to apply for payment in accordance with the Contract Documents;
(4) require that all claims for additional costs, extensions of time, damages for delays or otherwise with respect to subcontracted portions of the Work shall be submitted to the Contractor (via any Subcontractor or Sub-subcontractor where appropriate) in sufficient time so that the Contractor may comply in the manner provided in the Contract Documents for like claims by the Contractor upon the County;
(5) obligate each subcontractor specifically to consent to the provisions of this section.

A copy of all such signed subcontract agreements shall be filed by the Contractor with the Observer before the Subcontractor shall be allowed to commence work.

8.03 Payments to Subcontractors

The Contractor shall pay each Subcontractor, upon receipt of payment from the County, an amount directly based upon the value of the Work performed and allowed to the Contractor on account of such Subcontractor's work, less the percentage retained from payments to the Contractor. The Contractor shall also require each Subcontractor to make similar payments to its subcontractors.

If the Observer fails to approve a payment for any cause which is the fault of the Contractor and not the fault of a particular Subcontractor, the Contractor shall pay the Subcontractor, on demand made at any time after the Certificate for Payment should otherwise have been issued, for its work to the extent completed, less the retained percentage, if any.

The Observer may, on request and at its discretion, furnish to any Subcontractor, if practicable, information regarding percentages of completion certified to the Contractor on account of work done by such Subcontractors.

Neither the County, the Observer nor the Engineer shall have any obligation to pay or to see to the payment of any monies to such Subcontractor except as may otherwise be required.

9. Protection of Persons and Property

9.01 Safety Precautions and Programs

The Contractor shall be responsible for initiating, maintaining and supervising all safety precautions and programs in connection with the Work.

9.02 Safety of Persons and Property

The Contractor shall take all reasonable precautions for the safety of, and shall provide all reasonable protection to prevent damage, injury, or loss to:

(1) all employees on the Work and all other persons who may be affected thereby:
(2) all the Work and all materials and equipment to be incorporated therein, whether in storage or off the site, under the care, custody or control of the Contractor or any of its Subcontractors or Sub-subcontractors; and
(3) other property at the site or adjacent thereto, including trees, shrubs, lawns, walks, pavements, fences, roadways, structures and utilities not designated for removal, relocation or replacement in the course of construction.

The Contractor shall comply with all applicable laws, ordinances, rules, regulations and lawful orders of any public authority having jurisdiction for the safety of persons or property or to protect them from damage, injury or loss. Contractor shall erect and maintain, as required by existing conditions and progress of the Work, all reasonable safeguards for safety

and protection, including posting danger signs and other warnings against hazards, promulgating safety regulations and notifying owners and users of adjacent utilities.

When the use or storage of explosives or other hazardous materials or equipment is necessary for the execution of the Work, the Contractor shall exercise the utmost care and shall carry on such activities under the supervision of properly qualified personnel.

All blasting, including methods of storing and handling explosives and highly inflammable materials, shall conform to federal, state, local laws and ordinances.

The following is a list of requirements in addition to federal, state, and local laws and ordinances:

(1) The Contractor shall furnish the County with a Certificate of Blasting Insurance in the amount of $300,000.00 for each contract, at least twenty-four (24) hours prior to using explosives. A blasting permit must be obtained from the appropriate jurisdictions at least five (5) days prior to use of explosives. If blasting is covered under the Contractor's General Insurance Certificate for each contract, a separate blasting certificate will not be required.
(2) The following public utility companies and departments will be notified by the Contractor, on every occasion, at least twenty-four (24) hours prior to the use of explosives: Water and Wastewater, Electric, Gas, Telephone and the County Engineering Department.
(3) Explosive materials to be used shall be limited to blasting agents and dynamite, unless prior approval of other materials is obtained in writing from the Engineering Department.
(4) During blasting, all reasonable precautions shall be taken to protect pedestrians, passing vehicles, and public or private property. Blasting mats or protective cover shall be used when required by the Observer, the permit, or by safe blasting practices.
(5) All explosives shall be stored in accordance with all applicable laws and codes.
(6) The Engineer or its representative shall have the right to limit the use of explosives and/or blasting methods which in its opinion are dangerous to the public or nearby property of any kind.
(7) The Contractor, at its expense, shall promptly repair or replace all items known to be damaged as a result of blasting. All claims of damage shall be investigated by the County or by consulting firms approved by the County.
(8) The Contractor shall maintain accurate records throughout the blasting operations showing the type explosive used, number of holes, pounds per hole, depth of hole, total pounds per shot, delays used, date and time of blast and initials of the Observer. The Contractor is fully responsible for all claims resulting from its blasting operation.

All damage or loss to any property referred to in this article caused, in whole or in part, by the Contractor, any Subcontractor, any Sub-subcontractor, or anyone directly or indirectly employed by any of them, or by anyone for whose acts any of them may be liable, shall be

remedied by the Contractor, except damage or loss attributable solely to faulty drawings or specifications or solely to the acts or omissions of the County its agents, employees, or representatives or anyone employed by either of them, and not attributable in any degree to the fault or negligence of the Contractor.

The Contractor shall designate a responsible member of its organization at the site whose duty shall be the prevention of accidents. This person shall be the Contractor's superintendent unless otherwise designated in writing by the Contractor to the County.

9.03 Location and Protection of Utilities

Notwithstanding any other provision of the Contract Documents, the Contractor shall be solely responsible for the location and protection of any and all public utility lines and utility customer service lines in the Project area. The Contractor shall exercise due care to locate and to mark, uncover or otherwise protect all such lines in the construction zone and any of the Contractor's work or storage areas. Upon request, the County shall provide such information as it has about the location and grade of water, sewer, gas, and telephone and electric lines and other utilities in the Work area but such information shall not relieve or be deemed to be in satisfaction of the Contractor's obligation hereunder, which shall be primary and nondelegable. Any such lines damaged by the Contractor's operations shall be immediately repaired by the Contractor or it shall cause such damage to be repaired at its expense.

10. Termination

10.01 Termination by the County for Cause

Conditions for termination are as follows:

(A) Without prejudice to any other legal or equitable right or remedy which it would otherwise possess hereunder or as a matter of law, the County shall be entitled, by giving Contractor five (5) days prior written notice, to terminate the Agreement in its entirety at any time:

(1) If the Contractor becomes insolvent, voluntarily files for bankruptcy, is the subject of an involuntary petition for bankruptcy commenced by its creditors, makes a general assignment for the benefit of creditors or becomes the subject of any other proceeding commenced under any statute or law for the relief of debtors; or

(2) If a receiver trustee or liquidator of any of the property or income of Contractor shall be appointed; or

(3) If Contractor:

(a) Shall fail to prosecute the Work or any part thereof with diligence necessary to insure its progress and completion as prescribed by the time schedules; and shall fail to take such steps to remedy such default within ten (10) days after written notice thereof from the County; or

(4) If Contractor:

(a) Shall commit a default under any of the terms, provisions, conditions, or covenants contained in the Contract Documents; and

(b) Shall fail to take such steps to remedy such default within ten (10) days after written notice thereof from the County.

(B) In the event of County's termination for cause, Contractor shall only be paid its reimbursable costs incurred prior to the effective date of the termination notice and shall not be entitled to receive any further fixed fee payments hereunder and shall be further subject to any claim the County may have against Contractor under other provisions of the Contract Documents or as a matter of law, including the refund of any overpayment of reimbursable costs and/or fixed fee.

(C) If the Agreement is terminated for cause, the County shall have the right, but shall not be obligated, to complete the Work itself or by others; and to this end, the County shall be entitled to take possession of and use such equipment and materials as may be on the Project site, and to exercise all rights, options, and privileges of Contractor under its subcontracts, purchase orders, or otherwise; and Contractor shall promptly assign such rights, options and privileges to the County. If the County elects to complete the Work itself or by others, pursuant to the foregoing, the Contractor will reimburse the County for all costs incurred by the County (including, without limitation, applicable, general, and administrative expenses, and field overhead, and the cost of necessary equipment, materials, and field labor) in correcting work by Contractor which fails to meet contract requirements.

Nothing contained in the preceding sections shall require the County to pay for any of the Work which is unsatisfactory, as determined by the Observer or which is not submitted in compliance with the terms of the Contract Documents. The County shall not be required to make any payments to Contractor when Contractor is in default under the Contract Documents.

This Article shall not constitute a waiver of any right, at law or at equity, which the County may have if Contractor is in default, including the right to bring legal action for damages or to force specific performance of the terms and conditions of the Contract Documents.

10.02 Termination for Convenience

In connection with the Work outlined in the Contract Documents, it is agreed and fully understood by Contractor, that the County may cancel or indefinitely suspend further work hereunder or terminate the Agreement for the convenience of the County, upon fifteen (15) days written notice to Contractor. In the event the County terminates the Agreement for convenience, it is hereby understood and acknowledged by the Contractor that immediately upon receipt of the County's notice of termination, all work and labor being performed under the Contract Documents shall cease. Contractor shall invoice the County for all work satisfactorily completed and shall be compensated in accordance with the terms of the Contractor Documents for work accomplished prior to the receipt of said notice. No amount shall be due for lost or anticipated profits. However, no cost incurred after the effective date of the notice of termination shall be treated as reimbursable costs unless it relates to carrying out the un-terminated portion or taking closeout measures.

10.03 Obligations of Contractor Following Termination

After receipt of a notice of termination, whether such termination be for cause or convenience, Contractor shall, in good faith and to the best of its ability, do all things necessary to assure the efficient proper closeout of the terminated work (including the protection of County property). Among other things, the Contractor shall, except as otherwise directed or approved by the County:

(1) Stop the Work on the date and to the extent specified in the notice of termination.
(2) Place no further orders for subcontracts for services, equipment or materials, except as may be necessary for completion of such portion of the Work as is not terminated.
(3) Terminate all orders and subcontracts to the extent that they relate to the performance of the Work terminated by the notice of termination.
(4) Assign to the County, in the manner and to the extent directed by it, all right title, and interest of Contractor under the orders or subcontracts so terminated; in which case, the County shall have the right to settle or pay any or all claims arising out of such termination of such orders and/or subcontracts.
(5) With the approval of the County, settle all outstanding liabilities and all claims arising out of such termination or orders and subcontracts.
(6) Deliver to the County, all documents, property, plans, field surveys, maps, cross sections and other data, designs and work related to the Project, which shall become the property of the County upon termination. The delivery of such items shall be made in a reasonably organized form, without restriction on future use. Should the County subsequently contract with a new contractor for continuation of services on the Project subject of the Contract Documents, Contractor shall cooperate in providing information to the County and the new contractor.

11. Inspection and Audit

Contractor's records shall be subject to audit and such records shall include, but not be limited to accounting records, written policies and procedures; subcontract files (including proposals of successful and unsuccessful bidders, bid recaps, etc.); original estimates; estimating work sheets; correspondence; change order files (including documentation covering negotiated settlements); back charge logs and supporting documentation; general ledger entries detailing cash and trade discounts earned, insurance rebates and dividends; and any other Contractor records which may have a bearing on matters of interest to the County in connection with the contractor's work for the County. All of the foregoing, hereinafter referred to as "records," shall be open to inspection and subject to audit and/or reproduction by County or its authorized representative to the extent necessary to adequately permit evaluation and verification of:

(a) Contractor compliance with the Contract Documents,
(b) compliance with County's business ethics policies,
(c) compliance by other contractors or subcontractors with contracts with County or Contractor, and
(d) compliance with provisions for pricing change orders, invoices or claims submitted by the Contractor or any of its payees.

Other specific records subject to audit include all information, materials and data of every kind and character such as documents, subscriptions, recordings, computerized information, agreements, purchase orders, leases, contracts, commitments, arrangements, notes, daily diaries, superintendent reports, drawings, receipts, vouchers and memoranda, and any and all other agreements, sources of information that may, in County's judgment, have any bearing on or pertain to any matters, rights, duties or obligations under or covered by the Contract Documents. Such records subject to audit shall also include those records necessary to evaluate and verify direct and indirect costs, (including overhead allocations) as they may apply to costs associated with this Project. In those situations where Contractor's records have been generated from computerized data (whether mainframe, mini-computer, or PC based computer systems), Contractor agrees to provide County's representatives with extracts of data files in computer readable format on data disks or suitable alternative computer data exchange formats.

The County or its designee shall be entitled to audit all of the Contractor's records for a period of three (3) years after final payment or a longer period if required by law.

Contractor shall require all payees (including those entering into lump sum subcontracts and lump sum major material purchase orders), to comply with the provisions of this article by insertion of the requirements hereof in a written contract agreement between Contractor and payee. Requirements to include flow-down audit provisions in contracts with payees will apply to Subcontractors, Sub-Subcontractors, material suppliers, etc. when working under any type of contract including lump sum agreement, unit price agreements, time and material agreements, cost plus agreements, or other agreements. Contractor will cooperate fully and will cause all payees to cooperate fully in furnishing or in making available to County from time to time whenever requested in an expeditious manner any and all such information, materials and data required by this section.

County's agent or its authorized representative shall have access to the Contractor's facilities, shall be allowed to interview all current or former employees to discuss matters pertinent to the performance of the Work, shall have access to all necessary records, and shall be provided adequate and appropriate work space, in order to conduct audits in compliance with this section.

SECTION 12
SPECIAL CONDITIONS OF AGREEMENT

Table of Contents

I. County
II. Program Manager
III. General Engineering Consultant (GEC)
IV. The Construction Observer
V. Engineer of Record
VI. Insurance
VII. Record ("As-Built") Drawings
VIII. Limit of Financial Resources
IX. Limits of Work and Payment
X. State Sales Tax
XI. Completion of Work on Time
XII. Layout and Construction Stakes
XIII. Safety
XIV. Maintenance Bond Term & Amount
XV. Safety Restrictions - Work Near High Voltage Lines
XVI. Erosion Control
XVII. Discovery of Hazardous Materials
XVIII. Submittals – Certificate of Compliance
XIX. Unavailability of Materials
XX. Traffic Control
XXI. Temporary Traffic Handling Devices
XXII. Roadway Signs
XXIII. Project Signs
XXIV. Permits
XXV. Landscape Restoration
XXVI. Existing Fencing
XXVII. Easements
XXVIII. Limits of Contractor's Operation
XXIX. Maintenance of Pedestrian Walkways
XXX. Spoil
XXXI. Materials Testing
XXXII. Pre-Construction Conference
XXXIII. Weight Tickets
XXXIV. Confined Space Entry Program
XXXV. Tree and Plant Protection
XXXVI. Prosecution and Progress
XXXVII. Sanitary Provisions
XXXVIII. Work Near Railroads

SPECIAL CONDITIONS

I. County

Williamson County, a political subdivision of the State of Texas, acting through its County Judge, or his designee, agents or employees, whom Contractor has entered into the Agreement and for whom the Work is to be performed, is referred to as "County". The County shall be contacted through its Purchasing Department for contract related subjects and through the County Engineer's office for design and construction related subjects:

Purchasing Department	County Engineer
Williamson County	Williamson County
901 South Austin Avenue	3151 SE Inner Loop
Georgetown, TX 78626	Georgetown, TX 78626

II. Program Manager

Prime Strategies, Inc. is the County's Program Manager for the Project. The Program Manager represents the County and oversees the planning, design, review, and coordination of the design and construction phases of the Project.

III. General Engineering Consultant (GEC)

HNTB Corporation is the consulting engineering firm representing and assisting the County in the design, review, and coordination of the design and construction phases of the project, including oversight of the construction engineering and inspection services performed on the Project.

IV. The Construction Observer

Williamson County or Representative is the "Construction Observer" referred to herein and in the Contract Documents. The Construction Observer will be responsible for performing construction observation services on the Project.

V. Engineer of Record

HDR Engineering, Inc. is the County's design professional, who shall provide professional engineering services as defined in the Texas Government Code Chapter 2254, Subchapter A, and referred to as the " Engineer of Record" in the "General Conditions of Agreement" contained in the Contract Documents. Nothing contained in the Contract Documents shall create any contractual or agency relationship between the Engineer of Record and the Contractor.

VI. Insurance

The Contractor will carry Workmen's Compensation Insurance, Public Liability and Property Damage Insurance, and Automobile Insurance sufficient to provide adequate protection against damage claims which may arise from operations under the Contract Documents, in compliance with the following:

Contractors Insurance: Without limiting any of the other obligations or liabilities of the Contractor, during the term of the Agreement and prior to Final Completion, the Contractor and each subcontractor, at their own expense, shall purchase and maintain the herein stipulated minimum insurance with companies duly approved to do business in the State of Texas and satisfactory to the County. Certificates of each policy shall be delivered to the County before any work is started, along with a written statement from the issuing company stating that said policy shall not be canceled, non-renewed or materially changed without 30 days advance written notice being given to the County. Prior to the effective date of cancellation, Contractor must deliver to the County a replacement certificate of insurance or proof of reinstatement. A model Certificate of Insurance is illustrated herein. Coverage shall be of the following types and not less than the specified amounts:

(a) workers' compensation as required by Texas law, with the policy endorsed to provide a waiver of subrogation as to the County; employer's liability insurance of not less than $500,000 for each accident, $500,000 disease--each employee, $500,000 disease-policy limit.

(b) commercial general liability insurance, including independent contractor's liability, completed operations and contractual liability covering, but not limited to, the liability assumed under the indemnification provisions of the Contract Documents, fully insuring Contractor's (or subcontractor's) liability for injury to or death of County's employees and third parties, extended to include personal injury liability coverage with damage to property of third parties, with minimum limits as set forth below:

General Aggregate	$1,000,000
Operations Aggregate	$1,000,000
Personal and Advertising Injury	$600,000
Each Occurrence	$600,000
Fire Damage (any one fire)	$50,000
Medical Expense (any one person)	$5,000

The policy shall include coverage extended to apply to completed operations, asbestos hazards (if this project involves work with asbestos) and XCU (explosion, collapse and underground) hazards. The completed operations coverage must be maintained for a minimum of one year after Final Completion and acceptance of the Work, with evidence of same filed with County.

(c) comprehensive automobile and truck liability insurance, covering owned, hired and non-owned vehicles, with a combined bodily injury and property damage minimum limit of $600,000 per occurrence; or separate limits of $250,000 for bodily injury (per person), $500,000 bodily injury (per accident) and $100,000 for property damage. Such insurance shall include coverage for loading and unloading hazards.

"Umbrella" Liability Insurance: The Contractor shall obtain, pay for and maintain umbrella liability insurance during the contract term, insuring Contractor for an amount of not less than $1,000,000 per occurrence combined limit for bodily injury and property damage that follows form and applies in excess of the primary liability coverages required herein above. The policy shall provide "drop down" coverage where underlying primary insurance coverage limits are insufficient or exhausted. County and Project Engineer shall be named as additional insured.

Policy Endorsements and Special Conditions

(a) Each insurance policy to be furnished by Contractor shall include the following conditions by endorsement to the policy:

(1) name the County, the Program Manager, the County's Representatives, the GEC, the Construction Observer and the Engineer of Record as an additional insured as to all applicable coverage;
(2) each policy shall require that 30 days prior to the cancellation, non-renewal or any material change in coverage, a notice thereof shall be given to County by certified mail.
(3) the term "County" shall include all authorities, boards, bureaus, commissions, divisions, departments and offices of the County and individual members, employees and agents thereof in their official capacities, and/or while acting on behalf of the County;
(4) the "Program Manager" represents and assists the County in the planning, design, review, and coordination of the design and construction phases of the project.
(5) the policy phrase "other insurance" shall not apply to the County where the County is an additional insured on the policy; and
(6) all provisions of the Contract Documents concerning liability, duty and standard of care together with the indemnification provision, shall be underwritten by contractual liability coverage sufficient to include such obligations within applicable policies.

(b) Insurance furnished by the Contractor shall also be in accordance with the following requirements:
(1) any policy submitted shall not be subject to limitations, conditions or restrictions deemed inconsistent with the intent of the insurance requirements to be fulfilled by Contractor. The County's decision thereon shall be final;
(2) all policies are to be written through companies duly licensed to transact that class of insurance in the State of Texas; and
(3) all liability policies required herein shall be written with an "occurrence" basis coverage trigger.

(c) Contractor agrees to the following:
(1) Contractor hereby waives subrogation rights for loss or damage to the extent same are covered by insurance. Insurers shall have no right of recovery or subrogation against the County, it being the intention that the insurance policies shall protect all

parties to the Agreement and be primary coverage for all losses covered by the policies;

(2) companies issuing the insurance policies and Contractor shall have no recourse against the County for payment of any premiums or assessments for any deductibles, as all such premiums and deductibles are the sole responsibility and risk of the Contractor;

(3) approval, disapproval or failure to act by the County regarding any insurance supplied by the Contractor (or any subcontractors) shall not relieve the Contractor of full responsibility or liability for damages and accidents as set forth in the contract documents. Neither shall the bankruptcy, insolvency or denial of liability by the insurance company exonerate the Contractor from liability; and

(4) no special payments shall be made for any insurance that the Contractor and subcontractors are required to carry; all are included in the contract price and the contract unit prices.

Any of such insurance policies required under the Contract Documents may be written in combination with any of the others, where legally permitted, but none of the specified limits may be lowered thereby.

The Contractor shall furnish the County with satisfactory proof that it has provided adequate insurance coverage in amounts and by approved carriers as required by the Contract Documents.

VII. Record ("As-Built") Drawings

The Contractor shall mark all changes and revisions on all of its copies of the working drawings during the course of the Project as they occur. Upon completion of the Project and prior to Final Acceptance and Payment, the Contractor shall submit to the Construction Observer one set of its working drawings, dated and signed by the Contractor and its project superintendent and labeled as "As-Built", that shows all changes and revisions outlined above and that shows field locations of all above ground appurtenances including, but not limited to valves, fire hydrants and manholes. These as-built drawings shall be forwarded to the GEC and then to the County and become the property of the County. Each appurtenance shall be located by at least two (2) horizontal distances measured from existing, easily identifiable, immovable appurtenances such as fire hydrants or valves. Property pins can be used for as-builts tie-ins provided no existing utilities as previously described are available. Costs for delivering as-built drawings shall be subsidiary to other bid items.

VIII. Limit of Financial Resources

The County has a limited amount of financial resources committed to this Project; therefore, it shall be understood by Contractor that the County may be required to change and/or delete any items which it may feel is necessary to accomplish all or part of the scope of work within its limit of financial resources. Contractor shall be entitled to no claim for damages or anticipated profits on any portion of work that may be omitted. At any time during the duration of the Project, the County reserves the right to omit any

work from the Contract Documents. Unit prices for all items previously approved in the Contract Documents shall be used to delete or add work per change order.

IX. Limits of Work and Payment

It shall be the obligation of the Contractor to complete all work included in the Contract Documents, so authorized by the County, as described in the Contract Documents and Technical Specifications. Any question arising as to the limits of work shall be left up to the interpretation of the Engineer and/or Observer.

X. State Sales Tax

On a contract awarded by a governmental entity for the construction of a publicly-owned improvement in a street right-of-way or other easement which has been dedicated to the public and to the an Organization which qualifies for exemption pursuant to the provisions of Article 20.04 (F) of the Texas Limited Sales, Excise and Use Tax Act, the Contractor can probably be exempted in the following manner:

> The Contractor may buy tax-free any materials incorporated into the project by issuing a resale certificate in lieu of paying the sales tax at the time of purchase. The Contractor may then accept an exemption certificate from the City for the materials.

Even with a separated contract, the rental of equipment and the purchase of items which do not ultimately become part of the physical structure will still be subject to state and local sales taxes.

XI. Completion of Work on Time

The Contractor agrees that time is of the essence and that the definite value of damages which would result from delay would be incapable of ascertainment and uncertain, so that for each day of delay beyond the number of days herein agreed upon for the Substantial Completion of the Work specified in the Contract Documents and contracted for, after due allowance for such extension of time as is provided for under the provisions of Section 4.02 of the General Conditions, the County may withhold permanently from the Contractor's total compensation, not as penalty but as liquidated damages, the sum as specified in Special Specification 000-001 per calendar day.

Furthermore, it is agreed by the Contractor that the time period between Substantial Completion and Final Completion shall be no longer than **30** calendar days. This separate time period shall be for completion of the Punch List, as set forth in Section 5.06 of the General Conditions, Final Completion and Acceptance. In the event that Contractor fails to attain Final Completion on or before the expiration of the above said time period, the Contractor shall be subject to the remedies set forth in the Contract Documents. More specifically, the Contractor shall be subject to the terms set forth under Section 7.01 of the General Conditions, Abandonment by the Contractor. In addition to exercising its rights and remedies under the Contract Documents, the County may also exercise any remedy that may be available to it under the law or in equity.

XII. Layout and Construction Stakes

All construction staking shall be performed by the Contractor at the Contractor's expense.

XIII. Safety

The Contractor must use methods of construction that meet or exceed Occupational Safety and Health Administration Standards and any other local, state or federal regulations for safety that are in effect. The Contractor will have a trench safety plan prepared and sealed by Contractor's registered professional engineer.

XIV. Maintenance Bond Term & Amount

The required Maintenance Bond amount for this Project shall be twenty percent (20%) of the total amount bid and the bond period shall be two years from date of acceptance of completion, as noted on the Certificate of Completion.

XV. Safety Restrictions - Work Near High Voltage Lines

The following procedures shall be followed for work near high voltage lines on the Project.

(a) A warning sign not less than five (5) inches by seven (7) inches, painted yellow with black letters that are legible at twelve (12) feet shall be placed inside and outside vehicles such as cranes, derricks, power shovels, drilling rigs, pile drivers, hoisting equipment or similar apparatus. The warning sign shall read as follows: "Warning-Unlawful to Operate This Equipment Within Six Feet of High Voltage Lines".

(b) Equipment that may be operated with ten (10) feet of high voltage lines shall have an insulating cage guard around the boom or arm (except backhoes or dippers), and insulator links on the lift hook connections.

(c) When necessary to work within six (6) feet of high voltage electrical lines, notify the power company. The electric company will erect temporary mechanical barriers, de-energize the line, or raise or lower the line. All such work done by the power company shall be at the expense of the contractor. The contractor shall maintain an accurate log of all such calls to the electric company.

(d) No person shall work within six (6) feet of high voltage lines without protection measures having been taken as outlined in Paragraph C.

XVI. Erosion Control

Contractor shall comply with all laws prohibiting the pollution of any lake, stream, river, or wetland by the dumping of any refuse, rubbish, dredge material, or debris therein.

The Contractor will file the Notice of Intent (NOI) and the Notice of Termination (NOT) as the Project's operator. All required Permits and Notices shall be posted by the Contractor at the Project site.

Contractor shall apply temporary and/or permanent erosion and sedimentation controls, as specified in the plans or directed to disturbed roadside areas, fifteen feet and beyond from road pavement, prior to initiating road base operations. Following asphalt paving of road pavement, apply temporary and/or permanent erosion and sedimentation controls to remaining disturbed areas, as specified in the plans or as directed.

Contractor shall be responsible for the maintenance of all temporary and permanent water quality and erosion control measures proposed under the Storm Water Pollution Prevention Plan (SWPPP) or the Water Pollution Abatement Plan (WPAP) for the duration of the Project construction. Upon completion of construction and before the Construction Observer issues the Certificate of Completion, Contractor shall be responsible for the removal of all temporary measures and the cleaning and resetting of all permanent measures. All costs associated with this work shall be considered subsidiary to other bid items and no additional compensation shall be allowed.

Contractor shall take special precautions during all periods of heavy rainfall and at all locations where storm water, groundwater and/or mud and debris may enter the sewer systems. All mud, stones, and debris that enter the sewer systems due to Contractor's operations, or Contractor's neglect, shall be cleaned from the system by Contractor. It shall be Contractor's responsibility to see that such storm water, groundwater and debris do not enter the sewer system. All costs for such work shall be merged in the unit prices bid and no additional compensation shall be allowed.

If it is necessary in the prosecution of the Work to interrupt existing surface drainage, sewers, or under drainage, temporary drainage shall be provided until permanent drainage work is completed. The construction of all temporary drainage installations shall be considered as incidental to the construction of the Work. Drainage ways shall be kept clear or other satisfactory provisions made for drainage.

Contractor shall be responsible for and shall take all reasonable and necessary precautions to preserve and protect all existing tile drains, sewers, and other subsurface drains, or parts thereof, which may be continued in service without

change. Contractor shall repair, at its own expense, any and all damage to such facilities resulting from negligence or carelessness on the part of its operations.

The Construction Observer shall be responsible for the monitoring and inspection of the erosion control measures by completion of the Construction Pollution Prevention Plan Inspection and Maintenance Report, as required for coverage under the Texas Pollutant Discharge Elimination System (TPDES) General Construction Permit (TXR150000).

XVII. Discovery of Hazardous Materials

If, during the course of the Work, the existence of hazardous material, including asbestos containing material, is observed in the work area, the Contractor shall immediately notify the County in writing. The Contractor shall not perform any work pertinent to the hazardous material prior to receipt of special instructions from the County. Asbestos containing material includes transit pipe.

XVIII. Submittals – Certificate of Compliance

The Contractor shall submit to the Construction Observer a Certificate of Compliance from the manufacturer and/or supplier of each and every specified material or manufactured equipment item. The said certificate shall state that the material or the item of equipment to be furnished has been manufactured with materials in accordance with the applicable sections of all required codes, specifications, and standards as required by the specifications.

XIX. Unavailability of Materials

If the Contractor is unable to furnish or use any of the materials or equipment specified because of any order by a governmental agency limiting the manufacture or use, or because of the supply situation in the general market for such material or equipment, the Contractor shall offer substitutes therefor. The substitutes shall be suitable for the purpose, considering the factors of quality, serviceability, appearance, and maintenance. No substitute shall be used until the Engineer has approved it.

No consideration will be given to the use of substitutes on account of market conditions unless the Contractor demonstrates that, for the item in question, the Contractor placed its order without delay, that it has shown due diligence in attempting to locate the item as specified, and that the unavailability is due to market conditions in general throughout the particular industry.

If substitutes are used in the Work, the compensation to be paid to the Contractor shall be subject to review and adjustment. As a general principle, if the Engineer shall determine that the substitute will be less satisfactory, the Contractor shall allow a credit to the County; only under unusual circumstances shall there be an increase in compensation to the Contractor on account of substitution. The basis upon which the amount of price and adjustments will be founded shall be the cost of the appropriate items at the time the bids for the Project were opened.

XX. Traffic Control

Access shall be provided for residents and emergency vehicles at all times. When it becomes necessary to restrict access, the Contractor shall notify all applicable agencies (i.e. Fire Department, E.M.S., Public Works, etc.) a minimum of five (5) working days in advance of the proposed restrictions. At the end of each day, two lanes of traffic shall be opened to the public, unless otherwise stated in the Contract Documents.

XXI. Temporary Traffic Handling Devices

The Contractor shall furnish, erect and maintain all necessary barricades, lights, warning signs and temporary pavement markings as shown on the Plans and/or in accordance with the Texas Manual on Uniform Traffic Control Devices and with the Specifications in the Contract Documents. In addition, the Contractor shall provide flag-persons and take necessary precautionary measures for the protection of persons, property and the Work, when deemed necessary by the County or the Construction Observer.

The Construction Observer shall be responsible for the monitoring and inspection of the traffic control measures by completion of the Traffic Control Devices Inspection Report (TCDIR), and the Contractor shall be responsible for compliance with the terms of the TCDIR procedures.

XXII. Roadway Signs

All permanent and temporary roadway signage designated in the Contract Documents shall be in accordance with the Texas Manual on Uniform Traffic Control Devices.

XXIII. Project Signs

The Contractor shall erect at the site of construction, and maintain during construction, signs satisfactory to the County identifying the Project and indicating that the government is participating in the development of the Project. The project signs must be temporary signs, mounted in such a way that they can be moved and do not pose a safety issue. Two project signs will be required for the Project. The two said signs shall be 8' X 4' and made out of white 10 mm corrugated plastic with pressure sensitive vinyl lettering or approved equivalent to include: Road Bond Program, Your County Tax Dollars at Work!, with the Williamson County Seal, the Project’s name, and a brief description relating to the estimated date of completion, website address and the appropriate Williamson County Commissioner's name and precinct number. Furnishing, installing and maintaining these signs shall be considered subsidiary to Item 502, “Barricades, Signs and Traffic Handling”. The Contractor may use any manufacturer; however, the manufacturer must meet Williamson County standards.

XXIV. Permits

The Contractor shall be responsible for obtaining any and all required construction permits. Contractor agrees to comply with all conditions of the

permits and to maintain copies of the permits at the site at all times while the Work is in progress. The County shall be responsible for obtaining Section 404 permits from the U.S. Army Corps of Engineers as part of the Project design. When Contractor-initiated changes in the construction method changes the impacts to waters of the U.S., Contractor shall be responsible for obtaining new or revised Section 404 permits.

XXV. Landscape Restoration

If not designated as a specific pay item in bid package, the Contractor shall take the means necessary to protect all trees, shrubbery and sod. Protection, removal and replacement of existing landscaping will be in accordance with the Contract Documents.

XXVI. Existing Fencing

All fences encountered during construction within the right-of-way (ROW) shall be removed by the Contractor under "Preparing Right-of-Way." Permanent fencing, designating the ROW, will be provided by others, unless otherwise shown in the Contract Documents. The Contractor will be required to coordinate preparing ROW operations and fence removal and installations with the landowners as needed.

XXVII. Easements

Any easements, both temporary and permanent, required for the Project will be provided by the County as shown in the Contract Documents. Other easements required or desirable by the Contractor shall be arranged by the Contractor at its sole expense. The easements shall be cleaned after use and restored to their original conditions, or better by the Contractor. In the event additional work is required by the Contractor, it shall be the Contractor's responsibility to obtain written permission from the property owners involved for the use of additional property required. No additional payment will be allowed for this item.

XXVIII. Limits of Contractor's Operation

The Contractor shall limit construction operations to within the ROW or the easement unless otherwise directed by the County or its authorized representative.

XXIX. Maintenance of Pedestrian Walkways

The Contractor will be required to maintain clear walkways for pedestrians during construction in a manner to provide access in the most convenient and safest manner consistent with essential construction operations. Specifically, the following will be enforced.

Pedestrian traffic may be blocked at a location where work is actually in progress. Signs, barricades, and warning devices must be placed at nearest crosswalks approaching the construction site from every direction advising pedestrians of the blockage and advising them to use alternate routes.

Access to doorways and pedestrian entrances must be maintained at all times during hours that access is needed by business. Paving by sections or providing temporary access may be required.

No more than one corner of any intersection may be under construction at any one time. Work must be completed and opened for use by pedestrians before starting work on any other corner of an intersection.

The Contractor will be expected to diligently pursue construction from start to completion at every location to avoid prolonged and unnecessary disruptions to pedestrian traffic.

This work shall be considered incidental and not a separate pay item, unless provided otherwise in the Contract Documents.

XXX. Spoil

All excavated material unfit for backfill, waste material accumulated on the job, and any material surplus to that needed in the prosecution of the Work shall be removed from the site by the Contractor and properly and legally disposed of at its expense, unless otherwise directed by the Observer. **THE CONTRACTOR SHALL INDEMNIFY AND SAVE HARMLESS THE COUNTY, ALL OF ITS OFFICERS, AGENTS, AND EMPLOYEES FROM ALL SUITS, ACTIONS, OR CLAIMS OF ANY CHARACTER RESULTING FROM ITS ARRANGEMENTS FOR THE DISPOSAL OF SPOIL.** This shall be incidental and not a separate pay item.

XXXI. Materials Testing

Quality Control testing of all materials, construction items or products incorporated in the work shall be performed by the Contractor at the Contractor's expense, and shall be performed in accordance with the Quality Control (QC) / Quality Assurance (QA) program outlined in Appendix A.

Quality Assurance sampling and testing for acceptance may be required for quality assurance of used materials as directed by the Construction Observer or the County. The cost of such tests will be incurred by the County and coordinated by the Construction Observer through funds made available to the Construction Observer under his/her agreement with the County for the professional services related to construction engineering and inspection on the Project.

The Contractor shall furnish for review by the Construction Observer, not later than 10 days after receipt of notice to proceed, a Quality Control Plan consisting of plans, procedures, and organization necessary to produce an end product which complies with the contract documents. The Contractor will be allowed the latitude to develop standards of control subject to approval by the County. As a minimum, the plan shall include description of the type and frequency of

inspection staffing, materials handling and control, and testing deemed necessary to measure and control quality as specified by the contract documents.

XXXII. Pre-Construction Conference

Before the Project work order is issued, a pre-construction conference shall be held with representatives of the County and the Contractor. The Contractor shall plan to submit a schedule of operations at the pre-construction conference, unless otherwise notified. See Section XXXVI-Prosecution and Progress for additional construction schedule requirements.

XXXIII. Weight Tickets

The Contractor will be responsible for providing asphalt and aggregate tickets for quantity verifications on all asphaltic concrete used for the Project.

XXXIV. Confined Space Entry Program

It shall be the responsibility of the Contractor to implement and maintain a variable "Confined Space Entry Program" which must meet OSHA requirements for all its employees and subcontractors at all times during construction. OSHA defines all active sewer manholes, regardless of depth, as "permit required confined spaces". Contractors shall submit an acceptable "Confined Space Entry Program" for all applicable manholes and maintain an active file for these manholes. The cost of complying with this program shall be subsidiary to the pay items involving work in confined spaces.

XXXV. Tree and Plant Protection

Scope: Provide complete protection and maintenance of existing trees, shrubs, and grass areas designated to remain within construction limits and/or right-of-way.

Coordination: Coordinate protection of existing trees, shrubs and grass areas with other trades so as to prevent damage to these items.

Payment for Damages: If existing trees, shrubs or grass areas are destroyed, killed or badly damaged as a result of construction observations, Contract sum will be reduced by the amount of assessed damages. Damages will be evaluated by the Construction Observer, using the following:

Trees: International Shade Tree Conference Standards and following formula – measurement of a cross section of tree trunk will be made at a point 2 feet above existing grade level to determine cross section area in square inches. Assessment for damage will be $27.00 per square inch.

Shrubs and Grass Areas: An initial fine of $1,000 shall be imposed for any unauthorized disturbance within the boundaries of the shrub and grass areas to remain within the right-of-way and outside the limits of disturbance. This

disturbance includes but is not limited to: parking or intrusion of equipment or vehicles; storage of any materials, and any unauthorized damage and/or removal of vegetation. In addition to the initial fine, a base fine of $8.00 for every square foot of area of damaged vegetation within any areas designated to remain on the plans shall be imposed. The areas covered under this section include but are not limited to: areas designated to remain or no-work areas. In determining the amount of fine, the Construction Observer shall consider the degree and extent of harm caused by the violation, the cost of rectifying the damage, and whether the violation was committed willfully.

Materials: Tree Protection lumber dimensions shall be 4X4 and 2X4 sizes.

Protection: The Contractor shall protect existing trees, shrubs, and grass areas within construction limits from the following damage:

(1) Compaction of root area by equipment, vehicles or material storage;
(2) Trunk damage by moving equipment material storage, nailing or bolting;
(3) Strangling by tying ropes or guy wires to trunks or large branches;
(4) Poisoning by pouring solvents, gas, paint or other chemicals on or around trees and roots;
(5) Cutting of roots by excavating or ditching;
(6) Damage of branches by improper pruning;
(7) Drought from failure to water or by cutting or changing normal drainage pattern past roots;
(8) Changes of soil pH factor by disposal of lime base materials such as concrete or plaster;
(9) Do not cut roots 1-1/2” in diameter or over. Excavation and earthwork within drip line of trees shall be done by hand.

Install barricade protection around trees and shrubs, constructed of 4X4 posts and 2X4 stringers top and bottom. Install protection prior to demolition or excavation operations. Leave protection until construction operations are essentially complete.

Maintenance:

(1) Water trees and shrubs within construction limits as required to maintain their health during course of construction operations.
(2) Pruning will be performed by County.

XXXVI. Prosecution and Progress

At the pre-construction meeting, the Contractor shall submit for acceptance a schedule of all planned work activities and sequences that is intended to be followed in order to both substantially and fully complete the Work within the

allotted time periods (the "Project Schedule"). The purpose of the County requiring the Project Schedule shall be to:

(1) Ensure adequate planning during the prosecution and progress of the work in accordance with the allowable number of working/ calendar days and all milestones;
(2) Assure coordination of the efforts of the Contractor, County, Program Manager, Construction Observer, utilities and others that may be involved in the Project;
(3) Assist the Contractor, County, Program Manager and Construction Observer in monitoring the progress of the Work and evaluating proposed changes to the Contract Documents; and
(4) Assist the County, Program Manager and Construction Observer in administering the time requirements set forth in the Contract Documents.

A Type B Schedule will be required on all projects. Following is the schedule requirements:

Type B Schedule:

The Contractor shall create and maintain a Critical Path Method (CPM) Project Schedule showing the manner of prosecution of work that it intends to follow in order to both substantially and fully complete the Work within the allotted time periods. The Project Schedule shall employ computerized CPM for the planning, scheduling and reporting of the work as described in this specification. The CPM Project Schedule shall be prepared using the Precedence Diagram Method (PDM). No direct compensation will be allowed for fulfilling these requirements, as such work is considered subsidiary to the various bid items of the Project.

(1) Personnel. The Contractor shall provide an individual, referred to hereinafter as the Scheduler, to create and maintain the CPM schedule. He or she shall be proficient in CPM analysis and shall be able to perform required tasks on the software. The Scheduler shall be made available for discussion or meetings when requested by the County, Construction Observer or Program Manager.

(2) Schedule. The Project Schedule shall show the sequence and interdependence of activities required for complete performance of the work. The Contractor shall be responsible for assuring all work sequences are logical and show a coordinated plan of the Work.

Each activity on the schedule shall be described by: An activity number utilizing an alphanumeric designation system tied to the traffic control

plans, and that is agreeable to the County, Program Manager, or Construction Observer; concise description of the Work represented by the activity; and activity durations in whole working days with a maximum of twenty (20) working days. Durations greater than twenty (20) working days may be used for non-construction activities (mobilization, submittal preparation, curing, etc.), and other activities mutually agreeable between the Contractor and County, Program Manager or Construction Observer. The Contractor shall provide a legend for all abbreviations. The activities shall be coded so that organized plots of the schedule may be produced. Typical activity coding includes: Traffic control phase, location and work type.

The activity durations shall be based on the quantity for the individual work activity divided by a production rate. An estimated production rate for each activity shall also be shown.

The Contractor shall plan and incorporate major resources into the schedule. Major resources are defined as crews and equipment that constrain the Contractor from pursuing available work. The resources shall accurately represent the Contractor's planned equipment and manpower to achieve the productivity rates specified above.

Seasonal weather conditions shall be considered and included in the CPM schedule for all work influenced by temperature and/or precipitation. Seasonal weather conditions shall be determined by an assessment of average historical climatic conditions. Average historical weather data is available through the National Oceanic and Atmospheric Administration (NOAA). These effects will be simulated through the use of work calendars for each major work type (i.e., earthwork, concrete paving, structures, asphalt, drainage, etc.) Project and work calendars should be updated each month to show days actually able to work on the various work activities.

“Total float” is defined as the amount of time between the early start date and the late start date, or the early finish date and the late finish date, for each and every activity in the schedule. Float time in the schedule is a shared commodity between the County and the Contractor.

Only responsible delays in activities that affect milestone dates or the Project’s completion date, as determined by CPM analysis, will be considered for a time extension.

The schedule shall show the sequence and interdependence of activities required for complete performance of the work. The schedule shall be prepared and maintained in accordance with the scheduling requirements stated in this Section and shall include two (2) organized plots with the

activities logically grouped using the activity coding. The Contractor shall also provide an electronic copy of the schedule via e-mail.

The schedule shall encompass the time from the start of the Contract Time to the Project's Final Completion. The longest path through the schedule shall be readily discernable on the plot of the schedule.

(3) Joint Review, Revision and Acceptance. Within twenty (20) calendar days of receipt of the Contractor's proposed schedule, the County or its authorized agents shall evaluate the schedule for compliance with this specification, and notify the Contractor of the findings. If the County or its authorized personnel request a revision or justification, the Contractor shall provide a satisfactory revision or adequate justification to the satisfaction of the Construction Observer or County authorized personnel within seven (7) calendar days.

If the Contractor submits a CPM schedule for acceptance which is based on a sequence of work not in the Contract Documents, then the Contractor shall notify the County or its authorized entities in writing, separate from the schedule submittal.

The County's review and acceptance of the Contractor's Project Schedule is for conformance to the requirements of the Contract Documents only. Review and acceptance by the County or other authorized personnel of the Contractor's Project Schedule does not relieve the Contractor of any of its responsibility for the Project Schedule, or of the Contractor's ability to meet interim milestone dates (if specified) and the Final Completion date, nor does such review and acceptance expressly or by implication warrant, acknowledge or admit the reasonableness of the logic, durations, manpower or equipment loading of the Contractor's Project Schedule. In the event the Contractor fails to define any element of work, activity or logic and the County's review does not detect this omission or error, such omission or error, when discovered by the Contractor or County and its authorized personnel, shall be corrected by the Contractor at the next monthly schedule update and shall not affect the project completion date.

(4) Updates. The Project Schedule shall be updated on a monthly basis and shall be required as a basis for the pay application approval. The Project Schedule update shall be submitted with the pay application. The Contractor shall meet with the Construction Observer or County authorized personnel each month at a scheduled update meeting to review actual progress made through the data date of the schedule update. The review of progress will include dates activities actually started and/or completed, and the percentage of work completed or remaining duration on each activity started and/or completed. The percentage of work complete shall be calculated by utilizing the quantity and productivity rate

information. The Project Schedule update shall include one (1) copy of the following information:

a) Electronic copy of the updated schedule including revisions and changes via e-mail.
b) One (1) logically organized plot of the schedule update if requested by the County or its authorized personnel.

(5) Project Schedule Revisions. If the Contractor desires to make major changes in the Project Schedule, the Contractor shall notify the County or Construction Observer in writing. The written notification shall include the reason for the proposed revision, what the revision is comprised of, and how the revision was incorporated into the schedule. In addition to the written notification of the revision, the Contractor shall provide an electronic copy and one logically organized plot of the schedule including the revision if requested by the County or Construction Observer.

Major changes are hereby defined as those that may affect compliance with the requirements of the Contract Documents or those that change the critical path. All other changes may be accomplished through the monthly updating process.

(6) Time Impact Analysis. The Contractor shall notify the County or Construction Observer when an impact may justify an extension of Contract Time or adjustment of milestone dates. This notice shall be made in writing as soon as possible, but no later than the end of the next estimate period after the commencement of an impact or the notice for a change is given to the Contractor. Not providing notice to the County or Construction Observer by the end of the next estimate period will indicate the Contractor's approval of the time charges as shown on that time statement. Future consideration of that statement will not be permitted and the Contractor forfeits its right to subsequently request a time extension or time suspension unless the circumstances are such that the Contractor could not reasonably have knowledge of the impact by the end of the next estimate period.

When changes are initiated or impacts are experienced, the Contractor shall submit to the County or Construction Observer a written time impact analysis describing the influence of each change or impact.

A time impact analysis is an evaluation of the effects of changes in the construction sequence, contract, plans, or site conditions on the Contractor's plan for constructing the Project, as represented by the Project Schedule. The purpose of the time impact analysis is to determine if the overall Project has been delayed, and if necessary, to provide the Contractor and the County a

basis for making adjustments to the time allotted for Substantial Completion and Final Completion.

A time impact analysis shall consist of one or all of the steps listed below.

Step 1. Establish the status of the Project before the impact using the most recent Project Schedule update prior to the impact occurrence.

Step 2. Predict the effect of the impact on the most recent Project Schedule update prior to the impact occurrence. This requires estimating the duration of the impact and inserting the impact into the schedule update. The Contractor shall demonstrate how the impact was inserted into the schedule showing the added or modified activities and the added or modified relationships. Any other changes made to the schedule including modifications to the calendars or constraints shall be noted.

Step 3. Track the effects of the impact on the schedule during its occurrence. Note any changes in sequencing, and mitigation efforts.

Step 4. Compare the status of the Work prior to the impact (Step 1) to the prediction of the effect of the impact (Step 2), and to the status of the work during and after the effects of the impact are over (Step 3). Note that if an impact causes a lack of access to a portion of the Project, the effects of the impact may extend to include a reasonable period for remobilization.

The time impact analysis shall include an electronic copy of the complete schedule prepared in Step 2. If the Project Schedule is revised after the submittal of a time impact analysis but prior to its approval, the Contractor shall promptly indicate in writing to the County or Construction Observer the need for any modification to its time impact analysis.

Only one (1) copy of each time impact analysis shall be submitted within fourteen (14) calendar days after the completion of an impact. The County or Construction Observer may require Step 1 and Step 2 of the time impact analysis be submitted at the commencement of the impact, if needed to make a decision regarding the suspension of Contract Time.

Approval or rejection of each time impact analysis by the County, Construction Observer or Program Manager shall be made within fourteen (14) calendar days after receipt unless subsequent meetings and negotiations are necessary.

The time impact analysis shall be incorporated into and attached to any relevant change order(s) and/or supplemental agreement(s).

XXXVII. Sanitary Provisions

Provide and maintain adequate, neat, and sanitary toilet accommodations for employees, including County employees and representatives, in compliance with the requirements and regulations of the Texas Department of Health or other authorities having jurisdiction.

XXXVIII. Work Near Railroads

(A) General.

If the work crosses or is in close proximity to a railroad, do not interfere with the use or operation of the railroad company's trains or other property. Assign responsible supervisory personnel to ensure that tracks and adjacent areas are clear of debris, road materials, and equipment. It is the Contractor's responsibility to contact the railroad to determine the railroad's requirements for work within the railroad right of way and to comply with the requirements. The County will not reimburse the Contractor for any cost associated with these requirements. If the work requires construction within 25 ft. horizontally of the near rail or if the tracks may be subject to obstruction due to construction operations, notify the Engineer and the Railroad Company at least 3 days before performing work. The railroad company will provide flaggers during this work. If railroad flaggers will be needed longer than 2 consecutive days, request them at least 30 days before performing work within the railroad right of way. Flaggers provided by the railroad company will be paid for by the County. Do not store material or equipment in the Railroad's right of way within 15 ft. of the centerline of any track. Do not place any forms or temporary falsework within 8.5 ft. horizontally from the centerline or 22 ft. vertically above the top of rails of any track, unless otherwise shown in the Contract Documents.

(B) Temporary Crossings.

If a temporary crossing is needed, obtain permission from the railroad company before crossing the tracks. Execute the "Agreement for Contractor's Temporary Crossing" if required by the Railroad Company. The Contractor shall ensure that the tracks are left clear of equipment and debris that would endanger the safe operation of railroad traffic. Provide a crossing guard on each side of the crossing to direct equipment when hauling across the tracks. The Contractor shall stop construction traffic a safe distance away from the crossing upon the approach of railroad traffic. Work for temporary crossings will not be paid for directly, but shall be subsidiary to items of the Work subject of the Contract Documents. Work performed by the Railroad Company for the temporary crossing, except flaggers, will be at the Contractor's expense.

SECTION 13
TECHNICAL SPECIFICATIONS

Williamson County

Project: 1803-219 Southwest Bypass Segment 2

Basis of Estimate

Item	Description	**Rate	Basis	Quantity
160	**Topsoil**	27 CF/CY	118,611 CF	4,393 CY
161	**Compost Manufactured Topsoil**	9 SF/SY	380,754 SF	42,306 SY
164	**Seeding**			
	Temp (Warm)	9 SF/SY	190,386 SY	21,154 SY
	Temp (Cool)	9 SF/SY	190,386 SY	21,154 SY
	Perm	9 SF/SY	380,754 SF	42,306 SY
166	**Fertilizer (13-13-13)****	375 LB/AC	42,306 SY	1.65 TON
168	**Vegetative Watering**			
	(Item 164)(Temp)	55 GAL/SY	42,306 SY	2,327 MG
	(Item 164)(Perm)	110 GAL/SY	42,306 SY	4,655 MG
247	**FL BS (CMP IN PLC)**			
	(TY A GR 1&2)	27 CF/CY	265,626 CF	9,838 CY
		134 LB/CF		17,797 TON
310	**Prime Coat (MC-30 or AE-P)**	0.20 GAL/SY	27,276 SY	5,455 GAL
340	**Dense-Graded Hot-Mix Asphalt (SQ)**			
	TY-B or D PG64-22 Level Up	153.33 LB/CF	10,815 CF	829 TON
341	**Dense-Graded Hot-Mix Asphalt**			
	TY-B PG64-22	115 LB/SY/IN	27,085 SY	4,672 TON
	TY-D SAC-B PG70-22	115 LB/SY/IN	67,502 SY	5,941 TON

** For Informational Purposes Only.

MODIFIED STANDARDS

The following standard detail sheet or sheets have been modified:

RW(TRF) (MOD)
IGND (MOD)
BL (MOD)
IGTS (MOD)

CONTACT INFORMATION

City of Georgetown Electric Utility adjustments to be coordinated with:
City of Georgetown – Georgetown Utility Systems
300 Industrial Avenue, Georgetown, TX 78626
Jimmy Sikes; jimmy.sikes@georgetown.org; 512-930-6117

Work in the vicinity of the Enterprise Pipeline Facility to be coordinated with:
Enterprise Products
9420 W. Sam Houston Pkwy N., Room N1.217
Houston, Texas 77064-6317
P.O. Box 4324
Houston, TX 77210
Land_Encroachments@eprod.com; 866-901-8170
Rebecca Curry; ReCurry@eprod.com; 281-887-3312

Pedernales Electric Cooperative
10625 W Highway 29
Liberty Hill, TX 78642
P.O. Box 2048
Liberty Hill, TX 78642-2048
Dirk Field; dirk.field@peci.com; 512-778-5470 ext. 7037

City of Georgetown
300-1 Industrial Ave

Williamson County

Project: 1803-219 Southwest Bypass Segment 2

Georgetown, TX 78626
Michael Hallmark; Michael.hallmark@georgetown.org; 512-930-3569

Frontier/Verizon
2525 Ridgepoint Suite 400
Austin, TX 78754
Kevin Moseley; William.Moseley@ftr.com; 512-869-2257

LCRA
3700 Lake Austin Blvd.
Austin, TX 78703
Mary Beth Nickel; mnickel@lcra.org; 512-578-1806

P.O. Box 220
Austin, TX 78767

Oncor
3620 Franklin Avenue
Waco, TX 76710-7328
Leslie Davis; Leslie.Davis@oncor.com; 254-750-5244

GENERAL

References to manufacturer's trade name or catalog numbers are for the purpose of identification only. Similar materials from other manufacturers are permitted if they are of equal quality, comply with the specifications for this project, and are approved.

If work is performed at CONTRACTOR's option, when inclement weather is impending, and the work is damaged by subsequent precipitation, the CONTRACTOR is responsible for all costs associated with replacing the work, if required.

Right of way meets and bounds are on file with the County.

The roadbed shall be free of organic material prior to placing any section of the pavement structure.

Equip all construction equipment used in roadway work with highly visible omnidirectional flashing warning lights.

Provide a smooth, clean saw-cut along the existing asphalt or concrete pavement structure, as directed. Consider subsidiary to the pertinent Items.

Supply litter barrels in enough numbers at locations as directed to control litter within the project. Consider subsidiary to pertinent Items.

Use a self-contained vacuum broom to sweep the roadway and keep it free of sediment as directed. The CONTRACTOR will be responsible for any sweeping above and beyond the normal maintenance required to keep fugitive sediment off the roadway as directed by the CONSTRUCTION OBSERVER. Consider subsidiary to pertinent Items.

Damage to existing pipes and SETs due to CONTRACTOR operations shall be repaired at CONTRACTOR's expense.

All locations used for storing construction equipment, materials, and stockpiles of any type, within the right of way, will be as directed. Use of right of way for these purposes will be restricted to those locations where driver sight distance to businesses and side street intersections is not obstructed and at other locations where an unsightly appearance will not exist. The CONTRACTOR will not have exclusive use of right of way but will cooperate in the use of the right of way with the city/county and various public utility companies as required.

The Project Superintendent will be capable of speaking English and will be available to contact at all times when work is being performed, including subcontractor work. The Superintendent will be available and on-call 24 hours a day.

Coordinate and obtain approval from the CONSTRUCTION OBSERVER for all bridgework over existing roadways (including Texas Crushed Stone ROW crossing, if applicable).

Williamson County

Project: 1803-219 Southwest Bypass Segment 2

CONTRACTOR shall coordinate with Georgetown Utility Systems to allow them to install conduit underneath the proposed roadway after clearing activities, but prior to placement of the road base. Approximate location is at WBFR Station 400+20.00. Considered subsidiary to pertinent items.

Measure all minimum vertical clearances for all structures (including, but not limited to, signal mast arms, span wires, and overhead sign bridge structures) within the limits of the project for all roadway alignments in all directions of travel. Coordinate with the CONSTRUCTION OBSERVER to take these measurements and obtain prior to opening roadways to traffic unless otherwise approved. The CONSTRUCTION OBSERVER will report all minimum vertical clearance information on State maintained roadways to the Austin District Permit Office.

Use materials from prequalified material producers list as shown on the Texas Department of Transportation (TxDOT) – Construction Division's (CST) materials producers list. Refer to TxDOT's website for list of pre-qualified manufacturers. No substitutions will be allowed for materials found on the list. Submit list of approved suppliers/materials from TxDOT website to show items are TxDOT approved. Submit this list with request for material approval.

ENVIRONMENTAL (SW3P, WPAP, ETC.)

See SW3P, TCEQ Requirements for Recharge Zone of the Edwards Aquifer, and Temporary Erosion Notes for additional general notes and requirements not listed in this section.

CONTRACTOR shall designate an employee to coordinate the maintenance of the erosion control devices on this project. Maintain erosion control features according the Temporary and Permanent Erosion Control Sheets.

Install silt fence, erosion control logs, and rock filter dams at the earliest time possible, as directed. Periodically inspect and maintain all sediment traps and silt fence to ensure proper function. The sediment traps and silt fence shall remain in place until vegetation is established as determined solely by the CONSTRUCTION OBSERVER.

All slopes shall be seeded with approved grass, grass mixtures or ground cover suitable to the area and season in which they are applied.

Silt fences, rock berms, erosion control logs, sedimentation basins, and similarly recognized techniques and materials shall be employed during construction to prevent point source sedimentation loading of downstream facilities. Such installation shall be regularly inspected by the City of Georgetown for effectiveness. Additional measures may be required if, in the opinion of the CONSTRUCTION OBSERVER, they are warranted.

All temporary erosion control measures shall not be removed until final inspection and approval of the project by the CONSTRUCTION OBSERVER. It shall be the responsibility of the CONTRACTOR to maintain all temporary erosion control structures and to remove each structure as approved by the CONSTRUCTION OBSERVER.

All mud, dirt, rocks, debris, etc., spilled, tracked or otherwise deposited on existing paved streets, drives and areas used by the public shall be cleaned up immediately.

After temporary erosion control devices are no longer required, cleanup and reshaping of those areas will be required. Consider incidental to pertinent items.

The project limits are within the Edwards Aquifer Recharge Zone. Transport any soils contaminated during construction of the proposed project from the site and properly dispose of off-site, off the recharge zone, and off any area draining to the recharge zone of the Edwards Aquifer.

Suspend all activities near any significant recharge features, such as sinkholes, caves, or any other subterranean openings that are discovered during construction or core sampling. Do not proceed until the designated Geologist or TCEQ representative is present to evaluate and approve remedial action.

Perform maintenance of vehicles or equipment at designated maintenance sites. Keep a spill kit on-site during fueling and maintenance. This work is subsidiary.

Protect all areas of the right of way, which are not included in the actual limits of the proposed construction areas, from disturbance. Restore any area disturbed because of the CONTRACTOR's operations to a condition as good as, or better than, before the beginning of work at no cost to the state. This does not include the area between the existing quarry walls.

Williamson County

Project: 1803-219 Southwest Bypass Segment 2

Remove sediment accumulated during project construction from detention ponds prior to project close out, as directed the by CONSTRUCTION OBSERVER. Subsidiary to pertinent items.

When any abandoned well is encountered, cease construction operations in this area and notify the CONSTRUCTION OBSERVER who will coordinate the proper plugging procedures with Texas Commission on Environmental Quality (TCEQ).

Erosion control and stabilization measures must be initiated immediately in portions of the site where construction activities have temporarily ceased and will not resume for a period exceeding 14 calendar days. Track all exposed soil, stockpiles, and slopes. Tracking consists of operating a tracked vehicle or equipment up and down the slope, leaving track marks perpendicular to the direction of the slope. Re-track slopes and stockpiles after each rain event or every 14 days, whichever occurs first. This work is subsidiary.

CONTRACTOR is responsible to submit and receive approval from the TCEQ for any above ground storage tanks to be kept on site as well as any fees associated with this request. At a minimum, locate aboveground storage tanks kept on-site for construction purposes over bermed impervious liners as to not allow any leakage into underlying soils. Additionally, the containment will be sized to capture 150% of the total volume of fluids stored on-site within the storage area.

Maintain positive drainage for permanent and temporary work for the duration of the project. Be responsible for any items associated with the temporary or interim drainage and all related maintenance. This work is subsidiary.

Collect wastewater generated on-site by chemical toilets and transport off-site and dispose of properly.

Clean asphalt equipment in such a manner that will not leave any petroleum contaminants in the right of way. No construction waste materials will be buried within the right of way.

Project Specific Location (PSL) in USACE Jurisdictional Area.

Do not initiate activities in a PSL associated with a U.S. Army Corps of Engineers (USACE) jurisdictional area that have not been previously evaluated by the USACE as part of the permit review of this project. Such activities include, but are not limited to, haul roads, equipment staging areas, borrow and disposal sites. Associated defined here means materials are delivered to or from the PSL. The jurisdictional area includes all waters of the U.S. including wetlands or associated wetlands affected by activities associated with this project. Special restrictions may be required for such work. Consult with the USACE regarding activities, including PSLs that have not been previously evaluated by the USACE. Provide the Department with a copy of all USACE coordination and approvals before initiating activities.

Proceed with activities in PSLs that do not affect a USACE jurisdictional area if self-determination has been made that the PSL is non-jurisdictional or proper clearances have been obtained in USACE jurisdictional areas or have been previously evaluated by the USACE as part of the permit review of this project. Document any determinations that PSL activities do not affect a USACE jurisdictional area. Maintain copies of PSL determinations for review by the Department or any regulatory agency. The CONTRACTOR must document and coordinate with the USACE, if required, before any excavation material hauled from or embankment material hauled into a USACE jurisdictional area by either (1) or (2) below.

1. Restricted Use of Materials for the Previously Evaluated Permit Areas. When an area within the project limits has been evaluated by the USACE as part of the permit process for this project:
    a. suitable excavation of required material in the areas shown on the plans and cross sections as specified in Standard Specification Item 110, Excavation is used for permanent or temporary fill within a USACE jurisdictional area;
    b. suitable embankment from within the USACE jurisdictional area is used as fill within a USACE evaluated area;
    c. Unsuitable excavation or excess excavation that is disposed of at an approved location within a USACE evaluated area.
2. Contractor Materials from Areas Other than Previously Evaluated Areas. Provide the Department with a copy of all USACE coordination and approvals before initiating any activities in a jurisdictional area within the project limits that has not been evaluated by the USACE or for any off right of way locations used for the following, but not limited to, haul roads, equipment staging areas, borrow and disposal sites:
    a. Standard Specification Item 132, Embankment is used for temporary or permanent fill within a USACE jurisdictional area;

b. Unsuitable excavation or excess excavation that is disposed of outside a USACE evaluated area.

Work over or near Bodies of Water (Lakes, Rivers, Ponds, Creeks, etc.).
Keep on site a universal spill kit adequate for the body of water and the work being performed. No debris is allowed to fall into a body of water. Debris that falls into the water must be removed at the end of each work day. Debris that falls into the floodway must be removed at the end of each work week or prior to a rain event. This work is subsidiary.

DSHS Asbestos and Demolition Notification.
Complete and provide the Texas Department of State Health Services (DSHS) notification form to the CONSTRUCTION OBSERVER at least 30 calendar days prior to bridge or bridge class culvert removal or renovation. Notify the CONSTRUCTION OBSERVER via email of any changes to the work start date.

Migratory Birds and Bats.
Migratory birds may be nesting within the project limits and concentrated on roadway structures such as bridges and culverts. Remove all old and unoccupied migratory bird nests from any structures, trees, etc. between September 1st and January 31st. Prevent migratory birds from re-nesting between February 1st and August 31st.

All methods used for the removal of unoccupied bird nests and the prevention of re-nesting must be approved by the CONSTRUCTION OBSERVER well in advance of the planned use.

In the event that any active nests are encountered on-site during construction, all construction activity within the immediate vicinity of the nest must cease immediately. Contact the CONSTRUCTION OBSERVER to determine how to proceed.

Bats may roost within the project limits under bridges, in culverts, in large hollow trees, in dead standing trees, and in trees with shaggy bark. Maternity colonies may occur from April 1st through August 31st. If bats are present, ensure bats are not harmed. Exclusion protocols for known colonies should be followed well in advance of commencement of construction activities. Exclusion measures by qualified individuals are used to relocate existing colonies, except from April 1st through August 31st when such measures may separate mothers and pups. Exclusion measures are also the means of preventing establishment of new colonies and re-establishment of relocated colonies.

No extension of time or compensation payment will be granted for a delay or suspension of work caused by migratory birds or bats. This work is subsidiary.

TRENCH SAFETY NOTES
In accordance with the laws of the State of Texas and the US Occupational Safety and Health Administration regulations, all the trenches over 5 feet in depth in either hard and compact or soft and unstable soil shall be sloped, sored, sheeted, braced, or otherwise supported. Furthermore, all trenches less than 5 feet in depth shall also be effectively protected when hazardous ground movement may be expected. Trench safety systems to be utilized for this project will be provided by the CONTRACTOR.

In accordance with the US Occupational Safety and Health Administration regulations, when persons are in trenches 4 feet deep or more, adequate means of exit, such as a ladder or steps, must be provided and located so as to require no more than 25 feet of lateral travel.

If trench safety system details were not provided in the plans because trenches were anticipated to be less than 5 feet in depth, and if during construction it is found that trenches are in fact 5 feet or more in depth or trenches less than 5 feet in depth are in an area where hazardous ground movement is expected, all construction shall cease, the trenched area shall be barricaded and the CONSTRUCTION OBSERVER notified immediately. Construction shall not resume until appropriate trench safety systems details, as designed by a professional engineer, are retained and copies submitted to the CONSTRUCTION OBSSERVER for approval.

Williamson County

Project: 1803-219 Southwest Bypass Segment 2

QUARRY REQUIREMENTS AND COORDINATION

The project passes through the Texas Crushed Stone (TCS) active quarry. It is the CONTRACTOR's responsibility to coordinate with TCS for their blasting schedule and achieve set-back requirements during blast events. The CONTRACTOR shall keep the ROW secure at all times and is responsible for all personnel, equipment, and production during TCS blasting activity. Subsidiary to pertinent items. There will not be additional payment for any losses or delays during blast protocols.

Texas Crushed Stone requires one Right of Way access route (crossing) per an industrial agreement with the City of Georgetown. The crossing must be 80' wide and 25' tall at a minimum and TCS traffic must have access through it at all times. The current location of the crossing will need to be re-located to its permanent location as shown in the plans. CONTRACTOR is responsible for coordinating construction traffic as well as the change in the crossing location with Texas Crushed Stone. The PCTB, as called out on the Fencing and Grading Plans, must be installed and the crash walls, as called out on the Bridge Plans (Bents 3 and 4), must be complete before the TCS crossing is relocated. Subsidiary to pertinent items.

CONTRACTOR's Project Superintendent as well as any personnel working near the vertical walls of the quarry shall have proof of completion for MSHA New Miner Training with emphasis on High Wall Safety (8 hour course). Subsidiary to Item 500 "Mobilization".

BLASTING

Blasting is allowed on this project. All blasting shall meet the specifications and requirements of Item S2 RC.

Coordinate with the CONSTRUCTION OBSERVER and Texas Crushed Stone to determine blasting times.

Blasting is not allowed within 200 feet of TxDOT right-of-way. The roadway RM 2243 shall not be compromised and road closures are not permitted for blasting activities.

It is the CONTRACTORS responsibility to secure the site at all times.

A blasting plan is required to be submitted to the CONSTRUCTION OBSERVER for approval at least 1 week before each blast.

HAUL ROAD

Utilize the existing haul road (by others) where possible. The maximum grade on the existing access route is 15%.

Physical alterations of the existing haul road, including additional clearing, blading, grade alterations, and gate modifications at RM 2243 shall be considered subsidiary to pertinent items. Maintain sheet flow conditions at the edge of the haul road outside the limits of the existing quarry disturbance.

Remove all traffic control devices, remove rock, and re-vegetate the areas shown in the plans upon completion of work or as directed. This includes sections of the haul road no longer used due to any re-alignment of the haul road. Provide sufficient watering to establish vegetation, as approved by the CONSTRUCTION OBSERVER. Re-vegetation is not required within the existing limits of quarry disturbance, which is approximately from WBFR Station 401+00 to Station 439+00. Additional topsoil, seeding, and watering required to establish vegetation, but not directly called out in the plans, shall be considered subsidiary to pertinent items.

ITEM 100 - PREPARING RIGHT OF WAY

Do not burn brush unless otherwise approved.

Trim vegetation around signs and other obstructions. Consider subsidiary to pertinent Items.

Use hand methods or other means to remove objectionable material and obstructions if doing work by mechanical methods is impractical. Consider subsidiary to the pertinent Items.

All trees and brush are to be removed within the limits of the Right of Way between the I-35 SBFR and RM 2243 with the following two exceptions:

- All trees that have a diameter at breast height (DBH) of 12 inches or larger (excluding Hackberry, Chinaberry, Ashe Juniper (cedar), Chinese Tallow, and Mesquite) are to remain.
- All trees and brush within the limits of the permanent protection fence (two areas) installed near karst features in Segment 2 are to remain. Do not enter either area during construction.

Williamson County

Project: 1803-219 Southwest Bypass Segment 2

Removal of all trees and brush subsidiary to this item.

Re-vegetate all areas disturbed by tree clearing activity outside of the construction limits. Disturbed areas must be seeded or sodded within 14 days of last clearing activity. Subsidiary to this item.

Removal of existing building and parking lot along the I-35 southbound frontage road is required prior to project completion, but does not need to run concurrent with other site prep activities. See Item 496 and Item 504 of the general notes for additional information. Cap existing well in accordance with State law. Considered subsidiary to this item.

All items requiring removal that are not specifically called out for removal in the plans are considered subsidiary to this item. Prep ROW quantities for the WBFR cover all City ROW between the I-35 SBFR and RM 2243, as well as any TxDOT ROW on the I-35 SBFR and any City ROW on the Bypass north of RM 2243. Quantities for RM 2243 cover all TxDOT ROW on RM 2243.

ITEM 110 & 132 – EXCAVATION & EMBANKMENT

At no time will the retaining wall backfill material exceed the adjacent embankment operation by more than one embankment lift. At no time will the embankment adjacent to the retaining wall backfill exceed the wall backfill by any elevation.

Unsuitable material encountered in a cut or fill section will be considered waste. The CONSTRUCTION OBSERVER will define unsuitable material. Material, which the CONTRACTOR might deem to be unsatisfactory or unsuitable, due to moisture content, will not be considered unsuitable material, unless otherwise approved.

Obtain approval of all compaction equipment prior to all backfilling and embankment operations.

ITEM 132 – EMBANKMENT

The CONSTRUCTION OBSERVER must approve all embankment material before use on this project.

Existing material located within the project limits may be used as embankment if it meets specifications shown on the plans and if approved by the Construction Observer.

If delivery from offsite source is necessary, furnish embankment with a PI of less than 25 that does not contain sulfate contents greater than 3000 ppm.

Stockpile imported TY C embankment at an approved location until it meets all testing requirements. The stockpile must be between 500 CY and 5000 CY and must not exceed a height of 15 ft. It is the Contractor's responsibility to identify and notify the Construction Observer of the location of the borrow source to allow time for testing and approval to avoid delay to the project. Allow a minimum of five (5) working days for testing.

At no time will the retaining wall backfill material exceed the adjacent embankment operation by more than one embankment lift. At no time will the embankment adjacent to the retaining wall backfill exceed the wall backfill by any elevation.

Embankment placed over the area of MSE backfill must meet the same backfill requirements for the type specified under Item 423 in the plans.

The underlying layer or existing subgrade must be prepared and inspected prior to placement of the embankment. Use approved compaction equipment for all backfilling and embankment operations. Detachable sheepsfoot-type wheels mounted on backhoes, trackhoes and other similar equipment will not be allowed for compaction operations, including pipe installation. Payment for compaction will be subsidiary to the various bid items of the contract.

Track ALL embankment slopes left idle for more than 14 days, within or at the end of the 14-day idle period, to prevent erosion. Tracking consists of operating a tracked vehicle or equipment up and down the slope, leaving track marks perpendicular to the direction of the slope. Re-track slopes after rain events, as directed. Consider tracking of slopes to prevent erosion as subsidiary to the pertinent Items.

Due to the depth (30+ft) of some of the fills and the desire to limit settlement while using ordinary compaction methods, it is recommended that rock embankment construction be inspected/observed on a full-time basis.

Williamson County

Project: 1803-219 Southwest Bypass Segment 2

EMBANKMENT MATERIAL

There are two types of embankment on this project. Zone 1 embankment consists of all embankment material located lower than 8 ft beneath the proposed pavement surface. Zone 2 embankment consist of all embankment material within 8 ft of the proposed pavement surface. Material recommendations for the two zones are provided below. All embankment material should be free of vegetation or other objectionable material.

- Zone 1 embankment material should consist of material meeting TxDOT Standard Specifications Item 132, 3.2 Rock Embankment with the following exception: the maximum lift thickness should not exceed 2 ft, therefore the maximum rock size in its greatest dimension must be less than 2 feet.
- Zone 2 embankment material should consist of material meeting TxDOT Standard Specifications Item 132, Type C with the following gradation and plasticity requirements.

Item	Description	(Percent Retained-Sieve)					LL Max.	PI Max.	PI Min.
		2½"	1¾"	7/8"	#4	#40			
132	Embankment (Density Control) (Zone 2)	0	0-10	10-40	45-75	60-85	45	20	6

EMBANKMENT PLACEMENT – COMPACTION

- Compact the Zone 1 Rock Embankment using ordinary compaction methods in accordance with TxDOT Standard Specifications Item 132.
- Compact Zone 2 embankment material using density control in accordance with TxDOT Standard Specifications Item 132 with a maximum compacted lift thickness of 12 inches, provided the compaction operation and equipment has the ability to meet the compaction throughout each lift. Quality Assurance Embankment Testing (plasticity index, gradation, moisture/density relationship and in-place density) shall be in accordance with the TxDOT Guide Schedule of Sampling and Testing, March 2015. Quality Control testing shall be at the frequency selected by the CONTRACTOR.

ITEM 160 - TOPSOIL

No sandy loam allowed. Obtain approval of the actual depth of the topsoil sources for both on-site and off-site sources

All topsoil sources shall be approved by the CONSTRUCTION OBSERVER.

Existing topsoil salvaged from the project, meeting specification requirements, may be used where topsoil is called out in the plans.

The maximum height of topsoil stockpiles shall be five (5) feet.

Seed or track slopes within 14 days of placement.

ITEM 161 – COMPOST

Place a minimum of four (4) inches of compost manufactured topsoil at the locations identified on the plans. Any excess shall be at the CONTRACTOR's expense.

ITEM 164 – SEEDING FOR EROSION CONTROL

"No mowing" signs are not required on this project.

ITEM 166 – FERTILIZER

Fertilize all areas to be seeded. Apply fertilizer at a rate that provides 375 lbs of nitrogen per acre of seeded area. Fertilizer shall be subsidiary to other items.

ITEM 169 – SOIL RETENTION BLANKETS

Use materials from prequalified material producers list as shown on the Texas Department of Transportation (TxDOT) – Construction Divisions (CST) materials producers list. Refer to TxDOT's website for list of pre-qualified manufacturers. Direct all questions to the Maintenance Division, Vegetation Management Section, 125 E. 11th Street, Austin, TX 78701-2483.

Williamson County

Project: 1803-219 Southwest Bypass Segment 2

ITEM 204 – SPRINKLING
Sprinkling for the control of dust, as directed, will be required on this project. If dust control is not being maintained, cease operations until maintenance resumes. This work shall be considered subsidiary to pertinent items.

ITEM 247 - FLEXIBLE BASE
Furnish TY A material meeting Grade 1 & 2 requirements for the roadway and intersecting streets.

Flexible base material shall come from a source approved by the CONSTRUCTION OBSERVER. If the flexible base comes from a stockpile, the stockpile shall be tested before delivery to the project. The stockpile shall be built in lifts not to exceed two (2) feet and in a manner as to obtain a minimum working face of not less than ten (10) feet and maximum working face of not more than twenty (20) feet. Final acceptance of flexible base material will be from tests made from windrow samples or the stockpile.

The following table will govern the acceptance of compaction on base courses, when compacted in multiple courses. Compaction requirements are in percent of maximum dry density as determined by (Tex-113-E). When compacting in a single course, compact to at least 100% of maximum dry density as determined by Tex-113-E.

Item	Material	All Roadways	
		Lift	Min Density
247	FL BS (CMP IN PLC)	1st (first lift) 2nd (final lift)	98% 100%

Correct subgrade (e.g. unstable areas, soft spots, etc.) prior to placing Flex Base. This includes cut areas where the flex base is to be placed on existing rock. Consider subsidiary to the pertinent Items.

ITEM 300 – ASPHALTS, OILS, AND EMULSIONS
Asphalt season starts May 1st and ends September 15th.

PPA and REOBs are not allowed.

ITEMS 310, 340, & 341
Perform work during good weather, unless otherwise directed. If work is performed at CONTRACTOR's option, when inclement weather is impending, and the work is damaged by subsequent precipitation, the CONTRACTOR is responsible for all costs associated with replacing the work, if required.

ITEM 310 – PRIME COAT
Provide medium cure cutback asphalt (MC-30) or asphalt emulsion prime (AE-P).

Provide CONSTRUCTION OBSERVER with current Distributer Certification confirming calibration of asphalt measurement equipment.

Apply Prime to finished flex base surface at the rate shown in the plans. Hot mix can be applied to the primed surface of flex base after the prime has penetrated and cured for a minimum of 36 hours depending on weather conditions or as approved by the CONSTRUCTION OBSERVER. Provide the CONSTRUCTION OBSERVER with a copy of the asphalt deliver ticket prior to application. Do not apply if rain is forecast prior to paving.

Apply blotter material to all driveways and intersections. This work is subsidiary. When Multi Option is allowed, provide MC 30, EC 30, or AE-P.

ITEM 340 & 341 - DENSE-GRADED HOT-MIX ASPHALT
Contractor to submit for approval a current mix design (less than 6 months old) to the Construction Observer that meets the following requirements prior to use on the project.

Provide mixture Type B using PG binder 64-22 & Type D using PG binder 70-22.

Use aggregate meeting a Surface Aggregate Classification (SAC) requirement of B for all surface and non-surface mixtures (including shoulders).

Provide performance grade (PG) binders that do not contain Recycled Engine Oil Bottoms (REOB's) or Poly Phosphoric Acid (PPA).

Williamson County

Project: 1803-219 Southwest Bypass Segment 2

Do not perform this work when the weather, as indicated by NOAA states a chance of rain of 40% or greater.

Mill a transverse butt joint to transition from the new ACP to the existing surface tie-in. Make the transition a minimum of 50 feet H: 1 inch V slope ratio of newly placed ACP. Make the temporary joint, at the tie-in, a minimum of a 10 feet longitudinally and covering the entire width. Saw-cut existing pavement as directed. Prior to milling, core the existing pavement to determine its thickness. Do not proceed with milling until directed. Consider this work subsidiary to the pertinent Items.

Complete all roadways before final surface course placement, unless directed otherwise.

Ensure placement sequence to avoid excess distance of longitudinal joint lapback not to exceed one day's production rates.

The Contractor shall utilize a material transfer device per item 320 and a grade reference (such as a ski) for overlay operations. Consider subsidiary to the pertinent items.

Use a device to create a maximum 3H: 1V notched wedge joint on all longitudinal hot mix joints of two (2) inches or greater. Consider subsidiary to the pertinent Items.

Taper transverse faces at ends of passes as directed.

Make transverse tapers on each end of pass using a minimum slope rate of 60H:1V. Tapers shall be removed directly before placement of succeeding lift. Consider subsidiary to the pertinent Items.

Provide a minimum transition for all side streets of at least 12 ft. and driveways of at least six (6) feet, unless otherwise shown on the plans or otherwise approved/directed.

Tack every intermediate layer, unless otherwise directed. Do not dilute tack coat. Apply it through a distributor spray bar in accordance with Article 316.3.1 Distributor.

TESTING

Testing to be under separate COUNTY contract. CONTRACTOR shall coordinate with involved parties for asphalt testing.

The CONTRACTOR must sample asphalt binder, in accordance to the applicable item. Label the sample can with the corresponding project, lot, and sub-lot numbers.

Samples must be stored in a common area where they are readily available to the COUNTY representative at the plant. The CONTRACTOR will be responsible for supplying storage for all samples. Retain all asphalt samples until hot mix production is complete or directed otherwise.

Target laboratory molded density is 97% for all mixtures for Texas Gyratory Compactor (TGC) mixture designs.

When directed, the CONTRACTOR is responsible for disposal of all asphalt binder samples, in accordance to Local, State, and Federal regulations.

Refill and compact all HMAC core holes to the same elevation as the adjacent roadway. Use hot mix of the type being used in the project to fill core holes. As an alternative a high performance cold patching mix such as Rapid Cure Patching Mix meeting the requirements of DMS-9203 or Medium Cure Patching mix made with SCM meeting requirements of DMS-9202. Consider this work subsidiary to the pertinent Items.

When using Superpave Gyratory Compactor (SGC) to design mixtures, submit the SGC mix design to the CONSTRUCTION OBSERVER for approval.

When using substitute binders, mold specimens for mix design and production at the temperature required for the substitute binder used to produce the HMA.

All mixtures must meet the Hamburg requirement as stated in the table below.

Williamson County

Project: 1803-219 Southwest Bypass Segment 2

High-Temperature Binder Grade	Test Method	Hamburg Wheel Test Requirements [1]		
		Minimum # of Passes	Maximum Rut Depth (mm)[2]	Minimum Rut Depth (mm)[2,3]
PG 64 or lower	Tex-242-F	7,000	12.5	3
PG 70	Tex-242-F	15,000	12.5	3
PG 76 or higher	Tex-242-F	20,000	12.5	3

1. The CONSTRUCTION OBSERVER may accept Hamburg Wheel test results for production and placement if no more than 1 of the 5 most recent tests is below the specified number of passes and the failing test is no more than 2,000 passes below the specified number of passes.
2. Rut depth tested @ 122°F
3. Unless approved otherwise.

Use of RAS is not allowed. When using RAP, include the management methods of processing, stockpiling, and testing of RAP in the QCP submitted for the project. Blending of RAP in one feeder bin or in a stockpile is not permitted.

RAP is not allowed for any surface mix applications.

No more than 20% RAP by weight of aggregate is allowed in any mix application.

Submit any proposed adjustments or changes to a job mix formula to the CONSTRUCTION OBSERVER before production of the new job mix formula.

For Mixture Design Verification, provide the CONSTRUCTION OBSERVER with two 5-gallon buckets of each aggregate stockpile to be used on the project with three gallons of each PG binder from the plant to be used on the project. Sufficient quantities of any other additives that will be used in the HMA mixture shall also be provided.

Prior to allowing production of the trial batch, the Construction Observer will use the materials provided by the Contractor to perform the following tests to verify the HMA mixture .

1. Indirect Tensile Test in accordance with Tex-266-F
2. HAMBURG Wheel Test in accordance with Tex-242-F
3. Overlay Test in accordance with Tex-248-F
4. Cantabro Test in accordance with Tex-245-F

For mixtures designed with a Texas Gyratory Compactor (TGC), the CONSTRUCTION OBSERVER may require that the target laboratory molded density be raised to no more than 97.5% or may lower the design number of gyrations to no less than 35 for mixtures designed with an SGC if any of the following conditions exist:

1. The Indirect Tensile Test results in a value greater than 200 PSI
2. The Hamburg Wheel Test results in a value less than 3.0 mm
3. The Overlay Test results in a value less than 100 cycles
4. The Cantabro Test results in a value of more than 20% loss

In lieu of or in addition to evaluating the mixture design prior to allowing a trial batch to be produced, the CONSTRUCTION OBSERVER may also evaluate the mixture produced during the trial batch for compliance with the four tests listed above.

Submit thermal and segregation profiles as well as longitudinal joint densities on electronic forms provided by County to the CONSTRUCTION OBSERVER.

Williamson County

Project: 1803-219 Southwest Bypass Segment 2

When surface irregularities, as defined in Article 341.4.9.3.3.5, "Irregularities," are detected or measured, the Contractor must take immediate corrective action defined as the removal and replacement of a full lane width of the defective area using a paver to place new mix, unless otherwise directed. If there are multiple defective areas within a sub-lot, making up to 30% of the sub-lot by area, the CONSTRUCTION OBSERVER will require the entire sub-lot be removed, unless directed otherwise.

ITEM 354 – PLANING AND TEXTURING PAVEMENT

Milling machines must be able to meet the longitudinal grade and cross slope required.

Remove the loose material from the roadway before opening to traffic.

Plane a full lane width before opening to traffic at the end of a work period.

Accomplish a 2-inch depth of planing and texturing in two passes. A single cut will be permitted if at most a 1¼-inch vertical offset is created against adjacent lanes when opened to traffic at the end of a work period.

Accomplish the 2-inch Planed Butt Joint only when there is at least 4 inches of existing thickness of ACP. Consider the determination of existing thickness of ACP as subsidiary to the various Items.

Taper transverse faces at ends of passes as directed.

Make Transverse Tapers on each end of each pass using a minimum slope rate of 50 feet H to 1-inch V.

Retain ownership of planed materials.

Plane the designated areas and depths specified in the plans, as required. Mill the pavement producing a final pavement surface with transverse pattern of 0.2 inches center to center of each strike area with difference no greater than 1/16 inch between the ridge and valley (RVD) measurement of the final milled surface. Construct a uniform finish free from gouges and ridges that does not vary more than 1/8 inch in width of the cut.

Use planning machine that is power-driven, self-propelled micro-milling equipment possessing the size and shape to allow traffic safe passage through areas adjacent to the work.

Also, ensure the micro milling equipment will be:

- Equipped with a cutting mandrel with carbide or equivalent tipped cutting teeth designed for micro-milling bituminous pavement full lane width to close tolerances
- Capable of removing pavement to an accuracy of 1/16 inch (1.6 mm) with a maximum tool spacing of 5/8 inches
- Equipped with grade and slope controls operating from a string line or ski and based on mechanical or sonic operation
- Furnished with a lighting system for night work, as necessary
- Provided with conveyors capable of side, rear, or front loading to transfer the milled material from the roadway to a truck

Ensure micro-milling methods produce a uniform finished surface and maintain a constant cross slope between pavement edges in each lane. Provide positive drainage to prevent water accumulation on the micro-milled pavement, as shown on the Plans or directed by the CONSTRUCTION OBSERVER. The cross slope must be uniform with no depressions or slope misalignments greater than ¼ per 12 ft. exit when the slope is tested with a straightedge placed perpendicular to the center line.

Bevel back the longitudinal vertical edges greater than two (2) inches (50 mm) produced by the removal process and left exposed to traffic. Bevel the vertical edges back at least three (3) inches for each two (2) inches (75 mm for each 50 mm) of material removed. Use an attached mold board or other approved method.

Taper the transverse edges 10 ft. (3 m) to avoid creating a traffic hazard and to produce a smooth surface when removing material at ramp areas and ends of milled sections.

Protect with a temporary asphaltic concrete tie-in (paper joint) vertical edges at other areas such as bridge approach slabs, drainage structures, and utility appurtenances greater than ½ in areas left open to transversing vehicles. Place the temporary tie-in at taper rate of at least 6 to 1 horizontal to vertical distance. Do not micro-mill bridge joints. Damage due to micro-milling will be repaired at the CONTRACTOR's expense and to the satisfaction of the CONSTRUCTION OBSERVER.

Remove dust, residue, and loose milled material from the micro-milled surface. Do not allow traffic on the milled surface and do not place asphaltic concrete on the milled surface until removal is complete.

Measure the milled surface with a 10-foot straightedge at locations determined by the CONSTRUCTION OBSERVER for quality acceptance and acceptance of test section of milling operation. Remove and replace any areas exceeding 1/8 inch RVD, as directed by the CONSTRUCTION OBSERVER at no cost to the Department.

ITEM 400 - EXCAVATION AND BACKFILL FOR STRUCTURES

Cut pavements with the use of a saw as directed. Consider subsidiary to pertinent Items.

Obtain approval of all compaction equipment prior to all backfilling and embankment operations.

Use two (2) inch washed, crushed stone with 0% passing a No. 4 sieve to backfill for bridge ends. Consider subsidiary to the pertinent Items. Provide weep holes out the face of the backwall, as directed.

ITEM 416 – DRILLED SHAFT FOUNDATIONS

Stake all Foundations, for approval, before beginning drilling operations, as directed. Examples of types of foundations are Bridge Supports, Traffic Signal Pole Foundation, Roadway Illumination Assembly Foundations, Sign Support Locations, etc.

Calculate the vertical signal head clearance before placing any Traffic Signal Pole Foundation.

Fabricate roadway illumination assembly foundations in accordance with the City of Georgetown standards GUSL-CF-B or GUSL-CF-BR (for specific installation in rock). Alternate designs to GUSL-CF-BR or GUSL-CF-BR are prohibited.

Obtain approval before placing additional exposed Traffic Pole Foundation.

Set anchor bolts for Mast-Arm Signal Poles and Strain Poles. Set two in tension and two in compression. Obtain approval of anchor bolt placement as directed before placing concrete.

Field cut holes for anchor bolts only as directed.

Remove spoils, daily, out of flood plain, or as directed.

Take cores at the bottom of all drilled shafts supporting a bridge abutment or interior bent in accordance with Item 416.3.2. Drilled shafts under wingwalls are excluded from this requirement.

ITEM 420 – CONCRETE SUBSTRUCTURES

Use Permanent Metal Deck Forms (PMDF) or prestressed concrete panels.

Do not use PMDF in areas where a "Free Joint" is indicated in the plans.

Check the sign plans for locations of clearance signs and brackets on structures, which will require inserts in the pre-stressed beams. Forward such locations to the beam fabricator.

Where Retaining Walls are integral parts of the abutment header, do not place the abutment cap prior to backfilling the wall and the abutment area up to the elevation of the bottom of the abutment cap, unless otherwise directed.

The "H" values shown on bridge layout sheets are estimated column heights. Calculate the actual column heights based on field conditions.

Perform work during good weather unless otherwise directed. If work is performed at CONTRACTOR's option, when inclement weather is impending, and the work is damaged by subsequent precipitation, the CONTRACTOR is responsible for all costs associated with replacing the work, if required.

Williamson County

Project: 1803-219 Southwest Bypass Segment 2

Prior to the completion of work, stencil the National Bridge Inventory (NBI) number (structure number) on each structure built/shown on this project, as directed. Verify with the CONSTRUCTION OBSERVER that the NBI number, which is shown on each Bridge Layout, is the number to use. Stencil the NBI number in an approved location on each bridge. Consider subsidiary to the pertinent Items.

At backwall to cap construction joints, use bonding mortar, grout, or epoxy as a bonding agent.

ITEM 421 – HYDRAULIC CEMENT CONCRETE

Sulfate resistant concrete is not required for any class of concrete.

Over-design requirements for compressive strength are waived for non-structural concrete, as defined in Table 8, Item 421.4.1.

Minimum air-entrainment requirements are waived for all classes of concrete, except for Class S, DC, or CO concrete. For all classes of concrete, except for Class S, P, or CO concrete or non-structural concrete, as defined in Table 8, the entrained air content must not exceed 8% air.

For all non-pavement applications using Class S, or CO concrete, target 5.5% entrained air. If the air content exceeds the target air content by more than 3 percentage points, the load of concrete will be rejected.

ITEM 423 - RETAINING WALLS

Provide Ashlar Stone Finish for all MSE retaining walls. Match aesthetic details of Southwest Bypass: Segment 1 as well as Southwest Bypass and Wolf Ranch Parkway. Do not include Map of Texas emblem unless otherwise directed. Finish subsidiary to retaining wall. Finish subsidiary to this item.

Drill, epoxy, and place #4 bars @ 18 inch centers, as directed, to tie riprap to the coping or anchor slab.

Exposed face of wall, face of coping, and exposed underside of coping shall receive a permanent TY III Anti-Graffiti Coating per Item 740.

Surface area is measured from finished grade at top of wall, including coping, down to the estimated top of footing/bottom of wall.

Immediately backfill the face of the retaining wall after the wall height gets above the final grade in front of the wall.

Do not measure any footing adjustments made to accommodate the available optional designs. Supply the retaining wall fabricators with the drainage plans. Ensure the wall design accommodates the construction of inlets, conduit, and any other large drainage structure as shown on the plans.

Consider any Retaining Wall Light Brackets RW (BL) required for this project subsidiary to pertinent Items.

Use the approved Mechanically Stabilized Earth (MSE) Wall Systems listed on TxDOT's website.

Two (2) feet either side of the width of the leveling pad must be compacted to meet ordinary compaction standards prior to placement of the leveling pad.

Verify each row of panel placement for specification tolerances after backfilling is accomplished and prior to placement of the next row of panels. Correct to within tolerance prior to placing subsequent rows of panels. Notify when a tolerance check is needed.

At no time will the retaining wall backfill material exceed the adjacent embankment operation by more than one embankment lift. At no time will the embankment adjacent to the retaining wall backfill exceed the wall backfill by any elevation.

Build the wall backfill material a minimum of 24 inches horizontally beyond the end of the wall reinforcement. Compact it in accordance with 423.3.

For retaining walls RW-05 and RW-06 in the plans, use TxDOT 2014 Standard Specifications Item 423 type "DS" backfill. For RW-06, any embankment below select fill shall be type "DS" backfill, in lieu of embankment type specified under Item 132. No additional payment will be made, subsidiary to pertinent items.

Particles larger than ¼ inch will be angular or crushed. Rounded rock or gravel will not be allowed.

Williamson County

Project: 1803-219 Southwest Bypass Segment 2

Retaining wall coping placement will be such that the outside face of the wall panels are not offset from the inside face of coping by more than 1½ inches.

Seal all form liner joints, in a manner acceptable to prevent leakage at the surface.

Follow form liner manufacturer's recommended procedures for form liner construction.

The form liner will release clean and free of the concrete, without pulling or breaking concrete from the textured surface.

Provide underdrains as called out in the plans.

ITEM 425 - PRECAST PRESTRESSED CONCRETE STRUCTURAL MEMBERS

Hold a Prephase meeting for the erection of concrete members such as, Precast-Prestressed Concrete Beams and Precast-Prestressed Concrete Panels prior to the work, as directed. Notify the CONSTRUCTION OBSERVER of the meeting at least 24 hours prior.

ITEM 427 - SURFACE FINISHES FOR CONCRETE

All concrete structures, except those with form liner surfaces and those areas designated to receive special surface finishes, shall receive a Surface Area I, rub finish in accordance with this item. Perform an Ordinary Surface Finish to the faces of concrete units, such as Retaining Walls, Inlets, etc., that will have backfill material against them.

Perform the rub finish as soon as possible after form removal. Complete the finish application within 5 calendar days from the pour date. Should the completion of the finish work fall behind, or exceed the 5 day time frame, pours of any additional structures will cease until such time as the surface finish of existing structures is completed.

Consider Surface Finishes for concrete as subsidiary to the pertinent Items.

Follow form liner manufacturer's recommended procedures for form liner construction.

The form liner shall release clean and free of the concrete, without pulling or breaking concrete from the textured surface.

Seal all form liner joints, in a manner acceptable to prevent leakage at the surface.

Perform an Ordinary Surface Finish to the faces of concrete units, such as Retaining Walls, Inlets, etc., that will have backfill material against them.

Perform Low-Pressure water blasting to the concrete surfaces, if forms are not removed in time.

ITEM 431 – PNEUMATICALLY PLACED CONCRETE

This item shall be paid for by the square yard. Basis of estimate is 10% of the rock cut. Final quantities will vary based on field conditions encountered during construction.

Place PPC on unstable rock cuts or existing rock walls as determined and directed by the CONSTRUCTION OBSERVER. Paid for under this item. Incidental surface preparation required prior to placing PPC, including removal of loose rock, considered subsidiary to pertinent items.

Provide 2" thickness and use welded wire fabric unless otherwise directed. Mix design shall conform to Class II. Place anchors as directed. Subsidiary to this item.

Sculpt PPC finish to reproduce the texture and shape of the rock surrounding the PPC. Stain all PPC to match existing rock color patterns. Use white cement to provide better color match if needed, or as directed. Provide 4'x4' test panel for approval by the CONSTRUCTION OBSERVER prior to placing PPC. Subsidiary to this item. Provide additional thickness as needed for sculpting (max 2"). Paid for under this item.

ITEM 432, 462, 465, 466, & 467

Remove all loose Formwork and other Materials from the Floodplain or drainage areas, daily, which could float off in a Storm water Event, as directed.

ITEM 432 - RIPRAP

Fibers for Concrete as defined in DMS-4550 will not be allowed.

Williamson County

Project: 1803-219 Southwest Bypass Segment 2

Make concrete riprap five (4) inches thick unless otherwise noted or directed.

Make all mow strip riprap concrete four (4) inches thick, unless otherwise directed.

Where any proposed riprap joins existing riprap, saw cut the existing riprap and dowel/epoxy #4 bars @ 12 inch centers. Consider subsidiary to the pertinent Items. Consider saw cutting of riprap as subsidiary.

Additional riprap may be required, as determined by the CONSTRUCTION OBSERVER, near the end of project completion due to unanticipated erosion locations. Any additional, approved riprap will be paid for under this item.

All 8" Stone Riprap Protection shall have a thickness of 8" unless otherwise called out in the plans. 8" Stone Riprap Protection shall meet the gradation requirements in the table below unless otherwise approved by the CONSTRUCTION OBSERVER.

Sieve Size	Ty I Percent Retained	Ty II Percent Retained
5"		0
4"		10 - 40
3"		30 – 70
2"	0	60 – 90
1.5"	10 – 40	
1"	30 – 70	100
3/4"	60 - 90	
1/2"	100	

Use mechanically crushed on-site material from excavation activity for 8" Stone Protection Riprap. Stone should vary in size within the limits of the table above (Do not use a single size stone). Adjust stone gradation as directed by the CONSTRUCTION OBSERVER and obtain approval prior to placement. Crushed off-site material may be used if approved. Maintain a uniform aesthetic/color when placing stone riprap as directed. Subsidiary to this item.

Place 8" Stone Riprap Protection as shown on Figure 5 of the SRR standard. Place two layers of woven filter fabric beneath 8" Stone Riprap Protection. Do not place bedding material. Subsidiary to this item.

Ensure stone is free of excess sediment prior to placement. Wash stone prior to placement if directed by the CONSTRUCTION OBSERVER. Subsidiary to this item.

When placing stone, ensure tight interlocking of different stone sizes. Fill voids with smaller stone as directed by the CONSTRUCTION OBSERVER. Subsidiary to this item.

Compact stone riprap within clearzone (TY I) with vibratory drum roller. Other compaction methods must be approved by the CONSTRUCTION OBSERVER. When placing 8" Stone Riprap Protection TY I adjacent to TY D asphalt as shown on the typical sections, ensure any gaps are filled with smaller stone. Sweep stone off pavement surface prior to compacting stone riprap. Provide 50' long by 8.5' wide test strip of compacted TY I riprap for CONSTRUCTION OBSERVER's approval prior to placement on remainder of project and adjust gradation as directed. Subsidiary to this item.

ITEM 454 – BRIDGE EXPANSION JOINTS

Apply protection System II to structural steel armor joint.

For Asphalt-Plug Expansion Joints, refer to TxDOT's website for approved systems.

ITEMS 464, 466, & 467

When RCP or structure is to be placed below finished roadway subgrade and there is less than three (3) feet of fill from top of RCP to finished subgrade elevation, then flowable fill is required, as directed. Payment made under Item 401.

ITEM 466 – HEADWALLS AND WINGWALLS

Use Class C concrete for headwalls or wingwalls.

Williamson County

Project: 1803-219 Southwest Bypass Segment 2

ITEM 467 – SAFETY END TREATMENT

Cut pipe ends, in the field, to match roadway side slopes, or as directed. Apply asphalt base aluminum paint to the cut ends.

All Type II SETs shall have mitered pipe ends and cast-in-place riprap aprons.

ITEM 496 – REMOVING STRUCTURES

Notify CONSTRUCTION OBSERVER at least **30** days prior to Building Demolition that will require a 10-Calendar-Day, Prior-To-Work Notification to Texas Department of State Health Services (DSHS). If the work does not happen on the notified date then another 10-Calendar-Day, Prior-To-Work Notification will be required.

Conduct walk-through of Building with CONSTRUCTION OBSERVER to determine materials/items to be salvaged. Any material/items deemed salvageable shall be removed and stored at a location(s) approved by the CONSTRUCTION OBSERVER. Salvaging material/items shall be subsidiary to pertinent items.

Provide a detailed plan for the removal of the existing structure(s) to include the schedule of removal and list of all equipment to be used.

Removal of Building to include the structure itself, all miscellaneous items within that are not marked salvagable, all items adjacent to the exterior of the building not marked salvageable, any septic system on site, and all incidentals associated with the building. All removals associated with building shall be subsidiary to pertinent items.

The structure or structures to be removed may have surface coatings, which may contain hazardous materials. Provide for the safety and health of employees and abide by all OSHA Standards and Regulations as well as those set by Texas Department of State Health Services (DSHS).

The structural steel to be removed may contain lead paint. Submit a proposed demolition plan for approval by the CONSTRUCTION OBSERVER at least 60 days prior to the desired demolition date. Demolition plan should limit disturbing where lead paint is located when possible. If flame cutting methods will be used and lead paint cannot be avoided, the County will arrange to have the paint removed at the indicated flame-cutting locations. The paint will be removed by a separate contractor for a width of four (4) inches. No paint removal will be required if other demolition methods are employed.

ITEM 502 - BARRICADES, SIGNS, AND TRAFFIC HANDLING

In addition to the traffic control plans and the latest BC standard plan sheets, provide within the limits of the project, standard barricades, warning signs, delineators, lights, 28" cones, and flaggers in sufficient numbers and any combination as considered necessary by the CONSTRUCTION OBSERVER.

Utilize daily lane shifts as needed for the construction of the project. Normal traffic patterns shall be reinstated at the end of each workday. Perform mill and overlay operations during off-peak hours. Peak hours are defined as Monday through Friday: 7am-9am and 4pm-6pm. Ensure safety wedge is in place prior to normal traffic reinstatement.

Place one TY III barricade (8 feet) at each stockpile of material that is placed on the right-of-way and is located within 30 feet of the traveled way.

Furnish advisory speed signs in sufficient number as determined by the CONSTRUCTION OBSERVER.

Furnish sufficient personnel available to revise traffic control as directed by the CONSTRUCTION OBSERVER.

For any roadway drop-off greater than 2 inches adjacent to a roadway which is under traffic, the CONTRACTOR will be required to incorporate and maintain a 3:1 safety wedge into the proposed construction. All work involved shall be considered subsidiary to Item 502.

Provide the CONSTRUCTION OBSERVER a letter certifying that all truck-mounted attenuators (TMA) used on this project that were purchased on or after October 1, 1998, have been found to be crash worthy using the criteria outlined in NCHRP reports 230 or 350.

After completion of the project the CONTRACTOR shall fill any holes left by the barricades or sign supports and restore the area in which the signs were removed to its original condition.

Cover or remove any existing signs which conflict with temporary traffic control operations. Payment shall be considered subsidiary to this item.

Williamson County

Project: 1803-219 Southwest Bypass Segment 2

Ensure all permanent signs and pavement markings are installed before opening that section of roadway to traffic. Consider subsidiary to the pertinent items. Repair or replace any signs which are damaged during construction, or which are deemed insufficient by the CONSTRUCTION OBSERVER.

Repair barricades within 48 hours after barricade report has been delivered.

Refer to the Project Layout and Temporary Erosion Control Plan for Texas Crushed Stone ROW crossing notes.

Coordinate with the CONSTRUCTION OBSERVER for opening of the finished roadway to public traffic.

ITEM 504 - FIELD OFFICE AND LABORATORY
CONTRACTOR may use the I-35 southbound frontage building on the southeastern corner of the project, owned by the City of Georgetown, as the project field office. The City will pay for utilities. Any improvements (HVAC, Roofing, etc.) required in order to utilize the building as a field office are the sole responsibility of the CONTRACTOR.

All requirements under this item are considered subsidiary to pertinent items. Note that this building is to be removed in this project under separate item.

ITEM 506 - TEMPORARY EROSION, SEDIMENTATION, AND ENVIRONMENTAL CONTROLS
Obtain the CONSTRUCTION OBSERVER's approval for proposed methods used for erosion control before starting each phase of construction.

ITEM 512 – PORTABLE CONCRETE TRAFFIC BARRIER
Furnished PCTB may be salvaged in good condition as approved by the CONSTRUCTION OBSERVER.

ITEM 529 – CONCRETE CURB, GUTTER AND COMBINED CURB AND GUTTER
Fibers for concrete as defined in DMS-4550 will not be allowed.

ITEM 540 - METAL BEAM GUARD FENCE
Before beginning the installation of the proposed Metal Beam Guard Fence (MBGF), stake the locations for approval. Adjust the limits of the MBGF to meet field conditions, as directed, before erection.

Furnish new timber posts matching the post type on Southwest Bypass Segment 1 and RM 2243. Refer to Long Span standard for spanning culvert crossings.

Use applicable standard to match the existing RM 2243 metal beam guard fence height. Obtain approval prior to placement. Do not use the older, lower height standards for new metal beam guard fence called out elsewhere in the plans.

Install all permanent MBGF and delineators, when the roadway is constructed in one-half widths, on that section, before opening the road to traffic.

Provide Rail Elements that meet AASHTO M 180 TY I Galvanization (1.80 Oz per SY).

ITEM 550 – CHAIN LINK FENCE
Provide thermally fused PVC coating according to the specifications. Coating shall be black unless otherwise directed by the CONSTRUCTION OBSERVER.

ITEM 552 – WIRE FENCE
Begin installation of barbed wire fence within 30 calendar days of the NTP and complete installation within 60 calendar days of the NTP.

ITEM 556 – PIPE UNDERDRAINS
Filter material will meet the gradation requirements for concrete coarse aggregate (Grade 2, 3, or 4), per Table 4 of TxDOT Item 421.

Williamson County

Project: 1803-219 Southwest Bypass Segment 2

ITEM 585 - RIDE QUALITY FOR PAVEMENT SURFACES

Use Surface Test Type B Pay Schedule 3 to evaluate ride quality of travel lanes and shoulders greater than or equal to 10 ft wide.

The Contractor is responsible for the Surface Testing and the results shall be provided in a simple format by project stationing.

ITEMS 610, 618, 620, 624, 628, 684, & 686

Use materials from prequalified material producers list as shown on the Texas Department of Transportation (TxDOT) – Construction Division's (CST) materials producers list. Refer to TxDOT's website for list of pre-qualified manufacturers. No substitutions will be allowed for materials found on the list.

ITEM 610 – ROADWAY ILLUMINATION ASSEMBLIES

Fabricate steel roadway illumination poles in accordance with TxDOT standards RIP-(1) – RIP-(4) (Roadway Illumination Poles - 2017). Poles fabricated according to RIP-17.

Limitations on Use of the RIP-17 Standard

The Roadway Illumination Pole (RIP-17) standard details were developed for installations in locations where the 3-second gust basic maximum wind speed is 110 mph, and where the elevation of the base of the pole is less than (i.e. not more than) 25' above the elevation of surrounding terrain, in accordance with the "AASHTO Standard Specifications for Structural Supports for Highway Signs, Luminaires and Traffic Signals," 4th Edition (2001) (AASHTO Design Specifications). For poles to be installed in regions where the maximum basic wind speed exceeds 110 mph or to be mounted more than 25' above the surrounding terrain, the contractor shall provide poles meeting the following requirements:

A. Submittals. Following the electronic shop drawing submittal process (see ftp://ftp.dot.state.tx.us/pub/txdot-info/library/pubs/bus/bridge/e_submit_guide.pdf), the contractor shall submit to the Engineer, for approval, fabrication drawings and calculations for the poles. The drawings and calculations shall be sealed by a Texas registered or licensed professional engineer (P.E.).

B. Luminaire Structural Support Requirements. Lighting poles, arms, and anchor bolt assemblies shall have a 25 year design life to safely resist dead loads, ice loads and the required basic wind speeds at the location of installation in accordance with the current edition of the AASHTO Design Specifications. For transformer base poles, the fabricator shall include transformer base and connecting hardware in calculations and shop drawing submittals. All transformer bases shall have been structurally tested to resist the theoretical plastic moment capacity of the pole. Certification of the plastic moment load test and FHWA breakaway requirement test of the model of base being furnished shall be submitted with the shop drawings. Shop drawings shall show breakaway base model number, and manufacturer's name and logo. Manufacturer's shop drawings shall include the ASTM designations for all materials to be used.

Alternate designs to RIP-17 or the use of aluminum to fabricate poles will require the submission of shop drawings. Copies of the standard shop drawings are on file with Traffic Operations Division, Bridge Division, and the Materials Section of Construction Division. Additional shop drawings for roadway illumination assemblies built in conformance with these drawings are not required. Pre-approved shop drawing manufacturers and assembly model numbers can be found on TxDOT's website. Category is "Roadway Illumination and Electrical Supplies."

For both transformer and shoe-base type illumination poles, provide double-pole breakaway fuse holder as shown on the Texas Department of Transportation (TxDOT) – Construction Division's (CST) materials producers list. Category is "Roadway Illumination and Electrical Supplies." Fuse holder is shown on list under Items 610 & 620.

Provide 10-amp time delay fuses.

The local public utility will provide a 240/480-Volt Power Service Drop that will be utilized by the Illumination System installed within the project.

Provide luminaire drivers with a 480-volt operating range.

Maintain all new illumination for the duration of the contract.

Williamson County

Project: 1803-219 Southwest Bypass Segment 2

Place the illumination system in operation after satisfactory completion of the circuit tests. Final acceptance will not be made until the system has operated satisfactorily for a period of at least 14 consecutive days. Consider all repairs and adjustments subsidiary to pertinent Items. Pay for electrical energy during the trial period.

Inspection of all completed work provided in the Contract will be performed. The CONTRACTOR will be released from further maintenance on that project if the work is found to be satisfactory. Partial acceptance will be made and will be in no way void or alter any Items of the contract.

ITEM 618 - CONDUIT

Do not use cast iron junction boxes in concrete bridge rails. Use polymer concrete junction boxes only. Mount the junction boxes flush (+ 0", - ½") with concrete surface of concrete bridge rail.

Use materials from prequalified material producers list as shown on the Texas Department of Transportation (TxDOT) – Construction Division's (CST) materials producers list. Category is "Roadway Illumination and Electrical Supplies."

Consider the polymer concrete barrier boxes subsidiary to ITEM 618, "CONDUIT."

Refer to plans and specifications for type of conduit. Waterproof and tighten all couplings and connections. Bring all proposed and existing conduit into a ground box and 'elbow' it unless otherwise shown on the plans. Provide a bushing to protect the wire from abrasion when a conduit run terminates.

Replace sections of conduit with the size and type shown on the plans in the event the existing conduit proves unusable due to location or damage.

Fit PVC and HDPE conduit terminations with bell ends.

Secure permission from the proper authority, as directed, before cutting into or removing any sidewalks or curbs for installation of this Item.

Saw cut and replace any riprap, which must be removed to install the conduit. Replace riprap with material and texture as directed.

The locations of conduit and ground boxes are diagrammatic and so shift, as directed, to accommodate field conditions.

Install conduit in an area not exceeding two (2) feet in any direction from a straight line with the depth of the conduit at least two (2) feet, unless otherwise shown on the plans. Installation of the conduit by jacking or boring method will be at a depth of at least one (1) foot below the bottom of the base material of the roadway. Evidence of damage to the roadway during the jacking or boring operation will be enough grounds to stop the method being used.

Install conduit on a 2-inch sand cushion and backfill with at least six (6) inches of sand. Backfill the remainder of the trench with flexible base, soil or two-sack concrete as required by the location of the conduit or as directed.

Install underground conduits within a concrete encasement for all illumination conduits routed directly under a proposed roadway. Bore all illumination conduits routed directly under an existing roadway.

Consider all conduit elbows and rigid metal extensions required to be installed on PVC conduit systems subsidiary.

Install a high tension, non-metallic pull rope in all conduit runs. The pull ropes are for future use. Cap all empty conduit runs using standard weather tight conduit caps as directed. Consider this work subsidiary to the pertinent Item.

Install a continuous bare or green insulated copper wire No. 8 AWG or larger in every conduit throughout the electrical system including installed loop detectors and traffic signal cables which are in conformance with the Electrical Detail Standard Sheets and the latest edition of the National Electrical Code (NEC).

Placement of conduit under the existing pavement using the open trench method will not be allowed without prior approval.

Seal all conduit ends with a permanently soft, non-toxic duct seal. The duct seal must not adversely affect plastic materials or corrode metals.

Williamson County

Project: 1803-219 Southwest Bypass Segment 2

Use a coring device when drilling holes through concrete structures. Do not use masonry or concrete drills, unless otherwise approved.

Use conduit hangers for three (3) inch and larger conduit when hanging conduit from structures. Conduit hangers shall be used for all conduits prohibited from being embedded within bridge structure and routing across the bridge structure.

Existing conduit may be proposed for reuse in this project. If the existing conduit cannot be used to place or add new electrical conductors, repair or replace this conduit, as directed. Repair of the conduit will be paid as "Extra Work" on a "Force Account" basis. Probe the existing conduit when locating drill shafts so that the existing conduit's location will be known before it is needed.

When using existing conduit, ensure that all conduits have bushings and are cleaned of dirt, mud, grease, and other debris. Restrap conduit that is being relocated to new timber poles as if it were a new installation. Consider this work subsidiary to this Item.

Consider all fittings, brackets, and junction boxes necessary to complete the installations subsidiary to the pertinent Items.

ITEM 620 – ELECTRICAL CONDUCTORS

For both transformer and shoe-base type illumination poles, provide double-pole breakaway fuse holder from manufacturers pre-qualified by the Traffic Operations Division. Fuse holder is shown on the producer list under Items 610 & 620.

Provide and install approved 10-amp time delay fuses.

Provide breakaway disconnects in all breakaway poles. Use Bussman HEBW, Littelfuse LEB, Ferraz-Shawmut FEB, or equal on ungrounded conductors. For all grounded conductors use Bussman HET, Littelfuse LET, Ferraz-Shawmut FEBN, or equal. These breakaway connectors have a white colored marking and a permanently installed solid neutral.

Install a minimum size 8 AWG equipment grounding conductor (EGC) in all conduits including loop detectors and traffic signal cables. Payment and the size of the EGC will be in accordance with standard ED (3)-14, note 12.

Clearly and permanently, mark "Illumination" on the Illumination Conductors installed in a Signal Mast-Arm Pole or Strain Pole. Make the marks easily visible from the hand hole.

Identify the conductors as shown on the Electrical Details Standard Sheets when two or more conductors are present in one conduit or enclosure. Use identification tag with two plastic straps. Each tag will indicate circuit number, letter, or other identification as shown on the plans.

Bond grounding conductors, which share the same conduit, junction box or structures, together at every accessible point, in accordance with the Electrical Detail Standard Sheets and the latest edition of the National Electrical Code (NEC).

All wiring will be in accordance with the National Electrical Code (NEC) and the appropriate Department standard sheets.

ITEM 628 – ELECTRICAL SERVICES

The service enclosure provided in this contract will have provisions for pad locking the enclosure shut.

The traffic signal system will require 120/240-Volt Power Service provided by the Local Electric Utility Company. CONTRACTOR shall make all arrangements for power.

The illumination system will require 240/480-Volt Power Service provided by the Local Electric Utility Company. CONTRACTOR shall make all arrangements for power.

Williamson County

Project: 1803-219 Southwest Bypass Segment 2

ITEM 644 – SMALL ROADSIDE SIGN ASSEMBLIES
Fabricate all small signs not detailed on the plans in conformance with the latest edition of the "Standard Highway Sign Designs for Texas," refer to TxDOT's website.

ITEM 662 – WORK ZONE PAVEMENT MARKINGS
Notify the CONSTRUCTION OBSERVER at least 24 hours in advance of removing existing striping and placing pavement markings & markers.

Apply markings during good weather unless otherwise directed. If markings are placed at CONTRACTOR's option, when inclement weather is impending, and the markings are damaged by subsequent precipitation, the CONTRACTOR is responsible for all costs associated with replacing the markings if required.

Remove work zone pavement markings within 48 hours after permanent striping has been completed.

Foil backed pavement markings will not be allowed.

ITEM 666 – RETROREFLECTORIZED PAVEMENT MARKINGS
Reference existing channel islands, gores, and lane striping before commencing work. Provide referencing that will include a sketch of the layout to the CONSTRUCTION OBSERVER. Obtain approval for placement of guidemarks from the CONSTRUCTION OBSERVER before installing any permanent pavement markings. Consider subsidiary to the pertinent Items.

ITEM 672 – RAISED PAVEMENT MARKERS
Place the bituminous adhesive at a temperature range of 380°F to 390°F. Place the pavement marker on the bituminous adhesive within approximately 20 seconds after the adhesive is placed on the pavement. Ensure the pavement marker rests solely on the adhesive and not the pavement surface. Ensure that a minimum of ⅛ inch layer of bituminous adhesive remains between the pavement marker and the pavement surface.

ITEM 677 – ELIMINATE EXISTING PAVEMENT MARKINGS AND MARKERS
Use flail milling methods only unless otherwise approved by the CONSTRUCTION OBSERVER. Mill minimum width necessary for complete removal of the existing markings. Place 30 Mil (min) black thermoplastic over all areas that are flail milled. The black thermoplastic must meet the specifications of Item 666. Thermoplastic considered subsidiary to this item.

ITEM 680 – HIGHWAY TRAFFIC SIGNALS
Install all of the materials necessary for a complete signal system as follows:

Provide a 7 day advance notice to the Austin District Signal Shop at (512) 832-7012, and the Georgetown/Williamson County Area Office (512) 930-5402 before beginning any work involving traffic signals.

Provide a 14 day advance notice to the City of Georgetown (512) 930-8151 before beginning any work involving traffic signals.

Furnish all materials, tools, and labor required to provide a completed installation in accordance with the plans and specifications. Furnished materials provided by the CONTRACTOR will be new undepreciated stock.

Place the traffic signal into operation after the entire traffic signal has been completed, all required striping is complete, and all conflicting signing is removed. The responsible Signal Shop will be present to program the controller and assist with detection setup.

Install 250W EQ LED illumination fixtures as shown in the plans. Test in accordance with Item 616. This work is subsidiary.

Furnish and install permanent signs mounted on the traffic signal poles. Furnish all hardware for installation. Consider all costs associated with the furnishing and installation of the permanent signs and the necessary hardware subsidiary to the pertinent Items.

Williamson County

Project: 1803-219 Southwest Bypass Segment 2

After the completion of the entire signal installation (including striping), a 30-day test period begins. After it has been determined, by the County, that the field wiring and controller operation are satisfactory after this test period, and all other requirements of the project have been met, the County will relieve the CONTRACTOR of any other responsibilities for the operation of the signal.

Use qualified personnel to respond to and diagnose all trouble calls during the thirty-day test period. Repair any malfunction to Contractor-supplied signal equipment. Provide to the CONSTRUCTION OBSERVER a local telephone number, not subject to frequent changes and available on a 24-hour basis, for reporting trouble calls. Response time to reported calls must be less than 2 hours. Make appropriate repairs within 24 hours. Place a logbook in the controller cabinet and keep a record of each trouble call reported. Notify the CONSTRUCTION OBSERVER of each trouble call. Do not clear the error log in the conflict monitor during the thirty-day test period without the approval of the CONSTRUCTION OBSERVER.

Remove the existing stop sign panels (or assemblies) after the traffic signals are in operation.

Notify the CONSTRUCTION OBSERVER one (1) week before beginning any work involving traffic signals.

ITEM 682 – VEHICLE AND PEDESTRIAN SIGNAL HEADS

Install signal head attachments so the wiring to each passes from the signal pole through the attachment hardware to the signal head. Refer to District Standard for more conductor attachment information. Attachment methods not shown on the district standard are to be approved by the Construction Observer before work begins. Use UV rated tie wraps.

Ensure the signal heads are made of aluminum and are hooded and covered until the signal system is put into operation.

Each signal head will be one-way with the proper number of sections shown on the plans. Each head color will be bright yellow (Federal Yellow #13538 of Federal Standard 595). The inside of the visors will have a flat black finish.

Installed traffic signal heads within the project will have backplates unless otherwise shown on the plans. Backplates will be black aluminum.

Provide pedestrian signal head assemblies, which have a flush “egg-crated” or “Z” pattern visor for all lamps, and a one-piece reflector assembly for incandescent lamps only.

Provide louvers, which have five (5) vanes with a black finish on inside surfaces when required within the project. Fasten a hardware cloth screen, securely, with ⅝" or smaller mesh size to the front face of each louver to prevent entry by birds.

Mount signal heads level and plumb as directed.

Replace, at Contractor’s expense, all burned out or defective lamps for a period of four (4) weeks from the date of the initial turn on. At the end of this 4-week period, the Construction Observer will relieve the Contractor of any maintenance of this portion of the signal system.

Use the four point mounting system (TY A) for signal heads, except in cases of skewed or vertical heads when (TY B) will be used.

Place LED’s at the proper angle with the ground. The wording “top” or the “up arrow” indicates the proper fixed alignment within the signal head. Hang the head parallel to the ground once attached and not angled down as with incandescent heads. Ensure the signal head to be level and within tolerances. LED’s are designed to direct the indication towards the roadway surface. Variance in head leveling will cause the LED indication to appear dim during slight movement. Ensure each LED head to be properly leveled and sight tested before final acceptance.

ITEM 684 – TRAFFIC SIGNAL CABLES

Leave at least two (2) feet for each cable run in each pull box and leave at least two (2) feet in each steel pole in addition to the required length for each separate cable. Provide an extra five (5) feet of each conductor terminating in the controller cabinet. Ensure conductors are continuous without splice from terminal point to terminal point or as directed. Do not use wire nuts.

Williamson County

Project: 1803-219 Southwest Bypass Segment 2

ITEM 685 - ROADSIDE FLASHING BEACON ASSEMBLIES
Sign considered subsidiary to flashing beacon assembly.

ITEM 686 – TRAFFIC SIGNAL POLE ASSEMBLIES (STEEL)
Provide and install damping plates on all mast arms of 40 ft. and over. For mast arms less than 40 ft., refer to SMA and DMA Vibration Notes for guidance. Consider the cost for the provision and installation of damping plates as subsidiary to the various bid Items found within this project.

Provide double nuts on top and bottom of the base plate as shown on the standards.

Provide signal pole assemblies as shown on plans. Luminaire lamps and the installation of the arms and lamps are considered subsidiary to the pertinent Items.

When luminaires are to be installed on mast arm poles, provide a separate terminal strip in the signal pole access compartment. The terminal strip shall be a 4-circuit Buchanan-Type 104SN, Kulka-Type 985-GP-4 CU, or equivalent.

Provide a 10-amp time-delay fuse for traffic signal poles onto which luminaires are to be installed. Place the fuse in the fuse block indicated within note #4 found on State standard MA-D-12.

Furnish mast arms to the City of Georgetown for future installation, as noted in the plans.

ITEM 730 – ROADSIDE MOWING
Perform roadside mowing along the Roadway for the length of the project, as directed.

Complete spot mowing, as directed.

ITEM 734 – LITTER REMOVAL
Litter Removal, as defined below, is subsidiary to Roadside Mowing.

Complete Litter Removal Cycles along the Roadway for the length of the project, as directed.

Complete Litter Removal cycles prior to any mowing cycles.

Remove all litter on the right of way, within project limits.

ITEM 738 – CLEANING AND SWEEPING HIGHWAYS
Complete cleaning and sweeping cycles at regular intervals, as directed. Complete one cycle at the end of construction and prior to final acceptance. Subsidiary to pertinent items.

ITEM 6090 – LED INTERNALLY ILLUMINATED STREET NAME SIGNS
Coordinate with City of Georgetown for fabrication of Internally Illuminated Street Name Signs.

S2 RC – ROCK CUT
Place PPC on unstable areas as determined and directed by the CONSTRUCTION OBSERVER. Paid for under Item 431, “Pneumatically Placed Concrete”.

Refer to the “BLASTING” section of the general notes for notes pertaining to blasting activities.

Alternate methods to achieve a smooth rock face must be approved by the CONSTRUCTION OBSERVER and will be subject to site testing sufficient to substantiate the method to the satisfaction of the CONSTRUCTION OBSERVER prior to implementation. No additional payment will be made for alternate methods.

S2 GA - GATE ATTENDANT
Provide 2 (two) full time gate attendants, one located at the project entrance at RM 2243 and the other at the Segment 1 I-35 SBFR entrance, during working hours for the duration of the project, or as directed by the CONSTRUCTION OBSERVER. Gate attendants shall keep a log of all personnel and vehicles entering and exiting the site. Gate attendants shall be paid for by the hour. Contract assumes 10 hours per workday (5,600 total hours).

Williamson County

Project: 1803-219 Southwest Bypass Segment 2

ALT BID 1 – RETAINING WALL RW-06

If the CONSTRUCTION OBSERVER directs the CONTRACTOR not to build Alt Bid 1, omit Sheets 22, 78, 113, and 114 from the plan set. Deduct the quantities listed on Sheet 22 from the contract.

The list of material below is for the CONTRACTOR's information only.

It is the responsibility of the CONTRACTOR to verify all items and quantities listed below.

LIST OF MATERIAL/LABOR
SUBSIDIARY TO ITEM 680

DESCRIPTION	UNIT	QUANTITY
TRAFFIC SIGNAL CONTROLLER FOUNDATION	EA	1
LED LUMINAIRE	EA	4
R9-3 (18" x 18")	EA	4

[SOUTHWEST BYPASS: SEGMENT 2]
WILLIAMSON COUNTY
GOVERNING SPECIFICATIONS
(STANDARD SPECIFICATIONS, SPECIAL PROVISIONS, AND SPECIAL SPECIFICATIONS)

WHERE DISCREPENCIES OCCUR BETWEEN THE VARIOUS GOVERNING SPECIFICATIONS, THE SPECIAL PROVISIONS SHALL GOVERN OVER BOTH STANDARD SPECIFICATIONS AND SPECIAL SPECIFICATIONS.

ALL SPECIFICATIONS AND SPECIAL PROVISIONS APPLICABLE TO THIS PROJECT ARE IDENTIFIED AS FOLLOWS:

STANDARD SPECIFICATIONS: ADOPTED BY THE TEXAS DEPARTMENT OF TRANSPORTATION NOVEMBER 1, 2014. STANDARD SPECIFICATIONS ARE INCORPORATED INTO THE CONTRACT BY REFERENCE.

< > REFERNCE ITEMS NOT USED ON THIS CONTRACT
( ) REFERENCE ITEMS USED ON THIS CONTRACT

ITEMS 1 - 9 ARE SUPERSEDED BY THE CONTRACT GENERAL AND SPECIAL CONDITIONS, WHERE APPLICABLE. WHEREVER, IN THE TXDOT STANDARD SPECIFICATIONS, REFERENCE IS MADE TO THE STATE OF TEXAS, THE DEPARTMENT AND ITS REPRESENTATIVES, SUCH REFERENCE SHALL BE TAKEN TO MEAN WILLIAMSON COUNTY AND ITS REPRESENTATIVES.

ITEM 100 PREPARING RIGHT OF WAY
ITEM 104 REMOVING CONCRETE
ITEM 105 REMOVING TREATED AND UNTREATED BASE AND ASPHALT PAVEMENT
ITEM 110 EXCAVATION (132)
ITEM 132 EMBANKMENT (100) (132) <204> <210> <216> (400)
ITEM 160 TOPSOIL
ITEM 161 COMPOST
ITEM 164 SEEDING FOR EROSION CONTROL
ITEM 168 VEGETATIVE WATERING
ITEM 169 SOIL RETENTION BLANKETS
ITEM 247 FLEXIBLE BASE (105) <204> <210> <216>
ITEM 310 PRIME COAT <300> <316>
ITEM 340 DENSE-GRADED HOT-MIX ASPHALT (SMALL QUANTITY) <300> <320> <520> (585)
ITEM 341 DENSE-GRADED HOT-MIX ASPHALT <300> <320> <520> (585)
ITEM 354 PLANING AND TEXTURING PAVEMENT
ITEM 400 EXCAVATION AND BACKFILL FOR STRUCTURES (110) (132) <421> (423)
ITEM 416 DRILLED SHAFT FOUNDATIONS <405> (420) <421> <440> <448>
ITEM 420 CONCRETE STRUCTURES (400) <421> <427> <440> <441> <448>
ITEM 422 CONCRETE SUPERSTRUCTURES (420) <421> <422> <424> <438> <440> <780>
ITEM 423 RETAINING WALLS (110) (132) <216> (400) (420) <421> <424> <440> <445> <458> (556)
ITEM 425 PRECAST PRESTRESSED CONCRETE STRUCTURAL MEMBERS (420) <421> <424> <426> <427> <434> <440> <442> <445> <448>
ITEM 431 PNEUMATICALLY PLACED CONCRETE (420) <421> <440>
ITEM 432 RIPRAP (420) <421> <440>
ITEM 450 RAILING (420) <421> (422) <424> <427> <440> <442> <445> <540>
ITEM 454 BRIDGE EXPANSION JOINTS <442>
ITEM 464 REINFORCED CONCRETE PIPE (400) (467)
ITEM 466 HEADWALLS AND WINGWALLS (400) (420) <421> (432) <440> (464)
ITEM 467 SAFETY END TREATMENT (400) (420) <421> (432) <442> <440> <445> <462> <464>
ITEM 496 REMOVING STRUCTURES

ITEM 500	MOBILIZATION
ITEM 502	BARRICADES, SIGNS AND TRAFFIC HANDLING
ITEM 506	TEMPORARY EROSION, SEDIMENTATION, AND ENVIRONMENTAL CONTROLS
ITEM 512	PORTABLE CONCRETE TRAFFIC BARRIER (420) <421> <424> <440> <442>
ITEM 529	CONCRETE CURB, GUTTER AND COMBINED CURB AND GUTTER (420) <421> <440>
ITEM 540	METAL BEAM GUARD FENCE <421> <441> <445> (529)
ITEM 544	GUARDRAIL END TREATMENTS
ITEM 550	CHAIN LINK FENCE <421> <445>
ITEM 552	WIRE FENCE <445>
ITEM 556	PIPE UNDERDRAINS
ITEM 610	ROADWAY ILLUMINATION ASSEMBLIES (416) <421> (432) <441> <442> <445> <449> <616> (618) (620) (624) (628)
ITEM 618	CONDUIT (400) <476>
ITEM 620	ELECTRICAL CONDUCTORS
ITEM 624	GROUND BOXES (420) <421> (432) <440> (618) (620)
ITEM 628	ELECTRICAL SERVICES <441> <445> <449> (618) (620) <627> <656>
ITEM 644	SMALL ROADSIDE SIGN ASSEMBLIES <421> <440> <441> <442> <445> <636> <643> <656>
ITEM 658	DELINEATOR AND OBJECT MARKER ASSEMBLIES <445>
ITEM 666	REFLECTORIZED PAVEMENT MARKINGS (677) <678>
ITEM 672	RAISED PAVEMENT MARKERS (677) <678>
ITEM 677	ELIMINATING EXISTING PAVEMENT MARKINGS AND MARKERS <300> <302> <316>
ITEM 680	HIGHWAY TRAFFIC SIGNALS (416) (610) (618) (620) (624) <625> (628) <636> <656> (682) (684) (686)
ITEM 682	VEHICLE AND PEDESTRIAN SIGNAL HEADS
ITEM 684	TRAFFIC SIGNAL CABLES
ITEM 685	ROADSIDE FLASHING BEACON ASSEMBLIES <441> <442> <445> <449> <656> <687>
ITEM 686	TRAFFIC SIGNAL POLE ASSEMBLIES (STEEL) (416) <421> <441> <442> <445> <449>
ITEM 690	MAINTENANCE OF TRAFFIC SIGNALS (416) <421> <476> (610) (618) (620) (624) <625> (628) <636> <656> (680) (682) (684) (685) (686)
ITEM 740	GRAFFITI REMOVAL AND ANTI-GRAFFITI COATING <427>

SPECIAL PROVISIONS: THE CONTENT OF THE SPECIAL PROVISIONS ARE INCLUDED ON THE FOLLOWING PAGES.

SP 000-001	SCHEDULE OF LIQUIDATED DAMAGES
SP 002-WC1	RIGHT OF WAY IMPORTANT NOTICE TO CONTRACTORS
SP 500-WC01	MOBILIZATION
SP 502-WC01	BARRICATEDS, SIGNS, AND TRAFFIC HANDLING
SP 506-WC001	TEMPORARY EROSION, SEDIMENTATION, AND ENVIRONMENTAL CONTROLS

SPECIAL SPECIFICATIONS: THE CONTENT OF THE SPECIAL SPECIFICATIONS ARE INCLUDED ON THE FOLLOWING PAGES.

SS 6090	LED INTERNALLY ILLUMINATED STREET NAME SIGNS <445> <446> (618) (620)
SS S2 BD	<621> BOULDER DELINEATION
SS S2 GA	GATE ATTENDANT
SS S2 RC	ROCK CUT (110) (431)
SS WC101	SOIL RIPPING (160-WC001) (161-WC001) (164-WC001) (506-WC001) <WC102>
SS WC102	MULCH (161-WC001) (506-WC001)

GENERAL: THE ABOVE-LISTED SPECIFICATION ITEMS ARE THOSE UNDER WHICH PAYMENT IS TO BE MADE. THESE, TOGETHER WITH SUCH OTHER PERTINENT ITEMS, IF ANY, AS MAY BE REFERRED TO IN THE ABOVE-LISTED SPECIFICATION ITEMS, AND INCLUDING THE SPECIAL PROVISIONS AND SPECIAL SPECIFICATIONS LISTED ABOVE, CONSTITUTE THE COMPLETE SPECIFICATIONS FOR THIS PROJECT.

Special Provision to Item 000
Schedule of Liquidated Damages

Table1
Schedule of Liquidated Damages

For Dollar Amount of Original Contract		Dollar Amount of Daily Contract Administration Liquidated Damages per Working Day
From More Than	To and Including	
0	100,000	**570**
100,000	500,000	**590**
500,000	1,000,000	**610**
1,000,000	1,500,000	**685**
1,500,000	3,000,000	**785**
3,000,000	5,000,000	**970**
5,000,000	10,000,000	**1125**
10,000,000	20,000,000	**1285**
20,000,000	Over 20,000,000	**2590**

Special Provision 002—WC1
Right Of Way Important Notice to Contractors

The Contractor's attention is directed to the fact that there may be some outstanding right of way approvals as of April 2018 required for the construction of this project. The County anticipates that these approvals will be completed as shown.

For the Contractor's information, the following is a list of all tracts of right of way required for the construction of the project. The Contractor is invited to review the outstanding approval with the Engineer assigned to this project and listed in the "Notice to Contractors." An extension of work time may be granted, as necessary, for delays caused by interference with approvals beyond the estimated dates of clearance.

The following right of way tracts are to be approved as shown. The approximate location is based on the project centerline/baseline stationing.

PARCEL	OWNER	RT/LT OF CL	APPROX. LOCATION	ESTIMATED DATE OF APPROVAL
RM 2243	TxDOT		Approval required for all work inside TxDOT ROW along RM2243	Approval 10/01/2018

Special Provision to Item 500
Mobilization

Item 500, "Mobilization," of the Standard Specifications is amended with respect to the clauses cited below. No other clauses or requirements of this Item are waived or changed.

Article 500.3., "Payment." The 6th and 7th bullet is deleted and replaced by the following:

- Upon Final Completion, 97% of the mobilization lump sum bid will be paid. Previous payments under this Item will be deducted from this amount, and

- Payment for the remainder of the lump sum bid for "Mobilization" will be made with the Final Payment after all submittals are received, final quantities have been determined, and when any separate vegetative establishment and maintenance, test, and performance periods provided for in the Contract have been successfully completed and the County has issued the Certificate of Acceptance.

Special Provision to Item 502
Barricades, Signs, and Traffic Handling

For this project, Item 502, "Barricades, Signs, and Traffic Handling," of the Standard Specifications is amended with respect to the clauses cited below. No other clauses or requirements of this Item are waived or changed.

Article 502.4.1.3., "Maximum Total Payment Prior to Acceptance" is voided and replaced by the following:

> **Maximum Total Payment Prior to Completion.** The total payment for this Item will not exceed 10% of the total Contract amount before final completion in accordance with General Conditions of Agreement, Section 5.06, "Final Completion and Acceptance." The remaining balance will be paid in accordance with Section 502.4.1.5, "Balance Due."

Article 502.4.1.5., "Balance Due" is voided and replaced by the following:

> **Balance Due.** If all work is complete in accordance with General Conditions of Agreement, Section 5.06, "Final Completion and Acceptance," before payment of the amount allowed by this Article, the balance due will be paid with the Final Payment.

Special Provision 506-WC001

Temporary Erosion, Sedimentation, and Environmental Controls

For this project, Item 506, "Temporary Erosion, Sedimentation, and Environmental Controls," of the Standard Specifications, is hereby voided and replaced with the following.

PART 1 – GENERAL

1.1 DESCRIPTION

Install, maintain, and remove erosion, sedimentation, and environmental control measures to prevent or reduce the discharge of pollutants in accordance with the Storm Water Pollution Prevention Plan (SW3P) in the plans and the Texas Pollutant Discharge Elimination System (TPDES) General Permit TXR150000.

1.2 MEASUREMENT

A. Rock Filter Dams

Installation or removal of rock filter dams will be measured by the foot or by the cubic yard. The measured volume will include sandbags when used.

1. Linear Measurement

When rock filter dams are measured by the foot, measurement will be along the centerline of the top of the dam.

2. Volume Measurement

When rock filter dams are measured by the cubic yard, measurement will be based on the volume of rock computed by the method of average end areas.

a. Installation: Measurement will be made in final position.

b. Removal: Measurement will be made at the point of removal.

B. Temporary Pipe Slope Drains

Temporary pipe slope drains will be measured by the foot.

C. Temporary Paved Flumes

Temporary paved flumes will be measured by the square yard of surface area. The measured area will include the energy dissipater at the flume outlet.

D. Construction Exits

Construction exits will be measured by the square yard of surface area.

E. Earthwork for Erosion and Sediment Control

1. Equipment and Labor Measurement

   Equipment and labor used will be measured by the actual number of hours the equipment is operated and the labor is engaged in the work.

2. Volume Measurement

   a. In Place

      i. Excavation

         Excavation will be measured by the cubic yard in its original position and the volume computed by the method of average end areas.

      ii. Embankment

         Embankment will be measured by the cubic yard in its final position by the method of average end areas. The volume of embankment will be determined between:

         - the original ground surfaces or the surface upon that the embankment is to be constructed for the feature and
         - the lines, grades, and slopes of the accepted embankment for the feature.

   b. In Vehicles

      Excavation and embankment quantities will be combined and paid for under "Earthwork (Erosion and Sediment Control, In Vehicle)." Excavation will be measured by the cubic yard in vehicles at the point of removal. Embankment will be measured by the cubic yard in vehicles measured at the point of delivery. Shrinkage or swelling factors will not be considered in determining the calculated quantities.

F. Construction Perimeter Fence

   Construction perimeter fence will be measured by the foot.

G. Sandbags for Erosion Control

   Sandbags will be measured as each sandbag or by the foot along the top of sandbag berms or dams.

H. Temporary Sediment-Control Fence

   Installation or removal of temporary sediment-control fence will be measured by the foot.

I. Biodegradable Erosion Control Logs

   Installation or removal of biodegradable erosion control logs will be measured by the foot along the centerline of the top of the control logs.

J. Vertical Tracking

   Vertical tracking will not be measured or paid for directly, but is considered subsidiary to this Item.

1.3 PAYMENT

The following will not be paid for directly, but are subsidiary to pertinent Items:

- erosion-control measures for Contractor project-specific locations (PSLs) inside and outside the right-of-way (such as construction and haul roads, field offices, equipment and supply areas, plants, and material sources);

- removal of litter, unless a separate pay item is shown on the plans;
- repair to devices and features damaged by Contractor operations;
- added measures and maintenance needed due to negligence, carelessness, lack of maintenance, and failure to install permanent controls;
- removal and reinstallation of devices and features needed for the convenience of the Contractor;
- finish grading and dressing upon removal of the device; and
- minor adjustments including, but not limited to plumbing posts, reattaching fabric, minor grading to maintain slopes on an erosion embankment feature, or moving small numbers of sandbags.

Stabilization of disturbed areas will be paid for under pertinent Items.

Furnishing and installing pipe for outfalls associated with sediment traps and ponds will not be paid for directly, but is subsidiary to the excavation and embankment under this Item.

A. Rock Filter Dams

The work performed and materials furnished in accordance with this Item and measured as provided under "Measurement" will be paid for at the unit price bid as follows:

1. Installation

Installation will be paid for as "Rock Filter Dams (Install)" of the type specified. This price is full compensation for furnishing and operating equipment, finish backfill and grading, lacing, proper disposal, labor, materials, tools, and incidentals.

2. Removal

Removal will be paid for as "Rock Filter Dams (Remove)." This price is full compensation for furnishing and operating equipment, proper disposal, labor, materials, tools, and incidentals.

When the Owner directs that the rock filter dam installation or portions thereof be replaced, payment will be made at the unit price bid for "Rock Filter Dams (Remove)" and for "Rock Filter Dams (Install)" of the type specified. This price is full compensation for furnishing and operating equipment, finish backfill and grading, lacing, proper disposal, labor, materials, tools, and incidentals.

B. Temporary Pipe Slope Drains

The work performed and materials furnished in accordance with this Item and measured as provided under "Measurement" will be paid for at the unit price bid for "Temporary Pipe Slope Drains" of the size specified. This price is full compensation for furnishing materials, removal and disposal, furnishing and operating equipment, labor, tools, and incidentals.

Removal of temporary pipe slope drains will not be paid for directly, but is subsidiary to the installation Item. When the Owner directs that the pipe slope drain installation or portions thereof be replaced, payment will be made at the unit price bid for "Temporary Pipe Slope Drains" of the size specified, which is full compensation for the removal and reinstallation of the pipe drain.

Earthwork required for the pipe slope drain installation, including construction of the sediment trap, will be measured and paid for under "Earthwork for Erosion and Sediment Control."

Riprap concrete or stone, when used as an energy dissipater or as a stabilized sediment trap, will be measured and paid for in accordance with Item 432, "Riprap."

C. Temporary Paved Flumes

The work performed and materials furnished in accordance with this Item and measured as provided under "Measurement" will be paid for at the unit price bid for "Temporary Paved Flume (Install)" or "Temporary Paved Flume (Remove)." This price is full compensation for furnishing and placing materials, removal and disposal, equipment, labor, tools, and incidentals.

When the Owner directs that the paved flume installation or portions thereof be replaced, payment will be made at the unit prices bid for "Temporary Paved Flume (Remove)" and "Temporary Paved Flume (Install)." These prices are full compensation for the removal and replacement of the paved flume and for equipment, labor, tools, and incidentals.

Earthwork required for the paved flume installation, including construction of a sediment trap, will be measured and paid for under "Earthwork for Erosion and Sediment Control."

D. Construction Exits

Contractor-required construction exits from off right-of-way locations or on right-of-way PSLs will not be paid for directly, but are subsidiary to pertinent Items.

The work performed and materials furnished in accordance with this Item and measured as provided under "Measurement" for construction exits needed on right-of-way access to work areas required by the Owner will be paid for at the unit price bid for "Construction Exits (Install)" of the type specified or "Construction Exits (Remove)." This price is full compensation for furnishing and placing materials, excavating, removal and disposal, cleaning vehicles, labor, tools, and incidentals.

When the Owner directs that a construction exit or portion thereof be removed and replaced, payment will be made at the unit prices bid for "Construction Exit (Remove)" and "Construction Exit (Install)" of the type specified. These prices are full compensation for the removal and replacement of the construction exit and for equipment, labor, tools, and incidentals.

Construction of sediment traps used in conjunction with the construction exit will be measured and paid for under "Earthwork for Erosion and Sediment Control."

E. Earthwork for Erosion and Sediment Control

1. Initial Earthwork for Erosion and Sediment Control

The work performed and materials furnished in accordance with this Item and measured as provided under "Measurement" will be paid for at the unit price bid for "Excavation (Erosion and Sediment Control, In Place)," "Embankment (Erosion and Sediment Control, In Place)," "Excavation (Erosion and Sediment Control, In Vehicle)," "Embankment (Erosion and Sediment Control, (In Vehicle)," or "Earthwork (Erosion and Sediment Control, In Vehicle)."

This price is full compensation for excavation and embankment, including hauling, disposal of material not used elsewhere on the project; embankments, including furnishing material from approved sources and construction of erosion-control features; and equipment, labor, tools, and incidentals.

Sprinkling and rolling required by this Item will not be paid for directly, but will be subsidiary to this Item.

2. Maintenance Earthwork for Erosion and Sediment Control for Cleaning and Restoring Control Measures

The work performed and materials furnished in accordance with this Item and measured as provided under "Measurement" will be paid under a Contractor Force Account Item from invoice provided to the Owner.

This price is full compensation for excavation, embankment, and re-grading, including removal of accumulated sediment in various erosion control installations as directed, hauling, and disposal of material not used elsewhere on the project, excavation for construction of erosion-control features, embankments, including furnishing material from approved sources and construction of erosion-control features, and equipment, labor, tools, and incidentals.

Earthwork needed to remove and obliterate erosion-control features will not be paid for directly, but is subsidiary to pertinent Items unless otherwise shown on the plans.

Sprinkling and rolling required by this Item will not be paid for directly, but will be subsidiary to this Item.

F. Construction Perimeter Fence

The work performed and materials furnished in accordance with this Item and measured as provided under "Measurement" will be paid for at the unit price bid for "Construction Perimeter Fence." This price is full compensation for furnishing and placing the fence, digging, fence posts, wire, and flagging, removal and disposal, and materials, equipment, labor, tools, and incidentals.

Removal of construction perimeter fence will be not paid for directly, but is subsidiary to the installation Item. When the Owner directs that the perimeter fence installation or portions thereof be removed and replaced, payment will be made at the unit price bid for "Construction Perimeter Fence," which is full compensation for the removal and reinstallation of the construction perimeter fence.

G. Sandbags for Erosion Control

Sandbags will be paid for at the unit price bid for "Sandbags for Erosion Control" (of the height specified when measurement is by the foot). This price is full compensation for materials, placing sandbags, removal and disposal, equipment, labor, tools, and incidentals.

Removal of sandbags will not be paid for directly but is subsidiary to the installation Item. When the Owner directs that the sandbag installation or portions thereof be replaced, payment will be made at the unit price bid for "Sandbags for Erosion Control," which is full compensation for the reinstallation of the sandbags.

H. Temporary Sediment-Control Fence

The work performed and materials furnished in accordance with this Item and measured as provided under "Measurement" will be paid for at the unit price bid as follows:

1. Installation

Installation will be paid for as "Temporary Sediment-Control Fence (Install)." This price is full compensation for furnishing and operating equipment, finish backfill and grading, lacing, proper disposal, labor, materials, tools, and incidentals.

2. Removal

Removal will be paid for as "Temporary Sediment-Control Fence (Remove)." This price is full compensation for furnishing and operating equipment, proper disposal, labor, materials, tools, and incidentals.

I. Biodegradable Erosion Control Logs

The work performed and materials furnished in accordance with this Item and measured as provided under "Measurement" will be paid for at the unit price bid as follows:

1. Installation

   Installation will be paid for as "Biodegradable Erosion Control Logs (Install)" of the size specified. This price is full compensation for furnishing and operating equipment, finish backfill and grading, staking, proper disposal, labor, materials, tools, and incidentals.

2. Removal

   Removal will be paid for as "Biodegradable Erosion Control Logs (Remove)." This price is full compensation for furnishing and operating equipment, proper disposal, labor, materials, tools, and incidentals.

J. Vertical Tracking

Vertical tracking will not be measured or paid for directly, but is considered subsidiary to this Item.

PART 2 – PRODUCTS

2.1 MATERIALS

Furnish materials in accordance with the following:

- Item 161, "Compost"
- Item 432, "Riprap"
- Item 556, "Pipe Underdrains"

A. Rock Filter Dams

1. Aggregate

   Furnish aggregate with hardness, durability, cleanliness, and resistance to crumbling, flaking, and eroding acceptable to the Owner. Provide the following:

   a. Type 1, Type 2, and Type 4 rock filter dams: Use three (3) inches to six (6) inches aggregate.

   b. Type 3 rock filter dams: Use four (4) inches to eight (8) inches aggregate.

2. Wire

   Provide minimum twenty (20) gauge galvanized wire for the steel wire mesh and tie wires for Types 2 and Type 3 rock filter dams. Type 4 dams require:

   a. a double-twisted, hexagonal weave with a nominal mesh opening of 2½ inches by 3¼ inches;

   b. minimum 0.0866 inches steel wire for netting;

   c. minimum 0.1063 inches steel wire for selvages and corners; and

   d. minimum 0.0866 inches for binding or tie wire.

3. Sandbag Material

   Furnish sandbags meeting Section 506.2.8., "Sandbags," except that any gradation of aggregate may be used to fill the sandbags.

B. Temporary Pipe Slope Drains

Provide corrugated metal pipe, polyvinyl chloride (PVC) pipe, flexible tubing, watertight connection bands, grommet materials, prefabricated fittings, and flared entrance sections that conform to the plans. Recycled and other materials meeting these requirements are allowed if approved.

Furnish concrete in accordance with Item 432, "Riprap."

C. Temporary Paved Flumes

Furnish asphalt concrete, hydraulic cement concrete, or other comparable non-erodible material that conforms to the plans. Provide rock or rubble with a minimum diameter of six (6) inches and a maximum volume of one-half (½) $ft.^3$ for the construction of energy dissipaters.

D. Construction Exits

Provide materials that meet the details shown on the plans and this Section.

1. Rock Construction Exit

Provide crushed aggregate for long-term and short-term construction exits. Furnish aggregates that are clean, hard, durable, and free from adherent coatings such as salt, alkali, dirt, clay, loam, shale, soft or flaky materials, and organic and injurious matter. Use four (4) inch to eight (8) inch aggregate for Type 1. Use two (2) inch to four (4) inch aggregate for Type 3.

2. Timber Construction Exit

Furnish No. 2 quality or better railroad ties and timbers for long-term construction exits, free of large and loose knots, and treated to control rot. Fasten timbers with nuts and bolts or lag bolts, of at least one-half (½) inch diameter, unless otherwise shown on the plans or allowed. Provide plywood or pressed wafer board at least one-half (½) inch thick for short-term exits.

3. Foundation Course

Provide a foundation course consisting of flexible base, bituminous concrete, hydraulic cement concrete, or other materials as shown on the plans or directed.

E. Embankment for Erosion Control

Provide rock, loam, clay, topsoil, or other earth materials that will form a stable embankment to meet the intended use.

F. Pipe

Provide pipe outlet material in accordance with Item 556, "Pipe Underdrains," and details shown on the plans.

G. Construction Perimeter Fence

1. Posts

Provide essentially straight wood or steel posts that are at least sixty (60) inches long. Furnish soft wood posts with a minimum diameter of three (3) inches or use nominal two (2) inch by four (4) inch boards. Furnish hardwood posts with a minimum cross-section of 1½ inches by $1^1/_5$ inches. Furnish T-shaped or L-shaped steel posts with a minimum weight of 0.5 lbs. per foot.

2. Fence

   Provide orange construction fencing as approved.

3. Fence Wire

   Provide eleven (11) gauge or larger galvanized smooth or twisted wire. Provide sixteen (16) gauge or larger tie wire.

4. Flagging

   Provide brightly-colored flagging that is fade-resistant and at least ¾ inches wide to provide maximum visibility both day and night.

5. Staples

   Provide staples with a crown at least one-half (½) inch wide and legs at least one-half (½) inch long.

6. Used Materials

   Previously used materials meeting the applicable requirements may be used if approved.

H. Sandbags

Provide sandbag material of polypropylene, polyethylene, or polyamide woven fabric with a minimum unit weight of four (4) oz. per square yard, a Mullen burst-strength exceeding 300 psi, and an ultraviolet stability exceeding 70%.

Use natural coarse sand or manufactured sand meeting the gradation given in Table 1 to fill sandbags. Filled sandbags must be twenty-four (24) inches to thirty (30) inches long, sixteen (16) inches to eighteen (18) inches wide, and six (6) inches to eight (8) inches thick.

Table 1: Sand Gradation

Sieve #	Retained (% by Weight)
4	Maximum 3%
100	Minimum 80%
200	Minimum 95%

Aggregate may be used instead of sand for situations where sandbags are not adjacent to traffic. The aggregate size shall not exceed $^{3}/_{8}$ inch.

I. Temporary Sediment Control Fence

Provide a net-reinforced fence using woven geo-textile fabric. Logos visible to the traveling public will not be allowed.

1. Fabric

   Provide fabric materials in accordance with DMS-6230, “Temporary Sediment Control Fence Fabric.”

2. Posts

   Provide essentially straight wood or steel posts with a minimum length of 48 inches, unless otherwise shown on the plans. Furnish soft wood posts at least three (3) inches in diameter or use nominal two (2) inch by four (4) inch boards. Furnish hardwood posts with a minimum cross-section of 1½ inches by 1½ inches. Furnish T-shaped or L-shaped steel posts with a minimum weight of 1.3 lbs. per foot.

3. Net Reinforcement

   Provide net reinforcement of at least 12½ gauge galvanized welded wire mesh, with a maximum opening size of two (2) inches by four (4) inches, at least twenty-four (24) inches wide, unless otherwise shown on the plans.

4. Staples

   Provide staples with a crown at least ¾ inch wide and legs one-half (½) inch long.

5. Used Materials

   Use recycled material meeting the applicable requirements if approved.

J. Biodegradable Erosion Control Logs

1. Core Material

   Furnish core material that is biodegradable or recyclable. Use compost, mulch, aspen excelsior wood fibers, chipped site vegetation, agricultural rice or wheat straw, coconut fiber, 100% recyclable fibers, or any other acceptable material unless specifically called out on the plans. Permit no more than 5% of the material to escape from the containment mesh. Furnish compost meeting the requirements of Item 161, "Compost."

2. Containment Mesh

   Furnish containment mesh that is 100% biodegradable, photodegradable, or recyclable such as burlap, twine, UV photodegradable plastic, polyester, or any other acceptable material.

   Furnish biodegradable or photodegradable containment mesh when log will remain in place as part of a vegetative system.

   Furnish recyclable containment mesh for temporary installations.

3. Size

   Furnish biodegradable erosion control logs with diameters shown on the plans or as directed. Stuff containment mesh densely so logs do not deform.

PART 3 – EXECUTION

3.1 Construction

A. Contractor Responsibilities

Implement the Owner's SW3P for the project in accordance with the plans and specifications, TPDES General Permit TXR150000, and as directed by the Owner. Develop and implement an SW3P for project-specific material supply plants within and outside of the Owner's right-of-way in accordance with the specific or general storm water permit requirements. Prevent water pollution from storm water associated with construction activity from entering any surface water or private property on or adjacent to the project site.

B. General

1. Phasing

Implement control measures in the area to be disturbed before beginning construction or as directed. Limit the disturbance to the area shown on the plans or as directed. If, in the opinion of the Owner, the Contractor cannot control soil erosion and sedimentation resulting from construction operations, the Owner will limit the disturbed area to that which the Contractor is able to control. Minimize disturbance to vegetation.

2. Maintenance

Immediately correct ineffective control measures. Implement additional controls as directed. Remove excavated material within the time requirements specified in the applicable storm water permit.

3. Stabilization

Stabilize disturbed areas where construction activities will be temporarily stopped in accordance with the applicable storm water permit. Establish a uniform vegetative cover. The project will not be accepted until a 70% density of existing adjacent undisturbed areas is obtained, unless otherwise shown on the plans. When shown on the plans, the Owner may accept the project when adequate controls are in place that will control erosion, sedimentation, and water pollution until sufficient vegetative cover can be established.

4. Finished Work

Upon acceptance of vegetative cover, remove and dispose of all temporary control measures, temporary embankments, bridges, matting, falsework, piling, debris, or other obstructions placed during construction that are not a part of the finished work or as directed.

5. Restricted Activities and Required Precautions

Do not discharge onto the ground or surface waters any pollutants such as chemicals, raw sewage, fuels, lubricants, coolants, hydraulic fluids, bitumens, or any other petroleum product. Operate and maintain equipment on-site to prevent actual or potential water pollution. Manage, control, and dispose of litter on-site such that no adverse impacts to water quality occur. Prevent dust from creating a potential or actual unsafe condition, public nuisance, or condition endangering the value, utility, or appearance of any property. Wash out concrete trucks only as described in the TPDES General Permit TXR150000. Utilize appropriate controls to minimize the off-site transport of suspended sediments and other pollutants if it is necessary to pump or channel standing water (i.e. dewatering). Prevent discharges that would contribute to a violation of Edwards Aquifer Rules, water quality standards, the impairment of a listed water body, or other state or federal law.

C. Installation, Maintenance, and Removal Work

Perform work in accordance with the SW3P, according to manufacturers' guidelines, and in accordance with the TPDES General Permit TXR150000. Install and maintain the integrity of temporary erosion and sedimentation control devices to accumulate silt and debris until soil disturbing activities are completed and permanent erosion control features are in place or the disturbed area has been adequately stabilized as determined by the Owner. If a device ceases to function as intended, repair or replace the device or portions thereof as necessary. Remove sediment, debris, and litter. When approved, sediments may be disposed of within embankments, or in the right-of-way in areas where the material will not contribute to further siltation. Dispose of removed material in accordance with federal, state, and local regulations.

Remove devices upon approval or as directed. Finish-grade and dress the area upon removal. Stabilize disturbed areas in accordance with the permit and as shown on the plans or as directed. Materials removed are considered consumed by the project. Retain ownership of stockpiled material and remove it from the project when new installations or replacements are no longer required.

1. Rock Filter Dams for Erosion Control

   Remove trees, brush, stumps, and other objectionable material that may interfere with the construction of rock filter dams. Place sandbags as a foundation when required or at the Contractor's option.

   Place the aggregate to the lines, height, and slopes specified, without undue voids for Types 1, 2, 3, and 5. Place the aggregate on the mesh and then fold the mesh at the upstream side over the aggregate and secure it to itself on the downstream side with wire ties or hog rings for Types 2 and Type 3, or as directed. Place rock filter dams perpendicular to the flow of the stream or channel unless otherwise directed. Construct filter dams according to the following criteria unless otherwise shown on the plans:

   a. Type 1: Non-reinforced

      i. Height: At least eighteen (18) inches measured vertically from existing ground to top of filter dam

      ii. Top Width: At least two (2) ft.

      iii. Slopes: No steeper than 2:1

   b. Type 2: Reinforced

      i. Height: At least eighteen (18) inches measured vertically from existing ground to top of filter dam

      ii. Top Width: At least two (2) ft.

      iii. Slopes: No steeper than 2:1

   c. Type 3: Reinforced

      i. Height: At least thirty-six (36) inches measured vertically from existing ground to top of filter dam

      ii. Top Width: At least two (2) ft.

      iii. Slopes: No steeper than 2:1

   d. Type 4: Sack Gabions

      Unfold sack gabions and smooth out kinks and bends. Connect the sides by lacing in a single loop–double loop pattern on four (4) inch to 5 inch spacing for vertical filling. Pull the end lacing rod at one end until tight, wrap around the end, and twist four (4) times. Fill with stone at the filling end, pull the rod tight, cut the wire with approximately six (6) inches remaining, and twist wires four (4) times.

      Place the sack flat in a filling trough, fill with stone, connect sides, and secure ends as described above for horizontal filling.

      Lift and place without damaging the gabion. Shape sack gabions to existing contours.

   e. Type 5: Provide rock filter dams as shown on the plans.

2. Temporary Pipe Slope Drains

   Install pipe with a slope as shown on the plans or as directed. Construct embankment for the drainage system in eight (8) inch lifts to the required elevations. Hand-tamp the soil around and under the entrance section to the top of the embankment as shown on the plans or as directed. Form the top of the embankment or earth dike over the pipe slope drain at least one (1) ft. higher than the top of the inlet pipe at all points. Secure the pipe with hold-downs or hold-down grommets spaced a maximum of ten (10) ft. on

center. Construct the energy dissipaters or sediment traps as shown on the plans or as directed. Construct the sediment trap using concrete or rubble riprap in accordance with Item 432, "Riprap," when designated on the plans.

3. Temporary Paved Flumes

Construct paved flumes as shown on the plans or as directed. Provide excavation and embankment (including compaction of the subgrade) of material to the dimensions shown on the plans unless otherwise indicated. Install a rock or rubble riprap energy dissipater, constructed from the materials specified above, to a minimum depth of nine (9) inches at the flume outlet to the limits shown on the plans or as directed.

4. Construction Exits

Prevent traffic from crossing or exiting the construction site or moving directly onto a public roadway, alley, sidewalk, parking area, or other right-of-way areas other than at the location of construction exits when tracking conditions exist. Construct exits for either long-term or short-term use.

a. Long-Term

Place the exit over a foundation course as required. Grade the foundation course or compacted subgrade to direct runoff from the construction exits to a sediment trap as shown on the plans or as directed. Construct exits with a width of at least fourteen (14) ft. for one-way and twenty (20) ft. for two-way traffic for the full width of the exit or as directed.

i. Type 1: Construct to a depth of at least eight (8) inches using crushed aggregate as shown on the plans or as directed.

ii. Type 2: Construct using railroad ties and timbers as shown on the plans or as directed.

b. Short-Term

i. Type 3: Construct using crushed aggregate, plywood, or wafer board. This type of exit may be used for daily operations where long-term exits are not practical.

ii. Type 4: Construct as shown on the plans or as directed.

5. Earthwork for Erosion Control

Perform excavation and embankment operations to minimize erosion and to remove collected sediments from other erosion control devices.

a. Excavation and Embankment for Erosion Control Features

Place earth dikes, swales, or combinations of both along the low crown of daily lift placement, or as directed, to prevent runoff spillover. Place swales and dikes at other locations as shown on the plans or as directed to prevent runoff spillover or to divert runoff. Construct cuts with the low end blocked with undisturbed earth to prevent erosion of hillsides. Construct sediment traps at drainage structures in conjunction with other erosion control measures as shown on the plans or as directed.

Create a sediment basin, where required, providing 3,600 cu. ft. of storage per acre drained, or equivalent control measures for drainage locations that serve an area with ten (10) or more disturbed acres at one time, not including off-site areas.

b. Excavation of Sediment and Debris

Remove sediment and debris when accumulation affects the performance of the devices, after a rain, and when directed.

6. Construction Perimeter Fence

Construct, align, and locate fencing as shown on the plans or as directed.

a. Installation of Posts

Embed posts eighteen (18) inches deep or adequately anchor in rock, with a spacing of eight (8) ft. to ten (10) ft.

b. Wire Attachment

Attach the top wire to the posts at least three (3) ft. from the ground. Attach the lower wire midway between the ground and the top wire.

c. Flag Attachment

Attach flagging to both wire strands midway between each post. Use flagging at least eighteen (18) inches long. Tie flagging to the wire using a square knot.

7. Sandbags for Erosion Control

Construct a berm or dam of sandbags that will intercept sediment-laden storm water runoff from disturbed areas, create a retention pond, detain sediment, and release water in sheet flow. Fill each bag with sand so that at least the top six (6) inches of the bag is unfilled to allow for proper tying of the open end. Place the sandbags with their tied ends in the same direction. Offset subsequent rows of sandbags one-half (½) the length of the preceding row. Place a single layer of sandbags downstream as a secondary debris trap. Place additional sandbags as necessary or as directed for supplementary support to berms or dams of sandbags or earth.

8. Temporary Sediment-Control Fence

Provide temporary sediment-control fence near the downstream perimeter of a disturbed area to intercept sediment from sheet flow. Incorporate the fence into erosion-control measures used to control sediment in areas of higher flow. Install the fence as shown on the plans, as specified in this Section, or as directed.

a. Installation of Posts

Embed posts at least eighteen (18) inches deep, or adequately anchor if in rock, with a spacing of six (6) ft. to eight (8) ft. and install on a slight angle toward the runoff source.

b. Fabric Anchoring

Dig trenches along the uphill side of the fence to anchor six (6) inches to eight (8) inches of fabric. Provide a minimum trench cross-section of six (6) inches by six (6) inches. Place the fabric against the side of the trench and align approximately two (2) inches of fabric along the bottom in the upstream direction. Backfill the trench, then hand-tamp.

c. Fabric and Net Reinforcement Attachment

Attach the reinforcement to wooden posts with staples, or to steel posts with T-clips, in at least four (4) places equally spaced unless otherwise shown on the plans. Sewn vertical pockets may be used to attach reinforcement to end posts. Fasten the fabric to the top strand of reinforcement by hog rings or cord every fifteen (15) inches or less.

d. Fabric and Net Splices

Locate splices at a fence post with a minimum lap of six (6) inches attached in at least six (6) places equally spaced unless otherwise shown on the plans. Do not locate splices in concentrated flow areas.

Requirements for installation of used temporary sediment-control fence include the following:

i. fabric with minimal or no visible signs of biodegradation (weak fibers);

ii. fabric without excessive patching (more than one (1) patch every fifteen (15) ft. to twenty (20) ft.);

iii. posts without bends; and

iv. backing without holes.

9. Biodegradable Erosion Control Logs

Install biodegradable erosion control logs near the downstream perimeter of a disturbed area to intercept sediment from sheet flow. Incorporate the biodegradable erosion control logs into the erosion measures used to control sediment in areas of higher flow. Install, align, and locate the biodegradable erosion control logs as specified below, as shown in plans or as directed.

Secure biodegradable erosion control logs in a method adequate to prevent displacement as a result of normal rain events, prevent damage to the logs, and to the satisfaction of the Owner such that flow is not allowed under the logs. Temporarily removing and replacing biodegradable erosion logs as to facilitate daily work is allowed at the Contractor's expense.

10. Vertical Tracking

Perform vertical tracking on slopes to temporarily stabilize soil. Provide equipment with a track undercarriage capable of producing a linear soil impression measuring a minimum of twelve (12) inches long by two (2) inches to four (4) inches wide by one-half (½) inch to two (2) inches deep. Do not exceed twelve (12) inches between track impressions. Install continuous linear track impressions where the twelve (12) inches length impressions are perpendicular to the slope. Vertical tracking is required on projects where soil disturbing activities have occurred unless otherwise approved.

END OF SECTION

Special Specification 6090
LED Internally Illuminated Street Name Signs

1. DESCRIPTION

Furnish, fabricate, and install light emitting diode (LED) internally illuminated street name (IISN) signs attached to traffic signal poles as shown on the plans.

2. MATERIALS

Provide new materials that comply with the details shown on the plans, the requirements of this Item, and the pertinent requirements of the following Items:

- Item 445, "Galvanizing"
- Item 446, "Field Cleaning and Painting Steel"
- Item 620, "Electrical Conductors"
- Item 621, "Tray Cable"

Furnish and fabricate LED IISN sign assemblies and associated mounting hardware from new materials that comply with this specification. Provide single side message or double side message signs as shown on the plans.

Furnish 6 sets of submittals, of the LED IISN and mounting hardware, to the Engineer at the project address. Do not begin work or purchase materials before the submittals are approved by the Engineer.

2.1. **General Requirements.** Ensure sign assembly standard lengths are between 4 ft. and 10 ft. Ensure standard viewable heights are between 15 in. and 30 in. Use single or double faced signs as required by plans. Ensure maximum weight of the sign does not exceed maximum capacity of IISN support arms.

Construct sign fixture housing from 5000 or 6000 series aluminum. Powder-coat paint all exterior fixture housing glossy black or as shown on the plans. Ensure paint exceeds 1000-hr. salt-spray test in accordance with ASTM B117. IISN housing must be rated as NEMA type 3R. Use stainless steel screws and hardware.

Ensure sign panels, light sources, light engines, and power supplies can be replaced without sign removal. The sign shall be capable of continuous operation over a range in temperatures from -10°F to +140°F.

2.2. **LED Requirements.** Provide high flux LED's that are rated to maintain a minimum 70% of their initial lumens after 60,000 hr. according to IESNA LM-80-08. Ensure the LED arrays or modules will continue to operate if one LED goes out. Provide light engine and LED arrays or modules that are replaceable without removing the sign.

2.3. **Sign Panel Requirements.** Ensure the front panel of the sign is ultraviolet, weather, abrasion and impact resistant high impact strength polycarbonate, acrylic or a glass-fiber reinforced polyester fluoride. The front panel will be replaceable for future maintenance purposes. Provide translucent reflective type D sheeting and colored transparent acrylic film as per TxDOT DMS - 8300, "Sign Face Material."

As per Texas Manual on Uniform Traffic Control Devices Section 2D.38, street name signs will have a white legend on a green background. A border, if used, will be the same color as the legend. The lettering should be at least 8 inch capital letters, or upper/lower case letters. Supplementary lettering to indicate the type of street (such as Street, Avenue, or Road) or the section of the City (such as SE) may be in smaller lettering, at least 3 in. high. Ensure letter font type is Clearview - 2W as shown on *Standard Highway Sign Designs for Texas*, D3-1 Overhead Mount.

2.4. **Electrical and Illumination Requirements.** Provide IISN that will operate at 120 VAC. Ensure product meets standard for electric signs UL 48. The on-board circuitry of an IISN shall include voltage surge protection, to withstand high-repetition noise transients and low-repetition high-energy transients as stated in Section 2.1.8, NEMA Standard TS 2-2003. The power supply shall be housed inside the sign enclosure. Power supply shall be UL Class 2 limited output voltage and current plus isolation for safe operation, and UL rated for outdoor damp locations. Power supply shall be IP 64 Outdoor Rated. The light source shall evenly illuminate the sign panel. The average luminance over the entire panel surface will be uniform.

2.5. **Support Requirements.** The sign shall be designed and constructed to withstand 110 mph wind loads in conformance with the requirements of the AASHTO publication *Standard Specifications for Structural Supports of Highway Signs, Luminaires and Traffic Signals* (5th Edition 2009).

The sign must be supplied with mounting brackets from the manufacturer (swinging or rigid mounting) as shown on the plans.

2.6. **Color.** The color of the legend, symbols, and background must fall within the CIE (The International Commission on Illumination) color coordinates and reflectance values listed in Table 1.

Table 1
CIE Chromaticity Coordinates and Reflectance Values

	White			Green	
x	y	Reflectance	x	y	Reflectance
0.300	0.290	40 Min	0.255	0.330	3.5-10
280	0.310		0.255	0.520	
0.360	0.360		0.020	0.540	

2.7. **Workmanship.** The panels must exhibit good workmanship and must be free from objectionable marks or defects that would adversely affect appearance or serviceability.

2.8. **Warranty.** The manufacturer will replace failed IISNs, when non-operable due to defect in material or workmanship, within five years of installation with a new IISN that passes all testing, delivered and installed at the project location.

3. CONSTRUCTION

Fabricate and install internally illuminated street name signs in accordance with the details and dimensions shown on the plans, specified, or as approved by the Engineer. Install in accordance with the latest Electrical Detail Standards. Install signs level and plumb brackets or clamps. Attach IISN to traffic signal poles as per manufacturer's instructions or as shown on the plans.

Use established industry and utility safety practices when installing IISNs located near overhead or underground utilities. Consult with the appropriate utility company before beginning work.

Prevent scarring or marring of the poles, mast arms, and IISNs. Replace damaged components. Repair damaged galvanizing in accordance with Section 445.3.5, "Repairs." Repair damaged painted areas of a roadway illumination assembly in accordance with Item 446, "Field Cleaning and Painting Steel."

4. MEASUREMENT

This Item will be measured as each LED IISN sign installed.

5. PAYMENT

The work performed and materials furnished in accordance with this Item and measured as provided under "Measurement," will be paid for at the unit bid price for "LED Internally Illuminated Street Name Signs" of the

6090

sizes and types specified. This price is full compensation for furnishing, fabricating and installing the signs; support arm clamp assembly; liquidtight flexible metal conduit; and equipment, labor, tools, and incidentals.

New conduit will be paid for under Item 618, “Conduit.” New conductors, except the conductors internal to the pole, will be paid for under Item 620, “Electrical Conductors.” New tray cable, except the tray cable internal to the pole, will be paid for under Item 621, “Tray Cable.”

Special Specification S2 BD
Boulder Delineation

1. DESCRIPTION

Furnish and install boulder delineation.

2. MATERIALS

Furnish boulders to the size and shape specified on the plans.

Furnish boulders matching the stone type and aesthetic requirements as shown on the plans.

3. CONSTRUCTION

Place boulders so that each boulder is firmly seated on the proposed grade and cannot be dislodged, tilted, or otherwise moved by human means. Human means is defined as using body weight and/or strength to push, pull, stand on, or otherwise apply force without the use of tools.

4. MEASUREMENT

This item will be measured by the linear foot of boulders placed along a line. Measurement is taken along one edge of the boulders and does is not adjust for the size or shape of the boulders placed. Measurement includes any gaps between boulders specified in the plans.

5. PAYMENT

The work performed in accordance with this Item and measured as provided under “Measurement” will be paid for at the unit price bid for “Boulder Delineation”. This price is full compensation for furnishing and installing boulders as well as all tools, labor, and incidentals.

Special Specification S2 GA
Gate Attendant

1. DESCRIPTION

Provide full time gate attendant(s).

2. MATERIALS

Furnish clipboards, paper, or other materials as needed.

3. WORK METHODS

Record the name, organization, date, and time for all personnel entering and leaving the job site. Each week, deliver all records for the preceding week to the County. Retain copies until Final Completion.

4. MEASUREMENT

This item will be measured by the hour per gate attendant.

5. PAYMENT

The work performed in accordance with this Item and measured as provided under “Measurement” will be paid for at the unit price bid for “Gate Attendant”. This price is full compensation for all labor, materials, and incidentals.

Special Specification S2 RC
Rock Cut (Blasting & Scaling)

1. DESCRIPTION

Use controlled blasting methods, production blasting, and scaling to achieve smooth, uniform, and unfractured backslopes (Rock Cuts).

2. MATERIALS

Furnish all explosives and blasting caps that are no more than 1 year old. Each blasting cap period shall come from one lot number. Explosive storage shall be in accordance with all Federal, State, and local laws and regulations, and as approved by the County.

3. EQUIPMENT

Provide machinery, tools, and equipment necessary for proper execution of the work in a safe and controlled manner.

4. CONSTRUCTION

4.1. **Blasting Methods and Requirements.** Use methods in making excavations that do not shatter or loosen the backslopes and that produce smooth and uniform excavation slopes at the specified Slope angle.

4.1.1. **Perimeter Controlled Blasting**. The use of explosives and blasting accessories in carefully spaced and aligned drill holes. Perimeter controlled blasting techniques include presplitting and trim (cushion) blasting. Use on the entire length of cut section in Rock or cemented materials that have backslopes of 1V:0.75H or steeper, even if the main excavation can be ripped.

4.1.1.1. **Presplitting.** A perimeter control blasting method in which the perimeter row of blast holes are drilled along the plane of the specified final excavation backslope and that utilizes reduced drill hole spacing and reduced diameter explosives decoupled from the drill hole wall, and whose initiation precedes the initiation of the adjacent production holes by a minimum of 25 milliseconds.

Attach mechanical devices to all drilling Equipment used to drill the presplit holes to determine, within an accuracy of 1 degree, the angle at which the drill steel enters the Rock.Drill presplit holes with a minimum diameter of 2 1/2 inches and a maximum diameter of 3 inches. Drill the presplit holes with a minimum spacing of 10 times the presplit hole diameter, and a maximum spacing of 14 times the presplit hole diameter.

Start presplit drill holes along the presplit line within 3 inches of the dimensions shown on the blasting plan. Holes located beyond this tolerance will be rejected. Completely fill the rejected holes with stemming material at no additional cost to the County. Drill new presplit holes with the proper spacing.

Control the drilling operations to ensure that presplit hole alignment does not vary from the plane of the planned slope by more than 6 inches either parallel or normal to the slope.

The length of presplit holes for any individual lift shall not exceed 30 feet unless the Contractor can demonstrate to the County's satisfaction that hole alignment can be maintained within the above tolerances. If more than 5 percent of the presplit holes are misaligned in any one lift, reduce the height of the lifts until the 6-inch alignment tolerance is met.

Drill presplit holes a minimum of 30 feet longitudinally beyond the limits of the production holes to be detonated or to the end of the cut. Unless otherwise allowed by the County in writing, remove all overburden, including any loose or decomposed Rock, before drilling the presplitting holes. Cut the ground surface above the cut to the elevation specified in the plans prior to drilling the presplitting holes.

Use only explosives manufactured specifically made for presplitting in the presplit holes. The maximum diameter of explosives used in presplit holes shall not be greater than half the diameter of the presplit hole. Bulk ammonium nitrate and fuel oil (ANFO) will not be allowed in the presplit holes.

Determine that the presplit hole is free of obstructions for its entire depth before placing charges. Exercise all necessary precautions so the placing of the charges will not cause caving of material from the walls of the holes.

Detonation of explosives in each hole in a presplit shot may be delayed, providing the hole-to-hole delay is no more than 25 milliseconds.

4.1.1.2. **Trim (Cushion) Blasting.** A perimeter control blasting method in which the initiation of the perimeter row of blast holes drilled along the plane of the specified final excavation backslope follows the initiation of the adjacent production holes within 25 to 75 milliseconds, if production holes are being employed in the blast. When the horizontal distance from the new proposed slope face to the existing Rock face is less than 15 feet, the Contractor may trim blast instead of presplitting. The requirements in 4.1.1.1 for presplitting also apply to trim blasting, by changing the words "presplit" and "presplitting" to "trim blasting". If trim blasting burdens are less than 6 feet or zones of weakness in the Rock are observed, submit a hole loading diagram that reflects the site conditions.

4.1.2. **Production Blasting**. Fragmentation blasting in the main excavation area, usually using more widely spaced drill holes than controlled blast holes. Blasting in the mass of Rock to be excavated shall be designed to control flyrock, minimize ground vibration and air blast, and result in loosened and fragmented in-place Rock of a size that can be removed, transported, or crushed to produce specified products. Lay out production blast holes in a consistent pattern that does not affect the perimeter control blast holes.

Do not drill any row of production blast holes closer than 6 feet to the perimeter controlled blast line. Where necessary to minimize damage to the Rock backslope, a row of buffer holes may be drilled between the perimeter controlled blast line and the production blast holes. Except for the bottom lift, do not extend production holes below the bottom of the controlled blast holes. Do not exceed 6-inch diameter for production holes. Detonate production holes on a delay sequence documented in the blasting plan.

4.1.2.1. **Buffer Row.** The buffer row is located between the production holes and the perimeter controlled blast line. Locate the buffer hole line a minimum of 3 feet away from the perimeter control blast line, or 1 foot for every inch of buffer hole diameter, whichever is greater. Space buffer row holes 3 to 5 feet center-to-center. The explosive load in buffer holes shall not exceed 50 percent of the full explosive load that could be placed in a 3-inch production hole. Initiation of the buffer holes shall be on a delayed sequence toward a free face.

4.1.3. **Safety and Flyrock Control.** Use techniques that effectively limit and control flyrock. Clear the site of all boulders or other material as directed prior to beginning blasting Work. Following every blast, observe the entire blast area for a minimum of 5 minutes before reentering or commencing Work in the area.

Be responsible for the storage, transportation, and handling of explosives, their use, and the results of all blasting operations.

Cover all blast areas that are within 200 feet of residences, facilities or aboveground utilities using appropriate blast containment mats or an approved equivalent method.

Discontinue blasting operations, as directed, if it is apparent that the methods employed are either not producing acceptable results or the safety of the public, the Contractor's employees, or adjacent property is being jeopardized.

4.1.4. **Blast Monitoring.** If there is a structure within 1,000 feet of the blast, monitoring equipment shall be placed at the structure or located in a line between the blast and the structure, unless approved otherwise by the County. Blast monitoring data shall be submitted to the County with the blast report. The Contractor shall install blast monitoring equipment as specified by the manufacturer and Vibration Specialist and assure good coupling between the seismographs and ground.

Unless otherwise specified, ground vibrations shall not exceed a maximum peak particle velocity (largest single component) of 2 inches per second at any structure or water well. A seismograph shall be set for each blast at a distance determined by the Vibration Specialist to get a record of the vibration levels. Blasts shall not damage any existing structures. Furthermore, at the existing structures in the vicinity of the site, the maximum vibration and airblast limits shall not exceed the values indicated in Table 1, Table 2, and Figure B-1, Appendix B, of the United States Bureau of Mines Report of Investigations, RI 8507, 1980.

Table 1
Ground Vibration Limits

Type of Structure[1]	Peak Particle Velocity (inches per second)	
	At Low Frequency[2] (<40 Hertz)	At High Frequency (>40 Hertz)
Modern structures, drywall interiors	0.75	2.0
Older structures, plaster on wood lath construction for interior walls	0.50	2.0

1. For precarious structures not listed in the table, use the limits for older structures; for all other structures not listed in the table, use the limits listed for modern structures.
2. All spectral peaks within 50 percent amplitude of the predominant frequency must be analyzed.

Table 2
Air Overpressure Limits (decibels)

Instrumentation	Residential Structures	All Other Structures
0.1 hertz high-pass system	115	134
2 hertz high-pass system	113	133
5 or 6 hertz high-pass system	110	129
C-slow (for events not exceeding 2 seconds' duration)	85	105

Blasting in the vicinity of concrete and shotcrete shall be limited to prevent damage to cast-in-place concrete and shotcrete. The Contractor shall take special care when blasting in the vicinity of structural concrete and shotcrete that has not achieved full strength. Unless approved by the County, conform with the limitations in Table 3.

Table 3
Ground Vibration Limits for Green Concrete

Time After Pour	Peak Particle Velocity (inches per second)
0 – 3 days	0.25
3 – 28 days	1.0
>28 days	2.0

4.1.5. **Scaling.** Remove all loose, hanging, or potentially dangerous Rock on the excavated surface by scaling during the completion of the excavation of each lift or test section. Do not begin drilling the next lift until this Work has been completed, as directed. Scale the slopes throughout the Contract at the frequency required to remove loose or overhanging material. Use a suitable standard steel mine scaling rod to hand-scale the slopes. Other methods such as machine scaling, hydraulic splitters or light blasting may be used instead of, or to supplement, hand scaling.

The rock slope locations delineated on the Plans shall be thoroughly scaled and trimmed to the satisfaction of the County to assure that the desired rock face is obtained. No loose or potentially unstable rock shall be left on the rock face or the soil slope above the rock face. No vegetation shall be left on the rock face. No overhangs or launching pads shall be left on the rock face.

4.1.6. **Tolerance.** Rock slopes shall not deviate from a plane surface by more than 1 foot and shall not deviate from their theoretical location by more than 1 foot measured along any line perpendicular to the theoretical slope line.

4.2. **Blasting Procedures.**

4.2.1. **Preblast Survey.** The contractor shall conduct a preblast survey of all properties within 500 feet of the blast area and shall afford any property owners within at least 1,000 feet of the blast area an opportunity to have a preblast survey conducted on their property and structures. This survey shall be conducted by the contractor or his representative to determining existing conditions of the facilities and to document any preblast damage. The survey shall also determine the conditions of any water wells on the property including their quality and quantity of flow. Provide copies of all correspondence to the County. The limits of this survey may be expanded at the contractor's option.

4.2.2. **Blasting Plan.** Provide a blasting plan for the proposed cut, prepared by a person qualified and experienced in blasting Work. Submit the blasting plan for the County's review at least 14 Calendar Days before beginning drilling and blasting Work.

The blasting plan will be reviewed for conformance with the Specifications and any concerns will be discussed with the Contractor. Submit any proposed changes to the blasting plan in writing to the County for review before implementation. Submittal of blasting plan is for quality control and record-keeping purposes.

Review of blast design and techniques shall not relieve the Contractor of responsibility for adequacy, accuracy, safety, proper supervision, and compliance with these Specifications and/or the OSHA Regulations (29 CFR 1926.900-.914) and all federal, state, and local regulations that govern the use of explosives.

The blasting plan shall contain the full details of the drilling and blasting patterns, vibration, flyrock, and noise reduction methods, blast area security measures and traffic control that the Contractor proposes to use, and the following information:

- Station limits of proposed shot.
- Removal of overburden.

- Plan and Cross Section diagrams of proposed drill pattern for controlled and production blast holes including buffer rows, free face, burden, blast hole spacing, blast hole diameters, blast hole angles, lift height and sub drill depth. Accurately draw to scale and show each cut area to be blasted.
- Loading diagram showing the type, amount and specific gravity of explosives, primers, and initiators, and location depth, and type of stemming.
- Initiation sequence of production and controlled blast holes including delay times and delay system.
- Manufacturer's product data sheets for all explosives, primers and initiators to be used in the Work.

4.2.3. **Blasting Safety Plan**. In addition to the required Construction Plan a detailed Blasting Safety Plan shall be prepared stating “all regulations will be followed” and include the following:

- Description of clearing and guarding procedures to ensure the safety of personnel, staff, visitors, and the general public during blasting operations.
- Description of how inspections for and handling of misfires in loaded and/or excavated material.
- Description of how the explosive materials will be safely transported and stored.
- Safety Data Sheets (SDS).
- Proposed powder magazine locations.
- Emergency response plan to be approved by the County and further submitted to the local response agency before explosives are allowed on site.

4.2.4. **Blasting Notification.** Notify all owners and occupants of buildings, Structures, and utilities that are within the following distances of the blasting areas:

- 300 feet for shots using less than 50 pounds of explosives per time delay of 15 milliseconds.
- 600 feet for shots using between 50 and 250 pounds of explosives per time delay of 15 milliseconds.
- 1,250 feet for shots using more than 250 pounds of explosives per time delay of 15 milliseconds.

Provide notification, in writing, once, at least 48 hours before blasting begins, and again on the Day the blasting operations occur. Do not begin detonation of the blast until the County representative is ready to witness and videotape the blast.

Do not begin detonation of the blast until the County representative is ready to witness and videotape the blast. The Contractor shall establish a system of warning signals prior to blasting. As a minimum, warning signals shall be given at five minutes and one minute prior to each blast. Additionally, an all- clear signal shall be given after the shot has been examined for misfires or other problems. Warning signals shall be audible throughout the work area and for a distance of at least 1,000 feet from the blast.

4.2.5. **Blasting Test Sections.** Demonstrate the adequacy of proposed blasting plan by means of test shots in each cut or excavation before beginning full-scale blasting. Do not proceed with remaining drilling and blasting until acceptable test blast results have been demonstrated to the satisfaction of the County.

In areas where perimeter controlled blasting techniques are being employed, drill and blast short representative test sections not exceeding 100 feet in length. Excavate a section not less than 20 feet wide exposing the full height of the lift for examination. In areas where no perimeter controlled blasting techniques are being employed, determine effectiveness of the test section based on the material placement, cut slope stability, fragmentation and control of ground vibration, air blast and flyrock.

Do not drill ahead of the test blast area, except as provided in 4.1.1.1, until the test section has been evaluated. The Contractor may be directed to use test section lengths less than 100 feet.

If the results of the test shots are unacceptable, revise the methods, techniques, and procedures, at no additional cost to the County, so that the results achieved will be acceptable. No further drilling and blasting will be allowed until the revised methods are reviewed according to 4.2.2 and verified by additional test shots.

If, during the progress of the Work, the methods of drilling and blasting do not produce acceptable results within the tolerances specified, drill, blast and excavate additional test sections until a technique is determined that will produce acceptable results.

4.2.6. **Blasting According to Plan.** After the County has reviewed the blasting plan and determined that test sections have demonstrated acceptable results, perform all perimeter controlled and production blasting according to the plan that produced acceptable results. Notify the County when any changes in conditions or results are observed. On the Day of each blasting occurrence and before detonation of the blast, the supervisor or blasting specialist in charge shall certify, in writing, that the shots being carried out are consistent with the reviewed blasting plan.

4.2.7. **Blasting Report.** Submit a blasting report detailing the blast outcome within 48 hours of making each blast. Include in the report the following:

- Drill logs and notes regarding conditions encountered in the drill holes, including a description of encountered subsurface conditions such as open joints, soft or fractured Rock zones, groundwater conditions, hole alignment, and drilling problems.
- Any variations from the submitted Blasting Plan, including any changes to explosives type or amount, loading dimensions, hole spacing, and initiation sequence and delay times.
- All blast monitoring documentation.
- A copy of color video recording of blast area(s) before, during, and after each blast, with sound, a minimum format of 720p resolution, and in a format commonly used for viewing with a computer or DVD player.
- A comment section that includes the Contractor's evaluation of the blast performance, any unusual conditions or situations during the blast, and any misfires.
- Details of all damage incurred and details of all neighbors' complaints or comments.

4.2.8. **Rock Reinforcement.** Excavation shall be staged to allow rock reinforcement, where required, to be installed as the cut is brought down.

4.2.9. **Suspension of Blasting.** If damage to existing facilities or adjacent property occurs due to blasting, immediately suspend blasting and report damage to the County. Discontinue blasting operations if the methods of drilling and blasting do not produce acceptable results within the tolerances specified.

Before resuming blasting operations, revise the Blasting Plan and take other appropriate measures as necessary to correct the unacceptable blasting results. Submit the revised Blasting Plan to the County. Do not resume blasting until authorized by the County.

5. MEASUREMENT

This item will be measured by the square foot of Rock Cut surface area, from the bottom of grading to existing ground or as shown in the plans. Trapezoidal areas are calculated based on existing ground distance between perimeter controlled blast holes and their respective lengths.

6. PAYMENT

The work performed and materials furnished in accordance with this Item and measured as provided under "Measurement" will be paid for at the unit price bid for "Rock Cut". This price is full compensation for all perimeter controlled blasting, production blasting, scaling, blasting procedures, blasting coordination, and blast vibration monitoring as well as all equipment, labor, tools, and incidentals.

Excavation of existing material will be paid in accordance with Item 110, "Excavation."

Concrete placed for Rock Cut stability will be paid for in accordance with Item 431, "Pneumatically Placed Concrete."

Special Specification WC101
Soil Ripping

PART 1 – GENERAL

1.1 DESCRIPTION

Soil ripping is a treatment measure that loosens overly compacted soil. Soil ripping is the plowing of the ground to alleviate compaction to allow for vegetated growth and to prevent erosion in sheet flow conditions. Perform soil ripping on designated areas according to the plans or as directed.

1.2 RELATED ITEMS

A. Item 160-WC001, “Topsoil”

B. Item 161-WC001, “Compost”

C. Item WC102, “Mulch”

D. Item 164-WC001, “Seeding for Erosion Control”

E. Item 506-WC001, “Temporary Erosion, Sedimentation and Environmental Controls”

1.3 MEASUREMENT & PAYMENT

Not measured or paid directly. This item is subsidiary to other items in the contract. The contractor should apply the quantity of project seeding area with 2.2 and 2.3 of this specification for estimation purposes.

1.4 QUALITY CONTROL SUBMITTALS

A. Submit soil ripping equipment data for approval, prior to installation.

PART 2 – EXECUTION

2.1 SEQUENCING

A. Complete final grading in accordance with the plans or as directed.

B. Soil ripping should be performed prior to the installation of compost and/or topsoil, mulch, and/or native grass seeding and wildflower seeding.

2.2 CONSTRUCTION

A. Installation:

1. All soil surfaces with a slope of 3:1 or less that are compacted due to equipment traffic should be ripped.

2. Perform soil ripping parallel and perpendicular (in both directions) to the slope at location, groove spacing, and depth shown on the plans as well as any additional areas that have been compacted during construction

activities to achieve a standard proctor density of 80% – 85% in channels and 70% – 75% in non-channel areas.

3. If construction activities are on-going, repeat procedure as necessary.

4. Soil ripping should not be implemented within a drainage channel or in channel flow conditions.

2.3 MAINTENANCE

A. Routinely inspect the soil ripping weekly during construction and within 24 hours after every one-half (½) inch or greater rainfall event. Inspections should ensure that:

1. No slumping of the rips has occurred.

2. The ripping was installed at the appropriate depth and spacing.

3. The contour rips are parallel and perpendicular to the slope.

B. If major slumping or slope failure occurs, the area should be regraded and reseeded. If minor slumping or rills occur, the specified topsoil and/or compost and seeding for the area in the plans may be applied, at the discretion of the Owner's Representative.

C. Continue to inspect the area on a weekly basis until vegetation has been established.

END OF SECTION

Special Specification WC102
Mulch

PART 1 – GENERAL

1.1 DESCRIPTION

Furnish and apply mulch as shown in the plans or as directed.

1.2 RELATED ITEMS

A. Item 161-WC001, “Compost”

B. Item WC103, “Mulch Topdressing”

C. Item 506-WC001, “Temporary Erosion, Sedimentation, and Environmental Controls”

1.3 MEASUREMENT & PAYMENT

Not measured or paid directly. This item is subsidiary to other items of the contract.

1.4 QUALITY CONTROL SUBMITTALS

A. Submit one (1) pound sample of on-site shredded mulch for approval.

B. Submit imported organic mulch product data and supplier information, including product composition, as well as a one (1) pound sample for approval.

C. A statement that the shredded mulch has met the decomposition process.

PART 2 – PRODUCTS

2.1 MATERIALS

A. Mulch can be on-site shredded organic mulch or an imported organic mulch product.

1. Mulch can be comprised of wood chips, shredded bark, shredded landscape trimmings, or coarse compost material originating from the 3-county Central Texas region (Williamson, Travis, and Hays).

2. Mulch to be shredded with no pieces greater than three (3) inches in length and with all pieces passing through a two (2) to three (3) inch screen.

3. Invasive species should be excluded from mulch.

4. Color: natural wood.

5. Contamination: less than 0.5% weight by volume.

6. Mulch to have undergone a decomposition process either on-site or at a supplier’s location.

PART 3 – EXECUTION

3.1 SEQUENCING

A. For mulch material that has not gone through the stockpiling and decomposition process: Following removal of the existing vegetation from the site, shred the material to the specified size and place in a stockpile on-site. Complete the decomposition process in stockpile prior to installation or use of mulch at depths specified on plans. If using the mulch for dust control, compaction control, or on existing vegetation to remain, place immediately after the completion of the decomposition process.

3.2 CONSTRUCTION

A. Installation

1. Shred trees and vegetation to the specified size requirements.

2. Apply Nitrogen at the rate of one (1) part Nitrogen to ten (10) parts mulch.

3. Stockpile the mulch and allow to sit or cook for a period of no less than three (3) weeks if the temperature is above 70° F. If the temperature is below 70° F, extend the sitting or cooking time to five (5) to six (6) weeks.

4. Turn the stockpile at least twice per week during the sitting or cooking period.

5. Stockpiles should be surrounded by biodegradable erosion control logs within 24 hours of placement to prevent run-off of the material.

END OF SECTION

APPENDIX A

QUALITY CONTROL / QUALITY ASSURANCE PROGRAM

Approved December 2007

Appendix A

Quality Control / Quality Assurance Program

Section 1. Overview

Introduction

Williamson County has established the following Quality Control (QC) / Quality Assurance (QA) Program to assure that the materials and workmanship incorporated into any roadway or highway construction project are in reasonable conformity with the requirements of the approved plans and specifications, including any approved changes. It consists of an "Acceptance Program" and a “QA Program" based on test results obtained by qualified persons and equipment.

This QC/QA Program allows for the use of validated contractor-performed QC test results as part of an acceptance decision. It also allows for the use of test results obtained by commercial laboratories in the QA Program in acceptance decisions, as well. The effectiveness of the “Acceptance Program” shall be the responsibility of the Construction Observer.

Definitions

Acceptance Program - All factors that comprise the Williamson County's determination of the quality of the product as specified in the contract requirements. These factors include QC and QA verification sampling and testing, and inspection.

Quality Control Program - The contractor’s systematic program detailing the control measures and reporting requirements necessary to achieve reasonable conformance with the requirements of the approved plans and specifications.

Quality Assurance Program - Activities that are an unbiased and independent evaluation of all the inspection, sampling and testing procedures used in the acceptance program.

Proficiency Samples - Homogenous samples that are distributed and tested by two or more laboratories and/or personnel. The test results are compared to assure that the laboratories and/or personnel are obtaining the same results.

Qualified Laboratories - Laboratories that are capable as defined by appropriate programs established by Williamson County and as indicated in the "Laboratory Qualification Program". As a minimum, the qualification program shall include provisions for checking testing equipment and the laboratory shall keep records of calibration checks.

Qualified Sampling and Testing Personnel - Personnel who are capable as defined by appropriate programs established as stated in Section 6 of this Appendix.

Quality Assurance – All those planned and systematic actions necessary to provide confidence that a product or service will satisfy given requirements for quality.

Quality Control - All contractor/vendor operational techniques and activities that are performed or conducted to fulfill the contract requirements.

Vendor – A supplier of project-produced material that is not the contractor.

Verification Sampling and Testing - Sampling and testing performed to validate the quality of the product, which consists of the QC and QA sampling and testing.

Approved December 2007

Section 2. Acceptance Program

Materials incorporated into any roadway or highway construction project shall be subject to verification sampling and testing, and inspection as part of the QC program outlined below:

- Quality Control Inspection

  - Contractor-performed QC Inspection will be required as part of the acceptance decision. Inspection check lists for the following structural items shall be completed and submitted as part of the acceptance program:

    Item 400 – Excavation & Backfill
    Item 416 – Drilled Shaft Foundations
    Item 420 – Concrete Structures
    Item 421 – Hydraulic Cement Concrete
    Item 422 – Bridge Deck
    Item 423 – Retaining Wall
    Item 425 – Precast Pre-stressed Concrete Structural Members
    Item 440 – Reinforcing Steel
    Item 442 – Metal for Structures
    Item 462 – Concrete Box Culverts
    Item 464 – Reinforced Concrete Pipe

    Sample Inspection check lists are included at the end of this Appendix.

  - The contractor shall designate individual(s) responsible for the QC Inspection for the project or each work element thereof. The designated QC individual(s) will maintain responsibility for providing reports detailing the compliance of each work element to the requirements of the approved project plans and specifications.

  - The QC report will detail requirements of the approved project plans and specifications and measures initiated to ensure reasonable conformity.

  - The contactor shall submit the QC Plan for acceptance detailing the individuals & methods(s) intended to be used to obtain reasonable conformance to the approved project plans and specifications.

- Quality Control Sampling, Testing and frequency

  - Contractor-performed QC sampling and testing will be used as part of an acceptance decision.

  - The frequency and location will be according to the “Project Test” frequency as shown in Appendix B. This project has been designed utilizing TxDOT Specifications; therefore, the 2005 TxDOT Guide Schedule for Sampling and Testing has been adopted for the testing program. As a County-developed project, all references to TxDOT in the testing program shall be understood to mean Williamson County, and all references to the Engineer shall be understood to mean the County Engineer or his designated representative(s).

  - These QC sampling and testing personnel, laboratories, and equipment shall be qualified according to the "Sampling and Testing Personnel Qualification Program" and the "Laboratory Qualification Program" and shall be evaluated under the "Quality Assurance Program" contained herein.

Approved December 2007

- Any equipment used to perform QC sampling and testing shall be subject to an evaluation by QA sampling and testing personnel. This evaluation shall include calibration checks and split or proficiency sample tests. The requirements for, and frequency of, equipment calibration are shown in Appendix B. Acceptable tolerance limits for the comparison of test results from split or proficiency samples are shown in “Acceptable Tolerance Limits for Independent Assurance.”

- Any individual who performs verification or QC sampling and testing shall be evaluated by QA sampling and testing personnel. This evaluation shall include observations and split or proficiency sample testing. Acceptable tolerance limits for the comparison of test results for split or proficiency samples are shown in "Acceptable Tolerance Limits for Quality Assurance."

- Furthermore, these QC test results may be validated by verification test results obtained from independently taken samples at the direction of the Construction Observer or the County.

Approved December 2007

Section 3. Quality Assurance Program

This Quality Assurance Program; as deemed necessary by the County or the Construction Observer; shall evaluate all QC inspection, sampling and testing procedures, personnel, and equipment used as part of the acceptance program.

- QA Inspection
    - The Construction Observer will be responsible for QA inspection. The inspection will be performed at periodic intervals to assure compliance with the accepted QC program, as well as to assure reasonable close conformity to the approved project plans and specifications.
- Sampling and Testing Frequency and Location
    - Quality Assurance sampling and testing shall be performed at the same location and frequency established for the Project Tests in the "Guide Schedule of Sampling and Testing" found in Appendix B.
    - The frequency for the “Independent Assurance Tests” shall be as directed by the Construction Observer.
- Testing Equipment
    - Laboratory testing equipment used for QA sampling and testing shall be qualified according to the "Laboratory Qualification Program."
    - All laboratories used for QA sampling and testing must be AASHTO accredited and listed as an accepted Lab by the County.
    - The frequency for qualifying QA sampling and testing equipment shall not exceed one (1) year or as directed by the Construction Observer.
    - Calibration/verification is required whenever the laboratory or equipment is moved.
    - The QA equipment shall be other than that used for performing verification or QC testing.
- Testing Personnel
    - Laboratory personnel who perform QA sampling and testing shall be in accordance with the "Sampling and Testing Personnel Qualification Program" Included herein.
    - The individuals performing QA sampling and testing shall be other than those who perform other verification or QC testing.
- Comparison of QC and QA Test Results
    - Acceptable tolerance limits for the comparison of test results from split and proficiency samples are shown in "Acceptable Tolerance Limits for Independence Assurance."
    - If the comparison of the test results do not comply with the tolerances, an engineering review of the test procedures and equipment shall be performed immediately to determine the source of the discrepancy.
    - Corrective actions must be identified and incorporated as appropriate.

Approved December 2007

Test results from all samples involved in the Quality Assurance Program shall be documented and reported in the project files.

- Dispute Resolution System

    - Testing disputes arising between the Construction Observer, or his/her designated agents, and the Contractor shall be resolved in a reliable, unbiased manner. The decision of the County, the Construction Observer, or their authorized representatives will be final.

Approved December 2007

Section 4. Materials Certification

The Independent Assurance agency shall submit a "Certificate of Materials" to the Construction Observer indicating the conformity of tested materials to the approved plans and specifications including any exceptions, if applicable.

Approved December 2007

Section 5. Conflict of Interest

To avoid an appearance of a conflict of interest, sampling and testing of materials under the QA program shall be performed at a qualified laboratory other than the laboratory used for project testing by the Contractor.

Approved December 2007

Section 6. Sampling and Testing Personnel Qualification Program

Purpose

This program provides uniform Countywide procedures for sampling and testing personnel qualification to ensure that tests required by the specifications are performed according to the prescribed sampling and testing methods.

Sampling and Testing Personnel Qualification

Sampling and testing personnel will be qualified to perform tests for the acceptance of materials in the areas of Portland cement concrete, soils and aggregates and bituminous materials. The test methods for which individuals can be qualified include, but are not limited to, the following.
(* Denotes tests on which split or proficiency sample evaluations are required.)

Soils & Aggregates (100-E Series & 400-A Series)
Tex-101-E, Preparing Soil and Flexible Base Materials for Testing

Tex-102-E, Determining Slaking Time

Tex-103-E, Determining Moisture Content in Soil Materials

Tex-104-E, Determining Liquid Limit of Soils*

Tex-105-E, Determining Plastic Limit of Soils*

Tex-106-E, Calculating the Plasticity Index of Soils*

Tex-107-E, Determining the Bar Linear Shrinkage of Soils*

Tex-108-E, Determining the Specific Gravity of Soils

Tex-110-E, Particle Size Analysis of Soils*

Tex-111-E, Determining the Amount of Material in Soils Finer than 75 □m (No.200) Sieve

Tex-113-E, Laboratory Compaction Characteristics and Moisture-Density Relationship of Base Materials

Tex-114-E, Laboratory Compaction Characteristics and Moisture-Density Relationship of Subgrade and Embankment Soils

Tex-115-E, Field Method for Determining In-Place Density of Soils and Base Materials

Tex-116-E, Ball Mill Method for Determining the Disintegration of Flexible Base Material

Tex-117-E, Triaxial Compression Tests for Disturbed Soils and Base Materials

Tex-120-E, Soil-Cement Testing

Tex-121-E, Soil-Lime Testing

Tex-126-E, Molding, Testing, and Evaluating Bituminous Black Base Materials*

Tex-127-E, Lime Fly-Ash Compressive Strength Test Methods
Tex-128-E, Determining Soil pH

Tex-129-E, Measuring the Resistivity of Soil Materials

Approved December 2007

Tex-140-E, Measuring Thickness of Pavement Layer

Tex-400-A, Sampling Stone, Gravel, Sand, and Mineral Aggregates

Tex-401-A, Sieve Analysis of Fine and Coarse Aggregate*

Tex-402-A, Fineness Modulus of Fine Aggregate

Tex-403-A, Saturated Surface Dry Specific Gravity and Absorption of Aggregates

Tex-404-A, Determining Unit Mass (Weight) of Aggregates

Tex-405-A, Determining Percent Solids and Voids in Concrete Aggregates

Tex-406-A, Material Finer Than 75 □m (No. 200) Sieve in Mineral Aggregates (Decantation Test for Concrete Aggregates)

Tex-408-A, Organic Impurities in Fine Aggregate for Concrete

Tex-409-A, Free Moisture and Water Absorption in Aggregate for Concrete

Tex-409-A, Free Moisture and Water Absorption in Aggregate for Concrete

Tex-411-A, Soundness of Aggregate by Using Sodium Sulfate or Magnesium Sulfate

Tex-413-A, Determining Deleterious Materials in Mineral Aggregates

Tex-425-A, Determining Moisture Content in Fine Aggregate by the "Speedy" Moisture Method

Tex-460-A, Determining Crushed Face Particle Count

Bituminous (200-F Series)

Tex-200-F, Sieve Analysis of Fine and Coarse Aggregate*

Tex-201-F, Bulk Specific Gravity and Water Absorption of Aggregate

Tex-202-F, Apparent Specific Gravity of Material Finer than 180 □m (No. 80) Sieve

Tex-203-F, Sand Equivalent Test*

Tex-204-F, Design of Bituminous Mixtures

Tex-205-F, Laboratory Method of Mixing Bituminous Mixtures

Tex-206-F, Compacting Test Specimens of Bituminous Mixtures*

Tex-207-F, Determining Density of Compacted Bituminous Mixtures*

Tex-208-F, Test for Stabilometer Value of Bituminous Mixtures*

Tex-210-F, Determining Asphalt Content of Bituminous Mixtures by Extraction*

Tex-211-F, Recovery of Asphalt from Bituminous Mixtures by the Abson Process

Tex-212-F, Determining Moisture Content of Bituminous Mixtures

Tex-213-F, Determining Hydrocarbon-Volatile Content of Bituminous Mixtures

Tex-217-F, Determining Deleterious Material and Decantation Test for Coarse Aggregates

Tex-221-F, Sampling Aggregate for Bituminous Mixtures, Surface Treatments and Limestone Rock Asphalt

Tex-222-F, Sampling Bituminous Mixtures

Tex-224-F, Determining Flakiness Index

Tex-226-F, Indirect Tensile Strength Test

Tex-227-F, Theoretical Maximum Specific Gravity of Bituminous Mixtures*

Tex-228-F, Determining Asphalt Content of Bituminous Mixtures by the Nuclear Method*

Tex-229-F, Combined HMAC Cold-Belt Sampling and Testing Procedure

Tex-236-F, Determining Asphalt Content from Asphalt Paving Mixtures by the Ignition Method*

Concrete (400-A Series)

Tex-407-A, Sampling Freshly-Mixed Concrete

Tex-414-A, Air Content of Freshly Mixed Concrete by the Volumetric Method*

Tex-415-A, Slump of Portland Cement Concrete*

Tex-416-A, Air Content of Freshly Mixed Concrete by the Pressure Method*

Tex-417-A, Unit Weight, Yield, and Air Content (Gravimetric) of Concrete

Tex-418-A, Compressive Strength of Cylindrical Concrete Specimens*

Tex-419-A, Compressive Strength of Concrete Using Portions of Beams Broken in Flexure

Tex-424-A, Obtaining and Testing Drilled Cores of Concrete

Tex-436-A, Measuring Texture Depth by the Sand Patch Method

Tex-437-A, Test for Flow of Grout Mixtures (Flow Cone Method)

Tex-447-A, Making and Curing Concrete Test Specimens

Tex-448-A, Flexural Strength of Concrete Using Simple Beam Third-Point Loading*

Tex-450-A, Capping Cylindrical Concrete Specimens

Tex-460-A, Determining Crushed Face Particle Count

Asphalt (500-C Series)

Tex-502-C, Penetration of Bituminous Materials (refer to AASHTO T 49)

Tex-530-C, Effect of Water on Bituminous Paving Mixtures

Approved December 2007

Tex-531-C, Prediction of Moisture-Induced Damage to Bituminous Paving Materials Using Molded Specimens

Tex-1000-S, Operating Pavement Profilograph and Evaluating Profiles

Who Must Be Qualified?

Any individual who performs tests on materials for acceptance must be qualified.

.

Qualification of Sampling and Testing Personnel

All sampling and testing personnel for approved laboratories shall be qualified to do the work in accordance with "Laboratory Qualification Program".

Each laboratory shall maintain a minimum of one (1) qualified individual for each test procedure performed.

Section 7. Laboratory Qualification Program

Purpose

This program provides uniform countywide procedures to ensure that laboratory facilities and equipment are adequate for the performance of required sampling and testing methods.

Laboratories

All laboratories that perform testing for Williamson County must be accredited under the AASHTO Laboratory Accreditation Program. These include, but are not limited to the following:

- Area/project laboratories (includes field laboratories)
- Commercial laboratories
- Contractor laboratories
- Vendor laboratories (material suppliers).

The most current AASHTO accredited laboratories in the State of Texas can be obtained at http://patapsco.nist.gov/aashto/amrl/services/aap_intro.htm. In addition, Appendix C includes a list of AASHTO accredited laboratories obtained at the time this document was prepared.

Laboratory Qualification Responsibility

The Construction Observer or his/her authorized representatives will be responsible to ensure all QA laboratories used for project and QA testing and sampling are qualified.

Qualification Process

The laboratory qualifying authority will:

- identify the scope of testing to be performed
- verify that manuals and/or test methods used to perform tests are available and up-to-date
- document that the laboratory has the required equipment to perform the tests
- check the calibration/verification records for each piece of equipment, to include:
    - description of equipment
    - identification of any traceable standard used
    - frequency of calibration
    - date of last calibration
    - date of next calibration
    - procedure used to calibrate equipment
    - procedure used to identify equipment not in compliance.

In addition, all equipment may be subjected to calibration verification or other inspection by the qualifying authority.

Approved December 2007

Calibration Standards and Frequencies for Laboratory Equipment

The standards for calibration and the frequencies for laboratory equipment calibrations shall be in accordance with appropriate testing equipment measures as indicated in the Texas Department of Transportation Manual of Testing Procedures. 100-E (Soils), 200-F (Bituminous), and 400-A (Concrete) series of TxDOT's *Manual of Testing Procedures*.

Frequency for Laboratory Qualification

Laboratories shall be qualified at an interval not to exceed six (6) months, or as directed by the Construction Observer. Calibration/verification is required whenever the laboratory or equipment is moved.

Non-Compliance

A laboratory that does not meet the above requirements is subject to disqualification. Any equipment in a qualified laboratory failing to meet specified equipment requirements for a specific test method shall not be used for that test method.

Documentation

The Construction Observer will be responsible for verifying that laboratories are qualified to perform material testing. Documentation will be required to be kept by the qualified laboratory. Calibration records will be maintained for three (3) years, unless directed otherwise by the Construction Observer.

Dispute Resolution

The County will have the final decision regarding all disputes of the laboratory qualification and calibration of testing equipment.

Approved December 2007

Section 8. Acceptable Tolerance Limits for Quality Assurance

The following tables indicate the acceptable tolerance limits for the specified material.

Embankment

Embankment		
Procedure	**Texas Test Method**	**Tolerance**
In-place Density	"Tex-115-E, Field Method for Determining In-Place Density of Soils and Base Materials"	± 2.5% Field Density

Untreated & Treated Sub-base and Base Courses

Untreated & Treated Sub-base and Base Courses		
Procedure	**Texas Test Method**	**Tolerance**
In-place Density	"Tex-115-E, Field Method for Determining In-Place Density of Soils and Base Materials"	± 2.5% Field Density
Gradation:	"Tex-110-E, Particle Size Analysis of Soils"	-
> No. 4 ≤ No. 4	-	± 5% ± 3%
Liquid Limit	"Tex-104-E, Determining Liquid Limit of Soils"	15% of the mean*
Plasticity Index	"Tex-106-E, Calculating the Plasticity Index of Soils"	20% of the mean*

Asphalt Stabilized Base

Asphalt Stabilized Base		
Procedure	**Texas Test Method**	**Tolerance**
Gradation:	"Tex-200-F, Sieve Analysis of Fine and Coarse Aggregates"	-
> No. 4 ≤ No. 4	-	± 5% ± 3%
Liquid Limit	"Tex-104-E, Determining Liquid Limit of Soils"	15% of the mean*
Plasticity Index	"Tex-106-E, Calculating the Plasticity Index of Soils"	20% of the mean*
Percent Asphalt	"Tex-210-F, Determining Asphalt Content of Bituminous Mixtures by Extraction"	± 0.3%
-	"Tex-228-F, Determining Asphalt Content of Bituminous Mixtures by the Nuclear Method"	± 0.3%

Approved December 2007

-	"Tex-126-E, Molding, Testing, and Evaluating Bituminous Black Base Materials"	± 0.3%
-	"Tex-229-F, Combined HMAC Cold-belt Sampling and Testing Procedure"	± 0.3%
-	"Tex-236-F, Determining Asphalt Content from Asphalt Paving Mixtures by the Ignition Method"	± 0.3%
In-place Density (Cores)	"Tex-207-F, Determining Density of Compacted Bituminous Mixtures"	± 1% Field Density

Surface Treatment Aggregates

Surface Treatment Aggregates		
Procedure	**Texas Test Method**	**Tolerance**
Gradation:	"Tex-200-F, Sieve Analysis of Fine and Coarse Aggregates"	-
> No. 4 ≤ No. 4	-	± 5% ± 3%

Portland Cement Concrete Coarse Aggregate

Portland Cement Concrete Coarse Aggregate		
Procedure	**Texas Test Method**	**Tolerance**
Gradation:	"Tex-401-A, Sieve Analysis of Fine and Coarse Aggregate"	-
> No. 4 ≤ No. 4	-	± 5% ± 3%

Portland Cement Concrete Fine Aggregate

Portland Cement Concrete Fine Aggregate		
Procedure	**Texas Test Method**	**Tolerance**
Gradation (3/8" through No. 200)	"Tex-401-A, Sieve Analysis of Fine and Coarse Aggregate"	± 3%
Sand Equivalent	"Tex-203-F, Sand Equivalent Test"	± 10

Portland Cement Concrete Complete Mixture

Portland Cement Concrete Complete Mixture		
Procedure	**Texas Test Method**	**Tolerance**
Flexural Strength Compressive	1. "Tex-448-A, Flexural Strength of Concrete Using Simple Beam Third-Point Loading" 2. "Tex-418-A, Compressive Strength of Cylindrical Concrete Specimens"	20% of the mean*

Approved December 2007

Slump	"Tex-415-A, Slump of Portland Cement Concrete"	± 1.0"
Entrained Air	3. "Tex-414-A, Air Content of Freshly Mixed Concrete by the Volumetric Method" 4. "Tex-416-A, Air Content of Freshly Mixed Concrete by the Pressure Method"	± 1%

Asphaltic Concrete Coarse Aggregate

Asphaltic Concrete Coarse Aggregate		
Procedure	**Texas Test Method**	**Tolerance**
Gradation:	"Tex-200-F, Sieve Analysis of Fine and Coarse Aggregates"	-
> No. 10 ≤ No. 10	-	± 5% ± 3%
Deleterious Material	"Tex-217-F, Determining Deleterious Material and Decantation Test for Coarse Aggregates"	± 0.3 %
Decantation	"Tex-217-F, Determining Deleterious Material and Decantation Test for Coarse Aggregates"	20% of the mean*

Asphaltic Concrete Fine Aggregate

Asphaltic Concrete Fine Aggregate		
Procedure	**Texas Test Method**	**Tolerance**
Gradation (No. 10 through No. 200)	"Tex-200-F, Sieve Analysis of Fine and Coarse Aggregates"	± 3%
Bar Linear Shrinkage	"Tex-107-E, Determining the Bar Linear Shrinkage of Materials"	± 2

Asphaltic Concrete Combined Aggregate

Asphaltic Concrete Combined Aggregate		
Procedure	**Texas Test Method**	**Tolerance**
Gradation:	"Tex-200-F, Sieve Analysis of Fine and Coarse Aggregates"	-
> 5/8" 5/8" through No. 200 Passing No. 200	-	± 5% ± 3% ± 1.5%
Sand Equivalent	"Tex-203-F, Sand Equivalent Test"	± 10

Approved December 2007

Asphaltic Concrete Complete Mixture

Asphaltic Concrete Complete Mixture		
Procedure	**Texas Test Method**	**Tolerance**
Asphalt Content	"Tex-210-F, Determining Asphalt Content of Bituminous Mixtures by Extraction"	± 0.3%
-	"Tex-228-F, Determining Asphalt Content of Bituminous Mixtures by the Nuclear Method"	± 0.3%
-	"Tex-229-F, Combined HMAC Cold-belt Sampling and Testing Procedure"	± 0.3%
-	"Tex-236-F, Determining Asphalt Content from Asphalt Paving Mixtures by the Ignition Method"	± 0.3%
Maximum Theoretical Specific Gravity	"Tex-227-F, Theoretical Maximum Specific Gravity of Bituminous Mixtures"	± 0.020
Laboratory Molded Density	"Tex-207-F, Determining Density of Compacted Bituminous Mixtures"	± 1.0%
Laboratory Molded Bulk Specific Gravity	"Tex-207-F, Determining Density of Compacted Bituminous Mixtures"	± 0.020
Stability	"Tex-208-F, Test for Stabilometer Value of Bituminous Mixtures"	5 points
Moisture	"Tex-212-F, Determining Moisture Content of Bituminous Mixtures"	± 0.2 mL
In-place Air Voids (Core)	"Tex-207-F, Determining Density of Compacted Bituminous Mixtures"	± 1.0%

NOTE: The above tolerances are to be used when comparison of test results is by split samples. A tolerance of plus or minus two (2) standard deviations shall be used when comparison of test results is by proficiency samples.

*The difference between compared test results shall not exceed the indicated percentage of the mean of the compared test results - the mean being the average of the two test results.

EXAMPLE: Plasticity Index	
Job Control test value	18
IA Test value	22
Mean	20
20% difference	4

Both values are within 20% of the mean.

Approved December 2007

Williamson County Road Bond Program
Construction Quality Control & Quality Assurance Program

Inspection Check Lists

Williamson County
Road Bond Program
Inspection Check Lists

Spec Item: 400 – Excavation & Backfill for Structures
Report No.: _____
Description: _____
Date: _____
Location: _____
Time: _____

QC Reviewer: _____

Results: ☐ Accepted ☐ Not Accepted

Remarks: _____

QC Reviewer Signature: _____

Excavation and Backfill for Structures	**Yes**	**No**	**NA**
I. Excavation (400.3)			
1. Whenever excavating for installing structures across private property beyond the limits of the embankment, is the top soil removed prior excavation and kept separate and later replaced, as nearly as feasible, in its original position?	☐	☐	☐
2. If trench excavation deeper than five (5) feet, is trench protection required?	☐	☐	☐

Williamson County
Road Bond Program
Inspection Check Lists

		Yes	No	NA
3.	When old or abandoned structures or foundations are encountered in the excavation, are they removed for the full width of the excavation and to a depth of one (1) foot below the bottom of the excavation?	☐	☐	☐
4.	During construction, did the contractor receive approval from the Engineer of Record before laying any structures in the presence of water?	☐	☐	☐
5.	If the excavation cannot be dewatered to the point where the subgrade is free of mud, was a concrete mixture with not less than three (3) sacks of cement per cubic yard (or other material approved by the Engineer of Record) placed a minimum of three (3) inches in depth in the bottom of the excavation?	☐	☐	☐
6.	For all culverts where the soil encountered at established footing grade is an unstable or incompressible material is the procedure shown in Item 400.3.A.4 followed unless other methods are called for in the plans?	☐	☐	☐
7.	Unless otherwise shown on the plans, are all sewer pipe structures constructed in an open cut with vertical sides to a point one (1) foot above the pipe?	☐	☐	☐
8.	Are all vertical sides sheeted and braced when necessary to maintain the required vertical excavation throughout the construction?	☐	☐	☐
9.	For pipe to be installed in a fill section was the embankment constructed to one (1) foot above the top of the pipe and then excavated for the pipe?	☐	☐	☐

Williamson County
Road Bond Program
Inspection Check Lists

	Yes	No	NA
10. Is the trench excavated to the width and elevations as shown in the plans?	☐	☐	☐
11. Is the pipe, culvert, etc., properly centered in the trench?	☐	☐	☐

II. Shaping and Bedding (400.3.B)

1. For precast box sections and pipe, is the bedding in accordance with Item 400.3.B unless otherwise shown on the plans?	☐	☐	☐
2. For precast pipe and box sections where cement stabilized backfill is indicated on the plans, is the excavation undercut a minimum 4 inches and backfilled with stabilized material to support the pipe at the required grade?	☐	☐	☐

III. Backfill – General (400.3.C)

1. Is backfill material free from stones of such size as to interfere with compaction, large or frozen lumps which will not break down readily under compaction; and wood or other extraneous material?	☐	☐	☐
2. a. Is backfill in areas not supporting any portion of the completed roadbed, retaining wall or embankment, placed in layers not more than ten (10) inches in depth (loose measurement)?	☐	☐	☐
b. Is backfill which will support any portion of the roadbed, retaining wall or embankment, placed in uniform layers not to exceed eight (8) inches in depth (loose measurement)?	☐	☐	☐

Williamson County
Road Bond Program
Inspection Check Lists

	Yes	No	NA
3. Is each layer of backfill material to the moisture content needed to obtain the required density?	☐	☐	☐
4. If a cohesionless material, such as sand, is used, is it compacted with vibratory equipment, water ponding or a combination of both?	☐	☐	☐

IV. Backfill – Bridge Foundations, Retaining Walls and Culverts (400.3.C.2)

1. Is the material used for backfilling free of any appreciable amount of gravel or stone particles more than four (4) inches in greatest dimension and of a gradation that permits thorough compaction?	☐	☐	☐
2. Are mechanical tamps or rammers required when the structure being backfilled could sustain damage from other compacting operations?	☐	☐	☐
3. Are any special density requirements for backfill under or adjacent to structures met?	☐	☐	☐

V. Backfill – Pipe (400.3.C.3)

1. After the bedding and pipes have been installed as required, is the selected backfill materials brought to proper moisture condition, placed along both sides of the pipe equally, in uniform layers not exceeding eight (8) inches in depth (loose measurement), and thoroughly compacted mechanically?	☐	☐	☐



Williamson County
Road Bond Program
Inspection Check Lists

	Yes	No	NA
2. Is the method of backfill in question 1 above continued in this manner to the top of pipe elevation and compacted in accordance with Item 400.3.C.1?	☐	☐	☐

VI. Cement Stabilized Backfill (400.3.C.4)

1. When required by plans, is cement stabilized backfill or flowable backfill placed equally along all sides of the structure, so as to prevent strain on or displacement of the structure; and are all voids filled?	☐	☐	☐

Williamson County
Road Bond Program
Inspection Check Lists

Spec Item: 416 – Drilled Shaft Foundations
Description: _____
Location: _____
Report No.: _____
Date: _____
Time: _____

QC Reviewer: _____

Results: ☐ Accepted ☐ Not Accepted

Remarks: _____

QC Reviewer Signature: _____

416 – Drilled Shaft Foundations	**Yes**	**No**	**NA**
I. Materials (416.2)			
1. Did the Contractor incorporate materials into this project that meet the requirements of referenced items in Section 416.2?	☐	☐	☐
2. Does concrete for Drilled Shafts meet the requirements of Table 1 and Table 2 for concrete class and slump?	☐	☐	☐
3. If drilling slurry is used, does it meet the requirements of Table 3, as determined by Tex-130 E?	☐	☐	☐

Williamson County
Road Bond Program
Inspection Check Lists

Drilled Shaft Foundations – Item 416

	Yes	No	NA
4. Do Chemical Admixtures meet the requirements of DMS-4620?	☐	☐	☐

II. Construction (416.3)

A. Excavation

1. When excavating, was satisfactory founding material encountered at plan elevation?	☐	☐	☐
If not, was the bottom of the shaft adjusted, or the foundation altered, as determined by the Engineer of Record, to satisfactorily comply with the design requirements?			
2. Is the shaft vertical alignment measured and found to be within a tolerance of 1 inch per 10 feet of depth? **(Hold Point)**	☐	☐	☐
3. Is the center of shaft location measured and found to be not more than 1 inch from the horizontal position shown on the plans? **(Hold Point)**	☐	☐	☐
If not, was a structural review performed?			
4. Did the Contractor provide suitable access and lighting for proper inspection of the completed excavation?	☐	☐	☐

Williamson County
Road Bond Program
Inspection Check Lists

Drilled Shaft Foundations – Item 416

	Yes	No	NA
5. For abutment drill shafts, is the embankment at the bridge ends completed to grade and thoroughly compacted prior to drilling?	☐	☐	☐

B. Requirements for Slurry Displacement Method

1. If the slurry method is used to construct drilled shaft, is slurry mixed at the project site or is it premixed in a reservoir adjacent to the excavation (not in the shaft excavation or other hole)?	☐	☐	☐
2. During and after drilling was a head of slurry maintained in the shaft excavation at or near ground level or higher as necessary to counteract ground water pressure?	☐	☐	☐
3. Just prior to placement of reinforcing steel, was an airlift or proper size cleanout bucket used to remove accumulated material on the bottom after the completion of drilling? **(Hold Point)**	☐	☐	☐
4. Was concrete placement started within 4 hours of shaft excavation? If not, was shaft reprocessed?	☐	☐	☐
5. Is the slurry agitated if the placement of concrete is delayed to keep it liquefied?			

Williamson County
Road Bond Program
Inspection Check Lists

Drilled Shaft Foundations – Item 416

C. Reinforcing Steel	Yes	No	NA
1. Is the cage of reinforcing steel completely assembled according to plans and placed in the drill shaft as a unit immediately prior to concrete placement? **(Hold Point)**	☐	☐	☐
2. Where spiral reinforcement is used, is it tied to longitudinal bars (not welded) at a spacing not to exceed 24 inches?	☐	☐	☐
3. In uncased shafts, are concrete spacer blocks or steel chairs placed at sufficient intervals to insure concentric spacing for the entire length of the cage?	☐	☐	☐
4. In cased shafts, are steel chair spacers or bent pieces of steel bars placed at sufficient intervals to insure concentric spacing inside the casing?	☐	☐	☐
5. Is the cage adequately supported to control vertical displacement and racking and distortion of the steel during concrete placement and/or extraction of the casing?	☐	☐	☐
6. a. Is the elevation of the steel cage checked before and after concrete placement or after casing extraction when casing is used?	☐	☐	☐
b. Did the downward movement of the steel not exceed 6 inches per 20 feet of shaft length?	☐	☐	☐

Williamson County
Road Bond Program
Inspection Check Lists

Drilled Shaft Foundations – Item 416

	Yes	No	NA
c. Did the upward movement of the steel not exceed 6 inches?	☐	☐	☐
d. Were the dowel bars checked for proper lap length between the shaft and column?	☐	☐	☐

D. Concrete (Perform all work in accordance with the requirements of Item 420, "Concrete Structures".)

1. For dry shafts 24" in diameter or smaller, is concrete placed continuously through the entire length of the shaft through a suitable tube or tremie (limit freefall to 25 feet) to prevent segregation of materials?	☐	☐	☐
2. Does the elapsed time from the beginning of concrete placement into the cased portion of the shaft until the completion of extraction of the casing exceed one hour?	☐	☐	☐
3. At the time the concrete is placed, is the excavated drill shaft free from accumulated seep water?	☐	☐	☐
4. Has all loose material been removed from the bottom of the excavation prior to placing concrete?	☐	☐	☐

(Note: For dry shafts over 24" diameter concrete freefall is unlimited; use 3 foot drop tube.)

Williamson County
Road Bond Program
Inspection Check Lists

Drilled Shaft Foundations – Item 416

	Yes	No	NA
E. Additional Requirements for Slurry Displacement or Underwater Concrete Placement Methods			
1. Is the concrete placed through a closed tremie or pumped to the bottom of the excavation?	☐	☐	☐
2. If a tremie is used, is it kept full of concrete and well submerged in the previously placed concrete at all times?	☐	☐	☐

How is this determined?

3. During the placement of concrete was the tremie raised, as necessary, to maintain the free flow of concrete and the stability of any casing used?

4. Was additional concrete placed to ensure the removal of any contaminated concrete at the top of the shaft?

5. For pours over water, was a collar used to capture the slurry and the top portion of concrete flushed from the shaft?

6. If the tremie seal (separating layer between the concrete and contaminated bottom hole material) is lost, was the tremie removed, the bottom resealed and the tremie re-inserted at least 5 feet below the new seal before continuing concrete placement?

Williamson County
Road Bond Program
Inspection Check Lists

Drilled Shaft Foundations – Item 416

	Yes	No	NA
F. Load Testing			
1. If required, were the poured drill shafts load tested after curing in accordance with Item 405, "Foundation Test Load"?	☐	☐	☐

_____

_____

Williamson County Road Bond Program Inspection Check Lists

Drilled Shaft Foundations – Item 416

Drilled Shaft Record
Form No. 416

DRILLED SHAFT				BELL FTG.		Date Drilled	Casing Used	Drilling Mud	Slurry Plmt.	Remarks
No.	Dia. (in)	Top of Shaft Elev.	Length (ft)	Dia. (CY)	Vol. (CY)					
Bent No.	Design Load		Tons per shaft							
Bent No.	Design Load		Tons per shaft							
Bent No.	Design Load		Tons per shaft							
Bent No.	Design Load		Tons per shaft							
Bent No.	Design Load		Tons per shaft							

Summary for Payment				Comments
Total this sheet		Total this structure		
size of shaft	Length (ft.)	size of shaft	Length (ft.)	
Total Vol of Bells		Total Vol of Bells		

Williamson County
Road Bond Program
Inspection Check Lists

Drilled Shaft Foundations – Item 416

Signature/Date:_____

Williamson County
Road Bond Program
Inspection Check Lists

Spec Item: 420 – Concrete Structures
Description: _____
Location: _____
Report No.: _____
Date: _____
Time: _____

QC Reviewer: _____

Results: ☐ Accepted ☐ Not Accepted

Remarks: _____

QC Reviewer Signature: _____

Concrete Structures	**Yes**	**No**	**NA**
I. Materials (420.2)	☐	☐	☐
1. Were concrete structures constructed from materials conforming to TxDOT's Department Material Specifications in accordance with Section 420.2?			
II. Construction (420.4)			
A. Schedule Restrictions			

Williamson County
Road Bond Program
Inspection Check Lists

Concrete Structures – Item 420

	Yes	No	NA
1. Did the Contractor comply with the schedule restrictions of Section 420.4.A, prior to erecting forms, removing forms, placement of materials, equipment and bridge rail, opening to construction or full traffic, post-tensioning or backfilling, ensure the previously placed concrete attained the minimum compressive strength or curing time?	☐	☐	☐

B. Falsework and Forms

1. Are the working drawings for forms and falsework signed and sealed by a Registered Professional Engineer, licensed in the state of Texas?	☐	☐	☐
2. Were the falsework and forms placed braced and alignments checked to ensure placement in accordance with the plans signed/sealed working drawings?	☐	☐	☐

C. Reinforcement (provided under Item 440)

1. Was reinforcing steel supports welded to I-beams or girders or to reinforcing steel as shown in the plans?	☐	☐	☐
2. Is the installation of dowels and anchor bolts in accordance with Section 420.4.G.10?	☐	☐	☐

D. Placing Concrete - General

1. Is the temperature of structural concrete at the time of placement between 50°and 95° F?	☐	☐	☐

Williamson County
Road Bond Program
Inspection Check Lists

Concrete Structures – Item 420

	Yes	No	NA
2. Is the temperature of each truck load of concrete for bridge slabs and top slabs of direct traffic culverts being checked and is it between 50° and 85°F?	☐	☐	☐
3. Does the transporting time from the Batching Plant to the placing of concrete in the forms conform to the specification or requirements?	☐	☐	☐
4. If a pump is used to deliver concrete from the truck to the structure, is sampling for testing done at the discharge or was correlation testing performed and documented to ensure that specifications are met at the discharge end?	☐	☐	☐
5. Are all forms, pre-stressed concrete panels, T-beams and concrete box beams wetted thoroughly and remaining puddles of excess water removed prior to concrete placement?	☐	☐	☐
6. Does the method of handling, placing and consolidation of concrete minimize segregation of the concrete and displacement of the reinforcement?	☐	☐	☐
7. Does the concrete have a free fall of five (5) feet or less except in the case of thin walls or as specified otherwise?	☐	☐	☐

Williamson County
Road Bond Program
Inspection Check Lists

Concrete Structures – Item 420

	Yes	No	NA
8. Is the concrete deposited in the forms in uniform layers not more than thirty-six (36) inches in thickness unless otherwise directed by the Engineer?	☐	☐	☐
9. Is the sequence of successive layers or adjacent portions of concrete such that they can be vibrated into a homogenous mass with the previously placed concrete before it sets?	☐	☐	☐
10. Is the construction sequence arranged so that cold joints in a monolithic placement is avoided?	☐	☐	☐
11. Is the concrete vibrated immediately after placement to consolidate the concrete and have the mortar flushed to the form surfaces?	☐	☐	☐
12. Is at least one stand-by vibrator provided for emergency use in addition to those required for placement?	☐	☐	☐
13. Is the rate of placement and finish satisfactory?	☐	☐	☐
14. Unless otherwise shown on the plans, for monolithic mass placements having a least dimension greater than five (5) feet, did the contractor submit a detailed plan to minimize temperature differential and meet the requirements of the Specification?	☐	☐	☐

Williamson County
Road Bond Program
Inspection Check Lists

Concrete Structures – Item 420

	Yes	No	NA
E. Construction Joints			
1. Are all construction joints in bridge slabs of the type and at the locations shown on the plans?	☐	☐	☐
2. Are there additional bridge slab construction joints placed that are not shown on the plans?	☐	☐	☐
3. Was written authorization from the Engineer given for additional joints in these members?	☐	☐	☐
F. Placing Concrete in Cold Weather			
1. Is concrete placed only when the ambient temperature in the shade is 35°F and rising or above 40°F?	☐	☐	☐
2. Is the temperature maintained after placement in accordance with Section 420.4.G.11?	☐	☐	☐
G. Placing Concrete in Hot Weather			
1. Unless otherwise directed by the Engineer, is an approved retarding agent used in all concrete pours for superstructures and top slabs of direct traffic culverts when the air temperature is above 85°F?	☐	☐	☐

Williamson County
Road Bond Program
Inspection Check Lists

Concrete Structures – Item 420

	Yes	No	NA
H. Placing Concrete in Water			
1. Are all classes of concrete placed under water, except Class E and Class SS, redesigned to contain an additional sack of cement per cubic yard?	☐	☐	☐
2. Is the concrete placed with a tremie meeting the requirements of Section 420.4.G.13, and is it not permitted to fall freely through the water nor disturbed after being placed?	☐	☐	☐
I. Placing Concrete in Superstructure			
1. For simple span bridge slabs, what type of finishing machine was used?	☐	☐	☐
2. If other than a mechanical longitudinal screed or a self-propelled transverse finishing machine was used, was approval given by the Engineer for small placements or unusual conditions?	☐	☐	☐
J. Finish of Bridge Slabs			
1. Did QC Reviewer witness the dry-run with the Contractor to ensure dead load deflection, screed profile, steel elevation, tying of rebar, armor joint elevation, depth of cover, etc. was checked?	☐	☐	☐
2. Was the concrete worked with a float to ensure a smooth finish?	☐	☐	☐

Williamson County
Road Bond Program
Inspection Check Lists

Concrete Structures – Item 420

	Yes	No	NA
3. Did QC Reviewer perform sufficient checks with a 16-ft. straight edge on the plastic concrete to ensure final surface is within specified tolerances?	☐	☐	☐
4. Did QC Reviewer continue checking and floating until the deck surface was true to grade, free of depressions, high spots, voids and rough spots?	☐	☐	☐
5. Was the surface finish achieved by using a carpet drag, burlap drag or broom?	☐	☐	☐
6. Was the finished concrete surface coated within 10 minutes with a single application of evaporation retardant at the rate recommended by the manufacturer?	☐	☐	☐
7. Is the final bridge deck surface given a grooved steel tine finish approximately 1/8 to 3/16 inches deep approximately 1/8 inches wide, randomly spaced approximately ¾ to 1 inch apart?	☐	☐	☐
8. Did the bridge deck finish meet the ride quality tolerance of 1/8 inch in ten (10) feet (10 feet straight edge test)?	☐	☐	☐
9. Was the bridge deck grooved by saw-cutting in accordance with Section 420.4.I?	☐	☐	☐

Williamson County
Road Bond Program
Inspection Check Lists

Concrete Structures – Item 420

	Yes	No	NA
K. Curing Concrete			
1. Were the curing requirements of Item 420.4.J met? (Note: See Table 1 – Please note "Exceptions to 4-Day Curing?")	☐	☐	☐
L. Removal of Forms and Falsework			
1. Did the Contractor remove the forms and falsework in accordance with Section 420.4.K?	☐	☐	☐
M. Ordinary Surface Finish			
1. Unless noted otherwise in the plans, did the exposed surfaces for the following items receive an ordinary finish in accordance with Section 420.4.M?			
a. Inside and top of inlets?	☐	☐	☐
b. Inside and top of manholes?	☐	☐	☐
c. Inside of sewer appurtenances?	☐	☐	☐
d. Inside of culvert barrels?	☐	☐	☐
e. Bottom of bridge slab between girders or beams?	☐	☐	☐
f. Vertical and bottom surfaces of interior concrete beams or girders?	☐	☐	☐

Note: Form marks and chamfer edges do not need to be smoothed for inside of culvert barrels and bottom of bridge slabs between girders or beams.

N. Surface Finishes for Concrete (Item 427)			
1. Was the surface cleaned and patched in preparation to receive the finish coating as shown in the plans: was this work performed in accordance with the requirements of Item 427?	☐	☐	☐

Williamson County
Road Bond Program
Inspection Check Lists

Concrete Structures – Item 420

_____

_____

Williamson County
Road Bond Program
Inspection Check Lists

Spec Item: 421 – Hydraulic Cement Concrete
Description:
Location:
Report No.:
Date:
Time:

QC Reviewer:

Results: ☐ Accepted ☐ Not Accepted

Remarks:

QC Reviewer Signature:

Portland Cement Concrete	**Yes**	**No**	**NA**
I. Materials (421.2)			
1. Do the materials used in all mixed concrete placed on the job conform to TxDOT's Department Material Specifications and other requirements of Section 421.2?	☐	☐	☐
2. Is the concrete mix visually checked for uniformity from the beginning to the end of each load?	☐	☐	☐

Williamson County
Road Bond Program
Inspection Check Lists

Hydraulic Cement Concrete – Item 421

	Yes	No	NA
II. Construction (421.4)			
A. Classification and Mix Design			
1. Are the requirements for entrained air met as outlined in Section 421.4.A.4 (Table 7)?	☐	☐	☐
2. Are the requirements of Table 8 – "Slump Requirements" being met?	☐	☐	☐
3. Is the maximum water-cement ratio exceeded?	☐	☐	☐
4. If question 3 is "yes", is the ratio regularly exceeded; was a new design performed?	☐	☐	☐
5. Is no water added to the concrete once discharge has begun to ensure that the maximum water-cement ratio is not exceeded?	☐	☐	☐
B. Job Testing and Documentation			
1. Was the concrete checked at the beginning of the load for slump or entrained air to prohibit placement of non-conforming material?	☐	☐	☐
2. Is the required job site testing (strength, clump, entrained air, concrete temperature, etc.) being performed at the required frequency using proper TxDOT testing methods?	☐	☐	☐

Williamson County
Road Bond Program
Inspection Check Lists

Hydraulic Cement Concrete – Item 421

	Yes	No	NA
3. Are the concrete tickets properly completed?	☐	☐	☐
4. Is the amount of water withheld (based on the design water-cement ratio) at the plant shown on the concrete ticket?	☐	☐	☐
5. If concrete is pumped, where is sampling and testing being performed?	☐	☐	☐
6. Were comparison tests recorded between the haul unit and the point of unit discharge after pump?	☐	☐	☐

C. Truck Mounted Paving Mixers and Transit Mix Trucks

1. Is each truck delivered concrete batch mixed not less than 70 nor more than 100 revolutions of the drum at the mixing speed designated by the manufacturer to produce a uniform concrete mix?	☐	☐	☐
2. When water is added at the job site, is the batch mixed a minimum of 25 revolutions at mixing speed?	☐	☐	☐

Concrete Batch Ticket

Ticket No: _____

Date: _____

Material Information

MAT'L	Identification*	Am't Batched
AEA		oz.
RA		oz.
WRA		oz.
		oz.
CA_1		lbs.
CA_2		lbs.
FA_1		lbs.
Cement		lbs.
Fly Ash		lbs.
		lbs.
		lbs.
		lbs.

AT PLANT

Plant | Des. No. | Truck No.

CY | County | Project | CCSJ

Class | Air Temp ℉ | Mixer Chg'd. ☐ AM ☐ PM | MAX TIME

*%Moist | CA_1 | CA_2 | CA_3 | CA_4 | FA_1 | FA_2

Water: Added (gal). | Ice. (lbs) | Max. (gal)

Rev. Const.: Beg. | End | Mix Rev.

Remarks

Plant Inspector Signature

AT JOBSITE

Structure | Location in Str.

Water Added (gal). | Ice (lbs).

Rev. Constr. Beg. | End. | Mix Rev.

*Slump | *%Air | *Conc. Temp ℉ | *Unit Weight Lbs/ft^3

*Bm. Or Cyl. Nos | Target Value | psi | Mixer Unloaded ☐ AM ☐ PM

Remarks

Plant Inspector Signature

Williamson County
Road Bond Program
Inspection Check Lists

Spec Item: 422 – Reinforced Concrete Slab
Description: _____
Location: _____
Report No.: _____
Date: _____
Time: _____

QC Reviewer: _____

Results: ☐ Accepted ☐ Not Accepted

Remarks: _____

QC Reviewer Signature: _____

Reinforced Concrete Slab	**Yes**	**No**	**NA**
I. Materials (422.2)			
1. Are the materials furnished by the Contractor in accordance with the referenced Items of work and meet the requirements of Section 422.2?	☐	☐	☐
II. Construction (422.3)			
A. Pre-placement			
1. Is all placing, finishing and curing equipment in place and operational?	☐	☐	☐

Williamson County
Road Bond Program
Inspection Check Lists

Reinforced Concrete Slab – Item 422

	Yes	No	NA
2. Has a dry runoff the equipment been done?	☐	☐	☐
3. Has the proper clear cover for the rebar been checked?	☐	☐	☐
4. Does screed clear at the armor joints?	☐	☐	☐
5. Are drains and grates at plan location and elevation?	☐	☐	☐
6. Is sufficient plastic and curing blankets available in case of inclement weather after the pour begins?	☐	☐	☐
7. Are forms, deck panels, beams and every element that the fresh concrete will come in contact with properly wetted?	☐	☐	☐

B. During Placement

1. Has placement begun at the low end on spans with a profile grade of 1.5% or more?	☐	☐	☐
2. Are proper clear cover depths being checked at the frequency shown in the Test Guide Schedule?	☐	☐	☐

Williamson County
Road Bond Program
Inspection Check Lists

Reinforced Concrete Slab – Item 422

	Yes	No	NA
3. Is concrete being placed between exterior and adjacent beams prior to placing concrete on overhangs?	☐	☐	☐
4. Is the application of evaporation retardant and curing compound being applies at the times required by specification and at the rates identified by the manufacturer?	☐	☐	☐

C. Post Placement

1. Is the final surface within specification tolerances when checked with a 16-ft straightedge?	☐	☐	☐
2. Has concrete attained a compressive strength in accordance with Section 420.4.A and Table 5 of Section 421.4 prior to removing forms or introducing loads?	☐	☐	☐
3. If deck grooves are saw cut, were they installed in accordance with Section 420.4.I?	☐	☐	☐

Williamson County
Road Bond Program
Inspection Check Lists

Spec Item: 423 – Retaining Wall
Description:
Location:
Report No.:
Date:
Time:

QC Reviewer:

Results: ☐ Accepted ☐ Not Accepted

Remarks:

QC Reviewer Signature:

Retaining Wall	**Yes**	**No**	**NA**
I. Materials (432.2)			
1. Do the materials furnished by the Contractor meet the requirements of the referenced Items of work and other requirements of Section 432.2?			
2. For non-reinforced cast-in-place, was “Class A” concrete used?	☐	☐	☐
3. For reinforced cast-in-place, was “Class C” concrete used?	☐	☐	☐

Williamson County
Road Bond Program
Inspection Check Lists

Retaining Wall – Item 423

	Yes	No	NA
4. Are precast panels fabricated with "Class H" concrete with compressive strength breaks of 4,000 psi or greater?	☐	☐	☐
5. If machine-made concrete block units are used, were they cast in accordance with ASTM C-90, Class 1, Type II and meet the 28-day compressive strength of 4,000 psi with maximum moisture absorption of 7%?	☐	☐	☐
6. If machine-made concrete block units are used, were they sampled and tested in accordance with ASTM C-140 and are the molded dimensions within 1/8" tolerance, except where height must be within 1/16"?	☐	☐	☐
7. For filter fabric used in the Retaining Wall System, is it UV-resistant and does the material meet the requirements of DMS-6200?	☐	☐	☐
8. Are approved joint fillers, pads, waterstops, etc. used as shown in the plans?	☐	☐	☐
9. Does the retaining wall design service life meet the requirements of Section 423.3B?	☐	☐	☐
10. Does the backfill material conform to the gradation and other requirements stated in the plans and/or Item 423.C.2: Table 2 and Item 423.3.C.3: Table 3?	☐	☐	☐

Williamson County
Road Bond Program
Inspection Check Lists

Retaining Wall – Item 423

II. Construction (423.2)	Yes	No	NA
1. Is the foundation for the structure graded level and compacted with a roller approved prior to wall construction? (Hold Point)	☐	☐	☐
2. Are any foundation soils found to be unsuitable removed and replaced?	☐	☐	☐
3. Is filter fabric placed behind all wall joints, and at the intersection of retaining walls with other structures, including riprap?	☐	☐	☐
4. Does the filter fabric cover joints a minimum of 6 inches on each side and is it positively held in place?	☐	☐	☐
5. As select fill material is placed behind the wall panels, are the panel alignments maintained by acceptable bracing methods?	☐	☐	☐
6. Do vertical tolerances and horizontal alignment tolerance not exceed ¾" when measured along the wall with a 10-foot straight edge?	☐	☐	☐
7. Is the overall vertical tolerance of the wall (plumbness from top to bottom) within ½" per 10-feet of wall height?	☐	☐	☐
8. Does the backfill placement closely follow the erection of each lift of panels, and is it placed in 8" lifts and compacted to 95% of density?	☐	☐	☐

Williamson County
Road Bond Program
Inspection Check Lists

Retaining Wall – Item 423

	Yes	No	NA
9. At each reinforcement level, is the backfill leveled and compacted before placing the reinforcement?	☐	☐	☐
10. Is adjacent embankment placed to approximately the same level as the backfill material? Note: Do not create a continuous, distinct, vertical joint between the select and embankment backfill.	☐	☐	☐
11. Is compaction in the 3-foot strip adjacent to the backside of the wall accomplished with hand operated or walk-behind compacter?	☐	☐	☐
12. If rock backfill is used as select material, was a filter fabric layer placed before placing the last 2 feet of backfill immediately below the pavement structure or top of wall? Note: Overlap splices by at least 18".	☐	☐	☐
13. Does the upper 2 feet of rock backfill contain no stones larger than 3" in their greatest dimension and is it composed of material with sufficient fines to fill the voids in a compacted state?	☐	☐	☐
14. Is the wall being constructed in accordance with the details shown on the plan sheets and/or construction drawings?	☐	☐	☐
15. If construction drawings are used to show the construction details, does the Reviewer have (or have access to) a copy of these drawings?	☐	☐	☐

Williamson County
Road Bond Program
Inspection Check Lists

Retaining Wall – Item 423

	Yes	No	NA
16. Are proper spacers provided between panels?	☐	☐	☐
17. Is grading and drainage maintained adjacent to the wall during construction?	☐	☐	☐
18. If temporary MSE walls are used, were the walls constructed in accordance with Section 423.3.F requirements?	☐	☐	☐
19. If Concrete Block Retaining Walls are used, were the walls constructed in accordance with Section 423.3.G?	☐	☐	☐

Williamson County
Road Bond Program
Inspection Check Lists

Spec Item:	425 – Precast Pre-stressed Concrete Structural Members	Report No.:	
Description:		Date:	
Location:		Time:	

QC Reviewer: _____

Results: ☐ Accepted ☐ Not Accepted

Remarks: _____

QC Reviewer Signature: _____

Precast/Pre-stressed Concrete Structural Members	**Yes**	**No**	**NA**
I. Materials (425.2)			
1. Do the materials incorporated in the Precast Pre-stressed Concrete Structural Members conform to the reference items of work, TxDOT's Department Material Specifications and other requirements of Section 425.2?	☐	☐	☐
2. Did the Contractor provide manufacturer's certifications for bedding strips and use adhesives or bonding agents as recommended by the polystyrene manufacturer?	☐	☐	☐

Williamson County
Road Bond Program
Inspection Check Lists

Precast Pre-stressed Concrete Structural Members – Item 425

	Yes	No	NA
II. Construction (425.3)			
1. Are beams, bridge deck panels and bearing pads approved by TxDOT and is the TxDOT stamp on them?	☐	☐	☐
2. Do beams have any signs of damage such as cracks, spalling and/or "honeycombs"?	☐	☐	☐
3. Are dimensions correct?	☐	☐	☐
4. During erection of beams, did the Contractor securely tie or brace all beams in accordance with minimum erection and bracing standards?	☐	☐	☐
5. Are any safety hazards apparent (power lines, traffic hazards or other construction activities)?	☐	☐	☐
6. Have beams been erected to proper alignment as shown on the plans?	☐	☐	☐
7. Are beams positioned with the proper clearance from the abutment back-wall and adjacent beam?	☐	☐	☐

Williamson County
Road Bond Program
Inspection Check Lists

Spec Item: 440 – Reinforcing Steel
Description:
Location:
Report No.:
Date:
Time:

QC Reviewer:

Results: ☐ Accepted ☐ Not Accepted

Remarks:

QC Reviewer Signature:

Reinforcing Steel	**Yes**	**No**	**NA**
I. Materials (440.2)			
1. Does the reinforcing steel to be welded comply with ASTM A706 or have a carbon equivalency of not more than 0.55%?	☐	☐	☐
2. Do the electrodes used for welding conform to the requirements of Item 448.2 for the type of reinforcing steel used?	☐	☐	☐

Williamson County
Road Bond Program
Inspection Check Lists

Reinforcing Steel – Item 440

		Yes	No	NA
3.	Does the person performing the welding operation have welder certification paper issued by TxDOT that covers the type of work he/she is performing? (448.4)	☐	☐	☐
4.	Is an oven used to dry and store electrodes with low hydrogen coverings for the times and at the temperatures required? (448.4.C)	☐	☐	☐
5.	Is the rebar used on the job from an approved Mill as required by Section 440.2.A?	☐	☐	☐
6.	Unless otherwise shown on the plans, is the deformed rebar Grade 60 as required by Section 440.2.B?	☐	☐	☐
7.	For Epoxy Coated Rebar, is the coated reinforcing steel in accordance with Table 3 (440.2.F)?	☐	☐	☐
8.	Are mechanical couplers used when reinforcing steel is spliced?	☐	☐	☐
9.	Are all couplers furnished by the Contractor produced by a pre-qualified manufacturer? (DMS-4510)	☐	☐	☐
10.	Before being used, are the couplers sampled and tested as required in Item 440.2.G and do they meet all requirements? (DMS-4510)	☐	☐	☐

Williamson County
Road Bond Program
Inspection Check Lists

Reinforcing Steel – Item 440

	Yes	No	NA
II. Construction (440.3.C)			
1. Is steel reinforcement adequately stored above the surface of the ground upon platforms, skids or other supports and protected from damage and deterioration?	☐	☐	☐
2. In final placement, is the reinforcement free from dirt, paint, grease, oil or other foreign materials and from defects such as cracks and delaminations?	☐	☐	☐
3. Are lap-splice, wield-splice, or mechanically spliced bars placed as shown on the plans and meet the requirements of Section 440.3.D and Table 5 "Minimum Lap Requirements by Bar Size"?	☐	☐	☐
If not, was written approval given by the Engineer for additional splices?			
4. In the plane of the steel parallel to the nearest surface of concrete, do the bars vary from plan placement by not more than 1/12 of the spacing between bars?	☐	☐	☐
5. In the plane of the steel perpendicular to the nearest surface of concrete, do the bars vary from plan placement by not more than 1/4"?	☐	☐	☐
6. Is the depth of cover (concrete) to the nearest surface of steel at least 1" unless otherwise shown on the plans?	☐	☐	☐

Williamson County
Road Bond Program
Inspection Check Lists

Reinforcing Steel – Item 440

		Yes	No	NA
7.	For bridge slabs, is the clear cover tolerance for the top mat of reinforcement 0" to ½"?	☐	☐	☐
8.	Are bars of the proper size, location and quantity as shown on the plans?	☐	☐	☐
9.	a. What type of bar supports are used?	☐	☐	☐
	b. Are the bar supports adequate in strength and number to hold the reinforcement in place, before and during concrete placement?	☐	☐	☐
	If not, is concrete placement halted until corrective measures are taken?			
	c. If individual bar supports are used, are they placed in rows at 4 ft. maximum spacing?	☐	☐	☐
	d. If continuous type bar supports are used, are they placed in rows at 4 ft. maximum spacing?	☐	☐	☐
	e. Are continuous type bar supports used when permanent metal deck forms are used?	☐	☐	☐

Williamson County
Road Bond Program
Inspection Check Lists

Reinforcing Steel – Item 440

	Yes	No	NA
10. Are all accessories used with epoxy coated reinforcement such as tie wires, bar chairs, supports or clips made of steel, fully coated with epoxy or plastic?	☐	☐	☐
11. Has all visible damage to the coating been repaired in accordance with Section 440.3.F.3 before the reinforcement is used?	☐	☐	☐
12. Is any cutting of coated reinforcement done only by sawing or shear cutting with permission of the Engineer?	☐	☐	☐
13. Have all cut ends been coated before the reinforcement is used?	☐	☐	☐

Williamson County
Road Bond Program
Inspection Check Lists

Spec Item: 442 – Metal for Structures
Description: _____
Location: _____
Report No.: _____
Date: _____
Time: _____

QC Reviewer: _____

Results: ☐ Accepted ☐ Not Accepted

Remarks: _____

QC Reviewer Signature: _____

Metal for Structures	**Yes**	**No**	**NA**
I. Materials (442.2)			
A. Non-Bridge Structures:			
1. Was the structural steel delivered and used within the project tested in accordance with ASTM A370?	☐	☐	☐
2. Does the type and grades of steel used by the Contractor in accordance with the listing in Section 442.2.2.A or as shown on the plans?	☐	☐	☐

Williamson County
Road Bond Program
Inspection Check Lists

Metal for Structures – Item 442

	Yes	No	NA
3. Have tension members and other components listed in Section 442.2.2.B been impact tested and do the test results conform with the Charpy V-notch (CVN) requirements of Table 1 within the above stated section?	☐	☐	☐

B. Other Components such as Shear Connectors, Anchors, Fasteners, Slip-resistant Deck Plates and Rail Posts:

1. Do the materials supplied to the project under this section have a certification of material properties from the manufacturer?	☐	☐	☐
2. Do the materials meet the ASTM requirements as shown in Section 442.2.3 per category description and tested in accordance with section requirements?	☐	☐	☐

C. Forgings, Castings and Extrusions (442.2.B, C, D, E, F, G):

1. Do the components under this category meet the ASTM, class, grade and/or alloy-temper as required in accordance by Section 442.2.B, C, D, E, F, G?	☐	☐	☐

II. Construction Methods (442.3)

1. Was the structural metal fabricated, welded and erected in accordance with Item 441, “Steel Structures”; Item 447, “Structural Bolting; Item 448, “Structural Field Welding”; and applicable AWS welding codes?	☐	☐	☐
2. Were the fabricated and erected structural metal members painted in accordance with Item 446, “Cleaning and Painting Steel”?	☐	☐	☐

Williamson County
Road Bond Program
Inspection Check Lists

Metal for Structures – Item 442

		Yes	No	NA
3.	When specified in the plans, was the fabricated steel items galvanized in accordance with Item 445, "Galvanizing"?	☐	☐	☐
4.	Were field repairs to the painting or galvanizing of fabricated and erected steel items performed in accordance with Item 446, "Cleaning and Painting" or Item 445, "Galvanizing"?	☐	☐	☐

Williamson County
Road Bond Program
Inspection Check Lists

Spec Item: 462 – Concrete Box Culverts & Storm Drains
464 – Reinforced Concrete Pipe
Report No.: _____

Description: _____
Date: _____

Location: _____
Time: _____

QC Reviewer: _____

Results: ☐ Accepted ☐ Not Accepted

Remarks: _____

QC Reviewer Signature: _____ :

Concrete Box Culverts & Storm Drains/Reinforced Concrete Pipe	**Yes**	**No**	**NA**
I. Materials (462.2 and 464.2)			
A. Reinforced Concrete Pipe, Concrete Box Culverts and Strom Drains	☐	☐	☐
1. Were the individual sections of pipe or pre-cast boxes inspected and rejected if they do not have the Division of Materials and Tests monogram on them?	☐	☐	☐
2. For cast-in-place or pre-cast box culverts and storm drains, do the materials and method of fabrication comply with the requirements of Section 462.2.A, B?			

Williamson County
Road Bond Program
Inspection Check Lists

Concrete Box Culverts & Storm Drains – Item 462
Reinforced Concrete Pipe – Item 464

	Yes	No	NA
3. For cast-in-place box culverts and storm drains, during fabrication, did test specimens meet the requirements of Item 421, "Hydraulic Cement Concrete"; Item 440, "Reinforcing Steel" and conform to the requirements of Item 420, "Concrete Structures"?	☐	☐	☐
4. Were the individual sections of pipe or pre-cast boxes inspected at the project site and repaired or rejected if any of the defects are found?	☐	☐	☐
5. Were pre-cast sections inspected to ensure they meet the tolerance in accordance with Section 462.2.F?	☐	☐	☐
6. Are cracks which extend into the plane of the reinforcing steel repaired in an approved manner?	☐	☐	☐
7. Are small damaged or honeycombed areas which are purely surface in nature repaired to the satisfaction of the Engineer?	☐	☐	☐
8. Are precast sections stored on level blocking in a manner acceptable to the Engineer?	☐	☐	☐
9. Are lifting holes larger than 3" diameter?	☐	☐	☐

Williamson County
Road Bond Program
Inspection Check Lists

Concrete Box Culverts & Storm Drains – Item 462
Reinforced Concrete Pipe – Item 464

	Yes	No	NA
B. Jointing Materials			
1. For all jointing materials except mortar, has the Contractor furnished the Engineer the Manufacturer's Certificate of Compliance that complies with the requirements in Section 464.2.I?	☐	☐	☐

II. Construction (462.3 and 464.3)

A. Laying Pipe and Pre-cast Boxes

1. Unless otherwise authorized by the Engineer, did the Contractor start the laying of pipe or present boxes on the bedding at the outlet end with the spigot or tongue pointing downstream and proceed toward the inlet end with the abutting sections properly matched, true to the established lines and grade?	☐	☐	☐
2. Is proper equipment provided for hoisting and lowering the sections of pipe or pre-cast boxes into the trench without disturbing the bedding and the sides of the trench?	☐	☐	☐
3. Are the ends of the pipe or precast boxes carefully cleaned, if necessary?	☐	☐	☐
4. Is the pipe or pre-cast boxes fitted and matched so that when laid in the bed, it forms a smooth uniform conduit?	☐	☐	☐
5. Are multiple installations of reinforced concrete pipe (RCP) laid with the center lines of individual barrels parallel?	☐	☐	☐

Williamson County
Road Bond Program
Inspection Check Lists

Concrete Box Culverts & Storm Drains – Item 462
Reinforced Concrete Pipe – Item 464

	Yes	No	NA
6. Unless otherwise shown on the plans for multiple installations for RCP, are the clear distances between outer surfaces of adjacent pipes as shown in Item 464.3.B (Table 5)?	☐	☐	☐
7. Is the area for placement of structures excavated, shaped and the structures bedded and backfilled in accordance with Item 400, "Excavation and Backfill Structures"?	☐	☐	☐
8. Unless otherwise shown on the plans or permitted in writing by the Engineer, did heavy earth moving equipment haul over the structure before a minimum of 4-feet of compacted fill was placed over the top of the structure?	☐	☐	☐
9. Is pipe or pre-cast boxes damaged by the Contractor's equipment removed and replaced or repaired by an approved method by the Engineer?	☐	☐	☐

B. Jointing for Pipes, Concrete Box Culverts and Storm Drains

1. Does the mortar consist of one part cement, two parts sand, and sufficient water to make a plastic mix?	☐	☐	☐
2. Are the structure ends cleaned and wetted before making the joint?	☐	☐	☐
3. After the structures are tightly jointed, is the mortar packed into the joint from both inside and outside the structure, and then the inside finished smooth and flush with adjacent joints of structure?	☐	☐	☐

Williamson County
Road Bond Program
Inspection Check Lists

Concrete Box Culverts & Storm Drains – Item 462
Reinforced Concrete Pipe – Item 464

	Yes	No	NA
4. Are mortar joints cured by keeping the joints wet for at least 48 hours or until the backfill operation begins after the mortar joint has cured for at least 6 hours?	☐	☐	☐
5. Is no mortar jointing done when the atmospheric temperature is at or below 40°F?	☐	☐	☐
6. Are mortared joints protected against freezing by backfilling or other approved methods for at least 24 hours?	☐	☐	☐

C. Joints using Cold-Applied, Plastic Asphalt Sewer Joint Compound

1. Are both ends of the structure clean and dry at the time the joint is made?	☐	☐	☐
2. Was a ½" thick layer of the compound troweled or otherwise placed in the groove end of the structure covering not less than two-thirds of the joint face around the entire circumference before the tongue end of the next structure is shoved home with sufficient pressure to make a tight joint?	☐	☐	☐
3. After the joint is made, is any excess mastic projecting into the structure removed?	☐	☐	☐

D. Joints Using Rubber Gasket

1. Where rubber gasket joints are required by the plans, is the joint assembly made according to the recommendations of the gasket manufacturer?	☐	☐	☐

Williamson County
Road Bond Program
Inspection Check Lists

Concrete Box Culverts & Storm Drains – Item 462
Reinforced Concrete Pipe – Item 464

	Yes	No	NA
2. When using rubber gaskets, are the joints water tight?	☐	☐	☐

E. Joints Using Pre-formed Flexible Joint Sealants

1. Are the joints placed according to the procedure shown in Article 464.3.C.4 and the manufacturer's recommendations?	☐	☐	☐
2. Is the joint sealer placed in such manner that no dirt or other deleterious materials will come in contact with the joint sealing material?	☐	☐	☐
3. When the atmospheric temperature is below 60°F, are plastic joint seal gaskets either stored in an area warmed to above 70°F or artificially warmed to this temperature in a manner satisfactory to the Engineer?	☐	☐	☐

F. Connections and Stub Ends for Pipes, Concrete Box Culverts and Storm Drains

1. Is the bottom of existing structures mortared or concreted if necessary to eliminate any drainage pockets created by the connections?	☐	☐	☐
2. Is any damage to the existing structure resulting form making the connection satisfactorily repaired by the Contractor?	☐	☐	☐
3. Unless otherwise shown on the plans, are the connections between concrete pipe and corrugated metal pipe made with a suitable concrete collar having a minimum thickness of 4"?	☐	☐	☐

Williamson County
Road Bond Program
Inspection Check Lists

Concrete Box Culverts & Storm Drains – Item 462
Reinforced Concrete Pipe – Item 464

	Yes	No	NA
4. Are stub ends, for connections to future work not shown on the plans, finished by installing watertight plugs into the free end of the pipe?	☐	☐	☐
5. For precast boxes, fill lifting holes with mortar or concrete and cure or precast concrete mortar plugs may be used. Have the holes been filled accordingly prior to backfill?	☐	☐	☐

APPENDIX B

GUIDE SCHEDULE OF SAMPLING AND TESTING

GUIDE SCHEDULE OF SAMPLING & TESTING

MAY 2016

Texas Department of Transportation

Using the Guide Schedule

Research of sampling and testing rates listed for project tests in the following Guide Schedule show that the Department's and the Contractor's risk of either rejecting "good" material or accepting "bad" material range from 20% to 40%.

To reduce this risk, we recommend that the sampling rate be increased during initial production. A four-fold increase in testing frequency will generally reduce risk to approximately 5%. The intent of increasing testing at the start of production is to insure that the Contractor's processes are in control and to establish acceptability requirements early.

There is a need to increase the frequency of testing for high-variability materials and when testing results do not meet specifications. The Engineer may require the Contractor to reimburse the Department for costs resulting from failing test results, in accordance with the specifications.

Materials incorporated in TxDOT projects are subjected to various quality assurance procedures such as testing (as outlined in this document), certification, quality monitoring, approved lists, etc. The Engineer and testing staff should familiarize themselves with materials to be used before work begins by reviewing the specifications and this document. Discuss material testing requirements with the Contractor.

Other testing required by the specifications, but not shown in the Guide Schedule, should be performed at a frequency necessary to provide adequate confidence that materials meet specifications.

NOTE: For projects subject to FHWA construction oversight activities, use the "Letter of Certification of Materials Used" to document reasons for material acceptance when a test fails. For all other projects, document the justification and explanation for acceptance of materials that fail project tests in the project file.

Assuring the quality of the product and proper incorporation of materials into the project begins with proper sampling practices. Sampling, testing, and construction inspection must be performed collaboratively to assure the specific attributes of the finished product reflect quality workmanship. Sampling guidance for hot-mixed asphalt is contained in Tex-225-F, "Random Selection of Bituminous Mixture Samples," and the respective specification for that material. All remaining materials are covered by method and materials specifications, to which the following applies.

For acceptance testing, especially that which directly determines payment for the Contractor, sampling personnel should provide randomness in sampling by avoiding patterned sampling routines. Examples of such sampling practices are as follows:

- Soils/flexible base: Vary sampling between stockpiling operations, completed stockpile, windrow, and project site. Vary the time of day sampling is performed.
- Aggregates: Sample aggregates nearest the point of incorporation into the work. Vary sampling between stockpiling operations, completed stockpile, belt sampling, and if deemed necessary, railroad cars/trucks. Vary the time of day sampling is performed.
- Concrete (structural and miscellaneous: Always sample as near as practicable to the point of placement. For strength testing, vary the time of day or the number of truck from which the concrete is sampled. Tests for slump, air, and temperature should be done often to ensure the consistent control of the concrete production (not applicable to miscellaneous concrete).

This Guide Schedule is applicable to all contracts associated with the 2014 Standard Specifications.

This is a guide for minimum sampling and testing.
Testing frequency may need to be increased for high material variability or when test results approach specification limits.

TABLE I – EMBANKMENTS, SUBGRADES, BACKFILL, AND BASE COURSES

			PROJECT TESTS		
MATERIAL OR PRODUCT	TEST FOR	TEST NUMBER	LOCATION OR TIME OF SAMPLING (D)	FREQUENCY OF SAMPLING (F)	REMARKS
EMBANKMENT (CUTS & FILLS)	Liquid Limit **(A)**	Tex-104-E	During stockpiling operations, from completed stockpile, or project site **(B)**	Materials with PI ≤ 15: 10,000 CY	For Type A embankment or when required by the plans. This test may be waived for embankment cuts as directed by the Engineer. Determine a new liquid limit and plasticity index for each different material or notable change in material. Sample in accordance with Tex-100-E.
	Plasticity Index **(A)**	Tex-106-E		Materials with PI > 15: 5,000 CY	
	Gradation	Tex-110-E		Each 10,000 CY	When shown on plans. This test may be waived for embankment cuts, as directed by the Engineer. Sample in accordance with Tex-100-E.
	Moisture/Density	Tex-114-E		As directed by the Engineer	Not required for ordinary compaction. Determine a new optimum moisture and maximum density for each different material or notable change in material. Sample in accordance with Tex-100-E.
	In-place Density **(A)**	Tex-115-E	As designated by the Engineer	Fill: each 5,000 CY min. 1 per lift.	Not required for ordinary compaction. Determine a new optimum moisture and maximum density according to Tex-114-E for each different material or notable change in material. Correct the moisture contents measured by nuclear density gauge in Tex-115-E with the moisture contents determined in accordance with Tex-103-E, as necessary for control, for each different material or notable change in material and adjust the density accordingly. Materials such as RAP, gypsum, lime, cement, and iron ore tend to bias the counts for nuclear density gauges.
				Cut: each 6,000 LF	
RETAINING WALL (NON-SELECT BACKFILL)	As shown above for Embankment (Cuts and Fills)		As shown above for Embankment (Cuts and Fills)	As shown above for Embankment (Cuts and Fills)	Sample in accordance with Tex-100-E.
RETAINING WALL (SELECT BACKFILL)	Gradation	Tex-110-E	During stockpiling operations, from completed stockpile, or project site **(B)**	Each 5,000 CY	Sample in accordance with Tex-400-A.
	Resistivity **(A)**	Tex-129-E	During stockpiling operations, from completed stockpile, or project site **(B)**	Each 5,000 CY	For material with resistivity between 1,500 and 3,000 ohm-cm, determine chloride and sulfate content, as specified in Item 423. Sample in accordance with Tex-400-A.
	pH **(A)**	Tex-128-E	During stockpiling operations, from completed stockpile, or project site **(B)**	Each 5,000 CY	Sample in accordance with Tex-400-A.

This is a guide for minimum sampling and testing.
Testing frequency may need to be increased for high material variability or when test results approach specification limits.

TABLE I – EMBANKMENTS, SUBGRADES, BACKFILL, AND BASE COURSES

			PROJECT TESTS		
MATERIAL OR PRODUCT	TEST FOR	TEST NUMBER	LOCATION OR TIME OF SAMPLING (D)	FREQUENCY OF SAMPLING (F)	REMARKS
RETAINING WALL (SELECT BACKFILL) (continued)	Soundness	Tex-411-A	During stockpiling operations, or from completed stockpile	1 per source, per project	Test when backfill sources appear to contain particles such as shale, caliche, or other soft, poor-durability particles. Sample in accordance with Tex-400-A.
	In-place Density **(A)**	Tex-115-E	As designated by the Engineer.	1 per backfill lift, per wall	Not required for rock backfill. For walls greater than 500 ft. in length, perform one test per lift for every 500 ft. in length. **(F)** Correct the moisture contents measured by nuclear density gauge in Tex-115-E with the moisture contents determined in accordance with Tex-103-E for each different material or notable change in material and adjust the density accordingly.
UNTREATED BASE COURSES	Liquid Limit **(A)**	Tex-104-E	During stockpiling operations, from completed stockpile, or windrow **(B)**	Each 5,000 CY	Sample in accordance with Tex-400-A.
	Plasticity Index **(A)**	Tex-106-E	During stockpiling operations, from completed stockpile, or windrow **(B)**	Each 5,000 CY	
	Gradation **(A)**	Tex-110-E	During stockpiling operations, from completed stockpile, or windrow **(B)**	Each 5,000 CY	Sample in accordance with Tex-400-A.
	Moisture/Density	Tex-113-E	From completed stockpile at the source **(E)**	Each 20,000 CY	Not required for ordinary compaction. Sample in accordance with Tex-400-A.
	Wet Ball Mill **(A)**	Tex-116-E	From completed stockpile at the source **(E)**	Each 20,000 CY	As required by the plans. Sample in accordance with Tex-400-A.
	Strength **(A)**	Tex-117-E	From completed stockpile at the source **(E)**	Each 20,000 CY	As required by the plans. When base material is from a source where the District has a record of satisfactory triaxial results, the frequency of testing may be reduced to one per 30,000 CY. If any one test falls below the minimum value required, the frequency of testing will return to the original frequency of 20,000 CY. Sample in accordance with Tex-400-A.

This is a guide for minimum sampling and testing.
Testing frequency may need to be increased for high material variability or when test results approach specification limits.

TABLE I – EMBANKMENTS, SUBGRADES, BACKFILL, AND BASE COURSES

				PROJECT TESTS		
MATERIAL OR PRODUCT		TEST FOR	TEST NUMBER	LOCATION OR TIME OF SAMPLING (D)	FREQUENCY OF SAMPLING (F)	REMARKS
UNTREATED BASE COURSES		In-place Density (A)	Tex-115-E	As designated by the Engineer	Each 3,000 CY, min. 1 per lift	Correct the moisture contents measured by nuclear density gauge in Tex-115-E with the moisture contents determined in accordance with Tex-103-E, as necessary for control, for each different material or notable change in material and adjust the density accordingly. Materials such as RAP, gypsum, lime, cement, and iron ore tend to bias the counts for nuclear density gauges.
		Thickness (A)	Tex-140-E	As designated by the Engineer	Each 3,000 CY	Not required where survey grade control documents compliance.
TREATED SUBGRADE AND BASE COURSES	SUBGRADE BEFORE TREATMENT	Organic Content	Tex-148-E	As designated by the Engineer	1 per 500 linear feet or 5,000 CY	Required for existing subgrade material and material imported from a borrow source. Soil survey and geologic maps may be used to determine sampling locations. Sample in accordance with Tex-100-E.
		Sulfate Content	Tex-145-E	As designated by the Engineer	1 per 500 linear feet or 5,000 CY	Required for existing subgrade material and material imported from a borrow source. Soil survey and geologic maps may be used to determine sampling locations. Sample in accordance with Tex-100-E.
	NEW BASE MATERIAL	Liquid Limit (A)	Tex-104-E	During stockpiling operations, from completed stockpile, or windrow (B)	Each 5,000 CY	When central mix site or plant is used, windrow sampling may be waived. Sample in accordance with Tex-400-A.
		Plasticity Index (A)	Tex-106-E	During stockpiling operations, from completed stockpile, or windrow (B)	Each 5,000 CY	
		Gradation (A)	Tex-110-E	During stockpiling operations, from completed stockpile, or windrow (B)	Each 5,000 CY	Sample in accordance with Tex-400-A.
		Wet Ball Mill (A)	Tex-116-E	From completed stockpile at the source (E)	Each 20,000 CY	As required by the plans. Sample in accordance with Tex-400-A.

This is a guide for minimum sampling and testing.
Testing frequency may need to be increased for high material variability or when test results approach specification limits.

TABLE I – EMBANKMENTS, SUBGRADES, BACKFILL, AND BASE COURSES

				PROJECT TESTS		
MATERIAL OR PRODUCT		TEST FOR	TEST NUMBER	LOCATION OR TIME OF SAMPLING (D)	FREQUENCY OF SAMPLING (F)	REMARKS
TREATED SUBGRADE AND BASE COURSES	NEW BASE MATERIAL	Strength **(A)**	Tex-117-E	From completed stockpile at the source **(E)**	Each 20,000 CY	As required by the plans. When base material is from a source where the District has a record of satisfactory triaxial results, the frequency of testing may be reduced to one per 30,000 CY. If any one test falls below the minimum value required, the frequency of testing will return to the original frequency of 20,000 CY.
	LIME	Compliance with DMS-6350	Tex-600-J	During delivery to project	Commercial Lime Slurry: each 200 tons of lime Carbide Lime Slurry: each 100 tons of lime	Sample in accordance with Tex-400-A.Verify the source is listed on the current Material Producer List for Lime. Only materials appearing on the Material Producer List will be accepted. Sample frequency for Carbide Lime Slurry may be increased as directed by the Engineer. For Hydrated Lime and Quick Lime project testing is not required but it is encouraged to sample and test the material at a rate of 1 per project as a best practice.
	CEMENT	Compliance with DMS-4600		Railroad car, truck, or cement bins		Verify the source is listed on the current Material Producer List for Cement. If not, sample and test in accordance with DMS-4600. **(C)**
	FLY ASH MATERIAL	Compliance with DMS-4615		Project samples at location designated by the Engineer		Verify the source is listed on the current Material Producer List for Fly Ash. Only materials from CST/M&P approved sources appearing on the Material Producer List for Fly Ash will be accepted. Project testing is not required but it is encouraged to sample and test the material at a rate of 1 per project as a best practice. **(C)**
	COMPLETE MIXTURE	Pulverization Gradation	Tex-101-E Part III	Roadway, after pulverization and mixing	As necessary for control	At the beginning of the project, one test must be made for each 4,500 CY or 6,000 tons until the Engineer is satisfied that acceptable pulverization results are being obtained. Sample in accordance with Tex-100-E.
		Soil-Cement Testing Soil-Lime Testing	Tex-120-E, Part II, or Tex-121-E, Part II	From roadway windrow after treatment **(E)**	Each 20,000 CY	Not required for ordinary compaction. Determine a new moisture/density curve for each different or notable change in material. Perform Tex-120-E, Part II, for Cement Treated Material, and Tex-121-E, Part II, for Lime, Lime-Fly Ash, or Fly Ash Treated Material. If Tex-120-E, Part I, Tex-121-E, Part I, or Tex-127-E is performed prior to the project, this test may be waived. Sample in accordance with Tex-100-E.

This is a guide for minimum sampling and testing.
Testing frequency may need to be increased for high material variability or when test results approach specification limits.

TABLE I – EMBANKMENTS, SUBGRADES, BACKFILL, AND BASE COURSES

MATERIAL OR PRODUCT		TEST FOR	TEST NUMBER	PROJECT TESTS: LOCATION OR TIME OF SAMPLING (D)	PROJECT TESTS: FREQUENCY OF SAMPLING (F)	REMARKS
TREATED SUBGRADE AND BASE COURSES	COMPLETE MIXTURE	Soil-Cement Testing Soil-Lime Testing	Tex-120-E, Part I, Tex-121-E, Part I, or Tex-127-E	From roadway windrow after treatment	As necessary for control	Perform Tex-120-E, Part I, on cement treated material, and Tex-121-E, Part I, for lime-fly ash or fly ash treated material. Verifies the field strength by comparing results from the mix design. Performed at the discretion of Engineer. Sample in accordance with Tex-100-E.
		In-place Density **(A)**	Tex-115-E	As designated by the Engineer	Each 3,000 CY, min 1 per lift	Determine the appropriate moisture/density curve for each different material or notable change in material. Correct the moisture contents measured by nuclear density gauge in Tex-115-E with the moisture contents determined in accordance with Tex-103-E, as necessary for control, for each different material or notable change in material and adjust the density accordingly. Stabilizers and materials such as RAP, gypsum, and iron ore tend to bias the counts for nuclear density gauges.
		Thickness **(A)**	Tex-140-E	As designated by the Engineer	Each 3,000 CY	Not required where survey grade control documents are used for compliance
RECLAIMED ASPHALT PAVEMENT (RAP), CRUSHED CONCRETE, and RECYCLED MATERIALS		Sulfate Content	Tex-145-E	During stockpiling operations, from completed stockpile, or windrow	Each 5,000 CY	Required only for contractor furnished recycled material, including crushed concrete. Not required for RAP. Sample in accordance with Tex-400-A.
		Deleterious Material	Tex-413-A		Each 5,000 CY	Required only for contractor furnished recycled material, including crushed concrete. Sample in accordance with Tex-400-A.
		Decantation	Tex-406-A	During stockpiling operations, from completed stockpile, or windrow	Each 5,000 CY	Required only for contractor furnished RAP. Sample in accordance with Tex-400-A.

TABLE I – FOOTNOTES

A	When this project acceptance test fails but the product is accepted, document the reasons for acceptance on the Letter of Certification of Materials Used or in the SiteManager Remarks field.
B	Engineer will select any of these locations or any combinations thereof with the provision that the initial sample will be obtained from the completed stockpile at the source and at least one out of ten consecutive samples will be taken at the project site (from the windrow for treated and untreated bases and embankments when possible).
C	Attach the corresponding QM test report for SiteManager projects to satisfy project sampling and testing requirements.

This is a guide for minimum sampling and testing.

Testing frequency may need to be increased for high material variability or when test results approach specification limits.

D	For acceptance testing, especially that which directly determines payment for the Contractor, sampling personnel should provide randomness in sampling by avoiding patterned sampling routines. Examples of such sampling practices are as follows: • Soils/Flexible Base: For gradation, liquid limit, and plastic limit, vary sampling between stockpiling operations, completed stockpile, windrow, and project site. Vary the time of day sampling is performed. • Aggregates: Sample aggregates nearest the point of incorporation into the work. Vary sampling between stockpiling operations, completed stockpile, belt sampling, and if deemed necessary, railroad cars/trucks. Vary the time of day sampling is performed.
E	The Engineer will sample from the completed stockpile at the source and test prior to placement.
F	Each test performed that is based on a quantity of material is considered “or fraction thereof” for calculating number of tests.

This is a guide for minimum sampling and testing.
Testing frequency may need to be increased for high material variability or when test results approach specification limits.

TABLE IA – ASPHALT STABILIZED BASE (Plant Mix)

			PROJECT TESTS		
MATERIAL OR PRODUCT	TEST FOR	TEST NUMBER	LOCATION OR TIME OF SAMPLING (C)	FREQUENCY OF SAMPLING (D)	REMARKS
AGGREGATE	Gradation **(A)**	Tex-200-F, Part I	During stockpiling operations, from completed stockpile, or prior to mixing	Each 5,000 CY	Sample in accordance with Tex-400-A.
	Liquid Limit **(A)**	Tex-104-E	During stockpiling operations, from completed stockpile, or prior to mixing	Each 5,000 CY	Sample in accordance with Tex-400-A.
	Plasticity Index **(A)**	Tex-106-E	During stockpiling operations, from completed stockpile, or prior to mixing	Each 5,000 CY	
	Wet Ball Mill or L. A. Abrasion **(A)**	Tex-116-E or Tex-410-A	During stockpiling operations, from completed stockpile, or prior to mixing	Each 20,000 CY	When L. A. Abrasion is specified, tests are not required when the published value of the source, as listed on the current Material Producer List for BRSQC, meets the project specifications. Sample in accordance with Tex-400-A. **(B)**
	Coarse Aggregate Angularity **(A)**	Tex-460-A, Part I	During stockpiling operations, from completed stockpile, or prior to mixing	1 per project, per source	Not required for crushed stone sources. Sample in accordance with Tex-400-A.
	Sand Equivalent	Tex-203-F	Hot aggregate bins, feeder belt, or stockpile	1 per project, per source	When designated by the Engineer, test may be run on combined aggregates when multiple sources are used. Sample in accordance with Tex-400-A.
LIME	Compliance with DMS-6350		During delivery to the project	Hydrated Lime: 1 per project Commercial Lime Slurry: each 200 tons of lime **(D)** Carbide Lime Slurry: each 100 tons of lime **(D)** Quick Lime: 1 per project	On projects requiring less than 50 tons, material from CST/M&P approved sources may be accepted on the basis of Producer's Certification without sampling.
RECLAIMED ASPHALT PAVEMENT (RAP), and RECYCLED AGGREGATE	Decantation	Tex-217-F, Part II	During stockpiling operations, from completed stockpile, or prior to mixing	Each 10,000 CY	Sample in accordance with Tex-400-A.

This is a guide for minimum sampling and testing.
Testing frequency may need to be increased for high material variability or when test results approach specification limits.

TABLE IA – ASPHALT STABILIZED BASE (Plant Mix)

			PROJECT TESTS		
MATERIAL OR PRODUCT	TEST FOR	TEST NUMBER	LOCATION OR TIME OF SAMPLING (C)	FREQUENCY OF SAMPLING (D)	REMARKS
RECYCLED ASPHALT SHINGLES (RAS)	Decantation	Tex-217-F, Part III	During stockpiling operations, from completed stockpile, or prior to mixing	Each 10,000 CY	Sample in accordance with Tex-400-A.
ASPHALT BINDER	Compliance with Item 300 – Binder and Tack Coat		Sampled, tested and preapproved by CST/M&P. Take project samples when designated by the Engineer.	1 each for binder and tack coat per project, per grade, per source	Test at least one sample taken from the project. Sample tack coat at the distributor on the roadway in accordance with Tex-500-C, Part III. Sample binder at hot mix plant in accordance with Tex-500-C, Part II. Binder should arrive on the project pre-approved. If not pre-approved, sample binder before use.
COMPLETE MIXTURE	Laboratory Density **(A)**	Tex-126-E	Plant Mix **(C)**	20,000 CY (25,000 tons)	Sample in accordance with Tex-222-F.
	Percent Asphalt **(A)**	Tex-236-F	Plant Mix **(C)**	Each 1,500 CY (2,000 tons) or days production	Determine asphalt content correlation factors for ignition oven at a minimum of one per project. Sample in accordance with Tex-222-F.
	Indirect Tensile Strength – Dry	Tex-226-F	Plant Mix	1 per project, per design	Sample in accordance with Tex-222-F.
	Moisture Susceptibility	Tex-530-C	As designated by the Engineer	1 per project, per design	This test may be waived, when shown on the plans. Sample in accordance with Tex-222-F.
ROADWAY	In-Place Air Voids **(A)**	Tex-207-F	Roadway cores, as designated by the Engineer **(C, D)**	Each 2,500 CY (3,000 tons) or days production	Not required for ordinary compaction or when air void requirements are waived. Sample in accordance with Tex-222-F.

TABLE IA – FOOTNOTES

A	When this project acceptance test fails but the product is accepted, document the reasons for acceptance on the Letter of Certification of Materials Used or in the SiteManager Remarks field.
B	Engineer will select any of these locations or any combinations thereof with the provision that at least one out of ten consecutive samples will be taken at the project site (from the windrow for treated and untreated bases and embankments when possible).
C	For acceptance testing, especially that which directly determines payment for the Contractor, sampling personnel should provide randomness in sampling by avoiding patterned sampling routines. Examples of such sampling practices are as follows: • Soils/flexible base: Vary sampling between stockpiling operations, completed stockpile, windrow, and project site. Vary the time of day sampling is performed. • Aggregates: Sample aggregates nearest the point of incorporation into the work. Vary sampling between stockpiling operations, completed stockpile, belt sampling, and if deemed necessary, railroad cars/trucks. Vary the time of day sampling is performed.
D	Each test performed that is based on a quantity of material is considered “or fraction thereof” for calculating number of tests.

This is a guide for minimum sampling and testing.
Testing frequency may need to be increased for high material variability or when test results approach specification limits.

TABLE II – SEAL COAT

			PROJECT TESTS		
MATERIAL OR PRODUCT	TEST FOR	TEST NUMBER	LOCATION OR TIME OF SAMPLING (C)	FREQUENCY OF SAMPLING (D)	REMARKS
AGGREGATE	Gradation (A)	Tex-200-F, Part I	Stockpile (At source or at point of delivery)	One each 1,000 CY	Rate may be reduced to one each 2,000 CY if the Engineer approves a contractor quality control plan. Sample in accordance with Tex-221-F.
	L. A. Abrasion (A)	Tex-410-A	Stockpile	1 per 20,000 CY	Verify the published value of the source, as listed on the current Material Producer List for BRSQC, meets the project specifications. If not, sample and test at 1 per 20,000 CY prior to use. Sample in accordance with Tex-221-F. (B)
	Magnesium Soundness (A)	Tex-411-A	Stockpile	1 per 20,000 CY	Verify the published value of the source, as listed on the current Material Producer List for BRSQC, meets the project specifications. If not, sample and test at 1 per 20,000 CY prior to use. Sample in accordance with Tex-221-F. (B)
	Surface Aggregate Classification (A)	Tex-612-J, Tex-411-A	Stockpile	1 per 20,000 CY	Verify the published value of the source, as listed on the current Material Producer List for BRSQC, meets the project specifications. If not, sample and test at 1 per 20,000 CY prior to use. Sample in accordance with Tex-221-F. (B)
	Pressure Slake (A)	Tex-431-A	Stockpile	1 per 20,000 CY	Same as above. Required only for lightweight aggregate. Sample in accordance with Tex-221-F.
	Freeze Thaw (A)	Tex-432-A	Stockpile	1 per 20,000 CY	Same as above. Required only for lightweight aggregate. Sample in accordance with Tex-221-F.
	Unit Weight	Tex-404-A	Stockpile	1 per 20,000 CY	Same as above. Required only for lightweight aggregate. Sample in accordance with Tex-221-F.
	24 hr Water Absorption (A)	Tex-433-A	Stockpile	1 per 20,000 CY	Same as above. Required only for lightweight aggregate. Sample in accordance with Tex-221-F.
	Coarse Aggregate Angularity	Tex-460-A	Stockpile	1 per 20,000 CY	Only required for crushed gravel. Sample in accordance with Tex-221-F.
	Deleterious Material (A)	Tex-217-F, Part I	Stockpile	1 per 10,000 CY	Not required for lightweight aggregate. Sample in accordance with Tex-221-F.
	Decantation (A)	Tex-406-A	Stockpile	1 per 10,000 CY	Sample in accordance with Tex-221-F.
	Flakiness Index	Tex-224-F	Stockpile	Frequency as directed by the Engineer	Sample in accordance with Tex-221-F.

This is a guide for minimum sampling and testing.
Testing frequency may need to be increased for high material variability or when test results approach specification limits.

TABLE IA – ASPHALT STABILIZED BASE (Plant Mix)

			PROJECT TESTS		
MATERIAL OR PRODUCT	TEST FOR	TEST NUMBER	LOCATION OR TIME OF SAMPLING (C)	FREQUENCY OF SAMPLING (D)	REMARKS
	Micro Deval	Tex-461-A	Stockpile	1 per project or as necessary for control	Compare result to published value listed on the current Material Producer List for BRSQC. Submit sample to CST/M&P for Soundness and L.A. Abrasion testing when results differ by more than 3% points, unless otherwise directed by the Engineer. Sample in accordance with Tex-221-F.
	White Rock Count	Tex-220-F	Stockpile		Required only for Limestone Rock Asphalt. Not required when CST/M&P provides inspection at the plant. Sample in accordance with Tex-221-F.
	Naturally Impregnated Bitumen Content	Tex-236-F	Stockpile		Required only for Limestone Rock Asphalt. Not required when CST/M&P provides inspection at the plant. Sample in accordance with Tex-221-F.
PRECOATED AGGREGATE	Asphalt Content	Tex-236-F	Stockpile	Frequency as directed by the Engineer when a target value is specified	Sample in accordance with Tex-221-F.
ASPHALT	Compliance with Item 300		Sampled, tested, and preapproved by CST/M&P. Take project samples when designated by the Engineer from the distributor or transport.	1 per project, per grade, per source	Sample in accordance with Tex-500-C. Binder should arrive on the project pre-approved. If not pre-approved, sample binder before use.

TABLE II – FOOTNOTES

A	When this project acceptance test fails but the product is accepted, document the reasons for acceptance on the Letter of Certification of Materials Used or in the SiteManager Remarks field.
B	Attach the corresponding QM test report for SiteManager projects to satisfy project sampling and testing requirements.
C	For acceptance testing, especially that which directly determines payment for the Contractor, sampling personnel should provide randomness in sampling by avoiding patterned sampling routines. Examples of such sampling practices are as follows: • Aggregates: Sample aggregates nearest the point of incorporation into the work. Vary sampling between stockpiling operations, completed stockpile, belt sampling, and if deemed necessary, railroad cars/trucks. Vary the time of day sampling is performed.
D	Each test performed that is based on a quantity of material is considered “or fraction thereof” for calculating number of tests.

This is a guide for minimum sampling and testing.
Testing frequency may need to be increased for high material variability or when test results approach specification limits.

TABLE III – HYDRAULIC CEMENT CONCRETE – STRUCTURAL (Classes: C, F, H, S, CO, K, LMC, or SS)						
				PROJECT TESTS		
MATERIAL OR PRODUCT		TEST FOR	TEST NUMBER	LOCATION OR TIME OF SAMPLING (D)	FREQUENCY OF SAMPLING (E)	REMARKS
MINERAL AGGREGATE	COARSE AGGREGATE	Decantation **(B)**	Tex-406-A	From stockpile at concrete plant	Each 20,000 CY of concrete (each source)	Sample in accordance with Tex-400-A.
		Sieve Analysis **(A) (B)**	Tex-401-A		Each 1,000 CY of concrete (each source)	Sample in accordance with Tex-400-A. Test combined aggregate when used.
		Deleterious Materials **(B)**	Tex-413-A		1 per project or as necessary for control	Sample in accordance with Tex-400-A.
		Los Angeles Abrasion **(A) (B)**	Tex-410-A		Two, each source	Verify the value of the source, as listed on the current Material Producer list for CRSQC, meets the project specifications. If not, sample and submit to CST/M&P for testing prior to use in accordance with Tex-499-A. Sample in accordance with Tex-400-A. **(C)**
		5-cycle Magnesium Sulfate Soundness **(A) (B)**	Tex-411-A		Two, each source	Verify the value of the source, as listed on the current CRSQC, meets the project specifications. **(C)**
	FINE AGGREGATE	Sand Equivalent **(B)**	Tex-203-F	From stockpile at concrete plant	1 per project or as necessary for control	Sample in accordance with Tex-400-A. Test combined aggregate when used.
		Organic Impurities **(B)**	Tex-408-A		1 per project, per source	Sample in accordance with Tex-400-A.
		Sieve Analysis **(A) (B)**	Tex-401-A		Each 1,000 CY of concrete (each source)	Sample in accordance with Tex-400-A.
		Fineness Modulus **(B)**	Tex-402-A		1 per project or as necessary for control	Sample in accordance with Tex-400-A. Test combined aggregate when used. Test to confirm material variability when strength values are in question.
		Deleterious Material **(B)**	Tex-413-A		1 per project or as necessary for control	Sample in accordance with Tex-400-A. Test to confirm material variability when strength values are in question.
		Acid Insoluble Residue **(A) (B)**	Tex-612-J		Two, each source	Only for concrete subject to direct traffic. Verify the value of the source, as listed on the current CRSQC, meets the project specifications. If not, sample and submit to CST/M&P for testing prior to use in accordance with Tex-499-A. Sample in accordance with Tex-400-A. **(C)**
SILICA FUME		Compliance with DMS-4630 **(A)**		Railroad car, truck, bags or silos	1 per project, per class of concrete (For each type and brand)	Sample in accordance with Tex-320-D.

This is a guide for minimum sampling and testing.
Testing frequency may need to be increased for high material variability or when test results approach specification limits.

TABLE III – HYDRAULIC CEMENT CONCRETE – STRUCTURAL (Classes: C, F, H, S, CO, K, LMC, or SS)					
			PROJECT TESTS		
MATERIAL OR PRODUCT	TEST FOR	TEST NUMBER	LOCATION OR TIME OF SAMPLING (D)	FREQUENCY OF SAMPLING (E)	REMARKS
METAKAOLIN	Compliance with DMS-4635 **(A)**		Railroad car, truck or silos	1 per project, per class of concrete (For each type and brand)	
MIX DESIGN	Compliance with Standard Specification Item 421.4.A		At source (if not approved)	Min. 1 design per class, per source	Verify if cement, fly ash, slag cement, and chemical admixture sources are listed on the Material Producer Lists. If not, sample and submit to CST/M&P for testing. Water testing is contracted by the concrete supplier (commercial lab report to be reviewed by TxDOT). Sample in accordance with Tex-300-D for cement and in accordance with Tex-733-I for fly ash.
JOINT MATERIAL	Compliance with DMS-6300				Sample in accordance with Tex-500-C. Verify the source is listed on the Material Producer List for Joint Sealers. If not, sample and test prior to use in accordance with DMS-6310. **(C)**
CURING COMPOUND	Compliance with DMS-4650		Sampled at jobsite; tested by CST/M&P. See remarks.	When requested by CST	Only products listed on the Material Producer List for Concrete Curing Compounds will be allowed. When sample is requested by CST, sample in accordance with Tex-718-I. Ensure container has been agitated and mixed prior to sampling. **(C)**
EVAPORATION RETARDANTS	Compliance with DMS-4650				Only products listed on the Material Producer list for Evaporation Retardants will be allowed. **(C)**
REINFORCING STEEL	Compliance with the Std. Specifications & Spec. Provisions	As Specified			Only materials from CST/M&P approved sources listed on the Material Producer Lists for Reinforcing Steel Mills and Seven Wire Steel Strand will be allowed. **(C)**
MECHANICAL COUPLERS	Compliance with DMS-4510	Tex-743-I	Sampled at jobsite; Tested by CST/M&P	3 couplers per lot (500 couplers) for each type, model, bar size and grade	Only materials from CST/M&P approved sources listed on the Material Producer List for Mechanical Couplers will be allowed. **(C)**
LATEX	Compliance with DMS-4640 for concrete chemical admixtures		Sampled at jobsite.	Min. of 1 test per project	Sample in accordance with Tex-321-E.
EPOXY	Compliance with DMS-6100, unless otherwise specified		Sampled at jobsite if not pre-approved by CST/M&P.	1 per batch or shipment	Verify the source is listed on the Material Producer List for Epoxies and Adhesives. If not, sample and test prior to use in accordance with DMS-6100. Sample in accordance with Tex-734-I. **(C)**

This is a guide for minimum sampling and testing.
Testing frequency may need to be increased for high material variability or when test results approach specification limits.

TABLE III – HYDRAULIC CEMENT CONCRETE – STRUCTURAL (Classes: C, F, H, S, CO, K, LMC, or SS)					
			PROJECT TESTS		
MATERIAL OR PRODUCT	TEST FOR	TEST NUMBER	LOCATION OR TIME OF SAMPLING (D)	FREQUENCY OF SAMPLING (E)	REMARKS
CONCRETE	Compressive Strength (A)	Tex-418-A	At point of concrete placement	4 cylinders for each 60 CY per class, per day (For bridge railing and traffic railing, testing may be reduced to 4 cylinders per 180 CY per class regardless of days)	Sampling must be in accordance with Tex-407-A. Test two cylinders at 7 days, and if the average value is below the design strength as defined in Item 421 Table 8, test the remaining 2 cylinders at 28 days. If the average value of the 2 cylinders tested at 7 days meets the minimum design strength listed in Item 421 Table 8, the 2 remaining cylinders are not required to be tested.
CONCRETE	Slump	Tex-415-A		1 test per 4 strength specimens	Sample in accordance with Tex-407-A. Perform slump and temperature tests on the same load from which strength test specimens are made. Perform entrained air test only when entrained air concrete is specified in the plans. Check temperature of every load for bridge slabs and mass concrete placements. Contractor's required testing will be in accordance with specification requirements for the appropriate specification Item #.
	Entrained Air (A)	Tex-416-A or Tex-414-A			
	Temperature of Concrete (A)	Tex-422-A			
	Slab Thickness and Depth of Reinforcement	Tex-423-A, Part II	During dry run and during concrete placement (Bridge decks and direct traffic culverts)	1 per span	Min 6–Max 18 locations per span

TABLE III – FOOTNOTES	
A	When this project acceptance test fails but the product is accepted, document the reasons for acceptance on the Letter of Certification of Materials Used or in the SiteManager Remarks field.
B	These Project Tests may be used for one or more projects being furnished concrete from the same plant during the same period.
C	Attach the corresponding QM test report for SiteManager projects to satisfy project sampling and testing requirements.
D	For acceptance testing, especially that which directly determines payment for the Contractor, sampling personnel should provide randomness in sampling by avoiding patterned sampling routines. Examples of such sampling practices are as follows: • Aggregates: Sample aggregates nearest the point of incorporation into the work. Vary sampling between stockpiling operations, completed stockpile, and if deemed necessary, railroad cars/trucks. Vary the time of day sampling is performed. • Concrete (structural): Always sample as near as practicable to the point of placement. For strength testing, vary the time of day or the number of truck from which the concrete is sampled. Test often for slump, air, and temperature to ensure the consistent control of the concrete production.
E	Each test performed that is based on a quantity of material is considered "or fraction thereof" for calculating number of tests.

This is a guide for minimum sampling and testing.
Testing frequency may need to be increased for high material variability or when test results approach specification limits.

TABLE IV – HYDRAULIC CEMENT CONCRETE – NON-STRUCTURAL CONCRETE (Classes: A, B, or E)					
			PROJECT TESTS		
MATERIAL OR PRODUCT	TEST FOR	TEST NUMBER	LOCATION OR TIME OF SAMPLING (B)	FREQUENCY OF SAMPLING (C)	REMARKS
CONCRETE	Compressive Strength (A)	Tex-418-A	At point of concrete placement	2 cylinders per 180 CY, per class	Sampling must be in accordance with Tex-407-A. Strength will be determined by 7-day specimens.
MIX DESIGN	Compliance with the Standard Specification		At source if not approved.	Min. 1 design per class, per source	Verify if cement, fly ash, slag cement, and chemical admixture sources are listed on the Material Producer Lists. If not, sample and submit to CST/M&P for testing. Sample in accordance with Tex-300-D for cement and in accordance with Tex-733-I for fly ash. Water testing is contracted by the concrete supplier (commercial lab report to be reviewed by TxDOT).
SILICA FUME	Compliance with DMS-4630		Railroad car, truck, bags or silos	1 test per project, per class (for each type and brand)	Sample in accordance with Tex-320-D.
METAKAOLIN	Compliance with DMS-4635		Railroad car, truck or silos	1 test per project, per class (for each type and brand)	

TABLE IV – FOOTNOTES	
A	When this project acceptance test fails but the product is accepted, document the reasons for acceptance on the Letter of Certification of Materials Used or in the SiteManager Remarks field.
B	For acceptance testing, especially that which directly determines payment for the Contractor, sampling personnel should provide randomness in sampling by avoiding patterned sampling routines. Examples of such sampling practices are as follows: • Concrete (miscellaneous): Always sample as near as practicable to the point of placement. For strength testing, vary the time of day or the number of truck from which the concrete is sampled.
C	Each test performed that is based on a quantity of material is considered “or fraction thereof” for calculating number of tests.

This is a guide for minimum sampling and testing.
Testing frequency may need to be increased for high material variability or when test results approach specification limits.

TABLE V – HYDRAULIC CEMENT CONCRETE PAVEMENT (Classes: P or HES)

				PROJECT TESTS		
MATERIAL OR PRODUCT		TEST FOR	TEST NUMBER	LOCATION OR TIME OF SAMPLING	FREQUENCY OF SAMPLING (D)	REMARKS
MINERAL AGGREGATE	COARSE AGGREGATE	Decantation	Tex-406-A	From stockpile at concrete plant	Each 20,000 CY of concrete (each source)	Sample in accordance with Tex-400-A.
		Sieve Analysis (A)	Tex-401-A		As necessary for control	Sample in accordance with Tex-400-A. Test combined aggregate when used.
		Deleterious Materials	Tex-413-A		Each 20,000 CY of concrete (each source)	Sample in accordance with Tex-400-A.
		L.A. Abrasion (A)	Tex-410-A		Two, each source	Verify the value of the source, as listed on the current CRSQC, meets the project specifications. If not, sample and submit to CST/M&P for testing prior to use in accordance with Tex-499-A. Sample in accordance with Tex-400-A. (C)
		5-Cycle Magnesium Sulfate Soundness (A)	Tex-411-A			
	FINE AGGREGATE	Sand Equivalent	Tex-203-F	From stockpile at concrete plant	Each 3,000 CY of concrete (Each source or combination of sources)	Sample in accordance with Tex-400-A. Test combined aggregate when used. No less than one per week's production.
		Organic Impurities	Tex-408-A		1 per project, per source	Sample in accordance with Tex-400-A.
		Sieve Analysis (A)	Tex-401-A		As necessary for control	Sample in accordance with Tex-400-A. Test combined aggregate when used.
		Fineness Modulus (B)	Tex-402-A			
		Deleterious Material (B)	Tex-413-A		Each 20,000 CY of concrete (each source)	Sample in accordance with Tex-400-A.
		Acid Insoluble (A)	Tex-612-J		1 per project, per source	Verify the value of the source, as listed on the current CRSQC, meets the project specifications. If not, sample and submit to CST/M&P for testing prior to use in accordance with Tex-499-A. Sample in accordance with Tex-400-A. (C)
MIX DESIGN		Compliance with the Standard Specifications Item 421.4.A		At source, if not approved	Min. 1 design, per class, per source	Verify if cement, fly ash, ground granulated blast furnace slag, and admixture sources are listed on the Material Producer List. If not, sample and submit to CST/M&P for testing. Sample in accordance with Tex-300-D for cement and in accordance with Tex-733-I for fly ash. Water testing is contracted by the concrete supplier (commercial lab report to be reviewed by TxDOT).

This is a guide for minimum sampling and testing.
Testing frequency may need to be increased for high material variability or when test results approach specification limits.

TABLE V – HYDRAULIC CEMENT CONCRETE PAVEMENT (Classes: P or HES)					
			PROJECT TESTS		
MATERIAL OR PRODUCT	TEST FOR	TEST NUMBER	LOCATION OR TIME OF SAMPLING	FREQUENCY OF SAMPLING (D)	REMARKS
SILICA FUME	Compliance with DMS-4630		Railroad car, truck, bags or silos	1 per project per class of concrete (For each type and brand)	Sample in accordance with Tex-320-D.
METAKAOLIN	Compliance with DMS-4635		Railroad car, truck or silos	1 per project per class of concrete (For each type and brand)	Sample in accordance with Tex-320-D.
JOINT MATERIAL	Compliance with DMS-6310		Sampled at jobsite if not sampled at source by CST/M&P; tested by CST/M&P. See remarks.	1 per batch or shipment	Sample in accordance with Tex-500-C. Sampling may be waived when the source is listed on the Material Producer List for Joint Sealers. **(C)**
CURING COMPOUND	Compliance with DMS-4650		Sampled at jobsite; tested by CST/M&P. See remarks.	When requested by CST	Only products listed on the Material Producer List for Concrete Curing Compounds will be allowed. When sample is requested by CST, sample in accordance with Tex-718-I. Ensure container has been agitated and mixed prior to sampling. **(C)**
EVAPORATION RETARDANTS	Compliance with DMS-4650				Only products listed on the Material Producer List for Evaporation Retardants will be allowed. **(C)**
REINFORCING STEEL	Compliance with the Std. Specifications & Spec. Provisions	As Specified			Only materials from CST/M&P approved sources listed on the Material Producer List for Reinforcing Steel Mills and Seven Wire Steel Strand will be accepted. **(C)**
MULTIPLE PIECE TIE BARS	Compliance with DMS-4515	Tex-712-I	Sampled at jobsite if not sampled at source by CST/M&P; tested by CST/M&P. See remarks.	Refer to Tex-711-I for sampling rates	Only materials from CST/M&P approved sources listed on the Material Producer List for Multiple Piece Tie-bars for Concrete Pavements will be allowed. Sample in accordance with Tex-734-I.
EPOXY	Compliance with DMS-6100		Sampled at jobsite if not pre-approved by CST/M&P. See remarks.	1 batch per shipment	Verify the source is listed on the Material Producer List for Epoxies and Adhesives. If not, sample and test prior to use in accordance with DMS-6100. Sample in accordance with Tex-734-I. **(C)**

This is a guide for minimum sampling and testing.
Testing frequency may need to be increased for high material variability or when test results approach specification limits.

TABLE V – HYDRAULIC CEMENT CONCRETE PAVEMENT (Classes: P or HES)					
			PROJECT TESTS		
MATERIAL OR PRODUCT	TEST FOR	TEST NUMBER	LOCATION OR TIME OF SAMPLING	FREQUENCY OF SAMPLING (D)	REMARKS
CONCRETE	Strength (A) (B)	Tex-448-A or Tex-418-A	At point of concrete placement	2 cylinders for every 10 contractor job control tests	Sample in accordance with Tex-407-A. When the contract requires the project testing to be by the Engineer, the frequency and job control testing will be in accordance with the item of work. Split sample verification testing used when contractor performs job control testing. When job control testing by the contractor is waived by the plans, the frequency of sampling will be one test (2 specimens) for each 3,000 SY of concrete or fraction thereof or per day and split sample verification testing will be waived. Contractor's required testing will be in accordance with specification requirements for the appropriate specification Item #.
	Slump	Tex-415-A	At time and location strength specimens are made	1 test for every 10 contractor job control tests.	Sample in accordance with Tex-407-A. Slump is not required for slip-formed pavement. Perform slump and temperature tests on the same load from which the strength specimens are made. Perform entrained air test only when entrained air concrete is specified in the plans. Contractor's required testing will be in accordance with specification requirements for the appropriate specification Item #.
	Entrained Air (A)	Tex-416-A or Tex-414-A			
	Temperature	Tex-422-A			
	Thickness	Tex-423-A	Center of paving machine	Every 500 feet	Methods other than Tex-423-A may be shown on the plans.
	Ride Quality Surface Test Type B (A)	Tex-1001-S	Final riding surface of travel lanes		Engineer may verify contractor's results for surface test Type B. For traditional design-bid-build TxDOT projects, CST has contracted with TTI to perform random ride verification at 10% frequency. Results from surface test Type A are not required to be reported.

This is a guide for minimum sampling and testing.

Testing frequency may need to be increased for high material variability or when test results approach specification limits.

TABLE V – FOOTNOTES	
A	When this project acceptance test fails but the product is accepted, document the reasons for acceptance on the Letter of Certification of Materials Used or in the SiteManager Remarks field.
B	When a project test does not meet the specified strength requirements and a reduced pay factor is assigned, document the analysis on the Letter of Certification of Materials Used.
C	Attach the corresponding QM test report for SiteManager projects to satisfy project sampling and testing requirements.
D	Each test performed that is based on a quantity of material is considered “or fraction thereof” for calculating number of tests.

This is a guide for minimum sampling and testing.
Testing frequency may need to be increased for high material variability or when test results approach specification limits.

TABLE VI – ASPHALT CONCRETE PAVEMENT (Items 341, 342, 344, 346, 347 and 348) (All testing as noted in Table VI may be waived for exempt production as defined by specification.)					
			PROJECT TESTS		
MATERIAL OR PRODUCT	TEST FOR	TEST NUMBER	LOCATION (Per Design)	FREQUENCY OF SAMPLING (E)	REMARKS
COARSE AGGREGATE	L. A. Abrasion **(A)**	Tex-410-A	Stockpile **(B)**	1 per project, per source	Verify the published value of the source, as listed on the current Material Producer list for BRSQC, meets the project specifications. If not, sample in accordance with Tex-221-F and submit to CST/M&P for testing prior to use in accordance with Tex-499-A. **(C)**
	Magnesium Sulfate Soundness **(A)**	Tex-411-A			
	Surface Aggregate Classification **(A)**	Tex-499-A		1 per project, per source	
	Micro Deval	Tex-461-A		1 per project, per aggregate source	Not required when the Rated Source Soundness Magnesium loss is 15 or less as listed on the current published BRSQC. If testing is required, sample in accordance with Tex-221-F.
COMBINED AGGREGATE	Sand Equivalent	Tex-203-F	Stockpiles, hot bins or feeder belts	1 per project, per source, per design	Does not apply to Item 342. Sample in accordance with Tex-221-F. The timing of when the test is performed is at the discretion of the Engineer.
ASPHALT BINDER	Compliance with Item 300 Binder & Tack Coat **(A)**		Sampled, tested and pre-approved by CST/M&P. Project test sampled at the Plant for Binder & Road for Tack Coat	1 each for binder and tack coat per project, per grade, per source	Test a minimum of one sample taken from the project. Sample tack coat at the distributor on the roadway in accordance with Tex-500C, Part III. Sample binder at hot mix plant in accordance with Tex-500-C, Part II. Binder should arrive on the project pre-approved. If not pre-approved, sample binder before use.
MIX DESIGN	Compliance with applicable specification	Tex-204-F	At source (if not approved)	Min 1 design per Mix Type and Asphalt Grade	Verify that aggregates, recycled asphalt pavement, recycled asphalt shingles, mineral filler, asphalt binder, anti-stripping additives, and warm mix systems are on the Material Producer List where applicable and that they meet project specification requirements. Project sampling and testing may be conducted on individual materials as necessary for control.

This is a guide for minimum sampling and testing.
Testing frequency may need to be increased for high material variability or when test results approach specification limits.

TABLE VI – ASPHALT CONCRETE PAVEMENT (Items 341, 342, 344, 346, 347 and 348)

(All testing as noted in Table VI may be waived for exempt production as defined by specification.)

			PROJECT TESTS		PROJECT INDEPENDENT ASSURANCE TESTS		
MATERIAL OR PRODUCT	TEST FOR	TEST NUMBER	LOCATION	FREQUENCY (Per Design)	LOCATION	FREQUENCY	REMARKS
COMPLETE MIXTURE	Asphalt Content (%) (A)	Tex-236-F	Engineer Truck Sample (D)	Minimum 1 per Lot			Sample in accordance with Tex-222-F. Determine correlation factors for ignition oven using Tex-236-F at a minimum of one per project.
	Voids in Mineral Aggregates (VMA)	Tex-207-F	Truck Sample Plant Produced (D)	1 per Sublot	Truck	1 per 10 Lots only if compactor is shared by Contractor and State	Sample in accordance with Tex-222-F. Does not apply to Item 342, "Permeable Friction Course." Contractor's required testing will be in accordance with specification requirements for the appropriate specification Item #.
	Gradation (A)	Tex-236-F	Engineer Truck Sample (D)	Minimum 1 per 12 Sublots (E)			Sample in accordance with Tex-222-F. Determine correlation factors for ignition oven using Tex-236-F at a minimum of one per project.
	Boil Test	Tex-530-C	Truck Sample	1 per project			Sample in accordance with Tex-222-F. Unless waived by the Engineer.
	Indirect Tensile Strength – Dry	Tex-226-F					Sample in accordance with Tex-222-F. Unless waived by the Engineer. Does not apply to Items 342, 346, and 348.
	Moisture Content	Tex-212-F, Part II	Engineer Truck Sample				Sample in accordance with Tex-222-F.
	Lab Molded Density (A)	Tex-207-F	Truck Sample (D)	1 per Sublot 1 per Lot for Item 347	Truck	1 per 10 Lots only if compactor is shared by Contractor and State	Sample in accordance with Tex-222-F. Contractor's required testing will be in accordance with specification requirements for the appropriate specification Item #.
	Drain Down Test (A)	Tex-235-F	Engineer Truck Sample	1 per project 1 per Lot for Item 342			Sample in accordance with Tex-222-F. Not required for Item 341 and Item 344.
	Hamburg Wheel Test (A)	Tex-242-F	Engineer Truck Sample	1 per project			Sample in accordance with Tex-222-F. Sample during production. Does not apply to Item 348.
	Overlay Test	Tex-248-F	Engineer Truck Sample	1 per project			Sample in accordance with Tex-222-F. Does not apply to Items 341, 344, and 348.

This is a guide for minimum sampling and testing.
Testing frequency may need to be increased for high material variability or when test results approach specification limits.

TABLE VI – ASPHALT CONCRETE PAVEMENT (Items 341, 342, 344, 346, 347, and 348)

(All testing as noted in Table VI may be waived for exempt production as defined by specification.)

			PROJECT TESTS		
MATERIAL OR PRODUCT	**TEST FOR**	**TEST NUMBER**	**LOCATION**	**FREQUENCY (Per Design)**	**REMARKS**
ROADWAY	In-Place Air Voids **(A)**	Tex-207-F	Roadway **(D)**	2 cores per Sublot	Two cores taken per Sublot and averaged. Sample in accordance with Tex-222-F. Does not apply to Items 342, 347, and 348.
ROADWAY	Segregation Profile **(A)**	Tex-207-F, Part V	Roadway	1 per project	Not required when Contractor uses thermal imaging system. Does not apply to Items 342, 347, and 348.
	Joint Density **(A)**	Tex-207-F, Part VII	Roadway	1 per project	
	Thermal Profile	Tex-244-F	Immediately behind paver	1 per project	Not required when Contractor uses thermal imaging system.
	Ride Quality Test Type B **(A)**	Tex-1001-S	Final riding surface of travel lanes	1 per project	Engineer may verify Contractor's results for surface test Type B. For traditional design-bid-build TxDOT projects, CST has contracted with TTI to perform random ride verification at 10% frequency. Results for surface test Type A are not required to be reported.
	Permeability	Tex-246-F	Roadway	1 per project	Only applies to Items 342, 347, and 348.
FABRIC UNDERSEAL	Compliance with DMS-6220		Sampled, tested, and approved by CST/M&P		Sampling must be in accordance with Tex-735-I. Verify the source is listed on the current Material Producer List for Silt Fence, Filter Fabric, and Fabric Underseals. If not, sample and test prior to use in accordance with DMS-6220.

TABLE VI – FOOTNOTES

A	When this project acceptance test fails but the product is accepted, document the reasons for acceptance on the Letter of Certification of Materials Used or in the SiteManager Remarks field. This letter is required only for Asphalt Content and/or Gradation when production of complete mixture is suspended as required by QC/QA specifications.
B	Sampling may be performed at the plant, quarry, or both. Aggregate properties may be re-tested at any time during the project. These project tests may be used for one or more projects furnishing hot mix with the same aggregate source.
C	Attach the corresponding QM test report for SiteManager projects to satisfy project sampling and testing requirements.
D	Perform random sampling as specified in Tex-225-F, "Random Selection of Bituminous Mixture Samples."
E	Each test performed that is based on a quantity of material is considered "or fraction thereof" for calculating number of tests.

This is a guide for minimum sampling and testing.
Testing frequency may need to be increased for high material variability or when test results approach specification limits.

TABLE VII – ASPHALT CONCRETE PAVEMENT (Items 334)
(Refer to DMS-9210, "Limestone Rock Asphalt (LRA)," for testing requirements for Item 330.)

			PROJECT TESTS		
MATERIAL OR PRODUCT	**TEST FOR**	**TEST NUMBER**	**LOCATION**	**FREQUENCY (Per Design) (F)**	**REMARKS**
COARSE AGGREGATE	L. A. Abrasion **(A)**	Tex-410-A	Stockpile **(B)**	1 per project, per source	Verify the published value of the source, as listed on the current Material Producer List for BRSQC, meets the project specifications. If not, sample in accordance with Tex-221-F and submit to CST/M&P for testing prior to use in accordance with Tex-499-A. **(D)**
	Magnesium Sulfate Soundness **(A)**	Tex-411-A			
	Micro Deval	Tex-461-A			Sample in accordance with Tex-221-F. Testing frequency may be reduced or eliminated based on a satisfactory test history.
	Surface Aggregate Classification **(A)**	Tex-499-A	Stockpile **(B)**	1 per project, per source	Verify the published value of the source, as listed on the current Material Producer List for BRSQC, meets the project specifications. If not, sample in accordance with Tex-221-F and submit to CST/M&P for testing prior to use in accordance with Tex-499-A. SiteManager Quality Monitoring test documentation is accomplished by attaching an approved mix design.
COMBINED AGGREGATE	Sand Equivalent	Tex-203-F	Stockpiles, hot bins or feeder belts	1 per project, per source	Sample in accordance with Tex-221-F. The timing of when the test is performed is at the discretion of the Engineer.
ASPHALT BINDER	Compliance with Item 300 Binder & Tack Coat **(A) (C)**		Sampled, tested and pre-approved by CST/M&P. Project test sampled at the Plant for Binder & Road for Tack Coat	1 each for binder and tack coat per project, per grade, per source	Test a minimum of one sample from production. Sample tack coat at the distributor on the roadway in accordance with Tex-500-C, Part III. Sample binder at hot mix plant in accordance with Tex-500-C, Part II. Binder should arrive on the project pre-approved. If not pre-approved, sample binder before use.
MIX DESIGN	Compliance with applicable specification	Tex-204-F	At source (if not approved)	Min 1 design per Mix Type and Asphalt Grade	Verify that aggregates, recycled asphalt pavement, recycled asphalt shingles, mineral filler, asphalt binder, anti-stripping additives, and warm mix systems are on the Material Producer List where applicable and that they meet project specification requirements. Project sampling and testing may be conducted in individual materials as necessary for control.
COMPLETE MIXTURE	Asphalt Content (%) **(A)**	Tex-236-F	Engineer Truck Sample **(E)**	Minimum of 1 per 5,000 tons	Sample in accordance with Tex-222-F. Determine correlation factors for ignition oven using Tex-236-F at a minimum of one per project.
	Voids in Mineral Aggregates (VMA)	Tex-207-F	Truck Sample Plant Produced **(E)**	1 per 5,000 tons	Sample in accordance with Tex-222-F.
	Gradation **(A)**	Tex-236-F	Truck Sample	Minimum 1 per 5,000 tons	Sample in accordance with Tex-222-F. Determine correlation factors for ignition oven using Tex-236-F at a minimum of one per project.
	Boil Test	Tex-530-C		1 per project	Sample in accordance with Tex-222-F. The timing of when the test is performed is at the discretion of the Engineer.

This is a guide for minimum sampling and testing.
Testing frequency may need to be increased for high material variability or when test results approach specification limits.

TABLE VII – ASPHALT CONCRETE PAVEMENT (Items 334) (Refer to DMS-9210, "Limestone Rock Asphalt (LRA)," for testing requirements for Item 330.)					
			PROJECT TESTS		
MATERIAL OR PRODUCT	TEST FOR	TEST NUMBER	LOCATION	FREQUENCY (Per Design) (F)	REMARKS
COMPLETE MIXTURE	Moisture Content	Tex-212-F, Part II	Truck Sample	1 per 5,000 tons	Sample in accordance with Tex-222-F. Performed by CST/M&P at the point of production for payment calculations.
	Hydrocarbon-Volatile Content	Tex-213-F		1 per 5,000 tons	Sample in accordance with Tex-222-F. The timing of when the test is performed is at the discretion of the Engineer.
	Lab Molded Density (A)	Tex-207-F		1 per 5,000 tons	Sample in accordance with Tex-222-F.
	Hveem Stability (A)	Tex-208-F		1 per 5,000 tons	Sample in accordance with Tex-222-F. The timing of when the test is performed is at the discretion of the Engineer.
ROADWAY	Ride Quality Test Type B (A)	Tex-1001-S	Final riding surface of travel lanes		Engineer may verify Contractor's results for surface test Type B. For traditional design-bid-build TxDOT projects, CST has contracted with TTI to perform random ride verification at 10% frequency. Results from surface test Type A are not required to be reported.

TABLE VII – FOOTNOTES	
A	When this project acceptance test fails but the product is accepted, document the reasons for acceptance on the Letter of Certification of Materials Used or in the SiteManager Remarks field.
B	Sampling may be performed at the plant, quarry, or both. Aggregate properties may be re-tested at any time during the project.
C	Or as called for in the Specifications.
D	Attach the corresponding QM test report for SiteManager projects to satisfy project sampling and testing requirements.
E	Perform random sampling as specified in Tex-225-F, "Random Selection of Bituminous Mixture Samples."
F	Each test performed that is based on a quantity of material is considered "or fraction thereof" for calculating number of tests.

This is a guide for minimum sampling and testing.
Testing frequency may need to be increased for high material variability or when test results approach specification limits.

TABLE VIII – ASPHALT CONCRETE PAVEMENT (Item 340)

			PROJECT TESTS		
MATERIAL OR PRODUCT	TEST FOR	TEST NUMBER	LOCATION	FREQUENCY	REMARKS
COARSE AGGREGATE	L. A. Abrasion (A)	Tex-410-A	Stockpile (B)	1 per project, per source	Verify the published value of the source, as listed on the current Material Producer List for BRSQC, meets the project specifications. If not, sample in accordance with Tex-221-F and submit to CST/M&P for testing prior to use in accordance with Tex-499-A. (C)
	Magnesium Sulfate Soundness (A)	Tex-411-A			
	Micro Deval	Tex-461-A	Stockpile (B)	1 per project, per source	Sample in accordance with Tex-221-F. Testing frequency may be reduced or eliminated based on a satisfactory test history.
	Surface Aggregate Classification (A)	Tex-499-A	Stockpile (B)	1 per project, per source	Verify the published value of the source, as listed on the current Material Producer list for BRSQC, meets the project specifications. If not, sample in accordance with Tex-221-F and submit to CST/M&P for testing prior to use in accordance with Tex-499-A. (C)
COMBINED AGGREGATE	Sand Equivalent	Tex-203-F	Stockpiles, hot bins or feeder belts	1 per project, per design	Sample in accordance with Tex-221-F.
ASPHALT BINDER	Compliance with Item 300 Binder & Tack Coat (A)		Sampled, tested and pre-approved by CST/M&P. Plant for Binder & Road for Tack Coat	1 each for binder and tack coat per project, per grade, per source	Test a minimum of 1 sample taken from the project. Sample tack coat at the distributor on the roadway in accordance with Tex-500-C, Part III. Sample binder at hot mix plant in accordance with Tex-500-C, Part II. Binder should arrive on the project pre-approved. If not pre-approved, sample binder before use.
MIX DESIGN	Compliance with applicable specification	Tex-204-F	At source (if not approved)	Min. 1 design per Mix Type and Asphalt Grade	Verify that aggregates, recycled asphalt pavement, recycled asphalt shingles, mineral filler, asphalt binder, anti-stripping additives, and warm mix systems are on the Material Producer List where applicable and that they meet project specification requirements. Project sampling and testing may be conducted in individual materials as necessary for control.
COMPLETE MIXTURE	Asphalt Content (%)	Tex-236-F	Truck Sample (D)	Minimum of 1 per day	Sample in accordance with Tex-222-F. Determine correlation factors for ignition oven using Tex-236-F at a minimum of one per project.
	Voids in Mineral Aggregates (VMA)	Tex-207-F	Truck Sample Plant Produced (D)	1 per day	Sample in accordance with Tex-222-F.
	Gradation (A)	Tex-236-F	Truck Sample	Minimum 1 per day	Sample in accordance with Tex-222-F. Determine correlation factors for ignition oven using Tex-236-F at a minimum of one per project.
	Boil Test	Tex-530-C		1 per project	Sample in accordance with Tex-222-F. Unless waived by the Engineer.
	Indirect Tensile Strength – Dry	Tex-226-F		1 per project, per design	Sample in accordance with Tex-222-F. Unless waived by the Engineer.

This is a guide for minimum sampling and testing.
Testing frequency may need to be increased for high material variability or when test results approach specification limits.

TABLE VIII – ASPHALT CONCRETE PAVEMENT (Item 340)					
			PROJECT TESTS		
MATERIAL OR PRODUCT	TEST FOR	TEST NUMBER	LOCATION	FREQUENCY	REMARKS
COMPLETE MIXTURE	Lab Molded Density (A)	Tex-207-F	Truck Sample	1 per day	Sample in accordance with Tex-222-F.
	Hamburg Wheel Tracker (A)	Tex-242-F		1 per project	Sample in accordance with Tex-222-F. Sample during production.
ROADWAY	Air Voids (A)	Tex-207-F	Selected by the Engineer (D)	1 per day (2 Cores)	Sample in accordance with Tex-222-F.
	Ride Quality Test Type B (A)	Tex-1001-S	Final riding surface of travel lanes		Engineer may verify Contractor's results for surface test Type B. For traditional design-bid-build TxDOT projects, CST has contracted with TTI to perform random ride verification at 10% frequency. Results from surface test Type A are not required to be reported.
FABRIC UNDERSEAL	Compliance with DMS-6220		Sampled, tested, and approved by CST/M&P		Sample in accordance with Tex-735-I. Verify the source is listed on the current Material Producer List for Silt Fence, Filter Fabric, and Fabric Underseals. If not sample and submit to CST/M&P for testing prior to use in accordance with DMS-6220.

TABLE VIII – FOOTNOTES	
A	When this project acceptance test fails but the product is accepted, document the reasons for acceptance on the Letter of Certification of Materials Used or in the SiteManager Remarks field. This letter is required only for Asphalt Content and/or Gradation when production of complete mixture is suspended as required by QC/QA specifications.
B	Sampling may be performed at the plant, quarry, or both. Aggregate properties may be re-tested at any time during the project. These project tests may be used for one or more projects furnishing hot mix with the same aggregate source.
C	Attach the corresponding QM test report for SiteManager projects to satisfy project sampling and testing requirements.
D	Perform random sampling as specified in Tex-225-F, "Random Selection of Bituminous Mixture Samples."

This is a guide for minimum sampling and testing.
Testing frequency may need to be increased for high material variability or when test results approach specification limits.

TABLE IX – MICROSURFACING (Item 350)					
			PROJECT TESTS		
MATERIAL OR PRODUCT	**TEST FOR**	**TEST NUMBER**	**LOCATION OF SAMPLING**	**FREQUENCY (Per Design)**	**REMARKS**
AGGREGATE	5-Cycle Magnesium Sulfate Soundness **(A)**	Tex-411-A	Stockpile **(B)**	1 per project, per source	Verify the published value of the source, as listed on the current Material Producer list for BRSQC meets the project specifications. If not, sample in accordance with Tex-221-F and submit to CST/M&P for testing at 1 per project, per source. **(C)**
	Gradation	Tex-200-F, Part II		1 per project, per source	Sample in accordance with Tex-221-F.
	Crushed Face Count	Tex-460-A		1 per project, per source	Sample in accordance with Tex-221-F.
	Acid Insoluble **(A)**	Tex-612-J		1 per project, per source	Verify the value of the source, as listed on the current BRSQC, meets the project specifications. If not, sample and submit to CST/M&P for testing prior to use in accordance with Tex-499-A. Sample in accordance with Tex-221-F. **(C)**
	Surface Aggregate Classification	Tex-499-A	Stockpile, or BRSQC **(B)**	1 per project, per source	Verify the published value of the source, as listed on the current Material Producer list for BRSQC meets the project specifications. If not, sample in accordance with Tex-221-F and submit to CST/M&P for testing at 1 per project, per source. **(C)**
COMBINED BLEND	Sand Equivalent	Tex-203-F	Stockpile **(B)**	1 per project, per source	Sample in accordance with Tex-221-F.
ASPHALT BINDER	Compliance with Item 300 Binder & Tack Coat **(A)**		Sampled, tested, and pre-approved by CST/M&P. Project test sampled at the Plant for Binder & Road for Tack Coat	1 each for binder and tack coat per project, per grade, per source	Test a minimum of one sample during production. Sample tack coat at the distributor on the roadway in accordance with Tex-500-C, Part III. Sample binder at microsurfacing machine in accordance with Tex-500-C, Part III. Binder should arrive on the project pre-approved. If not pre-approved, sample binder before use.
CEMENT	Compliance with DMS-4600				Verify the source is listed on the current Material Producer List for Cement. If not, sample and submit to CST/M&P for testing prior to use in accordance with DMS-4600.
COMPLETE MIX	Asphalt Content	Tex-236-F	During production	1 per day	Sample in accordance with Tex-222-F. Determine correlation factors for ignition oven using Tex-236-F at a minimum of one per project.
	Gradation	Tex-200-F, Part II Tex-236-F			Sample in accordance with Tex-222-F. Determine correlation factors for ignition oven use at a minimum of one per project.

This is a guide for minimum sampling and testing.

Testing frequency may need to be increased for high material variability or when test results approach specification limits.

TABLE IX – FOOTNOTES	
A	When this project acceptance test fails but the product is accepted, document the reasons for acceptance on the Letter of Certification of Materials Used or in the SiteManager Remarks field. This letter is required only for Asphalt Content and/or Gradation when production of complete mixture is suspended as required by QC/QA specifications.
B	Sampling may be performed at the plant, quarry, or both. Aggregate properties may be re-tested at any time during the project. These project tests may be used for one or more projects furnishing hot mix with the same aggregate source.
C	Attach the corresponding QM test report for SiteManager projects to satisfy project sampling and testing requirements.
D	Each test performed that is based on a quantity of material is considered “or fraction thereof” for calculating number of tests.

APPENDIX C

AASHTO ACCREDITED LABORATORIES

AASHTO Accredited CMT Laboratories in Texas

* Directory of accredited laboratories and scope of testing is maintained on the AASHTO Materials Reference Laboratory website at: http://www.amrl.net. Laboratory must be accredited for each specific test performed.

WILLIAMSON COUNTY

FED. RD. DIV. NO.	FEDERAL AID PROJECT NO.		SHEET NO.
6			
STATE	DISTRICT	COUNTY	
TEXAS	AUS	WILLIAMSON	1
CONTROL	SECTION	JOB	
2103	01	034	

INDEX OF SHEETS

SHEET NO.	DESCRIPTION
1	TITLE SHEET
2	INDEX OF SHEETS

REGISTERED ACCESSIBILITY SPECIALIST (RAS) INSPECTION NOT REQUIRED

PRECINCT NUMBER 3

SOUTHWEST BYPASS: SEGMENT 2

NET LENGTH OF ROAD OVERLAY = 1,852.93 FT (0.351 MILES)
NET LENGTH OF NEW ROADWAY = 4,897.55 FT (0.928 MILES)
NET LENGTH OF NEW BRIDGE = 720.00 FT (0.136 MILES)
NET LENGTH OF EXISTING BRIDGE = 914.02 FT (0.173 MILES)
NET LENGTH OF PROJECT = 8,384.50 FT (1.588 MILES)

LIMITS: FROM IH 35 SBFR TO RM 2243 (LEANDER ROAD)

ROADWAY	CLASSIFICATION	DESIGN SPEED
SW BYPASS WBFR	MAJOR URBAN COLLECTOR	50 MPH
RM 2243	MINOR ARTERIAL	55 MPH

ROADWAY	ADT (2019)	ADT (2035)
SW BYPASS WBFR	20,300	68,500
ROADWAY	ADT (2015)	ADT (2035)
RM 2243	10,549	21,100

RM 2243 (LEANDER ROAD)

CSJ: 2103-01-034

NET LENGTH OF ROAD OVERLAY = 450.00 FT (0.085 MILES)

FOR THE CONSTRUCTION OF INTERIM TWO-WAY ROADWAY (FUTURE WESTBOUND FRONTAGE RD) CONSISTING OF GRADING, FLEX BASE, ASPHALT PAVEMENT, RETAINING WALLS, STORM SEWER, CULVERTS, EROSION CONTROL, WATER QUALITY FEATURES, AND BRIDGE STRUCTURE.

END PROJECT
STA 483+00.00
CSJ: 2103-01-034

END PROJECT
STA. 12+24.00

℄ WBFR_S2_CL STA 451+47.30=
℄ RM 2243 STA 480+72.74=
℄ RAMPNB2 STA 10+32.63, 5' RT

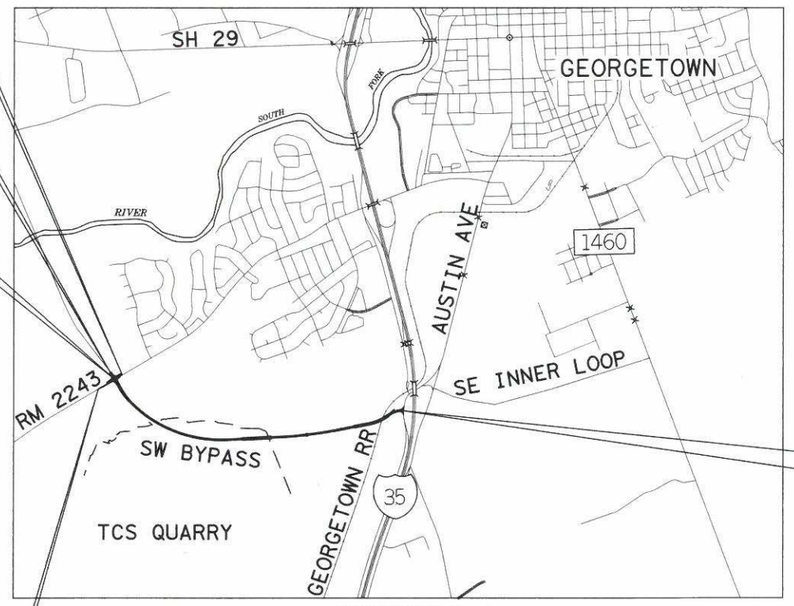

BEGIN PROJECT
STA. 68+36.97

BEGIN PROJECT
STA 475+06.85
CSJ: 2103-01-034

VICINITY MAP
N.T.S.

EXCEPTIONS: NONE
EQUATIONS: ℄ WBFR_I_CL STA 394+90.00 7.50 LT = ℄ WBFR_S2_CL STA 394+90.00
STA 72+93.69 BK= STA 372+93.02 AH
BRIDGE: STA 404+50.00 TO 411+70.00
WATERSHED: BRAZOS RIVER BASIN
AREA OF CONSTRUCTION DISTURBANCE: 56.07 ACRES

REQUIRED SIGNS SHALL BE PLACED IN ACCORDANCE WITH STANDARD SHEETS BC(1)-14 THRU BC(12)-14 AND THE "TEXAS MANUAL ON UNIFORM TRAFFIC CONTROL DEVICES".

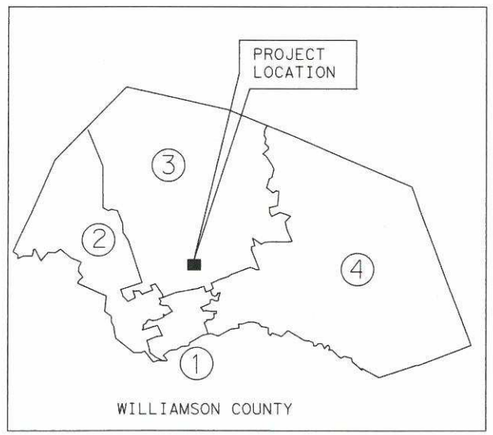

TxDOT STANDARD SPECIFICATIONS FOR CONSTRUCTION OF HIGHWAYS, STREETS AND BRIDGES ADOPTED ON NOVEMBER 1, 2014 AND ALL APPLICABLE SPECIAL PROVISIONS AND SPECIAL SPECIFICATIONS AS INDICATED IN THE BID DOCUMENTS SHALL GOVERN ON THIS PROJECT.

HDR Engineering, Inc.
810 Hesters Crossing, Suite 120
Round Rock, Texas 78681
Texas Registered Engineering Firm F-754

PREPARED BY:
HDR ENGINEERING, INC.
TBPE FIRM NO. F-754

JEFFREY L. CURREN — DATE 3/23/18
PROJECT MANAGER

STATE OF TEXAS
JEFFREY L. CURREN
84227
LICENSED
PROFESSIONAL ENGINEER

WILLIAMSON COUNTY
1848

© 2018 Williamson County, Texas
All rights reserved.

APPROVED BY:
WILLIAMSON COUNTY

DAN A GATTIS — DATE 3/27/18
WILLIAMSON COUNTY JUDGE

VALERIE COVEY — DATE 3/27/18
WILLIAMSON COUNTY COMMISSIONER
PRECINCT 3

APPROVED BY:
HNTB CORPORATION

RICHARD L RIDINGS, PE — DATE 3/27/18
ROAD BOND MANAGEMENT TEAM

PLOT DRIVER: TXDOT_PDF_BW.pltcfg PENTABLE: S2-000002017071B.tbl
USER: lgomezgonz DATE: 3/22/2018 TIME: 11:05:23 AM SCALE: 1:4000
FILE: \

	SHEET NO.	GENERAL
	1	TITLE SHEET
	2 - 3	INDEX OF SHEETS
	4 - 5	PROJECT LAYOUT
	6 - 12	TYPICAL SECTIONS
	13 - 13K	GENERAL NOTES
	14 - 22	SUMMARY OF QUANTITIES
	23 - 24	SUMMARY OF SMALL SIGN
	25 - 26	BORE HOLE LAYOUT
	27 - 29	BORING LOGS

	SHEET NO.	TRAFFIC CONTROL PLANS
	30	TRAFFIC CONTROL PLAN - SBFR I-35
	31 - 32	TRAFFIC CONTROL PLAN - RM 2243
*	33 - 44	BC(1)-14 THRU BC(12)-14
*	45	TCP(1-3)-18
*	46	TCP(1-5)-18

	SHEET NO.	ROADWAY PLANS
	47 - 47A	SURVEY CONTROL
	48	SW BYPASS PANEL LAYOUT
	49 - 50	ALIGNMENT DATA
	51	REMOVAL PLAN
	52 - 59	PLAN AND PROFILE - WBFR
	60	PLAN AND PROFILE - RM 2243
	61	INTERSECTION DETAIL - RM 2243
	62	INTERSECTION DETAIL POINT TABLE
	63	ISLAND DETAIL - RM 2243
#	64	BED-14
#	65	CCCG-12
#	66	CONCRETE DRIVEWAYS, SIDEWALKS AND RIPRAP MEDIANS (AUSTIN DISTRICT)
#	67	CONCRETE RIPRAP AND VEGETATIVE CONTROL (AUSTIN DISTRICT)
#	68	GF(31)-14
#	69	GF(31) LS-17
#	70	GF(31) TR-14
#	71	SGT (8) 31-17
#	72	SGT (8S) 31-17
#	73 - 76	PED-18

	SHEET NO.	RETAINING WALLS
	77	RETAINING WALL RW-05 PLAN AND PROFILE
	78	RETAINING WALL RW-06 PLAN AND PROFILE
#	79	RW(MSE)DD
#	80	RM(EM)
#	81 - 82	RW(MSE)
	83 - 84	RW(TRF)(MOD)
#	85	CRR

	SHEET NO.	FENCING AND GRADING
	86 - 87	GRADING ALIGNMENT DATA
	88 - 93	FENCING AND GRADING PLAN
	94	GRADING POINTS TABLE
	95 - 99	ROCK CUT CONTROL POINTS
	100 - 101	FENCING DETAILS
	102	GRADING DETAILS

	SHEET NO.	DRAINAGE PLANS
	103	CULVERT ALIGNMENT DATA
	104	HYDROLOGY COMPUTATION
	105	HYDRAULIC COMPUTATION
	106 - 108	PROPOSED DRAINAGE AREA MAP
	109	DRAINAGE CULVERT NO.6 LAYOUT
	110	DRAINAGE CULVERT NO.7 LAYOUT
	111 - 112	DRAINAGE CULVERT NO.8 LAYOUT
	113 - 114	DRAINAGE CULVERT NO.8B LAYOUT
	115	DRAINAGE CULVERT NO.9 LAYOUT
**	116 - 117	SETP-CD
**	118 - 119	SRR
**	120	CH-FW-0
**	121	CH-PW-S

	SHEET NO.	BRIDGE PLANS
	122 - 123	BRIDGE LAYOUT
	124 - 125	BORING LOGS
	126	ESTIMATED QUANTITIES
	127 - 128	ABUTMENT NO. 1
	129 - 130	ABUTMENT NO. 7
	131	INTERIOR BENT NOS. 2, 5-6
	132	INTERIOR BENT NOS. 3-4
	133 - 134	FRAMING PLAN
	135	360.00' PRESTRESSED CONCRETE GIRDER UNIT 1
	136	360.00' PRESTRESSED CONCRETE GIRDER UNIT 2
	137	IGND(MOD)
%	138	BAS-A
%	139 - 140	BL(MOD)
%	141	CSAB
%	142 - 143	FD
%	144 - 145	IGD
%	146 - 148	IGEB
%	149 - 150	IGMS
	151	IGTS(MOD)
%	152 - 153	MEBR(C)
%	154 - 157	PCP
%	158	PCP-FAB
%	159 - 160	PMDF
%	161 - 162	SEJ-A
%	163 - 164	SSTR

STATE OF TEXAS
JACOB E. WALKER
122057
LICENSED
PROFESSIONAL ENGINEER

03/26/2018

THE STANDARD SHEETS SPECIFICALLY IDENTIFIED ABOVE HAVE BEEN SELECTED BY ME OR UNDER MY RESPONSIBLE SUPERVISION AS BEING APPLICABLE TO THIS PROJECT.

STATE OF TEXAS
JUSTIN D. CARLTON
127593
LICENSED
PROFESSIONAL ENGINEER

03/26/2018

* THE STANDARD SHEETS SPECIFICALLY IDENTIFIED ABOVE HAVE BEEN SELECTED BY ME OR UNDER MY RESPONSIBLE SUPERVISION AS BEING APPLICABLE TO THIS PROJECT.

STATE OF TEXAS
PHAISARN CWATANAPHOL
89252
LICENSED
PROFESSIONAL ENGINEER

Phaisarn Cwatanaphol, P.E.

03/26/2018

** THE STANDARD SHEETS SPECIFICALLY IDENTIFIED ABOVE HAVE BEEN SELECTED BY ME OR UNDER MY RESPONSIBLE SUPERVISION AS BEING APPLICABLE TO THIS PROJECT.

STATE OF TEXAS
TYLER W. BRENDLINGER
122092
LICENSED
PROFESSIONAL ENGINEER

03/26/2018

% THE STANDARD SHEETS SPECIFICALLY IDENTIFIED ABOVE HAVE BEEN SELECTED BY ME OR UNDER MY RESPONSIBLE SUPERVISION AS BEING APPLICABLE TO THIS PROJECT.

NO.	DATE	REVISION	APPROVED

WILLIAMSON COUNTY

HDR Engineering, Inc.
810 Hesters Crossing, Suite 120
Round Rock, Texas 78681
Texas Registered Engineering Firm F-754

SOUTHWEST BYPASS SEGMENT 2

INDEX OF SHEETS

SHEET 1 OF 2

DESIGN	FED.RD. DIV.NO.	FEDERAL AID PROJECT NO.		HIGHWAY NO.
JC	6			
GRAPHICS	STATE	DISTRICT	COUNTY	SHEET NO.
LG	TEXAS	AUS	WILLIAMSON	2
CHECK	CONTROL	SECTION	JOB	
JW	2103	01	034	
CHECK				
JC				

PLOT DRIVER: TXDOT_PDF_BW.pltcfg PENTABLE: S2-0000020/T0718.tbl
USER: lgomezgonz DATE: 3/26/2018 TIME: 11:55:37 AM SCALE: 1:1
FILE: \

	SHEET NO.	TRAFFIC SIGNAL
	165	SW BYPASS AND RM 2243 EXISTING INTERSECTION LAYOUT
	166	SW BYPASS AND RM 2243 PROPOSED (INTERIM) SIGNAL LAYOUT
	167	SW BYPASS AND RM 2243 CONDUIT AND CONDUCTOR SCHEDULES (INTERIM)
	168	SW BYPASS AND RM 2243 ELEVATIONS (INTERIM)
	169	SW BYPASS AND RM 2243 PROPOSED (ULTIMATE) SIGNAL LAYOUT
	170	SW BYPASS AND RM 2243 SIGNING AND PHASING (ULTIMATE)
	171	SW BYPASS AND RM 2243 CONDUIT AND CONDUCTOR SCHEDULES (ULTIMATE)
	172	SW BYPASS AND RM 2243 ELEVATIONS (ULTIMATE)
	173	SW BYPASS AND RM 2243 VEHICLE DETECTION DETAILS (ULTIMATE)
$	174	TS-FD-12
$	175	SMA-80(1)-12
$	176	WV & IZ-14
$	177	ED(1)-14
$	178	ED(2)-14
$	179	ED(3)-14
$	180	ED(4)-14
$	181	ED(5)-14
$	182	ED(6)-14
$	183	ED(8)-14
$	184	ED(9)-14
$	185	ED(12)-14
$	186	SNS-95
$	187	SMA-80(2)-12
$	188	MA-C-12
$	189	MA-C(ILSN)-12
$	190	MA-D-12
$	191	LUM-A-12
$	192	CFA-12
$	193	TS-CF-04
$	194	MA-DPD-12
$	195	MAD-14(AUS)
$	196	BBU-14(AUS)
$	197	CITY OF GEORGETOWN SIGNAL DETAILS

	SHEET NO.	ILLUMINATION
	198 - 201	ILLUMINATION LAYOUTS
	202	ILLUMINATION UNDERPASS LAYOUTS
	203 - 204	ILLUMINATION DETAILS
	205	ILLUMINATION SCHEMATICS
##	206	RID(1)-17
##	207	RID(2)-17
##	208	RID(3)-17
##	209	RIP(1)-17
##	210	RIP(2)-17
##	211	RIP(3)-17
##	212	RIP(4)-17

	SHEET NO.	SIGNING & STRIPING
	213	STRIPING REMOVAL PLAN - SBFR I-35
	214 - 216	STRIPING REMOVAL PLAN - RM 2243
	217	STRIPING REMOVAL PLAN - RAMPNB2
	218	SIGNING AND STRIPING - SBFR I-35
	219 - 226	SIGNING AND STRIPING - WBFR
	227 - 229	SIGNING AND STRIPING - RM 2243
	230	SIGNING DETAIL WBFR
*	231	D&OM(3)-15B
*	232	D&OM(5)-15
*	233	D&OM (VIA)-15
*	234	PM(1)-12
*	235	PM(2)-12
*	236	PM(3)-12
*	237	SMD (GEN)-08
*	238	SMD(SLIP-1)-08
*	239	SMD(SLIP-2)-08
*	240	TSR(4)-13
*	241	SMD(BR-1)-14
*	242	SMD(BR-2)-14
*	243	SMD(BR-3)-14
*	244	SPRFBA(1)-13

	SHEET NO.	ENVIRONMENTAL ITEMS
	245	STORMWATER POLLUTION PREVENTION PLAN (SW3P)
	246	EPIC
	247	TCEQ REQUIREMENTS FOR RECHARGE ZONE OF THE EDWARDS AQUIFER
	248	TEMPORARY EROSION GENERAL NOTES
	249 - 256	TEMPORARY EROSION CONTROL PLAN
	257 - 264	PERMANENT EROSION CONTROL PLAN
*	265	EC(1)-16
*	266	EC(2)-16
*	267	EC(3)-16
*	268	TREE PROTECTION STANDARD

SHEET NO.	UTILITIES
269 - 276	UTILITY LAYOUT

XS01 - XS127 CROSS SECTIONS

STATE OF TEXAS
TIMOTHY GRIMES
100107
LICENSED
PROFESSIONAL ENGINEER
03/23/2018

$ THE STANDARD SHEETS SPECIFICALLY IDENTIFIED ABOVE HAVE BEEN SELECTED BY ME OR UNDER MY RESPONSIBLE SUPERVISION AS BEING APPLICABLE TO THIS PROJECT.

STATE OF TEXAS
PAUL K. DAVILA
101043
LICENSED
PROFESSIONAL ENGINEER
22 MAR 2018

THE STANDARD SHEETS SPECIFICALLY IDENTIFIED ABOVE HAVE BEEN SELECTED BY ME OR UNDER MY RESPONSIBLE SUPERVISION AS BEING APPLICABLE TO THIS PROJECT.

STATE OF TEXAS
JUSTIN D. CARLTON
127593
LICENSED
PROFESSIONAL ENGINEER
03/23/2018

* THE STANDARD SHEETS SPECIFICALLY IDENTIFIED ABOVE HAVE BEEN SELECTED BY ME OR UNDER MY RESPONSIBLE SUPERVISION AS BEING APPLICABLE TO THIS PROJECT.

NO.	DATE	REVISION	APPROVED

WILLIAMSON COUNTY

HDR Engineering, Inc.
810 Hesters Crossing, Suite 120
Round Rock, Texas 78681
Texas Registered Engineering Firm F-754

SOUTHWEST BYPASS SEGMENT 2

INDEX OF SHEETS

SHEET 2 OF 2

DESIGN	FED.RD. DIV.NO.	FEDERAL AID PROJECT NO.		HIGHWAY NO.
JC	6			
GRAPHICS	STATE	DISTRICT	COUNTY	SHEET NO.
LG	TEXAS	AUS	WILLIAMSON	
CHECK	CONTROL	SECTION	JOB	3
JW				
CHECK	2103	01	034	
JC				

PLOT DRIVER: TXDOT_PDF_BW.pltcfg PENTABLE: S2-0000020I7071B.tbl
USER: lgomezgonz DATE: 3/21/2018 TIME: 12:21:07 PM SCALE: 1:1
FILE: \

I-35 SBFR CENTERLINE "℄ SBFR"
POINT NO: 11
NORTHING: 10196145.3564
EASTING: 3129925.6570
IH 35 SBFR
EXISTING BUILDING TO BE REMOVED UPON PROJECT COMPLETION
POINT NO: 70049
NORTHING: 10195085.900
EASTING: 3129365.240
℄ SBFR
STA 911+95.41
20.25' LT
POINT NO: 804
NORTHING: 10195354.5847
EASTING: 3129320.6403
℄ SBFR
STA 909+25.04
22.44' LT
END 1.5" OVERLAY AT APPROACH SLAB STA 372+95.48
PC 910+00.56
910+00
S11°59'43.87"W
PT 909+21.32
℄ WBFR_I_CL STA 68+29.29 = ℄ SBFR STA 907+41.47
S84°33'23"W
PC 372+93.02
POB 68+00.00
LIMITS OF INNER SPACE CAVERN
BEGIN PROJECT STA 68+36.97
BEGIN 1.5" OVERLAY
70+00
PC 69+17.80
S44°38'15.07"W
370+00
PI 724+41.77
PC 731+04.96
905+00
ROW
GRR ROW
GRR ROW
POB 734+25.00
SPUR CENTERLINE "WBFR_I_SPUR"
POINT NO: 803
NORTHING: 10195507.4031
EASTING: 3129135.8664
℄ WBFR_I_CL
STA 69+80.58
7.52' LT
LAUBACH TRUSTEES
POINT NO: 1575
NORTHING: 10195785.8711
EASTING: 3129405.9802
℄ SBFR
STA 904+51.69
48.46' LT
J-D-P PROPERTIES
ROW
POINT NO: 5845
NORTHING: 10194843.3400
EASTING: 3128518.8500
℄ WBFR_I_CL
STA 377+60.35
348.95' LT
GEORGETOWN RAILROAD
ENTERPRISED ESMT (TYP)
POINT NO: 300
NORTHING: 10195032.0400
EASTING: 3128439.0750
℄ WBFR_I_CL
STA 377+88.99
147.01' LT
POINT NO: 5843
NORTHING: 10195161.4000
EASTING: 3128609.9300
℄ WBFR_I_CL
STA 376+04.64
72.80' LT
375+00
ROW
SEGMENT 1 WBFR CENTERLINE "WBFR_I_CL"
EQUATION:
STA 72+93.69 BK =
STA 372+93.02 AH
ENTERPRISE ESMT
ENTERPRISE ESMT
PT 378+20.38
BEGIN 1.5" OVERLAY AT APPROACH SLAB STA 382+09.50
POINT NO: 302
NORTHING: 10194970.1064
EASTING: 3128134.6716
℄ WBFR_I_CL
STA 380+95.75
149.25' LT
POINT NO: 303
NORTHING: 10194990.8796
EASTING: 3127876.3254
STA 383+45.39
79.56' LT
POINT NO: 304
NORTHING: 10194963.4544
EASTING: 3127775.5816
℄ WBFR_I_CL
STA 384+49.51
87.25' LT
THE TEXAS CRUSHED STONE CO.
POINT NO: 70050
NORTHING: 10193849.920
EASTING: 3129071.799
ROW
EXISTING FEATURE PROTECTION FENCE
EXISTING FEATURE PROTECTION FENCE
POINT NO: 306
NORTHING: 10194840.7437
EASTING: 3127451.0929
℄ WBFR_I_CL
STA 387+90.26
146.15' LT
POINT NO: 305
NORTHING: 10194878.8912
EASTING: 3127660.7608
℄ WBFR_I_CL
STA 385+78.36
148.35'
SEGMENT 1 FEATURE F1
SEGMENT 1 FEATURE F3
SEGMENT 1 FEATURE F2
N78°59'55.05"E
SW BYPASS WBFR
380+00
385+00
390+00
395+00
ROW
DRAINAGE ESMT
PC 387+03.24
POINT NO: 307
NORTHING: 10194824.9095
EASTING: 3127282.4697
℄ WBFR_I_CL
STA 389+56.86
132.22' LT
POINT NO: 310
NORTHING: 10194748.8900
EASTING: 3126706.0275
℄ WBFR_I_CL
STA 395+31.33
126.47' LT
ROW
400' ROW
SEGMENT 2 WBFR CENTERLINE "WBFR_S2_CL"
END 1.5" OVERLAY
BEGIN FULL DEPTH CONSTRUCTION
℄ WBFR_I_CL STA 394+90.00
7.50 LT =
℄ WBFR_S2_CL STA 394+90.00
SEGMENT 1 CONSTRUCTION BY OTHERS
POINT NO: 309
NORTHING: 10194769.6577
EASTING: 3126868.2736
℄ WBFR_I_CL
STA 393+69.68
125.53
MATCH LINE STA 395+50

NOTES:

HORIZONTAL DATUM IS BASED ON THE NAD-83 (1993) TEXAS CENTRAL (4203) STATE PLANE SYSTEM. COORDINATES ARE SURFACE VALUES BASED ON A COMBINED SURFACE ADJUSTMENT FACTOR OF 1.00014.

VERTICAL DATUM IS NAVD-88.

SEE SHEET 47 AND 48 FOR CONTROL POINTS

0 100 200 300 400
SCALE IN FEET

N

MATCH LINE STA 395+00
CITY OF GEORGETOWN OVERHEAD TRANSMISSION LINES
EXISTING LIMITS OF QUARRY
STA 407+10.00
339.50 LT
NORTHING: 10194447.76
EASTING: 3125533.65
STA 407+90.00
339.50 LT
NORTHING: 10194443.80
EASTING: 3125453.75
ROW
POINT NO: 531
NORTHING: 10194700.5101
EASTING: 3126309.4578
℄ WBFR_I_CL
STA 399+25.83
136.90' LT
TEMPORARY HAUL ROAD BY OTHERS
PROPOSED CULVERT NO.6
STA 396+00.00
SEGMENT 2 WBFR CENTERLINE "WBFR_S2_CL"
BEGIN BRIDGE
STA 404+50.00
PROPOSED TEXAS CRUSHED STONE ACCESS ROUTE (ROW CROSSING)
80'
POB 211+00.00
END BRIDGE
STA 411+70.00
400' ROW
400+00
SW BYPASS WBFR
405+00
410+00
415
S87°09'58.90"W
211+00
212+00
213+00
214+00
215
ROW
ROW
PROPOSED BRIDGE
RETAINING WALL RW-05
STA 407+90.00
60.50 RT
NORTHING: 10194843.31
EASTING: 3125433.98
STA 407+10.00
60.50 RT
NORTHING: 10194847.27
EASTING: 3125513.88
PT 402+15.25
UTILITY ESMT
UTILITY ESMT
POINT NO: 530
NORTHING: 10194891.1399
EASTING: 3126325.4820
℄ WBFR_I_CL
STA 398+94.61
57.88' RT
100' CITY OF GEORGETOWN ESMT
THE TEXAS CRUSHED STONE CO.
EXISTING LIMITS OF QUARRY
MATCH LINE STA 415+00

N

STATE OF TEXAS
JACOB E. WALKER
122057
LICENSED PROFESSIONAL ENGINEER
03/23/2018

NO.	DATE	REVISION	APPROVED

WILLIAMSON COUNTY

HDR Engineering, Inc.
810 Hesters Crossing, Suite 120
Round Rock, Texas 78681
Texas Registered Engineering Firm F-754

SOUTHWEST BYPASS SEGMENT 2

PROJECT LAYOUT BEGIN TO STA 415+00

SCALE: 1"=200' SHEET 1 OF 2

DESIGN	FED. RD. DIV. NO.	FEDERAL AID PROJECT NO.		HIGHWAY NO.
JC	6			
GRAPHICS	STATE	DISTRICT	COUNTY	SHEET NO.
LG	TEXAS	AUS	WILLIAMSON	
CHECK	CONTROL	SECTION	JOB	
JW	2103	01	034	4
CHECK				
JC				

PLOT DRIVER: TXDOT_PDF_BW.pltcfg PENTABLE: S2-0000020f07f8.tbl
USER: lgomezgon2 DATE: 3/23/2018 TIME: 1:4050 PM SCALE: 1:200
FILE: \

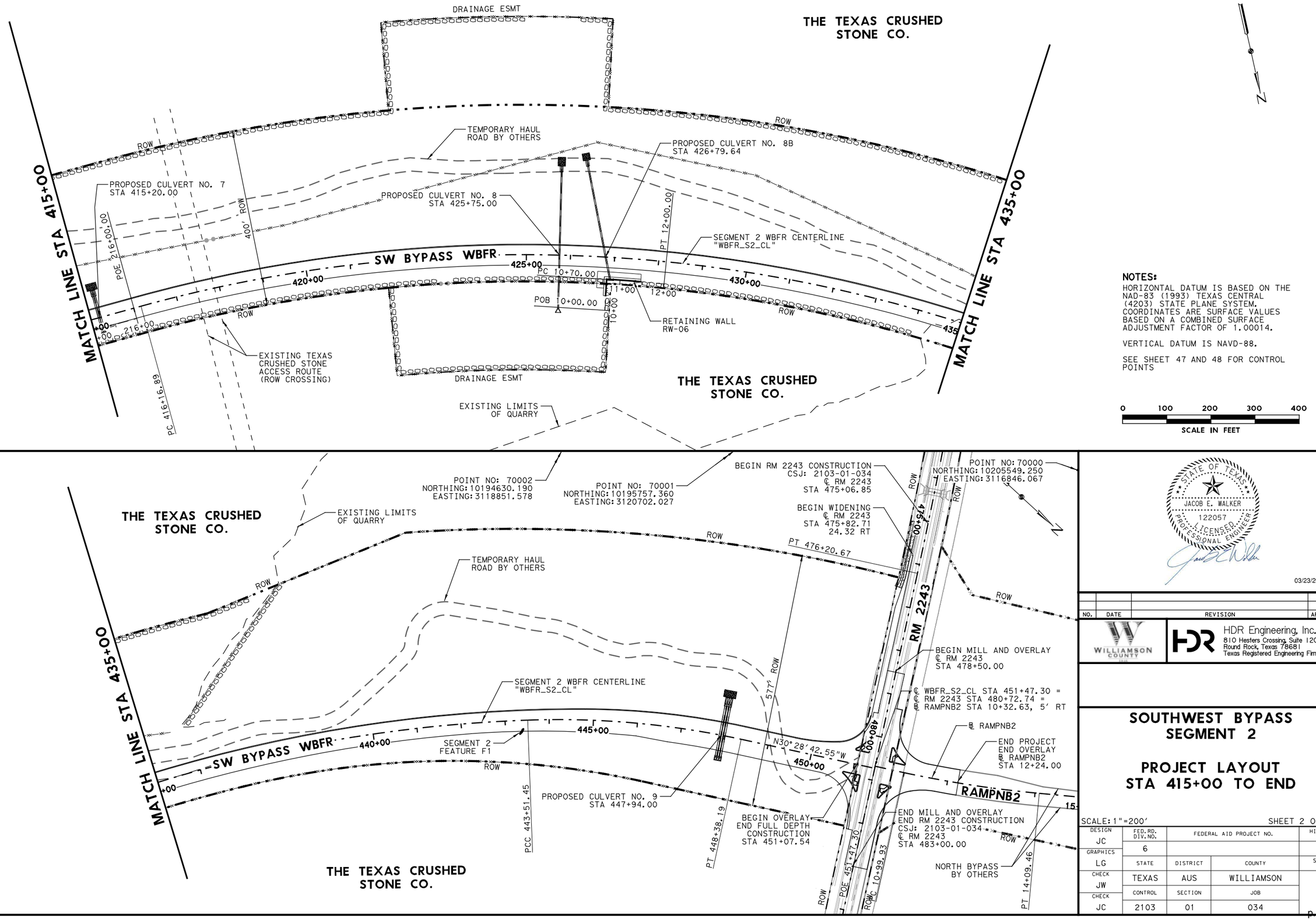

NOTES:

HORIZONTAL DATUM IS BASED ON THE NAD-83 (1993) TEXAS CENTRAL (4203) STATE PLANE SYSTEM. COORDINATES ARE SURFACE VALUES BASED ON A COMBINED SURFACE ADJUSTMENT FACTOR OF 1.00014.

VERTICAL DATUM IS NAVD-88.

SEE SHEET 47 AND 48 FOR CONTROL POINTS

0 100 200 300 400

SCALE IN FEET

STATE OF TEXAS
JACOB E. WALKER
122057
LICENSED PROFESSIONAL ENGINEER

03/23/2018

NO.	DATE	REVISION	APPROVED

WILLIAMSON COUNTY

HDR Engineering, Inc.
810 Hesters Crossing, Suite 120
Round Rock, Texas 78681
Texas Registered Engineering Firm F-754

SOUTHWEST BYPASS SEGMENT 2

PROJECT LAYOUT STA 415+00 TO END

SCALE: 1"=200' SHEET 2 OF 2

DESIGN	FED. RD. DIV. NO.	FEDERAL AID PROJECT NO.		HIGHWAY NO.
JC	6			
GRAPHICS	STATE	DISTRICT	COUNTY	SHEET NO.
LG	TEXAS	AUS	WILLIAMSON	
CHECK	CONTROL	SECTION	JOB	5
JW	2103	01	034	
CHECK				
JC				

PLOT DRIVER: TXDOT_PDF_BW.pltcfg PENTABLE: S2-0000020/7018.tbl
USER: lgomezgonz DATE: 3/23/2018 TIME: 1:40:54 PM SCALE: 1:200
FILE: \

4/12/2018 7:20 AM

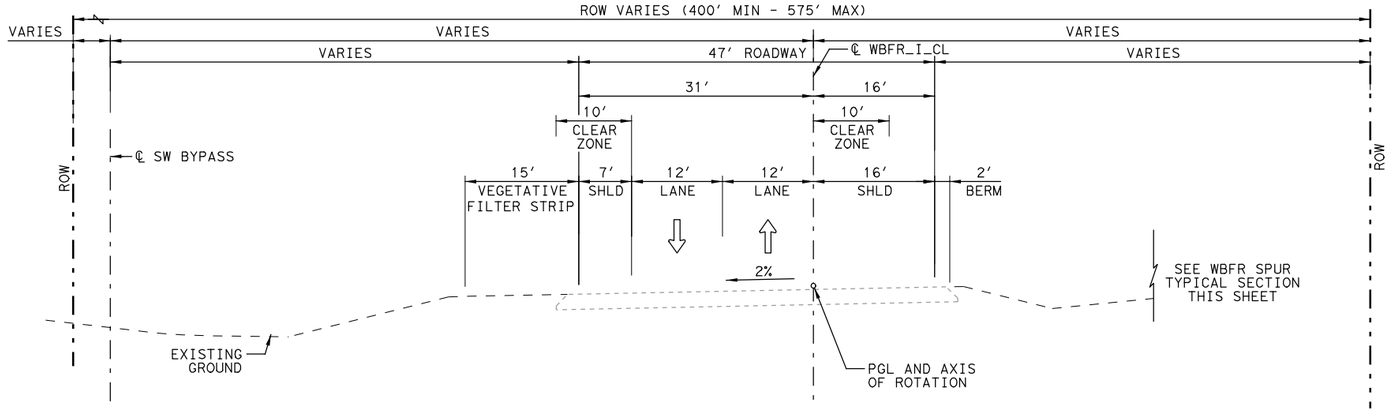

EXISTING SW BYPASS WBFR: SEGMENT 1

STA 68+36.97 TO STA 70+60.74

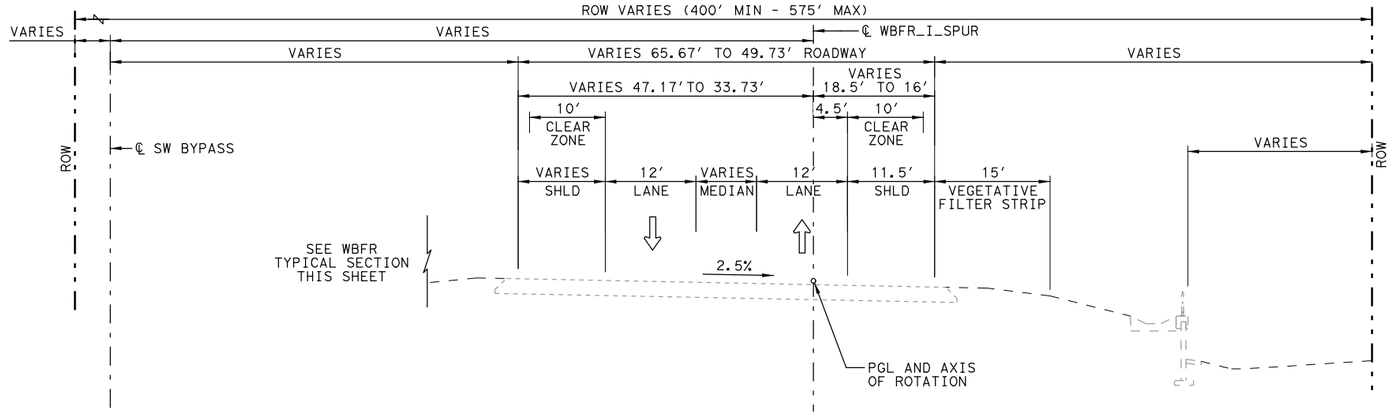

EXISTING SW BYPASS WBFR SPUR: SEGMENT 1

STA 368+20.00 TO STA 370+62.03

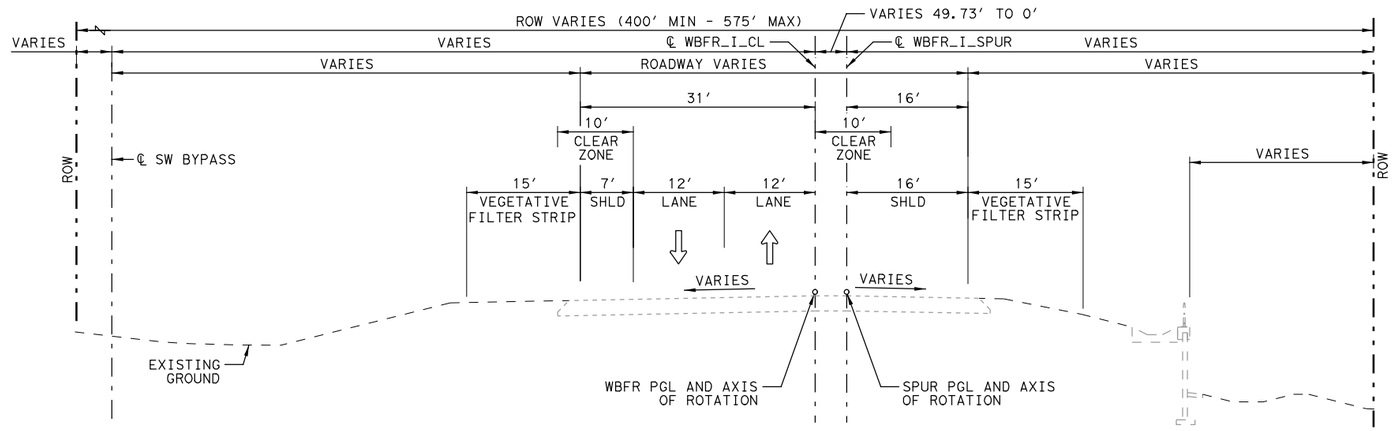

EXISTING SW BYPASS WBFR: SEGMENT 1

STA 70+60.74 TO STA 372+95.48
STATION EQUATION: STA 72+93.69 BK = STA 372+93.02 AHD
SPUR STA 370+62.03 TO STA 372+95.48
STA 372+95.48 TO STA 382+09.50 (BRIDGE LIMITS)

GENERAL NOTES:

1. THE HMAC TAPERED EDGE SHALL BE PRODUCED BY USE OF A SCREED ATTACHMENT CAPABLE OF PRODUCING A SMOOTH COMPACTED SURFACE.
2. ALL LOCATIONS OF VEGETATION FILTER STRIPS ARE TO HAVE SIDE SLOPES NO STEEPER THAN 5:1.
3. 15' VEGETATIVE FILTER STRIP MEASURED FROM OUTER MOST EDGE OF PAVED SURFACE INCLUDING MOW STRIP.
4. SEE EROSION CONTROL SHEETS FOR TOPSOIL AND SEEDING LIMITS.
5. SEE RETAINING WALL LAYOUT SHEETS FOR WALL LIMITS.
6. 2' BERM AND MOW STRIP CROSS-SLOPES TO MATCH ROADWAY CROSS-SLOPES UNLESS OTHERWISE NOTED.
7. SEE GRADING PLAN FOR SITE GRADING AND DITCH FLOW LINES.
8. BACKFILL NEW PAVEMENT EDGE WITH TOPSOIL AND SEEDING. COST TO BE SUBSIDIARY TO OVERLAY BID ITEMS.

STATE OF TEXAS
JACOB E. WALKER
122057
LICENSED
PROFESSIONAL ENGINEER

03/23/2018

NO.	DATE	REVISION	APPROVED

WILLIAMSON COUNTY

HDR Engineering, Inc.
810 Hesters Crossing, Suite 120
Round Rock, Texas 78681
Texas Registered Engineering Firm F-754

SOUTHWEST BYPASS SEGMENT 2

TYPICAL SECTIONS

SCALE: N.T.S. SHEET 1 OF 7

DESIGN	FED. RD. DIV. NO.	FEDERAL AID PROJECT NO.		HIGHWAY NO.
JC	6			
GRAPHICS	STATE	DISTRICT	COUNTY	SHEET NO.
LG	TEXAS	AUS	WILLIAMSON	
CHECK	CONTROL	SECTION	JOB	6
JW	2103	01	034	
CHECK				
JC				

PLOT DRIVER: TXDOT_PDF_BW.pltcfg PENTABLE: S2-0000020I7018.tbl
USER: lgomezgonz DATE: 3/23/2018 TIME: 1:40:58 PM SCALE: 1:240
FILE: \

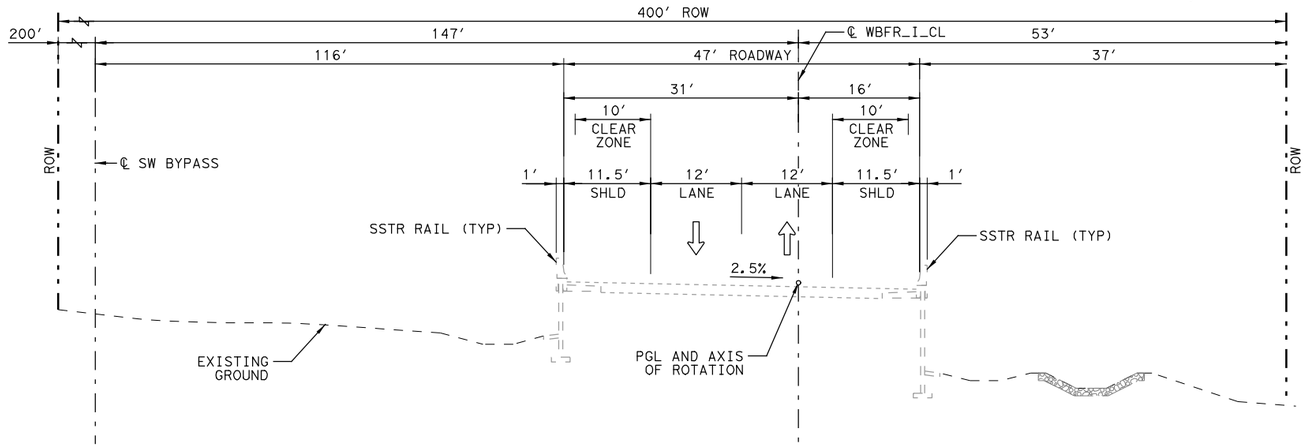

EXISTING SW BYPASS WBFR: SEGMENT 1

STA 382+09.50 TO STA 387+90.00

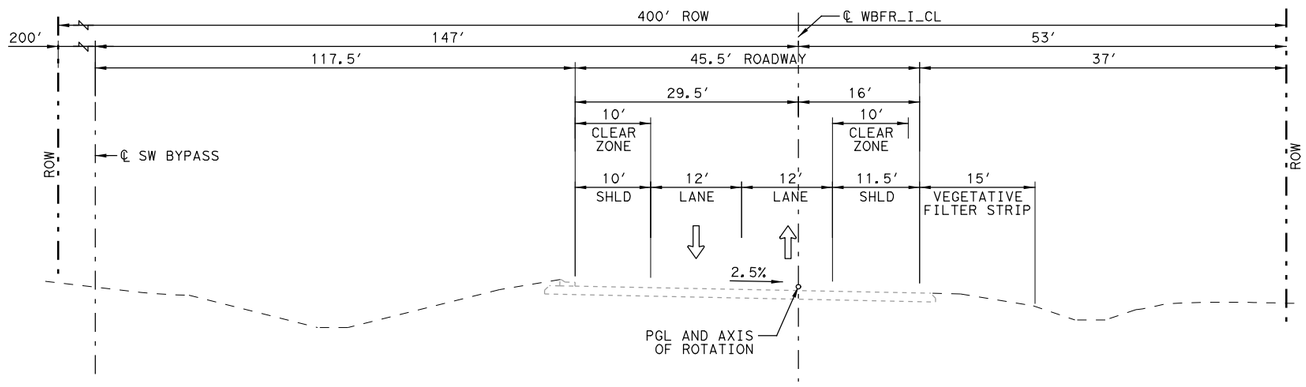

EXISTING SW BYPASS WBFR: SEGMENT 1

STA 387+90.00 TO STA 394+90.00

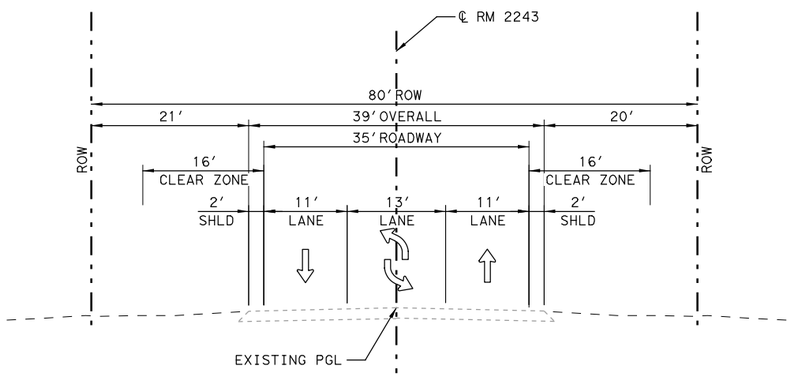

RM 2243 EXISTING TYPICAL SECTION

STA 475+82.71 TO STA 483+00.00

GENERAL NOTES:

1. THE HMAC TAPERED EDGE SHALL BE PRODUCED BY USE OF A SCREED ATTACHMENT CAPABLE OF PRODUCING A SMOOTH COMPACTED SURFACE.
2. ALL LOCATIONS OF VEGETATION FILTER STRIPS ARE TO HAVE SIDE SLOPES NO STEEPER THAN 5:1.
3. 15' VEGETATIVE FILTER STRIP MEASURED FROM OUTER MOST EDGE OF PAVED SURFACE INCLUDING MOW STRIP.
4. SEE EROSION CONTROL SHEETS FOR TOPSOIL AND SEEDING LIMITS.
5. SEE RETAINING WALL LAYOUT SHEETS FOR WALL LIMITS.
6. 2' BERM AND MOW STRIP CROSS-SLOPES TO MATCH ROADWAY CROSS-SLOPES UNLESS OTHERWISE NOTED.
7. SEE GRADING PLAN FOR SITE GRADING AND DITCH FLOW LINES.
8. BACKFILL NEW PAVEMENT EDGE WITH TOPSOIL AND SEEDING. COST TO BE SUBSIDIARY TO OVERLAY BID ITEMS.

STATE OF TEXAS
JACOB E. WALKER
122057
LICENSED
PROFESSIONAL ENGINEER

03/23/2018

NO.	DATE	REVISION	APPROVED

WILLIAMSON COUNTY

HDR Engineering, Inc.
810 Hesters Crossing, Suite 120
Round Rock, Texas 78681
Texas Registered Engineering Firm F-754

SOUTHWEST BYPASS SEGMENT 2

TYPICAL SECTIONS

SCALE: N.T.S. SHEET 2 OF 7

DESIGN	FED.RD. DIV.NO.	FEDERAL AID PROJECT NO.		HIGHWAY NO.
JC	6			
GRAPHICS LG	STATE	DISTRICT	COUNTY	SHEET NO.
CHECK JW	TEXAS	AUS	WILLIAMSON	
CHECK	CONTROL	SECTION	JOB	7
JC	2103	01	034	

PLOT DRIVER: TXDOT_PDF_BW.pltcfg PENTABLE: S2-0000020170718.tbl
USER: lgomezgonz DATE: 3/23/2018 TIME: 1:41:00 PM SCALE: 1:240
FILE: \

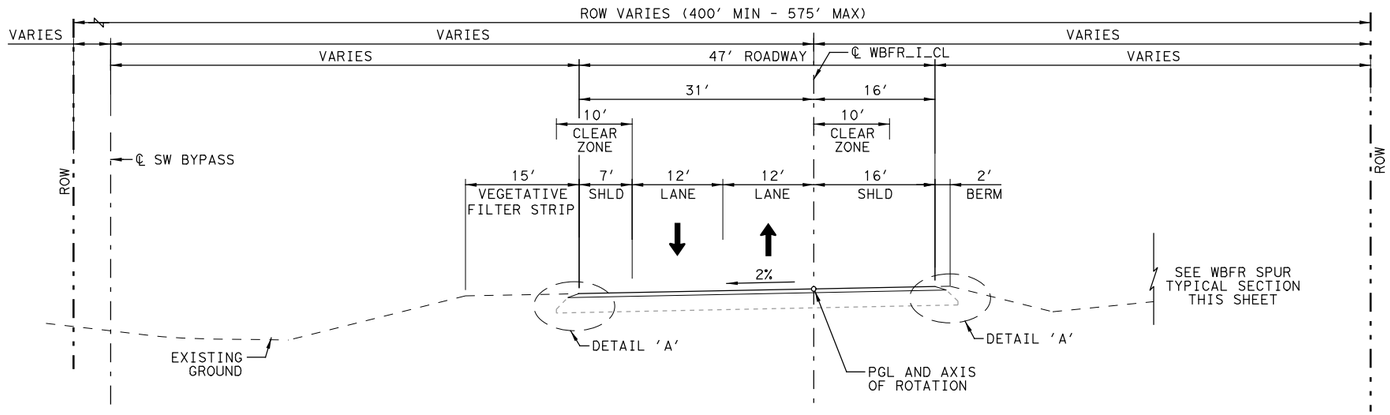

SW BYPASS WBFR

STA 68+36.97 TO STA 70+60.74

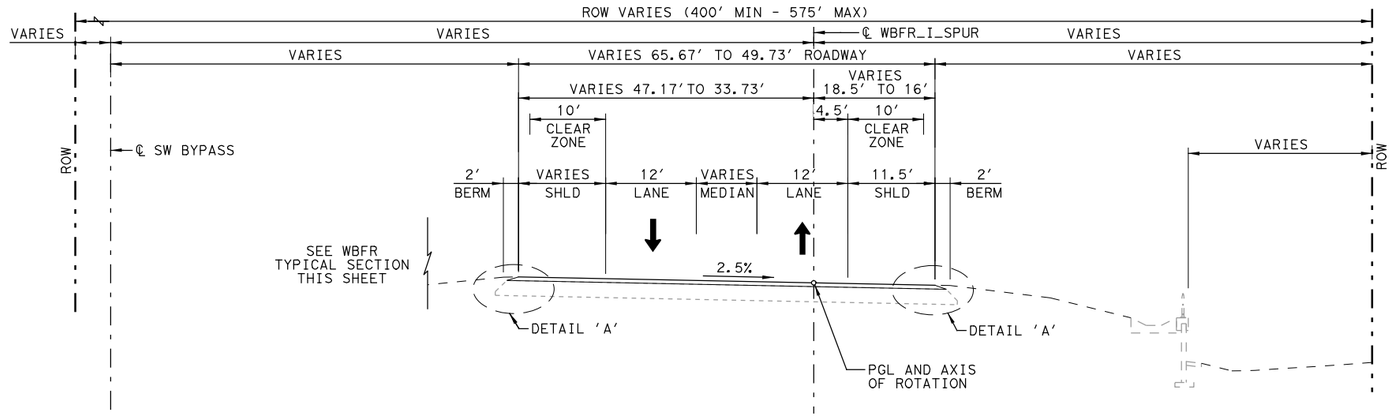

SW BYPASS WBFR SPUR

STA 368+20.00 TO STA 370+62.03

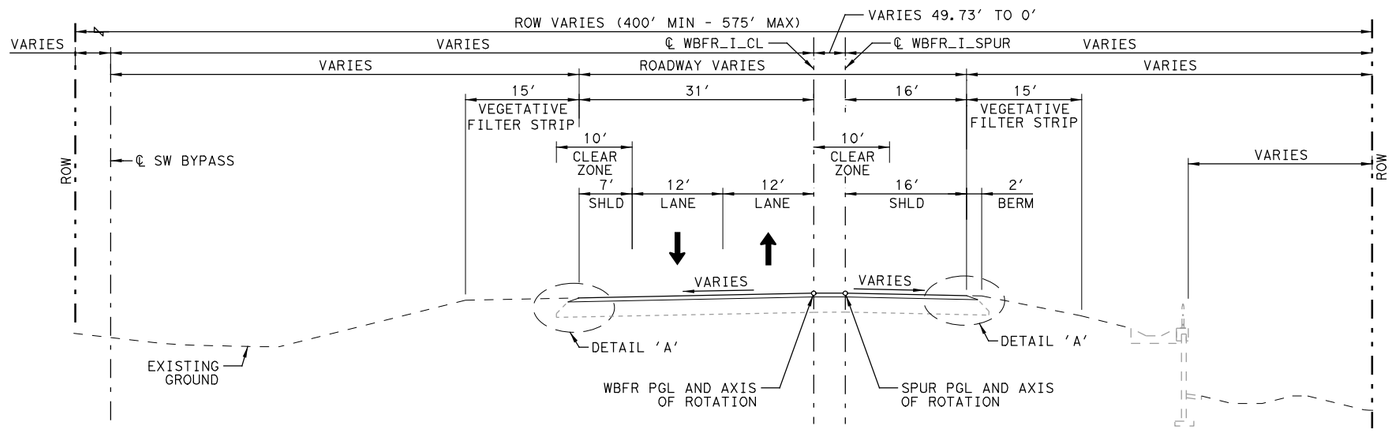

SW BYPASS WBFR

STA 70+60.74 TO STA 372+95.48
STATION EQUATION: STA 72+93.69 BK = STA 372+93.02 AHD
SPUR STA 370+62.03 TO STA 372+95.48
STA 372+95.48 TO STA 382+09.50 (BRIDGE LIMITS)

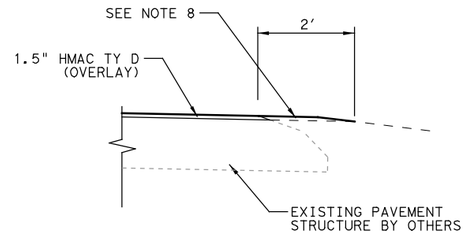

DETAIL "A"

GENERAL NOTES:

1. THE HMAC TAPERED EDGE SHALL BE PRODUCED BY USE OF A SCREED ATTACHMENT CAPABLE OF PRODUCING A SMOOTH COMPACTED SURFACE.
2. ALL LOCATIONS OF VEGETATION FILTER STRIPS ARE TO HAVE SIDE SLOPES NO STEEPER THAN 5:1.
3. 15' VEGETATIVE FILTER STRIP MEASURED FROM OUTER MOST EDGE OF PAVED SURFACE INCLUDING MOW STRIP.
4. SEE EROSION CONTROL SHEETS FOR TOPSOIL AND SEEDING LIMITS.
5. SEE RETAINING WALL LAYOUT SHEETS FOR WALL LIMITS.
6. 2' BERM AND MOW STRIP CROSS-SLOPES TO MATCH ROADWAY CROSS-SLOPES UNLESS OTHERWISE NOTED.
7. SEE GRADING PLAN FOR SITE GRADING AND DITCH FLOW LINES.
8. BACKFILL NEW PAVEMENT EDGE WITH TOPSOIL AND SEEDING. COST TO BE SUBSIDIARY TO OVERLAY BID ITEMS.

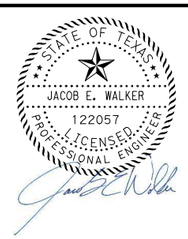

03/23/2018

NO.	DATE	REVISION	APPROVED

WILLIAMSON COUNTY

HDR Engineering, Inc.
810 Hesters Crossing, Suite 120
Round Rock, Texas 78681
Texas Registered Engineering Firm F-754

SOUTHWEST BYPASS SEGMENT 2

TYPICAL SECTIONS

SCALE: N. T. S. SHEET 3 OF 7

DESIGN	FED. RD. DIV. NO.	FEDERAL AID PROJECT NO.		HIGHWAY NO.
JC	6			
GRAPHICS	STATE	DISTRICT	COUNTY	SHEET NO.
LG	TEXAS	AUS	WILLIAMSON	
CHECK	CONTROL	SECTION	JOB	8
JW	2103	01	034	
CHECK				
JC				

PLOT DRIVER: TXDOT_PDF_BW.pltcfg PENTABLE: S2-0000020170718.tbl
USER: lgomezgonz DATE: 3/23/2018 TIME: 1:41:02 PM SCALE: 1:240
FILE: \

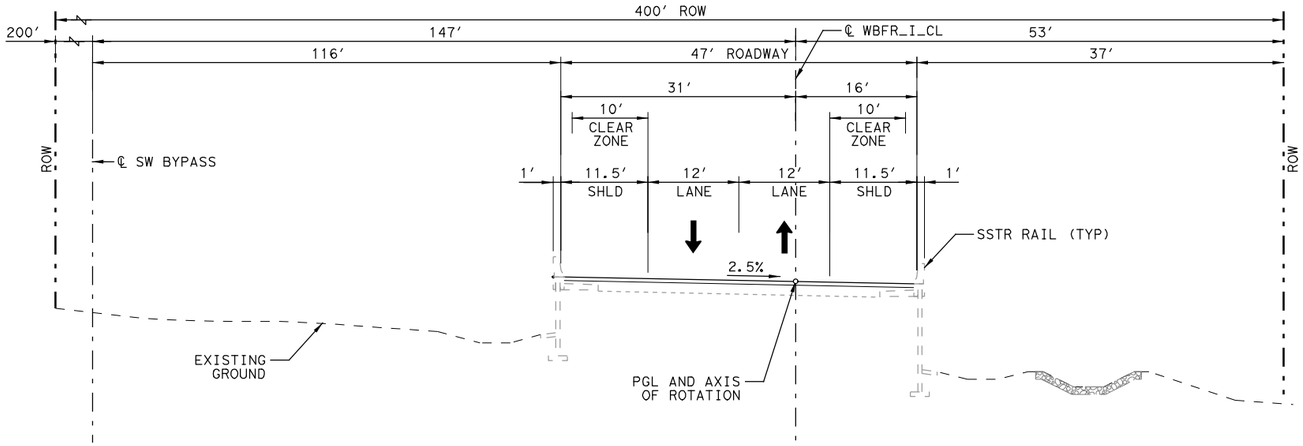

SW BYPASS WBFR: SEGMENT 1

STA 382+09.50 TO STA 387+90.00

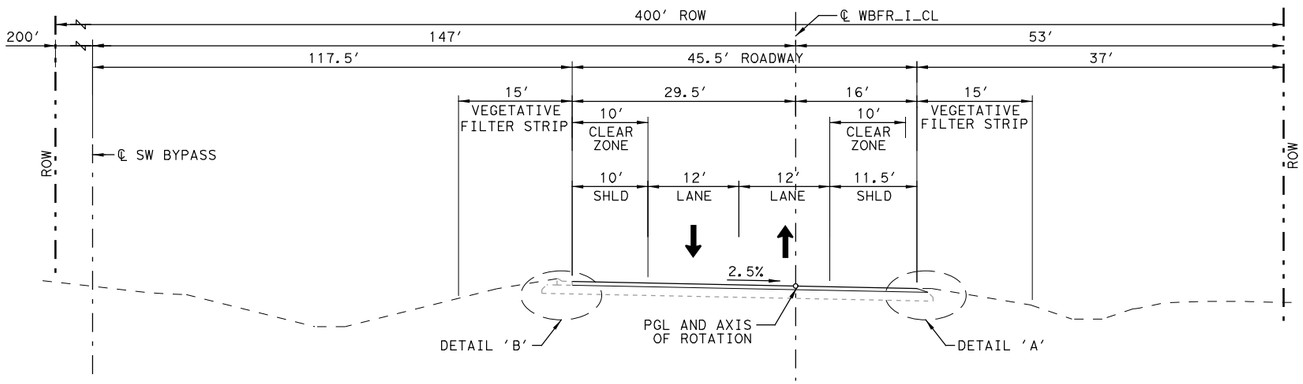

SW BYPASS WBFR: SEGMENT 1

STA 387+90.00 TO STA 394+90.00

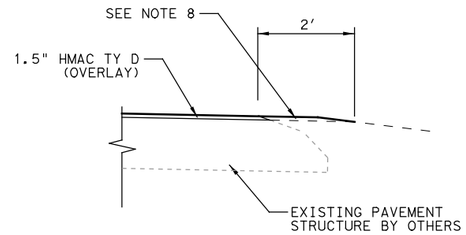

DETAIL "A"

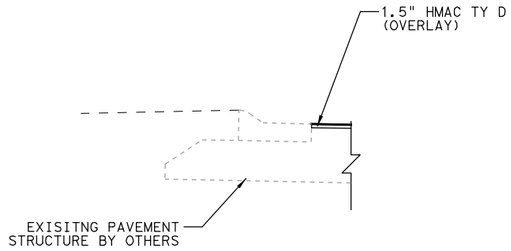

DETAIL "B"

GENERAL NOTES:

1. THE HMAC TAPERED EDGE SHALL BE PRODUCED BY USE OF A SCREED ATTACHMENT CAPABLE OF PRODUCING A SMOOTH COMPACTED SURFACE.
2. ALL LOCATIONS OF VEGETATION FILTER STRIPS ARE TO HAVE SIDE SLOPES NO STEEPER THAN 5:1.
3. 15' VEGETATIVE FILTER STRIP MEASURED FROM OUTER MOST EDGE OF PAVED SURFACE INCLUDING MOW STRIP.
4. SEE EROSION CONTROL SHEETS FOR TOPSOIL AND SEEDING LIMITS.
5. SEE RETAINING WALL LAYOUT SHEETS FOR WALL LIMITS.
6. 2' BERM AND MOW STRIP CROSS-SLOPES TO MATCH ROADWAY CROSS-SLOPES UNLESS OTHERWISE NOTED.
7. SEE GRADING PLAN FOR SITE GRADING AND DITCH FLOW LINES.
8. BACKFILL NEW PAVEMENT EDGE WITH TOPSOIL AND SEEDING. COST TO BE SUBSIDIARY TO OVERLAY BID ITEMS.

STATE OF TEXAS
JACOB E. WALKER
122057
LICENSED
PROFESSIONAL ENGINEER

03/23/2018

NO.	DATE	REVISION	APPROVED

WILLIAMSON COUNTY TEXAS

HDR Engineering, Inc.
810 Hesters Crossing, Suite 120
Round Rock, Texas 78681
Texas Registered Engineering Firm F-754

SOUTHWEST BYPASS SEGMENT 2

TYPICAL SECTIONS

SCALE: N. T. S. SHEET 4 OF 7

DESIGN	FED. RD. DIV. NO.	FEDERAL AID PROJECT NO.		HIGHWAY NO.
JC	6			
GRAPHICS	STATE	DISTRICT	COUNTY	SHEET NO.
LG	TEXAS	AUS	WILLIAMSON	
CHECK	CONTROL	SECTION	JOB	9
JW	2103	01	034	
CHECK				
JC				

PLOT DRIVER: TXDOT_PDF_BW.pltcfg PENTABLE: S2-0000020170718.tbl
USER: lgomezgon2 DATE: 3/23/2018 TIME: 1:41:04 PM SCALE: 1:240
FILE: \

4/12/2018 7:20 AM

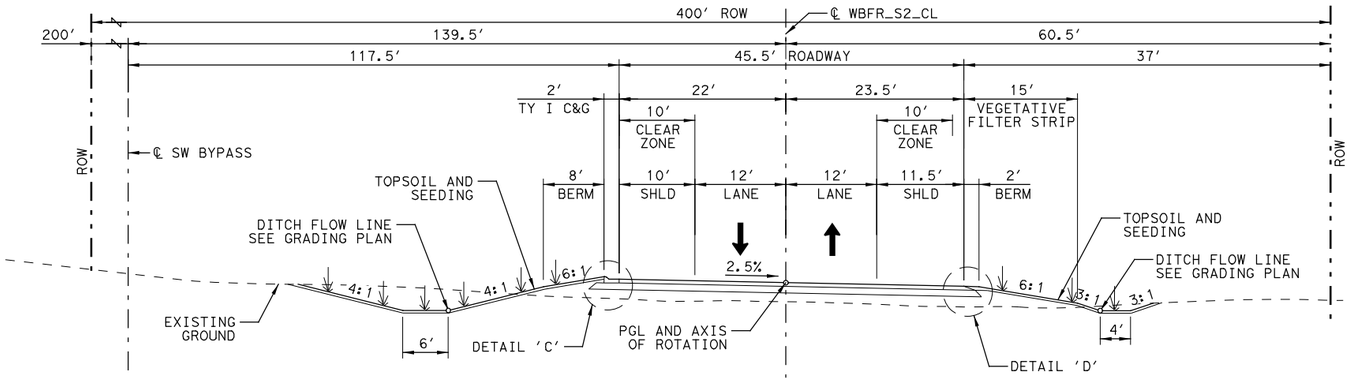

SW BYPASS WBFR

STA 394+90 TO STA 404+50.00
STA 404+50.00 TO STA 411+70.00 (BRIDGE LIMITS)

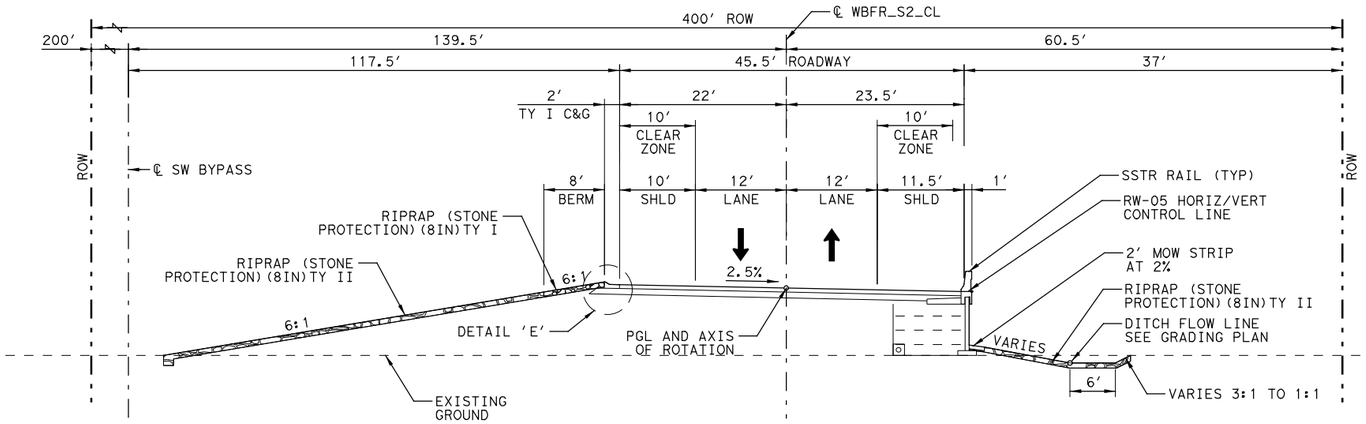

SW BYPASS WBFR

STA 411+70.00 TO STA 413+50.00

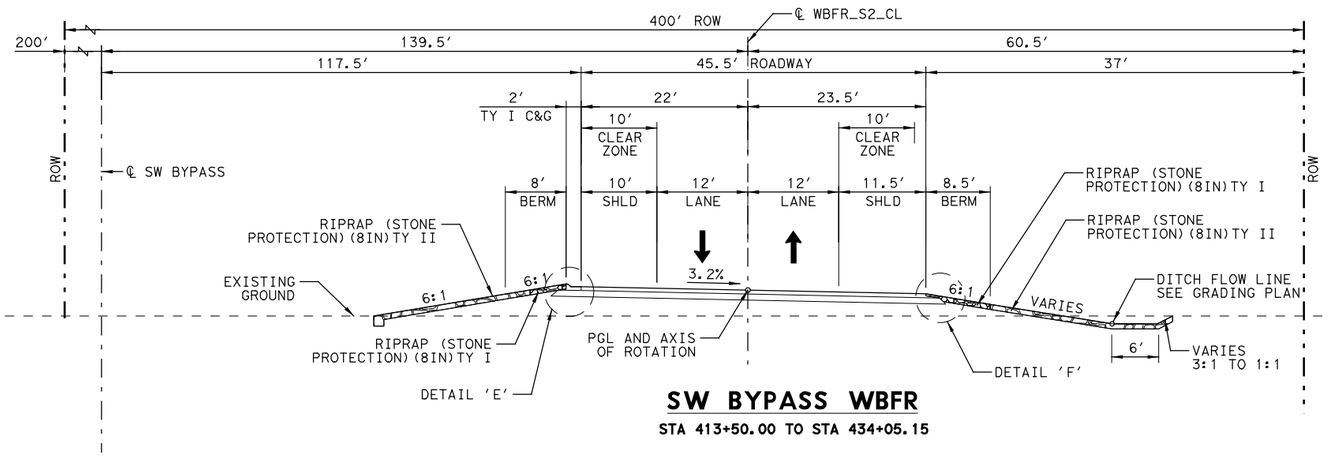

SW BYPASS WBFR

STA 413+50.00 TO STA 434+05.15

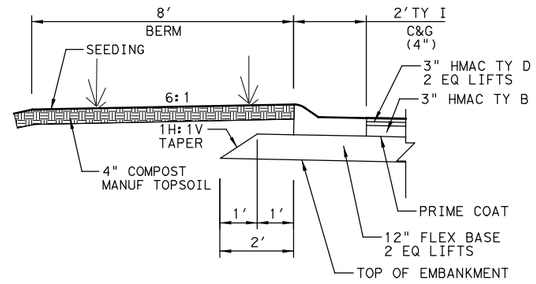

DETAIL "C"

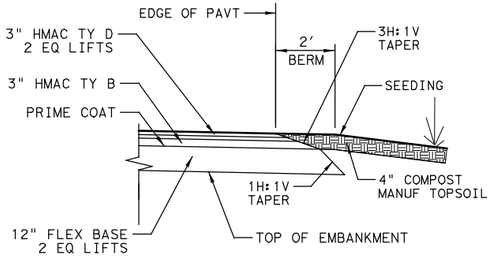

DETAIL "D"

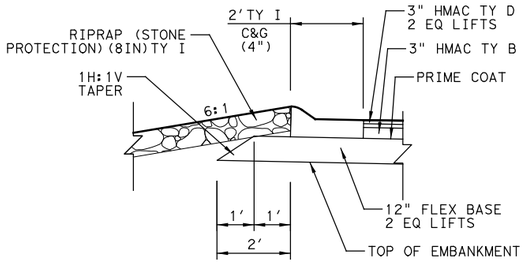

DETAIL "E"

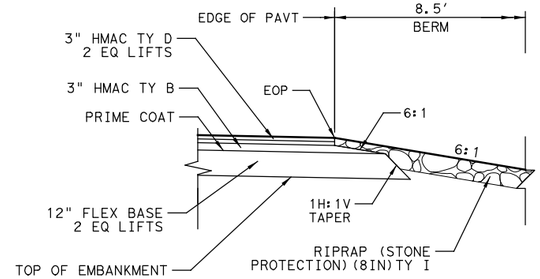

DETAIL "F"

GENERAL NOTES:

1. THE HMAC TAPERED EDGE SHALL BE PRODUCED BY USE OF A SCREED ATTACHMENT CAPABLE OF PRODUCING A SMOOTH COMPACTED SURFACE.
2. ALL LOCATIONS OF VEGETATION FILTER STRIPS ARE TO HAVE SIDE SLOPES NO STEEPER THAN 5:1.
3. 15' VEGETATIVE FILTER STRIP MEASURED FROM OUTER MOST EDGE OF PAVED SURFACE INCLUDING MOW STRIP.
4. SEE EROSION CONTROL SHEETS FOR TOPSOIL AND SEEDING LIMITS.
5. SEE RETAINING WALL LAYOUT SHEETS FOR WALL LIMITS.
6. 2' BERM AND MOW STRIP CROSS-SLOPES TO MATCH ROADWAY CROSS-SLOPES UNLESS OTHERWISE NOTED.
7. SEE GRADING PLAN FOR SITE GRADING AND DITCH FLOW LINES.
8. BACKFILL NEW PAVEMENT EDGE WITH TOPSOIL AND SEEDING. COST TO BE SUBSIDIARY TO OVERLAY BID ITEMS.

STATE OF TEXAS
JACOB E. WALKER
122057
LICENSED PROFESSIONAL ENGINEER
03/23/2018

NO.	DATE	REVISION	APPROVED

WILLIAMSON COUNTY

HDR Engineering, Inc.
810 Hesters Crossing, Suite 120
Round Rock, Texas 78681
Texas Registered Engineering Firm F-754

SOUTHWEST BYPASS SEGMENT 2

TYPICAL SECTIONS

SCALE: N. T. S.
SHEET 5 OF 7

DESIGN	FED. RD. DIV. NO.	FEDERAL AID PROJECT NO.		HIGHWAY NO.
JC	6			
GRAPHICS LG	STATE	DISTRICT	COUNTY	SHEET NO.
CHECK JW	TEXAS	AUS	WILLIAMSON	10
CHECK JC	CONTROL	SECTION	JOB	
	2103	01	034	

PLOT DRIVER: TXDOT_PDF_BW.pltcfg PENTABLE: S2-0000020170718.tbl
USER: lgomezgonz DATE: 3/23/2018 TIME: 1:41:06 PM SCALE: 1:240
FILE: \

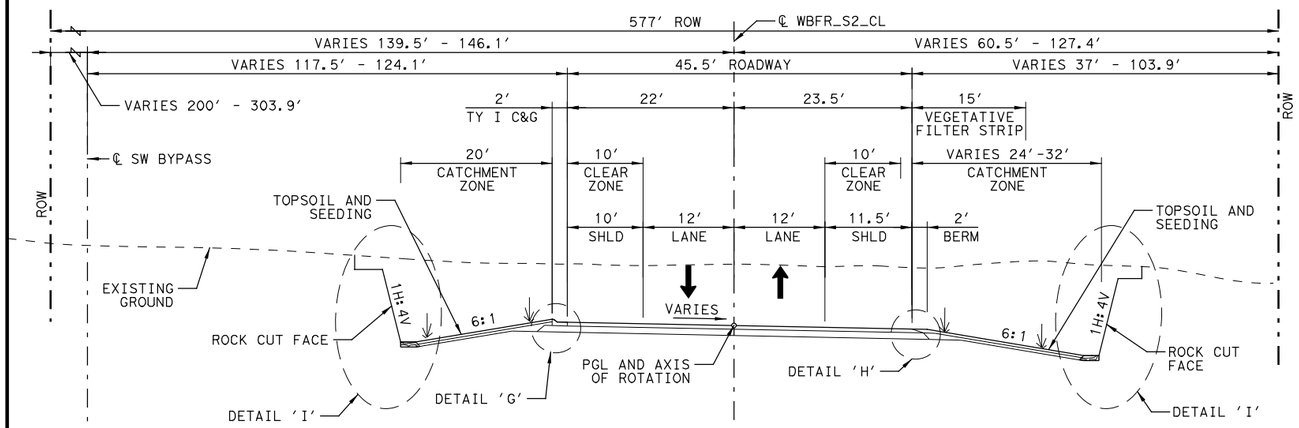

SW BYPASS WBFR
STA 434+05.15 TO STA 446+00.00

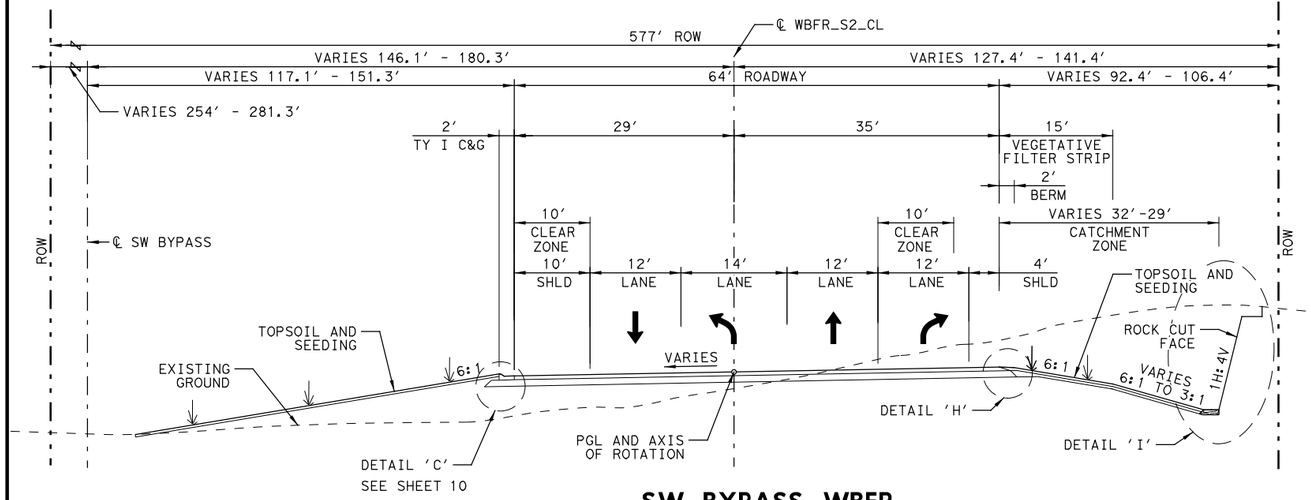

SW BYPASS WBFR
STA 446+00.00 TO STA 451+07.54

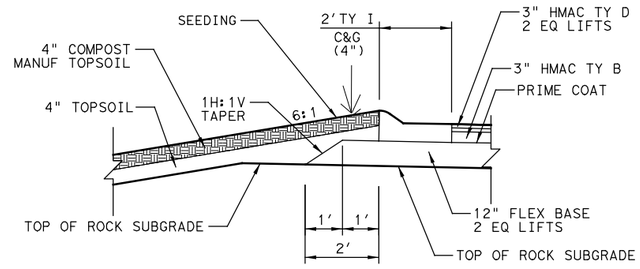

DETAIL "G"

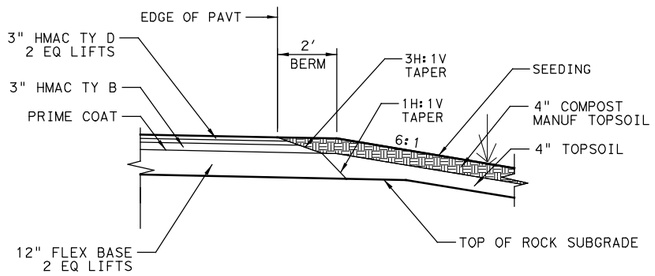

DETAIL "H"

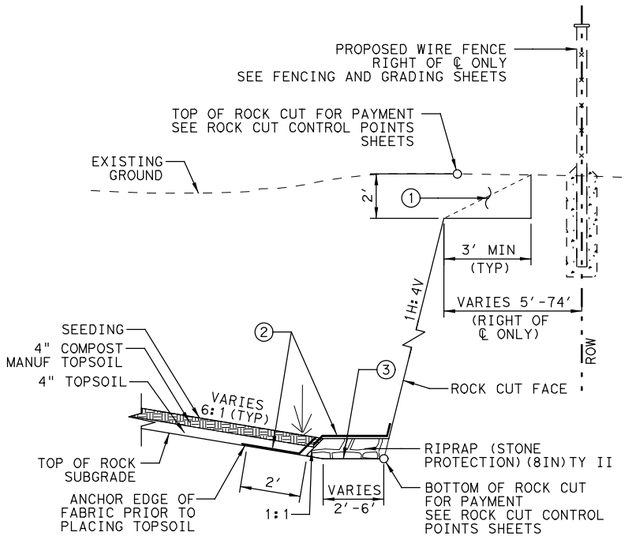

DETAIL "I"

GENERAL NOTES:

1. THE HMAC TAPERED EDGE SHALL BE PRODUCED BY USE OF A SCREED ATTACHMENT CAPABLE OF PRODUCING A SMOOTH COMPACTED SURFACE.
2. ALL LOCATIONS OF VEGETATION FILTER STRIPS ARE TO HAVE SIDE SLOPES NO STEEPER THAN 5:1.
3. 15' VEGETATIVE FILTER STRIP MEASURED FROM OUTER MOST EDGE OF PAVED SURFACE INCLUDING MOW STRIP.
4. SEE EROSION CONTROL SHEETS FOR TOPSOIL AND SEEDING LIMITS.
5. SEE RETAINING WALL LAYOUT SHEETS FOR WALL LIMITS.
6. 2' BERM AND MOW STRIP CROSS-SLOPES TO MATCH ROADWAY CROSS-SLOPES UNLESS OTHERWISE NOTED.
7. SEE GRADING PLAN FOR SITE GRADING AND DITCH FLOW LINES.
8. BACKFILL NEW PAVEMENT EDGE WITH TOPSOIL AND SEEDING. COST TO BE SUBSIDIARY TO OVERLAY BID ITEMS.

(1) REMOVE LOOSE TOPSOIL, CLAY, AND WEATHERED LIMESTONE IN TOP 2' OF ROCK CUT AS DIRECTED BY THE ENGINEER. PRIOR TO STA 442+00, USE MILLING METHODS TO PROVIDE A FLAT 3' BENCH. EXCAVATION OF BENCH IS RECOMENDED BEFORE BEGGINING BLASTING ACTIVITY. BEYOND STA 442+00, THE REMOVAL SHALL FOLLOW A 2:1 SLOPE INSTED OF THE 3' FLAT BENCH. SOLID ROCK/BOULDERS MAY BE LEFT IN PLACE AND FINAL SLOPE MAY VARY. FOR BOTH SECTIONS, ENSURE ALL LOOSE MATERIAL IS REMOVED FROM THE TOP OF THE ROCK CUT. LOOSE MATERIAL TYPICALLY INCLUDES ANYTHING THAT CAN BE DISLODGED BY CAT 420 SERIES BACKHOE OR EQUIVALENT, BUT IS SUBJECT TO THE ENGINEER'S APPROVAL. ALL WORK SHALL BE AS DIRECTED BY THE ENGINEER. ALL WORK SHALL BE CONSIDERED SUBSIDIARY TO EXCAVATION, PAID FOR IN CY.

(2) PLACE TWO LAYERS OF NON-WOVEN FILTER FABRIC AND OVERLAP AS SHOWN PRIOR TO PLACEMENT OF TOPSOIL. REMOVE TOP PORTION OF FILTER FABRIC, ALONG WITH SEDIMENT AND DEBRIS, ONCE VEGETATION IS SUFFICIENTLY ESTABLISHED AS DETERMINED BY THE ENGINEER. SUBSIDIARY TO 8" STONE PROTECTION RIPRAP.

(3) ROCK SUBGRADE IS NOT REQUIRED TO BE FLAT IN THIS AREA, BUT MUST NOT BE HIGHER THAN SHOWN. INTENT OF TYPICAL IS FOR THE STONE RIPRAP TO COVER ROUGH GRADING BETWEEN THE 6:1 SUBGRADE AND BOTTOM OF THE ROCK CUT. NO ADJUSTMENT TO PROPOSED GRADES WILL BE MADE. NO ADDITIONAL PAYMENT WILL BE MADE FOR CUTS DEEPER THAN SHOWN.

STATE OF TEXAS
JACOB E. WALKER
122057
LICENSED PROFESSIONAL ENGINEER
03/23/2018

NO.	DATE	REVISION	APPROVED

WILLIAMSON COUNTY

HDR Engineering, Inc.
810 Hesters Crossing, Suite 120
Round Rock, Texas 78681
Texas Registered Engineering Firm F-754

SOUTHWEST BYPASS SEGMENT 2

TYPICAL SECTIONS

SCALE: N.T.S. SHEET 6 OF 7

DESIGN	FED.RD. DIV.NO.	FEDERAL AID PROJECT NO.		HIGHWAY NO.
JC	6			
GRAPHICS LG	STATE	DISTRICT	COUNTY	SHEET NO.
CHECK JW	TEXAS	AUS	WILLIAMSON	11
CHECK JC	CONTROL	SECTION	JOB	
	2103	01	034	

PLOT DRIVER: TXDOT_PDF_BW.pltcfg PENTABLE: S2-0000020170718.tbl
USER: lgomezgonz DATE: 3/23/2018 TIME: 1:41:08 PM SCALE: 1:240
FILE: \
4/12/2018 7:20 AM

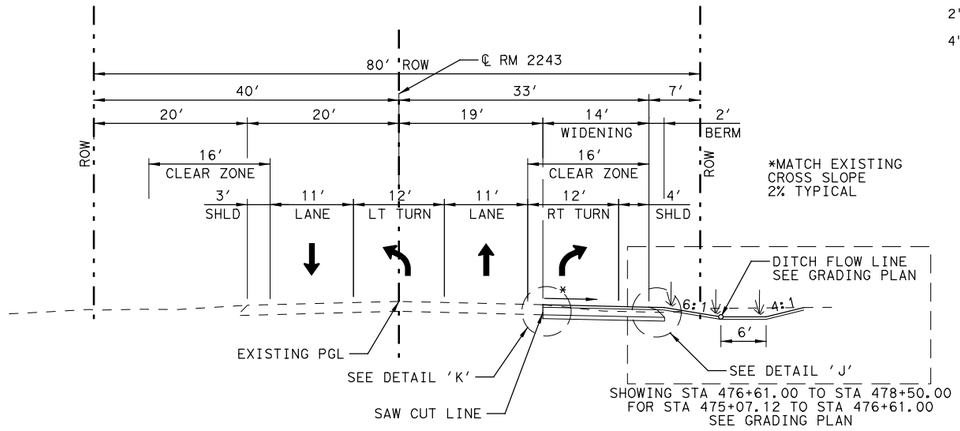

RM 2243 TYPICAL SECTION
STA 475+82.71 TO STA 478+50.00

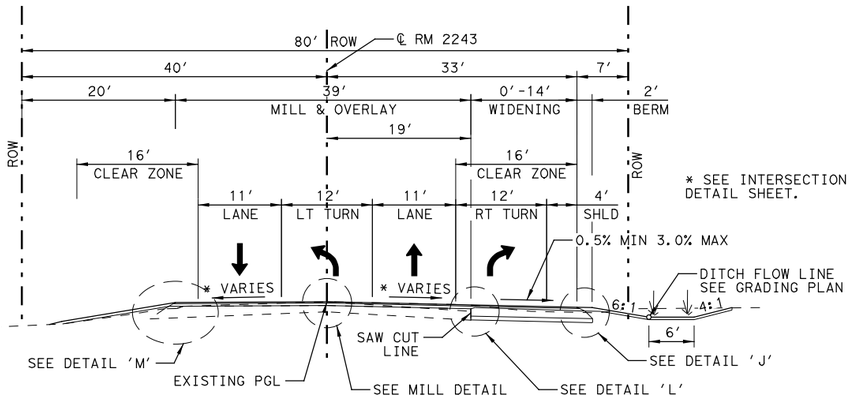

RM 2243 TYPICAL SECTION
STA 478+50.00 TO STA 479+51.15

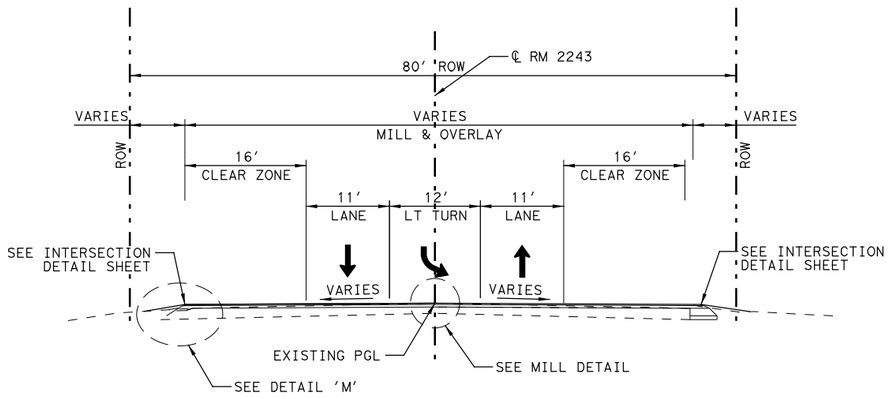

RM 2243 TYPICAL SECTION
STA 479+51.15 TO STA 483+00.00

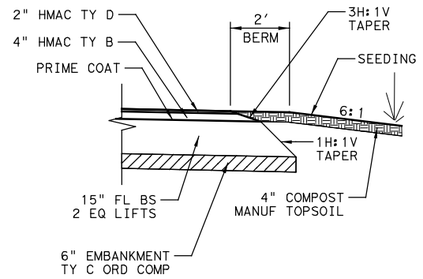

DETAIL "J"

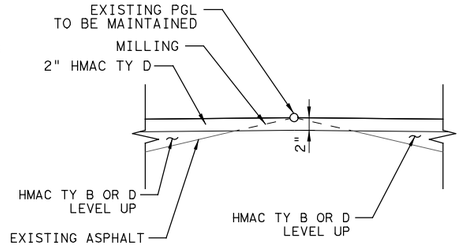

MILL DETAIL

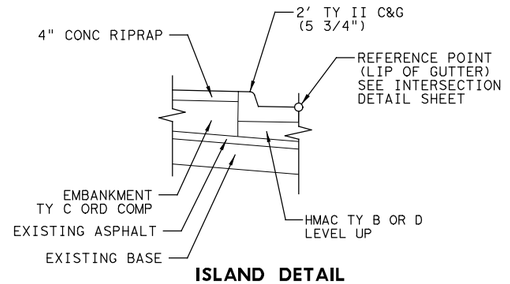

ISLAND DETAIL

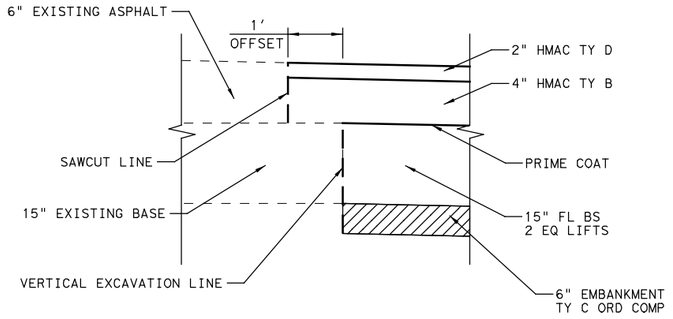

DETAIL "K"

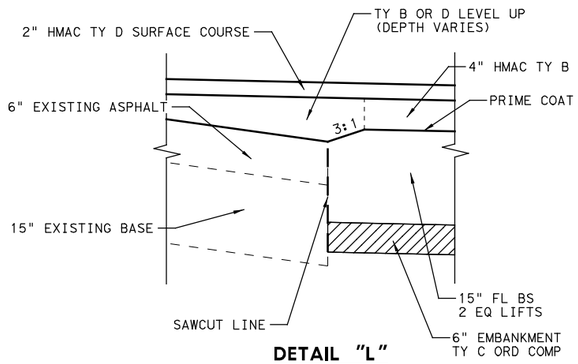

DETAIL "L"

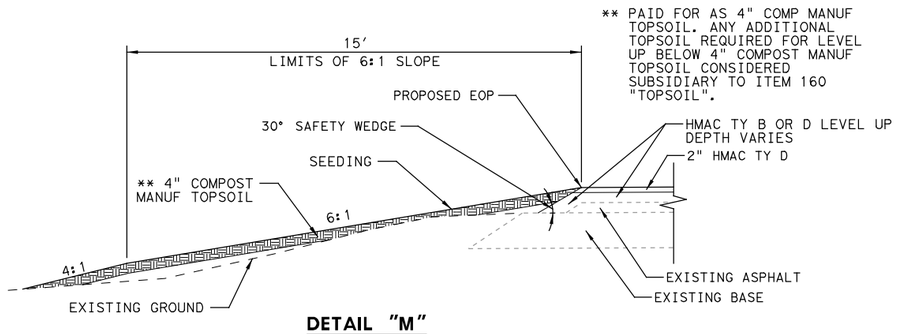

DETAIL "M"

THIS DETAIL ALSO APPLIES TO BOTH SIDES OF THE LEVEL UP ON RAMP NB2

GENERAL NOTES:

1. THE HMAC TAPERED EDGE SHALL BE PRODUCED BY USE OF A SCREED ATTACHMENT CAPABLE OF PRODUCING A SMOOTH COMPACTED SURFACE.
2. ALL LOCATIONS OF VEGETATION FILTER STRIPS ARE TO HAVE SIDE SLOPES NO STEEPER THAN 5:1.
3. 15' VEGETATIVE FILTER STRIP MEASURED FROM OUTER MOST EDGE OF PAVED SURFACE INCLUDING MOW STRIP.
4. SEE EROSION CONTROL SHEETS FOR TOPSOIL AND SEEDING LIMITS.
5. SEE RETAINING WALL LAYOUT SHEETS FOR WALL LIMITS.
6. 2' BERM AND MOW STRIP CROSS-SLOPES TO MATCH ROADWAY CROSS-SLOPES UNLESS OTHERWISE NOTED.
7. SEE GRADING PLAN FOR SITE GRADING AND DITCH FLOW LINES.
8. BACKFILL NEW PAVEMENT EDGE WITH TOPSOIL AND SEEDING. COST TO BE SUBSIDIARY TO OVERLAY BID ITEMS.

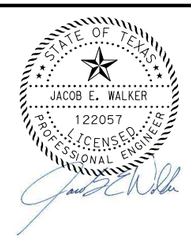

03/23/2018

NO.	DATE	REVISION	APPROVED

WILLIAMSON COUNTY

HDR Engineering, Inc.
810 Hesters Crossing, Suite 120
Round Rock, Texas 78681
Texas Registered Engineering Firm F-754

SOUTHWEST BYPASS SEGMENT 2

TYPICAL SECTIONS

SCALE: N.T.S. SHEET 7 OF 7

DESIGN	FED.RD. DIV.NO.	FEDERAL AID PROJECT NO.		HIGHWAY NO.
JC	6			
GRAPHICS	STATE	DISTRICT	COUNTY	SHEET NO.
LG	TEXAS	AUS	WILLIAMSON	
CHECK	CONTROL	SECTION	JOB	12
JW	2103	01	034	
CHECK				
JC				

PLOT DRIVER: TXDOT_PDF_BW.pltcfg PENTABLE: S2-000002017018.tbl
USER: lgomezgonz DATE: 3/23/2018 TIME: 1:41:11 PM SCALE: 1:240
FILE: \

Basis of Estimate

Item	Description	**Rate	Basis	Quantity
160	**Topsoil**	27 CF/CY	118,611 CF	4,393 CY
161	**Compost Manufactured Topsoil**	9 SF/SY	380,754 SF	42,306 SY
164	**Seeding**			
	Temp (Warm)	9 SF/SY	190,386 SY	21,154 SY
	Temp (Cool)	9 SF/SY	190,386 SY	21,154 SY
	Perm	9 SF/SY	380,754 SF	42,306 SY
166	**Fertilizer (13-13-13)****	375 LB/AC	42,306 SY	1.65 TON
168	**Vegetative Watering**			
	(Item 164)(Temp)	55 GAL/SY	42,306 SY	2,327 MG
	(Item 164)(Perm)	110 GAL/SY	42,306 SY	4,655 MG
247	**FL BS (CMP IN PLC)**			
	(TY A GR 1&2)	27 CF/CY 134 LB/CF	265,626 CF	9,838 CY 17,797 TON
310	**Prime Coat (MC-30 or AE-P)**	0.20 GAL/SY	27,276 SY	5,455 GAL
340	**Dense-Graded Hot-Mix Asphalt (SQ)**			
	TY-B or D PG64-22 Level Up	153.33 LB/CF	10,815 CF	829 TON
341	**Dense-Graded Hot-Mix Asphalt**			
	TY-B PG64-22	115 LB/SY/IN	27,085 SY	4,672 TON
	TY-D SAC-B PG70-22	115 LB/SY/IN	67,502 SY	5,941 TON

** For Informational Purposes Only.

MODIFIED STANDARDS
The following standard detail sheet or sheets have been modified:

RW(TRF) (MOD)
IGND (MOD)
BL (MOD)
IGTS (MOD)

CONTACT INFORMATION
City of Georgetown Electric Utility adjustments to be coordinated with:
City of Georgetown – Georgetown Utility Systems
300 Industrial Avenue, Georgetown, TX 78626
Jimmy Sikes; jimmy.sikes@georgetown.org; 512-930-6117

Work in the vicinity of the Enterprise Pipeline Facility to be coordinated with:
Enterprise Products
9420 W. Sam Houston Pkwy N., Room N1.217
Houston, Texas 77064-6317
P.O. Box 4324
Houston, TX 77210
Land_Encroachments@eprod.com; 866-901-8170
Rebecca Curry; ReCurry@eprod.com; 281-887-3312

Pedernales Electric Cooperative
10625 W Highway 29
Liberty Hill, TX 78642
P.O. Box 2048
Liberty Hill, TX 78642-2048
Dirk Field; dirk.field@peci.com; 512-778-5470 ext. 7037

City of Georgetown
300-1 Industrial Ave
Georgetown, TX 78626
Michael Hallmark; Michael.hallmark@georgetown.org; 512-930-3569

Frontier/Verizon
2525 Ridgepoint Suite 400
Austin, TX 78754
Kevin Moseley; William.Moseley@ftr.com; 512-869-2257

LCRA
3700 Lake Austin Blvd.
Austin, TX 78703
P.O. Box 220
Austin, TX 78767
Mary Beth Nickel; mnickel@lcra.org; 512-578-1806

Oncor
3620 Franklin Avenue
Waco, TX 76710-7328
Leslie Davis; Leslie.Davis@oncor.com; 254-750-5244

GENERAL
References to manufacturer's trade name or catalog numbers are for the purpose of identification only. Similar materials from other manufacturers are permitted if they are of equal quality, comply with the specifications for this project, and are approved.

Cross sections are supplemental data to the Plan and Profile sheets. In the case of a discrepancy, the Plan and Profile sheets shall govern.

If work is performed at CONTRACTOR's option, when inclement weather is impending, and the work is damaged by subsequent precipitation, the CONTRACTOR is responsible for all costs associated with replacing the work, if required.

Right of way meets and bounds are on file with the County.

The roadbed shall be free of organic material prior to placing any section of the pavement structure.

Equip all construction equipment used in roadway work with highly visible omnidirectional flashing warning lights.

Provide a smooth, clean saw-cut along the existing asphalt or concrete pavement structure, as directed. Consider subsidiary to the pertinent Items.

Supply litter barrels in enough numbers at locations as directed to control litter within the project. Consider subsidiary to pertinent Items.

Use a self-contained vacuum broom to sweep the roadway and keep it free of sediment as directed. The CONTRACTOR will be responsible for any sweeping above and beyond the normal maintenance required to keep fugitive sediment off the roadway as directed by the CONSTRUCTION OBSERVER. Consider subsidiary to pertinent Items.

Damage to existing pipes and SETs due to CONTRACTOR operations shall be repaired at CONTRACTOR's expense.

All locations used for storing construction equipment, materials, and stockpiles of any type, within the right of way, will be as directed. Use of right of way for these purposes will be restricted to those locations where driver sight distance to businesses and side street intersections is not obstructed and at other locations where an unsightly appearance will not exist. The CONTRACTOR will not have exclusive use of right of way but will cooperate in the use of the right of way with the city/county and various public utility companies as required.

The Project Superintendent will be capable of speaking English and will be available to contact at all times when work is being performed, including subcontractor work. The Superintendent will be available and on-call 24 hours a day.

Coordinate and obtain approval from the CONSTRUCTION OBSERVER for all bridgework over existing roadways (including Texas Crushed Stone ROW crossing, if applicable).

CONTRACTOR shall coordinate with Georgetown Utility Systems to allow them to install conduit underneath the proposed roadway after clearing activities, but prior to placement of the road base. Approximate location is at WBFR Station 400+20.00. Considered subsidiary to pertinent items.

Measure all minimum vertical clearances for all structures (including, but not limited to, signal mast arms, span wires, and overhead sign bridge structures) within the limits of the project for all roadway alignments in all directions of travel. Coordinate with the CONSTRUCTION OBSERVER to take these measurements and obtain prior to opening roadways to traffic unless otherwise approved. The CONSTRUCTION OBSERVER will report all minimum vertical clearance information on State maintained roadways to the Austin District Permit Office.

Use materials from prequalified material producers list as shown on the Texas Department of Transportation (TxDOT) – Construction Division's (CST) materials producers list. Refer to TxDOT's website for list of pre-qualified manufacturers. No substitutions will be allowed for materials found on the list. Submit list of approved suppliers/materials from TxDOT website to show items are TxDOT approved. Submit this list with request for material approval.

STATE OF TEXAS
JACOB E. WALKER
122057
LICENSED
PROFESSIONAL ENGINEER
03/26/2018

NO.	DATE	REVISION	APPROVED

WILLIAMSON COUNTY

HDR Engineering, Inc.
810 Hesters Crossing, Suite 120
Round Rock, Texas 78681
Texas Registered Engineering Firm F-754

SOUTHWEST BYPASS SEGMENT 2

GENERAL NOTES

SHEET 1 OF 12

DESIGN	FED. RD. DIV. NO.	FEDERAL AID PROJECT NO.		HIGHWAY NO.
JC	6			
GRAPHICS	STATE	DISTRICT	COUNTY	SHEET NO.
LG	TEXAS	AUS	WILLIAMSON	
CHECK	CONTROL	SECTION	JOB	13
JW	2103	01	034	
CHECK				
JC				

PLOT DRIVER: TXDOT_PDF_BW.pltcfg PENTABLE: S2-0000020/T0718.tbl
USER: Jcarlton DATE: 3/26/2018 TIME: 4:47:32 PM SCALE: 1:1
FILE: \

ENVIRONMENTAL (SW3P, WPAP, ETC.)
See SW3P, TCEQ Requirements for Recharge Zone of the Edwards Aquifer, and Temporary Erosion Notes for additional general notes and requirements not listed in this section.

CONTRACTOR shall designate an employee to coordinate the maintenance of the erosion control devices on this project. Maintain erosion control features according the Temporary and Permanent Erosion Control Sheets.

Install silt fence, erosion control logs, and rock filter dams at the earliest time possible, as directed. Periodically inspect and maintain all sediment traps and silt fence to ensure proper function. The sediment traps and silt fence shall remain in place until vegetation is established as determined solely by the CONSTRUCTION OBSERVER.

All slopes shall be seeded with approved grass, grass mixtures or ground cover suitable to the area and season in which they are applied.

Silt fences, rock berms, erosion control logs, sedimentation basins, and similarly recognized techniques and materials shall be employed during construction to prevent point source sedimentation loading of downstream facilities. Such installation shall be regularly inspected by the City of Georgetown for effectiveness. Additional measures may be required if, in the opinion of the CONSTRUCTION OBSERVER, they are warranted.

All temporary erosion control measures shall not be removed until final inspection and approval of the project by the CONSTRUCTION OBSERVER. It shall be the responsibility of the CONTRACTOR to maintain all temporary erosion control structures and to remove each structure as approved by the CONSTRUCTION OBSERVER.

All mud, dirt, rocks, debris, etc., spilled, tracked or otherwise deposited on existing paved streets, drives and areas used by the public shall be cleaned up immediately.

After temporary erosion control devices are no longer required, cleanup and reshaping of those areas will be required. Consider incidental to pertinent items.

The project limits are within the Edwards Aquifer Recharge Zone. Transport any soils contaminated during construction of the proposed project from the site and properly dispose of off-site, off the recharge zone, and off any area draining to the recharge zone of the Edwards Aquifer.

Suspend all activities near any significant recharge features, such as sinkholes, caves, or any other subterranean openings that are discovered during construction or core sampling. Do not proceed until the designated Geologist or TCEQ representative is present to evaluate and approve remedial action.

Perform maintenance of vehicles or equipment at designated maintenance sites. Keep a spill kit on-site during fueling and maintenance. This work is subsidiary.

Protect all areas of the right of way, which are not included in the actual limits of the proposed construction areas, from disturbance. Restore any area disturbed because of the CONTRACTOR's operations to a condition as good as, or better than, before the beginning of work at no cost to the state. This does not include the area between the existing quarry walls.

Remove sediment accumulated during project construction from detention ponds prior to project close out, as directed the by CONSTRUCTION OBSERVER. Subsidiary to pertinent items.

When any abandoned well is encountered, cease construction operations in this area and notify the CONSTRUCTION OBSERVER who will coordinate the proper plugging procedures with Texas Commission on Environmental Quality (TCEQ).

Erosion control and stabilization measures must be initiated immediately in portions of the site where construction activities have temporarily ceased and will not resume for a period exceeding 14 calendar days. Track all exposed soil, stockpiles, and slopes. Tracking consists of operating a tracked vehicle or equipment up and down the slope, leaving track marks perpendicular to the direction of the slope. Re-track slopes and stockpiles after each rain event or every 14 days, whichever occurs first. This work is subsidiary.

CONTRACTOR is responsible to submit and receive approval from the TCEQ for any above ground storage tanks to be kept on site as well as any fees associated with this request. At a minimum, locate aboveground storage tanks kept on-site for construction purposes over bermed impervious liners as to not allow any leakage into underlying soils. Additionally, the containment will be sized to capture 150% of the total volume of fluids stored on-site within the storage area.

Maintain positive drainage for permanent and temporary work for the duration of the project. Be responsible for any items associated with the temporary or interim drainage and all related maintenance. This work is subsidiary.

Collect wastewater generated on-site by chemical toilets and transport off-site and dispose of properly.

Clean asphalt equipment in such a manner that will not leave any petroleum contaminants in the right of way. No construction waste materials will be buried within the right of way.

Project Specific Location (PSL) in USACE Jurisdictional Area.
Do not initiate activities in a PSL associated with a U.S. Army Corps of Engineers (USACE) jurisdictional area that have not been previously evaluated by the USACE as part of the permit review of this project. Such activities include, but are not limited to, haul roads, equipment staging areas, borrow and disposal sites. Associated defined here means materials are delivered to or from the PSL. The jurisdictional area includes all waters of the U.S. including wetlands or associated wetlands affected by activities associated with this project. Special restrictions may be required for such work. Consult with the USACE regarding activities, including PSLs that have not been previously evaluated by the USACE. Provide the Department with a copy of all USACE coordination and approvals before initiating activities.

Proceed with activities in PSLs that do not affect a USACE jurisdictional area if self-determination has been made that the PSL is non-jurisdictional or proper clearances have been obtained in USACE jurisdictional areas or have been previously evaluated by the USACE as part of the permit review of this project. Document any determinations that PSL activities do not affect a USACE jurisdictional area. Maintain copies of PSL determinations for review by the Department or any regulatory agency. The CONTRACTOR must document and coordinate with the USACE, if required, before any excavation material hauled from or embankment material hauled into a USACE jurisdictional area by either (1) or (2) below.

1. Restricted Use of Materials for the Previously Evaluated Permit Areas. When an area within the project limits has been evaluated by the USACE as part of the permit process for this project:
   a. suitable excavation of required material in the areas shown on the plans and cross sections as specified in Standard Specification Item 110, Excavation is used for permanent or temporary fill within a USACE jurisdictional area;
   b. suitable embankment from within the USACE jurisdictional area is used as fill within a USACE evaluated area;
   c. Unsuitable excavation or excess excavation that is disposed of at an approved location within a USACE evaluated area.
2. Contractor Materials from Areas Other than Previously Evaluated Areas. Provide the Department with a copy of all USACE coordination and approvals before initiating any activities in a jurisdictional area within the project limits that has not been evaluated by the USACE or for any off right of way locations used for the following, but not limited to, haul roads, equipment staging areas, borrow and disposal sites:
   a. Standard Specification Item 132, Embankment is used for temporary or permanent fill within a USACE jurisdictional area;
   b. Unsuitable excavation or excess excavation that is disposed of outside a USACE evaluated area.

Work over or near Bodies of Water (Lakes, Rivers, Ponds, Creeks, etc.).
Keep on site a universal spill kit adequate for the body of water and the work being performed. No debris is allowed to fall into a body of water. Debris that falls into the water must be removed at the end of each work day. Debris that falls into the floodway must be removed at the end of each work week or prior to a rain event. This work is subsidiary.

DSHS Asbestos and Demolition Notification.
Complete and provide the Texas Department of State Health Services (DSHS) notification form to the CONSTRUCTION OBSERVER at least 30 calendar days prior to bridge or bridge class culvert removal or renovation. Notify the CONSTRUCTION OBSERVER via email of any changes to the work start date.

Migratory Birds and Bats.
Migratory birds may be nesting within the project limits and concentrated on roadway structures such as bridges and culverts. Remove all old and unoccupied migratory bird nests from any structures, trees, etc. between September 1st and January 31st. Prevent migratory birds from re-nesting between February 1st and August 31st.

All methods used for the removal of unoccupied bird nests and the prevention of re-nesting must be approved by the CONSTRUCTION OBSERVER well in advance of the planned use.

In the event that any active nests are encountered on-site during construction, all construction activity within the immediate vicinity of the nest must cease immediately. Contact the CONSTRUCTION OBSERVER to determine how to proceed.

Bats may roost within the project limits under bridges, in culverts, in large hollow trees, in dead standing trees, and in trees with shaggy bark. Maternity colonies may occur from April 1st through August 31st. If bats are present, ensure bats are not harmed. Exclusion protocols for known colonies should be followed well in advance of commencement of construction activities. Exclusion measures by qualified individuals are used to relocate existing colonies, except from April 1st through August 31st when such measures may separate mothers and pups. Exclusion measures are also the means of preventing establishment of new colonies and re-establishment of relocated colonies.

No extension of time or compensation payment will be granted for a delay or suspension of work caused by migratory birds or bats. This work is subsidiary.

STATE OF TEXAS
JACOB E. WALKER
122057
LICENSED
PROFESSIONAL ENGINEER
03/23/2018

NO.	DATE	REVISION	APPROVED

WILLIAMSON COUNTY

HDR Engineering, Inc.
810 Hesters Crossing, Suite 120
Round Rock, Texas 78681
Texas Registered Engineering Firm F-754

SOUTHWEST BYPASS SEGMENT 2

GENERAL NOTES

SHEET 2 OF 12

DESIGN	FED.RD. DIV.NO.	FEDERAL AID PROJECT NO.		HIGHWAY NO.
JC	6			
GRAPHICS	STATE	DISTRICT	COUNTY	SHEET NO.
LG	TEXAS	AUS	WILLIAMSON	
CHECK	CONTROL	SECTION	JOB	13A
JW	2103	01	034	
CHECK				
JC				

PLOT DRIVER: TXDOT_PDF_BW.pltcfg PENTABLE: S2-0000220170718.tbl
USER: lgomezgonz DATE: 3/23/2018 TIME: 14:15 PM SCALE: 1:1
FILE: \

TRENCH SAFETY NOTES

In accordance with the laws of the State of Texas and the US Occupational Safety and Health Administration regulations, all the trenches over 5 feet in depth in either hard and compact or soft and unstable soil shall be sloped, sored, sheeted, braced, or otherwise supported. Furthermore, all trenches less than 5 feet in depth shall also be effectively protected when hazardous ground movement may be expected. Trench safety systems to be utilized for this project will be provided by the CONTRACTOR.

In accordance with the US Occupational Safety and Health Administration regulations, when persons are in trenches 4 feet deep or more, adequate means of exit, such as a ladder or steps, must be provided and located so as to require no more than 25 feet of lateral travel.

If trench safety system details were not provided in the plans because trenches were anticipated to be less than 5 feet in depth, and if during construction it is found that trenches are in fact 5 feet or more in depth or trenches less than 5 feet in depth are in an area where hazardous ground movement is expected, all construction shall cease, the trenched area shall be barricaded and the CONSTRUCTION OBSERVER notified immediately. Construction shall not resume until appropriate trench safety systems details, as designed by a professional engineer, are retained and copies submitted to the CONSTRUCTION OBSSERVER for approval.

QUARRY REQUIREMENTS AND COORDINATION

The project passes through the Texas Crushed Stone (TCS) active quarry. It is the CONTRACTOR's responsibility to coordinate with TCS for their blasting schedule and achieve set-back requirements during blast events. The CONTRACTOR shall keep the ROW secure at all times and is responsible for all personnel, equipment, and production during TCS blasting activity. Subsidiary to pertinent items. There will not be additional payment for any losses or delays during blast protocols.

Texas Crushed Stone requires one Right of Way access route (crossing) per an industrial agreement with the City of Georgetown. The crossing must be 80' wide and 25' tall at a minimum and TCS traffic must have access through it at all times. The current location of the crossing will need to be re-located to its permanent location as shown in the plans. CONTRACTOR is responsible for coordinating construction traffic as well as the change in the crossing location with Texas Crushed Stone. The PCTB, as called out on the Fencing and Grading Plans, must be installed and the crash walls, as called out on the Bridge Plans (Bents 3 and 4), must be complete before the TCS crossing is relocated. Subsidiary to pertinent items.

CONTRACTOR's Project Superintendent as well as any personnel working near the vertical walls of the quarry shall have proof of completion for MSHA New Miner Training with emphasis on High Wall Safety (8 hour course). Subsidiary to Item 500 "Mobilization".

BLASTING

Blasting is allowed on this project. All blasting shall meet the specifications and requirements of Item S2 RC.

Coordinate with the CONSTRUCTION OBSERVER and Texas Crushed Stone to determine blasting times.

Blasting is not allowed within 200 feet of TxDOT right-of-way. The roadway RM 2243 shall not be compromised and road closures are not permitted for blasting activities.

It is the CONTRACTORS responsibility to secure the site at all times.

A blasting plan is required to be submitted to the CONSTRUCTION OBSERVER for approval at least 1 week before each blast.

HAUL ROAD

Utilize the existing haul road (by others) where possible. The maximum grade on the existing access route is 15%.

Physical alterations of the existing haul road, including additional clearing, blading, grade alterations, and gate modifications at RM 2243 shall be considered subsidiary to pertinent items. Maintain sheet flow conditions at the edge of the haul road outside the limits of the existing quarry disturbance.

Remove all traffic control devices, remove rock, and re-vegetate the areas shown in the plans upon completion of work or as directed. This includes sections of the haul road no longer used due to any re-alignment of the haul road. Provide sufficient watering to establish vegetation, as approved by the CONSTRUCTION OBSERVER. Re-vegetation is not required within the existing limits of quarry disturbance, which is approximately from WBFR Station 401+00 to Station 439+00. Additional topsoil, seeding, and watering required to establish vegetation, but not directly called out in the plans, shall be considered subsidiary to pertinent items.

ITEM 100 - PREPARING RIGHT OF WAY

Do not burn brush unless otherwise approved.

Trim vegetation around signs and other obstructions. Consider subsidiary to pertinent Items.

Use hand methods or other means to remove objectionable material and obstructions if doing work by mechanical methods is impractical. Consider subsidiary to the pertinent Items.

All trees and brush are to be removed within the limits of the Right of Way between the I-35 SBFR and RM 2243 with the following two exceptions:

- All trees that have a diameter at breast height (DBH) of 12 inches or larger (excluding Hackberry, Chinaberry, Ashe Juniper (cedar), Chinese Tallow, and Mesquite) are to remain.
- All trees and brush within the limits of the permanent protection fence (two areas) installed near karst features in Segment 2 are to remain. Do not enter either area during construction.

Removal of all trees and brush subsidiary to this item.

Re-vegetate all areas disturbed by tree clearing activity outside of the construction limits. Disturbed areas must be seeded or sodded within 14 days of last clearing activity. Subsidiary to this item.

Removal of existing building and parking lot along the I-35 southbound frontage road is required prior to project completion, but does not need to run concurrent with other site prep activities. See Item 496 and Item 504 of the general notes for additional information. Cap existing well in accordance with State law. Considered subsidiary to this item.

All items requiring removal that are not specifically called out for removal in the plans are considered subsidiary to this item. Prep ROW quantities for the WBFR cover all City ROW between the I-35 SBFR and RM 2243, as well as any TxDOT ROW on the I-35 SBFR and any City ROW on the Bypass north of RM 2243. Quantities for RM 2243 cover all TxDOT ROW on RM 2243.

ITEM 110 & 132 – EXCAVATION & EMBANKMENT

At no time will the retaining wall backfill material exceed the adjacent embankment operation by more than one embankment lift. At no time will the embankment adjacent to the retaining wall backfill exceed the wall backfill by any elevation.

Unsuitable material encountered in a cut or fill section will be considered waste. The CONSTRUCTION OBSERVER will define unsuitable material. Material, which the CONTRACTOR might deem to be unsatisfactory or unsuitable, due to moisture content, will not be considered unsuitable material, unless otherwise approved.

Obtain approval of all compaction equipment prior to all backfilling and embankment operations.

STATE OF TEXAS
JACOB E. WALKER
122057
LICENSED
PROFESSIONAL ENGINEER

03/23/2018

NO.	DATE	REVISION	APPROVED

WILLIAMSON COUNTY

HDR Engineering, Inc.
810 Hesters Crossing, Suite 120
Round Rock, Texas 78681
Texas Registered Engineering Firm F-754

SOUTHWEST BYPASS SEGMENT 2

GENERAL NOTES

SHEET 3 OF 12

DESIGN	FED.RD. DIV.NO.	FEDERAL AID PROJECT NO.		HIGHWAY NO.
JC	6			
GRAPHICS	STATE	DISTRICT	COUNTY	SHEET NO.
LG	TEXAS	AUS	WILLIAMSON	
CHECK	CONTROL	SECTION	JOB	13B
JW	2103	01	034	
CHECK				
JC				

PLOT DRIVER: TXDOT_PDF_BW.pltcfg PENTABLE: S2-0000020170718.tbl
USER: lgomezgonz TIME: 1:41:8 PM SCALE: 1:1
DATE: 3/23/2018
FILE: \

ITEM 132 – EMBANKMENT
The CONSTRUCTION OBSERVER must approve all embankment material before use on this project.

Existing material located within the project limits may be used as embankment if it meets specifications shown on the plans and if approved by the Construction Observer.

If delivery from offsite source is necessary, furnish embankment with a PI of less than 25 that does not contain sulfate contents greater than 3000 ppm.

Stockpile imported TY C embankment at an approved location until it meets all testing requirements. The stockpile must be between 500 CY and 5000 CY and must not exceed a height of 15 ft. It is the Contractor's responsibility to identify and notify the Construction Observer of the location of the borrow source to allow time for testing and approval to avoid delay to the project. Allow a minimum of five (5) working days for testing.

At no time will the retaining wall backfill material exceed the adjacent embankment operation by more than one embankment lift. At no time will the embankment adjacent to the retaining wall backfill exceed the wall backfill by any elevation.

Embankment placed over the area of MSE backfill must meet the same backfill requirements for the type specified under Item 423 in the plans.

The underlying layer or existing subgrade must be prepared and inspected prior to placement of the embankment. Use approved compaction equipment for all backfilling and embankment operations. Detachable sheepsfoot-type wheels mounted on backhoes, trackhoes and other similar equipment will not be allowed for compaction operations, including pipe installation. Payment for compaction will be subsidiary to the various bid items of the contract.

Track ALL embankment slopes left idle for more than 14 days, within or at the end of the 14-day idle period, to prevent erosion. Tracking consists of operating a tracked vehicle or equipment up and down the slope, leaving track marks perpendicular to the direction of the slope. Re-track slopes after rain events, as directed. Consider tracking of slopes to prevent erosion as subsidiary to the pertinent Items.

Due to the depth (30+ft) of some of the fills and the desire to limit settlement while using ordinary compaction methods, it is recommended that rock embankment construction be inspected/observed on a full-time basis.

EMBANKMENT MATERIAL
There are two types of embankment on this project. Zone 1 embankment consists of all embankment material located lower than 8 ft beneath the proposed pavement surface. Zone 2 embankment consist of all embankment material within 8 ft of the proposed pavement surface. Material recommendations for the two zones are provided below. All embankment material should be free of vegetation or other objectionable material.

- Zone 1 embankment material should consist of material meeting TxDOT Standard Specifications Item 132, 3.2 Rock Embankment with the following exception: the maximum lift thickness should not exceed 2 ft, therefore the maximum rock size in its greatest dimension must be less than 2 feet.
- Zone 2 embankment material should consist of material meeting TxDOT Standard Specifications Item 132, Type C with the following gradation and plasticity requirements.

Item	Description	(Percent Retained-Sieve)					LL Max.	PI Max.	PI Min.
		2½"	1¾"	7/8"	#4	#40			
132	Embankment (Density Control) (Zone 2)	0	0-10	10-40	45-75	60-85	45	20	6

EMBANKMENT PLACEMENT – COMPACTION
- Compact the Zone 1 Rock Embankment using ordinary compaction methods in accordance with TxDOT Standard Specifications Item 132.

ITEM 160 - TOPSOIL
No sandy loam allowed. Obtain approval of the actual depth of the topsoil sources for both on-site and off-site sources

All topsoil sources shall be approved by the CONSTRUCTION OBSERVER.

Existing topsoil salvaged from the project, meeting specification requirements, may be used where topsoil is called out in the plans.

The maximum height of topsoil stockpiles shall be five (5) feet.

Seed or track slopes within 14 days of placement.

ITEM 161 – COMPOST
Place a minimum of four (4) inches of compost manufactured topsoil at the locations identified on the plans. Any excess shall be at the CONTRACTOR's expense.

ITEM 164 – SEEDING FOR EROSION CONTROL
"No mowing" signs are not required on this project.

ITEM 166 – FERTILIZER
Fertilize all areas to be seeded. Apply fertilizer at a rate that provides 375 lbs of nitrogen per acre of seeded area. Fertilizer shall be subsidiary to other items.

ITEM 169 – SOIL RETENTION BLANKETS
Use materials from prequalified material producers list as shown on the Texas Department of Transportation (TxDOT) – Construction Divisions (CST) materials producers list. Refer to TxDOT's website for list of pre-qualified manufacturers. Direct all questions to the Maintenance Division, Vegetation Management Section, 125 E. 11th Street, Austin, TX 78701-2483.

ITEM 204 – SPRINKLING
Sprinkling for the control of dust, as directed, will be required on this project. If dust control is not being maintained, cease operations until maintenance resumes. This work shall be considered subsidiary to pertinent items.

ITEM 247 - FLEXIBLE BASE
Furnish TY A material meeting Grade 1 & 2 requirements for the roadway and intersecting streets.

Flexible base material shall come from a source approved by the CONSTRUCTION OBSERVER. If the flexible base comes from a stockpile, the stockpile shall be tested before delivery to the project. The stockpile shall be built in lifts not to exceed two (2) feet and in a manner as to obtain a minimum working face of not less than ten (10) feet and maximum working face of not more than twenty (20) feet. Final acceptance of flexible base material will be from tests made from windrow samples or the stockpile.

The following table will govern the acceptance of compaction on base courses, when compacted in multiple courses. Compaction requirements are in percent of maximum dry density as determined by (Tex-113-E). When compacting in a single course, compact to at least 100% of maximum dry density as determined by Tex-113-E.

Item	Material	All Roadways	
		Lift	Min Density
247	FL BS (CMP IN PLC)	1st (first lift) 2nd (final lift)	98% 100%

Correct subgrade (e.g. unstable areas, soft spots, etc.) prior to placing Flex Base. This includes cut areas where the flex base is to be placed on existing rock. Consider subsidiary to the pertinent Items.

ITEM 300 – ASPHALTS, OILS, AND EMULSIONS
Asphalt season starts May 1st and ends September 15th.

PPA and REOBs are not allowed.

ITEMS 310, 340, & 341
Perform work during good weather, unless otherwise directed. If work is performed at CONTRACTOR's option, when inclement weather is impending, and the work is damaged by subsequent precipitation, the CONTRACTOR is responsible for all costs associated with replacing the work, if required.

STATE OF TEXAS
JACOB E. WALKER
122057
LICENSED
PROFESSIONAL ENGINEER
03/23/2018

NO.	DATE	REVISION	APPROVED

WILLIAMSON COUNTY

HDR Engineering, Inc.
810 Hesters Crossing, Suite 120
Round Rock, Texas 78681
Texas Registered Engineering Firm F-754

SOUTHWEST BYPASS SEGMENT 2

GENERAL NOTES

SHEET 4 OF 12

DESIGN	FED.RD. DIV.NO.	FEDERAL AID PROJECT NO.		HIGHWAY NO.
JC	6			
GRAPHICS LG	STATE	DISTRICT	COUNTY	SHEET NO.
CHECK JW	TEXAS	AUS	WILLIAMSON	13C
CHECK JC	CONTROL 2103	SECTION 01	JOB 034	

PLOT DRIVER: TXDOT_PDF_BW.pltcfg PENTABLE: S2-000002070718.tbl
USER: lgomezgonz DATE: 3/23/2018 TIME: 2:46:34 PM SCALE: 1:1
FILE: \
4/12/2018 7:20 AM

ITEM 310 – PRIME COAT
Provide medium cure cutback asphalt (MC-30) or asphalt emulsion prime (AE-P).

Provide CONSTRUCTION OBSERVER with current Distributer Certification confirming calibration of asphalt measurement equipment.

Apply Prime to finished flex base surface at the rate shown in the plans. Hot mix can be applied to the primed surface of flex base after the prime has penetrated and cured for a minimum of 36 hours depending on weather conditions or as approved by the CONSTRUCTION OBSERVER. Provide the CONSTRUCTION OBSERVER with a copy of the asphalt deliver ticket prior to application. Do not apply if rain is forecast prior to paving.

Apply blotter material to all driveways and intersections. This work is subsidiary. When Multi Option is allowed, provide MC 30, EC 30, or AE-P.

ITEM 340 & 341 - DENSE-GRADED HOT-MIX ASPHALT
Contractor to submit for approval a current mix design (less than 6 months old) to the Construction Observer that meets the following requirements prior to use on the project.

Provide mixture Type B using PG binder 64-22 & Type D using PG binder 70-22.

Use aggregate meeting a Surface Aggregate Classification (SAC) requirement of B for all surface and non-surface mixtures (including shoulders).

Provide performance grade (PG) binders that do not contain Recycled Engine Oil Bottoms (REOB's) or Poly Phosphoric Acid (PPA).

Do not perform this work when the weather, as indicated by NOAA states a chance of rain of 40% or greater.

Mill a transverse butt joint to transition from the new ACP to the existing surface tie-in. Make the transition a minimum of 50 feet H: 1 inch V slope ratio of newly placed ACP. Make the temporary joint, at the tie-in, a minimum of a 10 feet longitudinally and covering the entire width. Saw-cut existing pavement as directed. Prior to milling, core the existing pavement to determine its thickness. Do not proceed with milling until directed. Consider this work subsidiary to the pertinent Items.

Complete all roadways before final surface course placement, unless directed otherwise.

Ensure placement sequence to avoid excess distance of longitudinal joint lapback not to exceed one day's production rates.

The Contractor shall utilize a material transfer device per item 320 and a grade reference (such as a ski) for overlay operations. Consider subsidiary to the pertinent items.

Use a device to create a maximum 3H: 1V notched wedge joint on all longitudinal hot mix joints of two (2) inches or greater. Consider subsidiary to the pertinent Items.

Taper transverse faces at ends of passes as directed.

Make transverse tapers on each end of pass using a minimum slope rate of 60H:1V. Tapers shall be removed directly before placement of succeeding lift. Consider subsidiary to the pertinent Items.

Provide a minimum transition for all side streets of at least 12 ft. and driveways of at least six (6) feet, unless otherwise shown on the plans or otherwise approved/directed.

Tack every intermediate layer, unless otherwise directed. Do not dilute tack coat. Apply it through a distributor spray bar in accordance with Article 316.3.1 Distributor.

TESTING
Testing to be under separate COUNTY contract. CONTRACTOR shall coordinate with involved parties for asphalt testing.

The CONTRACTOR must sample asphalt binder, in accordance to the applicable item. Label the sample can with the corresponding project, lot, and sub-lot numbers.

Samples must be stored in a common area where they are readily available to the COUNTY representative at the plant. The CONTRACTOR will be responsible for supplying storage for all samples. Retain all asphalt samples until hot mix production is complete or directed otherwise.

Target laboratory molded density is 97% for all mixtures for Texas Gyratory Compactor (TGC) mixture designs.

When directed, the CONTRACTOR is responsible for disposal of all asphalt binder samples, in accordance to Local, State, and Federal regulations.

Refill and compact all HMAC core holes to the same elevation as the adjacent roadway. Use hot mix of the type being used in the project to fill core holes. As an alternative a high performance cold patching mix such as Rapid Cure Patching Mix meeting the requirements of DMS-9203 or Medium Cure Patching mix made with SCM meeting requirements of DMS-9202. Consider this work subsidiary to the pertinent Items.

When using Superpave Gyratory Compactor (SGC) to design mixtures, submit the SGC mix design to the CONSTRUCTION OBSERVER for approval.

When using substitute binders, mold specimens for mix design and production at the temperature required for the substitute binder used to produce the HMA.

All mixtures must meet the Hamburg requirement as stated in the table below.

High-Temperature Binder Grade	Test Method	Hamburg Wheel Test Requirements [1]		
		Minimum # of Passes	Maximum Rut Depth (mm)[2]	Minimum Rut Depth (mm)[2,3]
PG 64 or lower	Tex-242-F	7,000	12.5	3
PG 70	Tex-242-F	15,000	12.5	3
PG 76 or higher	Tex-242-F	20,000	12.5	3

1. The CONSTRUCTION OBSERVER may accept Hamburg Wheel test results for production and placement if no more than 1 of the 5 most recent tests is below the specified number of passes and the failing test is no more than 2,000 passes below the specified number of passes.
2. Rut depth tested @ 122°F
3. Unless approved otherwise.

Use of RAS is not allowed. When using RAP, include the management methods of processing, stockpiling, and testing of RAP in the QCP submitted for the project. Blending of RAP in one feeder bin or in a stockpile is not permitted.

RAP is not allowed for any surface mix applications.

No more than 20% RAP by weight of aggregate is allowed in any mix application.

Submit any proposed adjustments or changes to a job mix formula to the CONSTRUCTION OBSERVER before production of the new job mix formula.

For Mixture Design Verification, provide the CONSTRUCTION OBSERVER with two 5-gallon buckets of each aggregate stockpile to be used on the project with three gallons of each PG binder from the plant to be used on the project. Sufficient quantities of any other additives that will be used in the HMA mixture shall also be provided.

Prior to allowing production of the trial batch, the Construction Observer will use the materials provided by the Contractor to perform the following tests to verify the HMA mixture .

1. Indirect Tensile Test in accordance with Tex-266-F
2. HAMBURG Wheel Test in accordance with Tex-242-F
3. Overlay Test in accordance with Tex-248-F
4. Cantabro Test in accordance with Tex-245-F

For mixtures designed with a Texas Gyratory Compactor (TGC), the CONSTRUCTION OBSERVER may require that the target laboratory molded density be raised to no more than 97.5% or may lower the design number of gyrations to no less than 35 for mixtures designed with an SGC if any of the following conditions exist:

1. The Indirect Tensile Test results in a value greater than 200 PSI
2. The Hamburg Wheel Test results in a value less than 3.0 mm
3. The Overlay Test results in a value less than 100 cycles
4. The Cantabro Test results in a value of more than 20% loss

In lieu of or in addition to evaluating the mixture design prior to allowing a trial batch to be produced, the CONSTRUCTION OBSERVER may also evaluate the mixture produced during the trial batch for compliance with the four tests listed above.

Submit thermal and segregation profiles as well as longitudinal joint densities on electronic forms provided by County to the CONSTRUCTION OBSERVER.

When surface irregularities, as defined in Article 341.4.9.3.3.5, "Irregularities," are detected or measured, the Contractor must take immediate corrective action defined as the removal and replacement of a full lane width of the defective area using a paver to place new mix, unless otherwise directed. If there are multiple defective areas within a sub-lot, making up to 30% of the sub-lot by area, the CONSTRUCTION OBSERVER will require the entire sub-lot be removed, unless directed otherwise.



03/23/2018

NO.	DATE	REVISION	APPROVED

WILLIAMSON COUNTY

HDR Engineering, Inc.
810 Hesters Crossing, Suite 120
Round Rock, Texas 78681
Texas Registered Engineering Firm F-754

SOUTHWEST BYPASS SEGMENT 2

GENERAL NOTES

SHEET 5 OF 12

DESIGN	FED.RD. DIV.NO.	FEDERAL AID PROJECT NO.		HIGHWAY NO.
JC	6			
GRAPHICS	STATE	DISTRICT	COUNTY	SHEET NO.
LG	TEXAS	AUS	WILLIAMSON	13D
CHECK	CONTROL	SECTION	JOB	
JW	2103	01	034	
CHECK				
JC				

PLOT DRIVER: TXDOT_PDF_BW.pltcfg USER: lgomezgonz DATE: 3/23/2018 TIME: 1:41:23 PM SCALE: 1:1 PENTABLE: S2-0000020170718.tbl FILE: \

ITEM 354 – PLANING AND TEXTURING PAVEMENT
Milling machines must be able to meet the longitudinal grade and cross slope required.

Remove the loose material from the roadway before opening to traffic.

Plane a full lane width before opening to traffic at the end of a work period.

Accomplish a 2-inch depth of planing and texturing in two passes. A single cut will be permitted if at most a 1¼-inch vertical offset is created against adjacent lanes when opened to traffic at the end of a work period.

Accomplish the 2-inch Planed Butt Joint only when there is at least 4 inches of existing thickness of ACP. Consider the determination of existing thickness of ACP as subsidiary to the various Items.

Taper transverse faces at ends of passes as directed.

Make Transverse Tapers on each end of each pass using a minimum slope rate of 50 feet H to 1-inch V.

Retain ownership of planed materials.

Plane the designated areas and depths specified in the plans, as required. Mill the pavement producing a final pavement surface with transverse pattern of 0.2 inches center to center of each strike area with difference no greater than 1/16 inch between the ridge and valley (RVD) measurement of the final milled surface. Construct a uniform finish free from gouges and ridges that does not vary more than 1/8 inch in width of the cut.

Use planning machine that is power-driven, self-propelled micro-milling equipment possessing the size and shape to allow traffic safe passage through areas adjacent to the work.

Also, ensure the micro milling equipment will be:

- Equipped with a cutting mandrel with carbide or equivalent tipped cutting teeth designed for micro-milling bituminous pavement full lane width to close tolerances
- Capable of removing pavement to an accuracy of 1/16 inch (1.6 mm) with a maximum tool spacing of 5/8 inches
- Equipped with grade and slope controls operating from a string line or ski and based on mechanical or sonic operation
- Furnished with a lighting system for night work, as necessary
- Provided with conveyors capable of side, rear, or front loading to transfer the milled material from the roadway to a truck

Ensure micro-milling methods produce a uniform finished surface and maintain a constant cross slope between pavement edges in each lane. Provide positive drainage to prevent water accumulation on the micro-milled pavement, as shown on the Plans or directed by the CONSTRUCTION OBSERVER. The cross slope must be uniform with no depressions or slope misalignments greater than ¼ per 12 ft. exit when the slope is tested with a straightedge placed perpendicular to the center line.

Bevel back the longitudinal vertical edges greater than two (2) inches (50 mm) produced by the removal process and left exposed to traffic. Bevel the vertical edges back at least three (3) inches for each two (2) inches (75 mm for each 50 mm) of material removed. Use an attached mold board or other approved method.

Taper the transverse edges 10 ft. (3 m) to avoid creating a traffic hazard and to produce a smooth surface when removing material at ramp areas and ends of milled sections.

Protect with a temporary asphaltic concrete tie-in (paper joint) vertical edges at other areas such as bridge approach slabs, drainage structures, and utility appurtenances greater than ½ in areas left open to transversing vehicles. Place the temporary tie-in at taper rate of at least 6 to 1 horizontal to vertical distance. Do not micro-mill bridge joints. Damage due to micro-milling will be repaired at the CONTRACTOR's expense and to the satisfaction of the CONSTRUCTION OBSERVER.

Remove dust, residue, and loose milled material from the micro-milled surface. Do not allow traffic on the milled surface and do not place asphaltic concrete on the milled surface until removal is complete.

Measure the milled surface with a 10-foot straightedge at locations determined by the CONSTRUCTION OBSERVER for quality acceptance and acceptance of test section of milling operation. Remove and replace any areas exceeding 1/8 inch RVD, as directed by the CONSTRUCTION OBSERVER at no cost to the Department.

ITEM 400 - EXCAVATION AND BACKFILL FOR STRUCTURES
Cut pavements with the use of a saw as directed. Consider subsidiary to pertinent Items.

Obtain approval of all compaction equipment prior to all backfilling and embankment operations.

Use two (2) inch washed, crushed stone with 0% passing a No. 4 sieve to backfill for bridge ends. Consider subsidiary to the pertinent Items. Provide weep holes out the face of the backwall, as directed.

ITEM 416 – DRILLED SHAFT FOUNDATIONS
Stake all Foundations, for approval, before beginning drilling operations, as directed. Examples of types of foundations are Bridge Supports, Traffic Signal Pole Foundation, Roadway Illumination Assembly Foundations, Sign Support Locations, etc.

Calculate the vertical signal head clearance before placing any Traffic Signal Pole Foundation.

Fabricate roadway illumination assembly foundations in accordance with the City of Georgetown standards GUSL-CF-B or GUSL-CF-BR (for specific installation in rock). Alternate designs to GUSL-CF-BR or GUSL-CF-BR are prohibited.

Obtain approval before placing additional exposed Traffic Pole Foundation.

Set anchor bolts for Mast-Arm Signal Poles and Strain Poles. Set two in tension and two in compression. Obtain approval of anchor bolt placement as directed before placing concrete.

Field cut holes for anchor bolts only as directed.

Remove spoils, daily, out of flood plain, or as directed.

Take cores at the bottom of all drilled shafts supporting a bridge abutment or interior bent in accordance with Item 416.3.2. Drilled shafts under wingwalls are excluded from this requirement.

ITEM 420 – CONCRETE SUBSTRUCTURES
Use Permanent Metal Deck Forms (PMDF) or prestressed concrete panels.

Do not use PMDF in areas where a "Free Joint" is indicated in the plans.

Check the sign plans for locations of clearance signs and brackets on structures, which will require inserts in the pre-stressed beams. Forward such locations to the beam fabricator.

Where Retaining Walls are integral parts of the abutment header, do not place the abutment cap prior to backfilling the wall and the abutment area up to the elevation of the bottom of the abutment cap, unless otherwise directed.

The "H" values shown on bridge layout sheets are estimated column heights. Calculate the actual column heights based on field conditions.

Perform work during good weather unless otherwise directed. If work is performed at CONTRACTOR's option, when inclement weather is impending, and the work is damaged by subsequent precipitation, the CONTRACTOR is responsible for all costs associated with replacing the work, if required.

Prior to the completion of work, stencil the National Bridge Inventory (NBI) number (structure number) on each structure built/shown on this project, as directed. Verify with the CONSTRUCTION OBSERVER that the NBI number, which is shown on each Bridge Layout, is the number to use. Stencil the NBI number in an approved location on each bridge. Consider subsidiary to the pertinent Items.

At backwall to cap construction joints, use bonding mortar, grout, or epoxy as a bonding agent.

STATE OF TEXAS
JACOB E. WALKER
122057
LICENSED
PROFESSIONAL ENGINEER

03/23/2018

NO.	DATE	REVISION	APPROVED

WILLIAMSON COUNTY TEXAS

HDR Engineering, Inc.
810 Hesters Crossing, Suite 120
Round Rock, Texas 78681
Texas Registered Engineering Firm F-754

SOUTHWEST BYPASS SEGMENT 2

GENERAL NOTES

SHEET 6 OF 12

DESIGN	FED.RD. DIV.NO.	FEDERAL AID PROJECT NO.		HIGHWAY NO.
JC	6			
GRAPHICS	STATE	DISTRICT	COUNTY	SHEET NO.
LG	TEXAS	AUS	WILLIAMSON	
CHECK	CONTROL	SECTION	JOB	
JW	2103	01	034	13E
CHECK				
JC				

PLOT DRIVER: TXDOT_PDF_BW.pltcfg PENTABLE: S2-0000020170718.tbl
USER: lgomezgon2 DATE: 3/23/2018 TIME: 1:41:25 PM SCALE: 1:1
FILE: \
4/12/2018 7:20 AM

ITEM 421 – HYDRAULIC CEMENT CONCRETE
Sulfate resistant concrete is not required for any class of concrete.

Over-design requirements for compressive strength are waived for non-structural concrete, as defined in Table 8, Item 421.4.1.

Minimum air-entrainment requirements are waived for all classes of concrete, except for Class S, DC, or CO concrete. For all classes of concrete, except for Class S, P, or CO concrete or non-structural concrete, as defined in Table 8, the entrained air content must not exceed 8% air.

For all non-pavement applications using Class S, or CO concrete, target 5.5% entrained air. If the air content exceeds the target air content by more than 3 percentage points, the load of concrete will be rejected.

ITEM 423 - RETAINING WALLS
Provide Ashlar Stone Finish for all MSE retaining walls. Match aesthetic details of Southwest Bypass: Segment 1 as well as Southwest Bypass and Wolf Ranch Parkway. Do not include Map of Texas emblem unless otherwise directed. Finish subsidiary to retaining wall. Finish subsidiary to this item.

Drill, epoxy, and place #4 bars @ 18 inch centers, as directed, to tie riprap to the coping or anchor slab.

Exposed face of wall, face of coping, and exposed underside of coping shall receive a permanent TY III Anti-Graffiti Coating per Item 740.

Surface area is measured from finished grade at top of wall, including coping, down to the estimated top of footing/bottom of wall.

Immediately backfill the face of the retaining wall after the wall height gets above the final grade in front of the wall.

Do not measure any footing adjustments made to accommodate the available optional designs. Supply the retaining wall fabricators with the drainage plans. Ensure the wall design accommodates the construction of inlets, conduit, and any other large drainage structure as shown on the plans.

Consider any Retaining Wall Light Brackets RW (BL) required for this project subsidiary to pertinent Items.

Use the approved Mechanically Stabilized Earth (MSE) Wall Systems listed on TxDOT's website.

Two (2) feet either side of the width of the leveling pad must be compacted to meet ordinary compaction standards prior to placement of the leveling pad.

Verify each row of panel placement for specification tolerances after backfilling is accomplished and prior to placement of the next row of panels. Correct to within tolerance prior to placing subsequent rows of panels. Notify when a tolerance check is needed.

At no time will the retaining wall backfill material exceed the adjacent embankment operation by more than one embankment lift. At no time will the embankment adjacent to the retaining wall backfill exceed the wall backfill by any elevation.

Build the wall backfill material a minimum of 24 inches horizontally beyond the end of the wall reinforcement. Compact it in accordance with 423.3.

For retaining walls RW-05 and RW-06 in the plans, use TxDOT 2014 Standard Specifications Item 423 type "DS" backfill. For RW-06, any embankment below select fill shall be type "DS" backfill, in lieu of embankment type specified under Item 132. No additional payment will be made, subsidiary to pertinent items.

Particles larger than ¼ inch will be angular or crushed. Rounded rock or gravel will not be allowed.

Retaining wall coping placement will be such that the outside face of the wall panels are not offset from the inside face of coping by more than 1½ inches.

Seal all form liner joints, in a manner acceptable to prevent leakage at the surface.

Follow form liner manufacturer's recommended procedures for form liner construction.

The form liner will release clean and free of the concrete, without pulling or breaking concrete from the textured surface.

Provide underdrains as called out in the plans.

ITEM 425 - PRECAST PRESTRESSED CONCRETE STRUCTURAL MEMBERS
Hold a Prephase meeting for the erection of concrete members such as, Precast-Prestressed Concrete Beams and Precast-Prestressed Concrete Panels prior to the work, as directed. Notify the CONSTRUCTION OBSERVER of the meeting at least 24 hours prior.

ITEM 427 - SURFACE FINISHES FOR CONCRETE
All concrete structures, except those with form liner surfaces and those areas designated to receive special surface finishes, shall receive a Surface Area I, rub finish in accordance with this item. Perform an Ordinary Surface Finish to the faces of concrete units, such as Retaining Walls, Inlets, etc., that will have backfill material against them.

Perform the rub finish as soon as possible after form removal. Complete the finish application within 5 calendar days from the pour date. Should the completion of the finish work fall behind, or exceed the 5 day time frame, pours of any additional structures will cease until such time as the surface finish of existing structures is completed.

Consider Surface Finishes for concrete as subsidiary to the pertinent Items.

Follow form liner manufacturer's recommended procedures for form liner construction.

The form liner shall release clean and free of the concrete, without pulling or breaking concrete from the textured surface.

Seal all form liner joints, in a manner acceptable to prevent leakage at the surface.

Perform an Ordinary Surface Finish to the faces of concrete units, such as Retaining Walls, Inlets, etc., that will have backfill material against them.

Perform Low-Pressure water blasting to the concrete surfaces, if forms are not removed in time.

ITEM 431 – PNEUMATICALLY PLACED CONCRETE
This item shall be paid for by the square yard. Basis of estimate is 10% of the rock cut. Final quantities will vary based on field conditions encountered during construction.

Place PPC on unstable rock cuts or existing rock walls as determined and directed by the CONSTRUCTION OBSERVER. Paid for under this item. Incidental surface preparation required prior to placing PPC, including removal of loose rock, considered subsidiary to pertinent items.

Provide 2" thickness and use welded wire fabric unless otherwise directed. Mix design shall conform to Class II. Place anchors as directed. Subsidiary to this item.

Sculpt PPC finish to reproduce the texture and shape of the rock surrounding the PPC. Stain all PPC to match existing rock color patterns. Use white cement to provide better color match if needed, or as directed. Provide 4'x4' test panel for approval by the CONSTRUCTION OBSERVER prior to placing PPC. Subsidiary to this item. Provide additional thickness as needed for sculpting (max 2"). Paid for under this item.

ITEM 432, 462, 465, 466, & 467
Remove all loose Formwork and other Materials from the Floodplain or drainage areas, daily, which could float off in a Storm water Event, as directed.

STATE OF TEXAS
JACOB E. WALKER
122057
LICENSED
PROFESSIONAL ENGINEER
03/23/2018

NO.	DATE	REVISION	APPROVED

WILLIAMSON COUNTY

HDR Engineering, Inc.
810 Hesters Crossing, Suite 120
Round Rock, Texas 78681
Texas Registered Engineering Firm F-754

SOUTHWEST BYPASS
SEGMENT 2

GENERAL NOTES

SHEET 7 OF 12

DESIGN	FED.RD. DIV.NO.	FEDERAL AID PROJECT NO.		HIGHWAY NO.
JC	6			
GRAPHICS LG	STATE	DISTRICT	COUNTY	SHEET NO.
CHECK JW	TEXAS	AUS	WILLIAMSON	
CHECK	CONTROL	SECTION	JOB	13F
JC	2103	01	034	

PLOT DRIVER: TXDOT_PDF_BW.pltcfg PENTABLE: S2-0000020170718.tbl
USER: lgomezgonz DATE: 3/23/2018 TIME: 2:45:58 PM SCALE: 1:1
FILE: \

ITEM 432 - RIPRAP
Fibers for Concrete as defined in DMS-4550 will not be allowed.

Make concrete riprap five (4) inches thick unless otherwise noted or directed.

Make all mow strip riprap concrete four (4) inches thick, unless otherwise directed.

Where any proposed riprap joins existing riprap, saw cut the existing riprap and dowel/epoxy #4 bars @ 12 inch centers. Consider subsidiary to the pertinent Items. Consider saw cutting of riprap as subsidiary.

Additional riprap may be required, as determined by the CONSTRUCTION OBSERVER, near the end of project completion due to unanticipated erosion locations. Any additional, approved riprap will be paid for under this item.

All 8" Stone Riprap Protection shall have a thickness of 8" unless otherwise called out in the plans. 8" Stone Riprap Protection shall meet the gradation requirements in the table below unless otherwise approved by the CONSTRUCTION OBSERVER.

Sieve Size	Ty I Percent Retained	Ty II Percent Retained
5"		0
4"		10 - 40
3"		30 – 70
2"	0	60 – 90
1.5"	10 – 40	
1"	30 – 70	100
3/4"	60 - 90	
1/2"	100	

Use mechanically crushed on-site material from excavation activity for 8" Stone Protection Riprap. Stone should vary in size within the limits of the table above (Do not use a single size stone). Adjust stone gradation as directed by the CONSTRUCTION OBSERVER and obtain approval prior to placement. Crushed off-site material may be used if approved. Maintain a uniform aesthetic/color when placing stone riprap as directed. Subsidiary to this item.

Place 8" Stone Riprap Protection as shown on Figure 5 of the SRR standard. Place two layers of woven filter fabric beneath 8" Stone Riprap Protection. Do not place bedding material. Subsidiary to this item.

Ensure stone is free of excess sediment prior to placement. Wash stone prior to placement if directed by the CONSTRUCTION OBSERVER. Subsidiary to this item.

When placing stone, ensure tight interlocking of different stone sizes. Fill voids with smaller stone as directed by the CONSTRUCTION OBSERVER. Subsidiary to this item.

Compact stone riprap within clearzone (TY I) with vibratory drum roller. Other compaction methods must be approved by the CONSTRUCTION OBSERVER. When placing 8" Stone Riprap Protection TY I adjacent to TY D asphalt as shown on the typical sections, ensure any gaps are filled with smaller stone. Sweep stone off pavement surface prior to compacting stone riprap. Provide 50' long by 8.5' wide test strip of compacted TY I riprap for CONSTRUCTION OBSERVER's approval prior to placement on remainder of project and adjust gradation as directed. Subsidiary to this item.

ITEM 454 – BRIDGE EXPANSION JOINTS
Apply protection System II to structural steel armor joint.

For Asphalt-Plug Expansion Joints, refer to TxDOT's website for approved systems.

ITEMS 464, 466, & 467
When RCP or structure is to be placed below finished roadway subgrade and there is less than three (3) feet of fill from top of RCP to finished subgrade elevation, then flowable fill is required, as directed. Payment made under Item 401.

ITEM 466 – HEADWALLS AND WINGWALLS
Use Class C concrete for headwalls or wingwalls.

ITEM 467 – SAFETY END TREATMENT
Cut pipe ends, in the field, to match roadway side slopes, or as directed. Apply asphalt base aluminum paint to the cut ends.

All Type II SETs shall have mitered pipe ends and cast-in-place riprap aprons.

ITEM 496 – REMOVING STRUCTURES
Notify CONSTRUCTION OBSERVER at least **30** days prior to Building Demolition that will require a 10-Calendar-Day, Prior-To-Work Notification to Texas Department of State Health Services (DSHS). If the work does not happen on the notified date then another 10-Calendar-Day, Prior-To-Work Notification will be required.

Conduct walk-through of Building with CONSTRUCTION OBSERVER to determine materials/items to be salvaged. Any material/items deemed salvageable shall be removed and stored at a location(s) approved by the CONSTRUCTION OBSERVER. Salvaging material/items shall be subsidiary to pertinent items.

Provide a detailed plan for the removal of the existing structure(s) to include the schedule of removal and list of all equipment to be used.

Removal of Building to include the structure itself, all miscellaneous items within that are not marked salvagable, all items adjacent to the exterior of the building not marked salvageable, any septic system on site, and all incidentals associated with the building. All removals associated with building shall be subsidiary to pertinent items.

The structure or structures to be removed may have surface coatings, which may contain hazardous materials. Provide for the safety and health of employees and abide by all OSHA Standards and Regulations as well as those set by Texas Department of State Health Services (DSHS).

The structural steel to be removed may contain lead paint. Submit a proposed demolition plan for approval by the CONSTRUCTION OBSERVER at least 60 days prior to the desired demolition date. Demolition plan should limit disturbing where lead paint is located when possible. If flame cutting methods will be used and lead paint cannot be avoided, the County will arrange to have the paint removed at the indicated flame-cutting locations. The paint will be removed by a separate contractor for a width of four (4) inches. No paint removal will be required if other demolition methods are employed.

ITEM 502 - BARRICADES, SIGNS, AND TRAFFIC HANDLING
In addition to the traffic control plans and the latest BC standard plan sheets, provide within the limits of the project, standard barricades, warning signs, delineators, lights, 28" cones, and flaggers in sufficient numbers and any combination as considered necessary by the CONSTRUCTION OBSERVER.

Utilize daily lane shifts as needed for the construction of the project. Normal traffic patterns shall be reinstated at the end of each workday. Perform mill and overlay operations during off-peak hours. Peak hours are defined as Monday through Friday: 7am-9am and 4pm-6pm. Ensure safety wedge is in place prior to normal traffic reinstatement.

Place one TY III barricade (8 feet) at each stockpile of material that is placed on the right-of-way and is located within 30 feet of the traveled way.

Furnish advisory speed signs in sufficient number as determined by the CONSTRUCTION OBSERVER.

Furnish sufficient personnel available to revise traffic control as directed by the CONSTRUCTION OBSERVER.

For any roadway drop-off greater than 2 inches adjacent to a roadway which is under traffic, the CONTRACTOR will be required to incorporate and maintain a 3:1 safety wedge into the proposed construction. All work involved shall be considered subsidiary to Item 502.

Provide the CONSTRUCTION OBSERVER a letter certifying that all truck-mounted attenuators (TMA) used on this project that were purchased on or after October 1, 1998, have been found to be crash worthy using the criteria outlined in NCHRP reports 230 or 350.

After completion of the project the CONTRACTOR shall fill any holes left by the barricades or sign supports and restore the area in which the signs were removed to its original condition.

Cover or remove any existing signs which conflict with temporary traffic control operations. Payment shall be considered subsidiary to this item.

Ensure all permanent signs and pavement markings are installed before opening that section of roadway to traffic. Consider subsidiary to the pertinent items. Repair or replace any signs which are damaged during construction, or which are deemed insufficient by the CONSTRUCTION OBSERVER.

Repair barricades within 48 hours after barricade report has been delivered.

Refer to the Project Layout and Temporary Erosion Control Plan for Texas Crushed Stone ROW crossing notes.

Coordinate with the CONSTRUCTION OBSERVER for opening of the finished roadway to public traffic.

STATE OF TEXAS
JACOB E. WALKER
122057
LICENSED
PROFESSIONAL ENGINEER
03/23/2018

NO.	DATE	REVISION	APPROVED

WILLIAMSON COUNTY

HDR Engineering, Inc.
810 Hesters Crossing, Suite 120
Round Rock, Texas 78681
Texas Registered Engineering Firm F-754

SOUTHWEST BYPASS SEGMENT 2

GENERAL NOTES

SHEET 8 OF 12

DESIGN	FED.RD. DIV.NO.	FEDERAL AID PROJECT NO.		HIGHWAY NO.
JC	6			
GRAPHICS	STATE	DISTRICT	COUNTY	SHEET NO.
LG	TEXAS	AUS	WILLIAMSON	
CHECK	CONTROL	SECTION	JOB	13G
JW	2103	01	034	
CHECK				
JC				

PLOT DRIVER: TXDOT_PDF_BW.pltcfg PENTABLE: S2-0000020170718.tbl
USER: lgomezgonz TIME: 1:41:31 PM SCALE: 1:1
DATE: 3/23/2018
FILE: \

ITEM 504 - FIELD OFFICE AND LABORATORY
CONTRACTOR may use the I-35 southbound frontage building on the southeastern corner of the project, owned by the City of Georgetown, as the project field office. The City will pay for utilities. Any improvements (HVAC, Roofing, etc.) required in order to utilize the building as a field office are the sole responsibility of the CONTRACTOR.

All requirements under this item are considered subsidiary to pertinent items. Note that this building is to be removed in this project under separate item.

ITEM 506 - TEMPORARY EROSION, SEDIMENTATION, AND ENVIRONMENTAL CONTROLS
Obtain the CONSTRUCTION OBSERVER's approval for proposed methods used for erosion control before starting each phase of construction.

ITEM 512 – PORTABLE CONCRETE TRAFFIC BARRIER
Furnished PCTB may be salvaged in good condition as approved by the CONSTRUCTION OBSERVER.

ITEM 529 – CONCRETE CURB, GUTTER AND COMBINED CURB AND GUTTER
Fibers for concrete as defined in DMS-4550 will not be allowed.

ITEM 540 - METAL BEAM GUARD FENCE
Before beginning the installation of the proposed Metal Beam Guard Fence (MBGF), stake the locations for approval. Adjust the limits of the MBGF to meet field conditions, as directed, before erection.

Furnish new timber posts matching the post type on Southwest Bypass Segment 1 and RM 2243. Refer to Long Span standard for spanning culvert crossings.

Use applicable standard to match the existing RM 2243 metal beam guard fence height. Obtain approval prior to placement. Do not use the older, lower height standards for new metal beam guard fence called out elsewhere in the plans.

Install all permanent MBGF and delineators, when the roadway is constructed in one-half widths, on that section, before opening the road to traffic.

Provide Rail Elements that meet AASHTO M 180 TY I Galvanization (1.80 Oz per SY).

ITEM 550 – CHAIN LINK FENCE
Provide thermally fused PVC coating according to the specifications. Coating shall be black unless otherwise directed by the CONSTRUCTION OBSERVER.

ITEM 552 – WIRE FENCE
Begin installation of barbed wire fence within 30 calendar days of the NTP and complete installation within 60 calendar days of the NTP.

ITEM 556 – PIPE UNDERDRAINS
Filter material will meet the gradation requirements for concrete coarse aggregate (Grade 2, 3, or 4), per Table 4 of TxDOT Item 421.

ITEM 585 - RIDE QUALITY FOR PAVEMENT SURFACES
Use Surface Test Type B Pay Schedule 3 to evaluate ride quality of travel lanes and shoulders greater than or equal to 10 ft wide.

The Contractor is responsible for the Surface Testing and the results shall be provided in a simple format by project stationing.

ITEMS 610, 618, 620, 624, 628, 684, & 686
Use materials from prequalified material producers list as shown on the Texas Department of Transportation (TxDOT) – Construction Division's (CST) materials producers list. Refer to TxDOT's website for list of pre-qualified manufacturers. No substitutions will be allowed for materials found on the list.

ITEM 610 – ROADWAY ILLUMINATION ASSEMBLIES
Fabricate steel roadway illumination poles in accordance with TxDOT standards RIP-(1) – RIP-(4) (Roadway Illumination Poles - 2017). Poles fabricated according to RIP-17.

Limitations on Use of the RIP-17 Standard

The Roadway Illumination Pole (RIP-17) standard details were developed for installations in locations where the 3-second gust basic maximum wind speed is 110 mph, and where the elevation of the base of the pole is less than (i.e. not more than) 25' above the elevation of surrounding terrain, in accordance with the "AASHTO Standard Specifications for Structural Supports for Highway Signs, Luminaires and Traffic Signals," 4th Edition (2001) (AASHTO Design Specifications). For poles to be installed in regions where the maximum basic wind speed exceeds 110 mph or to be mounted more than 25' above the surrounding terrain, the contractor shall provide poles meeting the following requirements:

A. Submittals. Following the electronic shop drawing submittal process (see ftp://ftp.dot.state.tx.us/pub/txdot-info/library/pubs/bus/bridge/e_submit_guide.pdf), the contractor shall submit to the Engineer, for approval, fabrication drawings and calculations for the poles. The drawings and calculations shall be sealed by a Texas registered or licensed professional engineer (P.E.).

B. Luminaire Structural Support Requirements. Lighting poles, arms, and anchor bolt assemblies shall have a 25 year design life to safely resist dead loads, ice loads and the required basic wind speeds at the location of installation in accordance with the current edition of the AASHTO Design Specifications. For transformer base poles, the fabricator shall include transformer base and connecting hardware in calculations and shop drawing submittals. All transformer bases shall have been structurally tested to resist the theoretical plastic moment capacity of the pole. Certification of the plastic moment load test and FHWA breakaway requirement test of the model of base being furnished shall be submitted with the shop drawings. Shop drawings shall show breakaway base model number, and manufacturer's name and logo. Manufacturer's shop drawings shall include the ASTM designations for all materials to be used.

Alternate designs to RIP-17 or the use of aluminum to fabricate poles will require the submission of shop drawings. Copies of the standard shop drawings are on file with Traffic Operations Division, Bridge Division, and the Materials Section of Construction Division. Additional shop drawings for roadway illumination assemblies built in conformance with these drawings are not required. Pre-approved shop drawing manufacturers and assembly model numbers can be found on TxDOT's website. Category is "Roadway Illumination and Electrical Supplies."

For both transformer and shoe-base type illumination poles, provide double-pole breakaway fuse holder as shown on the Texas Department of Transportation (TxDOT) – Construction Division's (CST) materials producers list. Category is "Roadway Illumination and Electrical Supplies." Fuse holder is shown on list under Items 610 & 620.

Provide 10-amp time delay fuses.

The local public utility will provide a 240/480-Volt Power Service Drop that will be utilized by the Illumination System installed within the project.

Provide luminaire drivers with a 480-volt operating range.

Maintain all new illumination for the duration of the contract.

Place the illumination system in operation after satisfactory completion of the circuit tests. Final acceptance will not be made until the system has operated satisfactorily for a period of at least 14 consecutive days. Consider all repairs and adjustments subsidiary to pertinent Items. Pay for electrical energy during the trial period.

Inspection of all completed work provided in the Contract will be performed. The CONTRACTOR will be released from further maintenance on that project if the work is found to be satisfactory. Partial acceptance will be made and will be in no way void or alter any Items of the contract.

STATE OF TEXAS
JACOB E. WALKER
122057
LICENSED
PROFESSIONAL ENGINEER
03/23/2018

NO.	DATE	REVISION	APPROVED

WILLIAMSON COUNTY

HDR Engineering, Inc.
810 Hesters Crossing, Suite 120
Round Rock, Texas 78681
Texas Registered Engineering Firm F-754

SOUTHWEST BYPASS SEGMENT 2

GENERAL NOTES

SHEET 9 OF 12

DESIGN	FED.RD. DIV.NO.	FEDERAL AID PROJECT NO.		HIGHWAY NO.
JC	6			
GRAPHICS	STATE	DISTRICT	COUNTY	SHEET NO.
LG	TEXAS	AUS	WILLIAMSON	
CHECK	CONTROL	SECTION	JOB	13H
JW	2103	01	034	
CHECK				
JC				

PLOT DRIVER: TXDOT_PDF_BW.pltcfg PENTABLE: S2-0000020170718.tbl
USER: lgomezgonz DATE: 3/23/2018 TIME: 1:41:33 PM SCALE: 1:1
FILE: \

ITEM 618 - CONDUIT

Do not use cast iron junction boxes in concrete bridge rails. Use polymer concrete junction boxes only. Mount the junction boxes flush (+ 0", - ½") with concrete surface of concrete bridge rail.

Use materials from prequalified material producers list as shown on the Texas Department of Transportation (TxDOT) – Construction Division's (CST) materials producers list. Category is "Roadway Illumination and Electrical Supplies."

Consider the polymer concrete barrier boxes subsidiary to ITEM 618, "CONDUIT."

Refer to plans and specifications for type of conduit. Waterproof and tighten all couplings and connections. Bring all proposed and existing conduit into a ground box and 'elbow' it unless otherwise shown on the plans. Provide a bushing to protect the wire from abrasion when a conduit run terminates.

Replace sections of conduit with the size and type shown on the plans in the event the existing conduit proves unusable due to location or damage.

Fit PVC and HDPE conduit terminations with bell ends.

Secure permission from the proper authority, as directed, before cutting into or removing any sidewalks or curbs for installation of this Item.

Saw cut and replace any riprap, which must be removed to install the conduit. Replace riprap with material and texture as directed.

The locations of conduit and ground boxes are diagrammatic and so shift, as directed, to accommodate field conditions.

Install conduit in an area not exceeding two (2) feet in any direction from a straight line with the depth of the conduit at least two (2) feet, unless otherwise shown on the plans. Installation of the conduit by jacking or boring method will be at a depth of at least one (1) foot below the bottom of the base material of the roadway. Evidence of damage to the roadway during the jacking or boring operation will be enough grounds to stop the method being used.

Install conduit on a 2-inch sand cushion and backfill with at least six (6) inches of sand. Backfill the remainder of the trench with flexible base, soil or two-sack concrete as required by the location of the conduit or as directed.

Install underground conduits within a concrete encasement for all illumination conduits routed directly under a proposed roadway. Bore all illumination conduits routed directly under an existing roadway.

Consider all conduit elbows and rigid metal extensions required to be installed on PVC conduit systems subsidiary.

Install a high tension, non-metallic pull rope in all conduit runs. The pull ropes are for future use. Cap all empty conduit runs using standard weather tight conduit caps as directed. Consider this work subsidiary to the pertinent Item.

Install a continuous bare or green insulated copper wire No. 8 AWG or larger in every conduit throughout the electrical system including installed loop detectors and traffic signal cables which are in conformance with the Electrical Detail Standard Sheets and the latest edition of the National Electrical Code (NEC).

Placement of conduit under the existing pavement using the open trench method will not be allowed without prior approval.

Seal all conduit ends with a permanently soft, non-toxic duct seal. The duct seal must not adversely affect plastic materials or corrode metals.

Use a coring device when drilling holes through concrete structures. Do not use masonry or concrete drills, unless otherwise approved.

Use conduit hangers for three (3) inch and larger conduit when hanging conduit from structures. Conduit hangers shall be used for all conduits prohibited from being embedded within bridge structure and routing across the bridge structure.

Existing conduit may be proposed for reuse in this project. If the existing conduit cannot be used to place or add new electrical conductors, repair or replace this conduit, as directed. Repair of the conduit will be paid as "Extra Work" on a "Force Account" basis. Probe the existing conduit when locating drill shafts so that the existing conduit's location will be known before it is needed.

When using existing conduit, ensure that all conduits have bushings and are cleaned of dirt, mud, grease, and other debris. Restrap conduit that is being relocated to new timber poles as if it were a new installation. Consider this work subsidiary to this Item.

Consider all fittings, brackets, and junction boxes necessary to complete the installations subsidiary to the pertinent Items.

ITEM 620 – ELECTRICAL CONDUCTORS

For both transformer and shoe-base type illumination poles, provide double-pole breakaway fuse holder from manufacturers pre-qualified by the Traffic Operations Division. Fuse holder is shown on the producer list under Items 610 & 620.

Provide and install approved 10-amp time delay fuses.

Provide breakaway disconnects in all breakaway poles. Use Bussman HEBW, Littelfuse LEB, Ferraz-Shawmut FEB, or equal on ungrounded conductors. For all grounded conductors use Bussman HET, Littelfuse LET, Ferraz-Shawmut FEBN, or equal. These breakaway connectors have a white colored marking and a permanently installed solid neutral.

Install a minimum size 8 AWG equipment grounding conductor (EGC) in all conduits including loop detectors and traffic signal cables. Payment and the size of the EGC will be in accordance with standard ED (3)-14, note 12.

Clearly and permanently, mark "Illumination" on the Illumination Conductors installed in a Signal Mast-Arm Pole or Strain Pole. Make the marks easily visible from the hand hole.

Identify the conductors as shown on the Electrical Details Standard Sheets when two or more conductors are present in one conduit or enclosure. Use identification tag with two plastic straps. Each tag will indicate circuit number, letter, or other identification as shown on the plans.

Bond grounding conductors, which share the same conduit, junction box or structures, together at every accessible point, in accordance with the Electrical Detail Standard Sheets and the latest edition of the National Electrical Code (NEC).

All wiring will be in accordance with the National Electrical Code (NEC) and the appropriate Department standard sheets.

ITEM 628 – ELECTRICAL SERVICES

The service enclosure provided in this contract will have provisions for pad locking the enclosure shut.

The traffic signal system will require 120/240-Volt Power Service provided by the Local Electric Utility Company. CONTRACTOR shall make all arrangements for power.

The illumination system will require 240/480-Volt Power Service provided by the Local Electric Utility Company. CONTRACTOR shall make all arrangements for power.

ITEM 644 – SMALL ROADSIDE SIGN ASSEMBLIES

Fabricate all small signs not detailed on the plans in conformance with the latest edition of the "Standard Highway Sign Designs for Texas," refer to TxDOT's website.

STATE OF TEXAS
JACOB E. WALKER
122057
LICENSED
PROFESSIONAL ENGINEER

03/23/2018

NO.	DATE	REVISION	APPROVED

WILLIAMSON COUNTY

HDR Engineering, Inc.
810 Hesters Crossing, Suite 120
Round Rock, Texas 78681
Texas Registered Engineering Firm F-754

SOUTHWEST BYPASS SEGMENT 2

GENERAL NOTES

SHEET 10 OF 12

DESIGN	FED.RD. DIV.NO.	FEDERAL AID PROJECT NO.		HIGHWAY NO.
JC	6			
GRAPHICS LG	STATE	DISTRICT	COUNTY	SHEET NO.
CHECK JW	TEXAS	AUS	WILLIAMSON	131
CHECK JC	CONTROL	SECTION	JOB	
	2103	01	034	

PLOT DRIVER: TXDOT_PDF_BW.pltcfg PENTABLE: S2-0000020170718.tbl
USER: lgomezgonz DATE: 3/23/2018 TIME: 1:41:36 PM SCALE: 1:1
FILE: \

ITEM 662 – WORK ZONE PAVEMENT MARKINGS
Notify the CONSTRUCTION OBSERVER at least 24 hours in advance of removing existing striping and placing pavement markings & markers.

Apply markings during good weather unless otherwise directed. If markings are placed at CONTRACTOR's option, when inclement weather is impending, and the markings are damaged by subsequent precipitation, the CONTRACTOR is responsible for all costs associated with replacing the markings if required.

Remove work zone pavement markings within 48 hours after permanent striping has been completed.

Foil backed pavement markings will not be allowed.

ITEM 666 – RETROREFLECTORIZED PAVEMENT MARKINGS
Reference existing channel islands, gores, and lane striping before commencing work. Provide referencing that will include a sketch of the layout to the CONSTRUCTION OBSERVER. Obtain approval for placement of guidemarks from the CONSTRUCTION OBSERVER before installing any permanent pavement markings. Consider subsidiary to the pertinent Items.

ITEM 672 – RAISED PAVEMENT MARKERS
Place the bituminous adhesive at a temperature range of 380°F to 390°F. Place the pavement marker on the bituminous adhesive within approximately 20 seconds after the adhesive is placed on the pavement. Ensure the pavement marker rests solely on the adhesive and not the pavement surface. Ensure that a minimum of ⅛ inch layer of bituminous adhesive remains between the pavement marker and the pavement surface.

ITEM 677 – ELIMINATE EXISTING PAVEMENT MARKINGS AND MARKERS
Use flail milling methods only unless otherwise approved by the CONSTRUCTION OBSERVER. Mill minimum width necessary for complete removal of the existing markings. Place 30 Mil (min) black thermoplastic over all areas that are flail milled. The black thermoplastic must meet the specifications of Item 666. Thermoplastic considered subsidiary to this item.

ITEM 680 – HIGHWAY TRAFFIC SIGNALS
Install all of the materials necessary for a complete signal system as follows:

Provide a 7 day advance notice to the Austin District Signal Shop at (512) 832-7012, and the Georgetown/Williamson County Area Office (512) 930-5402 before beginning any work involving traffic signals.

Provide a 14 day advance notice to the City of Georgetown (512) 930-8151 before beginning any work involving traffic signals.

Furnish all materials, tools, and labor required to provide a completed installation in accordance with the plans and specifications. Furnished materials provided by the CONTRACTOR will be new undepreciated stock.

Place the traffic signal into operation after the entire traffic signal has been completed, all required striping is complete, and all conflicting signing is removed. The responsible Signal Shop will be present to program the controller and assist with detection setup.

Install 250W EQ LED illumination fixtures as shown in the plans. Test in accordance with Item 616. This work is subsidiary.

Furnish and install permanent signs mounted on the traffic signal poles. Furnish all hardware for installation. Consider all costs associated with the furnishing and installation of the permanent signs and the necessary hardware subsidiary to the pertinent Items.

After the completion of the entire signal installation (including striping), a 30-day test period begins. After it has been determined, by the County, that the field wiring and controller operation are satisfactory after this test period, and all other requirements of the project have been met, the County will relieve the CONTRACTOR of any other responsibilities for the operation of the signal.

Use qualified personnel to respond to and diagnose all trouble calls during the thirty-day test period. Repair any malfunction to Contractor-supplied signal equipment. Provide to the CONSTRUCTION OBSERVER a local telephone number, not subject to frequent changes and available on a 24-hour basis, for reporting trouble calls. Response time to reported calls must be less than 2 hours. Make appropriate repairs within 24 hours. Place a logbook in the controller cabinet and keep a record of each trouble call reported. Notify the CONSTRUCTION OBSERVER of each trouble call. Do not clear the error log in the conflict monitor during the thirty-day test period without the approval of the CONSTRUCTION OBSERVER.

Remove the existing stop sign panels (or assemblies) after the traffic signals are in operation.

Notify the CONSTRUCTION OBSERVER one (1) week before beginning any work involving traffic signals.

ITEM 682 – VEHICLE AND PEDESTRIAN SIGNAL HEADS
Install signal head attachments so the wiring to each passes from the signal pole through the attachment hardware to the signal head. Refer to District Standard for more conductor attachment information. Attachment methods not shown on the district standard are to be approved by the Construction Observer before work begins. Use UV rated tie wraps.

Ensure the signal heads are made of aluminum and are hooded and covered until the signal system is put into operation.

Each signal head will be one-way with the proper number of sections shown on the plans. Each head color will be bright yellow (Federal Yellow #13538 of Federal Standard 595). The inside of the visors will have a flat black finish.

Installed traffic signal heads within the project will have backplates unless otherwise shown on the plans. Backplates will be black aluminum.

Provide pedestrian signal head assemblies, which have a flush "egg-crated" or "Z" pattern visor for all lamps, and a one-piece reflector assembly for incandescent lamps only.

Provide louvers, which have five (5) vanes with a black finish on inside surfaces when required within the project. Fasten a hardware cloth screen, securely, with ⅝" or smaller mesh size to the front face of each louver to prevent entry by birds.

Mount signal heads level and plumb as directed.

Replace, at Contractor's expense, all burned out or defective lamps for a period of four (4) weeks from the date of the initial turn on. At the end of this 4-week period, the Construction Observer will relieve the Contractor of any maintenance of this portion of the signal system.

Use the four point mounting system (TY A) for signal heads, except in cases of skewed or vertical heads when (TY B) will be used.

Place LED's at the proper angle with the ground. The wording "top" or the "up arrow" indicates the proper fixed alignment within the signal head. Hang the head parallel to the ground once attached and not angled down as with incandescent heads. Ensure the signal head to be level and within tolerances. LED's are designed to direct the indication towards the roadway surface. Variance in head leveling will cause the LED indication to appear dim during slight movement. Ensure each LED head to be properly leveled and sight tested before final acceptance.

ITEM 684 – TRAFFIC SIGNAL CABLES
Leave at least two (2) feet for each cable run in each pull box and leave at least two (2) feet in each steel pole in addition to the required length for each separate cable. Provide an extra five (5) feet of each conductor terminating in the controller cabinet. Ensure conductors are continuous without splice from terminal point to terminal point or as directed. Do not use wire nuts.

STATE OF TEXAS
JACOB E. WALKER
122057
LICENSED
PROFESSIONAL ENGINEER
03/23/2018

NO.	DATE	REVISION	APPROVED

WILLIAMSON COUNTY

HDR Engineering, Inc.
810 Hesters Crossing, Suite 120
Round Rock, Texas 78681
Texas Registered Engineering Firm F-754

SOUTHWEST BYPASS
SEGMENT 2

GENERAL NOTES

SHEET 11 OF 12

DESIGN	FED. RD. DIV. NO.	FEDERAL AID PROJECT NO.		HIGHWAY NO.
JC	6			
GRAPHICS	STATE	DISTRICT	COUNTY	SHEET NO.
LG	TEXAS	AUS	WILLIAMSON	
CHECK	CONTROL	SECTION	JOB	13J
JW	2103	01	034	
CHECK				
JC				

PLOT DRIVER: TXDOT_PDF_BW.pltcfg PENTABLE: S2-0000020/T018.tbl
USER: lgomezgonz DATE: 3/23/2018 TIME: 2:49:40 PM SCALE: 1:1
FILE: \

ITEM 685 - ROADSIDE FLASHING BEACON ASSEMBLIES
Sign considered subsidiary to flashing beacon assembly.

ITEM 686 – TRAFFIC SIGNAL POLE ASSEMBLIES (STEEL)
Provide and install damping plates on all mast arms of 40 ft. and over. For mast arms less than 40 ft., refer to SMA and DMA Vibration Notes for guidance. Consider the cost for the provision and installation of damping plates as subsidiary to the various bid Items found within this project.

Provide double nuts on top and bottom of the base plate as shown on the standards.

Provide signal pole assemblies as shown on plans. Luminaire lamps and the installation of the arms and lamps are considered subsidiary to the pertinent Items.

When luminaires are to be installed on mast arm poles, provide a separate terminal strip in the signal pole access compartment. The terminal strip shall be a 4-circuit Buchanan-Type 104SN, Kulka-Type 985-GP-4 CU, or equivalent.

Provide a 10-amp time-delay fuse for traffic signal poles onto which luminaires are to be installed. Place the fuse in the fuse block indicated within note #4 found on State standard MA-D-12.

Furnish mast arms to the City of Georgetown for future installation, as noted in the plans.

ITEM 730 – ROADSIDE MOWING
Perform roadside mowing along the Roadway for the length of the project, as directed.

Complete spot mowing, as directed.

ITEM 734 – LITTER REMOVAL
Litter Removal, as defined below, is subsidiary to Roadside Mowing.

Complete Litter Removal Cycles along the Roadway for the length of the project, as directed.

Complete Litter Removal cycles prior to any mowing cycles.

Remove all litter on the right of way, within project limits.

ITEM 738 – CLEANING AND SWEEPING HIGHWAYS
Complete cleaning and sweeping cycles at regular intervals, as directed. Complete one cycle at the end of construction and prior to final acceptance. Subsidiary to pertinent items.

ITEM 6090 – LED INTERNALLY ILLUMINATED STREET NAME SIGNS
Coordinate with City of Georgetown for fabrication of Internally Illuminated Street Name Signs.

S2 RC – ROCK CUT
Place PPC on unstable areas as determined and directed by the CONSTRUCTION OBSERVER. Paid for under Item 431, "Pneumatically Placed Concrete".

Refer to the "BLASTING" section of the general notes for notes pertaining to blasting activities.

Alternate methods to achieve a smooth rock face must be approved by the CONSTRUCTION OBSERVER and will be subject to site testing sufficient to substantiate the method to the satisfaction of the CONSTRUCTION OBSERVER prior to implementation. No additional payment will be made for alternate methods.

S2 GA - GATE ATTENDANT
Provide 2 (two) full time gate attendants, one located at the project entrance at RM 2243 and the other at the Segment 1 I-35 SBFR entrance, during working hours for the duration of the project, or as directed by the CONSTRUCTION OBSERVER. Gate attendants shall keep a log of all personnel and vehicles entering and exiting the site. Gate attendants shall be paid for by the hour. Contract assumes 10 hours per workday (5,600 total hours).

RETAINING WALL RW-06
If the CONSTRUCTION OBSERVER directs the CONTRACTOR not to build Retaining Wall RW-06, omit Sheets 22, 78, 113, and 114 from the plan set. Adjust contract quantities as shown on sheet 22.

The list of material below is for the CONTRACTOR's information only.

It is the responsibility of the CONTRACTOR to verify all items and quantities listed below.

LIST OF MATERIAL/LABOR
SUBSIDIARY TO ITEM 680

DESCRIPTION	UNIT	QUANTITY
TRAFFIC SIGNAL CONTROLLER FOUNDATION	EA	1
LED LUMINAIRE	EA	4
R9-3 (18" x 18")	EA	4

STATE OF TEXAS
JACOB E. WALKER
122057
LICENSED
PROFESSIONAL ENGINEER
04/10/2018

NO.	DATE	REVISION	APPROVED

WILLIAMSON COUNTY

HDR Engineering, Inc.
810 Hesters Crossing, Suite 120
Round Rock, Texas 78681
Texas Registered Engineering Firm F-754

SOUTHWEST BYPASS SEGMENT 2

GENERAL NOTES

SHEET 12 OF 12

DESIGN	FED.RD. DIV.NO.	FEDERAL AID PROJECT NO.		HIGHWAY NO.
JC	6			
GRAPHICS LG	STATE	DISTRICT	COUNTY	SHEET NO.
CHECK JW	TEXAS	AUS	WILLIAMSON	13K
CHECK JC	CONTROL	SECTION	JOB	
	2103	01	034	

PLOT DRIVER: TXDOT_PDF_BW.pltcfg PENTABLE: S2-0000020170718.tbl
USER: lgomezgonz DATE: 4/10/2018 TIME: 9:54:39 AM SCALE: 1:1
FILE: \

SUMMARY OF TRAFFIC CONTROL QUANTITIES

LOCATION	502 6001 BARRICADES, SIGNS AND TRAFFIC HANDLING (MO)	S2 GA GATE ATTENDANT (HR)
SOUTHWEST BYPASS: SEGMENT 2		
TRAFFIC CONTROL PLAN SBFR I-35 - SHEET 1 of 1		2,800
CSJ: 2103-01-034	14	
TRAFFIC CONTROL PLAN RM 2243- SHEET 1 of 2		2,800
TRAFFIC CONTROL PLAN RM 2243- SHEET 2 of 2		
Total	14	5,600

SUMMARY OF ROADWAY QUANTITIES

LOCATION	100 6002 PREPARING ROW (STA)	104 6001 REMOVING CONC (PAV) (SY)	104 6013 REMOVING CONC (FOUNDATIONS) (SY)	105 6011 REMOVING STAB BASE AND ASPH PAV (2"-6") (SY)	110 6001 EXCAVATION (ROADWAY) (CY)	132 6005# EMBANKMENT (FINAL) (ORD COMP) (TY C) (CY)	132 6006## EMBANKMENT (FINAL) (DENS CONT) (TY C) (CY)	247 6041 FL BS (CMP IN PLC) (TYA GR1&2) (FNAL POS) (CY)	310 6027 PRIME COAT (MC-30 OR AE-P) (GAL)	340 6242 D-GR HMA (SQ) TY-B OR D PG64-22 (LVL-UP) (TON)	341 6008 D-GR HMA TY-B PG64-22 (TON)	341 6042 D-GR HMA TY-D SAC-B PG70-22 (TON)	354 6021 PLANE ASPH CONC PAV (0" TO 2") (SY)	432 6001 RIPRAP (CONC) (4 IN) (CY)	432 6045 RIPRAP (MOW STRIP) (4 IN) (CY)	496 6039 REMOV STR (BUILDING) (EA)	496 6043 REMOV STR (SMALL FENCE) (LF)	529 6007 CONC CURB & GUTTER (TY I) (LF)
SOUTHWEST BYPASS: SEGMENT 2																		
PLAN AND PROFILE WBFR - SHEET 1 OF 8	12	5	582	715	-	-	-	-	-	-	-	290	-	-	-	2	617	-
PLAN AND PROFILE WBFR - SHEET 2 OF 8	11	-	-	-	-	-	-	-	-	-	-	373	-	-	-	-	-	-
PLAN AND PROFILE WBFR - SHEET 3 OF 8	11	-	-	-	2,166	212	1,021	1,247	689	-	590	773	-	-	-	-	-	661
PLAN AND PROFILE WBFR - SHEET 4 OF 8	11	-	-	-	4,400	4,798	1,325	630	347	-	298	297	-	-	15	-	-	347
PLAN AND PROFILE WBFR - SHEET 5 OF 8	11	-	-	-	1,056	6,776	9,472	2,058	1,136.0	-	975	965	-	-	13	-	-	1,105
PLAN AND PROFILE WBFR - SHEET 6 OF 8	11	-	-	-	6,195	102,560	23,914	2,078	1,148	-	983	966	-	-	-	-	-	1,108
PLAN AND PROFILE WBFR - SHEET 7 OF 8	11	-	-	-	85,864	100	515	2,114	1,170	-	1,001	986	-	-	-	-	-	1,109
PLAN AND PROFILE WBFR - SHEET 8 OF 8	8	-	-	-	7,658	79	787	1,497	846	239	725	857	1,217	9	-	-	-	583
CSJ: 2103-01-034																		
PLAN AND PROFILE RM 2243 - SHEET 1 OF 1	8	-	-	-	951	224	-	214	119	590	100	434	2,958	43	-	-	-	27
Total	94	5	582	715	108,290	114,749	37,034	9,838	5,455	829	4,672	5,941	4,175	52	28	2	617	4,940

\# ZONE 1 EMBANKMENT SEE GENERAL NOTES
\## ZONE 2 EMBANKMENT SEE GENERAL NOTES

SUMMARY OF ROADWAY QUANTITIES CONT

LOCATION	529 6008 CONC CURB & GUTTER (TY II) (LF)	531 6017 CURB RAMPS (TY 22) (EA)	540 6001 MTL W-BEAM GD FEN (TIM POST) (LF)	540 6006 MTL BEAM GD FEN TRANS (THRIE-BEAM) (EA)	540 6016 DOWNSTREAM ANCHOR TERMINAL SECTION (EA)	544 6001 GUARDRAIL END TREATMENT (INSTALL) (EA)
SOUTHWEST BYPASS: SEGMENT 2						
PLAN AND PROFILE WBFR - SHEET 1 OF 8	-	-	-	-	-	-
PLAN AND PROFILE WBFR - SHEET 2 OF 8	-	-	-	-	-	-
PLAN AND PROFILE WBFR - SHEET 3 OF 8	-	-	-	-	-	-
PLAN AND PROFILE WBFR - SHEET 4 OF 8	-	-	75	3	-	2
PLAN AND PROFILE WBFR - SHEET 5 OF 8	-	-	163	1	1	1
PLAN AND PROFILE WBFR - SHEET 6 OF 8	-	-	-	-	-	-
PLAN AND PROFILE WBFR - SHEET 7 OF 8	-	-	-	-	-	-
PLAN AND PROFILE WBFR - SHEET 8 OF 8	155	-	-	-	-	-
CSJ: 2103-01-034						
PLAN AND PROFILE RM 2243 - SHEET 1 OF 1	274	4	-	-	-	-
Total	429	4	238	4	1	3

SUMMARY OF RETAINING WALL QUANTITIES

LOCATION	420 6007 CL A CONC (FLUME) (CY)	423 RW05 RETAINING WALL (MSE) (ASHLAR STONE FIN) (SF)	423 RW06 RETAINING WALL (MSE) (ASHLAR STONE FIN) (SF)	432 6001 RIPRAP (CONC) (4 IN) (CY)	432 6045 RIPRAP (MOW STRIP) (4 IN) (CY)	450 6023 RAIL (TY SSTR) (LF)	556 6006 PIPE UNDERDRAINS (TY 6) (6") (LF)	740 6005 ANTI - GRAFFITI COATNG (PERMNENT-TY III) (SF)
SOUTHWEST BYPASS: SEGMENT 2								
RW-05 - SHEET 1 OF 1	1	2,690	-	-	5	180	215	2,690
RW-06 - SHEET 1 OF 1	-	-	2,416	28	-	114	-	-
Total	1	2,690	2,416	28	5	294	215	2,690

NO.	DATE	REVISION	APPROVED

WILLIAMSON COUNTY

HDR Engineering, Inc.
810 Hesters Crossing, Suite 120
Round Rock, Texas 78681
Texas Registered Engineering Firm F-754

SOUTHWEST BYPASS SEGMENT 2

SUMMARY OF QUANTITIES

SHEET 1 OF 9

DESIGN	FED.RD. DIV.NO.	FEDERAL AID PROJECT NO.		HIGHWAY NO.
JC	6			
GRAPHICS	STATE	DISTRICT	COUNTY	SHEET NO.
LG	TEXAS	AUS	WILLIAMSON	
CHECK	CONTROL	SECTION	JOB	14
JW	2103	01	034	
CHECK				
JC				

PLOT DRIVER: TXDOT_PDF_BW.pltcfg PENTABLE: S2-00002017018.tbl
USER: lgomezgonz DATE: 4/10/2018 TIME: 9:52:53 AM SCALE: 1:1
FILE: \

WBFR EARTHWORK QUANTITIES

STATION	ITEM 110 6001 EXCAVATION (ROADWAY) (CY)	ITEM 132 6005 EMBANKMENT (FINAL) (ORD COMP) (TY C) (CY)	ITEM 132 6006 * EMBANKMENT (FINAL) (DENS CONT) (TY C) (CY)
394+90.00	0	0	0
395+00.00	34	4	0
395+50.00	85	16	258
396+00.00	77	16	375
396+50.00	153	16	185
397+00.00	187	16	83
397+50.00	187	16	47
398+00.00	156	16	47
398+50.00	127	16	21
399+00.00	131	16	4
399+50.00	174	16	0
400+00.00	189	16	1
400+50.00	185	16	0
401+00.00	223	16	0
401+50.00	258	16	0
402+00.00	275	16	0
402+50.00	322	16	0
403+00.00	747	22	0
403+50.00	776	40	0
404+00.00	427	38	0
404+50.00	568	20	0
405+00.00	997	0	0
405+50.00	257	0	0
406+00.00	0	0	0
406+50.00	0	0	0
407+00.00	0	0	0
407+50.00	0	0	0
408+00.00	0	0	0
408+50.00	0	0	0
409+00.00	0	0	0
409+50.00	0	0	0
410+00.00	0	0	0
410+50.00	0	0	0
411+00.00	0	0	0
411+50.00	0	0	0
412+00.00	10	2,634	431
412+50.00	21	2,012	894
413+00.00	23	1,522	914
413+50.00	29	935	875
414+00.00	36	141	858
414+50.00	29	24	797
415+00.00	17	12	785
415+50.00	13	12	661
416+00.00	14	9	529
416+50.00	22	8	394
417+00.00	34	9	209
417+50.00	71	9	75
418+00.00	90	9	36
418+50.00	51	8	139
419+00.00	19	8	307
419+50.00	23	8	364
420+00.00	47	88	348
420+50.00	82	281	291
421+00.00	73	367	260
421+50.00	81	364	280
422+00.00	82	436	181
422+50.00	163	632	109
423+00.00	49	837	280
423+50.00	8	1,057	780
424+00.00	5	1,555	1,178
424+50.00	5	2,871	1,211
425+00.00	5	5,085	1,211
425+50.00	5	6,705	1,211
426+00.00	4	8,090	1,211
426+50.00	5	8,990	1,209
427+00.00	5	9,870	1,176
427+50.00	3	10,366	1,102

WBFR EARTHWORK QUANTITIES CONT.

STATION	ITEM 110 6001 EXCAVATION (ROADWAY) (CY)	ITEM 132 6005 EMBANKMENT (FINAL) (ORD COMP) (TY C) (CY)	ITEM 132 6006* EMBANKMENT (FINAL) (DENS CONT) (TY C) (CY)
428+00.00	64	10,460	1,012
428+50.00	285	10,152	980
429+00.00	593	9,070	1,453
429+50.00	828	7,901	984
430+00.00	948	4,945	990
430+50.00	881	1,898	997
431+00.00	585	518	1,004
431+50.00	266	186	1,013
432+00.00	109	271	1,022
432+50.00	67	468	1,025
433+00.00	37	617	1,022
433+50.00	18	826	1,020
434+00.00	16	1,033	1,015
434+50.00	1,461	683	868
435+00.00	3,557	96	498
435+50.00	4,155	4	17
436+00.00	4,150	0	0
436+50.00	4,342	0	0
437+00.00	4,670	0	0
437+50.00	4,898	0	0
438+00.00	4,921	0	0
438+50.00	4,873	0	0
439+00.00	4,799	0	0
439+50.00	4,703	0	0
440+00.00	4,530	0	0
440+50.00	4,310	0	0
441+00.00	4,156	0	0
441+50.00	3,984	0	0
442+00.00	3,804	0	0
442+50.00	3,641	0	0
443+00.00	3,478	0	0
443+50.00	3,292	0	0
444+00.00	2,966	0	0
444+50.00	2,609	0	0
445+00.00	2,250	0	0
445+50.00	1,776	0	0
446+00.00	1,250	0	0
446+50.00	824	0	0
447+00.00	628	0	14
447+50.00	667	0	156
448+00.00	758	3	219
448+50.00	684	8	201
449+00.00	543	8	125
449+50.00	512	9	55
450+00.00	550	21	16
450+50.00	603	9	1
451+07.54	639	21	0
TOTAL	107,339	114,525	37,034

* DENSITY CONTROLLED EMBANKMENT IS REQUIRED UP TO 8' BENEATH THE PAVEMENT SURFACE. SEE GENERAL NOTES FOR MORE INFORMATION.

TABLES INCLUDE WBFR EARTHWORK ONLY. SEE FENCING AND GRADING PLAN FOR ADDITIONAL EARTHWORK FOR SITE GRADING REQUIRED.

RM 2243 EARTHWORK QUANTITIES

STATION	ITEM 110 6001 EXCAVATION (ROADWAY) (CY)	ITEM 132 6005 EMBANKMENT (FINAL) (ORD COMP) (TY C) (CY)
475+07.12	0	0
475+50.00	11	0
476+00.00	37	5
476+50.00	65	12
477+00.00	108	20
477+50.00	171	30
478+00.00	193	30
478+50.00	166	30
479+00.00	97	31
479+50.00	76	30
480+00.00	0	0
480+50.00	0	21
481+00.00	0	0
481+50.00	0	15
482+00.00	0	0
482+50.00	11	0
483+00.00	16	0
TOTAL	951	224

NO.	DATE	REVISION	APPROVED

WILLIAMSON COUNTY

HDR Engineering, Inc.
810 Hesters Crossing, Suite 120
Round Rock, Texas 78681
Texas Registered Engineering Firm F-754

SOUTHWEST BYPASS SEGMENT 2

SUMMARY OF QUANTITIES

SHEET 2 OF 9

DESIGN	FED.RD. DIV.NO.	FEDERAL AID PROJECT NO.		HIGHWAY NO.
JC	6			
GRAPHICS LG	STATE	DISTRICT	COUNTY	SHEET NO.
CHECK JW	TEXAS	AUS	WILLIAMSON	15
CHECK JC	CONTROL 2103	SECTION 01	JOB 034	

PLOT DRIVER: TXDOT_PDF_BW.pltcfg PENTABLE: S2-00000201707018.tbl
USER: lgomezgonz DATE: 3/23/2018 TIME: 2:03:17 PM SCALE: 1:1
FILE: \

SUMMARY OF FENCING AND GRADING

LOCATION	110 6001	132 6005	431 8001	496 6043	512 6005	550 6001	550 6006	552 8001	552 8002	S2 BD	S2 RC
	EXCAVATION (ROADWAY)	EMBANKMENT (FINAL) (ORD COMP) (TY C)	PNEUMATICALLY PLACED CONC (ROCK FACIA)	REMOV STR (SMALL FENCE)	PORT CTB (FUR & INST) (F-SHAPE) (TY 1)	CHAIN LINK FENCE (INSTALL) (6')	GATE (REMOVE)	WIRE FENCE	GALVANIZED TUBE GATE	BOULDER DELINEATION	ROCK CUT
	CY	CY	SY	LF	LF	LF	EA	LF	EA	LF	SF
SOUTHWEST BYPASS: SEGMENT 2											
FENCING AND GRADING PLAN - SHEET 1 OF 6	-	-	-	391	-	-	1	164	-	-	-
FENCING AND GRADING PLAN - SHEET 2 OF 6	26,443	461	-	-	1,440	-	-	3,507	3	1,852	-
FENCING AND GRADING PLAN - SHEET 3 OF 6	12,664	227	-	-	-	-	-	3,966	2	2,860	-
FENCING AND GRADING PLAN - SHEET 4 OF 6	23,845	7,792	31	-	-	116	-	4,012	-	2,640	2,834
FENCING AND GRADING PLAN - SHEET 5 OF 6	-	-	540	-	-	-	-	2,716	-	699	48,578
FENCING AND GRADING PLAN - SHEET 6 OF 6	201	-	54	558	-	-	1	1,051	-	-	4,900
Total	63,153	8,480	625	949	1,440	116	2	15,416	5	8,051	56,312

SUMMARY OF DRAINAGE QUANTITIES

LOCATION	401 6001	432 6033	464 6005	464 6007	464 6008	464 6018	464 6026	466 6005	466 6130	467 6001	467 6388	467 6390	467 6394	467 6419	467 6422	467 6448	467 6453
	FLOWABLE BACKFILL	RIPRAP (STONE PROTECTION) (18 IN)	RC PIPE (CL III) (24 IN)	RC PIPE (CL III) (30 IN)	RC PIPE (CL III) (36 IN)	RC PIPE (CL IV) (24 IN)	RC PIPE (CL V) (24 IN)	HEADWALL (CH - FW - O) (DIA= 24 IN)	HEADWALL (CH - PW - S) (DIA= 24 IN)	SET (PIPE RUNNER ASSEMBLY)	SET (TY II) (24 IN) (RCP) (3:1) (C)	SET (TY II) (24 IN) (RCP) (4:1) (C)	SET (TY II) (24 IN) (RCP) (6:1) (C)	SET (TY II) (30 IN) (RCP) (4:1) (C)	SET (TY II) (30 IN) (RCP) (6:1) (C)	SET (TY II) (36 IN) (RCP) (3:1) (C)	SET (TY II) (36 IN) (RCP) (6:1) (C)
	CY	CY	LF	LF	LF	LF	LF	EA	EA	EA	EA	EA	EA	EA	EA	EA	EA
SOUTHWEST BYPASS: SEGMENT 2																	
CULVERT NO. 6 LAYOUT - SHEET 1 OF 1	21	53	84	-	-	-	-	-	-	-	1	1	-	-	-	-	-
CULVERT NO. 7 LAYOUT - SHEET 1 OF 1	30	35	-	168	-	-	-	-	-	-	-	-	-	2	2	-	-
CULVERT NO. 8 LAYOUT - SHEET 1 OF 2	-	30	-	-	-	200	-	-	-	-	-	-	1	-	-	-	-
CULVERT NO. 8 LAYOUT - SHEET 2 OF 2	-	-	-	-	-	110	-	1	-	-	-	-	-	-	-	-	-
CULVERT NO. 8B LAYOUT - SHEET 1 OF 2	-	25	-	-	-	-	94	-	-	-	-	-	1	-	-	-	-
CULVERT NO. 8B LAYOUT - SHEET 2 OF 2	-	-	-	-	-	-	170	-	1	-	-	-	-	-	-	-	-
CULVERT NO. 9 LAYOUT - SHEET 1 OF 1	116	41	-	-	360	-	-	-	-	1	-	-	-	-	-	3	3
Total	167	184	84	168	360	310	264	1	1	1	1	1	2	2	2	3	3

NO.	DATE	REVISION	APPROVED

WILLIAMSON COUNTY
HDR Engineering, Inc.
810 Hesters Crossing, Suite 120
Round Rock, Texas 78681
Texas Registered Engineering Firm F-754

SOUTHWEST BYPASS
SEGMENT 2

SUMMARY OF QUANTITIES

SHEET 3 OF 9

DESIGN	FED.RD. DIV.NO.	FEDERAL AID PROJECT NO.		HIGHWAY NO.
JC	6			
GRAPHICS LG	STATE	DISTRICT	COUNTY	SHEET NO.
CHECK JW	TEXAS	AUS	WILLIAMSON	16
CHECK JC	CONTROL	SECTION	JOB	
	2103	01	034	

PLOT DRIVER: TXDOT_PDF_BW.pltcfg PENTABLE: S2-0000020/0718.tbl
USER: lgomezgonz DATE: 4/11/2018 TIME: 7:01:36 AM SCALE: 1:1
FILE: \

TRAFFIC SIGNAL QUANTITY SUMMARY (INTERIM)

CONTRACTOR PROVIDED AND INSTALLED ITEMS				
TXDOT SPECS				
ITEM NO.	DESC. CODE	DESCRIPTION	UNIT	LEANDER RD AND SW BYPASS
416	6032	DRILL SHAFT (TRF SIG POLE) (36 IN)	LF	52
618	6046	CONDT (PVC) (SCH 80) (2")	LF	400
618	6047	CONDT (PVC) (SCH 80) (2") (BORE)	LF	335
618	6053	CONDT (PVC) (SCH 80) (3")	LF	130
618	6054	CONDT (PVC) (SCH 80) (3") (BORE)	LF	740
620	6007	ELEC CONDR (NO.8) BARE	LF	1340
620	6008	ELEC CONDR (NO.8) INSULATED	LF	1800
621	6002	TRAY CABLE (3 CONDR) (12 AWG)	LF	860
624	6010	GROUND BOX TY D (162922)W/APRON	EA	5
628	6164	ELC SRV TY D 120/240 070(NS)AL(E)PS(U)	EA	1
680	6002	INSTALL HWY TRF SIG (ISOLATED)	EA	1
*	*	TRAFFIC CONTROLLER FOUNDATION	EA	1
*	*	LED LUMINAIRE	EA	4
*	*	R9-3 (18"X18")	EA	4
686	6040	INS TRF SIG PL AM(S)1 ARM(36')LUM&ILSN**	EA	1
686	6044	INS TRF SIG PL AM(S)1 ARM(40')LUM&ILSN**	EA	1
686	6048	INS TRF SIG PL AM(S)1 ARM(44')LUM&ILSN**	EA	2
6090	6002	ILSN(LED)(8 D)(CITY OF GEORGETOWN)	EA	4

NOTES
* SUBSIDIARY TO ITEM 680.
** MAST ARMS TO BE FURNISHED AND DELIVERED TO THE CITY OF GEORGETOWN TO BE INSTALLED AT A LATER TIME.

NO.	DATE	REVISION	APPROVED

HDR Engineering, Inc.
810 Hesters Crossing, Suite 120
Round Rock, Texas 78681
Texas Registered Engineering Firm F-754

SOUTHWEST BYPASS SEGMENT 2

SUMMARY OF QUANTITIES

SHEET 4 OF 9

DESIGN	FED.RD. DIV.NO.	FEDERAL AID PROJECT NO.		HIGHWAY NO.
TG	6			
GRAPHICS	STATE	DISTRICT	COUNTY	SHEET NO.
AF	TEXAS	AUS	WILLIAMSON	17
CHECK	CONTROL	SECTION	JOB	
BP	2103	01	034	
CHECK				
TG				

PLOT DRIVER: TXDOT_PDF_BW.pltcfg
USER: lgomezgonz DATE: 3/23/2018
FILE: \
TIME: 2:03:21 PM
PENTABLE: S2-0000020/T018.tbl
SCALE: 1:1

TRAFFIC SIGNAL QUANTITY SUMMARY(ULTIMATE)(FOR INFORMATION ONLY)

ITEMS TO BE INSTALLED BY CITY OF GEORGETOWN				
TXDOT SPECS				
ITEM NO.	DESC. CODE	DESCRIPTION	UNIT	LEANDER RD AND SW BYPASS
620	6009	ELEC CONDR (NO.6) BARE	LF	70
620	6010	ELEC CONDR (NO.6) INSULATED	LF	140
680	6011	INSTALL HWY TRF SIG (UPGRADE)	EA	1
*	*	TRAFFIC CONTROLLER	EA	1
*	*	TRAFFIC CONTROLLER CABINET	EA	1
*	*	BATTERY BACK-UP UNIT	EA	1
*	*	R10-17T (36"X42")	EA	4
*	*	WIND DAMPNER	EA	3
*	*	CONFIRMATION LIGHTS	EA	8
*	*	REMOVE SIGNS ON POLES	EA	2
682	6001	VEH SIG SEC (12")LED(GRN)	EA	8
682	6002	VEH SIG SEC (12")LED(GRN ARW)	EA	4
682	6003	VEH SIG SEC (12")LED(YEL)	EA	8
682	6004	VEH SIG SEC (12")LED(YEL ARW)	EA	8
682	6005	VEH SIG SEC (12")LED(RED)	EA	8
682	6006	VEH SIG SEC (12")LED(RED ARW)	EA	4
682	6018	PED SIG SEC (LED)(COUNTDOWN)	EA	6
682	6023	BACK PLATE (12")(3 SEC)	EA	8
682	6024	BACK PLATE (12")(4 SEC)	EA	4
684	6028	TRF SIG CBL (TY A)(14 AWG)(2 CONDR)	LF	1045
684	6031	TRF SIG CBL (TY A)(14 AWG)(5 CONDR)	LF	2039
684	6033	TRF SIG CBL (TY A)(14 AWG)(7 CONDR)	LF	964
684	6049	TRF SIG CBL (TY A)(16 AWG)(3 CONDR)	LF	180
686	6292	INS TRF SIG PL AM (MAST)(INSTALL ONLY)	EA	4
688	6001	PED DETECT PUSH BUTTON (APS)	EA	6
688	6003	PED DETECTOR CONTROLLER UNIT	EA	1
6025	6001	RADAR PRESENCE DETECTOR	EA	4
6025	6002	RADAR DETECTION CABLE(6 CONDR)	LF	1928
6027	6003	CONDUIT (PREPARE)	LF	1605
6057	6001	RADAR ADVANCED DETECTION DEVICE	EA	4
**	**	RADAR PROCESSOR SYSTEM(4 CHANNEL)	EA	2

NOTES
* SUBSIDIARY TO ITEM 680.
** SUBSIDIARY TO ITEM 6025 AND 6057.

NOTE
QUANTITIES INCLUDED IN ULTIMATE SIGNAL PLANS ARE PROVIDED FOR INFORMATION ONLY AND ARE NOT INCLUDED IN THE BID FOR INTERIM SIGNAL INSTALLATION. CITY OF GEORGETOWN WILL BID AND CONSTRUCT ULTIMATE SIGNAL ONCE TRAFFIC SIGNAL WARRANTS ARE MET FOR THIS INTERSECTION.

NO.	DATE	REVISION	APPROVED

WILLIAMSON COUNTY TEXAS
HDR Engineering, Inc.
810 Hesters Crossing, Suite 120
Round Rock, Texas 78681
Texas Registered Engineering Firm F-754

SOUTHWEST BYPASS SEGMENT 2

SUMMARY OF QUANTITIES

SHEET 5 OF 9

DESIGN	FED.RD. DIV.NO.	FEDERAL AID PROJECT NO.		HIGHWAY NO.
TG	6			
GRAPHICS	STATE	DISTRICT	COUNTY	SHEET NO.
AF	TEXAS	AUS	WILLIAMSON	
CHECK	CONTROL	SECTION	JOB	18
BP	2103	01	034	
CHECK				
TG				

PLOT DRIVER: TXDOT_PDF_BW.pltcfg PENTABLE: S2-0000020170718.tbl
USER: lgomezgonz DATE: 3/23/2018 TIME: 2:03:23 PM SCALE:1:1
FILE: \

SUMMARY OF ILLUMINATION QUANTITIES

LOCATION	416 6029	432 6001	610 6105	610 6290	610 6291	618 0002***	618 6023	618 6024	618 6025	618 6066	620 6007	620 6008	624 6002	628 6044
	DRILL SHAFT (RDWY ILL POLE) (30 IN)	RIPRAP (CONC) (4 IN)	IN RD IL (U/P) (TY 1) (250W EQ) LED	IN RD IL (TY SA) 50T-12 (400W EQ) LED	IN RD IL (TY SA) 50T-12-12 (40 0W EQ) LED	CONT (LFMC) (1-1/4)	CONDT (PVC) (SCH 40) (2")	CONDT (PVC) (SCH 40) (2") (BORE)	CONDT (PVC) (SCH 40) (2") (CONC ENCSE)	CONDT (RM) (1 1/4")	ELEC CONDR (NO. 8) BARE	ELEC CONDR (NO. 8) INSULATED	GROUND BOX TY A (122311) W/APRON	ELC SRV TY A 240/480 060 (NS) SS (E) PS (U)
	LF	CY	EA	EA	EA	LF	LF	LF	LF	LF	LF	LF	EA	EA
ILLUMINATION LAYOUT														
BEGIN TO STA 379+00	32	2	-	2	2	-	755	-	-	-	951	1,902	-	-
STA 396+00 TO STA 407+50	-	-	-	-	-	-	2,985	-	-	-	361	722	4	1
STA 407+50 TO STA 417+00	-	-	-	-	-	-	2,977	-	-	-	72	144	4	-
STA 445+68 TO END	-	-	-	-	-	-	115	778	398	-	-	-	4	1
ILLUMINATION UNDERPASS LAYOUT														
TCS QUARRY BRIDGE	-	-	8	-	-	24	-	-	-	161	240	480	-	-
Total	32	2	8	2	2	24	6,832	778	398	161	1,624	3,248	12	2

*** FOR CONTRACTOR'S INFORMATION ONLY.

SUMMARY OF REMOVAL PAVEMENT MARKINGS QUANTITIES

LOCATION	677 6001	677 6007
	ELIM EXT PAV MRK & MRKS (4")	ELIM EXT PAV MRK & MRKS (24")
	LF	LF
SOUTHWEST BYPASS: SEGMENT 2		
SBFR I-35 Sheet 1 of 1	1,153	-
RM 2243 Sheet 2 of 3	-	-
RAMPNB2 Sheet 1 of 1	592	199
CSJ: 2103-01-034		
RM 2243 Sheet 1 of 3	1,452	-
RM 2243 Sheet 2 of 3	70	-
RM 2243 Sheet 3 of 3	1,114	-
Total	4,381	199

NOTES:
1. QUANTITIES WITHIN TXDOT ROW (CSJ: 2103-01-034) ARE SEPARATED FOR ADMINISTRATIVE PURPOSES, EVEN THOUGH THEY MAY BE CALLED OUT ON THE SAME SHEET.

NO.	DATE	REVISION	APPROVED

WILLIAMSON COUNTY

HDR Engineering, Inc.
810 Hesters Crossing, Suite 120
Round Rock, Texas 78681
Texas Registered Engineering Firm F-754

SOUTHWEST BYPASS SEGMENT 2

SUMMARY OF QUANTITIES

SHEET 6 OF 9

DESIGN	FED.RD. DIV.NO.	FEDERAL AID PROJECT NO.		HIGHWAY NO.
LG	6			
GRAPHICS: LG	STATE	DISTRICT	COUNTY	SHEET NO.
CHECK: JC	TEXAS	AUS	WILLIAMSON	19
CHECK: JW	CONTROL	SECTION	JOB	
	2103	01	034	

PLOT DRIVER: TXDOT_PDF_BW.pltcfg USER: lgomezgonz DATE: 3/23/2018 FILE: \
PENTABLE: S2-0000020/7018.tbl TIME: 2:03:25 PM SCALE: 1:20

SUMMARY OF SIGN AND PAVEMENT MARKINGS QUANTITIES

LOCATION	644 6001	644 6004	644 6012	644 6030	644 6066	644 6076	658 6004	658 6005	658 6014	658 6047	658 6061	666 6006	666 6036	666 6048	666 6054
	IN SM RD SN SUP&AM TY10BWG(1) SA(P)	IN SM RD SN SUP&AM TY10BWG(1) SA(T)	IN SM RD SN SUP&AM TY10BWG(1)SB(T)	IN SM RD SN SUP&AM TYS80(1)SA(T)	IN SM RD SN SUP&AM (RAIL MOUNT)	REMOVE SM RD SN SUP&AM	INSTL DEL ASSM (D-SW)SZ 1(FLX)SRF	INSTL DEL ASSM (D-SW)SZ 1(FLX)SRF(BI)	INSTL DEL ASSM (D-SW)SZ (BR)CTB (BI)	INSTL OM ASSM (OM-2Y)(WC)GND	INSTL DEL ASSM (D-SW)SZ 1(BRF)GF2	REFL PAV MRK TY I (W)4"(DOT) (100MIL)	REFL PAV MRK TY I (W)8"(SLD) (100MIL)	REFL PAV MRK TY I (W)24"(SLD) (100MIL)	REFL PAV MRK TY I (W)(ARROW) (100MIL)
	EA	EA	EA	EA	EA	EA	EA	EA	EA	EA	EA	LF	LF	LF	EA
SOUTHWEST BYPASS: SEGMENT 2															
SIGNING AND STRIPING SBFR I-35 - SHEET 1 OF 1	1	7	1	2	-	-	25	-	-	-	-	56	230	16	2
SIGNING AND STRIPING WBFR - SHEET 1 OF 8	3	1	-	-	2	-	-	31	29	-	6	-	-	-	1
SIGNING AND STRIPING WBFR - SHEET 2 OF 8	-	-	-	-	2	-	-	-	37	2	6	-	-	-	-
SIGNING AND STRIPING WBFR - SHEET 3 OF 8	-	-	-	-	-	-	-	-	-	2	-	-	-	-	-
SIGNING AND STRIPING WBFR - SHEET 4 OF 8	-	1	-	1	1	-	-	-	41	-	9	-	-	-	-
SIGNING AND STRIPING WBFR - SHEET 5 OF 8	-	1	-	-	-	-	-	-	1	1	8	-	-	-	-
SIGNING AND STRIPING WBFR - SHEET 6 OF 8	-	1	-	-	-	-	-	-	4	-	-	-	-	-	-
SIGNING AND STRIPING WBFR - SHEET 7 OF 8	1	2	-	2	-	-	-	-	-	-	-	-	-	-	-
SIGNING AND STRIPING WBFR - SHEET 8 OF 8	4	1	-	1	-	-	-	-	-	2	-	-	736	-	8
SIGNING AND STRIPING RM 2243 - SHEET 2 OF 3	2	4	-	2	-	1	4	-	-	-	-	-	846	90	6
CSJ: 2103-01-034															
SIGNING AND STRIPING RM 2243 - SHEET 1 OF 3	2	1	-	1	-	2	-	-	-	-	-	-	473	-	3
SIGNING AND STRIPING RM 2243 - SHEET 2 OF 3	3	-	-	-	-	5	8	-	-	-	-	-	1,222	96	6
SIGNING AND STRIPING RM 2243 - SHEET 3 OF 3	-	1	-	1	-	2	-	-	-	-	-	-	299	-	2
Total	16	20	1	10	5	10	37	31	112	7	29	56	3,806	202	28

SUMMARY OF SIGN AND PAVEMENT MARKINGS QUANTITIES CONT.

LOCATION	666 6078	666 6102	666 6147	666 6168	666 6170	666 6178	666 6184	666 6192	666 6207	666 6214	666 6282	666 6287	666 6303	666 6315
	REFL PAV MRK TY I (W)(WORD) (100MIL)	REF PAV MRK TY I(W)36"(YLD TRI)(100MIL)	REFL PAV MRK TY I (Y) 24"(SLD) (100MIL)	REFL PAV MRK TY II (W) 4" (DOT)	REFL PAV MRK TY II (W) 4" (SLD)	REFL PAV MRK TY II (W) 8" (SLD)	REFL PAV MRK TY II (W) (ARROW)	REFL PAV MRK TY II (W) (WORD)	REFL PAV MRK TY II (Y) 4" (SLD)	REFL PAV MRK TY II (Y) 24" (SLD)	REF PROF PAV MRK TY I(W)4"(SLD)(060MIL)	REF PROF PAV MRK TY I(Y)4"(SLD)(090MIL)	RE PM W/RET REQ TY I (W)4"(SLD) (100MIL)	RE PM W/RET REQ TY I (Y)4"(SLD) (100MIL)
	EA	EA	LF	LF	LF	LF	EA	EA	LF	LF	LF	LF	LF	LF
SOUTHWEST BYPASS: SEGMENT 2														
SIGNING AND STRIPING SBFR I-35 - SHEET 1 OF 1	2	-	89	56	772	230	1	1	936	89	-	-	1,057	1,182
SIGNING AND STRIPING WBFR - SHEET 1 OF 8	1	-	-	-	1,218	-	-	-	-	-	1,899	1,900	-	-
SIGNING AND STRIPING WBFR - SHEET 2 OF 8	-	-	-	-	620	-	-	-	-	-	2,401	2,402	-	-
SIGNING AND STRIPING WBFR - SHEET 3 OF 8	-	-	-	-	-	-	-	-	-	-	2,201	2,200	-	-
SIGNING AND STRIPING WBFR - SHEET 4 OF 8	-	-	-	-	1,520	-	-	-	-	-	2,200	2,200	-	-
SIGNING AND STRIPING WBFR - SHEET 5 OF 8	-	-	-	-	-	-	-	-	-	-	2,200	2,200	-	-
SIGNING AND STRIPING WBFR - SHEET 6 OF 8	-	-	-	-	-	-	-	-	-	-	2,200	2,200	-	-
SIGNING AND STRIPING WBFR - SHEET 7 OF 8	-	-	68	-	-	-	-	-	-	-	2,104	2,199	96	539
SIGNING AND STRIPING WBFR - SHEET 8 OF 8	8	-	7	-	-	192	2	2	-	-	313	700	435	172
SIGNING AND STRIPING RM 2243 - SHEET 2 OF 3	6	10	-	-	-	-	-	-	-	-	-	300	642	244
CSJ: 2103-01-034														
SIGNING AND STRIPING RM 2243 - SHEET 1 OF 3	3	-	-	-	-	-	2	2	1,264	-	-	-	268	1,264
SIGNING AND STRIPING RM 2243 - SHEET 2 OF 3	6	10	-	-	-	-	-	-	50	-	-	-	605	817
SIGNING AND STRIPING RM 2243 - SHEET 3 OF 3	2	-	-	-	-	-	2	2	1,216	-	-	-	-	1,216
Total	28	20	164	56	4,130	422	7	7	3,466	89	15,518	16,301	3,103	5,434

SUMMARY OF SIGN AND PAVEMENT MARKINGS QUANTITIES CONT.

LOCATION	672 6007	672 6009	672 6010	685 6004
	REFL PAV MRKR TY I-C	REFL PAV MRKR TY II-A-A	REFL PAV MRKR TY II-C-R	INSTL RDSD FLSH BCN ASSM (SOLAR PWRD)
	EA	EA	EA	EA
SOUTHWEST BYPASS: SEGMENT 2				
SIGNING AND STRIPING SBFR I-35 - SHEET 1 OF 1	7	48	-	-
SIGNING AND STRIPING WBFR - SHEET 1 OF 8	-	94	-	-
SIGNING AND STRIPING WBFR - SHEET 2 OF 8	-	30	-	-
SIGNING AND STRIPING WBFR - SHEET 3 OF 8	-	28	-	-
SIGNING AND STRIPING WBFR - SHEET 4 OF 8	-	28	-	-
SIGNING AND STRIPING WBFR - SHEET 5 OF 8	-	28	-	-
SIGNING AND STRIPING WBFR - SHEET 6 OF 8	-	28	-	-
SIGNING AND STRIPING WBFR - SHEET 7 OF 8	-	48	-	-
SIGNING AND STRIPING WBFR - SHEET 8 OF 8	24	60	14	-
SIGNING AND STRIPING RM 2243 - SHEET 2 OF 3	13	28	205	2
CSJ: 2103-01-034				
SIGNING AND STRIPING RM 2243 - SHEET 1 OF 3	16	62	7	1
SIGNING AND STRIPING RM 2243 - SHEET 2 OF 3	20	40	321	-
SIGNING AND STRIPING RM 2243 - SHEET 3 OF 3	15	60	-	1
Total	95	582	547	4

NOTES:

1. QUANTITIES WITHIN TXDOT ROW (CSJ:2103-01-034) ARE SEPARATED FOR ADMINISTRATIVE PURPOSES, EVEN THOUGH THEY MAY BE CALLED OUT ON THE SAME SHEET.

NO.	DATE	REVISION	APPROVED

WILLIAMSON COUNTY

HDR Engineering, Inc.
810 Hesters Crossing, Suite 120
Round Rock, Texas 78681
Texas Registered Engineering Firm F-754

SOUTHWEST BYPASS SEGMENT 2

SUMMARY OF QUANTITIES

SHEET 7 OF 9

DESIGN	FED.RD. DIV.NO.	FEDERAL AID PROJECT NO.		HIGHWAY NO.
LG	6			
GRAPHICS LG	STATE	DISTRICT	COUNTY	SHEET NO.
CHECK JC	TEXAS	AUS	WILLIAMSON	20
CHECK JW	CONTROL 2103	SECTION 01	JOB 034	

PLOT DRIVER: TXDOT_PDF_BW.pltcfg PENTABLE: S2-0000020170718.tbl
USER: lgomezgonz DATE: 3/23/2018 TIME: 2:03:26 PM SCALE: 1:20
FILE: \

SUMMARY OF EROSION CONTROL QUANTITIES

LOCATION	160 6005 FURNISHING AND PLACING TOPSOIL	161 6017 COMPOST MANUF TOPSOIL (4")	164 6009 BROADCAST SEED (TEMP) (WARM)	164 6011 BROADCAST SEED (TEMP) (COOL)	164 6023 CELL FBR MLCH SEED(PERM) (RURAL) (CLAY)	166 6002 * FERTILIZER	168 6001 VEGETATIVE WATERING	169 6001 SOIL RETENTION BLANKETS (CL 1) (TY A)	432 8001 RIPRAP (STONE PROTECTION) (8 IN) (TY I)	432 8002 RIPRAP (STONE PROTECTION) (8 IN) (TY II)	506 6002 ROCK FILTER DAMS (INSTALL) (TY 2)	506 6011 ROCK FILTER DAMS (REMOVE)	506 6020 CONSTRUCTION EXITS (INSTALL) (TY 1)	506 6024 CONSTRUCTION EXITS (REMOVE)	506 6038 TEMP SEDMT CONT FENCE (INSTALL)	506 6039 TEMP SEDMT CONT FENCE (REMOVE)	506 8002 REMOVE ROCK
	CY	SY	SY	SY	SY	TON	MG	SY	CY	CY	LF	LF	SY	SY	LF	LF	SY
SOUTHWEST BYPASS: SEGMENT 2																	
TEMPORARY EROSION CONTROL PLAN - SHEET 1 OF 8	-	-	-	-	-	-	-	-	-	-	-	26	-	-	963	2,335	-
TEMPORARY EROSION CONTROL PLAN - SHEET 2 OF 8	-	-	-	-	-	-	-	-	-	-	-	161	-	-	381	1,803	-
TEMPORARY EROSION CONTROL PLAN - SHEET 3 OF 8	-	-	-	-	-	-	-	-	-	-	30	30	80	80	1,781	2,229	1,814
TEMPORARY EROSION CONTROL PLAN - SHEET 4 OF 8	-	-	-	-	-	-	-	-	-	-	-	-	-	-	454	454	-
TEMPORARY EROSION CONTROL PLAN - SHEET 5 OF 8	-	-	-	-	-	-	-	-	-	-	15	15	-	-	-	-	-
TEMPORARY EROSION CONTROL PLAN - SHEET 6 OF 8	-	-	-	-	-	-	-	-	-	-	60	60	-	-	-	-	-
TEMPORARY EROSION CONTROL PLAN - SHEET 7 OF 8	-	-	-	-	-	-	-	-	-	-	-	-	-	-	875	875	3,299
TEMPORARY EROSION CONTROL PLAN - SHEET 8 OF 8	-	-	-	-	-	-	-	-	-	-	65	65	80	80	699	699	2,270
CSJ: 2103-01-034																	
TEMPORARY EROSION CONTROL PLAN - SHEET 8 OF 8	-	-	-	-	-	-	-	-	-	-	30	30	-	-	144	144	-
SOUTHWEST BYPASS: SEGMENT 2																	
PERMANENT EROSION CONTROL PLAN - SHEET 1 OF 8	-	3,466	1,733	1,733	3,466	0.13	572	-	-	-	-	-	-	-	-	-	-
PERMANENT EROSION CONTROL PLAN - SHEET 2 OF 8	-	60	30	30	60	-	10	-	-	-	-	-	-	-	-	-	-
PERMANENT EROSION CONTROL PLAN - SHEET 3 OF 8	482	8,960	4,480	4,480	8,960	0.35	1,479	5,564	-	-	-	-	-	-	-	-	-
PERMANENT EROSION CONTROL PLAN - SHEET 4 OF 8	1,510	8,698	4,349	4,349	8,698	0.34	1,435	1,782	12	689	-	-	-	-	-	-	-
PERMANENT EROSION CONTROL PLAN - SHEET 5 OF 8	-	-	-	-	-	-	-	-	394	2,620	-	-	-	-	-	-	-
PERMANENT EROSION CONTROL PLAN - SHEET 6 OF 8	31	218	109	109	218	0.01	36	218	467	5,644	-	-	-	-	-	-	-
PERMANENT EROSION CONTROL PLAN - SHEET 7 OF 8	2,043	14,029	7,015	7,015	14,029	0.54	2,315	4,949	4	146	-	-	-	-	-	-	-
PERMANENT EROSION CONTROL PLAN - SHEET 8 OF 8	327	6,250	3,125	3,125	6,250	0.24	1,032	4,277	-	79	-	-	-	-	-	-	-
CSJ: 2103-01-034																	
PERMANENT EROSION CONTROL PLAN - SHEET 8 OF 8	-	625	313	313	625	0	103	429	-	-	-	-	-	-	-	-	-
Total	4,393	42,306	21,154	21,154	42,306	2	6,982	17,219	877	9,178	200	387	160	160	5,297	8,539	7,383

* FOR CONTRACTOR'S INFORMATION ONLY

NOTES:
1. QUANTITIES WITHIN TXDOT ROW (CSJ: 2103-01-034) ARE SEPARATED FOR ADMINISTRATIVE PURPOSES, EVEN THOUGH THEY MAY BE CALLED OUT ON THE SAME SHEET.

NO.	DATE	REVISION	APPROVED

WILLIAMSON COUNTY

HDR Engineering, Inc.
810 Hesters Crossing, Suite 120
Round Rock, Texas 78681
Texas Registered Engineering Firm F-754

SOUTHWEST BYPASS SEGMENT 2

SUMMARY OF QUANTITIES

SHEET 8 OF 9

DESIGN	FED.RD. DIV.NO.	FEDERAL AID PROJECT NO.		HIGHWAY NO.
LG	6			
GRAPHICS: LG	STATE	DISTRICT	COUNTY	SHEET NO.
CHECK: JC	TEXAS	AUS	WILLIAMSON	21
CHECK: JW	CONTROL	SECTION	JOB	
	2103	01	034	

PLOT DRIVER: TXDOT_PDF_BW.pltcfg USER: lgomezgonz DATE: 3/23/2018 FILE: \
PENTABLE: S2-0000020/T0718.tbl TIME: 2:03:28 PM SCALE: 1:20

CONTRACT QUANTITY ADJUSTMENTS IF RETAINING WALL RW-06 IS NOT CONSTRUCTED

LOCATION	132 6005	423 RW06	432 6001	432 6033	432 8002	450 6023	464 6026	466 6130	467 6394	550 6001	552 8001	S2 BD
	EMBANKMENT (FINAL) (ORD COMP) (TY C)	RETAINING WALL (MSE) (ASHLAR STONE FIN)	RIPRAP (CONC) (4 IN)	RIPRAP (STONE PROTECTION) (18 IN)	RIPRAP (STONE PROTECTION) (8 IN) (TY II)	RAIL (TY SSTR)	RC PIPE (CL V) (24 IN)	HEADWALL (CH - PW - S) (DIA= 24 IN)	SET (TY II) (24 IN) (RCP) (6: 1) (C)	CHAIN LINK FENCE (INSTALL) (6')	WIRE FENCE	BOULDER DELINEATION
	CY	SF	CY	CY	CY	LF	LF	EA	EA	LF	LF	LF
SOUTHWEST BYPASS: SEGMENT 2												
RW-06 - SHEET 1 OF 1	-	(2,416)	(28)	-	-	(114)	-	-	-	-	-	-
FENCING AND GRADING PLAN - SHEET 4 OF 6	1,080	-	-	-	-	-	-	-	-	(116)	107	107
CULVERT NO. 8B LAYOUT - SHEET 1 OF 2	-	-	-	(25)	-	-	(94)	-	(1)	-	-	-
CULVERT NO. 8B LAYOUT - SHEET 2 OF 2	-	-	-	-	-	-	(170)	(1)	-	-	-	-
PERMANENT EROSION CONTROL PLAN - SHEET 6 OF 8	-	-	-	-	38	-	-	-	-	-	-	-
Total	1,080	(2,416)	(28)	(25)	38	(114)	(264)	(1)	(1)	(116)	107	107

NO.	DATE	REVISION	APPROVED

WILLIAMSON COUNTY

HDR Engineering, Inc.
810 Hesters Crossing, Suite 120
Round Rock, Texas 78681
Texas Registered Engineering Firm F-754

SOUTHWEST BYPASS SEGMENT 2

SUMMARY OF QUANTITIES

SHEET 9 OF 9

DESIGN	FED. RD. DIV. NO.	FEDERAL AID PROJECT NO.		HIGHWAY NO.
JC	6			
GRAPHICS	STATE	DISTRICT	COUNTY	SHEET NO.
LG	TEXAS	AUS	WILLIAMSON	22
CHECK	CONTROL	SECTION	JOB	
JW	2103	01	034	
CHECK				
JC				

PLOT DRIVER: TXDOT_PDF_BW.pltcfg
USER: lgomezgonz DATE: 4/10/2018
FILE:
PENTABLE: S2-0000020/T0718.tbl
TIME: 9:53:06 AM SCALE: 1:1

SUMMARY OF SMALL SIGNS

SM RD SGN ASSM TY XXXXX (X) XX (X-XXXX)

PLAN SHEET NO.	SIGN NO.	SIGN NOMENCLATURE	SIGN	DIMENSIONS	FLAT ALUMINUM (TYPE A)	EXAL ALUMINUM (TYPE G)	POST TYPE FRP = Fiberglass TWT = Thin-Wall 10BWG = 10 BWG S80 = Sch 80	POSTS 1 or 2	ANCHOR TYPE UA=Universal Conc UB=Universal Bolt SA=Slipbase-Conc SB=Slipbase-Bolt WS=Wedge Steel WP=Wedge Plastic	MOUNTING DESIGNATION PREFABRICATED P = "Plain" T = "T" U = "U"	1EXT or 2EXT = # of Ext BM = Extruded Wind Beam WC = 1.12 #/ft Wing Channel EXAL= Extruded Alum Sign Panels	BRIDGE MOUNT CLEARANCE SIGNS (See Note 2) TY = TYPE TY N TY S
218	1	D3-2	SW BYPASS NEXT RIGHT	78 x 36	X		S80	1	SA	T		
	2	R3-7R	RIGHT LANE MUST TURN RIGHT	36 x 36	X		10BWG	1	SA	P		
	3	W4-1R	MERGEING TRAFFIC	48 x 48	X		10BWG	1	SA	T		
	4	5-1a	WRONG WAY	42 x 30	X		10BWG	1	SA	T		
	5	R5-1	DO NOT ENTER	36 x 36	X		10BWG	1	SA	T		
	6	W1-6R	RIGHT ARROW	48 x 24	X		10BWG	1	SA	T		
	7	R6-1R	ONE WAY	54 x 18	X		10BWG	1	SA	T		
	8	5-1a	WRONG WAY	42 x 30	X		10BWG	1	SA	T		
	9	W1-2R	CURVE ADVISORY SPEED 35	48 x48	X		10BWG	1	SA	T		
	10	R3-5R	RIGHT TURN ONLY	30 x 36	X		S80	1	SA	T		
		R5-1	DO NOT ENTER	36 x 36								
	11	R1-1	STOP	48 x 48	X		10BWG	1	SB	T		
219	1	M3-3B	SOUTH	24 x 12	X		10BWG	1	SA	P		
		M1-1B	INTERSTATE 35	24 x 24								
		M6-1B	RIGHT ARROW	21 x 15								
	2	R3-5R	RIGHT TURN ONLY	30 x 36	X		10BWG	1	SA	P		
	3	W3-1	STOP AHEAD	48 x 48	X			1	RM	TYPE 3		
	4	M2-1B	JCT	21 x 15	X			1	RM	TYPE 1		
		M3-3B	SOUTH	12 x 24								
		M1-1B	INTERSTATE 35	24 x 24								
	5	W8-13aT	BRIDGE MAY ICE IN COLD WEATHER	48 x 48	X		10BWG	1	SA	T		
	6	R2-1	SPEET LIMIT 50	30 x 36	X		10BWG	1	SA	P		
220	1	W1-2L	CURVE ADVISORY SPEED 40	48 x 48	X			1	RM	TYPE 1		
	2	W8-13aT	BRIDGE MAY ICE IN COLD WEATHER	48 x 48	X			1	RM	TYPE 1		
222	1	W8-13aT	BRIDGE MAY ICE IN COLD WEATHER	48 x 48	X		10BWG	1	SA	T		
	2	R16-4 (MOD)	ACTIVE QUARRY ZONE / CELL PHONE USE PROHIBITED	72 x 42	X		S80	1	SA	T		
	3	R8-3a	NO PARKING	48 x 48	X			1	RM	TYPE 3		
223	1	W8-13aT	BRIDGE MAY ICE IN COLD WEATHER	48 x 48	X		10BWG	1	SA	T		
224	1	R8-3a	NO PARKING	48 x 48	X		10BWG	1	SA	T		
225	1	R16-4 (MOD)	ACTIVE QUARRY ZONE / CELL PHONE USE PROHIBITED	72 x 42	X		S80	1	SA	T		
	2	M2-1	JCT	21 x 15	X		10BWG	1	SA	P		
		M1-6R	TEXAS RANCH ROAD	24 x 24								
	3	W3-1	STOP AHEAD	48 x 48	X		10BWG	1	SA	T		
	4	D3-2	LEANDER RD NEXT INTERSECTION	102 x 36	X		S80	1	SA	T		
	5	R3-8b	ADVANCE INTERSECTION LANE CONTROL	48 x 30	X		10BWG	1	SA	T		

ALUMINUM SIGN BLANKS THICKNESS	
Square Feet	Minimum Thickness
Less than 7.5	0.080"
7.5 to 15	0.100"
Greater than 15	0.125"

The Standard Highway Sign Designs for Texas (SHSD) can be found at the following website.

http://www.txdot.gov/

NOTE:

1. Sign supports shall be located as shown on the plans, except that the Engineer may shift the sign supports, within design guidelines, where necessary to secure a more desirable location or to avoid conflict with utilities. Unless otherwise shown on the plans, the Contractor shall stake and the Engineer will verify all sign support locations.
2. For installation of bridge mount clearance signs, see Bridge Mounted Clearance Sign Assembly (BMCS)Standard Sheet.
3. For Sign Support Descriptive Codes, see Sign Mounting Details Small Roadside Signs General Notes & Details SMD(GEN).

STATE OF TEXAS
JUSTIN D. CARLTON
127593
LICENSED
PROFESSIONAL ENGINEER

03/23/2018

Texas Department of Transportation

Traffic Operations Division Standard

SUMMARY OF SMALL SIGNS

SOSS SHEET 1 OF 2

FILE: sums16.dgn	DN: TxDOT	CK: TxDOT	DW: TxDOT	CK: TxDOT
©TxDOT May 1987	CONT	SECT	JOB	HIGHWAY
REVISIONS	2103	01	034	
4-16	DIST	COUNTY		SHEET NO.
8-16	AUS	WILLIAMSON		33

18

DISCLAIMER:
The use of this standard is governed by the "Texas Engineering Practice Act". No warranty of any kind is made by TxDOT for any purpose whatsoever. TxDOT assumes no responsibility for the conversion of this standard to other formats or for incorrect results or damages resulting from its use.

DATE: 3/23/2018 12:34:23 PM
FILE: c:\pwworking\dal\d0910664\sums01.dgn

SUMMARY OF SMALL SIGNS

SM RD SGN ASSM TY XXXXX (X) XX (X-XXXX)

PLAN SHEET NO.	SIGN NO.	SIGN NOMENCLATURE	SIGN	DIMENSIONS	FLAT ALUMINUM (TYPE A)	EXAL ALUMINUM (TYPE G)	POST TYPE FRP = Fiberglass TWT = Thin-Wall 10BWG = 10 BWG S80 = Sch 80	POSTS 1 or 2	ANCHOR TYPE UA=Universal Conc UB=Universal Bolt SA=Slipbase-Conc SB=Slipbase-Bolt WS=Wedge Steel WP=Wedge Plastic	MOUNTING DESIGNATION PREFABRICATED P = "Plain" T = "T" U = "U"	1EXT or 2EXT = # of Ext BM = Extruded Wind Beam WC = 1.12 #/ft Wing Channel EXAL= Extruded Alum Sign Panels	BRIDGE MOUNT CLEARANCE SIGNS (See Note 2) TY = TYPE TY N TY S
226	1	R2-1	SPEET LIMIT 50	30 x 36	X		10BWG	1	SA	P		
	2	R3-7R	RIGHT LANE MUST TURN RIGHT	36 x 36	X		10BWG	1	SA	P		
	3	D3-2	LEANDER RD NEXT INTERSECTION	102 x 36	X		S80	1	SA	T		
	4	R3-8b	ADVANCE INTERSECTION LANE CONTROL	48 x 30	X		10BWG	1	SA	T		
	5	R3-7R	RIGHT LANE MUST TURN RIGHT	36 x 36	X		10BWG	1	SA	P		
	6	R2-1	SPEET LIMIT 50	30 x 36	X		10BWG	1	SA	P		
227	1	W2-1	INTERSECTION WARNING	48 x 48	X		10BWG	1	SA	T	SPRFBA(1)-13	
	2	D3-2	SW BYPASS NEXT INTERSECTION	102 x 36	X		S80	1	SA	T		
	3	R2-1	SPEET LIMIT 55	24 x 30	X		10BWG	1	SA	P		
	4	R3-7R	RIGHT LANE MUST TURN RIGHT	36 x 36	X		10BWG	1	SA	P		
228	1	R1-2	YIELD	48 x 48 x 48	X		10BWG	1	SA	T		
	2	R1-1	STOP	48 x 48	X		S80	1	SA	T	SPRFBA(1)-13	
		W4-4	CROSS TRAFFIC DOES NOT STOP	36 x 18								
	3	R3-5R	RIGHT TURN ONLY	30 x 36	X		10BWG	1	SA	P		
	4	R1-2	YIELD	48 x 48 x 48	X		10BWG	1	SA	T		
	5	M1-6R	TEXAS RANCH ROAD	24 x 24	X		10BWG	1	SA	P		
		M6-4	DIRECTIONAL ARROW	21 x 15								
	6	R3-5R	RIGHT TURN ONLY	30 x 36	X		10BWG	1	SA	P		
	7	R3-5R	RIGHT TURN ONLY	30 x 36	X		10BWG	1	SA	P		
	8	R1-2	YIELD	48 x 48 x 48	X		10BWG	1	SA	T		
	9	R1-2	YIELD	48 x 48 x 48	X		10BWG	1	SA	T		
	10	R1-1	STOP	48 x 48	X		S80	1	SA	T	SPRFBA(1)-13	
		W4-4	CROSSING TRAFFIC DOES NOT STOP	36 x 18								
	11	R3-5R	RIGHT TURN ONLY	30 x 36	X		10BWG	1	SA	P		
229	1	D3-2	SW BYPASS NEXT INTERSECTION	102 x 36	X		S80	1	SA	T		
	2	W2-1	INTERSECTION WARNING	48 x 48	X		10BWG	1	SA	T	SPRFBA(1)-13	

ALUMINUM SIGN BLANKS THICKNESS	
Square Feet	Minimum Thickness
Less than 7.5	0.080"
7.5 to 15	0.100"
Greater than 15	0.125"

The Standard Highway Sign Designs for Texas (SHSD) can be found at the following website.

http://www.txdot.gov/

NOTE:

1. Sign supports shall be located as shown on the plans, except that the Engineer may shift the sign supports, within design guidelines, where necessary to secure a more desirable location or to avoid conflict with utilities. Unless otherwise shown on the plans, the Contractor shall stake and the Engineer will verify all sign support locations.
2. For installation of bridge mount clearance signs, see Bridge Mounted Clearance Sign Assembly (BMCS)Standard Sheet.
3. For Sign Support Descriptive Codes, see Sign Mounting Details Small Roadside Signs General Notes & Details SMD(GEN).

STATE OF TEXAS
JUSTIN D. CARLTON
127593
LICENSED
PROFESSIONAL ENGINEER

03/23/2018

Texas Department of Transportation

Traffic Operations Division Standard

SUMMARY OF SMALL SIGNS

SOSS SHEET 2 OF 2

FILE: sums16.dgn	DN: TxDOT	CK: TxDOT	DW: TxDOT	CK: TxDOT
© TxDOT May 1987	CONT	SECT	JOB	HIGHWAY
REVISIONS	2103	01	034	
4-16	DIST	COUNTY		SHEET NO.
8-16	AUS	WILLIAMSON		24

18

DISCLAIMER:
The use of this standard is governed by the "Texas Engineering Practice Act". No warranty of any kind is made by TxDOT for any purpose whatsoever. TxDOT assumes no responsibility for the conversion of this standard to other formats or for incorrect results or damages resulting from its use.

DATE: 3/23/2018 12:35:27 PM
FILE: c:\pwworking\dal\d0910664\sums02.dgn

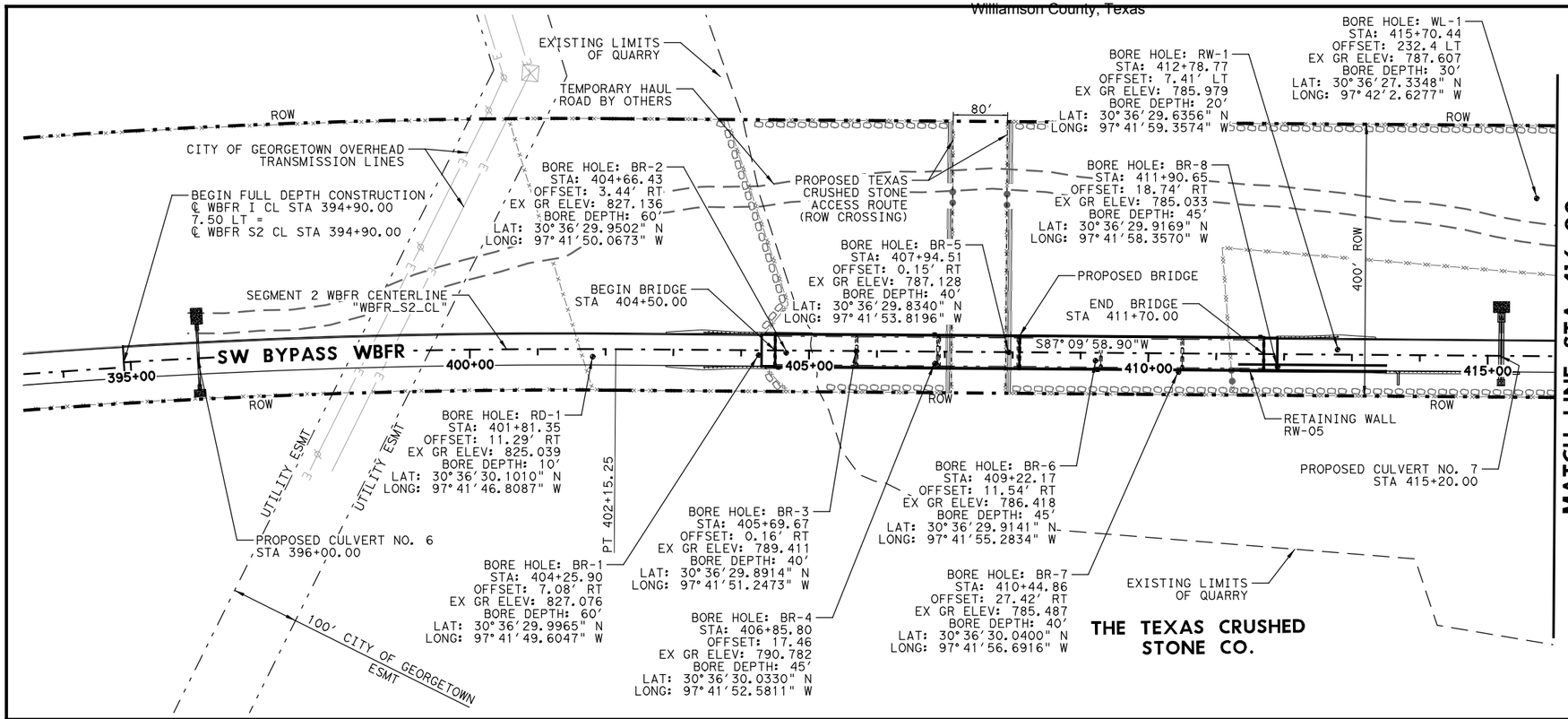

NOTES:
SEE "SW BYPASS WBFR BORING LOGS" SHEETS FOR BORING LOG DATA.

0 100 200 300 400
SCALE IN FEET

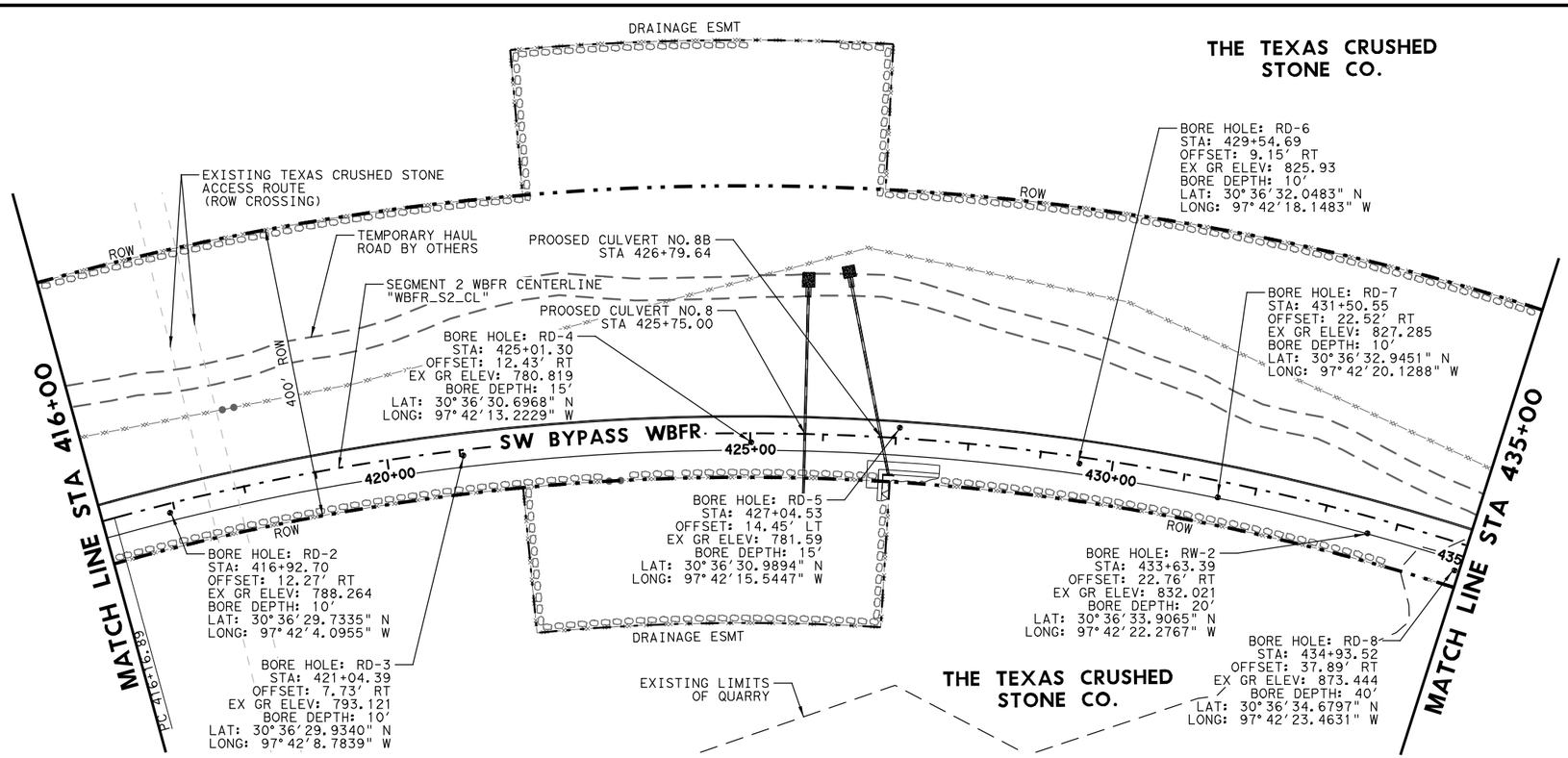

STATE OF TEXAS
JACOB E. WALKER
122057
LICENSED PROFESSIONAL ENGINEER
03/23/2018

NO.	DATE	REVISION	APPROVED

WILLIAMSON COUNTY

HDR Engineering, Inc.
810 Hesters Crossing, Suite 120
Round Rock, Texas 78681
Texas Registered Engineering Firm F-754

SOUTHWEST BYPASS SEGMENT 2

BORE HOLE LAYOUT WBFR

SCALE: 1"=200' SHEET 1 OF 2

DESIGN	FED.RD. DIV.NO.	FEDERAL AID PROJECT NO.		HIGHWAY NO.
JC	6			
GRAPHICS	STATE	DISTRICT	COUNTY	SHEET NO.
LG	TEXAS	AUS	WILLIAMSON	
CHECK	CONTROL	SECTION	JOB	25
JW	2103	01	034	
CHECK				
JC				

PLOT DRIVER: TXDOT_PDF_BW.pltcfg PENTABLE: S2-0000020170718.tbl
USER: lgomezgonz DATE: 3/23/2018 TIME: 1:42:03 PM SCALE: 1:200
FILE: \

4/12/2018 7:20 AM

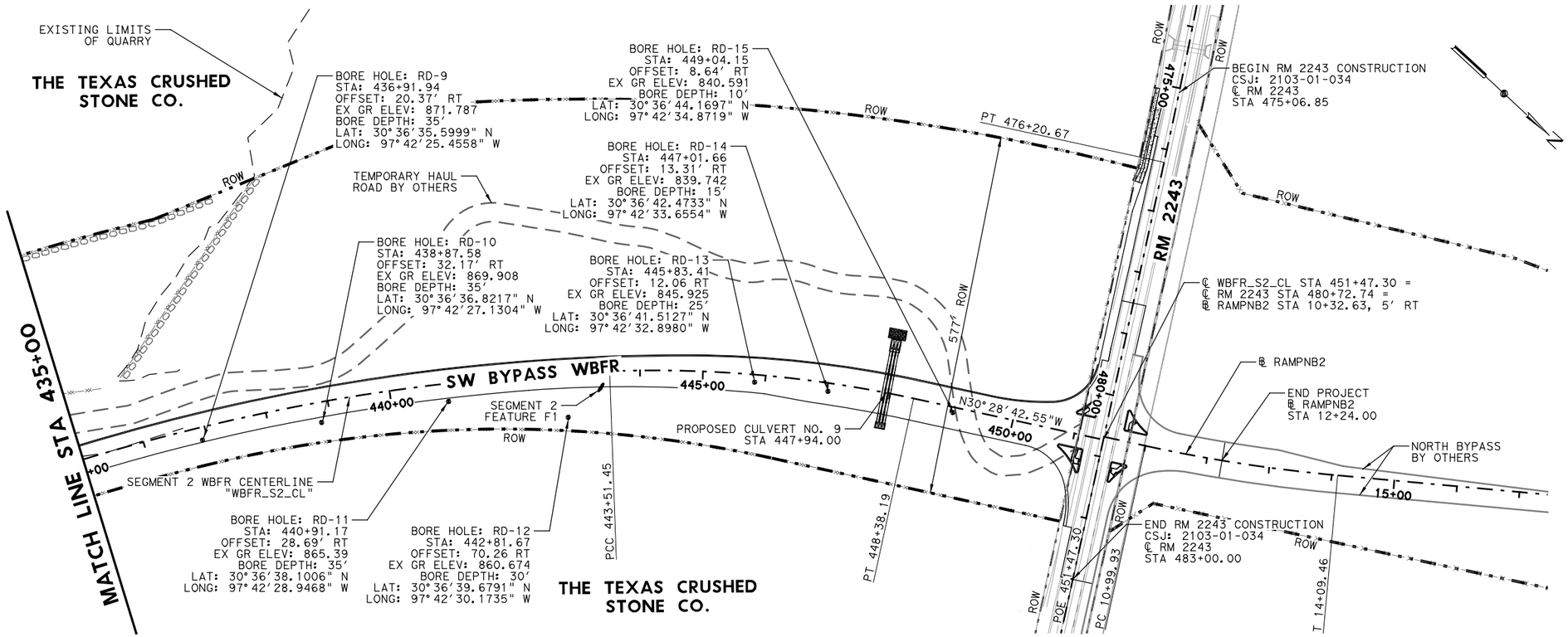

NOTES:
SEE "SW BYPASS WBFR BORING LOGS" SHEETS FOR BORING LOG DATA.

0 100 200 300 400
SCALE IN FEET

STATE OF TEXAS
JACOB E. WALKER
122057
LICENSED
PROFESSIONAL ENGINEER

03/23/2018

NO.	DATE	REVISION	APPROVED

WILLIAMSON COUNTY

HDR Engineering, Inc.
810 Hesters Crossing, Suite 120
Round Rock, Texas 78681
Texas Registered Engineering Firm F-754

SOUTHWEST BYPASS SEGMENT 2

BORE HOLE LAYOUT WBFR

SCALE: 1"=200' SHEET 2 OF 2

DESIGN	FED.RD. DIV.NO.	FEDERAL AID PROJECT NO.		HIGHWAY NO.
JC	6			
GRAPHICS LG	STATE	DISTRICT	COUNTY	SHEET NO.
CHECK JW	TEXAS	AUS	WILLIAMSON	26
CHECK JC	CONTROL 2103	SECTION 01	JOB 034	

PLOT DRIVER: TXDOT_POF_BW.pltcfg PENTABLE: S2-0000020170718.tbl
USER: lgomezgonz DATE: 3/23/2018 TIME: 1:42:19 PM SCALE: 1:200
FILE: \

4/12/2018 7:20 AM

Test Hole No. RD-01
Sta 401+81, 11 ft RT

Test Hole No. RD-01
El 825.0

LIMESTONE, soft, brown to tan
50(1.38) 50(0.75)
50(0.25) 50(0.13) LIMESTONE, hard to very hard, tan
50(0.63) 50(0.25)
50(0.88) 31(6)
50(0.25) 50(0.13)
50(1.12) 50(0.88) LIMESTONE, soft to very hard, tan to gray
50(0.75) 50(0.75)
50(0.88) 50(0.25)

B/H = 785.0

Test Hole No. RD-02
Sta 416+93, 12 ft RT

Test Hole No. RD-02
El 788.3

LIMESTONE, soft, tan
50(0.88) 50(0.5)
LIMESTONE, very hard, tan
50(1) 50(0.5)

B/H = 778.3

Test Hole No. RD-03
Sta 421+04, 8 ft RT

Test Hole No. RD-03
El 793.1

LIMESTONE, soft, tan
31(6) 50(4.25)
LIMESTONE, soft to hard, tan
50(1) 50(0.5)

B/H = 783.1

Test Hole No. RD-06
Sta 429+55, 9 ft RT

Test Hole No. RD-06
El 825.9

LIMESTONE, soft, tan
50(1.25) 50(0.25)
LIMESTONE, hard, tan
50(1) 50(0.63)

B/H = 815.9

Test Hole No. RD-04
Sta 425+01, 12 ft RT

Test Hole No. RD-04
El 780.8

LIMESTONE, soft, tan
50(5.13) 50(0.25)
23(6) 50(1.25) LIMESTONE, soft, tan
50(5.75) 50(2)

B/H = 765.8

Test Hole No. RD-05
Sta 427+05, 14 ft RT

Test Hole No. RD-05
El 781.6

LIMESTONE, soft, tan
50(1) 50(0.25)
LIMESTONE, hard, tan
50(1.25) 50(0.25)
LIMESTONE, hard, tan
50(1) 50(0.5)

B/H = 766.6

NO.	DATE	REVISION	APPROVED

WILLIAMSON COUNTY

HDR Engineering, Inc.
810 Hesters Crossing, Suite 120
Round Rock, Texas 78681
Texas Registered Engineering Firm F-754

SOUTHWEST BYPASS
SEGMENT 2

BORING LOGS
WBFR

SCALE: 1"=20' SHEET 1 OF 3

DESIGN	FED.RD. DIV.NO.	FEDERAL AID PROJECT NO.		HIGHWAY NO.
TW	6			
GRAPHICS	STATE	DISTRICT	COUNTY	SHEET NO.
LG	TEXAS	AUS	WILLIAMSON	
CHECK	CONTROL	SECTION	JOB	27
JW	2103	01	034	
CHECK				
JC				

PLOT DRIVER: TXDOT_PDF_BW.pltcfg PENTABLE: S2-00000201707I8.tbl
USER: lgomezgonz DATE: 3/23/2018 TIME: 10:27:32 AM SCALE: 1:20
FILE: \

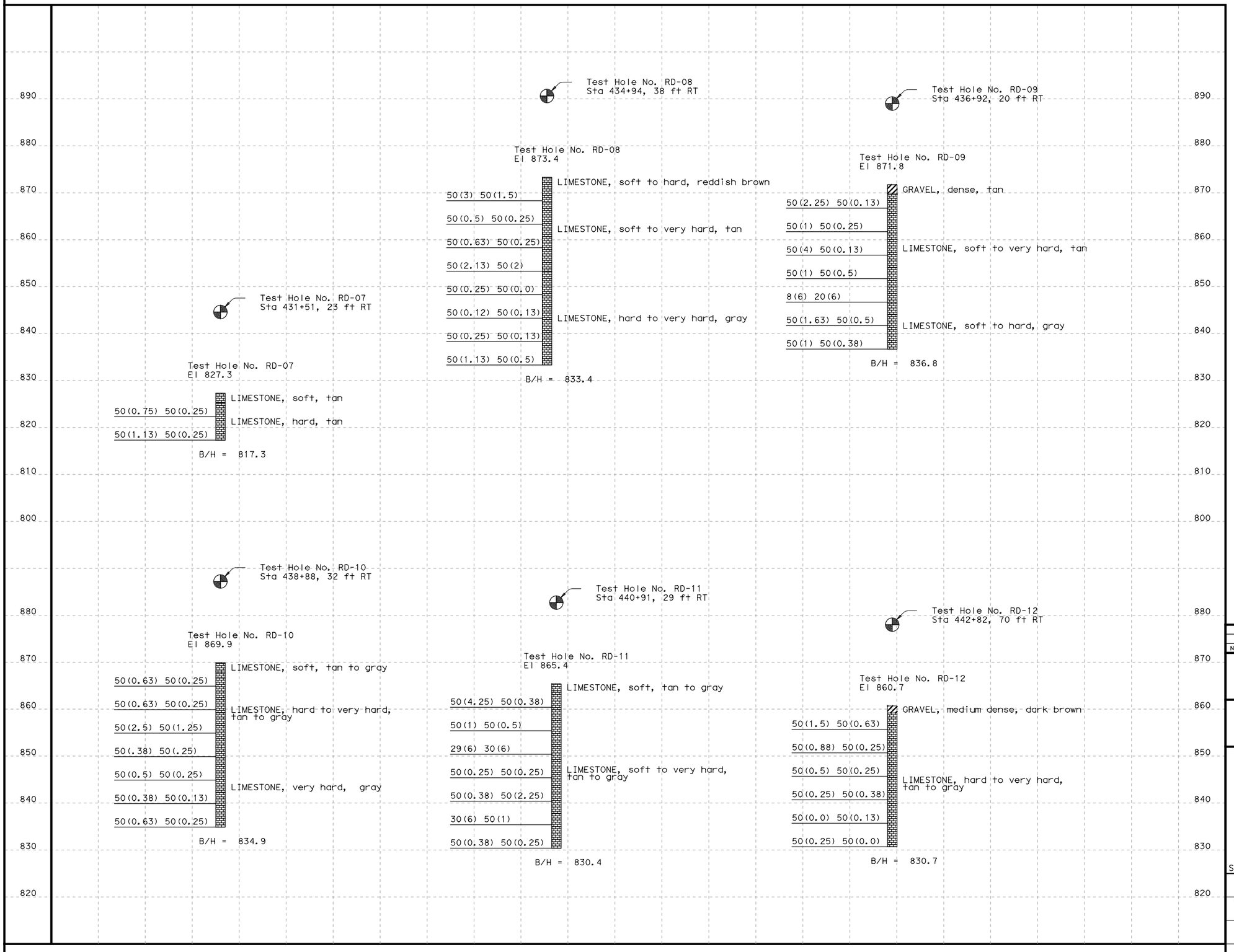

NO.	DATE	REVISION	APPROVED

WILLIAMSON COUNTY

HDR Engineering, Inc.
810 Hesters Crossing, Suite 120
Round Rock, Texas 78681
Texas Registered Engineering Firm F-754

SOUTHWEST BYPASS
SEGMENT 2

BORING LOGS
WBFR

SCALE: 1"=20'

SHEET 2 OF 3

DESIGN	FED.RD. DIV.NO.	FEDERAL AID PROJECT NO.		HIGHWAY NO.
TW	6			
GRAPHICS	STATE	DISTRICT	COUNTY	SHEET NO.
LG	TEXAS	AUS	WILLIAMSON	
CHECK	CONTROL	SECTION	JOB	28
JW	2103	01	034	
CHECK				
JC				

PLOT DRIVER: TXDOT_PDF_BW.pltcfg USER: lgomezgonz DATE: 3/23/2018 TIME: 10:27:35 AM SCALE: 1:20 PENTABLE: S2-0000020I7018.tbl FILE: \

Test Hole No. RD-13
Sta 445+83, 12 ft RT

Test Hole No. RD-13
El 845.9

50(0.82) 50(0.43) GRAVEL, dense, dark brown to tan
50(0.37) 50(0.13)
50(4.5) 50(0.38) LIMESTONE, hard to very hard, tan to gray
40(6) 50(1.25)
50(1) 50(0.25)

B/H = 820.9

Test Hole No. RD-14
Sta 447+02, 13 ft RT

Test Hole No. RD-14
El 839.7

50(2.75) 50(1.5) GRAVEL, dense, dark brown to tan
50(1.13) 50(1) LIMESTONE, soft to very hard, tan to gray
50(.25) 50(0.0)

B/H = 824.7

Test Hole No. RD-15
Sta 449+04, 9 ft RT

Test Hole No. RD-15
El 840.6

20(6) 50(0.13) GRAVEL, very dense, dark brown
50(0.37) 50(0.38) LIMESTONE, soft to very hard, tan to gray

B/H = 830.6

Test Hole No. RW-02
Sta 433+63, 23 ft RT

Test Hole No. RW-02
El 832.0

50(1) 50(0.5) LIMESTONE, completely weathered, tan
50(1.25) 50(1)
50(0.5) 50(0.25) LIMESTONE, hard to very hard, tan
50(1) 50(0.38)

B/H = 812

Test Hole No. RW-01
Sta 412+79, 7 ft RT

Test Hole No. RW-01
El 786.0

50(0.5) 50(0.25) LIMESTONE, soft, tan
50(0.5) 50(0.38)
50(0.5) 50(0.13) LIMESTONE, hard to very hard, tan
50(4.5) 50(1.5)

B/H = 766.0

Test Hole No. WL-01
Sta 415+70, 232 ft LT

Test Hole No. WL-01
El 787.6

50(0.75) 50(0.25) LIMESTONE, soft, reddish brown
50(1.38) 20(6) LIMESTONE, soft to very hard, tan
50(0.5) 50(0.25)
50(0.5) 50(0.25)
50(0.37) 50(0.13) LIMESTONE, very hard, tan
50(0.38) 50(0.25)

B/H = 757.6

NO.	DATE	REVISION	APPROVED

WILLIAMSON COUNTY

HDR Engineering, Inc.
810 Hesters Crossing, Suite 120
Round Rock, Texas 78681
Texas Registered Engineering Firm F-754

SOUTHWEST BYPASS SEGMENT 2

BORING LOGS WBFR

SCALE: 1"=20' SHEET 3 OF 3

DESIGN	FED.RD. DIV.NO.	FEDERAL AID PROJECT NO.		HIGHWAY NO.
TW	6			
GRAPHICS	STATE	DISTRICT	COUNTY	SHEET NO.
LG	TEXAS	AUS	WILLIAMSON	
CHECK	CONTROL	SECTION	JOB	29
JW	2103	01	034	
CHECK				
JC				

PLOT DRIVER: TXDOT_PDF_BW.pltcfg PENTABLE: S2-00000201707lB.tbl
USER: lgomezgonz DATE: 3/23/2018 TIME: 10:27:39 AM SCALE: 1:20
FILE: \

PROJECT TRAFFIC CONTROL NARRATIVE:

1. PLACE ADVANCED WARNING SIGNS AND BARRICADES AT PROJECT LIMITS PER CURRENT TXDOT STANDARDS, TMUTCD, AND AS DELINEATED IN THE PLANS.
2. PLACE TEMPORARY BMP'S FOR EROSION CONTROL.
3. BEGIN CONSTRUCTION OF SW BYPASS SEGMENT 2 WITHIN THE CITY ROW SOUTH OF RM 2243.
   A. PERFORM EARTHWORK ASSOCIATED WITH CUT SECTIONS AND ANY NECESSARY BLASTING ACTIVITIES. BEGIN BRIDGE CONSTRUCTION.
   B. CONSTRUCT REMAINDER OF PROJECT WITHIN CITY ROW INCLUDING: BRIDGE, RETAINING WALLS, CULVERTS, EMBANKMENT, PAVEMENT, AND INCIDENTALS.
4. CONSTRUCT ALL WORK WITHIN TXDOT & CITY ROW FOR RM 2243 USING DAILY LANE SHIFTS AS NEEDED. WORK INCLUDES: SIGNAL POLES, CONDUIT, ILLUMINATION, CURB AND GUTTER, PAVEMENT WIDENING, OVERLAY, AND INCIDENTALS. COMPLETION OF WORK ON RM 2243 SHOULD CORRESPOND TO COMPLETION OF REMAINDER OF PROJECT.
5. REMOVE STRUCTURE (TOPS BUILDING)
6. COMPLETE SEEDING AND PERMANENT EROSION CONTROL.
7. PLACE FINAL LIFT OF ASPHALT ON ENTIRE PROJECT FROM IH35 TO RM 2243. BACKFILL AND SEED PAVEMENT EDGES.
8. PLACE SIGNING AND STRIPING.
9. REMOVE TEMPORARY BMP'S.
10. COMPLETE FINAL SITE CLEAN UP.
11. REMOVE ADVANCED WARNING SIGNS AND BARRICADES. COORDINATE WITH THE ENGINEER PRIOR TO OPENING THE ROAD TO PUBLIC TRAFFIC.

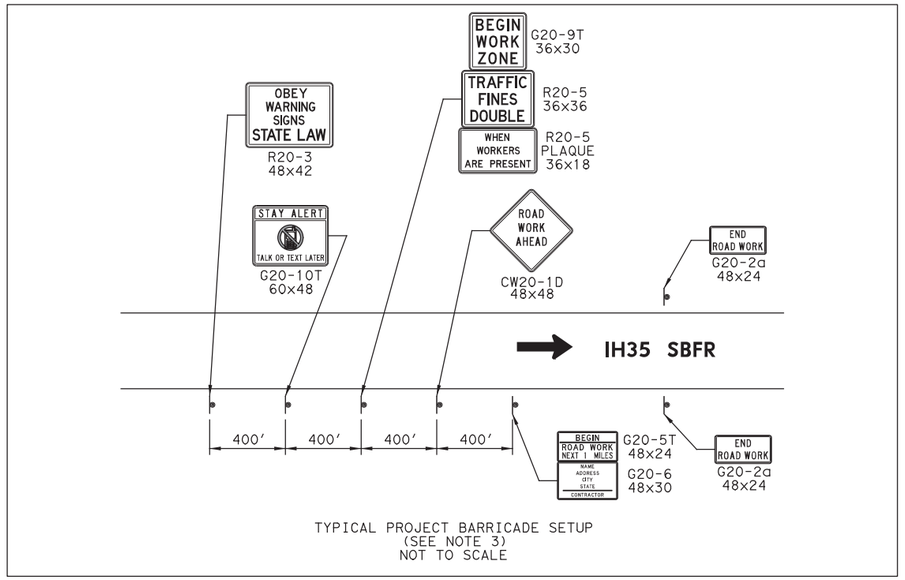

TYPICAL PROJECT BARRICADE SETUP
(SEE NOTE 3)
NOT TO SCALE

LEGEND

- PLASTIC DRUMS
- TRAFFIC FLOW
- SIGN POST
- TY III BARRICADE
- WORK ZONE
- MILL AND OVERLAY

NOTES:

1. SEE TCP(1-5a)-18 FOR ANY ADDITIONAL INFORMATION NOT SHOWN, INCLUDING SIGN PLACEMENT.
2. TRAFFIC CONTROL PLANS SHALL CONFORM TO THE CURRENT TxDOT STANDARDS AND THE TEXAS MANUAL ON UNIFORM TRAFFIC CONTROL DEVICES (TMUTCD).
3. ADVANCED WARNING SIGNS SHALL REMAIN UNTIL COMPLETION OF THE WORK.
4. SEE BC(2)-14 FOR SIGN SPACING AND LOCATIONS OF TYPICAL CROSSROAD SIGNS.
5. LANE SHALL ONLY BE CLOSED WHEN CONTRACTOR IS READY TO WORK ON I-35 SBFR, NOT FOR THE ENTIRE DURATION OF PROJECT.

0 50 100 150 200

SCALE IN FEET

STATE OF TEXAS
JUSTIN D. CARLTON
127593
LICENSED
PROFESSIONAL ENGINEER
03/23/2018

NO.	DATE	REVISION	APPROVED

WILLIAMSON COUNTY TEXAS

HDR Engineering, Inc.
810 Hesters Crossing, Suite 120
Round Rock, Texas 78681
Texas Registered Engineering Firm F-754

SOUTHWEST BYPASS SEGMENT 2

TRAFFIC CONTROL PLAN SBFR I-35

SCALE: 1"=100' SHEET 1 OF 1

DESIGN	FED. RD. DIV. NO.	FEDERAL AID PROJECT NO.		HIGHWAY NO.
JC	6			
GRAPHICS	STATE	DISTRICT	COUNTY	SHEET NO.
LG	TEXAS	AUS	WILLIAMSON	
CHECK	CONTROL	SECTION	JOB	30
JW	2103	01	034	
CHECK				
JC				

PLOT DRIVER: TXDOT_PDF_BW.pltcfg PENTABLE: S2-0000020170718.tbl
USER: lgomezgon2 DATE: 3/23/2018 TIME: 10:21:15 AM SCALE: 1:00
FILE: \

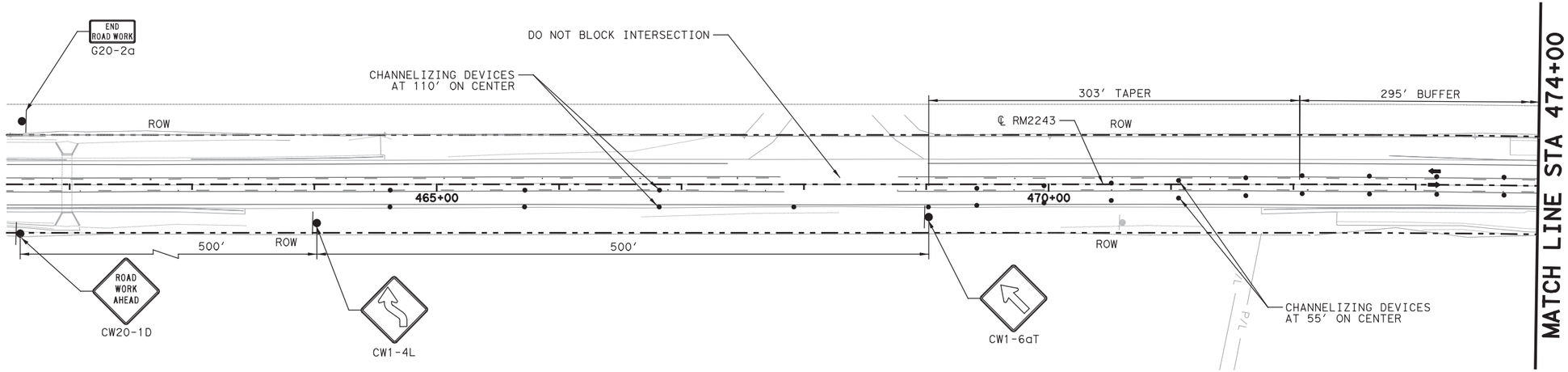

LEGEND

- PLASTIC DRUMS
- TRAFFIC FLOW
- SIGN POST
- TY III BARRICADE
- WORK ZONE
- MILL AND OVERLAY

NOTES:

1. SEE TCP(1-3a)-18 FOR ANY ADDITIONAL INFORMATION NOT SHOWN, INCLUDING SIGN PLACEMENT.
2. CONTRACTOR TO UTILIZE DAILY LANE SHIFTS TO PERFORM SHOULDER WIDENING, MILL, AND OVERLAY. ENSURE ALL LANES RETURN TO FULL OPERATION AT THE END OF EACH DAY. LANE SHIFTS ARE TO BE IMPLEMENTED DURING WORKING HOURS ONLY.
3. MAINTAIN 11' TRAVEL LANES THROUGH TRAFFIC CONTROL ZONE.
4. EDGE DROP OFFS IN EXCESS OF 2" SHALL BE BACK FILED WITH 3:1 MAX SAFETY WEDGE USING FLEX BASE OR OTHER APPROVED MATERIAL AND WILL BE SUBSIDIARY TO PERTINENT BID ITEMS.
5. TRAFFIC CONTROL PLANS SHALL CONFORM TO THE CURRENT TxDOT STANDARDS AND THE TEXAS MANUAL ON UNIFORM TRAFFIC CONTROL DEVICES (TMUTCD).
6. ADVANCED WARNING SIGNS SHALL REMAIN UNTIL COMPLETION OF THE WORK.
7. SEE BC(2)-14 FOR SIGN SPACING AND LOCATIONS OF TYPICAL CROSSROAD SIGNS.

0 50 100 150 200

SCALE IN FEET

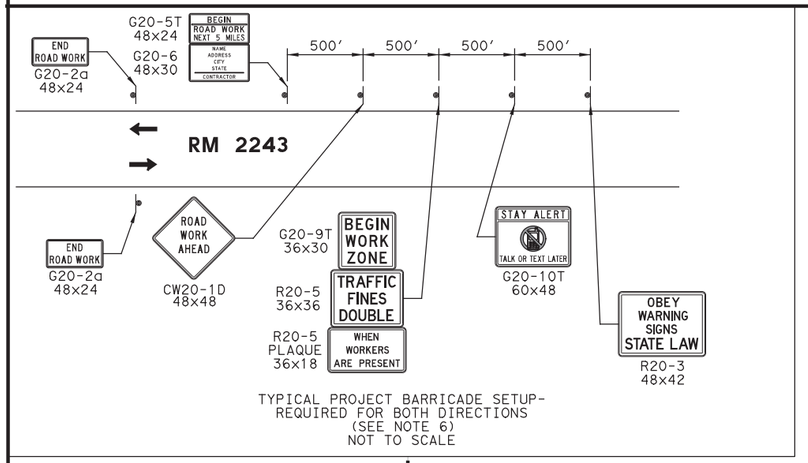

TYPICAL PROJECT BARRICADE SETUP-
REQUIRED FOR BOTH DIRECTIONS
(SEE NOTE 6)
NOT TO SCALE

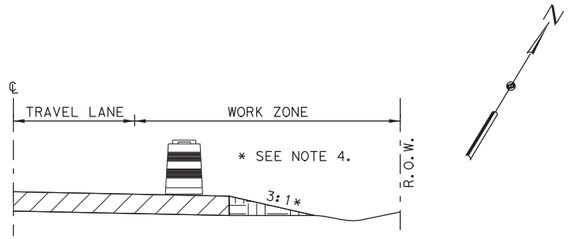

SAFETY WEDGE DETAIL

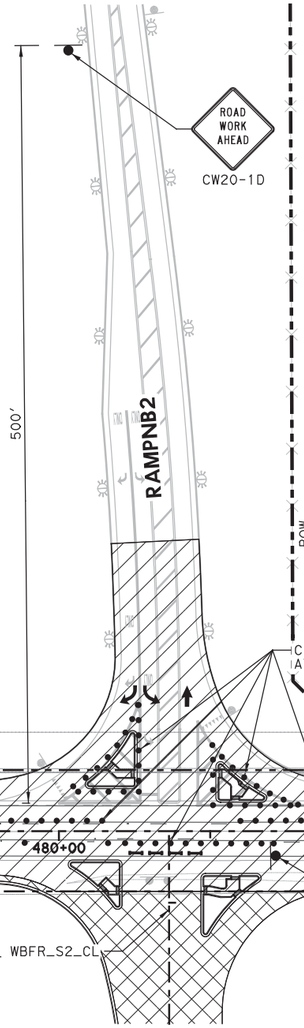



03/23/2018

NO.	DATE	REVISION	APPROVED

WILLIAMSON COUNTY

HDR Engineering, Inc.
810 Hesters Crossing, Suite 120
Round Rock, Texas 78681
Texas Registered Engineering Firm F-754

SOUTHWEST BYPASS SEGMENT 2

TRAFFIC CONTROL PLAN RM 2243

SCALE: 1"=100' SHEET 1 OF 2

DESIGN	FED.RD. DIV.NO.	FEDERAL AID PROJECT NO.		HIGHWAY NO.
JC	6			
GRAPHICS	STATE	DISTRICT	COUNTY	SHEET NO.
LG	TEXAS	AUS	WILLIAMSON	
CHECK	CONTROL	SECTION	JOB	31
JW				
CHECK	2103	01	034	
JC				

PLOT DRIVER: TXDOT_PDF_BW.pltcfg PENTABLE: S2-0000020070718.tbl
USER: lgomezgon2 DATE: 3/23/2018 TIME: 10:21:23 AM SCALE: 1:100
FILE: \

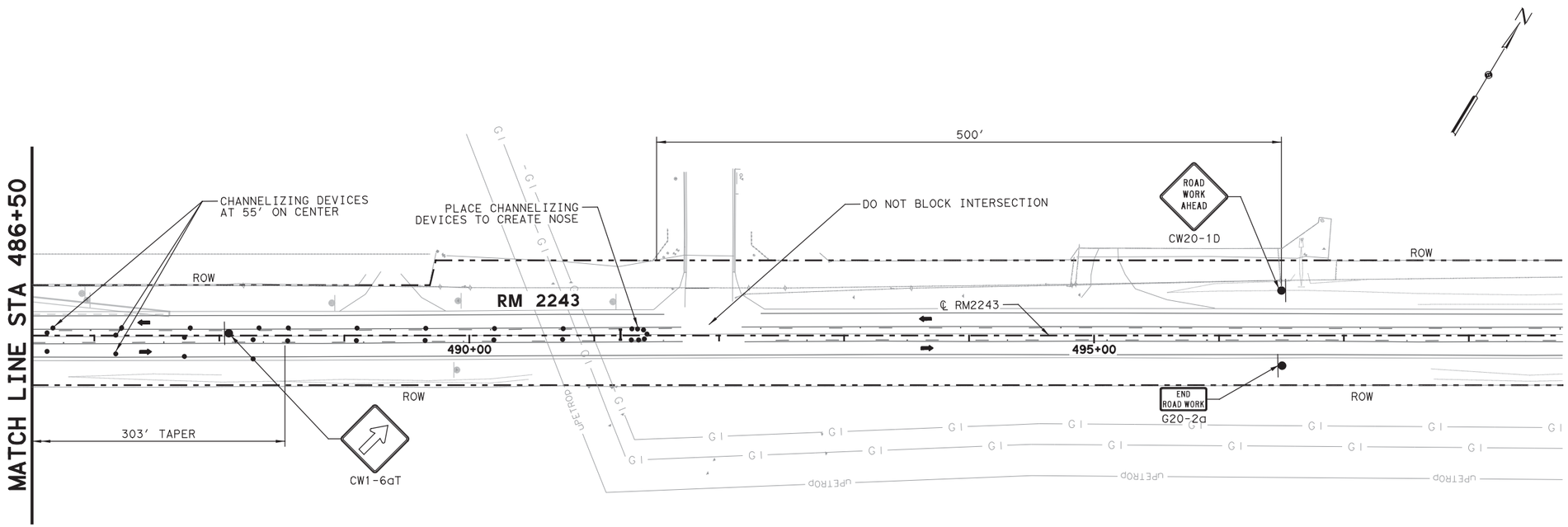

TYPICAL SECTION

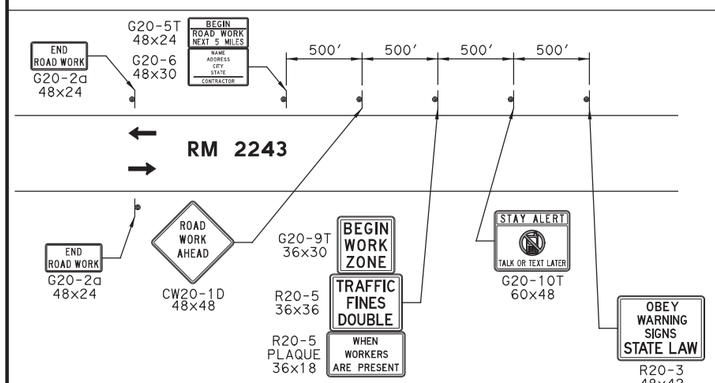

TYPICAL PROJECT BARRICADE SETUP-
REQUIRED FOR BOTH DIRECTIONS
(SEE NOTE 6)
NOT TO SCALE

LEGEND

- PLASTIC DRUMS
- TRAFFIC FLOW
- SIGN POST
- TY III BARRICADE
- WORK ZONE
- MILL AND OVERLAY

NOTES:

1. SEE TCP(1-3a)-18 FOR ANY ADDITIONAL INFORMATION NOT SHOWN, INCLUDING SIGN PLACEMENT.
2. CONTRACTOR TO UTILIZE DAILY LANE SHIFTS TO PERFORM SHOULDER WIDENING, MILL, AND OVERLAY. ENSURE ALL LANES RETURN TO FULL OPERATION AT THE END OF EACH DAY. LANE SHIFTS ARE TO BE IMPLEMENTED DURING WORKING HOURS ONLY.
3. MAINTAIN 11' TRAVEL LANES THROUGH TRAFFIC CONTROL ZONE.
4. EDGE DROP OFFS IN EXCESS OF 2" SHALL BE BACK FILED WITH 3:1 MAX SAFETY WEDGE USING FLEX BASE OR OTHER APPROVED MATERIAL AND WILL BE SUBSIDIARY TO PERTINENT BID ITEMS.
5. TRAFFIC CONTROL PLANS SHALL CONFORM TO THE CURRENT TxDOT STANDARDS AND THE TEXAS MANUAL ON UNIFORM TRAFFIC CONTROL DEVICES (TMUTCD).
6. ADVANCED WARNING SIGNS SHALL REMAIN UNTIL COMPLETION OF THE WORK.
7. SEE BC(2)-14 FOR SIGN SPACING AND LOCATIONS OF TYPICAL CROSSROAD SIGNS.

0 50 100 150 200

SCALE IN FEET



03/23/2018

NO.	DATE	REVISION	APPROVED

WILLIAMSON COUNTY TEXAS

HDR Engineering, Inc.
810 Hesters Crossing, Suite 120
Round Rock, Texas 78681
Texas Registered Engineering Firm F-754

SOUTHWEST BYPASS SEGMENT 2

TRAFFIC CONTROL PLAN RM 2243

SCALE: 1"=100' SHEET 2 OF 2

DESIGN	FED.RD. DIV.NO.	FEDERAL AID PROJECT NO.		HIGHWAY NO.
JC	6			
GRAPHICS	STATE	DISTRICT	COUNTY	SHEET NO.
LG	TEXAS	AUS	WILLIAMSON	
CHECK	CONTROL	SECTION	JOB	32
JW	2103	01	034	
CHECK				
JC				

PLOT DRIVER: TXDOT_PDF_BW.pltcfg PENTABLE: S2-0000020170718.tbl
USER: lgomezgonz DATE: 3/23/2018 TIME: 10:21:30 AM SCALE: 1:100
FILE: \

DISCLAIMER:
The use of this standard is governed by the "Texas Engineering Practice Act". No warranty of any kind is made by TxDOT for any purpose whatsoever. TxDOT assumes no responsibility for the conversion of this standard to other formats or for incorrect results or damages resulting from its use.

BARRICADE AND CONSTRUCTION (BC) STANDARD SHEETS GENERAL NOTES:

1. The Barricade and Construction Standard Sheets (BC sheets) are intended to show typical examples for placement of temporary traffic control devices, construction pavement markings, and typical work zone signs. The information contained in these sheets meet or exceed the requirements shown in the "Texas Manual on Uniform Traffic Control Devices" (TMUTCD).

2. The development and design of the Traffic Control Plan (TCP)is the responsibility of the Engineer.

3. The Contractor may propose changes to the TCP that are signed and sealed by a licensed professional engineer for approval. The Engineer may develop, sign and seal Contractor proposed changes.

4. The Contractor is responsible for installing and maintaining the traffic control devices as shown in the plans. The Contractor may not move or change the approximate location of any device without the approval of the Engineer.

5. Geometric design of lane shifts and detours should, when possible, meet the applicable design criteria contained in manuals such as the American Association of State Highway and Transportation Officials (AASHTO), "A Policy on Geometric Design of Highways and Streets," the TxDOT "Roadway Design Manual" or engineering judgment.

6. When projects abut, the Engineer(s) may omit the END ROAD WORK, TRAFFIC FINES DOUBLE, and other advance warning signs if the signing would be redundant and the work areas appear continuous to the motorists. If the adjacent project is completed first, the Contractor shall erect the necessary warning signs as shown on these sheets, the TCP sheets or as directed by the Engineer. The BEGIN ROAD WORK NEXT X MILES sign shall be revised to show appropriate work zone distance.

7. The Engineer may require duplicate warning signs on the median side of divided highways where median width will permit and traffic volumes justify the signing.

8. All signs shall be constructed in accordance with the details found in the "Standard Highway Sign Designs for Texas," latest edition. Sign details not shown in this manual shall be shown in the plans or the Engineer shall provide a detail to the Contractor before the sign is manufactured.

9. The temporary traffic control devices shown in the illustrations of the BC sheets are examples. As necessary, the Engineer will determine the most appropriate traffic control devices to be used.

10. As shown on BC(2), the OBEY WARNING SIGNS STATE LAW sign, STAY ALERT TALK OR TEXT LATER (see Sign Detail G20-10T) and the WORK ZONE TRAFFIC FINES DOUBLE sign with plaque shall be erected in advance of the CSJ limits. However, the TRAFFIC FINES DOUBLE sign will not be required on projects consisting solely of mobile operation work, such as striping or milling edgeline rumble strips. The BEGIN ROAD WORK NEXT X MILES, CONTRACTOR and END ROAD WORK signs shall be erected at or near the CSJ limits.

11. Except for devices required by Note 10, traffic control devices should be in place only while work is actually in progress or a definite need exists.

12. The Engineer has the final decision on the location of all traffic control devices.

13. Inactive equipment and work vehicles, including workers' private vehicles must be parked away from travel lanes. They should be as close to the right-of-way line as possible, or located behind a barrier or guardrail, or as approved by the Engineer.

WORKER SAFETY APPAREL NOTES:

1. Workers on foot who are exposed to traffic or to construction equipment within the right-of-way shall wear high-visibility safety apparel meeting the requirements of ISEA "American National Standard for High-Visibility Apparel," or equivalent revisions, and labeled as ANSI 107-2004 standard performance for Class 2 or 3 risk exposure. Class 3 garments should be considered for high traffic volume work areas or night time work.

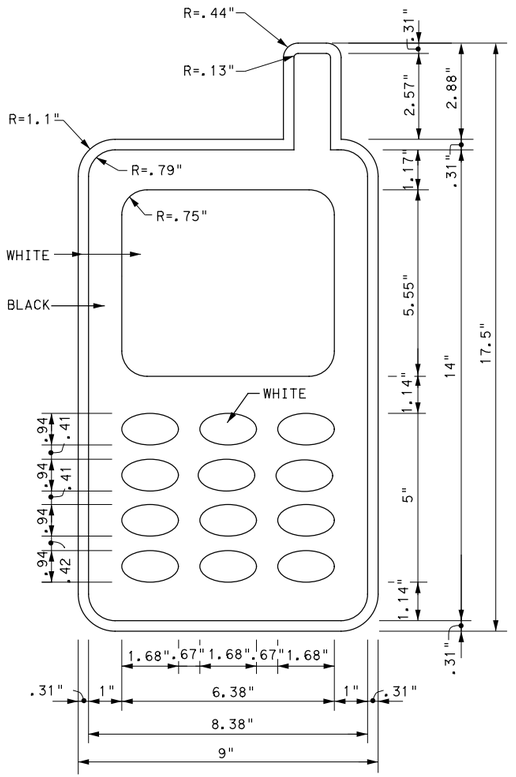

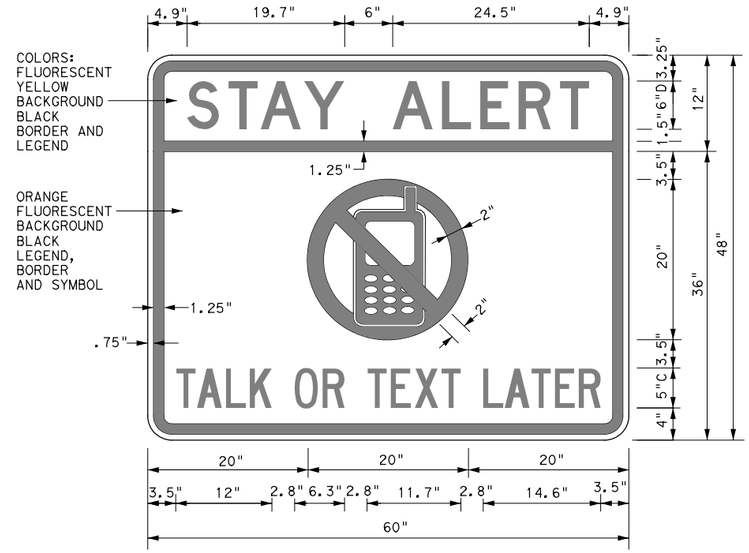

3.0" Radius, 1.25" Border, 0.75" Indent, Black on Yellow;
[STAY ALERT] Font: D
3.0" Radius, 1.25" Border, 0.75" Indent, Black on Orange;
[TALK OR TEXT LATER] Font: C specified length;

SIGN DETAIL (G20-10T)

Only pre-qualified products shall be used. The "Compliant Work Zone Traffic Control Devices List" (CWZTCD) describes pre-qualified products and their sources and may be found on-line at the web address given below or by contacting:

Texas Department of Transportation
Traffic Operations Division - TE
Phone (512) 416-3118

THE DOCUMENTS BELOW CAN BE FOUND ON-LINE AT http://www.txdot.gov
COMPLIANT WORK ZONE TRAFFIC CONTROL DEVICES LIST (CWZTCD)
DEPARTMENTAL MATERIAL SPECIFICATIONS (DMS)
MATERIAL PRODUCER LIST (MPL)
ROADWAY DESIGN MANUAL - SEE "MANUALS (ONLINE MANUALS)"
STANDARD HIGHWAY SIGN DESIGNS FOR TEXAS (SHSD)
TEXAS MANUAL ON UNIFORM TRAFFIC CONTROL DEVICES (TMUTCD)
TRAFFIC ENGINEERING STANDARD SHEETS

SHEET 1 OF 12

Texas Department of Transportation | Traffic Operations Division Standard

BARRICADE AND CONSTRUCTION GENERAL NOTES AND REQUIREMENTS

BC(1)-14

FILE: bc-14.dgn	DN: TxDOT	CK: TxDOT	DW: TxDOT	CK: TxDOT
©TxDOT November 2002	CONT	SECT	JOB	HIGHWAY
REVISIONS	2103	01	034	
4-03 5-10 8-14	DIST	COUNTY		SHEET NO.
9-07 7-13	AUS	WILLIAMSON		33

95

DATE: 3/23/2018 10:28:25 AM
FILE: c:\pworking\dal\d0911859\bc-14.dgn

DISCLAIMER:
The use of this standard is governed by the "Texas Engineering Practice Act". No warranty of any kind is made by TxDOT for any purpose whatsoever. TxDOT assumes no responsibility for the conversion of this standard to other formats or for incorrect results or damages resulting from its use.

TYPICAL LOCATION OF CROSSROAD SIGNS

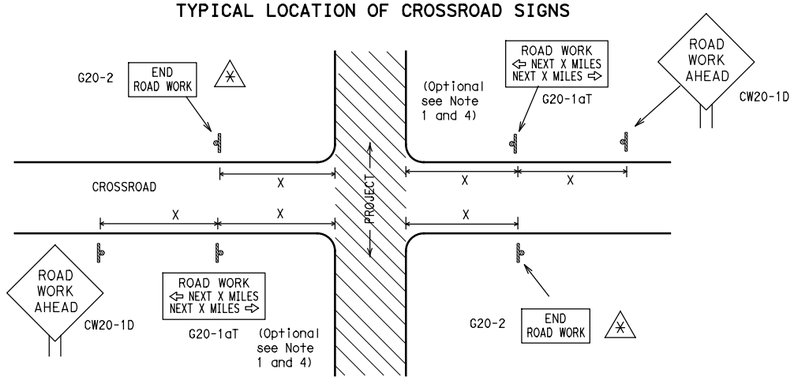

✳ May be mounted on back of "ROAD WORK AHEAD"(CW20-1D) sign with approval of Engineer. (See note 2 below)

1. The typical minimum signing on a crossroad approach should be a "ROAD WORK AHEAD" (CW20-1D)sign and a (G20-2) "END ROAD WORK" sign, unless noted otherwise in plans.
2. The Engineer may use the reduced size 36" x 36" ROAD WORK AHEAD (CW20-1D) sign mounted back to back with the reduced size 36" x 18" "END ROAD WORK"(G20-2) sign on low volume crossroads (see Note 4 under "Typical Construction Warning Sign Size and Spacing"). See the "Standard Highway Sign Designs for Texas" manual for sign details. The Engineer may omit the advance warning signs on low volume crossroads. The Engineer will determine whether a road is low volume. This information shall be shown in the plans.
3. Based on existing field conditions, the Engineer/Inspector may require additional signs such as FLAGGER AHEAD, LOOSE GRAVEL, or other appropriate signs. When additional signs are required, these signs will be considered part of the minimum requirements. The Engineer/Inspector will determine the proper location and spacing of any sign not shown on the BC sheets, Traffic Control Plan sheets or the Work Zone Standard Sheets.
4. The "ROAD WORK NEXT X MILES"(G20-1aT)sign shall be required at high volume crossroads to advise motorists of the length of construction in either direction from the intersection. The Engineer will determine whether a roadway is considered high volume.
5. Additional traffic control devices may be shown elsewhere in the plans for higher volume crossroads.
6. When work occurs in the intersection area, appropriate traffic control devices, as shown elsewhere in the plans or as determined by the Engineer/Inspector, shall be in place.

T-INTERSECTION

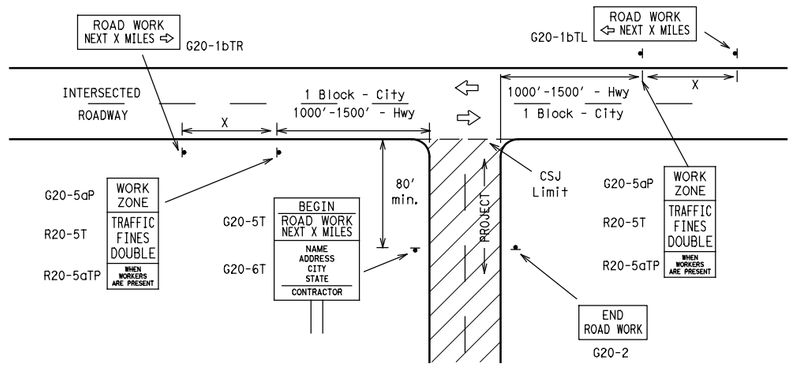

CSJ LIMITS AT T-INTERSECTION

1. The Engineer will determine the types and location of any additional traffic control devices, such as a flagger and accompanying signs, or other signs, that should be used when work is being performed at or near an intersection.
2. If construction closes the road at a T-intersection the Contractor shall place the "CONTRACTOR NAME"(G20-6T) sign behind the Type 3 Barricades for the road closure (see BC(10) also). The "ROAD WORK NEXT X MILES" left arrow(G20-1bTL) and "ROAD WORK NEXT X MILES" right arrow (G20-1bTR)" signs shall be replaced by the detour signing called for in the plans.

TYPICAL CONSTRUCTION WARNING SIGN SIZE AND SPACING[1,5,6]

SIZE

Sign Number or Series	Conventional Road	Expressway/ Freeway
CW20[4] CW21 CW22 CW23 CW25	48" x 48"	48" x 48"
CW1, CW2, CW7, CW8, CW9, CW11, CW14	36" x 36"	48" x 48"
CW3, CW4, CW5, CW6, CW8-3, CW10, CW12	48" x 48"	48" x 48"

SPACING

Posted Speed	Sign Spacing "X" △
MPH	Feet (Apprx.)
30	120
35	160
40	240
45	320
50	400
55	500[2]
60	600[2]
65	700[2]
70	800[2]
75	900[2]
80	1000[2]
✳	✳[3]

✳ For typical sign spacings on divided highways, expressways and freeways, see Part 6 of the "Texas Manual on Uniform Traffic Control Devices" (TMUTCD) typical application diagrams or TCP Standard Sheets.

△ Minimum distance from work area to first Advance Warning sign nearest the work area and/or distance between each additional sign.

GENERAL NOTES

1. Special or larger size signs may be used as necessary.
2. Distance between signs should be increased as required to have 1500 feet advance warning.
3. Distance between signs should be increased as required to have 1/2 mile or more advance warning.
4. 36" x 36" "ROAD WORK AHEAD" (CW20-1D)signs may be used on low volume crossroads at the discretion of the Engineer. See Note 2 under "Typical Location of Crossroad Signs".
5. Only diamond shaped warning sign sizes are indicated.
6. See sign size listing in "TMUTCD", Sign Appendix or the "Standard Highway Sign Designs for Texas" manual for complete list of available sign design sizes.

WORK AREAS IN MULTIPLE LOCATIONS WITHIN CSJ LIMITS

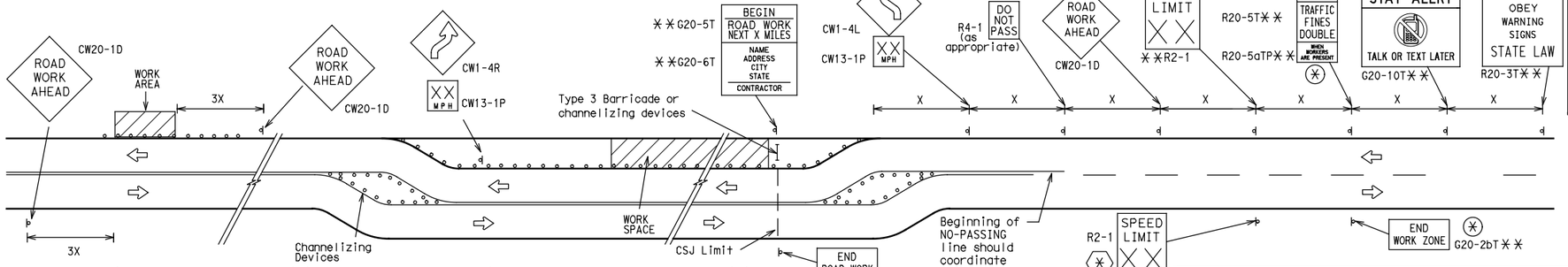

When extended distances occur between minimal work spaces, the Engineer/Inspector should ensure additional "ROAD WORK AHEAD"(CW20-1D)signs are placed in advance of these work areas to remind drivers they are still within the project limits. See the applicable TCP sheets for exact location and spacing of signs and channelizing devices.

SAMPLE LAYOUT OF SIGNING FOR WORK BEGINNING AT THE CSJ LIMITS

SAMPLE LAYOUT OF SIGNING FOR WORK BEGINNING DOWNSTREAM OF THE CSJ LIMITS

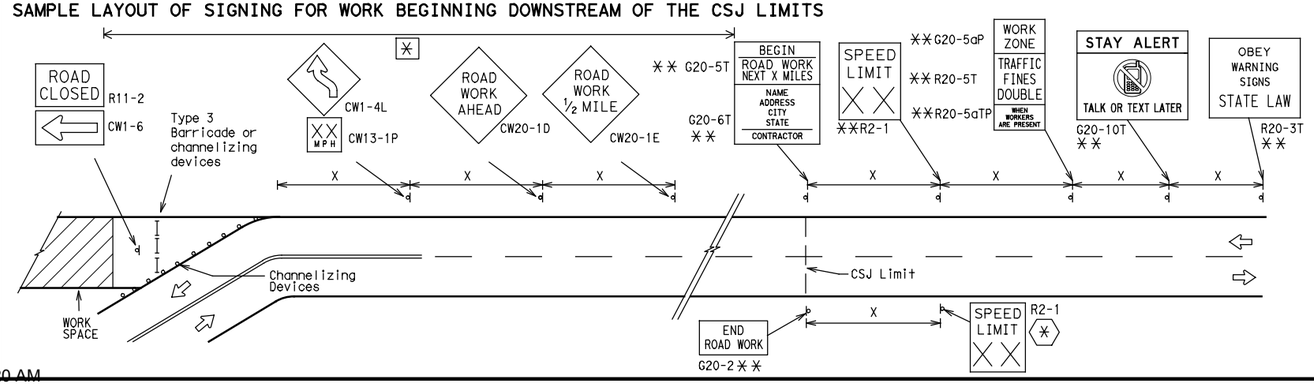

NOTES

The Contractor shall determine the appropriate distance to be placed on the G20-1 series signs and "BEGIN ROAD WORK NEXT X MILES"(G20-5T)sign for each specific project. This distance shall replace the "X" and shall be rounded to the nearest whole mile with the approval of the Engineer. No decimals shall be used.

✳ The "BEGIN WORK ZONE"(G20-9TP) and "END WORK ZONE" (G20-2bT) shall be used as shown on the sample layout when advance signs are required outside the CSJ Limits. They inform the motorist of entering or leaving a part of the work zone lying outside the CSJ Limits where traffic fines may double if workers are present.

✳✳ Required CSJ Limit signing. See Note 10 on BC(1). TRAFFIC FINES DOUBLE signs will not be required on projects consisting solely of mobile operations work.

✳ Area for placement of "ROAD WORK AHEAD" (CW20-1D)sign and other signs or devices as called for on the Traffic Control Plan.

✳ Contractor will install a regulatory speed limit sign at the end of the work zone.

LEGEND

⊢⊣	Type 3 Barricade
○ ○ ○	Channelizing Devices
▬	Sign
X	See Typical Construction Warning Sign Size and Spacing chart or the TMUTCD for sign spacing requirements.

SHEET 2 OF 12

Texas Department of Transportation

Traffic Operations Division Standard

BARRICADE AND CONSTRUCTION PROJECT LIMIT

BC(2)-14

FILE: bc-14.dgn	DN: TxDOT	CK: TxDOT	DW: TxDOT	CK: TxDOT
©TxDOT November 2002	CONT	SECT	JOB	HIGHWAY
REVISIONS	2103	01	034	
9-07 8-14	DIST	COUNTY		SHEET NO.
7-13	AUS	WILLIAMSON		34

96

DATE: 3/23/2018 10:28:26 AM
FILE: c:\pwworking\dal\d0911859\bc-14.dgn

TYPICAL APPLICATION OF WORK ZONE SPEED LIMIT SIGNS

Work zone speed limits shall be regulatory, established in accordance with the "Procedures for Establishing Speed Zones," and approved by the Texas Transportation Commission, or by City Ordinance when within Incorporated City Limits.

Reduced speeds should only be posted in the vicinity of work activity and not throughout the entire project.

Regulatory work zone speed signs (R2-1) shall be removed or covered during periods when they are not needed.

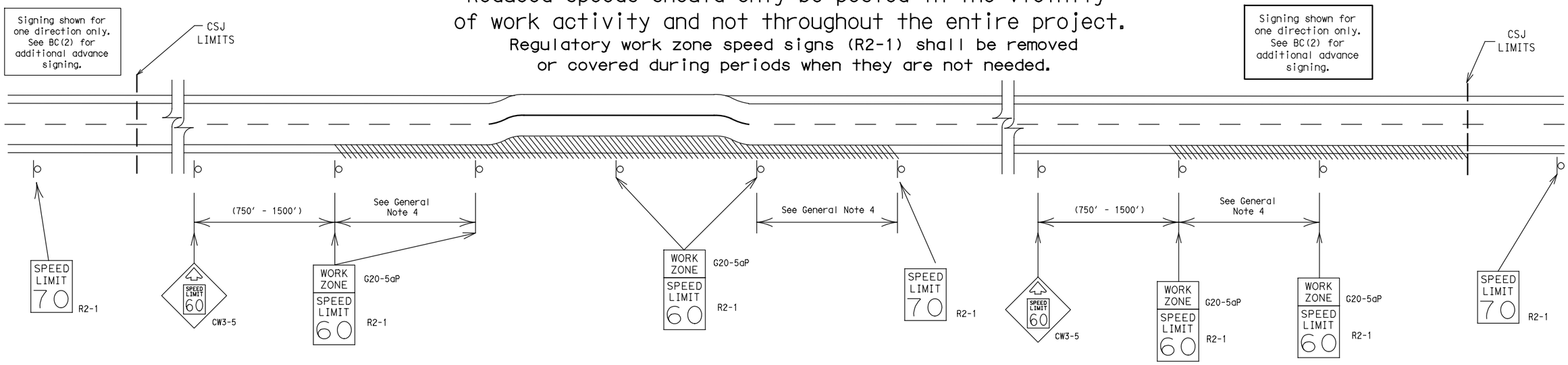

GUIDANCE FOR USE:

LONG/INTERMEDIATE TERM WORK ZONE SPEED LIMITS

This type of work zone speed limit should be included on the design of the traffic control plans when restricted geometrics with a lower design speed are present in the work zone and modification of the geometrics to a higher design speed is not feasible.

Long/Intermediate Term Work Zone Speed Limit signs, when approved as described above, should be posted and visible to the motorist when work activity is present. Work activity may also be defined as a change in the roadway that requires a reduced speed for motorists to safely negotiate the work area, including:

a) rough road or damaged pavement surface
b) substantial alteration of roadway geometrics (diversions)
c) construction detours
d) grade
e) width
f) other conditions readily apparent to the driver

As long as any of these conditions exist, the work zone speed limit signs should remain in place.

SHORT TERM WORK ZONE SPEED LIMITS

This type of work zone speed limit may be included on the design of the traffic control plans when workers or equipment are not behind concrete barrier, when work activity is within 10 feet of the traveled way or actually in the travelled way.

Short Term Work Zone Speed Limit signs should be posted and visible to the motorists only when work activity is present. When work activity is not present, signs shall be removed or covered.
(See Removing or Covering on BC(4)).

GENERAL NOTES

1. Regulatory work zone speed limits should be used only for sections of construction projects where speed control is of major importance.
2. Regulatory work zone speed limit signs shall be placed on supports at a 7 foot minimum mounting height.
3. Speed zone signs are illustrated for one direction of travel and are normally posted for each direction of travel.
4. Frequency of work zone speed limit signs should be:
   40 mph and greater 0.2 to 2 miles
   35 mph and less 0.2 to 1 mile
5. Regulatory speed limit signs shall have black legend and border on a white reflective background (See "Reflective Sheeting" on BC(4)).
6. Fabrication, erection and maintenance of the"ADVANCE SPEED LIMIT"(CW3-5)sign, "WORK ZONE"(G20-5aP) plaque and the "SPEED LIMIT"(R2-1)signs shall not be paid for directly, but shall be considered subsidiary to Item 502.
7. Turning signs from view, laying signs over or down will not be allowed, unless as otherwise noted under "REMOVING OR COVERING" on BC(4).
8. Techniques that may help reduce traffic speeds include but are not limited to:
   A. Law enforcement.
   B. Flagger stationed next to sign.
   C. Portable changeable message sign (PCMS).
   D. Low-power (drone) radar transmitter.
   E. Speed monitor trailers or signs.
9. Speeds shown on details above are for illustration only. Work Zone Speed Limits should only be posted as approved for each project.
10. For more specific guidance concerning the type of work, work zone conditions and factors impacting allowable regulatory construction speed zone reduction see TxDOT form #1204 in the TxDOT e-form system.

DISCLAIMER:
The use of this standard is governed by the "Texas Engineering Practice Act". No warranty of any kind is made by TxDOT for any purpose whatsoever. TxDOT assumes no responsibility for the conversion of this standard to other formats or for incorrect results or damages resulting from its use.

SHEET 3 OF 12

Texas Department of Transportation

Traffic Operations Division Standard

BARRICADE AND CONSTRUCTION WORK ZONE SPEED LIMIT

BC(3)-14

FILE: bc-14.dgn	DN: TxDOT	CK: TxDOT	DW: TxDOT	CK: TxDOT
©TxDOT November 2002	CONT	SECT	JOB	HIGHWAY
REVISIONS 9-07 8-14 7-13	2103	01	034	
	DIST	COUNTY		SHEET NO.
	AUS	WILLIAMSON		35

97

DATE: 3/23/2018 10:28:27 AM
FILE: c:\pwworking\ddi\d0911859\bc-14.dgn

DISCLAIMER:
The use of this standard is governed by the "Texas Engineering Practice Act". No warranty of any kind is made by TxDOT for any purpose whatsoever. TxDOT assumes no responsibility for the conversion of this standard to other formats or for incorrect results or damages resulting from its use.

TYPICAL MINIMUM CLEARANCES FOR LONG TERM AND INTERMEDIATE TERM SIGNS

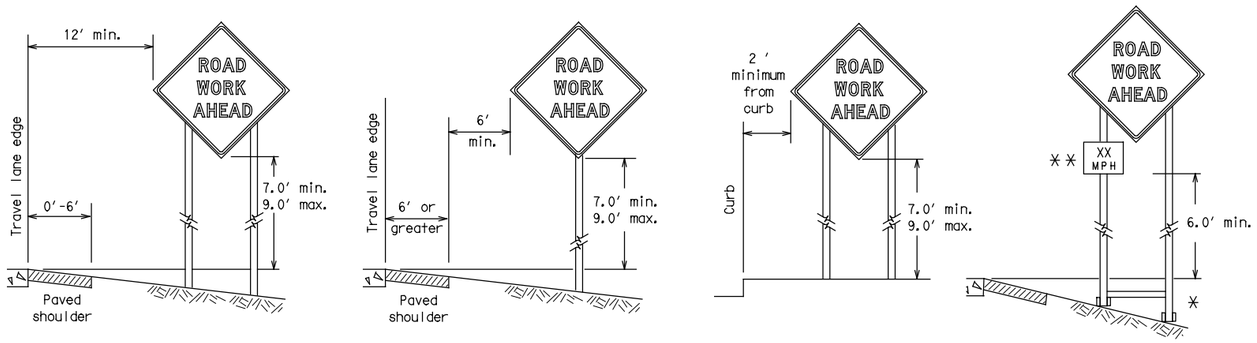

⚹ When placing skid supports on unlevel ground, the leg post lengths must be adjusted so the sign appears straight and plumb. Objects shall NOT be placed under skids as a means of leveling.

⚹⚹ When plaques are placed on dual-leg supports, they should be attached to the upright nearest the travel lane. Supplemental plaques (advisory or distance) should not cover the surface of the parent sign.

ATTACHMENT FOR SIGN SUPPORTS

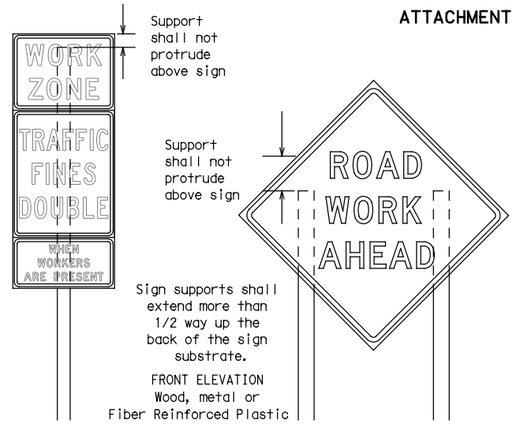

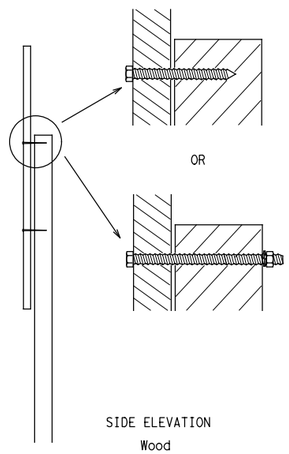

Attachment to wooden supports will be by bolts and nuts or screws. Use TxDOT's or manufacturer's recommended procedures for attaching sign substrates to other types of sign supports

Nails shall NOT be allowed. Each sign shall be attached directly to the sign support. Multiple signs shall not be joined or spliced by any means. Wood supports shall not be extended or repaired by splicing or other means.

Splicing embedded perforated square metal tubing in order to extend post height will only be allowed when the splice is made using four bolts, two above and two below the spice point. Splice must be located entirely behind the sign substrate, not near the base of the support. Splice insert lengths should be at least 5 times nominal post size, centered on the splice and of at least the same gauge material.

STOP/SLOW PADDLES

1. STOP/SLOW paddles are the primary method to control traffic by flaggers. The STOP/SLOW paddle size should be 24" x 24" as detailed below.
2. When used at night, the STOP/SLOW paddle shall be retroreflectorized.
3. STOP/SLOW paddles may be attached to a staff with a minimum length of 6′ to the bottom of the sign.
4. Any lights incorporated into the STOP or SLOW paddle faces shall only be as specifically described in Section 6E.03 Hand Signaling Devices in the TMUTCD.

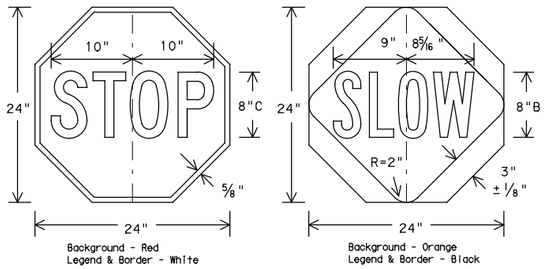

CONTRACTOR REQUIREMENTS FOR MAINTAINING PERMANENT SIGNS WITHIN THE PROJECT LIMITS

1. Permanent signs are used to give notice of traffic laws or regulations, call attention to conditions that are potentially hazardous to traffic operations, show route designations, destinations, directions, distances, services, points of interest, and other geographical, recreational, or cultural information. Drivers proceeding through a work zone need the same, if not better route guidance as normally installed on a roadway without construction.
2. When permanent regulatory or warning signs conflict with work zone conditions, remove or cover the permanent signs until the permanent sign message matches the roadway condition.
3. When existing permanent signs are moved and relocated due to construction purposes, they shall be visible to motorists at all times.
4. If existing signs are to be relocated on their original supports, they shall be installed on crashworthy bases as shown on the SMD Standard sheets. The signs shall meet the required mounting heights shown on the BC Sheets or the SMD Standards. This work should be paid for under the appropriate pay item for relocating existing signs.
5. If permanent signs are to be removed and relocated using temporary supports, the Contractor shall use crashworthy supports as shown on the BC sheets or the CWZTCD. The signs shall meet the required mounting heights shown on the BC Sheets or the SMD Standards during construction. This work should be paid for under the appropriate pay item for relocating existing signs.
6. Any sign or traffic control device that is struck or damaged by the Contractor or his/her construction equipment shall be replaced as soon as possible by the Contractor to ensure proper guidance for the motorists. This will be subsidiary to Item 502.

GENERAL NOTES FOR WORK ZONE SIGNS

1. Contractor shall install and maintain signs in a straight and plumb condition and/or as directed by the Engineer.
2. Wooden sign posts shall be painted white.
3. Barricades shall NOT be used as sign supports.
4. All signs shall be installed in accordance with the plans or as directed by the Engineer. Signs shall be used to regulate, warn, and guide the traveling public safely through the work zone.
5. The Contractor may furnish either the sign design shown in the plans or in the "Standard Highway Sign Designs for Texas" (SHSD). The Engineer/Inspector may require the Contractor to furnish other work zone signs that are shown in the TMUTCD but may have been omitted from the plans. Any variation in the plans shall be documented by written agreement between the Engineer and the Contractor's Responsible Person. All changes must be documented in writing before being implemented. This can include documenting the changes in the Inspector's TxDOT diary and having both the Inspector and Contractor initial and date the agreed upon changes.
6. The Contractor shall furnish sign supports listed in the "Compliant Work Zone Traffic Control Device List" (CWZTCD). The Contractor shall install the sign support in accordance with the manufacturer's recommendations. If there is a question regarding installation procedures, the Contractor shall furnish the Engineer a copy of the manufacturer's installation recommendations so the Engineer can verify the correct procedures are being followed.
7. The Contractor is responsible for installing signs on approved supports and replacing signs with damaged or cracked substrates and/or damaged or marred reflective sheeting as directed by the Engineer/Inspector.
8. Identification markings may be shown only on the back of the sign substrate. The maximum height of letters and/or company logos used for identification shall be 1 inch.
9. The Contractor shall replace damaged wood posts. New or damaged wood sign posts shall not be spliced.

DURATION OF WORK (as defined by the "Texas Manual on Uniform Traffic Control Devices" Part 6)

1. The types of sign supports, sign mounting height, the size of signs, and the type of sign substrates can vary based on the type of work being performed. The Engineer is responsible for selecting the appropriate size sign for the type of work being performed. The Contractor is responsible for ensuring the sign support, sign mounting height and substrate meets manufacturer's recommendations in regard to crashworthiness and duration of work requirements.
   a. Long-term stationary - work that occupies a location more than 3 days.
   b. Intermediate-term stationary - work that occupies a location more than one daylight period up to 3 days, or nighttime work lasting more than one hour.
   c. Short-term stationary - daytime work that occupies a location for more than 1 hour in a single daylight period.
   d. Short, duration - work that occupies a location up to 1 hour.
   e. Mobile - work that moves continuously or intermittently (stopping for up to approximately 15 minutes.)

SIGN MOUNTING HEIGHT

1. The bottom of Long-term/Intermediate-term signs shall be at least 7 feet, but not more than 9 feet, above the paved surface, except as shown for supplemental plaques mounted below other signs.
2. The bottom of Short-term/Short Duration signs shall be a minimum of 1 foot above the pavement surface but no more than 2 feet above the ground.
3. Long-term/Intermediate-term Signs may be used in lieu of Short-term/Short Duration signing.
4. Short-term/Short Duration signs shall be used only during daylight and shall be removed at the end of the workday or raised to appropriate Long-term/Intermediate sign height.
5. Regulatory signs shall be mounted at least 7 feet, but not more than 9 feet, above the paved surface regardless of work duration.

SIZE OF SIGNS

1. The Contractor shall furnish the sign sizes shown on BC (2) unless otherwise shown in the plans or as directed by the Engineer.

SIGN SUBSTRATES

1. The Contractor shall ensure the sign substrate is installed in accordance with the manufacturer's recommendations for the type of sign support that is being used. The CWZTCD lists each substrate that can be used on the different types and models of sign supports.
2. "Mesh" type materials are NOT an approved sign substrate, regardless of the tightness of the weave.
3. All wooden individual sign panels fabricated from 2 or more pieces shall have one or more plywood cleat, 1/2" thick by 6" wide, fastened to the back of the sign and extending fully across the sign. The cleat shall be attached to the back of the sign using wood screws that do not penetrate the face of the sign panel. The screws shall be placed on both sides of the splice and spaced at 6" centers. The Engineer may approve other methods of splicing the sign face.

REFLECTIVE SHEETING

1. All signs shall be retroreflective and constructed of sheeting meeting the color and retro-reflectivity requirements of DMS-8300 for rigid signs or DMS-8310 for roll-up signs. The web address for DMS specifications is shown on BC(1).
2. White sheeting, meeting the requirements of DMS-8300 Type A, shall be used for signs with a white background.
3. Orange sheeting, meeting the requirements of DMS-8300 Type B_{FL} or Type C_{FL}, shall be used for rigid signs with orange backgrounds.

SIGN LETTERS

1. All sign letters and numbers shall be clear, and open rounded type uppercase alphabet letters as approved by the Federal Highway Administration (FHWA) and as published in the "Standard Highway Sign Design for Texas" manual. Signs, letters and numbers shall be of first class workmanship in accordance with Department Standards and Specifications.

REMOVING OR COVERING

1. When sign messages may be confusing or do not apply, the signs shall be removed or completely covered.
2. Long-term stationary or intermediate stationary signs installed on square metal tubing may be turned away from traffic 90 degrees when the sign message is not applicable. This technique may not be used for signs installed in the median of divided highways or near any intersections where the sign may be seen from approaching traffic.
3. Signs installed on wooden skids shall not be turned at 90 degree angles to the roadway. These signs should be removed or completely covered when not required.
4. When signs are covered, the material used shall be opaque, such as heavy mil black plastic, or other materials which will cover the entire sign face and maintain their opaque properties under automobile headlights at night, without damaging the sign sheeting.
5. Burlap shall NOT be used to cover signs.
6. Duct tape or other adhesive material shall NOT be affixed to a sign face.
7. Signs and anchor stubs shall be removed and holes backfilled upon completion of work.

SIGN SUPPORT WEIGHTS

1. Where sign supports require the use of weights to keep from turning over, the use of sandbags with dry, cohesionless sand should be used.
2. The sandbags will be tied shut to keep the sand from spilling and to maintain a constant weight.
3. Rock, concrete, iron, steel or other solid objects shall not be permitted for use as sign support weights.
4. Sandbags should weigh a minimum of 35 lbs and a maximum of 50 lbs.
5. Sandbags shall be made of a durable material that tears upon vehicular impact. Rubber (such as tire inner tubes) shall NOT be used.
6. Rubber ballasts designed for channelizing devices should not be used for ballast on portable sign supports. Sign supports designed and manufactured with rubber bases may be used when shown on the CWZTCD list.
7. Sandbags shall only be placed along or laid over the base supports of the traffic control device and shall not be suspended above ground level or hung with rope, wire, chains or other fasteners. Sandbags shall be placed along the length of the skids to weigh down the sign support.
8. Sandbags shall NOT be placed under the skid and shall not be used to level sign supports placed on slopes.

FLAGS ON SIGNS

1. Flags may be used to draw attention to warning signs. When used the flag shall be 16 inches square or larger and shall be orange or fluorescent red-orange in color. Flags shall not be allowed to cover any portion of the sign face.

Texas Department of Transportation | Traffic Operations Division Standard

BARRICADE AND CONSTRUCTION TEMPORARY SIGN NOTES

BC(4)-14

FILE: bc-14.dgn	DN: TxDOT	CK: TxDOT	DW: TxDOT	CK: TxDOT
©TxDOT November 2002	CONT	SECT	JOB	HIGHWAY
REVISIONS 9-07 8-14 7-13	2103	01	034	
	DIST	COUNTY		SHEET NO.
	AUS	WILLIAMSON		36

98

DISCLAIMER:
The use of this standard is governed by the "Texas Engineering Practice Act". No warranty of any kind is made by TxDOT for any purpose whatsoever. TxDOT assumes no responsibility for the conversion of this standard to other formats or for incorrect results or damages resulting from its use.

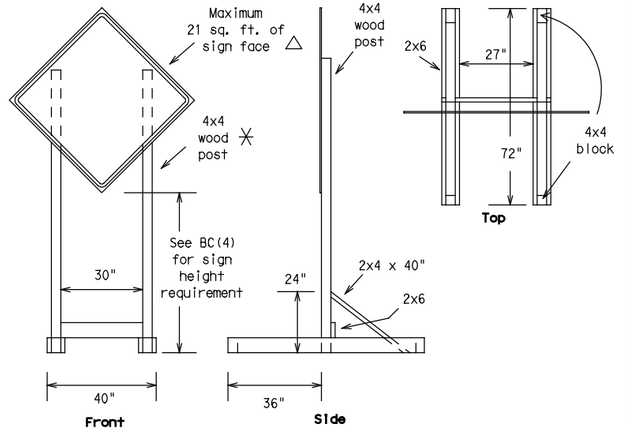

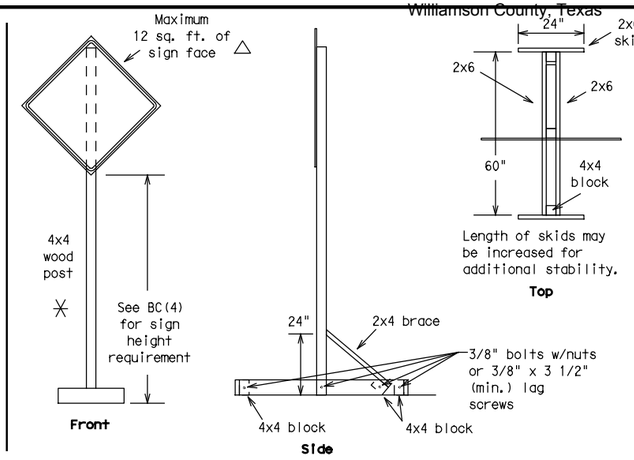

SKID MOUNTED WOOD SIGN SUPPORTS

LONG/INTERMEDIATE TERM STATIONARY - PORTABLE SKID MOUNTED SIGN SUPPORTS □

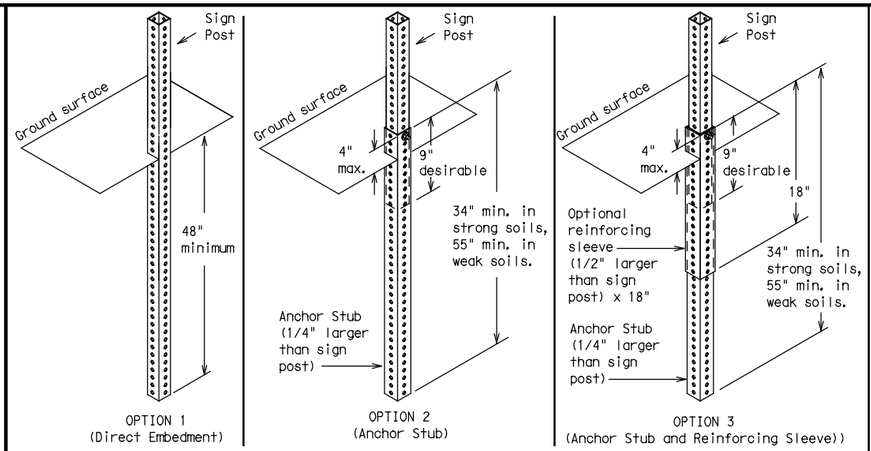

PERFORATED SQUARE METAL TUBING

WING CHANNEL
Lap-splice/base bolted anchor

GROUND MOUNTED SIGN SUPPORTS

Refer to the CWZTCD and the manufacturer's installation procedure for each type sign support.
The maximum sign square footage shall adhere to the manufacturer's recommendation.
Two post installations can be used for larger signs.

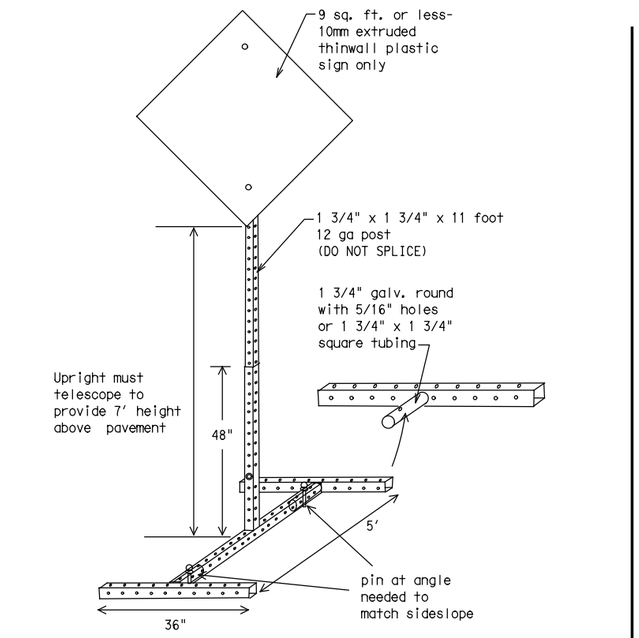

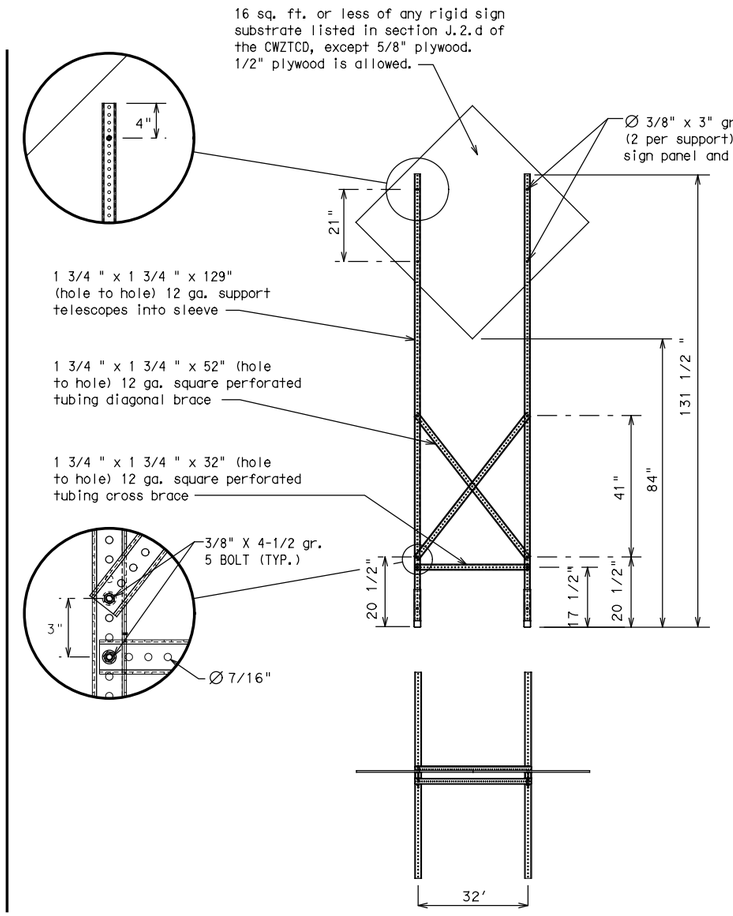

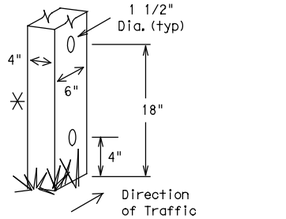

Nominal Post Size	Number of Posts	Maximum Sq. feet of Sign Face	Minimum Soil Embedment	Drilled Hole(s) Required
4 x 4	1	12	36"	NO
4 x 4	2	21	36"	NO
4 x 6	1	21	36"	YES
4 x 6	2	36	36"	YES

WOOD POST SYSTEM FOR GROUND MOUNTED SIGN SUPPORTS

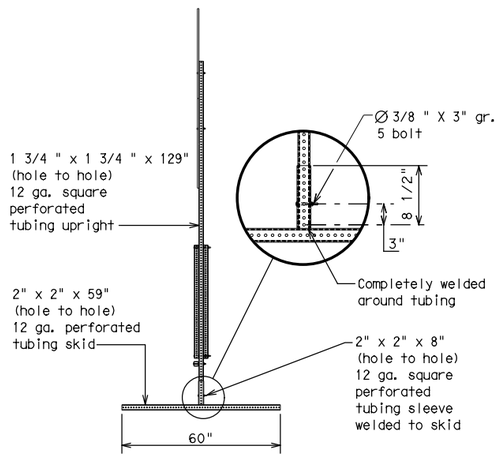

WEDGE ANCHORS

Both steel and plastic Wedge Anchor Systems as shown on the SMD Standard Sheets may be used as temporary sign supports for signs up to 10 square feet of sign face. They may be set in concrete or in sturdy soils if approved by the Engineer. (See web address for "Traffic Engineering Standard Sheets" on BC(1)).

OTHER DESIGNS

MORE DETAILS OF APPROVED LONG/INTERMEDIATE AND SHORT TERM SUPPORTS CAN BE FOUND ON THE CWZTCD LIST. SEE BC(1) FOR WEBSITE LOCATION.

GENERAL NOTES

1. Nails may be used in the assembly of wooden sign supports, but 3/8" bolts with nuts or 3/8" x 3 1/2" lag screws must be used on every joint for final connection.
2. No more than 2 sign posts shall be placed within a 7 ft. circle, except for specific materials noted on the CWZTCD List.
3. When project is completed, all sign supports and foundations shall be removed from the project site. This will be considered subsidiary to Item 502.

□ See BC(4) for definition of "Work Duration."

✳ Wood sign posts MUST be one piece. Splicing will NOT be allowed. Posts shall be painted white.

△ See the CWZTCD for the type of sign substrate that can be used for each approved sign support.

Texas Department of Transportation

Traffic Operations Division Standard

SKID MOUNTED PERFORATED SQUARE STEEL TUBING SIGN SUPPORTS

BARRICADE AND CONSTRUCTION TYPICAL SIGN SUPPORT

BC(5)-14

FILE: bc-14.dgn	DN: TxDOT	CK: TxDOT	DW: TxDOT	CK: TxDOT
©TxDOT November 2002	CONT	SECT	JOB	HIGHWAY
REVISIONS	2103	01	034	
9-07 8-14	DIST	COUNTY		SHEET NO.
7-13	AUS	WILLIAMSON		37

99

DATE: 3/23/2018 10:28:30 AM
FILE: c:\pwworking\dal\d0911859\bc-14.dgn

DISCLAIMER:
The use of this standard is governed by the "Texas Engineering Practice Act". No warranty of any kind is made by TxDOT for any purpose whatsoever. TxDOT assumes no responsibility for the conversion of this standard to other formats or for incorrect results or damages resulting from its use.

WHEN NOT IN USE, REMOVE THE PCMS FROM THE RIGHT-OF-WAY OR PLACE THE PCMS BEHIND BARRIER OR GUARDRAIL WITH SIGN PANEL TURNED PARALLEL TO TRAFFIC

PORTABLE CHANGEABLE MESSAGE SIGNS

1. The Engineer/Inspector shall approve all messages used on portable changeable message signs (PCMS).
2. Messages on PCMS should contain no more than 8 words (about four to eight characters per word), not including simple words such as "TO," "FOR," "AT," etc.
3. Messages should consist of a single phase, or two phases that alternate. Three-phase messages are not allowed. Each phase of the message should convey a single thought, and must be understood by itself.
4. Use the word "EXIT" to refer to an exit ramp on a freeway; i.e., "EXIT CLOSED." Do not use the term "RAMP."
5. Always use the route or interstate designation (IH, US, SH, FM) along with the number when referring to a roadway.
6. When in use the bottom of a stationary PCMS message panel should be a minimum 7 feet above the roadway, where possible.
7. The message term "WEEKEND" should be used only if the work is to start on Saturday morning and end by Sunday evening at midnight. Actual days and hours of work should be displayed on the PCMS if work is to begin on Friday evening and/or continue into Monday morning.
8. The Engineer/Inspector may select one of two options which are available for displaying a two-phase message on a PCMS. Each phase may be displayed for either four seconds each or for three seconds each.
9. Do not "flash" messages or words included in a message. The message should be steady burn or continuous while displayed.
10. Do not present redundant information on a two-phase message; i.e., keeping two lines of the message the same and changing the third line.
11. Do not use the word "Danger" in message.
12. Do not display the message "LANES SHIFT LEFT" or "LANES SHIFT RIGHT" on a PCMS. Drivers do not understand the message.
13. Do not display messages that scroll horizontally or vertically across the face of the sign.
14. The following table lists abbreviated words and two-word phrases that are acceptable for use on a PCMS. Both words in a phrase must be displayed together. Words or phrases not on this list should not be abbreviated, unless shown in the TMUTCD.
15. PCMS character height should be at least 18 inches for trailer mounted units. They should be visible from at least 1/2 (.5) mile and the text should be legible from at least 600 feet at night and 800 feet in daylight. Truck mounted units must have a character height of 10 inches and must be legible from at least 400 feet.
16. Each line of text should be centered on the message board rather than left or right justified.
17. If disabled, the PCMS should default to an illegible display that will not alarm motorists and will only be used to alert workers that the PCMS has malfunctioned. A pattern such as a series of horizontal solid bars is appropriate.

WORD OR PHRASE	ABBREVIATION
Access Road	ACCS RD
Alternate	ALT
Avenue	AVE
Best Route	BEST RTE
Boulevard	BLVD
Bridge	BRDG
Cannot	CANT
Center	CTR
Construction Ahead	CONST AHD
CROSSING	XING
Detour Route	DETOUR RTE
Do Not	DONT
East	E
Eastbound	(route) E
Emergency	EMER
Emergency Vehicle	EMER VEH
Entrance, Enter	ENT
Express Lane	EXP LN
Expressway	EXPWY
XXXX Feet	XXXX FT
Fog Ahead	FOG AHD
Freeway	FRWY, FWY
Freeway Blocked	FWY BLKD
Friday	FRI
Hazardous Driving	HAZ DRIVING
Hazardous Material	HAZMAT
High-Occupancy	HOV
Vehicle Highway	HWY
Hour(s)	HR, HRS
Information	INFO
It Is	ITS
Junction	JCT
Left	LFT
Left Lane	LFT LN
Lane Closed	LN CLOSED
Lower Level	LWR LEVEL
Maintenance	MAINT

WORD OR PHRASE	ABBREVIATION
Major	MAJ
Miles	MI
Miles Per Hour	MPH
Minor	MNR
Monday	MON
Normal	NORM
North	N
Northbound	(route) N
Parking	PKING
Road	RD
Right Lane	RT LN
Saturday	SAT
Service Road	SERV RD
Shoulder	SHLDR
Slippery	SLIP
South	S
Southbound	(route) S
Speed	SPD
Street	ST
Sunday	SUN
Telephone	PHONE
Temporary	TEMP
Thursday	THURS
To Downtown	TO DWNTN
Traffic	TRAF
Travelers	TRVLRS
Tuesday	TUES
Time Minutes	TIME MIN
Upper Level	UPR LEVEL
Vehicles (s)	VEH, VEHS
Warning	WARN
Wednesday	WED
Weight Limit	WT LIMIT
West	W
Westbound	(route) W
Wet Pavement	WET PVMT
Will Not	WONT

Roadway designation # IH-number, US-number, SH-number, FM-number

RECOMMENDED PHASES AND FORMATS FOR PCMS MESSAGES DURING ROADWORK ACTIVITIES

(The Engineer may approve other messages not specifically covered here.)

Phase 1: Condition Lists

Road/Lane/Ramp Closure List

FREEWAY CLOSED X MILE	FRONTAGE ROAD CLOSED
ROAD CLOSED AT SH XXX	SHOULDER CLOSED XXX FT
ROAD CLSD AT FM XXXX	RIGHT LN CLOSED XXX FT
RIGHT X LANES CLOSED	RIGHT X LANES OPEN
CENTER LANE CLOSED	DAYTIME LANE CLOSURES
NIGHT LANE CLOSURES	I-XX SOUTH EXIT CLOSED
VARIOUS LANES CLOSED	EXIT XXX CLOSED X MILE
EXIT CLOSED	RIGHT LN TO BE CLOSED
MALL DRIVEWAY CLOSED	X LANES CLOSED TUE - FRI
XXXXXXXX BLVD CLOSED	

Other Condition List

ROADWORK XXX FT	ROAD REPAIRS XXXX FT
FLAGGER XXXX FT	LANE NARROWS XXXX FT
RIGHT LN NARROWS XXXX FT	TWO-WAY TRAFFIC XX MILE
MERGING TRAFFIC XXXX FT	CONST TRAFFIC XXX FT
LOOSE GRAVEL XXXX FT	UNEVEN LANES XXXX FT
DETOUR X MILE	ROUGH ROAD XXXX FT
ROADWORK PAST SH XXXX	ROADWORK NEXT FRI-SUN
BUMP XXXX FT	US XXX EXIT X MILES
TRAFFIC SIGNAL XXXX FT	LANES SHIFT *

* LANES SHIFT in Phase 1 must be used with STAY IN LANE in Phase 2.

Phase 2: Possible Component Lists

Action to Take/Effect on Travel List

MERGE RIGHT	FORM X LINES RIGHT
DETOUR NEXT X EXITS	USE XXXXX RD EXIT
USE EXIT XXX	USE EXIT I-XX NORTH
STAY ON US XXX SOUTH	USE I-XX E TO I-XX N
TRUCKS USE US XXX N	WATCH FOR TRUCKS
WATCH FOR TRUCKS	EXPECT DELAYS
EXPECT DELAYS	PREPARE TO STOP
REDUCE SPEED XXX FT	END SHOULDER USE
USE OTHER ROUTES	WATCH FOR WORKERS
STAY IN LANE *	

Location List

AT FM XXXX
BEFORE RAILROAD CROSSING
NEXT X MILES
PAST US XXX EXIT
XXXXXXX TO XXXXXXX
US XXX TO FM XXXX

Warning List

SPEED LIMIT XX MPH
MAXIMUM SPEED XX MPH
MINIMUM SPEED XX MPH
ADVISORY SPEED XX MPH
RIGHT LANE EXIT
USE CAUTION
DRIVE SAFELY
DRIVE WITH CARE

** Advance Notice List

TUE-FRI XX AM- X PM
APR XX-XX X PM-X AM
BEGINS MONDAY
BEGINS MAY XX
MAY X-X XX PM - XX AM
NEXT FRI-SUN
XX AM TO XX PM
NEXT TUE AUG XX
TONIGHT XX PM- XX AM

* LANES SHIFT in Phase 1 must be used with STAY IN LANE in Phase 2.

** See Application Guidelines Note 6.

APPLICATION GUIDELINES

1. Only 1 or 2 phases are to be used on a PCMS.
2. The 1st phase (or both) should be selected from the "Road/Lane/Ramp Closure List" and the "Other Condition List".
3. A 2nd phase can be selected from the "Action to Take/Effect on Travel, Location, General Warning, or Advance Notice Phase Lists".
4. A Location Phase is necessary only if a distance or location is not included in the first phase selected.
5. If two PCMS are used in sequence, they must be separated by a minimum of 1000 ft. Each PCMS shall be limited to two phases, and should be understandable by themselves.
6. For advance notice, when the current date is within seven days of the actual work date, calendar days should be replaced with days of the week. Advance notification should typically be for no more than one week prior to the work.

WORDING ALTERNATIVES

1. The words RIGHT, LEFT and ALL can be interchanged as appropriate.
2. Roadway designations IH, US, SH, FM and LP can be interchanged as appropriate.
3. EAST, WEST, NORTH and SOUTH (or abbreviations E, W, N and S) can be interchanged as appropriate.
4. Highway names and numbers replaced as appropriate.
5. ROAD, HIGHWAY and FREEWAY can be interchanged as needed.
6. AHEAD may be used instead of distances if necessary.
7. FT and MI, MILE and MILES interchanged as appropriate.
8. AT, BEFORE and PAST interchanged as needed.
9. Distances or AHEAD can be eliminated from the message if a location phase is used.

PCMS SIGNS WITHIN THE R.O.W. SHALL BE BEHIND GUARDRAIL OR CONCRETE BARRIER OR SHALL HAVE A MINIMUM OF FOUR (4) PLASTIC DRUMS PLACED PERPENDICULAR TO TRAFFIC ON THE UPSTREAM SIDE OF THE PCMS, WHEN EXPOSED TO ONE DIRECTION OF TRAFFIC. WHEN EXPOSED TO TWO WAY TRAFFIC, THE FOUR DRUMS SHOULD BE PLACED WITH ONE DRUM AT EACH OF THE FOUR CORNERS OF THE UNIT.

FULL MATRIX PCMS SIGNS

1. When Full Matrix PCMS signs are used, the character height and legibility/visibility requirements shall be maintained as listed in Note 15 under "PORTABLE CHANGEABLE MESSAGE SIGNS" above.
2. When symbol signs, such as the "Flagger Symbol"(CW20-7) are represented graphically on the Full Matrix PCMS sign and, with the approval of the Engineer, it shall maintain the legibility/visibility requirement listed above.
3. When symbol signs are represented graphically on the Full Matrix PCMS, they shall only supplement the use of the static sign represented, and shall not substitute for, or replace that sign.
4. A full matrix PCMS may be used to simulate a flashing arrow board provided it meets the visibility, flash rate and dimming requirements on BC(7), for the same size arrow.

Texas Department of Transportation — Traffic Operations Division Standard

BARRICADE AND CONSTRUCTION PORTABLE CHANGEABLE MESSAGE SIGN (PCMS)

BC(6)-14

FILE: bc-14.dgn	DN: TxDOT	CK: TxDOT	DW: TxDOT	CK: TxDOT
©TxDOT November 2002	CONT	SECT	JOB	HIGHWAY
REVISIONS	2103	01	034	
9-07 8-14	DIST	COUNTY		SHEET NO.
7-13	AUS	WILLIAMSON		38

100

DATE: 3/23/2018 10:28:31 AM
FILE: c:\pwworking\dal\d0911859\bc-14.dgn

DISCLAIMER:
The use of this standard is governed by the "Texas Engineering Practice Act". No warranty of any kind is made by TxDOT for any purpose whatsoever. TxDOT assumes no responsibility for the conversion of this standard to other formats or for incorrect results or damages resulting from its use.

1. Barrier Reflectors shall be pre-qualified, and conform to the color and reflectivity requirements of DMS-8600. A list of prequalified Barrier Reflectors can be found at the Material Producer List web address shown on BC(1).
2. Color of Barrier Reflectors shall be as specified in the TMUTCD. The cost of the reflectors shall be considered subsidiary to Item 512.

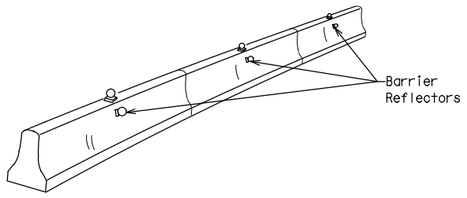

CONCRETE TRAFFIC BARRIER (CTB)

3. Where traffic is on one side of the CTB, two (2) Barrier Reflectors shall be mounted in approximately the midsection of each section of CTB. An alternate mounting location is uniformly spaced at one end of each CTB. This will allow for attachment of a barrier grapple without damaging the reflector. The Barrier Reflector mounted on the side of the CTB shall be located directly below the reflector mounted on top of the barrier, as shown in the detail above.
4. Where CTB separates two-way traffic, three barrier reflectors shall be mounted on each section of CTB. The reflector unit on top shall have two yellow reflective faces (Bi-Directional)while the reflectors on each side of the barrier shall have one yellow reflective face, as shown in the detail above.
5. When CTB separates traffic traveling in the same direction, no barrier reflectors will be required on top of the CTB.
6. Barrier Reflector units shall be yellow or white in color to match the edgeline being supplemented.
7. Maximum spacing of Barrier Reflectors is forty (40) feet.
8. Pavement markers or temporary flexible-reflective roadway marker tabs shall NOT be used as CTB delineation.
9. Attachment of Barrier Reflectors to CTB shall be per manufacturer's recommendations.
10. Missing or damaged Barrier Reflectors shall be replaced as directed by the Engineer.
11. Single slope barriers shall be delineated as shown on the above detail.

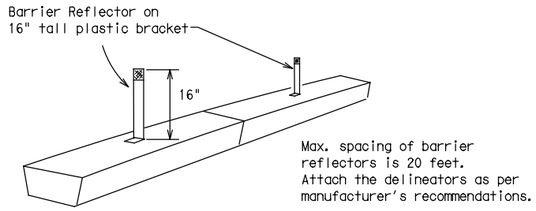

LOW PROFILE CONCRETE BARRIER (LPCB)

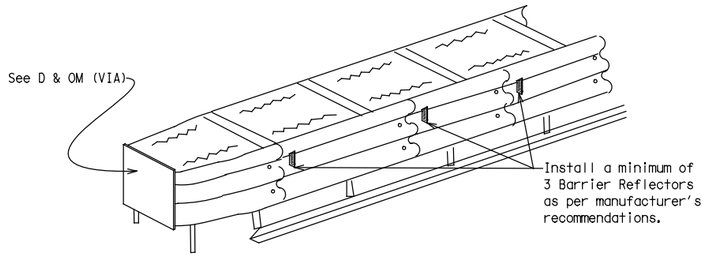

DELINEATION OF END TREATMENTS

END TREATMENTS FOR CTB'S USED IN WORK ZONES

End treatments used on CTB's in work zones shall meet crashworthy standards as defined in the National Cooperative Highway Research Report 350. Refer to the CWZTCD List for approved end treatments and manufacturers.

BARRIER REFLECTORS FOR CONCRETE TRAFFIC BARRIER AND ATTENUATORS

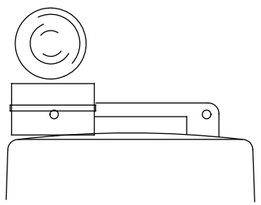

Type C Warning Light or approved substitute mounted on a drum adjacent to the travel way.

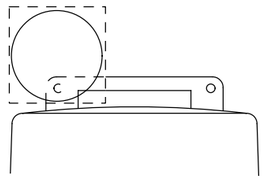

Warning reflector may be round or square.Must have a yellow reflective surface area of at least 30 square inches

WARNING LIGHTS

1. Warning lights shall meet the requirements of the TMUTCD.
2. Warning lights shall NOT be installed on barricades.
3. Type A-Low Intensity Flashing Warning Lights are commonly used with drums. They are intended to warn of or mark a potentially hazardous area. Their use shall be as indicated on this sheet and/or other sheets of the plans by the designation "FL". The Type A Warning Lights shall not be used with signs manufactured with Type B_{FL} or C_{FL} Sheeting meeting the requirements of Departmental Material Specification DMS-8300.
4. Type-C and Type D 360 degree Steady Burn Lights are intended to be used in a series for delineation to supplement other traffic control devices. Their use shall be as indicated on this sheet and/or other sheets of the plans by the designation "SB".
5. The Engineer/Inspector or the plans shall specify the location and type of warning lights to be installed on the traffic control devices.
6. When required by the Engineer, the Contractor shall furnish a copy of the warning lights certification. The warning light manufacturer will certify the warning lights meet the requirements of the latest ITE Purchase Specifications for Flashing and Steady-Burn Warning Lights.
7. When used to delineate curves, Type-C and Type D Steady Burn Lights should only be placed on the outside of the curve, not the inside.
8. The location of warning lights and warning reflectors on drums shall be as shown elsewhere in the plans.

WARNING LIGHTS MOUNTED ON PLASTIC DRUMS

1. Type A flashing warning lights are intended to warn drivers that they are approaching or are in a potentially hazardous area.
2. Type A random flashing warning lights are not intended for delineation and shall not be used in a series.
3. A series of sequential flashing warning lights placed on channelizing devices to form a merging taper may be used for delineation. If used, the successive flashing of the sequential warning lights should occur from the beginning of the taper to the end of the merging taper in order to identify the desired vehicle path. The rate of flashing for each light shall be 65 flashes per minute, plus or minus 10 flashes.
4. Type C and D steady-burn warning lights are intended to be used in a series to delineate the edge of the travel lane on detours, on lane changes, on lane closures, and on other similar conditions.
5. Type A, Type C and Type D warning lights shall be installed at locations as detailed on other sheets in the plans.
6. Warning lights shall not be installed on a drum that has a sign, chevron or vertical panel.
7. The maximum spacing for warning lights on drums should be identical to the channelizing device spacing.

WARNING REFLECTORS MOUNTED ON PLASTIC DRUMS AS A SUBSTITUTE FOR TYPE C (STEADY BURN) WARNING LIGHTS

1. A warning reflector or approved substitute may be mounted on a plastic drum as a substitute for a Type C, steady burn warning light at the discretion of the Contractor unless otherwise noted in the plans.
2. The warning reflector shall be yellow in color and shall be manufactured using a sign substrate approved for use with plastic drums listed on the CWZTCD.
3. The warning reflector shall have a minimum retroreflective surface area (one-side) of 30 square inches.
4. Round reflectors shall be fully reflectorized, including the area where attached to the drum.
5. Square substrates must have a minimum of 30 square inches of reflectorized sheeting. They do not have to be reflectorized where it attaches to the drum.
6. The side of the warning reflector facing approaching traffic shall have sheeting meeting the color and retroreflectivity requirements for DMS 8300-Type B or Type C.
7. When used near two-way traffic, both sides of the warning reflector shall be reflectorized.
8. The warning reflector should be mounted on the side of the handle nearest approaching traffic.
9. The maximum spacing for warning reflectors should be identical to the channelizing device spacing requirements.

Arrow Boards may be located behind channelizing devices in place for a shoulder taper or merging taper, otherwise they shall be delineated with four (4) channelizing devices placed perpendicular to traffic on the upstream side of traffic.

1. The Flashing Arrow Board should be used for all lane closures on multi-lane roadways, or slow moving maintenance or construction activities on the travel lanes.
2. Flashing Arrow Boards should not be used on two-lane, two-way roadways, detours, diversions or work on shoulders unless the "CAUTION" display (see detail below) is used.
3. The Engineer/Inspector shall choose all appropriate signs, barricades and/or other traffic control devices that should be used in conjunction with the Flashing Arrow Board.
4. The Flashing Arrow Board should be able to display the following symbols:

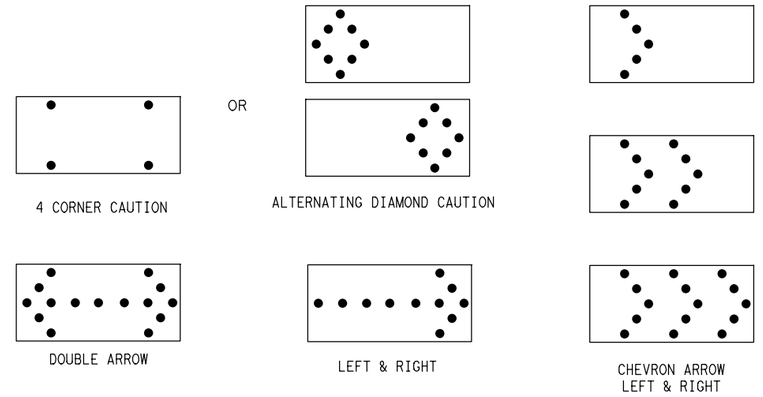

5. The "CAUTION" display consists of four corner lamps flashing simultaneously, or the Alternating Diamond Caution mode as shown.
6. The straight line caution display is NOT ALLOWED.
7. The Flashing Arrow Board shall be capable of minimum 50 percent dimming from rated lamp voltage. The flashing rate of the lamps shall not be less than 25 nor more than 40 flashes per minute.
8. Minimum lamp "on time" shall be approximately 50 percent for the flashing arrow and equal intervals of 25 percent for each sequential phase of the flashing chevron.
9. The sequential arrow display is NOT ALLOWED.
10. The flashing arrow display is the TxDOT standard; however, the sequential Chevron display may be used during daylight operations.
11. The Flashing Arrow Board shall be mounted on a vehicle, trailer or other suitable support.
12. A Flashing Arrow Board SHALL NOT BE USED to laterally shift traffic.
13. A full matrix PCMS may be used to simulate a Flashing Arrow Board provided it meets visibility, flash rate and dimming requirements on this sheet for the same size arrow.
14. Minimum mounting height of trailer mounted Arrow Boards should be 7 feet from roadway to bottom of panel.

REQUIREMENTS			
TYPE	MINIMUM SIZE	MINIMUM NUMBER OF PANEL LAMPS	MINIMUM VISIBILITY DISTANCE
B	30 x 60	13	3/4 mile
C	48 x 96	15	1 mile

ATTENTION

Flashing Arrow Boards shall be equipped with automatic dimming devices.

WHEN NOT IN USE, REMOVE THE ARROW BOARD FROM THE RIGHT-OF-WAY OR PLACE THE ARROW BOARD BEHIND CONCRETE TRAFFIC BARRIER OR GUARDRAIL.

FLASHING ARROW BOARDS

SHEET 7 OF 12

TRUCK-MOUNTED ATTENUATORS

1. Truck-mounted attenuators (TMA) used on TxDOT facilities must meet the requirements outlined in the National Cooperative Highway Research Report No. 350 (NCHRP 350) or the Manual for Assessing Safety Hardware (MASH).
2. Refer to the CWZTCD for the requirements of Level 2 or Level 3 TMAs.
3. Refer to the CWZTCD for a list of approved TMAs.
4. TMAs are required on freeways unless otherwise noted in the plans.
5. A TMA should be used anytime that it can be positioned 30 to 100 feet in advance of the area of crew exposure without adversely affecting the work performance.
6. The only reason a TMA should not be required is when a work area is spread down the roadway and the work crew is an extended distance from the TMA.

Texas Department of Transportation

Traffic Operations Division Standard

BARRICADE AND CONSTRUCTION ARROW PANEL, REFLECTORS, WARNING LIGHTS & ATTENUATOR

BC(7)-14

FILE: bc-14.dgn	DN: TxDOT	CK: TxDOT	DW: TxDOT	CK: TxDOT
©TxDOT November 2002	CONT	SECT	JOB	HIGHWAY
REVISIONS 9-07 8-14 7-13	2103	01	034	
	DIST	COUNTY		SHEET NO.
	AUS	WILLIAMSON		38

101

DATE: 3/23/2018 10:28:32 AM
FILE: c:\pwworking\dal\d0911859\bc-14.dgn

DISCLAIMER:
The use of this standard is governed by the "Texas Engineering Practice Act". No warranty of any kind is made by TxDOT for any purpose whatsoever. TxDOT assumes no responsibility for the conversion of this standard to other formats or for incorrect results or damages resulting from its use.

GENERAL NOTES

1. For long term stationary work zones on freeways, drums shall be used as the primary channelizing device.
2. For intermediate term stationary work zones on freeways, drums should be used as the primary channelizing device but may be replaced in tangent sections by vertical panels, or 42" two-piece cones. In tangent sections one-piece cones may be used with the approval of the Engineer but only if personnel are present on the project at all times to maintain the cones in proper position and location.
3. For short term stationary work zones on freeways, drums are the preferred channelizing device but may be replaced in tapers, transitions and tangent sections by vertical panels, two-piece cones or one-piece cones as approved by the Engineer.
4. Drums and all related items shall comply with the requirements of the current version of the "Texas Manual on Uniform Traffic Control Devices" (TMUTCD) and the "Compliant Work Zone Traffic Control Devices List" (CWZTCD).
5. Drums, bases, and related materials shall exhibit good workmanship and shall be free from objectionable marks or defects that would adversely affect their appearance or serviceability.
6. The Contractor shall have a maximum of 24 hours to replace any plastic drums identified for replacement by the Engineer/Inspector. The replacement device must be an approved device.

GENERAL DESIGN REQUIREMENTS

Pre-qualified plastic drums shall meet the following requirements:

1. Plastic drums shall be a two-piece design; the "body" of the drum shall be the top portion and the "base" shall be the bottom.
2. The body and base shall lock together in such a manner that the body separates from the base when impacted by a vehicle traveling at a speed of 20 MPH or greater but prevents accidental separation due to normal handling and/or air turbulence created by passing vehicles.
3. Plastic drums shall be constructed of lightweight flexible, and deformable materials. The Contractor shall NOT use metal drums or single piece plastic drums as channelization devices or sign supports.
4. Drums shall present a profile that is a minimum of 18 inches in width at the 36 inch height when viewed from any direction. The height of drum unit (body installed on base) shall be a minimum of 36 inches and a maximum of 42 inches.
5. The top of the drum shall have a built-in handle for easy pickup and shall be designed to drain water and not collect debris. The handle shall have a minimum of two widely spaced 9/16 inch diameter holes to allow attachment of a warning light, warning reflector unit or approved compliant sign.
6. The exterior of the drum body shall have a minimum of four alternating orange and white retroreflective circumferential stripes not less than 4 inches nor greater than 8 inches in width. Any non-reflectorized space between any two adjacent stripes shall not exceed 2 inches in width.
7. Bases shall have a maximum width of 36 inches, a maximum height of 4 inches, and a minimum of two footholds of sufficient size to allow base to be held down while separating the drum body from the base.
8. Plastic drums shall be constructed of ultra-violet stabilized, orange, high-density polyethylene (HDPE) or other approved material.
9. Drum body shall have a maximum unballasted weight of 11 lbs.
10. Drum and base shall be marked with manufacturer's name and model number.

RETROREFLECTIVE SHEETING

1. The stripes used on drums shall be constructed of sheeting meeting the color and retroreflectivity requirements of Departmental Materials Specification DMS-8300, "Sign Face Materials." Type A reflective sheeting shall be supplied unless otherwise specified in the plans.
2. The sheeting shall be suitable for use on and shall adhere to the drum surface such that, upon vehicular impact, the sheeting shall remain adhered in-place and exhibit no delaminating, cracking, or loss of retroreflectivity other than that loss due to abrasion of the sheeting surface.

BALLAST

1. Unballasted bases shall be large enough to hold up to 50 lbs. of sand. This base, when filled with the ballast material, should weigh between 35 lbs (minimum) and 50 lbs (maximum). The ballast may be sand in one to three sandbags separate from the base, sand in a sand-filled plastic base, or other ballasting devices as approved by the Engineer. Stacking of sandbags will be allowed, however height of sandbags above pavement surface may not exceed 12 inches.
2. Bases with built-in ballast shall weigh between 40 lbs. and 50 lbs. Built-in ballast can be constructed of an integral crumb rubber base or a solid rubber base.
3. Recycled truck tire sidewalls may be used for ballast on drums approved for this type of ballast on the CWZTCD list.
4. The ballast shall not be heavy objects, water, or any material that would become hazardous to motorists, pedestrians, or workers when the drum is struck by a vehicle.
5. When used in regions susceptible to freezing, drums shall have drainage holes in the bottoms so that water will not collect and freeze becoming a hazard when struck by a vehicle.
6. Ballast shall not be placed on top of drums.
7. Adhesives may be used to secure base of drums to pavement.

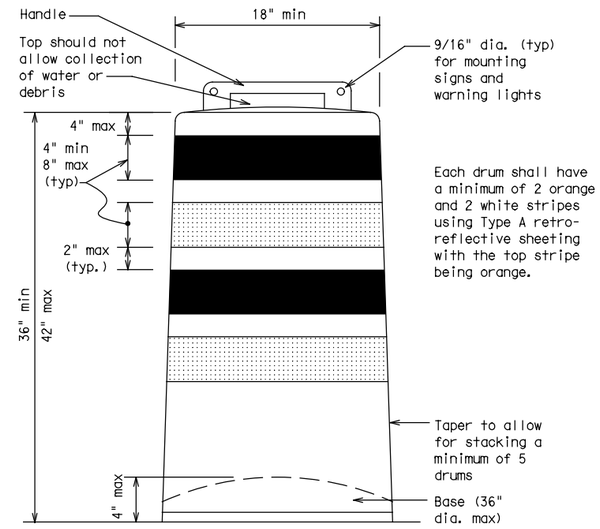

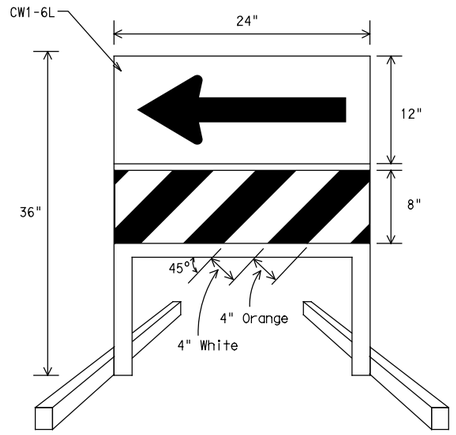

DIRECTION INDICATOR BARRICADE

1. The Direction Indicator Barricade may be used in tapers, transitions, and other areas where specific directional guidance to drivers is necessary.
2. If used, the Direction Indicator Barricade should be used in series to direct the driver through the transition and into the intended travel lane.
3. The Direction Indicator Barricade shall consist of One-Direction Large Arrow (CW1-6) sign in the size shown with a black arrow on a background of Type B_{FL} or Type C_{FL} Orange retroreflective sheeting above a rail with Type A retroreflective sheeting in alternating 4" white and orange stripes sloping downward at an angle of 45 degrees in the direction road users are to pass. Sheeting types shall be as per DMS 8300.
4. Double arrows on the Direction Indicator Barricade will not be allowed.
5. Approved manufacturers are shown on the CWZTCD List. Ballast shall be as approved by the manufacturers instructions.

This detail is not intended for fabrication. See note 3 and the CWZTCD list for providers of approved Detectable Pedestrian Barricades

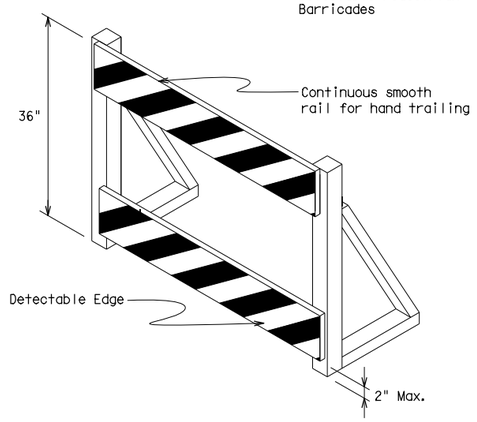

DETECTABLE PEDESTRIAN BARRICADES

1. When existing pedestrian facilities are disrupted, closed, or relocated in a TTC zone, the temporary facilities shall be detectable and include accessibility features consistent with the features present in the existing pedestrian facility.
2. Where pedestrians with visual disabilities normally use the closed sidewalk, a device that is detectable by a person with a visual disability traveling with the aid of a long cane shall be placed across the full width of the closed sidewalk.
3. Detectable pedestrian barricades similar to the one pictured above, longitudinal channelizing devices, some concrete barriers, and wood or chain link fencing with a continuous detectable edging can satisfactorily delineate a pedestrian path.
4. Tape, rope, or plastic chain strung between devices are not detectable, do not comply with the design standards in the "Americans with Disabilities Act Accessibility Guidelines for Buildings and Facilities (ADAAG)" and should not be used as a control for pedestrian movements.
5. Warning lights shall not be attached to detectable pedestrian barricades.
6. Detectable pedestrian barricades may use 8" nominal barricade rails as shown on BC(10) provided that the top rail provides a smooth continuous rail suitable for hand trailing with no splinters, burrs, or sharp edges.

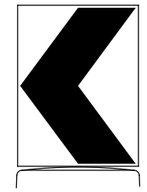

18" x 24" Sign
(Maximum Sign Dimension)
Chevron CW1-8, Opposing Traffic Lane Divider, Driveway sign D70a, Keep Right R4 series or other signs as approved by Engineer

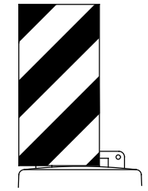

12" x 24"
Vertical Panel
mount with diagonals sloping down towards travel way

Plywood, Aluminum or Metal sign substrates shall NOT be used on plastic drums

SIGNS, CHEVRONS, AND VERTICAL PANELS MOUNTED ON PLASTIC DRUMS

1. Signs used on plastic drums shall be manufactured using substrates listed on the CWZTCD.
2. Chevrons and other work zone signs with an orange background shall be manufactured with Type B_{FL} or Type C_{FL} Orange sheeting meeting the color and retroreflectivity requirements of DMS-8300, "Sign Face Material," unless otherwise specified in the plans.
3. Vertical Panels shall be manufactured with orange and white sheeting meeting the requirements of DMS-8300 Type A Diagonal stripes on Vertical Panels shall slope down toward the intended traveled lane.
4. Other sign messages (text or symbolic) may be used as approved by the Engineer. Sign dimensions shall not exceed 18 inches in width or 24 inches in height, except for the R9 series signs discussed in note 8 below.
5. Signs shall be installed using a 1/2 inch bolt (nominal) and nut, two washers, and one locking washer for each connection.
6. Mounting bolts and nuts shall be fully engaged and adequately torqued. Bolts should not extend more than 1/2 inch beyond nuts.
7. Chevrons may be placed on drums on the outside of curves, on merging tapers or on shifting tapers. When used in these locations they may be placed on every drum or spaced not more than on every third drum. A minimum of three (3) should be used at each location called for in the plans.
8. R9-9, R9-10, R9-11 and R9-11a Sidewalk Closed signs which are 24 inches wide may be mounted on plastic drums, with approval of the Engineer.

Texas Department of Transportation

Traffic Operations Division Standard

BARRICADE AND CONSTRUCTION CHANNELIZING DEVICES

BC(8)-14

FILE: bc-14.dgn	DN: TxDOT	CK: TxDOT	DW: TxDOT	CK: TxDOT
©TxDOT November 2002	CONT	SECT	JOB	HIGHWAY
REVISIONS	2103	01	034	
4-03 7-13	DIST	COUNTY		SHEET NO.
9-07 8-14	AUS	WILLIAMSON		40

102

DISCLAIMER:
The use of this standard is governed by the "Texas Engineering Practice Act". No warranty of any kind is made by TxDOT for any purpose whatsoever. TxDOT assumes no responsibility for the conversion of this standard to other formats or for incorrect results or damages resulting from its use.

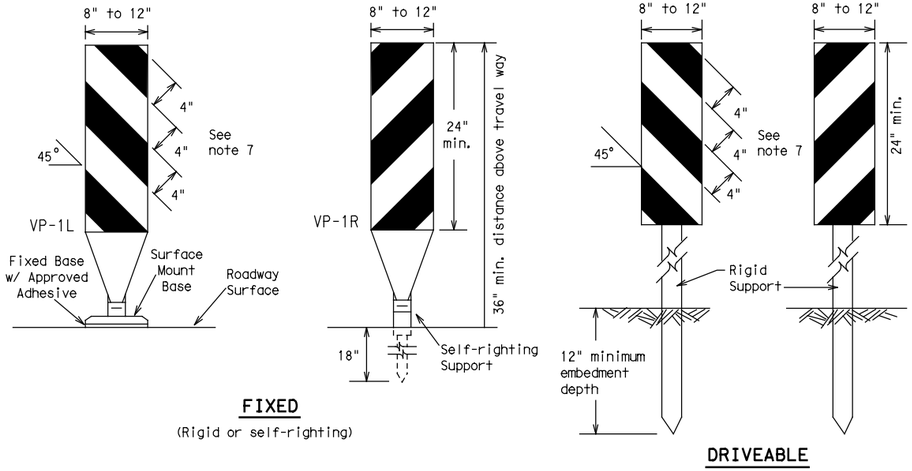

FIXED
(Rigid or self-righting)

DRIVEABLE

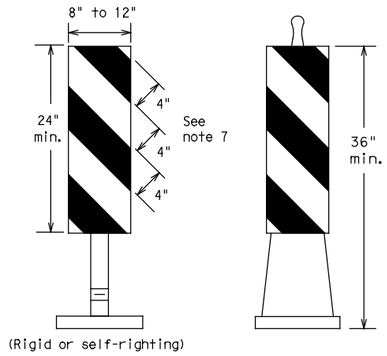

(Rigid or self-righting)

PORTABLE

1. Vertical Panels (VP's) are normally used to channelize traffic or divide opposing lanes of traffic.
2. VP's may be used in daytime or nighttime situations. They may be used at the edge of shoulder drop-offs and other areas such as lane transitions where positive daytime and nighttime delineation is required. The Engineer/Inspector shall refer to the Roadway Design Manual Appendix B "Treatment of Pavement Drop-offs in Work Zones" for additional guidelines on the use of VP's for drop-offs.
3. VP's should be mounted back to back if used at the edge of cuts adjacent to two-way two lane roadways. Stripes are to be reflective orange and reflective white and should always slope downward toward the travel lane.
4. VP's used on expressways and freeways or other high speed roadways, may have more than 270 square inches of retroreflective area facing traffic.
5. Self-righting supports are available with portable base. See "Compliant Work Zone Traffic Control Devices List" (CWZTCD).
6. Sheeting for the VP's shall be retroreflective Type A conforming to Departmental Material Specification DMS-8300, unless noted otherwise.
7. Where the height of reflective material on the vertical panel is 36 inches or greater, a panel stripe of 6 inches shall be used.

VERTICAL PANELS (VPs)

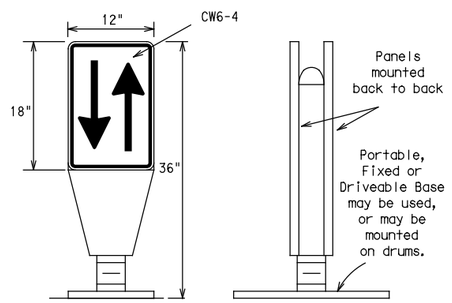

1. Opposing Traffic Lane Dividers (OTLD) are delineation devices designed to convert a normal one-way roadway section to two-way operation. OTLD's are used on temporary centerlines. The upward and downward arrows on the sign's face indicate the direction of traffic on either side of the divider. The base is secured to the pavement with an adhesive or rubber weight to minimize movement caused by a vehicle impact or wind gust.
2. The OTLD may be used in combination with 42" cones or VPs.
3. Spacing between the OTLD shall not exceed 500 feet. 42" cones or VPs placed between the OTLD's should not exceed 100 foot spacing.
4. The OTLD shall be orange with a black non-reflective legend. Sheeting for the OTLD shall be retroreflective Type B_{FL} or Type C_{FL} conforming to Departmental Material Specification DMS-8300, unless noted otherwise. The legend shall meet the requirements of DMS-8300.

OPPOSING TRAFFIC LANE DIVIDERS (OTLD)

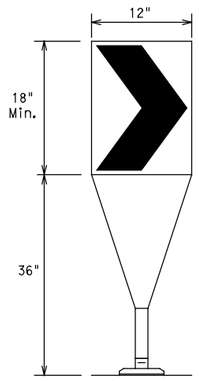

Fixed Base w/ Approved Adhesive (Driveable Base, or Flexible Support can be used)

1. The chevron shall be a vertical rectangle with a minimum size of 12 by 18 inches.
2. Chevrons are intended to give notice of a sharp change of alignment with the direction of travel and provide additional emphasis and guidance for vehicle operators with regard to changes in horizontal alignment of the roadway.
3. Chevrons, when used, shall be erected on the outside of a sharp curve or turn, or on the far side of an intersection. They shall be in line with and at right angles to approaching traffic. Spacing should be such that the motorist always has three in view, until the change in alignment eliminates its need.
4. To be effective, the chevron should be visible for at least 500 feet.
5. Chevrons shall be orange with a black nonreflective legend. Sheeting for the chevron shall be retroreflective Type B_{FL} or Type C_{FL} conforming to Departmental Material Specification DMS-8300, unless noted otherwise. The legend shall meet the requirements of DMS-8300.
6. For Long Term Stationary use on tapers or transitions on freeways and divided highways self-righting chevrons may be used to supplement plastic drums but not to replace plastic drums.

CHEVRONS

GENERAL NOTES

1. Work Zone channelizing devices illustrated on this sheet may be installed in close proximity to traffic and are suitable for use on high or low speed roadways. The Engineer/Inspector shall ensure that spacing and placement is uniform and in accordance with the "Texas Manual on Uniform Traffic Control Devices" (TMUTCD).
2. Channelizing devices shown on this sheet may have a driveable, fixed or portable base. The requirement for self-righting channelizing devices must be specified in the General Notes or other plan sheets.
3. Channelizing devices on self-righting supports should be used in work zone areas where channelizing devices are frequently impacted by errant vehicles or vehicle related wind gusts making alignment of the channelizing devices difficult to maintain. Locations of these devices shall be detailed elsewhere in the plans. These devices shall conform to the TMUTCD and the "Compliant Work Zone Traffic Control Devices List" (CWZTCD).
4. The Contractor shall maintain devices in a clean condition and replace damaged, nonreflective, faded, or broken devices and bases as required by the Engineer/Inspector. The Contractor shall be required to maintain proper device spacing and alignment.
5. Portable bases shall be fabricated from virgin and/or recycled rubber. The portable bases shall weigh a minimum of 30 lbs.
6. Pavement surfaces shall be prepared in a manner that ensures proper bonding between the adhesives, the fixed mount bases and the pavement surface. Adhesives shall be prepared and applied according to the manufacturer's recommendations.
7. The installation and removal of channelizing devices shall not cause detrimental effects to the final pavement surfaces, including pavement surface discoloration or surface integrity. Driveable bases shall not be permitted on final pavement surfaces. The Engineer/Inspector shall approve all application and removal procedures of fixed bases.

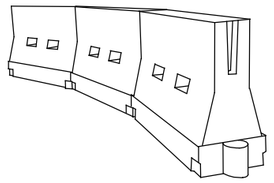

LONGITUDINAL CHANNELIZING DEVICES (LCD)

1. LCDs are crashworthy, lightweight, deformable devices that are highly visible, have good target value and can be connected together. They are not designed to contain or redirect a vehicle on impact.
2. LCDs may be used instead of a line of cones or drums.
3. LCDs shall be placed in accordance to application and installation requirements specific to the device, and used only when shown on the CWZTCD list.
4. LCDs should not be used to provide positive protection for obstacles, pedestrians or workers.
5. LCDs shall be supplemented with retroreflective delineation as required for temporary barriers on BC(7) when placed roughly parallel to the travel lanes.
6. LCDs used as barricades placed perpendicular to traffic should have at least one row of reflective sheeting meeting the requirements for barricade rails as shown on BC(10) placed near the top of the LCD along the full length of the device.

WATER BALLASTED SYSTEMS USED AS BARRIERS

1. Water ballasted systems used as barriers shall not be used solely to channelize road users, but also to protect the work space per the appropriate NCHRP 350 crashworthiness requirements based on roadway speed and barrier application.
2. Water ballasted systems used to channelize vehicular traffic shall be supplemented with retroreflective delineation or channelizing devices to improve daytime/nighttime visibility. They may also be supplemented with pavement markings.
3. Water ballasted systems used as barriers shall be placed in accordance to application and installation requirements specific to the device, and used only when shown on the CWZTCD list.
4. Water ballasted systems used as barriers should not be used for a merging taper except in low speed (less than 45 MPH) urban areas. When used on a taper in a low speed urban area, the taper shall be delineated and the taper length should be designed to optimize road user operations considering the available geometric conditions.
5. When water ballasted systems used as barriers have blunt ends exposed to traffic, they should be attenuated as per manufacturer recommendations or flared to a point outside the clear zone.

If used to channelize pedestrians, longitudinal channelizing devices or water ballasted systems must have a continuous detectable bottom for users of long canes and the top of the unit shall not be less than 32 inches in height.

HOLLOW OR WATER BALLASTED SYSTEMS USED AS LONGITUDINAL CHANNELIZING DEVICES OR BARRIERS

Posted Speed *	Formula	Minimum Desirable Taper Lengths ** 10′ Offset	11′ Offset	12′ Offset	Suggested Maximum Spacing of Channelizing Devices: On a Taper	On a Tangent
30	$L=\frac{WS^2}{60}$	150′	165′	180′	30′	60′
35		205′	225′	245′	35′	70′
40		265′	295′	320′	40′	80′
45	L = WS	450′	495′	540′	45′	90′
50		500′	550′	600′	50′	100′
55		550′	605′	660′	55′	110′
60		600′	660′	720′	60′	120′
65		650′	715′	780′	65′	130′
70		700′	770′	840′	70′	140′
75		750′	825′	900′	75′	150′
80		800′	880′	960′	80′	160′

** Taper lengths have been rounded off.
L=Length of Taper (FT.) W=Width of Offset (FT.)
S=Posted Speed (MPH)

SUGGESTED MAXIMUM SPACING OF CHANNELIZING DEVICES AND MINIMUM DESIRABLE TAPER LENGTHS

Texas Department of Transportation | Traffic Operations Division Standard

BARRICADE AND CONSTRUCTION CHANNELIZING DEVICES

BC(9)-14

FILE: bc-14.dgn	DN: TxDOT	CK: TxDOT	DW: TxDOT	CK: TxDOT
© TxDOT November 2002	CONT	SECT	JOB	HIGHWAY
REVISIONS 9-07 8-14 7-13	2103	01	034	
	DIST	COUNTY		SHEET NO.
	AUS	WILLIAMSON		41

103

DATE: 3/23/2018 10:28:35 AM
FILE: c:\pwworking\dal\d0911859\bc-14.dgn

DISCLAIMER:
The use of this standard is governed by the "Texas Engineering Practice Act". No warranty of any kind is made by TxDOT for any purpose whatsoever. TxDOT assumes no responsibility for the conversion of this standard to other formats or for incorrect results or damages resulting from its use.

TYPE 3 BARRICADES

1. Refer to the Compliant Work Zone Traffic Control Devices List (CWZTCD) for details of the Type 3 Barricades and a list of all materials used in the construction of Type 3 Barricades.
2. Type 3 Barricades shall be used at each end of construction projects closed to all traffic.
3. Barricades extending across a roadway should have stripes that slope downward in the direction toward which traffic must turn in detouring. When both right and left turns are provided, the chevron striping may slope downward in both directions from the center of the barricade. Where no turns are provided at a closed road striping should slope downward in both directions toward the center of roadway.
4. Striping of rails, for the right side of the roadway, should slope downward to the left. For the left side of the roadway, striping should slope downward to the right.
5. Identification markings may be shown only on the back of the barricade rails. The maximum height of letters and/or company logos used for identification shall be 1".
6. Barricades shall not be placed parallel to traffic unless an adequate clear zone is provided.
7. Warning lights shall NOT be installed on barricades.
8. Where barricades require the use of weights to keep from turning over, the use of sandbags with dry, cohesionless sand is recommended. The sandbags will be tied shut to keep the sand from spilling and to maintain a constant weight. Sand bags shall not be stacked in a manner that covers any portion of a barricade rails reflective sheeting. Rock, concrete, iron, steel or other solid objects will NOT be permitted. Sandbags should weigh a minimum of 35 lbs and a maximum of 50 lbs. Sandbags shall be made of a durable material that tears upon vehicular impact. Rubber (such as tire inner tubes) shall not be used for sandbags. Sandbags shall only be placed along or upon the base supports of the device and shall not be suspended above ground level or hung with rope, wire, chains or other fasteners.
9. Sheeting for barricades shall be retroreflective Type A conforming to Departmental Material Specification DMS-8300 unless otherwise noted.

Barricades shall NOT be used as a sign support.

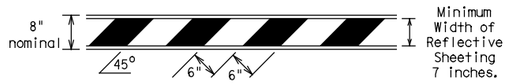

TYPICAL STRIPING DETAIL FOR BARRICADE RAIL

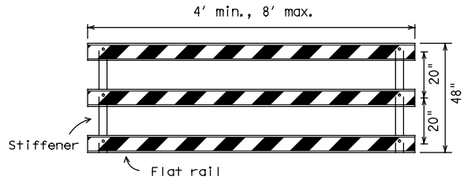

Stiffener may be inside or outside of support, but no more than 2 stiffeners shall be allowed on one barricade.

TYPICAL PANEL DETAIL FOR SKID OR POST TYPE BARRICADES

Each roadway of a divided highway shall be barricaded in the same manner.

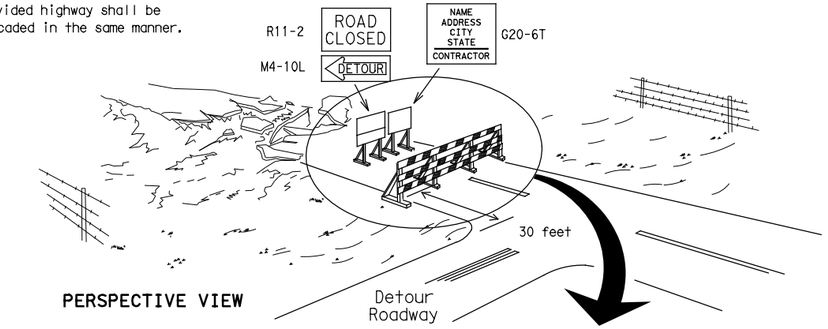

PERSPECTIVE VIEW

The three rails on Type 3 barricades shall be reflectorized orange and reflective white stripes on one side facing one-way traffic and both sides for two-way traffic.
Barricade striping should slant downward in the direction of detour.

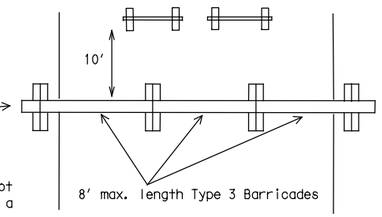

PLAN VIEW

1. Signs should be mounted on independent supports at a 7 foot mounting height in center of roadway. The signs should be a minimum of 10 feet behind Type 3 Barricades.
2. Advance signing shall be as specified elsewhere in the plans.

TYPE 3 BARRICADE (POST AND SKID) TYPICAL APPLICATION

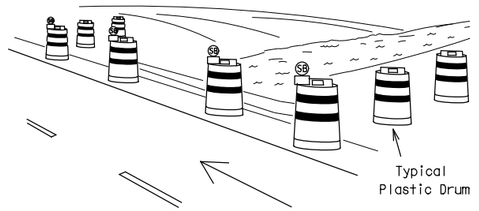

PERSPECTIVE VIEW

1. Where positive redirectional capability is provided, drums may be omitted.
2. Plastic construction fencing may be used with drums for safety as required in the plans.
3. Vertical Panels on flexible support may be substituted for drums when the shoulder width is less than 4 feet.
4. When the shoulder width is greater than 12 feet, steady-burn lights may be omitted if drums are used.
5. Drums must extend the length of the culvert widening.

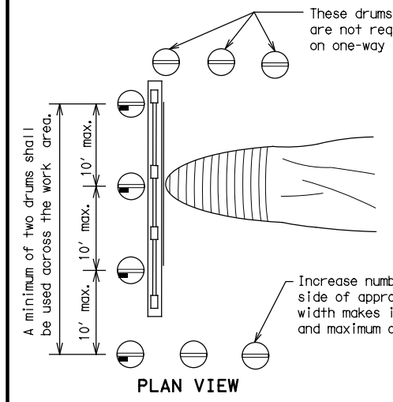

PLAN VIEW

LEGEND	
	Plastic drum
	Plastic drum with steady burn light or yellow warning reflector
SB	Steady burn warning light or yellow warning reflector

CULVERT WIDENING OR OTHER ISOLATED WORK WITHIN THE PROJECT LIMITS

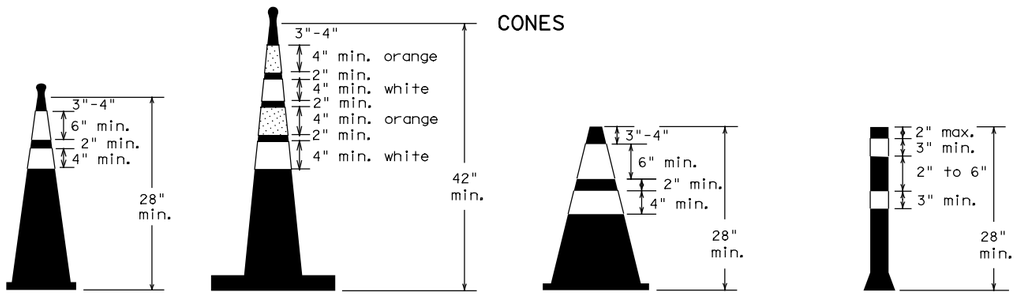

28" Cones shall have a minimum weight of 9 1/2 lbs.

42" 2-piece cones shall have a minimum weight of 30 lbs. including base.

1. Traffic cones and tubular markers shall be predominantly orange, and meet the height and weight requirements shown above.
2. One-piece cones have the body and base of the cone molded in one consolidated unit. Two-piece cones have a cone shaped body and a separate rubber base, or ballast, that is added to keep the device upright and in place.
3. Two-piece cones may have a handle or loop extending up to 8" above the minimum height shown, in order to aid in retrieving the device.
4. Cones or tubular markers used at night shall have white or white and orange reflective bands as shown above. The reflective bands shall have a smooth, sealed outer surface and meet the requirements of Departmental Material Specification DMS-8300 Type A.
5. 28" cones and tubular markers are generally suitable for short duration and short-term stationary work as defined on BC(4). These should not be used for intermediate-term or long-term stationary work unless personnel is on-site to maintain them in their proper upright position.
6. 42" two-piece cones, vertical panels or drums are suitable for all work zone durations.
7. Cones or tubular markers used on each project should be of the same size and shape.

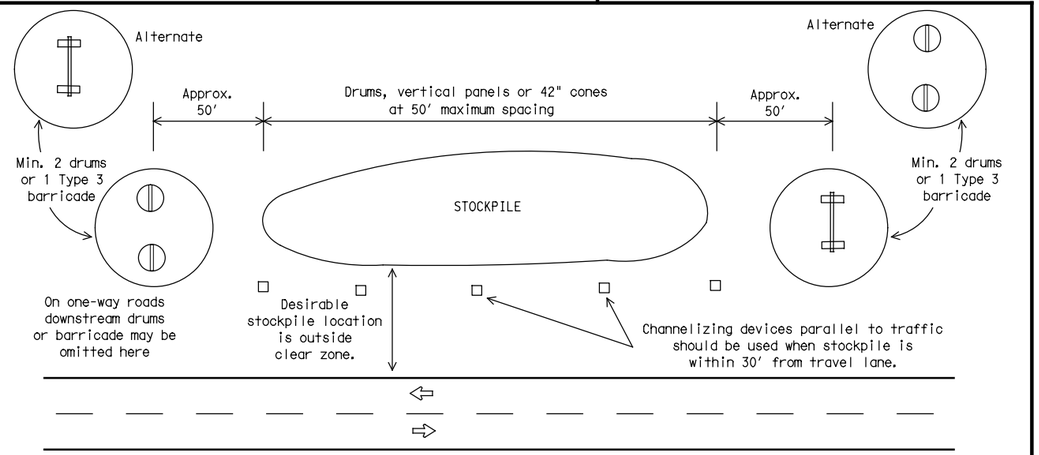

TRAFFIC CONTROL FOR MATERIAL STOCKPILES

THIS DEVICE SHALL NOT BE USED ON PROJECTS LET AFTER MARCH 2014.

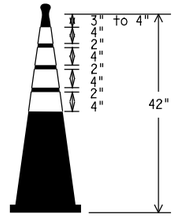

EDGELINE CHANNELIZER

1. This device is intended only for use in place of a vertical panel to channelize traffic by indicating the edge of the travel lane. It is not intended to be used in transitions or tapers.
2. This device shall not be used to separate lanes of traffic (opposing or otherwise) or warn of objects.
3. This device is based on a 42 inch, two-piece cone with an alternate striping pattern: four 4 inch retroreflective bands, with an approximate 2 inch gap between bands. The color of the band should correspond to the color of the edgeline (yellow for left edgeline, white for right edgeline) for which the device is substituted or for which it supplements. The reflectorized bands shall be retroreflective Type A conforming to Departmental Material Specification DMS-8300, unless otherwise noted.
4. The base must weigh a minimum of 30 lbs.

Texas Department of Transportation

Traffic Operations Division Standard

BARRICADE AND CONSTRUCTION CHANNELIZING DEVICES

BC(10)-14

FILE: bc-14.dgn	DN: TxDOT	CK: TxDOT	DW: TxDOT	CK: TxDOT
©TxDOT November 2002	CONT	SECT	JOB	HIGHWAY
REVISIONS 9-07 8-14 7-13	2103	01	034	
	DIST	COUNTY		SHEET NO.
	AUS	WILLIAMSON		42

104

DATE: 3/23/2018 10:28:36 AM
FILE: c:\pwworking\dal\d0911859\bc-14.dgn

WORK ZONE PAVEMENT MARKINGS

GENERAL

1. The Contractor shall be responsible for maintaining work zone and existing pavement markings, in accordance with the standard specifications and special provisions, on all roadways open to traffic within the CSJ limits unless otherwise stated in the plans.
2. Color, patterns and dimensions shall be in conformance with the "Texas Manual on Uniform Traffic Control Devices" (TMUTCD).
3. Additional supplemental pavement marking details may be found in the plans or specifications.
4. Pavement markings shall be installed in accordance with the TMUTCD and as shown on the plans.
5. When short term markings are required on the plans, short term markings shall conform with the TMUTCD, the plans and details as shown on the Standard Plan Sheet WZ(STPM).
6. When standard pavement markings are not in place and the roadway is opened to traffic, DO NOT PASS signs shall be erected to mark the beginning of the sections where passing is prohibited and PASS WITH CARE signs at the beginning of sections where passing is permitted.
7. All work zone pavement markings shall be installed in accordance with Item 662, "Work Zone Pavement Markings."

RAISED PAVEMENT MARKERS

1. Raised pavement markers are to be placed according to the patterns on BC(12).
2. All raised pavement markers used for work zone markings shall meet the requirements of Item 672, "RAISED PAVEMENT MARKERS" and Departmental Material Specification DMS-4200 or DMS-4300.

PREFABRICATED PAVEMENT MARKINGS

1. Removable prefabricated pavement markings shall meet the requirements of DMS-8241.
2. Non-removable prefabricated pavement markings (foil back) shall meet the requirements of DMS-8240.

MAINTAINING WORK ZONE PAVEMENT MARKINGS

1. The Contractor will be responsible for maintaining work zone pavement markings within the work limits.
2. Work zone pavement markings shall be inspected in accordance with the frequency and reporting requirements of work zone traffic control device inspections as required by Form 599.
3. The markings should provide a visible reference for a minimum distance of 300 feet during normal daylight hours and 160 feet when illuminated by automobile low-beam headlights at night, unless sight distance is restricted by roadway geometrics.
4. Markings failing to meet this criteria within the first 30 days after placement shall be replaced at the expense of the Contractor as per Specification Item 662.

REMOVAL OF PAVEMENT MARKINGS

1. Pavement markings that are no longer applicable, could create confusion or direct a motorist toward or into the closed portion of the roadway shall be removed or obliterated before the roadway is opened to traffic.
2. The above shall not apply to detours in place for less than three days, where flaggers and/or sufficient channelizing devices are used in lieu of markings to outline the detour route.
3. Pavement markings shall be removed to the fullest extent possible, so as not to leave a discernable marking. This shall be by any method approved by TxDOT Specification Item 677 for "Eliminating Existing Pavement Markings and Markers".
4. The removal of pavement markings may require resurfacing or seal coating portions of the roadway as described in Item 677.
5. Subject to the approval of the Engineer, any method that proves to be successful on a particular type pavement may be used.
6. Blast cleaning may be used but will not be required unless specifically shown in the plans.
7. Over-painting of the markings SHALL NOT BE permitted.
8. Removal of raised pavement markers shall be as directed by the Engineer.
9. Removal of existing pavement markings and markers will be paid for directly in accordance with Item 677, "ELIMINATING EXISTING PAVEMENT MARKINGS AND MARKERS," unless otherwise stated in the plans.
10. Black-out marking tape may be used to cover conflicting existing markings for periods less than two weeks when approved by the Engineer.

Temporary Flexible-Reflective Roadway Marker Tabs

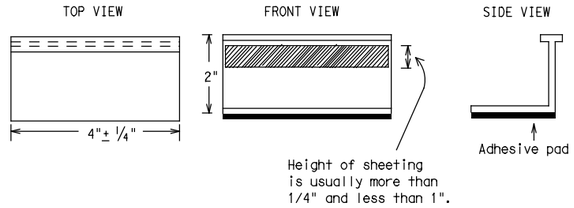

STAPLES OR NAILS SHALL NOT BE USED TO SECURE TEMPORARY FLEXIBLE-REFLECTIVE ROADWAY MARKER TABS TO THE PAVEMENT SURFACE

1. Temporary flexible-reflective roadway marker tabs used as guidemarks shall meet the requirements of DMS-8242.
2. Tabs detailed on this sheet are to be inspected and accepted by the Engineer or designated representative. Sampling and testing is not normally required, however at the option of the Engineer, either "A" or "B" below may be imposed to assure quality before placement on the roadway.
   A. Select five (5) or more tabs at random from each lot or shipment and submit to the Construction Division, Materials and Pavement Section to determine specification compliance.
   B. Select five (5) tabs and perform the following test. Affix five (5) tabs at 24 inch intervals on an asphaltic pavement in a straight line. Using a medium size passenger vehicle or pickup, run over the markers with the front and rear tires at a speed of 35 to 40 miles per hour, four (4) times in each direction. No more than one (1) out of the five (5) reflective surfaces shall be lost or displaced as a result of this test.
3. Small design variances may be noted between tab manufacturers.
4. See Standard Sheet WZ(STPM) for tab placement on new pavements. See Standard Sheet TCP(7-1) for tab placement on seal coat work.

RAISED PAVEMENT MARKERS USED AS GUIDEMARKS

1. Raised pavement markers used as guidemarks shall be from the approved product list, and meet the requirements of DMS-4200.
2. All temporary construction raised pavement markers provided on a project shall be of the same manufacturer.
3. Adhesive for guidemarks shall be bituminous material hot applied or butyl rubber pad for all surfaces, or thermoplastic for concrete surfaces.

Guidemarks shall be designated as:
YELLOW - (two amber reflective surfaces with yellow body).
WHITE - (one silver reflective surface with white body).

DEPARTMENTAL MATERIAL SPECIFICATIONS	
PAVEMENT MARKERS (REFLECTORIZED)	DMS-4200
TRAFFIC BUTTONS	DMS-4300
EPOXY AND ADHESIVES	DMS-6100
BITUMINOUS ADHESIVE FOR PAVEMENT MARKERS	DMS-6130
PERMANENT PREFABRICATED PAVEMENT MARKINGS	DMS-8240
TEMPORARY REMOVABLE, PREFABRICATED PAVEMENT MARKINGS	DMS-8241
TEMPORARY FLEXIBLE, REFLECTIVE ROADWAY MARKER TABS	DMS-8242

A list of prequalified reflective raised pavement markers, non-reflective traffic buttons, roadway marker tabs and other pavement markings can be found at the Material Producer List web address shown on BC(1).

DISCLAIMER:
The use of this standard is governed by the "Texas Engineering Practice Act". No warranty of any kind is made by TxDOT for any purpose whatsoever. TxDOT assumes no responsibility for the conversion of this standard to other formats or for incorrect results or damages resulting from its use.

Texas Department of Transportation — Traffic Operations Division Standard

BARRICADE AND CONSTRUCTION PAVEMENT MARKINGS

BC(11)-14

FILE: bc-14.dgn	DN: TxDOT	CK: TxDOT	DW: TxDOT	CK: TxDOT
©TxDOT February 1998	CONT	SECT	JOB	HIGHWAY
REVISIONS	2103	01	034	
2-98 9-07	DIST	COUNTY		SHEET NO.
1-02 7-13	AUS	WILLIAMSON		43
11-02 8-14				

105

DATE: 3/23/2018 10:28:38 AM
FILE: c:\pwworking\dal\d0911859\bc-14.dgn

DISCLAIMER:
The use of this standard is governed by the "Texas Engineering Practice Act". No warranty of any kind is made by TxDOT for any purpose whatsoever. TxDOT assumes no responsibility for the conversion of this standard to other formats or for incorrect results or damages resulting from its use.

PAVEMENT MARKING PATTERNS

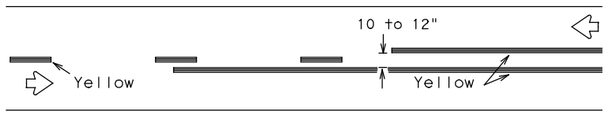

REFLECTORIZED PAVEMENT MARKINGS - PATTERN A

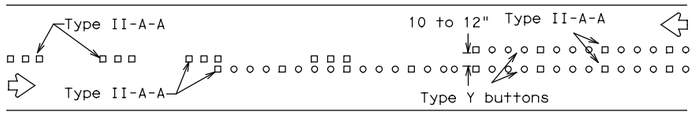

RAISED PAVEMENT MARKERS - PATTERN A

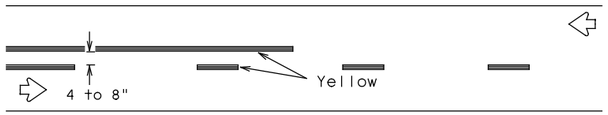

REFLECTORIZED PAVEMENT MARKINGS - PATTERN B

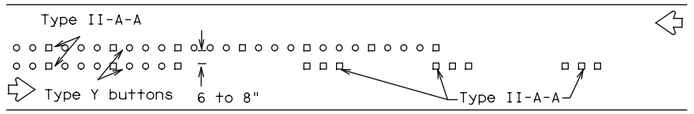

RAISED PAVEMENT MARKERS - PATTERN B

Pattern A is the TXDOT Standard, however Pattern B may be used if approved by the Engineer.
Prefabricated markings may be substituted for reflectorized pavement markings.

CENTER LINE & NO-PASSING ZONE BARRIER LINES FOR TWO-LANE, TWO-WAY HIGHWAYS

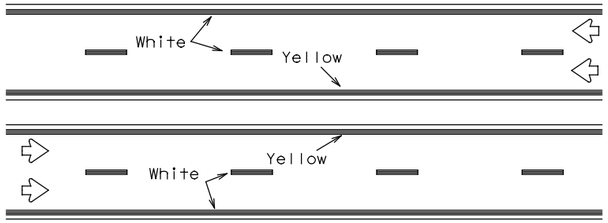

REFLECTORIZED PAVEMENT MARKINGS

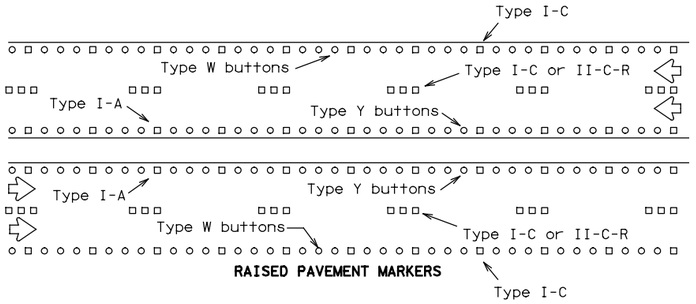

RAISED PAVEMENT MARKERS

Prefabricated markings may be substituted for reflectorized pavement markings.

EDGE & LANE LINES FOR DIVIDED HIGHWAY

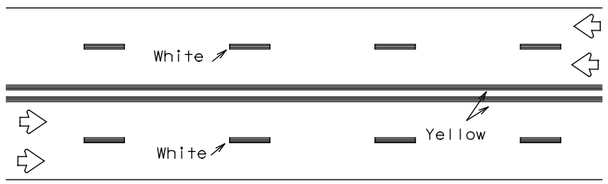

REFLECTORIZED PAVEMENT MARKINGS

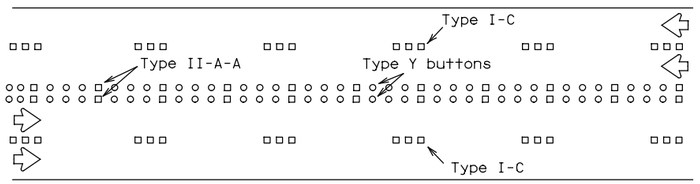

RAISED PAVEMENT MARKERS

Prefabricated markings may be substituted for reflectorized pavement markings.

LANE & CENTER LINES FOR MULTILANE UNDIVIDED HIGHWAYS

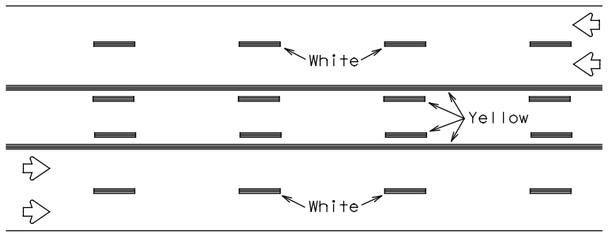

REFLECTORIZED PAVEMENT MARKINGS

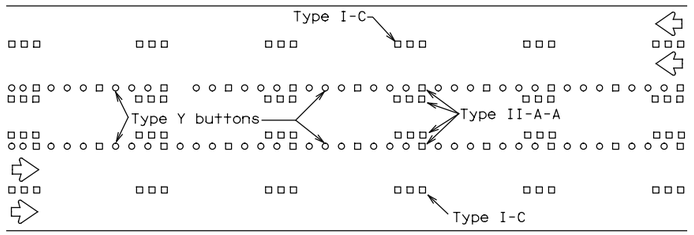

RAISED PAVEMENT MARKERS

Prefabricated markings may be substituted for reflectorized pavement markings.

TWO-WAY LEFT TURN LANE

STANDARD WORK ZONE PAVEMENT MARKINGS DETAILS

SOLID LINES

DOUBLE NO-PASSING LINE

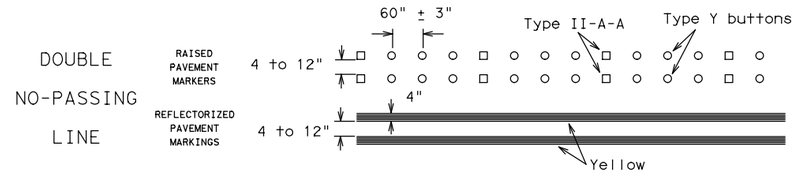

EDGE LINE OR SINGLE NO-PASSING LINE

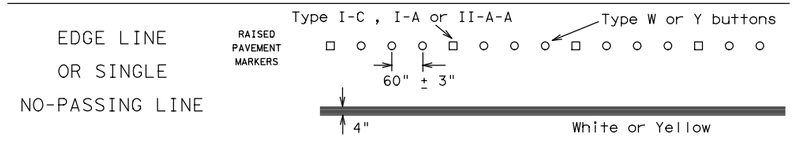

WIDE LINE

(FOR LEFT TURN CHANNELIZING LINE OR CHANNELIZING LINE USED TO DISCOURAGE LANE CHANGING.)

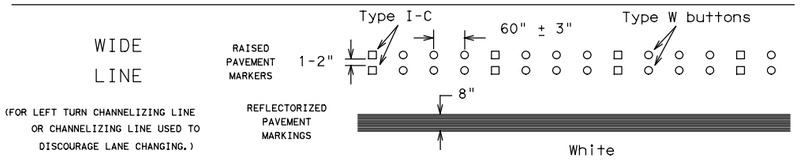

BROKEN LINES

CENTER LINE OR LANE LINE

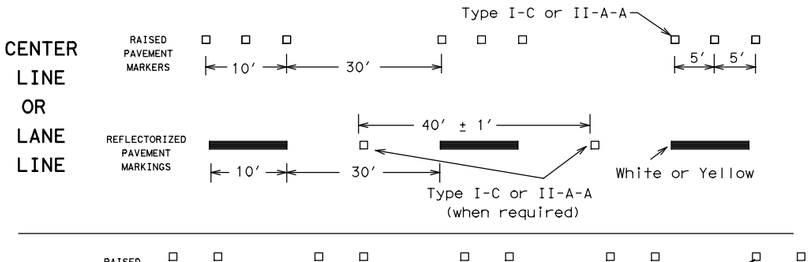

AUXILIARY OR LANEDROP LINE

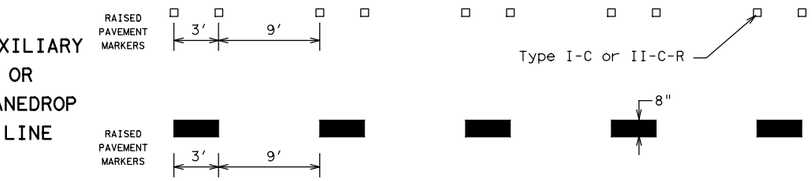

REMOVABLE MARKINGS WITH RAISED PAVEMENT MARKERS

If raised pavement markers are used to supplement REMOVABLE markings, the markers shall be applied to the top of the tape at the approximate mid length of tape used for broken lines or at 20 foot spacing for solid lines. This allows an easier removal of raised pavement markers and tape.

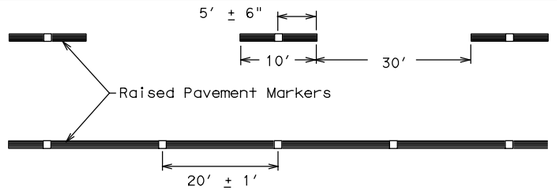

Centerline only - not to be used on edge lines

Raised pavement markers used as standard pavement markings shall be from the approved products list and meet the requirements of Item 672 "RAISED PAVEMENT MARKERS."

Texas Department of Transportation

Traffic Operations Division Standard

BARRICADE AND CONSTRUCTION PAVEMENT MARKING PATTERNS

BC(12)-14

FILE: bc-14.dgn	DN: TxDOT	CK: TxDOT	DW: TxDOT	CK: TxDOT
©TxDOT February 1998	CONT	SECT	JOB	HIGHWAY
REVISIONS	2103	01	034	
1-97 9-07	DIST	COUNTY		SHEET NO.
2-98 7-13	AUS	WILLIAMSON		44
11-02 8-14				

106

DATE: 3/23/2018 10:28:39 AM
FILE: c:\pwworking\dal\d0911859\bc-14.dgn

DISCLAIMER:
The use of this standard is governed by the "Texas Engineering Practice Act". No warranty of any kind is made by TxDOT for any purpose whatsoever. TxDOT assumes no responsibility for the conversion of this standard to other formats or for incorrect results or damages resulting from its use.

DATE: 3/23/2018 10:28:41 AM
FILE: c:\pwworking\dal\d0911859\tcp1-3-18.dgn

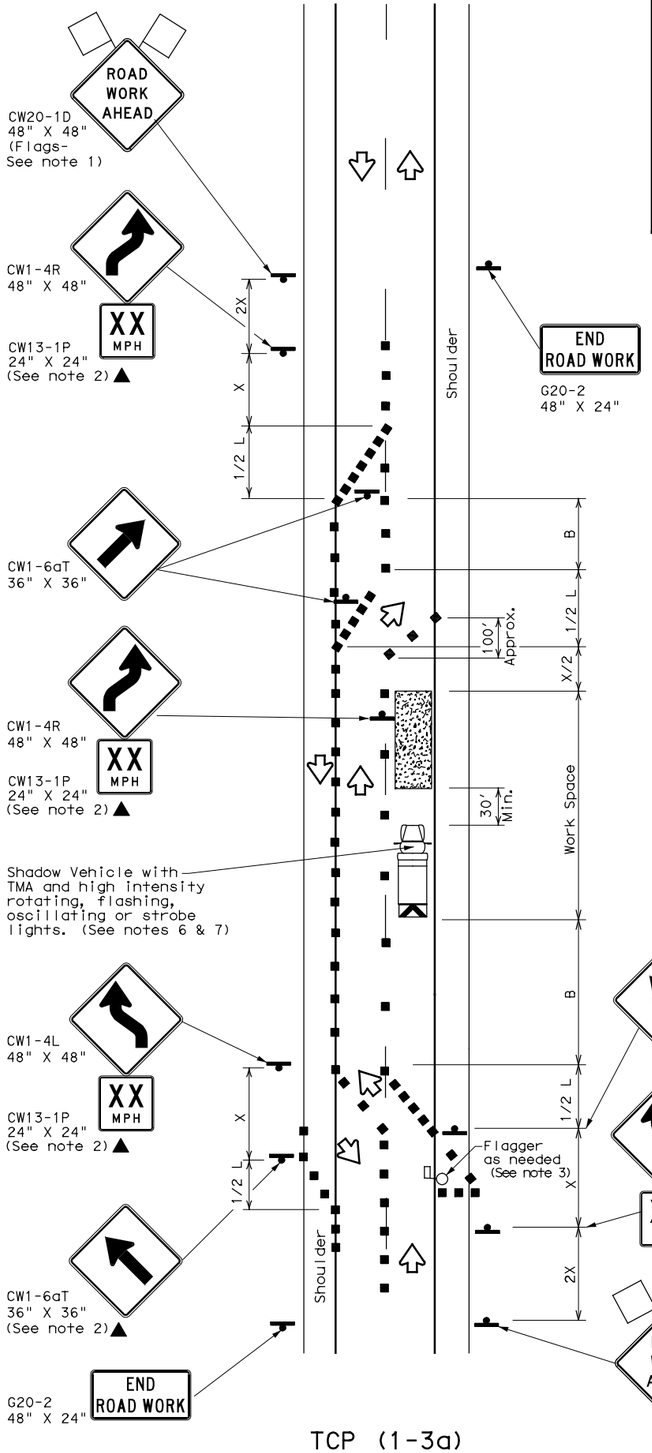

TCP (1-3a)
2-LANE ROADWAY WITH PAVED SHOULDERS

ONE LANE CLOSED
ADEQUATE FIELD OF VIEW

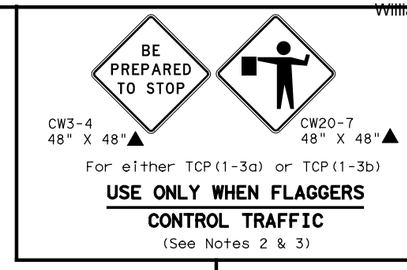

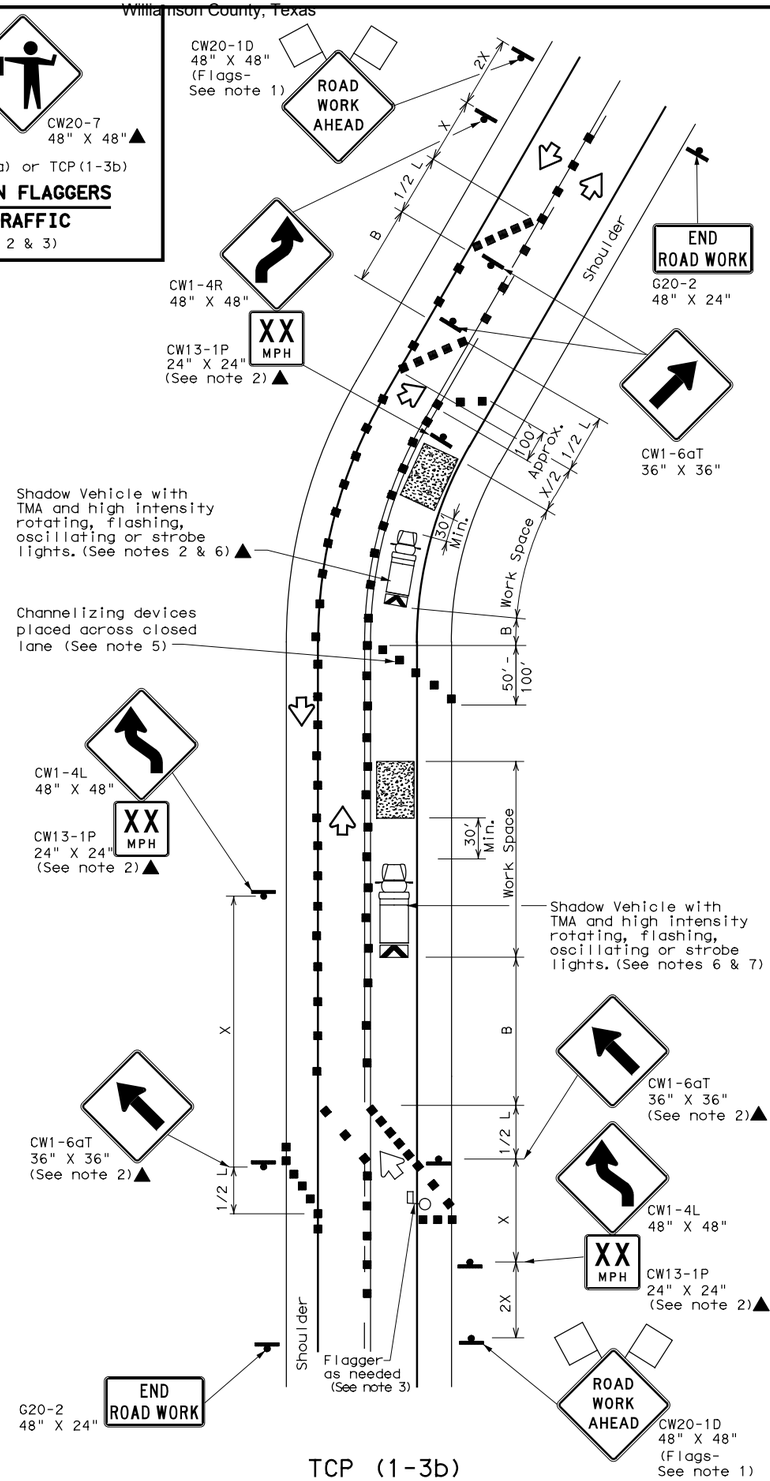

TCP (1-3b)
2-LANE ROADWAY WITH PAVED SHOULDERS

ONE LANE CLOSED
INADEQUATE FIELD OF VIEW

LEGEND			
	Type 3 Barricade		Channelizing Devices
	Heavy Work Vehicle		Truck Mounted Attenuator (TMA)
	Trailer Mounted Flashing Arrow Board	M	Portable Changeable Message Sign (PCMS)
	Sign		Traffic Flow
	Flag		Flagger

Posted Speed *	Formula	Minimum Desirable Taper Lengths ** 10' Offset	11' Offset	12' Offset	Suggested Maximum Spacing of Channelizing Devices: On a Taper	On a Tangent	Minimum Sign Spacing "X" Distance	Suggested Longitudinal Buffer Space "B"
30	$L=\frac{WS^2}{60}$	150'	165'	180'	30'	60'	120'	90'
35		205'	225'	245'	35'	70'	160'	120'
40		265'	295'	320'	40'	80'	240'	155'
45	L=WS	450'	495'	540'	45'	90'	320'	195'
50		500'	550'	600'	50'	100'	400'	240'
55		550'	605'	660'	55'	110'	500'	295'
60		600'	660'	720'	60'	120'	600'	350'
65		650'	715'	780'	65'	130'	700'	410'
70		700'	770'	840'	70'	140'	800'	475'
75		750'	825'	900'	75'	150'	900'	540'

* Conventional Roads Only
** Taper lengths have been rounded off.
L=Length of Taper(FT) W=Width of Offset(FT) S=Posted Speed(MPH)

TYPICAL USAGE				
MOBILE	SHORT DURATION	SHORT TERM STATIONARY	INTERMEDIATE TERM STATIONARY	LONG TERM STATIONARY
	✓	✓		

GENERAL NOTES

1. Flags attached to signs where shown are REQUIRED.
2. All traffic control devices illustrated are REQUIRED, except those denoted with the triangle symbol may be omitted when stated elsewhere in the plans, or for routine maintenance work, when approved by the Engineer.
3. Flagger control should NOT be used unless roadway conditions or heavy traffic volume require additional emphasis to safely control traffic. Additional flaggers may be positioned in advance of traffic queues to alert traffic to reduce speed.
4. DO NOT PASS, PASS WITH CARE and construction regulatory speed zone signs may be installed downstream of the ROAD WORK AHEAD signs.
5. When the work zone is made up of several work spaces, channelizing devices should be placed laterally across the closed lane to re-emphasize closure. Laterally placed channelizing devices should be repeated every 500 to 1000 feet in urban areas and every 1/4 to 1/2 mile in rural areas.
6. A Shadow Vehicle with a TMA should be used anytime it can be positioned 30 to 100 feet in advance of the area of crew exposure without adversely affecting the performance or quality of the work. If workers are no longer present but road or work conditions require the traffic control to remain in place, Type 3 Barricades or other channelizing devices may be substituted for the Shadow Vehicle and TMA.
7. Additional Shadow Vehicles with TMAs may be positioned off the paved surface, next to those shown in order to protect wider work spaces.
8. Where traffic is directed over a yellow centerline, channelizing devices which separate two-way traffic should be spaced on tapers at 20', or 15' if posted speed are 35 mph or slower, and for tangent sections, at 1/2S where S is the speed in mph. This tighter device spacing is intended for the area of conflicting markings not the entire work zone.

Texas Department of Transportation

Traffic Operations Division Standard

TRAFFIC CONTROL PLAN TRAFFIC SHIFTS ON TWO LANE ROADS

TCP(1-3)-18

FILE: tcp1-3-18.dgn	DN:	CK:	DW:	CK:
© TxDOT December 1985	CONT	SECT	JOB	HIGHWAY
REVISIONS	2103	01	034	
2-94 4-98	DIST	COUNTY		SHEET NO.
8-95 2-12	AUS	WILLIAMSON		45
1-97 2-18				

153

DISCLAIMER:
The use of this standard is governed by the "Texas Engineering Practice Act". No warranty of any kind is made by TxDOT for any purpose whatsoever. TxDOT assumes no responsibility for the conversion of this standard to other formats or for incorrect results or damages resulting from its use.

DATE: 3/23/2018 10:28:43 AM
FILE: c:\pwworking\dal\d0911859\tcp1-5-18.dgn

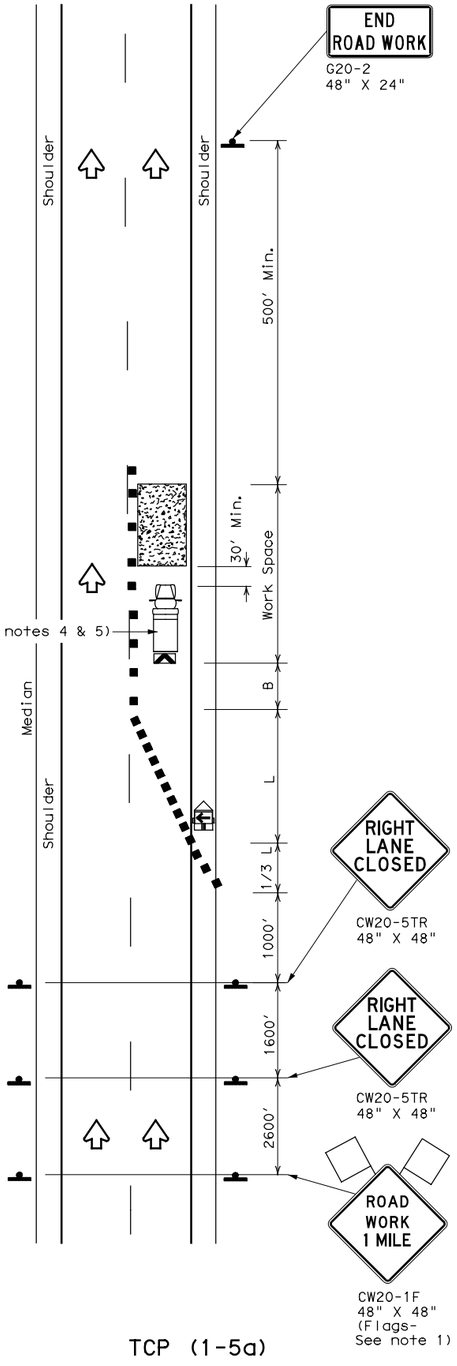

TCP (1-5a)

ONE LANE CLOSURE

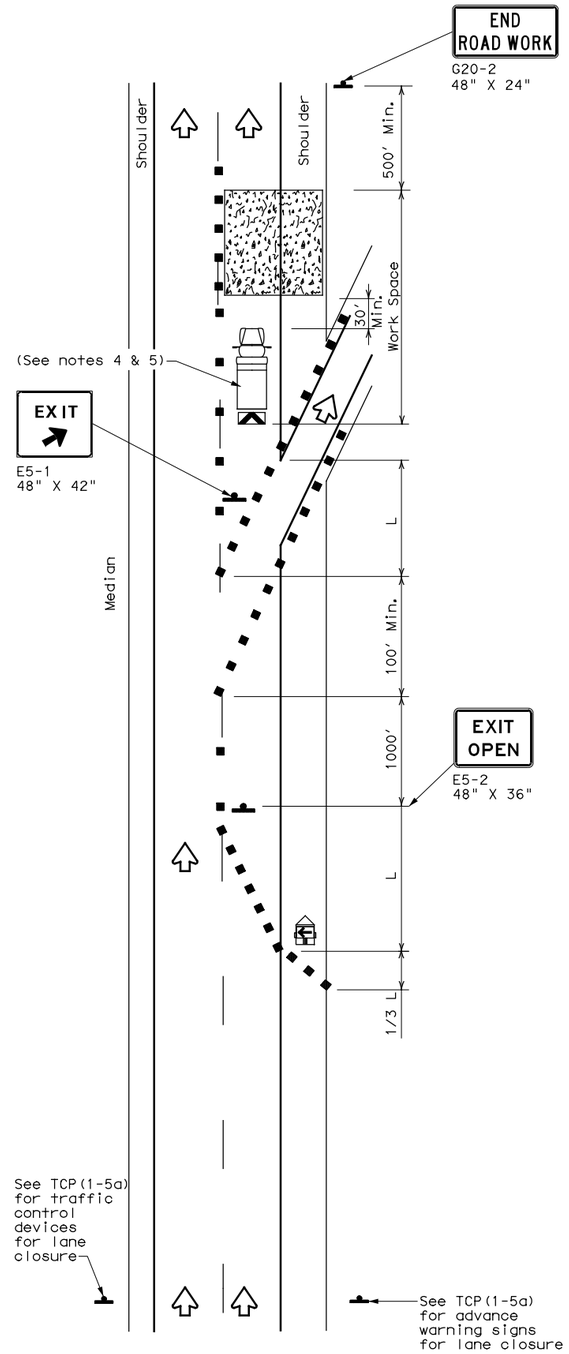

TCP (1-5b)

LANE CLOSURE NEAR EXIT RAMPS

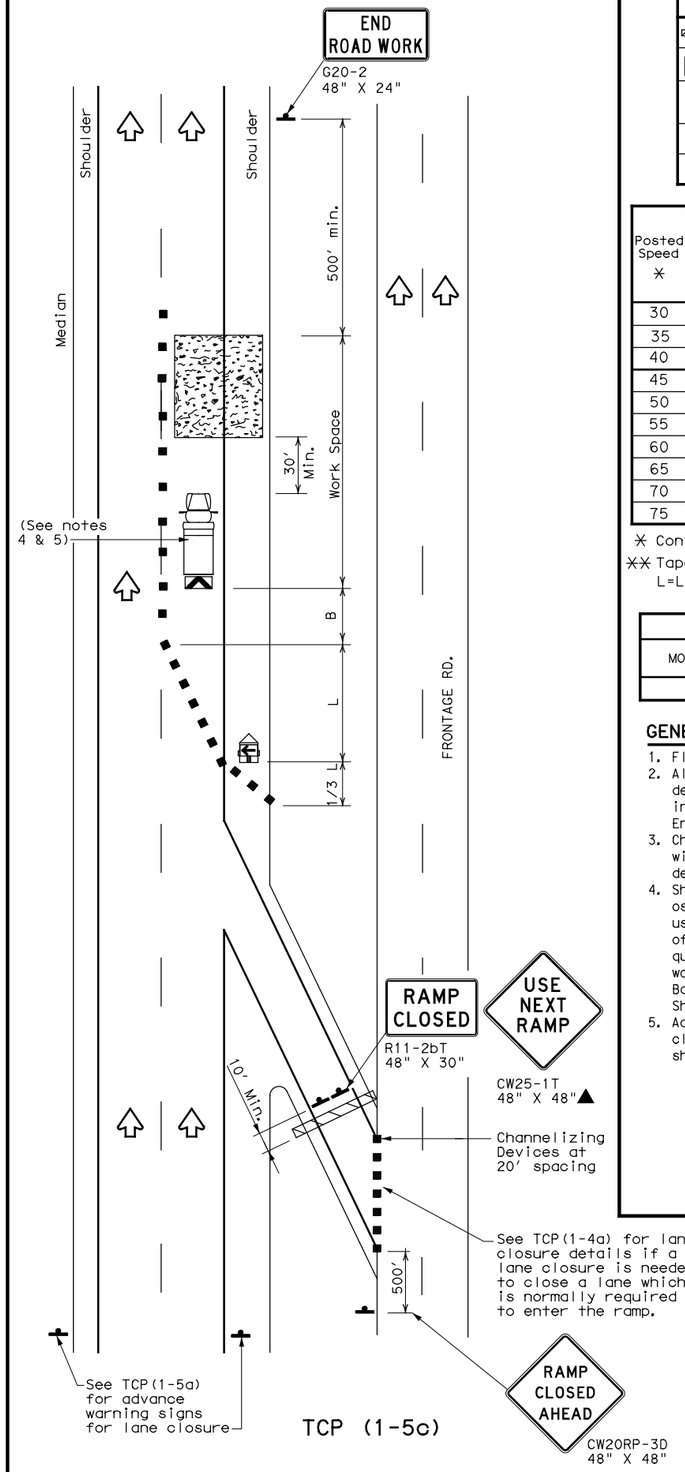

TCP (1-5c)

LANE CLOSURE NEAR ENTRANCE RAMPS

LEGEND			
	Type 3 Barricade		Channelizing Devices
	Heavy Work Vehicle		Truck Mounted Attenuator (TMA)
	Trailer Mounted Flashing Arrow Board	M	Portable Changeable Message Sign (PCMS)
	Sign		Traffic Flow
	Flag		Flagger

Posted Speed *	Formula	Minimum Desirable Taper Lengths ** 10' Offset	11' Offset	12' Offset	Suggested Maximum Spacing of Channelizing Devices: On a Taper	On a Tangent	Minimum Sign Spacing "X" Distance	Suggested Longitudinal Buffer Space "B"
30	$L=\frac{WS^2}{60}$	150'	165'	180'	30'	60'	120'	90'
35		205'	225'	245'	35'	70'	160'	120'
40		265'	295'	320'	40'	80'	240'	155'
45	L=WS	450'	495'	540'	45'	90'	320'	195'
50		500'	550'	600'	50'	100'	400'	240'
55		550'	605'	660'	55'	110'	500'	295'
60		600'	660'	720'	60'	120'	600'	350'
65		650'	715'	780'	65'	130'	700'	410'
70		700'	770'	840'	70'	140'	800'	475'
75		750'	825'	900'	75'	150'	900'	540'

* Conventional Roads Only

** Taper lengths have been rounded off.
L=Length of Taper(FT) W=Width of Offset(FT) S=Posted Speed(MPH)

TYPICAL USAGE				
MOBILE	SHORT DURATION	SHORT TERM STATIONARY	INTERMEDIATE TERM STATIONARY	LONG TERM STATIONARY
		✓		

GENERAL NOTES

1. Flags attached to signs where shown, are REQUIRED.
2. All traffic control devices illustrated are REQUIRED, except those denoted with the triangle symbol may be omitted when stated elsewhere in the plans, or for routine maintenance work, when approved by the Engineer.
3. Channelizing devices used to close lanes may be supplemented with the Chevron Alignment Sign placed on every other channelizing device. Chevrons may be attached to plastic drums as per BC Standards.
4. Shadow Vehicle with TMA and high intensity rotating, flashing, oscillating or strobe lights. A Shadow Vehicle with a TMA should be used anytime it can be positioned 30 to 100 feet in advance of the area of crew exposure without adversely affecting the performance or quality of the work. If workers are no longer present but road or work conditions require the traffic control to remain in place, Type 3 Barricades or other channelizing devices may be substituted for the Shadow Vehicle and TMA.
5. Additional Shadow Vehicles with TMAs may be positioned in each closed lane, on the shoulder or off the paved surface, next to those shown in order to protect a wider work space.

Texas Department of Transportation

Traffic Operations Division Standard

TRAFFIC CONTROL PLAN LANE CLOSURES FOR DIVIDED HIGHWAYS

TCP(1-5)-18

FILE: tcp1-5-18.dgn	DN:	CK:	DW:	CK:
©TxDOT February 2012	CONT	SECT	JOB	HIGHWAY
REVISIONS 2-18	2103	01	034	
	DIST	COUNTY		SHEET NO.
	AUS	WILLIAMSON		46

CONTROL MAP OF SW BYPASS WILLIAMSON COUNTY, TEXAS

LEGEND

- MAG NAIL SET
- IRON ROD SET W/ CAP
- COTTON GIN SPINDLE (CGS)
- 80D/W NAIL SET
- TXDOT BRASS MONUMENT FOUND
- TBM

CONTROL MAP

Point No.	Northing	Easting	Elev	Description
11	10196145.3564	3129925.6570	790.78	MON
300	10195032.0400	3128439.0750	790.87	TPT-80D/W-LVL
302	10194970.1064	3128134.6716	790.09	TPT-80D/W-LVL
303	10194990.8796	3127876.3254	791.24	TPT-CGS-LVL
304	10194963.4544	3127775.5816	790.04	TPT-80D/W-LVL
305	10194878.8912	3127660.7608	791.10	TPT-80D/W-LVL
306	10194840.7437	3127451.0929	795.67	TPT-MAG-LVL
307	10194824.9095	3127282.4697	798.52	TPT-80D/W-LVL
309	10194769.6577	3126868.2736	808.78	TPT-80D/W-LVL
310	10194748.8900	3126706.0275	812.64	TPT-80DW-FLY-LVL
530	10194891.1399	3126325.4820	819.72	TPT-80D/W-LVL
531	10194700.5101	3126309.4578	823.14	TPT-80D/W-LVL
801	10195092.1700	3127506.8900	794.57	TPT-80D/W
802	10195167.2400	3127480.2300	794.52	TPT-80D/W
803	10195507.4031	3129135.8664	801.53	TPT-IRSC-IC-LVL
804	10195354.5847	3129320.6403	798.24	TPT-IRSC-IC-LVL
1575	10195785.8711	3129405.9802	791.56	TPT-80DW-RETIE-LVL
5843	10195161.4000	3128609.9300	792.01	IRSC-4933-LVL
5845	10194843.3400	3128518.8500	793.04	IRSC-4933-LVL

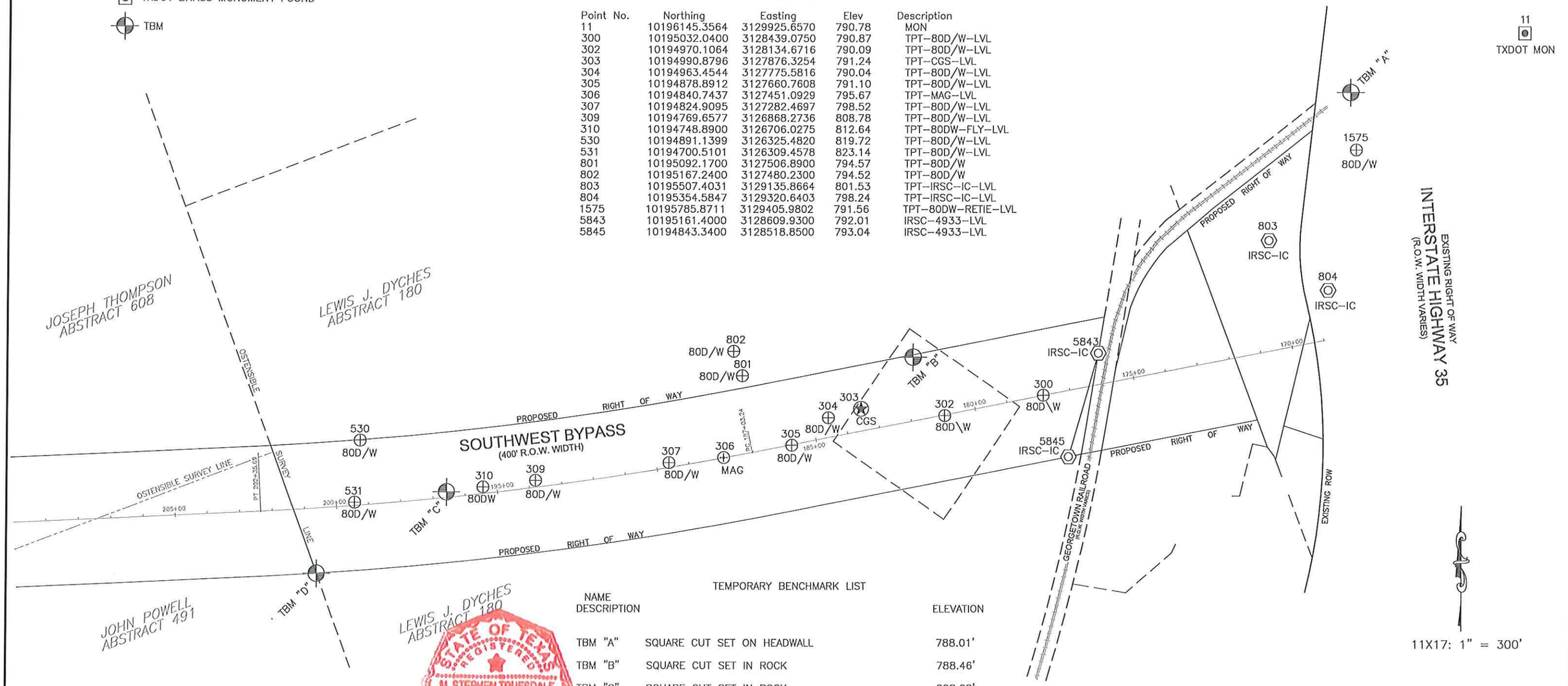

11X17: 1" = 300'

TEMPORARY BENCHMARK LIST

NAME	DESCRIPTION	ELEVATION
TBM "A"	SQUARE CUT SET ON HEADWALL	788.01'
TBM "B"	SQUARE CUT SET IN ROCK	788.46'
TBM "C"	SQUARE CUT SET IN ROCK	808.08'
TBM "D"	IRON ROD WITH CAP STAMPED "INLAND"	827.10'

STATE OF TEXAS REGISTERED M. STEPHEN TRUESDALE 4933 PROFESSIONAL LAND SURVEYOR

AS PREPARED BY:

M. Stephen Truesdale 28 MAR 2017

M. STEPHEN TRUESDALE
REGISTERED PROFESSIONAL LAND SURVEYOR NO. 4933
LICENSED STATE LAND SURVEYOR
FIRM REGISTRATION NO. 100591-00
INLAND GEODETICS, LLC
1504 CHISHOLM TRAIL ROAD, STE. 103
ROUND ROCK, TX 78681

DATE

NOTES:
COORDINATES ARE SURFACE VALUES BASED ON THE TEXAS STATE PLANE COORDINATE SYSTEM, NAD 83, CENTRAL ZONE 4203.
TO CONVERT COORDINATES AND DISTANCES TO GRID VALUES MULTIPLY BY A COMBINED SURFACE ADJUSTMENT FACTOR OF 0.99986002.
ELEVATIONS REPORTED ARE GPS ORTHOMETRIC HEIGHTS.

INLAND GEODETICS
PROFESSIONAL LAND SURVEYORS
1504 CHISHOLM TRAIL RD. STE. 103
ROUND ROCK, TX. 78681
PH. (512) 238-1200, FAX (512) 238-1251
FIRM REGISTRATION NO. 100591-00

CONTROL MAP OF SW BYPASS WILLIAMSON COUNTY, TEXAS

LEGEND

- COTTON GIN SPINDLE (CGS)
- 80D/W NAIL SET (UNLESS NOTED OTHERWISE)
- IRON ROD FOUND

CONTROL MAP

PointNo.	Northing	Easting	Elev	Description
100	10196081.8600	3121271.7200	824.93	TPT-IRON ROD FOUND
101	10195752.2700	3120634.3050	845.26	TPT-CGS
500	10196584.8600	3122031.4710	858.34	TPT-80DW
501	10196354.7100	3121644.1930	838.02	TPT-100DW



11X17: 1" = 100'

AS PREPARED BY:

M. Stephen Truesdale 23 MAR 2018

M. STEPHEN TRUESDALE DATE
REGISTERED PROFESSIONAL LAND SURVEYOR NO. 4933
LICENSED STATE LAND SURVEYOR
FIRM REGISTRATION NO. 100591-00
INLAND GEODETICS, LLC
1504 CHISHOLM TRAIL ROAD, STE. 103
ROUND ROCK, TX 78681

STATE OF TEXAS REGISTERED M. STEPHEN TRUESDALE 4933 PROFESSIONAL LAND SURVEYOR

NOTES:
COORDINATES ARE SURFACE VALUES BASED ON THE TEXAS STATE PLANE COORDINATE SYSTEM, NAD 83, CENTRAL ZONE 4203.
TO CONVERT COORDINATES AND DISTANCES TO GRID VALUES MULTIPLY BY A COMBINED SURFACE ADJUSTMENT FACTOR OF 0.99986002.
ELEVATIONS REPORTED ARE GPS ORTHOMETRIC HEIGHTS.

INLAND GEODETICS
PROFESSIONAL LAND SURVEYORS
1504 CHISHOLM TRAIL RD. STE. 103
ROUND ROCK, TX. 78681
PH. (512) 238-1200, FAX (512) 238-1251
FIRM REGISTRATION NO. 100591-00

4/12/2018 7:20 AM
S:_HDR-PROJECTS\SWBYPASS\ROW-SCHEV\HDR SW-BYPASS-SH1-PHASE 2-CONTROL.dwg



N

NOT TO SCALE

LEGEND

✕ – AERIAL TARGET

CONTROL NOTES:

POINT NUMBERS 1575 AND 803, PROVIDED BY HDR ON 10.19.2015, WERE USED FOR THIS CONTROL SURVEY.
FILE NAME: HDR-SW-BYPASS-TOPO-2016-FINAL.CSV.

#803	#1575
N: 10195507.40	N: 10195785.87
E: 3129135.87	E: 3129405.98
EL: 801.53	EL: 791.56

DATUM
TEXAS STATE PLANE COORDINATE SYSTEM, CENTRAL ZONE, (4203) FIPS NAD 83 NAVD 88 GRID

NOTES:
COORDINATES ARE GRID VALUES BASED ON THE TEXAS STATE PLANE COORDINATE SYSTEM, AS STATED ABOVE. TO CONVERT THE COORDINATES TO SURFACE MULTIPLY BY THE COMBINED SURFACE ADJUSTMENT FACTOR WHICH HAS BEEN CALCULATED BY ANOTHER SURVEYING FIRM AND RELATED HEREON AS 1.00014.

Point Table

Point #	Northing	Easting	Elevation	Raw Description
70000	10204120.67	3116409.77	891.50	AT-3
70001	10194330.15	3120265.19	845.45	AT-4
70002	10193203.14	3118415.00	890.29	AT-5
70049	10193658.79	3128927.19	803.78	AT-1
70050	10192422.98	3128633.79	814.62	AT-2

STATE OF TEXAS
REGISTERED
WILLIAM R. HERRING
6355
PROFESSIONAL
LAND SURVEYOR

WILLIAM R. HERRING
REGISTERED PROFESSIONAL LAND SURVEYOR
NO. 6355 – STATE OF TEXAS

9/18/2017
DATE

NO.	REVISIONS	BY	DATE

JOB NUMBER: 38165
DATE: 08.21.2017
SCALE: NTS
SURVEYOR: WHerring
TECHNICIAN: MPowell/TNelson
DRAWING: 38165-WilCoByPass
TRACT ID: N/A
PARTYCHIEF: KMiller
FIELDBOOKS: 27834

SAM
SURVEYING•AERIAL MAPPING•ENGINEERING
4801 Southwest Parkway
Building Two, Suite 100
Austin Texas, 78735
Ofc: 512.447.0575
Fax: 512.326.3029
email: info@sam.biz
Texas Firm Registration No. 10064300

SW BYPASS - PANEL LAYOUT
HDR
WILLIAMSON COUNTY, TEXAS

PROJECT: HDR SW BYPASS

SHEET 1
OF 1

PATH:\\SAMINC\AUS\PROJECTS\1017038165\100\SURVEY\02BASE\1017038165-GS - HDR WILLIAMSON COUNTY BY-PASS-GS - 1017038165-GS.DWG
4/12/2018 7:20 AM

ULTIMATE ML CL "SWB_ML_CL"

FUTURE MAINLANE CENTERLINE NOT SHOWN ON SHEETS

	STATION	NORTHING	EASTING
(1) Element: Circular			
PC ( )	171+15.89	10195330.833	3129030.148
PI ( )	174+76.48	10195093.676	3128758.520
CC ( )		10196340.238	3128148.840
PT ( )	178+20.38	10195024.863	3128404.556
Radius:	1340.00		
Delta:	30°07'21.85" Right		
Degree of Curvature(Arc):	4°16'32.90"		
Length:	704.49		
Tangent:	360.59		
Chord:	696.41		
Middle Ordinate:	46.03		
External:	47.67		
Tangent Direction:	S 48°52'33.20" W		
Radial Direction:	N 41°07'26.80" W		
Chord Direction:	S 63°56'14.12" W		
Radial Direction:	N 11°00'04.95" W		
Tangent Direction:	S 78°59'55.05" W		
Element: Linear			
PT ( )	178+20.38	10195024.863	3128404.556
PC ( )	187+03.24	10194856.385	3127537.921
Tangent Direction:	S 78°59'55.05" W		
Tangent Length:	882.86		
(2) Element: Circular			
PC ( )	187+03.24	10194856.385	3127537.921
PI ( )	194+70.77	10194709.916	3126784.499
CC ( )		10205408.828	3125486.471
PT ( )	202+35.69	10194671.972	3126017.910
Radius:	10750.00		
Delta:	8°10'03.85" Right		
Degree of Curvature(Arc):	0°31'58.74"		
Length:	1532.45		
Tangent:	767.53		
Chord:	1531.16		
Middle Ordinate:	27.30		
External:	27.37		
Tangent Direction:	S 78°59'55.05" W		
Radial Direction:	N 11°00'04.95" W		
Chord Direction:	S 83°04'56.98" W		
Radial Direction:	N 2°50'01.10" W		
Tangent Direction:	S 87°09'58.90" W		
Element: Linear			
PT ( )	202+35.69	10194671.972	3126017.910
PC ( )	216+37.33	10194602.680	3124617.983
Tangent Direction:	S 87°09'58.90" W		
Tangent Length:	1401.64		
(3) Element: Circular			
PC ( )	216+37.33	10194602.680	3124617.983
PI ( )	236+97.65	10194500.826	3122560.181
CC ( )		10198003.517	3124449.652
PT ( )	253+43.01	10196276.451	3121515.156
Radius:	3405.00		
Delta:	62°21'18.54" Right		
Degree of Curvature(Arc):	1°40'57.70"		
Length:	3705.67		
Tangent:	2060.32		
Chord:	3525.48		
Middle Ordinate:	491.79		
External:	574.82		
Tangent Direction:	S 87°09'58.90" W		
Radial Direction:	N 2°50'01.10" W		
Chord Direction:	N 61°39'21.83" W		
Radial Direction:	N 59°31'17.45" E		
Tangent Direction:	N 30°28'42.55" W		

SOUTHWEST BYPASS WBFR "WBFR_I_CL"

	STATION	NORTHING	EASTING
Element: Linear			
POB ( )	68+00.00	10195535.155	3129313.720
PC ( )	69+17.80	10195523.980	3129196.447
Tangent Direction:	N 84°33'23" E		
Tangent Length:	117.80		
(4) Element: Circular			
PC ( )	69+17.80	10195523.980	3129196.447
PI ( )	70+83.83	10195508.230	3129031.173
CC ( )		10194925.690	3129253.461
PT ( )	72+41.77	10195409.875	3128897.419
Radius:	601.00		
Design Speed(mph):	40.00		
Superelevation:	-5.800%		
Delta:	30°53'07" Left		
Degree of Curvature(Arc):	9°32'00"		
Length:	323.97		
Tangent:	166.02		
Chord:	320.06		
Middle Ordinate:	21.70		
External:	22.51		
Tangent Direction:	N 84°33'23" E		
Radial Direction:	N 5°26'37" W		
Chord Direction:	N 69°06'50" E		
Radial Direction:	N 36°19'43" W		
Tangent Direction:	N 53°40'17" E		

SOUTHWEST BYPASS WBFR "WBFR_I_CL" CONT

	STATION	NORTHING	EASTING
Element: Linear			
PT ( )	72+41.77	10195409.875	3128897.419
PC ( )	72+93.69	10195379.118	3128855.593
Tangent Direction:	N 53°40'17" E		
Tangent Length:	51.92		
(5) Element: Circular			
PC ( )	72+93.69	10195379.118	3128855.593
PI ( )	A 375+61.08	10195220.316	3128639.636
CC ( )		10196340.238	3128148.840
Eqn ( )	72+93.69	10195379.118	3128855.593
Eqn ( )	A 372+93.02	10195379.118	3128855.593
PT ( )	A 378+20.38	10195169.162	3128376.503
Radius:	1193.00		
Design Speed(mph):	50.00		
Superelevation:	5.600%		
Delta:	25°19'38" Right		
Degree of Curvature(Arc):	4°48'10"		
Length:	527.36		
Tangent:	268.06		
Chord:	523.08		
Middle Ordinate:	29.02		
External:	29.74		
Tangent Direction:	N 53°40'17" E		
Radial Direction:	N 36°19'43" W		
Chord Direction:	N 66°20'06" E		
Radial Direction:	N 11°00'05" W		
Tangent Direction:	N 78°59'55" E		
Element: Linear			
PT ( )	A 378+20.38	10195169.162	3128376.503
PC ( )	A 387+03.24	10195000.684	3127509.869
Tangent Direction:	N 78°59'55" E		
Tangent Length:	882.86		
(6) Element: Circular			
PC ( )	A 387+03.24	10195000.68	3127509.87
PI ( )	A 390+96.80	10194925.58	3127123.54
CC ( )		10205408.83	3125486.47
POE( )	A 394+90.00	10194879.32	3126732.71
Radius:	10603.00		
Design Speed(mph):	50.00		
Superelevation:	1.400%		
Delta:	4°15'05" Right		
Degree of Curvature(Arc):	0°32'25"		
Length:	786.76		
Tangent:	393.56		
Chord:	786.58		
Middle Ordinate:	7.30		
External:	7.30		
Tangent Direction:	N 78°59'55" E		
Radial Direction:	N 11°00'05" W		
Chord Direction:	N 81°07'28" E		
Radial Direction:	N 6°45'00" W		
Tangent Direction:	N 83°15'00" E		

(WBFR_I_CL ENDS AT STA 394+90)

SOUTHWEST BYPASS WBFR "WBFR_S2_CL"

	STATION	NORTHING	EASTING
(6) Element: Circular			
POB( )	394+90.00	10194871.87	3126733.59
PI ( )	398+52.77	10194829.24	3126373.34
CC ( )		10205408.83	3125486.47
PT ( )	402+15.25	10194811.30	3126011.01
Radius:	10610.50		
Delta:	3°54'59" Right		
Degree of Curvature(Arc):	0°32'24"		
Length:	725.25		
Tangent:	362.77		
Chord:	725.11		
Middle Ordinate:	6.20		
External:	6.20		
Tangent Direction:	S 83°15'00" W		
Radial Direction:	N 6°45'00" W		
Chord Direction:	S 85°12'30" W		
Radial Direction:	N 2°50'01" W		
Tangent Direction:	S 87°09'59" W		
Element: Linear			
PT ( )	402+15.25	10194811.30	3126011.01
PC ( )	416+16.89	10194742.01	3124611.09
Tangent Direction:	S 87°09'59" W		
Tangent Length:	1401.64		

SOUTHWEST BYPASS WBFR "WBFR_S2_CL" CONT

	STATION	NORTHING	EASTING
(7) Element: Circular			
PC ( )	416+16.89	10194742.01	3124611.09
PI ( )	430+70.10	10194670.17	3123159.65
CC ( )		10198003.52	3124449.65
PCC ( )	443+51.45	10195700.37	3122134.70
Radius:	3265.50		
Delta:	47°58'48" Right		
Degree of Curvature(Arc):	1°45'16"		
Length:	2734.56		
Tangent:	1453.21		
Chord:	2655.36		
Middle Ordinate:	282.09		
External:	308.76		
Tangent Direction:	S 87°09'59" W		
Radial Direction:	N 2°50'01" W		
Chord Direction:	N 68°50'37" W		
Radial Direction:	N 45°08'47" E		
Tangent Direction:	N 44°51'13" W		
(8) Element: Circular			
PCC ( )	443+51.45	10195700.37	3122134.70
PI ( )	445+96.10	10195873.80	3121962.15
CC ( )		10197068.65	3123509.99
PT ( )	448+38.19	10196084.65	3121838.06
Radius:	1940.00		
Delta:	14°22'30" Right		
Degree of Curvature(Arc):	2°57'12"		
Length:	486.73		
Tangent:	244.65		
Chord:	485.46		
Middle Ordinate:	15.24		
External:	15.37		
Tangent Direction:	N 44°51'13" W		
Radial Direction:	N 45°08'47" E		
Chord Direction:	N 37°39'58" W		
Radial Direction:	N 59°31'17" E		
Tangent Direction:	N 30°28'43" W		
Element: Linear			
PT ( )	448+38.19	10196084.65	3121838.06
POE ( )	453+00.00	10196482.65	3121603.82
Tangent Direction:	N 30°28'43" W		
Tangent Length:	461.81		

(WBFR_S2_CL BEGINS AT STA 394+90

STATE OF TEXAS
JACOB E. WALKER
122057
LICENSED
PROFESSIONAL ENGINEER
03/23/2018

NO.	DATE	REVISION	APPROVED

WILLIAMSON COUNTY

HDR Engineering, Inc.
810 Hesters Crossing, Suite 120
Round Rock, Texas 78681
Texas Registered Engineering Firm F-754

SOUTHWEST BYPASS SEGMENT 2

ALIGNMENT DATA

SHEET 1 OF 2

DESIGN	FED. RD. DIV. NO.	FEDERAL AID PROJECT NO.		HIGHWAY NO.
JC	6			
GRAPHICS	STATE	DISTRICT	COUNTY	SHEET NO.
LG	TEXAS	AUS	WILLIAMSON	49
CHECK	CONTROL	SECTION	JOB	
JW	2103	01	034	
CHECK				
JC				

PLOT DRIVER: TXDOT_PDF_BW.pltcfg PENTABLE: S2-0000020I0718.tbl
USER: lgomezgonz TIME: 1:44:34 PM SCALE: 1:1
FILE: \ DATE: 3/23/2018
4/12/2018 7:20 AM

RM 2243 "℄ RM 2243"

		STATION	NORTHING	EASTING
(9)	Element: Circular			
	POB ( )	472+30.64	10195918.838	3120958.604
	PI ( )	474+25.67	10196023.288	3121123.312
	CC ( )		10186240.810	3127095.979
	PT ( )	476+20.67	10196122.074	3121291.479
	Radius:	11460.00		
	Design Speed(mph):	55.00		
	Superelevation:	6.000%		
	Delta:	1°57'00" Right		
	Degree of Curvature(Arc):	0°30'00"		
	Length:	390.03		
	Tangent:	195.04		
	Chord:	390.01		
	Middle Ordinate:	1.66		
	External:	1.66		
	Tangent Direction:	N 57°37'08" E		
	Radial Direction:	N 32°22'52" W		
	Chord Direction:	N 58°35'38" E		
	Radial Direction:	N 30°25'52" W		
	Tangent Direction:	N 59°34'08" E		
	Element: Linear			
	PT ( )	476+20.67	10196122.074	3121291.479
	POE ( )	503+38.95	10197498.885	3123635.288
	Tangent Direction:	N 59°34'08" E		
	Tangent Length:	2718.28		

RAMP "℄ RAMPNB2"

		STATION	NORTHING	EASTING
	Element: Linear			
	POB ( )	10+00.00	10196320.392	3121693.514
	PC ( )	10+99.93	10196406.516	3121642.827
	Tangent Direction:	N 30°28'43" W		
	Tangent Length:	99.93		
(10)	Element: Circular			
	PC ( )	10+99.93	10196406.516	3121642.827
	PI ( )	12+54.89	10196540.063	3121564.229
	CC ( )		10195138.479	3119488.278
	PT ( )	14+09.46	10196662.882	3121469.740
	Radius:	2500.00		
	Design Speed(mph):	50.00		
	Superelevation:	3.800%		
	Delta:	7°05'38" Left		
	Degree of Curvature(Arc):	2°17'31"		
	Length:	309.52		
	Tangent:	154.96		
	Chord:	309.33		
	Middle Ordinate:	4.79		
	External:	4.80		
	Tangent Direction:	N 30°28'43" W		
	Radial Direction:	N 59°31'17" E		
	Chord Direction:	N 34°01'31" W		
	Radial Direction:	N 52°25'40" E		
	Tangent Direction:	N 37°34'20" W		
	Element: Linear			
	PT ( )	14+09.46	10196662.882	3121469.740
	PC ( )	20+49.75	10197170.370	3121079.314
	Tangent Direction:	N 37°34'20" W		
	Tangent Length:	640.29		

SBFR I-35 "℄ SBFR"

		STATION	NORTHING	EASTING
	Element: Linear			
	POB ( )	900+00.00	10196124.67	3129679.95
	PC ( )	901+68.10	10196022.82	3129546.22
	Tangent Direction:	S 52°42'24" W		
	Tangent Length:	168.10		
(11)	Element: Circular			
	PC ( )	901+68.10	10196022.82	3129546.22
	PI ( )	905+90.59	10195766.83	3129210.11
	CC ( )		10195492.19	3129950.35
	PT ( )	909+21.32	10195353.56	3129297.92
	Radius:	667.00		
	Delta:	64°42'08" Left		
	Degree of Curvature(Arc):	8°35'24"		
	Length:	753.22		
	Tangent:	422.49		
	Chord:	713.83		
	Middle Ordinate:	103.53		
	External:	122.55		
	Tangent Direction:	S 52°42'24" W		
	Radial Direction:	N 37°17'36" W		
	Chord Direction:	S 20°21'20" W		
	Radial Direction:	S 78°00'16" W		
	Tangent Direction:	S 11°59'44" E		
	Element: Linear			
	PT ( )	909+21.32	10195353.56	3129297.92
	PC ( )	910+00.56	10195276.06	3129314.39
	Tangent Direction:	S 11°59'44" E		
	Tangent Length:	79.24		
(12)	Element: Circular			
	PC ( )	910+00.56	10195276.06	3129314.39
	PI ( )	913+66.08	10194918.52	3129390.35
	CC ( )		10194878.67	3127444.11
	PT ( )	917+22.88	10194558.17	3129329.08
	Radius:	1912.02		
	Delta:	21°38'42" Right		
	Degree of Curvature(Arc):	2°59'48"		
	Length:	722.32		
	Tangent:	365.52		
	Chord:	718.03		
	Middle Ordinate:	34.01		
	External:	34.62		
	Tangent Direction:	S 11°59'44" E		
	Radial Direction:	S 78°00'16" W		
	Chord Direction:	S 1°10'23" E		
	Radial Direction:	N 80°21'01" W		
	Tangent Direction:	S 9°38'59" W		

SOUTHWEST BYPASS WBFR "WBFR_I_SPUR"

		STATION	NORTHING	EASTING
(5)	Element: Linear			
	POB ( )	367+25.00	10195772.351	3129264.678
	PC ( )	371+04.92	10195502.013	3128997.739
	Tangent Direction:	N 44°38'15" E		
	Tangent Length:	379.92		
	Element: Circular			
	PC ( )	371+04.92	10195502.013	3128997.739
	PI ( )	374+73.77	10195239.551	3128738.576
	CC ( )		10196340.238	3128148.840
	PT ( )	378+20.38	10195169.162	3128376.503
	Radius:	1193.00		
	Design Speed(mph):	50.00		
	Superelevation:	5.600%		
	Delta:	34°21'40" Right		
	Degree of Curvature(Arc):	4°48'10"		
	Length:	715.46		
	Tangent:	368.85		
	Chord:	704.79		
	Middle Ordinate:	53.23		
	External:	55.72		
	Tangent Direction:	N 44°38'15" E		
	Radial Direction:	N 45°21'45" W		
	Chord Direction:	N 61°49'05" E		
	Radial Direction:	N 11°00'05" W		
	Tangent Direction:	N 78°59'55" E		
	Element: Linear			
	PT ( )	378+20.38	10195169.162	3128376.503
	POE ( )	387+03.24	10195000.684	3127509.869
	Tangent Direction:	N 78°59'55" E		
	Tangent Length:	882.86		

STATE OF TEXAS
JACOB E. WALKER
122057
LICENSED
PROFESSIONAL ENGINEER
03/23/2018

NO.	DATE	REVISION	APPROVED

WILLIAMSON COUNTY

HDR Engineering, Inc.
810 Hesters Crossing, Suite 120
Round Rock, Texas 78681
Texas Registered Engineering Firm F-754

SOUTHWEST BYPASS SEGMENT 2

ALIGNMENT DATA

SHEET 2 OF 2

DESIGN	FED.RD. DIV.NO.	FEDERAL AID PROJECT NO.		HIGHWAY NO.
JC	6			
GRAPHICS	STATE	DISTRICT	COUNTY	SHEET NO.
LG	TEXAS	AUS	WILLIAMSON	
CHECK	CONTROL	SECTION	JOB	50
JW	2103	01	034	
CHECK				
JC				

PLOT DRIVER: TXDOT_PDF_BW.pltcfg PENTABLE: S2-0000020170718.tbl
USER: lgomezgonz DATE: 3/23/2018 TIME: 1:44:36 PM SCALE: 1:1
FILE: \

4/12/2018 7:20 AM

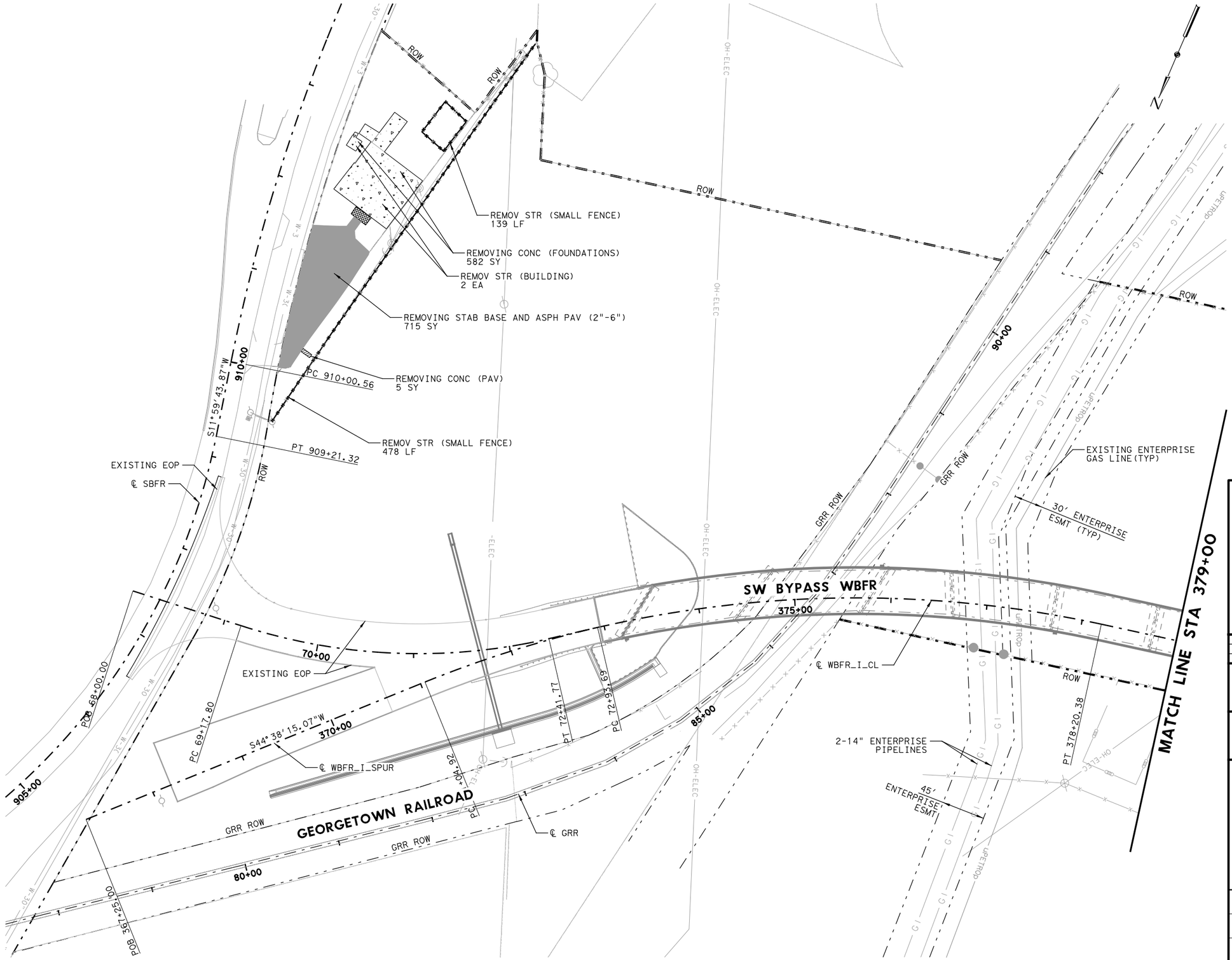

LEGEND

- REMOVE STAB BASE AND ASPHALT
- REMOVE WOOD DECK
- REMOVE FOUNDATION
- REMOVE CONCRETE PAV
- REMOVE FENCE

NOTES:

1. ALL ITEMS REQUIRING REMOVAL THAT ARE NOT SPECIFICALLY CALLED OUT IN PLANS SHALL BE CONSIDERED SUBSIDIARY TO PREP ROW.

STATE OF TEXAS
JACOB E. WALKER
122057
LICENSED
PROFESSIONAL ENGINEER

03/23/2018

NO.	DATE	REVISION	APPROVED

WILLIAMSON COUNTY

HDR Engineering, Inc.
810 Hesters Crossing, Suite 120
Round Rock, Texas 78681
Texas Registered Engineering Firm F-754

SOUTHWEST BYPASS SEGMENT 2

REMOVAL PLAN

SCALE: 1"=100'

DESIGN	FED.RD. DIV.NO.	FEDERAL AID PROJECT NO.		HIGHWAY NO.
JC	6			
GRAPHICS LG	STATE	DISTRICT	COUNTY	SHEET NO.
CHECK JW	TEXAS	AUS	WILLIAMSON	51
CHECK JC	CONTROL 2103	SECTION 01	JOB 034	

PLOT DRIVER: TXDOT_PDF_BW.pltcfg PENTABLE: S2-00002017018.tbl
USER: lgomezgonz DATE: 3/23/2018 TIME: 1:44:40 PM SCALE: 1:100
FILE: \

4/12/2018 7:20 AM

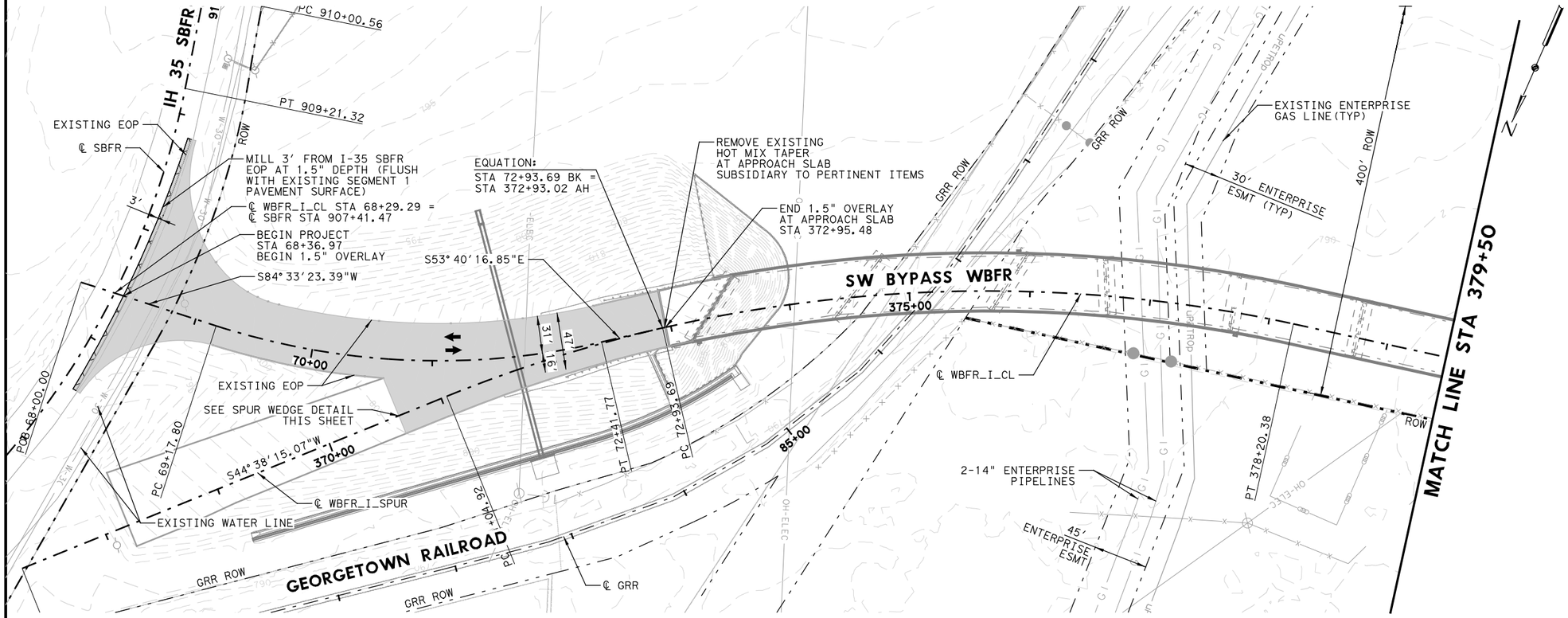

LEGEND

- OVERLAY
- PAVEMENT WIDENING
- MILL AND OVERLAY

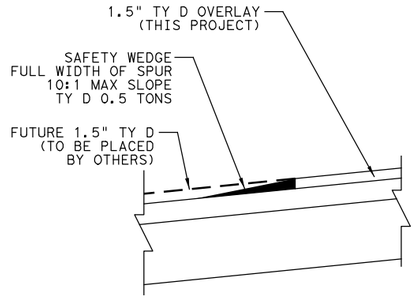

SPUR WEDGE DETAIL

NOTES:

1. ALL STATION AND OFFSET ARE FROM "WBFR_S2_CL" UNLESS OTHERWISE INDICATED.
2. ALL DIMENSIONS ARE FROM LIP OF GUTTER OR EDGE OF PAVEMENT UNLESS OTHERWISE INDICATED.
3. SEE "INTERSECTION DETAILS" SHEETS FOR INTERSECTION AND MEDIAN INFORMATION NOT SHOWN.

H: 0 50 100 150 200
V: 0 10 20 30 40
SCALE IN FEET

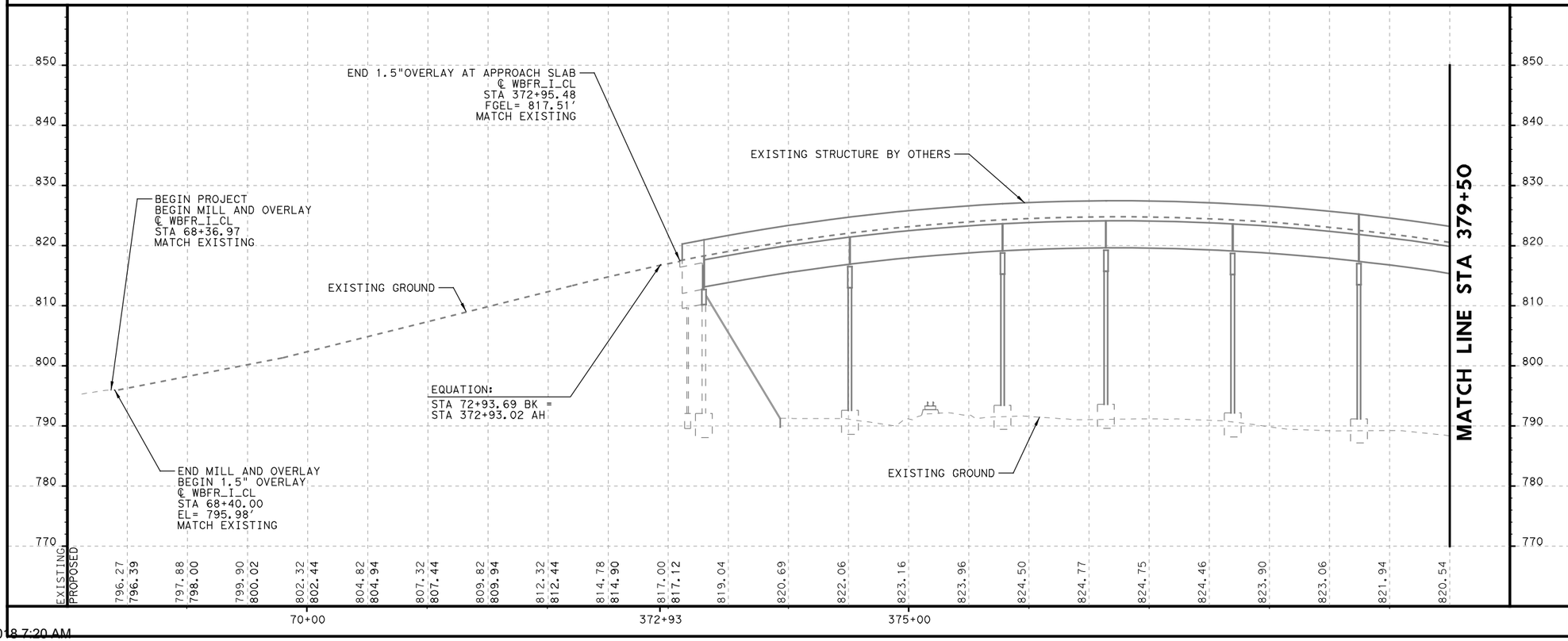



03/23/2018

NO.	DATE	REVISION	APPROVED

WILLIAMSON COUNTY

HDR Engineering, Inc.
810 Hesters Crossing, Suite 120
Round Rock, Texas 78681
Texas Registered Engineering Firm F-754

SOUTHWEST BYPASS SEGMENT 2

PLAN AND PROFILE WBFR BEGIN TO STA 379+50

SCALE: 1"=100'-H
1"=20'-V

SHEET 1 OF 8

DESIGN	FED.RD. DIV.NO.	FEDERAL AID PROJECT NO.		HIGHWAY NO.
JC	6			
GRAPHICS LG	STATE	DISTRICT	COUNTY	SHEET NO.
CHECK JW	TEXAS	AUS	WILLIAMSON	
CHECK JC	CONTROL	SECTION	JOB	52
	2103	01	034	

PLOT DRIVER: TXDOT_PDF_BW.pltcfg PENTABLE: S2-0000020170718.tbl
USER: lgomezgonz DATE: 3/23/2018 TIME: 1:44:46 PM SCALE: 1:100
FILE: \
4/12/2018 7:20 AM

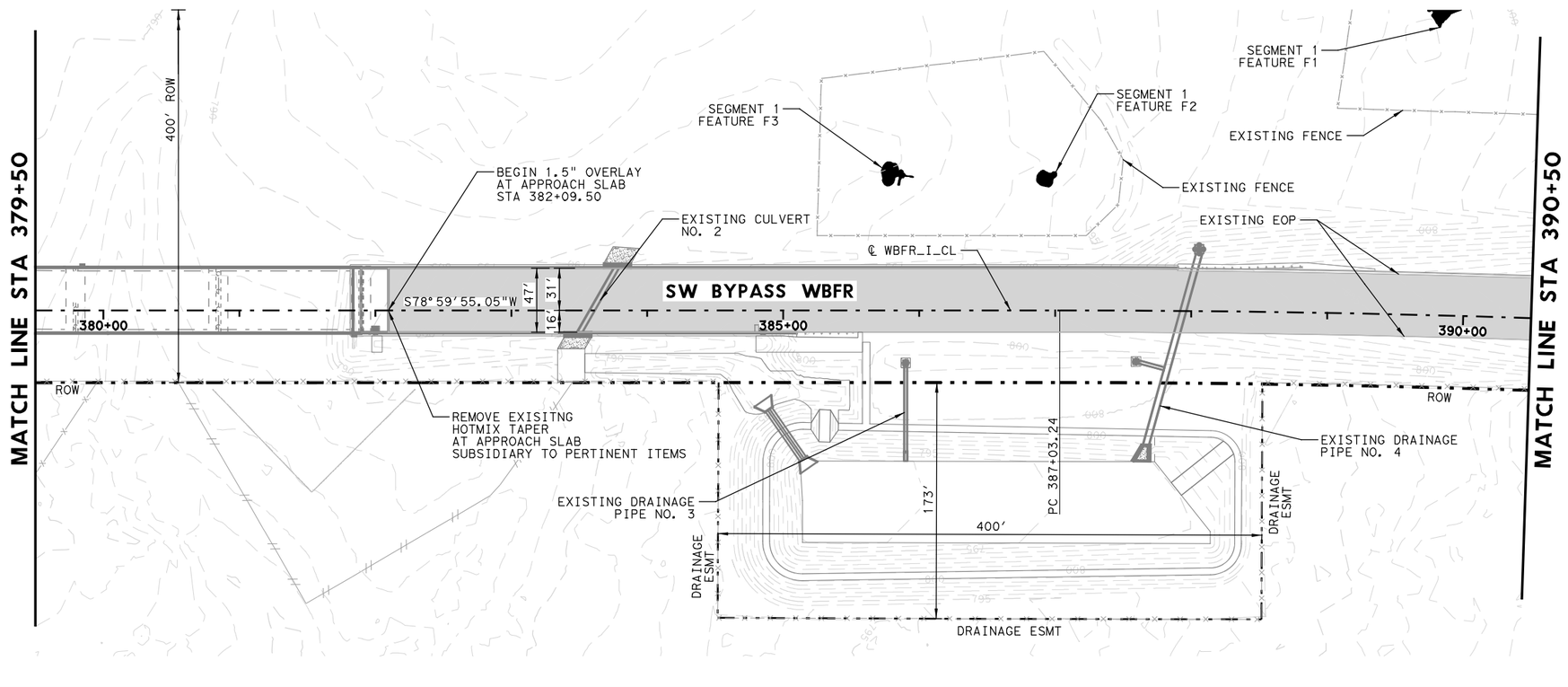

LEGEND

- OVERLAY
- PAVEMENT WIDENING
- MILL AND OVERLAY

NOTES:

1. ALL STATION AND OFFSET ARE FROM "WBFR_S2_CL" UNLESS OTHERWISE INDICATED.
2. ALL DIMENSIONS ARE FROM LIP OF GUTTER OR EDGE OF PAVEMENT UNLESS OTHERWISE INDICATED.
3. SEE "INTERSECTION DETAILS" SHEETS FOR INTERSECTION AND MEDIAN INFORMATION NOT SHOWN.

H: 0 50 100 150 200
V: 0 10 20 30 40
SCALE IN FEET

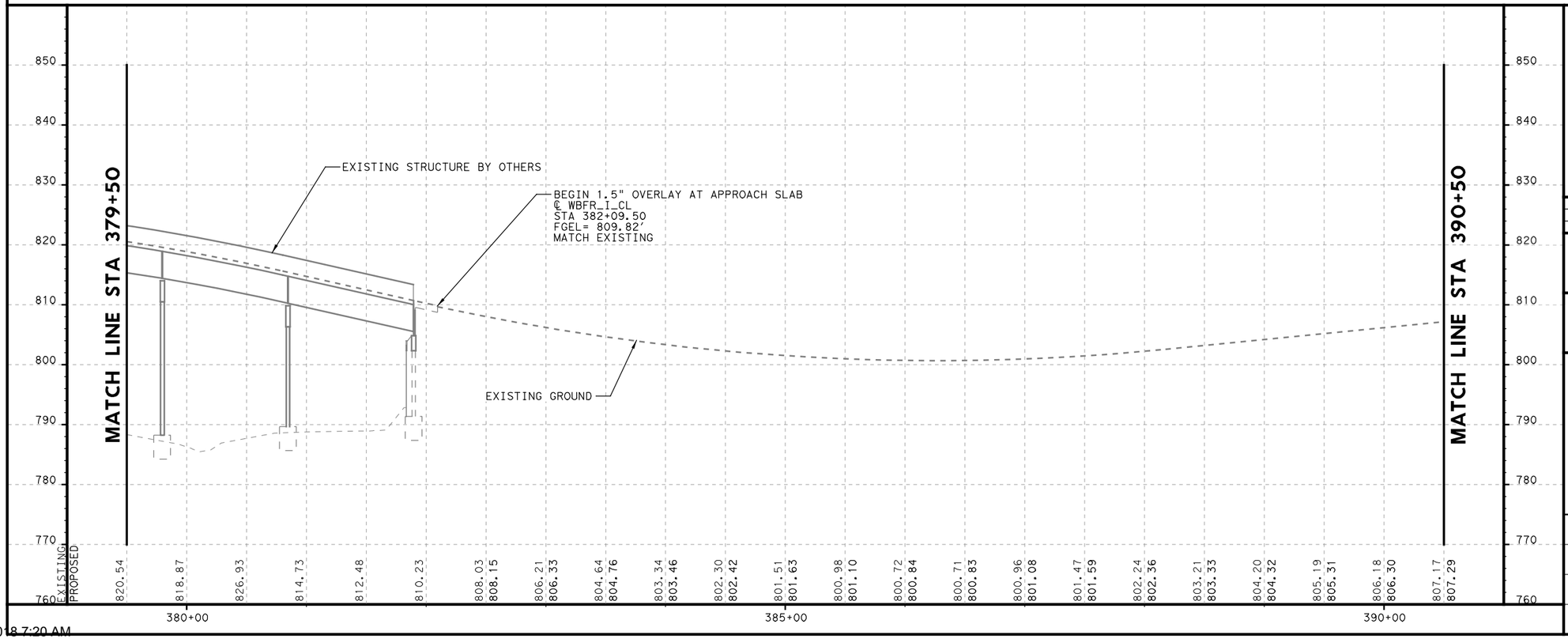

JACOB E. WALKER
122057
LICENSED
PROFESSIONAL ENGINEER
STATE OF TEXAS
03/23/2018

NO.	DATE	REVISION	APPROVED

WILLIAMSON COUNTY

HDR Engineering, Inc.
810 Hesters Crossing, Suite 120
Round Rock, Texas 78681
Texas Registered Engineering Firm F-754

SOUTHWEST BYPASS SEGMENT 2

PLAN AND PROFILE WBFR STA 379+50 TO STA 390+50

SCALE: 1"=100'-H
1"=20'-V

SHEET 2 OF 8

DESIGN	FED.RD. DIV.NO.	FEDERAL AID PROJECT NO.		HIGHWAY NO.
JC	6			
GRAPHICS	STATE	DISTRICT	COUNTY	SHEET NO.
LG	TEXAS	AUS	WILLIAMSON	
CHECK	CONTROL	SECTION	JOB	53
JW	2103	01	034	
CHECK				
JC				

PLOT DRIVER: TXDOT_PDF_BW.pltcfg PENTABLE: S2-0000020170718.tbl
USER: lgomezgonz DATE: 3/23/2018 TIME: 1:44:56 PM SCALE: 1:100
FILE: \

4/12/2018 7:20 AM

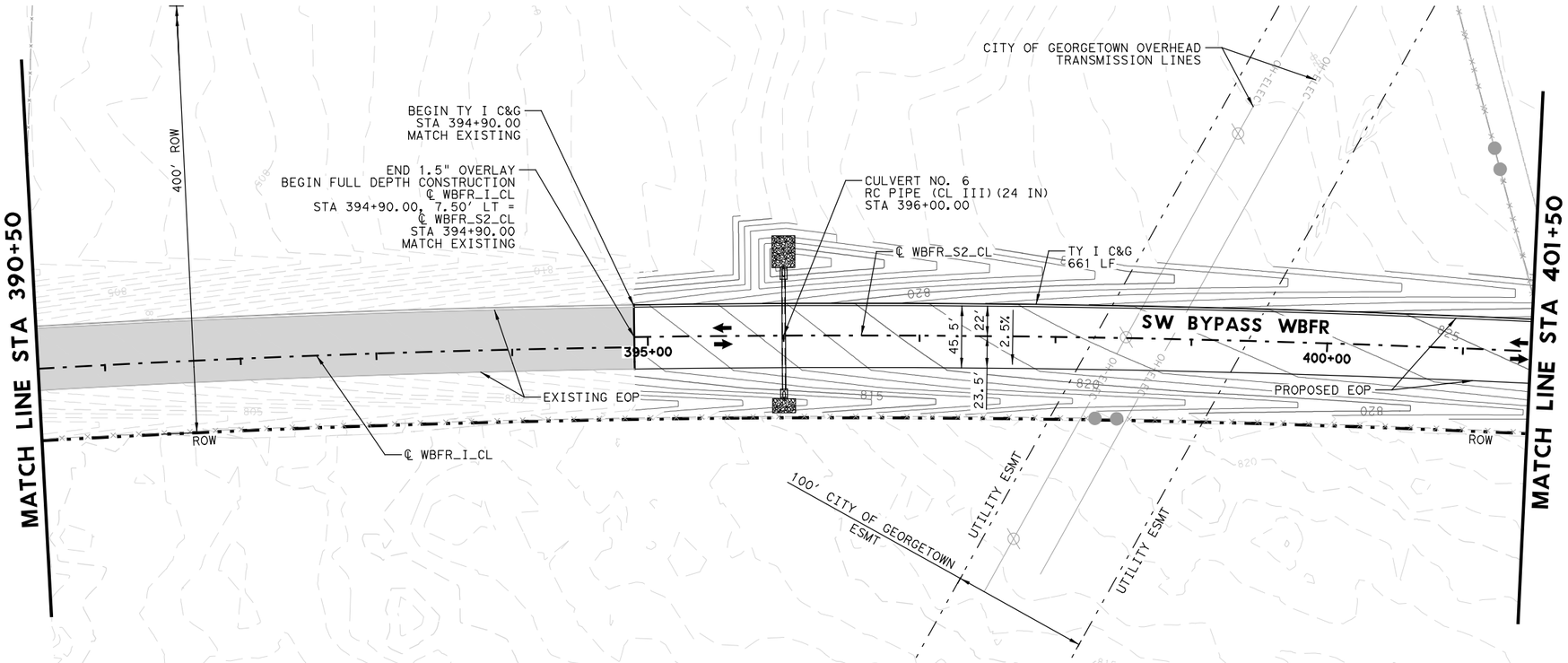

LEGEND

- OVERLAY
- PAVEMENT WIDENING
- MILL AND OVERLAY

NOTES:

1. ALL STATION AND OFFSET ARE FROM "WBFR_S2_CL" UNLESS OTHERWISE INDICATED.
2. ALL DIMENSIONS ARE FROM LIP OF GUTTER OR EDGE OF PAVEMENT UNLESS OTHERWISE INDICATED.
3. SEE "INTERSECTION DETAILS" SHEETS FOR INTERSECTION AND MEDIAN INFORMATION NOT SHOWN.

H: 0 50 100 150 200
V: 0 10 20 30 40
SCALE IN FEET

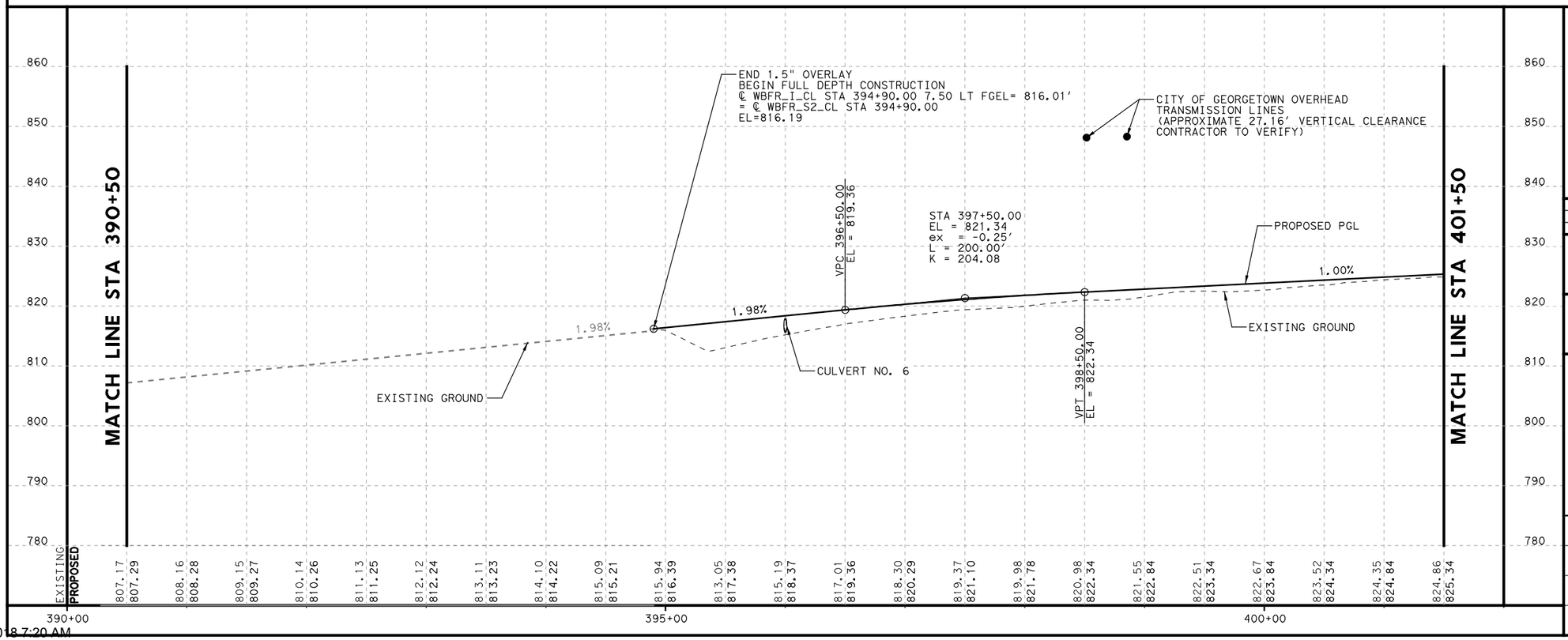

STATE OF TEXAS
JACOB E. WALKER
122057
LICENSED
PROFESSIONAL ENGINEER
03/23/2018

NO.	DATE	REVISION	APPROVED

WILLIAMSON COUNTY

HDR Engineering, Inc.
810 Hesters Crossing, Suite 120
Round Rock, Texas 78681
Texas Registered Engineering Firm F-754

SOUTHWEST BYPASS SEGMENT 2

PLAN AND PROFILE WBFR 390+50 TO STA 401+50

SCALE: 1"=100'-H
1"=20'-V

SHEET 3 OF 8

DESIGN	FED.RD. DIV.NO.	FEDERAL AID PROJECT NO.		HIGHWAY NO.
JC	6			
GRAPHICS KB	STATE	DISTRICT	COUNTY	SHEET NO.
CHECK JW	TEXAS	AUS	WILLIAMSON	54
CHECK JC	CONTROL	SECTION	JOB	
	2103	01	034	

PLOT DRIVER: TXDOT_PDF_BW.pltcfg PENTABLE: S2-00000201707l8.tbl
USER: lgomezgonz DATE: 3/23/2018 TIME: 1:45:06 PM SCALE: 1:100
FILE: \

4/12/2018 7:20 AM

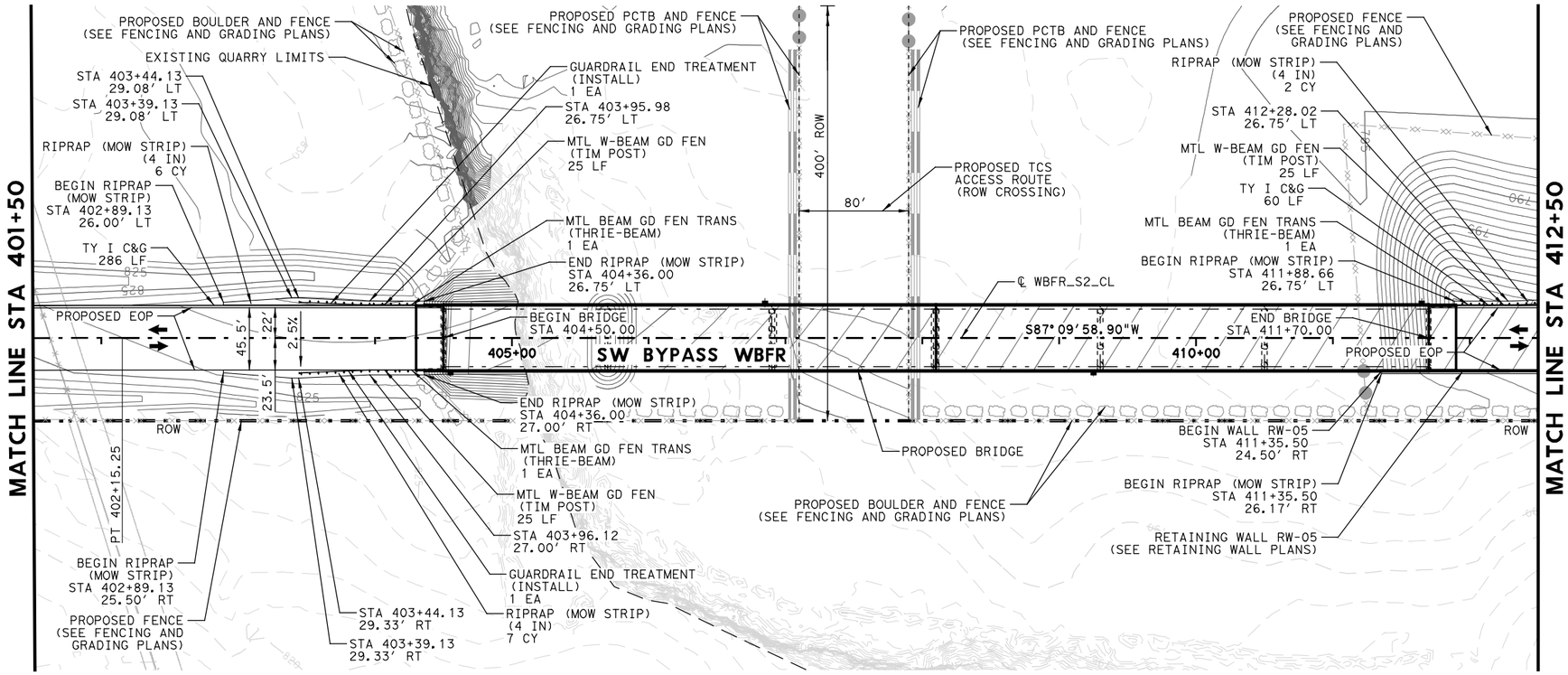

LEGEND

- OVERLAY
- PAVEMENT WIDENING
- MILL AND OVERLAY

NOTES:

1. ALL STATION AND OFFSET ARE FROM "WBFR_S2_CL" UNLESS OTHERWISE INDICATED.
2. ALL DIMENSIONS ARE FROM LIP OF GUTTER OR EDGE OF PAVEMENT UNLESS OTHERWISE INDICATED.
3. SEE "INTERSECTION DETAILS" SHEETS FOR INTERSECTION AND MEDIAN INFORMATION NOT SHOWN.

H: 0 50 100 150 200
V: 0 10 20 30 40
SCALE IN FEET

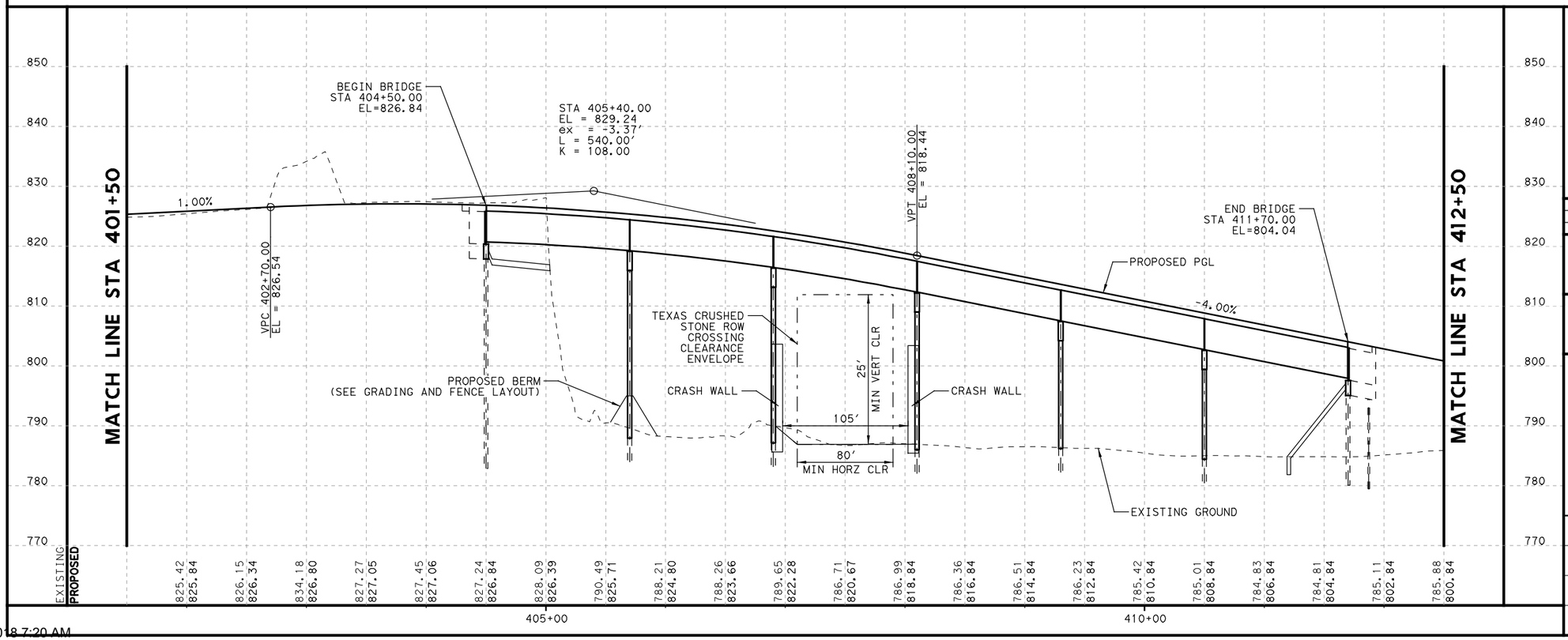

STATE OF TEXAS
JACOB E. WALKER
122057
LICENSED
PROFESSIONAL ENGINEER
03/23/2018

NO.	DATE	REVISION	APPROVED

WILLIAMSON COUNTY

HDR Engineering, Inc.
810 Hesters Crossing, Suite 120
Round Rock, Texas 78681
Texas Registered Engineering Firm F-754

SOUTHWEST BYPASS SEGMENT 2

PLAN AND PROFILE WBFR STA 401+50 TO STA 412+50

SCALE: 1"=100'-H
1"=20'-V

SHEET 4 OF 8

DESIGN	FED.RD. DIV.NO.	FEDERAL AID PROJECT NO.		HIGHWAY NO.
JC	6			
GRAPHICS	STATE	DISTRICT	COUNTY	SHEET NO.
KB	TEXAS	AUS	WILLIAMSON	
CHECK	CONTROL	SECTION	JOB	55
JW	2103	01	034	
CHECK				
JC				

PLOT DRIVER: TXDOT_PDF_BW.pltcfg PENTABLE: S2-0000020170718.tbl
USER: lgomezgonz DATE: 3/23/2018 TIME: 1:45:16 PM SCALE: 1:100
FILE: \

4/12/2018 7:20 AM

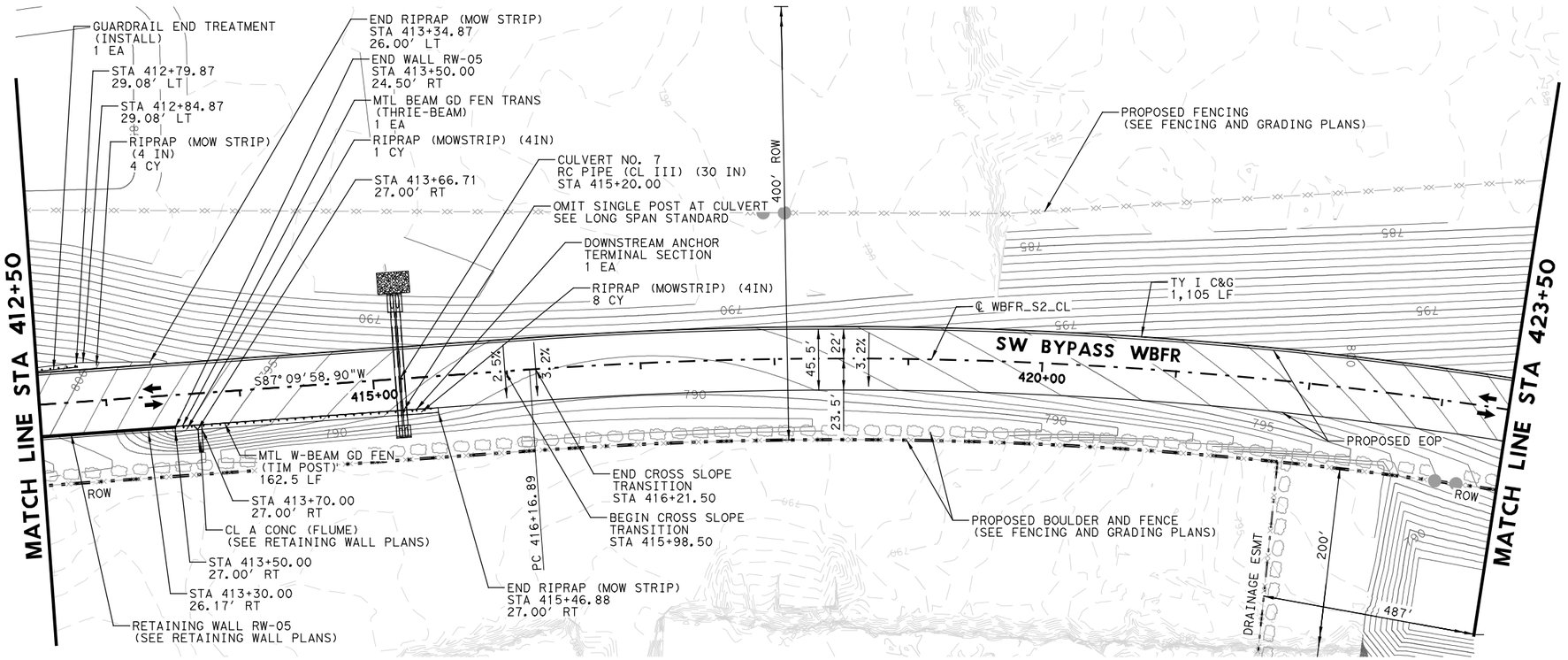

LEGEND

- OVERLAY
- PAVEMENT WIDENING
- MILL AND OVERLAY

NOTES:

1. ALL STATION AND OFFSET ARE FROM "WBFR_S2_CL" UNLESS OTHERWISE INDICATED.
2. ALL DIMENSIONS ARE FROM LIP OF GUTTER OR EDGE OF PAVEMENT UNLESS OTHERWISE INDICATED.
3. SEE "INTERSECTION DETAILS" SHEETS FOR INTERSECTION AND MEDIAN INFORMATION NOT SHOWN.

H: 0 50 100 150 200
V: 0 10 20 30 40
SCALE IN FEET

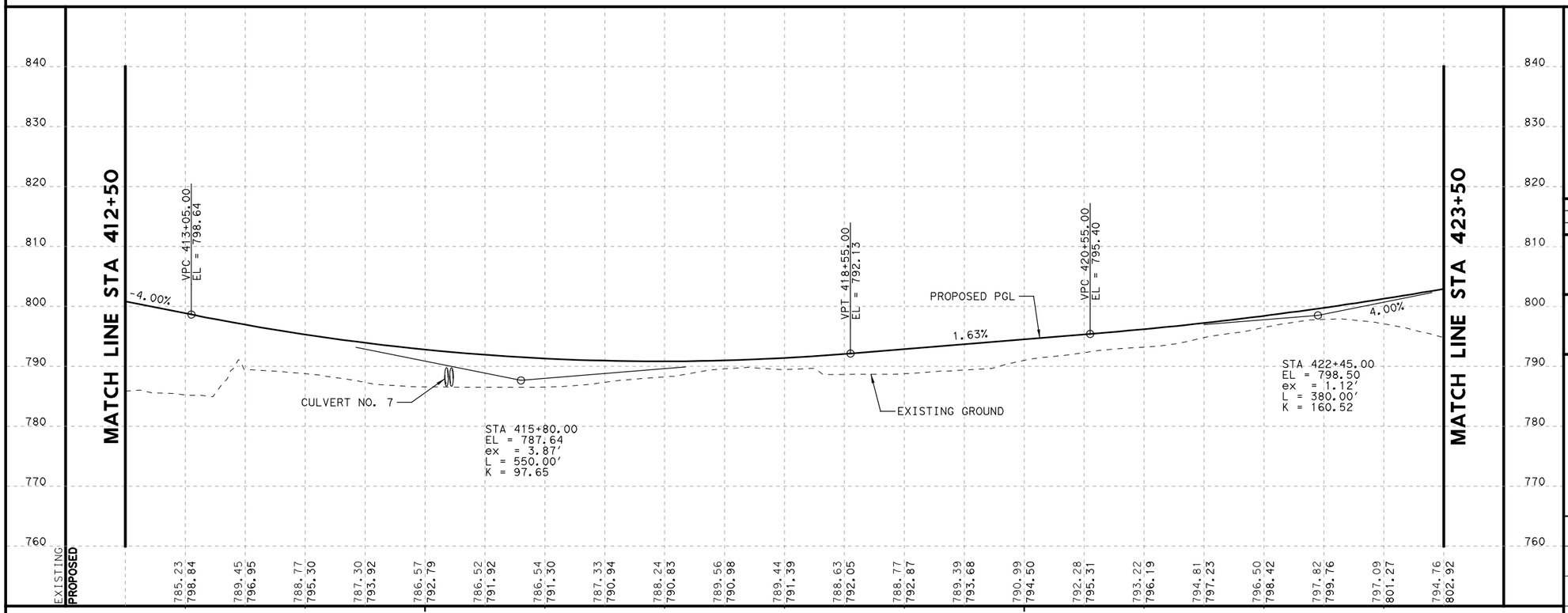

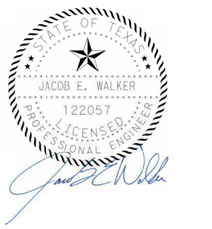

03/23/2018

NO.	DATE	REVISION	APPROVED

WILLIAMSON COUNTY

HDR Engineering, Inc.
810 Hesters Crossing, Suite 120
Round Rock, Texas 78681
Texas Registered Engineering Firm F-754

SOUTHWEST BYPASS SEGMENT 2

PLAN AND PROFILE WBFR STA 412+50 TO STA 423+50

SCALE: 1"=100'-H
1"=20'-V

SHEET 5 OF 8

DESIGN	FED.RD. DIV.NO.	FEDERAL AID PROJECT NO.		HIGHWAY NO.
JC	6			
GRAPHICS	STATE	DISTRICT	COUNTY	SHEET NO.
KB	TEXAS	AUS	WILLIAMSON	
CHECK	CONTROL	SECTION	JOB	56
JW	2103	01	034	
CHECK				
JC				

PLOT DRIVER: TXDOT_PDF_BW.pltcfg PENTABLE: S2-0000020170718.tbl
USER: lgomezgonz DATE: 3/23/2018 TIME: 1:45:26 PM SCALE: 1:100
FILE: \

4/12/2018 7:20 AM

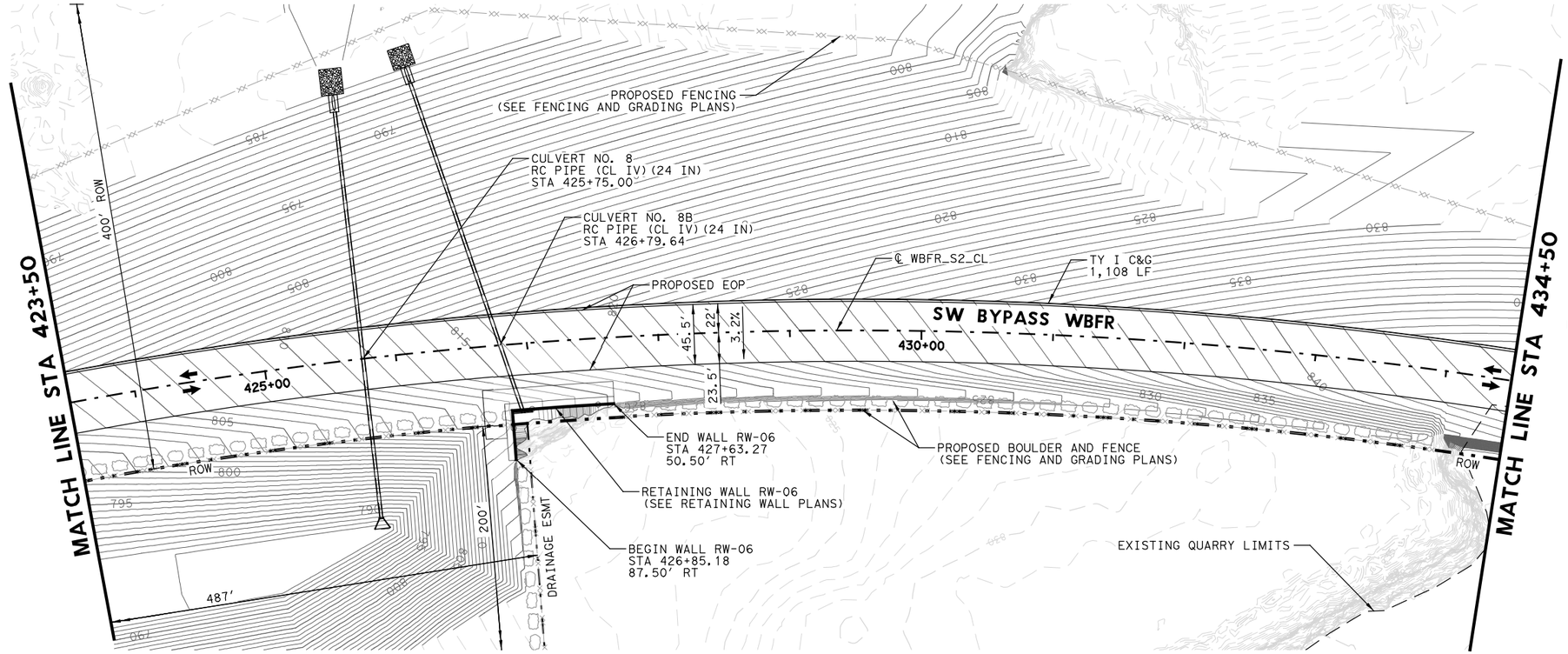

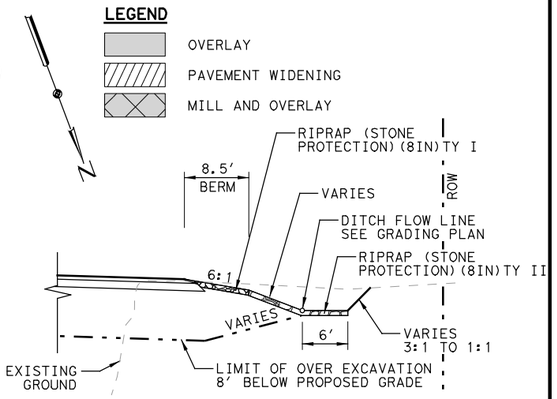

OVER EXCAVATION DETAIL

APPROXIMATE STA 427+90.00 TO STA 432+85.00

NOTES:

1. ALL STATION AND OFFSET ARE FROM "WBFR_S2_CL" UNLESS OTHERWISE INDICATED.
2. ALL DIMENSIONS ARE FROM LIP OF GUTTER OR EDGE OF PAVEMENT UNLESS OTHERWISE INDICATED.
3. SEE "INTERSECTION DETAILS" SHEETS FOR INTERSECTION AND MEDIAN INFORMATION NOT SHOWN.

H: 0 50 100 150 200
V: 0 10 20 30 40
SCALE IN FEET

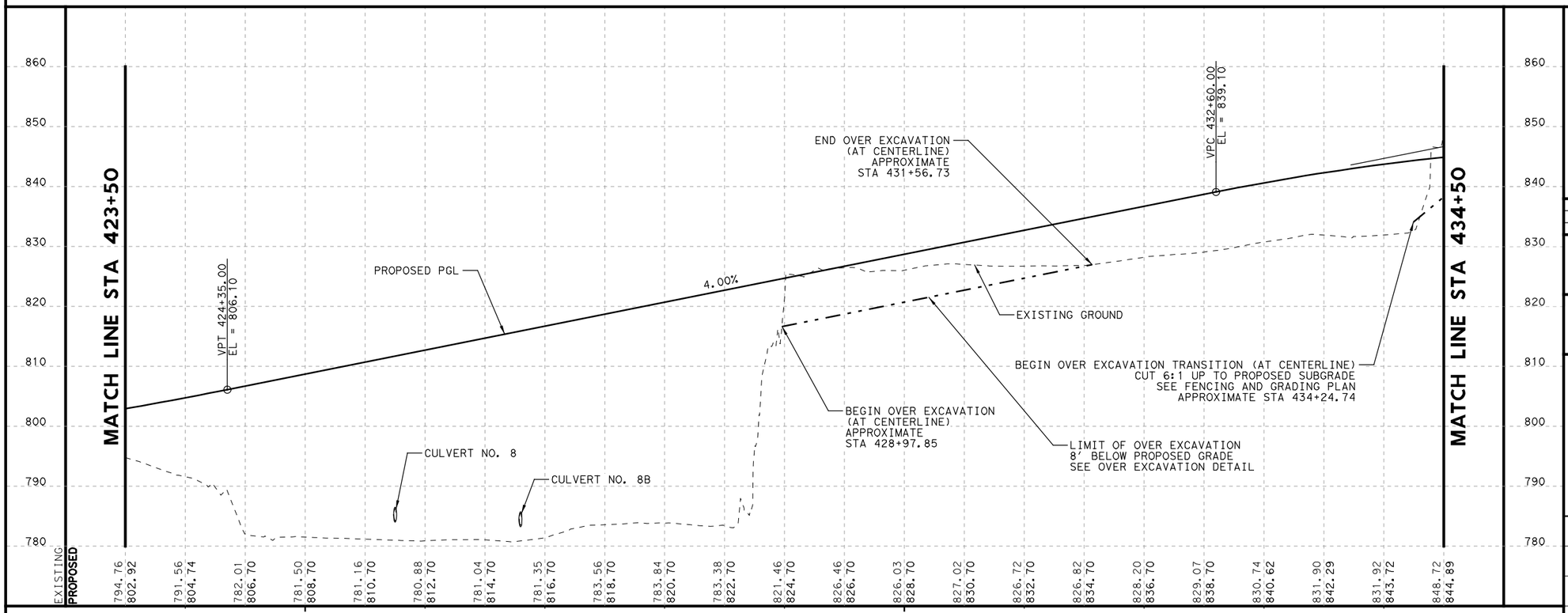



NO.	DATE	REVISION	APPROVED

WILLIAMSON COUNTY

HDR Engineering, Inc.
810 Hesters Crossing, Suite 120
Round Rock, Texas 78681
Texas Registered Engineering Firm F-754

SOUTHWEST BYPASS SEGMENT 2

PLAN AND PROFILE WBFR STA 423+50 TO STA 434+50

SCALE: 1"=100'-H
1"=20'-V

SHEET 6 OF 8

DESIGN	FED.RD. DIV.NO.	FEDERAL AID PROJECT NO.		HIGHWAY NO.
JC	6			
GRAPHICS	STATE	DISTRICT	COUNTY	SHEET NO.
KB	TEXAS	AUS	WILLIAMSON	
CHECK	CONTROL	SECTION	JOB	57
JW	2103	01	034	
CHECK				
JC				

PLOT DRIVER: TXDOT_PDF_BW.pltcfg PENTABLE: S2-0000020170718.tbl
USER: lgomezgonz DATE: 3/23/2018 TIME: 1:45:37 PM SCALE: 1:100
FILE: \
4/12/2018 7:20 AM

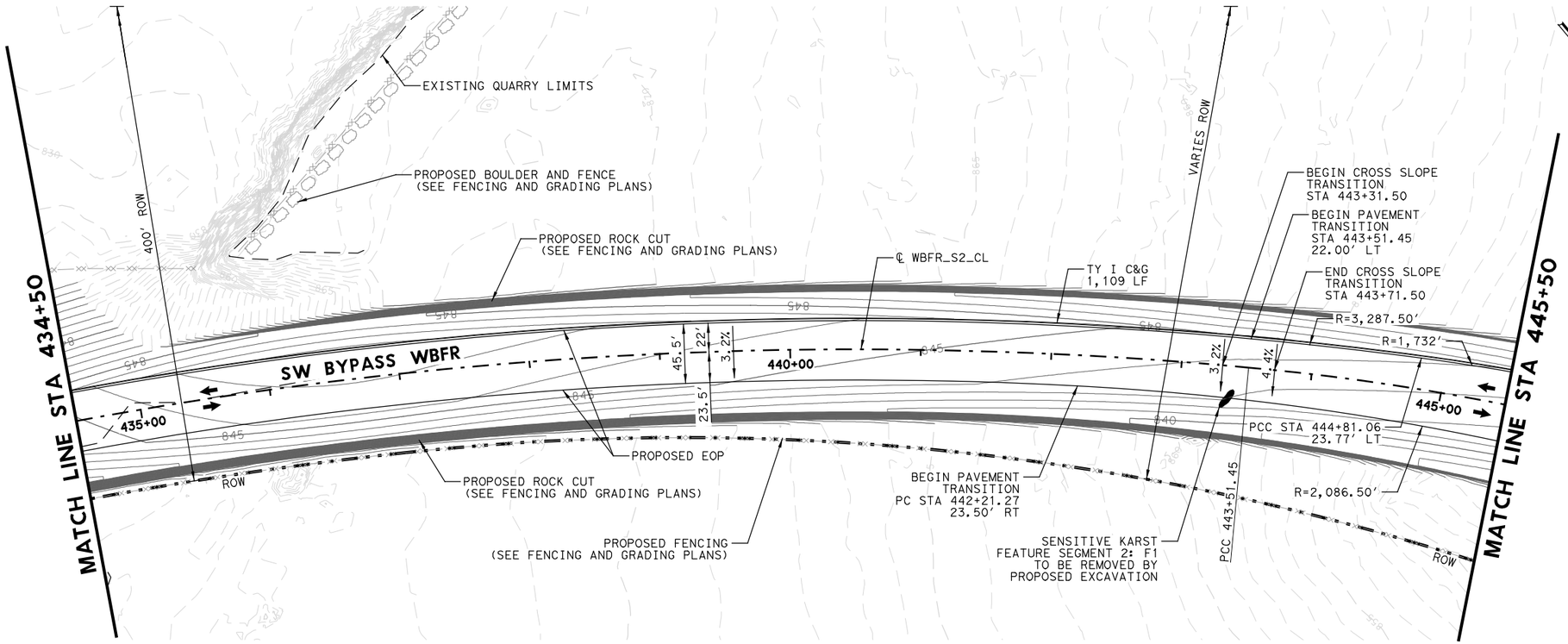

LEGEND

- OVERLAY
- PAVEMENT WIDENING
- MILL AND OVERLAY

NOTES:

1. ALL STATION AND OFFSET ARE FROM "WBFR_S2_CL" UNLESS OTHERWISE INDICATED.
2. ALL DIMENSIONS ARE FROM LIP OF GUTTER OR EDGE OF PAVEMENT UNLESS OTHERWISE INDICATED.
3. SEE "INTERSECTION DETAILS" SHEETS FOR INTERSECTION AND MEDIAN INFORMATION NOT SHOWN.

H: 0 50 100 150 200
V: 0 10 20 30 40
SCALE IN FEET

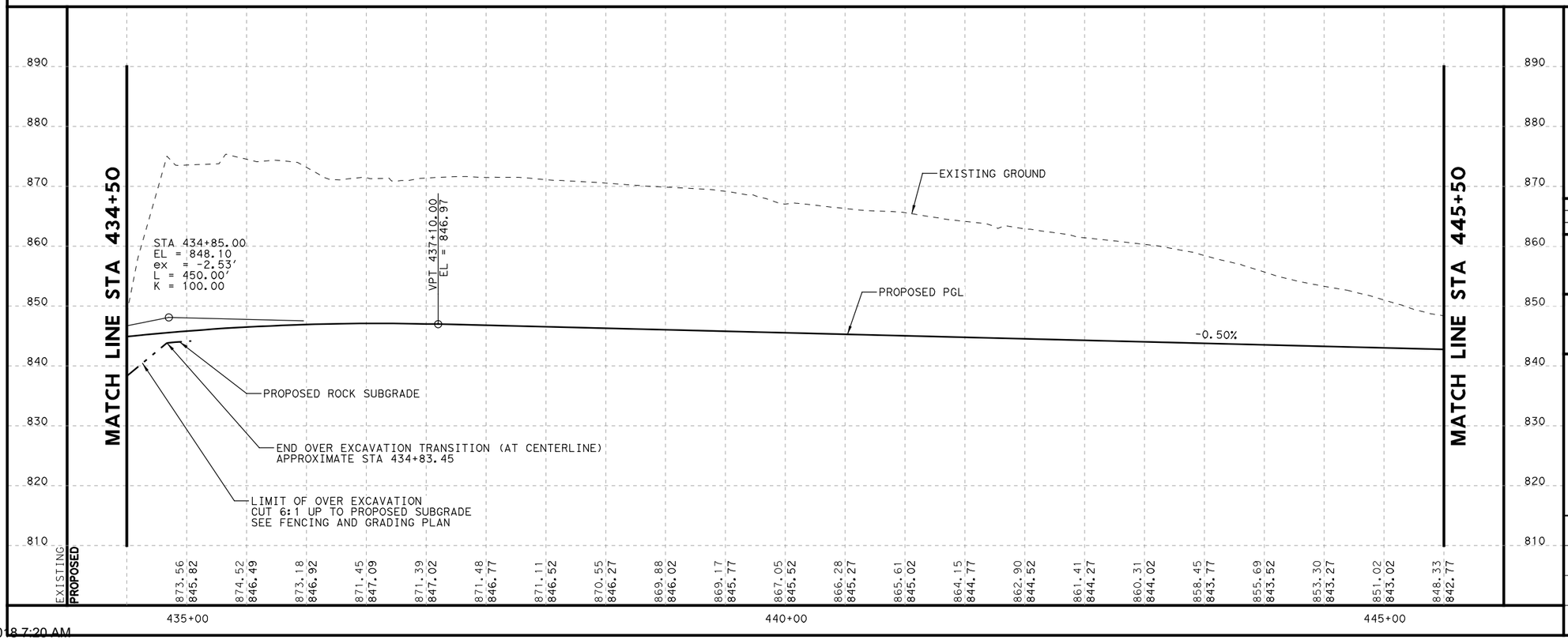

JACOB E. WALKER
122057
LICENSED
PROFESSIONAL ENGINEER
STATE OF TEXAS
03/23/2018

NO.	DATE	REVISION	APPROVED

WILLIAMSON COUNTY

HDR Engineering, Inc.
810 Hesters Crossing, Suite 120
Round Rock, Texas 78681
Texas Registered Engineering Firm F-754

SOUTHWEST BYPASS SEGMENT 2

PLAN AND PROFILE WBFR STA 434+50 TO STA 445+50

SCALE: 1"=100'-H
1"=20'-V

SHEET 7 OF 8

DESIGN	FED.RD. DIV.NO.	FEDERAL AID PROJECT NO.		HIGHWAY NO.
JC	6			
GRAPHICS	STATE	DISTRICT	COUNTY	SHEET NO.
KB	TEXAS	AUS	WILLIAMSON	
CHECK	CONTROL	SECTION	JOB	58
JW	2103	01	034	
CHECK				
JC				

PLOT DRIVER: TXDOT_PDF_BW.pltcfg PENTABLE: S2-0000020170718.tbl
USER: lgomezgonz DATE: 3/23/2018 TIME: 1:45:47 PM SCALE: 1:100
FILE: \

4/12/2018 7:20 AM

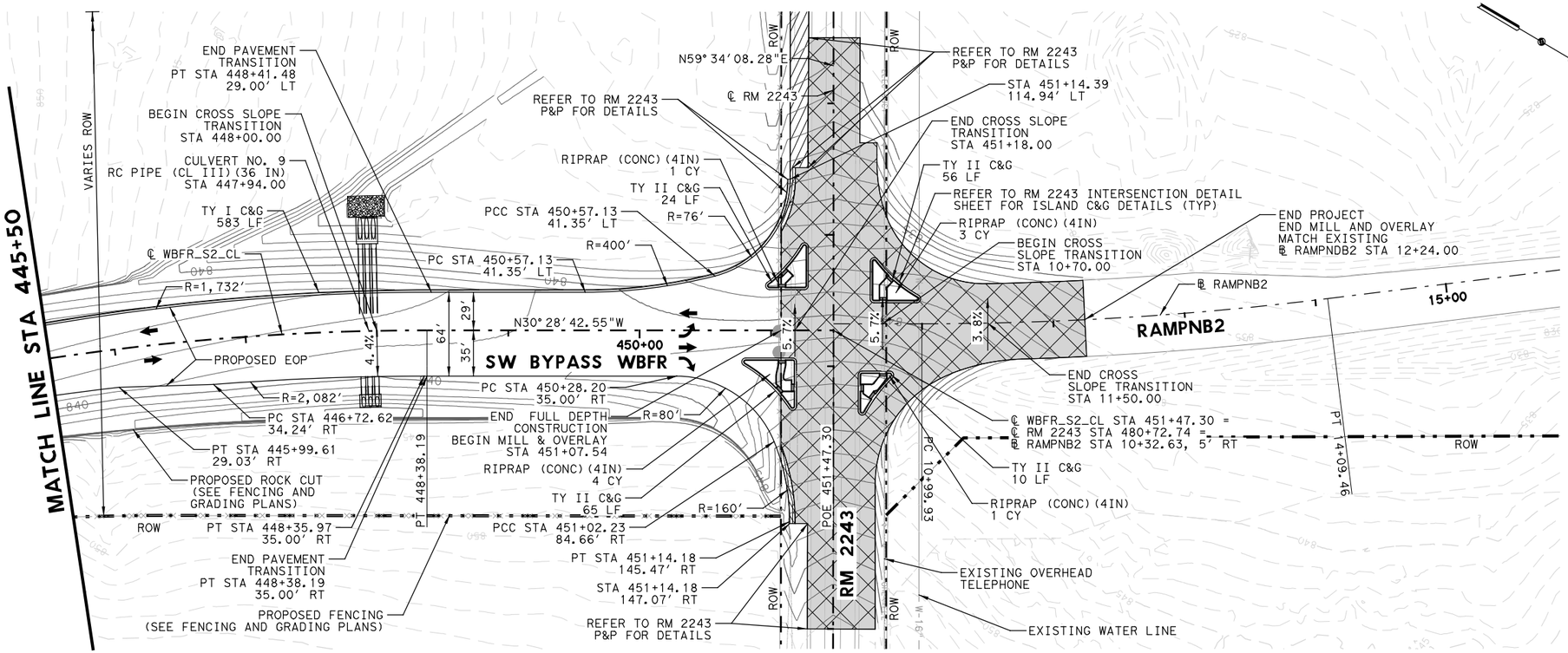

LEGEND

- OVERLAY
- PAVEMENT WIDENING
- MILL AND OVERLAY

NOTES:

1. ALL STATION AND OFFSET ARE FROM "WBFR_S2_CL" UNLESS OTHERWISE INDICATED.
2. ALL DIMENSIONS ARE FROM LIP OF GUTTER OR EDGE OF PAVEMENT UNLESS OTHERWISE INDICATED.
3. SEE "INTERSECTION DETAILS" SHEETS FOR INTERSECTION AND MEDIAN INFORMATION NOT SHOWN.

H: 0 50 100 150 200
V: 0 10 20 30 40
SCALE IN FEET

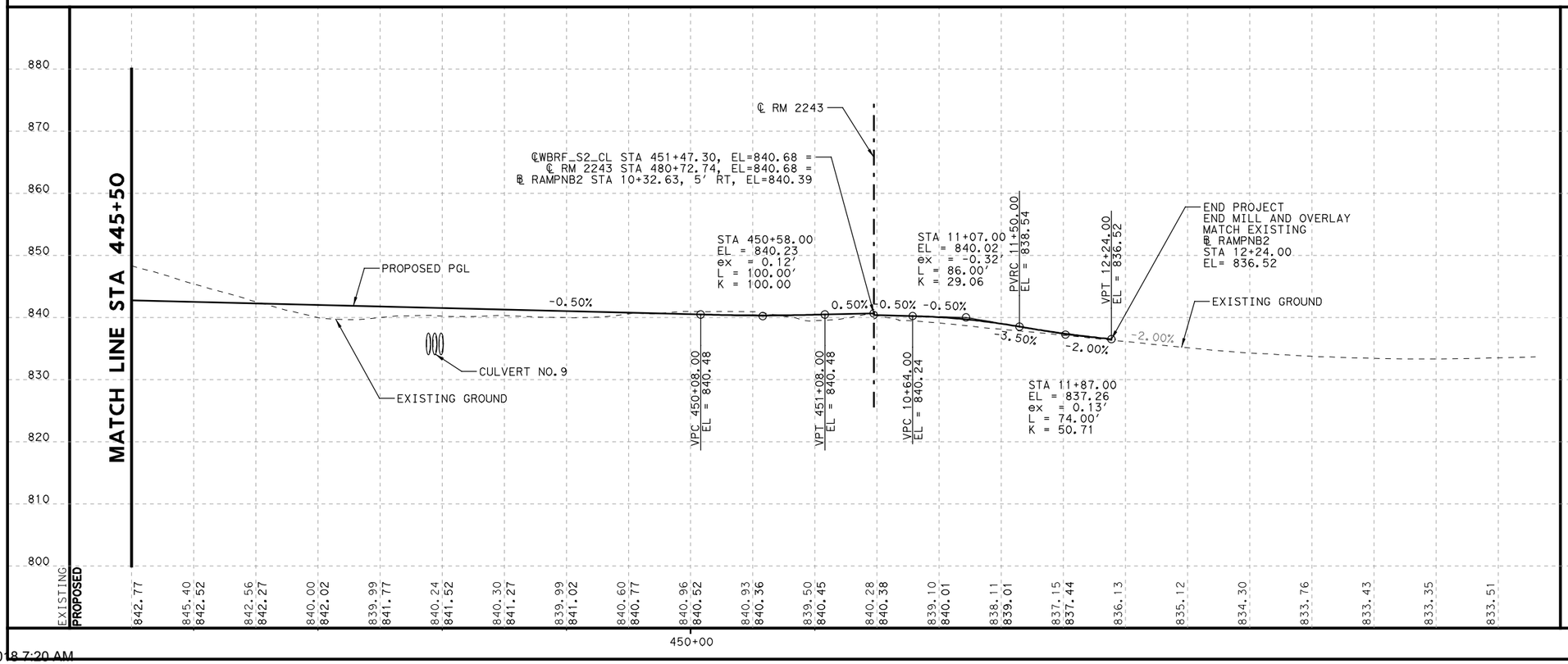

STATE OF TEXAS
JACOB E. WALKER
122057
LICENSED
PROFESSIONAL ENGINEER
03/23/2018

NO.	DATE	REVISION	APPROVED

WILLIAMSON COUNTY TEXAS

HDR Engineering, Inc.
810 Hesters Crossing, Suite 120
Round Rock, Texas 78681
Texas Registered Engineering Firm F-754

SOUTHWEST BYPASS SEGMENT 2

PLAN AND PROFILE WBFR STA 445+50 TO END

SCALE: 1"=100'-H
1"=20'-V

SHEET 8 OF 8

DESIGN	FED.RD. DIV.NO.	FEDERAL AID PROJECT NO.		HIGHWAY NO.
JC	6			
GRAPHICS	STATE	DISTRICT	COUNTY	SHEET NO.
KB	TEXAS	AUS	WILLIAMSON	
CHECK	CONTROL	SECTION	JOB	59
JW	2103	01	034	
CHECK				
JC				

PLOT DRIVER: TXDOT_PDF_BW.pltcfg PENTABLE: S2-0000020170718.tbl
USER: lgomezgonz DATE: 3/23/2018 TIME: 1:45:57 PM SCALE: 1:100
FILE: \

4/12/2018 7:20 AM

SAW CUT EXISTING PAVEMENT. SUBSIDIARY TO VARIOUS ITEMS.
℄ RM 2243 STA 476+61.00 27.48′ RT
℄ RM 2243 STA 476+35.16 24.38′ RT
EXISTING OVERHEAD TELEPHONE
BEGIN WIDENING MATCH EXISTING ℄ RM 2243 STA 475+82.71 18.63′ RT
℄ RM 2243 STA 475+82.71 24.32′ RT
BEGIN CONSTRUCTION CSJ: 2103-01-034 ℄ RM 2243 STA 475+06.85
℄ RM 2243 STA 475+07.12 22.75′ RT
BEGIN RIPRAP ℄ RM 2243 STA 475+06.85 37.74′ RT
RIPRAP (4IN) 27 CY
℄ RM 2243 STA 476+39.46 37.88′ RT
END RIPRAP ℄ RM 2243 STA 476+59.11 43.19′ RT
℄ RM 2243 STA 477+07.00 33.00′ RT
℄ RM 2243 PC STA 479+45.07 33.00′ LT
℄ RM 2243 STA 479+30.00 33.00′ LT
℄ RM 2243 STA 479+30.01 19.98′ LT
PT 476+20.67
℄ RM 2243 STA 478+50.00 20.16′ LT
EXISTING ~3.8%
BEGIN MILL AND OVERLAY BEGIN TRANSITION MATCH EXISTING ℄ RM 2243 STA 478+50.00
EXISTING ~3.2%
N59°34′08.28"E
℄ RM 2243 STA 478+50.00 18.94′ RT
℄ RM 2243 STA 479+48.87 19.12′ RT
℄ RM 2243 STA 479+48.85 29.00′ RT
END TY I C&G ℄ WBFR_S2_CL STA 451+12.39 114.94′ LT
BEGIN CURB HEIGHT TRANSITION 4" TO 0" OVER 10 FT ℄ WBFR_S2_CL PC STA 541+12.32 108.89′ LT
TY I C&G 27 LF
SAWCUT 4′ FROM PROPOSED EDGE OF PAVEMENT REMOVAL OF EXISTING PAVEMENT PAID FOR AS EXCAVATION
℄ RM 2243 PC STA 479+57.83 29.00′ RT
END WIDENING ℄ RM 2243 PT STA 479+97.89 39.75′ RT
RIPRAP (CONC)(4IN) 5 CY
CURB RAMP (TY 22) 1 EA
CURB RAMP (TY 22) 1 EA
TY II C&G 55 LF
℄ RM 2243 PCC STA 479+81.36 38.62′ LT
END CROSS SLOPE TRANSITION ℄ RM 2243 STA 480+00.00
END PROJECT END MILL AND OVERLAY MATCH EXISTING ℄ RAMPNB2 STA 12+24.00
℄ RAMPNB2 STA 12+24.00 30.00′ LT
℄ RAMPNB2 PT STA 11+49.79 30.00′ LT
RIPRAP (CONC)(4IN) 3 CY
℄ RAMPNB2
℄ RAMPNB2 PC STA 11+75.26 28.00′ RT
℄ RAMPNB2 PT STA 11+22.55 37.77′ RT
℄ RAMPNB2 PC STA 11+21.56 38.16′ RT
℄ WBFR_S2_CL STA 451+47.30 = ℄ RM 2243 STA 480+72.74 = ℄ RAMPNB2 STA 10+32.63, 5′ RT
REFER TO RM 2243 INTERSECTION DETAIL SHEET FOR ISLAND C&G DETAILS (TYP)
℄ RAMPNB2 STA 12+24.00 28.00′ RT
PC 10+99.93
RAMPNB2
SW BYPASS WBFR
R=76′
TY II C&G 79 LF
℄ WBFR_S2_CL
R=400′
N30°28′42.55"W
450+00
29′
35′
64′
RIPRAP (CONC)(4IN) 4 CY
TY II C&G LF 60
END FULL DEPTH CONSTRUCTION BEGIN MILL AND OVERLAY ℄ WBFR_S2_CL STA 451+07.54
℄ RM 2243 PC STA 481+59.83 39.75′ RT
CURB RAMP (TY 22) 1 EA
CURB RAMP (TY 22) 1 EA
TY II C&G 80 LF
RIPRAP (CONC)(4IN) 4 CY
℄ RM 2243 PT STA 481+89.57 32.00′ LT
BEGIN CROSS SLOPE TRANSITION STA 481+50.00
℄ RM 2243 STA 483+00.00 32.00′ LT
EXISTING ~2.3%
END PROJECT END MILL AND OVERLAY END TRANSITION MATCH EXISTING ℄ RM 2243 STA 483.00+00
EXISTING ~3.2%
EXISTING WATER LINE
RM 2243
475+00
485+00
℄ RM 2243
℄ RM 2243 STA 483+00.00 19.70′ RT
℄ RM 2243 STA 482+19.85 19.48′ RT
℄ RM 2243 STA 482+19.84 29.00′ RT
℄ RM 2243 PT STA 482+18.24 29.00′ RT
SAWCUT 4′ FROM PROPOSED EDGE OF PAVEMENT REMOVAL OF EXISTING PAVEMENT PAID FOR AS EXCAVATION
ROW
W-16"
0.5%
POE 451+47.30
19′
14′
23′
52′

LEGEND

- OVERLAY
- PAVEMENT WIDENING
- MILL AND OVERLAY

NOTES:

1. ALL STATION AND OFFSET ARE FROM "WBFR_S2_CL" UNLESS OTHERWISE INDICATED.
2. ALL DIMENSIONS ARE FROM LIP OF GUTTER OR EDGE OF PAVEMENT UNLESS OTHERWISE INDICATED.
3. SEE "INTERSECTION DETAILS" SHEETS FOR INTERSECTION AND MEDIAN INFORMATION NOT SHOWN.

H: 0 50 100 150 200
V: 0 10 20 30 40
SCALE IN FEET

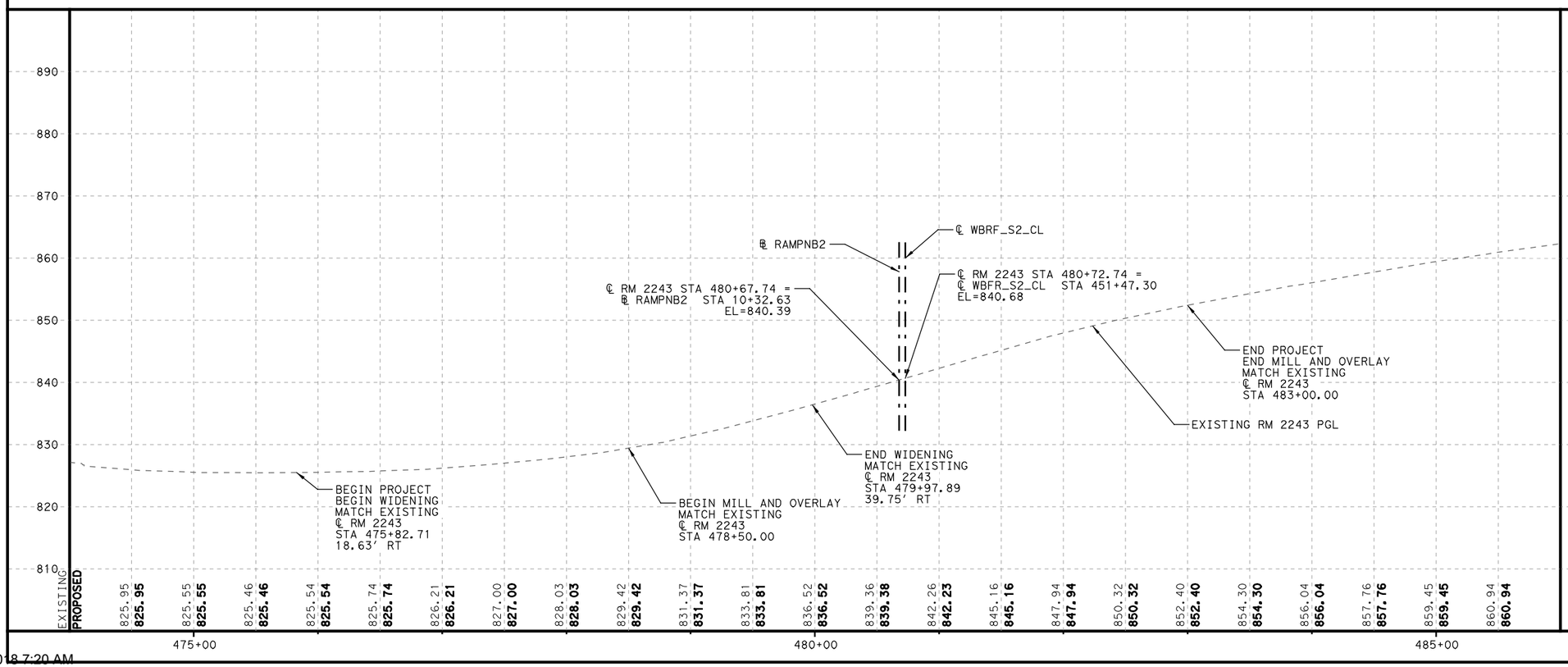

STATE OF TEXAS
JACOB E. WALKER
122057
LICENSED PROFESSIONAL ENGINEER
03/23/2018

NO.	DATE	REVISION	APPROVED

WILLIAMSON COUNTY

HDR Engineering, Inc.
810 Hesters Crossing, Suite 120
Round Rock, Texas 78681
Texas Registered Engineering Firm F-754

SOUTHWEST BYPASS SEGMENT 2

PLAN AND PROFILE RM 2243 STA 474+00 TO 486+00

SCALE: 1"=100′-H
1"=20′-V
SHEET 1 OF 1

DESIGN	FED.RD. DIV.NO.	FEDERAL AID PROJECT NO.		HIGHWAY NO.
JC	6			
GRAPHICS	STATE	DISTRICT	COUNTY	SHEET NO.
LG	TEXAS	AUS	WILLIAMSON	
CHECK	CONTROL	SECTION	JOB	60
JW	2103	01	034	
CHECK				
JC				

PLOT DRIVER: TXDOT_PDF_BW.pltcfg PENTABLE: S2-0000020170718.tbl
USER: lgomezgonz DATE: 3/23/2018 TIME: 1:46:12 PM SCALE: 1:100
FILE: \
4/12/2018 7:20 AM

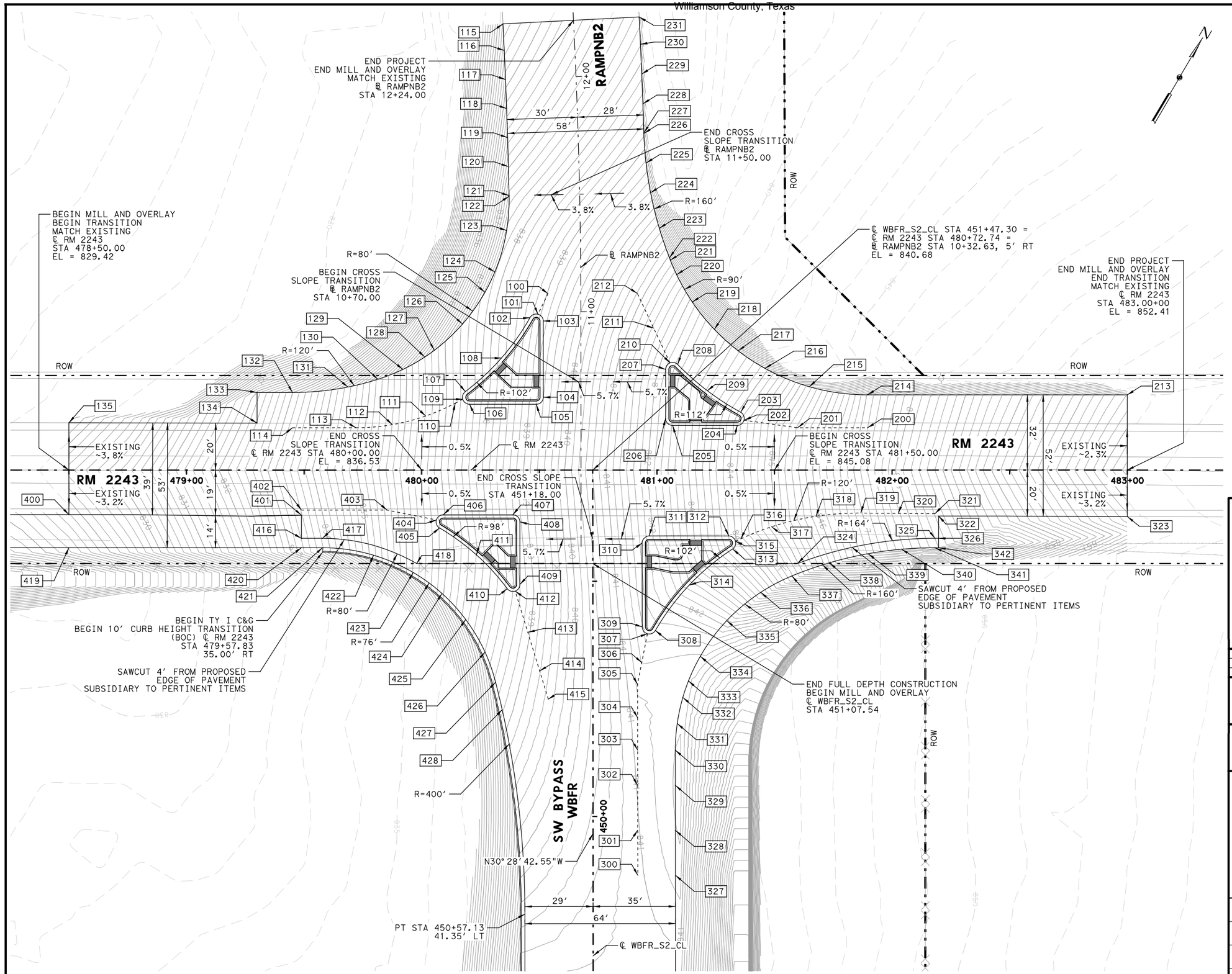

LEGEND

- OVERLAY
- PAVEMENT WIDENING
- MILL AND OVERLAY
- GRADE BREAK

NOTES:

1. ALL STATION AND OFFSET ARE FROM "WBFR_S2_CL" UNLESS OTHERWISE INDICATED.
2. ALL DIMENSIONS ARE FROM LIP OF GUTTER OR EDGE OF PAVEMENT UNLESS OTHERWISE INDICATED.
3. MILL AREA TO A DEPTH 2" BELOW PROPOSED GRADE. MILLING WILL NOT BE UNIFORM ACROSS THE PROPOSED OVERLAY AREA. ANY ADJUSTMENT REQUIRED TO ATTAIN CORRECT MILLING DEPTH CONSIDERED SUBSIDIARY TO PERTINENT ITEMS.

0 20 40 60 80

SCALE IN FEET

STATE OF TEXAS
JACOB E. WALKER
122057
LICENSED
PROFESSIONAL ENGINEER

03/23/2018

NO.	DATE	REVISION	APPROVED

WILLIAMSON COUNTY

HDR Engineering, Inc.
810 Hesters Crossing, Suite 120
Round Rock, Texas 78681
Texas Registered Engineering Firm F-754

SOUTHWEST BYPASS SEGMENT 2

INTERSECTION DETAIL RM 2243

SCALE: 1"=40' SHEET 1 OF 1

DESIGN	FED. RD. DIV. NO.	FEDERAL AID PROJECT NO.		HIGHWAY NO.
JC	6			
GRAPHICS	STATE	DISTRICT	COUNTY	SHEET NO.
LG	TEXAS	AUS	WILLIAMSON	
CHECK	CONTROL	SECTION	JOB	61
JW	2103	01	034	
CHECK				
JC				

PLOT DRIVER: TXDOT_PDF_BW.pltcfg USER: lgomezgonz FILE: \
PENTABLE: S2-0000020IT0718.tbl TIME: 1:46:21 PM DATE: 3/23/2018 SCALE: 1:40

TABLE OF NW POINTS					
POINT	BASELINE	STATION	OFFSET	ELEVATION	DESCRIPTION
100	℄ RAMPNB2	11+07.71	14.00' LT	839.02	BREAKLINE
101	℄ RAMPNB2	10+98.95	18.24' LT	838.94	BREAKLINE
102	℄ RAMPNB2	10+97.52	21.61' LT	838.78	LOC PRC (102'-3')
103	℄ RAMPNB2	10+96.05	16.00' LT	839.09	LOC PT (3')
104	℄ RAMPNB2	10+63.65	16.00' LT	839.33	LOC PC (3')
105	℄ RM 2243	480+48.72	28.00' LT	839.17	LOC PT (3')
106	℄ RM 2243	480+20.34	28.00' LT	837.55	LOC PC (3')
107	℄ RM 2243	480+18.54	33.40' LT	837.44	LOC PRC (3'-102')
108	℄ RM 2243	480+33.94	47.71' LT	838.24	LOC
109	℄ RM 2243	480+17.45	30.20' LT	837.38	BREAKLINE
110	℄ RM 2243	480+14.28	28.51' LT	837.21	BREAKLINE PC (90')
111	℄ RM 2243	480+01.66	23.00' LT	836.51	BREAKLINE (90')
112	℄ RM 2243	479+87.48	19.33' LT	835.67	BREAKLINE (90')
113	℄ RM 2243	479+72.07	18.00' LT	834.79	BREAKLINE PT (90')
114	℄ RM 2243	479+45.07	18.00' LT	833.25	BREAKLINE
115	℄ RAMPNB2	12+24.00	30.00' LT	835.38	EOP
116	℄ RAMPNB2	12+12.50	30.00' LT	835.62	EOP
117	℄ RAMPNB2	12+00.00	30.00' LT	835.91	EOP
118	℄ RAMPNB2	11+87.50	30.00' LT	836.24	EOP
119	℄ RAMPNB2	11+75.00	30.00' LT	836.59	EOP
120	℄ RAMPNB2	11+62.50	30.00' LT	836.98	EOP
121	℄ RAMPNB2	11+50.00	30.00' LT	837.40	EOP
122	℄ RAMPNB2	11+49.79	30.00' LT	837.40	EOP PC (80')
123	℄ RAMPNB2	11+35.00	31.30' LT	837.72	EOP (80')
124	℄ RAMPNB2	11+17.25	36.50' LT	837.81	EOP (80')
125	℄ RAMPNB2	11+08.46	40.77' LT	837.72	EOP (80')
126	℄ RM 2243	480+17.38	62.19' LT	837.36	EOP (80')
127	℄ RM 2243	480+05.30	50.97' LT	836.74	EOP (80')
128	℄ RM 2243	480+01.30	48.14' LT	836.50	EOP (80')
129	℄ RM 2243	479+92.04	42.87' LT	835.90	EOP (80')
130	℄ RM 2243	479+81.36	38.62' LT	835.21	EOP PCC (80'-120')
131	℄ RM 2243	479+68.60	35.33' LT	834.42	EOP (120')
132	℄ RM 2243	479+45.07	33.00' LT	833.00	EOP PT (120')
133	℄ RM 2243	479+30.00	33.00' LT	832.01	EOP
134	℄ RM 2243	479+30.00	20.00' LT	832.35	EOP
135	℄ RM 2244	478+50.00	20.16' LT	828.66	EOP

TABLE OF NE POINTS					
POINT	BASELINE	STATION	OFFSET	ELEVATION	DESCRIPTION
200	℄ RM 2243	481+89.57	18.00' LT	847.16	BREAKLINE
201	℄ RM 2243	481+59.79	18.00' LT	845.53	BREAKLINE
202	℄ RM 2243	481+37.10	21.26' LT	844.24	BREAKLINE
203	℄ RM 2243	481+35.63	24.63' LT	844.06	LOC PRC (112'-3')
204	℄ RM 2243	481+34.19	19.00' LT	844.09	LOC PT (3')
205	℄ RM 2243	481+06.72	19.00' LT	842.52	LOC PC (3')
206	℄ RAMPNB2	10+54.60	36.00' RT	842.34	LOC PT (3')
207	℄ RAMPNB2	10+75.46	36.00' RT	842.16	LOC PC (3')
208	℄ RAMPNB2	10+77.55	41.15' RT	842.38	LOC PRC (3'-112')
209	℄ RAMPNB2	10+66.37	53.76' RT	843.20	LOC (112')
210	℄ RAMPNB2	10+78.25	37.89' RT	842.22	BREAKLINE
211	℄ RAMPNB2	10+93.02	30.95' RT	841.54	BREAKLINE
212	℄ RAMPNB2	11+07.71	24.01' RT	840.84	BREAKLINE
213	℄ RM 2243	483+00.00	32.00' LT	851.68	EOP
214	℄ RM 2243	481+89.57	32.00' LT	847.03	EOP PC (90')
215	℄ RM 2243	481+64.80	35.48' LT	845.26	EOP (90')
216	℄ RM 2243	481+45.96	43.28' LT	843.93	EOP (90')
217	℄ RAMPNB2	10+83.34	66.88' RT	843.31	EOP (90')
218	℄ RAMPNB2	10+92.44	56.78' RT	842.73	EOP (90')
219	℄ RAMPNB2	11+04.05	47.38' RT	842.07	EOP (90')
220	℄ RAMPNB2	11+15.51	40.76' RT	841.41	EOP (90')
221	℄ RAMPNB2	11+21.56	38.16' RT	841.09	EOP PT (90')
222	℄ RAMPNB2	11+22.55	37.77' RT	841.04	EOP PC (160')
223	℄ RAMPNB2	11+35.00	33.62' RT	840.41	EOP (160')
224	℄ RAMPNB2	11+50.00	30.19' RT	839.68	EOP (160')
225	℄ RAMPNB2	11+62.50	28.55' RT	839.20	EOP (160')
226	℄ RAMPNB2	11+75.00	28.00' RT	838.80	EOP (160')
227	℄ RAMPNB2	11+75.26	28.00' RT	838.79	EOP PT (160')
228	℄ RAMPNB2	11+87.50	28.00' RT	838.44	EOP
229	℄ RAMPNB2	12+00.00	28.00' RT	838.12	EOP
230	℄ RAMPNB2	12+12.50	28.00' RT	837.82	EOP
231	℄ RAMPNB2	12+24.00	28.00' RT	837.58	EOP

TABLE OF SE POINTS					
POINT	BASELINE	STATION	OFFSET	ELEVATION	DESCRIPTION
300	℄ WBFR_S2_CL	449+75.00	19.00' RT	840.95	BREAKLINE
301	℄ WBFR_S2_CL	449+94.10	19.00' RT	840.98	BREAKLINE
302	℄ WBFR_S2_CL	450+13.21	19.00' RT	841.02	BREAKLINE
303	℄ WBFR_S2_CL	450+28.20	19.00' RT	841.06	BREAKLINE
304	℄ WBFR_S2_CL	450+41.92	19.00' RT	841.11	BREAKLINE
305	℄ WBFR_S2_CL	450+56.20	19.00' RT	841.20	BREAKLINE
306	℄ WBFR_S2_CL	450+65.44	20.80' RT	841.34	BREAKLINE
307	℄ WBFR_S2_CL	450+77.70	23.18' RT	841.57	BREAKLINE
308	℄ WBFR_S2_CL	450+79.09	26.60' RT	841.59	LOC PRC (102'-3')
309	℄ WBFR_S2_CL	450+80.59	21.00' RT	841.48	LOC PT (3')
310	℄ WBFR_S2_CL	451+16.28	21.00' RT	841.72	LOC PC (3')
311	℄ RM 2243	480+96.77	28.00' RT	841.91	LOC PT (3')
312	℄ RM 2243	481+30.56	28.00' RT	843.84	LOC PC (3')
313	℄ RM 2243	481+32.20	33.51' RT	843.80	LOC PRC (3'-102')
314	℄ RM 2243	481+13.74	48.91' RT	842.42	LOC (102')
315	℄ RM 2243	481+33.45	30.19' RT	843.99	BREAKLINE
316	℄ RM 2243	481+35.69	29.17' RT	844.12	BREAKLINE PC (120')
317	℄ RM 2243	481+48.83	24.04' RT	844.90	BREAKLINE (120')
318	℄ RM 2243	481+67.62	19.60' RT	845.93	BREAKLINE (120')
319	℄ RM 2243	481+86.76	18.22' RT	846.97	BREAKLINE PT (120')
320	℄ RM 2243	482+02.63	18.35' RT	847.80	BREAKLINE
321	℄ RM 2243	482+18.24	18.48' RT	848.51	BREAKLINE
322	℄ RM 2243	482+19.85	19.48' RT	848.57	EOP
323	℄ RM 2243	483+00.00	19.70' RT	851.78	EOP
324	℄ RM 2243	481+59.83	39.75' RT	N/A	SAW CUT PC (164')
325	℄ RM 2243	482+18.24	29.00' RT	N/A	SAW CUT PT (164')
326	℄ RM 2243	482+19.84	29.00' RT	N/A	SAW CUT
327	℄ WBFR_S2_CL	449+75.00	35.00' RT	841.21	EOP
328	℄ WBFR_S2_CL	449+94.10	35.00' RT	841.32	EOP
329	℄ WBFR_S2_CL	450+13.21	35.00' RT	841.35	EOP
330	℄ WBFR_S2_CL	450+28.20	35.00' RT	841.33	EOP PC (80')
331	℄ WBFR_S2_CL	450+39.52	35.80' RT	841.29	EOP (80')
332	℄ WBFR_S2_CL	450+50.60	38.20' RT	841.22	EOP (80')
333	℄ WBFR_S2_CL	450+57.61	40.60' RT	841.18	EOP (80')
334	℄ WBFR_S2_CL	450+68.11	45.67' RT	841.31	EOP (80')
335	℄ RM 2243	481+29.72	64.02' RT	842.14	EOP (80')
336	℄ RM 2243	481+44.20	51.95' RT	843.52	EOP (80')
337	℄ RM 2243	481+57.44	45.00' RT	844.64	EOP PCC (80'-164')
338	℄ RM 2243	481+73.41	39.41' RT	845.83	EOP (164')
339	℄ RM 2243	481+89.87	35.53' RT	846.86	EOP (164')
340	℄ RM 2243	482+04.00	33.63' RT	847.62	EOP (164')
341	℄ RM 2243	482+18.24	33.00' RT	848.26	EOP PT (164')
342	℄ RM 2244	482+19.84	33.00' RT	848.33	EOP

TABLE OF SW POINTS					
POINT	BASELINE	STATION	OFFSET	ELEVATION	DESCRIPTION
400	℄ RM 2243	478+50.00	18.94' RT	828.81	WIDENING
401	℄ RM 2243	479+48.87	19.12' RT	833.49	WIDENING
402	℄ RM 2243	479+48.88	17.00' RT	833.52	BREAKLINE
403	℄ RM 2243	479+85.25	17.00' RT	835.56	BREAKLINE
404	℄ RM 2243	480+06.25	21.18' RT	836.78	BREAKLINE
405	℄ RM 2243	480+07.61	24.58' RT	836.85	LOC PRC (98'-3')
406	℄ RM 2243	480+09.13	19.00' RT	836.96	LOC PT (3')
407	℄ RM 2243	480+38.76	19.00' RT	838.65	LOC PC (3')
408	℄ WBFR_S2_CL	454+25.33	31.00' LT	838.80	LOC PT (3')
409	℄ WBFR_S2_CL	450+98.73	31.00' LT	838.68	LOC PC (3')
410	℄ WBFR_S2_CL	450+96.93	36.41' LT	838.38	LOC PRC (3'-98')
411	℄ WBFR_S2_CL	451+11.28	49.49' LT	837.67	LOC (98')
412	℄ WBFR_S2_CL	450+95.90	33.00' LT	838.55	BREAKLINE
413	℄ WBFR_S2_CL	450+78.34	27.65' LT	838.95	BREAKLINE
414	℄ WBFR_S2_CL	450+61.89	22.65' LT	839.32	BREAKLINE
415	℄ WBFR_S2_CL	450+49.88	19.00' LT	839.57	BREAKLINE
416	℄ RM 2243	479+48.85	29.00' RT	N/A	SAW CUT
417	℄ RM 2243	479+57.83	29.00' RT	N/A	SAW CUT PC (80')
418	℄ RM 2243	479+97.89	37.75' RT	N/A	SAW CUT PT (80')
419	℄ RM 2243	478+50.00	33.00' RT	828.35	EOP
420	℄ RM 2243	479+48.84	33.00' RT	833.28	EOP
421	℄ RM 2243	479+57.83	33.00' RT	833.81	LOC PC (76')
422	℄ RM 2243	479+79.54	36.17' RT	835.11	LOC (76')
423	℄ RM 2243	479+96.44	43.53' RT	836.19	LOC (76')
424	℄ WBFR_S2_CL	450+94.92	64.20' LT	836.96	LOC (76')
425	℄ WBFR_S2_CL	450+83.79	54.05' LT	837.61	LOC (76')
426	℄ WBFR_S2_CL	450+70.00	45.88' LT	838.17	LOC (76')
427	℄ WBFR_S2_CL	450+57.13	41.35' LT	838.54	LOC PCC (76'-400')
428	℄ WBFR_S2_CL	450+45.52	38.58' LT	838.81	LOC (400')

STATE OF TEXAS
JACOB E. WALKER
122057
LICENSED
PROFESSIONAL ENGINEER

03/23/2018

NO.	DATE	REVISION	APPROVED

WILLIAMSON COUNTY

HDR Engineering, Inc.
810 Hesters Crossing, Suite 120
Round Rock, Texas 78681
Texas Registered Engineering Firm F-754

SOUTHWEST BYPASS SEGMENT 2

INTERSECTION DETAIL POINT TABLES

DESIGN	FED.RD. DIV.NO.	FEDERAL AID PROJECT NO.		HIGHWAY NO.
JC	6			
GRAPHICS	STATE	DISTRICT	COUNTY	SHEET NO.
LG	TEXAS	AUS	WILLIAMSON	
CHECK	CONTROL	SECTION	JOB	62
JW				
CHECK	2103	01	034	
JC				

PLOT DRIVER: TXDOT_PDF_BW.pltcfg PENTABLE: S2-0000020/T018.tbl
USER: lgomezgonz DATE: 3/23/2018 TIME: 1:46:23 PM SCALE: 1:1
FILE: \

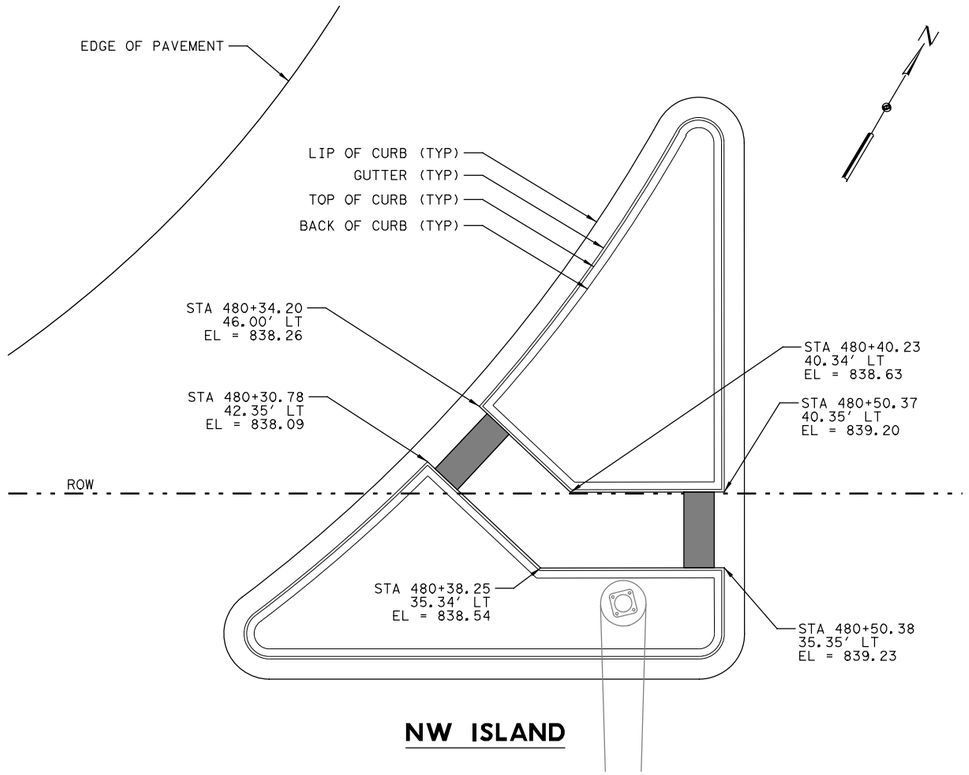

NW ISLAND

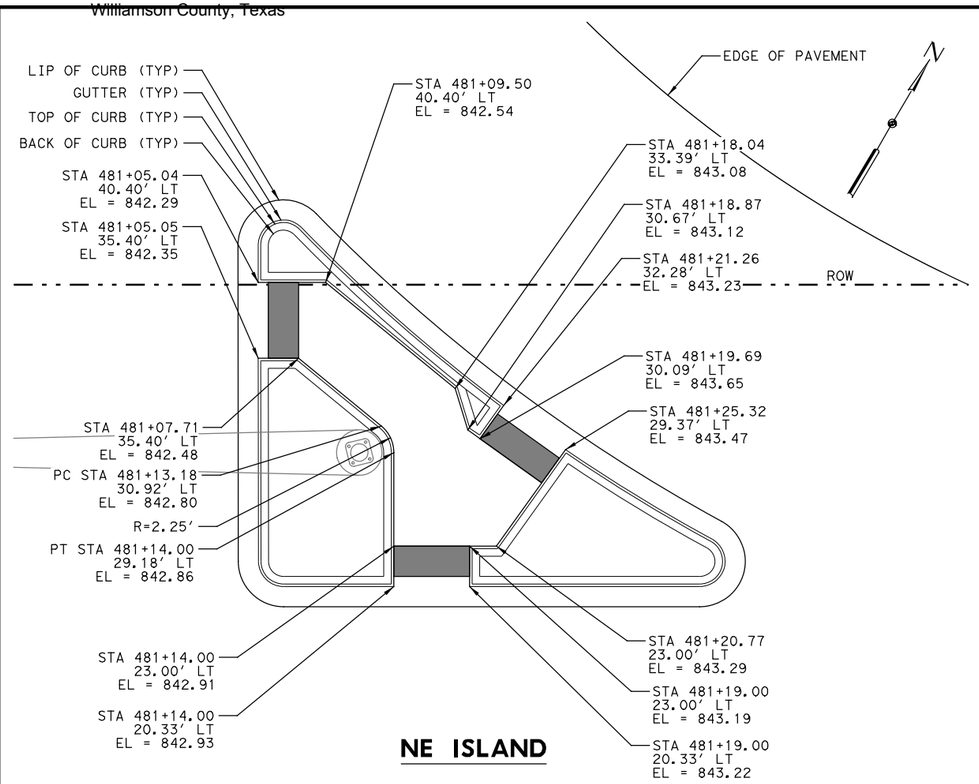

NE ISLAND

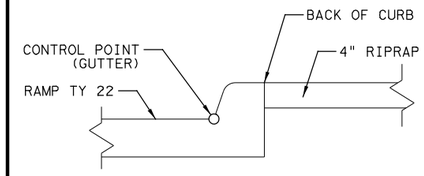

DETAIL B

NOTES:

1. ALL STATION AND OFFSET ARE FROM "RM 2243" UNLESS OTHERWISE INDICATED.
2. ALL DIMENSIONS ARE FROM GUTTER UNLESS OTHERWISE INDICATED. SEE DETAIL B.

0 5 10 15 20

SCALE IN FEET

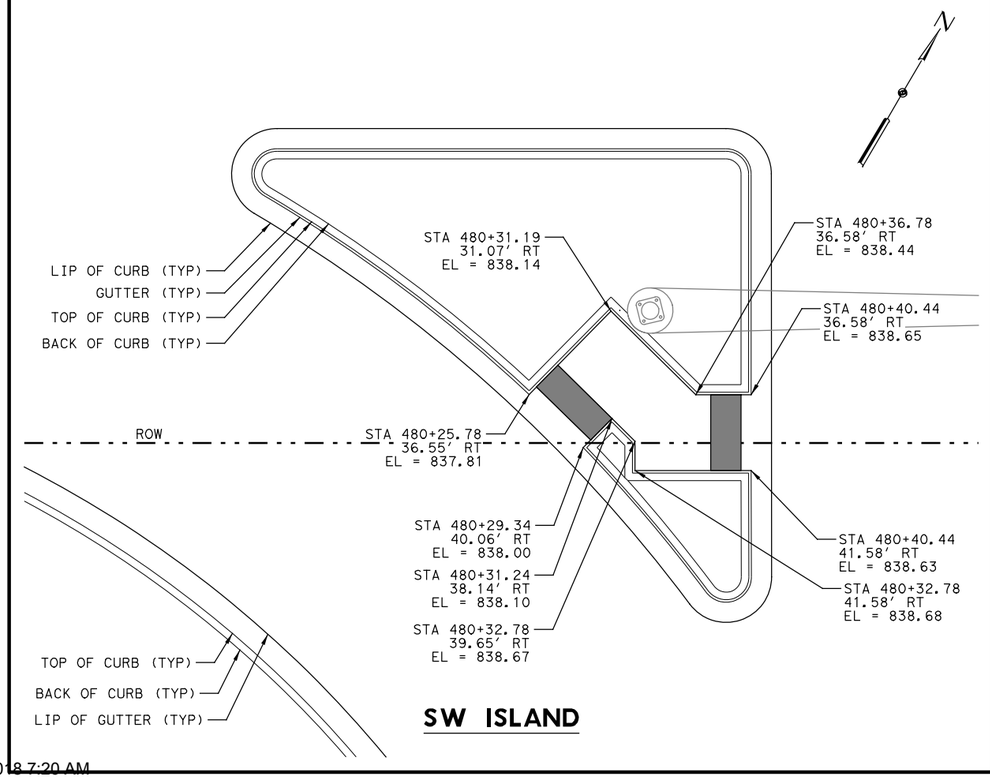

SW ISLAND

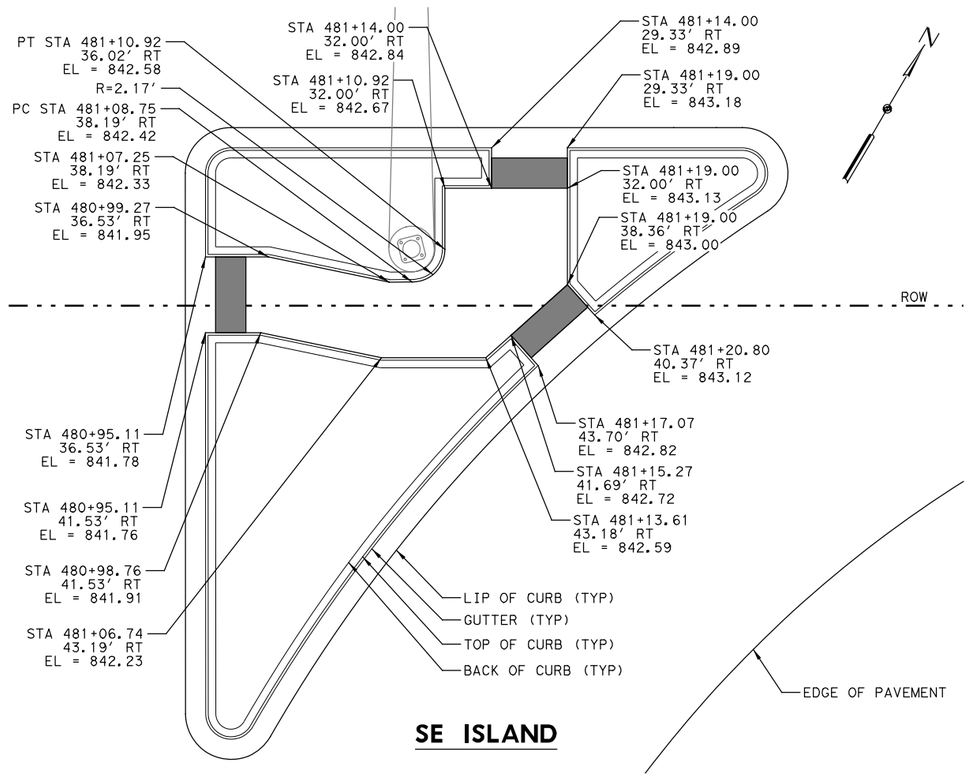

SE ISLAND

STATE OF TEXAS
JACOB E. WALKER
122057
LICENSED
PROFESSIONAL ENGINEER

03/23/2018

NO.	DATE	REVISION	APPROVED

WILLIAMSON COUNTY

HDR Engineering, Inc.
810 Hesters Crossing, Suite 120
Round Rock, Texas 78681
Texas Registered Engineering Firm F-754

SOUTHWEST BYPASS SEGMENT 2

ISLAND DETAIL RM 2243

SCALE: 1"=10'

SHEET 1 OF 1

DESIGN	FED. RD. DIV. NO.	FEDERAL AID PROJECT NO.		HIGHWAY NO.
JC	6			
GRAPHICS	STATE	DISTRICT	COUNTY	SHEET NO.
LG	TEXAS	AUS	WILLIAMSON	
CHECK	CONTROL	SECTION	JOB	63
JW	2103	01	034	
CHECK				
JC				

PLOT DRIVER: TXDOT_PDF_BW.pltcfg PENTABLE: S2-0000020f007b.tbl
USER: lgomezgon2 DATE: 3/23/2018 TIME: 1:46:28 PM SCALE: 1:10
FILE: \
4/12/2018 7:20 AM

DISCLAIMER:
The use of this standard is governed by the "Texas Engineering Practice Act". No warranty of any kind is made by TxDOT for any purpose whatsoever. TxDOT assumes no responsibility for the conversion of this standard to other formats or for incorrect results or damages resulting from its use.

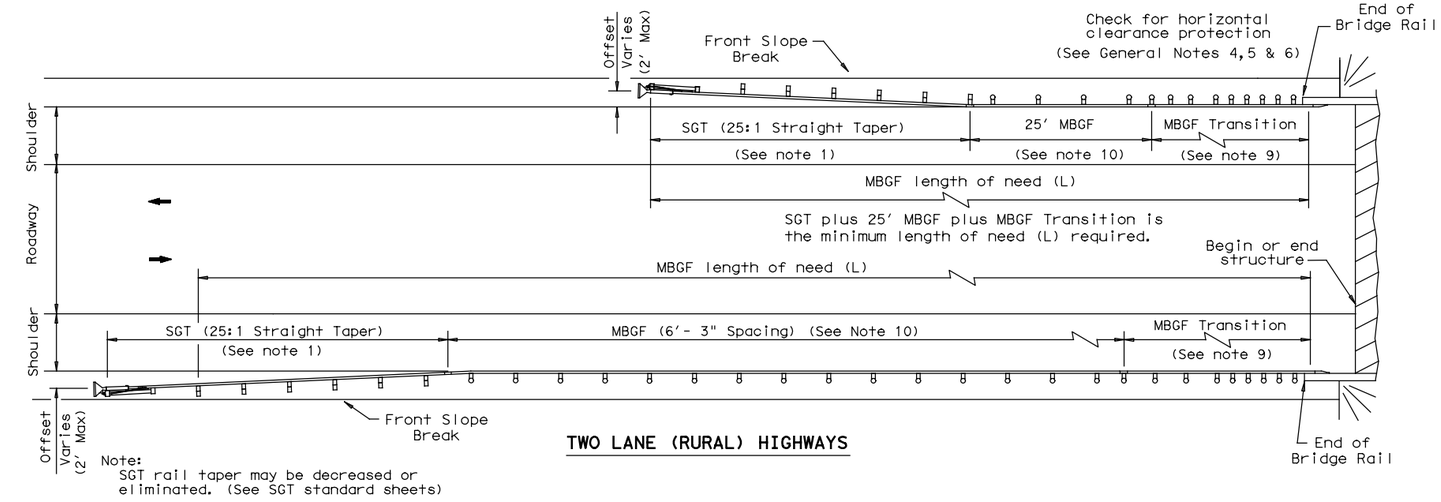

Note:
SGT rail taper may be decreased or eliminated. (See SGT standard sheets)

TWO LANE (RURAL) HIGHWAYS

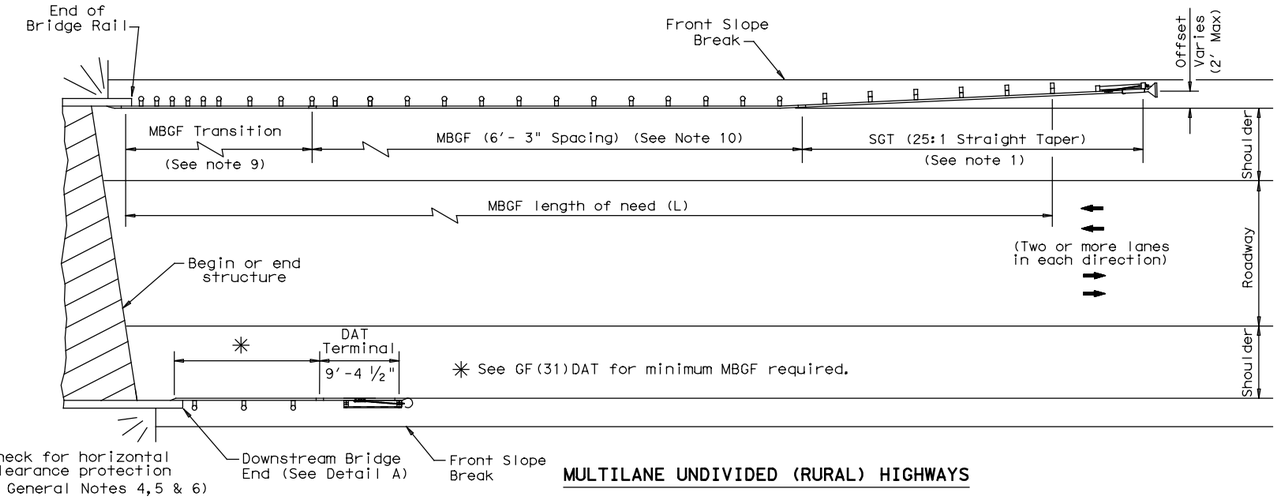

MULTILANE UNDIVIDED (RURAL) HIGHWAYS

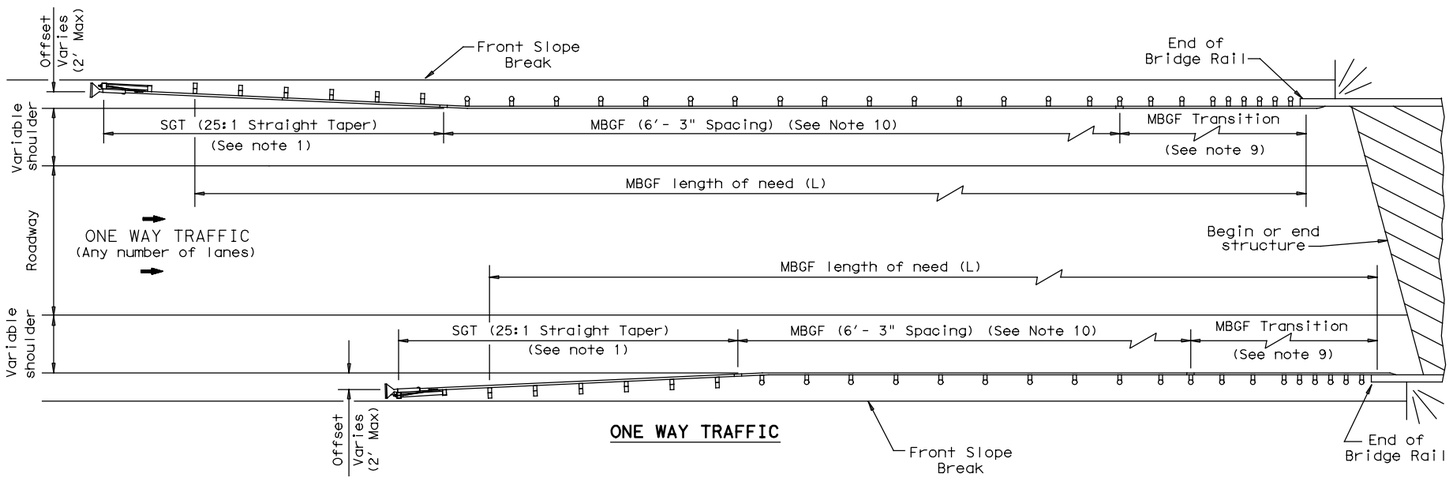

ONE WAY TRAFFIC

GENERAL NOTES

1. For more detail: See GF(31), SGT( )31, GF(31)TR, and GF(31)TL2 standard sheets.
2. Quantities of metal beam guard fence (MBGF) at individual bridge ends are as shown in the plans.
3. Use average daily traffic (ADT) for the current year to determine MBGF length of need in accordance with the Roadway Design Manual unless otherwise specified. Where significant traffic volume growth is anticipated on low volume (0-750 ADT) highways, use length determinations for the higher volume category.
4. MBGF may not be required to shield departure end of bridge unless other obstacles within the horizontal clearance limits or opposing traffic indicate a MBGF consideration.
5. Downstream anchor terminals (DAT) are only for downstream end anchorage use, outside the horizontal clearance area of opposing traffic.
6. Direct connection of MBGF to concrete rails are only for downstream rail connections outside the horizontal clearance area of opposing traffic. (This requires a minimum of three standard line posts plus the DAT terminal, See Detail A)
7. The crown shall be widened to accommodate MBGF. Typically the "front slope" break should be 2'- 0" from the back of the MBGF post. This applies to new construction on new alignment or where existing roadway cross section is to be widened to increase roadway width. This does not apply to rehabilitation work where existing roadway crown width is to be retained (See Typical Cross Section at MBGF).
8. For restrictive bridge widths: The MBGF should be properly transitioned from the existing bridge rail to the adjoining MBGF (See MBGF Transition Standards). Metal beam guard fence at these bridge location(s) shall be flared at the rate of 25:1 or flatter, and be of the length necessary to locate the terminal end at the 2 ft."maximum" offset from the shoulder edge in the approach direction.
9. Transition length and post spacing will vary depending on the transition type. Transition type will be shown elsewhere in the plans.
10. A minimum 25' length of MBGF will be required.

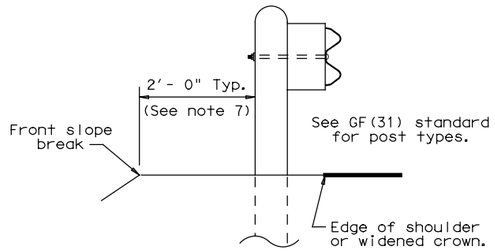

TYPICAL CROSS SECTION AT MBGF

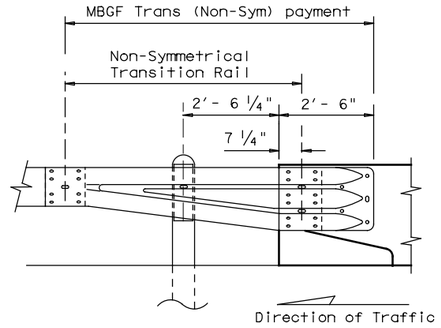

Note:
All rail elements shall be lapped in the direction of adjacent traffic.

DETAIL A

Showing Downstream Rail Attachment

Texas Department of Transportation

Design Division Standard

BRIDGE END DETAILS

(METAL BEAM GUARD FENCE APPLICATIONS TO RIGID RAILS)

BED-14

FILE: bed14.dgn	DN: TxDOT	CK: AM	DW: BD/VP	CK: CGL
© TxDOT: December 2011	CONT	SECT	JOB	HIGHWAY
REVISIONS	2103	01	034	
04-2014 Added 25' MBGF to Two Lane (Rural) Highway section. Eng.CGL, Cad.VP	DIST	COUNTY		SHEET NO.
	AUS	WILLIAMSON		64

DATE: 3/23/2018 10:36:57 AM
FILE: c:\pwworking\dal\d0911856\bed14.dgn

DISCLAIMER:
The use of this standard is governed by the "Texas Engineering Practice Act". No warranty of any kind is made by TxDOT for any purpose whatsoever. TxDOT assumes no responsibility for the conversion of this standard to other formats or for incorrect results or damages resulting from its use.

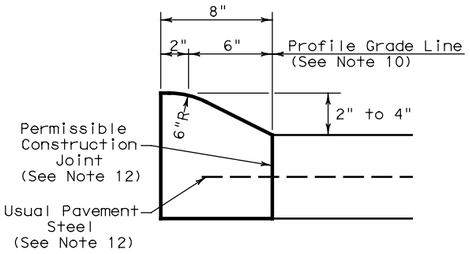

TYPE I CURB (MONOLITHIC)
2" - 4" HEIGHT

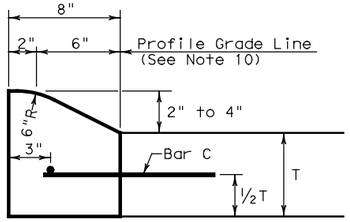

TYPE I CURB
2" - 4" HEIGHT

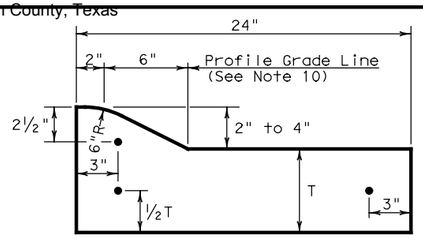

TYPE I CURB AND GUTTER
2" - 4" HEIGHT

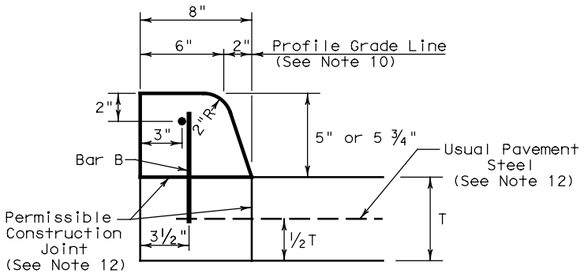

TYPE II CURB (MONOLITHIC)
5" - 5 ¾" HEIGHT

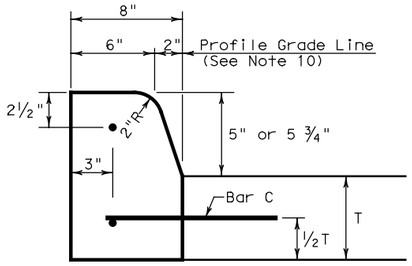

TYPE II CURB
5" - 5 ¾" HEIGHT

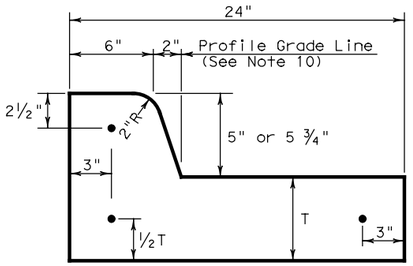

TYPE II CURB AND GUTTER
5" - 5 ¾" HEIGHT

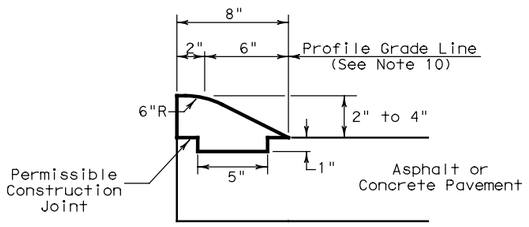

TYPE III CURB (KEYED)
2" - 4" HEIGHT

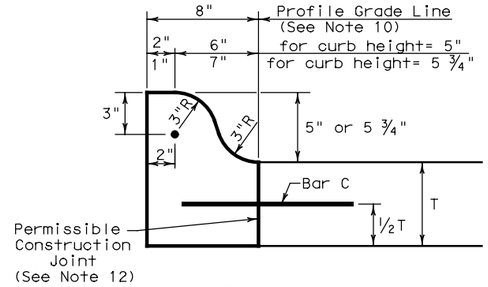

TYPE IIa CURB
5" - 5 ¾" HEIGHT

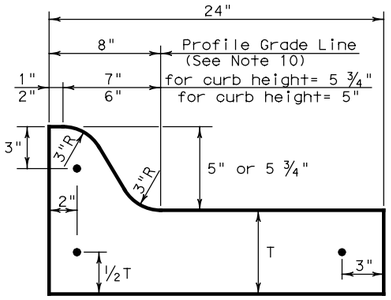

TYPE IIa CURB AND GUTTER
5" - 5 ¾" HEIGHT

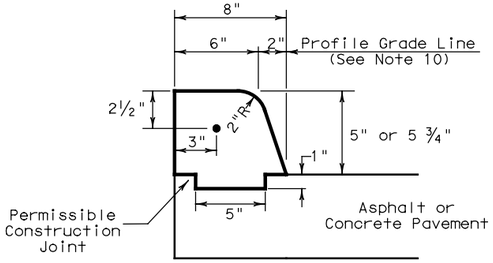

TYPE IV CURB (KEYED)
5" - 5 ¾" HEIGHT

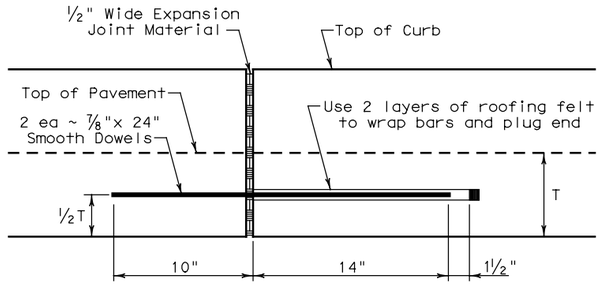

EXPANSION JOINT DETAIL

Curb Transition Note:
Field conditions may require a longer or shorter transition, and shall be shown elsewhere in the plans, or as directed by the Engineer.

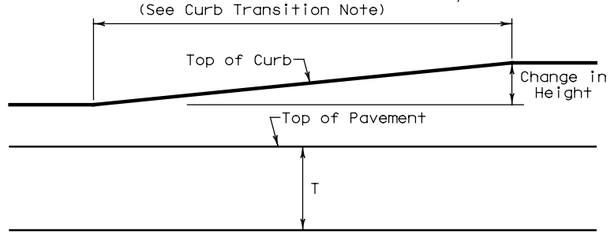

CURB TRANSITION
Note: To be paid for as Highest Curb

General Notes

1. All materials and construction shall be in accordance with Item 529, "Concrete Curb, Gutter, and Combined Curb and Gutter."
2. Concrete shall be Class A.
3. When reinforcing bars are used, they shall be No.4 unless otherwise shown. The use of synthetic fiber in lieu of steel reinforcing is acceptable, provided the fiber producer is on the Department Producer List (MPL), maintained by TxDOT, Construction Division.
4. Round exposed sharp edges with a rounding tool, to a minimum radius of ¼ inch.
5. All existing curbs and driveways to be removed shall be sawed or removed at existing joints.
6. Where concrete curb is placed on existing concrete pavement, the pavement shall be drilled and the reinforcing bars grouted in place.
7. Expansion and contraction joints shall be constructed to match pavement joints in all curbs and curb and gutter adjacent to jointed concrete pavement. Where placement of curb or curb and gutter is not adjacent to concrete pavement, expansion joints shall be provided at structures, curb returns at streets, and at locations directed by The Engineer.
8. Vertical and horizontal dowel bars and transverse reinforcing bars shall be placed at four feet C-C.
9. Dimension 'T' shown is the thickness of concrete pavement. When curb is installed adjacent to flexible pavement dimension 'T' is 8" maximum.
10. Usual profile grade line. Refer to typical sections and plan-profile sheets for exact locations.
11. One-half inch expansion joint material shall be provided where curb or curb and gutter is adjacent to sidewalk or riprap.
12. When vertical permissible construction joints are used, resulting in a longitudinal construction joint in the pavement, the longitudinal pavement steel shall be placed in accordance with pavement details shown elsewhere in the plans for longitudinal construction joints. Reinforcing steel for curb section shall then conform to that required for concrete curb.

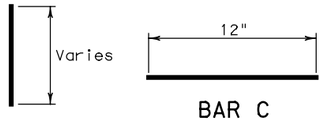

BAR B BAR C

Texas Department of Transportation — Design Division Standard

CONCRETE CURB AND CURB AND GUTTER

CCCG-12

FILE: cccg12.dgn	DN: TxDOT	CK: AM	DW: VP	CK:
© TxDOT: 1995	CONT	SECT	JOB	HIGHWAY
REVISIONS UPDATED 2012 - VP	2103	01	034	
	DIST	COUNTY		SHEET NO.
	AUS	WILLIAMSON		65

DATE: 3/23/2018 10:36:59 AM
FILE: c:\pwworking\dal\d0911856\cccg12.dgn

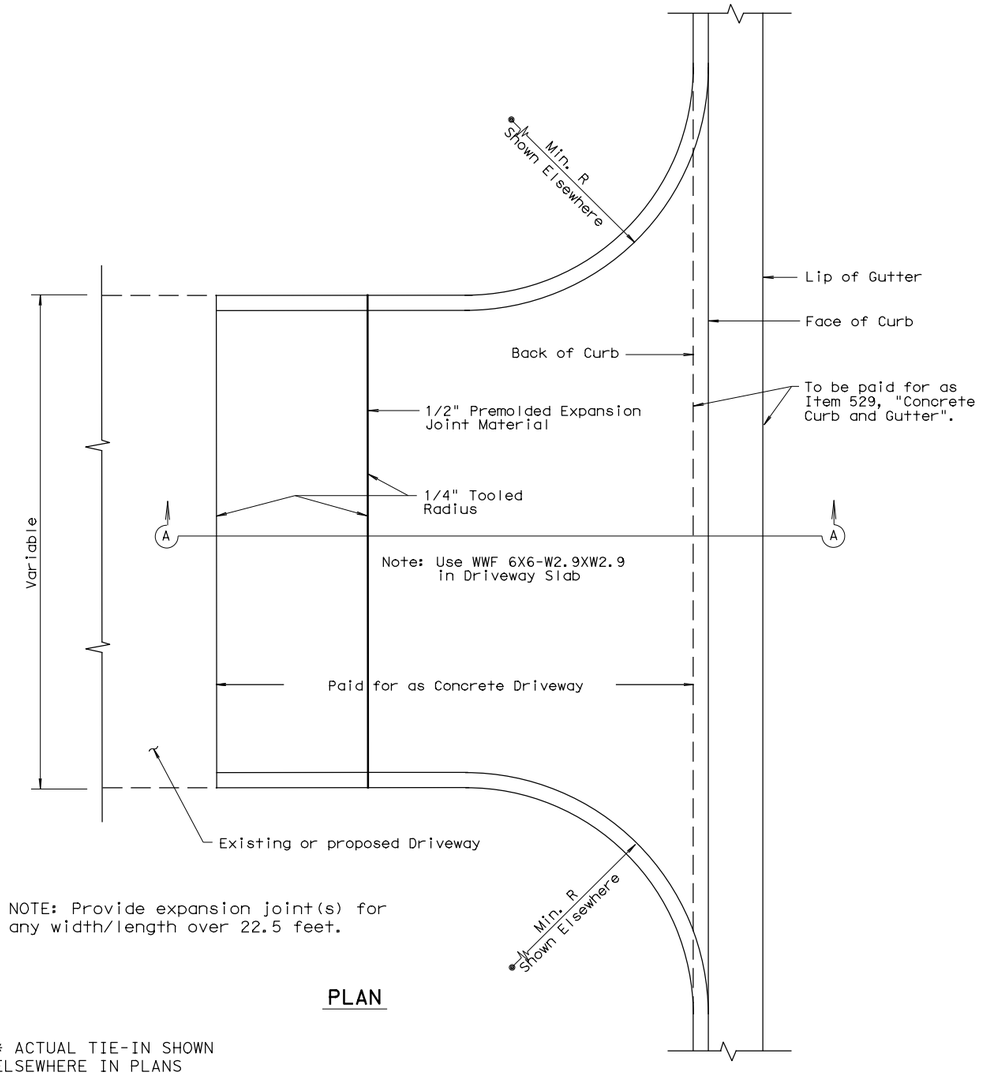

NOTE: Provide expansion joint(s) for any width/length over 22.5 feet.

PLAN

* ACTUAL TIE-IN SHOWN ELSEWHERE IN PLANS OR AS DIRECTED.

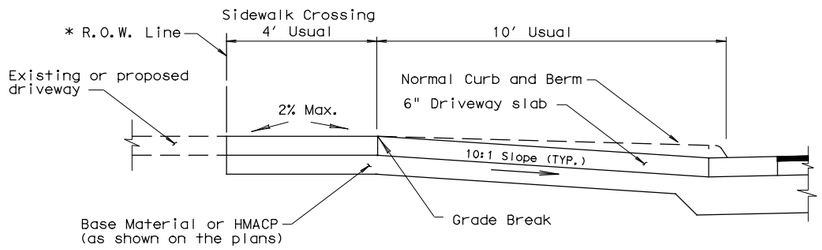

SECTION A-A

CONCRETE DRIVEWAY DETAILS

Payment for Driveways will be in accordance with Item 530, "Driveways".

Ensure grade break does not exceed 8% unless otherwise directed.

Provide absolute minimum sidewalk crossing width of 3' for driveway width of 20' or less.

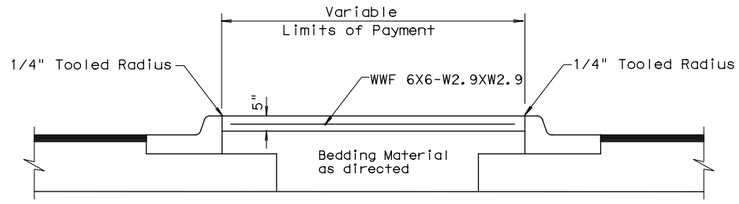

RIPRAP MEDIAN DETAIL

Use Class B Concrete for Riprap.

Payment of Riprap Median will be in accordance with Item 432, "Riprap".

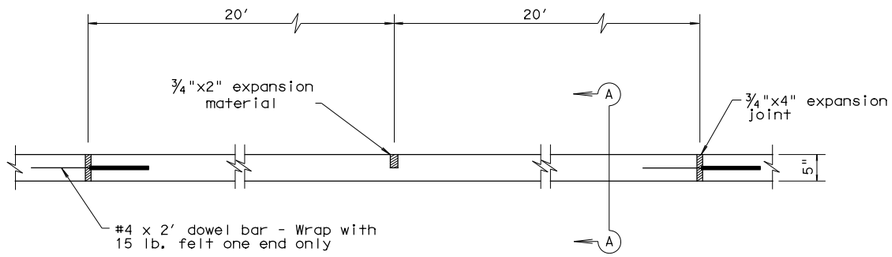

ELEVATION

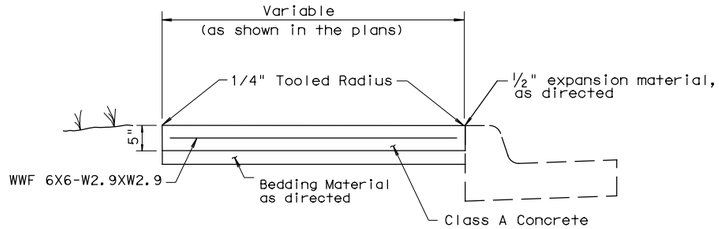

SECTION A-A

SIDEWALK DETAILS

Place a 3/4" expansion joint at 40' (max.) intervals and at sidewalk ends.

Expansion joints will be continuous with adjacent curb and gutter joints.

Place a 1/4" tooled radius at all joints.

Ensure the cross slope of the sidewalk does not exceed 2%.

Payment for sidewalk will be in accordance with Item 531, "Sidewalks".

See Statewide PED standard for additional pedestrian element criteria.

Texas Department of Transportation
Austin District Design

CONCRETE DRIVEWAYS, SIDEWALKS AND RIPRAP MEDIANS

AUSTIN DISTRICT STANDARD

© TxDOT 2002

REVISIONS
4/03 District Update
9/04 2004 Update

DIST	FED REG	FEDERAL AID PROJECT •			SHEET
AUS	6				66
COUNTY		CONTROL	SECT	JOB	HIGHWAY
WILLIAMSON		2103	01	034	

FILE: CDSR-04.dgn

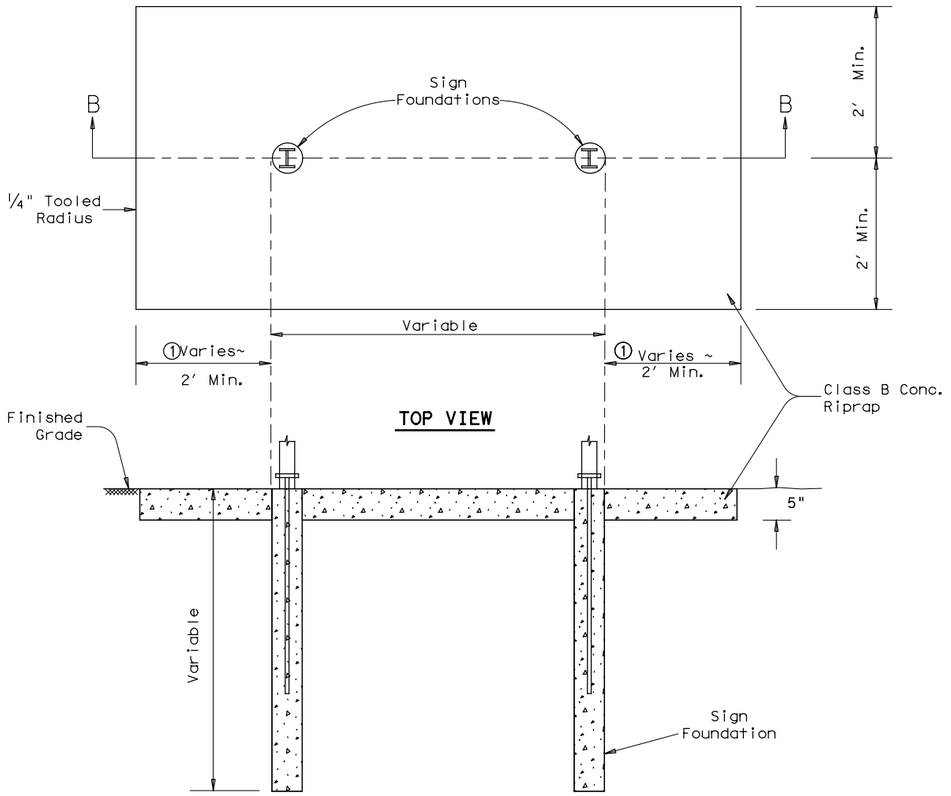

TOP VIEW

SECTION B-B

LARGE GROUND MOUNTED GUIDE SIGNS OR OVERHEAD SIGN BRIDGES

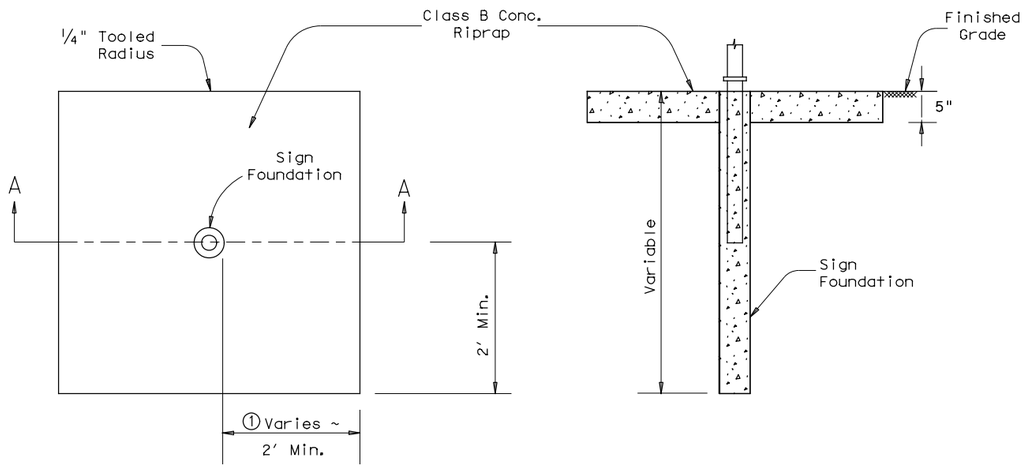

TOP VIEW

SECTION A-A

CANTILEVER SIGNS

Use detail on small roadside signs only when shown elsewhere on the plans or as directed.

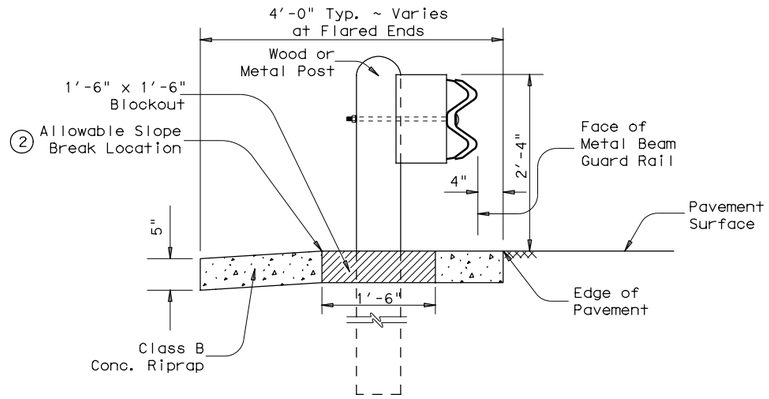

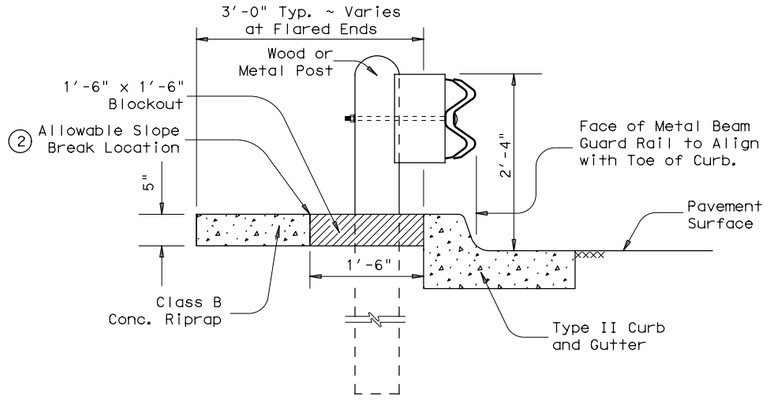

METAL BEAM GUARD FENCE

Fill 1'-6" x 1'-6" Blockout with 2 sack Grout after Riprap has been placed. Consider subsidiary to pertinet Items.

① For large Ground Mounted Guide Signs, extend the Riprap to the outside lateral edges of the signs. However, in those instances where the edge of the sign does not extend 2'-0" from the post, utilize a 2'-0" minimum dimension.

① For Overhead Sign Bridges and Cantilever Sign Mounts the dimensions will be measured from outside edge of Drill Shafts.

② For rehabilitation type projects that do not involve reworking the front slope behind the Metal Beam Guard Fence, a break in the slope is allowed as shown or as directed but shall be 4:1 or flatter. For all other projects, the Riprap Mow Strip shall be placed at 10:1 or flatter or as directed. Unless paid for under separate bid items, earthwork required to adjust the slope as shown or directed will be subsidiary to pertinent Items.

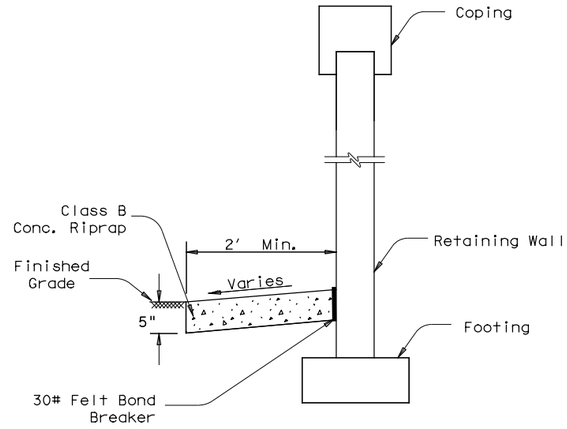

RETAINING WALL

GENERAL NOTES:

Provide vegetation control for Signs, Metal Beam Guard Fence and Retaining Walls as shown on the plans or as directed.

Payment for Riprap shall be in accordance with Item 432, "Riprap". Reinforce Riprap with WWF 6X6-W2.9XW2.9.

Ensure care is taken such that the finished grade of Riprap matches finished grade of adjacent topsoil.

Make Riprap depth 5" unless otherwise shown on the plans.

Ensure that the thickness of the Concrete Riprap is not applied to the sign Drilled Shaft foundation resulting in the shortening of the required Drilled Shaft length.

Unless otherwise shown, center the Metal Beam Guard Fence posts in the 1'-6"X1'-6" Blockout for Grout.

Texas Department of Transportation
Austin District Design

CONCRETE RIPRAP FOR VEGETATION CONTROL

Austin District Standard

© TxDOT 2003	DIST	FED REG	FEDERAL AID PROJECT •	SHEET
REVISIONS 3/03 District Update 9/04 2004 Update	AUS	6		67
	COUNTY		CONTROL SECT JOB	HIGHWAY
	WILLIAMSON		2103 01 034	

VC-04.dgn

DISCLAIMER:
The use of this standard is governed by the "Texas Engineering Practice Act". No warranty of any kind is made by TxDOT for any purpose whatsoever. TxDOT assumes no responsibility for the conversion of this standard to other formats or for incorrect results or damages resulting from its use.

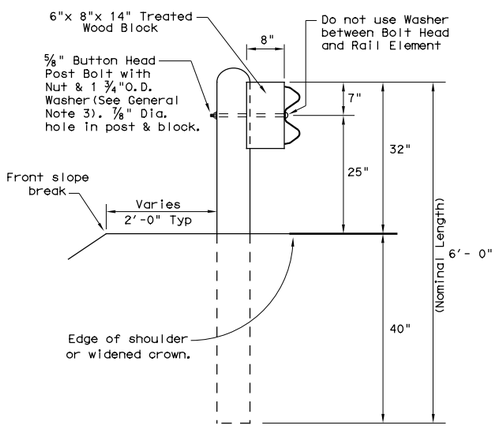

TYPICAL POST

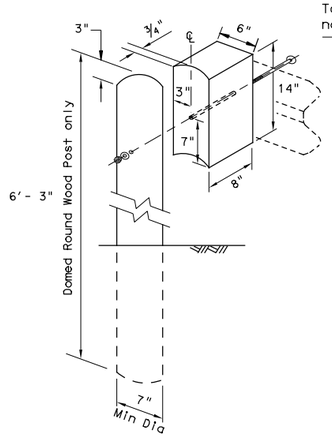

WOOD BLOCK TO ROUND WOOD POST

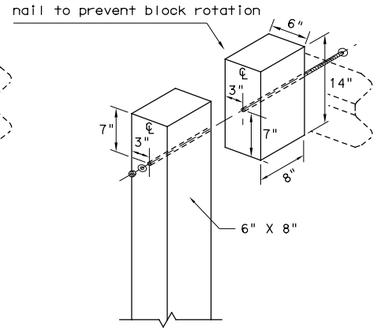

WOOD BLOCK TO RECTANGULAR WOOD POST

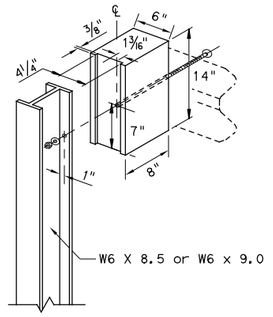

WOOD BLOCK TO STEEL POST

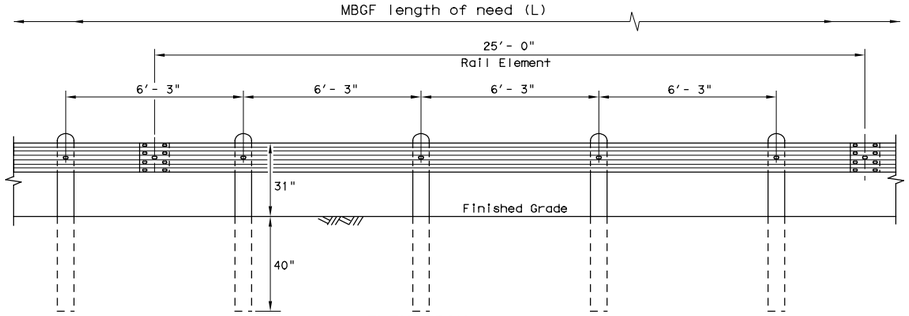

ELEVATION MID-SPAN RAIL SPLICE

Showing a 25'- 0" section of W-Beam rail, 12'- 6" rail sections may also be supplied (See General Note 2)

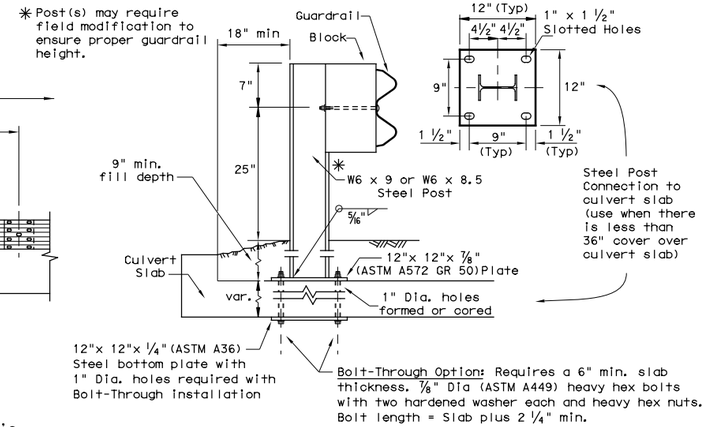

LOW FILL CULVERT POST

Culverts of 25 ft. or less, see GF(31)LS standard for "Long Span" option.

Epoxy Note:
Epoxy Anchor Option: This option may only be used if the culvert slab is 8" min. thick. Threaded anchor rods must be ⅞" Dia. ASTM A449 or A193 Grade B7 with heavy hex nut, and one hardened washer each. Embed anchor rods 6" with Hilti HIT RE 500 epoxy adhesive. Other Type III Class C epoxy adhesives meeting the requirements of DMS-6100, "Epoxies and Adhesives", may be used If it can be demonstrated that they meet or exceed the strength of Hilti HIT RE 500 with the same embedment depth and threaded rod dia. Follow the manufacturer's requirements for installing epoxied threaded rods. Extend rods ¼" min. beyond nut.

GENERAL NOTES

1. The type of post (round wood post, rectangular wood post, or steel post) will be as shown in the plans. The exact position of MBGF shall be shown in the plans or as directed by the Engineer. Steel posts to be galvanized in accordance with Item 445, "Galvanizing."
2. Rail element shall meet the requirements of Item 540,"Metal Beam Guard Fence" except as modified in the plans. The Contractor may furnish rail elements of 25'- 0", or 12'- 6" (nom.) lengths. Rail elements may have slotted holes at 3'-1½" C-C or 6'-3" C-C. A special length of rail may be manufactured to accommodate the downstream anchor terminal (DAT) and the transition sections of guardrail.
3. Button head "post" bolts (ASTM A307) shall be of sufficient length to extend through the full thickness of the nut (ASTM A563) and Type A (1 ¾" O.D.)washer and not more than 1" beyond it. Button head "splice" bolts (ASTM A307) are ⅝" x 1 ¼" (or 2" long at triple rail splices) with a ⅝" double recessed nut (ASTM A563). Thrie beam "connection" ⅞" dia. (ASTM A325) hex bolts shall be of sufficient length to extend through the full thickness of the rail, washers, and nuts.
4. Fittings (bolts, nuts, and washers) shall be galvanized in accordance with Item 445, "Galvanizing." Fittings shall be subsidiary to the bid item.
5. Crown shall be widened to accommodate the Metal Beam Guard Fence.
6. The lateral approach to the guard fence, shall have a maximum slope of 1V:10H.
7. If shown elsewhere in the plans or as directed by the Engineer, the guard fence may be flared at a rate of 25:1 or flatter.
8. Unless otherwise shown in the plans, guard fence placed in the vicinity of curbs shall be positioned so that the face of curb is located directly below or behind the face of the rail. Rail placed over curbs shall be installed so that the post bolt is located approximately 25 inches above the gutter pan or edge of shoulder.
9. If solid rock is encountered within 0 to 18" of the finished grade, drill a 22" dia. hole, or drill two 12" dia. front to back overlapping holes, 24" into the rock. If solid rock is encountered below 18",drill a 12" dia. hole, 12" into the rock or to the standard embedment depth, whichever maybe less. Any excess post length, after meeting these depths, may be field cut to ensure proper guardrail mounting height. Backfill with a cohesionless material.
10. Posts shall not be set in concrete, of any depth.
11. Special fabrication will be required at installations having a curvature of less than 150 ft. radius.
12. Unless otherwise shown in the plans, a composite material post and/or block that meets the requirements of DMS-7210,"Composite Material Posts and Blocks for Metal Beam Guard Fence" may be substituted for posts and/or blocks of similar dimensions. The Construction Division, TxDOT maintains a Material Producer List (MPL) for producers of materials conforming to DMS-7210. Only producers on the MPL may furnish composite material posts and/or blocks.
13. For posts located partially or wholly between precast box culvert units, the use of a cast-in-place concrete closure between boxes is required. See Detail "A" on Bridge Standard SCP-MD.

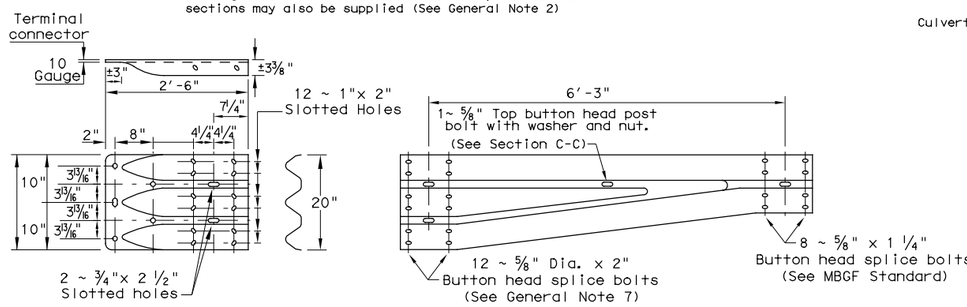

THRIE-BEAM TERMINAL CONNECTION

(SEE GENERAL NOTES 6 & 7 FOR REQUIRED HARDWARE)

NON-SYMMETRICAL TRANSITION TO W-BEAM (10 Gauge)

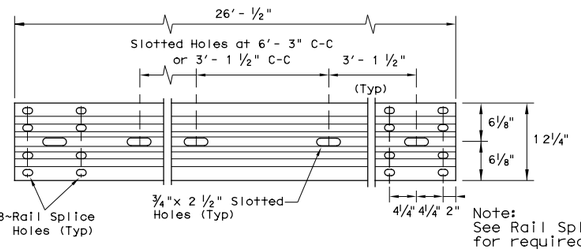

ELEVATION 25'- 0"(NOM.) W-BEAM SECTION

12'- 6" RAIL SECTIONS MAY ALSO BE SUPPLIED (SEE GENERAL NOTE 2)

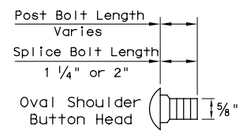

BUTTON HEAD BOLT

Post and Splice Bolts (See General Note 3)

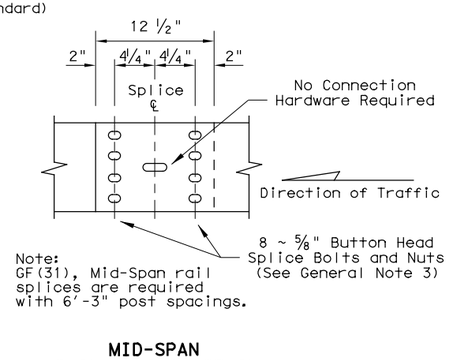

Note:
GF(31), Mid-Span rail splices are required with 6'-3" post spacings.

MID-SPAN RAIL SPLICE DETAIL

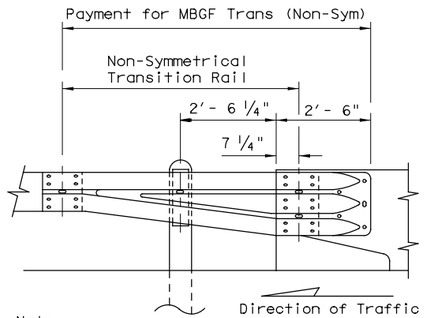

Note:
All rail elements shall be lapped in the direction of adjacent traffic.

DOWNSTREAM RAIL ATTACHMENT

Texas Department of Transportation

Design Division Standard

METAL BEAM GUARD FENCE

GF(31)-14

FILE: gf3114.dgn	DN: TxDOT	CK: AM	DW: VP	CK: CGL
©TxDOT: December 2011	CONT	SECT	JOB	HIGHWAY
REVISIONS	2103	01	034	
	DIST	COUNTY		SHEET NO.
	AUS	WILLIAMSON		68

DATE: 3/23/2018 10:37:03 AM
FILE: c:\pwworking\dal\d0911856\gf3114.dgn

DISCLAIMER:
The use of this standard is governed by the "Texas Engineering Practice Act". No warranty of any kind is made by TxDOT for any purpose whatsoever. TxDOT assumes no responsibility for the conversion of this standard to other formats or for incorrect results or damages resulting from its use.

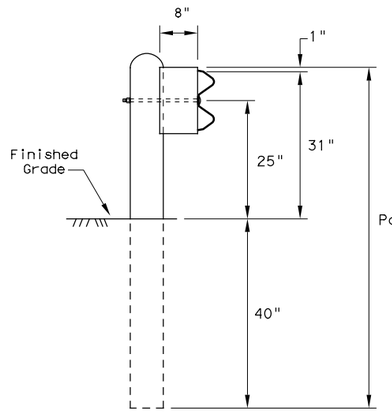

Standard Line Post Installation

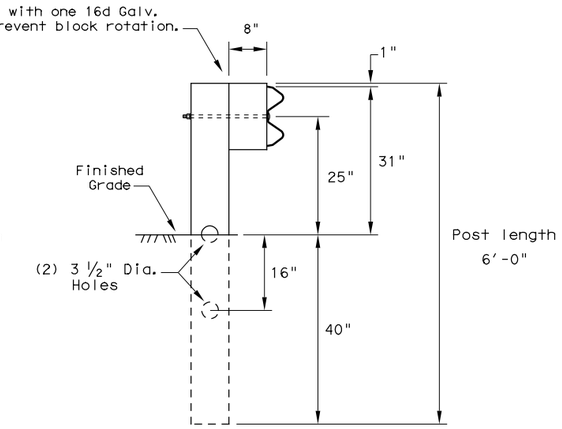

Rectangular CRT Post (6"x 8" x 6' Long)

(6) CRT required.
See Elevation Detail for locations.

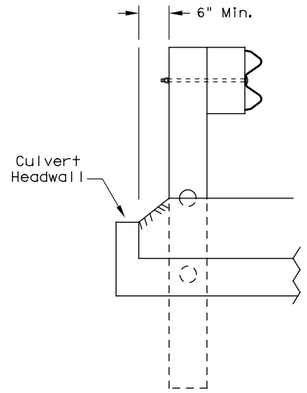

Lateral Offset Between the Guardrail and the Culvert Headwall

GENERAL NOTES

1. The type of line post (round wood post, rectangular wood post, or steel post) will be as shown in the plans. The exact position of the transitions shall be as shown in the plans or as directed by the Engineer. Steel posts to be galvanized in accordance with Item 445, "Galvanizing."
2. Rail element shall meet all requirements of Item 540, "Metal Beam Guard Fence" except as modified on the plans. The Contractor may furnish rail elements of 12 ½ or 25 foot nominal lengths.
3. Rail post holes are offset 3'- 1 ½" from standard guardrail to accommodate the midspan splicing.
4. Button head post bolts (ASTM A307) shall be of sufficient length to extend through the full thickness of the nut (ASTM A563) and no more than ¾" beyond it. Button head splice bolts (ASTM A307) are ⅝" x 1 ¼" with a ⅝" double recessed nut (ASTM A563). Galvanized fittings (bolts, nuts, and washers) shall be in accordance with Item, "Metal For Structures". Fittings shall be subsidiary to the bid item requiring construction of transition.
5. Where solid rock is encountered or where shown on the plans, the diameter of the holes shall be approximately 12 inches, the backfilling shall be with a cohesionless material, and embedment depth shall be 1' - 6" or more as directed by the Engineer.
6. Posts shall not be set in concrete, of any depth.
7. Refer to GF(31) Standard Sheet for additional details.

NOTE: Field drilled holes shall be repaired in accordance with Item 445, "Galvanizing". Flame cutting of holes in guardrail shall not be permitted.

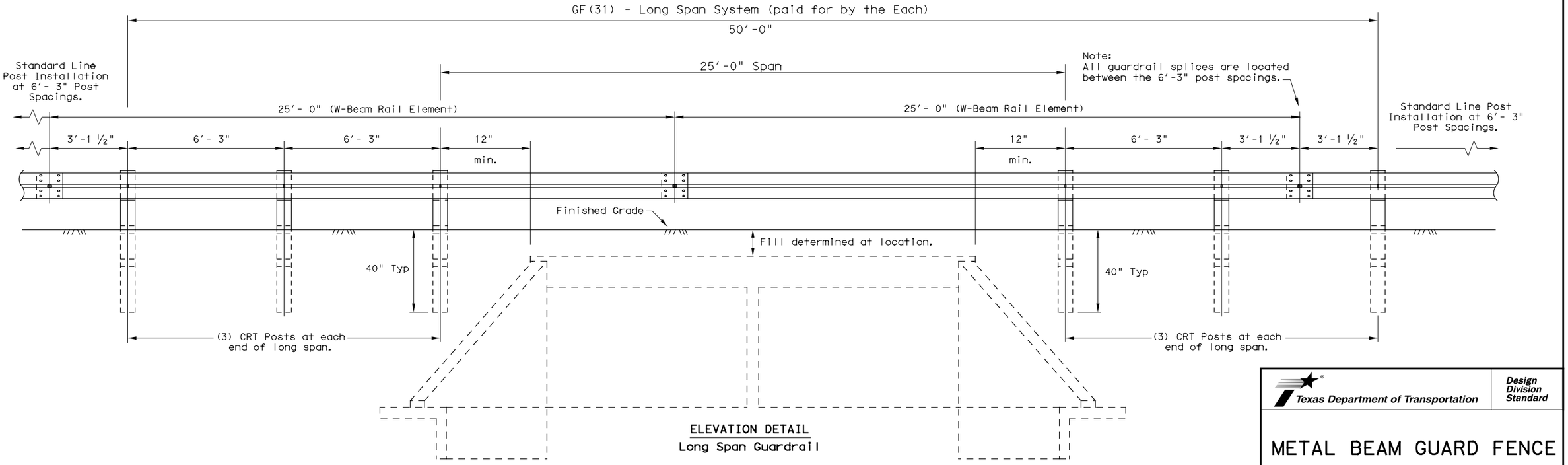

ELEVATION DETAIL
Long Span Guardrail

Texas Department of Transportation — Design Division Standard

METAL BEAM GUARD FENCE
(LONG SPAN)

GF(31)LS-17

FILE: gf31ls17.dgn		DN: TxDOT	CK: KM	DW: VP		CK: CGL	
© TxDOT: December 2011		CONT	SECT	JOB		HIGHWAY	
REVISIONS Revised 12, 2017 CL		2103	01	034			
		DIST	COUNTY			SHEET NO.	
		AUS	WILLIAMSON			69	

DATE: 3/23/2018
FILE: c:\pwworking\dal\d0911856\gf31ls17.dgn

DISCLAIMER:
The use of this standard is governed by the "Texas Engineering Practice Act". No warranty of any kind is made by TxDOT for any purpose whatsoever. TxDOT assumes no responsibility for the conversion of this standard to other formats or for incorrect results or damages resulting from its use.

DATE: 3/23/2018 10:37:06 AM
FILE: c:\pwworking\dal\d0911856\gf31tr14.dgn

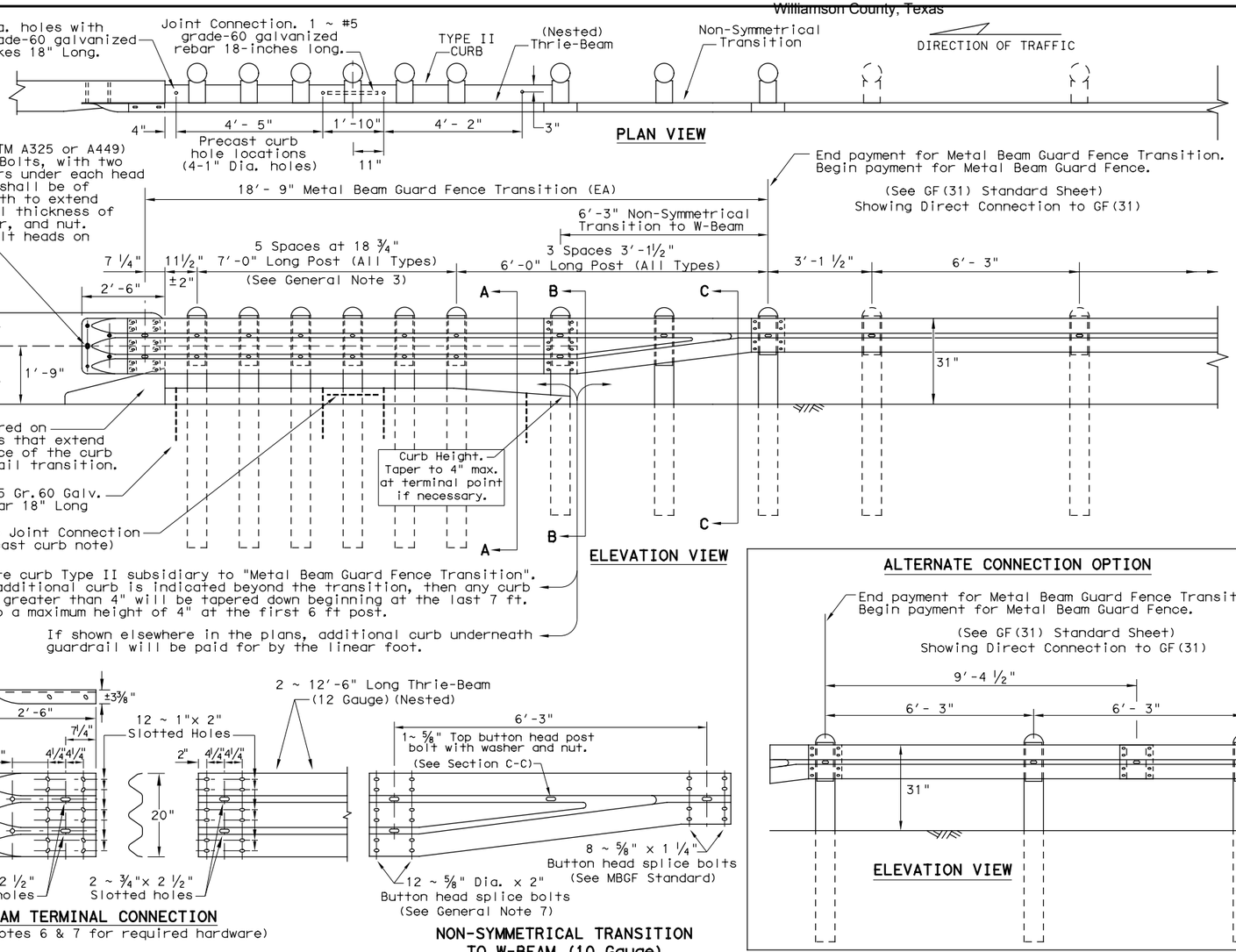

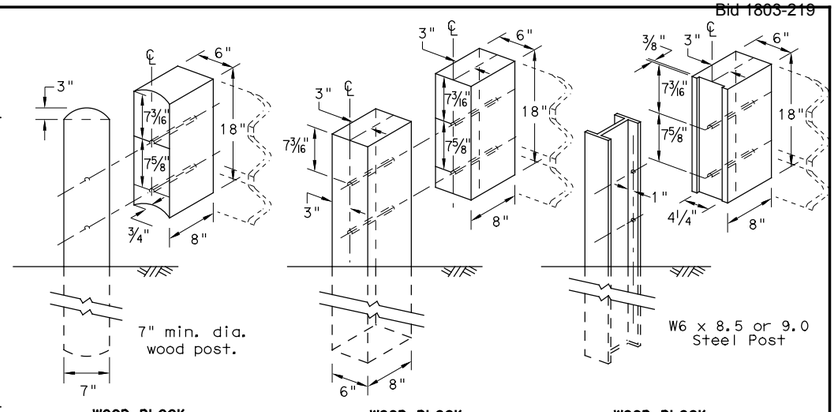

GENERAL NOTES

1. Concrete curb may be cast-in-place or precast as shown on this sheet. When used in conjunction with thrie-beam guard fence transitions, curb shall be Type II (Typically 5-3/4" height above surface; See CCCG standard sheet) unless otherwise shown in the plans. If other curb heights are shown in the plans in conjunction with the transition, the curb height may be from 4" to 8" with a relatively vertical face. Concrete curb shall be continuous to the seventh post.

   Contact the Design Division for drainage cut out options needed within the curb section of the transition.

2. The type of post (round wood post, rectangular wood post or steel post) will be as shown in the plans.

3. The post length shall be marked on all 7'- 0" long posts by the Manufacturer. The mark shall be located within the top 1 ft. region of the post, at least 5/8" in height, and visible after installation. Wooden posts shall be marked with a brand, and steel posts with a stencil before galvanizing.

4. Rail element shall meet the requirements of Item 540,"Metal Beam Guard Fence" except as modified on the plans. The thrie-beam terminal connector and the thrie-beam transition to w-beam shall be of the same material, but shall not be less than 10 gauge.

   Contractor shall verify that the locations of bolt holes match those in the thrie-beam terminal connector prior to ordering materials.

5. Unless otherwise shown in the plans, transitions shall be placed with the block face in front of or directly above the curb face.

6. Galvanized washers used with the 5/8" dia. post bolts shall be Type A 1-3/4" O.D. washers. The (12) plate washers (FWR03) required at the terminal connector splice.

7. Button head "post" bolts (ASTM A307) shall be of sufficient length to extend through the full thickness of the nut (ASTM A563) and washer and not more than 1" beyond it. Button head "splice" bolts (ASTM A307) 5/8" dia.x 2" (at triple rail splices) with 5/8" double recessed nuts.

8. Fittings (bolts, nuts, and washers) shall be galvanized in accordance with Item 445,"Galvanizing". Fittings shall be subsidiary to the bid item.

9. Crown shall be widened to accommodate transitions.

10. If solid rock is encountered. See the MBGF standard sheet for the proper installation guidance.

11. Posts shall not be set in concrete.

12. Unless otherwise shown in the plans, a composite material (post or block) that meets the requirements of DMS-7210, "Composite Material Posts and Blocks for Metal Beam Guard Fence" may be substituted for (post or block) of similar dimensions. TxDOT's Construction Division maintains a Material Producer List (MPL) for producers of materials conforming to DMS-7210. Only producers on the MPL can furnish composite material posts and/or blocks.

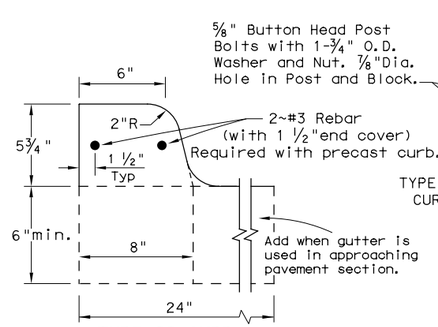

PRECAST CURB:
Type II Precast Curb secured with 4~#5 Gr.60 Galv. Rebar stakes 18" long. The 12'- 2" section of curb may be cast in two sections.
Section ① 5'- 8" long
Section ② 6'- 6" long with the last 3'- 6" of curb tapered to a 4" height.
The Joint Connection is two 9" long 1" Dia. female ends connected with 1~#5 Gr.60 Galv.Rebar 18" long.

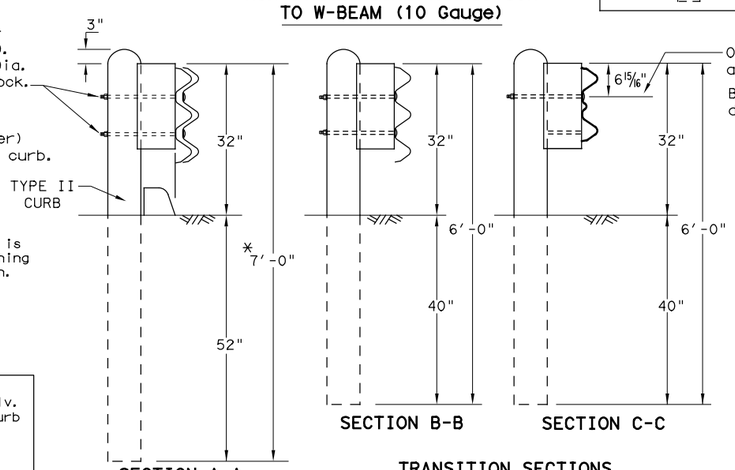

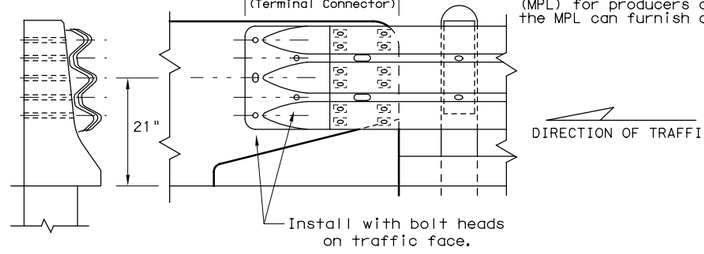

(12) Galvanized rectangular washers (FWR03) are required under the recessed nut at the terminal connector splice to nested thrie-beam. (See General Notes 6 & 7).

DIRECTION OF TRAFFIC

Texas Department of Transportation — Design Division Standard

METAL BEAM GUARD FENCE TRANSITION
(Thrie-Beam Transition)
GF(31)TR-14

FILE: gf31tr14.dgn	DN: TxDOT	CK: AM	DW: VP	CK: CGL
©TxDOT: December 2011	CONT	SECT	JOB	HIGHWAY
REVISIONS	2103	01	034	
	DIST	COUNTY		SHEET NO.
	AUS	WILLIAMSON		70

DISCLAIMER:
The use of this standard is governed by the "Texas Engineering Practice Act". No warranty of any kind is made by TxDOT for any purpose whatsoever. TxDOT assumes no responsibility for the conversion of this standard to other formats or for incorrect results or damages resulting from its use.

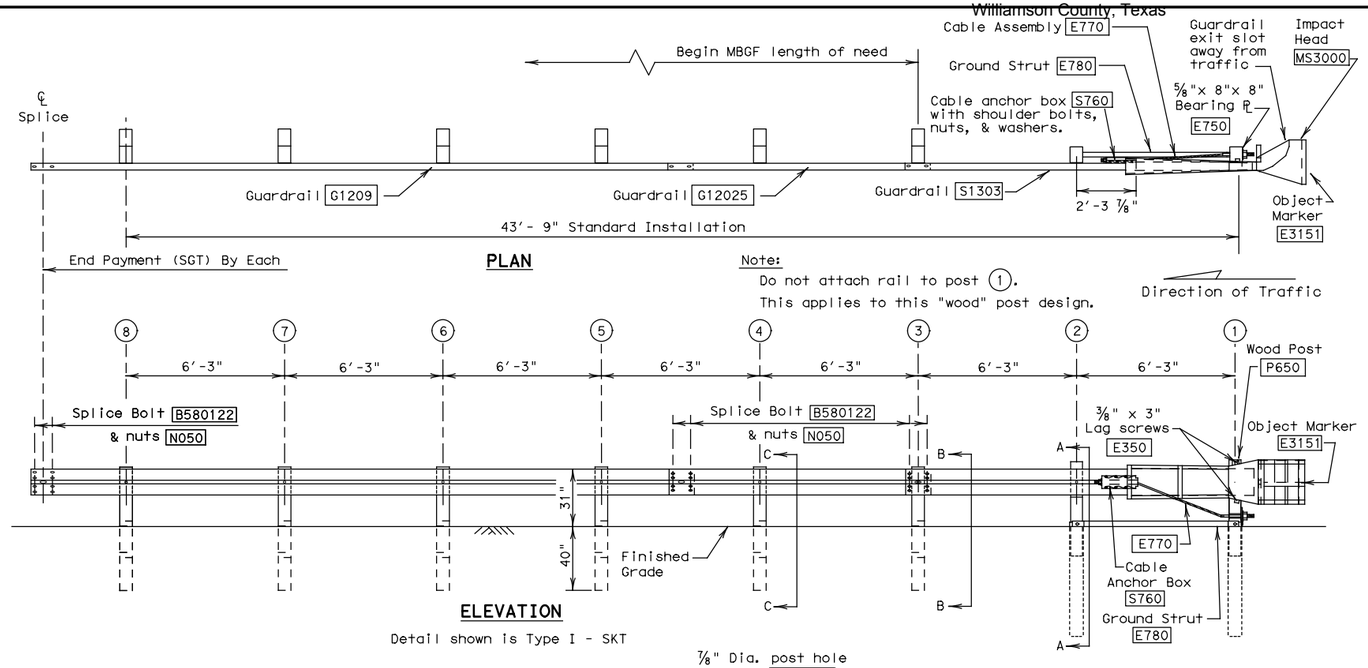

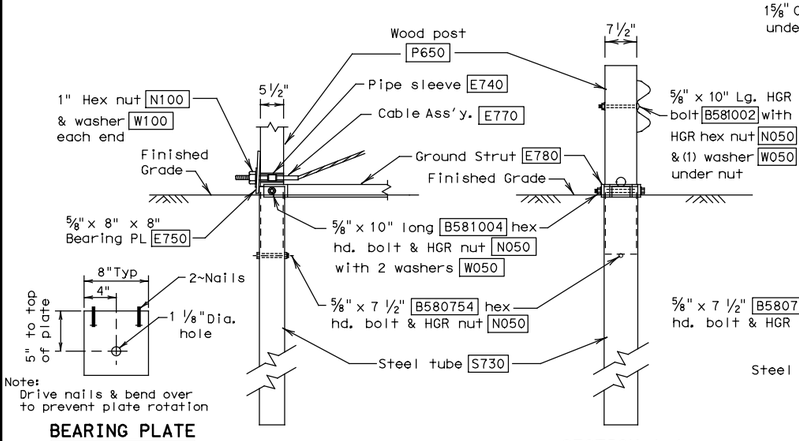

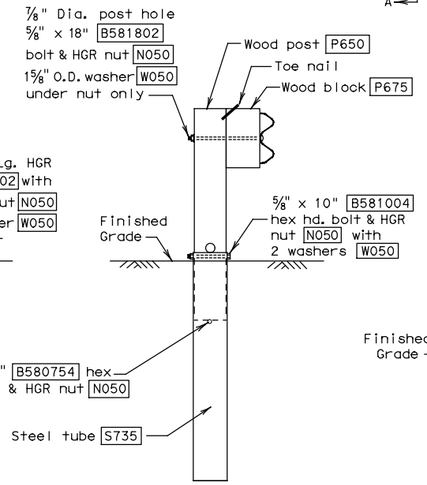

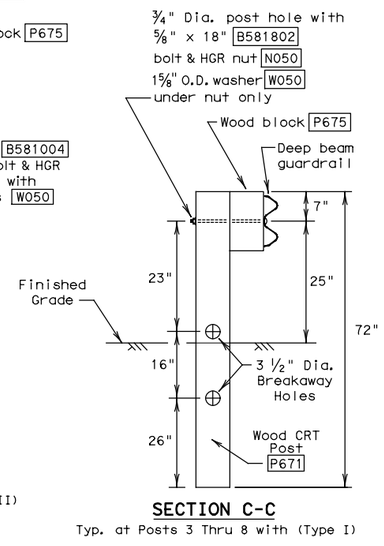

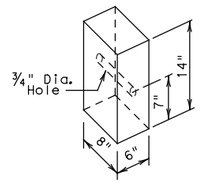

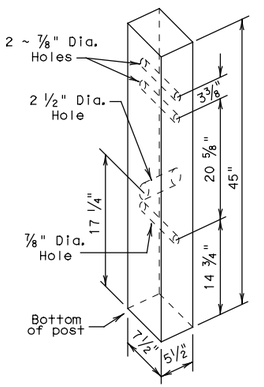

GENERAL NOTES

1. For additional information contact: Interstate Steel Inc. (432) 263-3725
2. The Type of SGT unit will be specified elsewhere in the plans. The numbers in the circles indicate post position. The Type of SGT unit chosen is a maintenance consideration and does not affect the systems performance.

	Post & Tube Options	Post Only
Type I	Posts (1) thru (2)	Posts (3) thru (8)
Type II	Posts (1) thru (4)	Posts (5) thru (8)
Type III	Posts (1) thru (8)	None

3. SGT's placed within the "minimum" 150 ft. radius, shall be installed straight. Standard rail elements may be installed within the radius, without special fabrication.
4. All bolts, nuts cable assemblies, cable anchors, steel tubes & bearing plates shall be galvanized.
5. A flare rate of 25:1 may be used over the first 50 ft. of the system to prevent the terminal head from encroaching the shoulder. The flare may be decreased or eliminated for specific installations, if directed by the Engineer.
6. The steel tubes shall not protrude more than 4 inches above ground. Site grading may be necessary to meet this requirement.
7. The steel tubes may be driven with an approved driving head. They shall not be driven with the wood post in the tube. If the steel tubes are placed in drilled holes, the backfill material must be satisfactorily compacted to prevent tube settlement.
8. If solid rock is encountered. See the Manufacturer's installation manual for the proper installation guidance.
9. The breakaway cable assembly must be taut. A locking device, (vice grips or channel lock pliers) should be used to prevent the cable from twisting when tightening the nuts.
10. The wood blocks shall be "toe nailed" to the rectangular wood posts to prevent them from turning when the wood shrinks. The bearing plate on the front post shall also be "toe nailed" to prevent rotation.
11. For curb installations, the soil tubes and posts shall be installed at the proper ground elevation behind the curb. The posts will then require field drilling new holes to accommodate the rail to post connection bolt to maintain the proper height of the rail above the gutter pan. The excess post length above the rail will be removed if directed by the Engineer.
12. An object marker shall be installed on the front of the impact head as detailed on D&OM(VIA).

BILL OF MATERIAL

Item #	POST & TUBE OPTIONS Type I	Type II	Type III	DESCRIPTION
S1303	1	1	1	Guardrail (12 Ga.) 12'- 6" SKT
G12025	1	1	1	Guardrail (12 Ga.) 9'- 4 1/2"
G1209	1	1	1	Guardrail (12 Ga.) 25'- 0"
S730	2	2	2	Steel Tube - 6" x 8" x 72" x 1/8" min. or 3/16"
S735	0	2	6	Steel Tube - 6" x 8" x 54" x 1/8" min. or 3/16"
P650	2	4	8	Wood Posts - 5 1/2" x 7 1/2" x 45"
P671	6	4	0	Wood CRT Posts - 6" x 8" x 72"
P675	6	6	6	Wood Block - 6" x 8" x 14"
E740	1	1	1	Pipe Sleeve - 2" Std. Pipe x 5 1/2"
E750	1	1	1	Bearing Plate - 5/8" x 8" x 8"
S760	1	1	1	Cable Anchor Box
E770	1	1	1	Cable Assembly
E780	1	1	1	Ground Strut
MS3000	1	1	1	Impact Head
				HARDWARE
B580754	2	4	8	5/8" x 7 1/2" Hex Hd. Bolt
B581004	2	4	8	5/8" x 10" Hex Hd. Bolt (Top of Tubes)
W050	11	15	23	5/8" Washers
B581002	1	1	1	5/8" x 10" HGR Post Bolt (Post 2)
B580122	16	16	16	5/8" x 1 1/4" HGR Splice Bolt
B581802	6	6	6	5/8" x 18" HGR Post Bolt (Posts (3) thru (8))
N050	35	39	47	5/8" HGR Nut (24-Spi, Varies-Posts, 2-Strut)
E350	2	2	2	3/8" x 3" Lag Screw
N100	2	2	2	1" Hex Nut (Anchor Cable)
W100	2	2	2	1" Washer (Anchor Cable)
SB12A	8	8	8	Cable Anchor Box Shoulder Bolts
N012A	8	8	8	1/2" Structural Nut
W012A	8	8	8	1/2" Structural Washer
E3151	1	1	1	Object Marker - (18" x 18")

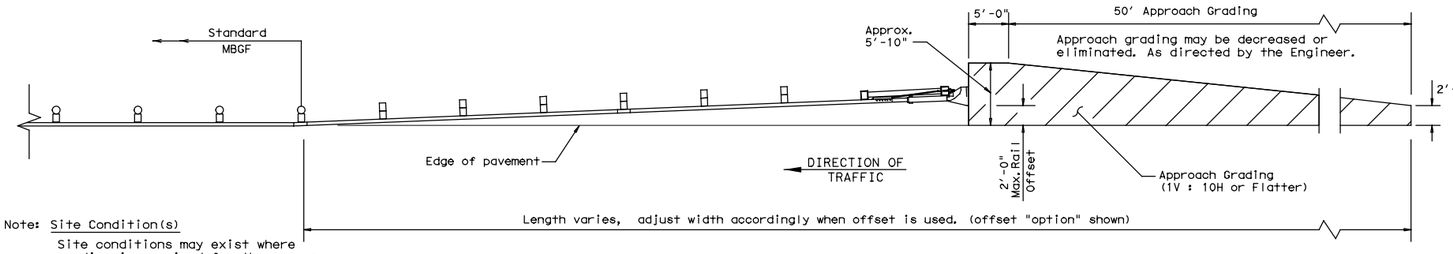

APPROACH GRADING AT GUARDRAIL END TREATMENTS

POST & TUBE OPTIONS
Type I post (1) thru (2)
Type II post (1) thru (4)
Type III post (1) thru (8)

Texas Department of Transportation — Design Division Standard

SINGLE GUARDRAIL TERMINAL (SKT-31) (WOOD POST)

SGT(8)31-17

FILE: sgt83117.dgn	DN: TxDOT	CK: KM	DW: TxDOT	CK:
©TxDOT December 2011	CONT	SECT	JOB	HIGHWAY
REVISIONS	2103	01	034	
	DIST	COUNTY		SHEET NO.
	AUS	WILLIAMSON		371

DATE: 3/23/2018
FILE: c:\pwworking\dal\d0911856\sgt83117.dgn

DISCLAIMER:
The use of this standard is governed by the "Texas Engineering Practice Act". No warranty of any kind is made by TxDOT for any purpose whatsoever. TxDOT assumes no responsibility for the conversion of this standard to other formats or for incorrect results or damages resulting from its use.

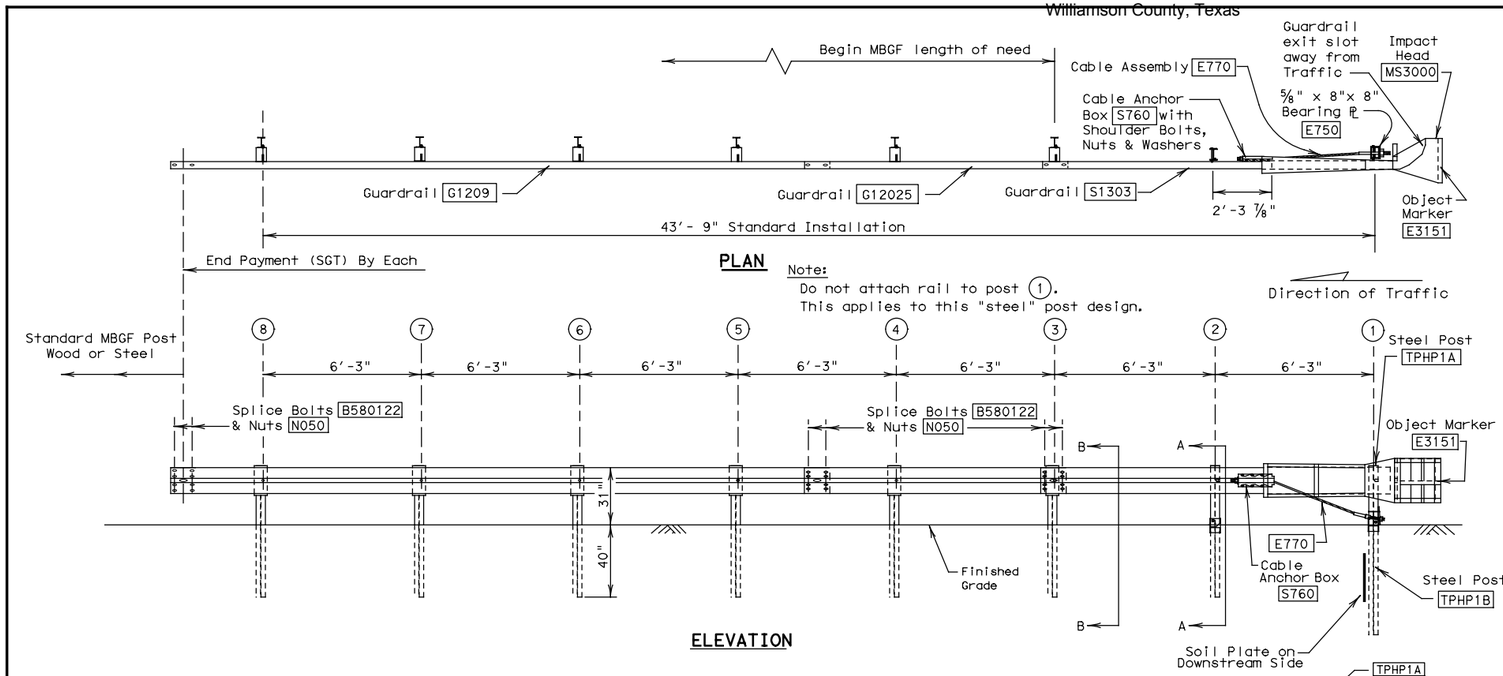

PLAN

Note:
Do not attach rail to post (1).
This applies to this "steel" post design.

ELEVATION

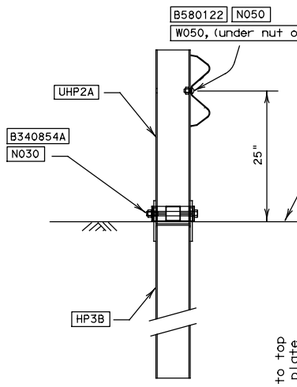

SECTION A-A
at post (2)

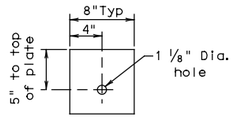

BEARING PLATE
E750

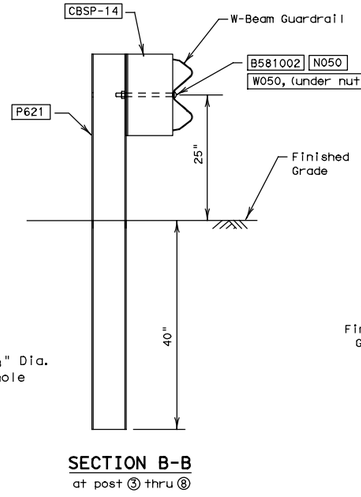

SECTION B-B
at post (3) thru (8)

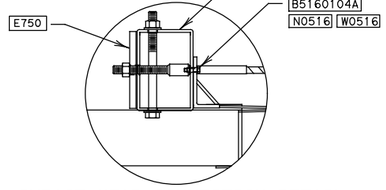

IMPACT HEAD CONNECTION DETAIL

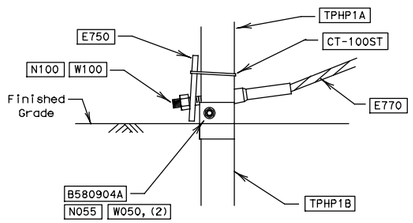

SIDE VIEW

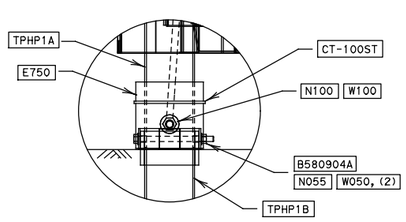

FRONT VIEW

POST #1 CONNECTION DETAILS

GENERAL NOTES

1. For additional information contact: Interstate Steel Inc., (432) 263-3725.
2. All bolts, nuts cable assemblies, cable anchors, steel posts & bearing plates shall be galvanized.
3. SGT's placed within the "minimum" 150 ft. radius, shall be installed straight. Standard rail elements may be installed within the radius without special fabrication.
4. A flare rate of 25:1 may be used to prevent the terminal head from encroaching on the shoulder. The flare may be decreased or eliminated for specific installations, if directed by the Engineer.
5. The lower sections of the post shall not protrude more than 4 inches above finished ground. Site grading may be necessary to meet this requirement.
6. The lower section of the steel posts should not be driven with the upper post attached. If the post is placed in a drilled hole, the backfill material must be satisfactorily compacted to prevent settlement.
7. If solid rock is encountered. See manufacturer's installation manual for the proper installation guidance.
8. The breakaway cable assembly must be taut. A locking device, (vice grips or channel lock pliers) should be used to prevent the cable from twisting when tightening the nuts.
9. Hinge bolts shall not be set below finished grade. At curb locations the posts shall be installed at the proper grade elevation behind the curb. The posts will then require field drilling new holes to accommodate the rail to post connection bolt to maintain the proper height of the rail above the gutter pan. The excess post length above the rail will be removed as directed by the Engineer.
10. An object marker shall be installed on the front of the impact head as detailed on D&OM(VIA).

ITEM NO.	QTY	BILL OF MATERIALS
S1303	1	GUARDRAIL (12 GA) 12'- 6" SKT Panel
G12025	1	GUARDRAIL (12 GA) 9' - 4 1/2"
G1209	1	GUARDRAIL (12 GA) 25'- 0"
TPHP1A	1	FIRST POST ASSEMBLY TOP, TUBE
TPHP1B	1	FIRST POST ASSEMBLY BOTTOM, 6'- 0"
UHP2A	1	SECOND POST ASSEMBLY TOP
HP3B	1	SECOND POST ASSEMBLY BOTTOM, 3'- 5 7/8"
P621	6	STANDARD STEEL LINE POST 6'- 0" (POST 3 THRU 8)
E750	1	BEARING PLATE
S760	1	CABLE ANCHOR BOX
E770	1	BCT CABLE ANCHOR ASSEMBLY
CT-100ST	1	CABLE TIE - STEEL
CBSP-14	6	ROUTED BLOCK
MS3000	1	IMPACT HEAD
HARDWARE		
B580122	25	5/8" Dia. x 1 1/4" SPLICE BOLT
B580904A	1	5/8" Dia. x 9" HEX BOLT GR. 5
B340854A	1	3/4" Dia. x 8 1/2" HEX BOLT GR. 5
B581002	6	5/8" Dia. x 10" H.G.R. BOLT (Post 3 thru 8)
N055	1	5/8" Dia. HEX NUT (Post 1 only)
N050	31	5/8" Dia. H.G.R. NUT (at splices & at Post 2 thru 8)
W050	9	H.G.R. WASHER (At Post 1(2) & 2 thru 8)
N100	2	1" ANCHOR CABLE HEX NUT
W100	2	1" ANCHOR CABLE WASHER
B5160104A	2	5/16" x 1" HEX BOLT, GR. 5
N0516	2	5/16" HEX NUT
W0516	4	5/16" WASHER
SB12A	8	CABLE ANCHOR BOX SHOULDER BOLT
N030	1	3/4" HEX NUT
N012A	8	1/2" STR. NUT
W012A	8	1/2" STR. WASHER
E3151	1	OBJECT MARKER (18" x 18")

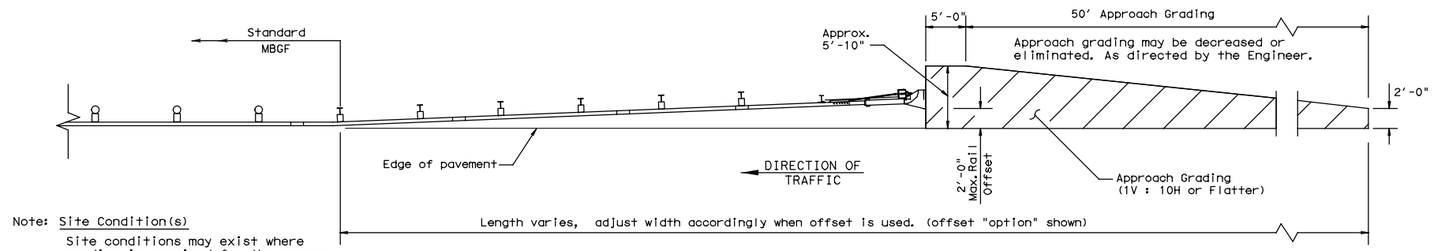

Note: Site Condition(s)
Site conditions may exist where grading is required for the proper installation of metal guard fence and end treatments.

APPROACH GRADING AT GUARDRAIL END TREATMENTS

Texas Department of Transportation — Design Division Standard

SINGLE GUARDRAIL TERMINAL (SKT-31) (STEEL POST) SGT(8S)31-17

FILE: sgt8s3117.dgn	DN: TxDOT	CK: KM	DW: TxDOT	CK:
©TxDOT December 2011	CONT	SECT	JOB	HIGHWAY
REVISIONS	2103	01	034	
	DIST	COUNTY		SHEET NO.
	AUS	WILLIAMSON		73

DATE: 3/23/2018
FILE: c:\pwworking\dal\d0911856\sgt8s3117.dgn

4/12/2018 7:20 AM

DISCLAIMER:
The use of this standard is governed by the "Texas Engineering Practice Act". No warranty of any kind is made by TxDOT for any purpose whatsoever. TxDOT assumes no responsibility for the conversion of this standard to other formats or for incorrect results or damages resulting from its use.

DATE: 3/23/2018
FILE: c:\pwworking\dal\d0911856\ped18.dgn

TYPE 1

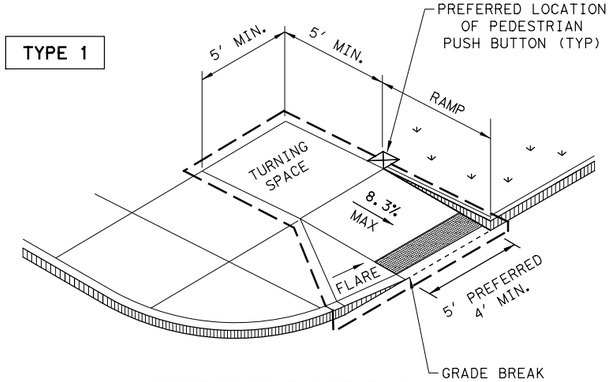

PERPENDICULAR CURB RAMP

TYPE 2

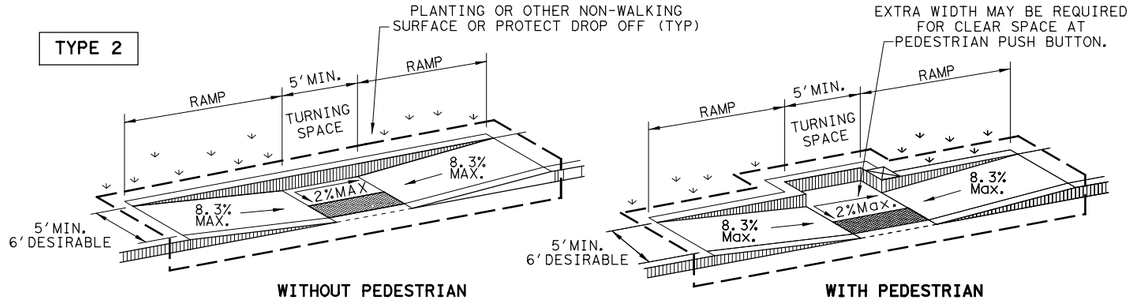

WITHOUT PEDESTRIAN PUSH BUTTON

WITH PEDESTRIAN PUSH BUTTON

PARALLEL CURB RAMP

TYPE 3

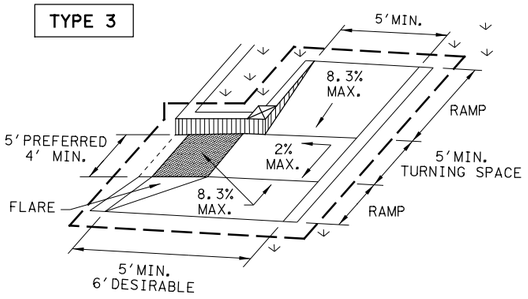

TYPE 6

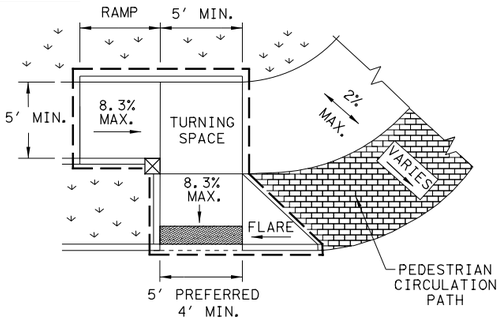

COMBINATION CURB RAMPS

TYPE 20

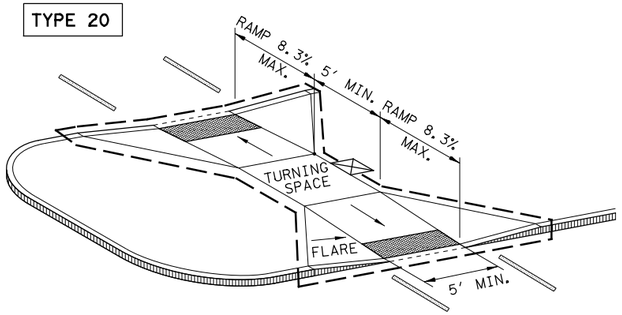

CURB RAMPS AT MEDIAN ISLANDS

TYPE 7

(SIDEWALK SET BACK FROM CURB)

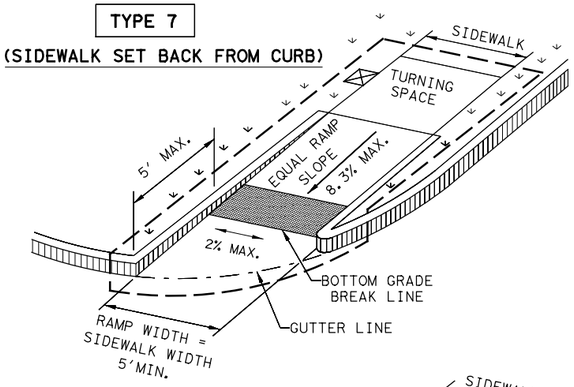

CROSS SLOPE NOT TO EXCEED 2% ON ANY PORTION OF RAMP, TURNING SPACE OR TRANSITION TO STREET.

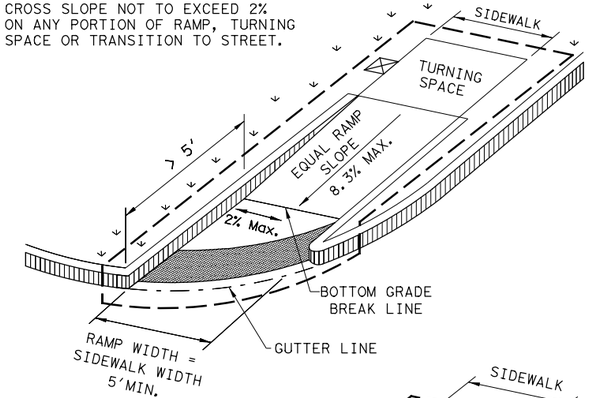

TYPE 10

(SIDEWALK ADJACENT TO CURB)

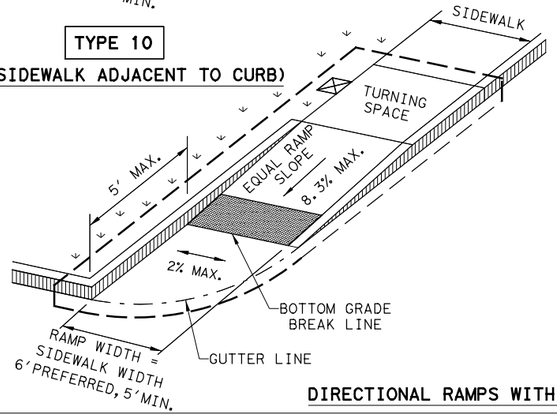

CROSS SLOPE NOT TO EXCEED 2% ON ANY PORTION OF RAMP, TURNING SPACE OR TRANSITION TO STREET.

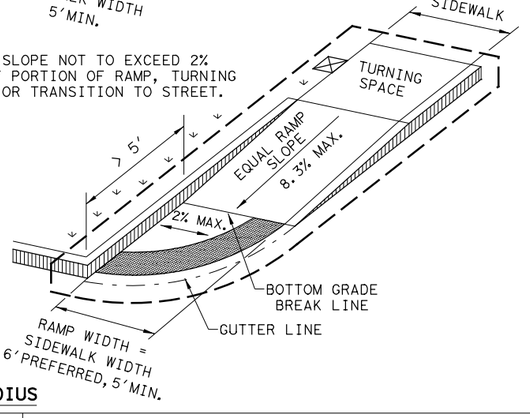

DIRECTIONAL RAMPS WITHIN RADIUS

TYPE 5

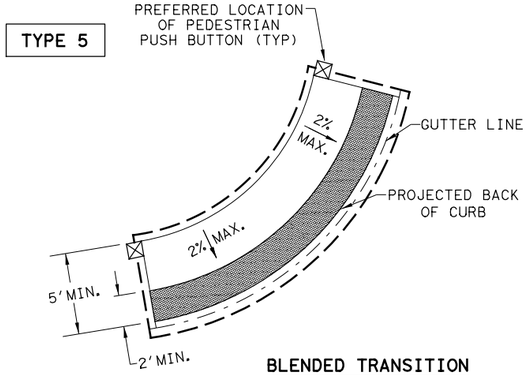

BLENDED TRANSITION
(FLUSH LANDING)

TYPE 21

INSTALL DETECTABLE WARNING SURFACE AT EACH END OF THE CUT-THROUGH RAMP WITH A MINIMUM 2' USUAL SIDEWALK SURFACE BETWEEN. IF MEDIAN IS LESS THAN 6' WIDE, ELIMINATE DETECTABLE WARNING SURFACES.

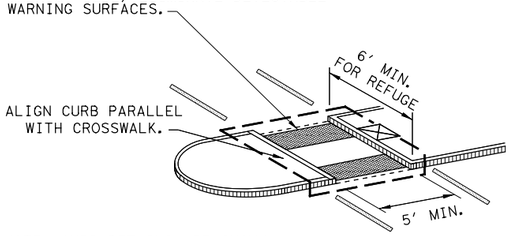

NOTE: CURB DETAILS ARE SHOWN ELSEWHERE IN THE PLANS.

TYPE 22

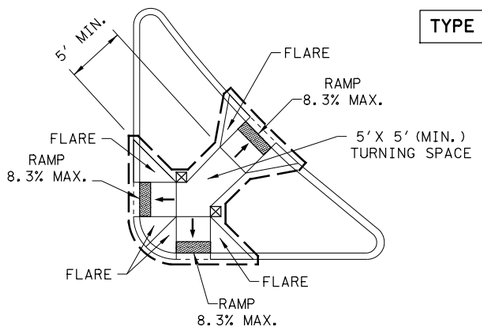

COMBINATION ISLAND RAMPS

BOTTOM GRADE BREAK OF CURB RAMP WILL NORMALLY BE AT GUTTER LINE. SURFACE SLOPES AT GRADE BREAKS SHALL BE FLUSH.

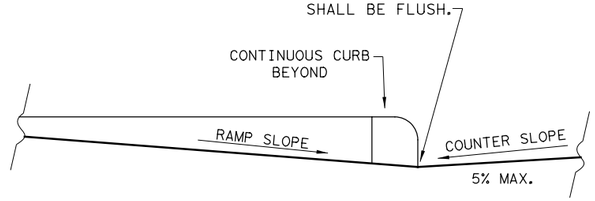

TYPICAL SECTION OF PERPENDICULAR CURB RAMP AT CONNECTION TO ROADWAY

NOTES / LEGEND:

SEE GENERAL NOTES ON SHEET 2 OF 4 FOR MORE INFORMATION.

DENOTES PLANTING OR NON-WALKING SURFACE NOT PART OF PEDESTRIAN CIRCULATION PATH.

DETECTABLE WARNING SURFACE

DENOTES PREFERRED LOCATION OF PEDESTRIAN PUSH BUTTON IF APPLICABLE.

GUTTER LINE

GRADE BREAK

RAMP LIMITS OF PAYMENT

SHEET 1 OF 4

Texas Department of Transportation

Design Division Standard

PEDESTRIAN FACILITIES CURB RAMPS

PED-18

FILE: ped18	DN: TxDOT	DW: VP	CK: KM	CK: PK & JG
© TxDOT: MARCH, 2002	CONT	SECT	JOB	HIGHWAY
REVISIONS	2103	01	034	
REVISED 08, 2005	DIST	COUNTY		SHEET NO.
REVISED 06, 2012	AUS	WILLIAMSON		77
REVISED 01, 2018				

DISCLAIMER:
The use of this standard is governed by the "Texas Engineering Practice Act". No warranty of any kind is made by TxDOT for any purpose whatsoever. TxDOT assumes no responsibility for the conversion of this standard to other formats or for incorrect results or damages resulting from its use.

GENERAL NOTES

CURB RAMPS

1. Install a curb ramp or blended transition at each pedestrian street crossing.
2. All slopes shown are maximum allowable. Cross slopes of 1.5% and lesser running should be used. Adjust curb ramp length or grade of approach sidewalks as directed.
3. Maximum allowable cross slope on sidewalk and curb ramp surfaces is 2%.
4. The minimum sidewalk width is 5′. Where the sidewalk is adjacent to the back of curb, a 6′ sidewalk width is desirable. Where a 5′ sidewalk cannot be provided due to site constraints, sidewalk width may be reduced to 4′ for short distances. 5′x 5′ passing areas at intervals not to exceed 200′ are required.
5. Turning Spaces shall be 5′x 5′ minimum. Cross slope shall be maximum 2%.
6. Clear space at the bottom of curb ramps shall be a minimum of 4′x 4′ wholly contained within the crosswalk and wholly outside the parallel vehicular travel path.
7. Provide flared sides where the pedestrian circulation path crosses the curb ramp. Flared sides shall be sloped at 10% maximum, measured parallel to the curb. Returned curbs may be used only where pedestrians would not normally walk across the ramp, either because the adjacent surface is planted, substantially obstructed, or otherwise protected.
8. Additional information on curb ramp location, design, light reflective value and texture may be found in the latest draft of the Proposed Guidelines for Pedestrian Facilities in the Public Right of Way (PROWAG) as published by the U.S. Architectural and Transportation Barriers Compliance Board (Access Board).
9. To serve as a pedestrian refuge area, the median should be a minimum of 6′ wide, measured from back of curbs. Medians should be designed to provide accessible passage over or through them.
10. Small channelization islands, which do not provide a minimum 5′x 5′ landing at the top of curb ramps, shall be cut through level with the surface of the street.
11. Crosswalk dimensions, crosswalk markings and stop bar locations shall be as shown elsewhere in the plans. At intersections where crosswalk markings are not required, curb ramps shall align with theoretical crosswalks unless otherwise directed.
12. Provide curb ramps to connect the pedestrian access route at each pedestrian street crossing. Handrails are not required on curb ramps.
13. Curb ramps and landings shall be constructed and paid for in accordance with Item 531 "Sidewalks".
14. Place concrete at a minimum depth of 5" for ramps, flares and landings, unless otherwise directed.
15. Furnish and install No. 3 reinforcing steel bars at 18" o.c. both ways, unless otherwise directed.
16. Provide a smooth transition where the curb ramps connect to the street.
17. Curbs shown on sheet 1 within the limits of payment are considered part of the curb ramp for payment, whether it is concrete curb, gutter, or combined curb and gutter.
18. Existing features that comply with applicaible standards may remain in place unless otherwise shown on the plans.

DETECTABLE WARNING MATERIAL

19. Curb ramps must contain a detectable warning surface that consists of raised truncated domes complying with PROWAG. The surface must contrast visually with adjoining surfaces, including side flares. Furnish and install an approved cast-in-place dark brown or dark red detectable warning surface material adjacent to uncolored concrete, unless specified elsewhere in the plans.
20. Detectable Warning Materials must meet TxDOT Departmental Materials Specification DMS 4350 and be listed on the Material Producer List. Install products in accordance with manufacturer's specifications.
21. Detectable warning surfaces must be firm, stable and slip resistant.
22. Detectable warning surfaces shall be a minimum of 24 inches in depth in the direction of pedestrian travel, and extend the full width of the curb ramp or landing where the pedestrian access route enters the street.
23. Detectable warning surfaces shall be located so that the edge nearest the curb line is at the back of curb and neither end of that edge is greater than 5 feet from the back of curb. Detectable warning surfaces may be curved along the corner radius.
24. Shaded areas on Sheet 1 of 4 indicate the approximate location for the detectable warning surface for each curb ramp type.

DETECTABLE WARNING PAVERS (IF USED)

25. Furnish detectable warning paver units meeting all requirements of ASTM C-936, C-33. Lay in a two by two unit basket weave pattern or as directed.
26. Lay full-size units first followed by closure units consisting of at least 25 percent (25%) of a full unit. Cut detectable warning paver units using a power saw.

SIDEWALKS

27. Provide clear ground space at operable parts, including pedestrian push buttons. Operable parts shall be placed within unobstructed reach range specified in PROWAG section R406.
28. Place traffic signal or illumination poles, ground boxes, controller boxes, signs, drainage facilities and other items so as not to obstruct the pedestrian access route or clear ground space.
29. Street grades and cross slopes shall be as shown elsewhere in the plans.
30. Changes in level greater than 1/4 inch are not permitted.
31. The least possible grade should be used to maximize accessibility. The running slope of sidewalks and crosswalks within the public right of way may follow the grade of the parallel roadway. Where a continuous grade greater than five percent (5%) must be provided, handrails may be desirable to improve accessibility. Handrails may also be needed to protect pedestrians from potentially hazardous conditions. If provided, handrails shall comply with PROWAG R409.
32. Handrail extensions shall not protrude into the usable landing area or into intersecting pedestrian routes.
33. Driveways and turnouts shall be constructed and paid for in accordance with Item "Intersections, Driveways and Turnouts". Sidewalks shall be constructed and paid for in accordance with Item, "Sidewalks".
34. Sidewalk details are shown elsewhere in the plans.

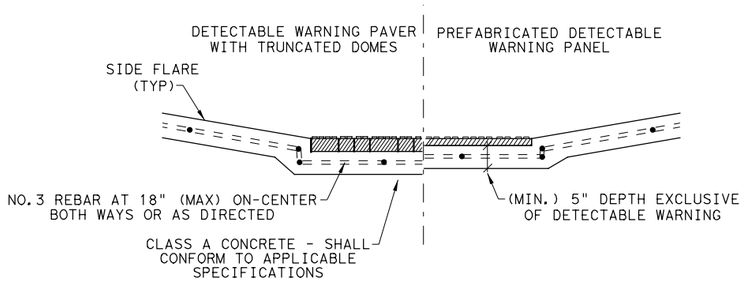

SECTION VIEW DETAIL
CURB RAMP AT DETECTIBLE WARNINGS

DETECTABLE WARNING SURFACE DETAILS

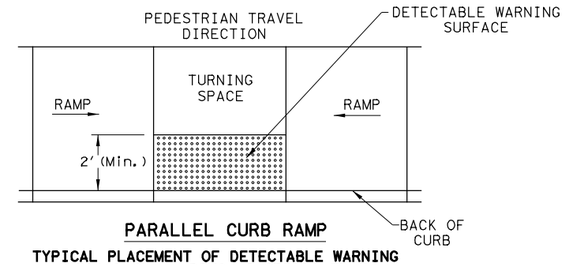

PARALLEL CURB RAMP
TYPICAL PLACEMENT OF DETECTABLE WARNING SURFACE ON LANDING AT STREET EDGE.

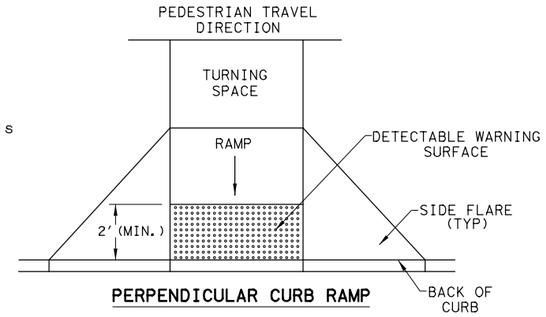

PERPENDICULAR CURB RAMP
TYPICAL PLACEMENT OF DETECTABLE WARNING SURFACE ON SLOPING RAMP RUN.

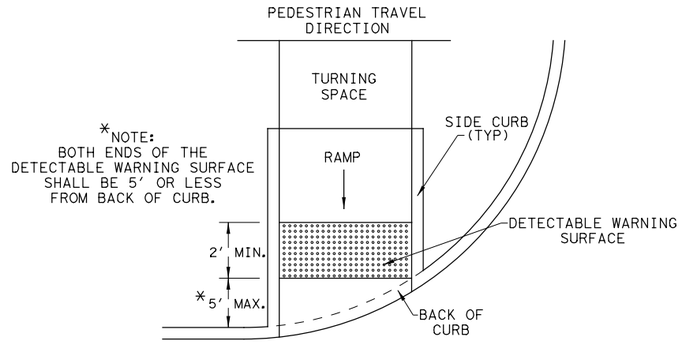

DIRECTIONAL CURB RAMP
TYPICAL PLACEMENT OF DETECTABLE WARNING SURFACE ON SLOPING RAMP RUN.

SHEET 2 OF 4

Texas Department of Transportation | Design Division Standard

PEDESTRIAN FACILITIES CURB RAMPS

PED-18

FILE: ped18	DN: TxDOT	DW: VP	CK: KM	CK: PK & JG	
© TxDOT: MARCH, 2002	CONT	SECT	JOB	HIGHWAY	
REVISIONS REVISED 08,2005 REVISED 06,2012 REVISED 01,2018	2103	01	034		
	DIST	COUNTY		SHEET NO.	
	AUS	WILLIAMSON		74	

DATE: 3/23/2018
FILE: c:\pwworking\dal\d0911856\ped18.dgn

4/12/2018 7:20 AM

DISCLAIMER:
The use of this standard is governed by the "Texas Engineering Practice Act". No warranty of any kind is made by TxDOT for any purpose whatsoever. TxDOT assumes no responsibility for the conversion of this standard to other formats or for incorrect results or damages resulting from its use.

DATE: 3/23/2018
FILE: c:\pwworking\dal\d0911856\ped18.dgn

SIDEWALK TREATMENT AT DRIVEWAYS

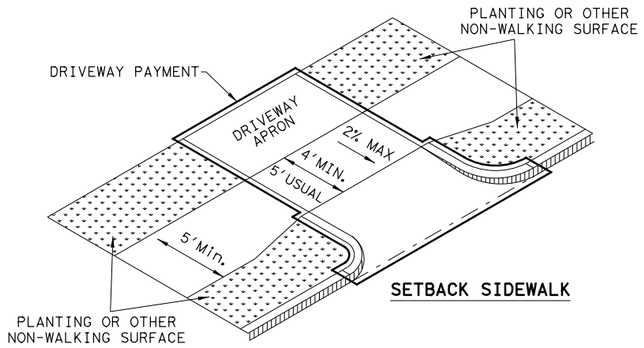

SETBACK SIDEWALK

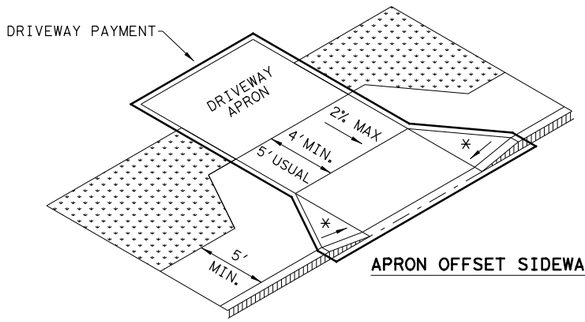

APRON OFFSET SIDEWALK

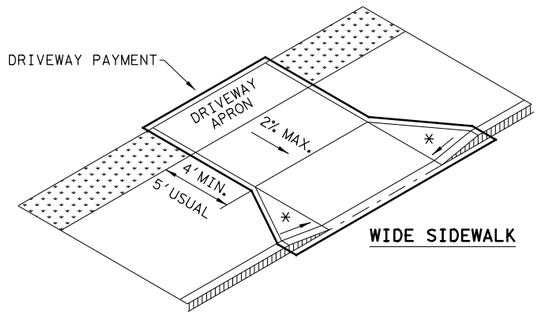

WIDE SIDEWALK

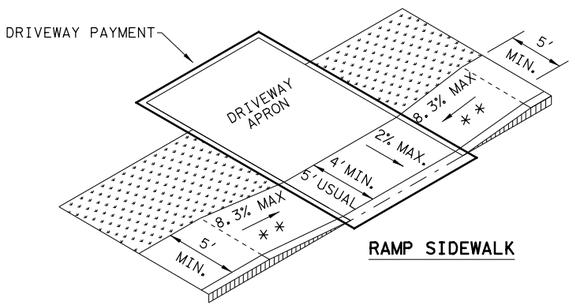

RAMP SIDEWALK

NOTES:

* WHERE DRIVEWAYS CROSS THE PEDESTRIAN ROUTE, SIDES SHALL BE FLARED AT 10% MAX SLOPE.

* * IF CURB HEIGHT IS GREATER THAN 6 INCHES, USE GRADE LESS THAN OR EQUAL TO 5%. HANDRAIL AND DETECTABLE WARNING ARE NOT REQUIRED.

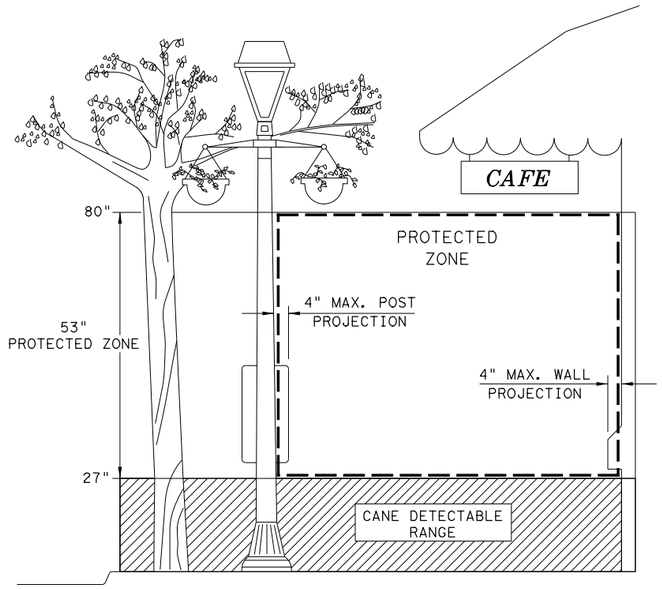

PROTECTED ZONE

NOTE: IN PEDESTRIAN CIRCULATION AREA, MAXIMUM 4" PROJECTION FOR POST OR WALL MOUNTED OBJECTS BETWEEN 27" AND 80" ABOVE THE SURFACE.

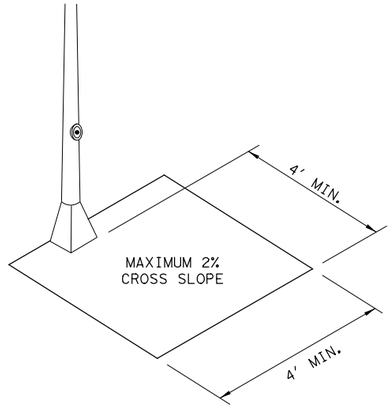

CLEAR SPACE ADJACENT TO PEDESTRIAN PUSH BUTTON

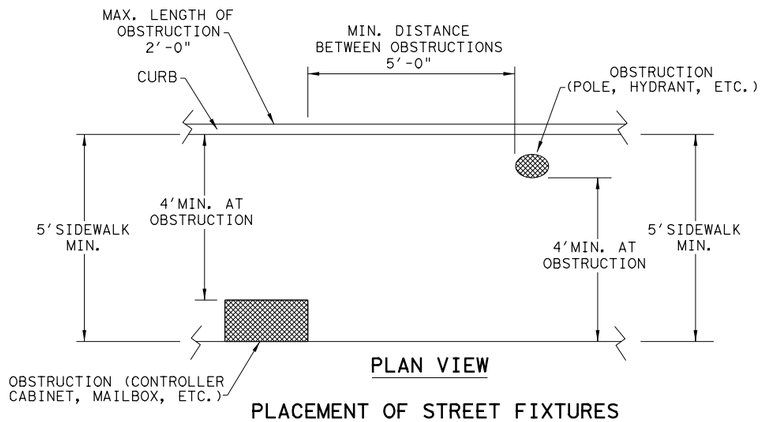

PLAN VIEW

PLACEMENT OF STREET FIXTURES

NOTE: ITEMS NOT INTENDED FOR PUBLIC USE. MINIMUM 4' X 4' CLEAR GROUND SPACE REQUIRED AT PUBLIC USE FIXTURES.

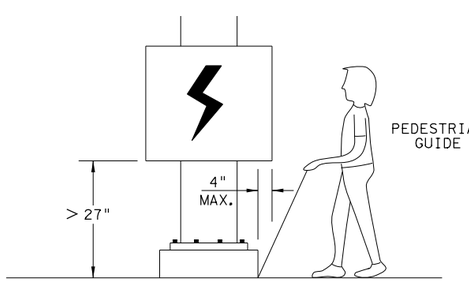

WHEN AN OBSTRUCTION OF A HEIGHT GREATER THAN 27" FROM THE SURFACE WOULD CREATE A PROTRUSION OF MORE THAN 4" INTO THE PEDESTRIAN CIRCULATION AREA, CONSTRUCT ADDITIONAL CURB OR FOUNDATION AT THE BOTTOM TO PROVIDE A MAXIMUM 4" OVERHANG.

PROTRUDING OBJECTS OF A HEIGHT ≤ 27" ARE DETECTABLE BY CANE AND DO NOT REQUIRE ADDITIONAL TREATMENT.

DETECTION BARRIER FOR VERTICAL CLEARANCE < 80"

SHEET 3 OF 4

Texas Department of Transportation | Design Division Standard

PEDESTRIAN FACILITIES CURB RAMPS

PED-18

FILE: ped18	DN: TxDOT	DW: VP	CK: KM	CK: PK & JG	
© TxDOT: MARCH, 2002	CONT	SECT	JOB	HIGHWAY	
REVISIONS	2103	01	034		
REVISED 08, 2005 REVISED 06, 2012 REVISED 01, 2018	DIST	COUNTY		SHEET NO.	
	AUS	WILLIAMSON		75	

TYPICAL CROSSING LAYOUTS

SEE SHEET 1 OF 4 FOR DETAILS AND DIMENSIONS

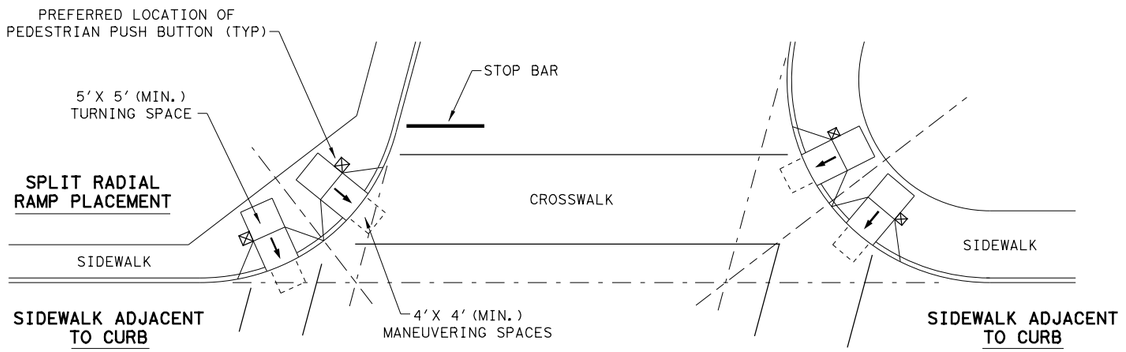

SKEWED INTERSECTION WITH "LARGE" RADIUS

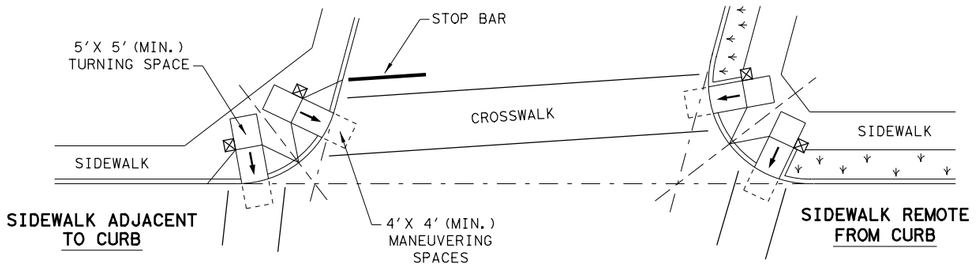

SKEWED INTERSECTION WITH "SMALL" RADIUS

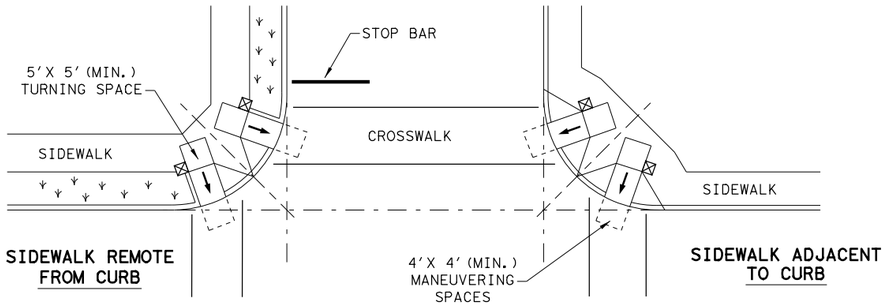

NORMAL INTERSECTION WITH "SMALL" RADIUS

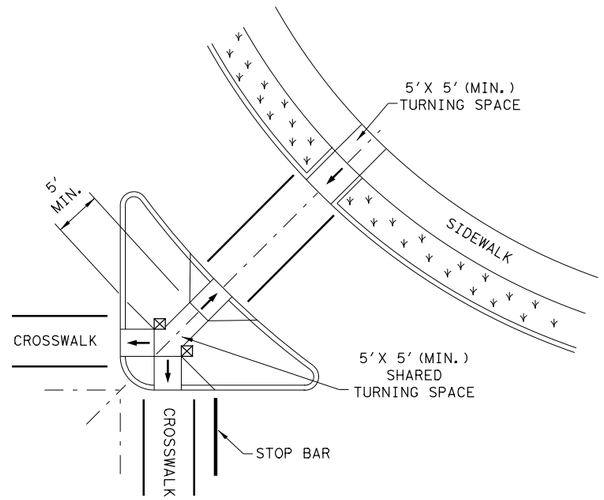

AT INTERSECTION
W/FREE RIGHT TURN & ISLAND

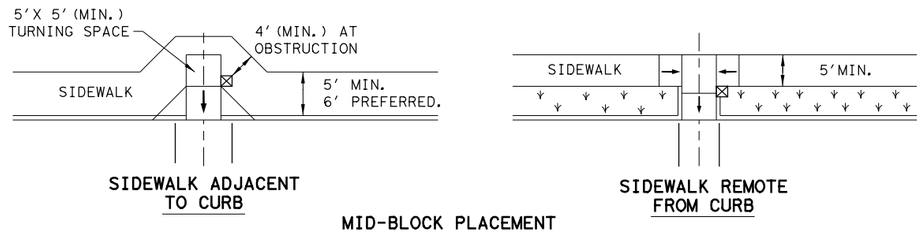

MID-BLOCK PLACEMENT
PERPENDICULAR RAMPS

LEGEND:

SHOWS DOWNWARD SLOPE. →

DENOTES PREFERRED LOCATION OF PEDESTRIAN PUSH BUTTON (IF APPLICABLE). ☒

DENOTES PLANTING OR NON-WALKING SURFACE NOT PART OF PEDESTRIAN CIRCULATION PATH.

SHEET 4 OF 4

Texas Department of Transportation — Design Division Standard

PEDESTRIAN FACILITIES CURB RAMPS

PED-18

FILE: ped18	DN: TxDOT	DW: VP	CK: KM	CK: PK & JG
© TxDOT: MARCH, 2002	CONT	SECT	JOB	HIGHWAY
REVISIONS	2103	01	034	
REVISED 08, 2005	DIST	COUNTY		SHEET NO.
REVISED 06, 2012	AUS	WILLIAMSON		76
REVISED 01, 2018				

DISCLAIMER:
The use of this standard is governed by the "Texas Engineering Practice Act". No warranty of any kind is made by TxDOT for any purpose whatsoever. TxDOT assumes no responsibility for the conversion of this standard to other formats or for incorrect results or damages resulting from its use.

DATE: 3/23/2018
FILE: c:\pwworking\dal\d0911856\ped18.dgn

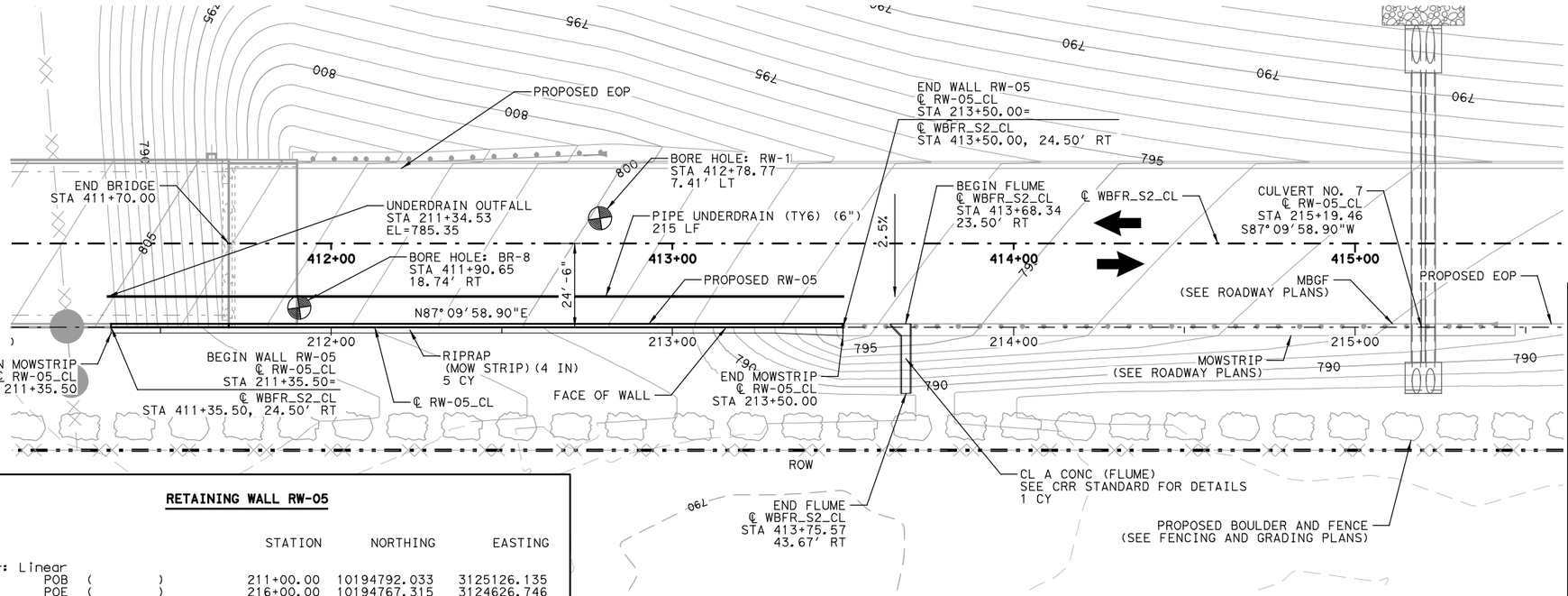

PLAN

RETAINING WALL RW-05

		STATION	NORTHING	EASTING
Element: Linear				
POB	( )	211+00.00	10194792.033	3125126.135
POE	( )	216+00.00	10194767.315	3124626.746
Tangent Direction:		N 87°09'59" E		
Tangent Length:		500.00		

H: 0 20 40 60 80
V: 0 5 10 15 20
SCALE IN FEET

LEGEND

- PROPOSED RETAINING WALL
- TRAFFIC ARROW
- BORING
- PROPOSED ROW
- PROPOSED RIPRAP

NOTES:

1. EXISTING GROUND AS SHOWN IS EXISTING LIMESTONE. SEE "BORING LOGS WBFR" SHEETS FOR BORING LOG DATA.

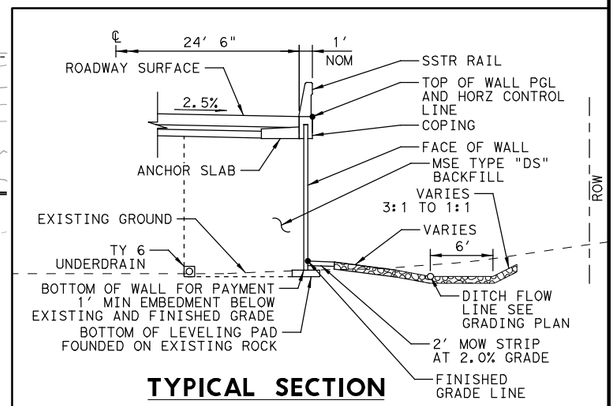

TYPICAL SECTION

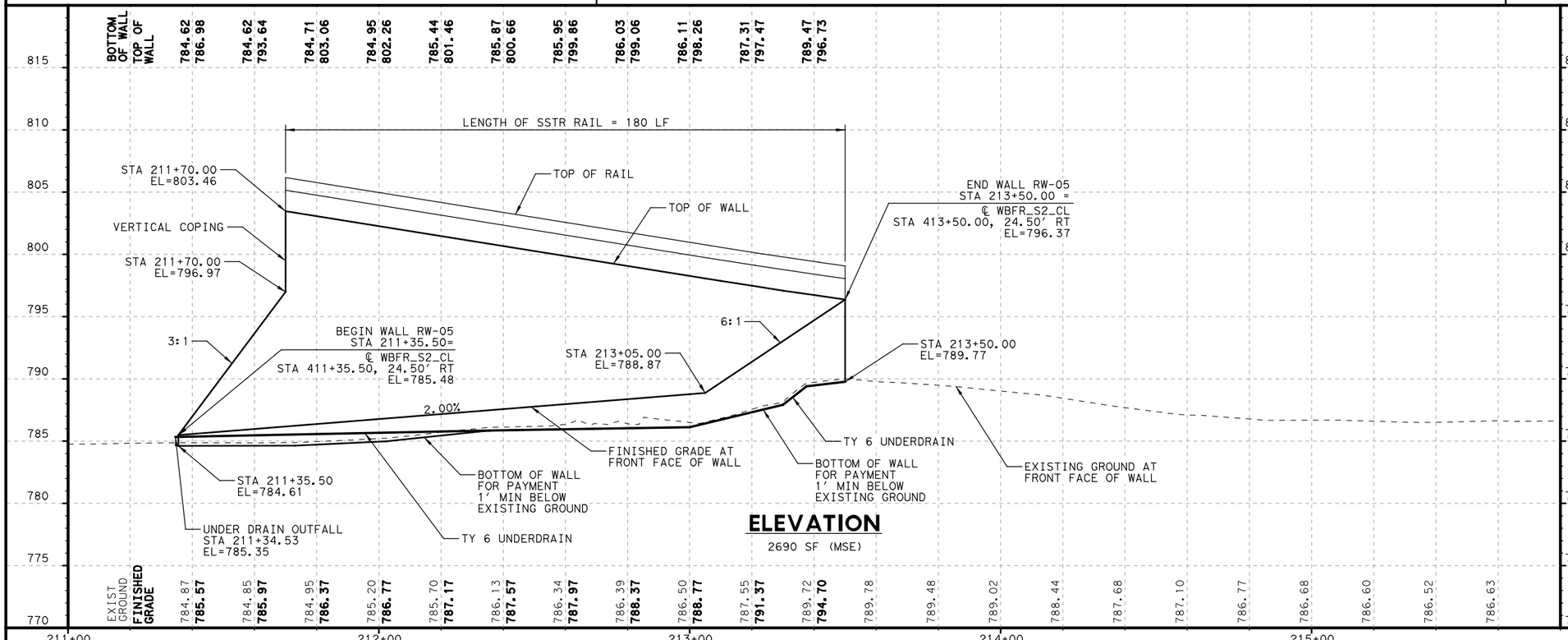

ELEVATION

2690 SF (MSE)

STATE OF TEXAS
JACOB E. WALKER
122057
LICENSED
PROFESSIONAL ENGINEER
03/23/2018

NO.	DATE	REVISION	APPROVED

WILLIAMSON COUNTY

HDR Engineering, Inc.
810 Hesters Crossing, Suite 120
Round Rock, Texas 78681
Texas Registered Engineering Firm F-754

SOUTHWEST BYPASS SEGMENT 2

RETAINING WALL RW-05 PLAN AND PROFILE

SCALE: 1"=40'-H
1"=10'-V

SHEET 1 OF 1

DESIGN	FED.RD. DIV.NO.	FEDERAL AID PROJECT NO.		HIGHWAY NO.
JC	6			
GRAPHICS	STATE	DISTRICT	COUNTY	SHEET NO.
LG	TEXAS	AUS	WILLIAMSON	
CHECK	CONTROL	SECTION	JOB	77
JW				
CHECK	2103	01	034	
JC				

PLOT DRIVER: TXDOT_PDF_BW.pltcfg PENTABLE: S2-000002017018.tbl
USER: lgomezgonz DATE: 3/23/2018 TIME: 1:46:40 PM SCALE: 1:40
FILE: \

4/12/2018 7:20 AM

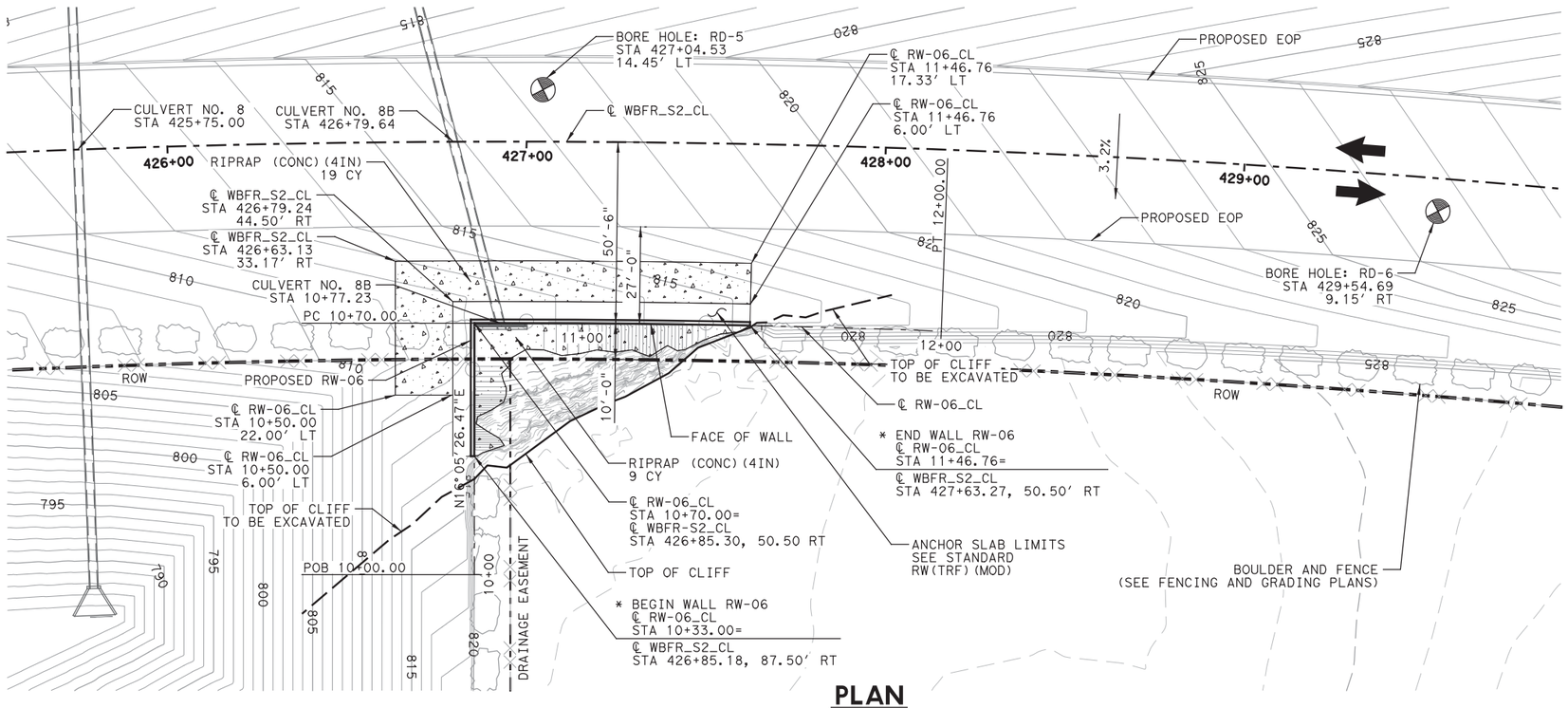

PLAN

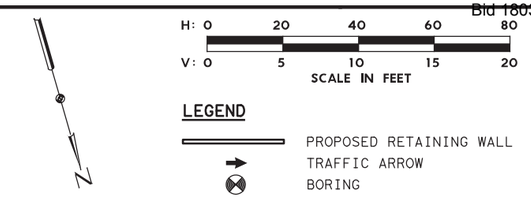

LEGEND

- PROPOSED RETAINING WALL
- TRAFFIC ARROW
- BORING
- PROPOSED ROW
- PROPOSED RIPRAP

NOTES:

1. EXISTING GROUND AS SHOWN IS EXISTING LIMESTONE. SEE "BORING LOGS WBFR" SHEETS FOR BORING LOG DATA.

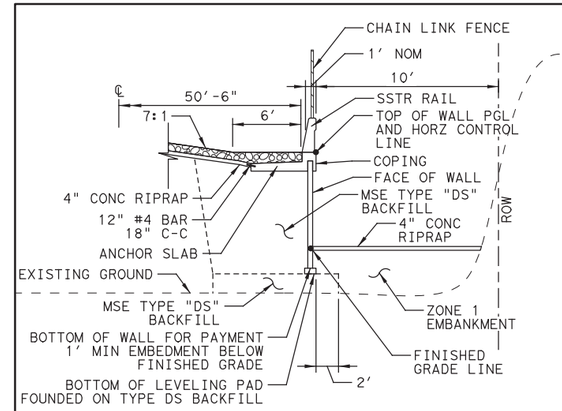

TYPICAL SECTION

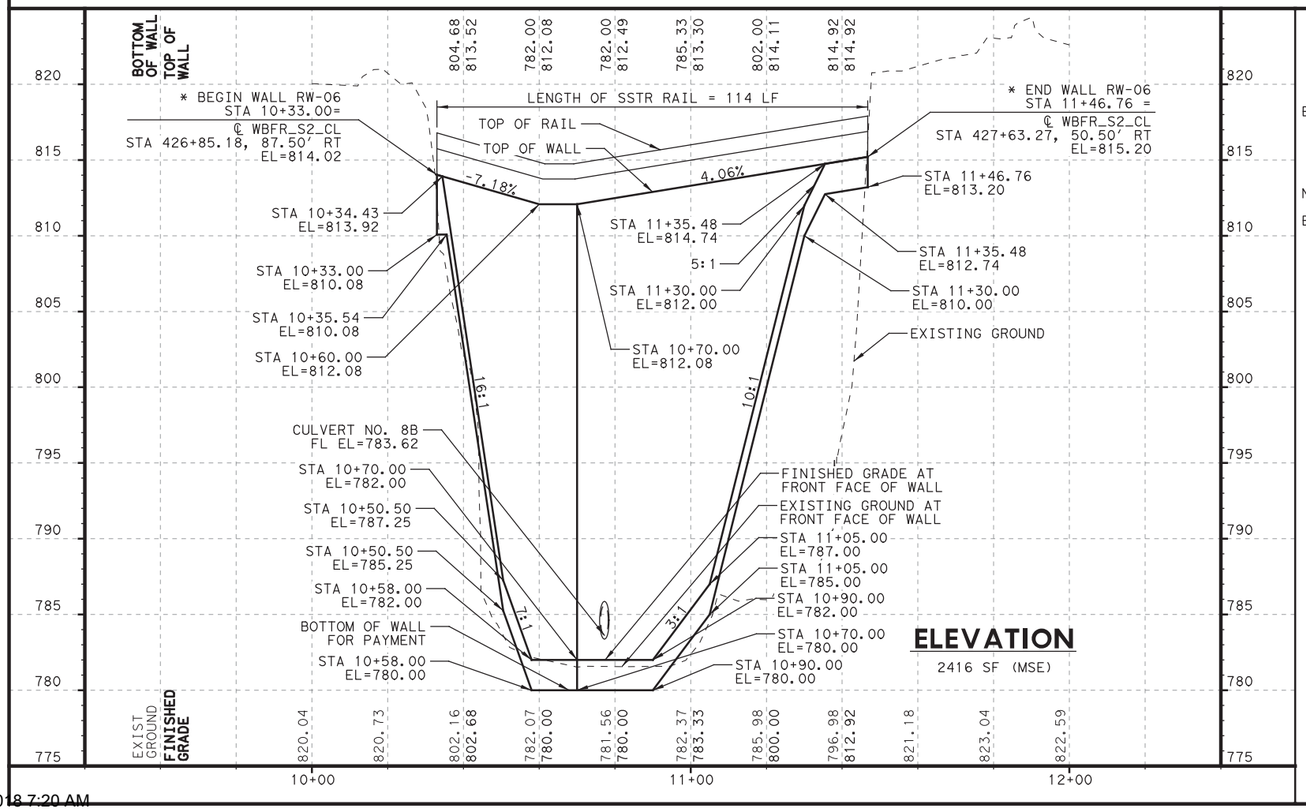

ELEVATION

2416 SF (MSE)

RETAINING WALL RW-06

		STATION	NORTHING	EASTING
Element: Linear				
POB	( )	10+00.00	10194978.968	3123587.602
PC	( )	10+70.00	10194911.711	3123568.200
Tangent Direction:		N 16°05'26" E		
Tangent Length:		70.00		
Non-collinear				
Element: Circular				
PC	( )	10+70.00	10194911.711	3123568.200
PI	( )	11+35.01	10194929.534	3123505.683
CC	( )		10198003.517	3124449.652
PT	( )	12+00.00	10194949.870	3123443.936
Radius:		3215.00		
Delta:		2°19'00" Right		
Degree of Curvature(Arc):		1°46'56"		
Length:		130.00		
Tangent:		65.01		
Chord:		129.99		
Middle Ordinate:		0.66		
External:		0.66		
Tangent Direction:		N 74°05'15" W		
Radial Direction:		N 15°54'45" E		
Chord Direction:		N 72°55'45" W		
Radial Direction:		N 18°13'45" E		
Tangent Direction:		N 71°46'15" W		

* IF RETAINING WALL RW-6 IS NOT CONSTRUCTED, REMOVE RETAINING WALL RW-6 PLAN AND PROFILE SHEET FROM PLAN SET.

STATE OF TEXAS
JACOB E. WALKER
122057
LICENSED
PROFESSIONAL ENGINEER
04/10/2018

NO.	DATE	REVISION	APPROVED

WILLIAMSON COUNTY

HDR Engineering, Inc.
810 Hesters Crossing, Suite 120
Round Rock, Texas 78681
Texas Registered Engineering Firm F-754

SOUTHWEST BYPASS SEGMENT 2

RETAINING WALL RW-06 PLAN AND PROFILE

SCALE: 1"=40'-H
1"=10'-V

SHEET 1 OF 1

DESIGN	FED.RD. DIV.NO.	FEDERAL AID PROJECT NO.		HIGHWAY NO.
JC	6			
GRAPHICS	STATE	DISTRICT	COUNTY	SHEET NO.
LG	TEXAS	AUS	WILLIAMSON	
CHECK	CONTROL	SECTION	JOB	78
JW				
CHECK	2103	01	034	
JC				

PLOT DRIVER: TXDOT_PDF_BW.pltcfg PENTABLE: S2-000002017018.tbl
USER: lgomezgonz DATE: 4/10/2018 TIME: 2:35:8 PM SCALE: 1:40
FILE: \

4/12/2018 7:20 AM

WALL SUMMARY

MSE Retaining Wall	Begin Station (1)	End Station (1)	Retained Soil Frictin Angle (2)	Foundation Soil Friction Angle (2)	Ground Improvement (3)	Min Earth Reinforcement Length (4)	Min Wall Embedment (7)	Underdrain Required (5)	Drawdown Analysis (6)	Bench Width (8)
RW-05	STA 211+35.50	STA 213+50.00	32° Ⓐ	34° Ⓑ	None	8′ or 0.7 H′	1′ Ⓑ	Yes	No	2′
RW-06	STA 10+33.00	STA 11+46.76	32° Ⓐ	34° Ⓒ	None	8′ or 0.7 H′	1′ Ⓒ	No	Yes	2′

Ⓐ Retained embankment shall consist of Rock Embankment or Type C material as defined in the general notes.

Ⓑ RW-05, Leveling pad and reinforced zone shall be founded on limestone.

Ⓒ RW-06, Leveling pad and reinforced zone shall be founded on TxDot Standard specifications Item 423 Type DS backfill.

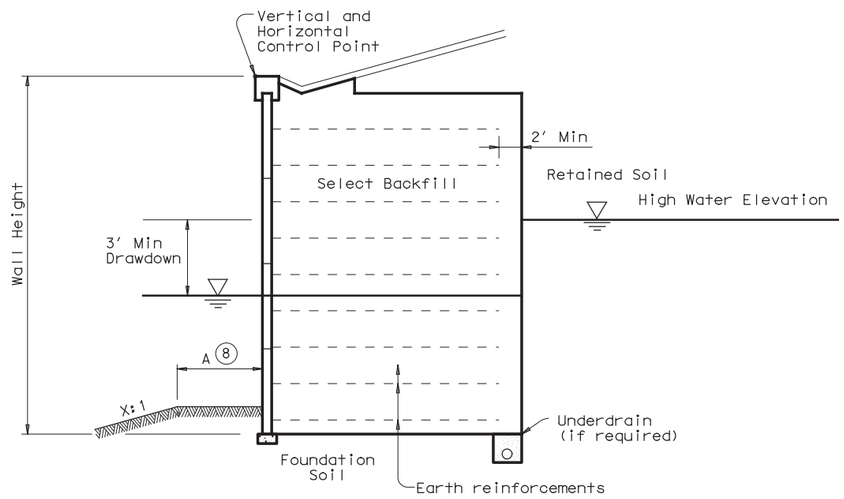

TYPICAL SECTION

(RAPID DRAWDOWN CONDITION)

(1) Indicate limits for which the stated soil design requirements/assumptions are applicable.

(2) Retained and Foundation friction angle listed should be based on local experience or measured/correlated long term strength values.

(3) Indicate if ground improvement is required or not required. If shown as required, refer to Ground Improvement Detail(s) for additional information.

(4) Indicate on table minimum length and length ratio required. The minimum default length of earth reinforcements shall be either 8′-0" or 70% of the wall height, whichever is greater. Wall height and design wall height may differ depending on project geometry and loading conditions. Note: Wall height at bridge abutments is equal to the distance between the top of leveling pad and finished grade at the bridge abutment backwall.

(5) Indicate if underdrain is required or not required.

(6) Indicate if rapid drawdown analysis is required.

(7) Guidance to wall designer of record for determination of minimum wall embedment: Unless noted elsewhere in the plans, the minimum embedment provided from the top of leveling pad to finish grade shall be 1′ for level ground where there is no potential for erosion or future excavation or 2′ for sloping ground (4.0H:1.0V or steeper) or where there is potential for removal of soil in front of the wall.

(8) Horizontal Bench width at base of wall varies. Use the following criteria to establish base width.
A = 2.0′ Min for X ≥ 4. or
A = 4.0′ Min for X ≦ 4.
Applicable to both drawdown and dry condition.

DISCLAIMER:
The use of this standard is governed by the "Texas Engineering Practice Act". No warranty of any kind is made by TxDOT for any purpose whatsoever. TxDOT assumes no responsibility for the conversion of this standard to other formats or for incorrect results or damages resulting from its use.

DATE: 3/22/2018 10:08:12 AM
FILE: c:\pwworking\dal\d0911860\rwstde16.dgn

HDR ENGINEERING, INC.
TBPE FIRM F-754

STATE OF TEXAS
THOMAS C. WESLING
81589
LICENSED
PROFESSIONAL ENGINEER

03/22/2018

Texas Department of Transportation

Bridge Division Standard

MECHANICALLY STABILIZED EARTH RETAINING WALL DESIGN DATA

RW(MSE)DD

FILE: rwstde16.dgn	DN: TxDOT	CK: MJG	DW: JTR	CK: MJG
©TxDOT January 2013	CONT	SECT	JOB	HIGHWAY
REVISIONS	2103	01	034	
	DIST	COUNTY		SHEET NO.
	AUS	WILLIAMSON		79

DISCLAIMER:
The use of this standard is governed by the "Texas Engineering Practice Act". No warranty of any kind is made by TxDOT for any purpose whatsoever. TxDOT assumes no responsibility for the conversion of this standard to other formats or for incorrect results or damages resulting from its use.

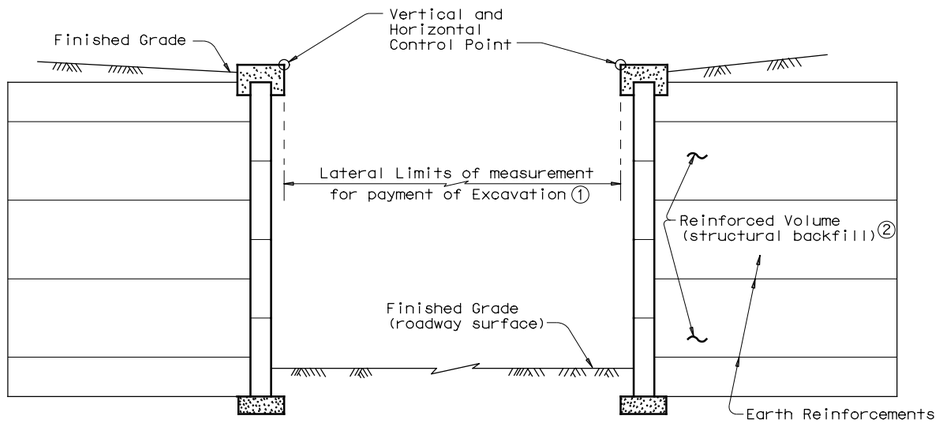

TYPICAL SECTION
Excavation Between MSE Retaining Walls ③

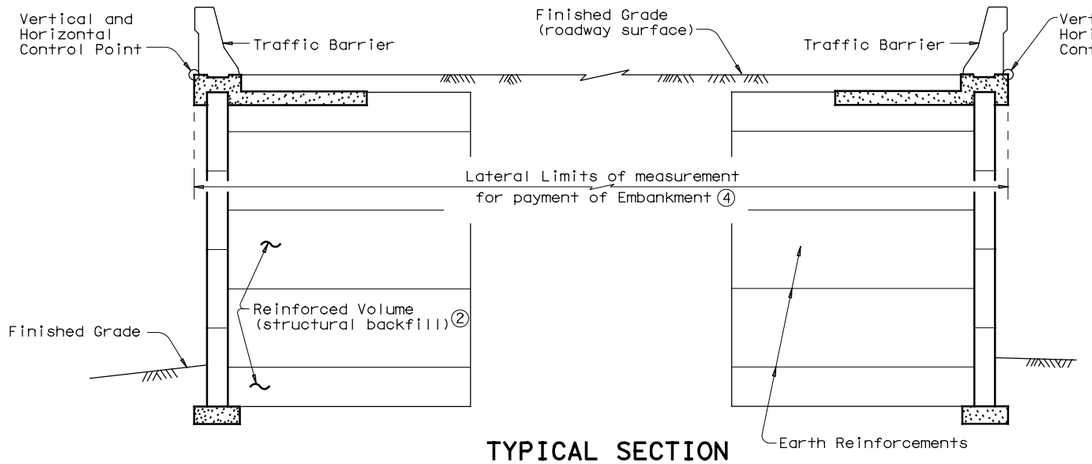

TYPICAL SECTION
Embankment Between MSE Retaining Walls ③

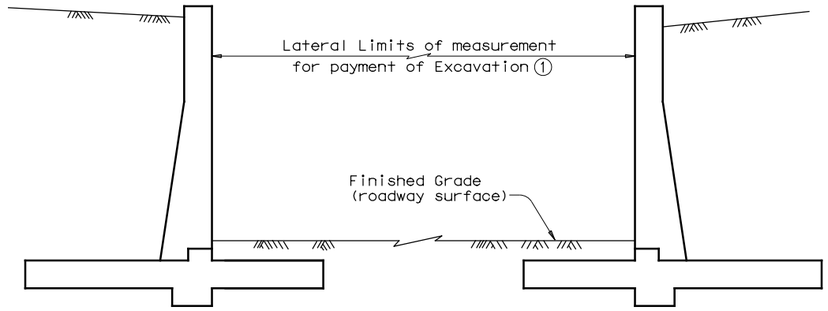

TYPICAL SECTION
Excavation Between Conventional Retaining Walls

① Only the Excavation above the proposed subgrade elevation will be measured for payment.

② Meeting requirements of Retaining-Wall Item.

③ Earthwork measurement with other designs of retaining walls will be made to the outside finished face in the same manner.

④ Only the Embankment above the existing ground line will be measured for payment.

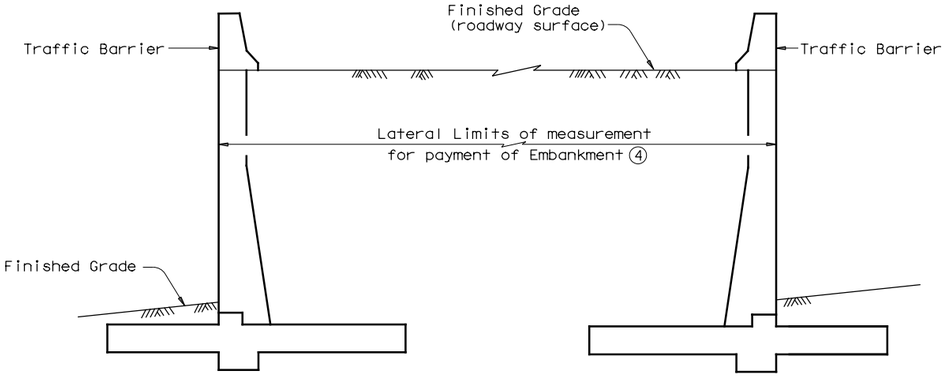

TYPICAL SECTION
Embankment Between Conventional Retaining Walls

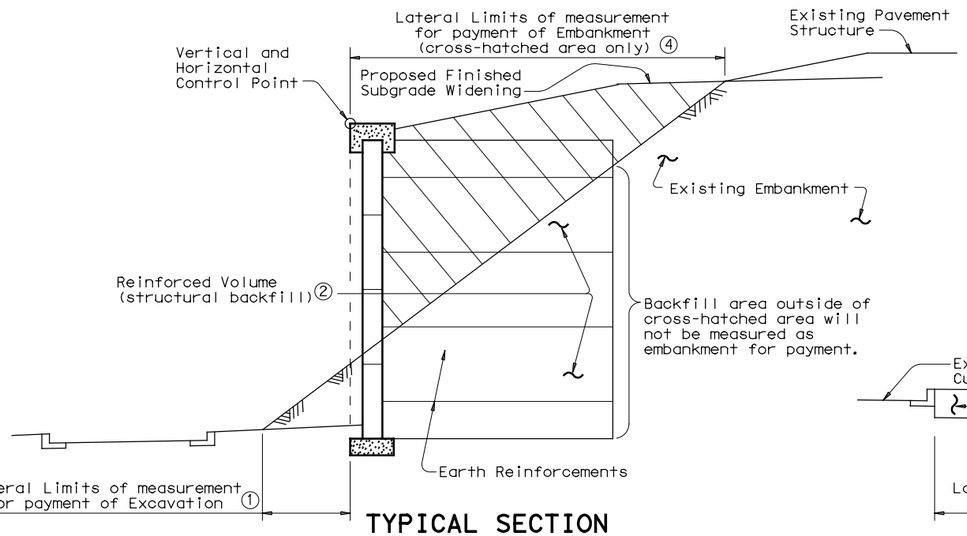

TYPICAL SECTION
Widening Embankment with MSE Retaining Walls ③

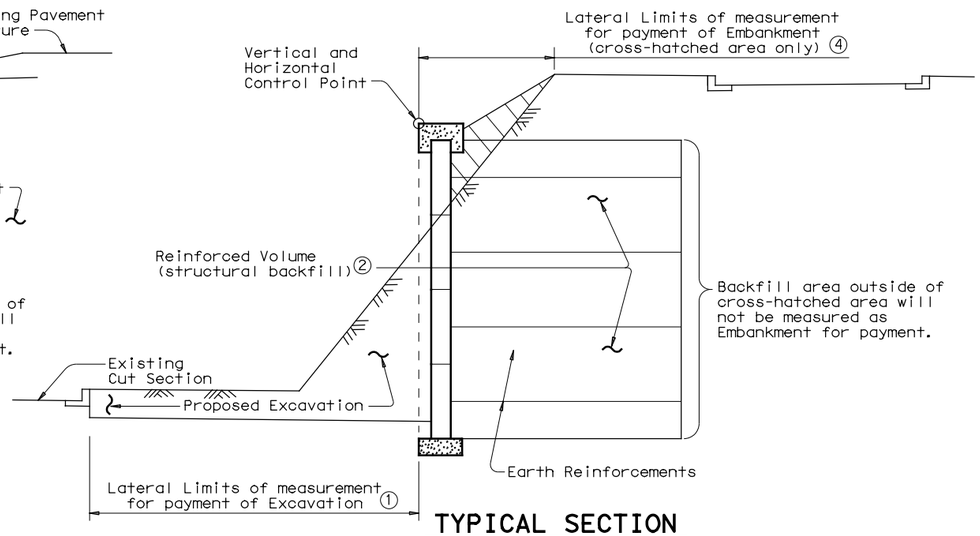

TYPICAL SECTION
Widening Cut Section with MSE Retaining Walls ③

Texas Department of Transportation

Bridge Division Standard

EARTHWORK MEASUREMENT AT RETAINING WALLS

RW(EM)

FILE: rwstde12.dgn	DN: TxDOT	CK: TxDOT	DW: BWH	CK: JMH
©TxDOT March 2010	CONT	SECT	JOB	HIGHWAY
REVISIONS	2103	01	034	
	DIST	COUNTY		SHEET NO.
	AUS	WILLIAMSON		80

DATE: 3/23/2018 10:38:10 AM
FILE: c:\pwworking\dal\d0911860\rwstde12.dgn

DISCLAIMER:
The use of this standard is governed by the "Texas Engineering Practice Act". No warranty of any kind is made by TxDOT for any purpose whatsoever. TxDOT assumes no responsibility for the conversion of this standard to other formats or for incorrect results or damages resulting from its use.

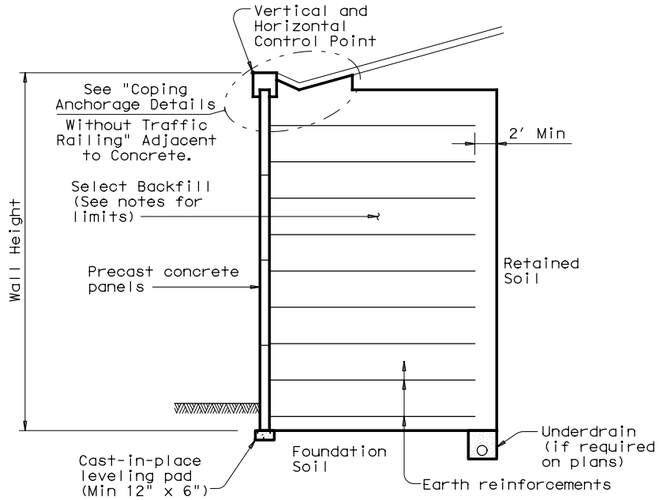

TYPICAL SECTION

(Wall at bottom of slope)

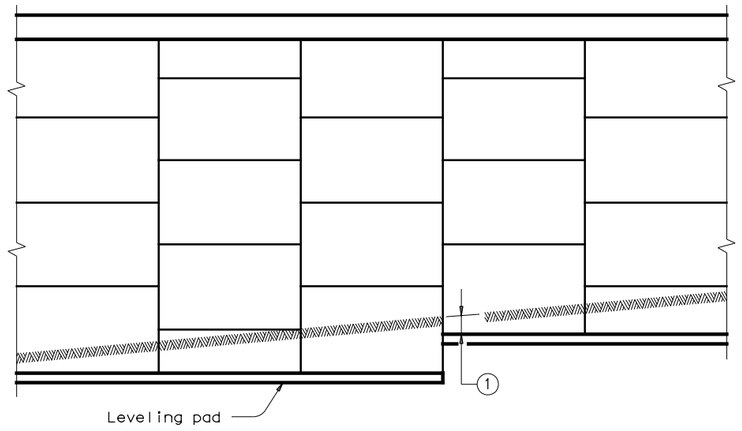

ELEVATION

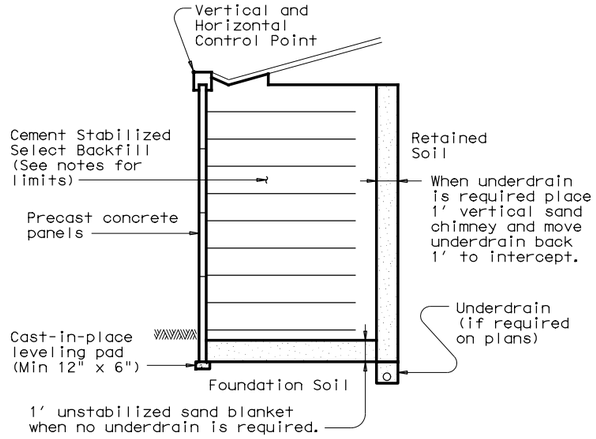

SPECIAL DRAINAGE PROVISIONS

(When cement stabilized backfill is used)

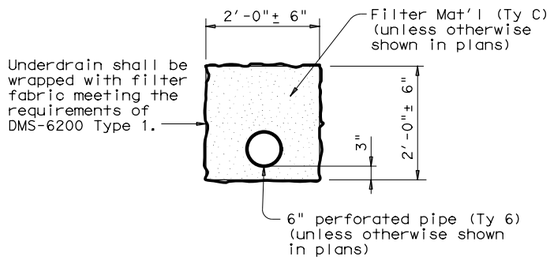

UNDERDRAIN DETAIL

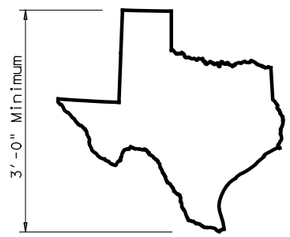

MAP OF TEXAS EMBLEM ②

① Minimum embedment conforming to values given on the RW(MSE)DD standard.

② Map of Texas emblem shall be formed into a wall panel next to each bridge abutment. The exact location of each emblem shall be approved by the Engineer. The cost of forming the emblems will not be paid for directly, but shall be incidental to the Item "Retaining Wall". The map of Texas shall be inset a minimum of ¾" into the face of the panel, and shall receive a smooth finish. The inset area shall be finished in a contrasting color as approved by the Engineer.

Texas Department of Transportation

Bridge Division Standard

MECHANICALLY STABILIZED EARTH RETAINING WALL

RW(MSE)

FILE: rwstde01.dgn	DN: TxDOT	CK: TxDOT	DW: JGD	CK: MJG
©TxDOT March 2010	CONT	SECT	JOB	HIGHWAY
REVISIONS 04-11: Added Table & Corrosion Criteria. 01-13: Wall embed, (WS) table, retained fill, soil strength.	2103	01	034	
	DIST	COUNTY		SHEET NO.
	AUS	WILLIAMSON		81

DATE: 3/23/2018 10:38:11 AM
FILE: c:\pwworking\dal\d0911860\rwstde01.dgn

DISCLAIMER:
The use of this standard is governed by the "Texas Engineering Practice Act". No warranty of any kind is made by TxDOT for any purpose whatsoever. TxDOT assumes no responsibility for the conversion of this standard to other formats or for incorrect results or damages resulting from its use.

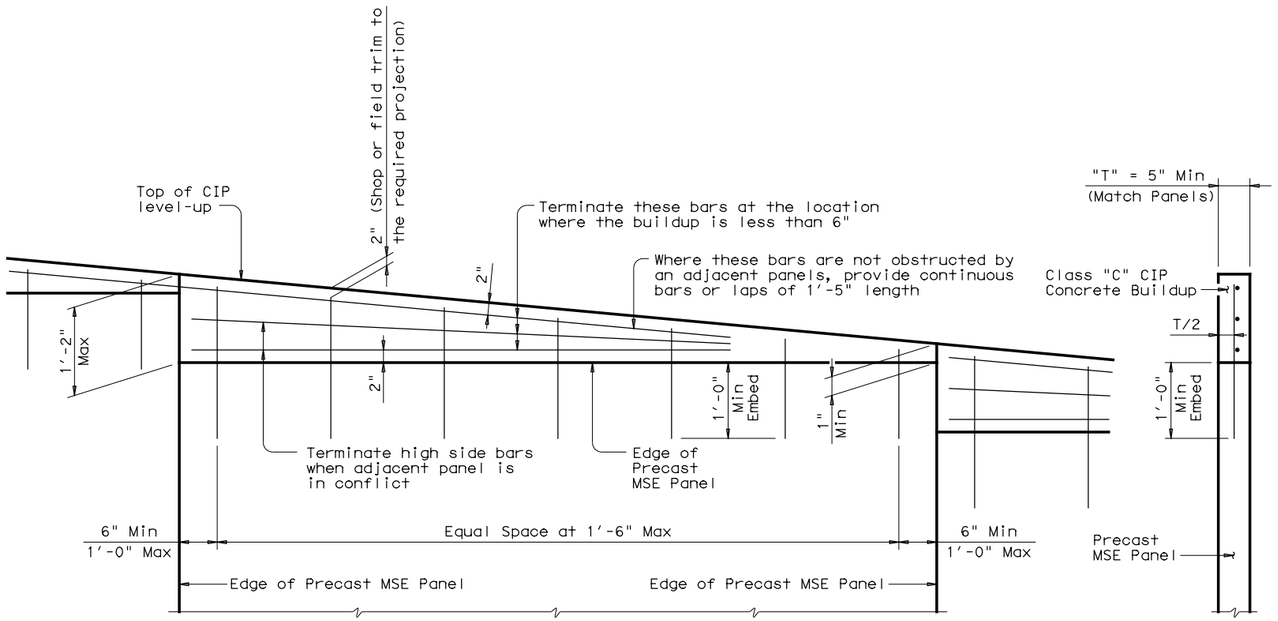

LEVEL UP DETAIL (5)

Provide Grade 60 (#4) Reinforcement

(3) Precast coping shall be anchored to prevent rotation or displacement. Use these details to develop custom anchorage for precast copings. Details shall include coping reinforcement. Concrete flume (if required) shall be paid for separately from Item 423.

(4) Soil design parameter must be based on long term soil strength. Design parameters must be listed on the RW(MSE)DD standard.

(5) Cast vertical bars into the top of panels. At contractor's option vertical bars may be embedded 4" with a Type III Clac C epoxy anchorage system. Follow manufacturer's directions for installing the epoxied vertical bars.

(6)

SELECT BACKFILL UNIT WEIGHT			
Type A, B & D	Unit Weight	Inernal Stability	External Stability
	105 PCF	Pullout	Sliding, Overturning, Eccentricity
	125 PCF	Rupture	Bearing

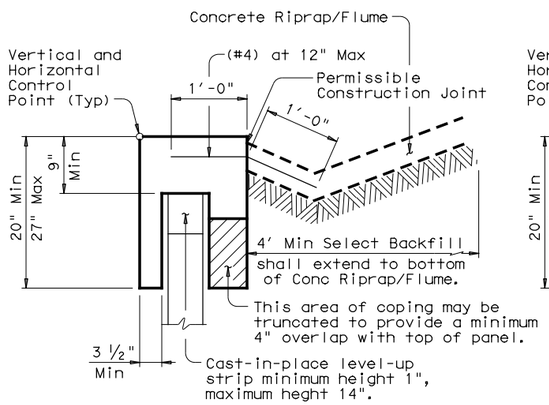

ADJACENT TO CONCRETE
(Excluding Concrete Pavement)

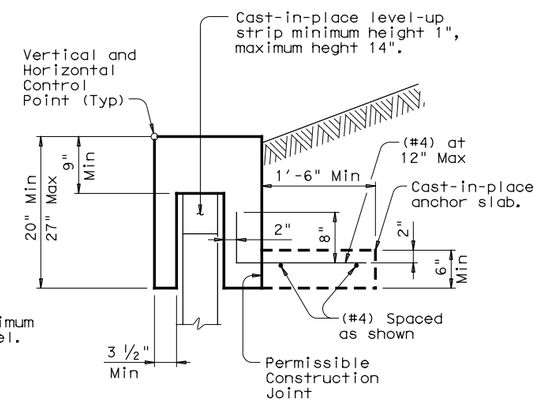

ADJACENT TO SOIL

COPING ANCHORAGE DETAILS WITHOUT TRAFFIC RAILING (3)

DESIGN PARAMETERS:

Design of retaining walls shall be based on the following design parameters unless stated elsewhere in the plans:

Retained Soil	Unit Weight = 125 pcf Ø = (4) C = 0 psf
Foundation Soil	Ø = (4) C = 0 psf
Select Backfill	Unit Weight = See Table (6) Ø = 34 C = 0 psf
Cement Stabilized Select Backfill	Unit Weight = 125 pcf Ø = 45 C = 0 psf

Stress in steel and concrete shall be in accordance with current AASHTO Standard and Interim Specifications. The minimum length of earth reinforcements are as shown on the RW(MSE)DD standard.

STABILITY CRITERIA:

Stability criteria applies to both dry and drawdown analysis.
Factor of safety in sliding along the base of the structure shall be greater than or equal to 1.5.
Factor of safety in overturning shall be greater than or equal to 2.0.
The base pressure resultant shall fall within the middle third of the retaining wall.
The factor of safety against pullout of the earth reinforcements shall be greater than or equal to 1.5 at each level. Pullout resistance shall be determined from test data evaluated at ¾ inch strain.

CORROSION CRITERIA:

The earth reinforcement elements shall be designed to have a minimum design life of 75 years, using current AASHTO corrosion rates.
Stress calculations (rupture) shall be done on the calculated earth reinforcement section remaining after 75 years. Pullout calculations may be based on non-corroded section.

PRECAST COPINGS:

Wall supplier is to maximize lengths of precast coping. Precast coping is to be provided in 10′ minimum lengths (typical). To optimize coping lengths at radiuses, end of runs or other wall geometric conditions favorable to shorter coping sections, shorter lengths may be used pending approval by the Engineer. This applies only to coping without railing.

JOINT SEALER:

The joints between coping segments must be sealed in accordance with the DMS-6310 "Joint Sealant's and Fillers", joint sealing material, Class 4. The joint must be sealed 3" below and 6" above the adjoining pavement surface, or as directed by the Engineer. The purpose of the joint sealing is to contain surface drainage and prevent infiltration into the retaining wall backfill.

GENERAL NOTES:

Section and elevation shown is for informational purposes only. Specific geometry is to be determined based on wall layouts and other plan information.
The select backfill specified for use within the mechanically stabilized earth volume shall extend horizontally from the back of the panels to a minimum 2′ beyond the end of the earth reinforcements. The select backfill shall extend vertically from the top of the leveling pad or 4" below the lowest earth reinforcement, whichever is lower, to the top of panels.
The uppermost earth reinforcements shall be no more than 3.0′ below the top of wall.
The lowest level of earth reinforcements shall be no more than 2.0′ above the top of the leveling pad.
Minimum wire size for earth reinforcements shall be W7.0. If different longitudinal and cross wires are used in an earth reinforcement mesh, the smaller wire shall have at least 50% of the cross sectional area of the larger wire.
A maximum of four wire mesh configurations (wire sizes) will be allowed on a project. Each mesh configuration shall have a unique transverse bar spacing, differing from other configurations by a minimum of 3". Earth reinforcement lengths shall be stepped in increments no finer than 12".
Standard precast concrete panels shall have a maximum height of 6′, and a maximum surface area of 50 sq ft. Top and bottom panels may exceed these limitations as necessary to achieve required wall grades. Maximum height of any panel shall be 7′-6". Minimum panel thickness shall be 5". Panels shall be arranged to provide offset horizontal joints.
An open joint shall be provided around the perimeter of the concrete panels. The joint configuration shall be such that 1) the filter fabric and/or pad materials are not exposed at the wall face and 2) the design opening is between ⅜" and ¾".
A one-piece corner panel shall be provided for wall angle changes of greater than 30 degrees. Butting of chamfered panels will be allowed for angle changes of 30 degrees or less.
Concrete coping shall be provided along the top of wall, at the vertical steps at bridge backwalls, and at other vertical steps along the top of wall. The joints between all coping segments shall be sealed to prevent infiltration of water into the retaining wall backfill. Sealing shall be in accordance with the DMS-6310 "Joint Sealants and Fillers", using Class 4 joint sealant.
When obstructions (inlets, drilled shafts, piling, etc.) prevent placement of soil reinforcements in their normal locations, provide details and calculations that establish support for the affected panels. Furnish the same earth reinforcement coverage as that required in the absence of the obstruction. For skewed (rotated) earth reinforcements no adjustment in length is needed for skew angles between 1 and 10 degrees. For skew angles greater than 10 degrees adjust the length of earth reinforcement to provide a cosine length of the reinforcement equivalent to the stated design length for the section of wall. Provide calculations that justify any alterations made to the soil reinforcements or modifications to their normal placement. Do not use panels without any soil reinforcements connected to them unless they are connected with galvanized hardware to adjacent panels which do have supporting Soil reinforcements attached to them and as approved by the Engineer.
Reinforced concrete must be Class "C", Precast concrete Class "H", Unreinforced concrete Class "A".
All reinforcing steel must be Grade 60.
Coping and anchor slabs are considered subsidiary to the Item "Retaining Wall".
These details are to be used in conjunction with the retaining wall layout, standard RW(MSE)DD and other applicable standards.

Texas Department of Transportation

Bridge Division Standard

MECHANICALLY STABILIZED EARTH RETAINING WALL

RW(MSE)

FILE: rwstde01.dgn	DN: TxDOT	CK: TxDOT	DW: JGD	CK: MJG
©TxDOT March 2010	CONT	SECT	JOB	HIGHWAY
REVISIONS 04-11: Added Table & Corrosion Criteria. 01-13: Wall embed, (WS) table, retained fill, soil strength.	2103	01	034	
	DIST	COUNTY		SHEET NO.
	AUS	WILLIAMSON		82

DATE: 3/23/2018 10:38:13 AM
FILE: c:\pwworking\dal\d0911860\rwstde01.dgn

DISCLAIMER:
The use of this standard is governed by the "Texas Engineering Practice Act". No warranty of any kind is made by TxDOT for any purpose whatsoever. TxDOT assumes no responsibility for the conversion of this standard to other formats or for incorrect results or damages resulting from its use.

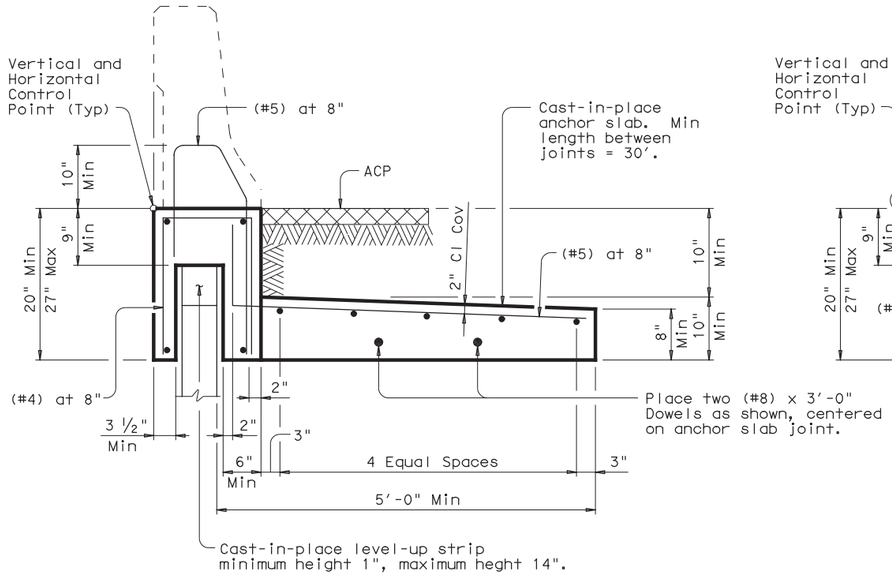

"WIDE BASED" ADJACENT TO ACP

(Showing T551 Rail, other rails listed similar)

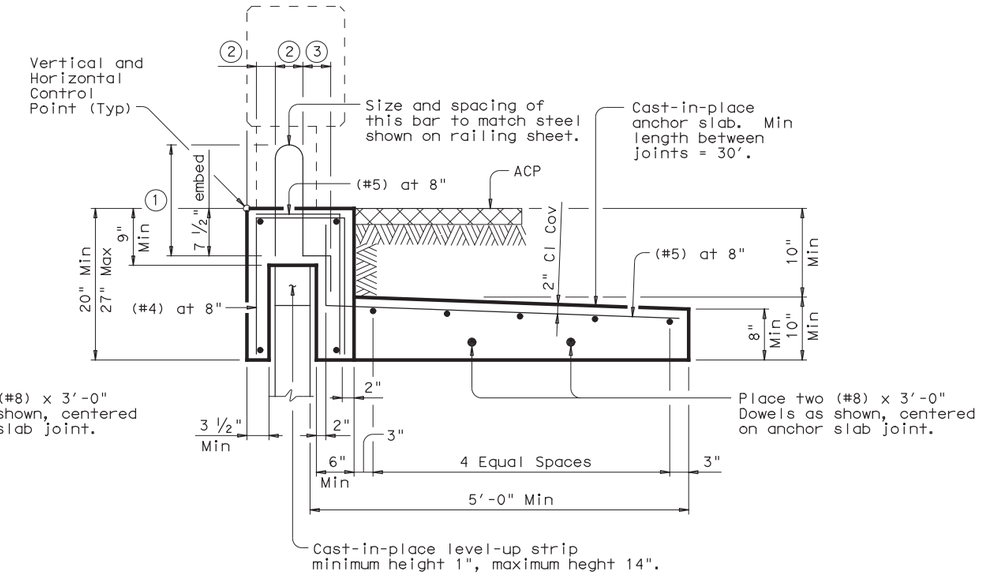

"NARROW BASED" ADJACENT TO ACP

(Showing T223 Rail, other rails listed similar)

Rail Type	Detail	Precasting Rail with Coping Allowed
T1F/T1W/C1W	NARROW	NO
T221/C221	NARROW	YES
T223/C223	NARROW	NO
T401/T402/C402	NARROW	NO
T411/C411	NARROW	NO
T551/T552	WIDE	YES
T66	NARROW	NO
T77	NARROW	NO
SSTR	WIDE	YES
C412	NARROW	NO

1. Reinforcement length equal to length shown on the appropriate Rail standard plus 1".
2. Match dimension on the appropriate Rail standard.
3. Match dimension on the appropriate Rail standard. Bend end of rail anchorage reinforcing as shown as required to maintain Clear Cover.

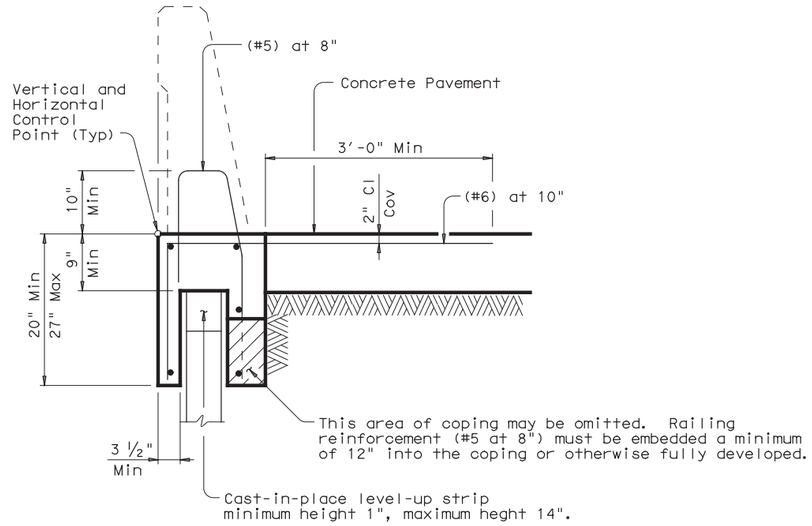

"WIDE BASED" ADJACENT TO CONCRETE PAVEMENT

(Showing SSTR Rail, other rails listed similar)

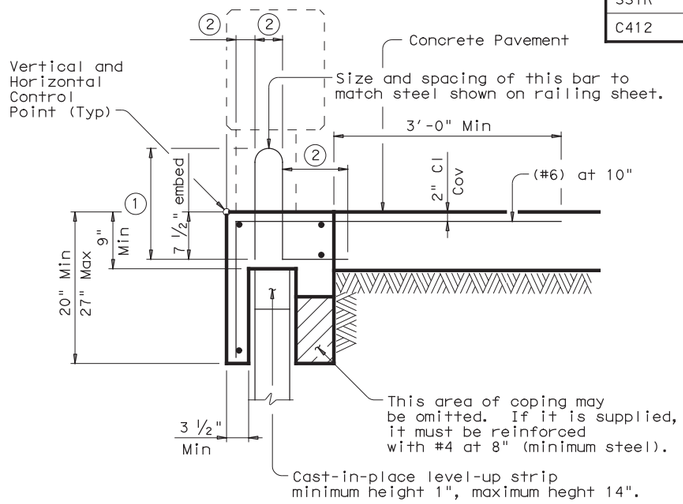

"NARROW BASED" ADJACENT TO CONCRETE PAVEMENT

(Showing T223 Rail, other rails listed similar)

CAST-IN-PLACE COPINGS:

Casting of the coping directly against the precast panel sides will not be permitted, as this may result in panel cracking. The contractor must use a 1/4"(Min) compressible material on both sides of the panel to isolate the coping from the precast panel.

When cast-in-place coping is anchored to reinforced concrete pavement, a smooth level-up strip must be provided on the top of the precast panels. The purpose of the level-up is to allow the pavement and coping to move longitudinally relative to the wall without causing damage.

Railing and coping joints must be provided at 33' maximum spacing. Railing and coping joints must be placed to coincide with precast panel joints.

PRECAST COPINGS:

A smooth level-up strip must be provided on top of the precast panels prior to installation of the coping. Shims may be used on top of the level-up strip to facilitate alignment. Total shim thickness not to exceed 1".

Precast coping must be provided in 10' minimum lengths.

JOINTED CONCRETE PAVEMENT:

When coping is adjacent to and anchored into jointed concrete pavement, the coping joints must coincide with the pavement joints.

JOINT SEALER:

The joints between coping segments must be sealed in accordance with the DMS-6310 "Joint Sealant's and Fillers", joint sealing material, Class 4. The joint must be sealed 3" below and 6" above the adjoining pavement surface, or as directed by the Engineer. The purpose of the joint sealing is to contain surface drainage and prevent infiltration into the retaining wall backfill.

GENERAL NOTES:

Details on this sheet are to be used in development of specific details for mounting traffic railing on mechanically stabilized earth (MSE) walls.

The specific details proposed must have strengths equivalent to those shown on this sheet. Areas of particular importance are the connection of the coping to the railing, the strength of the vertical coping leg connecting the railing to the anchor slab, and the connection of the coping to the anchor slab or concrete pavement.

Shop drawings for the traffic railing foundations must be submitted to the Engineer in accordance with the Item "Retaining Wall". The shop drawings must include bar bending details.

Precasting of the coping or coping and railing will be allowed. The anchor slab, when required, must be cast-in-place.

The Contractor's attention is directed to the fact that various configurations of precast coping/railing combinations are covered by patent. The contractor must provide for use of these systems in accordance with Article 7.3.

Concrete must be Class "C".

All reinforcing steel must be Grade 60.

Longitudinal bars must be (#4), unless otherwise shown.

Coping and anchor slabs must be considered subsidiary to the Item "Retaining Wall". The traffic railing will be paid for by the linear foot for the appropriate railing type.

STATE OF TEXAS
JOHN M. HOLT
68237
REGISTERED PROFESSIONAL ENGINEER

03/22/2018

Texas Department of Transportation — Bridge Division Standard

RETAINING WALL TRAFFIC RAILING FOUNDATIONS

SH 1 OF 2 — RW(TRF)(MOD)

FILE: rwstde03.dgn	DN: TxDOT	CK: TxDOT	DW: JTR	CK: MPM
©TxDOT March 2010	CONT	SECT	JOB	HIGHWAY
REVISIONS	2103	01	034	
01-13: Precast option with Rails.	DIST	COUNTY		SHEET NO.
	AUS	WILLIAMSON		83

DATE: 3/22/2018 4:15:38 PM
FILE: c:\pwworking\dal\d0911860\rwstde03.dgn

DISCLAIMER:
The use of this standard is governed by the "Texas Engineering Practice Act". No warranty of any kind is made by TxDOT for any purpose whatsoever. TxDOT assumes no responsibility for the conversion of this standard to other formats or for incorrect results or damages resulting from its use.

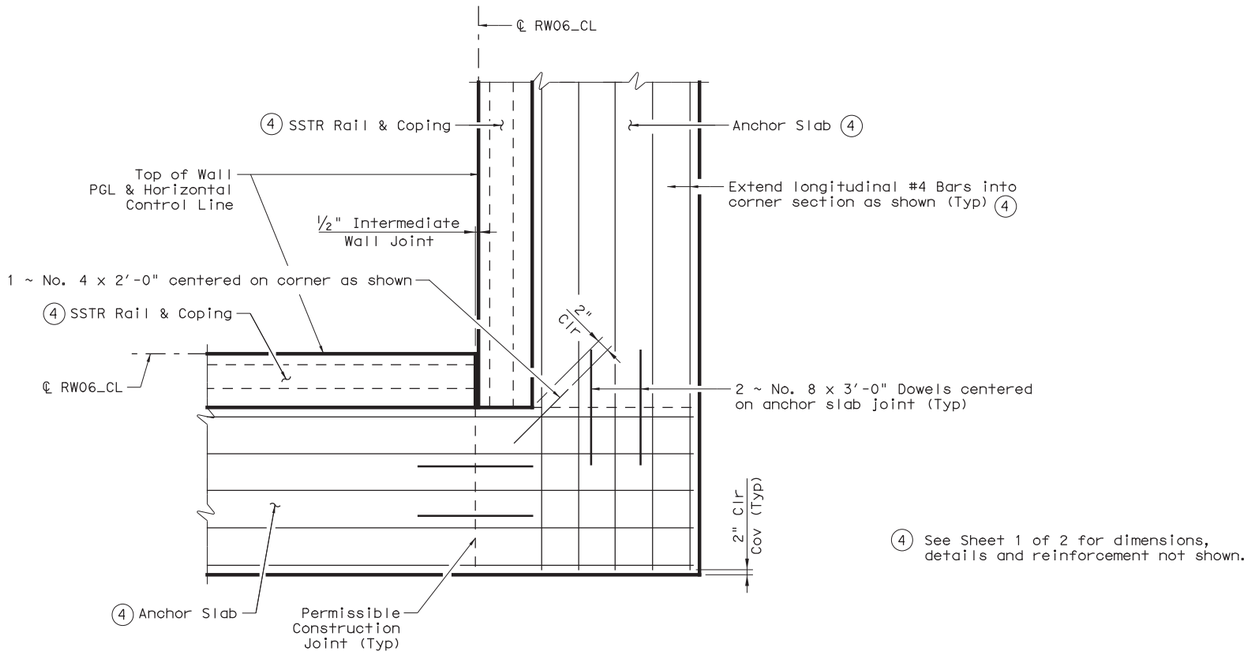

4 See Sheet 1 of 2 for dimensions, details and reinforcement not shown.

ANCHOR SLAB AT WALL CORNER

NOTES:

See Sheet 1 of 2 for General Notes.

See "Retaining Wall RW-06 Plan & Profile" sheet for additional information.

STATE OF TEXAS
JOHN M. HOLT
68237
REGISTERED PROFESSIONAL ENGINEER

03/22/2018

Texas Department of Transportation | Bridge Division Standard

RETAINING WALL TRAFFIC RAILING FOUNDATIONS

SH 2 OF 2 RW(TRF)(MOD)

FILE: rwstde03.dgn	DN: TxDOT	CK: TxDOT	DW: JTR	CK: MPM
©TxDOT March 2010	CONT	SECT	JOB	HIGHWAY
REVISIONS 01-13: Precast option with Rails. MOD 01/18: Anchor Slab Corner Detail	2103	01	034	
	DIST	COUNTY		SHEET NO.
	AUS	WILLIAMSON		84

DATE: 3/22/2018 4:16:43 PM
FILE: c:\pw\working\dal\d0911860\rwstde03A.dgn

DISCLAIMER:
The use of this standard is governed by the "Texas Engineering Practice Act". No warranty of any kind is made by TxDOT for any purpose whatsoever. TxDOT assumes no responsibility for the conversion of this standard to other formats or for incorrect results or damages resulting from its use.

DATE: 3/23/2018 10:38:18 AM
FILE: c:\pwworking\dal\d0911860\crrstde1.dgn

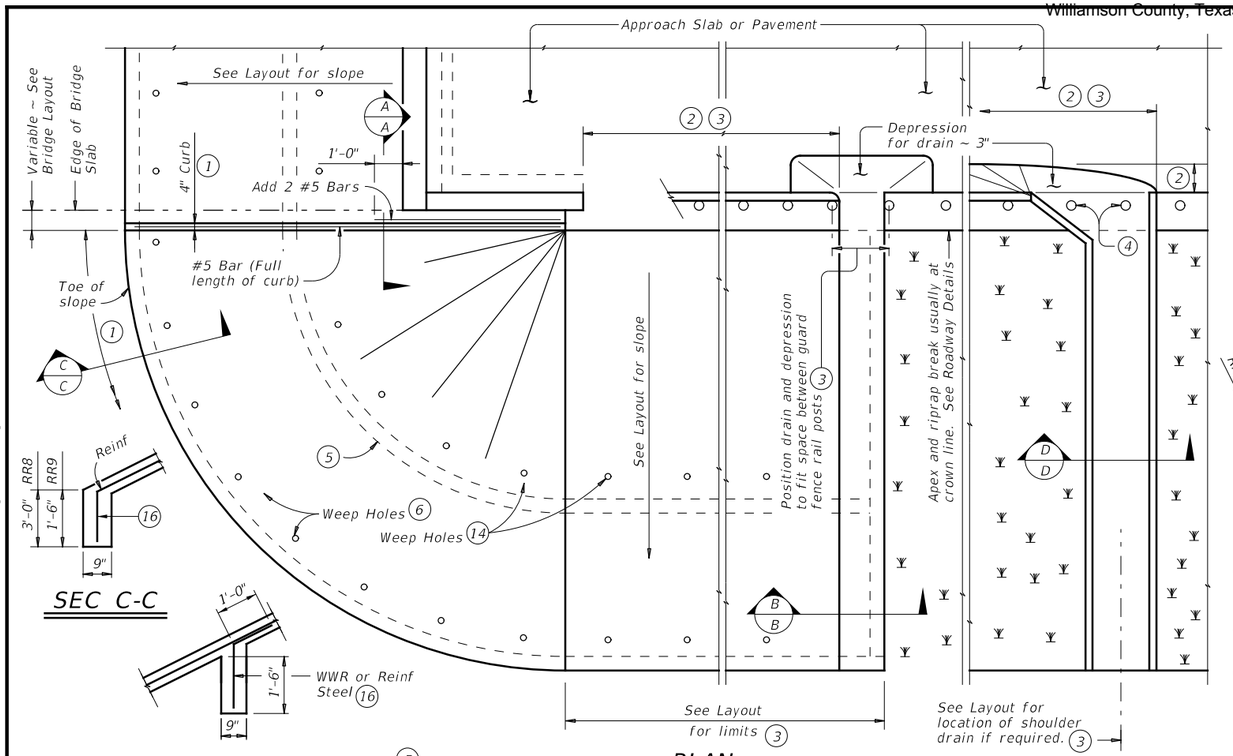

PLAN

SEC C-C

INTERMEDIATE TOEWALL

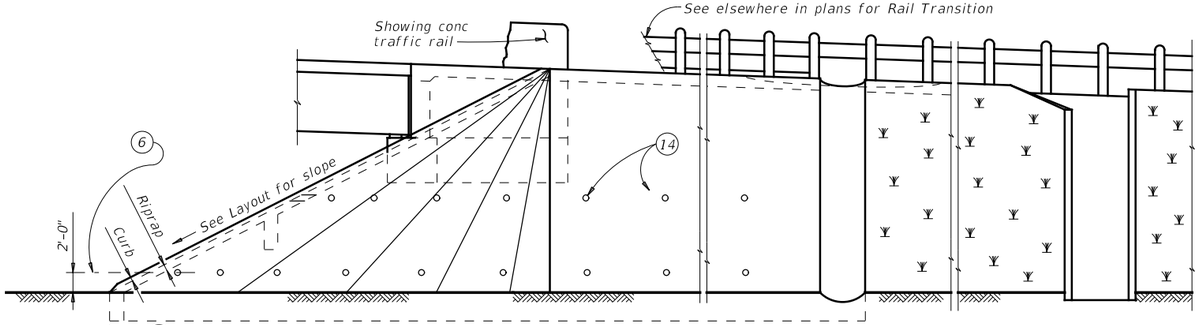

ELEVATION

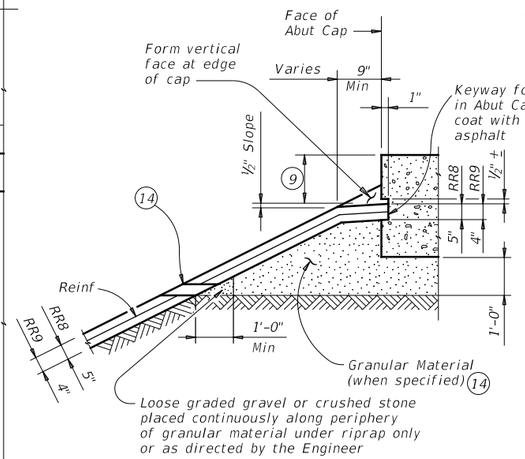

SHOWING KEYWAY OPTION

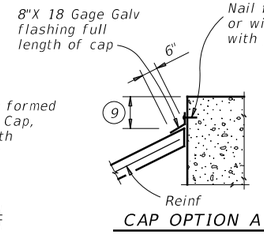

CAP OPTION A

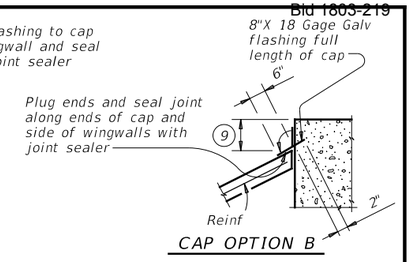

CAP OPTION B

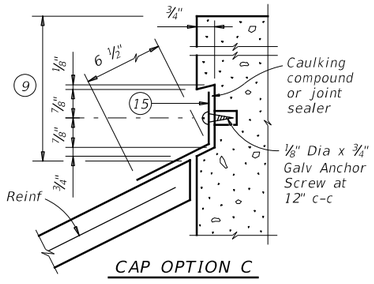

CAP OPTION C

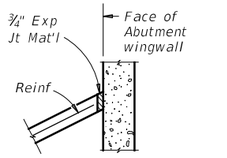

SECT THRU RIPRAP AT WINGWALL (12)

SECTIONS THRU RIPRAP AT CAP (11)

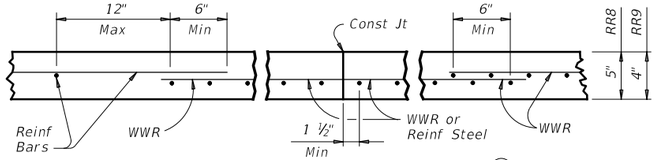

REINFORCEMENT DETAILS (13)

See General Notes for optional sythetic fiber reinforcement.

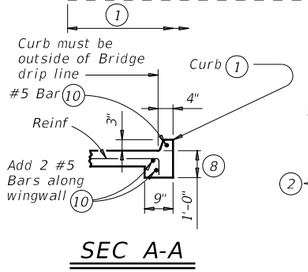

SEC A-A

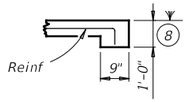

SEC B-B

(No Drain)

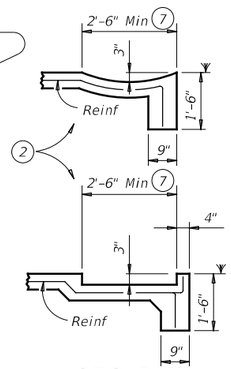

SEC B-B

(Shoulder Drain integral with riprap)

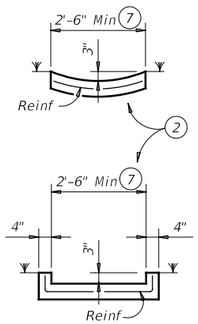

SEC D-D

(Shoulder Drain)

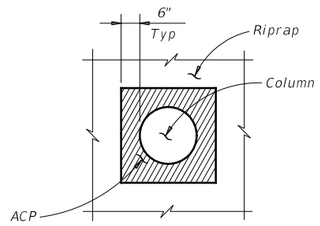

Riprap Blockout to be filled with ACP. (Subsidiary to Riprap)

RIPRAP DETAIL AT COLUMNS

(As directed by the Engineer)

1. When riprap is shown extended around header on layout, extend slab and toewall as shown and eliminate 4" curb.
2. Limits and configuration of drains and depressions are as shown elsewhere in plans or as directed by the Engineer.
3. Location of shoulder drain must consider limitations imposed by rail transition. Do not locate shoulder drains at expansion joints between approach slab and concrete pavement.
4. See details elsewhere in plans for installation of guard fence posts through concrete riprap.
5. Provide intermediate toewall only when designated elsewhere in the plans or included in the specifications.
6. Provide lower level of 2" Dia weep holes at 10' c-c backed by 1 CF packet of gravel and galvanized hardware cloth at all locations unless directed by the Engineer to eliminate.
7. Use wider or other drain configurations if shown elsewhere in plans or if directed by the Engineer.
8. Wall extension may be reduced or modified if approved by the Engineer. Increase wall extension to 1'-6" whenever the optional intermediate toewall is called for in the plans.
9. Top of cap to top of riprap dimension varies as directed by the Engineer. Should be 9" Min for beam/slab type bridges and 1'-6" for slab span, box beam, or slab beam bridges.
10. #5 bars shown are required even when synthetic fiber reinforcing option is selected.
11. Provide sealing option for joint between the face of cap and riprap as designated by the Engineer or as shown elsewhere on plans.
12. Flashing (shown in Cap Option A) may be used at wingwall in addition to Exp Jt Mat'l if shown on plans or directed by the Engineer.
13. Provide #3 reinforcing bars at 18" Spa c-c. Provide Welded Wire Reinforcement (WWR) as 6x6-D3xD3. Combinations of WWR and reinforcing bars may be used if both are permitted. Use lap splices of a minimum 6 inches, measured from the transverse wire of WWR, and the ends of reinforcing bars.
14. If granular material is specified, provide upper level of 2" Dia weep holes at 10' c-c backed by galvanized hardware cloth.
15. 8" x 18 Gage Galv Sheet Metal
16. Provide WWR or #3 bars, with 1'-0" extension into slope.

FOR CONTRACTOR'S INFORMATION ONLY:
5" of RR8 = 0.015 CY/SF
4" of RR9 = 0.012 CY/SF
#3 Reinf at 18" c-c = 0.501 Lbs/SF
6x6-D3xD3 = 0.408 Lbs/SF

GENERAL NOTES:

Provide Class "B" concrete with a minimum compressive strength of 2,000 psi unless noted elsewhere in plans.

Provide Grade 60 reinforcing steel.

Provide synthetic fibers listed on the "Fibers for Concrete" Material Producer List (MPL) in lieu of steel reinforcing in riprap concrete unless noted otherwise.

Install construction joints or grooved joints extending the full slant slope height at intervals of approximately 20 feet unless otherwise directed by the Engineer.

Hardware cloth, loose grade stone behind weep holes, flashing, or other sealing material are subsidiary to the bid item "Riprap".

Use reinforcing bars, deformed Welded Wire Reinforcing (WWR), or any suitable combination of both types for riprap reinforcing, unless specified elsewhere in the plans.

See Layout for limits of riprap.

RR8 is to be used on stream crossings.

RR9 is to be used on other embankments.

Texas Department of Transportation

Bridge Division Standard

CONCRETE RIPRAP AND SHOULDER DRAINS
EMBANKMENTS AT BRIDGE ENDS (TYPES RR8 & RR9)

CRR

FILE: crrstde1.dgn	DN: TxDOT	CK: TxDOT	DW: TxDOT	CK: TxDOT
©TxDOT January 2015 REVISIONS	CONT	SECT	JOB	HIGHWAY
	2103	01	034	
	DIST	COUNTY		SHEET NO.
	AUS	WILLIAMSON		85

RT QUARRY DITCH FL "℄ DITCH RT2"

		STATION	NORTHING	EASTING
Element: Linear				
POB	( )	11+00.00	10194812.508	3125125.121
PI	( )	15+00.00	10194792.734	3124725.610
Tangent Direction:		N 87°09'59" E		
Tangent Length:		400.00		
Element: Linear				
PI	( )	15+00.00	10194792.734	3124725.610
PC	( )	16+16.89	10194786.955	3124608.862
Tangent Direction:		N 87°09'59" E		
Tangent Length:		116.89		
Element: Circular				
PC	( )	16+16.89	10194786.955	3124608.862
PI	( )	20+92.16	10194763.459	3124134.174
CC	( )		10198003.517	3124449.652
PT	( )	25+60.62	10194878.084	3123672.935
Radius:		3220.50		
Delta:		16°47'23" Right		
Degree of Curvature(Arc):		1°46'45"		
Length:		943.73		
Tangent:		475.27		
Chord:		940.35		
Middle Ordinate:		34.51		
External:		34.88		
Tangent Direction:		N 87°09'59" E		
Radial Direction:		N 2°50'01" W		
Chord Direction:		N 84°26'19" W		
Radial Direction:		N 13°57'22" E		
Tangent Direction:		N 76°02'38" W		
Element: Linear				
PT	( )	25+60.62	10194878.084	3123672.935
PI	( )	26+69.31	10194904.299	3123567.450
Tangent Direction:		N 76°02'38" W		
Tangent Length:		108.69		
Element: Linear				
PI	( )	26+69.31	10194904.299	3123567.450
PC	( )	26+70.62	10194904.658	3123566.190
Tangent Direction:		N 74°05'15" W		
Tangent Length:		1.31		
Element: Circular				
PC	( )	26+70.62	10194904.658	3123566.190
PI	( )	27+35.78	10194922.522	3123503.529
CC	( )		10198003.517	3124449.652
PT	( )	28+00.92	10194942.905	3123441.642
Radius:		3222.33		
Delta:		2°19'00" Right		
Degree of Curvature(Arc):		1°46'41"		
Length:		130.30		
Tangent:		65.16		
Chord:		130.29		
Middle Ordinate:		0.66		
External:		0.66		
Tangent Direction:		N 74°05'15" W		
Radial Direction:		N 15°54'45" E		
Chord Direction:		N 72°55'45" W		
Radial Direction:		N 18°13'45" E		
Tangent Direction:		N 71°46'15" W		
Element: Linear				
PT	( )	28+00.92	10194942.905	3123441.642
PC	( )	28+06.70	10194944.713	3123436.153
Tangent Direction:		N 71°46'15" W		
Tangent Length:		5.78		
Element: Circular				
PC	( )	28+06.70	10194944.713	3123436.153
PI	( )	30+47.18	10195019.940	3123207.740
CC	( )		10197414.225	3124249.485
PT	( )	32+86.30	10195135.786	3122997.000
Radius:		2600.00		
Delta:		10°34'08" Right		
Degree of Curvature(Arc):		2°12'13"		
Length:		479.60		
Tangent:		240.48		
Chord:		478.92		
Middle Ordinate:		11.05		
External:		11.10		
Tangent Direction:		N 71°46'15" W		
Radial Direction:		N 18°13'45" E		
Chord Direction:		N 66°29'11" W		
Radial Direction:		N 28°47'53" E		
Tangent Direction:		N 61°12'07" W		

RT QUARRY DITCH FL "℄ DITCH RT2" CONT

		STATION	NORTHING	EASTING
Element: Linear				
PT	( )	32+86.30	10195135.786	3122997.000
PC	( )	33+55.56	10195169.151	3122936.306
Tangent Direction:		N 61°12'07" W		
Tangent Length:		69.26		
Element: Circular				
PC	( )	33+55.56	10195169.151	3122936.306
PI	( )	33+62.26	10195172.380	3122930.431
CC	( )		10195142.861	3122921.854
PT	( )	33+68.75	10195172.802	3122923.741
Radius:		30.00		
Delta:		25°11'27" Left		
Degree of Curvature(Arc):		190°59'09"		
Length:		13.19		
Tangent:		6.70		
Chord:		13.08		
Middle Ordinate:		0.72		
External:		0.74		
Tangent Direction:		N 61°12'07" W		
Radial Direction:		N 28°47'53" E		
Chord Direction:		N 73°47'50" W		
Radial Direction:		N 3°36'26" E		
Tangent Direction:		N 86°23'34" W		
Element: Linear				
PT	( )	33+68.75	10195172.802	3122923.741
PC	( )	33+76.56	10195173.293	3122915.947
Tangent Direction:		N 86°23'34" W		
Tangent Length:		7.81		
Element: Circular				
PC	( )	33+76.56	10195173.293	3122915.947
PI	( )	33+78.77	10195173.432	3122913.743
CC	( )		10195183.273	3122916.576
PT	( )	33+80.90	10195174.486	3122911.802
Radius:		10.00		
Delta:		24°54'27" Right		
Degree of Curvature(Arc):		572°57'28"		
Length:		4.35		
Tangent:		2.21		
Chord:		4.31		
Middle Ordinate:		0.24		
External:		0.24		
Tangent Direction:		N 86°23'34" W		
Radial Direction:		N 3°36'26" E		
Chord Direction:		N 73°56'21" W		
Radial Direction:		N 28°30'53" E		
Tangent Direction:		N 61°29'07" W		
Element: Linear				
PT	( )	33+80.90	10195174.486	3122911.802
POE	( )	33+82.90	10195175.441	3122910.045
Tangent Direction:		N 61°29'07" W		
Tangent Length:		2.00		

STATE OF TEXAS
JACOB E. WALKER
122057
LICENSED
PROFESSIONAL ENGINEER

03/23/2018

NO.	DATE	REVISION	APPROVED

WILLIAMSON COUNTY

HDR Engineering, Inc.
810 Hesters Crossing, Suite 120
Round Rock, Texas 78681
Texas Registered Engineering Firm F-754

SOUTHWEST BYPASS
SEGMENT 2

GRADING ALIGNMENT DATA

SHEET 1 OF 2

DESIGN	FED.RD. DIV.NO.	FEDERAL AID PROJECT NO.		HIGHWAY NO.
JC	6			
GRAPHICS	STATE	DISTRICT	COUNTY	SHEET NO.
LG	TEXAS	AUS	WILLIAMSON	
CHECK	CONTROL	SECTION	JOB	86
JW	2103	01	034	
CHECK				
JC				

PLOT DRIVER: TXDOT_PDF_BW.pltcfg USER: lgomezgonz DATE: 3/23/2018 FILE: \
PENTABLE: S2-00000201107018.tbl TIME: 1:47:03 PM SCALE: 1:1

RT CUT DITCH FL "℄ DITCH RT3"

		STATION	NORTHING	EASTING
Element: Circular				
PC	( )	0+00.00	10195172.451	3122915.552
PI	( )	3+94.01	10195360.168	3122569.134
CC	( )		10198003.517	3124449.652
PCC	( )	7+84.12	10195625.875	3122278.197
Radius:		3220.00		
Delta:		13°57'08.80" Right		
Degree of Curvature(Arc):		1°46'45.74"		
Length:		784.12		
Tangent:		394.01		
Chord:		782.19		
Middle Ordinate:		23.84		
External:		24.02		
Tangent Direction:		N 61°32'51.33" W		
Radial Direction:		N 28°27'08.67" E		
Chord Direction:		N 54°34'16.93" W		
Radial Direction:		N 42°24'17.48" E		
Tangent Direction:		N 47°35'42.52" W		
Element: Circular				
PCC	( )	7+84.12	10195625.875	3122278.197
PI	( )	9+83.22	10195760.140	3122131.183
CC	( )		10197057.629	3123585.791
PCC	( )	11+80.93	10195921.481	3122014.521
Radius:		1939.00		
Delta:		11°43'31.18" Right		
Degree of Curvature(Arc):		2°57'17.69"		
Length:		396.81		
Tangent:		199.10		
Chord:		396.12		
Middle Ordinate:		10.14		
External:		10.20		
Tangent Direction:		N 47°35'42.52" W		
Radial Direction:		N 42°24'17.48" E		
Chord Direction:		N 41°43'56.93" W		
Radial Direction:		N 54°07'48.66" E		
Tangent Direction:		N 35°52'11.34" W		
Element: Circular				
PCC	( )	11+80.93	10195921.481	3122014.521
PI	( )	12+80.09	10196001.832	3121956.421
CC	( )		10197155.482	3123721.119
PT	( )	13+79.10	10196087.288	3121906.127
Radius:		2106.00		
Delta:		5°23'28.79" Right		
Degree of Curvature(Arc):		2°43'14.15"		
Length:		198.17		
Tangent:		99.16		
Chord:		198.09		
Middle Ordinate:		2.33		
External:		2.33		
Tangent Direction:		N 35°52'11.34" W		
Radial Direction:		N 54°07'48.66" E		
Chord Direction:		N 33°10'26.95" W		
Radial Direction:		N 59°31'17.45" E		
Tangent Direction:		N 30°28'42.55" W		
Element: Linear				
PT	( )	13+79.10	10196087.288	3121906.127
PC	( )	15+95.99	10196274.210	3121796.116
Tangent Direction:		N 30°28'42.55" W		
Tangent Length:		216.89		
Element: Circular				
PC	( )	15+95.99	10196274.210	3121796.116
PI	( )	16+46.43	10196317.684	3121770.530
CC	( )		10196314.787	3121865.062
PT	( )	16+86.00	10196359.510	3121798.730
Radius:		80.00		
Delta:		64°28'01.68" Right		
Degree of Curvature(Arc):		71°37'11.01"		
Length:		90.01		
Tangent:		50.44		
Chord:		85.34		
Middle Ordinate:		12.33		
External:		14.58		
Tangent Direction:		N 30°28'42.55" W		
Radial Direction:		N 59°31'17.45" E		
Chord Direction:		N 1°45'18.28" E		
Radial Direction:		S 56°00'40.88" E		
Tangent Direction:		N 33°59'19.12" E		
Element: Linear				
PT	( )	16+86.00	10196359.510	3121798.730
PI	( )	17+25.29	10196392.088	3121820.695
Tangent Direction:		N 33°59'19.12" E		
Tangent Length:		39.29		
Element: Linear				
PI	( )	17+25.29	10196392.088	3121820.695
POE	( )	17+29.80	10196394.617	3121824.425
Tangent Direction:		N 55°51'51.87" E		
Tangent Length:		4.51		

BOTTOM OF RT WALL CUT "℄ RT WALL CUT"

		STATION	NORTHING	EASTING
Element: Circular				
PC	( )	0+00.00	10195174.209	3122916.505
PI	( )	3+44.27	10195338.230	3122613.817
CC	( )		10198003.517	3124449.652
PCC	( )	6+85.93	10195562.571	3122352.676
Radius:		3218.00		
Delta:		12°12'46.51" Right		
Degree of Curvature(Arc):		1°46'49.72"		
Length:		685.93		
Tangent:		344.27		
Chord:		684.64		
Middle Ordinate:		18.26		
External:		18.36		
Tangent Direction:		N 61°32'51.33" W		
Radial Direction:		N 28°27'08.67" E		
Chord Direction:		N 55°26'28.07" W		
Radial Direction:		N 40°39'55.18" E		
Tangent Direction:		N 49°20'04.82" W		
Element: Circular				
PCC	( )	6+85.93	10195562.571	3122352.676
PI	( )	10+34.65	10195789.805	3122088.169
CC	( )		10197155.482	3123721.119
PT	( )	13+77.05	10196090.331	3121911.298
Radius:		2100.00		
Delta:		18°51'22.26" Right		
Degree of Curvature(Arc):		2°43'42.13"		
Length:		691.12		
Tangent:		348.71		
Chord:		688.00		
Middle Ordinate:		28.37		
External:		28.76		
Tangent Direction:		N 49°20'04.82" W		
Radial Direction:		N 40°39'55.18" E		
Chord Direction:		N 39°54'23.69" W		
Radial Direction:		N 59°31'17.45" E		
Tangent Direction:		N 30°28'42.55" W		
Element: Linear				
PT	( )	13+77.05	10196090.331	3121911.298
PC	( )	15+93.94	10196277.253	3121801.287
Tangent Direction:		N 30°28'42.55" W		
Tangent Length:		216.89		
Element: Circular				
PC	( )	15+93.94	10196277.253	3121801.287
PI	( )	16+40.60	10196317.467	3121777.620
CC	( )		10196314.787	3121865.062
PT	( )	16+77.21	10196356.155	3121803.705
Radius:		74.00		
Delta:		64°28'01.68" Right		
Degree of Curvature(Arc):		77°25'36.22"		
Length:		83.26		
Tangent:		46.66		
Chord:		78.94		
Middle Ordinate:		11.40		
External:		13.48		
Tangent Direction:		N 30°28'42.55" W		
Radial Direction:		N 59°31'17.45" E		
Chord Direction:		N 1°45'18.28" E		
Radial Direction:		S 56°00'40.88" E		
Tangent Direction:		N 33°59'19.12" E		
Element: Linear				
PT	( )	16+77.21	10196356.155	3121803.705
PI	( )	17+04.76	10196379.004	3121819.109
Tangent Direction:		N 33°59'19.12" E		
Tangent Length:		27.56		
Element: Linear				
PI	( )	17+04.76	10196379.004	3121819.109
PI	( )	17+17.94	10196392.088	3121820.695
Tangent Direction:		N 6°54'32.08" E		
Tangent Length:		13.18		
Element: Linear				
PI	( )	17+17.94	10196392.088	3121820.695
POE	( )	17+22.45	10196394.617	3121824.425
Tangent Direction:		N 55°51'51.87" E		
Tangent Length:		4.51		

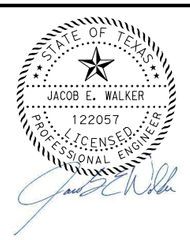

03/23/2018

NO.	DATE	REVISION	APPROVED

WILLIAMSON COUNTY

HDR Engineering, Inc.
810 Hesters Crossing, Suite 120
Round Rock, Texas 78681
Texas Registered Engineering Firm F-754

SOUTHWEST BYPASS SEGMENT 2

GRADING ALIGNMENT DATA

SHEET 2 OF 2

DESIGN	FED.RD. DIV.NO.	FEDERAL AID PROJECT NO.		HIGHWAY NO.
JC	6			
GRAPHICS LG	STATE	DISTRICT	COUNTY	SHEET NO.
CHECK JW	TEXAS	AUS	WILLIAMSON	87
CHECK JC	CONTROL 2103	SECTION 01	JOB 034	

PLOT DRIVER: TXDOT_PDF_BW.pltcfg USER: lgomezgonz DATE: 3/23/2018 FILE: \
PENTABLE: S2-0000020170718.tbl TIME: 1:47:07 PM SCALE:1:1

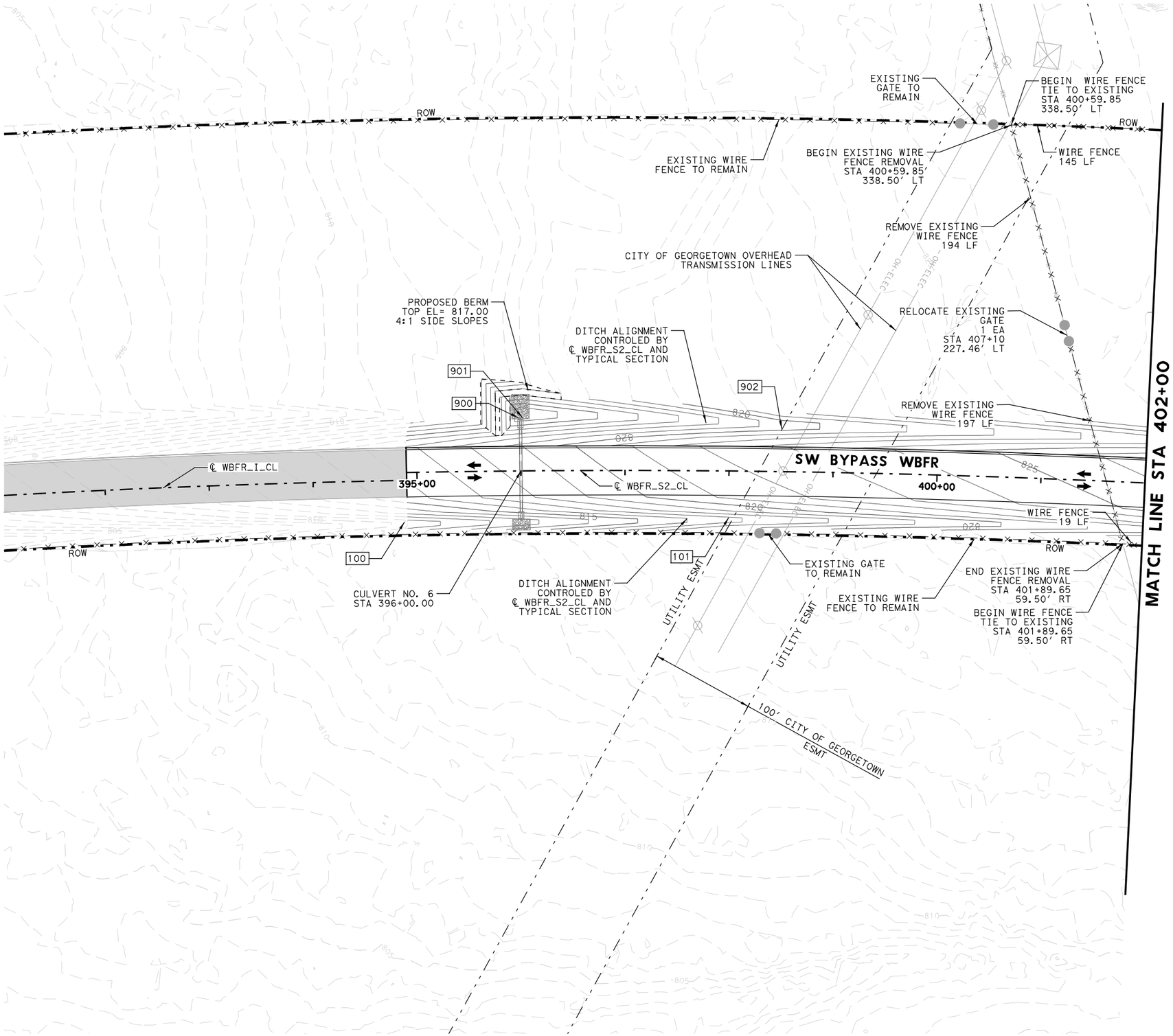

LEGEND

- EXISTING WIRE FENCE
- PROPOSED WIRE FENCE
- CHAIN LINK FENCE
- BOULDER DELINEATION
- ROW
- PCTB
- GRADE BREAK
- GATE
- ### GRADING AND ROCK CUT POINT

NOTES:

1. POTENTIAL FENCING GAPS: IF SLOPES ARE GREATER THAN 2:1 OR ELEVATION CHANGE GREATER THAN 4 FT, COORDINATE FENCE AND BOULDER PLACEMENT WITH ENGINEER.
2. SEE DRAINAGE SHEETS FOR CULVERT INFORMATION.
3. SEE ROADWAY SHEETS FOR GEOMETRIC INFORMATION INFORMATION.
4. SEE GRADING POINT TABLE SHEET FOR GRADING POINT INFORMATION.
4. SEE ROCK CUT CONTROL POINTS SHEETS FOR ROCK CUT POINT INFORMATION.

0 50 100 150 200

SCALE IN FEET

STATE OF TEXAS
JACOB E. WALKER
122057
LICENSED
PROFESSIONAL ENGINEER

03/23/2018

NO.	DATE	REVISION	APPROVED

WILLIAMSON COUNTY TX

HDR Engineering, Inc.
810 Hesters Crossing, Suite 120
Round Rock, Texas 78681
Texas Registered Engineering Firm F-754

SOUTHWEST BYPASS SEGMENT 2

FENCING AND GRADING PLAN

STA 391+00 TO STA 402+00

SCALE: 1"=100' SHEET 1 OF 6

DESIGN	FED.RD. DIV.NO.	FEDERAL AID PROJECT NO.		HIGHWAY NO.
JC	6			
GRAPHICS	STATE	DISTRICT	COUNTY	SHEET NO.
LG	TEXAS	AUS	WILLIAMSON	
CHECK	CONTROL	SECTION	JOB	88
JW	2103	01	034	
CHECK				
JC				

PLOT DRIVER: TXDOT_PDF_BW.pltcfg PENTABLE: S2-00000220170718.tbl
USER: lgomezgon2 DATE: 3/23/2018 TIME: 1:47:22 PM SCALE: 1:100
FILE: \

4/12/2018 7:20 AM

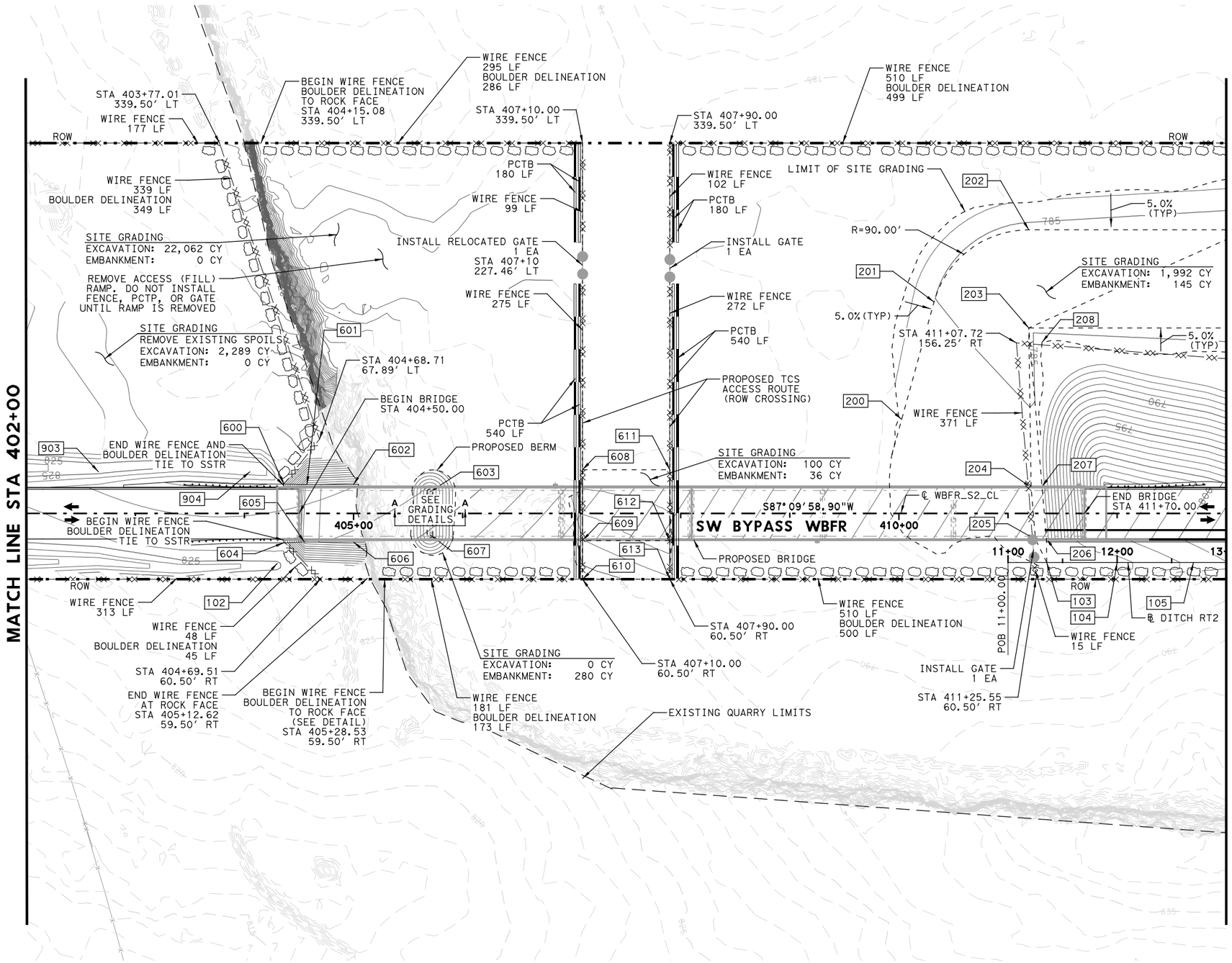

LEGEND

- EXISTING WIRE FENCE
- PROPOSED WIRE FENCE
- CHAIN LINK FENCE
- BOULDER DELINEATION
- ROW
- PCTB
- GRADE BREAK
- GATE
- ### GRADING AND ROCK CUT POINT

NOTES:

1. POTENTIAL FENCING GAPS: IF SLOPES ARE GREATER THAN 2:1 OR ELEVATION CHANGE GREATER THAN 4 FT, COORDINATE FENCE AND BOULDER PLACEMENT WITH ENGINEER.
2. SEE DRAINAGE SHEETS FOR CULVERT INFORMATION.
3. SEE ROADWAY SHEETS FOR GEOMETRIC INFORMATION INFORMATION.
4. SEE GRADING POINT TABLE SHEET FOR GRADING POINT INFORMATION.
4. SEE ROCK CUT CONTROL POINTS SHEETS FOR ROCK CUT POINT INFORMATION.

0 50 100 150 200

SCALE IN FEET

STATE OF TEXAS
JACOB E. WALKER
122057
LICENSED
PROFESSIONAL ENGINEER

03/23/2018

NO.	DATE	REVISION	APPROVED

WILLIAMSON COUNTY

HDR Engineering, Inc.
810 Hesters Crossing, Suite 120
Round Rock, Texas 78681
Texas Registered Engineering Firm F-754

SOUTHWEST BYPASS SEGMENT 2

FENCING AND GRADING PLAN

STA 402+00 TO STA 413+00

SCALE: 1"=100' SHEET 2 OF 6

DESIGN	FED.RD. DIV.NO.	FEDERAL AID PROJECT NO.		HIGHWAY NO.
JC	6			
GRAPHICS	STATE	DISTRICT	COUNTY	SHEET NO.
RR	TEXAS	AUS	WILLIAMSON	
CHECK	CONTROL	SECTION	JOB	89
JW	2103	01	034	
CHECK				
JC				

PLOT DRIVER: TXDOT_PDF_BW.pltcfg PENTABLE: S2-0000020170718.tbl
USER: lgomezgonz DATE: 3/23/2018 TIME: 1:47:30 PM SCALE: 1:100
FILE: \

4/12/2018 7:20 AM

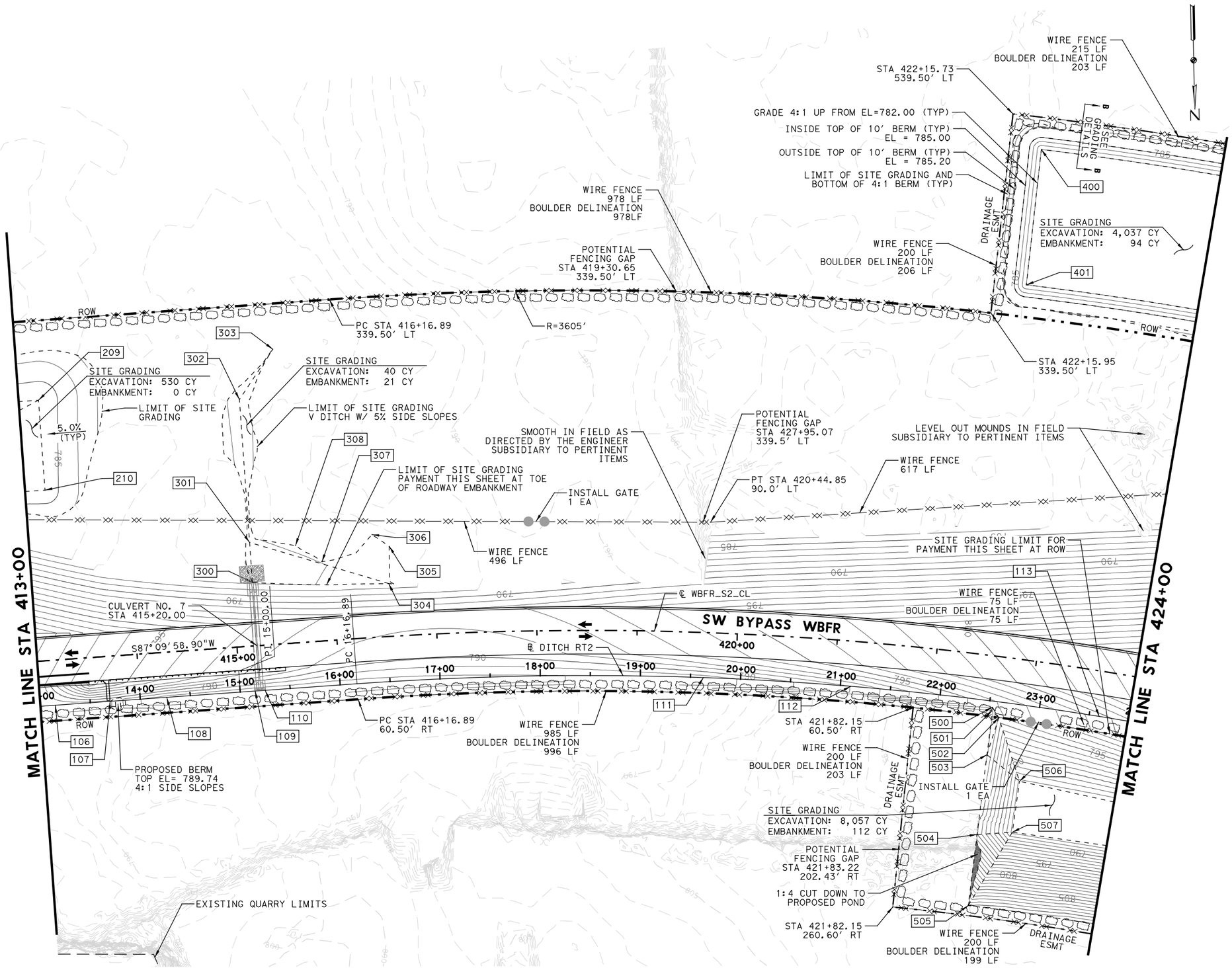

LEGEND

- EXISTING WIRE FENCE
- PROPOSED WIRE FENCE
- CHAIN LINK FENCE
- BOULDER DELINEATION
- ROW
- PCTB
- GRADE BREAK
- GATE
- ### GRADING AND ROCK CUT POINT

NOTES:

1. POTENTIAL FENCING GAPS: IF SLOPES ARE GREATER THAN 2:1 OR ELEVATION CHANGE GREATER THAN 4 FT, COORDINATE FENCE AND BOULDER PLACEMENT WITH ENGINEER.
2. SEE DRAINAGE SHEETS FOR CULVERT INFORMATION.
3. SEE ROADWAY SHEETS FOR GEOMETRIC INFORMATION INFORMATION.
4. SEE GRADING POINT TABLE SHEET FOR GRADING POINT INFORMATION.
4. SEE ROCK CUT CONTROL POINTS SHEETS FOR ROCK CUT POINT INFORMATION.

0 50 100 150 200

SCALE IN FEET

STATE OF TEXAS
JACOB E. WALKER
122057
LICENSED
PROFESSIONAL ENGINEER

03/23/2018

NO.	DATE	REVISION	APPROVED

WILLIAMSON COUNTY

HDR Engineering, Inc.
810 Hesters Crossing, Suite 120
Round Rock, Texas 78681
Texas Registered Engineering Firm F-754

SOUTHWEST BYPASS SEGMENT 2

FENCING AND GRADING PLAN

STA 413+00 TO STA 424+00

SCALE: 1"=100' SHEET 3 OF 6

DESIGN	FED.RD. DIV.NO.	FEDERAL AID PROJECT NO.		HIGHWAY NO.
JC	6			
GRAPHICS	STATE	DISTRICT	COUNTY	SHEET NO.
RR	TEXAS	AUS	WILLIAMSON	
CHECK	CONTROL	SECTION	JOB	90
JW	2103	01	034	
CHECK				
JC				

PLOT DRIVER: TXDOT_PDF_BW.pltcfg PENTABLE: S2-0000020170718.tbl
USER: lgomezgonz DATE: 3/23/2018 TIME: 1:47:40 PM SCALE: 1:00
FILE: \

4/12/2018 7:20 AM

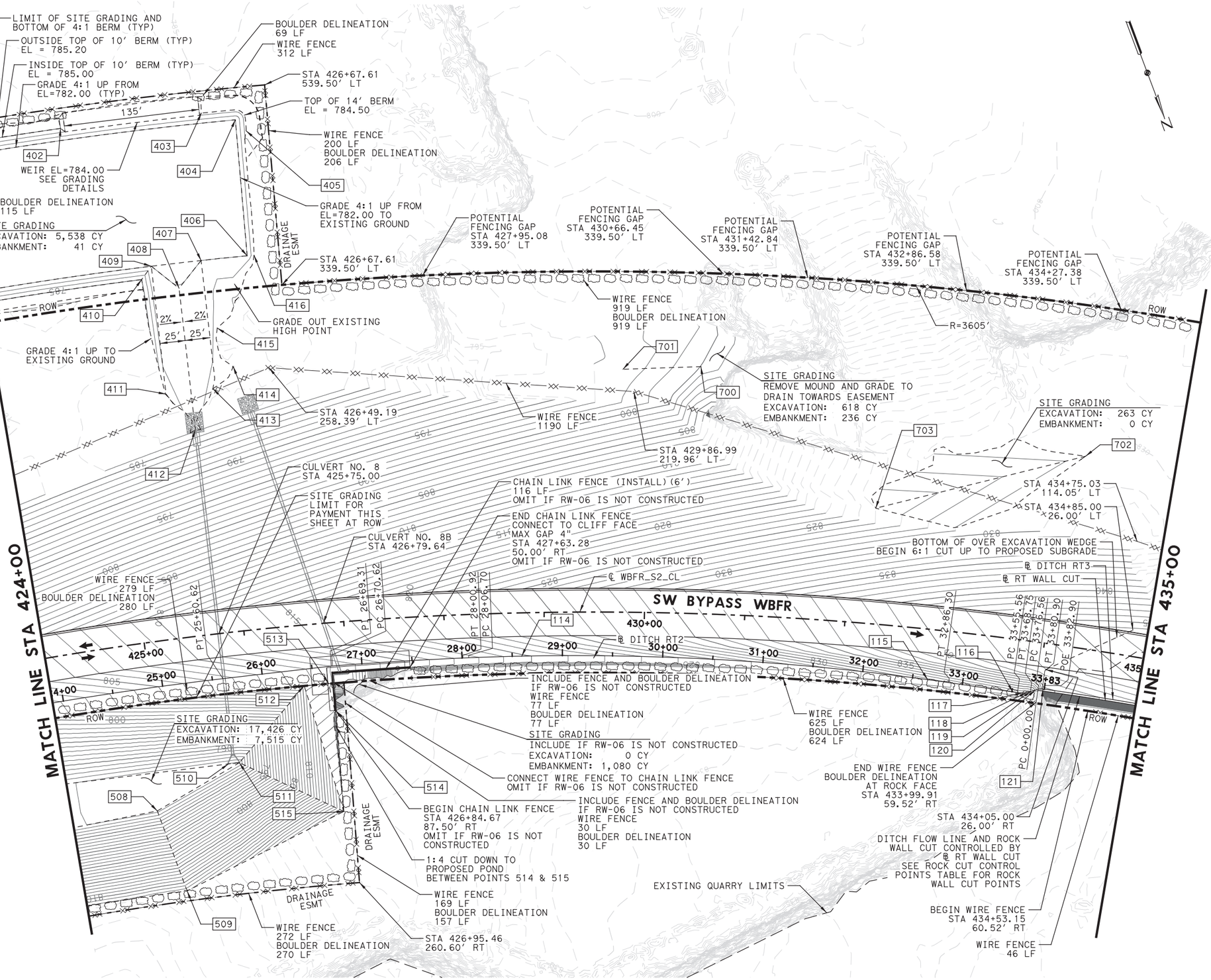

LEGEND

- EXISTING WIRE FENCE
- PROPOSED WIRE FENCE
- CHAIN LINK FENCE
- BOULDER DELINEATION
- ROW
- PCTB
- GRADE BREAK
- GATE
- ### GRADING AND ROCK CUT POINT

NOTES:

1. POTENTIAL FENCING GAPS: IF SLOPES ARE GREATER THAN 2:1 OR ELEVATION CHANGE GREATER THAN 4 FT, COORDINATE FENCE AND BOULDER PLACEMENT WITH ENGINEER.
2. SEE DRAINAGE SHEETS FOR CULVERT INFORMATION.
3. SEE ROADWAY SHEETS FOR GEOMETRIC INFORMATION INFORMATION.
4. SEE GRADING POINT TABLE SHEET FOR GRADING POINT INFORMATION.
4. SEE ROCK CUT CONTROL POINTS SHEETS FOR ROCK CUT POINT INFORMATION.

0 50 100 150 200

SCALE IN FEET

STATE OF TEXAS
JACOB E. WALKER
122057
LICENSED
PROFESSIONAL ENGINEER

04/10/2018

NO.	DATE	REVISION	APPROVED

WILLIAMSON COUNTY

HDR Engineering, Inc.
810 Hesters Crossing, Suite 120
Round Rock, Texas 78681
Texas Registered Engineering Firm F-754

SOUTHWEST BYPASS SEGMENT 2

FENCING AND GRADING PLAN

STA 424+00 TO STA 435+00

SCALE: 1"=100' SHEET 4 OF 6

DESIGN	FED.RD. DIV.NO.	FEDERAL AID PROJECT NO.		HIGHWAY NO.
JC	6			
GRAPHICS RR	STATE	DISTRICT	COUNTY	SHEET NO.
CHECK JW	TEXAS	AUS	WILLIAMSON	91
CHECK JC	CONTROL	SECTION	JOB	
	2103	01	034	

PLOT DRIVER: TXDOT_PDF_BW.pltcfg PENTABLE: S2-0000020170718.tbl
USER: lgomezgonz DATE: 4/10/2018 TIME: 2:46:58 PM SCALE: 1:100
FILE: \

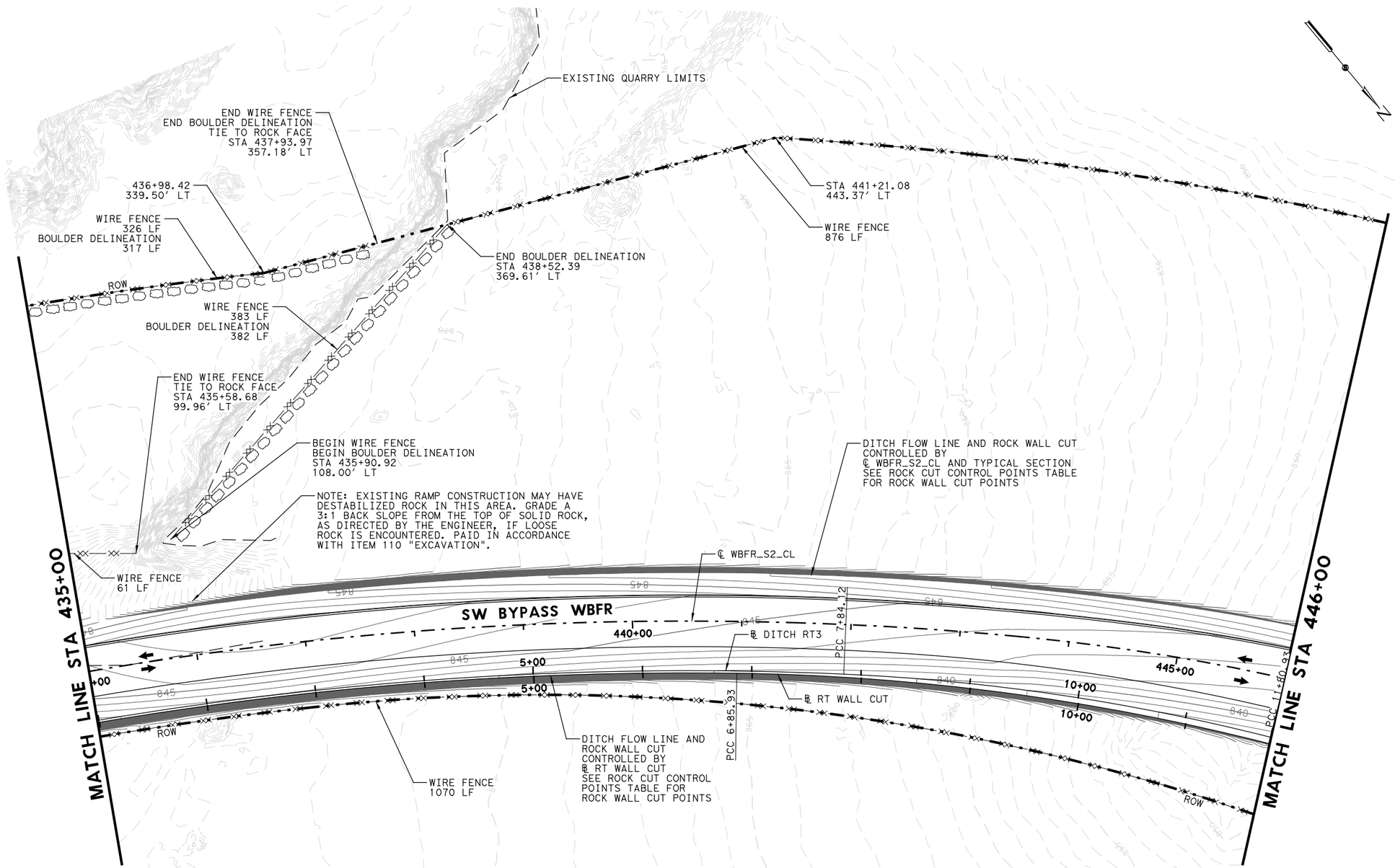

LEGEND

- EXISTING WIRE FENCE
- PROPOSED WIRE FENCE
- CHAIN LINK FENCE
- BOULDER DELINEATION
- ROW
- PCTB
- GRADE BREAK
- GATE
- ### GRADING AND ROCK CUT POINT

NOTES:

1. POTENTIAL FENCING GAPS: IF SLOPES ARE GREATER THAN 2:1 OR ELEVATION CHANGE GREATER THAN 4 FT, COORDINATE FENCE AND BOULDER PLACEMENT WITH ENGINEER.
2. SEE DRAINAGE SHEETS FOR CULVERT INFORMATION.
3. SEE ROADWAY SHEETS FOR GEOMETRIC INFORMATION INFORMATION.
4. SEE GRADING POINT TABLE SHEET FOR GRADING POINT INFORMATION.
4. SEE ROCK CUT CONTROL POINTS SHEETS FOR ROCK CUT POINT INFORMATION.

0 50 100 150 200

SCALE IN FEET

STATE OF TEXAS
JACOB E. WALKER
122057
LICENSED
PROFESSIONAL ENGINEER

03/23/2018

NO.	DATE	REVISION	APPROVED

WILLIAMSON COUNTY

HDR Engineering, Inc.
810 Hesters Crossing, Suite 120
Round Rock, Texas 78681
Texas Registered Engineering Firm F-754

SOUTHWEST BYPASS SEGMENT 2

FENCING AND GRADING PLAN

STA 435+00 TO STA 446+00

SCALE: 1"=100'

SHEET 5 OF 6

DESIGN	FED. RD. DIV. NO.	FEDERAL AID PROJECT NO.		HIGHWAY NO.
JC	6			
GRAPHICS				
RR	STATE	DISTRICT	COUNTY	SHEET NO.
CHECK	TEXAS	AUS	WILLIAMSON	
JW	CONTROL	SECTION	JOB	92
CHECK				
JC	2103	01	034	

PLOT DRIVER: TXDOT_PDF_BW.pltcfg PENTABLE: S2-0000020170718.tbl
USER: lgomezgonz DATE: 3/23/2018 TIME: 1:48:00 PM SCALE: 1:100
FILE: \

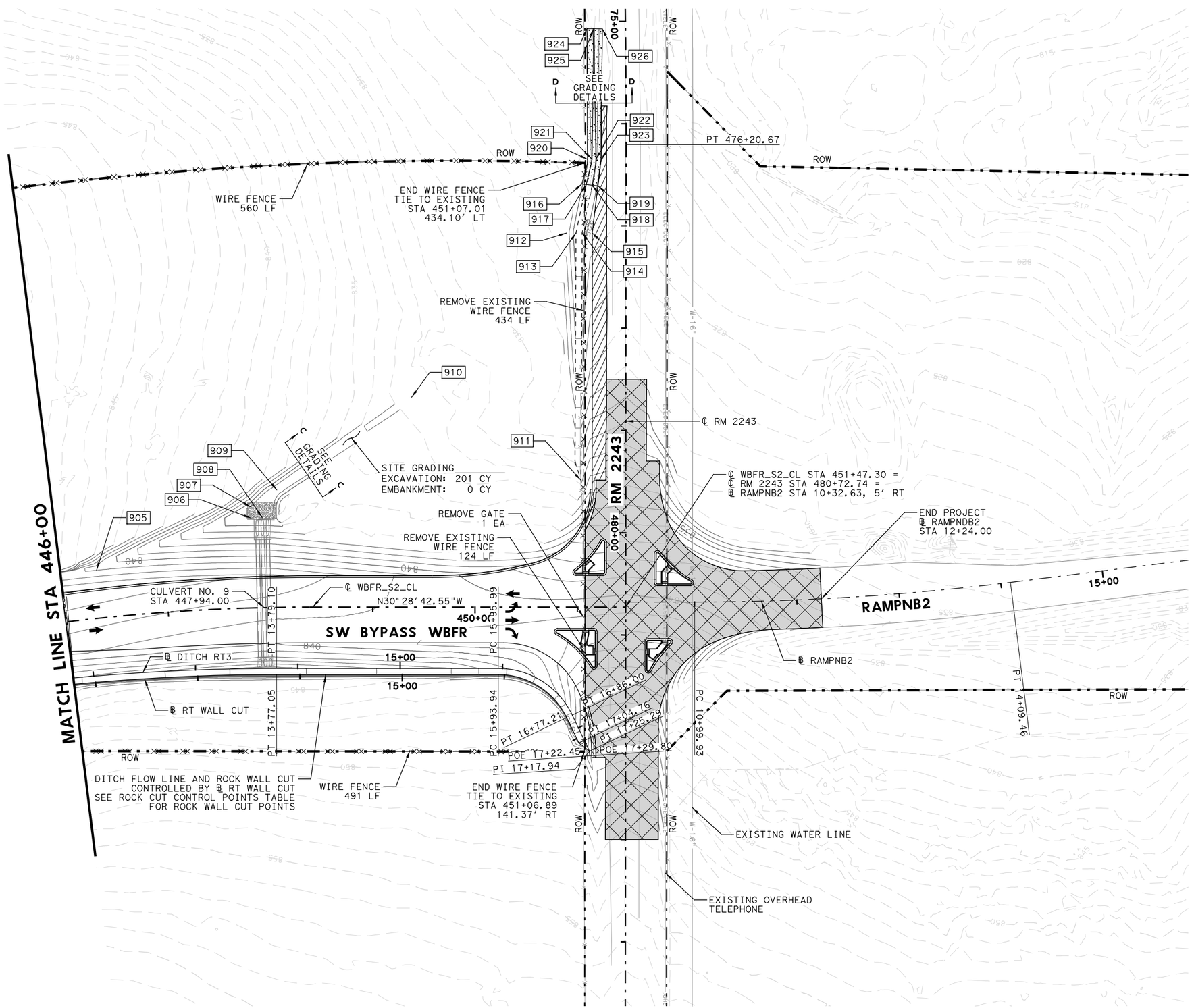

LEGEND

- EXISTING WIRE FENCE
- PROPOSED WIRE FENCE
- CHAIN LINK FENCE
- BOULDER DELINEATION
- ROW
- PCTB
- GRADE BREAK
- GATE
- ### GRADING AND ROCK CUT POINT

NOTES:

1. POTENTIAL FENCING GAPS: IF SLOPES ARE GREATER THAN 2:1 OR ELEVATION CHANGE GREATER THAN 4 FT, COORDINATE FENCE AND BOULDER PLACEMENT WITH ENGINEER.
2. SEE DRAINAGE SHEETS FOR CULVERT INFORMATION.
3. SEE ROADWAY SHEETS FOR GEOMETRIC INFORMATION INFORMATION.
4. SEE GRADING POINT TABLE SHEET FOR GRADING POINT INFORMATION.
4. SEE ROCK CUT CONTROL POINTS SHEETS FOR ROCK CUT POINT INFORMATION.

0 50 100 150 200

SCALE IN FEET

STATE OF TEXAS
JACOB E. WALKER
122057
LICENSED
PROFESSIONAL ENGINEER

03/23/2018

NO.	DATE	REVISION	APPROVED

WILLIAMSON COUNTY

HDR Engineering, Inc.
810 Hesters Crossing, Suite 120
Round Rock, Texas 78681
Texas Registered Engineering Firm F-754

SOUTHWEST BYPASS SEGMENT 2

FENCING AND GRADING PLAN

STA 446+00 TO END

SCALE: 1"=100' SHEET 6 OF 6

DESIGN	FED.RD. DIV.NO.	FEDERAL AID PROJECT NO.		HIGHWAY NO.
JC	6			
GRAPHICS	STATE	DISTRICT	COUNTY	SHEET NO.
RR	TEXAS	AUS	WILLIAMSON	
CHECK	CONTROL	SECTION	JOB	93
JW	2103	01	034	
CHECK				
JC				

PLOT DRIVER: TXDOT_PDF_BW.pltcfg PENTABLE: S2-0000020170718.tbl
USER: lgomezgonz DATE: 3/23/2018 TIME: 1:48:0 PM SCALE:1:100
FILE: \

4/12/2018 7:20 AM

TABLE OF GRADING POINTS (100'S)					
POINT NO.	ALIGNMENT	STATION	OFFSET	ELEVATION	DESCRIPTION
SHEET 3 OF 8					
100	℄ WBFR_S2_CL	394+87.00	47.68' RT	810.27	DITCH FL
101	℄ WBFR_S2_CL	398+00.00	44.90' RT	816.84	DITCH FL
SHEET 4 OF 8					
102	℄ WBFR_S2_CL	404+30.00	45.90' RT	824.40	END DITCH FL
103	℄ DITCH RT2	11+35.49	0.00'	785.48	DITCH FL
104	℄ DITCH RT2	12+00.00	0.00'	785.67	DITCH FL
105	℄ DITCH RT2	12+70.00	0.00'	787.29	DITCH FL
SHEET 5 OF 8					
106	℄ DITCH RT2	13+15.00	0.00'	788.31	DITCH FL
107	℄ DITCH RT2	13+70.00	0.00'	788.76	DITCH FL
108	℄ DITCH RT2	14+26.54	0.00'	787.37	DITCH FL
109	℄ DITCH RT2	15+15.00	0.00'	787.10	DITCH FL
110	℄ DITCH RT2	15+25.00	0.00'	787.10	DITCH FL
111	℄ DITCH RT2	19+62.88	0.00'	788.41	DITCH FL
112	℄ DITCH RT2	21+10.29	0.00'	791.00	DITCH FL
113	℄ DITCH RT2	23+60.17	0.00'	799.50	DITCH FL
SHEET 6 OF 8					
114	℄ DITCH RT2	28+59.43	0.00'	819.73	DITCH FL
115	℄ DITCH RT2	32+65.13	0.00'	830.83	DITCH FL
116	℄ DITCH RT2	33+50.86	0.00'	831.91	DITCH FL
117	℄ DITCH RT2	33+60.93	0.00'	832.09	DITCH FL
118	℄ DITCH RT2	33+65.11	0.00'	832.33	DITCH FL
119	℄ DITCH RT2	33+69.28	0.00'	832.73	DITCH FL
120	℄ DITCH RT2	33+73.68	0.00'	834.75	DITCH FL
121	℄ DITCH RT2	33+81.56	0.00'	839.70	DITCH FL

TABLE OF GRADING POINTS (200'S)					
POINT NO.	ALIGNMENT	STATION	OFFSET	ELEVATION	DESCRIPTION
SHEET 4 OF 8					
200	℄ WBFR_S2_CL	410+02.46	86.05' LT	785.38	BREAKLINE
201	℄ WBFR_S2_CL	410+32.18	193.91' LT	785.01	BREAKLINE
202	℄ WBFR_S2_CL	411+18.95	260.00' LT	784.66	BREAKLINE
203	℄ WBFR_S2_CL	411+18.95	170.00' LT	784.79	FLOWLINE
204	℄ WBFR_S2_CL	411+21.20	23.66' LT	785.21	FLOWLINE
205	℄ WBFR_S2_CL	411+25.21	24.00' RT	785.35	FLOWLINE
206	℄ WBFR_S2_CL	411+35.17	23.16' RT	785.38	BREAKLINE
207	℄ WBFR_S2_CL	411+31.17	24.50' LT	785.23	BREAKLINE
208	℄ WBFR_S2_CL	411+31.16	156.82' LT	785.39	EXISTING
SHEET 5 OF 8					
209	℄ WBFR_S2_CL	413+20.00	260.00' LT	784.06	FLOWLINE
210	℄ WBFR_S2_CL	413+20.00	170.00' LT	784.33	BREAKLINE

TABLE OF GRADING POINTS (300'S)					
POINT NO.	ALIGNMENT	STATION	OFFSET	ELEVATION	DESCRIPTION
SHEET 5 OF 8					
300	℄ WBFR_S2_CL	415+20.00	63.25' LT	786.80	FLOW LINE
301	℄ WBFR_S2_CL	415+20.00	103.25' LT	786.71	FLOW LINE
302	℄ WBFR_S2_CL	415+20.00	246.50' LT	786.38	FLOW LINE
303	℄ WBFR_S2_CL	415+56.85	294.16' LT	786.32	FLOW LINE
304	℄ WBFR_S2_CL	416+55.00	52.70' LT	787.23	ROADWAY TOE
305	℄ WBFR_S2_CL	416+57.70	89.91' LT	787.55	TIE
306	℄ WBFR_S2_CL	416+41.53	102.58' LT	787.54	TIE
307	℄ WBFR_S2_CL	415+90.80	79.00' LT	787.04	TIE
308	℄ WBFR_S2_CL	415+65.47	96.90' LT	787.25	TIE

TABLE OF GRADING POINTS (400'S)					
POINT NO.	ALIGNMENT	STATION	OFFSET	ELEVATION	DESCRIPTION
SHEET 5 OF 8					
400	℄ WBFR_S2_CL	422+43.46	507.53' LT	782.00	POND BOTTOM
401	℄ WBFR_S2_CL	422+44.64	371.50' LT	782.00	POND BOTTOM
SHEET 6 OF 8					
402	℄ WBFR_S2_CL	424+89.53	519.50' LT	785.00	10' BERM TOP
403	℄ WBFR_S2_CL	426+11.36	517.50' LT	784.50	14' BERM TOP
404	℄ WBFR_S2_CL	426+39.91	507.50' LT	782.00	POND BOTTOM
405	℄ WBFR_S2_CL	426+48.52	497.04' LT	784.50	END OF BERM
406	℄ WBFR_S2_CL	426+38.88	371.50' LT	782.00	POND BOTTOM
407	℄ WBFR_S2_CL	425+97.45	371.50' LT	782.00	POND BOTTOM
408	℄ WBFR_S2_CL	425+75.00	346.50' LT	782.00	FLOW LINE
409	℄ WBFR_S2_CL	425+52.55	371.50' LT	782.00	POND BOTTOM
410	℄ WBFR_S2_CL	425+42.53	359.51' LT	785.00	10' BERM TOP
411	℄ WBFR_S2_CL	425+51.73	243.22' LT	783.18	TIE
412	℄ WBFR_S2_CL	425+75.00	204.35' LT	782.94	FLOW LINE
413	℄ WBFR_S2_CL	425+95.55	243.20' LT	783.12	TIE
414	℄ WBFR_S2_CL	426+16.14	263.00' LT	784.04	TIE
415	℄ WBFR_S2_CL	426+05.40	302.87' LT	783.20	TIE
416	℄ WBFR_S2_CL	426+45.07	371.44' LT	783.73	TIE

TABLE OF GRADING POINTS (500'S)					
POINT NO.	ALIGNMENT	STATION	OFFSET	ELEVATION	DESCRIPTION
SHEET 5 OF 8					
500	℄ WBFR_S2_CL	422+62.01	50.97' RT	795.86	FLOW LINE
501	℄ WBFR_S2_CL	422+62.00	54.95' RT	797.23	TIE
502	℄ WBFR_S2_CL	422+77.00	60.50' RT	795.70	BREAKLINE
503	℄ WBFR_S2_CL	422+62.72	98.81' RT	797.13	TIE
504	℄ WBFR_S2_CL	422+62.99	179.04' RT	795.08	TIE
505	℄ WBFR_S2_CL	422+63.24	250.50' RT	809.93	TIE
506	℄ WBFR_S2_CL	422+99.63	120.93' RT	786.69	POND BOTTOM
507	℄ WBFR_S2_CL	422+99.57	172.24' RT	786.68	POND BOTTOM
SHEET 6 OF 8					
508	℄ WBFR_S2_CL	424+89.32	167.47' RT	785.55	POND BOTTOM
509	℄ WBFR_S2_CL	425+09.06	250.50' RT	812.81	TIE
510	℄ WBFR_S2_CL	425+69.27	130.12' RT	785.00	POND BOTTOM
511	℄ WBFR_S2_CL	425+80.73	130.12' RT	785.00	POND BOTTOM
512	℄ WBFR_S2_CL	426+55.00	60.50' RT	810.54	Tie
513	℄ WBFR_S2_CL	426+80.00	60.50' RT	811.69	TIE
514	℄ WBFR_S2_CL	426+85.27	88.18' RT	814.63	TIE
515	℄ WBFR_S2_CL	426+84.85	188.55' RT	821.34	TIE

TABLE OF GRADING POINTS (600'S)					
POINT NO.	ALIGNMENT	STATION	OFFSET	ELEVATION	DESCRIPTION
SHEET 4 OF 8					
600	℄ WBFR_S2_CL	404+36.00	26.75' LT	828.07	TOP OF MOW STRIP
601	℄ WBFR_S2_CL	404+57.38	26.51' LT	817.26	BREAKLINE
602	℄ WBFR_S2_CL	405+00.00	26.51' LT	816.41	BREAKLINE
603	℄ WBFR_S2_CL	405+70.00	19.50' LT	795.00	TOP OF BERM
604	℄ WBFR_S2_CL	404+36.00	27.00' RT	826.19	TOP OF MOW STRIP
605	℄ WBFR_S2_CL	404+55.00	26.51' RT	817.26	BREAKLINE
606	℄ WBFR_S2_CL	405+00.00	26.51' RT	816.36	BREAKLINE
607	℄ WBFR_S2_CL	405+70.00	19.50' RT	795.00	TOP OF BERM
608	℄ WBFR_S2_CL	407+10.00	40.00' LT	786.24	EXIST GROUND
609	℄ WBFR_S2_CL	407+10.00	25.00' RT	789.04	BREAKLINE
610	℄ WBFR_S2_CL	407+10.00	60.50' RT	790.56	EXIST GROUND
611	℄ WBFR_S2_CL	407+90.00	40.00' LT	786.38	EXIST GROUND
612	℄ WBFR_S2_CL	407+90.00	25.00' RT	787.41	BREAKLINE
613	℄ WBFR_S2_CL	407+90.00	60.50' RT	789.11	EXIST GROUND

TABLE OF GRADING POINTS (700'S)					
POINT NO.	ALIGNMENT	STATION	OFFSET	ELEVATION	DESCRIPTION
SHEET 6 OF 8					
700	℄ WBFR_S2_CL	430+48.86	214.14' LT	800.00	FLOWLINE
701	℄ WBFR_S2_CL	429+76.60	242.05' LT	797.21	FLOWLINE
702	℄ WBFR_S2_CL	434+14.30	190.16' LT	829.31	FLOWLINE
703	℄ WBFR_S2_CL	432+21.27	115.10' LT	826.00	FLOWLINE

TABLE OF GRADING POINTS (900'S)					
POINT NO.	ALIGNMENT	STATION	OFFSET	ELEVATION	DESCRIPTION
SHEET 3 OF 8					
900	℄ WBFR_S2_CL	395+98.00	51.16' LT	813.14	DITCH FL
901	℄ WBFR_S2_CL	396+02.00	51.07' LT	813.24	DITCH FL
902	℄ WBFR_S2_CL	398+50.00	41.52' LT	819.56	DITCH FL
SHEET 4 OF 8					
903	℄ WBFR_S2_CL	402+66.00	38.20' LT	824.55	DITCH FL
904	℄ WBFR_S2_CL	404+05.00	38.21' LT	825.25	END DITCH FL
SHEET 8 OF 8					
905	℄ WBFR_S2_CL	446+34.69	47.13' LT	840.96	DITCH FL
906	℄ WBFR_S2_CL	447+83.66	87.62' LT	833.82	DITCH FL
907	℄ WBFR_S2_CL	447+83.60	98.62' LT	833.82	DITCH FL
908	℄ WBFR_S2_CL	447+94.01	88.53' LT	833.81	DITCH FL
909	℄ WBFR_S2_CL	448+07.98	114.75' LT	833.63	DITCH FL
910	℄ WBFR_S2_CL	449+37.99	205.21' LT	832.68	TIE TO EXIST
911	℄ RM 2243	479+48.83	43.87' RT	831.78	DITCH FL
912	℄ RM 2243	477+07.00	58.05' RT	826.62	DITCH TIE
913	℄ RM 2243	477+07.00	48.79' RT	824.30	DITCH FL
914	℄ RM 2243	477+07.00	42.79' RT	824.30	DITCH FL
915	℄ RM 2243	477+07.00	33.00' RT	825.64	EOP
916	℄ RM 2243	476+59.12	43.19' RT	825.26	DITCH TIE
917	℄ RM 2243	476+59.63	38.93' RT	823.93	DITCH FL
918	℄ RM 2243	476+60.34	32.98' RT	823.93	DITCH FL
919	℄ RM 2243	476+61.00	27.48' RT	825.19	EOP
920	℄ RM 2243	476+35.00	37.75' RT	825.09	DITCH TIE
921	℄ RM 2243	476+35.00	33.32' RT	823.78	DITCH FL
922	℄ RM 2243	476+35.00	29.50' RT	823.78	DITCH FL
923	℄ RM 2243	476+35.00	24.38' RT	825.06	EOP
924	℄ RM 2243	475+07.12	37.74' RT	823.95	DITCH TIE
925	℄ RM 2243	475+07.12	31.13' RT	822.82	DITCH FL
926	℄ RM 2243	475+07.12	22.75' RT	824.73	MOW STRIP

STATE OF TEXAS
JACOB E. WALKER
122057
LICENSED
PROFESSIONAL ENGINEER

03/23/2018

NO.	DATE	REVISION	APPROVED

WILLIAMSON COUNTY TX

HDR Engineering, Inc.
810 Hesters Crossing, Suite 120
Round Rock, Texas 78681
Texas Registered Engineering Firm F-754

SOUTHWEST BYPASS SEGMENT 2

GRADING POINTS TABLE

DESIGN	FED.RD. DIV.NO.	FEDERAL AID PROJECT NO.		HIGHWAY NO.
JC	6			
GRAPHICS	STATE	DISTRICT	COUNTY	SHEET NO.
LG	TEXAS	AUS	WILLIAMSON	
CHECK				94
JW	CONTROL	SECTION	JOB	
CHECK	2103	01	034	
JC				

PLOT DRIVER: TXDOT_PDF_BW.pltcfg PENTABLE: S2-000002017018.tbl
USER: lgomezgon2 DATE: 3/23/2018 TIME: 1:48:13 PM SCALE: 1:1
FILE: \

SOUTHWEST (LEFT) ROCK CUT - POINT TABLE								
TOP OF ROCK CUT			BOTTOM OF ROCK CUT			ROCK CUT LENGTH	BEARING	AREA (SF)
NORTHING	EASTING	EL	NORTHING	EASTING	EL			
10,195,153.439	3,122,766.946	844.55	10,195,153.654	3,122,767.073	843.55	1.03	N 30:34:12.89 E	0
10,195,155.865	3,122,762.493	845.34	10,195,156.234	3,122,762.712	843.62	1.77	N 30:41:20.25 E	7
10,195,158.297	3,122,758.043	846.12	10,195,158.820	3,122,758.354	843.69	2.51	N 30:44:15.63 E	11
10,195,160.736	3,122,753.596	846.91	10,195,161.413	3,122,754.000	843.75	3.26	N 30:49:35.96 E	15
10,195,163.180	3,122,749.152	847.70	10,195,164.013	3,122,749.651	843.81	4.01	N 30:55:23.80 E	18
10,195,165.631	3,122,744.711	848.48	10,195,166.619	3,122,745.305	843.87	4.75	N 31:00:53.63 E	22
10,195,168.099	3,122,740.280	849.22	10,195,169.232	3,122,740.963	843.93	5.45	N 31:04:57.35 E	26
10,195,170.579	3,122,735.855	849.93	10,195,171.852	3,122,736.625	843.98	6.13	N 31:10:06.60 E	29
10,195,173.066	3,122,731.434	850.64	10,195,174.478	3,122,732.292	844.03	6.81	N 31:17:05.66 E	33
10,195,175.559	3,122,727.016	851.35	10,195,177.111	3,122,727.962	844.08	7.49	N 31:21:49.73 E	36
10,195,178.058	3,122,722.602	852.06	10,195,179.750	3,122,723.636	844.13	8.17	N 31:25:46.44 E	40
10,195,180.563	3,122,718.190	852.77	10,195,182.397	3,122,719.315	844.17	8.87	N 31:31:31.82 E	43
10,195,183.075	3,122,713.782	853.49	10,195,185.049	3,122,714.997	844.21	9.57	N 31:36:44.50 E	47
10,195,185.590	3,122,709.375	854.21	10,195,187.709	3,122,710.684	844.25	10.27	N 31:42:19.65 E	50
10,195,188.112	3,122,704.972	854.94	10,195,190.375	3,122,706.374	844.29	10.98	N 31:46:46.28 E	54
10,195,190.639	3,122,700.572	855.66	10,195,193.047	3,122,702.069	844.32	11.69	N 31:52:05.87 E	57
10,195,193.166	3,122,696.170	856.43	10,195,195.726	3,122,697.768	844.35	12.45	N 31:58:23.46 E	61
10,195,195.691	3,122,691.767	857.22	10,195,198.412	3,122,693.470	844.38	13.24	N 32:02:28.79 E	65
10,195,198.223	3,122,687.368	858.02	10,195,201.104	3,122,689.177	844.41	14.03	N 32:07:29.99 E	69
10,195,200.761	3,122,682.971	858.81	10,195,203.803	3,122,684.889	844.43	14.82	N 32:13:54.07 E	73
10,195,203.306	3,122,678.578	859.61	10,195,206.508	3,122,680.604	844.45	15.63	N 32:19:21.89 E	77
10,195,205.856	3,122,674.188	860.41	10,195,209.220	3,122,676.323	844.47	16.43	N 32:24:06.15 E	81
10,195,208.413	3,122,669.802	861.21	10,195,211.939	3,122,672.047	844.49	17.23	N 32:29:05.49 E	85
10,195,210.977	3,122,665.419	862.01	10,195,214.664	3,122,667.775	844.50	18.05	N 32:34:43.16 E	90
10,195,213.546	3,122,661.039	862.80	10,195,217.396	3,122,663.507	844.51	18.85	N 32:39:41.23 E	94
10,195,216.122	3,122,656.662	863.60	10,195,220.134	3,122,659.243	844.52	19.67	N 32:45:14.36 E	98
10,195,218.703	3,122,652.288	864.41	10,195,222.878	3,122,654.983	844.53	20.49	N 32:50:33.38 E	102
10,195,221.304	3,122,647.926	865.15	10,195,225.630	3,122,650.727	844.53	21.25	N 32:55:20.15 E	106
10,195,223.925	3,122,643.577	865.82	10,195,228.387	3,122,646.476	844.53	21.94	N 33:00:43.67 E	110
10,195,226.552	3,122,639.231	866.49	10,195,231.151	3,122,642.229	844.53	22.64	N 33:05:58.41 E	113
10,195,229.186	3,122,634.888	867.17	10,195,233.922	3,122,637.986	844.53	23.34	N 33:11:24.88 E	117
10,195,231.826	3,122,630.549	867.84	10,195,236.699	3,122,633.748	844.52	24.04	N 33:17:01.95 E	120
10,195,234.472	3,122,626.214	868.51	10,195,239.483	3,122,629.513	844.51	24.74	N 33:21:32.30 E	124
10,195,237.125	3,122,621.882	869.19	10,195,242.273	3,122,625.283	844.50	25.45	N 33:27:01.95 E	127
10,195,239.822	3,122,617.579	869.67	10,195,245.070	3,122,621.058	844.49	25.96	N 33:32:28.18 E	131
10,195,242.521	3,122,613.277	870.18	10,195,247.873	3,122,616.836	844.47	26.50	N 33:37:23.92 E	133
10,195,245.289	3,122,609.020	870.39	10,195,250.683	3,122,612.619	844.45	26.74	N 33:42:43.64 E	135
10,195,248.063	3,122,604.767	870.60	10,195,253.499	3,122,608.406	844.43	26.98	N 33:47:57.78 E	136
10,195,250.865	3,122,600.533	870.70	10,195,256.321	3,122,604.198	844.41	27.10	N 33:53:26.66 E	137
10,195,253.676	3,122,596.304	870.79	10,195,259.150	3,122,599.993	844.38	27.22	N 33:58:35.56 E	138
10,195,256.494	3,122,592.080	870.88	10,195,261.985	3,122,595.793	844.36	27.34	N 34:03:59.24 E	139
10,195,259.322	3,122,587.863	870.95	10,195,264.827	3,122,591.598	844.33	27.44	N 34:09:21.16 E	139
10,195,262.158	3,122,583.651	871.00	10,195,267.675	3,122,587.407	844.31	27.51	N 34:14:50.00 E	140
10,195,265.002	3,122,579.444	871.06	10,195,270.530	3,122,583.220	844.28	27.60	N 34:20:08.64 E	140
10,195,267.843	3,122,575.236	871.16	10,195,273.391	3,122,579.037	844.26	27.73	N 34:24:55.80 E	141
10,195,270.687	3,122,571.030	871.27	10,195,276.258	3,122,574.859	844.23	27.87	N 34:30:03.97 E	141
10,195,273.535	3,122,566.825	871.40	10,195,279.132	3,122,570.686	844.21	28.03	N 34:35:57.21 E	142
10,195,276.389	3,122,562.626	871.53	10,195,282.012	3,122,566.516	844.18	28.19	N 34:40:31.96 E	143
10,195,279.250	3,122,558.430	871.66	10,195,284.899	3,122,562.352	844.16	28.35	N 34:46:17.61 E	144
10,195,282.117	3,122,554.239	871.79	10,195,287.792	3,122,558.191	844.13	28.51	N 34:51:10.36 E	144
10,195,285.031	3,122,550.080	871.73	10,195,290.691	3,122,554.035	844.11	28.47	N 34:56:39.97 E	145
10,195,287.965	3,122,545.936	871.59	10,195,293.597	3,122,549.884	844.08	28.36	N 35:01:48.85 E	144
10,195,290.900	3,122,541.792	871.49	10,195,296.509	3,122,545.736	844.06	28.27	N 35:06:47.47 E	144
10,195,293.808	3,122,537.629	871.54	10,195,299.427	3,122,541.594	844.03	28.36	N 35:12:30.18 E	144
10,195,296.729	3,122,533.475	871.56	10,195,302.352	3,122,537.456	844.01	28.40	N 35:17:52.53 E	144
10,195,299.706	3,122,529.361	871.35	10,195,305.283	3,122,533.322	843.98	28.21	N 35:23:01.81 E	144
10,195,302.659	3,122,525.231	871.27	10,195,308.220	3,122,529.193	843.96	28.15	N 35:28:06.31 E	143
10,195,305.619	3,122,521.105	871.19	10,195,311.164	3,122,525.068	843.93	28.10	N 35:33:11.93 E	143
10,195,308.586	3,122,516.984	871.12	10,195,314.114	3,122,520.948	843.91	28.05	N 35:38:36.33 E	143
10,195,311.558	3,122,512.866	871.05	10,195,317.070	3,122,516.832	843.88	28.01	N 35:44:08.92 E	142
10,195,314.532	3,122,508.751	871.00	10,195,320.033	3,122,512.721	843.86	27.98	N 35:49:02.97 E	142
10,195,317.512	3,122,504.639	870.95	10,195,323.002	3,122,508.615	843.83	27.95	N 35:54:46.90 E	142
10,195,320.498	3,122,500.533	870.89	10,195,325.977	3,122,504.513	843.81	27.91	N 35:59:42.10 E	142
10,195,323.487	3,122,496.428	870.86	10,195,328.958	3,122,500.415	843.78	27.91	N 36:04:57.92 E	142
10,195,326.493	3,122,492.336	870.78	10,195,331.946	3,122,496.322	843.76	27.85	N 36:09:56.97 E	142
10,195,329.503	3,122,488.246	870.70	10,195,334.940	3,122,492.234	843.73	27.80	N 36:15:35.20 E	141
10,195,332.519	3,122,484.161	870.63	10,195,337.940	3,122,488.150	843.71	27.75	N 36:20:49.92 E	141
10,195,335.542	3,122,480.081	870.56	10,195,340.947	3,122,484.071	843.68	27.71	N 36:26:05.79 E	141
10,195,338.569	3,122,476.005	870.49	10,195,343.960	3,122,479.997	843.66	27.66	N 36:31:10.94 E	141
10,195,341.602	3,122,471.932	870.42	10,195,346.979	3,122,475.927	843.63	27.61	N 36:36:41.71 E	140
10,195,344.642	3,122,467.865	870.36	10,195,350.004	3,122,471.862	843.61	27.57	N 36:42:07.13 E	140
10,195,347.687	3,122,463.802	870.29	10,195,353.035	3,122,467.801	843.58	27.53	N 36:47:15.11 E	140
10,195,350.738	3,122,459.743	870.23	10,195,356.073	3,122,463.745	843.56	27.49	N 36:52:30.19 E	140
10,195,353.795	3,122,455.689	870.17	10,195,359.117	3,122,459.694	843.53	27.46	N 36:57:46.08 E	140

SOUTHWEST (LEFT) ROCK CUT - POINT TABLE								
TOP OF ROCK CUT			BOTTOM OF ROCK CUT			ROCK CUT LENGTH	BEARING	AREA (SF)
NORTHING	EASTING	EL	NORTHING	EASTING	EL			
10,195,356.858	3,122,451.639	870.11	10,195,362.167	3,122,455.647	843.51	27.42	N 37:03:02.80 E	139
10,195,359.927	3,122,447.595	870.05	10,195,365.223	3,122,451.605	843.48	27.39	N 37:07:55.57 E	139
10,195,363.003	3,122,443.554	869.99	10,195,368.285	3,122,447.568	843.46	27.35	N 37:13:57.48 E	139
10,195,366.086	3,122,439.520	869.93	10,195,371.354	3,122,443.535	843.43	27.32	N 37:18:46.06 E	139
10,195,369.178	3,122,435.493	869.84	10,195,374.429	3,122,439.507	843.41	27.24	N 37:23:42.83 E	139
10,195,372.276	3,122,431.469	869.77	10,195,377.510	3,122,435.484	843.38	27.20	N 37:29:30.49 E	138
10,195,375.378	3,122,427.450	869.70	10,195,380.597	3,122,431.465	843.36	27.15	N 37:34:16.48 E	138
10,195,378.486	3,122,423.435	869.63	10,195,383.690	3,122,427.452	843.33	27.11	N 37:39:53.19 E	138
10,195,381.606	3,122,419.429	869.53	10,195,386.789	3,122,423.443	843.31	27.03	N 37:45:22.21 E	138
10,195,384.741	3,122,415.435	869.39	10,195,389.895	3,122,419.438	843.28	26.91	N 37:50:08.56 E	137
10,195,387.890	3,122,411.452	869.21	10,195,393.006	3,122,415.439	843.26	26.75	N 37:55:47.97 E	136
10,195,391.048	3,122,407.476	869.01	10,195,396.124	3,122,411.444	843.23	26.57	N 38:00:55.35 E	135
10,195,394.212	3,122,403.505	868.81	10,195,399.248	3,122,407.454	843.21	26.39	N 38:06:06.89 E	135
10,195,397.381	3,122,399.538	868.62	10,195,402.378	3,122,403.469	843.18	26.22	N 38:11:28.10 E	134
10,195,400.552	3,122,395.573	868.44	10,195,405.514	3,122,399.489	843.16	26.06	N 38:16:49.54 E	133
10,195,403.729	3,122,391.613	868.27	10,195,408.656	3,122,395.513	843.13	25.91	N 38:21:49.01 E	132
10,195,406.907	3,122,387.653	868.12	10,195,411.805	3,122,391.542	843.11	25.78	N 38:26:58.16 E	131
10,195,410.090	3,122,383.698	867.98	10,195,414.959	3,122,387.577	843.08	25.67	N 38:32:36.17 E	131
10,195,413.280	3,122,379.748	867.84	10,195,418.119	3,122,383.615	843.06	25.54	N 38:37:46.10 E	130
10,195,416.475	3,122,375.803	867.70	10,195,421.286	3,122,379.659	843.03	25.43	N 38:42:43.40 E	129
10,195,419.676	3,122,371.862	867.55	10,195,424.458	3,122,375.708	843.01	25.30	N 38:48:30.73 E	129
10,195,422.885	3,122,367.928	867.40	10,195,427.637	3,122,371.761	842.98	25.17	N 38:53:23.70 E	128
10,195,426.096	3,122,363.996	867.27	10,195,430.821	3,122,367.820	842.96	25.06	N 38:59:01.20 E	128
10,195,429.310	3,122,360.066	867.16	10,195,434.012	3,122,363.883	842.93	24.98	N 39:04:08.68 E	127
10,195,432.531	3,122,356.142	867.04	10,195,437.209	3,122,359.951	842.91	24.87	N 39:09:13.50 E	127
10,195,435.757	3,122,352.223	866.92	10,195,440.411	3,122,356.024	842.88	24.78	N 39:14:20.73 E	126
10,195,438.989	3,122,348.308	866.80	10,195,443.620	3,122,352.102	842.86	24.68	N 39:19:35.19 E	126
10,195,442.227	3,122,344.397	866.69	10,195,446.835	3,122,348.185	842.83	24.59	N 39:25:18.72 E	125
10,195,445.469	3,122,340.491	866.59	10,195,450.055	3,122,344.273	842.81	24.51	N 39:30:42.66 E	125
10,195,448.707	3,122,336.581	866.53	10,195,453.282	3,122,340.365	842.78	24.48	N 39:35:39.41 E	124
10,195,451.951	3,122,332.676	866.48	10,195,456.515	3,122,336.463	842.76	24.45	N 39:41:03.65 E	124
10,195,455.201	3,122,328.777	866.42	10,195,459.753	3,122,332.566	842.73	24.42	N 39:46:24.12 E	124
10,195,458.457	3,122,324.882	866.37	10,195,462.998	3,122,328.673	842.71	24.39	N 39:51:23.10 E	124
10,195,461.719	3,122,320.993	866.31	10,195,466.249	3,122,324.786	842.68	24.36	N 39:56:22.81 E	124
10,195,464.988	3,122,317.108	866.26	10,195,469.505	3,122,320.903	842.66	24.33	N 40:02:08.21 E	124
10,195,468.278	3,122,313.243	866.11	10,195,472.767	3,122,317.026	842.63	24.20	N 40:07:18.24 E	123
10,195,471.537	3,122,309.351	866.17	10,195,476.036	3,122,313.153	842.61	24.29	N 40:12:01.34 E	123
10,195,474.820	3,122,305.479	866.13	10,195,479.310	3,122,309.286	842.58	24.27	N 40:17:38.70 E	123
10,195,478.123	3,122,301.624	866.02	10,195,482.590	3,122,305.423	842.56	24.18	N 40:22:47.27 E	123
10,195,481.431	3,122,297.774	865.90	10,195,485.876	3,122,301.566	842.53	24.09	N 40:28:02.19 E	123
10,195,484.746	3,122,293.929	865.79	10,195,489.168	3,122,297.714	842.51	24.00	N 40:33:42.45 E	122
10,195,488.067	3,122,290.089	865.68	10,195,492.466	3,122,293.866	842.48	23.91	N 40:38:58.30 E	122
10,195,491.424	3,122,286.281	865.40	10,195,495.770	3,122,290.024	842.46	23.65	N 40:44:12.24 E	121
10,195,494.760	3,122,282.455	865.27	10,195,499.080	3,122,286.187	842.43	23.54	N 40:49:24.13 E	120
10,195,498.101	3,122,278.634	865.14	10,195,502.395	3,122,282.355	842.41	23.43	N 40:54:38.98 E	119
10,195,501.448	3,122,274.817	865.01	10,195,505.717	3,122,278.528	842.38	23.33	N 41:00:00.41 E	119
10,195,504.800	3,122,271.005	864.88	10,195,509.044	3,122,274.706	842.36	23.21	N 41:05:24.75 E	118
10,195,508.161	3,122,267.202	864.74	10,195,512.377	3,122,270.889	842.33	23.10	N 41:10:13.90 E	118
10,195,511.529	3,122,263.404	864.59	10,195,515.716	3,122,267.077	842.31	22.97	N 41:15:30.61 E	117
10,195,514.903	3,122,259.611	864.44	10,195,519.061	3,122,263.270	842.28	22.84	N 41:20:50.88 E	116
10,195,518.282	3,122,255.824	864.29	10,195,522.411	3,122,259.469	842.26	22.71	N 41:26:14.75 E	116
10,195,521.680	3,122,252.053	864.07	10,195,525.768	3,122,255.672	842.23	22.51	N 41:31:03.47 E	115
10,195,525.059	3,122,248.265	863.99	10,195,529.130	3,122,251.881	842.21	22.45	N 41:36:45.24 E	114
10,195,528.435	3,122,244.474	863.95	10,195,532.498	3,122,248.095	842.18	22.44	N 41:42:28.27 E	114
10,195,531.807	3,122,240.682	863.96	10,195,535.872	3,122,244.314	842.16	22.47	N 41:46:48.65 E	114
10,195,535.205	3,122,236.911	863.87	10,195,539.252	3,122,240.538	842.13	22.41	N 41:52:02.33 E	114
10,195,538.611	3,122,233.147	863.77	10,195,542.637	3,122,236.768	842.11	22.33	N 41:58:06.01 E	114
10,195,542.028	3,122,229.394	863.63	10,195,546.028	3,122,233.002	842.08	22.21	N 42:03:01.66 E	113
10,195,545.455	3,122,225.650	863.47	10,195,549.425	3,122,229.242	842.06	22.07	N 42:08:18.06 E	112
10,195,548.890	3,122,221.913	863.30	10,195,552.828	3,122,225.487	842.03	21.92	N 42:13:33.08 E	112
10,195,552.328	3,122,218.180	863.15	10,195,556.236	3,122,221.737	842.01	21.79	N 42:18:28.69 E	111
10,195,555.773	3,122,214.452	862.99	10,195,559.650	3,122,217.993	841.98	21.66	N 42:24:23.57 E	110
10,195,559.227	3,122,210.733	862.80	10,195,563.070	3,122,214.253	841.96	21.48	N 42:29:17.38 E	110
10,195,562.689	3,122,207.021	862.61	10,195,566.496	3,122,210.519	841.93	21.32	N 42:34:40.24 E	109
10,195,566.155	3,122,203.314	862.43	10,195,569.927	3,122,206.790	841.91	21.15	N 42:39:41.06 E	108
10,195,569.627	3,122,199.612	862.24	10,195,573.364	3,122,203.067	841.88	20.99	N 42:45:16.45 E	107
10,195,573.103	3,122,195.914	862.07	10,195,576.807	3,122,199.349	841.86	20.83	N 42:50:31.55 E	106
10,195,576.582	3,122,192.219	861.90	10,195,580.255	3,122,195.635	841.83	20.69	N 42:55:25.48 E	105
10,195,580.067	3,122,188.529	861.74	10,195,583.709	3,122,191.928	841.81	20.54	N 43:01:24.18 E	105
10,195,583.552	3,122,184.840	861.60	10,195,587.169	3,122,188.225	841.78	20.43	N 43:06:08.25 E	104
10,195,587.046	3,122,181.159	861.45	10,195,590.635	3,122,184.528	841.76	20.30	N 43:11:20.43 E	103
10,195,590.545	3,122,177.483	861.30	10,195,594.106	3,122,180.836	841.73	20.17	N 43:16:36.62 E	103
10,195,594.050	3,122,173.813	861.15	10,195,597.582	3,122,177.150	841.71	20.04	N 43:22:26.04 E	102
10,195,597.558	3,122,170.146	861.00	10,195,601.065	3,122,173.469	841.68	19.91	N 43:27:24.58 E	101

NOTES:

1. SEE TYPICAL SECTIONS FOR ROCK CUT SLOPES AS WELL AS TOP AND BOTTOM OF ROCK CUT FOR PAY.
2. SEE FENCING AND GRADING PLANS FOR GRADING INFORMATION.
3. ROCK CUT PAID FOR UNDER ITEM S2 RC AS "ROCK CUT" BY THE SF.
4. POINTS ARE LOCATED ALONG ℄ WBFR_S2_CL ON APPROXIMATELY 5' STATION INCREMENTS. NOTE THAT THE ROCK CUT FACES ARE NOT PERPENDICULAR TO THE ROADWAY CENTERLINE. USE TABLE VALUES FOR ROCK CUT CONSTRUCTION. LEFT CUT POINTS ARE FROM STA 435+20 TO STA 446+35 (APPROXIMATE LENGTH OF CUT = 4,354 LF). RIGHT CUT POINTS ARE FROM STA 434+05 TO STA 450+30, FOLLOWED BY POINTS APPROXIMATELY EVERY 3'-5' AROUND THE RIGHT TURN (APPROXIMATE LENGTH OF CUT = 6,998 LF).
5. USE LINEAR INTERPOLATION FOR VALUES BETWEEN ROWS.
6. COORDINATES ARE SURFACE VALUES. TO OBTAIN GRID VALUES, DIVIDE BY A COMBINED SURFACE ADJUSTMENT FACTOR OF 1.00014.

STATE OF TEXAS
JACOB E. WALKER
122057
LICENSED
PROFESSIONAL ENGINEER

03/23/2018

NO.	DATE	REVISION	APPROVED

WILLIAMSON COUNTY

HDR Engineering, Inc.
810 Hesters Crossing, Suite 120
Round Rock, Texas 78681
Texas Registered Engineering Firm F-754

SOUTHWEST BYPASS SEGMENT 2

ROCK CUT CONTROL POINTS

SHEET 1 OF 5

DESIGN	FED.RD. DIV.NO.	FEDERAL AID PROJECT NO.		HIGHWAY NO.
JC	6			
GRAPHICS	STATE	DISTRICT	COUNTY	SHEET NO.
LG	TEXAS	AUS	WILLIAMSON	
CHECK	CONTROL	SECTION	JOB	95
JW	2103	01	034	
CHECK				
JC				

PLOT DRIVER: TXDOT_PDF_BW.pltcfg PENTABLE: S2-00002201710718.tbl
USER: lgomezgonz DATE: 3/23/2018 TIME: 1:48:15 PM SCALE: 1:1
FILE: \

4/12/2018 7:20 AM

SOUTHWEST (LEFT) ROCK CUT - POINT TABLE

TOP OF ROCK CUT			BOTTOM OF ROCK CUT			ROCK CUT LENGTH	BEARING	AREA (SF)
NORTHING	EASTING	EL	NORTHING	EASTING	EL			
10,195,601.077	3,122,166.490	860.84	10,195,604.553	3,122,169.793	841.66	19.77	N 43:32:17.27 E	101
10,195,604.605	3,122,162.842	860.65	10,195,608.046	3,122,166.122	841.63	19.61	N 43:37:39.92 E	100
10,195,608.138	3,122,159.198	860.47	10,195,611.546	3,122,162.457	841.61	19.44	N 43:43:10.98 E	99
10,195,611.675	3,122,155.560	860.29	10,195,615.051	3,122,158.797	841.58	19.29	N 43:47:45.12 E	98
10,195,615.216	3,122,151.925	860.12	10,195,618.561	3,122,155.143	841.56	19.13	N 43:53:29.09 E	97
10,195,618.763	3,122,148.295	859.96	10,195,622.077	3,122,151.494	841.53	19.00	N 43:59:18.36 E	97
10,195,622.310	3,122,144.667	859.81	10,195,625.599	3,122,147.850	841.51	18.86	N 44:03:42.05 E	96
10,195,625.862	3,122,141.043	859.68	10,195,629.126	3,122,144.212	841.48	18.76	N 44:09:14.18 E	95
10,195,629.425	3,122,137.429	859.52	10,195,632.659	3,122,140.579	841.46	18.62	N 44:14:46.15 E	95
10,195,632.988	3,122,133.817	859.38	10,195,636.197	3,122,136.951	841.43	18.50	N 44:19:21.23 E	94
10,195,636.558	3,122,130.210	859.24	10,195,639.741	3,122,133.329	841.41	18.38	N 44:25:05.35 E	93
10,195,640.141	3,122,126.617	859.05	10,195,643.290	3,122,129.713	841.38	18.21	N 44:30:49.52 E	93
10,195,643.730	3,122,123.030	858.86	10,195,646.845	3,122,126.102	841.36	18.04	N 44:36:06.47 E	92
10,195,647.327	3,122,119.451	858.66	10,195,650.406	3,122,122.496	841.33	17.86	N 44:40:54.84 E	91
10,195,650.936	3,122,115.884	858.41	10,195,653.972	3,122,118.896	841.31	17.63	N 44:46:21.49 E	90
10,195,654.529	3,122,112.301	858.30	10,195,657.543	3,122,115.301	841.29	17.53	N 44:51:59.84 E	89
10,195,658.123	3,122,108.720	858.21	10,195,661.120	3,122,111.712	841.27	17.46	N 44:57:07.80 E	89
10,195,661.722	3,122,105.143	858.12	10,195,664.703	3,122,108.128	841.25	17.39	N 45:02:18.29 E	88
10,195,665.322	3,122,101.568	858.06	10,195,668.291	3,122,104.549	841.23	17.35	N 45:06:56.00 E	88
10,195,668.952	3,122,097.999	857.93	10,195,671.896	3,122,100.965	841.21	17.23	N 45:12:47.82 E	88
10,195,672.630	3,122,094.469	857.58	10,195,675.511	3,122,097.381	841.19	16.89	N 45:18:23.77 E	87
10,195,676.282	3,122,090.914	857.41	10,195,679.132	3,122,093.803	841.17	16.74	N 45:23:21.67 E	86
10,195,679.948	3,122,087.373	857.19	10,195,682.759	3,122,090.231	841.16	16.52	N 45:28:30.04 E	85
10,195,683.622	3,122,083.840	856.96	10,195,686.391	3,122,086.664	841.14	16.31	N 45:33:48.29 E	84
10,195,687.298	3,122,080.309	856.74	10,195,690.028	3,122,083.102	841.12	16.10	N 45:39:12.73 E	83
10,195,690.971	3,122,076.775	856.57	10,195,693.672	3,122,079.546	841.10	15.95	N 45:43:58.48 E	82
10,195,694.650	3,122,073.247	856.41	10,195,697.320	3,122,075.996	841.08	15.80	N 45:50:06.78 E	81
10,195,698.335	3,122,069.726	856.24	10,195,700.975	3,122,072.451	841.06	15.65	N 45:54:27.67 E	80
10,195,702.026	3,122,066.210	856.06	10,195,704.634	3,122,068.911	841.04	15.48	N 46:00:12.86 E	79
10,195,705.726	3,122,062.704	855.87	10,195,708.300	3,122,065.377	841.03	15.30	N 46:04:51.33 E	78
10,195,709.432	3,122,059.204	855.67	10,195,711.971	3,122,061.849	841.01	15.11	N 46:10:17.02 E	78
10,195,713.151	3,122,055.717	855.43	10,195,715.647	3,122,058.326	840.99	14.88	N 46:16:04.96 E	76
10,195,716.884	3,122,052.244	855.15	10,195,719.329	3,122,054.809	840.97	14.62	N 46:22:19.53 E	75
10,195,720.620	3,122,048.775	854.87	10,195,723.017	3,122,051.297	840.95	14.35	N 46:27:20.41 E	74
10,195,724.357	3,122,045.307	854.62	10,195,726.711	3,122,047.790	840.94	14.10	N 46:31:39.66 E	73
10,195,728.082	3,122,041.827	854.47	10,195,730.410	3,122,044.289	840.92	13.97	N 46:36:08.74 E	72
10,195,731.815	3,122,038.353	854.32	10,195,734.114	3,122,040.794	840.90	13.83	N 46:42:57.39 E	71
10,195,735.554	3,122,034.886	854.15	10,195,737.824	3,122,037.304	840.89	13.67	N 46:48:29.61 E	70
10,195,739.299	3,122,031.425	853.99	10,195,741.540	3,122,033.819	840.87	13.52	N 46:53:26.27 E	69
10,195,743.059	3,122,027.980	853.77	10,195,745.262	3,122,030.340	840.86	13.31	N 46:58:14.19 E	68
10,195,746.824	3,122,024.540	853.55	10,195,748.989	3,122,026.866	840.84	13.10	N 47:03:11.32 E	67
10,195,750.593	3,122,021.104	853.34	10,195,752.722	3,122,023.398	840.83	12.90	N 47:08:11.14 E	66
10,195,754.367	3,122,017.672	853.14	10,195,756.460	3,122,019.936	840.81	12.71	N 47:14:51.16 E	65
10,195,758.147	3,122,014.248	852.93	10,195,760.204	3,122,016.478	840.80	12.50	N 47:18:39.21 E	64
10,195,761.936	3,122,010.831	852.71	10,195,763.954	3,122,013.026	840.78	12.30	N 47:24:20.67 E	63
10,195,765.751	3,122,007.403	852.49	10,195,767.728	3,122,009.566	840.77	12.08	N 47:34:20.74 E	63
10,195,769.582	3,122,003.982	852.26	10,195,771.518	3,122,006.111	840.75	11.86	N 47:43:05.79 E	62
10,195,773.428	3,122,000.576	852.01	10,195,775.318	3,122,002.667	840.74	11.62	N 47:53:25.44 E	60
10,195,777.287	3,121,997.186	851.74	10,195,779.128	3,121,999.235	840.72	11.36	N 48:03:38.58 E	59
10,195,781.151	3,121,993.801	851.50	10,195,782.948	3,121,995.813	840.71	11.12	N 48:13:50.33 E	58
10,195,785.024	3,121,990.426	851.26	10,195,786.779	3,121,992.402	840.69	10.90	N 48:23:23.52 E	57
10,195,788.909	3,121,987.065	851.02	10,195,790.619	3,121,989.002	840.68	10.66	N 48:33:41.99 E	55
10,195,792.803	3,121,983.713	850.78	10,195,794.470	3,121,985.614	840.66	10.43	N 48:45:08.11 E	54
10,195,796.705	3,121,980.372	850.54	10,195,798.331	3,121,982.236	840.65	10.19	N 48:58:04.45 E	53
10,195,800.618	3,121,977.043	850.30	10,195,802.202	3,121,978.870	840.63	9.97	N 49:04:29.54 E	52
10,195,804.541	3,121,973.726	850.06	10,195,806.083	3,121,975.514	840.62	9.73	N 49:13:29.95 E	51
10,195,808.476	3,121,970.421	849.81	10,195,809.974	3,121,972.170	840.60	9.49	N 49:25:13.06 E	49
10,195,812.420	3,121,967.129	849.56	10,195,813.875	3,121,968.837	840.59	9.25	N 49:34:23.52 E	48
10,195,816.374	3,121,963.849	849.31	10,195,817.786	3,121,965.516	840.57	9.01	N 49:44:03.77 E	47
10,195,820.338	3,121,960.579	849.06	10,195,821.707	3,121,962.205	840.56	8.76	N 49:54:16.27 E	46
10,195,824.308	3,121,957.317	848.83	10,195,825.638	3,121,958.906	840.54	8.55	N 50:04:13.87 E	44
10,195,828.287	3,121,954.067	848.60	10,195,829.578	3,121,955.619	840.52	8.33	N 50:14:43.09 E	43
10,195,832.276	3,121,950.828	848.37	10,195,833.529	3,121,952.343	840.51	8.10	N 50:24:25.63 E	42
10,195,836.274	3,121,947.601	848.14	10,195,837.489	3,121,949.078	840.49	7.89	N 50:33:31.78 E	41
10,195,840.282	3,121,944.385	847.91	10,195,841.458	3,121,945.824	840.48	7.66	N 50:44:35.27 E	40
10,195,844.300	3,121,941.181	847.68	10,195,845.438	3,121,942.583	840.46	7.44	N 50:56:01.84 E	39
10,195,848.328	3,121,937.990	847.45	10,195,849.427	3,121,939.352	840.45	7.22	N 51:05:59.58 E	38
10,195,852.375	3,121,934.825	847.14	10,195,853.426	3,121,936.133	840.43	6.92	N 51:13:03.13 E	36
10,195,856.432	3,121,931.671	846.84	10,195,857.434	3,121,932.926	840.41	6.63	N 51:23:45.28 E	35
10,195,860.499	3,121,928.529	846.53	10,195,861.452	3,121,929.730	840.40	6.32	N 51:34:04.11 E	33
10,195,864.223	3,121,924.953	846.24	10,195,865.479	3,121,926.546	840.38	6.20	N 51:44:45.62 E	32
10,195,867.574	3,121,920.895	845.96	10,195,869.516	3,121,923.374	840.36	6.42	N 51:55:31.97 E	33
10,195,868.581	3,121,913.817	845.75	10,195,873.562	3,121,920.214	840.35	9.74	N 52:05:38.49 E	58
10,195,871.933	3,121,909.722	845.49	10,195,877.618	3,121,917.065	840.33	10.62	N 52:15:09.80 E	54

SOUTHWEST (LEFT) ROCK CUT - POINT TABLE

TOP OF ROCK CUT			BOTTOM OF ROCK CUT			ROCK CUT LENGTH	BEARING	AREA (SF)
NORTHING	EASTING	EL	NORTHING	EASTING	EL			
10,195,874.960	3,121,905.190	845.21	10,195,881.683	3,121,913.928	840.31	12.06	N 52:25:31.40 E	62
10,195,877.243	3,121,899.670	844.97	10,195,885.757	3,121,910.802	840.30	14.77	N 52:35:25.59 E	80

NOTES:

1. SEE TYPICAL SECTIONS FOR ROCK CUT SLOPES AS WELL AS TOP AND BOTTOM OF ROCK CUT FOR PAY.
2. SEE FENCING AND GRADING PLANS FOR GRADING INFORMATION.
3. ROCK CUT PAID FOR UNDER ITEM S2 RC AS "ROCK CUT" BY THE SF.
4. POINTS ARE LOCATED ALONG ℄ WBFR_S2_CL ON APPROXIMATELY 5' STATION INCREMENTS. NOTE THAT THE ROCK CUT FACES ARE NOT PERPENDICULAR TO THE ROADWAY CENTERLINE. USE TABLE VALUES FOR ROCK CUT CONSTRUCTION. LEFT CUT POINTS ARE FROM STA 435+20 TO STA 446+35 (APPROXIMATE LENGTH OF CUT = 4,354 LF). RIGHT CUT POINTS ARE FROM STA 434+05 TO STA 450+30, FOLLOWED BY POINTS APPROXIMATELY EVERY 3'-5' AROUND THE RIGHT TURN (APPROXIMATE LENGTH OF CUT = 6,998 LF).
5. USE LINEAR INTERPOLATION FOR VALUES BETWEEN ROWS.
6. COORDINATES ARE SURFACE VALUES. TO OBTAIN GRID VALUES, DIVIDE BY A COMBINED SURFACE ADJUSTMENT FACTOR OF 1.00014.

STATE OF TEXAS
JACOB E. WALKER
122057
LICENSED
PROFESSIONAL ENGINEER

03/23/2018

NO.	DATE	REVISION	APPROVED

WILLIAMSON COUNTY

HDR Engineering, Inc.
810 Hesters Crossing, Suite 120
Round Rock, Texas 78681
Texas Registered Engineering Firm F-754

SOUTHWEST BYPASS SEGMENT 2

ROCK CUT CONTROL POINTS

SHEET 2 OF 5

DESIGN	FED.RD. DIV.NO.	FEDERAL AID PROJECT NO.		HIGHWAY NO.
JC	6			
GRAPHICS	STATE	DISTRICT	COUNTY	SHEET NO.
LG	TEXAS	AUS	WILLIAMSON	
CHECK	CONTROL	SECTION	JOB	96
JW	2103	01	034	
CHECK				
JC				

PLOT DRIVER: TXDOT_PDF_BW.pltcfg PENTABLE: S2-00002201710718.tbl
USER: lgomezgonz TIME: 1:48:8 PM SCALE: 1:1
DATE: 3/23/2018
FILE: \

4/12/2018 7:20 AM

NORTHEAST (RIGHT) ROCK CUT - POINT TABLE

TOP OF ROCK CUT			BOTTOM OF ROCK CUT			ROCK CUT LENGTH	BEARING	AREA (SF)
NORTHING	EASTING	EL	NORTHING	EASTING	EL			
10,195,176.731	3,122,912.268	839.82	10,195,176.560	3,122,912.175	839.03	0.81	S 28:32:23.95 W	0
10,195,183.693	3,122,910.455	860.92	10,195,178.917	3,122,907.848	839.16	22.43	S 28:37:41.19 W	57
10,195,187.553	3,122,906.961	867.89	10,195,181.282	3,122,903.525	839.28	29.49	S 28:43:09.02 W	128
10,195,190.827	3,122,903.151	872.16	10,195,183.652	3,122,899.205	839.41	33.76	S 28:48:33.34 W	156
10,195,193.321	3,122,898.913	872.84	10,195,186.029	3,122,894.890	839.52	34.35	S 28:53:07.96 W	168
10,195,195.666	3,122,894.594	872.81	10,195,188.413	3,122,890.577	839.64	34.19	S 28:58:45.94 W	169
10,195,198.016	3,122,890.289	872.78	10,195,190.799	3,122,886.277	839.75	34.05	S 29:04:12.38 W	168
10,195,200.400	3,122,885.980	872.84	10,195,193.201	3,122,881.964	839.87	33.98	S 29:09:18.69 W	168
10,195,202.787	3,122,881.684	872.90	10,195,195.605	3,122,877.663	839.97	33.94	S 29:14:35.66 W	167
10,195,205.180	3,122,877.391	872.96	10,195,198.015	3,122,873.365	840.08	33.89	S 29:19:53.58 W	167
10,195,207.568	3,122,873.107	872.98	10,195,200.427	3,122,869.080	840.18	33.81	S 29:25:11.31 W	167
10,195,209.966	3,122,868.805	872.97	10,195,202.855	3,122,864.781	840.29	33.69	S 29:30:17.35 W	167
10,195,212.368	3,122,864.518	872.97	10,195,205.285	3,122,860.495	840.38	33.59	S 29:35:44.50 W	166
10,195,214.788	3,122,860.239	873.01	10,195,207.722	3,122,856.212	840.48	33.53	S 29:40:45.64 W	165
10,195,217.209	3,122,855.962	873.03	10,195,210.165	3,122,851.933	840.57	33.46	S 29:46:06.70 W	165
10,195,219.628	3,122,851.684	873.01	10,195,212.614	3,122,847.658	840.67	33.34	S 29:51:20.17 W	165
10,195,222.054	3,122,847.410	872.99	10,195,215.071	3,122,843.387	840.75	33.23	S 29:56:48.56 W	164
10,195,224.484	3,122,843.137	872.96	10,195,217.533	3,122,839.119	840.84	33.11	S 30:01:47.65 W	164
10,195,226.930	3,122,838.874	872.96	10,195,220.002	3,122,834.855	840.92	33.03	S 30:07:06.37 W	163
10,195,229.391	3,122,834.619	873.00	10,195,222.478	3,122,830.595	841.01	32.97	S 30:12:11.99 W	163
10,195,231.851	3,122,830.364	873.00	10,195,224.961	3,122,826.339	841.08	32.90	S 30:17:33.42 W	162
10,195,234.317	3,122,826.113	873.01	10,195,227.449	3,122,822.086	841.16	32.83	S 30:23:05.66 W	162
10,195,236.762	3,122,821.849	872.87	10,195,229.945	3,122,817.838	841.23	32.61	S 30:28:18.44 W	161
10,195,239.132	3,122,817.540	872.36	10,195,232.446	3,122,813.593	841.31	32.01	S 30:33:17.89 W	159
10,195,241.589	3,122,813.282	872.22	10,195,234.955	3,122,809.352	841.37	31.80	S 30:38:33.43 W	157
10,195,244.071	3,122,809.039	872.16	10,195,237.470	3,122,805.114	841.44	31.67	S 30:44:09.63 W	156
10,195,246.472	3,122,804.748	871.69	10,195,239.991	3,122,800.881	841.50	31.12	S 30:49:23.31 W	155
10,195,248.866	3,122,800.452	871.16	10,195,242.519	3,122,796.652	841.57	30.50	S 30:54:33.47 W	152
10,195,251.396	3,122,796.237	871.22	10,195,245.053	3,122,792.426	841.62	30.51	S 30:59:53.81 W	150
10,195,253.951	3,122,792.037	871.37	10,195,247.594	3,122,788.204	841.68	30.60	S 31:05:17.47 W	151
10,195,256.464	3,122,787.812	871.29	10,195,250.141	3,122,783.987	841.73	30.47	S 31:10:16.27 W	151
10,195,258.984	3,122,783.591	871.22	10,195,252.694	3,122,779.773	841.79	30.34	S 31:15:27.18 W	150
10,195,261.511	3,122,779.374	871.14	10,195,255.255	3,122,775.563	841.83	30.21	S 31:20:55.45 W	149
10,195,264.075	3,122,775.179	871.20	10,195,257.821	3,122,771.357	841.88	30.22	S 31:25:49.10 W	149
10,195,266.661	3,122,770.998	871.33	10,195,260.394	3,122,767.154	841.92	30.32	S 31:31:25.58 W	149
10,195,269.254	3,122,766.822	871.47	10,195,262.973	3,122,762.956	841.97	30.41	S 31:36:45.33 W	150
10,195,271.851	3,122,762.648	871.58	10,195,265.559	3,122,758.762	842.00	30.49	S 31:41:59.56 W	150
10,195,274.437	3,122,758.467	871.62	10,195,268.151	3,122,754.572	842.04	30.49	S 31:47:01.09 W	150
10,195,277.034	3,122,754.293	871.67	10,195,270.750	3,122,750.385	842.07	30.51	S 31:52:38.47 W	150
10,195,279.639	3,122,750.124	871.73	10,195,273.355	3,122,746.203	842.11	30.53	S 31:57:45.88 W	150
10,195,282.251	3,122,745.959	871.79	10,195,275.967	3,122,742.025	842.13	30.57	S 32:02:52.73 W	151
10,195,284.870	3,122,741.799	871.85	10,195,278.584	3,122,737.851	842.16	30.60	S 32:07:52.98 W	151
10,195,287.496	3,122,737.644	871.91	10,195,281.209	3,122,733.680	842.18	30.64	S 32:13:54.24 W	151
10,195,290.129	3,122,733.492	871.97	10,195,283.839	3,122,729.514	842.21	30.68	S 32:18:38.12 W	151
10,195,292.776	3,122,729.350	872.07	10,195,286.476	3,122,725.352	842.22	30.77	S 32:23:57.63 W	151
10,195,295.447	3,122,725.223	872.25	10,195,289.120	3,122,721.194	842.24	30.93	S 32:29:19.56 W	152
10,195,298.125	3,122,721.100	872.42	10,195,291.769	3,122,717.039	842.25	31.10	S 32:34:31.73 W	153
10,195,300.774	3,122,716.959	872.43	10,195,294.425	3,122,712.889	842.27	31.09	S 32:39:42.24 W	153
10,195,303.411	3,122,712.811	872.35	10,195,297.088	3,122,708.743	842.27	31.01	S 32:45:20.99 W	153
10,195,306.055	3,122,708.666	872.26	10,195,299.757	3,122,704.601	842.28	30.90	S 32:50:23.77 W	153
10,195,308.705	3,122,704.526	872.18	10,195,302.432	3,122,700.464	842.28	30.82	S 32:55:28.39 W	152
10,195,311.363	3,122,700.391	872.10	10,195,305.113	3,122,696.330	842.29	30.73	S 33:00:51.12 W	152
10,195,314.028	3,122,696.259	872.02	10,195,307.801	3,122,692.200	842.28	30.65	S 33:05:52.32 W	151
10,195,316.726	3,122,692.150	872.06	10,195,310.495	3,122,688.075	842.28	30.70	S 33:11:03.15 W	151
10,195,319.443	3,122,688.053	872.16	10,195,313.195	3,122,683.953	842.27	30.81	S 33:16:23.83 W	152
10,195,322.166	3,122,683.961	872.27	10,195,315.902	3,122,679.836	842.27	30.92	S 33:21:57.24 W	152
10,195,324.881	3,122,679.862	872.29	10,195,318.615	3,122,675.723	842.25	30.96	S 33:26:48.18 W	153
10,195,327.601	3,122,675.768	872.31	10,195,321.335	3,122,671.614	842.24	31.00	S 33:32:31.57 W	153
10,195,330.328	3,122,671.678	872.33	10,195,324.060	3,122,667.509	842.24	31.04	S 33:37:43.86 W	153
10,195,333.030	3,122,667.572	872.20	10,195,326.792	3,122,663.409	842.21	30.91	S 33:43:03.41 W	153
10,195,335.745	3,122,663.473	872.10	10,195,329.530	3,122,659.312	842.18	30.84	S 33:48:09.63 W	152
10,195,338.477	3,122,659.386	872.05	10,195,332.275	3,122,655.220	842.16	30.81	S 33:53:24.00 W	152
10,195,341.215	3,122,655.304	871.99	10,195,335.025	3,122,651.132	842.14	30.77	S 33:58:46.52 W	152
10,195,343.960	3,122,651.226	871.94	10,195,337.782	3,122,647.048	842.11	30.75	S 34:04:09.61 W	152
10,195,346.717	3,122,647.156	871.92	10,195,340.545	3,122,642.969	842.09	30.75	S 34:09:08.75 W	152
10,195,349.480	3,122,643.090	871.89	10,195,343.315	3,122,638.893	842.06	30.75	S 34:14:46.30 W	152
10,195,352.239	3,122,639.021	871.82	10,195,346.091	3,122,634.822	842.04	30.70	S 34:19:57.15 W	151
10,195,355.001	3,122,634.955	871.73	10,195,348.872	3,122,630.756	842.01	30.63	S 34:24:54.66 W	151
10,195,357.770	3,122,630.892	871.64	10,195,351.661	3,122,626.693	841.99	30.56	S 34:30:09.19 W	151
10,195,360.552	3,122,626.840	871.59	10,195,354.455	3,122,622.635	841.96	30.54	S 34:35:36.19 W	151
10,195,363.344	3,122,622.793	871.55	10,195,357.256	3,122,618.581	841.94	30.52	S 34:40:39.11 W	151
10,195,366.141	3,122,618.751	871.51	10,195,360.062	3,122,614.531	841.91	30.51	S 34:46:05.22 W	150
10,195,368.945	3,122,614.713	871.47	10,195,362.875	3,122,610.486	841.89	30.49	S 34:51:08.68 W	150
10,195,371.757	3,122,610.681	871.44	10,195,365.694	3,122,606.445	841.86	30.49	S 34:56:26.21 W	150

NORTHEAST (RIGHT) ROCK CUT - POINT TABLE

TOP OF ROCK CUT			BOTTOM OF ROCK CUT			ROCK CUT LENGTH	BEARING	AREA (SF)
NORTHING	EASTING	EL	NORTHING	EASTING	EL			
10,195,374.573	3,122,606.651	871.41	10,195,368.520	3,122,602.408	841.84	30.48	S 35:01:46.14 W	150
10,195,377.396	3,122,602.627	871.37	10,195,371.351	3,122,598.375	841.81	30.47	S 35:07:19.98 W	150
10,195,380.224	3,122,598.606	871.33	10,195,374.189	3,122,594.347	841.79	30.45	S 35:12:40.52 W	150
10,195,383.059	3,122,594.590	871.30	10,195,377.033	3,122,590.324	841.76	30.45	S 35:17:45.27 W	150
10,195,385.900	3,122,590.578	871.26	10,195,379.883	3,122,586.304	841.74	30.43	S 35:23:13.09 W	150
10,195,388.732	3,122,586.559	871.15	10,195,382.739	3,122,582.289	841.71	30.35	S 35:28:11.25 W	150
10,195,391.577	3,122,582.550	871.07	10,195,385.601	3,122,578.278	841.69	30.28	S 35:33:33.98 W	149
10,195,394.429	3,122,578.546	870.99	10,195,388.470	3,122,574.272	841.66	30.23	S 35:38:57.82 W	149
10,195,397.283	3,122,574.543	870.90	10,195,391.344	3,122,570.270	841.64	30.16	S 35:44:03.53 W	149
10,195,400.143	3,122,570.545	870.81	10,195,394.225	3,122,566.273	841.61	30.10	S 35:49:27.19 W	149
10,195,403.021	3,122,566.559	870.77	10,195,397.112	3,122,562.280	841.59	30.08	S 35:54:36.58 W	148
10,195,405.909	3,122,562.581	870.75	10,195,400.005	3,122,558.291	841.56	30.09	S 36:00:11.27 W	148
10,195,408.804	3,122,558.607	870.74	10,195,402.904	3,122,554.307	841.54	30.10	S 36:05:06.26 W	148
10,195,411.705	3,122,554.638	870.73	10,195,405.809	3,122,550.327	841.51	30.12	S 36:10:23.84 W	148
10,195,414.598	3,122,550.663	870.64	10,195,408.720	3,122,546.352	841.49	30.05	S 36:15:24.46 W	148
10,195,417.496	3,122,546.692	870.56	10,195,411.637	3,122,542.381	841.46	30.00	S 36:20:43.09 W	148
10,195,420.400	3,122,542.726	870.47	10,195,414.561	3,122,538.415	841.44	29.92	S 36:26:19.94 W	148
10,195,423.309	3,122,538.763	870.37	10,195,417.490	3,122,534.453	841.41	29.85	S 36:31:35.40 W	147
10,195,426.226	3,122,534.805	870.29	10,195,420.426	3,122,530.496	841.39	29.79	S 36:36:35.29 W	147
10,195,429.148	3,122,530.852	870.20	10,195,423.367	3,122,526.543	841.36	29.73	S 36:41:59.44 W	147
10,195,432.077	3,122,526.903	870.11	10,195,426.315	3,122,522.594	841.34	29.66	S 36:47:24.95 W	146
10,195,435.012	3,122,522.959	870.03	10,195,429.268	3,122,518.651	841.31	29.60	S 36:52:11.63 W	146
10,195,437.952	3,122,519.019	869.94	10,195,432.228	3,122,514.711	841.29	29.53	S 36:57:57.13 W	146
10,195,440.900	3,122,515.084	869.86	10,195,435.194	3,122,510.777	841.26	29.48	S 37:02:46.38 W	145
10,195,443.856	3,122,511.155	869.79	10,195,438.166	3,122,506.846	841.24	29.43	S 37:08:11.08 W	145
10,195,446.822	3,122,507.235	869.74	10,195,441.143	3,122,502.921	841.21	29.41	S 37:13:18.43 W	145
10,195,449.794	3,122,503.319	869.69	10,195,444.127	3,122,498.999	841.19	29.38	S 37:19:06.84 W	145
10,195,452.772	3,122,499.407	869.64	10,195,447.117	3,122,495.083	841.16	29.36	S 37:24:09.81 W	145
10,195,455.752	3,122,495.497	869.57	10,195,450.113	3,122,491.171	841.14	29.30	S 37:29:37.97 W	145
10,195,458.733	3,122,491.587	869.47	10,195,453.114	3,122,487.264	841.11	29.23	S 37:34:22.90 W	144
10,195,461.728	3,122,487.688	869.41	10,195,456.122	3,122,483.361	841.09	29.19	S 37:39:46.12 W	144
10,195,464.728	3,122,483.793	869.35	10,195,459.136	3,122,479.463	841.06	29.16	S 37:45:04.87 W	144
10,195,467.734	3,122,479.903	869.29	10,195,462.155	3,122,475.569	841.04	29.12	S 37:50:29.59 W	144
10,195,470.747	3,122,476.017	869.23	10,195,465.181	3,122,471.680	841.01	29.09	S 37:55:31.97 W	143
10,195,473.766	3,122,472.137	869.18	10,195,468.213	3,122,467.796	840.99	29.06	S 38:00:58.13 W	143
10,195,476.792	3,122,468.262	869.13	10,195,471.250	3,122,463.916	840.96	29.04	S 38:06:11.91 W	143
10,195,479.819	3,122,464.388	869.05	10,195,474.294	3,122,460.041	840.94	28.98	S 38:11:42.79 W	143
10,195,482.846	3,122,460.514	868.95	10,195,477.343	3,122,456.171	840.91	28.90	S 38:16:50.55 W	143
10,195,485.880	3,122,456.645	868.85	10,195,480.398	3,122,452.305	840.89	28.82	S 38:22:04.87 W	142
10,195,488.919	3,122,452.780	868.75	10,195,483.459	3,122,448.444	840.86	28.75	S 38:27:16.08 W	142
10,195,491.964	3,122,448.920	868.65	10,195,486.527	3,122,444.588	840.84	28.67	S 38:32:47.53 W	142
10,195,495.016	3,122,445.065	868.54	10,195,489.600	3,122,440.737	840.81	28.58	S 38:37:43.80 W	141
10,195,498.084	3,122,441.223	868.50	10,195,492.679	3,122,436.890	840.79	28.56	S 38:43:04.56 W	141
10,195,501.158	3,122,437.385	868.45	10,195,495.763	3,122,433.048	840.76	28.54	S 38:47:43.94 W	141
10,195,504.220	3,122,433.539	868.31	10,195,498.854	3,122,429.210	840.74	28.42	S 38:53:41.00 W	140
10,195,507.232	3,122,429.651	867.88	10,195,501.951	3,122,425.378	840.71	28.01	S 38:58:38.13 W	139
10,195,510.253	3,122,425.771	867.48	10,195,505.053	3,122,421.550	840.69	27.61	S 39:04:02.28 W	137
10,195,513.344	3,122,421.947	867.39	10,195,508.161	3,122,417.726	840.66	27.55	S 39:09:32.89 W	136
10,195,516.421	3,122,418.111	867.21	10,195,511.275	3,122,413.908	840.64	27.39	S 39:14:24.94 W	135
10,195,519.497	3,122,414.275	866.99	10,195,514.395	3,122,410.094	840.61	27.19	S 39:20:02.47 W	135
10,195,522.585	3,122,410.448	866.81	10,195,517.521	3,122,406.286	840.59	27.03	S 39:24:57.96 W	134
10,195,525.707	3,122,406.649	866.77	10,195,520.653	3,122,402.482	840.56	27.02	S 39:30:19.53 W	133
10,195,528.836	3,122,402.856	866.73	10,195,523.790	3,122,398.682	840.54	27.00	S 39:35:49.95 W	133
10,195,531.971	3,122,399.067	866.69	10,195,526.933	3,122,394.888	840.51	26.99	S 39:40:32.03 W	133
10,195,535.111	3,122,395.283	866.66	10,195,530.083	3,122,391.098	840.49	26.98	S 39:46:18.94 W	133
10,195,538.258	3,122,391.504	866.62	10,195,533.237	3,122,387.313	840.46	26.97	S 39:51:05.61 W	133
10,195,541.407	3,122,387.728	866.57	10,195,536.398	3,122,383.533	840.44	26.93	S 39:56:45.32 W	133
10,195,544.550	3,122,383.946	866.45	10,195,539.565	3,122,379.758	840.41	26.84	S 40:02:03.49 W	133
10,195,547.698	3,122,380.169	866.34	10,195,542.737	3,122,375.988	840.39	26.75	S 40:07:23.90 W	132
10,195,550.843	3,122,376.388	866.17	10,195,545.915	3,122,372.223	840.36	26.60	S 40:12:12.63 W	132
10,195,553.993	3,122,372.613	866.01	10,195,549.099	3,122,368.462	840.34	26.46	S 40:18:14.37 W	131
10,195,557.150	3,122,368.842	865.84	10,195,552.288	3,122,364.706	840.31	26.32	S 40:23:13.58 W	130
10,195,560.313	3,122,365.076	865.68	10,195,555.483	3,122,360.956	840.29	26.17	S 40:27:51.29 W	129
10,195,563.491	3,122,361.324	865.57	10,195,558.684	3,122,357.210	840.26	26.09	S 40:33:29.08 W	129
10,195,566.675	3,122,357.576	865.46	10,195,561.891	3,122,353.469	840.24	26.00	S 40:38:44.34 W	128
10,195,569.863	3,122,353.836	865.34	10,195,565.104	3,122,349.734	840.21	25.90	S 40:45:34.40 W	128
10,195,573.055	3,122,350.103	865.21	10,195,568.326	3,122,346.006	840.19	25.79	S 40:54:15.24 W	127
10,195,576.254	3,122,346.374	865.07	10,195,571.557	3,122,342.286	840.16	25.68	S 41:02:04.00 W	127
10,195,579.461	3,122,342.653	864.92	10,195,574.797	3,122,338.573	840.14	25.54	S 41:10:44.28 W	126
10,195,582.678	3,122,338.939	864.78	10,195,578.045	3,122,334.868	840.11	25.43	S 41:18:20.35 W	126
10,195,585.904	3,122,335.234	864.64	10,195,581.302	3,122,331.171	840.09	25.31	S 41:26:25.96 W	125
10,195,589.138	3,122,331.536	864.50	10,195,584.568	3,122,327.481	840.06	25.19	S 41:34:58.50 W	124
10,195,592.387	3,122,327.850	864.39	10,195,587.842	3,122,323.799	840.04	25.10	S 41:42:39.28 W	124
10,195,595.644	3,122,324.172	864.28	10,195,591.125	3,122,320.125	840.01	25.02	S 41:50:45.97 W	124

NOTES:

1. SEE TYPICAL SECTIONS FOR ROCK CUT SLOPES AS WELL AS TOP AND BOTTOM OF ROCK CUT FOR PAY.
2. SEE FENCING AND GRADING PLANS FOR GRADING INFORMATION.
3. ROCK CUT PAID FOR UNDER ITEM S2 RC AS "ROCK CUT" BY THE SF.
4. POINTS ARE LOCATED ALONG ℄ WBFR_S2_CL ON APPROXIMATELY 5' STATION INCREMENTS. NOTE THAT THE ROCK CUT FACES ARE NOT PERPENDICULAR TO THE ROADWAY CENTERLINE. USE TABLE VALUES FOR ROCK CUT CONSTRUCTION. LEFT CUT POINTS ARE FROM STA 435+20 TO STA 446+35 (APPROXIMATE LENGTH OF CUT = 4,354 LF). RIGHT CUT POINTS ARE FROM STA 434+05 TO STA 450+30, FOLLOWED BY POINTS APPROXIMATELY EVERY 3'-5' AROUND THE RIGHT TURN (APPROXIMATE LENGTH OF CUT = 6,998 LF).
5. USE LINEAR INTERPOLATION FOR VALUES BETWEEN ROWS.
6. COORDINATES ARE SURFACE VALUES. TO OBTAIN GRID VALUES, DIVIDE BY A COMBINED SURFACE ADJUSTMENT FACTOR OF 1.00014.

STATE OF TEXAS
JACOB E. WALKER
122057
LICENSED
PROFESSIONAL ENGINEER

03/23/2018

NO.	DATE	REVISION	APPROVED

WILLIAMSON COUNTY

HDR Engineering, Inc.
810 Hesters Crossing, Suite 120
Round Rock, Texas 78681
Texas Registered Engineering Firm F-754

SOUTHWEST BYPASS SEGMENT 2

ROCK CUT CONTROL POINTS

SHEET 3 OF 5

DESIGN	FED.RD. DIV.NO.	FEDERAL AID PROJECT NO.		HIGHWAY NO.
JC	6			
GRAPHICS	STATE	DISTRICT	COUNTY	SHEET NO.
LG	TEXAS	AUS	WILLIAMSON	
CHECK	CONTROL	SECTION	JOB	97
JW				
CHECK	2103	01	034	
JC				

PLOT DRIVER: TXDOT_PDF_BW.pltcfg PENTABLE: S2-00002017018.tbl
USER: lgomezgonz DATE: 3/23/2018 TIME: 1:48:21 PM SCALE: 1:1
FILE: \
4/12/2018 7:20 AM

NORTHEAST (RIGHT) ROCK CUT - POINT TABLE

TOP OF ROCK CUT			BOTTOM OF ROCK CUT			ROCK CUT LENGTH	BEARING	AREA (SF)
NORTHING	EASTING	EL	NORTHING	EASTING	EL			
10,195,598.911	3,122,320.503	864.17	10,195,594.416	3,122,316.458	839.99	24.92	S 41:59:01.29 W	123
10,195,602.187	3,122,316.842	864.07	10,195,597.716	3,122,312.800	839.96	24.85	S 42:06:54.38 W	123
10,195,605.454	3,122,313.172	863.87	10,195,601.024	3,122,309.149	839.94	24.67	S 42:14:36.31 W	122
10,195,608.727	3,122,309.508	863.66	10,195,604.341	3,122,305.505	839.91	24.48	S 42:23:09.51 W	121
10,195,612.018	3,122,305.860	863.50	10,195,607.667	3,122,301.870	839.89	24.34	S 42:31:18.39 W	120
10,195,615.333	3,122,302.233	863.42	10,195,611.001	3,122,298.242	839.86	24.29	S 42:39:13.89 W	120
10,195,618.656	3,122,298.614	863.34	10,195,614.344	3,122,294.623	839.84	24.22	S 42:47:09.62 W	120
10,195,621.986	3,122,295.002	863.25	10,195,617.695	3,122,291.011	839.81	24.16	S 42:55:31.71 W	119
10,195,625.316	3,122,291.389	863.12	10,195,621.054	3,122,287.407	839.79	24.05	S 43:03:17.09 W	119
10,195,628.669	3,122,287.798	863.06	10,195,624.422	3,122,283.811	839.76	24.02	S 43:11:29.07 W	118
10,195,632.027	3,122,284.211	862.99	10,195,627.798	3,122,280.223	839.74	23.97	S 43:19:12.10 W	118
10,195,635.390	3,122,280.630	862.90	10,195,631.183	3,122,276.643	839.71	23.90	S 43:27:43.34 W	118
10,195,638.762	3,122,277.057	862.81	10,195,634.576	3,122,273.071	839.68	23.84	S 43:35:52.92 W	118
10,195,642.143	3,122,273.492	862.72	10,195,637.977	3,122,269.507	839.66	23.77	S 43:43:40.46 W	117
10,195,645.532	3,122,269.935	862.63	10,195,641.387	3,122,265.951	839.63	23.71	S 43:51:55.33 W	117
10,195,648.927	3,122,266.384	862.52	10,195,644.804	3,122,262.403	839.60	23.63	S 43:59:46.15 W	117
10,195,652.316	3,122,262.849	862.40	10,195,648.219	3,122,258.875	839.57	23.53	S 44:07:36.82 W	116
10,195,655.709	3,122,259.325	862.28	10,195,651.639	3,122,255.358	839.54	23.44	S 44:15:56.71 W	115
10,195,659.110	3,122,255.810	862.15	10,195,655.066	3,122,251.850	839.51	23.34	S 44:23:55.38 W	115
10,195,662.519	3,122,252.304	862.03	10,195,658.501	3,122,248.350	839.48	23.24	S 44:32:24.12 W	114
10,195,665.937	3,122,248.805	861.91	10,195,661.944	3,122,244.859	839.45	23.15	S 44:39:38.90 W	114
10,195,669.363	3,122,245.314	861.78	10,195,665.396	3,122,241.375	839.42	23.05	S 44:47:49.49 W	113
10,195,672.789	3,122,241.825	861.62	10,195,668.855	3,122,237.900	839.39	22.91	S 44:56:03.79 W	113
10,195,676.215	3,122,238.336	861.41	10,195,672.322	3,122,234.433	839.36	22.73	S 45:04:24.58 W	112
10,195,679.650	3,122,234.854	861.20	10,195,675.797	3,122,230.974	839.33	22.54	S 45:12:00.18 W	111
10,195,683.092	3,122,231.381	860.99	10,195,679.280	3,122,227.524	839.30	22.36	S 45:20:10.30 W	110
10,195,686.549	3,122,227.923	860.82	10,195,682.771	3,122,224.082	839.26	22.22	S 45:28:25.52 W	109
10,195,690.024	3,122,224.483	860.70	10,195,686.269	3,122,220.648	839.23	22.13	S 45:36:13.99 W	109
10,195,693.508	3,122,221.052	860.59	10,195,689.776	3,122,217.223	839.20	22.05	S 45:44:06.02 W	108
10,195,696.998	3,122,217.629	860.47	10,195,693.290	3,122,213.806	839.17	21.96	S 45:52:29.46 W	108
10,195,700.490	3,122,214.207	860.31	10,195,696.812	3,122,210.397	839.13	21.83	S 46:00:35.70 W	107
10,195,703.981	3,122,210.784	860.11	10,195,700.341	3,122,206.997	839.10	21.66	S 46:08:01.99 W	107
10,195,707.493	3,122,207.384	859.98	10,195,703.879	3,122,203.606	839.07	21.55	S 46:16:15.47 W	106
10,195,711.294	3,122,204.287	861.48	10,195,707.424	3,122,200.222	839.03	23.14	S 46:24:27.87 W	109
10,195,714.983	3,122,201.075	862.29	10,195,710.977	3,122,196.848	839.00	24.01	S 46:32:15.48 W	116
10,195,718.571	3,122,197.758	862.48	10,195,714.537	3,122,193.481	838.96	24.24	S 46:40:29.13 W	118
10,195,721.903	3,122,194.169	861.12	10,195,718.105	3,122,190.124	838.93	22.87	S 46:48:13.76 W	115
10,195,725.309	3,122,190.657	860.15	10,195,721.681	3,122,186.774	838.89	21.91	S 46:56:40.04 W	110
10,195,728.682	3,122,187.109	858.91	10,195,725.264	3,122,183.434	838.83	20.70	S 47:04:30.31 W	104
10,195,732.238	3,122,183.756	858.68	10,195,728.855	3,122,180.102	838.76	20.53	S 47:12:19.48 W	101
10,195,735.802	3,122,180.412	858.45	10,195,732.454	3,122,176.778	838.68	20.38	S 47:20:44.40 W	100
10,195,739.367	3,122,177.069	858.17	10,195,736.059	3,122,173.463	838.60	20.17	S 47:28:04.71 W	99
10,195,742.916	3,122,173.736	857.85	10,195,739.659	3,122,170.169	838.53	19.91	S 47:36:03.74 W	98
10,195,746.469	3,122,170.419	857.53	10,195,743.261	3,122,166.889	838.45	19.67	S 47:44:09.63 W	96
10,195,750.046	3,122,167.130	857.31	10,195,746.870	3,122,163.618	838.37	19.52	S 47:52:33.88 W	95
10,195,753.633	3,122,163.851	857.11	10,195,750.486	3,122,160.355	838.29	19.40	S 48:00:26.48 W	95
10,195,757.223	3,122,160.576	856.91	10,195,754.109	3,122,157.101	838.24	19.24	S 48:08:09.61 W	94
10,195,760.818	3,122,157.307	856.70	10,195,757.739	3,122,153.856	838.20	19.07	S 48:15:37.77 W	93
10,195,764.415	3,122,154.041	856.47	10,195,761.377	3,122,150.619	838.17	18.86	S 48:24:06.53 W	92
10,195,768.009	3,122,150.773	856.18	10,195,765.021	3,122,147.391	838.13	18.61	S 48:32:21.75 W	91
10,195,771.611	3,122,147.513	855.88	10,195,768.673	3,122,144.173	838.09	18.34	S 48:39:49.77 W	90
10,195,775.227	3,122,144.270	855.64	10,195,772.332	3,122,140.962	838.05	18.13	S 48:48:33.01 W	89
10,195,778.853	3,122,141.038	855.40	10,195,775.998	3,122,137.761	838.01	17.92	S 48:56:12.66 W	88
10,195,782.489	3,122,137.819	855.18	10,195,779.671	3,122,134.569	837.98	17.73	S 49:04:19.91 W	87
10,195,786.135	3,122,134.610	854.98	10,195,783.351	3,122,131.385	837.94	17.56	S 49:11:50.67 W	86
10,195,789.787	3,122,131.411	854.78	10,195,787.038	3,122,128.210	837.90	17.40	S 49:20:39.15 W	85
10,195,793.447	3,122,128.220	854.57	10,195,790.731	3,122,125.044	837.86	17.22	S 49:27:50.90 W	84
10,195,797.113	3,122,125.037	854.37	10,195,794.432	3,122,121.887	837.82	17.06	S 49:35:54.69 W	83
10,195,800.788	3,122,121.864	854.17	10,195,798.140	3,122,118.739	837.78	16.89	S 49:43:24.21 W	82
10,195,804.470	3,122,118.701	853.97	10,195,801.855	3,122,115.600	837.75	16.72	S 49:51:35.48 W	82
10,195,808.155	3,122,115.542	853.75	10,195,805.576	3,122,112.469	837.71	16.53	S 49:59:42.40 W	81
10,195,811.761	3,122,112.289	852.99	10,195,809.305	3,122,109.348	837.67	15.79	S 50:08:06.28 W	79
10,195,815.419	3,122,109.097	852.51	10,195,813.040	3,122,106.235	837.63	15.34	S 50:15:55.41 W	76
10,195,819.100	3,122,105.933	852.13	10,195,816.783	3,122,103.132	837.59	14.99	S 50:24:08.25 W	74
10,195,822.781	3,122,102.768	851.70	10,195,820.532	3,122,100.037	837.55	14.59	S 50:31:41.79 W	72
10,195,826.468	3,122,099.611	851.27	10,195,824.287	3,122,096.952	837.51	14.18	S 50:38:24.94 W	70
10,195,830.119	3,122,096.411	850.57	10,195,828.050	3,122,093.875	837.47	13.50	S 50:47:26.36 W	67
10,195,833.844	3,122,093.301	850.28	10,195,831.820	3,122,090.807	837.43	13.25	S 50:56:20.48 W	65
10,195,837.580	3,122,090.204	850.02	10,195,835.596	3,122,087.749	837.39	13.02	S 51:03:24.14 W	64
10,195,841.304	3,122,087.093	849.64	10,195,839.379	3,122,084.699	837.35	12.67	S 51:11:50.86 W	62
10,195,845.046	3,122,084.005	849.34	10,195,843.168	3,122,081.658	837.32	12.39	S 51:20:03.26 W	61
10,195,848.795	3,122,080.924	849.02	10,195,846.965	3,122,078.627	837.28	12.10	S 51:27:21.50 W	60
10,195,852.490	3,122,077.777	848.33	10,195,850.768	3,122,075.604	837.24	11.43	S 51:36:17.41 W	57
10,195,856.224	3,122,074.678	847.83	10,195,854.577	3,122,072.591	837.20	10.96	S 51:43:13.87 W	54

NORTHEAST (RIGHT) ROCK CUT - POINT TABLE

TOP OF ROCK CUT			BOTTOM OF ROCK CUT			ROCK CUT LENGTH	BEARING	AREA (SF)
NORTHING	EASTING	EL	NORTHING	EASTING	EL			
10,195,859.965	3,122,071.588	847.34	10,195,858.393	3,122,069.586	837.16	10.49	S 51:51:37.70 W	52
10,195,863.716	3,122,068.510	846.86	10,195,862.216	3,122,066.591	837.12	10.04	S 51:59:12.43 W	50
10,195,867.530	3,122,065.513	846.75	10,195,866.046	3,122,063.605	837.08	9.97	S 52:07:30.06 W	49
10,195,871.350	3,122,062.524	846.63	10,195,869.882	3,122,060.628	837.04	9.89	S 52:15:02.72 W	48
10,195,875.142	3,122,059.499	846.28	10,195,873.724	3,122,057.660	837.00	9.57	S 52:21:54.78 W	47
10,195,878.969	3,122,056.521	846.13	10,195,877.574	3,122,054.701	836.96	9.45	S 52:31:49.55 W	46
10,195,882.809	3,122,053.560	846.02	10,195,881.429	3,122,051.751	836.92	9.38	S 52:39:42.17 W	46
10,195,886.656	3,122,050.608	845.90	10,195,885.291	3,122,048.811	836.88	9.30	S 52:46:46.99 W	45
10,195,890.511	3,122,047.667	845.80	10,195,889.160	3,122,045.880	836.84	9.24	S 52:54:36.53 W	45
10,195,894.328	3,122,044.676	845.40	10,195,893.035	3,122,042.957	836.80	8.86	S 53:03:00.69 W	44
10,195,898.147	3,122,041.688	844.97	10,195,896.917	3,122,040.044	836.75	8.47	S 53:11:49.47 W	42
10,195,901.951	3,122,038.679	844.39	10,195,900.805	3,122,037.141	836.71	7.92	S 53:18:33.62 W	40
10,195,905.774	3,122,035.696	843.89	10,195,904.699	3,122,034.246	836.67	7.44	S 53:26:51.10 W	37
10,195,909.639	3,122,032.769	843.63	10,195,908.600	3,122,031.361	836.63	7.22	S 53:34:31.49 W	36
10,195,913.590	3,122,029.960	843.92	10,195,912.507	3,122,028.485	836.59	7.55	S 53:42:44.99 W	36
10,195,917.376	3,122,026.926	843.03	10,195,916.420	3,122,025.618	836.55	6.68	S 53:50:14.72 W	35
10,195,921.255	3,122,024.019	842.74	10,195,920.340	3,122,022.760	836.51	6.42	S 53:59:29.66 W	32
10,195,923.144	3,122,022.723	842.94	10,195,922.194	3,122,021.413	836.47	6.67	S 54:03:02.60 W	15
10,195,927.218	3,122,019.908	843.31	10,195,926.207	3,122,018.508	836.41	7.11	S 54:09:55.21 W	34
10,195,931.277	3,122,017.079	843.56	10,195,930.225	3,122,015.615	836.35	7.43	S 54:17:59.14 W	36
10,195,935.341	3,122,014.262	843.81	10,195,934.247	3,122,012.732	836.29	7.75	S 54:26:02.37 W	38
10,195,939.398	3,122,011.441	843.99	10,195,938.274	3,122,009.861	836.23	8.00	S 54:34:20.07 W	39
10,195,943.392	3,122,008.537	843.70	10,195,942.305	3,122,007.001	836.17	7.76	S 54:42:49.08 W	39
10,195,947.458	3,122,005.738	843.88	10,195,946.341	3,122,004.152	836.12	8.00	S 54:50:36.39 W	39
10,195,951.511	3,122,002.926	843.94	10,195,950.381	3,122,001.314	836.06	8.12	S 54:58:11.39 W	40
10,195,955.569	3,122,000.125	844.00	10,195,954.426	3,121,998.486	836.01	8.24	S 55:06:32.36 W	40
10,195,959.631	3,121,997.335	844.06	10,195,958.476	3,121,995.670	835.95	8.36	S 55:15:04.32 W	41
10,195,963.699	3,121,994.556	844.12	10,195,962.531	3,121,992.864	835.90	8.47	S 55:22:56.63 W	41
10,195,967.771	3,121,991.788	844.18	10,195,966.590	3,121,990.069	835.84	8.60	S 55:30:35.53 W	42
10,195,971.847	3,121,989.029	844.24	10,195,970.655	3,121,987.284	835.79	8.71	S 55:39:47.63 W	43
10,195,975.923	3,121,986.274	844.26	10,195,974.724	3,121,984.511	835.73	8.79	S 55:46:50.67 W	43
10,195,980.004	3,121,983.530	844.29	10,195,978.798	3,121,981.747	835.68	8.87	S 55:55:33.77 W	43
10,195,985.146	3,121,980.096	844.32	10,195,983.930	3,121,978.287	835.60	8.99	S 56:05:28.39 W	55
10,195,989.180	3,121,977.423	844.35	10,195,987.953	3,121,975.589	835.53	9.09	S 56:12:58.72 W	44
10,195,993.220	3,121,974.759	844.38	10,195,991.983	3,121,972.900	835.45	9.20	S 56:21:35.10 W	44
10,195,997.256	3,121,972.091	844.35	10,195,996.018	3,121,970.221	835.38	9.25	S 56:29:38.99 W	45
10,196,001.287	3,121,969.415	844.23	10,196,000.059	3,121,967.552	835.30	9.20	S 56:36:32.58 W	45
10,196,005.341	3,121,966.774	844.23	10,196,004.107	3,121,964.892	835.23	9.28	S 56:44:51.82 W	45
10,196,009.401	3,121,964.144	844.24	10,196,008.160	3,121,962.241	835.15	9.37	S 56:53:25.78 W	45
10,196,013.464	3,121,961.518	844.22	10,196,012.219	3,121,959.600	835.07	9.43	S 57:00:42.65 W	45
10,196,017.533	3,121,958.904	844.21	10,196,016.284	3,121,956.969	835.00	9.49	S 57:09:31.12 W	46
10,196,021.612	3,121,956.304	844.22	10,196,020.354	3,121,954.347	834.92	9.59	S 57:15:58.51 W	46
10,196,025.691	3,121,953.705	844.20	10,196,024.431	3,121,951.734	834.84	9.65	S 57:24:37.67 W	47
10,196,029.775	3,121,951.116	844.18	10,196,028.513	3,121,949.131	834.77	9.70	S 57:33:11.14 W	47
10,196,033.866	3,121,948.537	844.15	10,196,032.601	3,121,946.538	834.69	9.75	S 57:40:25.32 W	47
10,196,037.962	3,121,945.967	844.13	10,196,036.695	3,121,943.954	834.61	9.81	S 57:48:47.97 W	47
10,196,042.064	3,121,943.408	844.11	10,196,040.794	3,121,941.380	834.54	9.86	S 57:56:37.88 W	48
10,196,046.173	3,121,940.858	844.09	10,196,044.900	3,121,938.816	834.46	9.93	S 58:03:36.86 W	48
10,196,050.288	3,121,938.321	844.08	10,196,049.011	3,121,936.261	834.38	10.00	S 58:12:18.38 W	48
10,196,054.406	3,121,935.789	844.05	10,196,053.127	3,121,933.715	834.31	10.04	S 58:20:18.89 W	48
10,196,058.531	3,121,933.268	844.03	10,196,057.249	3,121,931.179	834.23	10.10	S 58:27:46.60 W	49
10,196,062.661	3,121,930.756	844.00	10,196,061.377	3,121,928.653	834.15	10.15	S 58:35:36.90 W	49
10,196,066.796	3,121,928.254	843.98	10,196,065.511	3,121,926.137	834.07	10.21	S 58:44:33.45 W	49
10,196,070.938	3,121,925.762	843.96	10,196,069.650	3,121,923.630	833.99	10.28	S 58:51:45.61 W	50
10,196,075.090	3,121,923.288	843.97	10,196,073.795	3,121,921.133	833.92	10.36	S 58:59:49.78 W	50
10,196,079.241	3,121,920.812	844.02	10,196,077.945	3,121,918.645	833.92	10.41	S 59:07:04.68 W	50
10,196,083.397	3,121,918.347	844.06	10,196,082.101	3,121,916.167	833.92	10.45	S 59:16:07.36 W	50
10,196,087.559	3,121,915.891	844.11	10,196,086.262	3,121,913.699	833.92	10.50	S 59:23:14.36 W	51
10,196,091.724	3,121,913.441	844.15	10,196,090.429	3,121,911.241	833.94	10.52	S 59:31:02.59 W	51
10,196,095.893	3,121,910.987	844.22	10,196,094.598	3,121,908.787	834.00	10.53	S 59:31:02.59 W	51
10,196,100.054	3,121,908.521	844.22	10,196,098.767	3,121,906.333	834.07	10.46	S 59:32:08.16 W	51
10,196,104.215	3,121,906.053	844.22	10,196,102.936	3,121,903.880	834.13	10.40	S 59:31:10.12 W	50
10,196,108.374	3,121,903.584	844.22	10,196,107.104	3,121,901.426	834.20	10.33	S 59:31:22.27 W	50
10,196,112.535	3,121,901.117	844.22	10,196,111.273	3,121,898.973	834.27	10.26	S 59:31:05.19 W	50
10,196,116.695	3,121,898.650	844.23	10,196,115.441	3,121,896.520	834.34	10.19	S 59:30:47.88 W	49
10,196,120.934	3,121,896.137	844.23	10,196,119.688	3,121,894.020	834.41	10.12	S 59:31:12.95 W	50
10,196,125.235	3,121,893.587	844.24	10,196,123.998	3,121,891.484	834.48	10.06	S 59:32:08.32 W	50
10,196,129.536	3,121,891.037	844.25	10,196,128.307	3,121,888.948	834.55	10.00	S 59:31:51.09 W	50
10,196,133.838	3,121,888.489	844.27	10,196,132.616	3,121,886.412	834.63	9.94	S 59:31:46.68 W	50
10,196,138.141	3,121,885.941	844.29	10,196,136.925	3,121,883.876	834.70	9.88	S 59:30:28.03 W	50
10,196,142.443	3,121,883.394	844.31	10,196,141.234	3,121,881.340	834.77	9.83	S 59:31:07.00 W	49
10,196,146.745	3,121,880.846	844.33	10,196,145.543	3,121,878.804	834.84	9.78	S 59:31:02.25 W	49
10,196,151.050	3,121,878.302	844.36	10,196,149.852	3,121,876.268	834.92	9.73	S 59:30:08.85 W	49
10,196,155.354	3,121,875.758	844.40	10,196,154.161	3,121,873.731	834.99	9.70	S 59:31:15.13 W	49

NOTES:

1. SEE TYPICAL SECTIONS FOR ROCK CUT SLOPES AS WELL AS TOP AND BOTTOM OF ROCK CUT FOR PAY.
2. SEE FENCING AND GRADING PLANS FOR GRADING INFORMATION.
3. ROCK CUT PAID FOR UNDER ITEM S2 RC AS "ROCK CUT" BY THE SF.
4. POINTS ARE LOCATED ALONG ℄ WBFR_S2_CL ON APPROXIMATELY 5' STATION INCREMENTS. NOTE THAT THE ROCK CUT FACES ARE NOT PERPENDICULAR TO THE ROADWAY CENTERLINE. USE TABLE VALUES FOR ROCK CUT CONSTRUCTION. LEFT CUT POINTS ARE FROM STA 435+20 TO STA 446+35 (APPROXIMATE LENGTH OF CUT = 4,354 LF). RIGHT CUT POINTS ARE FROM STA 434+05 TO STA 450+30, FOLLOWED BY POINTS APPROXIMATELY EVERY 3'-5' AROUND THE RIGHT TURN (APPROXIMATE LENGTH OF CUT = 6,998 LF).
5. USE LINEAR INTERPOLATION FOR VALUES BETWEEN ROWS.
6. COORDINATES ARE SURFACE VALUES. TO OBTAIN GRID VALUES, DIVIDE BY A COMBINED SURFACE ADJUSTMENT FACTOR OF 1.00014.

STATE OF TEXAS
JACOB E. WALKER
122057
LICENSED
PROFESSIONAL ENGINEER

03/23/2018

NO.	DATE	REVISION	APPROVED

WILLIAMSON COUNTY

HDR Engineering, Inc.
810 Hesters Crossing, Suite 120
Round Rock, Texas 78681
Texas Registered Engineering Firm F-754

SOUTHWEST BYPASS SEGMENT 2

ROCK CUT CONTROL POINTS

SHEET 4 OF 5

DESIGN	FED.RD. DIV.NO.	FEDERAL AID PROJECT NO.		HIGHWAY NO.
JC	6			
GRAPHICS	STATE	DISTRICT	COUNTY	SHEET NO.
LG	TEXAS	AUS	WILLIAMSON	
CHECK	CONTROL	SECTION	JOB	98
JW				
CHECK	2103	01	034	
JC				

PLOT DRIVER: TXDOT_PDF_BW.pltcfg PENTABLE: S2-0000020170718.tbl
USER: lgomezgonz DATE: 3/23/2018 TIME: 1:46:24 PM SCALE: 1:1
FILE: \
4/12/2018 7:20 AM

NORTHEAST (RIGHT) ROCK CUT - POINT TABLE

TOP OF ROCK CUT			BOTTOM OF ROCK CUT			ROCK CUT LENGTH	BEARING	AREA (SF)
NORTHING	EASTING	EL	NORTHING	EASTING	EL			
10,196,159.658	3,121,873.214	844.43	10,196,158.470	3,121,871.195	835.06	9.66	S 59:31:37.25 W	48
10,196,163.962	3,121,870.669	844.46	10,196,162.779	3,121,868.659	835.14	9.61	S 59:31:14.71 W	48
10,196,168.267	3,121,868.125	844.50	10,196,167.089	3,121,866.123	835.21	9.58	S 59:31:37.02 W	48
10,196,172.571	3,121,865.581	844.54	10,196,171.398	3,121,863.587	835.28	9.54	S 59:31:59.52 W	48
10,196,176.877	3,121,863.040	844.58	10,196,175.707	3,121,861.051	835.35	9.51	S 59:32:04.04 W	48
10,196,181.183	3,121,860.499	844.63	10,196,180.016	3,121,858.515	835.43	9.48	S 59:32:08.58 W	47
10,196,185.489	3,121,857.958	844.68	10,196,184.325	3,121,855.979	835.50	9.46	S 59:32:13.15 W	47
10,196,189.789	3,121,855.405	844.68	10,196,188.634	3,121,853.443	835.57	9.39	S 59:30:55.14 W	47
10,196,194.083	3,121,852.844	844.63	10,196,192.943	3,121,850.907	835.64	9.27	S 59:31:17.51 W	47
10,196,198.374	3,121,850.277	844.56	10,196,197.252	3,121,848.371	835.72	9.11	S 59:30:57.84 W	46
10,196,202.661	3,121,847.704	844.46	10,196,201.561	3,121,845.835	835.79	8.94	S 59:31:15.82 W	45
10,196,206.963	3,121,845.155	844.48	10,196,205.870	3,121,843.299	835.86	8.89	S 59:30:22.08 W	45
10,196,211.268	3,121,842.612	844.52	10,196,210.179	3,121,840.762	835.93	8.85	S 59:31:00.71 W	44
10,196,215.573	3,121,840.069	844.56	10,196,214.489	3,121,838.226	836.01	8.81	S 59:32:13.82 W	44
10,196,219.875	3,121,837.521	844.58	10,196,218.798	3,121,835.690	836.08	8.76	S 59:32:08.96 W	44
10,196,224.178	3,121,834.974	844.60	10,196,223.107	3,121,833.154	836.15	8.71	S 59:31:29.37 W	44
10,196,228.495	3,121,832.451	844.70	10,196,227.416	3,121,830.618	836.19	8.77	S 59:31:00.12 W	44
10,196,232.809	3,121,829.924	844.78	10,196,231.725	3,121,828.082	836.23	8.81	S 59:31:24.89 W	44
10,196,237.120	3,121,827.392	844.83	10,196,236.034	3,121,825.546	836.27	8.82	S 59:31:54.27 W	44
10,196,241.098	3,121,825.022	844.90	10,196,240.024	3,121,823.198	836.44	8.72	S 59:30:35.11 W	41
10,196,245.396	3,121,822.467	845.00	10,196,244.333	3,121,820.662	836.62	8.64	S 59:30:19.20 W	43
10,196,249.693	3,121,819.910	845.09	10,196,248.642	3,121,818.125	836.81	8.54	S 59:30:38.21 W	43
10,196,253.986	3,121,817.347	845.15	10,196,252.952	3,121,815.589	837.00	8.40	S 59:32:14.29 W	42
10,196,258.288	3,121,814.799	845.29	10,196,257.261	3,121,813.053	837.18	8.36	S 59:32:09.20 W	42
10,196,262.596	3,121,812.261	845.46	10,196,261.570	3,121,810.517	837.37	8.34	S 59:31:53.70 W	42
10,196,266.902	3,121,809.719	845.62	10,196,265.879	3,121,807.981	837.55	8.32	S 59:31:07.00 W	42
10,196,271.173	3,121,807.119	845.51	10,196,270.188	3,121,805.445	837.74	8.01	S 59:31:37.12 W	41
10,196,275.441	3,121,804.513	845.37	10,196,274.497	3,121,802.909	837.93	7.67	S 59:31:19.09 W	39
10,196,279.568	3,121,802.013	845.23	10,196,278.699	3,121,800.458	838.11	7.34	S 60:48:06.08 W	36
10,196,283.188	3,121,800.056	845.15	10,196,282.435	3,121,798.508	838.26	7.10	S 64:03:36.47 W	30
10,196,285.983	3,121,798.736	845.14	10,196,285.310	3,121,797.186	838.38	6.97	S 66:31:47.37 W	22
10,196,288.824	3,121,797.541	845.14	10,196,288.228	3,121,795.992	838.50	6.84	S 68:57:18.19 W	22
10,196,291.711	3,121,796.473	845.15	10,196,291.190	3,121,794.925	838.61	6.74	S 71:23:55.16 W	21
10,196,294.641	3,121,795.531	845.17	10,196,294.193	3,121,793.985	838.73	6.64	S 73:50:22.07 W	21
10,196,297.615	3,121,794.715	845.20	10,196,297.238	3,121,793.172	838.85	6.55	S 76:16:11.86 W	21
10,196,300.632	3,121,794.029	845.25	10,196,300.325	3,121,792.489	838.97	6.47	S 78:43:33.05 W	21
10,196,303.691	3,121,793.474	845.32	10,196,303.453	3,121,791.935	839.08	6.43	S 81:12:32.70 W	21
10,196,306.793	3,121,793.055	845.41	10,196,306.622	3,121,791.513	839.20	6.40	S 83:40:19.36 W	21
10,196,309.934	3,121,792.770	845.51	10,196,309.831	3,121,791.228	839.32	6.38	S 86:10:42.70 W	21
10,196,313.116	3,121,792.623	845.61	10,196,313.080	3,121,791.081	839.44	6.36	S 88:39:45.35 W	21
10,196,316.336	3,121,792.611	845.70	10,196,316.368	3,121,791.078	839.57	6.32	N 88:48:15.03 W	21
10,196,319.331	3,121,792.725	845.76	10,196,319.426	3,121,791.207	839.68	6.27	N 86:25:08.28 W	19
10,196,322.886	3,121,793.026	845.86	10,196,323.055	3,121,791.525	839.82	6.23	N 83:34:33.71 W	23
10,196,326.092	3,121,793.452	845.96	10,196,326.326	3,121,791.967	839.94	6.20	N 81:02:42.74 W	21
10,196,329.567	3,121,794.083	846.07	10,196,329.872	3,121,792.615	840.07	6.18	N 78:15:46.39 W	22
10,196,332.946	3,121,794.869	846.19	10,196,333.321	3,121,793.420	840.20	6.17	N 75:29:24.89 W	22
10,196,336.344	3,121,795.836	846.32	10,196,336.789	3,121,794.408	840.34	6.16	N 72:41:30.04 W	22
10,196,339.766	3,121,796.938	846.46	10,196,340.263	3,121,795.585	840.69	5.95	N 69:49:48.39 W	22
10,196,343.387	3,121,798.309	846.61	10,196,343.930	3,121,797.042	841.10	5.68	N 66:48:05.07 W	23
10,196,347.228	3,121,800.015	846.79	10,196,347.814	3,121,798.840	841.54	5.41	N 63:29:36.58 W	24
10,196,350.972	3,121,801.943	846.96	10,196,351.592	3,121,800.863	841.98	5.13	N 60:08:27.54 W	23
10,196,354.610	3,121,804.084	847.11	10,196,355.250	3,121,803.103	842.42	4.83	N 56:52:47.10 W	21
10,196,358.429	3,121,806.557	847.27	10,196,359.041	3,121,805.650	842.89	4.51	N 55:59:25.50 W	21
10,196,362.373	3,121,809.135	847.49	10,196,362.947	3,121,808.283	843.38	4.24	N 56:01:53.40 W	21
10,196,365.023	3,121,813.752	847.75	10,196,367.189	3,121,810.540	843.87	5.48	N 56:00:23.01 W	23
10,196,368.729	3,121,816.945	847.97	10,196,371.325	3,121,813.094	844.37	5.88	N 56:00:56.42 W	28
10,196,372.275	3,121,820.537	848.21	10,196,375.675	3,121,815.495	844.88	6.93	N 56:00:24.52 W	32
10,196,374.905	3,121,825.197	848.49	10,196,380.127	3,121,817.452	845.37	9.85	N 56:00:37.87 W	41

NOTES:

1. SEE TYPICAL SECTIONS FOR ROCK CUT SLOPES AS WELL AS TOP AND BOTTOM OF ROCK CUT FOR PAY.
2. SEE FENCING AND GRADING PLANS FOR GRADING INFORMATION.
3. ROCK CUT PAID FOR UNDER ITEM S2 RC AS "ROCK CUT" BY THE SF.
4. POINTS ARE LOCATED ALONG ℄ WBFR_S2_CL ON APPROXIMATELY 5' STATION INCREMENTS. NOTE THAT THE ROCK CUT FACES ARE NOT PERPENDICULAR TO THE ROADWAY CENTERLINE. USE TABLE VALUES FOR ROCK CUT CONSTRUCTION. LEFT CUT POINTS ARE FROM STA 435+20 TO STA 446+35 (APPROXIMATE LENGTH OF CUT = 4,354 LF). RIGHT CUT POINTS ARE FROM STA 434+05 TO STA 450+30, FOLLOWED BY POINTS APPROXIMATELY EVERY 3'-5' AROUND THE RIGHT TURN (APPROXIMATE LENGTH OF CUT = 6,998 LF).
5. USE LINEAR INTERPOLATION FOR VALUES BETWEEN ROWS.
6. COORDINATES ARE SURFACE VALUES. TO OBTAIN GRID VALUES, DIVIDE BY A COMBINED SURFACE ADJUSTMENT FACTOR OF 1.00014.

STATE OF TEXAS
JACOB E. WALKER
122057
LICENSED
PROFESSIONAL ENGINEER

03/23/2018

NO.	DATE	REVISION	APPROVED

WILLIAMSON COUNTY

HDR Engineering, Inc.
810 Hesters Crossing, Suite 120
Round Rock, Texas 78681
Texas Registered Engineering Firm F-754

SOUTHWEST BYPASS SEGMENT 2

ROCK CUT CONTROL POINTS

SHEET 5 OF 5

DESIGN	FED.RD. DIV.NO.	FEDERAL AID PROJECT NO.		HIGHWAY NO.
JC	6			
GRAPHICS LG	STATE	DISTRICT	COUNTY	SHEET NO.
CHECK JW	TEXAS	AUS	WILLIAMSON	99
CHECK JC	CONTROL 2103	SECTION 01	JOB 034	

PLOT DRIVER: TXDOT_PDF_BW.pltcfg USER: lgomezgonz FILE: \
PENTABLE: S2-00002017018.tbl TIME: 1:48:27 PM DATE: 3/23/2018 SCALE: 1:1

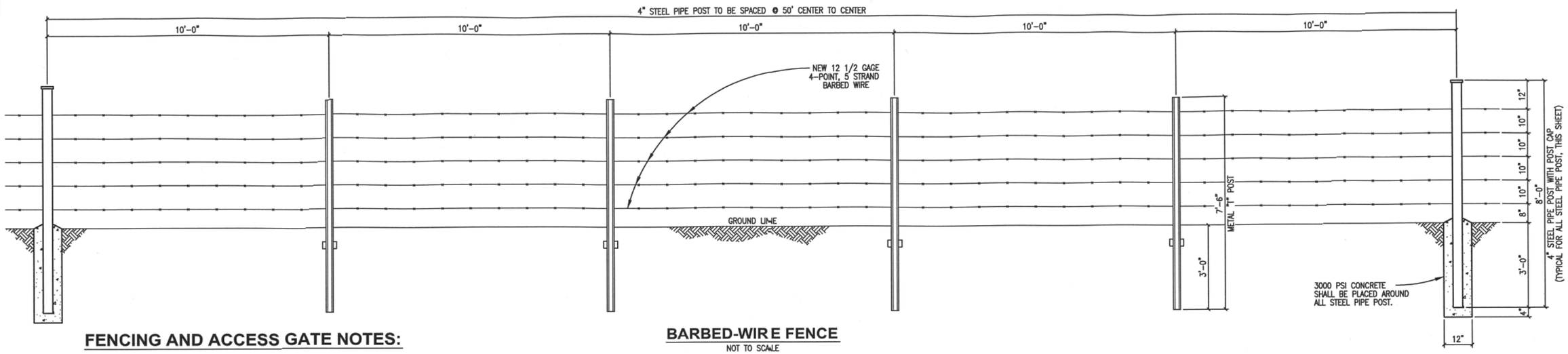

BARBED-WIRE FENCE
NOT TO SCALE

FENCING AND ACCESS GATE NOTES:

1. GATE MANUFACTURER SHALL FURNISH HINGES AND HINGE BOLTS.
2. GATE MANUFACTURER SHALL FURNISH SLIDING LATCHES FOR GATE.
3. CONTRACTOR SHALL FURNISH GALVANIZED CHAIN AND MASTER LOCK WITH KEY FOR GATES REQUIRED. LOCKS SHALL BE IDENTICAL FOR ALL GATES. MASTER KEYS SHALL BE GIVEN TO THE CITY OF GEORGETOWN CONSTRUCTION PROJECT MANAGER.
4. WHERE EXISTING ADJACENT POST IS MORE THAN 6 FEET FROM NEW GATE POST, CONTRACTOR SHALL INSTALL NEW LIKE POST 6 FEET MAXIMUM FROM GATE POST.
5. GATE SHALL BE 11'-6" RAIL MADE OF 1 5/8" GALVINIZED TUBING
6. IF FIRM SOIL FOOTING NOT OBTAINED FOR METAL "T" POST, 3000 P.S.I. CONCRETE SHALL BE PLACED AROUND BASE, AS DIRECTED BY THE ENGINEER.
7. ALL BARBED WIRE SHALL BE NEW 12 1/2 GAGE, 4-POINT, 5 STRAND BARBED WIRE.
8. INTERMEDIATE BRACE POST SHALL BE SPACED AT A MAXIMUM OF 500' ALONG NEW BARBED WIRE FENCE.
9. ALL P.I. POINTS ON NEW FENCE SHALL BE 6" STEEL POSTS AS DETAILED ON THIS SHEET.

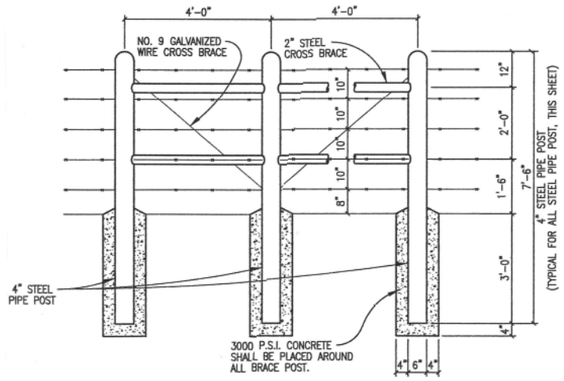

INTERMEDIATE BRACE POST
NOT TO SCALE

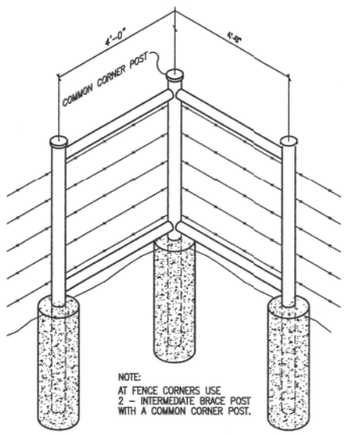

FENCE CORNER BRACE POSTS
NOT TO SCALE

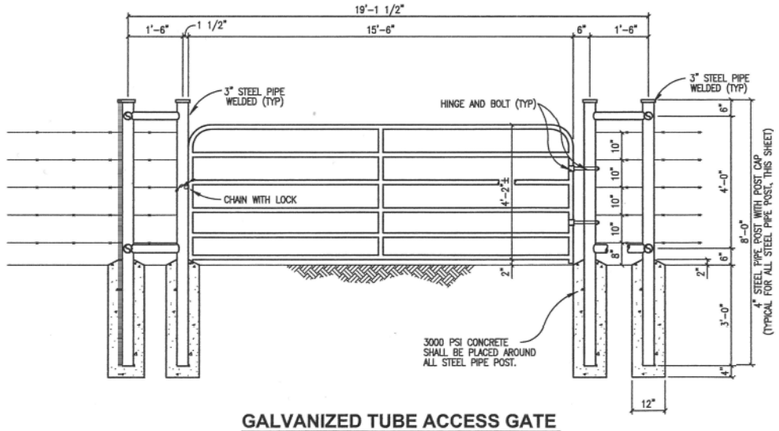

GALVANIZED TUBE ACCESS GATE
NOT TO SCALE

STATE OF TEXAS
JACOB E. WALKER
122057
LICENSED
PROFESSIONAL ENGINEER

03/23/2018

NO.	DATE	REVISION	APPROVED

WILLIAMSON COUNTY TEXAS

HDR Engineering, Inc.
810 Hesters Crossing, Suite 120
Round Rock, Texas 78681
Texas Registered Engineering Firm F-754

SOUTHWEST BYPASS SEGMENT 2

FENCING DETAILS

NTS

SHEET 1 OF 2

DESIGN	FED.RD. DIV.NO.	FEDERAL AID PROJECT NO.		HIGHWAY NO.
JC	6			
GRAPHICS	STATE	DISTRICT	COUNTY	SHEET NO.
LG	TEXAS	AUS	WILLIAMSON	
CHECK	CONTROL	SECTION	JOB	
JW	2103	01	034	100
CHECK				
JC				

PLOT DRIVER: TXDOT_PDF_BW.pltcfg PENTABLE: S2-0000020170718.tbl
USER: lgomezgon2 DATE: 3/23/2018 TIME: 1:48:30 PM SCALE: 1:2
FILE: \
4/12/2018 7:20 AM

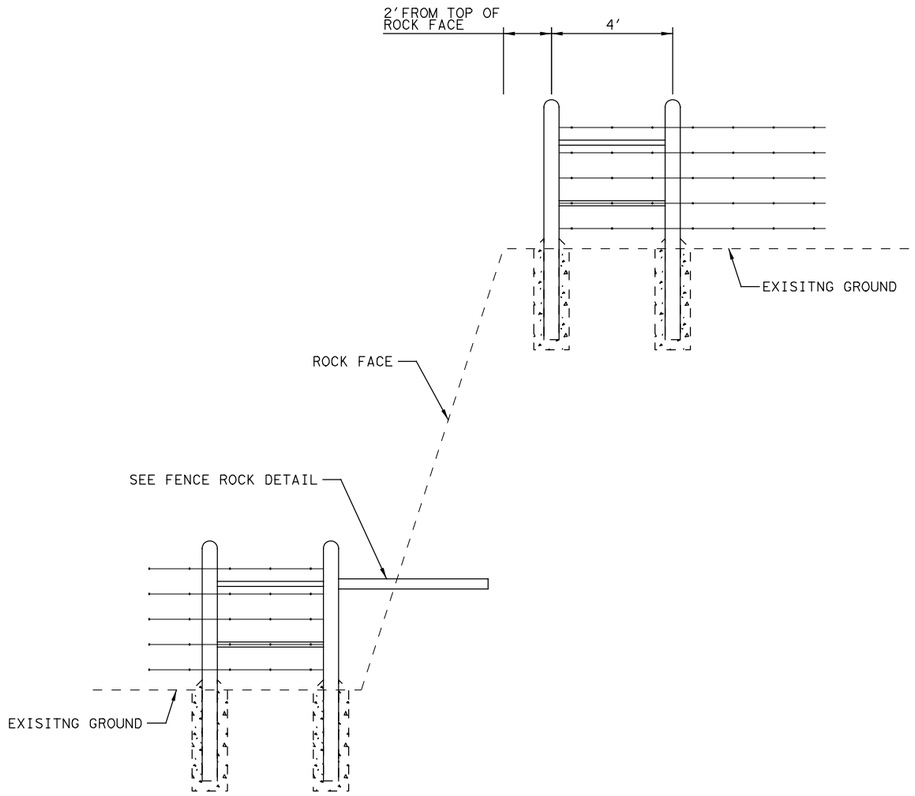

FENCE AT TOP OF ROCK FACE

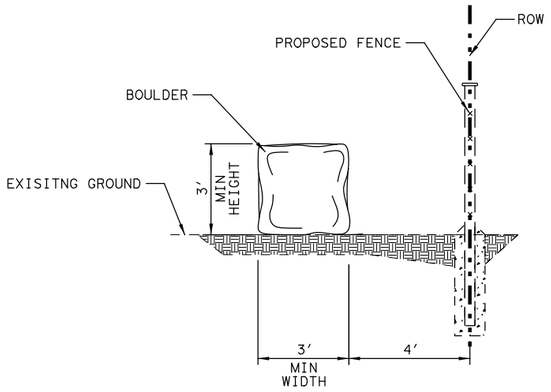

FENCE AND BOULDER DELINEATION ELEVATION

BOULDER DELINEATION GENERAL NOTES:

1. MIN BOULDER SIZE IS 3'x3'x3', OR 3' IN THE SMALLEST DIMENSION. BOULDERS SHOULD NOT VARY BY MORE THAN 25% IN WIDTH OR HEIGHT FROM ONE BOULDER TO THE NEXT. PLACE BOULDERS TO MAINTAIN UNIFORM WIDTH AND HEIGHT ALONG MEASUREMENT LINE IF POSSIBLE. OTHERWISE, PLACE LONGEST DIMENSION PARALLEL TO THE MEASUREMENT LINE.
2. FINAL PLACEMENT IS SUBJECT TO THE ENGINEER'S APPROVAL. COORDINATE WITH ENGINEER PRIOR TO PLACEMENT AND ADJUST AS DIRECTED. ENGINEER MAY APPROVE ALTERNATE BOULDER SIZES AND PLACEMENT, PROVIDED THEY MEET THE INTENT OF UNIFORM DELINEATION. SUBSIDIARY TO ITEM S2 BD.
3. NO IMPORT OF NEW ROCK IS ANTICIPATED. UTILIZE EXISTING ROCK FROM PROJECT EXCAVATIONS. BOULDERS ARE NOT REQUIRED TO BE CUT TO SIZE.

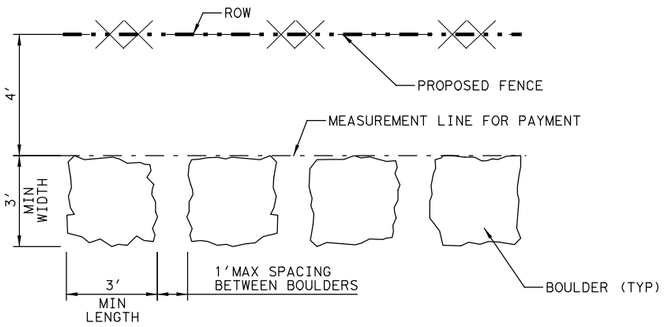

FENCE AND BOULDER DELINEATION PLAN

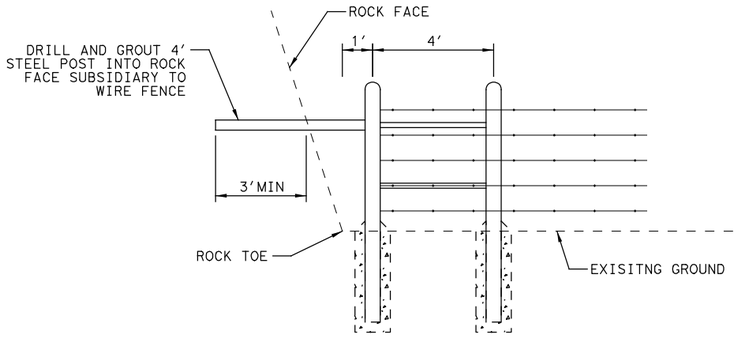

FENCE ROCK TIE

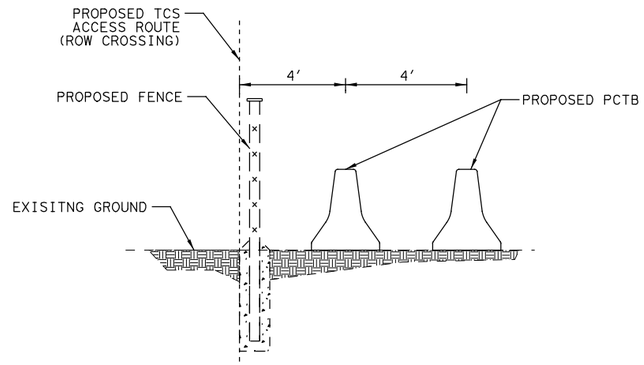

TCS FENCE CROSSING DETAIL



03/23/2018

NO.	DATE	REVISION	APPROVED

WILLIAMSON COUNTY

HDR Engineering, Inc.
810 Hesters Crossing, Suite 120
Round Rock, Texas 78681
Texas Registered Engineering Firm F-754

SOUTHWEST BYPASS SEGMENT 2

FENCING DETAILS

NTS

SHEET 2 OF 2

DESIGN	FED.RD. DIV.NO.	FEDERAL AID PROJECT NO.		HIGHWAY NO.
JC	6			
GRAPHICS	STATE	DISTRICT	COUNTY	SHEET NO.
LG	TEXAS	AUS	WILLIAMSON	
CHECK	CONTROL	SECTION	JOB	101
JW	2103	01	034	
CHECK				
JC				

PLOT DRIVER: TXDOT_PDF_BW.pltcfg PENTABLE: S2-000002017018.tbl
USER: lgomezgonz DATE: 3/23/2018 TIME: 1:48:41 PM SCALE: 1:1
FILE: \

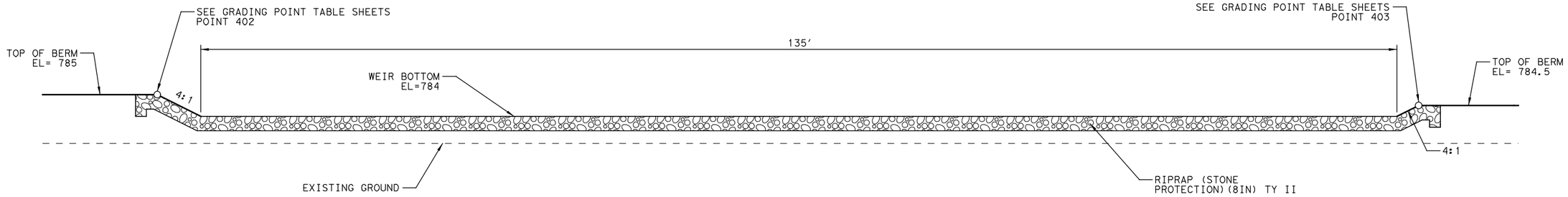

DETAIL SECTION ALONG WEIR

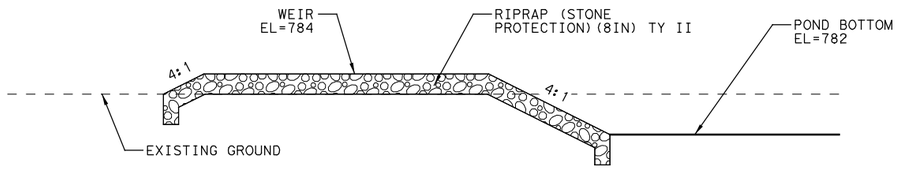

DETAIL SECTION THROUGH WEIR

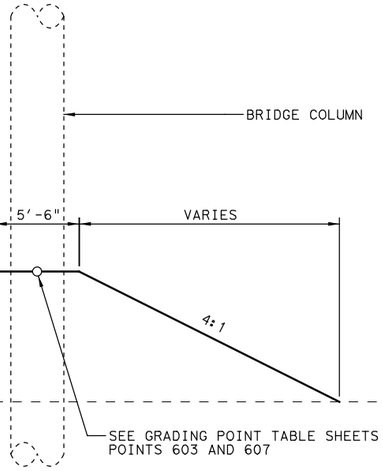

SECTION A-A

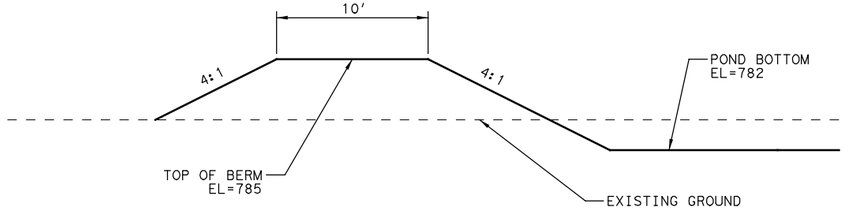

SECTION B-B

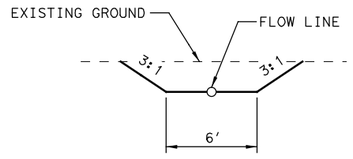

SECTION C-C

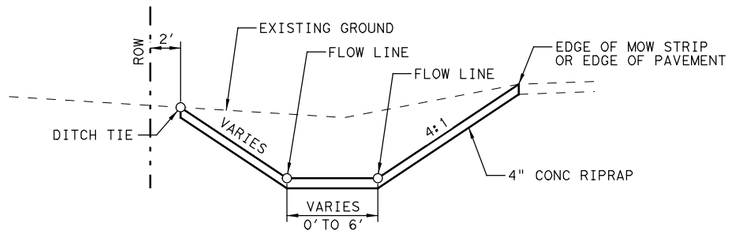

SECTION D-D

STATE OF TEXAS
JACOB E. WALKER
122057
LICENSED
PROFESSIONAL ENGINEER

03/23/2018

NO.	DATE	REVISION	APPROVED

WILLIAMSON COUNTY

HDR Engineering, Inc.
810 Hesters Crossing, Suite 120
Round Rock, Texas 78681
Texas Registered Engineering Firm F-754

SOUTHWEST BYPASS SEGMENT 2

GRADING DETAILS

NTS

DESIGN	FED.RD. DIV.NO.	FEDERAL AID PROJECT NO.		HIGHWAY NO.
JC	6			
GRAPHICS	STATE	DISTRICT	COUNTY	SHEET NO.
LG	TEXAS	AUS	WILLIAMSON	
CHECK	CONTROL	SECTION	JOB	102
JW	2103	01	034	
CHECK				
JC				

PLOT DRIVER: TXDOT_PDF_BW.pltcfg PENTABLE: S2-0000020170718.tbl
USER: lgomezgonz DATE: 3/23/2018 TIME: 1:48:51 PM SCALE: 1:1
FILE: \
4/12/2018 7:20 AM

CULVERT NO. 6

Project Name: SWBypass_2243
Description:
Horizontal Alignment Name: S2_Culvert 6
Description: Segment 2-Culvert 6
Style: D_ALIGN_ML

	STATION	NORTHING	EASTING
Element: Linear			
POB ( )	10+20.00	10194779.972	3126632.865
POE ( )	11+60.00	10194919.165	3126617.852
Tangent Direction:	N 6°09'21" W		
Tangent Length:	140.00		

CULVERT NO. 7

Project Name: SWBypass_2243
Description:
Horizontal Alignment Name: S2_Culvert 7
Description: Segment 2-Culvert 7
Style: D_ALIGN_ML

	STATION	NORTHING	EASTING
Element: Linear			
POB ( )	10+00.00	10194646.922	3124712.800
POE ( )	12+00.00	10194846.677	3124702.912
Tangent Direction:	N 2°50'01" W		
Tangent Length:	200.00		

CULVERT NO. 9

Project Name: SWBypass_2243
Description:
Horizontal Alignment Name: S2_Culvert 9
Description: Segment 2-Culvert 9
Style: D_ALIGN_ML

	STATION	NORTHING	EASTING
Element: Linear			
POB ( )	9+46.51	10196094.739	3121440.889
PI ( )	9+71.19	10196096.600	3121465.503
Tangent Direction:	N 85°40'34" E		
Tangent Length:	24.68		
Element: Linear			
PI ( )	9+71.19	10196096.600	3121465.503
PI ( )	10+98.91	10196075.487	3121591.470
Tangent Direction:	N 80°29'07" W		
Tangent Length:	127.72		
Element: Linear			
PI ( )	10+98.91	10196075.487	3121591.470
PC ( )	12+81.49	10195998.370	3121756.955
Tangent Direction:	N 65°00'51" W		
Tangent Length:	182.57		
Element: Circular			
PC ( )	12+81.49	10195998.370	3121756.955
PI ( )	12+97.70	10195991.522	3121771.649
CC ( )		10196025.562	3121769.627
PT ( )	13+11.21	10196000.061	3121785.429
Radius:	30.00		
Delta:	56°46'09" Left		
Degree of Curvature(Arc):	190°59'09"		
Length:	29.72		
Tangent:	16.21		
Chord:	28.52		
Middle Ordinate:	3.61		
External:	4.10		
Tangent Direction:	N 65°00'51" W		
Radial Direction:	N 24°59'09" E		
Chord Direction:	N 86°36'04" E		
Radial Direction:	N 31°47'00" W		
Tangent Direction:	N 58°13'00" E		
Element: Linear			
PT ( )	13+11.21	10196000.061	3121785.429
POE ( )	15+00.00	10196099.498	3121945.908
Tangent Direction:	N 58°13'00" E		
Tangent Length:	188.79		

CULVERT NO. 8

Project Name: SWBypass_2243
Description:
Horizontal Alignment Name: S2_Culvert 8
Description:
Style: Default

	STATION	NORTHING	EASTING
Element: Linear			
POB ( )	8+00.00	10194543.608	3123588.467
POE ( )	13+50.00	10195077.323	3123721.311
Tangent Direction:	N 13°58'38" E		
Tangent Length:	550.00		

CULVERT NO. 8B *

Project Name: SWBypass_2243
Description:
Horizontal Alignment Name: S2_Culvert 8B
Description: S2_Culvert 8B
Style: Default

	STATION	NORTHING	EASTING
Element: Linear			
POB ( )	10+00.00	10194525.78	3123550.44
POE ( )	14+25.00	10194950.62	3123562.28
Tangent Direction:	N 1°35'47" E		
Tangent Length:	425.00		

* IF RETAINING WALL RW-06 IS NOT CONSTRUCTED, OMIT CULVERT NO. 8B FROM CULVERT ALIGNMENT DATA.

STATE OF TEXAS
PHAISARN CWATANAPHOL
89252
LICENSED
PROFESSIONAL ENGINEER

Phaisarn Cwatanaphol, P.E.

04/10/2018

NO.	DATE	REVISION	APPROVED

WILLIAMSON COUNTY TEXAS

HDR Engineering, Inc.
810 Hesters Crossing, Suite 120
Round Rock, Texas 78681
Texas Registered Engineering Firm F-754

SOUTHWEST BYPASS SEGMENT 2

CULVERT ALIGMENT DATA

SHEET 1 OF 1

DESIGN	FED.RD. DIV.NO.	FEDERAL AID PROJECT NO.		HIGHWAY NO.
QL	6			
GRAPHICS	STATE	DISTRICT	COUNTY	SHEET NO.
BD	TEXAS	AUS	WILLIAMSON	
CHECK	CONTROL	SECTION	JOB	103
PC	2103	01	034	
CHECK				
QL				

PLOT DRIVER: TXDOT_PDF_BW.pltcfg PENTABLE: S2-0000020170718.tbl
USER: lgomezgonz DATE: 4/10/2018 TIME: 9:42:44 AM SCALE:1:1
FILE: \

TABLE B5 RATIONAL METHOD PEAK FLOW CALCULATIONS TABLE													
DRAINAGE ID	DRAINAGE AREA (AC)	COMPOSITE C	*TC (MIN)	I5 (IN/HR)	Q5 (CFS)	I10 (IN/HR)	Q10 (CFS)	I25 (IN/HR)	Q25 (CFS)	I50 (IN/HR)	Q50 (CFS)	I100 (IN/HR)	Q100 (CFS)
SEGMENT 2 PROPOSED CONDITIONS													
I-2b3	3.53	0.39	11.7	5.48	8	6.37	9	7.47	11	8.66	14	9.70	17
I-5a	12.46	0.40	30.0	3.46	17	4.07	20	4.88	27	5.72	35	6.49	41
I-5b	16.59	0.43	25.5	3.79	27	4.45	32	5.32	42	6.23	54	7.05	64
Q-4b	3.75	0.47	10.0	5.81	10	6.75	12	7.88	16	9.11	20	10.20	23
Q-4c	2.78	0.59	10.8	5.65	9	6.56	11	7.68	14	8.88	18	9.95	21
Q-4d1	5.75	0.57	10.0	5.81	19	6.75	22	7.88	29	9.11	36	10.20	42
Q-4d2	1.06	0.45	10.0	5.81	3	6.75	3	7.88	4	9.11	5	10.20	6
Q-5	0.83	0.45	10.0	5.81	2	6.75	3	7.88	3	9.11	4	10.20	5
I-2b1	1.90	0.63	10.0	5.81	7	6.75	8	7.88	11	9.11	13	10.20	15
I-5c	1.10	0.43	16.3	4.75	2	5.55	3	6.56	3	7.63	4	8.59	5

DESIGN YEAR = 25-YR
* PER WILLIAMSON COUNTY DESIGN CRITERIA MANUAL AND TXDOT HYDRAULIC DESIGN MANUAL, A 10 MINUTE MINIMUM TIME OF CONCENTRATION WAS USED FOR RATIONAL METHOD CALCULATIONS.

CULVERT NO. 6

DRAINAGE ID: I-2b3
Q25 = 11 CFS
Q100 = 17 CFS

CULVERT NO. 7

DRAINAGE ID: Q-4b, Q-4c, & Q-5
Q25 = 33 CFS
Q100 = 49 CFS

CULVERT NO. 8

DRAINAGE ID: Q-4d1
Q25 = 29 CFS
Q100 = 42 CFS

CULVERT NO. 8B

DRAINAGE ID: Q-4d2
Q25 = 4 CFS
Q100 = 6 CFS

CULVERT NO. 9

DRAINAGE ID: I-5a & I-5b
Q25 = 69 CFS
Q100 = 105 CFS

STATE OF TEXAS
PHAISARN CWATANAPHOL
89252
LICENSED
PROFESSIONAL ENGINEER
Phaisarn Cwatanaphol, P.E.
03/22/2018

NO.	DATE	REVISION	APPROVED

WILLIAMSON COUNTY TEXAS

HDR Engineering, Inc.
810 Hesters Crossing, Suite 120
Round Rock, Texas 78681
Texas Registered Engineering Firm F-754

SOUTHWEST BYPASS
SEGMENT 2

HYDROLOGY COMPUTATIONS

SHEET 1 OF 1

DESIGN	FED.RD. DIV.NO.	FEDERAL AID PROJECT NO.		HIGHWAY NO.
QL	6			
GRAPHICS QL	STATE	DISTRICT	COUNTY	SHEET NO.
CHECK PC	TEXAS	AUS	WILLIAMSON	
	CONTROL	SECTION	JOB	104
CHECK PC	2103	01	034	

PLOT DRIVER: TXDOT_PDF_BW.pltcfg PENTABLE: S2-000002017018.tbl
USER: qluu DATE: 3/22/2018 TIME: 3:18:26 PM SCALE: 1:1
FILE: \
4/12/2018 7:20 AM

HY-8 INPUT DATA

CULVERT DATA										TAILWATER DATA					
NAME	SHAPE	RISE (IN)	n	INLET CONFIGURATION	OVERALL LENGTH (FT)	INLET ELEVATION (FT)	OUTLET ELEVATION (FT)	SLOPE (FT/FT)	NUMBER OF BARRELS	CHANNEL TYPE	BOTTOM WIDTH (FT)	SIDE SLOPE	CHANNEL SLOPE (FT/FT)	n	25-YR TAILWATER ELEVATION (FT)
CULVERT NO. 6	CIRCULAR	24	0.013	SET (TY II)(24 IN)(RCP)(4:1)(C)-UPSTREAM SET (TY II)(24 IN)(RCP) (3:1)(C)-DOWNSTREAM	96.29	813.13	812.64	0.0051	1	N/A	N/A	N/A	N/A	N/A	813.54
CULVERT NO. 7	CIRCULAR	30	0.013	SET (TY II)(30 IN)(RCP)(4:1)(C)-UPSTREAM SET (TY II)(30 IN)(RCP) (6:1)(C)-DOWNSTREAM	107.81	787.10	786.80	0.0028	2	IRREGULAR CHANNEL	40	55	0.005	0.059	N/A
CULVERT NO. 8	CIRCULAR	24	0.013	SET (TY II)(24 IN)(RCP)(6:1)(C)-DOWNSTREAM HEADWALL (CH-FW-O)(DIA = 24 IN)-UPSTREAM	323.79	785.00	782.95	0.0063	1	IRREGULAR CHANNEL	0	35	0.0018	0.059	N/A
#CULVERT NO. 8B	CIRCULAR	24	0.013	HEADWALL (CH-PW-S)(DIA = 24 IN)-UPSTREAM SET (TY II)(24 IN)(RCP) (6:1)(C)-DOWNSTREAM	264.00	783.62	782.83	0.0030	1	IRREGULAR CHANNEL	45	30	0.0023	0.25	783.05
CULVERT NO. 9	CIRCULAR	36	0.013	SET (TY II)(36 IN)(RCP)(3:1)(C)-UPSTREAM SET (TY II)(36 IN)(RCP) (6:1)(C)-DOWNSTREAM	145.03	834.58	833.81	0.0053	3	IRREGULAR CHANNEL	0	6	0.013	0.059	N/A

CULVERT HYDRAULIC COMPUTATIONS

NAME	*Q25 (CFS)	Q100 (CFS)	OUTLET V25 (FT/S)	OUTLET V100 (FT/S)	TW V25 (FT/S)	TW V100 (FT/S)	HW25	HW100	TW25	TW100	USGS FLOW TYPE 25	USGS FLOW TYPE 100
CULVERT NO. 6	11.00	17.00	5.67	6.80	0.00	0.00	815.14	815.83	813.54	813.71	7-M2c	7-M2c
CULVERT NO. 7	33.00	49.00	6.00	6.98	0.77	0.89	789.36	789.99	787.06	787.14	2-M2c	7-M2c
CULVERT NO. 8	29.00	42.00	9.57	13.37	0.73	0.81	790.98	797.74	783.71	783.87	7-M2c	6-FFc
#CULVERT NO. 8B	4.00	6.00	0.00 **	0.00 **	0.44	0.51	783.65	783.80	783.05	783.11	6-FF†	6-FF†
CULVERT NO. 9	69.00	105.00	6.80	7.50	2.65	2.97	836.88	837.65	835.38	835.68	1-S2n	5-S2n

* DESIGN YEAR
** SYSTEM IN FREE FLOW

SW BYPASS DITCH FLOW CALCULATIONS

DRAINAGE ID	STATION RANGE	SIDE	DESCRIPTION	SLOPE %	n	BOTTOM WIDTH (FT)	SLOPE LT (FT)	SLOPE RT (FT)	*Q25 (CFS)	Q100 (CFS)	h25 (FT)	h100 (FT)	V25 (FT/S)	V100 (FT/S)	MAX HEIGHT CAPACITY (CFS)
I-2b1	394+87 - 396+00	RT	DITCH (STONE)	0.0211	0.045	4	3	3	22	32	0.92	1.16	3.55	4.13	108.41
	396+00 - 404+33			0.0149	0.045	4	3	3	11	15	0.71	0.85	2.59	2.91	71.81
I-2b3	396+01 - 404+18	LT	DITCH (STONE)	0.0181	0.045	6	4	6	11	17	0.54	0.71	2.50	3.00	35.09
Q-4b	413+65 - 415+20	RT	DITCH (STONE)	0.0114	0.045	6	3	3	16	23	0.78	0.97	2.50	2.88	406.18
Q-4c	415+20 - 420+86	RT	DITCH (STONE)	0.0065	0.045	6	3	3	17	26	0.93	1.21	2.08	2.47	58.98
Q-5	420+86 - 423+32			0.0311	0.045	6	3	3	3	5	0.23	0.31	2.04	2.48	129.02
Q-4d	427+61 - 433+83	RT	DITCH (STONE)	0.0252	0.045	6	3	2	29	42	0.88	1.10	4.03	4.66	60.66
	433+83 - 434+06			0.3207	0.045	3	3	2	29	42	0.61	0.75	10.82	12.39	522.41
	434+06 - 436+55			0.0129	0.045	2	3	2	29	42	1.50	1.87	3.39	3.91	185.20
I-5b	436+55 - 447+90	RT	DITCH (GRASS)	0.0076	0.030	4	6	3	42	64	1.23	1.58	3.62	4.26	406.56
I-5a	447+90 - 451+05	RT	DITCH (GRASS)	0.0115	0.030	6	5	3	27	41	0.80	1.03	3.72	4.39	731.24
I-5c	436+58 - 446+15	LT	DITCH (GRASS)	0.0040	0.030	2	3	6	3	5	0.49	0.67	1.46	1.79	196.26
	446+15 - 447+80	LT	DITCH (GRASS)	0.0426	0.030	6	3	6	3	5	0.16	0.22	2.81	3.47	863.26

* DESIGN YEAR

IF RETAINING WALL RW-06 IS NOT CONSTRUCTED, OMIT CULVERT NO. 8B FROM TABLE.

STATE OF TEXAS
PHAISARN CWATANAPHOL
89252
LICENSED
PROFESSIONAL ENGINEER

Phaisarn Cwatanaphol, P.E.

04/10/2018

NO.	DATE	REVISION	APPROVED

WILLIAMSON COUNTY

HDR Engineering, Inc.
810 Hesters Crossing, Suite 120
Round Rock, Texas 78681
Texas Registered Engineering Firm F-754

SOUTHWEST BYPASS SEGMENT 2

HYDRAULIC COMPUTATIONS

SHEET 1 OF 1

DESIGN	FED. RD. DIV. NO.	FEDERAL AID PROJECT NO.		HIGHWAY NO.
QL	6			
GRAPHICS QL	STATE	DISTRICT	COUNTY	SHEET NO.
CHECK PC	TEXAS	AUS	WILLIAMSON	105
CHECK PC	CONTROL 2103	SECTION 01	JOB 034	

PLOT DRIVER: TXDOT_PDF_BW.pltcfg USER: lgomezgonz DATE: 4/10/2018 FILE: \
PENTABLE: S2-0000020T0718.tbl TIME: 9:42:47 AM SCALE: 1:1

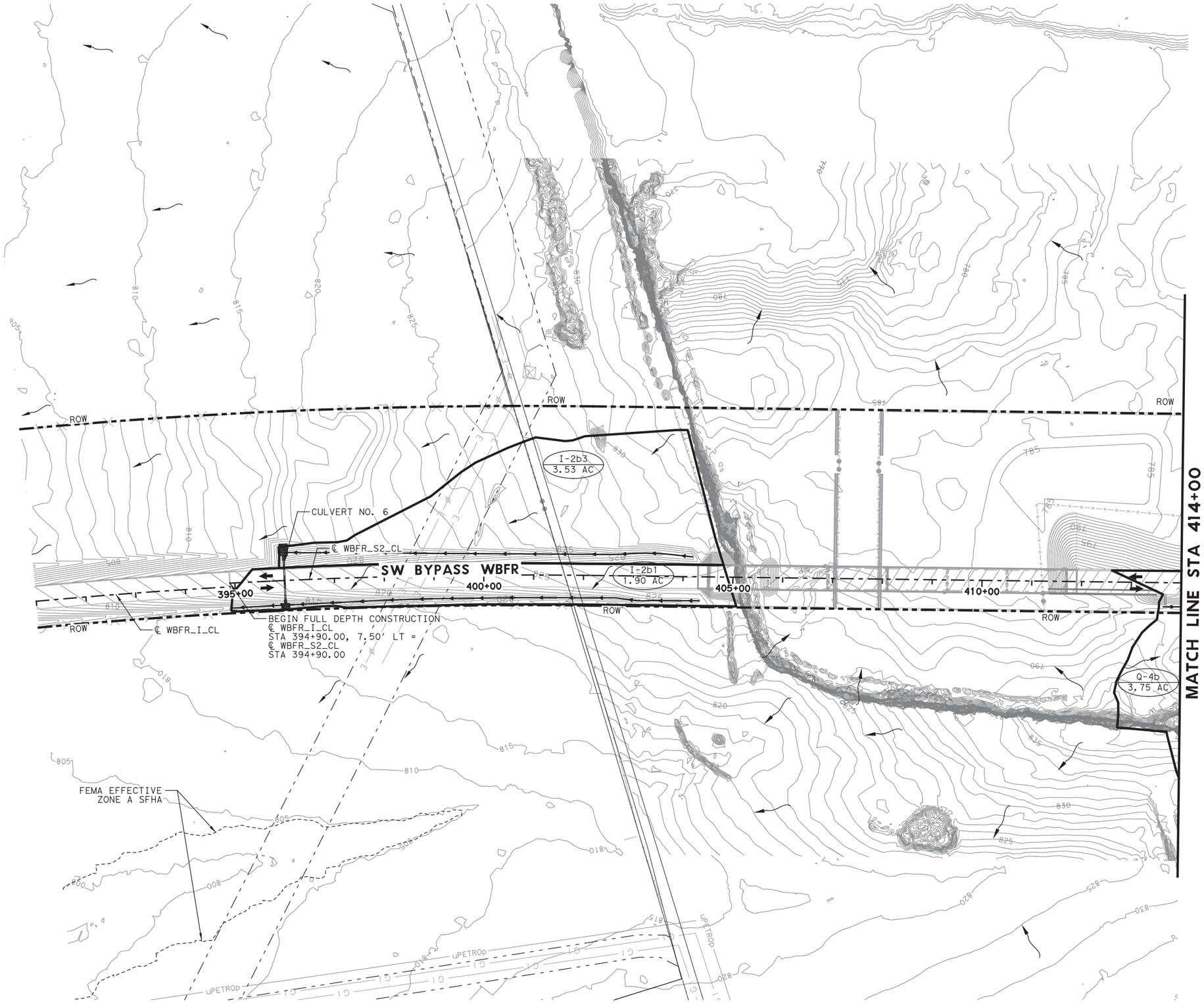

LEGEND

- PROPOSED DRAINAGE AREA BOUNDARY
- 820 — MAJOR CONTOURS
- MINOR CONTOURS
- PROPOSED DITCH
- FLOW ARROW
- DA-XX / X.XX AC — DRAINAGE AREA ID / DRAINAGE AREA

NOTES:

1. DRAINAGE ANALYSIS PER WILLIAMSON COUNTY DRAINAGE CRITERIA MANUAL.
2. SEE DRAINAGE REPORT FOR EXISTING AND OVERALL PROPOSED DRAINAGE AREA.

* IF RETAINING WALL RW-06 IS NOT CONSTRUCTED, OMIT CULVERT NO. 8B FROM PLAN SHEET.

0 100 200 300 400

SCALE IN FEET

STATE OF TEXAS
PHAISARN CWATANAPHOL
89252
LICENSED
PROFESSIONAL ENGINEER

Phaisarn Cwatanaphol, P.E.

04/10/2018

NO.	DATE	REVISION	APPROVED

WILLIAMSON COUNTY

HDR Engineering, Inc.
810 Hesters Crossing, Suite 120
Round Rock, Texas 78681
Texas Registered Engineering Firm F-754

SOUTHWEST BYPASS SEGMENT 2

PROPOSED DRAINAGE AREA MAP BEGIN TO STA 414+00

SCALE: 1"=200' SHEET 1 OF 3

DESIGN	FED.RD. DIV.NO.	FEDERAL AID PROJECT NO.		HIGHWAY NO.
QL	6			
GRAPHICS LG	STATE	DISTRICT	COUNTY	SHEET NO.
CHECK PC	TEXAS	AUS	WILLIAMSON	
CHECK QL	CONTROL 2103	SECTION 01	JOB 034	106

PLOT DRIVER: TXDOT_PDF_BW.pltcfg PENTABLE: S2-0000020170718.tbl
USER: lgomezgonz DATE: 4/10/2018 TIME: 9:42:59 AM SCALE: 1:200
FILE: \

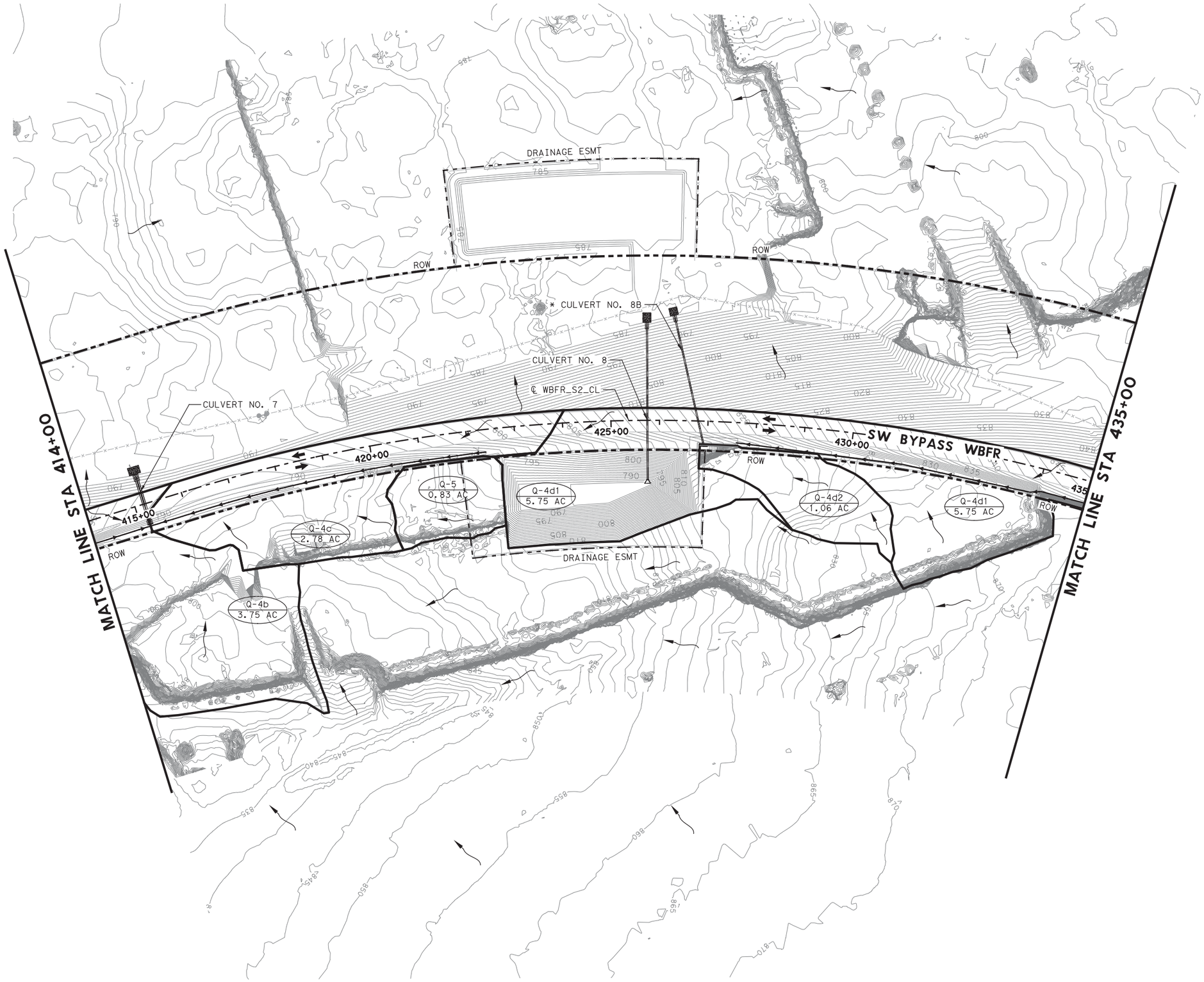

LEGEND

- PROPOSED DRAINAGE AREA BOUNDARY
- 820 MAJOR CONTOURS
- MINOR CONTOURS
- PROPOSED DITCH
- FLOW ARROW
- DA-XX / X.XX AC — DRAINAGE AREA ID / DRAINAGE AREA

NOTES:

1. DRAINAGE ANALYSIS PER WILLIAMSON COUNTY DRAINAGE CRITERIA MANUAL.
2. SEE DRAINAGE REPORT FOR EXISTING AND OVERALL PROPOSED DRAINAGE AREA.

* IF RETAINING WALL RW-06 IS NOT CONSTRUCTED, OMIT CULVERT NO. 8B FROM PLAN SHEET.

0 100 200 300 400

SCALE IN FEET

STATE OF TEXAS
PHAISARN CWATANAPHOL
89252
LICENSED
PROFESSIONAL ENGINEER

Phaisarn Cwatanaphol, P.E.

04/10/2018

NO.	DATE	REVISION	APPROVED

WILLIAMSON COUNTY TEXAS

HDR Engineering, Inc.
810 Hesters Crossing, Suite 120
Round Rock, Texas 78681
Texas Registered Engineering Firm F-754

SOUTHWEST BYPASS SEGMENT 2

PROPOSED DRAINAGE AREA MAP STA 414+00 TO STA 435+00

SCALE: 1"=200' SHEET 2 OF 3

DESIGN	FED.RD. DIV.NO.	FEDERAL AID PROJECT NO.		HIGHWAY NO.
QL	6			
GRAPHICS LG	STATE	DISTRICT	COUNTY	SHEET NO.
CHECK PC	TEXAS	AUS	WILLIAMSON	107
CHECK QL	CONTROL 2103	SECTION 01	JOB 034	

PLOT DRIVER: TXDOT_PDF_BW.pltcfg PENTABLE: S2-000002017018.tbl
USER: lgomezgonz DATE: 4/10/2018 TIME: 9:43:06 AM SCALE: 1:200
FILE: \

4/12/2018 7:20 AM



LEGEND

- PROPOSED DRAINAGE AREA BOUNDARY
- 820 MAJOR CONTOURS
- MINOR CONTOURS
- PROPOSED DITCH
- FLOW ARROW
- DA-XX / X.XX AC — DRAINAGE AREA ID / DRAINAGE AREA

NOTES:

1. DRAINAGE ANALYSIS PER WILLIAMSON COUNTY DRAINAGE CRITERIA MANUAL.
2. SEE DRAINAGE REPORT FOR EXISTING AND OVERALL PROPOSED DRAINAGE AREA.

* IF RETAINING WALL RW-06 IS NOT CONSTRUCTED, OMIT CULVERT NO. 8B FROM PLAN SHEET.

0 100 200 300 400

SCALE IN FEET

STATE OF TEXAS
PHAISARN CWATANAPHOL
89252
LICENSED
PROFESSIONAL ENGINEER

Phaisarn Cwatanaphol, P.E.

04/10/2018

NO.	DATE	REVISION	APPROVED

WILLIAMSON COUNTY

HDR Engineering, Inc.
810 Hesters Crossing, Suite 120
Round Rock, Texas 78681
Texas Registered Engineering Firm F-754

SOUTHWEST BYPASS SEGMENT 2

PROPOSED DRAINAGE AREA MAP STA 435+00 TO END

SCALE: 1"=200' SHEET 3 OF 3

DESIGN	FED.RD. DIV.NO.	FEDERAL AID PROJECT NO.		HIGHWAY NO.
QL	6			
GRAPHICS LG	STATE	DISTRICT	COUNTY	SHEET NO.
CHECK PC	TEXAS	AUS	WILLIAMSON	108
CHECK QL	CONTROL	SECTION	JOB	
	2103	01	034	

PLOT DRIVER: TXDOT_PDF_BW.pltcfg PENTABLE: S2-0000020170718.tbl
USER: lgomezgonz DATE: 4/10/2018 TIME: 9:43:3 AM SCALE: 1:200
FILE: \

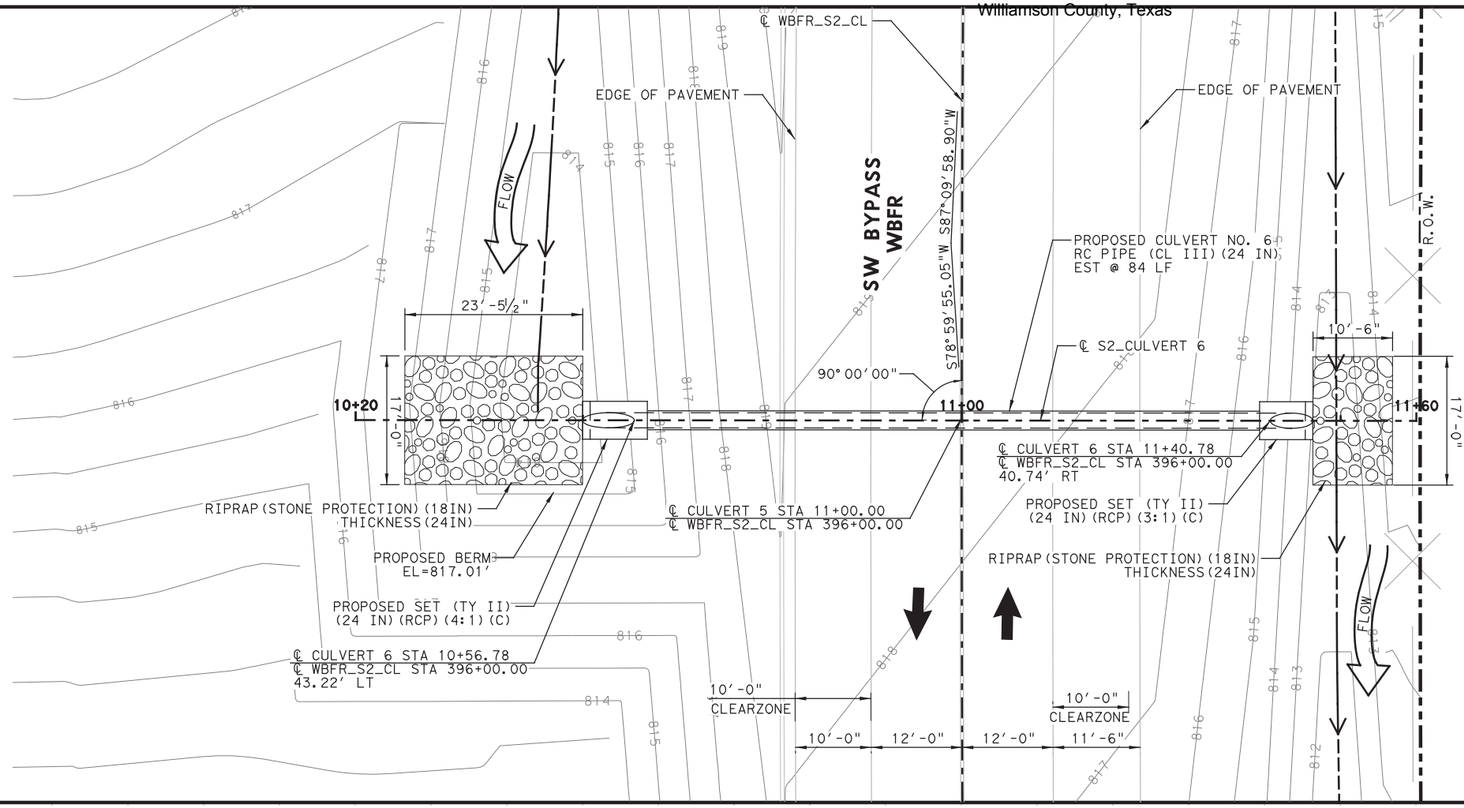

HYDRAULIC DATA

DESIGN FREQ.	= 25-YR
TW_{25}	= 813.54
$HW_{ALLOW.}$	= 817.01
Q_{25}	= 11 CFS
HW_{25}	= 815.14
Q_{100}	= 17 CFS
TW_{100}	= 813.71
HW_{100}	= 815.83
V_{25}	= 5.67 FT/S
V_{100}	= 6.80 FT/S

LEGEND

- 796.00 — PROPOSED CONTOURS
- PROPOSED ROW
- RIPRAP (STONE PROTECTION)

NOTES:

1. SEE CULVERT ALIGNMENT SHEET FOR ALIGNMENT INFORMATION NOT SHOWN.
2. CONTRACTOR TO NOTIFY INSPECTOR OR ENGINEER PRIOR TO PLACING RIPRAP ON SOLID ROCK OR UNDISTURBED AREAS.

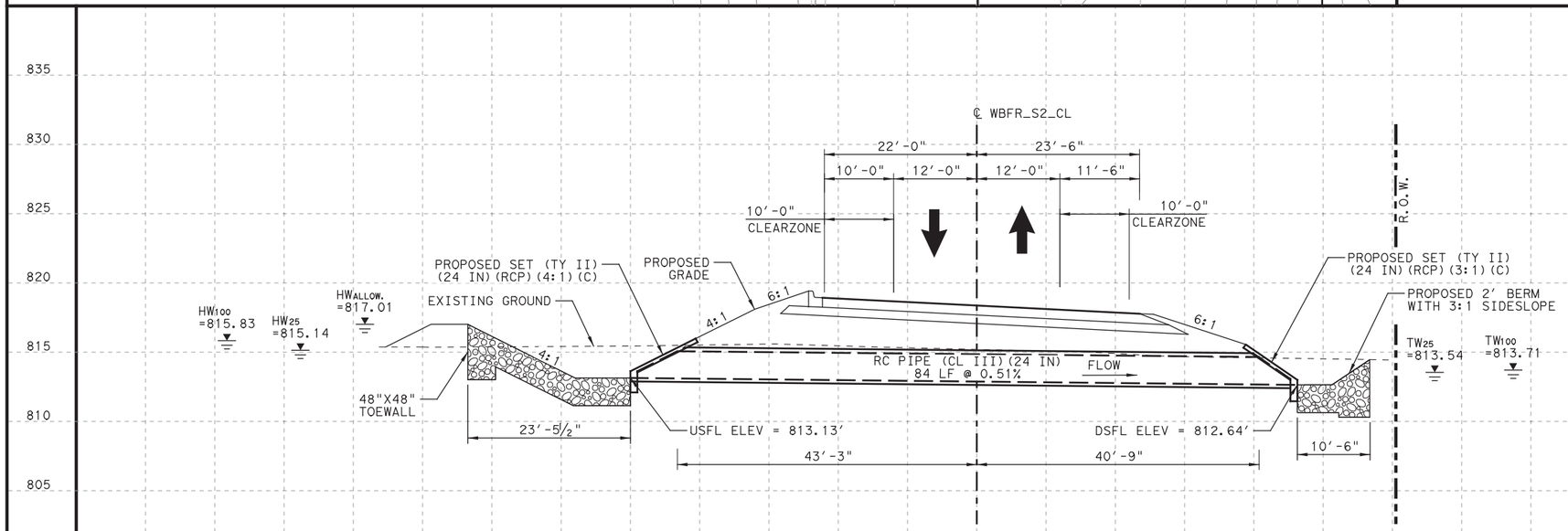

CULVERT NO. 6

RC PIPE (CL III)(24 IN)
SET (TY II)(24 IN)(RCP)(3:1)(C) DOWNSTREAM
SET (TY II)(24 IN)(RCP)(4:1)(C) UPSTREAM

PHAISARN CWATANAPHOL
89252
LICENSED PROFESSIONAL ENGINEER
STATE OF TEXAS
Phaisarn Cwatanapho, P.E.
03/22/2018

NO.	DATE	REVISION	APPROVED

WILLIAMSON COUNTY

HDR Engineering, Inc.
810 Hesters Crossing, Suite 120
Round Rock, Texas 78681
Texas Registered Engineering Firm F-754

SOUTHWEST BYPASS SEGMENT 2

DRAINAGE CULVERT NO. 6 LAYOUT

SCALE: 1"=20'-H
1"=10'-V

SHEET 1 OF 1

DESIGN	FED. RD. DIV. NO.	FEDERAL AID PROJECT NO.		HIGHWAY NO.
QL	6			
GRAPHICS	STATE	DISTRICT	COUNTY	SHEET NO.
BD	TEXAS	AUS	WILLIAMSON	
CHECK	CONTROL	SECTION	JOB	109
PC				
CHECK	2103	01	034	
QL				

PLOT DRIVER: TXDOT_PDF_BW.pltcfg PENTABLE: S2-000002017018.tbl
USER: qluu TIME: 3:19:03 PM SCALE: 1:20
DATE: 3/22/2018
FILE: \

4/12/2018 7:20 AM

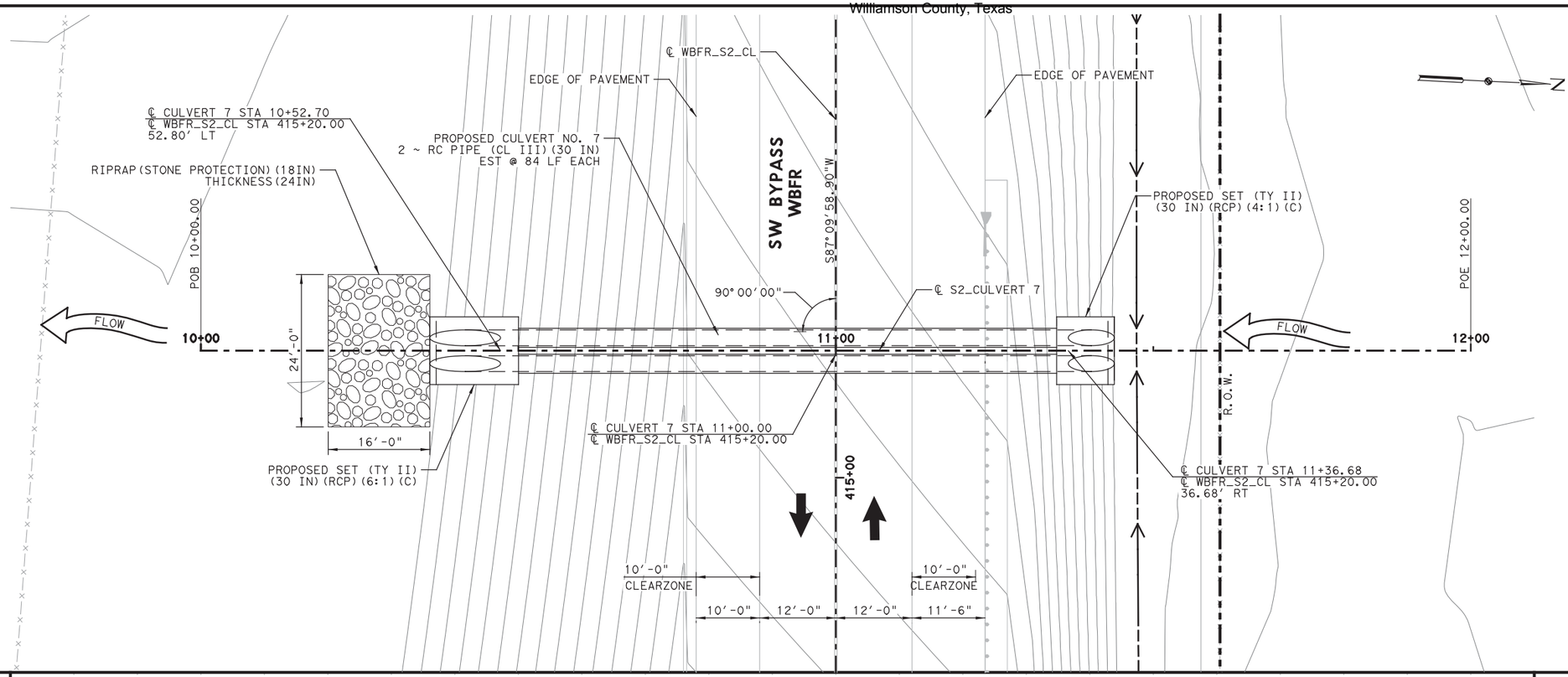

HYDRAULIC DATA

DESIGN FREQ.	= 25-YR
TW_{25}	= 787.06
$HW_{ALLOW.}$	= 789.73
Q_{25}	= 33 CFS
HW_{25}	= 789.36
Q_{100}	= 49 CFS
TW_{100}	= 787.14
HW_{100}	= 789.99
V_{25}	= 6.00 FT/S
V_{100}	= 6.98 FT/S

LEGEND

796.00 PROPOSED CONTOURS

PROPOSED ROW

RIPRAP (STONE PROTECTION)

NOTES:

1. SEE CULVERT ALIGNMENT SHEET FOR ALIGNMENT INFORMATION NOT SHOWN.
2. CONTRACTOR TO NOTIFY INSPECTOR OR ENGINEER PRIOR TO PLACING RIPRAP ON SOLID ROCK OR UNDISTURBED AREAS.

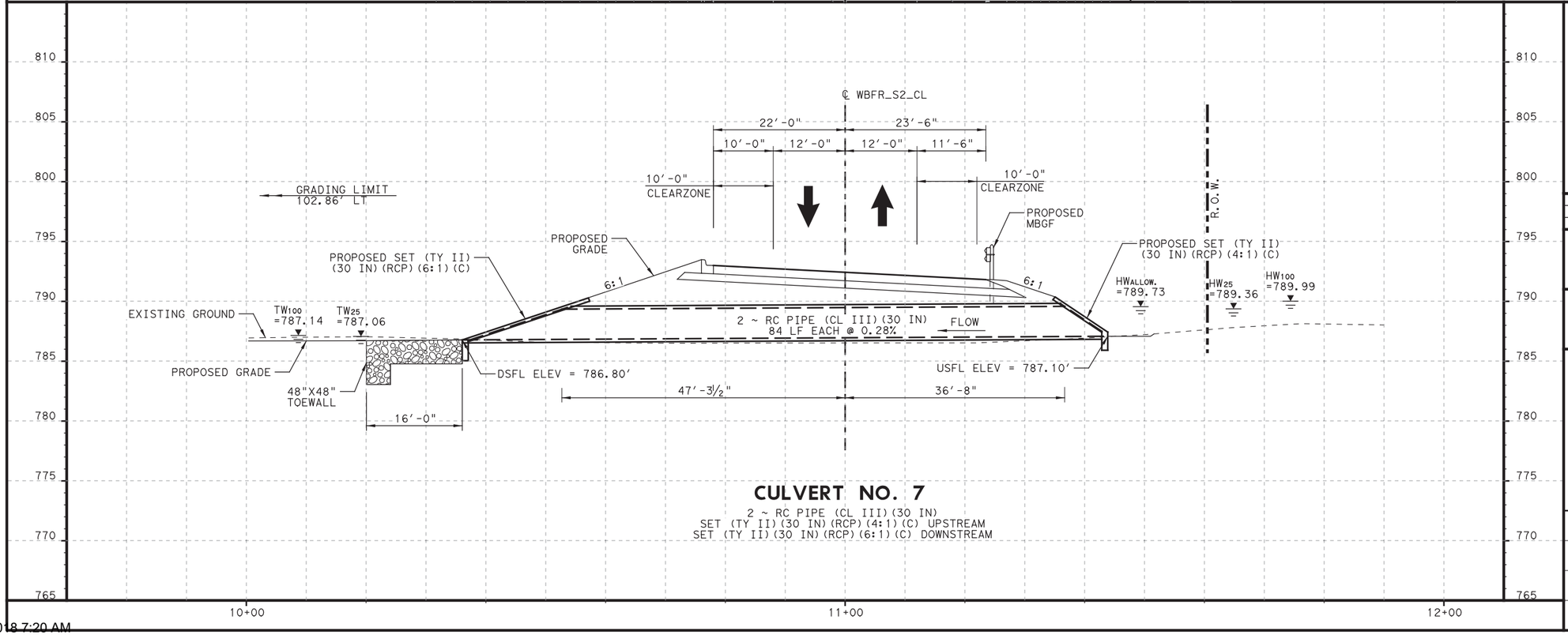

CULVERT NO. 7

2 ~ RC PIPE (CL III)(30 IN)
SET (TY II)(30 IN)(RCP)(4:1)(C) UPSTREAM
SET (TY II)(30 IN)(RCP)(6:1)(C) DOWNSTREAM

STATE OF TEXAS
PHAISARN CWATANAPHOL
89252
LICENSED
PROFESSIONAL ENGINEER

Phaisarn Cwatanapho, P.E. 03/22/2018

NO.	DATE	REVISION	APPROVED

WILLIAMSON COUNTY

HDR Engineering, Inc.
810 Hesters Crossing, Suite 120
Round Rock, Texas 78681
Texas Registered Engineering Firm F-754

SOUTHWEST BYPASS SEGMENT 2

DRAINAGE CULVERT NO. 7 LAYOUT

SCALE: 1"=20'-H
1"=10'-V

SHEET 1 OF 1

DESIGN	FED. RD. DIV. NO.	FEDERAL AID PROJECT NO.		HIGHWAY NO.
QL	6			
GRAPHICS	STATE	DISTRICT	COUNTY	SHEET NO.
BD	TEXAS	AUS	WILLIAMSON	
CHECK	CONTROL	SECTION	JOB	110
PC	2103	01	034	
CHECK				
QL				

PLOT DRIVER: TXDOT_PDF_BW.pltcfg PENTABLE: S2-0000020IT07IB.tbl
USER: qluu TIME: 3:9:0 PM SCALE: 1:20
DATE: 3/22/2018
FILE: \

4/12/2018 7:20 AM

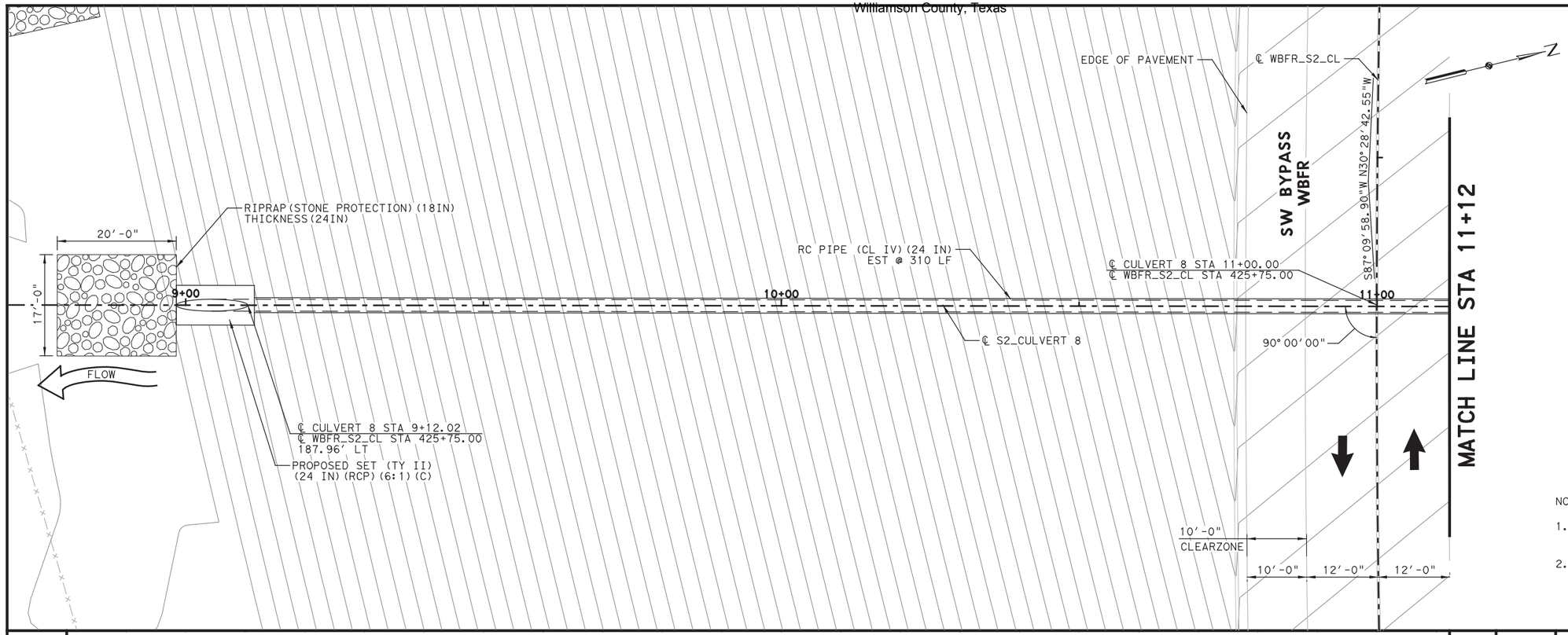

HYDRAULIC DATA

DESIGN FREQ.	= 25-YR
TW_{25}	= 783.71
$HW_{ALLOW.}$	= 807.60
Q_{25}	= 29 CFS
HW_{25}	= 790.98
Q_{100}	= 42 CFS
TW_{100}	= 783.87
HW_{100}	= 797.74
V_{25}	= 9.57 FT/S
V_{100}	= 13.37 FT/S

LEGEND

796.00 PROPOSED CONTOURS

PROPOSED ROW

RIPRAP (STONE PROTECTION)

NOTES:

1. SEE CULVERT ALIGNMENT SHEET FOR ALIGNMENT INFORMATION NOT SHOWN.
2. CONTRACTOR TO NOTIFY INSPECTOR OR ENGINEER PRIOR TO PLACING RIPRAP ON SOLID ROCK OR UNDISTURBED AREAS.

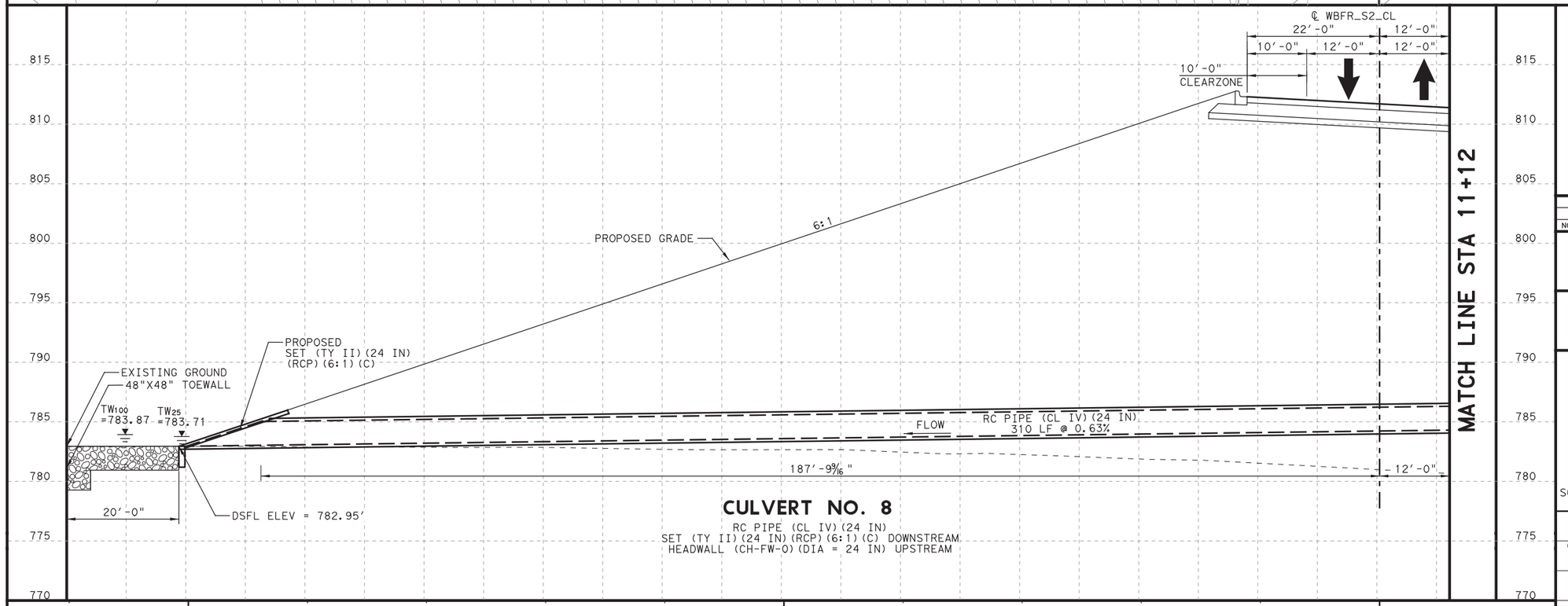

CULVERT NO. 8

RC PIPE (CL IV) (24 IN)
SET (TY II) (24 IN) (RCP) (6:1) (C) DOWNSTREAM
HEADWALL (CH-FW-0) (DIA = 24 IN) UPSTREAM

STATE OF TEXAS
PHAISARN CWATANAPHOL
89252
LICENSED
PROFESSIONAL ENGINEER

Phaisarn Cwatanapho l, P.E. 03/22/2018

NO.	DATE	REVISION	APPROVED

WILLIAMSON COUNTY

HDR Engineering, Inc.
810 Hesters Crossing, Suite 120
Round Rock, Texas 78681
Texas Registered Engineering Firm F-754

SOUTHWEST BYPASS SEGMENT 2

DRAINAGE CULVERT NO. 8 LAYOUT

SCALE: 1"=20'-H
1"=10'-V

SHEET 1 OF 2

DESIGN	FED.RD. DIV.NO.	FEDERAL AID PROJECT NO.		HIGHWAY NO.
QL				
GRAPHICS				
BD	STATE	DISTRICT	COUNTY	SHEET NO.
CHECK	TEXAS	AUS	WILLIAMSON	
PC	CONTROL	SECTION	JOB	111
CHECK	2103	01	034	
QL				

PLOT DRIVER: TXDOT_PDF_BW.pltcfg DATE: 3/22/2018 TIME: 3:9:6 PM SCALE: 1:20
USER: qluu PENTABLE: S2-0000020I7071B.tbl
FILE: \

4/12/2018 7:20 AM

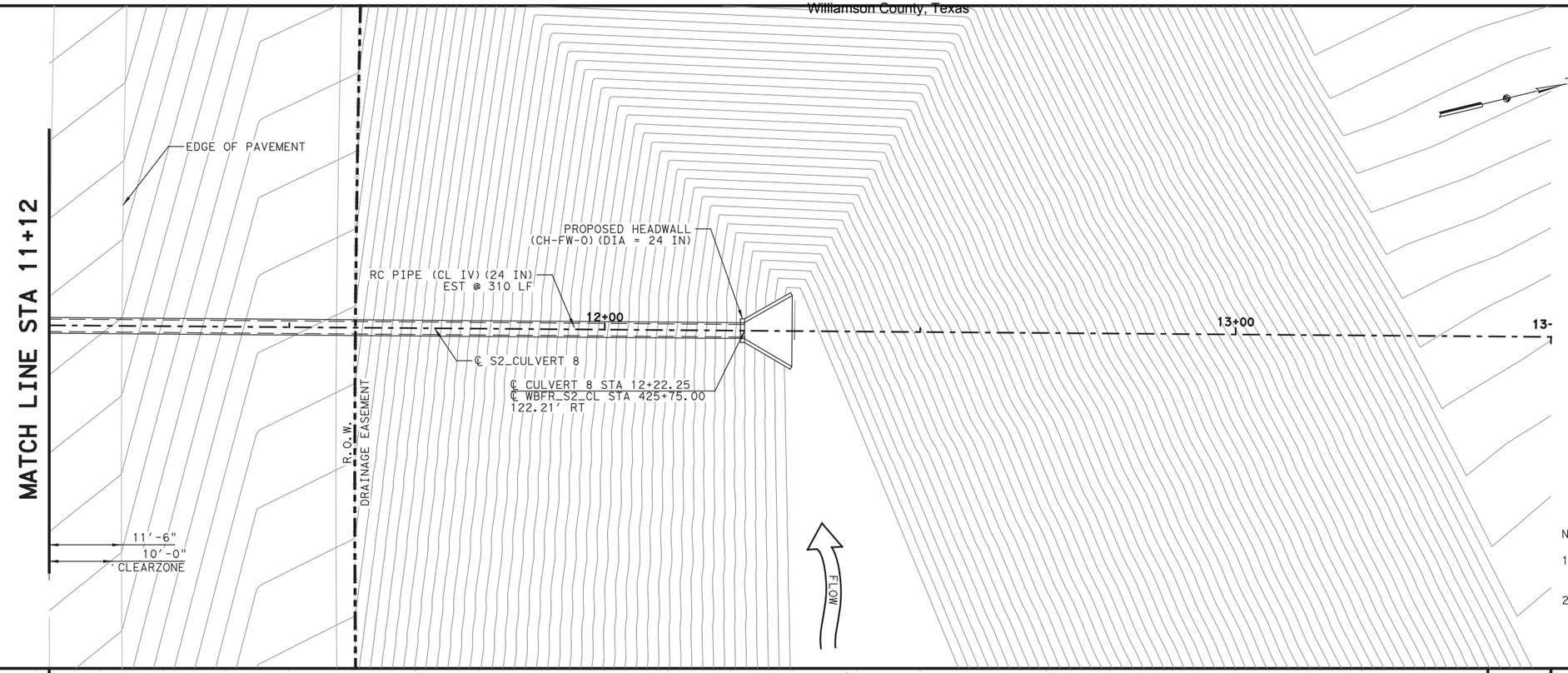

HYDRAULIC DATA

DESIGN FREQ.	= 25-YR
TW_{25}	= 783.71
$HW_{ALLOW.}$	= 807.60
Q_{25}	= 29 CFS
HW_{25}	= 790.98
Q_{100}	= 42 CFS
TW_{100}	= 783.87
HW_{100}	= 797.74
V_{25}	= 9.57 FT/S
V_{100}	= 13.37 FT/S

LEGEND

796.00 PROPOSED CONTOURS

PROPOSED ROW

RIPRAP (STONE PROTECTION)

NOTES:

1. SEE CULVERT ALIGNMENT SHEET FOR ALIGNMENT INFORMATION NOT SHOWN.
2. CONTRACTOR TO NOTIFY INSPECTOR OR ENGINEER PRIOR TO PLACING RIPRAP ON SOLID ROCK OR UNDISTURBED AREAS.

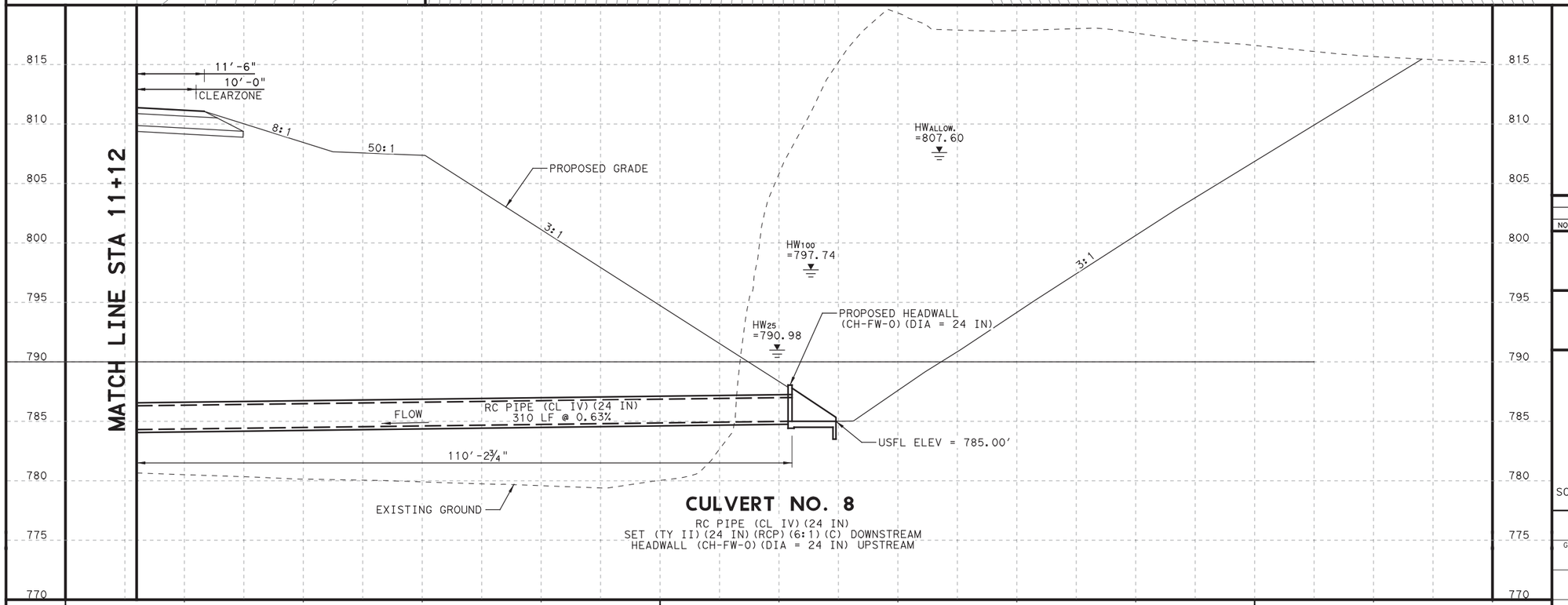

CULVERT NO. 8

RC PIPE (CL IV)(24 IN)
SET (TY II)(24 IN)(RCP)(6:1)(C) DOWNSTREAM
HEADWALL (CH-FW-O)(DIA = 24 IN) UPSTREAM

STATE OF TEXAS
PHAISARN CWATANAPHOL
89252
LICENSED
PROFESSIONAL ENGINEER

Phaisarn Cwatanapho, P.E. 03/22/2018

NO.	DATE	REVISION	APPROVED

WILLIAMSON COUNTY TEXAS

HDR Engineering, Inc.
810 Hesters Crossing, Suite 120
Round Rock, Texas 78681
Texas Registered Engineering Firm F-754

SOUTHWEST BYPASS SEGMENT 2

DRAINAGE CULVERT NO. 8 LAYOUT

SCALE: 1"=20'-H
1"=10'-V

SHEET 2 OF 2

DESIGN	FED.RD. DIV.NO.	FEDERAL AID PROJECT NO.		HIGHWAY NO.
QL				
GRAPHICS				
BD	STATE	DISTRICT	COUNTY	SHEET NO.
CHECK	TEXAS	AUS	WILLIAMSON	
PC	CONTROL	SECTION	JOB	112
CHECK	2103	01	034	
QL				

PLOT DRIVER: TXDOT_PDF_BW.pltcfg USER: qluu FILE: \
DATE: 3/22/2018 TIME: 3/9/23 PM PENTABLE: S2-00000201707IB.tbl SCALE: 1:20

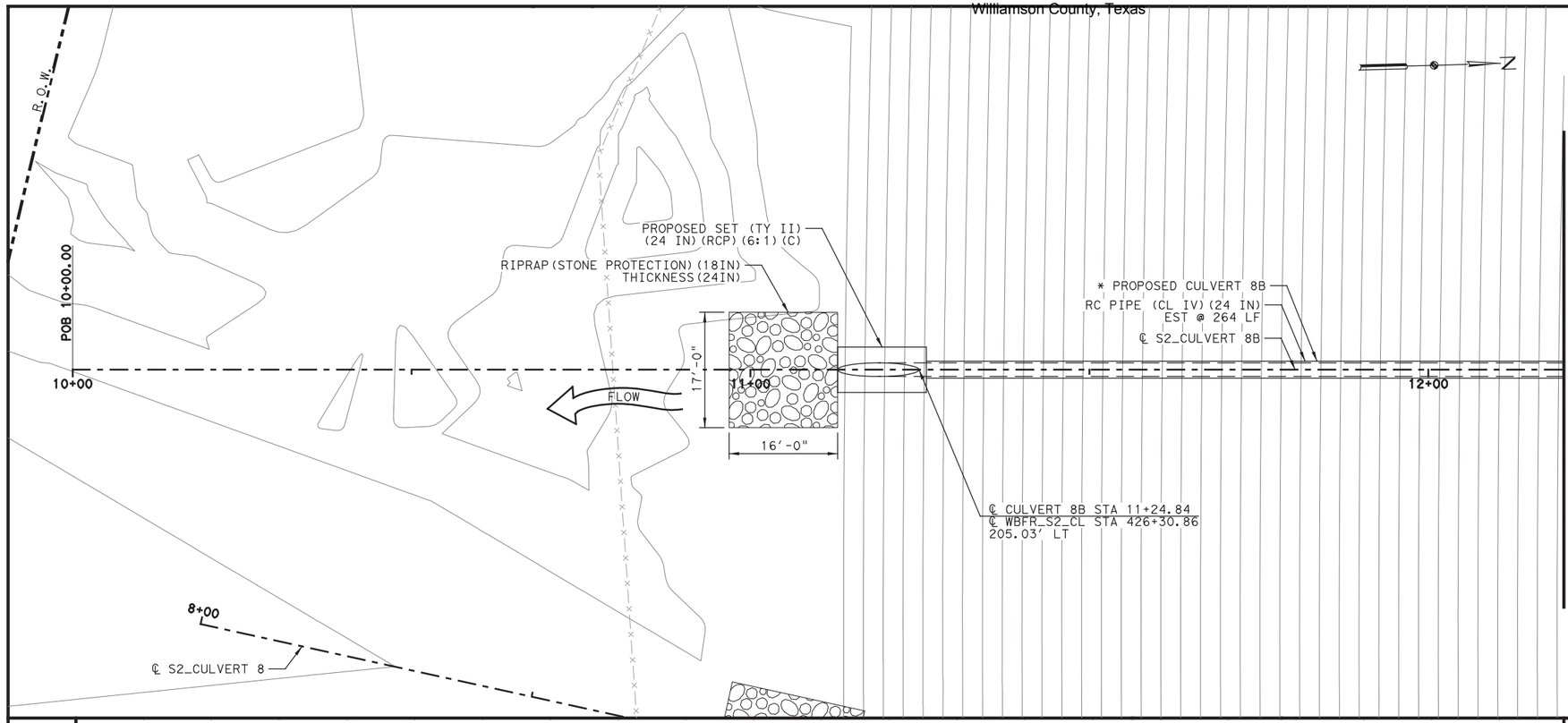

HYDRAULIC DATA

DESIGN FREQ.	= 25-YR
TW_{25}	= 783.05
$HW_{ALLOW.}$	= 809.72
Q_{25}	= 4 CFS
HW_{25}	= 783.65
Q_{100}	= 6 CFS
TW_{100}	= 783.11
HW_{100}	= 783.80
V_{25}	= 0.00 FT/S
V_{100}	= 0.00 FT/S

LEGEND

796.00 — PROPOSED CONTOURS

PROPOSED ROW

RIPRAP (STONE PROTECTION)

NOTES:

1. SEE CULVERT ALIGNMENT SHEET FOR ALIGNMENT INFORMATION NOT SHOWN.
2. CONTRACTOR TO NOTIFY INSPECTOR OR ENGINEER PRIOR TO PLACING RIPRAP ON SOLID ROCK OR UNDISTURBED AREAS.

* IF RETAINING WALL RW-06 IS NOT CONSTRUCTED, REMOVE DRAINAGE CULVERT NO. 8B LAYOUT SHEETS FROM PLAN SET.

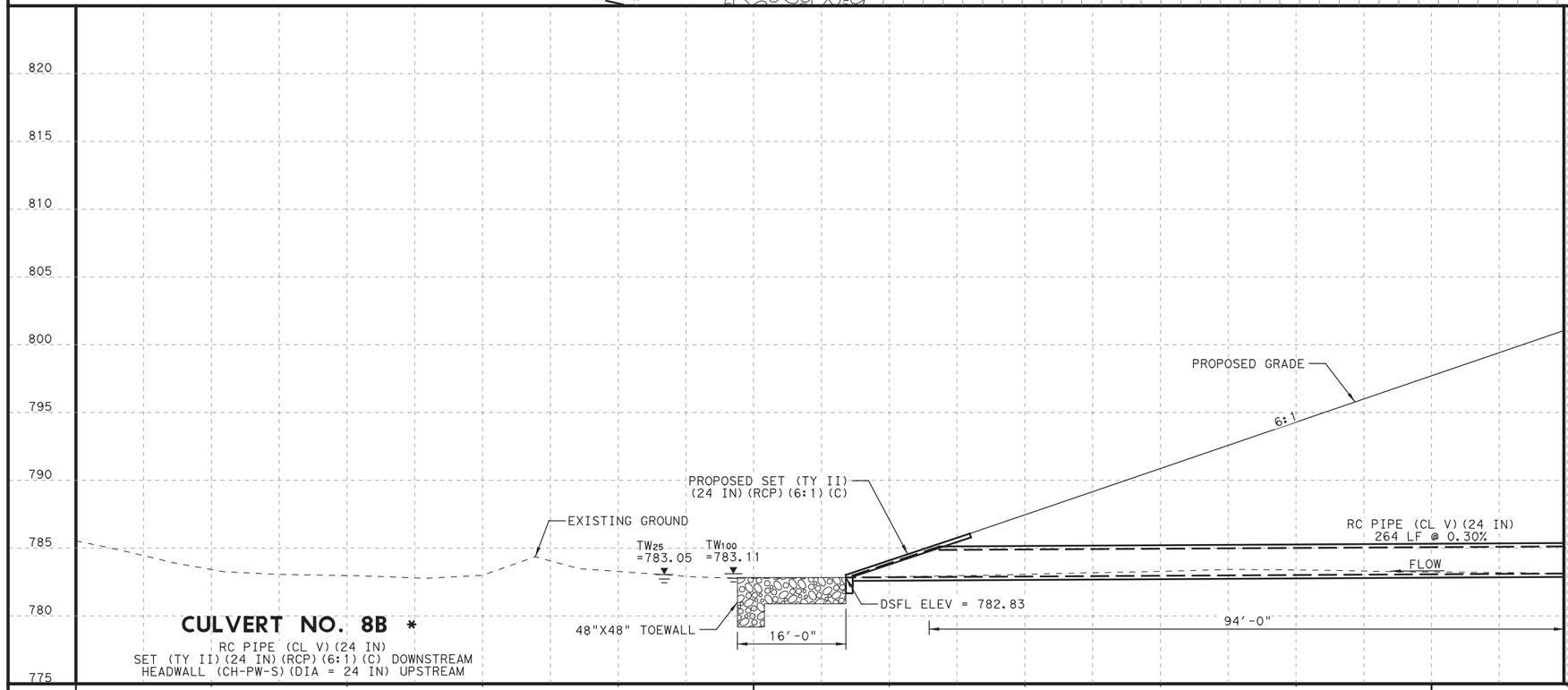

STATE OF TEXAS
PHAISARN CWATANAPHOL
89252
LICENSED
PROFESSIONAL ENGINEER

Phaisarn Cwatanaphol, P.E.

04/10/2018

NO.	DATE	REVISION	APPROVED

WILLIAMSON COUNTY

HDR Engineering, Inc.
810 Hesters Crossing, Suite 120
Round Rock, Texas 78681
Texas Registered Engineering Firm F-754

SOUTHWEST BYPASS SEGMENT 2

DRAINAGE CULVERT NO. 8B LAYOUT

SCALE: 1"=20'-H
1"=10'-V

SHEET 1 OF 2

DESIGN	FED. RD. DIV. NO.	FEDERAL AID PROJECT NO.		HIGHWAY NO.
QL				
GRAPHICS				
QL	STATE	DISTRICT	COUNTY	SHEET NO.
CHECK	TEXAS	AUS	WILLIAMSON	
PC	CONTROL	SECTION	JOB	113
CHECK	2103	01	034	
QL				

PLOT DRIVER: TXDOT_PDF_BW.pltcfg PENTABLE: S2-0000020I7018.tbl
USER: lgomezgon2 DATE: 4/10/2018 TIME: 9:43:34 AM SCALE: 1:20
FILE: \

4/12/2018 7:20 AM

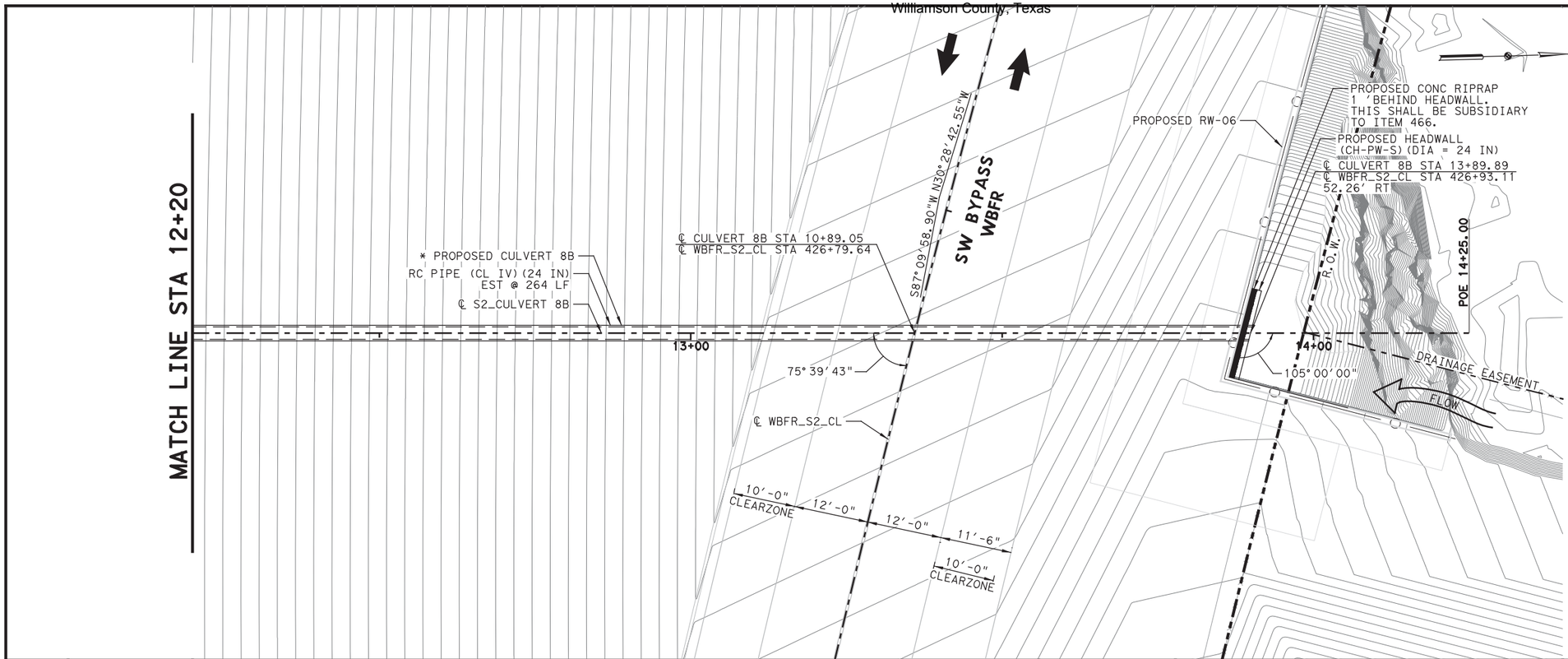

HYDRAULIC DATA

DESIGN FREQ.	= 25-YR
TW_{25}	= 783.05
$HW_{ALLOW.}$	= 809.72
Q_{25}	= 4 CFS
HW_{25}	= 783.65
Q_{100}	= 6 CFS
TW_{100}	= 783.11
HW_{100}	= 783.80
V_{25}	= 0.00 FT/S
V_{100}	= 0.00 FT/S

LEGEND

—796.00—	PROPOSED CONTOURS
— — — —	PROPOSED ROW
	RIPRAP (STONE PROTECTION)

NOTES:

1. SEE CULVERT ALIGNMENT SHEET FOR ALIGNMENT INFORMATION NOT SHOWN.
2. CONTRACTOR TO NOTIFY INSPECTOR OR ENGINEER PRIOR TO PLACING RIPRAP ON SOLID ROCK OR UNDISTURBED AREAS.

* IF RETAINING WALL RW-06 IS NOT CONSTRUCTED, REMOVE DRAINAGE CULVERT NO. 8B LAYOUT SHEETS FROM PLAN SET.

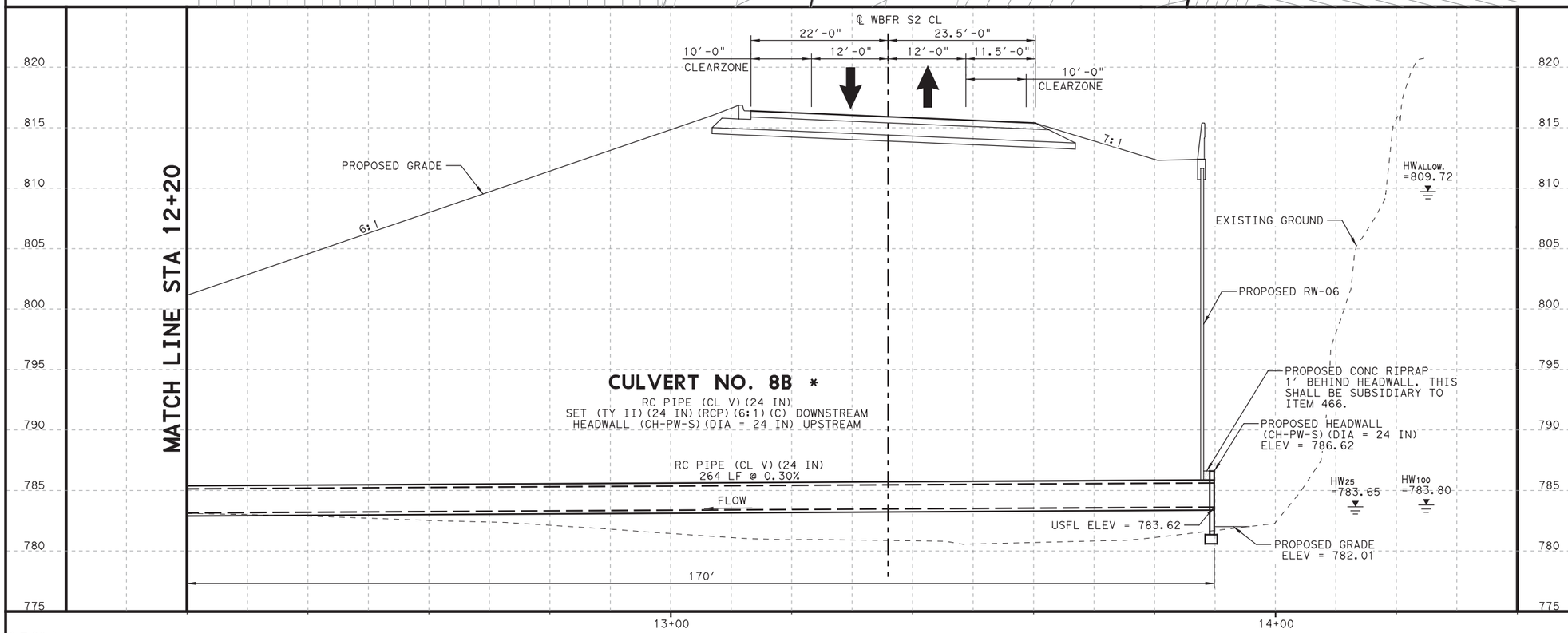

STATE OF TEXAS
PHAISARN CWATANAPHOL
89252
LICENSED
PROFESSIONAL ENGINEER

Phaisarn Cwatanaphol, P.E.

04/10/2018

NO.	DATE	REVISION	APPROVED

WILLIAMSON COUNTY

HDR Engineering, Inc.
810 Hesters Crossing, Suite 120
Round Rock, Texas 78681
Texas Registered Engineering Firm F-754

SOUTHWEST BYPASS SEGMENT 2

DRAINAGE CULVERT NO. 8B LAYOUT

SCALE: 1"=20'-H
1"=10'-V

SHEET 2 OF 2

DESIGN	FED. RD. DIV. NO.	FEDERAL AID PROJECT NO.		HIGHWAY NO.
QL				
GRAPHICS	STATE	DISTRICT	COUNTY	SHEET NO.
QL	TEXAS	AUS	WILLIAMSON	114
CHECK	CONTROL	SECTION	JOB	
PC	2103	01	034	
CHECK				
QL				

PLOT DRIVER: TXDOT_PDF_BW.pltcfg PENTABLE: S2-00000201707l8.tbl
USER: lgomezgonz DATE: 4/10/2018 TIME: 9:43:38 AM SCALE: 1:20
FILE: \

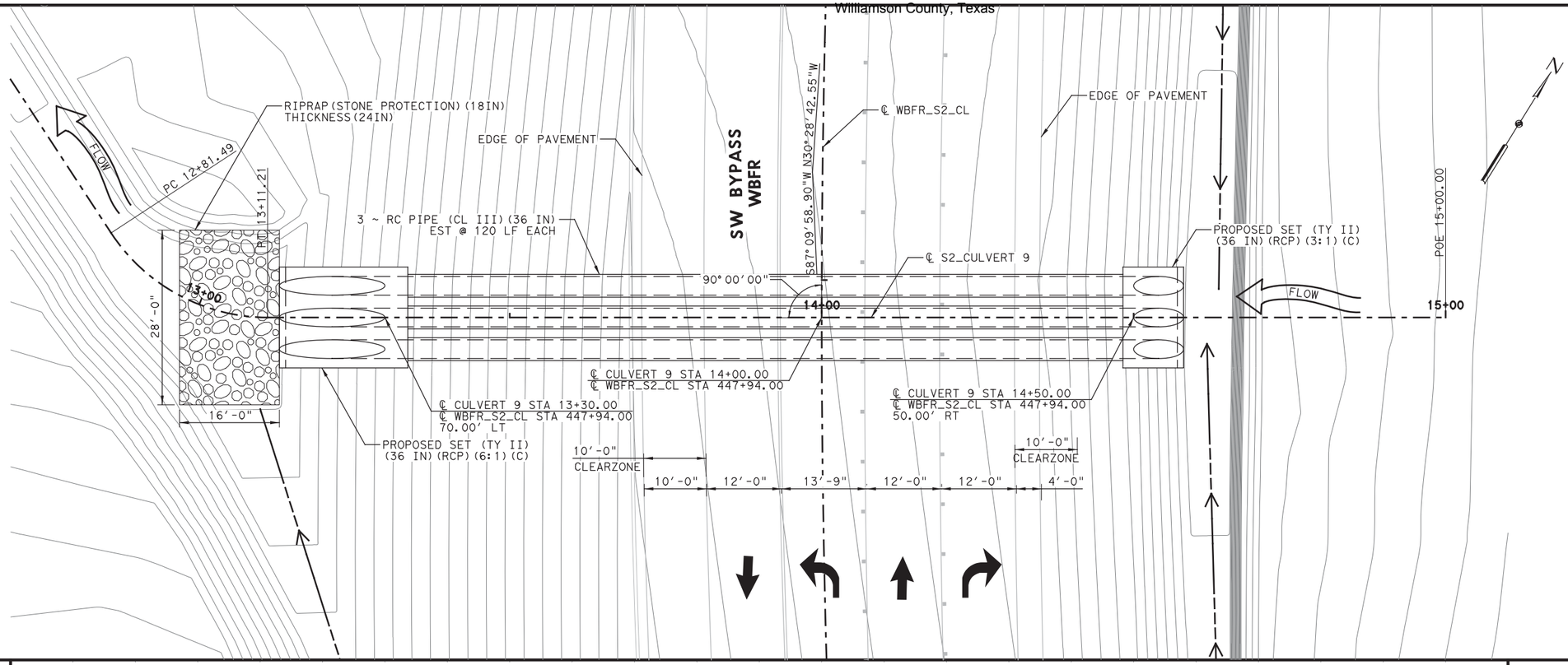

HYDRAULIC DATA

DESIGN FREQ.	= 25-YR
TW_{25}	= 835.38
$HW_{ALLOW.}$	= 837.21
Q_{25}	= 69 CFS
HW_{25}	= 836.88
Q_{100}	= 105 CFS
TW_{100}	= 835.68
HW_{100}	= 837.65
V_{25}	= 6.80 FT/S
V_{100}	= 7.50 FT/S

LEGEND

796.00 — PROPOSED CONTOURS

PROPOSED ROW

RIPRAP (STONE PROTECTION)

NOTES:

1. SEE CULVERT ALIGNMENT SHEET FOR ALIGNMENT INFORMATION NOT SHOWN.
2. CONTRACTOR TO NOTIFY INSPECTOR OR ENGINEER PRIOR TO PLACING RIPRAP ON SOLID ROCK OR UNDISTURBED AREAS.

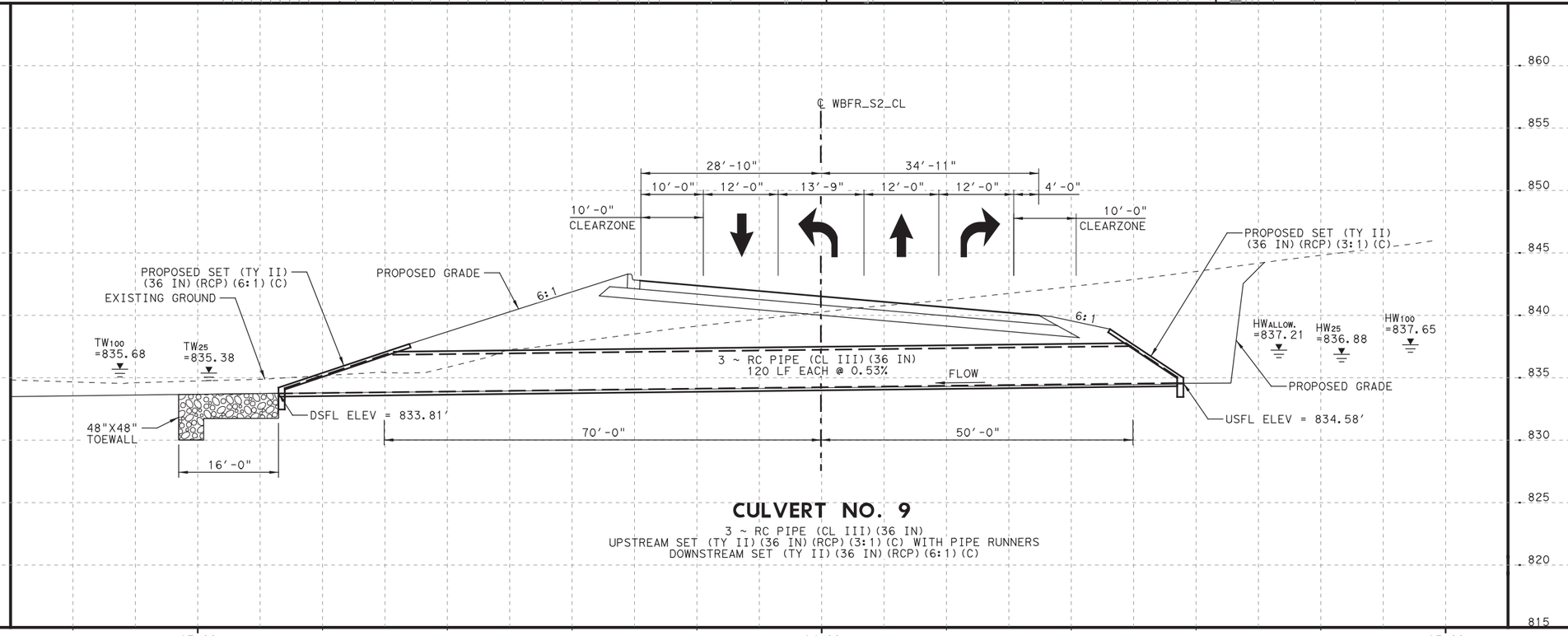

CULVERT NO. 9

3 ~ RC PIPE (CL III) (36 IN)
UPSTREAM SET (TY II) (36 IN) (RCP) (3:1) (C) WITH PIPE RUNNERS
DOWNSTREAM SET (TY II) (36 IN) (RCP) (6:1) (C)

STATE OF TEXAS
PHAISARN CWATANAPHOL
89252
LICENSED
PROFESSIONAL ENGINEER

Phaisarn Cwatanapho l, P.E.

03/22/2018

NO.	DATE	REVISION	APPROVED

WILLIAMSON COUNTY

HDR Engineering, Inc.
810 Hesters Crossing, Suite 120
Round Rock, Texas 78681
Texas Registered Engineering Firm F-754

SOUTHWEST BYPASS SEGMENT 2

DRAINAGE CULVERT NO. 9 LAYOUT

SCALE: 1"=20'-H
1"=10'-V

SHEET 1 OF 1

DESIGN	FED.RD. DIV. NO.	FEDERAL AID PROJECT NO.		HIGHWAY NO.
QL				
GRAPHICS				
BD	STATE	DISTRICT	COUNTY	SHEET NO.
CHECK	TEXAS	AUS	WILLIAMSON	
PC	CONTROL	SECTION	JOB	115
CHECK	2103	01	034	
QL				

PLOT DRIVER: TXDOT_PDF_BW.pltcfg PENTABLE: S2-0000020I7018.tbl
USER: qluu TIME: 3/9:39 PM SCALE: i:20
DATE: 3/22/2018
FILE: \

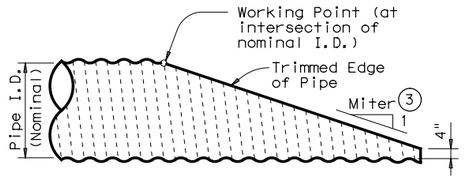

NOTE: All Pipe Runners, calculations, and dimensions are based on the pipe culverts mitered as shown in this detail. Alternate styles of mitered ends will require that appropriate adjustments be made to the values presented on this standard.

SIDE ELEVATION OF TYPICAL PIPE CULVERT MITER

(Showing Corrugated Metal Pipe Culvert.
Details of Concrete Pipe Culvert are similar.)

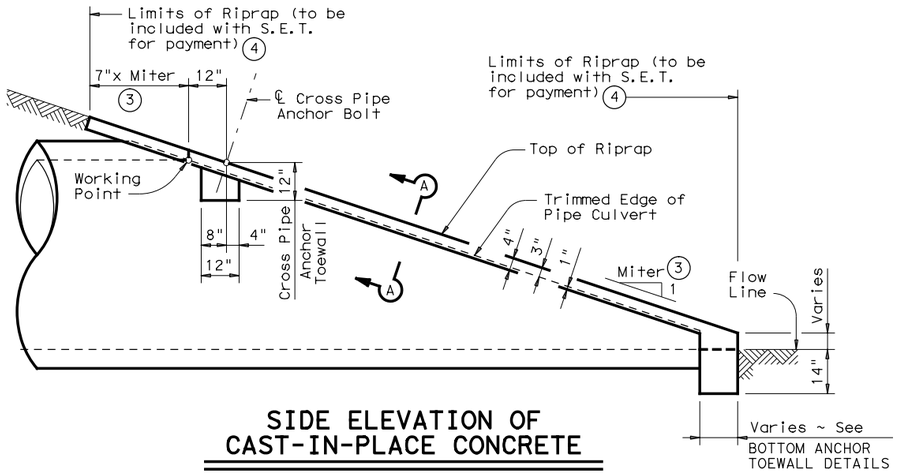

SIDE ELEVATION OF CAST-IN-PLACE CONCRETE

(Showing Concrete Pipe Culvert.
Details of Corrugated Metal Pipe Culvert are similar.
Pipe Runners not shown for clarity)

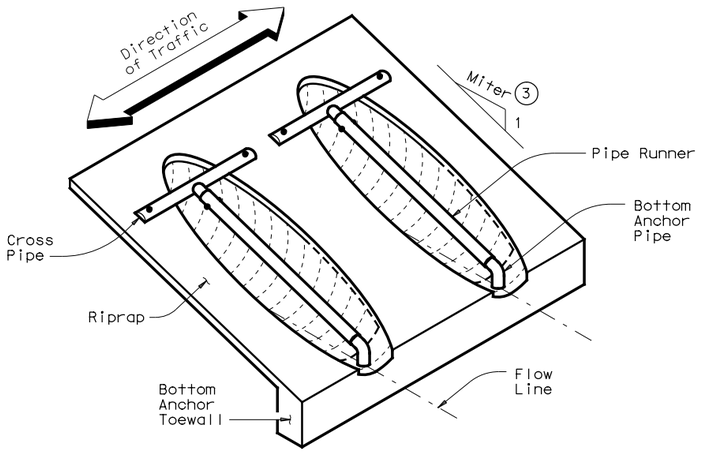

ISOMETRIC VIEW OF TYPICAL INSTALLATION

(Showing installation with no skew.)

CROSS PIPE LENGTHS & PIPE RUNNER LENGTHS (1)(2)

Nominal Culvert I.D.	Pipe Culvert Spa ~ G	Cross Pipe Length	Pipe Runner Length											
			3:1 Side Slope				4:1 Side Slope				6:1 Side Slope			
			0° Skew	15° Skew	30° Skew	45° Skew	0° Skew	15° Skew	30° Skew	45° Skew	0° Skew	15° Skew	30° Skew	45° Skew
24"	1'- 7"	3'- 5"	N/A	N/A	N/A	5'-10"	N/A	N/A	N/A	8'- 1"	N/A	N/A	N/A	12'- 9"
27"	1'- 8"	3'- 8"	N/A	N/A	5'- 5"	6'-11"	N/A	N/A	7'- 7"	9'- 7"	N/A	N/A	11'-11"	14'-11"
30"	1'-10"	3'-11"	N/A	N/A	6'- 4"	8'- 0"	N/A	N/A	8'- 9"	11'- 0"	N/A	N/A	13'- 8"	17'- 0"
33"	1'-11"	4'- 2"	6'- 2"	6'- 5"	7'- 3"	9'- 1"	8'- 6"	8'-10"	10'- 0"	12'- 5"	13'- 3"	13'- 9"	15'- 5"	19'- 2"
36"	2'- 1"	4'- 5"	6'-11"	7'- 3"	8'- 2"	10'- 2"	9'- 6"	9'-11"	11'- 2"	13'-10"	14'- 9"	15'- 3"	17'- 2"	21'- 3"
42"	2'- 4"	4'-11"	8'- 6"	8'-10"	9'-11"	12'- 4"	11'- 7"	12'- 0"	13'- 6"	16'- 8"	17'- 9"	18'- 5"	20'- 8"	25'- 7"
48"	2'- 7"	5'- 5"	10'- 1"	10'- 5"	11'- 9"	N/A	13'- 7"	14'- 2"	15'-10"	N/A	20'- 9"	21'- 6"	24'- 2"	N/A
54"	3'- 0"	5'-11"	11'- 8"	12'- 1"	N/A	N/A	15'- 8"	16'- 3"	N/A	N/A	23'-10"	24'- 8"	N/A	N/A
60"	3'- 3"	6'- 5"	13'- 3"	N/A	N/A	N/A	17'- 9"	N/A	N/A	N/A	26'-10"	N/A	N/A	N/A

TYPICAL PIPE CULVERT MITERS (3)

Side Slope	0° Skew	15° Skew	30° Skew	45° Skew
3:1	3:1	3.106:1	3.464:1	4.243:1
4:1	4:1	4.141:1	4.619:1	5.657:1
6:1	6:1	6.212:1	6.928:1	8.485:1

CONDITIONS WHERE PIPE RUNNERS ARE NOT REQUIRED (2)

Nominal Culvert I.D.	Single Pipe Culvert	Multiple Pipe Culverts
12" thru 21"	Skews thru 45°	Skews thru 45°
24"	Skews thru 45°	Skews thru 30°
27"	Skews thru 30°	Skews thru 15°
30"	Skews thru 15°	Skews thru 15°
33"	Skews thru 15°	Always required
36"	Normal (No Skew)	Always required
42" to 60"	Always required	Always required

STANDARD PIPE SIZES & MAX PIPE RUNNER LENGTHS (1)

Pipe Size	Pipe O.D.	Pipe I.D.	Max Pipe Runner Length
2" STD	2.375"	2.067"	N/A
3" STD	3.500"	3.068"	10'- 0"
4" STD	4.500"	4.026"	19'- 8"
5" STD	5.563"	5.047"	34'- 2"

ESTIMATED CONCRETE RIPRAP QUANTITIES (CY) (5)

Nominal Culvert I.D.	3:1 Side Slope				4:1 Side Slope				6:1 Side Slope			
	0° Skew	15° Skew	30° Skew	45° Skew	0° Skew	15° Skew	30° Skew	45° Skew	0° Skew	15° Skew	30° Skew	45° Skew
12"	0.4	0.4	0.5	0.5	0.5	0.5	0.5	0.6	0.7	0.7	0.7	0.8
15"	0.5	0.5	0.5	0.6	0.6	0.6	0.6	0.7	0.7	0.7	0.8	0.9
18"	0.5	0.5	0.6	0.6	0.6	0.7	0.7	0.8	0.8	0.8	0.9	1.0
21"	0.6	0.6	0.6	0.7	0.7	0.7	0.8	0.9	0.9	0.9	1.0	1.2
24"	0.6	0.7	0.7	0.8	0.8	0.8	0.8	1.0	1.0	1.0	1.1	1.3
27"	0.7	0.7	0.8	0.9	0.8	0.9	0.9	1.1	1.1	1.1	1.2	1.4
30"	0.8	0.8	0.8	0.9	0.9	0.9	1.0	1.2	1.2	1.2	1.3	1.6
33"	0.8	0.8	0.9	1.0	1.0	1.0	1.1	1.3	1.3	1.4	1.5	1.7
36"	0.9	0.9	0.9	1.1	1.1	1.1	1.2	1.4	1.4	1.5	1.6	1.8
42"	1.0	1.0	1.1	1.3	1.2	1.3	1.3	1.6	1.6	1.7	1.8	2.1
48"	1.1	1.1	1.2	N/A	1.4	1.4	1.5	N/A	1.9	1.9	2.1	N/A
54"	1.3	1.3	N/A	N/A	1.6	1.6	N/A	N/A	2.1	2.1	N/A	N/A
60"	1.4	N/A	N/A	N/A	1.7	N/A	N/A	N/A	2.3	N/A	N/A	N/A

(1) Size of Pipe Runner shall be as shown in the tables. Cross Pipe shall be the same size as the Pipe Runner. Cross Pipe Stub Out and Bottom Anchor Pipe shall be the next smaller size pipe as shown in the STANDARD PIPE SIZES table.

(2) This standard allows for the placement of only one pipe runner across each culvert pipe opening. In order to limit the clear opening to be traversed by an errant vehicle, the following conditions must be met:

For 60" culvert pipes, the skew must not exceed 0°.
For 54" culvert pipes, the skew must not exceed 15°.
For 48" culvert pipes, the skew must not exceed 30°.
For all culvert pipe sizes 42" and less, the skew must not exceed 45°.

If the above conditions cannot be met, the designer should consider using a safety end treatment with flared wings. For further information, refer to the TxDOT "Roadway Design Manual".

(3) Miter = Slope of Mitered Pipe Culvert End

(4) Riprap placed beyond the limits shown will be paid as Concrete Riprap in accordance with Item 432, "Riprap".

(5) Quantities shown are for one end of one reinforced Concrete Pipe Culvert. For multiple Pipe Culverts or for Corrugated Metal Pipe Culverts, quantities will need to be adjusted. Riprap quantities are for Contractor's information only.

DISCLAIMER:
The use of this standard is governed by the "Texas Engineering Practice Act". No warranty of any kind is made by TxDOT for any purpose whatsoever. TxDOT assumes no responsibility for the conversion of this standard to other formats or for incorrect results or damages resulting from its use.

DATE: 3/22/2018 3:19:43 PM
FILE: c:\pwworking\dal\d0911850\setpcdse.dgn

SHEET 1 OF 2

Texas Department of Transportation — Bridge Division Standard

SAFETY END TREATMENT

FOR 12" DIA TO 60" DIA
PIPE CULVERTS
TYPE II ~ CROSS DRAINAGE

SETP-CD

FILE: setpcdse.dgn	DN: GAF	CK: CAT	DW: JRP	CK: GAF
©TxDOT February 2010	CONT	SECT	JOB	HIGHWAY
REVISIONS	2103	01	034	
11-10: Add note for synthetic fibers.	DIST	COUNTY		SHEET NO.
	AUS	WILLIAMSON		116

DISCLAIMER:
The use of this standard is governed by the "Texas Engineering Practice Act". No warranty of any kind is made by TxDOT for any purpose whatsoever. TxDOT assumes no responsibility for the conversion of this standard to other formats or for incorrect results or damages resulting from its use.

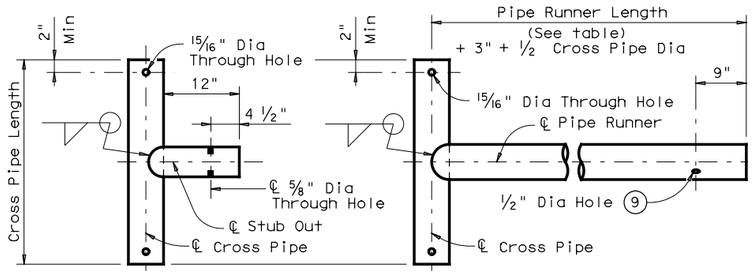

OPTION A1 OPTION A2

CROSS PIPE AND CONNECTIONS DETAILS

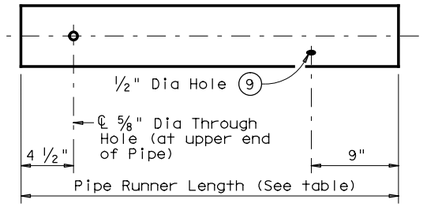

NOTE: The separate Pipe Runner shown is required when Cross Pipe Connection Option A1 is used.

PIPE RUNNER DETAILS

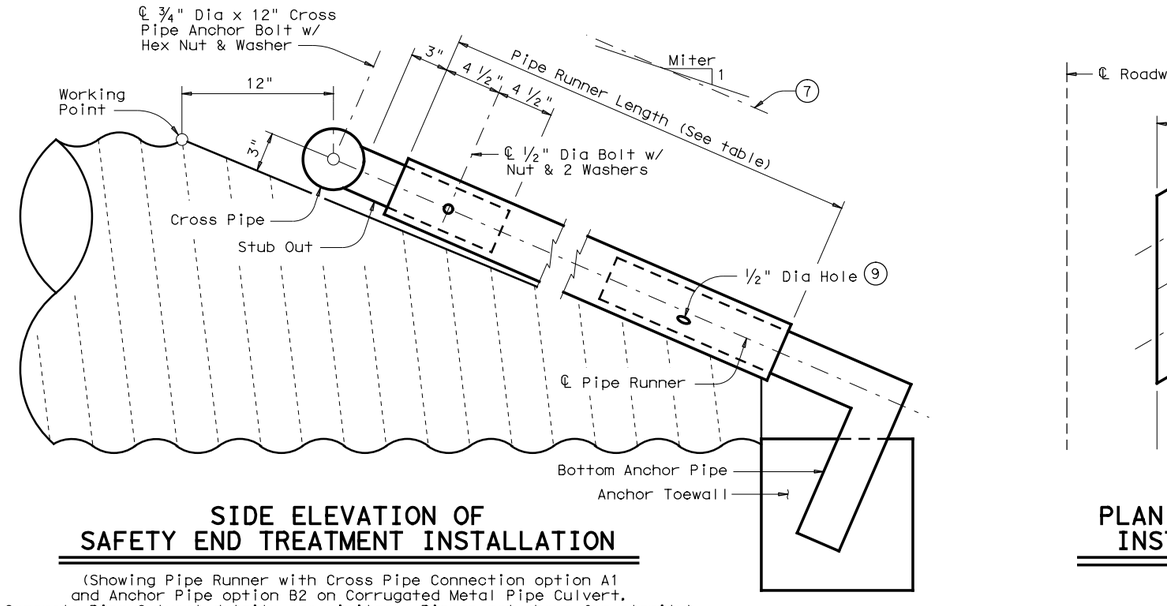

SIDE ELEVATION OF SAFETY END TREATMENT INSTALLATION

(Showing Pipe Runner with Cross Pipe Connection option A1 and Anchor Pipe option B2 on Corrugated Metal Pipe Culvert. Concrete Pipe Culvert details are similar. Riprap not shown for clarity)

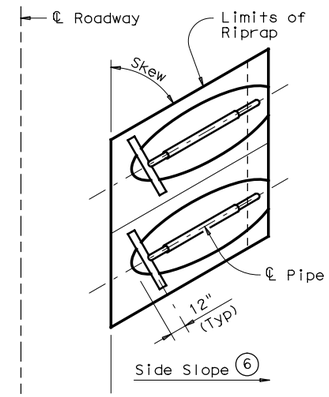

PLAN OF SKEWED INSTALLATION

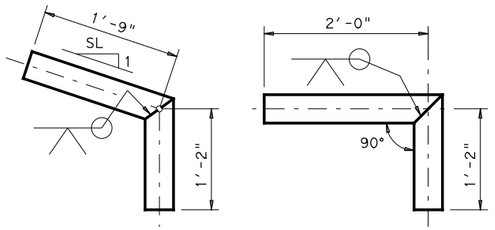

OPTION B1 OPTION B2

BOTTOM ANCHOR PIPE DETAILS (10)

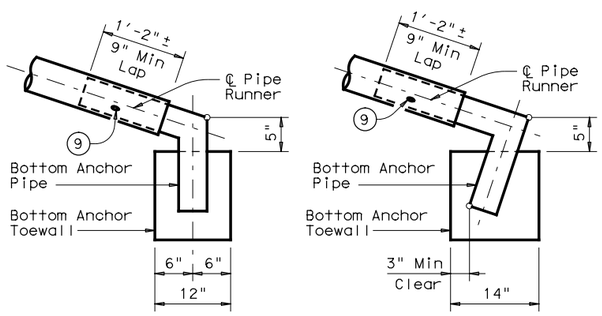

OPTION B1 OPTION B2

BOTTOM ANCHOR TOEWALL DETAILS

(Culvert & Riprap not shown for clarity)

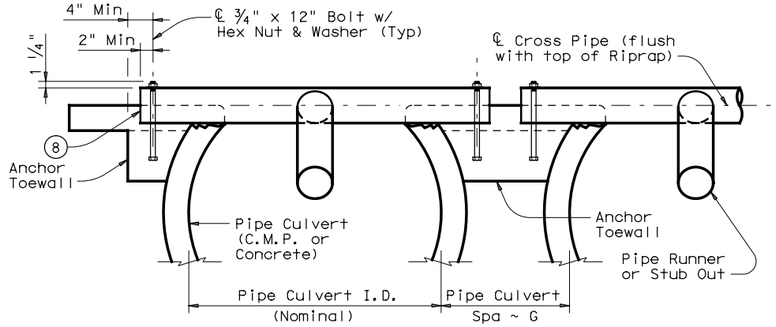

SHOWING CROSS PIPE & ANCHOR TOEWALL

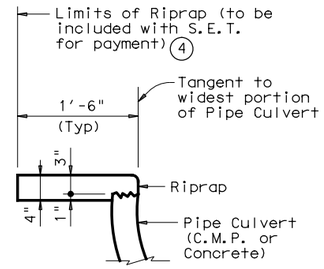

SHOWING TYPICAL PIPE CULVERT & RIPRAP

SECTION A-A

(4) Riprap placed beyond the limits shown will be paid as Concrete Riprap in accordance with Item 432, "Riprap".

(6) Recommended values of side slope are 3:1, 4:1, & 6:1. All quantities, calculations, and dimensions shown herein are based on these recommended values. Slope of 3:1 or flatter is required for vehicle safety.

(7) Note that actual slope of Pipe Runner may vary slightly from Side Slope of Riprap and trimmed Culvert Pipe edge.

(8) Care shall be taken to ensure that Riprap concrete does not flow into the Cross Pipe so as to permit disassembly of the bolted connection to allow cleanout access.

(9) After installation, the 1/2" hole shall be inspected to ensure that the lap of the Pipe Runner with the Bottom Anchor Pipe is adequate.

(10) At fabricator's option, a heat bend to a smooth 5" radius or a manufactured elbow (of the same material as the Runner) may be substituted for the mitered and welded joint in the Bottom Anchor Pipe.

GENERAL NOTES:

Pipe Runners are designed for a traversing load of 1,800 pounds at yield as recommended by Research Report 280-1, "Safety Treatment of Roadside Cross-Drainage Structures", Texas Transportation Institute, March 1981.

The Safety End Treatments shown herein are intended for use in those installations where out of control vehicles are likely to traverse the openings approximately perpendicular to the Pipe Runners.

Riprap and all necessary inverts shall be Concrete Riprap conforming to the requirements of Item 432, "Riprap".

Synthetic fibers listed on the "Fibers for Concrete" Material Producer List (MPL) may be used in lieu of steel reinforcing in riprap concrete unless noted otherwise.

Payment for riprap and toewall is included in the Price Bid for each Safety End Treatment.

Pipe Runners, Cross Pipes, and Anchor Pipes shall conform to the requirements of ASTM A53 (Type E or S, Grade B), ASTM A500 (Grade B), or API 5LX52.

Bolts and nuts shall conform to ASTM A307.

All steel components, except concrete reinforcing, shall be galvanized after fabrication. Galvanizing damaged during transport or construction shall be repaired in accordance with the specifications.

Texas Department of Transportation — Bridge Division Standard

SAFETY END TREATMENT

FOR 12" DIA TO 60" DIA PIPE CULVERTS
TYPE II ~ CROSS DRAINAGE

SETP-CD

FILE: setpcdse.dgn	DN: GAF	CK: CAT	DW: JRP	CK: GAF
©TxDOT February 2010	CONT	SECT	JOB	HIGHWAY
REVISIONS	2103	01	034	
11-10: Add note for synthetic fibers.	DIST	COUNTY		SHEET NO.
	AUS	WILLIAMSON		117

DATE: 3/22/2018 3:19:44 PM
FILE: c:\pwworking\dal\d0911850\setpcdse.dgn

DISCLAIMER:
The use of this standard is governed by the "Texas Engineering Practice Act". No warranty of any kind is made by TxDOT for any purpose whatsoever. TxDOT assumes no responsibility for the conversion of this standard to other formats or for incorrect results or damages resulting from its use.

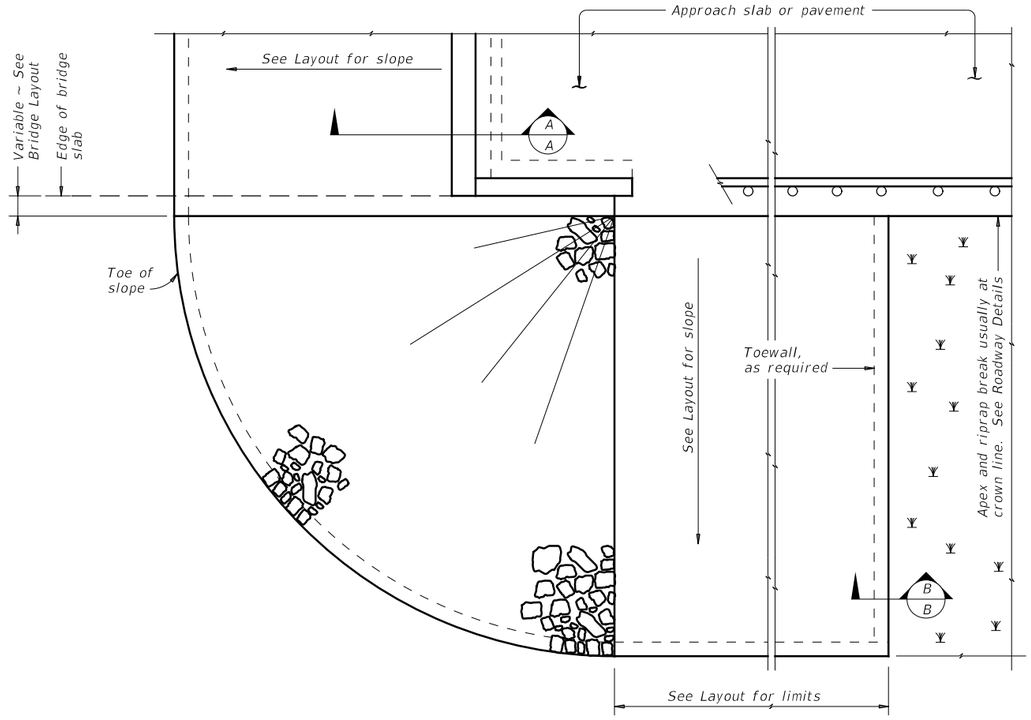

PLAN

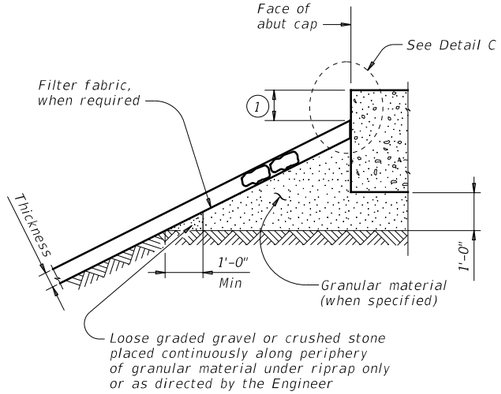

SECTION A-A AT CAP

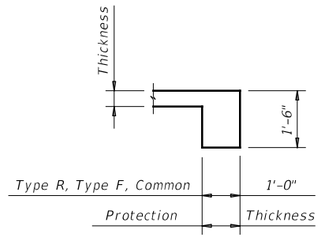

SECTION B-B

Provide toewall when shoulder drain is located adjacent to limits of stone riprap. Omit toewall when thickness of protection riprap is greater than 18".

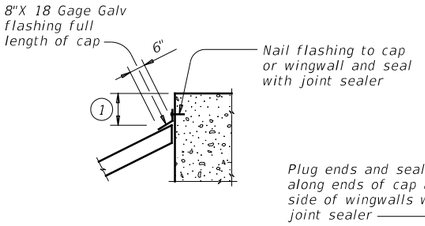

CAP OPTION A

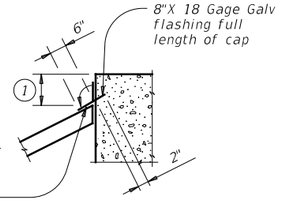

CAP OPTION B

DETAIL C

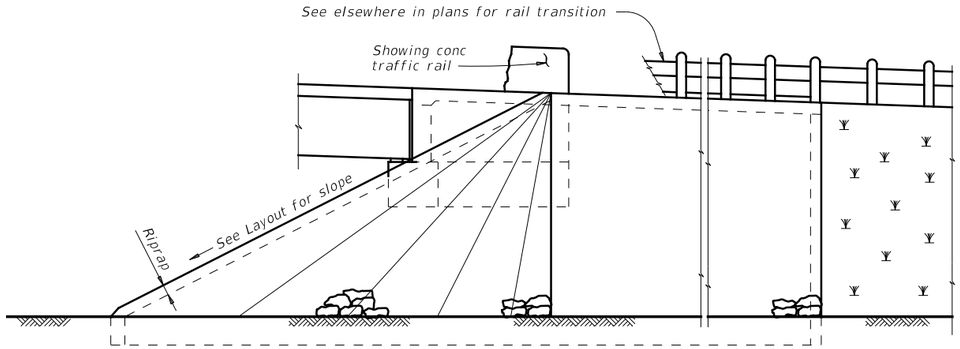

ELEVATION

GENERAL NOTES:
Refer to Item 432, "Riprap" for stone size and gradation, and construction details. See Layout for limits and thickness of riprap specified.
See elsewhere in plans for locations and details of shoulder drains.

(1) Top of cap to top of riprap dimension varies as directed by the Engineer. Provide 9" Min for beam/slab type bridges and 1'-6" for slab span, box beam, or slab beam bridges.

Texas Department of Transportation

Bridge Division Standard

STONE RIPRAP

SRR

FILE: srrstde1.dgn	DN: AES	CK: JGD	DW: BWH	CK: AES		
©TxDOT January 2015	CONT	SECT	JOB	HIGHWAY		
REVISIONS	2103	01	034			
	DIST	COUNTY		SHEET NO.		
	AUS	WILLIAMSON		118		

DATE: 3/22/2018 3:19:47 PM
FILE: c:\pwworking\dot\d0911850\srrstde1.dgn

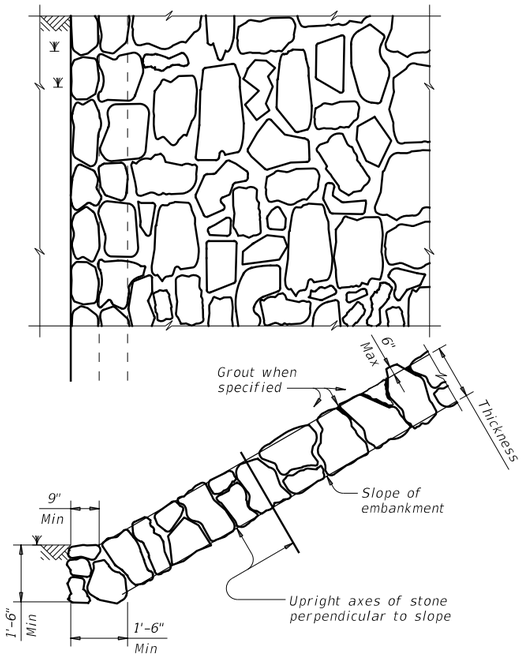

FIGURE 1 ~ TYPE R STONE RIPRAP

dry or grouted

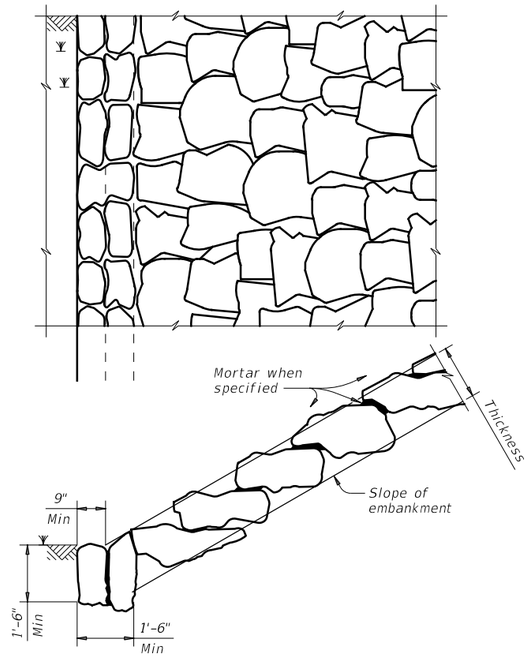

FIGURE 2 ~ TYPE F STONE RIPRAP

dry or mortared

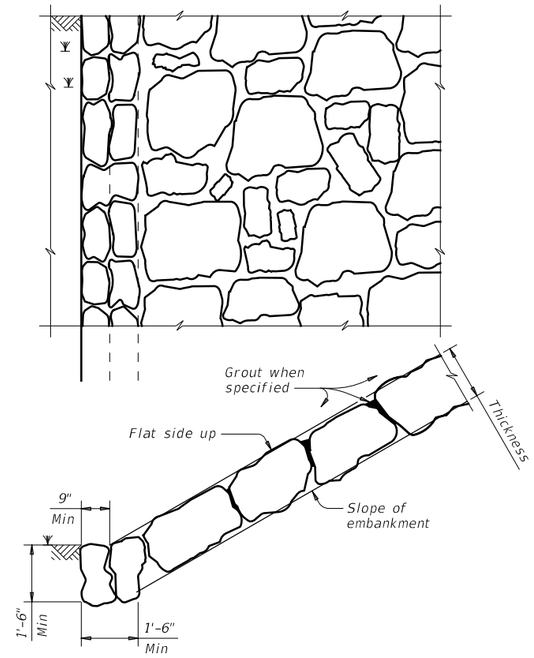

FIGURE 3 ~ TYPE F STONE RIPRAP

grouted

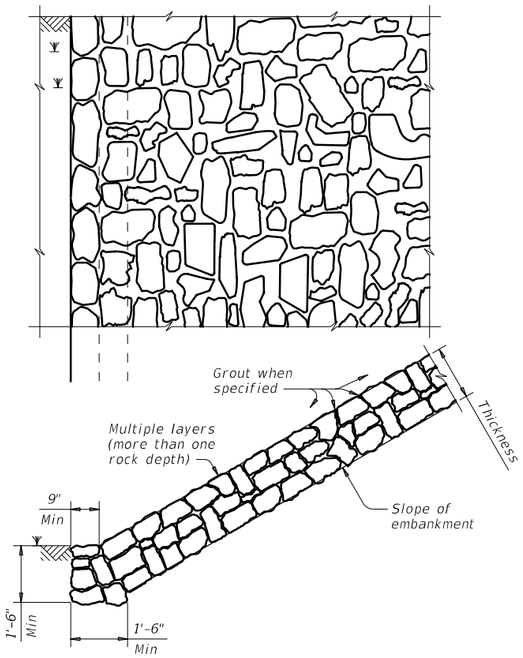

FIGURE 4 ~ COMMON STONE RIPRAP

dry or grouted

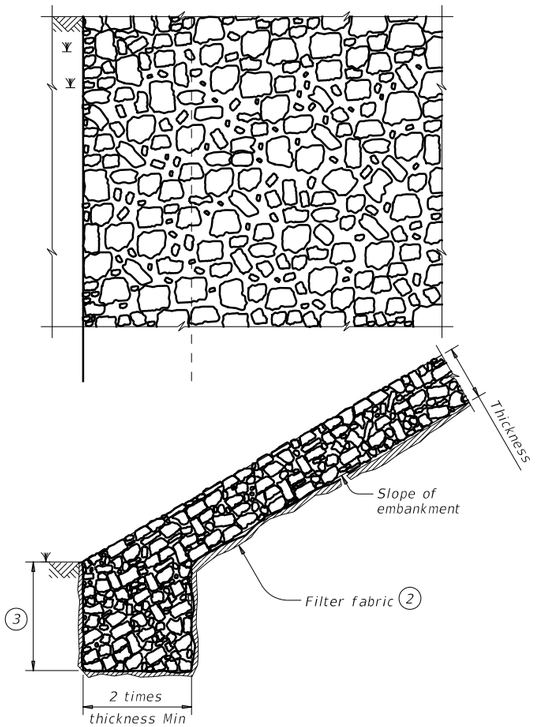

FIGURE 5 ~ PROTECTION STONE RIPRAP

(2) Provide bedding material instead of filter fabric if shown elsewhere in plans. See Layout for thickness of bedding material.

(3) Minimum toe depth is the larger of the maximum scour depth or 2 times the riprap thickness.

DISCLAIMER:
The use of this standard is governed by the "Texas Engineering Practice Act". No warranty of any kind is made by TxDOT for any purpose whatsoever. TxDOT assumes no responsibility for the conversion of this standard to other formats or for incorrect results or damages resulting from its use.

DATE: 3/22/2018 3:19:48 PM
FILE: c:\pwworking\dal\d0911850\srrstde1.dgn

SHEET 2 OF 2

Texas Department of Transportation

Bridge Division Standard

STONE RIPRAP

SRR

FILE: srrstde1.dgn	DN: AES	CK: JGD	DW: BWH	CK: AES
©TxDOT January 2015	CONT	SECT	JOB	HIGHWAY
REVISIONS	2103	01	034	
	DIST	COUNTY		SHEET NO.
	AUS	WILLIAMSON		119

TABLE OF VARIABLE DIMENSIONS AND QUANTITIES FOR ONE HEADWALL (4)

SLOPE	DIA OF PIPE, D	Values for one Pipe						Values to be added for each addt'l Pipe		
		W	X	Y	L	Reinf (Lbs)	Conc (CY) (1)	X and W	Reinf (Lbs)	Conc (CY) (1)
2:1	12"	4'- 7 ½"	2'- 6"	2'-10"	3'- 3 ¼"	84	0.6	1'- 9"	20	0.2
	15"	5'- 5 ¾"	2'- 9 ½"	3'- 4"	3'-10 ¼"	99	0.7	2'- 2"	24	0.3
	18"	6'- 4 ¼"	3'- 1"	3'-10"	4'- 5"	120	0.9	2'- 8"	32	0.3
	21"	7'- 2 ¾"	3'- 4 ½"	4'- 4"	5'- 0"	137	1.1	3'- 1"	43	0.4
	24"	8'- 2 ½"	3'- 9 ½"	4'-10"	5'- 7"	158	1.3	3'- 7"	50	0.5
	27"	9'- 1"	4'- 1"	5'- 4"	6'- 2"	173	1.5	3'-11"	56	0.6
	30"	9'-11 ½"	4'- 4 ½"	5'-10"	6'- 8 ¾"	197	1.7	4'- 4"	65	0.8
	33"	10'-10"	4'- 8"	6'- 4"	7'- 3 ¾"	216	2.0	4'- 8"	71	0.9
	36"	11'- 8 ¼"	4'-11 ½"	6'-10"	7'-10 ¾"	241	2.2	5'- 1"	81	1.0
	42"	13'- 5 ¼"	5'- 6 ½"	7'-10"	9'- 0 ½"	290	2.8	5'-10"	97	1.3
	48"	15'- 9"	6'- 1 ½"	9'- 4"	10'- 9 ¼"	350	3.8	6'- 7"	117	1.7
	54"	17'- 5 ¾"	6'- 8 ½"	10'- 4"	11'-11 ¼"	415	4.5	7'- 6"	151	2.1
	60"	19'- 2 ¾"	7'- 3 ½"	11'- 4"	13'- 1"	469	5.3	8'- 3"	174	2.5
	66"	20'-11 ½"	7'-10 ½"	12'- 4"	14'- 3"	530	6.2	8'- 9"	194	2.9
	72"	22'- 8 ½"	8'- 5 ½"	13'- 4"	15'- 4 ¾"	587	7.1	9'- 4"	213	3.3
3:1	12"	6'- 3"	2'- 6"	4'- 3"	4'-11"	114	0.8	1'- 9"	22	0.2
	15"	7'- 5"	2'- 9 ½"	5'- 0"	5'- 9 ¼"	133	1.1	2'- 2"	28	0.3
	18"	8'- 6 ¾"	3'- 1"	5'- 9"	6'- 7 ¾"	166	1.3	2'- 8"	37	0.5
	21"	9'- 8 ¾"	3'- 4 ½"	6'- 6"	7'- 6"	189	1.6	3'- 1"	48	0.6
	24"	11'- 0"	3'- 9 ½"	7'- 3"	8'- 4 ½"	221	2.0	3'- 7"	58	0.7
	27"	12'- 2"	4'- 1"	8'- 0"	9'- 2 ¾"	245	2.3	3'-11"	67	0.8
	30"	13'- 4"	4'- 4 ½"	8'- 9"	10'- 1 ¼"	287	2.7	4'- 4"	77	1.0
	33"	14'- 5 ¾"	4'- 8"	9'- 6"	10'-11 ¾"	310	3.1	4'- 8"	84	1.2
	36"	15'- 7 ¾"	4'-11 ½"	10'- 3"	11'-10"	343	3.5	5'- 1"	96	1.4
	42"	17'-11 ½"	5'- 6 ½"	11'- 9"	13'- 6 ¾"	424	4.5	5'-10"	119	1.7
	48"	21'- 1 ¾"	6'- 1 ½"	14'- 0"	16'- 2"	527	6.1	6'- 7"	146	2.3
	54"	23'- 5 ½"	6'- 8 ½"	15'- 6"	17'-10 ¾"	618	7.3	7'- 6"	186	2.9
	60"	25'- 9 ¼"	7'- 3 ½"	17'- 0"	19'- 7 ½"	707	8.7	8'- 3"	219	3.4
	66"	28'- 1"	7'-10 ½"	18'- 6"	21'- 4 ¼"	797	10.1	8'- 9"	242	3.9
	72"	30'- 4 ¾"	8'- 5 ½"	20'- 0"	23'- 1 ¼"	910	11.7	9'- 4"	272	4.4
4:1	12"	7'-10 ¾"	2'- 6"	5'- 8"	6'- 6 ½"	144	1.1	1'- 9"	24	0.3
	15"	9'- 4"	2'- 9 ½"	6'- 8"	7'- 8 ½"	177	1.5	2'- 2"	32	0.4
	18"	10'- 9 ½"	3'- 1"	7'- 8"	8'-10 ¼"	217	1.9	2'- 8"	42	0.5
	21"	12'- 2 ¾"	3'- 4 ½"	8'- 8"	10'- 0"	254	2.3	3'- 1"	57	0.7
	24"	13'- 9 ½"	3'- 9 ½"	9'- 8"	11'- 2"	295	2.8	3'- 7"	67	0.9
	27"	15'- 3"	4'- 1"	10'- 8"	12'- 3 ¾"	328	3.3	3'-11"	77	1.0
	30"	16'- 8 ¼"	4'- 4 ½"	11'- 8"	13'- 5 ¾"	379	3.8	4'- 4"	89	1.3
	33"	18'- 1 ¾"	4'- 8"	12'- 8"	14'- 7 ½"	417	4.5	4'- 8"	101	1.4
	36"	19'- 7"	4'-11 ½"	13'- 8"	15'- 9 ¼"	464	5.1	5'-1"	115	1.7
	42"	22'- 5 ¾"	5'- 6 ½"	15'- 8"	18'- 1"	575	6.5	5'-10"	141	2.1
	48"	26'- 6 ¼"	6'- 1 ½"	18'- 8"	21'- 6 ¾"	720	8.9	6'- 7"	175	2.8
	54"	29'- 5"	6'- 8 ½"	20'- 8"	23'-10 ¼"	863	10.7	7'- 6"	226	3.6
	60"	32'- 3 ¾"	7'- 3 ½"	22'- 8"	26'- 2"	984	12.7	8'- 3"	264	4.3
	66"	35'- 2 ½"	7'-10 ½"	24'- 8"	28'- 5 ¾"	1126	14.9	8'- 9"	300	4.9
	72"	38'- 1 ¼"	8'- 5 ½"	26'- 8"	30'- 9 ½"	1283	17.3	9'- 4"	334	5.6
6:1	12"	11'- 2"	2'- 6"	8'- 6"	9'- 9 ¾"	220	1.9	1'- 9"	28	0.4
	15"	13'- 2 ¼"	2'- 9 ½"	10'- 0"	11'- 6 ½"	264	2.5	2'- 2"	37	0.5
	18"	15'- 2 ½"	3'- 1"	11'- 6"	13'- 3 ¼"	326	3.2	2'- 8"	50	0.7
	21"	17'- 2 ¾"	3'- 4 ½"	13'- 0"	15'- 0 ¼"	381	3.9	3'- 1"	69	0.9
	24"	19'- 4 ½"	3'- 9 ½"	14'- 6"	16'- 9"	447	4.8	3'- 7"	80	1.2
	27"	21'- 4 ¾"	4'- 1"	16'- 0"	18'- 5 ¾"	506	5.7	3'-11"	96	1.4
	30"	23'- 5 ¼"	4'- 4 ½"	17'- 6"	20'- 2 ½"	587	6.7	4'- 4"	110	1.7
	33"	25'- 5 ½"	4'- 8"	19'- 0"	21'-11 ¼"	667	7.8	4'- 8"	127	2.0
	36"	27'- 5 ¾"	4'-11 ½"	20'- 6"	23'- 8"	727	9.0	5'- 1"	144	2.3
	42"	31'- 6 ¼"	5'- 6 ½"	23'- 6"	27'- 1 ½"	914	11.5	5'-10"	179	3.0
	48"	37'- 3 ½"	6'- 1 ½"	28'- 0"	32'- 4"	1181	15.9	6'- 7"	231	4.0
	54"	41'- 4 ¼"	6'- 8 ½"	31'- 0"	35'- 9 ½"	1412	19.2	7'- 6"	300	5.0
	60"	45'- 4 ¾"	7'- 3 ½"	34'- 0"	39'- 3"	1619	22.9	8'- 3"	353	6.0

DISCLAIMER:
The use of this standard is governed by the "Texas Engineering Practice Act". No warranty of any kind is made by TxDOT for any purpose whatsoever. TxDOT assumes no responsibility for the conversion of this standard to other formats or for incorrect results or damages resulting from its use.

DATE: 3/22/2018 3:19:53 PM
FILE: c:\pwworking\dal\d0911850\chfw00se.dgn

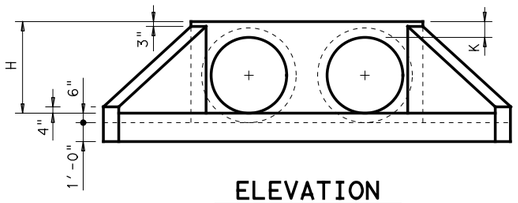

ELEVATION
Showing dimensions

1. Quantities shown are for concrete pipe and will increase slightly for metal pipe installations.
2. For vehicle safety, curbs shall project no more than 3" above finished grade. Curb heights shall be reduced, if necessary, to meet these requirements. No changes will be made in quantities and no additional compensation will be allowed for this work.
3. Provide a 1'-0" footing as shown where required to maintain 4" Min cover for pipes.
4. Quantities shown are for one structure end only (one headwall).
5. Min Length = 6" + 3" x $\left(\frac{12 \times H - 7}{12 \times L}\right)$
   Max Length = 12 x H - 3" x $\left(\frac{12 \times H - 7}{12 \times L}\right)$ - 1"
6. Lengths of wings based on SL:1 Slope along this line.

TABLE OF REINFORCING STEEL (4)

Bar	Size	Spa	No.
A	# 4	1'-0"	~
B	# 3	1'-6"	~
C	# 4	1'-0"	~
D	# 3	1'-0"	~
E	# 5	~	4
F	# 5	~	~
G	# 3	~	2
S	# 4	~	6
V	# 4	1'-0"	~
W	# 5	~	4

TABLE OF CONSTANT DIMENSIONS

DIA OF PIPE, D	G	K	H
12"	9"	1'- 0"	2'- 0"
15"	11"	1'- 0"	2'- 3"
18"	1'- 2"	1'- 0"	2'- 6"
21"	1'- 4"	1'- 0"	2'- 9"
24"	1'- 7"	1'- 0"	3'- 0"
27"	1'- 8"	1'- 0"	3'- 3"
30"	1'-10"	1'- 0"	3'- 6"
33"	1'-11"	1'- 0"	3'- 9"
36"	2'- 1"	1'- 0"	4'- 0"
42"	2'- 4"	1'- 0"	4'- 6"
48"	2'- 7"	1'- 3"	5'- 3"
54"	3'- 0"	1'- 3"	5'- 9"
60"	3'- 3"	1'- 3"	6'- 3"
66"	3'- 3"	1'- 3"	6'- 9"
72"	3'- 4"	1'- 3"	7'- 3"

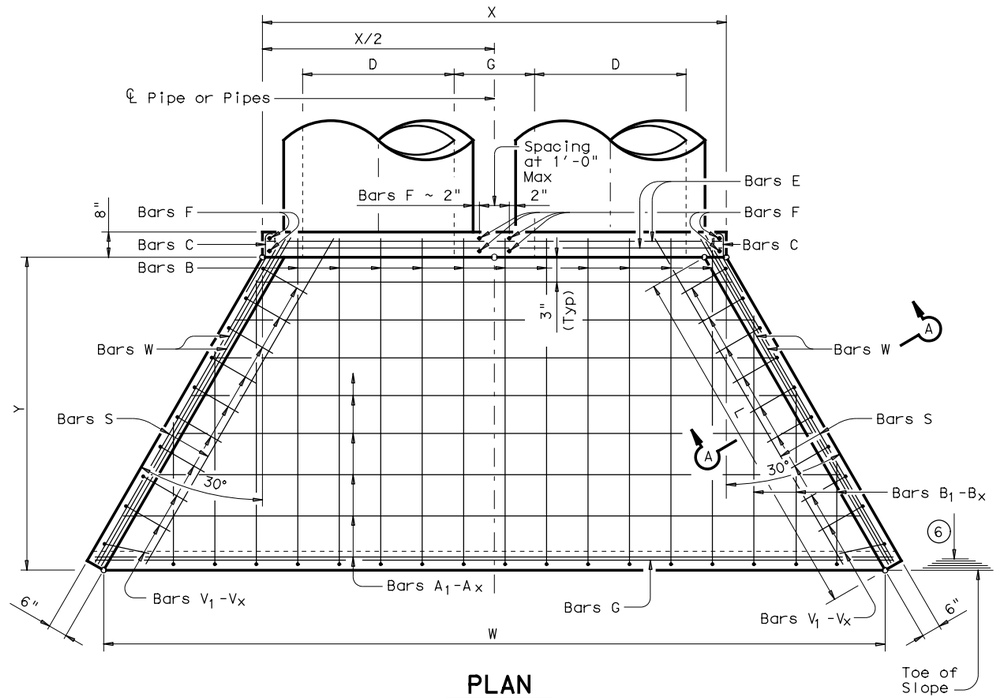

PLAN

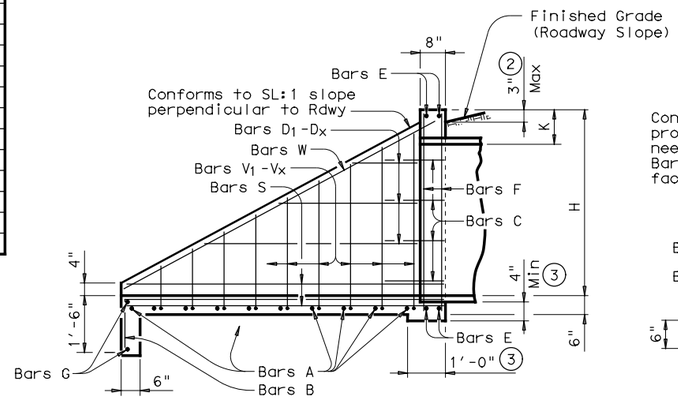

TYPICAL WING ELEVATION

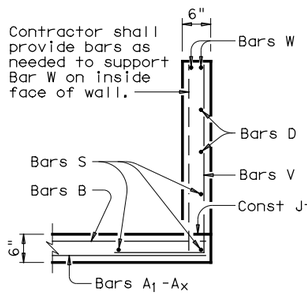

SECTION A-A

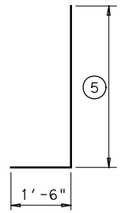

BARS V

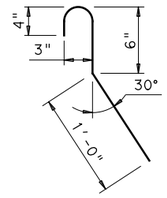

BARS C
(2'-0" long)

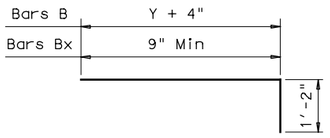

BARS B & B1-Bx

GENERAL NOTES:

Designed according to AASHTO LRFD Specifications.

Reinforcing steel shall be placed with the center of the outside layer of bars 2" from the surface of the concrete.

All reinforcing steel shall be Grade 60.

All concrete shall be Class "C" and shall have a minimum compressive strength of 3600 psi.

No bridge rails of any type may be mounted directly to these culvert headwalls.

Texas Department of Transportation | Bridge Division Standard

CONCRETE HEADWALLS WITH FLARED WINGS FOR 0° SKEW PIPE CULVERTS

CH-FW-0

FILE: chfw00se.dgn	DN: TxDOT	CK: TxDOT	DW: TxDOT	CK: GAF
©TxDOT February 2010	CONT	SECT	JOB	HIGHWAY
REVISIONS	2103	01	034	
	DIST	COUNTY		SHEET NO.
	AUS	WILLIAMSON		120

TABLE OF VARIABLE DIMENSIONS AND QUANTITIES FOR ONE HEADWALL (4)

SLOPE	DIA OF PIPE, D	15 Degrees						30 Degrees						45 Degrees					
		Values for one Pipe			Values to be added for each addt'l Pipe			Values for one Pipe			Values to be added for each addt'l Pipe			Values for one Pipe			Values to be added for each addt'l Pipe		
		W	Reinf (Lbs)	Conc (CY) (1)	W	Reinf (Lbs)	Conc (CY) (1)	W	Reinf (Lbs)	Conc (CY) (1)	W	Reinf (Lbs)	Conc (CY) (1)	W	Reinf (Lbs)	Conc (CY) (1)	W	Reinf (Lbs)	Conc (CY) (1)
2:1	12"	9'- 4"	124	1.1	1'- 9 3/4"	15	0.2	10'- 5"	130	1.2	2'- 0"	16	0.2	12'- 9"	159	1.5	2'- 5 3/4"	17	0.3
	15"	10'- 7"	136	1.3	2'- 3"	17	0.2	11'-10"	159	1.5	2'- 6"	18	0.2	14'- 6"	191	1.8	3'- 0 3/4"	20	0.3
	18"	11'-11"	165	1.5	2'- 9"	19	0.3	13'- 3"	174	1.7	3'- 1"	29	0.3	16'- 3"	207	2.1	3'- 9 1/4"	33	0.4
	21"	13'- 2"	203	1.9	3'- 2 1/4"	31	0.4	14'- 9"	233	2.1	3'- 6 3/4"	33	0.4	18'- 0"	276	2.6	4'- 4 1/4"	36	0.5
	24"	14'- 6"	240	2.1	3'- 8 1/4"	34	0.4	16'- 2"	251	2.4	4'- 1 3/4"	36	0.5	19'-10"	318	2.9	5'- 0 3/4"	39	0.6
	27"	15'- 9"	258	2.5	4'- 0 3/4"	38	0.5	17'- 7"	292	2.8	4'- 6 1/4"	39	0.6	21'- 7"	342	3.4	5'- 6 1/4"	44	0.7
	30"	17'- 1"	297	2.8	4'- 5 3/4"	40	0.6	19'- 1"	311	3.1	5'- 0"	42	0.6	23'- 4"	388	3.8	6'- 1 3/4"	47	0.8
	33"	18'- 5"	320	3.3	4'- 9 3/4"	43	0.6	20'- 6"	358	3.6	5'- 4 3/4"	46	0.7	25'- 1"	439	4.4	6'- 7 1/4"	51	0.9
	36"	19'- 8"	401	4.0	5'- 3"	47	0.9	21'-11"	422	4.5	5'-10 3/4"	50	0.9	26'-10"	517	5.5	7'- 2 1/4"	55	1.2
	42"	22'- 3"	476	5.0	6'- 0 3/4"	53	1.1	24'-10"	528	5.6	6'- 8 3/4"	56	1.2	30'- 5"	634	6.9	8'- 3"	76	1.4
	48"	25'-11"	577	6.6	6'- 9 3/4"	60	1.3	28'-10"	637	7.3	7'- 7 1/4"	79	1.5	35'- 4"	791	9.0	9'- 3 3/4"	88	1.8
	54"	28'- 6"	711	7.8	7'- 9"	83	1.6	31'- 9"	781	8.7	8'- 8"	87	1.8	38'-11"	958	10.7	10'- 7 1/4"	97	2.2
	60"	31'- 1"	805	9.2	8'- 6 1/4"	91	1.9	34'- 8"	881	10.2	9'- 6 1/4"	97	2.1	42'- 5"	1113	12.5	11'- 8"	124	2.6
	66"	33'- 8"	907	10.6	9'- 0 3/4"	98	2.1	37'- 6"	1028	11.8	10'- 1 1/4"	102	2.4	46'- 0"	1235	14.5	12'- 4 1/4"	132	2.9
	72"	36'- 3"	1071	12.1	9'- 8"	105	2.4	40'- 5"	1207	13.5	10'- 9 1/4"	110	2.6	49'- 6"	1446	16.6	13'- 2 1/4"	141	3.2
3:1	12"	13'- 6"	178	1.6	1'- 9 3/4"	15	0.2	15'- 0"	189	1.8	2'- 0"	15	0.2	18'- 5"	237	2.2	2'- 5 3/4"	17	0.2
	15"	15'- 3"	212	1.9	2'- 3"	17	0.2	17'- 0"	223	2.1	2'- 6"	17	0.3	20'-10"	276	2.6	3'- 0 3/4"	20	0.3
	18"	17'- 1"	231	2.3	2'- 9"	19	0.3	19'- 1"	259	2.5	3'- 1"	29	0.3	23'- 4"	318	3.1	3'- 9 1/4"	32	0.4
	21"	18'-11"	306	2.7	3'- 2 1/4"	31	0.4	21'- 1"	339	3.0	3'- 6 3/4"	33	0.4	25'-10"	413	3.7	4'- 4 1/4"	36	0.5
	24"	20'- 8"	345	3.1	3'- 8 3/4"	35	0.4	23'- 1"	384	3.5	4'- 1 3/4"	36	0.5	28'- 3"	462	4.2	5'- 0 3/4"	40	0.6
	27"	22'- 6"	376	3.7	4'- 0 3/4"	38	0.5	25'- 1"	438	4.1	4'- 6 1/4"	39	0.6	30'- 9"	522	5.0	5'- 6 1/4"	44	0.7
	30"	24'- 4"	422	4.1	4'- 5 3/4"	40	0.6	27'- 2"	466	4.6	5'- 0"	42	0.6	33'- 3"	578	5.6	6'- 1 3/4"	47	0.8
	33"	26'- 2"	476	4.8	4'-10"	43	0.6	29'- 2"	522	5.3	5'- 4 3/4"	46	0.7	35'- 9"	644	6.5	6'- 7 1/4"	51	0.9
	36"	27'-11"	590	5.9	5'- 3 1/4"	47	0.8	31'- 2"	645	6.6	5'-10 3/4"	50	0.9	38'- 2"	787	8.0	7'- 2 1/4"	56	1.2
	42"	31'- 7"	684	7.3	6'- 0 1/4"	53	1.1	35'- 3"	776	8.2	6'- 8 3/4"	56	1.2	43'- 2"	933	10.0	8'- 3"	79	1.4
	48"	36'- 9"	880	9.6	6'- 9 3/4"	61	1.3	41'- 0"	953	10.7	7'- 7 1/4"	81	1.5	50'- 2"	1166	13.1	9'- 3 3/4"	88	1.8
	54"	40'- 5"	1065	11.4	7'- 9"	85	1.6	45'- 0"	1185	12.7	8'- 8"	89	1.8	55'- 2"	1435	15.5	10'- 7 1/4"	97	2.2
	60"	44'- 0"	1224	13.3	8'- 6 1/4"	93	1.9	49'- 1"	1356	14.8	9'- 6 1/4"	96	2.1	60'- 1"	1627	18.2	11'- 8"	124	2.6
	66"	47'- 7"	1357	15.4	9'- 1"	98	2.1	53'- 1"	1497	17.2	10'- 1 1/4"	103	2.3	65'- 1"	1834	21.1	12'- 4 1/4"	130	2.9
	72"	51'- 3"	1624	17.7	9'- 8"	105	2.3	57'- 2"	1787	19.7	10'- 9 1/4"	109	2.6	70'- 0"	2210	24.1	13'- 2 1/4"	139	3.2
4:1	12"	17'- 7"	232	2.1	1'- 9 3/4"	15	0.2	19'- 8"	259	2.4	2'- 0"	16	0.2	24'- 0"	314	2.9	2'- 5 3/4"	18	0.2
	15"	19'-11"	272	2.5	2'- 3"	17	0.2	22'- 3"	301	2.8	2'- 6"	18	0.3	27'- 3"	361	3.5	3'- 0 3/4"	21	0.3
	18"	22'- 3"	313	3.0	2'- 9"	19	0.3	24'-10"	344	3.3	3'- 1"	29	0.3	30'- 5"	427	4.0	3'- 9 1/4"	32	0.4
	21"	24'- 7"	407	3.6	3'- 2 1/4"	31	0.4	27'- 5"	446	4.0	3'- 6 3/4"	33	0.4	33'- 7"	549	4.9	4'- 4 1/4"	36	0.5
	24"	26'-11"	455	4.1	3'- 8 3/4"	35	0.4	30'- 0"	499	4.5	4'- 1 3/4"	36	0.5	36'- 9"	609	5.6	5'- 0 3/4"	40	0.6
	27"	29'- 3"	514	4.8	4'- 0 3/4"	38	0.5	32'- 7"	562	5.4	4'- 6 1/4"	40	0.6	39'-11"	703	6.6	5'- 6 1/4"	43	0.7
	30"	31'- 7"	568	5.4	4'- 5 3/4"	40	0.6	35'- 3"	620	6.0	5'- 0"	42	0.6	43'- 2"	768	7.4	6'- 1 3/4"	49	0.8
	33"	33'-11"	634	6.2	4'-10"	43	0.7	37'-10"	710	7.0	5'- 4 3/4"	46	0.7	46'- 4"	848	8.5	6'- 7 1/4"	52	0.9
	36"	36'- 3"	776	7.7	5'- 3"	48	0.9	40'- 5"	868	8.6	5'-10 3/4"	49	0.9	49'- 6"	1058	10.6	7'- 2 1/4"	56	1.1
	42"	40'-11"	921	9.6	6'- 0 1/4"	53	1.0	45'- 7"	1022	10.7	6'- 8 3/4"	57	1.2	55'-10"	1262	13.1	8'- 3"	78	1.4
	48"	47'- 7"	1152	12.6	6'-10"	61	1.3	53'- 1"	1268	14.0	7'- 7 1/4"	80	1.5	65'- 1"	1579	17.2	9'- 3 3/4"	86	1.8
	54"	52'- 3"	1416	14.9	7'- 9 1/4"	86	1.6	58'- 4"	1589	16.6	8'- 8"	89	1.8	71'- 5"	1916	20.4	10'- 7 1/4"	95	2.2
	60"	56'-11"	1606	17.5	8'- 6 3/4"	92	1.9	63'- 6"	1798	19.5	9'- 6 1/4"	95	2.1	77'- 9"	2184	23.9	11'- 8"	122	2.6
	66"	61'- 7"	1811	20.2	9'- 0 3/4"	97	2.1	68'- 8"	2011	22.5	10'- 1 1/4"	101	2.4	84'- 2"	2464	27.6	12'- 4 1/4"	131	2.9
	72"	66'- 3"	2142	23.2	9'- 8"	104	2.4	73'-11"	2371	25.9	10'- 9 1/4"	108	2.6	90'- 6"	2929	31.7	13'- 2 1/4"	138	3.2
6:1	12"	25'-11"	342	3.1	1'- 9 3/4"	15	0.2	28'-10"	374	3.5	2'- 0"	16	0.2	35'- 4"	456	4.3	2'- 5 3/4"	17	0.2
	15"	29'- 3"	390	3.7	2'- 3"	17	0.2	32'- 7"	442	4.2	2'- 6"	18	0.2	39'-11"	549	5.1	3'- 0 3/4"	20	0.3
	18"	32'- 7"	459	4.4	2'- 9"	20	0.3	36'- 4"	515	4.9	3'- 1"	29	0.3	44'- 7"	629	6.0	3'- 9 1/4"	33	0.4
	21"	36'- 0"	608	5.3	3'- 2 1/4"	31	0.4	40'- 2"	660	5.9	3'- 6 3/4"	33	0.4	49'- 2"	823	7.2	4'- 4 1/4"	38	0.5
	24"	39'- 4"	672	6.0	3'- 8 3/4"	35	0.4	43'-11"	748	6.7	4'- 1 3/4"	36	0.5	53'- 9"	920	8.2	5'- 0 3/4"	42	0.6
	27"	42'- 8"	770	7.1	4'- 0 3/4"	38	0.5	47'- 8"	852	8.0	4'- 6 1/4"	41	0.5	58'- 4"	1039	9.7	5'- 6 1/4"	45	0.7
	30"	46'- 1"	839	8.0	4'- 5 3/4"	40	0.6	51'- 5"	949	8.9	5'- 0"	44	0.6	62'-11"	1154	10.9	6'- 1 3/4"	48	0.8
	33"	49'- 5"	947	9.2	4'-10"	45	0.7	55'- 2"	1040	10.3	5'- 4 3/4"	48	0.7	67'- 6"	1284	12.6	6'- 7 1/4"	50	0.9
	36"	52'-10"	1151	11.4	5'- 3"	49	0.8	58'-11"	1287	12.7	5'-10 3/4"	51	1.0	72'- 1"	1575	15.6	7'- 2 1/4"	55	1.1
	42"	59'- 6"	1365	14.2	6'- 0 1/4"	55	1.0	66'- 5"	1522	15.8	6'- 8 3/4"	57	1.2	81'- 4"	1867	19.4	8'- 3"	76	1.4
	48"	69'- 4"	1729	18.5	6'-10"	59	1.3	77'- 4"	1934	20.7	7'- 7 1/4"	79	1.5	94'- 9"	2360	25.3	9'- 3 3/4"	86	1.8
	54"	76'- 1"	2130	22.0	7'- 9 1/4"	83	1.6	84'-10"	2370	24.6	8'- 8"	87	1.8	103'-11"	2904	30.1	10'- 7 1/4"	95	2.2
	60"	82'-10"	2414	25.8	8'- 6 3/4"	90	1.9	92'- 5"	2673	28.8	9'- 6 1/4"	94	2.1	113'-2"	3286	35.3	11'- 8"	122	2.6
	66"	89'- 7"	2712	29.9	9'- 0 3/4"	96	2.1	99'-11"	3030	33.3	10'- 1 1/4"	101	2.4	122'-4"	3689	40.8	12'- 4 1/4"	130	2.9
	72"	96'- 3"	3210	34.2	9'- 8"	102	2.4	107'-5"	3572	38.2	10'- 9 1/4"	108	2.6	131'-6"	4364	46.8	13'- 2 1/4"	139	3.2

DISCLAIMER:
The use of this standard is governed by the "Texas Engineering Practice Act". No warranty of any kind is made by TxDOT for any purpose whatsoever. TxDOT assumes no responsibility for the conversion of this standard to other formats or for incorrect results or damages resulting from its use.

DATE: 3/22/2018 3:19:57 PM
FILE: c:\pwworking\ddi\d0911850\chpwsste.dgn

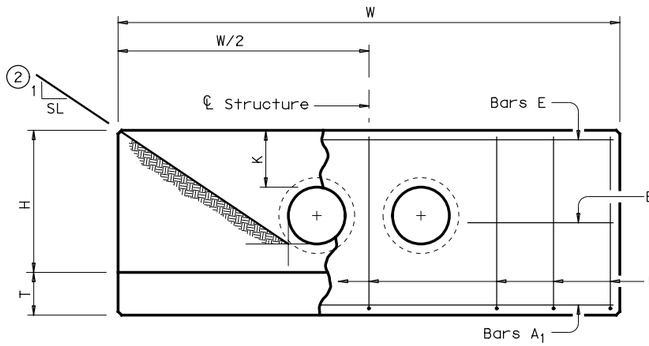

ELEVATION

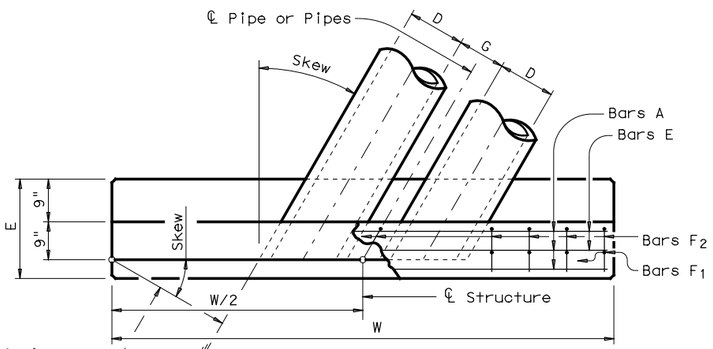

PLAN OF SKEWED PIPES

Showing 30° Skew

Lengths of wings based on SL:1 Slope along this line.

(2) Toe of Slope

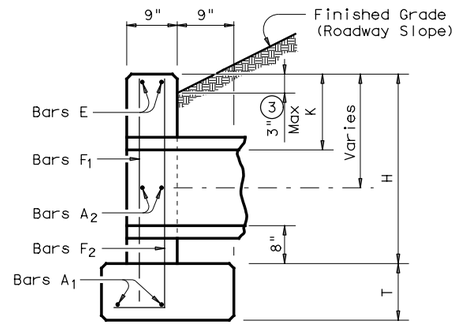

℄ SECTION

BARS F2

(1) Quantities shown are for concrete pipe and will increase slightly for metal pipe installations.

(2) Indicated slope is perpendicular to centerline Pipe or Pipes.

(3) For vehicle safety, curbs shall project no more than 3" above finished grade. Curb heights shall be reduced, if necessary, to meet these requirements. No changes will be made in quantities and no additional compensation will be allowed for this work.

(4) Quantities shown are for one structure end only (one headwall).

TABLE OF CONSTANT DIMENSIONS

DIA OF PIPE, D	G	K	H	T	E
12"	9"	1'- 0"	2'- 8"	9"	1'- 9"
15"	11"	1'- 0"	2'-11"	9"	1'- 9"
18"	1'- 2"	1'- 0"	3'- 2"	9"	1'- 9"
21"	1'- 4"	1'- 0"	3'- 5"	9"	2'- 0"
24"	1'- 7"	1'- 0"	3'- 8"	9"	2'- 0"
27"	1'- 8"	1'- 0"	3'-11"	9"	2'- 3"
30"	1'-10"	1'- 0"	4'- 2"	9"	2'- 3"
33"	1'-11"	1'- 0"	4'- 5"	9"	2'- 6"
36"	2'- 1"	1'- 0"	4'- 8"	1'- 0"	2'- 6"
42"	2'- 4"	1'- 0"	5'- 2"	1'- 0"	2'- 9"
48"	2'- 7"	1'- 3"	5'-11"	1'- 0"	3'- 0"
54"	3'- 0"	1'- 3"	6'- 5"	1'- 0"	3'- 3"
60"	3'- 3"	1'- 3"	6'-11"	1'- 0"	3'- 6"
66"	3'- 3"	1'- 3"	7'- 5"	1'- 0"	3'- 9"
72"	3'- 4"	1'- 3"	7'-11"	1'- 0"	4'- 0"

TABLE OF REINFORCING STEEL (4)

Bar	Size	Spa	No.
A1	# 5	~	2
A2	# 5	1'-6"	~
E	# 5	~	2
F	# 5	1'-0"	~

GENERAL NOTES:

Designed according to AASHTO LRFD Specifications.

Reinforcing steel shall be placed with the center of the outside layer of bars 2" from the surface of the concrete.

All reinforcing steel shall be Grade 60.

All concrete shall be Class "C" and shall have a minimum compressive strength of 3600 psi.

No bridge rails of any type may be mounted directly to these culvert headwalls.

Texas Department of Transportation

Bridge Division Standard

CONCRETE HEADWALLS WITH PARALLEL WINGS FOR SKEWED PIPE CULVERTS

CH-PW-S

FILE: chpwsste.dgn	DN: TxDOT	CK: TxDOT	DW: TxDOT	CK: GAF
©TxDOT February 2010	CONT	SECT	JOB	HIGHWAY
REVISIONS	2103	01	034	
	DIST	COUNTY		SHEET NO.
	AUS	WILLIAMSON		124

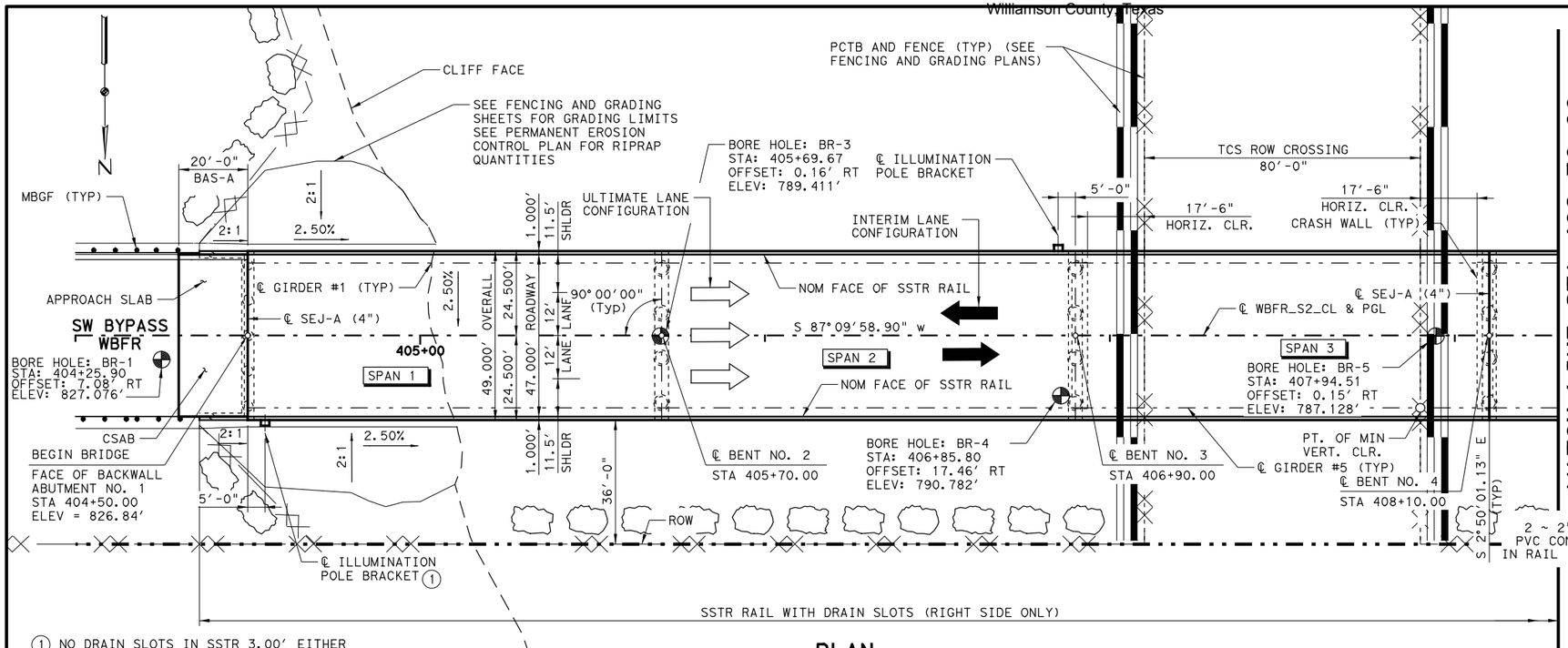

PLAN

(1) NO DRAIN SLOTS IN SSTR 3.00' EITHER SIDE OF ILLUMINATION POLE BRACKET.

(2) SEE FENCING AND GRADING SHEETS FOR GRADING LIMITS. SEE PERMANENT EROSION CONTROL PLAN FOR RIPRAP QUANTITIES.

GENERAL NOTES:

1. DESIGNED IN ACCORDANCE WITH AASHTO LRFD SPECIFICATION, 7TH EDITION WITH ALL CURRENT INTERIM SPECIFICATIONS.

2. FOR ADDITIONAL GEOMETRIC INFORMATION SEE ROADWAY SHEETS.

3. ALL DIMENSIONS ARE HORIZONTAL OR VERTICAL AND MUST BE CORRECTED FOR GRADE AND SUPERELEVATION.

4. CONTRACTOR SHALL FIELD VERIFY LOCATIONS OF UTILITIES PRIOR TO ORDERING MATERIALS OR DRILLING FOUNDATIONS.

5. THE "H" VALUES SHOWN ARE ESTIMATED COLUMN HEIGHTS. CONTRACTOR SHALL VERIFY ACTUAL COLUMN HEIGHTS BASED ON FIELD CONDITIONS.

6. FOR BORE HOLE DATA, SEE BORING LOG SHEETS.

7. DRILLED SHAFTS ARE DESIGNED WITH SKIN FRICTION ONLY DUE TO THE POSSIBILITY OF ENCOUNTERING VOIDS. FOUND DRILLED SHAFTS AT THE ELEVATIONS SHOWN OR DEEPER.

NBI NO: 14-246-D017-01-004
DESIGN SPEED: 50 MPH
ADT (2018): 20,300
ADT (2038): 68,500
FUNC. CLASS: MAJOR URBAN COLLECTOR
DESIGN INCLUDES 2" FUTURE OVERLAY

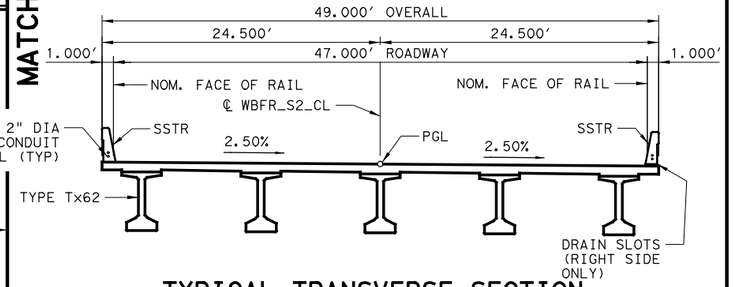

TYPICAL TRANSVERSE SECTION

NTS

HL93 LOADING

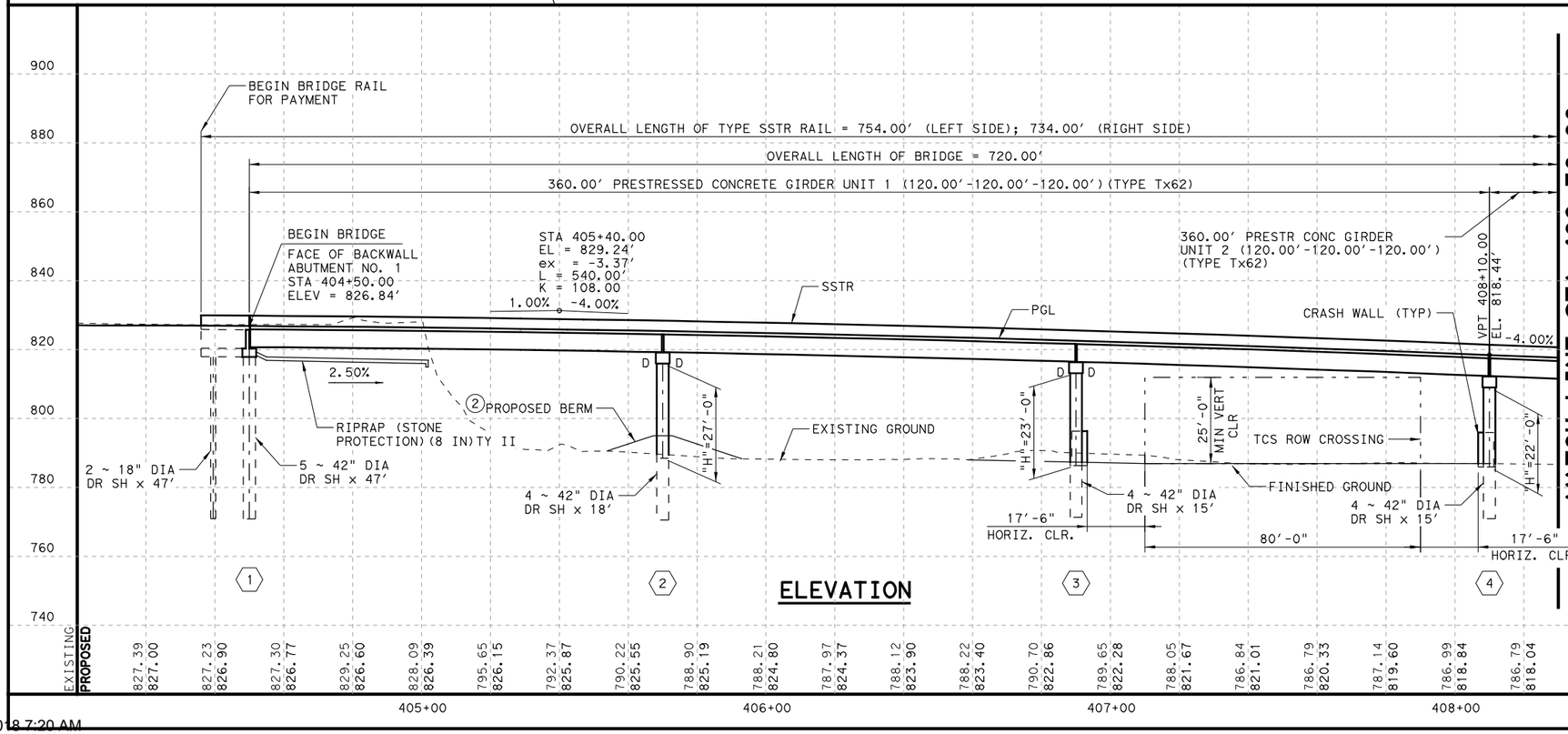

ELEVATION

STATE OF TEXAS
TYLER W. BRENDLINGER
122092
LICENSED PROFESSIONAL ENGINEER
03/23/2018

NO.	DATE	REVISION	APPROVED

WILLIAMSON COUNTY
HDR Engineering, Inc.
810 Hesters Crossing, Suite 120
Round Rock, Texas 78681
Texas Registered Engineering Firm F-754

SOUTHWEST BYPASS SEGMENT 2 BRIDGE LAYOUT

TCS QUARRY BRIDGE

SCALE: 1"=40'

SHEET 1 OF 2

DESIGN	FED.RD. DIV.NO.	FEDERAL AID PROJECT NO.		HIGHWAY NO.
TWB	6			
GRAPHICS	STATE	DISTRICT	COUNTY	SHEET NO.
TGG	TEXAS	AUS	WILLIAMSON	
CHECK	CONTROL	SECTION	JOB	122
JMH	2103	01	034	
CHECK				
JMH				

PLOT DRIVER: TXDOT_PDF_BW.pltcfg PENTABLE: S2-000002017018.tbl
USER: lgomezgonz DATE: 3/23/2018 TIME: 1:36:22 PM SCALE: 1:40
FILE: \
4/12/2018 7:20 AM

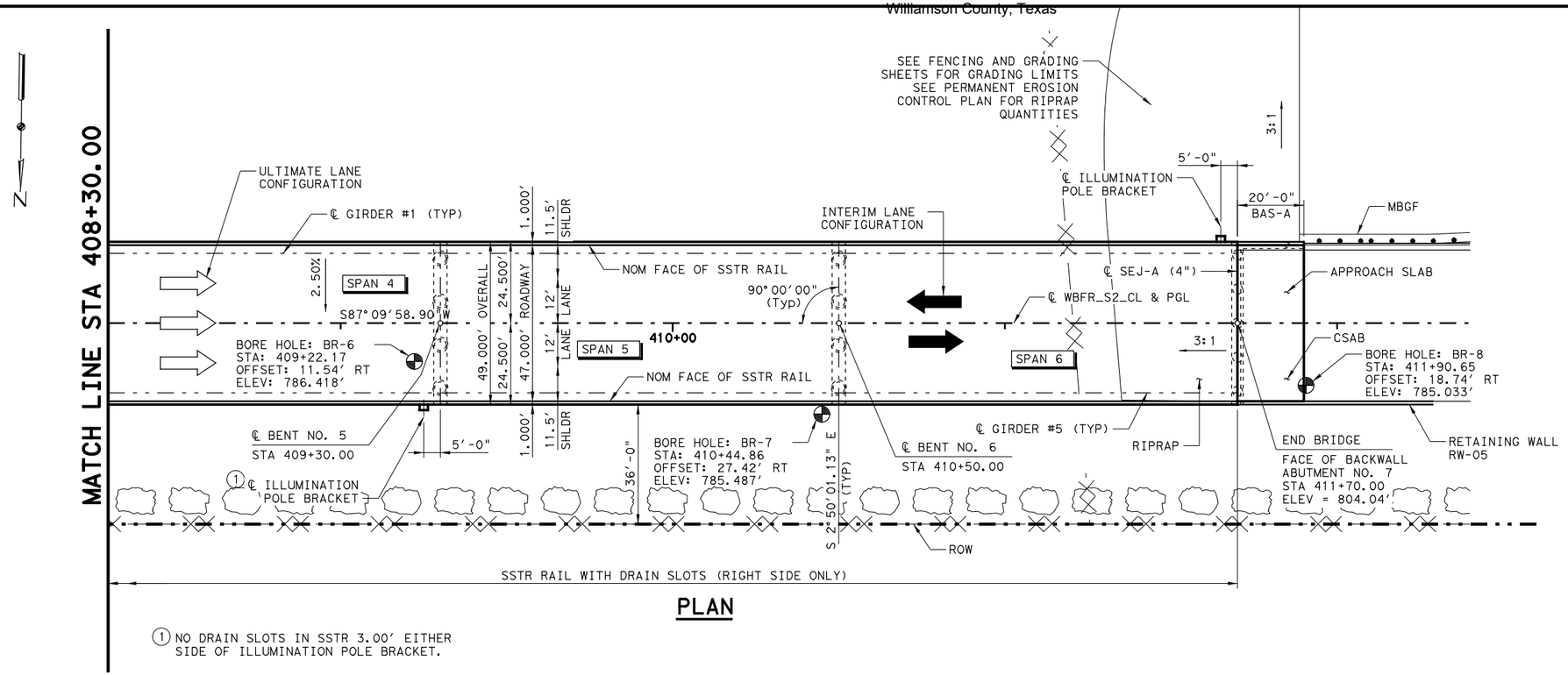

PLAN

① NO DRAIN SLOTS IN SSTR 3.00' EITHER SIDE OF ILLUMINATION POLE BRACKET.

HL93 LOADING

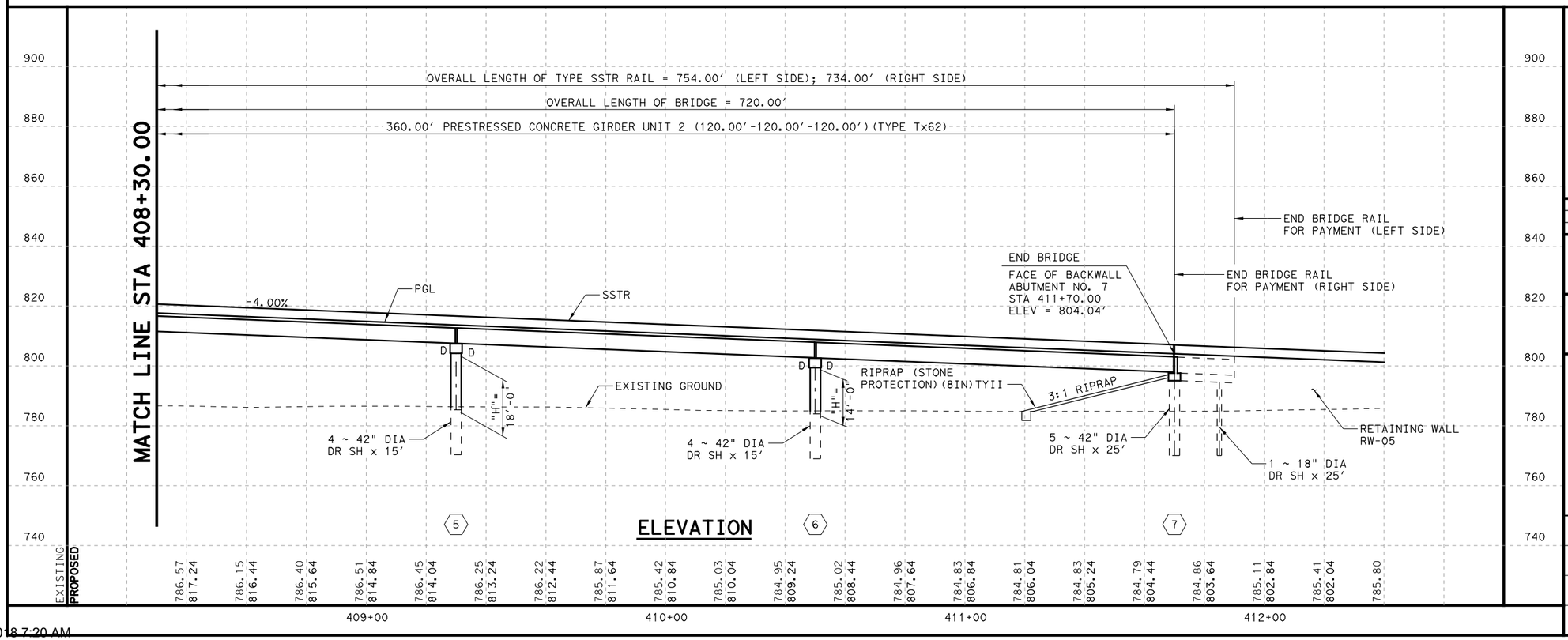

ELEVATION

STATE OF TEXAS
TYLER W. BRENDLINGER
122092
LICENSED
PROFESSIONAL ENGINEER
03/23/2018

NO.	DATE	REVISION	APPROVED

WILLIAMSON COUNTY
HDR Engineering, Inc.
810 Hesters Crossing, Suite 120
Round Rock, Texas 78681
Texas Registered Engineering Firm F-754

SOUTHWEST BYPASS SEGMENT 2 BRIDGE LAYOUT

TCS QUARRY BRIDGE

SCALE: 1"=40'

SHEET 2 OF 2

DESIGN	FED.RD. DIV.NO.	FEDERAL AID PROJECT NO.		HIGHWAY NO.
TWB	6			
GRAPHICS	STATE	DISTRICT	COUNTY	SHEET NO.
TGG	TEXAS	AUS	WILLIAMSON	
CHECK	CONTROL	SECTION	JOB	123
JMH	2103	01	034	
CHECK				
JMH				

PLOT DRIVER: TXDOT_PDF_BW.pltcfg PENTABLE: S2-0000020170718.tbl
USER: lgomezgonz DATE: 3/22/2018 TIME: 10:3:57 AM SCALE: 1:40
FILE: \
4/12/2018 7:20 AM

Test Hole No. BR-01
Sta 404+26, 7 ft RT

Test Hole No. BR-01
El 827.1

CLAY, stiff, brown

50(.87) 50(.38) LIMESTONE, very hard, tan

50(.62) 50(.13)

50(.62) 50(.13) LIMESTONE, very hard, tan to gray

50(.62) 50(.13)

6(6) 15(6)

50(.5) 50(.25)

50(1) 50(.5)

26(6) 50(4.5) LIMESTONE, soft to hard, tan to gray

50(.88) 50(.25)

50(.75) 50(.75)

50(.75) 50(.75)

50(.25) 50(.5)

B/H = 767.1

Test Hole No. BR-02
Sta 404+66, 3 ft RT

Test Hole No. BR-02
El 827.1

50(.63) 50(.25) LIMESTONE, soft, tan

50(.25) 50(0) LIMESTONE, very hard, tan

50(.5) 50(0)

50(.12) 50(.13)

50(.62) 50(.38)

50(.38) 50(.25)

50(3.25) 50(2.13) LIMESTONE, soft to very hard, tan to gray

50(.37) 50(.13)

50(1) 50(1.5)

50(.75) 50(.13)

50(.25) 50(.13)

50(.25) 50(.13)

B/H = 767.1

Test Hole No. BR-03
Sta 405+70, 0

Test Hole No. BR-03
El 789.4

LIMESTONE, soft, tan

LIMESTONE, hard, tan

50(.62) 50(.88)

50(.63) 50(0) LIMESTONE, hard to very hard, tan

50(.88) 50(.25)

50(.37) 50(.38)

50(.75) 50(.5)

50(.63) 50(.25) LIMESTONE, hard to very hard, tan to gray

50(.5) 50(.25)

B/H = 749.4

Test Hole No. BR-04
Sta 406+86, 17 ft RT

Test Hole No. BR-04
El 790.8

50(2.5) 50(.5) LIMESTONE, soft, reddish brown to tan

50(.62) 50(.38) LIMESTONE, soft to very hard, tan

50(.38) 50(0)

50(.75) 50(.25)

50(.75) 50(.25)

50(.63) 50(.25) LIMESTONE, hard to very hard, tan to gray

50(3.38) 50(1.5)

50(.75) 50(.13)

B/H = 745.8

Test Hole No. BR-05
Sta 407.95, 0

Test Hole No. BR-05
El 787.1

50(1) 50(.5) LIMESTONE, soft, tan

50(.38) 50(.5) LIMESTONE, hard to very hard, tan

50(.5) 50(.25)

50(.38) 50(.13)

50(.88) 50(.5) LIMESTONE, very hard, tan

50(.88) 50(.25)

50(.38) 50(1) LIMESTONE, very hard, tan

50(1) 50(1)

B/H = 747.1

NO.	DATE	REVISION	APPROVED

WILLIAMSON COUNTY

HDR Engineering, Inc.
810 Hesters Crossing, Suite 120
Round Rock, Texas 78681
Texas Registered Engineering Firm F-754

SOUTHWEST BYPASS
SEGMENT 2
BORING LOGS

TSC QUARRY BRIDGE

SCALE: 1"=20' SHEET 1 OF 2

DESIGN	FED.RD. DIV.NO.	FEDERAL AID PROJECT NO.		HIGHWAY NO.
TWB	6			
GRAPHICS	STATE	DISTRICT	COUNTY	SHEET NO.
TGG	TEXAS	AUS	WILLIAMSON	
CHECK	CONTROL	SECTION	JOB	124
JMH	2103	01	034	
CHECK				
JMH				

PLOT DRIVER: TXDOT_PDF_BW.pltcfg PENTABLE: S2-0000020170718.tbl
USER: lgomezgon2 DATE: 3/22/2018 TIME: 10:13:59 AM SCALE: 1:20
FILE: \
4/12/2018 7:20 AM



Test Hole No. BR-06
Sta 409+22, 12 ft RT

Test Hole No. BR-06
El 786.4

50(1.63) 50(2)
50(.5) 50(.25)
50(.75) 50(.38)
50(1.75) 50(.13)
50(.75) 50(.63)
50(.5) 50(.25)
50(.88) 50(.5)
50(.63) 50(.25)
50(.38) 50(.38)

LIMESTONE, soft, tan
LIMESTONE, hard to very hard, tan
LIMESTONE, very hard, tan to gray

B/H = 741.4



Test Hole No. BR-07
Sta 410+45, 27 ft RT

Test Hole No. BR-07
El 785.5

50(.37) 50(.13)
50(.88) 50(.75)
50(.5) 50(.13)
50(.5) 50(.25)
50(.38) 50(.25)
50(3) 10(6)
50(1) 50(.88)
50(.63) 50(.25)

LIMESTONE, soft, reddish brown to tan
LIMESTONE, very hard, tan
LIMESTONE, very hard, tan to gray

B/H = 745.5



Test Hole No. BR-08
Sta 411+91, 19 ft RT

Test Hole No. BR-08
El 785

50(.5) 50(.75)
50(.37) 50(.13)
50(.25) 50(.25)
50(.5) 50(.38)
50(6) 50(1)
50(6) 10(2)
50(.5) 50(.5)
50(.38) 50(.25)

LIMESTONE, hard to very hard, tan to gray
LIMESTONE, very hard, gray

B/H = 740

800 790 780 770 760 750 740

NO. | DATE | REVISION | APPROVED

WILLIAMSON COUNTY

HDR Engineering, Inc.
810 Hesters Crossing, Suite 120
Round Rock, Texas 78681
Texas Registered Engineering Firm F-754

SOUTHWEST BYPASS
SEGMENT 2
BORING LOGS

TSC QUARRY BRIDGE

SCALE: 1"=20' SHEET 2 OF 2

DESIGN	FED. RD. DIV. NO.	FEDERAL AID PROJECT NO.		HIGHWAY NO.
TWB	6			
GRAPHICS	STATE	DISTRICT	COUNTY	SHEET NO.
TGG	TEXAS	AUS	WILLIAMSON	125
CHECK	CONTROL	SECTION	JOB	
JMH	2103	01	034	
CHECK				
JMH				

PLOT DRIVER: TXDOT_PDF_BW.pltcfg PENTABLE: S2-00000201f0718.tbl
USER: lgomezgonz TIME: 10:44:01 AM SCALE: 1:20
DATE: 3/22/2018
FILE: \

SUMMARY OF ESTIMATED QUANTITIES

BID ITEM DESCRIPTION / BRIDGE ELEMENT	400 6005 CEM STABIL BKFL	416 6001 DRILL SHAFT (18")	416 6005 DRILL SHAFT (42")	420 6013 CL C CONC (ABUT)	420 6029 CL C CONC (CAP)	420 6037 CL C CONC (COLUMN)	420 6074 CL C CONC (MISC)	422 6001 REINF CONC SLAB	422 6015 APPROACH SLAB	425 6040 PRESTR CONC GIRDER (TX62)	450 6023 RAIL (TY SSTR)	454 6001 SEALED EXPANSION JOINT (4 IN) (SEJ - A)	618 6023 CONDT (PVC) (SCH 40) (2")
	CY	LF	LF	CY	CY	CY	CY	SF	CY	LF	LF	LF	LF
2 ~ ABUTMENTS	224	119	360	74.1							48.0	96	96
5 ~ INTERIOR BENTS			312		135.0	148.4	86.4					48	
1 ~ 360.00' PRESTR CONC GIRDER UNIT 1								17640	37.7	1793.05	720.0		1440
1 ~ 360.00' PRESTR CONC GIRDER UNIT 2								17640	37.7	1794.00	720.0		1440
TOTAL	224	119	672	74.1	135.0	148.4	86.4	35280	75.4	3587.05	1488.0	144	2976

BEARING SEAT ELEVATIONS

		GIRD. 1	GIRD. 2	GIRD. 3	GIRD. 4	GIRD. 5
ABUT 1	(FWD)	821.087	820.825	820.562	820.300	820.037
BENT 2	(BK)	819.645	819.383	819.120	818.858	818.595
	(FWD)	819.609	819.347	819.085	818.822	818.560
BENT 3	(BK)	816.856	816.594	816.331	816.069	815.806
	(FWD)	816.798	816.536	816.273	816.011	815.748
BENT 4	(BK)	812.734	812.471	812.209	811.947	811.684
	(FWD)	812.550	812.287	812.025	811.763	811.500
BENT 5	(BK)	807.830	807.568	807.305	807.042	806.780
	(FWD)	807.750	807.487	807.225	806.963	806.700
BENT 6	(BK)	803.030	802.768	802.505	802.242	801.980
	(FWD)	802.950	802.688	802.425	802.163	801.900
ABUT 7	(BK)	798.230	797.968	797.705	797.443	797.180

NOTES:

1. FOR RIPRAP (STONE PROTECTION)(8 IN)TY II QUANTITIES, SEE PERMANENT EROSION CONTROL PLAN SHEETS.

HL93 LOADING



NO.	DATE	REVISION	APPROVED

WILLIAMSON COUNTY

HDR Engineering, Inc.
810 Hesters Crossing, Suite 120
Round Rock, Texas 78681
Texas Registered Engineering Firm F-754

SOUTHWEST BYPASS SEGMENT 2
ESTIMATED QUANTITIES AND BEARING SEAT ELEVATIONS TCS QUARRY BRIDGE

SHEET 1 OF 1

DESIGN	FED.RD. DIV.NO.	FEDERAL AID PROJECT NO.		HIGHWAY NO.
TWB	6			
GRAPHICS	STATE	DISTRICT	COUNTY	SHEET NO.
TGG	TEXAS	AUS	WILLIAMSON	
CHECK	CONTROL	SECTION	JOB	126
JMH	2103	01	034	
CHECK				
JMH				

PLOT DRIVER: TXDOT_PDF_BW.pltcfg PENTABLE: S2-0000020170718.tbl
USER: lgomezgonz DATE: 3/22/2018 TIME: 10:4403 AM SCALE: 1:1
FILE: \

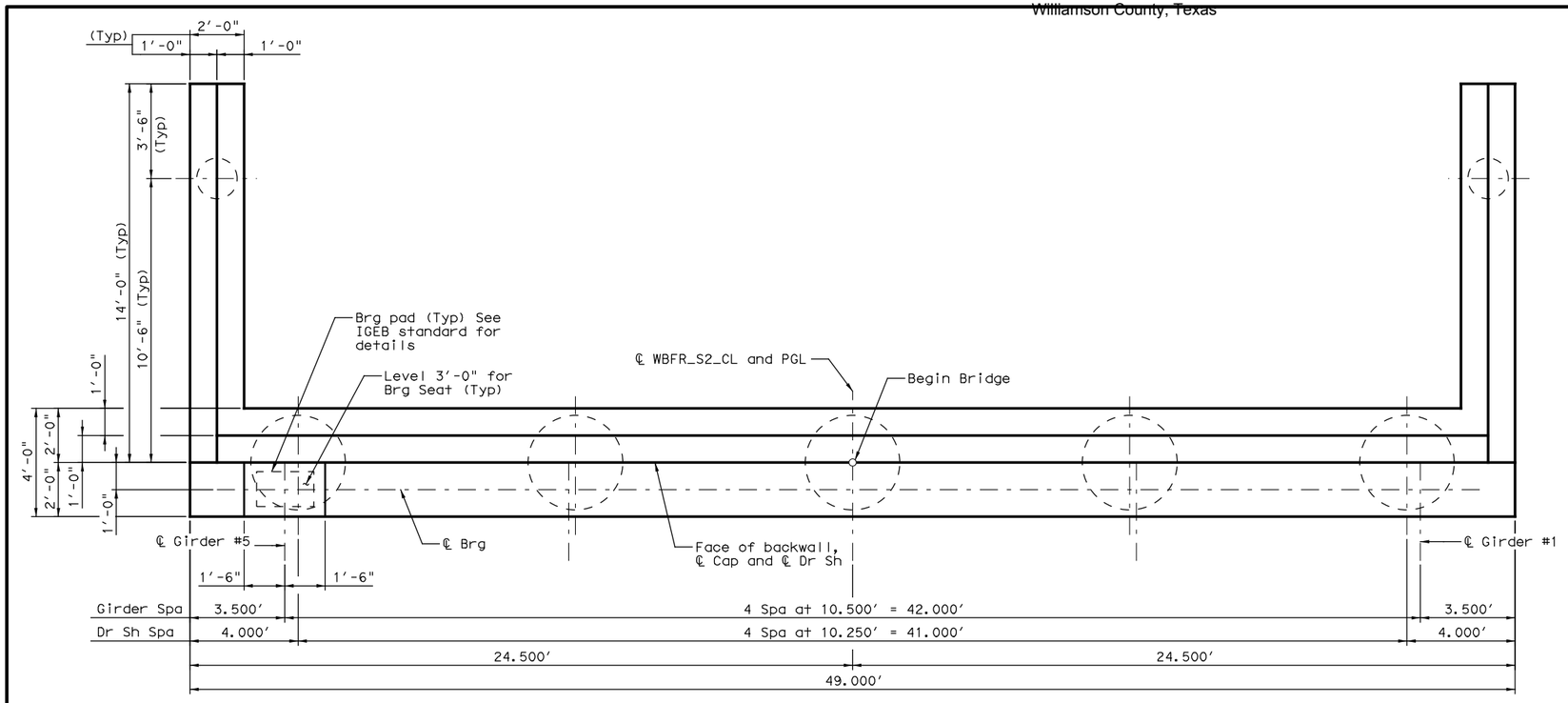

PLAN

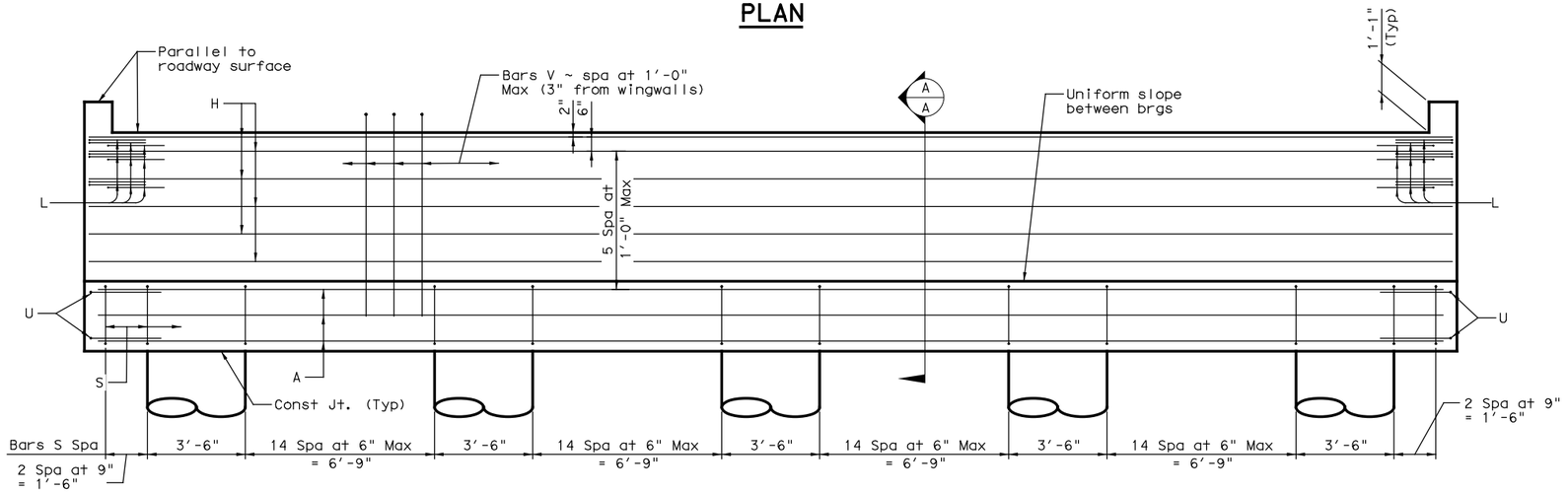

ELEVATION

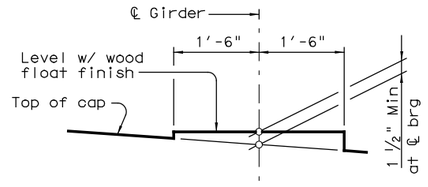

BEARING SEAT DETAIL

(Bearing surface must be clean and free of all loose material before placing bearing pad.)

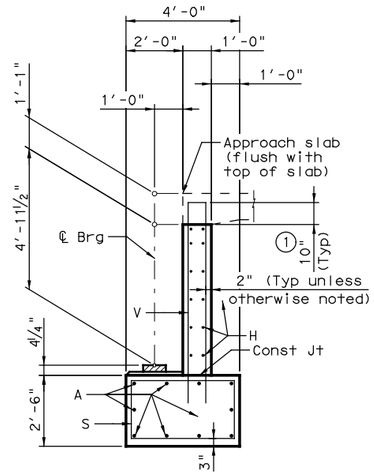

SECTION A-A

1 Increase as required to maintain 3" from finished grade.

HL93 LOADING

STATE OF TEXAS
TYLER W. BRENDLINGER
122092
LICENSED
PROFESSIONAL ENGINEER
03/23/2018

NO.	DATE	REVISION	APPROVED

WILLIAMSON COUNTY

HDR Engineering, Inc.
810 Hesters Crossing Suite 120
Round Rock, Texas 78681
Texas Registered Engineering Firm F-754

SOUTHWEST BYPASS SEGMENT 2 ABUTMENT NO. 1

TCS QUARRY BRIDGE

SCALE: 3/8"=1'-0" SHEET 1 OF 2

DESIGN	FED.RD. DIV.NO.	FEDERAL AID PROJECT NO.		HIGHWAY NO.
TWB	6			
GRAPHICS TGG	STATE	DISTRICT	COUNTY	SHEET NO.
CHECK JMH	TEXAS	AUS	WILLIAMSON	127
CHECK JMH	CONTROL	SECTION	JOB	
	2103	01	034	

PLOT DRIVER: TXDOT_PDF_BW.pltcfg PENTABLE: S2-000002021707018.tbl
USER: lgomezgonz DATE: 3/22/2018 TIME: 10:44:06 AM SCALE:1:1
FILE: \
4/12/2018 7:20 AM

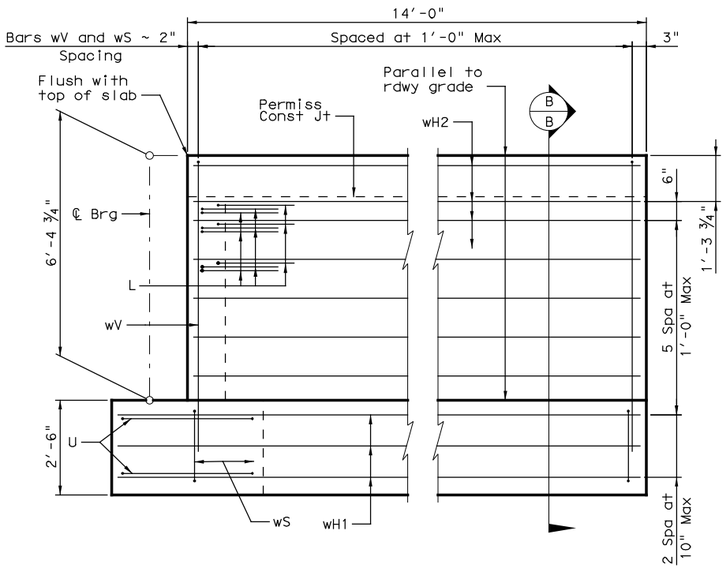

WINGWALL ELEVATION

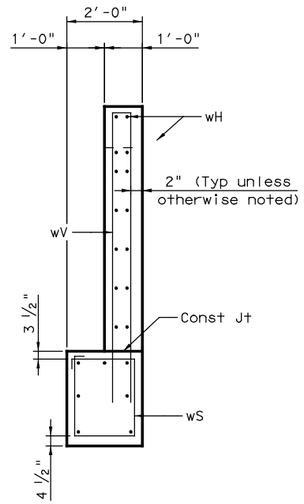

SECTION B-B

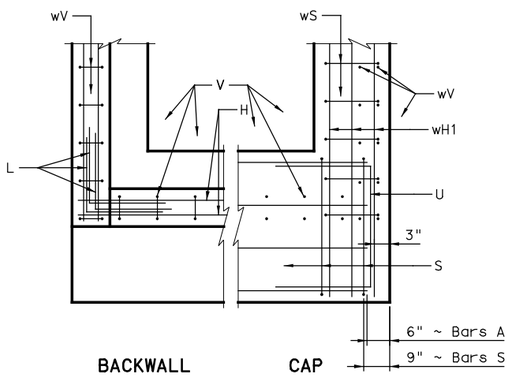

CORNER DETAILS

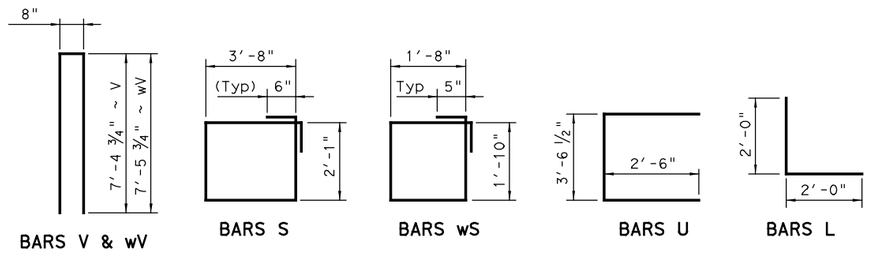

(1) For Contractor's information only.

TABLE OF ESTIMATED QUANTITIES

Bar	No.	Size	Length	Weight
A	10	#11	48'-0"	2550
H	12	#6	48'-8"	877
L	18	#6	4'-0"	108
S	66	#5	12'-6"	860
U	4	#6	8'-7"	52
V	48	#5	15'-6"	776
wH1	14	#6	15'-8"	329
wH2	28	#6	13'-8"	575
wS	30	#4	7'-10"	157
wV	30	#5	15'-8"	490
(1) Reinforcing Steel			Lb	6774
Class C Concrete			CY	38.7

GENERAL NOTES:

Designed according to AASHTO LRFD Bridge Design Specifications, 7th Edition (2014)

Cover dimensions are clear dimensions, unless noted otherwise Reinforcing bar dimensions shown are out-to-out of bar

See Foundation Detail Standard Sheet, FD, for all foundation details and notes not shown
See Stone Riprap Standard Sheet, SRR, for riprap attachment details
See railing standards for rail anchorage in wingwalls
Calculated Foundation Loads = 111 tons/ Dr Sh
See Bridge Layout for header slope and foundation type, size and length

MATERIAL NOTES:

Provide Class C Concrete strength f'c = 3600 psi
Provide Grade 60 reinforcing steel

HL93 LOADING



NO.	DATE	REVISION	APPROVED

WILLIAMSON COUNTY TEXAS

HDR Engineering, Inc.
810 Hesters Crossing, Suite 120
Round Rock, Texas 78681
Texas Registered Engineering Firm F-754

SOUTHWEST BYPASS SEGMENT 2 ABUTMENT NO. 1

TCS QUARRY BRIDGE

SCALE: 1/2"=1'-0" SHEET 2 OF 2

DESIGN	FED.RD. DIV.NO.	FEDERAL AID PROJECT NO.		HIGHWAY NO.
TWB	6			
GRAPHICS	STATE	DISTRICT	COUNTY	SHEET NO.
TGG	TEXAS	AUS	WILLIAMSON	
CHECK	CONTROL	SECTION	JOB	128
JMH	2103	01	034	
CHECK				
JMH				

PLOT DRIVER: TXDOT_PDF_BW.pltcfg PENTABLE: S2-0000020170718.tbl
USER: lgomezgon2 DATE: 3/22/2018 TIME: 10:44:10 AM SCALE: 1:1
FILE: \

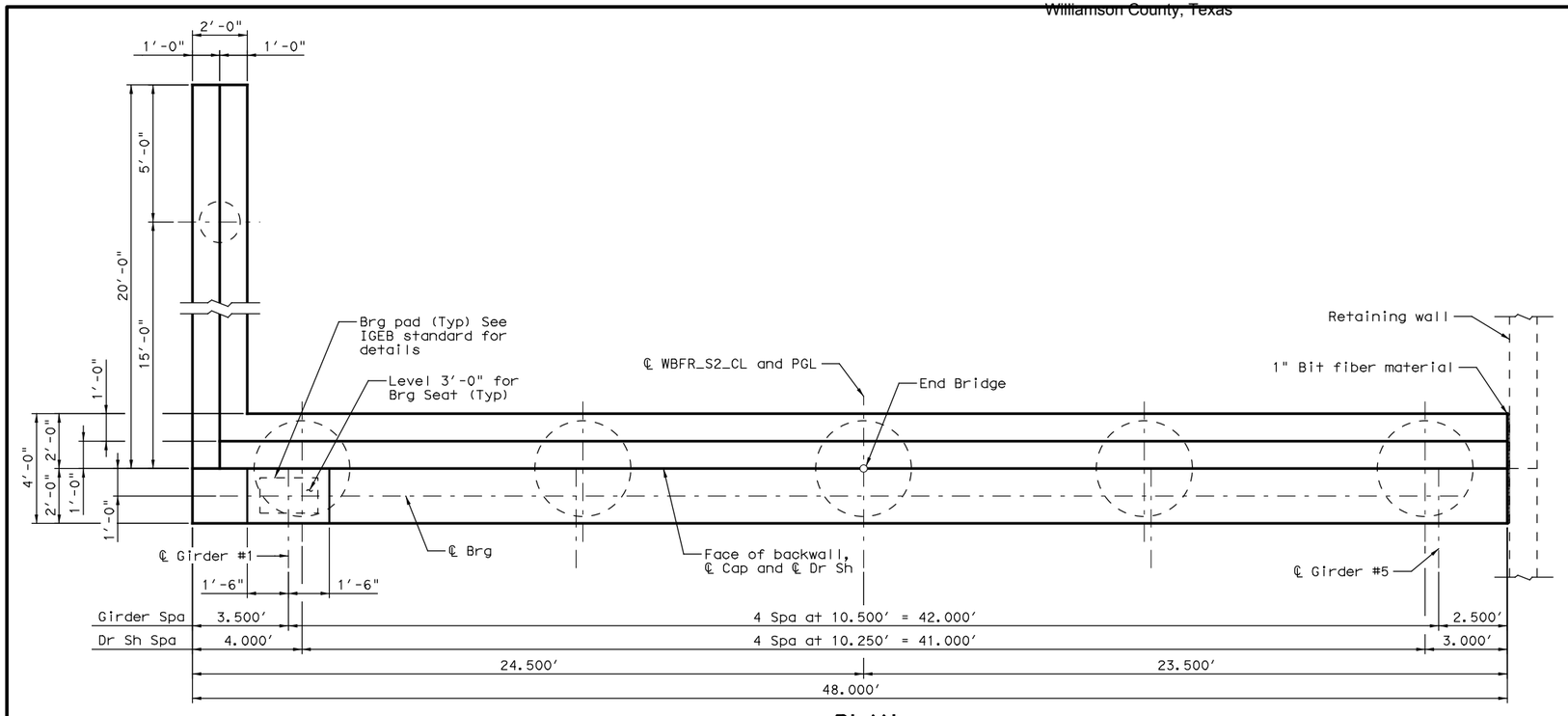

PLAN

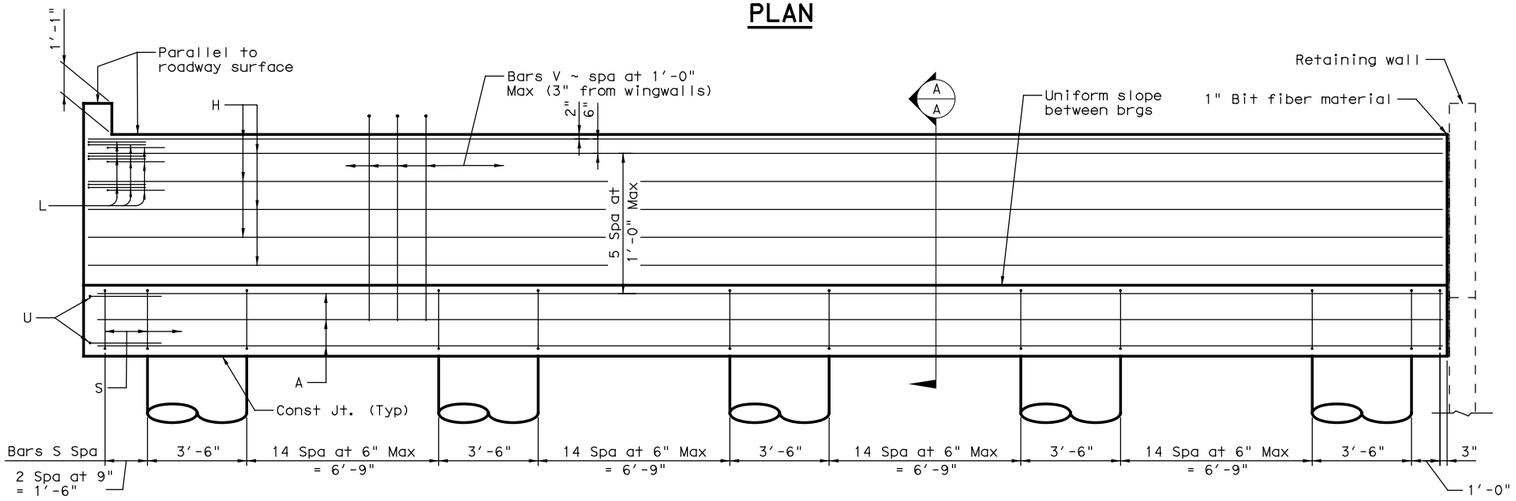

ELEVATION

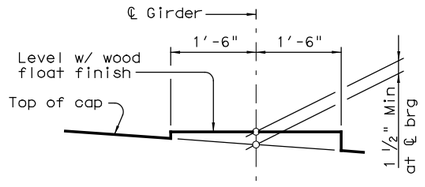

BEARING SEAT DETAIL

(Bearing surface must be clean and free of all loose material before placing bearing pad.)

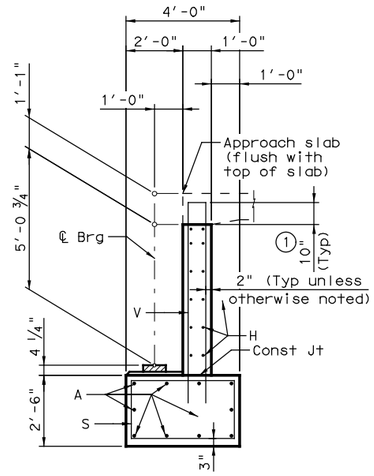

SECTION A-A

① Increase as required to maintain 3" from finished grade.

HL93 LOADING

STATE OF TEXAS
TYLER W. BRENDLINGER
122092
LICENSED PROFESSIONAL ENGINEER
03/23/2018

NO.	DATE	REVISION	APPROVED

WILLIAMSON COUNTY

HDR Engineering, Inc.
810 Hesters Crossing Suite 120
Round Rock, Texas 78681
Texas Registered Engineering Firm F-754

SOUTHWEST BYPASS SEGMENT 2 ABUTMENT NO. 7

TCS QUARRY BRIDGE

SCALE: 3/8"=1'-0" SHEET 1 OF 2

DESIGN	FED.RD. DIV.NO.	FEDERAL AID PROJECT NO.		HIGHWAY NO.
TWB	6			
GRAPHICS TGG	STATE	DISTRICT	COUNTY	SHEET NO.
CHECK JMH	TEXAS	AUS	WILLIAMSON	129
CHECK JMH	CONTROL	SECTION	JOB	
	2103	01	034	

PLOT DRIVER: TXDOT_PDF_BW.pltcfg PENTABLE: S2-000002017018.tbl
USER: lgomezgonz DATE: 3/22/2018 TIME: 10:44:3 AM SCALE:1:1
FILE: \

4/12/2018 7:20 AM

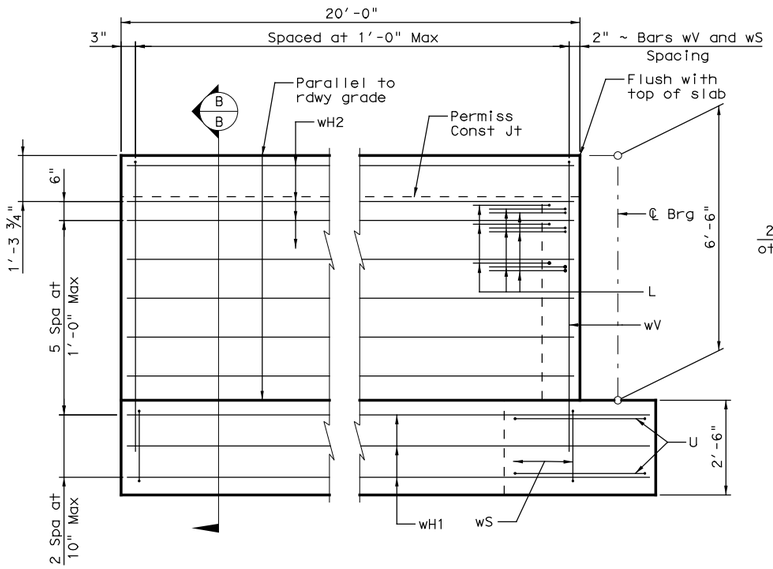

WINGWALL ELEVATION

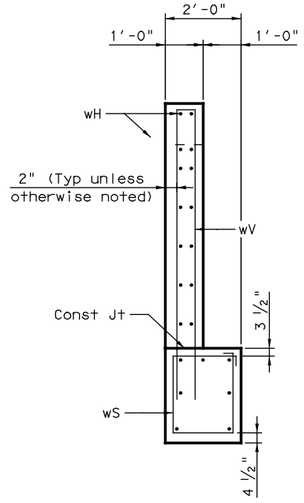

SECTION B-B

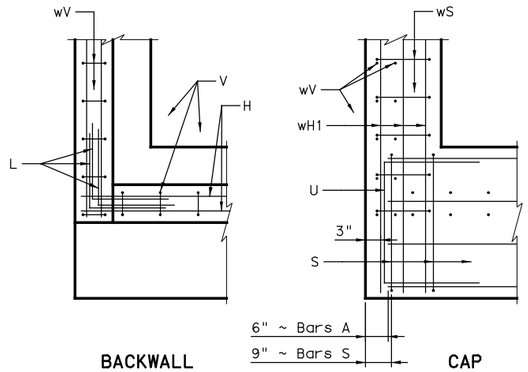

CORNER DETAILS

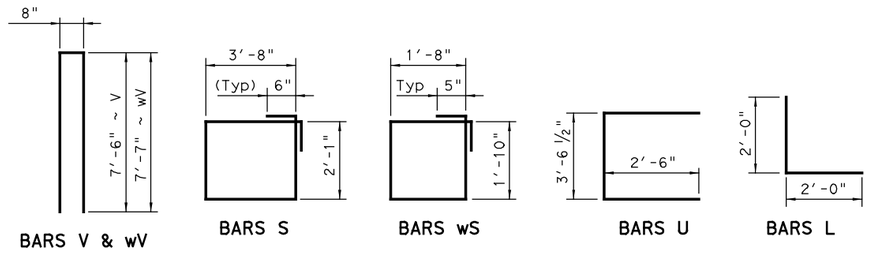

① For Contractor's information only.

TABLE OF ESTIMATED QUANTITIES

Bar	No.	Size	Length	Weight
A	10	#11	47'-4"	2513
H	12	#6	47'-8"	859
L	9	#6	4'-0"	54
S	65	#5	12'-6"	847
U	4	#6	8'-7"	52
V	48	#5	15'-8"	784
wH1	7	#6	21'-8"	228
wH2	14	#6	19'-8"	414
wS	21	#4	7'-10"	110
wV	21	#5	15'-10"	347

①	Reinforcing Steel	Lb	6208
	Class C Concrete	CY	35.4

GENERAL NOTES:

Designed according to AASHTO LRFD Bridge Design Specifications, 7th Edition (2014)

Cover dimensions are clear dimensions, unless noted otherwise Reinforcing bar dimensions shown are out-to-out of bar

See Foundation Detail Standard Sheet, FD, for all foundation details and notes not shown
See Stone Riprap Standard Sheet, SRR, for riprap attachment details
See railing standards for rail anchorage in wingwalls
Calculated Foundation Loads = 111 tons/ Dr Sh
See Bridge Layout for header slope and foundation type, size and length

MATERIAL NOTES:

Provide Class C Concrete strength f'c = 3600 psi
Provide Grade 60 reinforcing steel

HL93 LOADING



NO.	DATE	REVISION	APPROVED

WILLIAMSON COUNTY TEXAS

HDR Engineering, Inc.
810 Hesters Crossing, Suite 120
Round Rock, Texas 78681
Texas Registered Engineering Firm F-754

SOUTHWEST BYPASS SEGMENT 2 ABUTMENT NO. 7

TCS QUARRY BRIDGE

SCALE: 1/2"=1'-0" SHEET 2 OF 2

DESIGN	FED.RD. DIV.NO.	FEDERAL AID PROJECT NO.		HIGHWAY NO.
TWB	6			
GRAPHICS	STATE	DISTRICT	COUNTY	SHEET NO.
TGG	TEXAS	AUS	WILLIAMSON	
CHECK	CONTROL	SECTION	JOB	130
JMH	2103	01	034	
CHECK				
JMH				

PLOT DRIVER: TXDOT_PDF_BW.pltcfg PENTABLE: S2-000002017071B.tbl
USER: lgomezgon2 DATE: 3/22/2018 TIME: 10:46:16 AM SCALE: 1:1
FILE: \

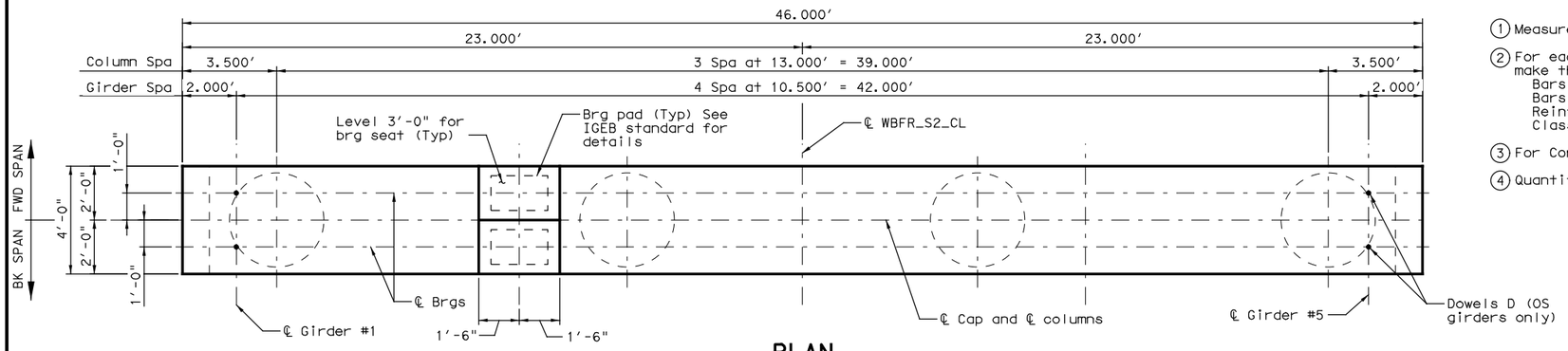

PLAN

(1) Measured parallel to top of cap cross-slope.

(2) For each linear foot variation in "H" value, make the following adjustments:
Bars V length, 1'-0"
Bars Z length, 37'-9"
Reinforcing steel, 291 Lb
Class "C" conc (col), 1.43 CY

(3) For Contractor's information only.

(4) Quantities shown are for one Interior Bent only.

TABLE OF CAP QUANTITIES (4)

Bar	No.	Size	Length	Weight
A	6	#11	45'-6"	1450
B	5	#11	43'-9"	1162
D	4	#9	1'-8"	23
S	64	#5	15'-8"	1046
T	10	#5	43'-9"	456
U	2	#5	11'-2"	23
(3) Reinforcing Steel			Lb	4160
Class C Concrete (Cap)			CY	27.0

TABLE OF COLUMN QUANTITIES (2)

Bent	"H"	Bars V 56 ~ #9		Bars Z 4 ~ #4		Reinf Steel	Class C Conc (Col)
No.	Ft	Length	Weight	Length	Weight	Lb	CY
2	27'	29'-9"	5664	1047'-6"	2799	8463	38.5
5	18'	20'-9"	3951	707'-9"	1891	5842	25.7
6	14'	16'-9"	3189	556'-9"	1488	4677	20.0

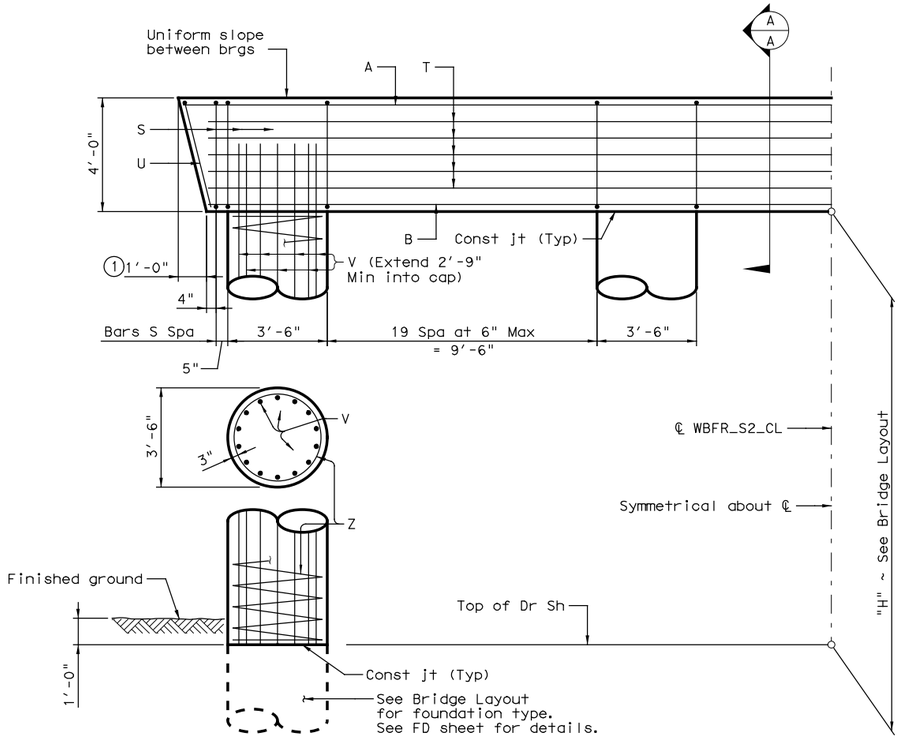

HALF ELEVATION

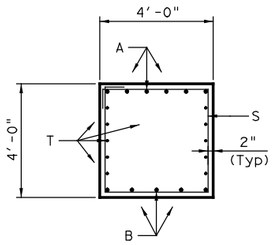

SECTION A-A

GENERAL NOTES:

Designed according to AASHTO LRFD Bridge Design Specifications, 7th Edition (2014)

Cover dimensions are clear dimensions, unless noted otherwise Reinforcing bar dimensions shown are out-to-out of bar

See Foundation Detail Standard Sheet, FD, for all foundation details and notes not shown
Calculated Foundation Loads = 276 tons/ Dr Sh
See Bridge Layout for foundation type, size and length

MATERIAL NOTES:

Provide Class C Concrete strength f'c = 3600 psi
Provide Grade 60 reinforcing steel
Galvanize dowel bars D

HL93 LOADING

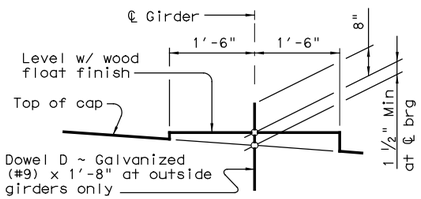

BEARING SEAT DETAIL

(Bearing surface must be clean and free of all loose material before placing bearing pad.)

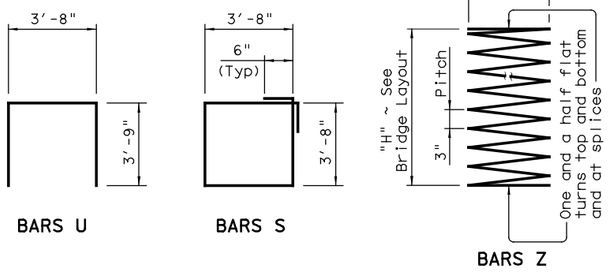

STATE OF TEXAS
TYLER W. BRENDLINGER
122092
LICENSED PROFESSIONAL ENGINEER
03/23/2018

NO.	DATE	REVISION	APPROVED

WILLIAMSON COUNTY

HDR Engineering, Inc.
810 Hesters Crossing, Suite 120
Round Rock, Texas 78681
Texas Registered Engineering Firm F-754

SOUTHWEST BYPASS SEGMENT 2 INTERIOR BENT NOS. 2, 5-6 TCS QUARRY BRIDGE

SCALE: 3/8"=1'-0" SHEET 1 OF 1

DESIGN	FED.RD. DIV.NO.	FEDERAL AID PROJECT NO.		HIGHWAY NO.
TWB	6			
GRAPHICS	STATE	DISTRICT	COUNTY	SHEET NO.
TGG	TEXAS	AUS	WILLIAMSON	
CHECK	CONTROL	SECTION	JOB	131
JMH	2103	01	034	
CHECK				
JMH				

PLOT DRIVER: TXDOT_PDF_BW.pltcfg PENTABLE: S2-00000201707IB.tbl
USER: lgomezgon2 DATE: 3/22/2018 TIME: 10:49 AM SCALE: 1:1
FILE: \
4/12/2018 7:20 AM

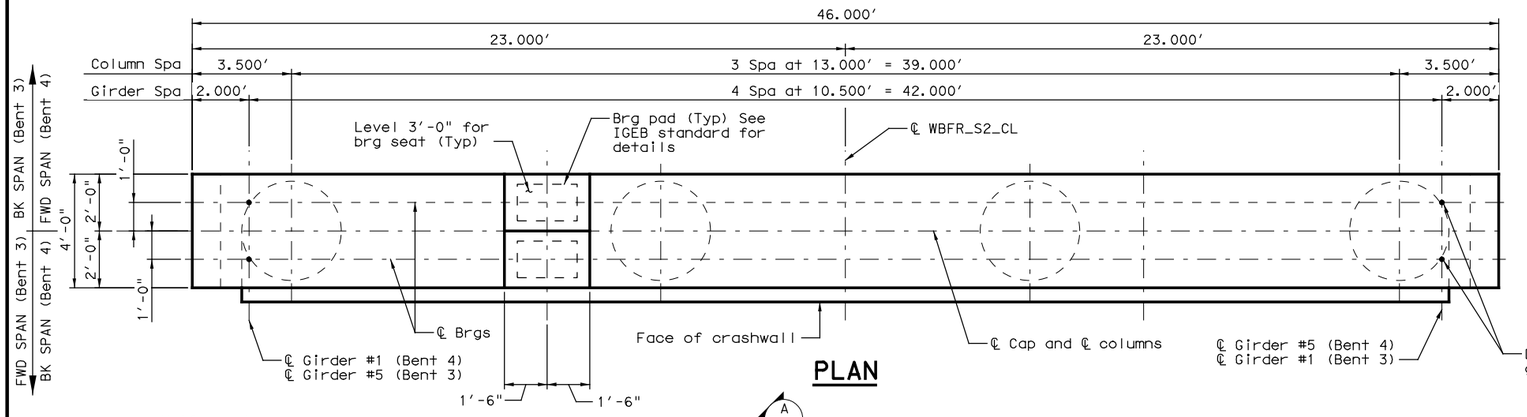

PLAN

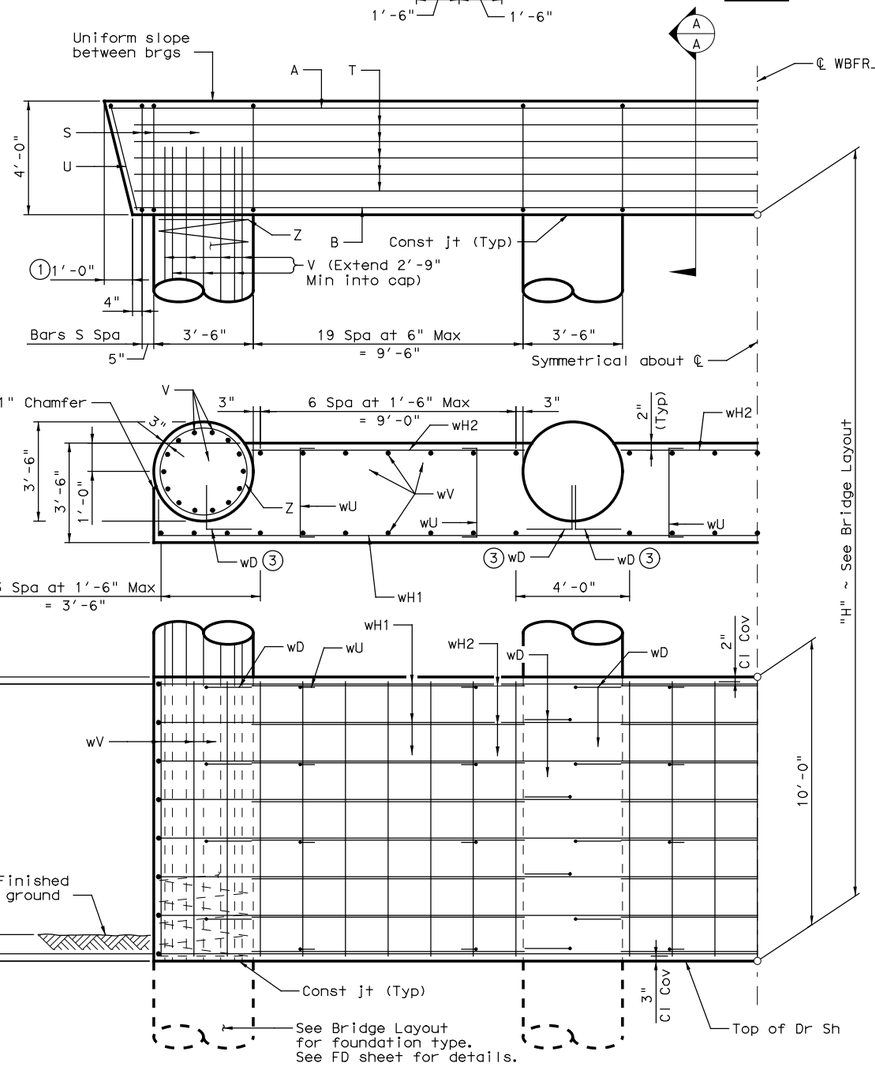

HALF ELEVATION

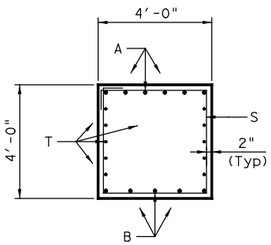

SECTION A-A

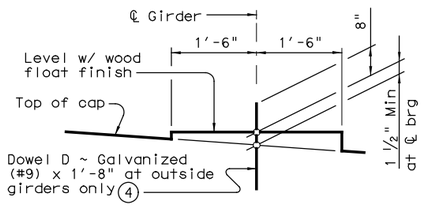

BEARING SEAT DETAIL

(Bearing surface must be clean and free of all loose material before placing bearing pad.)

(1) Measured parallel to top of cap cross-slope

(2) For each linear foot variation in "H" value, make the following adjustments:
Bars V length, 1'-0"
Bars Z length, 37'-9"
Reinforcing steel, 291 Lb
Class "C" conc (col), 1.43 CY

(3) Bars wD Embed 1'-3" Min into Column. At Contractor's option, bars wD may be placed with the column or may be drilled and grouted with the anchorage end sloped 1:6 in column.

(4) Deduct 23 lbs for Dowels D at Interior Bent No. 4.

(5) For Contractor's information only.

(6) Quantities shown are for one Interior Bent only.

TABLE OF CAP QUANTITIES (6)

	Bar	No.	Size	Length	Weight
	A	6	#11	45'-6"	1450
	B	5	#11	43'-9"	1162
(4)	D	4	#9	1'-8"	23
	S	64	#5	15'-8"	1046
	T	10	#5	43'-9"	456
	U	2	#5	11'-2"	23
	wD	24	#6	3'-2"	114
	wH1	8	#6	44'-8"	537
	wH2	24	#6	9'-6"	342
	wU	24	#4	4'-2"	67
	wV	48	#4	9'-8"	697
(5)	Reinforcing Steel			Lb	5917
	Class C Concrete (Cap)			CY	27.0
	Class C Conc (Misc)			CY	43.2

TABLE OF COLUMN QUANTITIES (2)

Bent	"H"	Bars V 56 ~ #9		Bars Z 4 ~ #4		Reinf Steel	Class C Conc (Col)
No.	Ft	Length	Weight	Length	Weight	Lb	CY
3	23'	25'-9"	4903	896'-6"	2395	7298	32.8
4	22'	24'-9"	4712	858'-9"	2295	7007	31.4

GENERAL NOTES:

Designed according to AASHTO LRFD Bridge Design Specifications, 7th Edition (2014)

Cover dimensions are clear dimensions, unless noted otherwise
Reinforcing bar dimensions shown are out-to-out of bar

See Foundation Detail Standard Sheet, FD, for all foundation details and notes not shown
Calculated Foundation Loads = 303 tons/ Dr Sh
See Bridge Layout for foundation type, size and length

MATERIAL NOTES:

Provide Class C Concrete strength f'c = 3600 psi
Provide Grade 60 reinforcing steel
Galvanize dowel bars D

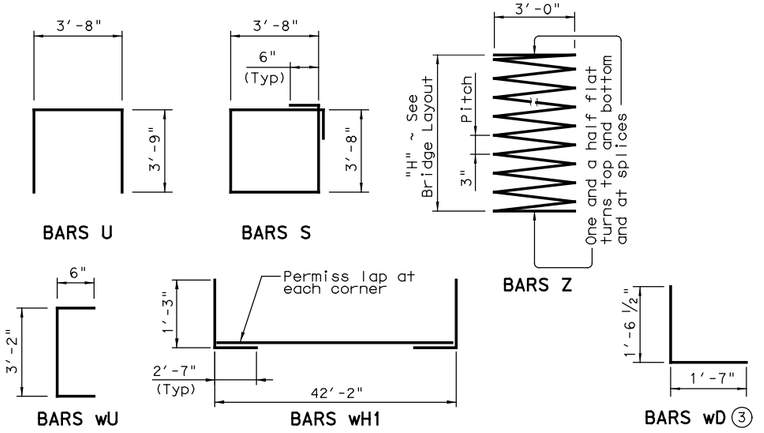

HL93 LOADING

STATE OF TEXAS
TYLER W. BRENDLINGER
122092
LICENSED
PROFESSIONAL ENGINEER
03/23/2018

NO.	DATE	REVISION	APPROVED

WILLIAMSON COUNTY

HDR Engineering, Inc.
810 Hesters Crossing, Suite 120
Round Rock, Texas 78681
Texas Registered Engineering Firm F-754

SOUTHWEST BYPASS SEGMENT 2 INTERIOR BENT NOS. 3-4 TCS QUARRY BRIDGE

SCALE: 3/8"=1'-0" SHEET 1 OF 1

DESIGN	FED.RD. DIV.NO.	FEDERAL AID PROJECT NO.		HIGHWAY NO.
TWB	6			
GRAPHICS TGG	STATE	DISTRICT	COUNTY	SHEET NO.
CHECK JMH	TEXAS	AUS	WILLIAMSON	
CHECK JMH	CONTROL	SECTION	JOB	132
	2103	01	034	

PLOT DRIVER: TXDOT_PDF_BW.pltcfg PENTABLE: S2-000002017018.tbl
USER: lgomezgonz DATE: 3/22/2018 TIME: 10:45:21 AM SCALE: 1:1
FILE: \

4/12/2018 7:20 AM

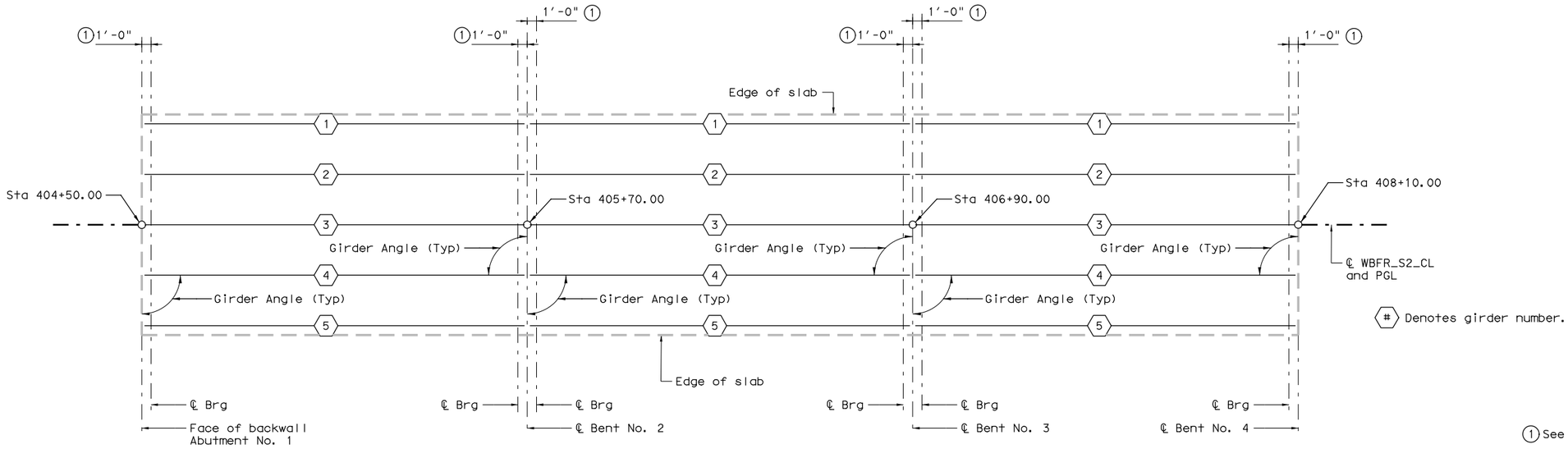

SPAN 1
(TY Tx62 Girder)

SPAN 2
(TY Tx62 Girder)

SPAN 3
(TY Tx62 Girder)

1. See IGEB Standard for orientation of dimension.
2. Girder lengths shown are bottom girder flange lengths with adjustments made for girder slope.

FRAMING PLAN

BENT REPORT

ABUT NO. 1 (S 2 50 1.13 E)
DISTANCE BETWEEN STATION LINE AND GIRDER 1, 21.000 L

		GIRDER	SPAC. (C.L. BENT)	ANGLE D	M	S
SPAN	1	GIRDER 1	0.000	90	0	0
		GIRDER 2	10.500	90	0	0
		GIRDER 3	10.500	90	0	0
		GIRDER 4	10.500	90	0	0
		GIRDER 5	10.500	90	0	0
		TOTAL	42.000			

BENT NO. 2 (S 2 50 1.13 E)
DISTANCE BETWEEN STATION LINE AND GIRDER 1, 21.000 L

		GIRDER	SPAC. (C.L. BENT)	ANGLE D	M	S
SPAN	1	GIRDER 1	0.000	90	0	0
		GIRDER 2	10.500	90	0	0
		GIRDER 3	10.500	90	0	0
		GIRDER 4	10.500	90	0	0
		GIRDER 5	10.500	90	0	0
		TOTAL	42.000			

BENT NO. 2 (S 2 50 1.13 E)
DISTANCE BETWEEN STATION LINE AND GIRDER 1, 21.000 L

		GIRDER	SPAC. (C.L. BENT)	ANGLE D	M	S
SPAN	2	GIRDER 1	0.000	90	0	0
		GIRDER 2	10.500	90	0	0
		GIRDER 3	10.500	90	0	0
		GIRDER 4	10.500	90	0	0
		GIRDER 5	10.500	90	0	0
		TOTAL	42.000			

BENT NO. 3 (S 2 50 1.13 E)
DISTANCE BETWEEN STATION LINE AND GIRDER 1, 21.000 L

		GIRDER	SPAC. (C.L. BENT)	ANGLE D	M	S
SPAN	2	GIRDER 1	0.000	90	0	0
		GIRDER 2	10.500	90	0	0
		GIRDER 3	10.500	90	0	0
		GIRDER 4	10.500	90	0	0
		GIRDER 5	10.500	90	0	0
		TOTAL	42.000			

BENT NO. 3 (S 2 50 1.13 E)
DISTANCE BETWEEN STATION LINE AND GIRDER 1, 21.000 L

		GIRDER	SPAC. (C.L. BENT)	ANGLE D	M	S
SPAN	3	GIRDER 1	0.000	90	0	0
		GIRDER 2	10.500	90	0	0
		GIRDER 3	10.500	90	0	0
		GIRDER 4	10.500	90	0	0
		GIRDER 5	10.500	90	0	0
		TOTAL	42.000			

BENT NO. 4 (S 2 50 1.13 E)
DISTANCE BETWEEN STATION LINE AND GIRDER 1, 21.000 L

		GIRDER	SPAC. (C.L. BENT)	ANGLE D	M	S
SPAN	3	GIRDER 1	0.000	90	0	0
		GIRDER 2	10.500	90	0	0
		GIRDER 3	10.500	90	0	0
		GIRDER 4	10.500	90	0	0
		GIRDER 5	10.500	90	0	0
		TOTAL	42.000			

GIRDER REPORT

BEAM REPORT, SPAN 1

	HORIZONTAL DISTANCE C-C BENT	C-C BRG.	TRUE DISTANCE BOT. GDR. FLG. (2)	GIRDER SLOPE
GIRDER 1	120.000	118.000	119.51	-0.0122
GIRDER 2	120.000	118.000	119.51	-0.0122
GIRDER 3	120.000	118.000	119.51	-0.0122
GIRDER 4	120.000	118.000	119.51	-0.0122
GIRDER 5	120.000	118.000	119.51	-0.0122

BEAM REPORT, SPAN 2

	HORIZONTAL DISTANCE C-C BENT	C-C BRG.	TRUE DISTANCE BOT. GDR. FLG. (2)	GIRDER SLOPE
GIRDER 1	120.000	118.000	119.53	-0.0233
GIRDER 2	120.000	118.000	119.53	-0.0233
GIRDER 3	120.000	118.000	119.53	-0.0233
GIRDER 4	120.000	118.000	119.53	-0.0233
GIRDER 5	120.000	118.000	119.53	-0.0233

BEAM REPORT, SPAN 3

	HORIZONTAL DISTANCE C-C BENT	C-C BRG.	TRUE DISTANCE BOT. GDR. FLG. (2)	GIRDER SLOPE
GIRDER 1	120.000	118.000	119.57	-0.0344
GIRDER 2	120.000	118.000	119.57	-0.0344
GIRDER 3	120.000	118.000	119.57	-0.0344
GIRDER 4	120.000	118.000	119.57	-0.0344
GIRDER 5	120.000	118.000	119.57	-0.0344

HL93 LOADING



NO.	DATE	REVISION	APPROVED

HDR Engineering, Inc.
810 Hesters Crossing, Suite 120
Round Rock, Texas 78681
Texas Registered Engineering Firm F-754

SOUTHWEST BYPASS
SEGMENT 2
FRAMING PLAN
UNIT 1
TCS QUARRY BRIDGE

SCALE: 3/8"=1'-0" SHEET 1 OF 1

DESIGN	FED.RD. DIV.NO.	FEDERAL AID PROJECT NO.		HIGHWAY NO.
TWB	6			
GRAPHICS	STATE	DISTRICT	COUNTY	SHEET NO.
TGG	TEXAS	AUS	WILLIAMSON	
CHECK	CONTROL	SECTION	JOB	133
JMH	2103	01	034	
CHECK				
JMH				

PLOT DRIVER: TXDOT_PDF_BW.pltcfg PENTABLE: S2-000020170718.tbl
USER: lgomezgonz DATE: 3/22/2018 TIME: 10:42:3 AM SCALE: 1:1
FILE: \
4/12/2018 7:20 AM

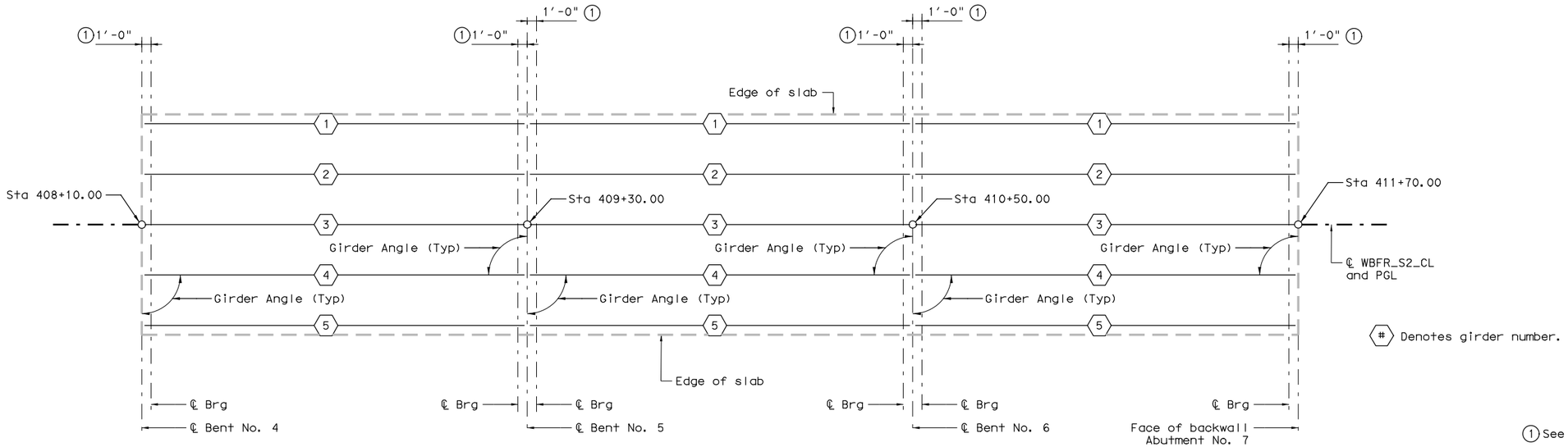

SPAN 4 (TY Tx62 Girder)

SPAN 5 (TY Tx62 Girder)

SPAN 6 (TY Tx62 Girder)

(1) See IGEB Standard for orientation of dimension.

(2) Girder lengths shown are bottom girder flange lengths with adjustments made for girder slope.

FRAMING PLAN

BENT REPORT

BENT NO. 4 (S 2 50 1.13 E)
DISTANCE BETWEEN STATION LINE AND GIRDER 1, 21.000 L

		GIRDER	GIRDER SPAC. (C.L. BENT)	GIRDER ANGLE D	M	S
SPAN	4	GIRDER 1	0.000	90	0	0
		GIRDER 2	10.500	90	0	0
		GIRDER 3	10.500	90	0	0
		GIRDER 4	10.500	90	0	0
		GIRDER 5	10.500	90	0	0
		TOTAL	42.000			

BENT NO. 5 (S 2 50 1.13 E)
DISTANCE BETWEEN STATION LINE AND GIRDER 1, 21.000 L

		GIRDER	GIRDER SPAC. (C.L. BENT)	GIRDER ANGLE D	M	S
SPAN	4	GIRDER 1	0.000	90	0	0
		GIRDER 2	10.500	90	0	0
		GIRDER 3	10.500	90	0	0
		GIRDER 4	10.500	90	0	0
		GIRDER 5	10.500	90	0	0
		TOTAL	42.000			
SPAN	5	GIRDER 1	0.000	90	0	0
		GIRDER 2	10.500	90	0	0
		GIRDER 3	10.500	90	0	0
		GIRDER 4	10.500	90	0	0
		GIRDER 5	10.500	90	0	0
		TOTAL	42.000			

BENT NO. 6 (S 2 50 1.13 E)
DISTANCE BETWEEN STATION LINE AND GIRDER 1, 21.000 L

		GIRDER	GIRDER SPAC. (C.L. BENT)	GIRDER ANGLE D	M	S
SPAN	5	GIRDER 1	0.000	90	0	0
		GIRDER 2	10.500	90	0	0
		GIRDER 3	10.500	90	0	0
		GIRDER 4	10.500	90	0	0
		GIRDER 5	10.500	90	0	0
		TOTAL	42.000			
SPAN	6	GIRDER 1	0.000	90	0	0
		GIRDER 2	10.500	90	0	0
		GIRDER 3	10.500	90	0	0
		GIRDER 4	10.500	90	0	0
		GIRDER 5	10.500	90	0	0
		TOTAL	42.000			

ABUT NO. 7 (S 2 50 1.13 E)
DISTANCE BETWEEN STATION LINE AND GIRDER 1, 21.000 L

		GIRDER	GIRDER SPAC. (C.L. BENT)	GIRDER ANGLE D	M	S
SPAN	6	GIRDER 1	0.000	90	0	0
		GIRDER 2	10.500	90	0	0
		GIRDER 3	10.500	90	0	0
		GIRDER 4	10.500	90	0	0
		GIRDER 5	10.500	90	0	0
		TOTAL	42.000			

GIRDER REPORT

BEAM REPORT, SPAN 4

	HORIZONTAL DISTANCE C-C BENT	C-C BRG.	TRUE DISTANCE BOT. GDR. FLG. (2)	GIRDER SLOPE
GIRDER 1	120.000	118.000	119.60	-0.0400
GIRDER 2	120.000	118.000	119.60	-0.0400
GIRDER 3	120.000	118.000	119.60	-0.0400
GIRDER 4	120.000	118.000	119.60	-0.0400
GIRDER 5	120.000	118.000	119.60	-0.0400

BEAM REPORT, SPAN 5

	HORIZONTAL DISTANCE C-C BENT	C-C BRG.	TRUE DISTANCE BOT. GDR. FLG. (2)	GIRDER SLOPE
GIRDER 1	120.000	118.000	119.60	-0.0400
GIRDER 2	120.000	118.000	119.60	-0.0400
GIRDER 3	120.000	118.000	119.60	-0.0400
GIRDER 4	120.000	118.000	119.60	-0.0400
GIRDER 5	120.000	118.000	119.60	-0.0400

BEAM REPORT, SPAN 6

	HORIZONTAL DISTANCE C-C BENT	C-C BRG.	TRUE DISTANCE BOT. GDR. FLG. (2)	GIRDER SLOPE
GIRDER 1	120.000	118.000	119.60	-0.0400
GIRDER 2	120.000	118.000	119.60	-0.0400
GIRDER 3	120.000	118.000	119.60	-0.0400
GIRDER 4	120.000	118.000	119.60	-0.0400
GIRDER 5	120.000	118.000	119.60	-0.0400

HL93 LOADING

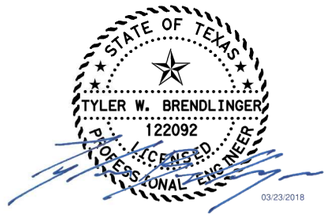

NO.	DATE	REVISION	APPROVED

HDR Engineering, Inc.
810 Hesters Crossing, Suite 120
Round Rock, Texas 78681
Texas Registered Engineering Firm F-754

SOUTHWEST BYPASS
SEGMENT 2
FRAMING PLAN
UNIT 2
TCS QUARRY BRIDGE

SCALE: 3/8"=1'-0" SHEET 1 OF 1

DESIGN	FED.RD. DIV.NO.	FEDERAL AID PROJECT NO.		HIGHWAY NO.
TWB	6			
GRAPHICS	STATE	DISTRICT	COUNTY	SHEET NO.
TGG	TEXAS	AUS	WILLIAMSON	
CHECK	CONTROL	SECTION	JOB	134
JMH	2103	01	034	
CHECK				
JMH				

PLOT DRIVER: TXDOT_PDF_BW.pltcfg PENTABLE: S2-0000020170718.tbl
USER: lgomezgonz DATE: 3/22/2018 TIME: 10:4:25 AM SCALE: 1:1
FILE: \
4/12/2018 7:20 AM

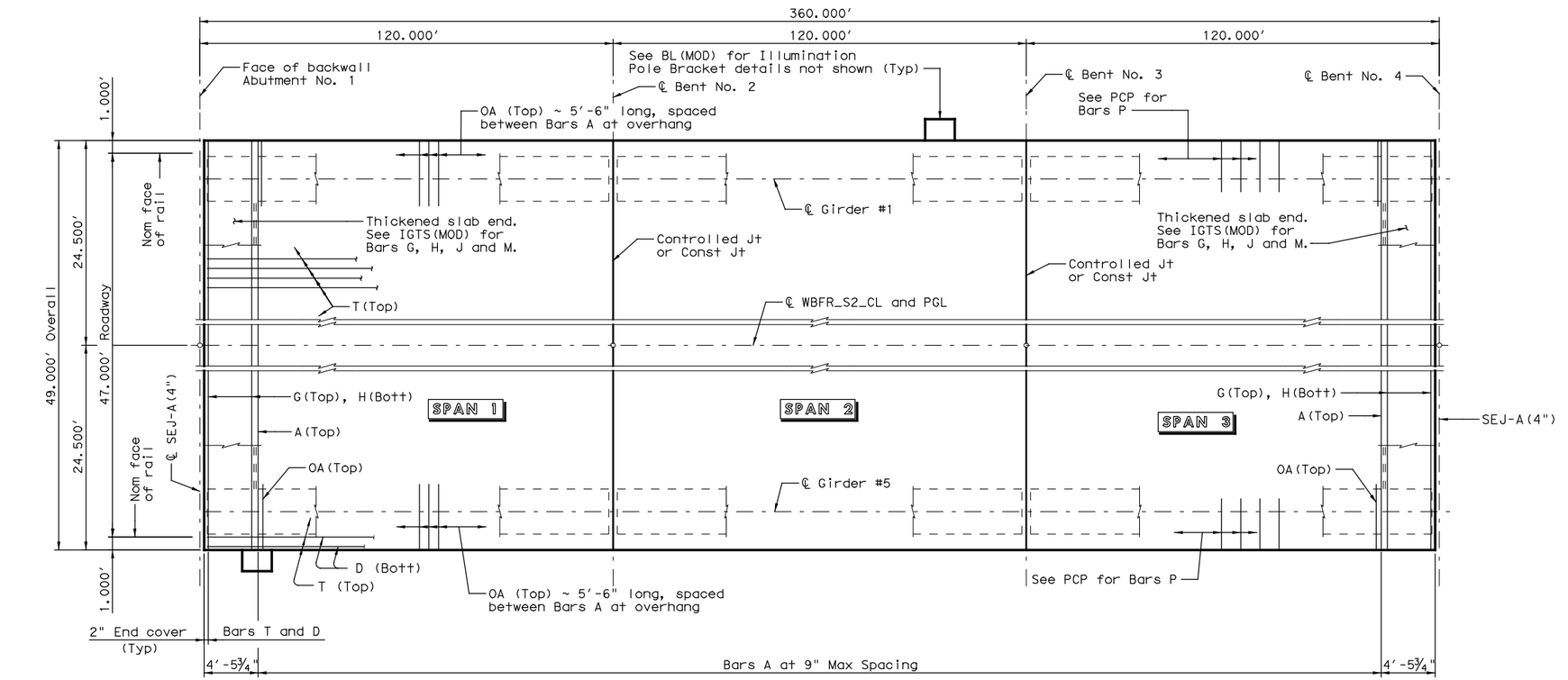

PLAN

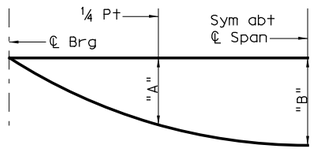

Span No.	Girder No.	"A" Ft	"B" Ft
1-3	1,5	0.104	0.146
	2-4	0.125	0.175

DEAD LOAD DEFLECTION DIAGRAM

NOTE: Deflections shown are due to concrete slab only. (E_c = 5000 ksi)
Calculated deflections shown are theoretical and actual deflections may be less. Deflections shall be adjusted based on field observations

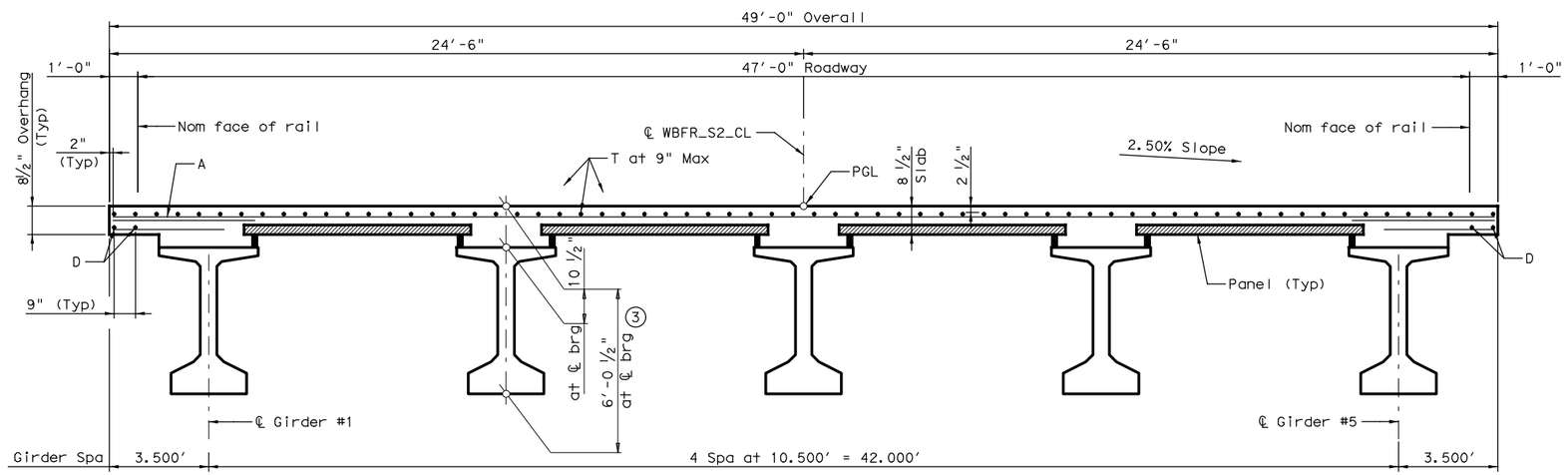

TYPICAL TRANSVERSE SECTION

BAR	SIZE
A	#4
D	#4
G	#4
H	#4
J	#4
M	#4
OA	#5
P	#4
T	#4

TABLE OF ESTIMATED QUANTITIES

SPAN	REINF CONC SLAB	PRESTRESSED CONC BEAMS (TY Tx62) ②	REINFORCING STEEL
	SF	LF	Lb
1	5880	597.55	13524
2	5880	597.65	13524
3	5880	597.85	13524
Total	17640	1793.05	① 40572

GENERAL NOTES:

Designed according to AASHTO LRFD Bridge Design Specifications, 7th Edition (2014)
See PCP and PCP-FAB for panel details not shown
See IGTS(MOD) Standard for Thickened Slab End Details and quantity adjustments
See IGMS Standard for miscellaneous details
See Railing Standard for rail anchorage in slab
See BL(MOD) Standard for Illumination Pole Bracket details and conduit in SSTR railing
See PMDF Standard for details and quantity adjustments if this option is used

Cover dimensions are clear dimensions, unless noted otherwise

MATERIAL NOTES:

Provide Class S concrete (f'c = 4000 psi)
Provide Grade 60 reinforcing steel
Provide bar laps, where required, as follows:
Uncoated ~ #4 = 1'-7"
Deformed Welded Wire Reinforcement (WWR) (ASTM A1064) of equal size and spacing may be substituted for Bars A, D, OA, P or T unless noted otherwise. Provide the same laps as required for reinforcing bars

① Reinforcing steel weight is calculated using an approximate factor of 2.3 lbs per sq ft

② Quantity shown are bottom beam flange lengths with adjustments made for beam slope.

③ Theoretical dimension only.

HL93 LOADING



NO.	DATE	REVISION	APPROVED

HDR Engineering, Inc.
810 Hesters Crossing, Suite 120
Round Rock, Texas 78681
Texas Registered Engineering Firm F-754

SOUTHWEST BYPASS SEGMENT 2 360.00' PRESTRESSED CONCRETE GIRDER UNIT 1 TCS QUARRY BRIDGE

SCALE: 3/8"=1'-0" SHEET 1 OF 1

DESIGN	FED.RD. DIV.NO.	FEDERAL AID PROJECT NO.		HIGHWAY NO.
TWB	6			
GRAPHICS	STATE	DISTRICT	COUNTY	SHEET NO.
TGG	TEXAS	AUS	WILLIAMSON	
CHECK	CONTROL	SECTION	JOB	135
JMH	2103	01	034	
CHECK				
JMH				

PLOT DRIVER: TXDOT_PDF_BW.pltcfg PENTABLE: S2-00000201707018.tbl
USER: lgomezgonz DATE: 3/22/2018 TIME: 10:4:29 AM SCALE:1:1
FILE: \
4/12/2018 7:20 AM

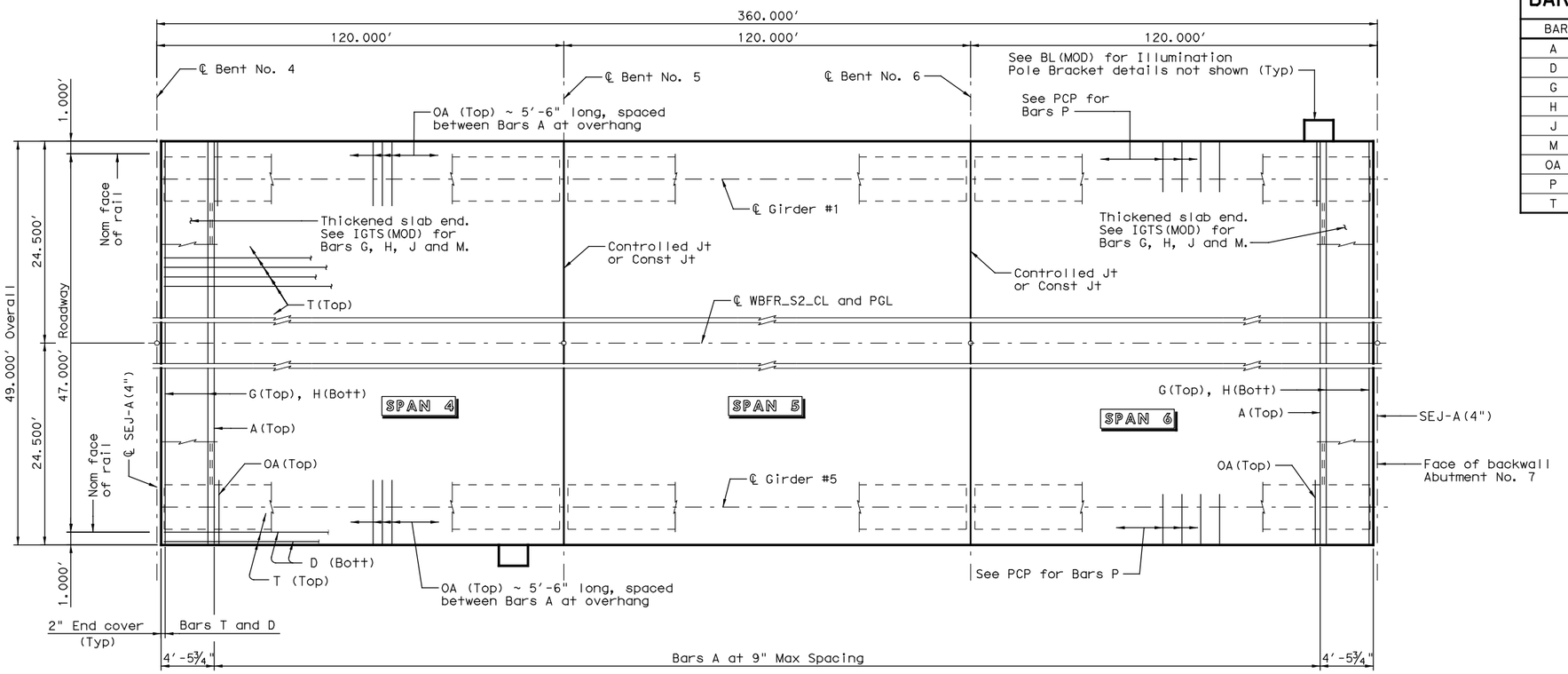

PLAN

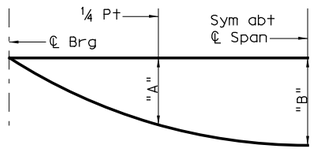

Span No.	Girder No.	"A" Ft	"B" Ft
4-6	1,5	0.104	0.146
	2-4	0.125	0.175

DEAD LOAD DEFLECTION DIAGRAM

NOTE: Deflections shown are due to concrete slab only. (E_c = 5000 ksi)
Calculated deflections shown are theoretical and actual deflections may be less. Deflections shall be adjusted based on field observations

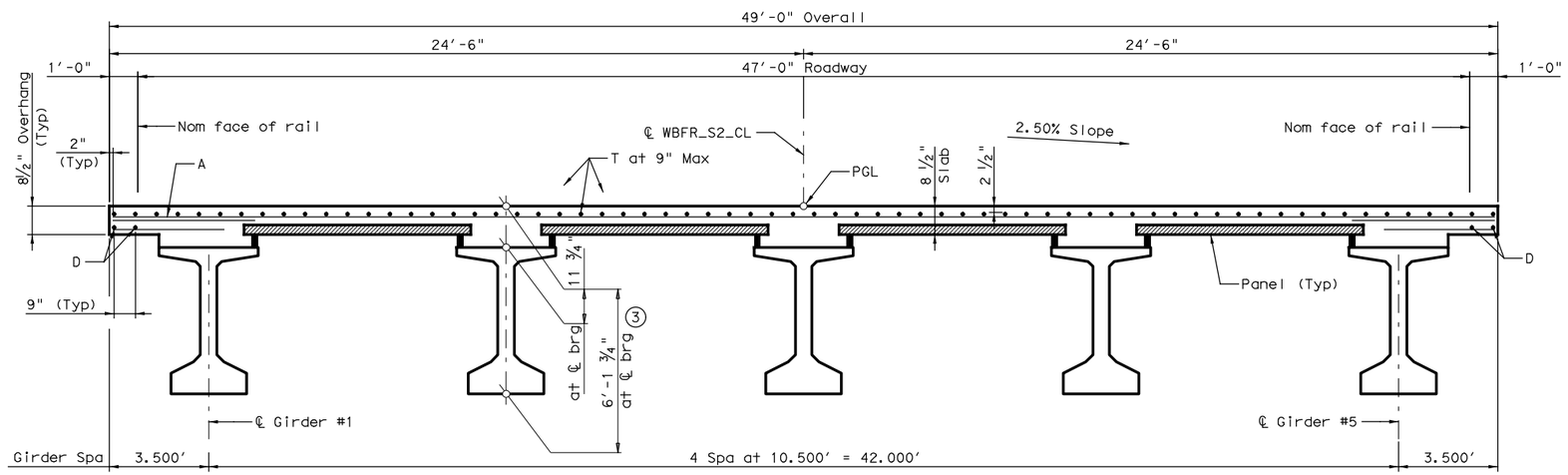

TYPICAL TRANSVERSE SECTION

BAR TABLE	
BAR	SIZE
A	#4
D	#4
G	#4
H	#4
J	#4
M	#4
OA	#5
P	#4
T	#4

TABLE OF ESTIMATED QUANTITIES

SPAN	REINF CONC SLAB	PRESTRESSED CONC BEAMS (TY Tx62) (2)	REINFORCING STEEL
	SF	LF	Lb
4	5880	598.00	13524
5	5880	598.00	13524
6	5880	598.00	13524
Total	17640	1794.00	(1) 40572

GENERAL NOTES:

Designed according to AASHTO LRFD Bridge Design Specifications, 7th Edition (2014)
See PCP and PCP-FAB for panel details not shown
See IGTS(MOD) Standard for Thickened Slab End Details and quantity adjustments
See IGMS Standard for miscellaneous details
See Railing Standard for rail anchorage in slab
See BL(MOD) Standard for Illumination Pole Bracket details and conduit in SSTR railing
See PMDF Standard for details and quantity adjustments if this option is used

Cover dimensions are clear dimensions, unless noted otherwise

MATERIAL NOTES:

Provide Class S concrete (f′c = 4000 psi)
Provide Grade 60 reinforcing steel
Provide bar laps, where required, as follows:
Uncoated ~ #4 = 1′-7"
Deformed Welded Wire Reinforcement (WWR) (ASTM A1064) of equal size and spacing may be substituted for Bars A, D, OA, P or T unless noted otherwise. Provide the same laps as required for reinforcing bars

(1) Reinforcing steel weight is calculated using an approximate factor of 2.3 lbs per sq ft
(2) Quantity shown are bottom beam flange lengths with adjustments made for beam slope.
(3) Theoretical dimension only.

HL93 LOADING



NO.	DATE	REVISION	APPROVED

HDR Engineering, Inc.
810 Hesters Crossing, Suite 120
Round Rock, Texas 78681
Texas Registered Engineering Firm F-754

SOUTHWEST BYPASS SEGMENT 2 360.00′ PRESTRESSED CONCRETE GIRDER UNIT 2 TCS QUARRY BRIDGE

SCALE: 3/8"=1′-0" SHEET 1 OF 1

DESIGN	FED.RD. DIV.NO.	FEDERAL AID PROJECT NO.		HIGHWAY NO.
TWB	6			
GRAPHICS TGG	STATE	DISTRICT	COUNTY	SHEET NO.
CHECK JMH	TEXAS	AUS	WILLIAMSON	136
CHECK JMH	CONTROL	SECTION	JOB	
	2103	01	034	

PLOT DRIVER: TXDOT_PDF_BW.pltcfg PENTABLE: S2-00000201707018.tbl
USER: lgomezgonz DATE: 3/22/2018 TIME: 10:43:32 AM SCALE: 1:1
FILE: \

STRUCTURE	DESIGNED GIRDERS									STRAIGHT STRAND PATTERN								DEPRESSED STRAND PATTERN (1)			CONCRETE		OPTIONAL DESIGN				
	SPAN NO.	GIRDER NO.	GIRDER TYPE	PRESTRESSING STRANDS						TOT NO. DEB	DEBONDED STRANDS PER ROW															
				NON-STD STRAND PATTERN	TOTAL NO.	SIZE (in)	STRGTH fpu (ksi)	"e" ℄ (in)	"e" END (in)		DIST FROM BOTTOM (in)	NO. OF STRANDS TOTAL	NO. OF STRANDS DE-BONDED	NUMBER OF STRANDS DEBONDED TO (ft from end) 3	6	9	12	15	NO.	TO END (in)	TO ℄ (in)	RELEASE STRGTH (2) f'ci (ksi)	MINIMUM 28 DAY COMP STRGTH f'c (ksi)	DESIGN LOAD COMP STRESS (TOP ℄) (SERVICE I) fct(ksi)	DESIGN LOAD TENSILE STRESS (BOTT ℄) (SERVICE III) fcb(ksi)	REQUIRED MINIMUM ULTIMATE MOMENT CAPACITY (STRENGTH I) (kip-ft)	LIVE LOAD DISTRIBUTION FACTOR (3) Moment	Shear
SOUTHWEST BYPASS TCS QUARRY BRIDGE	All	All	Tx62		52	0.6	270	21.47	11.78										12	54.5	12.5	6.000	7.500	3.954	-4.440	11093	0.778	0.985

NON-STANDARD STRAND PATTERNS

PATTERN	STRAND ARRANGEMENT AT ℄ OF GIRDER

(1) When TO END (in) equals TO ℄ (in), place these straight strands at the defined TO values. Fill the lower rows with the remainder of the total number of strands in accordance with the Debonded Strand Designs notes.

(2) Based on the following allowable stresses (ksi):

Compression = 0.65 f'ci

Tension = $0.24\sqrt{f'ci}$

Optional designs must likewise conform.

(3) Portion of full HL93.

DESIGN NOTES:

Designed according to AASHTO LRFD Bridge Design Specifications.

Optional designs for girders 120 feet or longer must have a calculated residual camber equal to or greater than that of the designed girder.

Prestress losses for the designed girders have been calculated for a relative humidity of 60 percent. Optional designs must likewise conform.

FABRICATION NOTES:

Provide Class H concrete.

Provide Grade 60 reinforcing steel bars.

Use low relaxation strands, each pretensioned to 75 percent of fpu.

Strand debonding must comply with Item 424.4.2.2.2.4. Full-length debonded strands are only permitted in positions marked △. Double wrap full-length debonded strands in outer most position of each row.

When shown on this sheet, the Fabricator has the option of furnishing either the designed girder or an approved optional design. All optional design submittals must be signed, sealed and dated by a Professional Engineer registered in the State of Texas.

DEBONDED STRAND DESIGNS:

Locate strands for the designed girder as low as possible on the 2" grid system unless a non-standard strand pattern is indicated. Fill row "2.5", then row "4.5", then row "6.5", etc. Place strands within a row as follows:

1) Locate a strand in each "A" and outer most positions.
2) Place strand symmetrically about vertical centerline of girder.
3) Space strands as equally as possible across the entire width.

Do not debond strands in position "G". Distribute debonded strands symmetrically about the vertical centerline. Increase debonded lengths working outward, with debonding staggered in each row.

DEPRESSED STRAND DESIGNS:

Locate strands for the designed girder as low as possible on the 2" grid system unless a non-standard strand pattern is indicated. Fill row "2.5", then row "4.5", then row "6.5", etc., beginning each row in the "A" position and working outward until the required number of strands is reached. All strands in the "A" position must be depressed, maintaining the 2" spacing so that, at the girder ends, the upper two strands are in the position shown in the table.

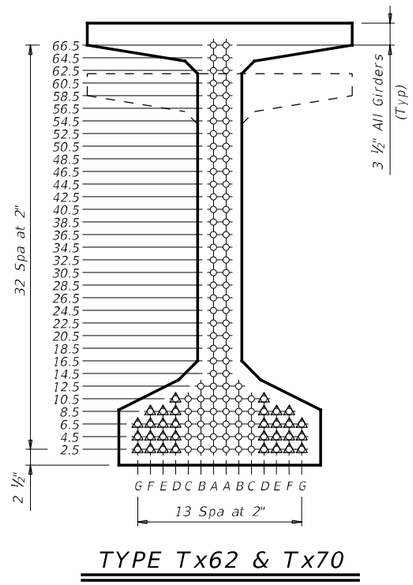

TYPE Tx62 & Tx70

HL93 LOADING

STATE OF TEXAS
TYLER W. BRENDLINGER
122092
LICENSED
PROFESSIONAL ENGINEER
03/23/2018

Texas Department of Transportation

Bridge Division Standard

PRESTRESSED CONCRETE I-GIRDER DESIGNS (NON-STANDARD SPANS)

IGND(MOD)

FILE: igndsts1-17.dgn	DN: TxDOT	CK: TxDOT	DW: JTR	CK: TAR
©TxDOT August 2017	CONT	SECT	JOB	HIGHWAY
REVISIONS	2103	01	034	
MOD: Removed girder sections not required	DIST	COUNTY		SHEET NO.
	AUS	WILLIAMSON		137

DISCLAIMER:
The use of this standard is governed by the "Texas Engineering Practice Act". No warranty of any kind is made by TxDOT for any purpose whatsoever. TxDOT assumes no responsibility for the conversion of this standard to other formats or for incorrect results or damages resulting from its use.

DATE:
FILE:

DISCLAIMER:
The use of this standard is governed by the "Texas Engineering Practice Act". No warranty of any kind is made by TxDOT for any purpose whatsoever. TxDOT assumes no responsibility for the conversion of this standard to other formats or for incorrect results or damages resulting from its use.

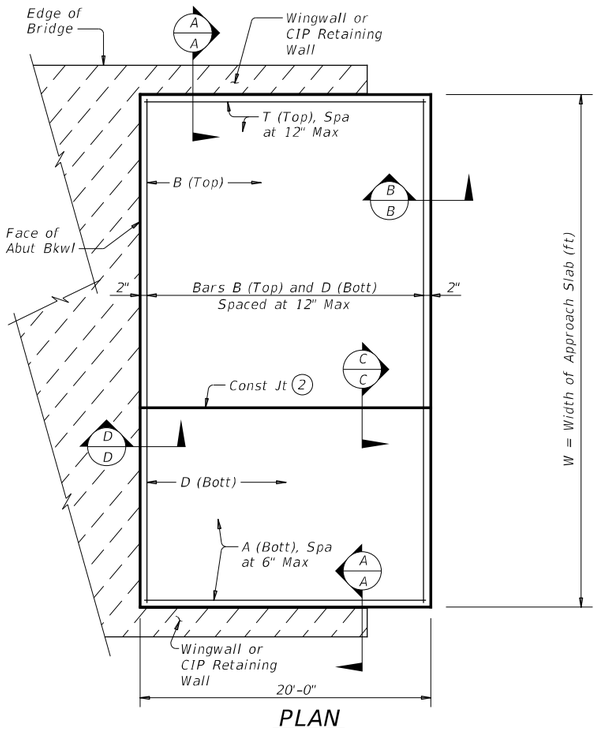

PLAN

(Showing Non-Skewed Approach Slab)

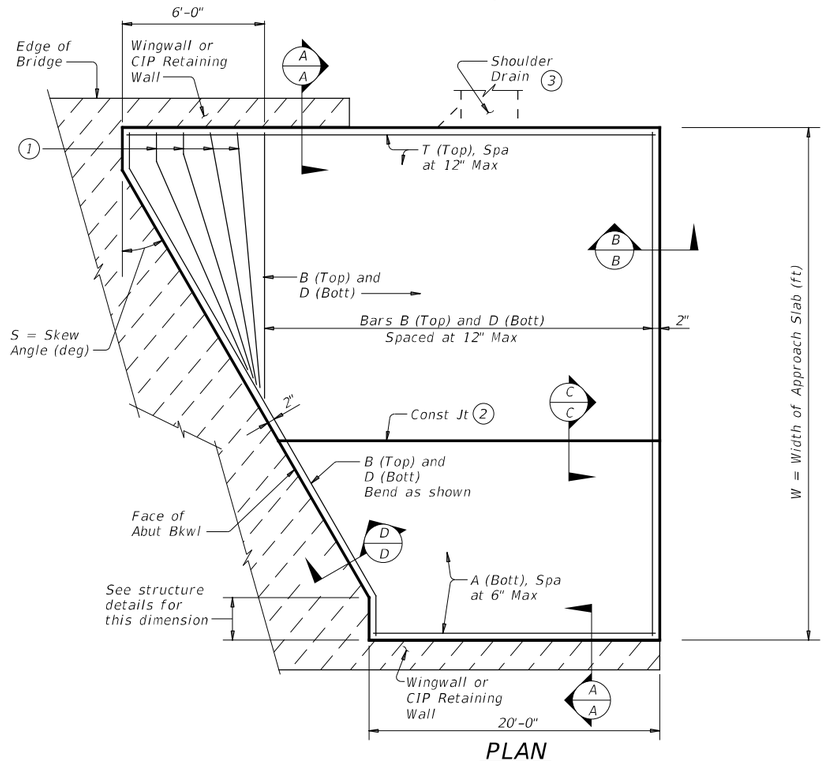

PLAN

(Showing Skewed Approach Slab)

BAR TABLE	
BAR	SIZE
A	#8
B	#5
D	#5
T	#5

APPROXIMATE QUANTITIES (4)

Reinf steel weight = 8.5 Lbs/SF of Approach Slab

Volume of Appr Slab Conc (CY) = $0.802W + 0.02W^2 \tan S$

W = Width of Approach Slab (ft)

S = Skew Angle (deg)

(1) Flare Bars B and D in this region (1'-6" Max Spa, 3" Min Spa). Minimum flared bar length = 2'-6". Bend bars as necessary.

(2) Provide longitudinal construction joints that align with longitudinal construction joints in the bridge slab with bridges built in stages. Other longitudinal construction joints must receive approval of the Engineer.

(3) See details elsewhere in plans for shoulder drain location and details.

(4) For Contractor's information only.

(5) Multiple piece tie bars are acceptable at longitudinal construction joints provided minimum laps shown are achieved.

(6) See details elsewhere in plans for required cross-slope.

(7) Place in accordance with Item 438.

(8) Backer rod shall be 25% larger than joint opening and shall be compatible with the sealant.

(9) Place ½" Preformed Bituminous Fiber Material between concrete railing and top of approach slab as shown when concrete railing projects over the approach slab.

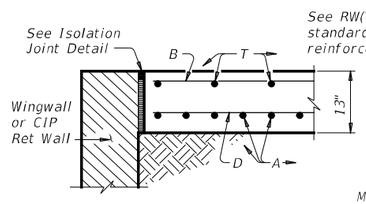

SHOWING WINGWALL OR CIP RETAINING WALL

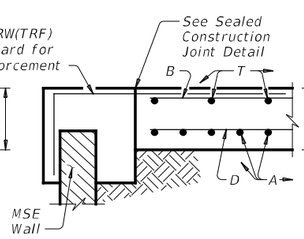

SHOWING MSE WALL

SECTION A-A

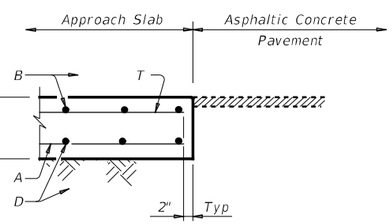

SECTION B-B

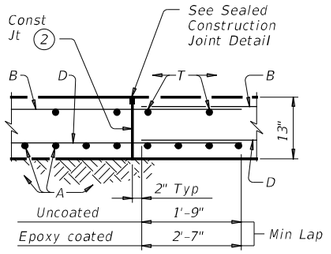

SECTION C-C (5)

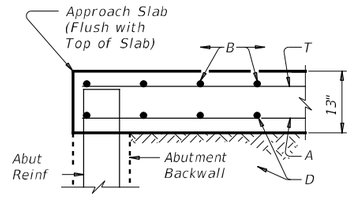

SECTION D-D

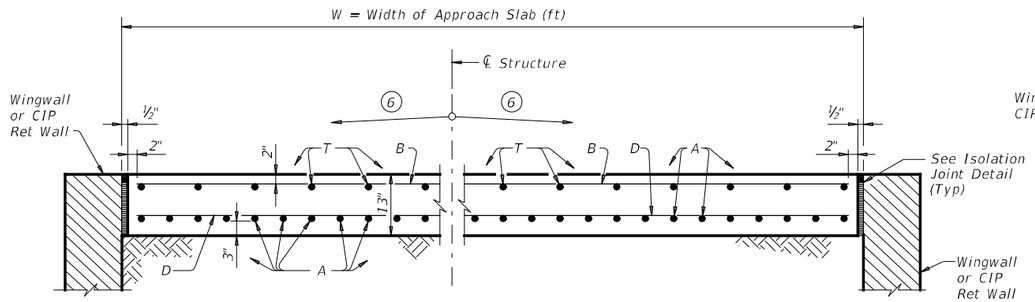

TYPICAL TRANSVERSE SECTION

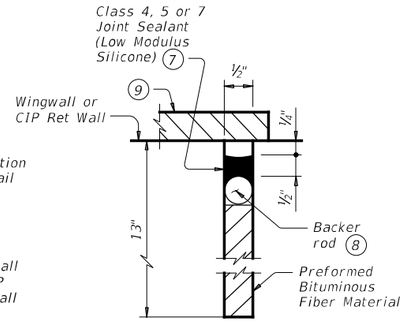

ISOLATION JOINT DETAIL

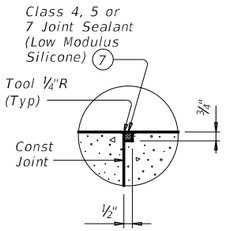

SEALED CONSTRUCTION JOINT DETAIL

GENERAL NOTES:

Construct approach slab in accordance with Item 422.

Provide Class "S" concrete with a minimum compressive strength of 4,000 psi.

Provide Grade 60 reinforcing steel.

Construct the subgrade or subbase from the bridge for a minimum distance of 100 feet prior to the approach slab, unless otherwise indicated on the plans.

Compact and finish the subgrade or foundation for the approach slab to the typical cross-section and to the lines and grades shown on the plans.

Cure for 4 days using water or membrane curing per Item 422.

Sealant, backer rod and preformed bituminous fiber material are subsidiary to approach slab concrete.

Provide a 1" bondbreaker (asphaltic concrete pavement or asphalt stabilized base) between the approach slab and cement stabilized backfill or cement treated base. Other bondbreakers may be used if approved by the Engineer.

Cover dimensions are clear dimensions, unless noted otherwise.

Texas Department of Transportation

Bridge Division Standard

BRIDGE APPROACH SLAB

ASPHALTIC CONCRETE PAVEMENT

BAS-A

FILE: basaste1.dgn	DN: TxDOT	CK: TxDOT	DW: TxDOT	CK: TxDOT
©TxDOT January 2015 REVISIONS	CONT	SECT	JOB	HIGHWAY
	2103	01	034	
	DIST	COUNTY		SHEET NO.
	AUS	WILLIAMSON		138

DATE: 3/22/2018 10:14:37 AM
FILE: c:\pwworking\dot\d0911849\basaste1.dgn

DISCLAIMER:
The use of this standard is governed by the "Texas Engineering Practice Act". No warranty of any kind is made by TxDOT for any purpose whatsoever. TxDOT assumes no responsibility for the conversion of this standard to other formats or for incorrect results or damages resulting from its use.

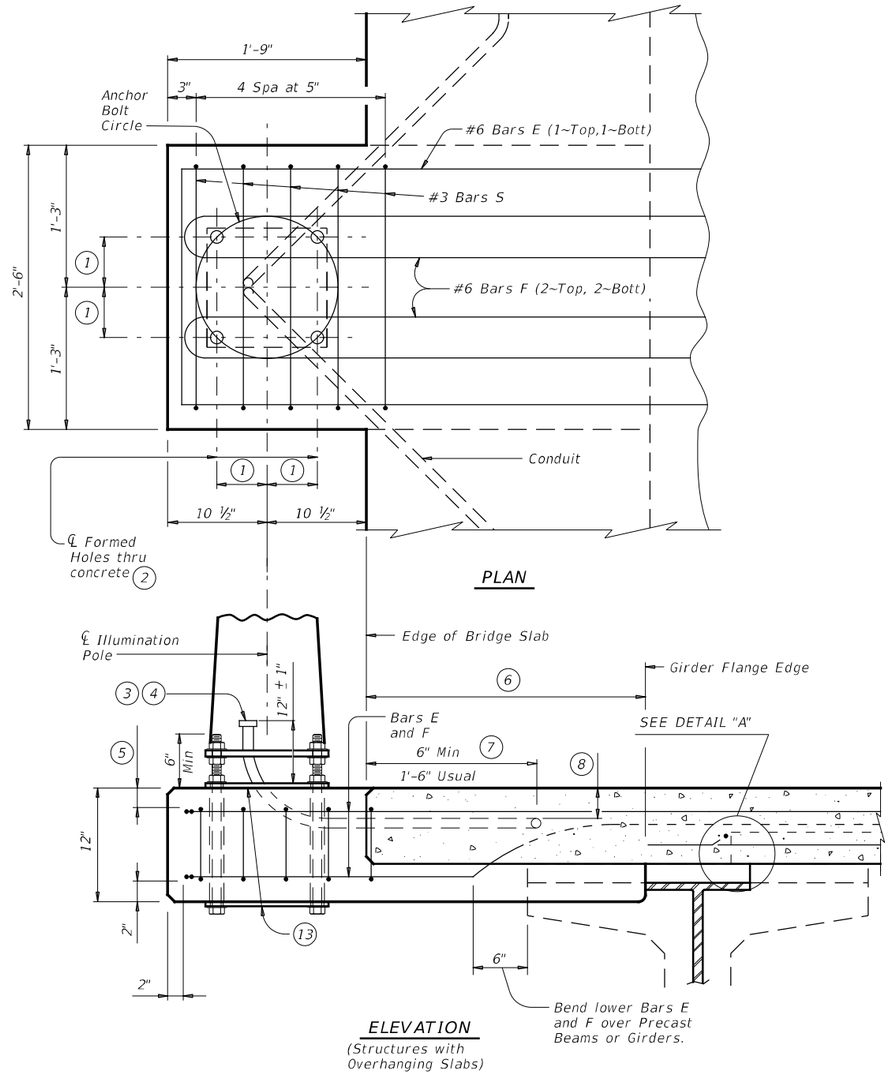

ILLUMINATION POLE BRACKET LOCATION AND REINFORCING

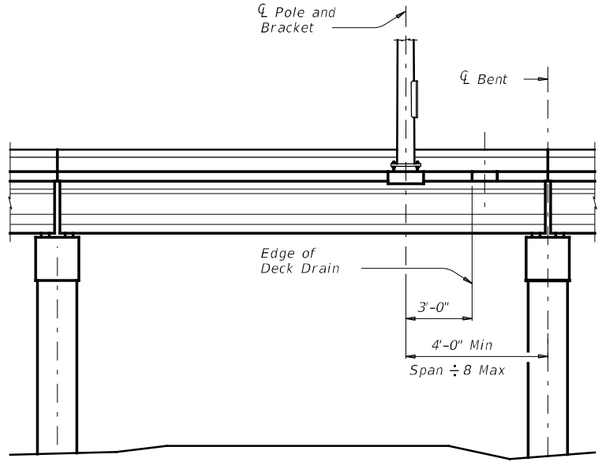

TYPICAL BRIDGE ELEVATION

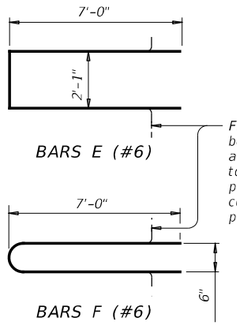

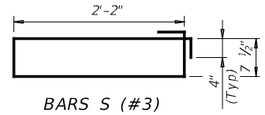

BARS S (#3)

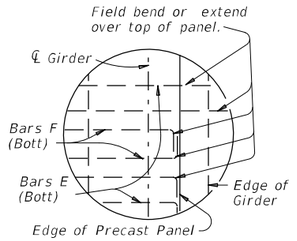

DETAIL "A"

PRIOR TO ORDERING MATERIALS THE POLE MANUFACTURE MUST PROVIDE A POLE DESIGN THAT MEETS CURRENT AASHTO LRFD SPECIFICATIONS FOR STRUCTURAL SUPPORT FOR HIGHWAY SIGNS, LUMINARIES, AND TRAFFIC SIGNALS AND INTERIM SPECIFICATIONS FOR APPROVAL OF THE ENGINEER.

TABLE OF ANCHOR BOLT AND STEEL PLATE INFORMATION

	ANCHOR BOLT CIRCLE DIAMETER	ANCHOR BOLT OFFSET	ANCHOR BOLT DIAMETER	ANCHOR BOLT HOLE SIZE		TOP AND BOTTOM STEEL PLATE SIZE	CENTER HOLE DIAMETER IN TOP STEEL PLATE
				CONCRETE	STEEL		
	IN	IN	IN	IN	IN	IN	IN
	13	4 ⅜	1	1 ¼	1 ¼	PL ½ X 13 X 1'-1"	9 ½
	15	5 5/16	1 ¼	1 ½	1 ½	PL ½ X 15 ½ X 1'-3 ½	10 ½
1	(14) SWBY	11	3 ⅞	1	1 ¼	1 ¼	PL ½ X 12 X 1'-0"	7 ½

ESTIMATED QUANTITIES~ONE BRACKET

ITEM		UNIT	QUANT
CONCRETE	(9) (10)	CY	0.2
REINFORCING STEEL	(10)	LB	146
STRUCTURAL STEEL	(10) (11)	LB	104
CONDUIT	(12)	LF	4

(1) See table for dimension.
(2) See table for hole size.
(3) If lighting is to be placed on future contract, extend conduit only 6" and provide water tight cap.
(4) Ream burrs and install bell ends or bushings on all conduit ends.
(5) Provide same clear cover required for bridge slab. Place beneath top slab reinforcing only if necessary to provide this cover.
(6) If slab edge to girder flange edge exceeds 3'-11", lengthen Bars E and F proportionally to ensure Bars E and F extend 1'-6" Min beyond girder flange edge.
(7) Clear rail anchors, drains, etc 1 ½" Min.
(8) 1 ½" Min cover but always beneath top layer slab reinforcing.
(9) Variation due to slab thickness is insignificant.
(10) For Contractor's information only.
(11) Anchor Bolts, Nuts, Washers, and 2 plates.
(12) Additional to main run (Size and type as shown elsewhere on the plans).
(13) See table for anchor bolt and steel plate information.
1 (14) Bolt circle and bolt diameter based on Valmont Model No. R800 A320.

GENERAL NOTES:

Designed for up to 50 Ft light pole with one 12 Ft arm, 60 Lb luminaire with 1.6 sq ft EPA at maximum design wind speed of 110 mph (3 second gusts). A special design is required if luminaire mounting height exceeds 100 ft above average surrounding terrain.

Concrete for Illumination Pole Brackets must be of the same type and placed monolithically with the bridge slab. The bracket quantity is considered subsidiary to the Item "Reinforced Concrete Slab".

The anchor bolts, nuts, washers, and plates are subsidiary to the Item "Roadway Illumination Assemblies".

1 The number and location of brackets is shown elsewhere on the plans. Brackets found to conflict with other components of the bridge may be relocated as necessary.

Provide Grade 60 reinforcing steel.

Cover dimensions are clear dimensions, unless noted otherwise.

Reinforcing bar dimensions shown are out-to-out of bar.

Texas Department of Transportation — Bridge Division Standard

BRIDGE LIGHTING DETAILS

BL(MOD)

STATE OF TEXAS
TYLER W. BRENDLINGER
122092
LICENSED
PROFESSIONAL ENGINEER
03/23/2018

FILE: blstde01.dgn	DN: TxDOT	CK: TxDOT	DW: TxDOT	CK: TxDOT
©TxDOT January 2015	CONT	SECT	JOB	HIGHWAY
REVISIONS	2103	01	034	
1 MOD: ANCHOR BOLT CIRCLE	DIST	COUNTY		SHEET NO.
	AUS	WILLIAMSON		139

DATE: 3/22/2018 10:14:39 AM
FILE: c:\pwworking\dal\d0911849\top1-1.dgn

DISCLAIMER:
The use of this standard is governed by the "Texas Engineering Practice Act". No warranty of any kind is made by TxDOT for any purpose whatsoever. TxDOT assumes no responsibility for the conversion of this standard to other formats or for incorrect results or damages resulting from its use.

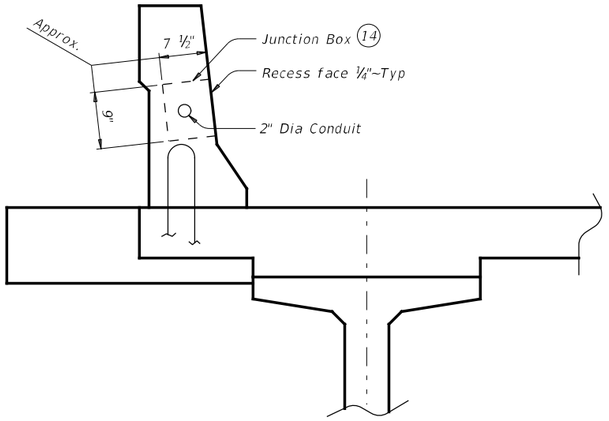

SHOWING T551, T552, AND T80HT

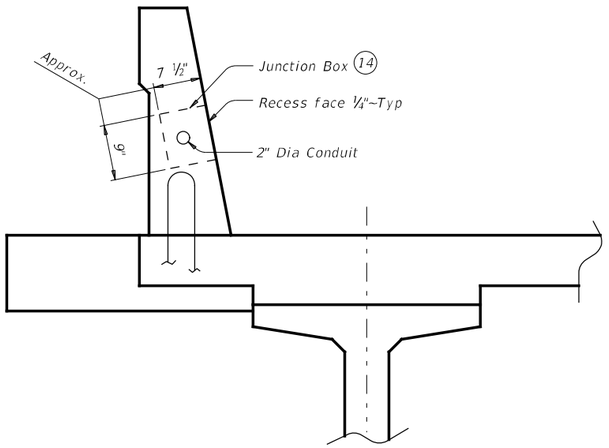

SHOWING SSTR AND T80SS

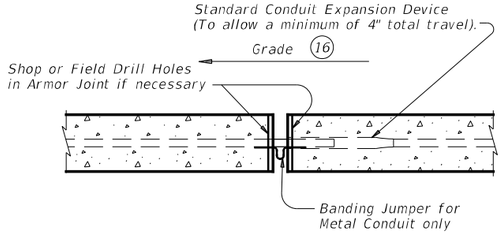

CONDUIT EXPANSION JOINT

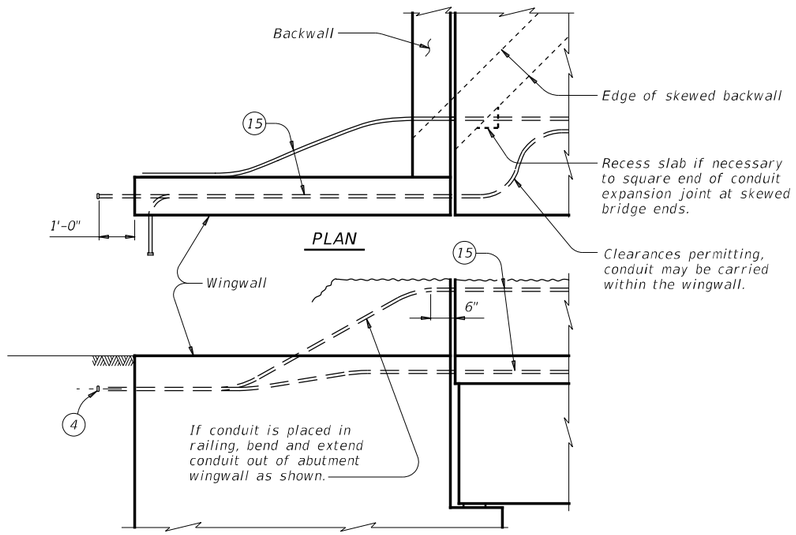

ELEVATION

TREATMENT AT END OF BRIDGE

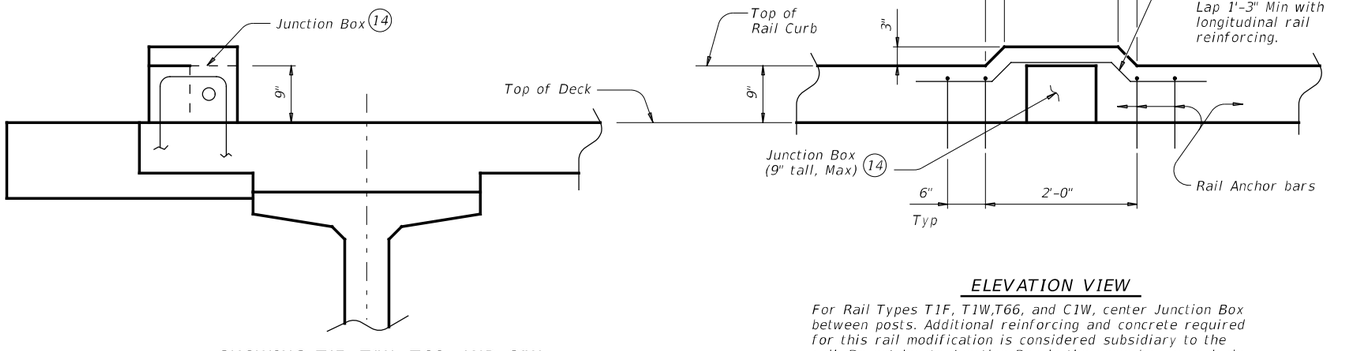

SHOWING T1F, T1W, T66, AND C1W

See Elevation View for curb modifications

ELEVATION VIEW

For Rail Types T1F, T1W,T66, and C1W, center Junction Box between posts. Additional reinforcing and concrete required for this rail modification is considered subsidiary to the rail. Do not locate Junction Box in the same bay as a drain slot in rail curb.

JUNCTION BOX LOCATION

Use these details as a guide in locating junction boxes in rail types not shown.

(4) Ream burrs and install bell ends or bushings on all conduit ends.

(14) Provide polymer concrete junction boxes meeting the requirements of DMS 11030.

(15) Position of conduit shown elsewhere on the plans or as directed by the Engineer.

(16) Place Conduit Expansion Device on high side of expansion joint.

STATE OF TEXAS
TYLER W. BRENDLINGER
122092
LICENSED
PROFESSIONAL ENGINEER
03/23/2018

SHEET 2 OF 2

Texas Department of Transportation

Bridge Division Standard

BRIDGE LIGHTING DETAILS

BL(MOD)

FILE: blstde01.dgn	DN: TxDOT	CK: TxDOT	DW: TxDOT	CK: TxDOT
©TxDOT January 2015	CONT	SECT	JOB	HIGHWAY
REVISIONS	2103	01	034	
	DIST	COUNTY		SHEET NO.
	AUS	WILLIAMSON		140

DATE: 3/22/2018 10:14:40 AM
FILE: c:\pwworking\dal\d0911849\rop1-1.dgn

DISCLAIMER:
The use of this standard is governed by the "Texas Engineering Practice Act". No warranty of any kind is made by TxDOT for any purpose whatsoever. TxDOT assumes no responsibility for the conversion of this standard to other formats or for incorrect results or damages resulting from its use.

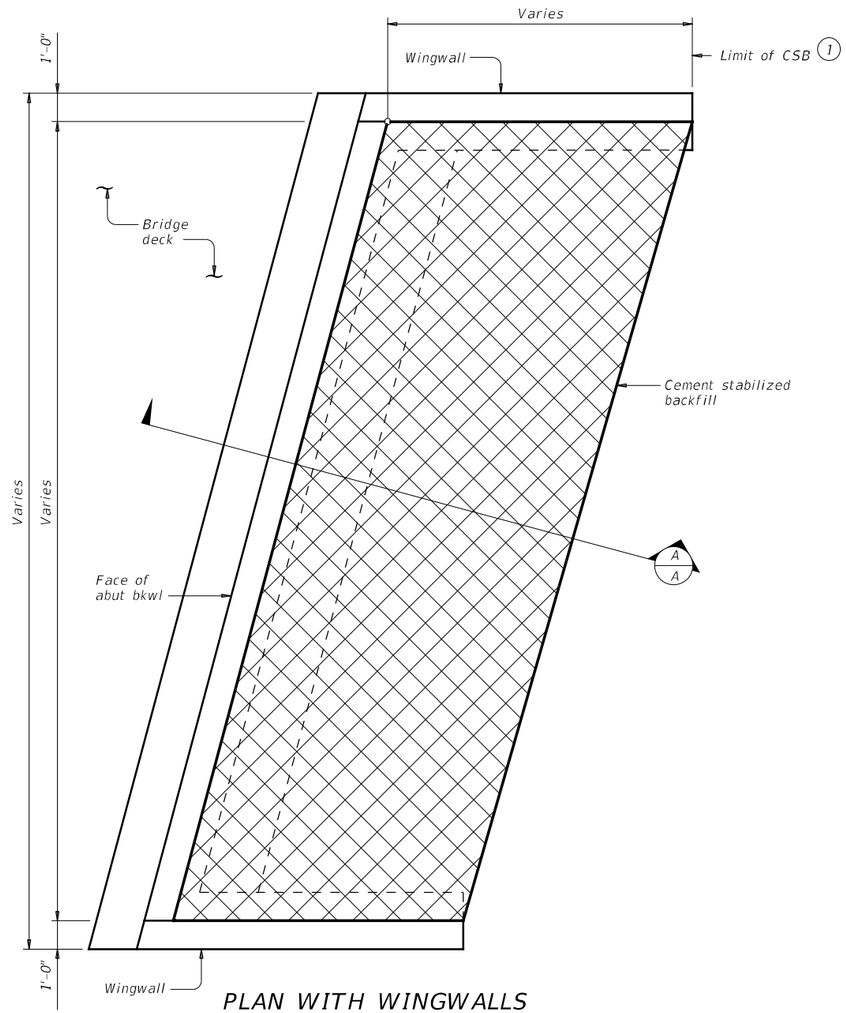

PLAN WITH WINGWALLS

Cast-in-place retaining walls similar.

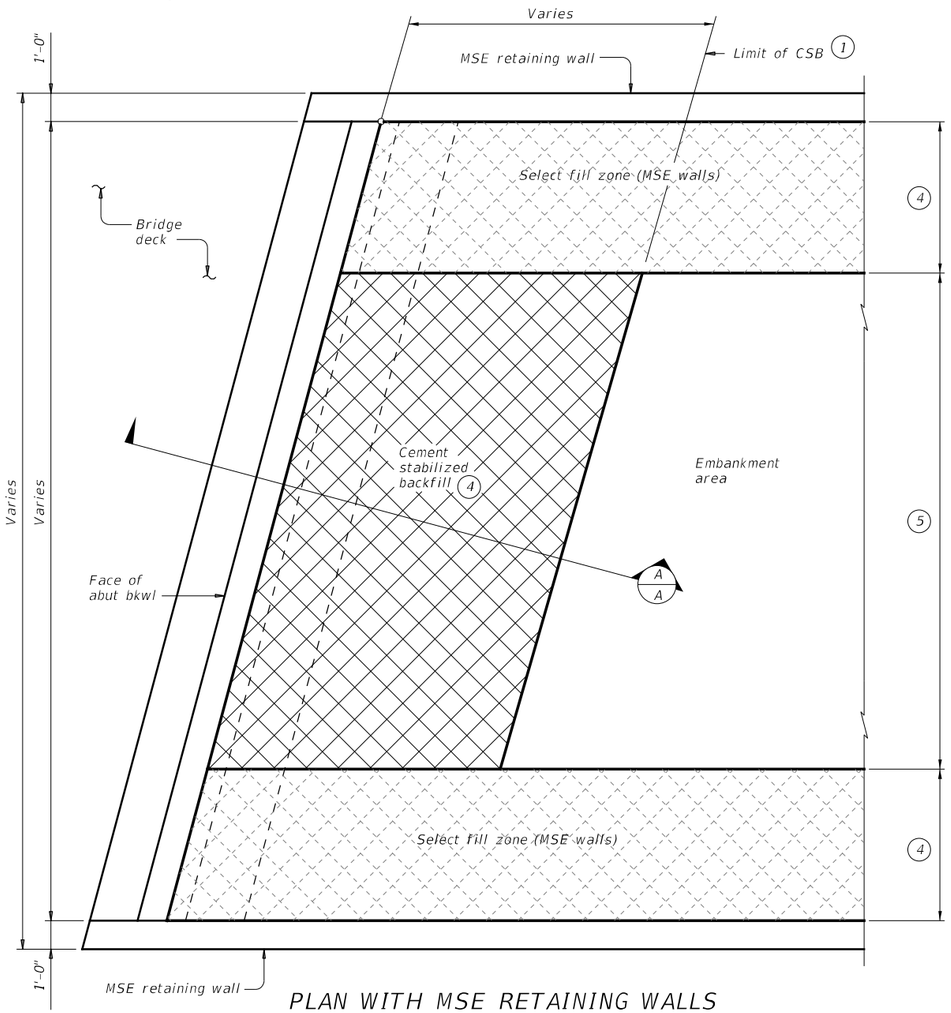

PLAN WITH MSE RETAINING WALLS

(1) Usual limit of Cement Stabilized Backfill is at end of wingwall. Extend CSB limits as required to maintain a slope no steeper than 1:1 at bottom of backfill.

(2) Bench backfill as shown with 12" (approximate) bench depths.

(3) Other materials can be used as a bond breaker if permitted by the Engineer. 2 layers of 30 Lb roofing felt or 2 layers of heavy mil polyethylene sheeting are examples.

(4) Where MSE retaining walls are present, adjust CSB limits to accommodate the select fill zone. See retaining wall details for additional information.

(5) When distance between select fill zones is less than 5'-0", MSE select fill may be substituted for cement stabilized backfill with approval from the Engineer.

GENERAL NOTES:

Provide Cement Stabilized Backfill (CSB) meeting the requirements of Item 400, "Excavation and Backfill for Structures", to the limits shown at bridge abutments.

Details are drawn showing left forward skew. See Bridge Layout for actual skew direction.

These details do not apply when Concrete Block retaining walls are used in lieu of wingwalls.

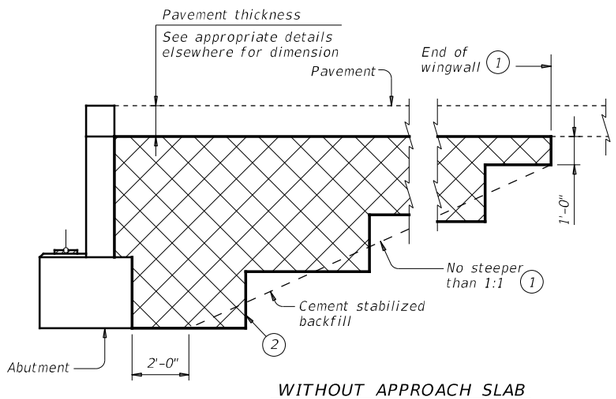

WITHOUT APPROACH SLAB

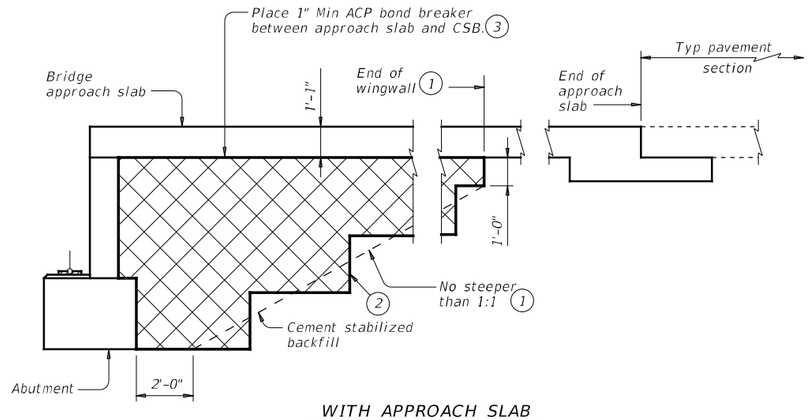

WITH APPROACH SLAB

SECTION A-A

Texas Department of Transportation

Bridge Division Standard

CEMENT STABILIZED ABUTMENT BACKFILL

BRIDGE ABUTMENT

CSAB

FILE: csabstel.dgn	DN: TxDOT	CK: TxDOT	DW: TxDOT	CK: TxDOT
©TxDOT January 2015	CONT	SECT	JOB	HIGHWAY
REVISIONS 01-16: Add MSE wall details.	2103	01	034	
	DIST	COUNTY		SHEET NO.
	AUS	WILLIAMSON		141

DATE: 3/22/2018 10:14:42 AM
FILE: c:\pwworking\dal\d0911849\csabstel.dgn

DISCLAIMER:
The use of this standard is governed by the "Texas Engineering Practice Act". No warranty of any kind is made by TxDOT for any purpose whatsoever. TxDOT assumes no responsibility for the conversion of this standard to other formats or for incorrect results or damages resulting from its use.

DATE: 3/22/2018 10:14:44 AM
FILE: c:\pwworking\dal\d0911849\fdstde01.dgn

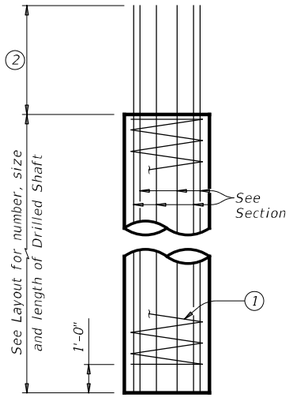

ABUTMENTS, WINGWALLS AND MULTI-DRILLED SHAFT FOOTINGS

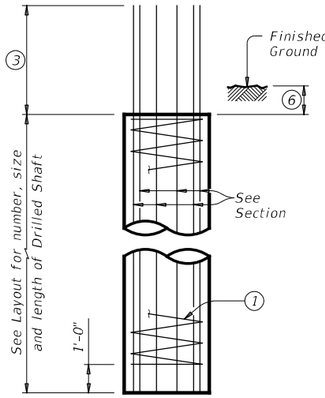

INTERIOR BENTS DRILLED SHAFT DIA EQUAL TO COLUMN DIA

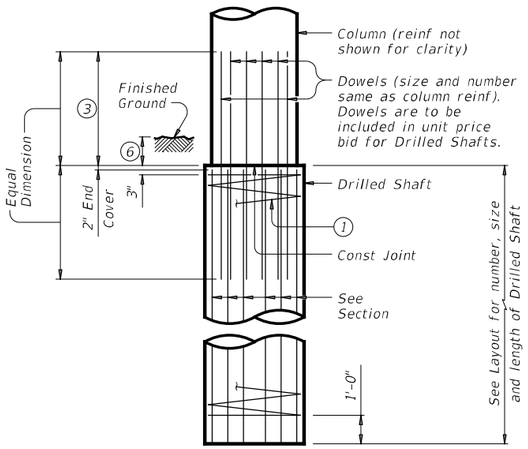

INTERIOR BENTS DRILLED SHAFT DIA GREATER THAN COLUMN DIA

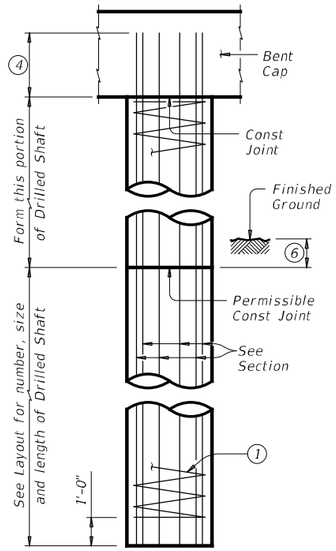

OPTIONAL INTERIOR BENT DRILLED SHAFT DETAIL (5)

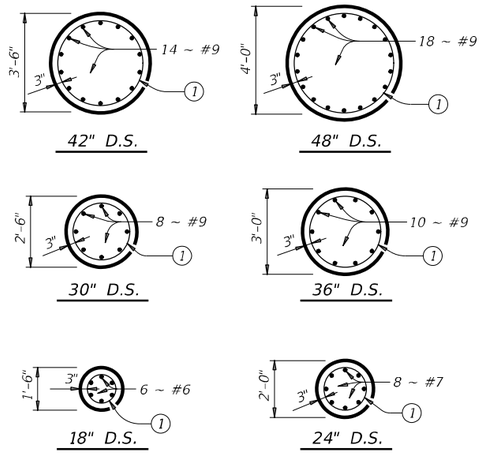

DRILLED SHAFT SECTIONS

DRILLED SHAFT DETAILS

TABLE OF PILE EMBEDMENT	
Pile Type	Embedment Depth (Ft)
16" Sq Concrete 18" Sq Concrete HP14 Steel HP16 Steel	1'-0"
20" Sq Concrete 24" Sq Concrete HP18 Steel	1'-6"

See standard CP for additional details on concrete pile embedment.

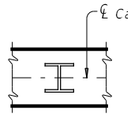

ORIENTATION OF STEEL H-PILING

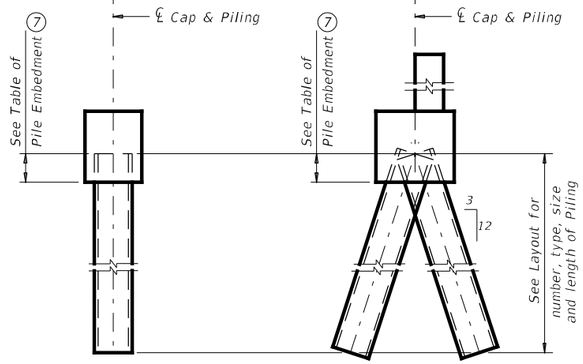

VERTICAL PILE BATTERED PILE

PILING DETAILS
(Concrete or Steel H)

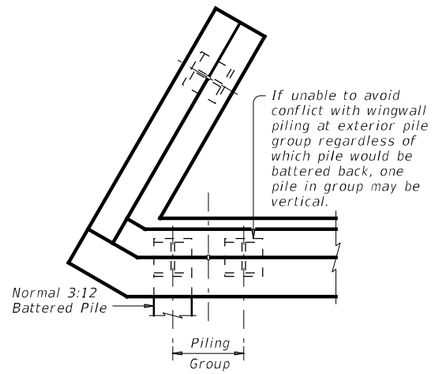

DETAIL "A"
(Showing Plan View of a 30° Skewed Abutment)

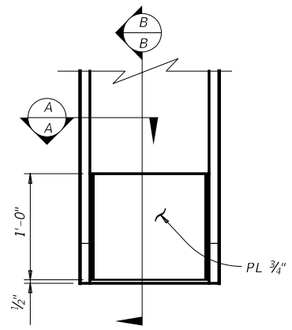

ELEVATION

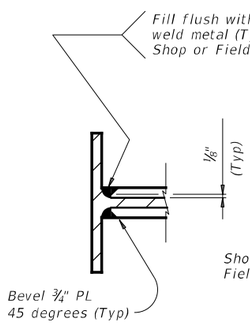

SECTION A-A

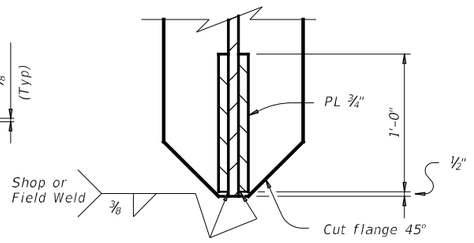

SECTION B-B

STEEL H-PILE TIP REINFORCEMENT

See Item 407 "Steel Piling" to determine when tip reinforcement is required and for options to the details shown.

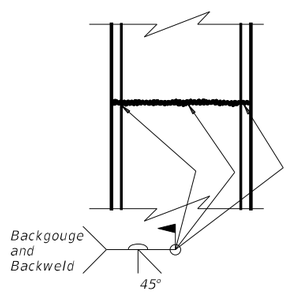

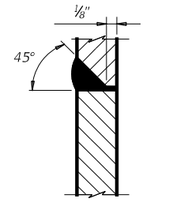

SECTION THRU FLANGE OR WEB

STEEL H-PILE SPLICE DETAIL

Use when required.

(1) #3 Spiral at 6" pitch (One and a half flat turns top & bottom).

(2) Min extension into supported element:
#6 Bars = 1'-6"
#7 Bars = 1'-8"
#9 Bars = 2'-3"

(3) Min lap with Column reinf:
#7 Bars = 2'-9"
#9 Bars = 4'-6"

(4) Min extension into supported element:
#6 Bars = 1'-6"
#7 Bars = 1'-8"
#9 Bars = 2'-8"

(5) Drilled Shafts may extend to the bottom of bent caps for "H" heights of 6 ft and less (as shown on the Bridge Layout), if approved. This option can only be used when the Drilled Shaft diameter equals the Column diameter. Obtain approval of the forming method above the ground line prior to construction. No adjustments in payment will be made if this option is used.

(6) 1'-0" Min

(7) Or as shown on plans.

SHEET 1 OF 2

Texas Department of Transportation | Bridge Division Standard

COMMON FOUNDATION DETAILS

FD

FILE: fdstde01.dgn	DN: TxDOT	CK: TxDOT	DW: TxDOT	CK: TxDOT
©TxDOT January 2015 REVISIONS	CONT	SECT	JOB	HIGHWAY
	2103	01	034	
	DIST	COUNTY		SHEET NO.
	AUS	WILLIAMSON		142

DISCLAIMER:
The use of this standard is governed by the "Texas Engineering Practice Act". No warranty of any kind is made by TxDOT for any purpose whatsoever. TxDOT assumes no responsibility for the conversion of this standard to other formats or for incorrect results or damages resulting from its use.

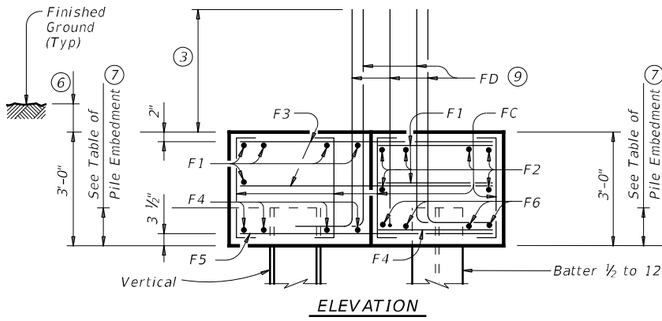

ELEVATION

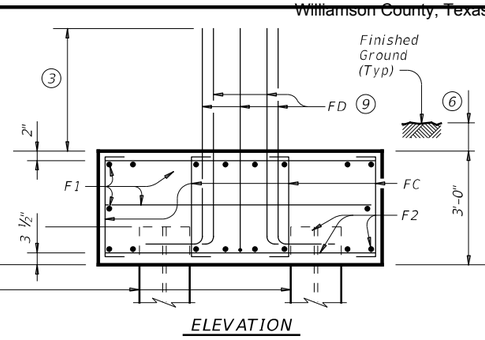

ELEVATION

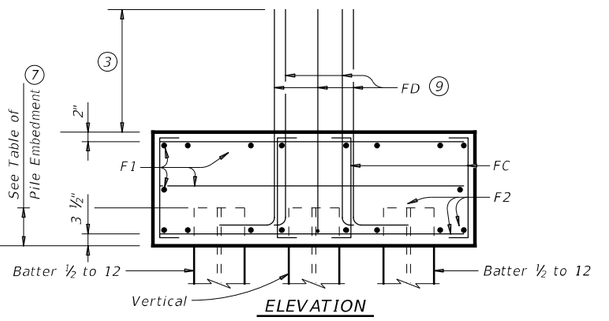

ELEVATION

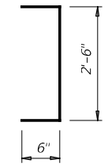

BARS FC

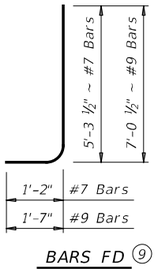

BARS FD (9)

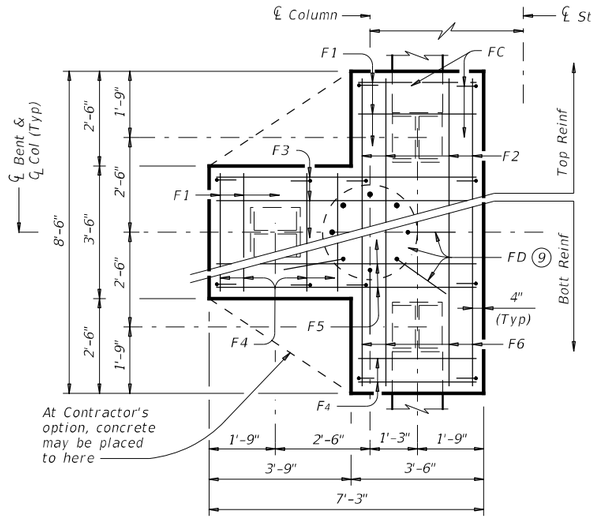

PLAN

THREE PILE FOOTING (8)

For 36" Dia and smaller columns.

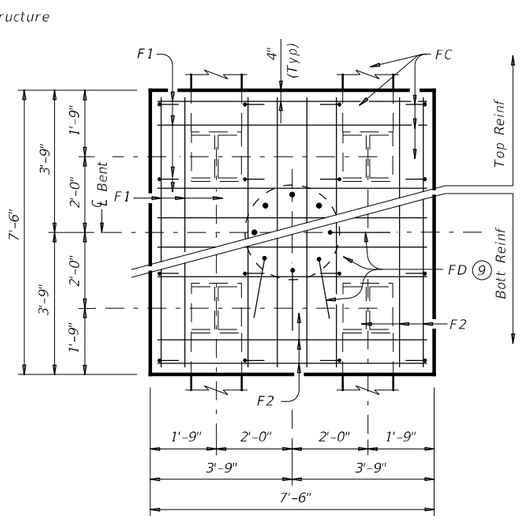

PLAN

FOUR PILE FOOTING (8)

For 42" Dia and smaller columns.

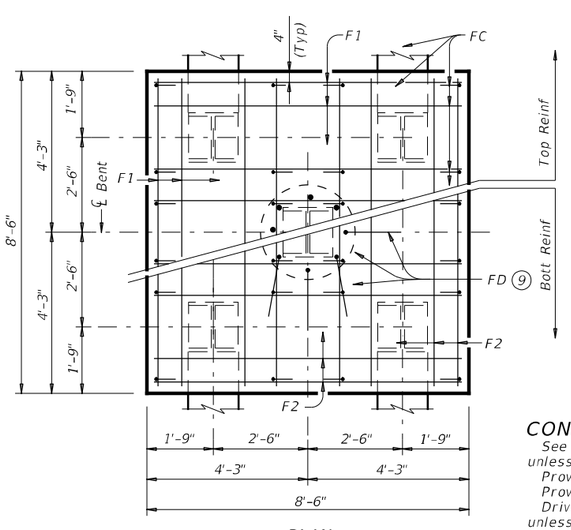

PLAN

FIVE PILE FOOTING (8)

For 42" Dia and smaller columns.

TABLE OF FOOTING QUANTITIES FOR 30" COLUMNS

ONE 3 PILE FOOTING				
Bar	No.	Size	Length	Weight
F1	11	#4	3'- 2"	23
F2	6	#4	8'- 2"	33
F3	6	#4	6'- 11"	28
F4	8	#9	3'- 2"	86
F5	4	#9	6'- 11"	94
F6	4	#9	8'- 2"	111
FC	12	#4	3'- 6"	28
FD (10)	8	#9	8'- 8"	236
Reinforcing Steel			Lb	639
Class "C" Concrete			CY	4.8

ONE 4 PILE FOOTING				
Bar	No.	Size	Length	Weight
F1	20	#4	7'- 2"	96
F2	16	#8	7'- 2"	306
FC	16	#4	3'- 6"	37
FD (11)	8	#9	8'- 8"	236
Reinforcing Steel			Lb	675
Class "C" Concrete			CY	6.3

ONE 5 PILE FOOTING				
Bar	No.	Size	Length	Weight
F1	20	#4	8'- 2"	109
F2	16	#9	8'- 2"	444
FC	24	#4	3'- 6"	56
FD (11)	8	#9	8'- 8"	236
Reinforcing Steel			Lb	845
Class "C" Concrete			CY	8.0

CONSTRUCTION NOTES:

See Bridge Layout for foundation type required. Use these foundation details unless shown otherwise.
Provide Class C Concrete (f'_c = 3600 psi), unless shown otherwise.
Provide Grade 60 reinforcing steel.
Drive piling under abutment wingwalls to a minimum resistance of 10 Tons/Pile unless shown otherwise.

GENERAL NOTES:

Designed according to AASHTO LRFD Specifications.

Cover dimensions are clear dimensions, unless noted otherwise.
Reinforcing bar dimensions shown are out-to-out of bar.

DESIGNER NOTES:

Do not use the Drilled Shaft details shown on this standard for retaining wall, noise wall, barrier or sign foundations without structural evaluation.
Do not use the footings shown on this standard in direct contact with salt water or exposed to salt water spray.
Maximum allowable pile loads for the footings shown are :
72 Tons/Pile with 24" Dia Columns
80 Tons/Pile with 30" Dia Columns
100 Tons/Pile with 36" Dia Columns
120 Tons/Pile with 42" Dia Columns

(3) Min lap with Column reinf:
#7 Bars = 2'-9"
#9 Bars = 4'-6"

(6) 1'-0" Min

(7) Or as shown on plans.

(8) See Layout for Type, Size and length of Piling.

(9) Number and size of FD bars must match Column reinforcing. Tie FD bars to the top of the bottom reinforcing mat.

(10) For 24" Columns, use #7 FD bars (6'-6") in place of #9 bars and deduct 130 lbs.
For 36" Columns, add 2 FD bars (59 lbs).

(11) For 24" Columns, use #7 FD bars (6'-6") in place of #9 bars and deduct 130 lbs.
For 36" Columns, add 2 FD bars (59 lbs).
For 42" Columns, add 6 FD bars (177 lbs)
(42" Columns disallowed on 3 Pile Footings)

Texas Department of Transportation

Bridge Division Standard

COMMON FOUNDATION DETAILS

FD

FILE: fdstde01.dgn	DN: TxDOT	CK: TxDOT	DW: TxDOT	CK: TxDOT
©TxDOT January 2015	CONT	SECT	JOB	HIGHWAY
REVISIONS	2103	01	034	
	DIST	COUNTY		SHEET NO.
	AUS	WILLIAMSON		143

DATE: 3/22/2018 10:14:46 AM
FILE: c:\pwworking\dal\d0911849\fdstde01.dgn

DISCLAIMER:
The use of this standard is governed by the "Texas Engineering Practice Act". No warranty of any kind is made by TxDOT for any purpose whatsoever. TxDOT assumes no responsibility for the conversion of this standard to other formats or for incorrect results or damages resulting from its use.

DATE: 3/22/2018 10:14:48 AM
FILE: c:\pwworking\dal\d0911849\igdstds1.dgn

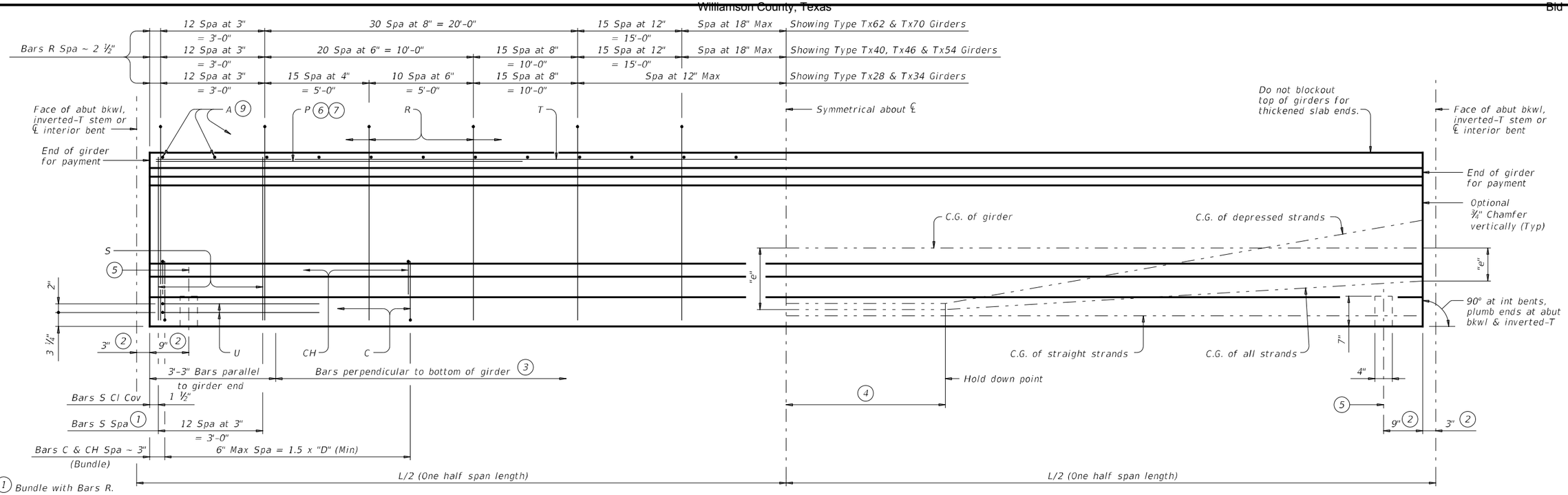

(1) Bundle with Bars R.

(2) Measured along ℄ Girder at interior bents; perpendicular to abutment bkwl or inverted-T stem.

(3) The average of the top and bottom spacing of Bars R cannot exceed the required spacing.

(4) L/20, but not less than 5'-0" (-0,+2').

(5) ℄ 4" x 1 ½" Vertical Slotted Hole at doweled girder end [labeled (D) on Bridge Layout]. Required for outside girder only or as shown on substructure details. Anchorage holes may be tapered (4 ¾" x 1 ⅝") at base. If holes are formed with sheet metal, forms may be left in place.

GIRDER ELEVATION

(6) Bars P (#6 x 15'-0") required in Tx62 and Tx70 girders. At the fabricator's option bars larger than #6 may be used. When L is less than 50 ft, Bars P are to be the same length as Bars T.

(7) Bars P (#6 x 15'-0") are only required in Tx28, Tx34, Tx40, Tx46, and Tx54 girders when "e" at girder ends exceeds 0.25 x "D". At the fabricator's option bars larger than #6 may be used. When L is less than 50 ft, Bars P are to be the same length as Bars T.

(8) 1 ⅜" Clear Cover to Bars S.

(9) Space Bars A at 6" Max for girders requiring overhang bracket hangers. Space at 12" Max for all other girders. Tie to Bars R as necessary. See standard IGMS for "Deck Forming Notes".

(10) Based on 155 pcf total weight of concrete and reinforcing steel.

(11) Smooth trowel finish on the slab overhang side of exterior girder.

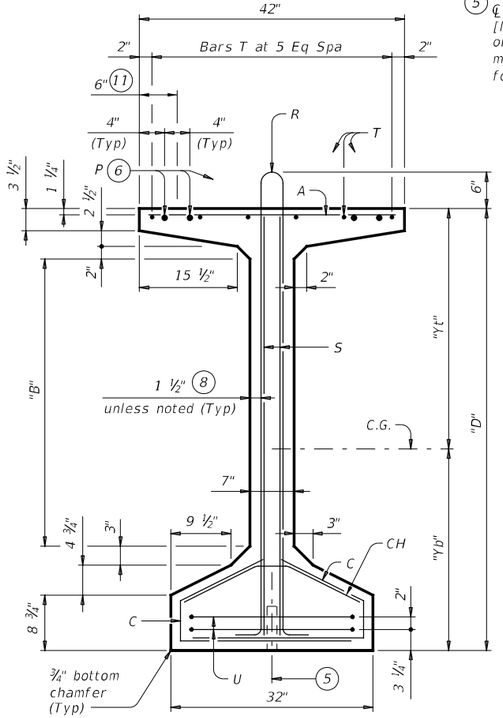

TYPE Tx62 & Tx70

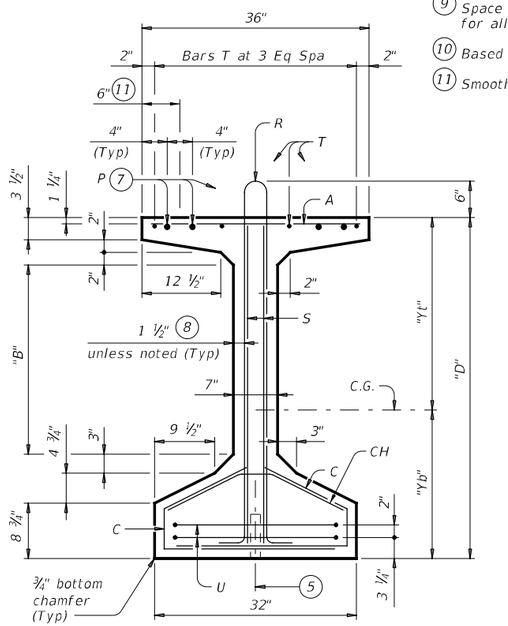

TYPE Tx46 & Tx54

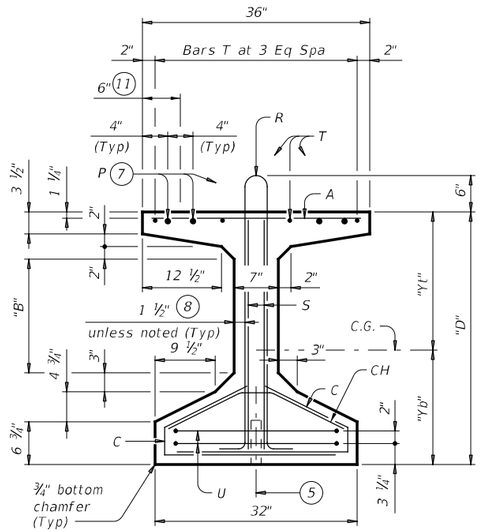

TYPE Tx28, Tx34 & Tx40

GIRDER DIMENSIONS AND SECTION PROPERTIES

Girder Type	"D" (in.)	"B" (in.)	"Yt" (in.)	"Yb" (in.)	Area (in.²)	"Ix" (in.⁴)	"Iy" (in.⁴)	Weight (10) (plf)
Tx28	28	6	15.02	12.98	585	52,772	40,559	630
Tx34	34	12	18.49	15.51	627	88,355	40,731	675
Tx40	40	18	21.90	18.10	669	134,990	40,902	720
Tx46	46	22	25.90	20.10	761	198,089	46,478	819
Tx54	54	30	30.49	23.51	817	299,740	46,707	880
Tx62	62	37 ½"	33.72	28.28	910	463,072	57,351	980
Tx70	70	45 ½"	38.09	31.91	966	628,747	57,579	1,040

GENERAL NOTES:

Designed according to AASHTO LRFD Bridge Design Specifications.
Provide Class H concrete.
Provide Grade 60 reinforcing steel.
An equal area of deformed Welded Wire Reinforcement (WWR) (ASTM A1064) may be substituted for Bars A, C, R or T unless otherwise noted.
It is permissible for bars or strands to come in contact with materials used in forming anchor holes.

Cover dimensions are clear dimensions, unless noted otherwise. Reinforcing bar dimensions shown are out-to-out of bar.

HL93 LOADING

Texas Department of Transportation

Bridge Division Standard

PRESTRESSED CONCRETE I-GIRDER DETAILS

IGD

FILE: igdstds1-17.dgn	DN: TxDOT	CK: JMH	DW: JTR	CK: JMH
©TxDOT August 2017 REVISIONS	CONT	SECT	JOB	HIGHWAY
	2103	01	034	
	DIST	COUNTY		SHEET NO.
	AUS	WILLIAMSON		144

DISCLAIMER:
The use of this standard is governed by the "Texas Engineering Practice Act". No warranty of any kind is made by TxDOT for any purpose whatsoever. TxDOT assumes no responsibility for the conversion of this standard to other formats or for incorrect results or damages resulting from its use.

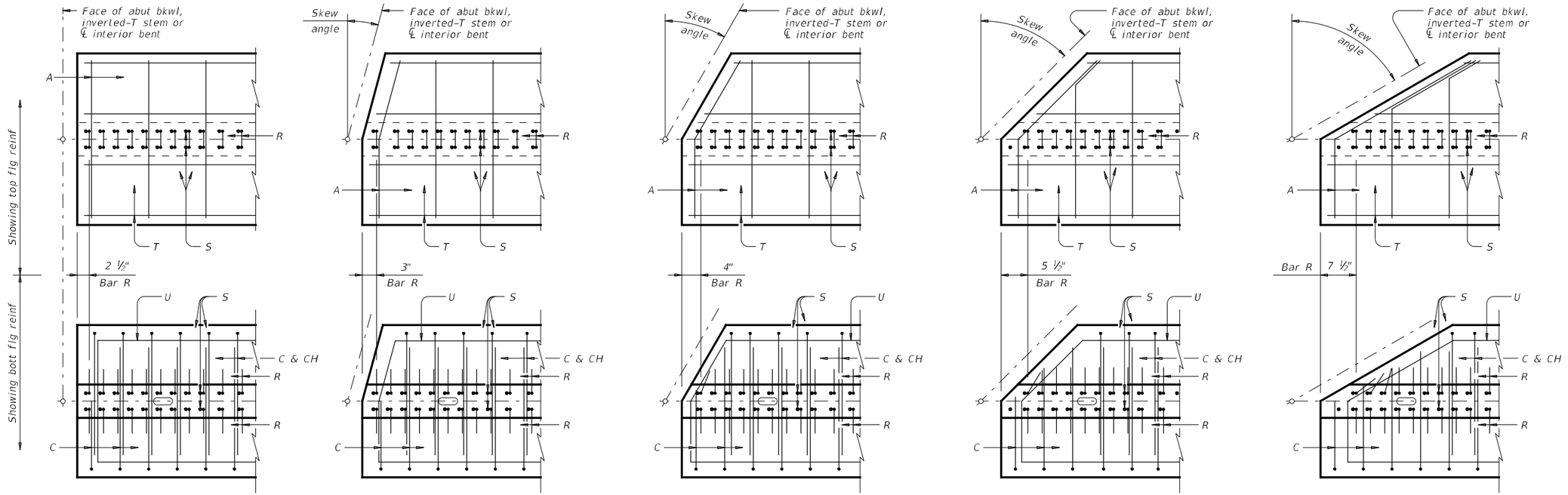

PLAN OF GIRDER ENDS (12)

To control top flange cracking that may occur during form removal, additional top flange reinforcing may be placed as shown in girder ends at the Fabricator's option.

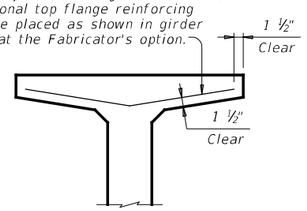

OPTIONAL TOP FLANGE REINFORCING DETAIL

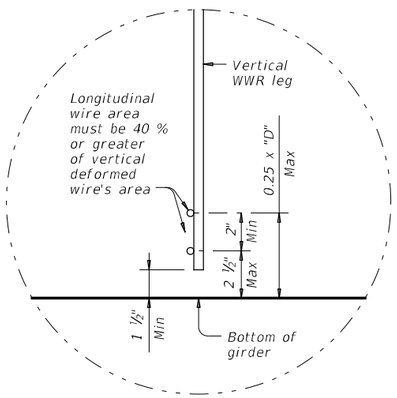

OPTIONAL WELDED WIRE REINFORCEMENT (WWR) DETAIL

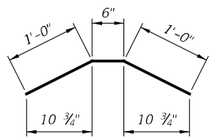

BARS CH (#4)

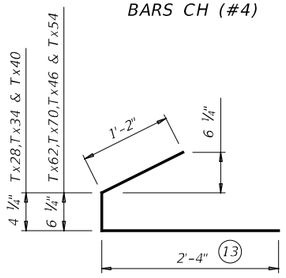

BARS C (#4)

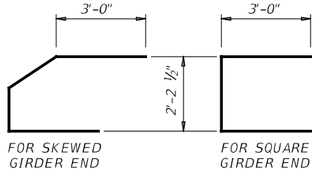

BARS U (#5)

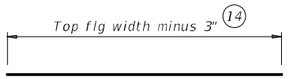

BARS A (#3)

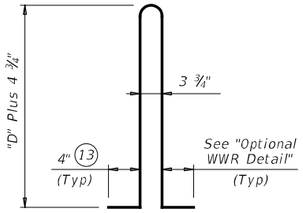

BARS R (#4) (16)



BARS S (#6)

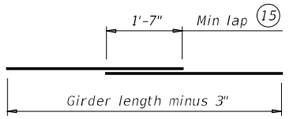

BARS T (#4)

(12) Reinforcing patterns shown are provided as guides to determine reinforcement placement in skewed ends. Place Bars S as close to girder end as cover requirements permit, which may prevent them to be bundled with Bars R.

(13) Bars may be cut or bent at skewed end as required.

(14) Increase as necessary for bars at skewed end.

(15) No portion of bar less than 10 ft.

(16) For Welded Wire Reinforcement (WWR) option, area of Bars R may be reduced in proportion to the increase in reinforcement yield strength over 60 ksi. Yield strength of WWR is limited to 75 ksi.

HL93 LOADING SHEET 2 OF 2

Texas Department of Transportation | Bridge Division Standard

PRESTRESSED CONCRETE I-GIRDER DETAILS

IGD

FILE: igdstds1-17.dgn	DN: TxDOT	CK: JMH	DW: JTR	CK: JMH
©TxDOT August 2017	CONT	SECT	JOB	HIGHWAY
REVISIONS	2103	01	034	
	DIST	COUNTY		SHEET NO.
	AUS	WILLIAMSON		145

DATE: 3/22/2018 10:14:49 AM
FILE: c:\pwworking\dal\d0911849\igdstds1.dgn

DISCLAIMER:
The use of this standard is governed by the "Texas Engineering Practice Act". No warranty of any kind is made by TxDOT for any purpose whatsoever. TxDOT assumes no responsibility for the conversion of this standard to other formats or for incorrect results or damages resulting from its use.

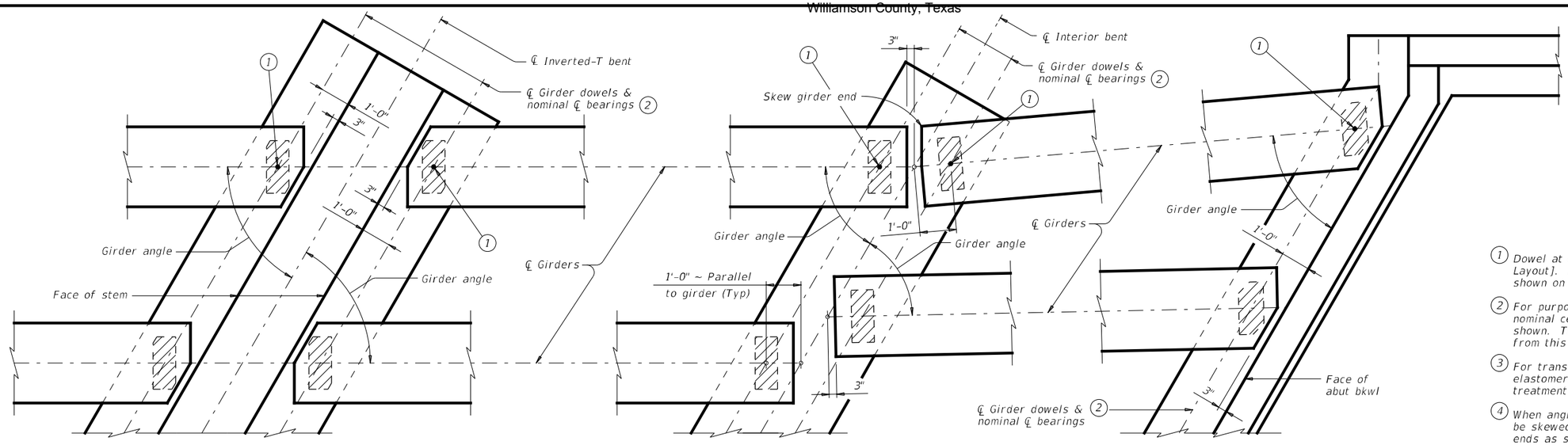

AT INVERTED-T BENT W/SKEW

AT CONVENTIONAL INTERIOR BENT W/SKEW

AT ABUTMENT W/SKEW (3)

(1) Dowel at doweled girder end [labeled (D) on Bridge Layout]. Required for outside girder only or as shown on substructure details.

(2) For purposes of computing bearing seat elevations, nominal centerline of bearing must be defined as shown. The actual center of bearing pad may vary from this line.

(3) For transition bents with backwall, girder and elastomeric bearings must receive the same treatment as shown for abutments.

(4) When angle exceeds 0°, one or both girders ends must be skewed to maintain the clearance between girder ends as shown in view.

(5) See Table of Bearing Pad Dimensions for bearing size. Girder end skew angles in Table not applicable for this situation. Table reflects girder conflicts of this type on radial bents only.

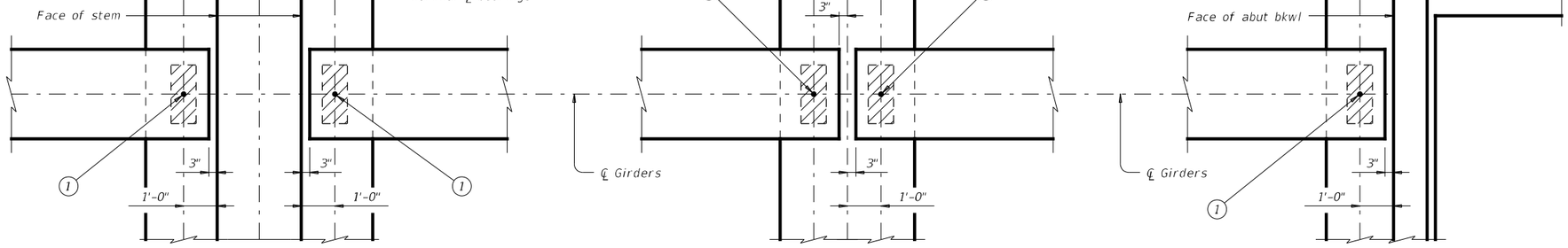

AT INVERTED-T BENT

AT CONVENTIONAL INTERIOR BENT

AT ABUTMENT (3)

GIRDER END DETAILS

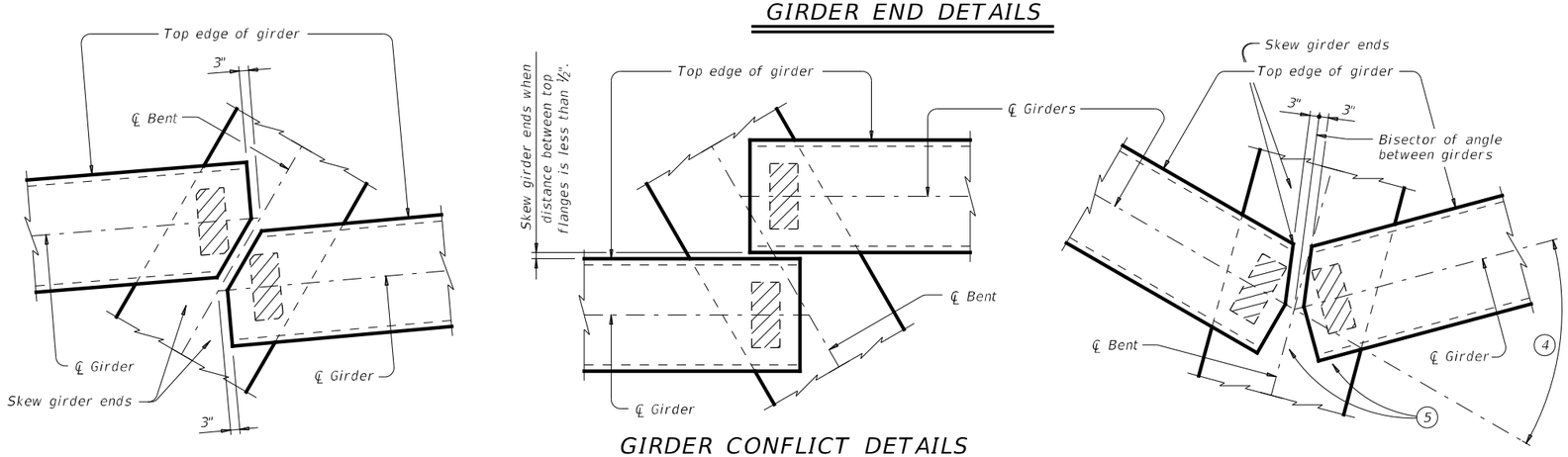

GIRDER CONFLICT DETAILS

GENERAL NOTES:

These details accommodate skew angles up to 60°.

Shop drawings for approval are required.

A bearing layout which identifies location and orientation of all bearings must be developed by the bearing fabricator. Permanently mark each bearing in accordance with the bearing layout. A copy of the bearing layout is to be provided to the Engineer.

Cost of furnishing and installing elastomeric bearings, including beveled and embedded steel plates, must be included in unit price bid for "Prestressed Concrete Girders".

HL93 LOADING SHEET 1 OF 3

Texas Department of Transportation — Bridge Division Standard

ELASTOMERIC BEARING AND GIRDER END DETAILS
PRESTR CONCRETE I-GIRDERS

IGEB

FILE: igebsts1-17.dgn	DN: AEE	CK: JMH	DW: JTR	CK: TxDOT
©TxDOT August 2017	CONT	SECT	JOB	HIGHWAY
REVISIONS	2103	01	034	
	DIST	COUNTY		SHEET NO.
	AUS	WILLIAMSON		146

DATE: 3/22/2018 10:14:51 AM
FILE: c:\pwworking\dot\d0911849\igebsts1.dgn

DISCLAIMER:
The use of this standard is governed by the "Texas Engineering Practice Act". No warranty of any kind is made by TxDOT for any purpose whatsoever. TxDOT assumes no responsibility for the conversion of this standard to other formats or for incorrect results or damages resulting from its use.

DATE: 3/22/2018 10:14:52 AM
FILE: c:\pwworking\dal\d0911849\igebsts1.dgn

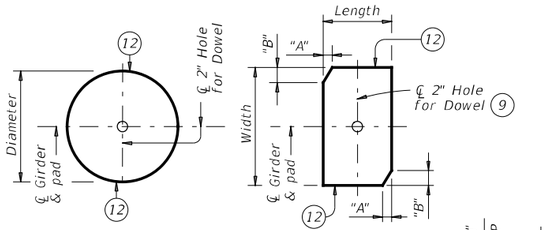

PLANS (10)

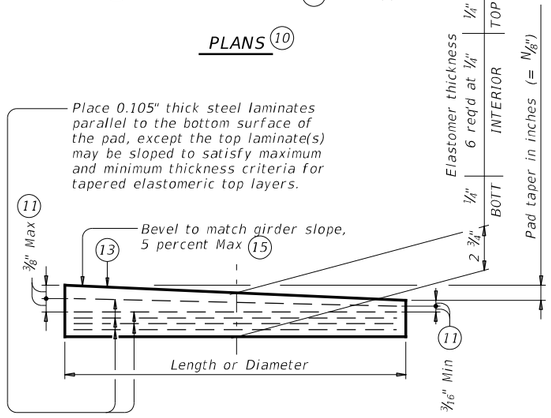

ELEVATION

LAMINATED ELASTOMERIC BEARING PAD

(50 DUROMETER)

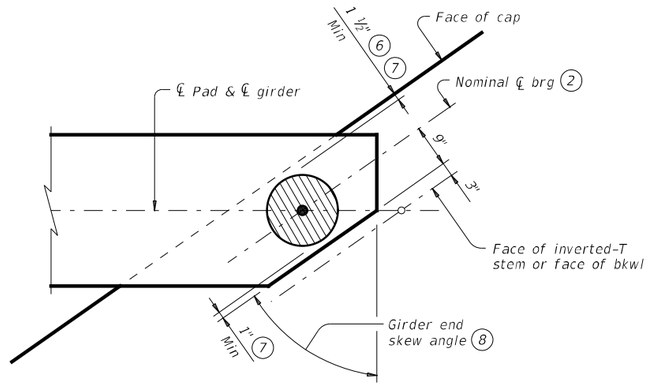

ROUND BEARINGS FOR SKEWED GIRDER ENDS AT FACE OF INVERTED-T STEM OR FACE OF BKWL

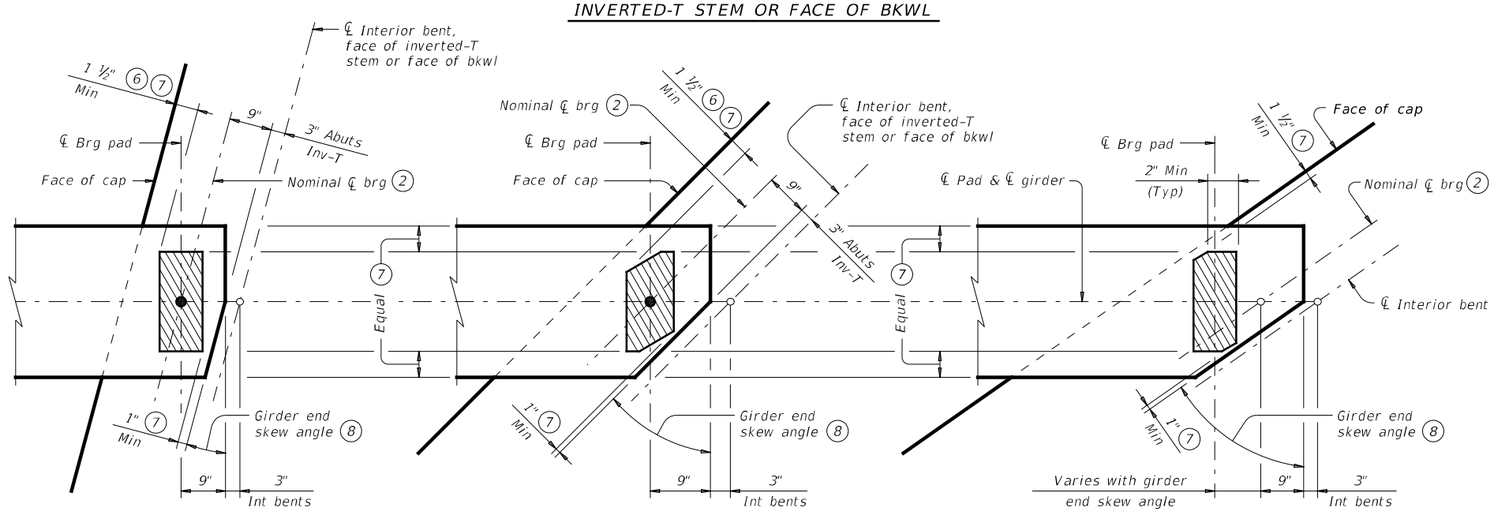

SKEWED GIRDER ENDS AT INT BENTS, FACE OF INVERTED-T STEM OR FACE OF BKWL

SKEWED GIRDER ENDS AT CONVENTIONAL INTERIOR BENTS (16)
(NO GIRDER DOWELS)

BEARING PAD PLACEMENT DIAGRAMS

TABLE OF MINIMUM SUBSTRUCTURE DIMENSIONS (14)

Girder Type	Abutments: Face of Bkwl to Face of Cap	Int Bents: Overall Cap Width	Inv-T Bents: Corbel Width
Tx28 thru Tx54	1'-9"	3'-6"	1'-10 ½"
Tx62 & Tx70	2'-0"	4'-0"	2'-1 ½"

TABLE OF BEARING PAD DIMENSIONS

Bent Type	Girder Type	Bearing Type (13)	Girder End Skew Angle Range	Pad Size Lgth x Wdth	Pad Clip Dimensions "A"	Pad Clip Dimensions "B"
ABUTMENTS, INVERTED-T AND TRANSITION BENTS WITH BACKWALLS	Tx28,Tx34, Tx40,Tx46 & Tx54	G-1-"N"	0° thru 21°	8" x 21"	---	---
		G-2-"N"	21°+ thru 30°	8" x 21"	1 ½"	2 ½"
		G-3-"N"	30°+ thru 45°	9" x 21"	4 ½"	4 ½"
		G-4-"N"	45°+ thru 60°	15" Dia	---	---
	Tx62 & Tx70	G-5-"N"	0° thru 21°	9" x 21"	---	---
		G-6-"N"	21°+ thru 30°	9" x 21"	1 ½"	2 ½"
		G-7-"N"	30°+ thru 45°	10" x 21"	4 ½"	4 ½"
		G-8-"N"	45°+ thru 60°	10" x 21"	7 ¼"	4 ¼"
CONVENTIONAL INTERIOR BENTS	Tx28,Tx34, Tx40,Tx46 & Tx54	---	---	---	---	---
		---	---	---	---	---
		G-1-"N"	0° thru 60°	8" x 21"	---	---
	Tx62 & Tx70	G-5-"N"	0° thru 60°	9" x 21"	---	---
CONVENTIONAL INTERIOR BENTS WITH SKEWED GIRDER ENDS (GIRDER CONFLICTS) (16)	Tx28,Tx34, Tx40,Tx46 & Tx54	G-1-"N"	0° thru 18°	8" x 21"	---	---
		G-2-"N"	18°+ thru 30°	8" x 21"	1 ½"	2 ½"
		G-9-"N"	30°+ thru 45°	8" x 21"	3"	3"
		G-10-"N"	45°+ thru 60°	9" x 21"	6"	3 ½"
	Tx62 & Tx70	G-5-"N"	0° thru 18°	9" x 21"	---	---
		G-5-"N"	18°+ thru 30°	9" x 21"	---	---
		G-11-"N"	30°+ thru 45°	9" x 21"	1 ½"	1 ½"
		G-12-"N"	45°+ thru 60°	9" x 21"	3"	1 ¾"

(2) For purposes of computing bearing seat elevations, nominal centerline of bearing must be defined as shown. The actual center of bearing pad may vary from this line.

(6) 3" for inverted-T.

(7) Place centerline pad as near nominal centerline bearing as possible between limits shown.

(8) Girder end skew angle is equal to 90° minus the girder angle except at some conflicting girders.

(9) Provide 2" dia hole only at locations required. See Substructure details for location.

(10) See Table of Bearing Pad Dimensions for dimensions.

(11) Maximum and minimum layer thicknesses shown are for elastomer only, on tapered layers.

(12) Locate Permanent Mark here.

(13) Indicate BEARING TYPE on all pads. For tapered pads, locate BEARING TYPE on the high side. The Fabricator must include the value of "N" (amount of taper in ⅛" increments) in this mark.
Examples: N=0, (for 0" taper)
N=1, (for ⅛" taper)
N=2, (for ¼" taper)
(etc.)
Fabricated pad top surface slope must not vary from plan girder slope by more than $\left(\frac{0.0625"}{\text{Length or Dia}}\right)$ IN/IN.

(14) Substructure dimensions must satisfy the minimums provided to accommodate the elastomeric bearings shown on this standard.

(15) See sheet 3 of 3 for beveled plate use when slopes exceed 5 percent.

(16) If girder end is skewed for a girder conflict at an interior bent and a beveled sole plate is required, use bearing type for abutments at this location. Location of bearing centerline is to be set as for abutments in this case.

HL93 LOADING SHEET 2 OF 3

Texas Department of Transportation | Bridge Division Standard

ELASTOMERIC BEARING AND GIRDER END DETAILS

PRESTR CONCRETE I-GIRDERS

IGEB

FILE: igebsts1-17.dgn	DN: AEE	CK: JMH	DW: JTR	CK: TxDOT
©TxDOT August 2017 REVISIONS	CONT	SECT	JOB	HIGHWAY
	2103	01	034	
	DIST	COUNTY		SHEET NO.
	AUS	WILLIAMSON		147

DISCLAIMER:
The use of this standard is governed by the "Texas Engineering Practice Act". No warranty of any kind is made by TxDOT for any purpose whatsoever. TxDOT assumes no responsibility for the conversion of this standard to other formats or for incorrect results or damages resulting from its use.

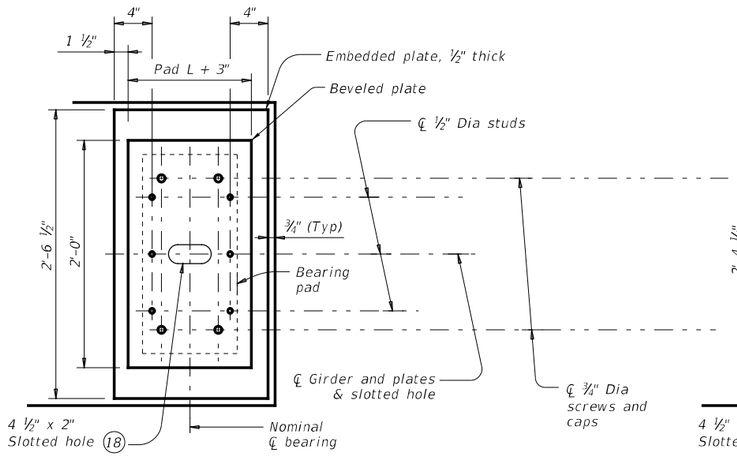

NORMAL GIRDER END
RECTANGULAR BEARING PAD

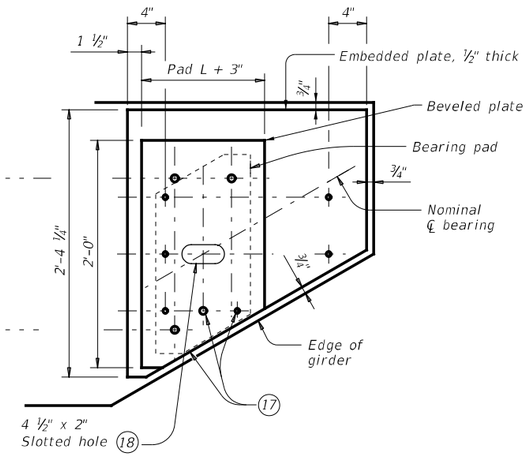

SKEWED GIRDER END
CLIPPED RECTANGULAR BEARING PAD

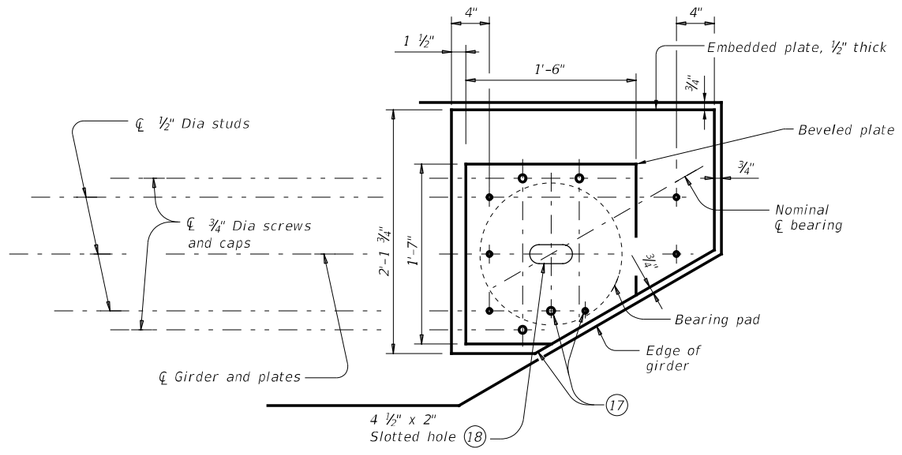

SKEWED GIRDER END
15" DIA BEARING PAD

PLAN VIEW OF SOLE PLATE DETAILS

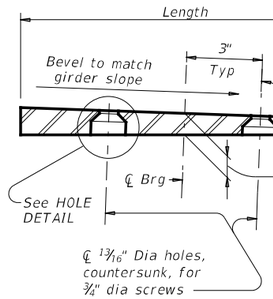

SECTION

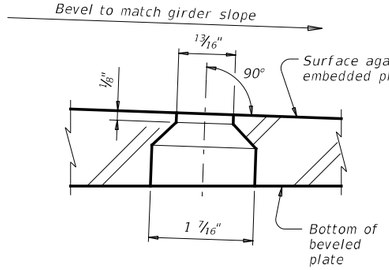

HOLE DETAIL

(17) Cut beveled and embedded plates to match girder end skew. Adjust location of screw and stud as shown when necessary.

(18) Slotted hole is required at doweled girder end locations.

SOLE PLATE NOTES:

Provide constant thickness elastomeric bearings with beveled and embedded steel sole plates in accordance with these details when the girder slope exceeds 5 percent or if otherwise required in the plans. Provide for all girders in the span.

On the shop drawings, dimension sole plates to the nearest 1/16" based on required thickness at centerline of bearing and slope of girder. Thickness tolerance variation from the approved shop drawings is 1/16"+/-, except variation from a plane parallel to the theoretical top surface can not exceed 1/16" total. Bearing surface tolerances listed in Item 424 apply to embedded and beveled plates.

Steel plate must conform to ASTM A36, A572 Gr 50, or A709 Gr 36 or Gr 50. Hot dip galvanize both the embedded plate and beveled sole plate after fabrication. Seal weld caps to embedded plate before galvanizing.

When determining if relocation of screw holes and studs are necessary for skewed girder ends, minimum clearance from screw or stud centerline to plate edge is 1.25".

Tap threads in the embedded plate only. Drill and tap prior to galvanizing.

¾" Dia screws must be electroplated, socket flat head countersunk cap screws conforming to ASTM F835. Electroplating must conform to ASTM B633, SC 2, Type I. Provide screws long enough to maintain a ¾" minimum embedment into the embedded plate and galvanized cap. Provide galvanized steel caps (16 ga Min) with a nominal 1" inside diameter and deep enough to accommodate the screws, but not less than ½" deep or deeper than 1".

Install beveled sole plates prior to shipping girders. Installed screw heads must not protrude below the bottom of the beveled plate.

BEVELED PLATE DETAILS

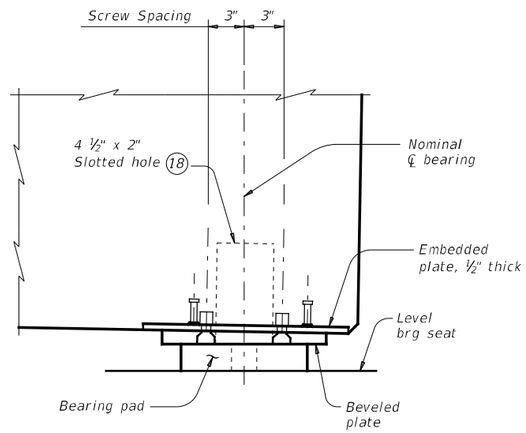

SIDE ELEVATION

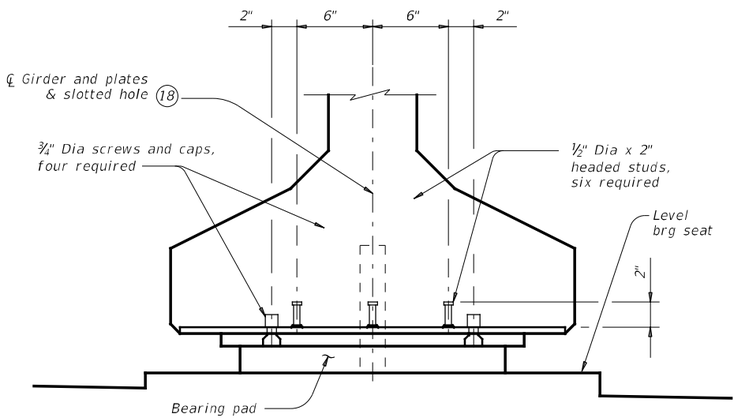

END ELEVATION
Showing normal girder end.

GIRDER DETAILS

HL93 LOADING SHEET 3 OF 3

Texas Department of Transportation | Bridge Division Standard

ELASTOMERIC BEARING AND GIRDER END DETAILS
PRESTR CONCRETE I-GIRDERS

IGEB

FILE: igebsts1-17.dgn	DN: AEE	CK: JMH	DW: JTR	CK: TxDOT
©TxDOT August 2017 REVISIONS	CONT	SECT	JOB	HIGHWAY
	2103	01	034	
	DIST	COUNTY		SHEET NO.
	AUS	WILLIAMSON		148

DATE: 3/22/2018 10:14:54 AM
FILE: c:\pwworking\ddi\d0911849\igebsts1.dgn

DISCLAIMER:
The use of this standard is governed by the "Texas Engineering Practice Act". No warranty of any kind is made by TxDOT for any purpose whatsoever. TxDOT assumes no responsibility for the conversion of this standard to other formats or for incorrect results or damages resulting from its use.

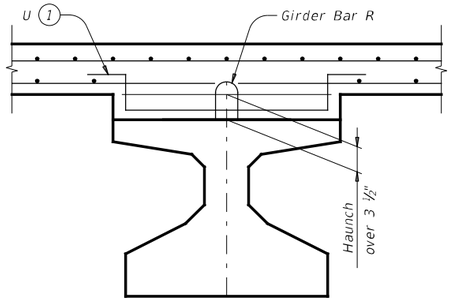

HAUNCH REINFORCING DETAIL

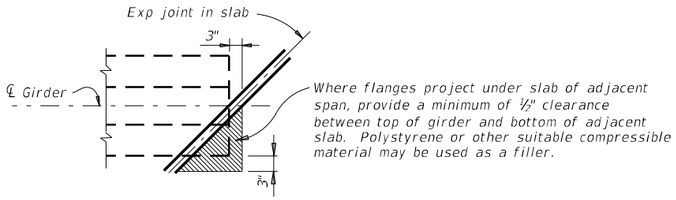

TREATMENT AT GIRDER END FOR SKEWED SPANS

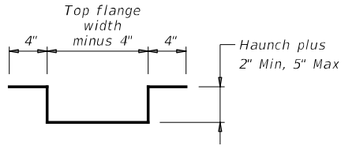

BARS U (#4)

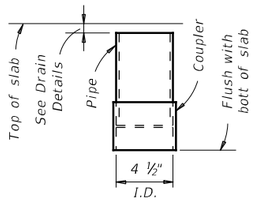

C-I-P DRAIN DETAIL (2)

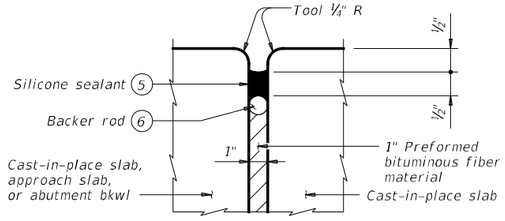

TYPE A JOINT DETAIL (7)

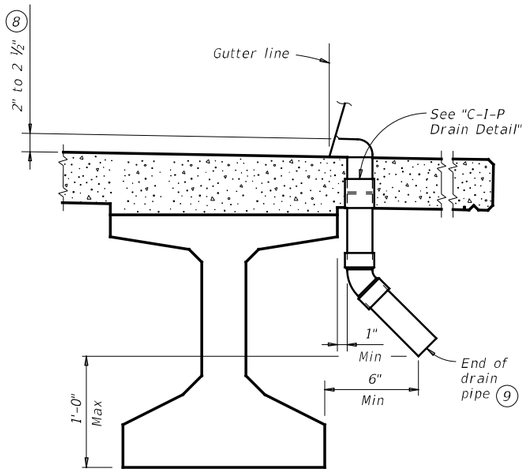

DRAIN DETAIL (10)

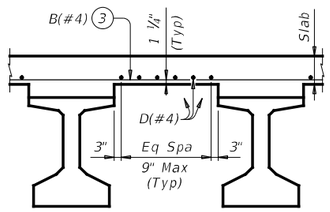

TYPICAL PART TRANSVERSE SLAB SECTION WITHOUT PCP (4)

Top reinforcing steel not shown for clarity.

(1) Space Bars U with girder Bars R in all areas where measured haunch exceeds 3 ½".

(2) Roughen outside of PVC with coarse rasp or equal to ensure bond with cast-in-place concrete.

(3) Bars B(#4) spaced at 9" Max with 2" end cover. Overhang option, Contractor's may end alternating bars B(#4) at centerline outside girder.

(4) Provide Grade 60 reinforcing steel. Provide bar laps, where required, as follows:
Uncoated ~ #4 = 1'-7"
Epoxy coated ~ #4 = 2'-5"

(5) Class 7 silicone sealant that conforms to DMS-6310. Install when ambient temperature is between 55°F and 85°F and rising. Engineer to determine allowable hours for sealant application.

(6) 1 ¼" backer rod must be compatible with joint sealant. Use of multiple pieces to create a backer rod cross section is not permitted. Top of backer rod must be convex as shown.

(7) The maximum distance between Type A expansion joints is 100'. See Bridge Layout for location of joints. Type A joints are subsidiary to Item 422, "Concrete Superstructures".

(8) Drain entrance formed in rail or sidewalk.

(9) Water may not be discharged onto girders.

(10) All drain pipe and fittings to be 4" diameter (Sch 40) PVC. See Item 481 "Pipe for Drains" for pipe, connections and solvent welding. Bend reinforcing steel to clear PVC 1". Drain length and location is as directed by the Engineer. Drains are not permitted over roadways or railways, or within 10'-0" of bent caps. Degrease outside of exposed PVC, apply acrylic water base primer, then coat with same surface finishing material as used for outside girder face. Variations of the above designs, as required for the type of rail used and its location on the structure, may be installed with the approval and direction of the Engineer.

GENERAL NOTES:

Designed according to AASHTO LRFD Bridge Design Specifications.

All items (reinforcing steel, drains, joint formers, etc.) shown on this sheet are subsidiary to other bid items.

Cover dimensions are clear dimensions, unless noted otherwise.

Reinforcing bar dimensions shown are out-to-out of bar.

DECK FORMWORK NOTES:

Overhang bracket hangers are limited to a safe working load of 3,600 lbs, applied to and along the axis of a coil rod at 45 degrees from vertical, regardless of higher loads permitted by hanger manufacturers. Do not place a hanger less than 12" from girder end. Space hangers accordingly.

SHEET 1 OF 2

Texas Department of Transportation

Bridge Division Standard

MISCELLANEOUS SLAB DETAILS
PRESTR CONCRETE I-GIRDERS

IGMS

FILE: igmsst(s)-17.dgn	DN: TxDOT	CK: TxDOT	DW: JTR	CK: TxDOT
©TxDOT August 2017	CONT	SECT	JOB	HIGHWAY
REVISIONS	2103	01	034	
	DIST	COUNTY		SHEET NO.
	AUS	WILLIAMSON		149

DATE: 3/22/2018 10:14:56 AM
FILE: c:\pwworking\dal\d0911849\igmsst1.dgn

DISCLAIMER:
The use of this standard is governed by the "Texas Engineering Practice Act". No warranty of any kind is made by TxDOT for any purpose whatsoever. TxDOT assumes no responsibility for the conversion of this standard to other formats or for incorrect results or damages resulting from its use.

DATE: 3/22/2018 10:14:57 AM
FILE: c:\pwworking\ddl\d0911849\igmsst1.dgn

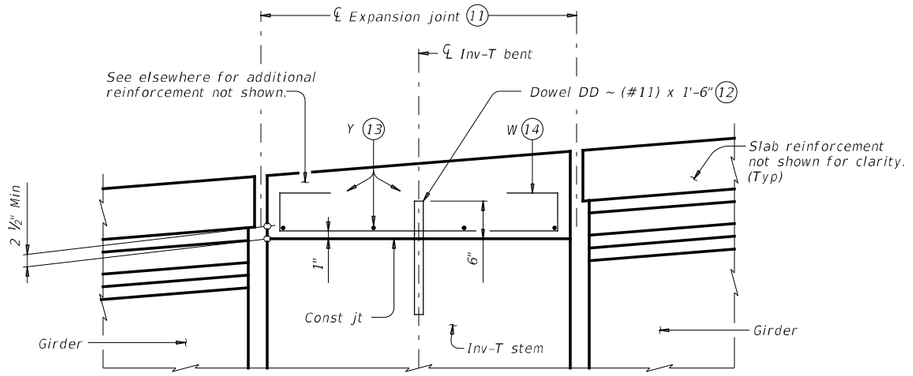

SHOWING EXPANSION JOINTS

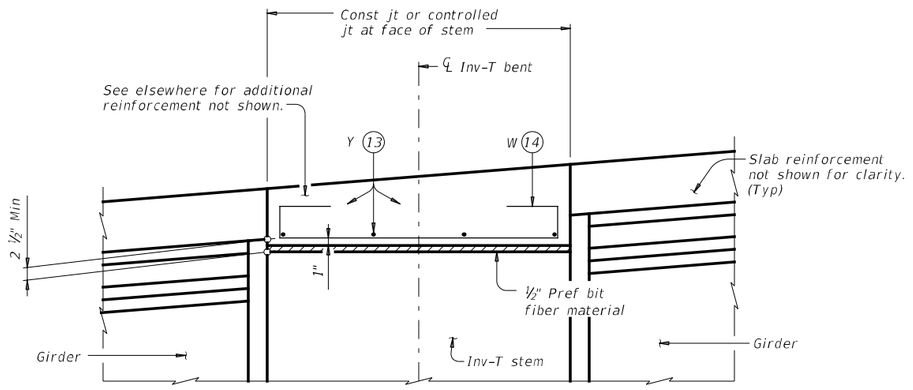

SHOWING CONST JTS OR CONTROLLED JTS

REINFORCEMENT OVER INV-T BENTS

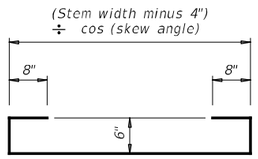

BARS W (#4)

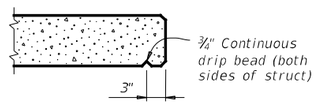

DRIP BEAD DETAIL

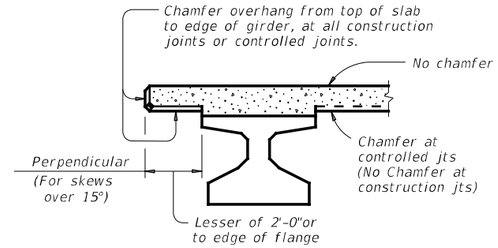

CHAMFER LIMITS DETAIL (15)

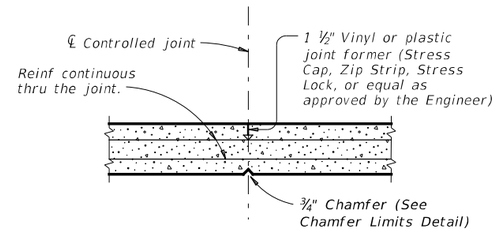

CONTROLLED JOINT DETAIL

(Saw-cutting is not allowed)

(11) See Layout for joint type.

(12) Dowels DD (#11) spaced at 5 Ft Max. See Inv-T bents for quantity and location.

(13) Space Bars Y (#4) at 12" Max. Use 2" end cover. Number of Bars Y must satisfy spacing limit. Place parallel to bent.

(14) Space Bars W at 12" Max (3" from end of cap). Tilt if necessary to maintain cover requirements. Place parallel to longitudinal slab reinforcement.

(15) See Span details for type of joint and joint locations.

SHEET 2 OF 2

Texas Department of Transportation | Bridge Division Standard

MISCELLANEOUS SLAB DETAILS
PRESTR CONCRETE I-GIRDERS

IGMS

FILE: igmsst1-17.dgn	DN: TxDOT	CK: TxDOT	DW: JTR	CK: TxDOT
©TxDOT August 2017 REVISIONS	CONT	SECT	JOB	HIGHWAY
	2103	01	034	
	DIST	COUNTY		SHEET NO.
	AUS	WILLIAMSON		150

DISCLAIMER:
The use of this standard is governed by the "Texas Engineering Practice Act". No warranty of any kind is made by TxDOT for any purpose whatsoever. TxDOT assumes no responsibility for the conversion of this standard to other formats or for incorrect results or damages resulting from its use.

DATE: 3/22/2018 10:14:59 AM
FILE: c:\pwworking\dal\d0911849\igtsst1.dgn

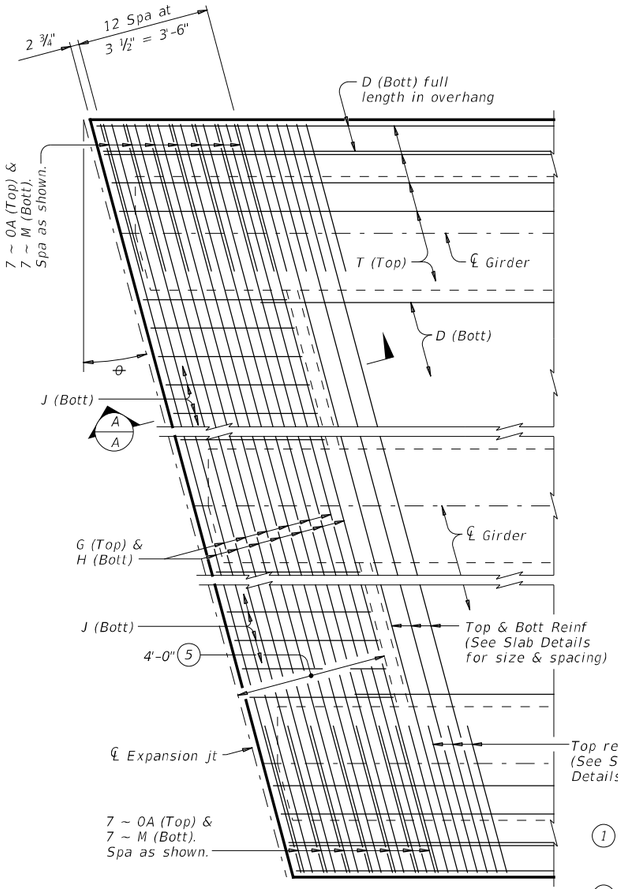

PARTIAL PLAN FOR SLABS WITHOUT BREAKBACK

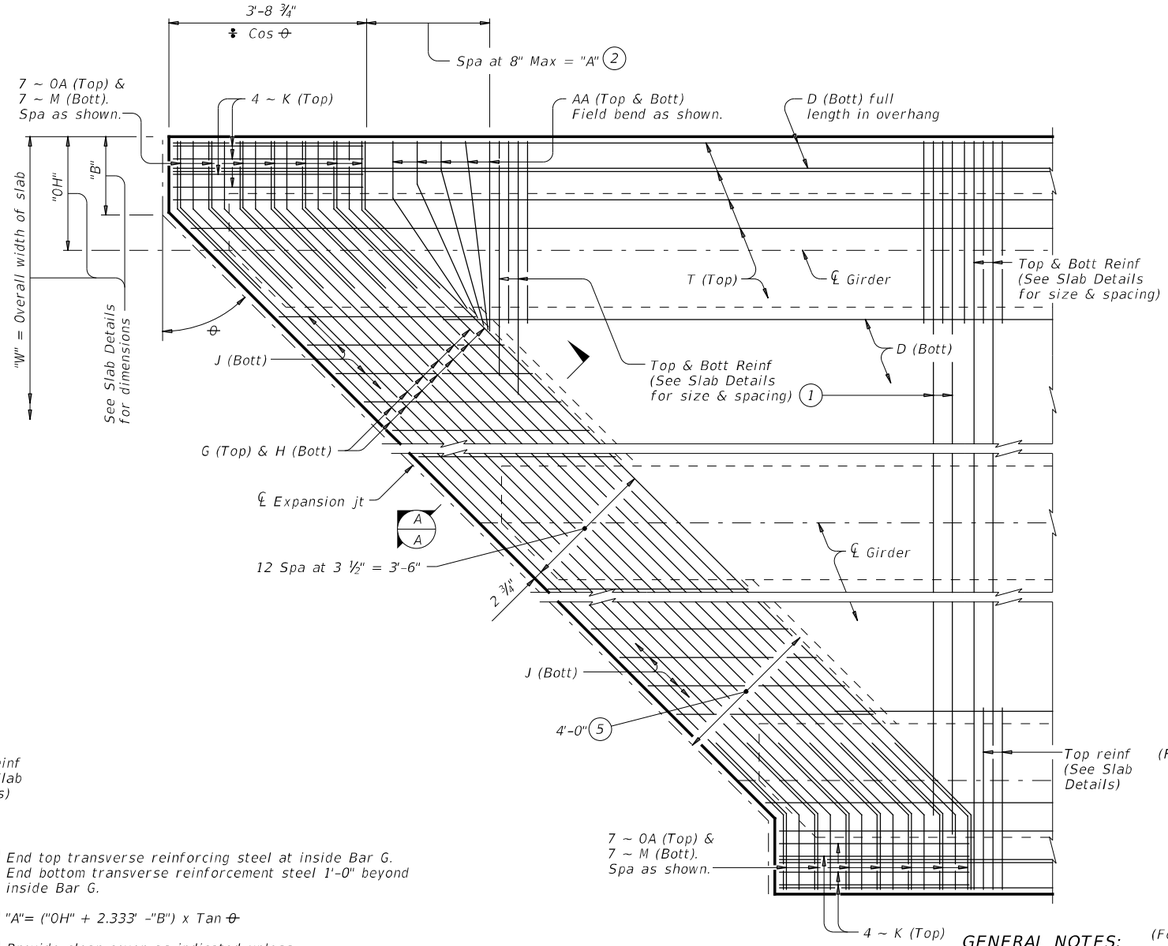

PARTIAL PLAN FOR SLABS WITH BREAKBACK

1. End top transverse reinforcing steel at inside Bar G. End bottom transverse reinforcement steel 1'-0" beyond inside Bar G.
2. "A"= ("0H" + 2.333" -"B") x Tan θ
3. Provide clear cover as indicated unless otherwise shown on Span Details.
4. Only required on slabs with breakbacks.
5. Thickened slab end dimensioned perpendicular to face of bkwl, centerline interior bent or face of inverted-T stem.

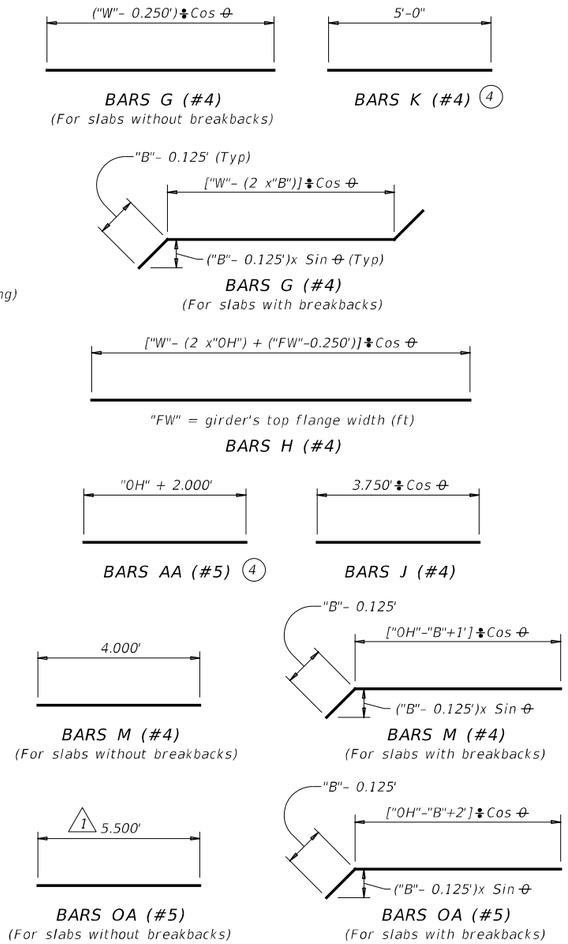

GENERAL NOTES:

Designed according to AASHTO LRFD Bridge Design Specifications.
These details are restricted to Prestressed Concrete I-Girder Spans.
These details are to be used in conjunction with the Span Details and PCP standard (if prestressed concrete panels are used).
When Option 2 from PCP standard is used, provide Bars AA, G, K and OA in the slab.

MATERIAL NOTES:

Provide Grade 60 reinforcing steel.
If slab reinforcing steel is shown on the Slab Details to be epoxy coated, then Bars AA, G, K, H, J, M and OA must be epoxy coated.
Provide bar laps, where required, as follows:
Uncoated ~ #4 = 1'-7"
Epoxy Coated ~ #4 = 2'-5"

Cover dimensions are clear dimensions, unless noted otherwise.
Reinforcing bar dimensions shown are out-to-out of bar.

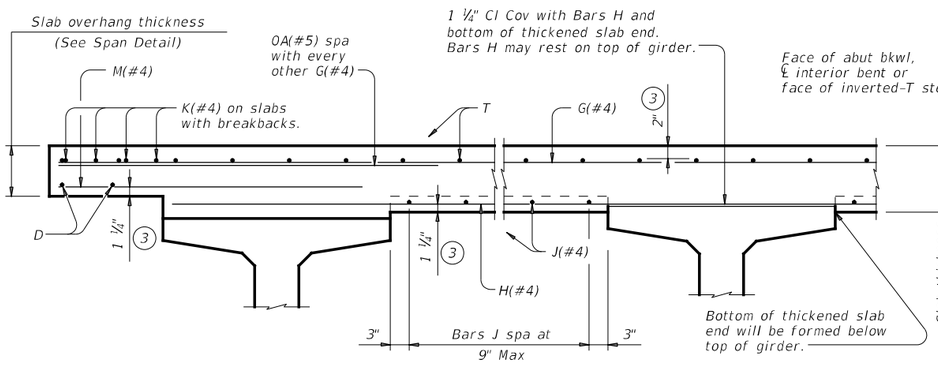

2" AND MORE OF HAUNCH — LESS THAN 2" OF HAUNCH

TYPICAL TRANSVERSE SECTION

(Showing Prestressed Conc I-Girders at ℄ Brg)

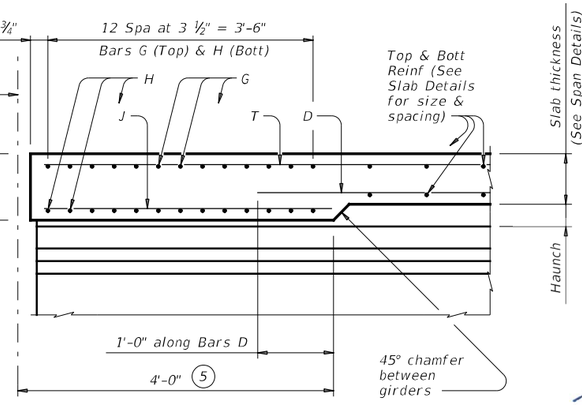

SECTION A-A

(Showing with 2" and more of haunch)

HL93 LOADING

STATE OF TEXAS
TYLER W. BRENDLINGER
122092
LICENSED
PROFESSIONAL ENGINEER
03/23/2018

Texas Department of Transportation — Bridge Division Standard

THICKENED SLAB END DETAILS

PRESTRESSED CONCRETE I-GIRDER SPANS

IGTS(MOD)

FILE: igtsst1-17.dgn	DN: TxDOT	CK: TxDOT	DW: JTR	CK: TxDOT
©TxDOT August 2017	CONT	SECT	JOB	HIGHWAY
REVISIONS	2103	01	034	
1 MOD: Bar OA	DIST	COUNTY		SHEET NO.
	AUS	WILLIAMSON		151

DISCLAIMER:
The use of this standard is governed by the "Texas Engineering Practice Act". No warranty of any kind is made by TxDOT for any purpose whatsoever. TxDOT assumes no responsibility for the conversion of this standard to other formats or for incorrect results or damages resulting from its use.

DATE: 3/22/2018 10:15:00 AM
FILE: c:\pwworking\ddl\d0911849\mebcsts1.dgn

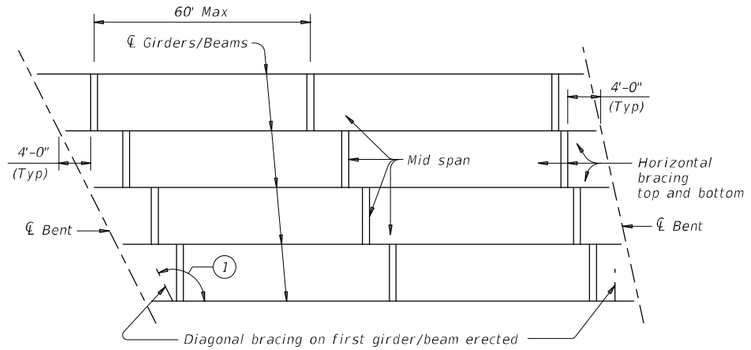

ERECTION BRACING

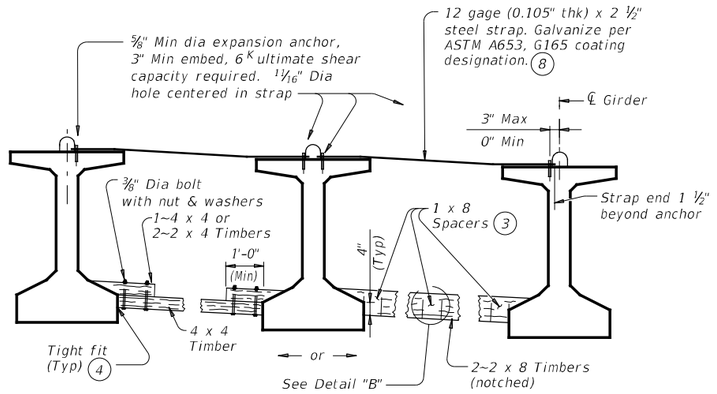

FOR ERECTION BRACING, OPTION 1

(This option is not allowed when slab is formed with PMDF or plywood.)

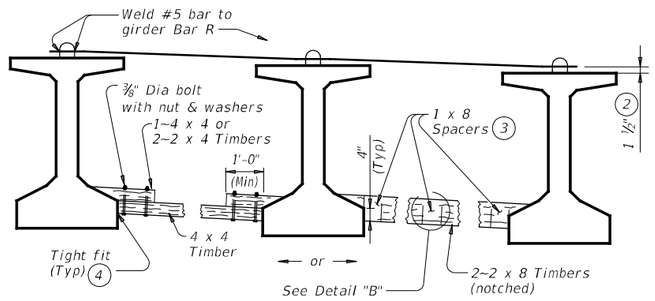

FOR ERECTION BRACING, OPTION 2

HORIZONTAL BRACING DETAILS (5)

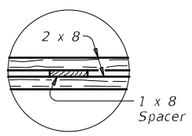

PLAN

DETAIL "B"

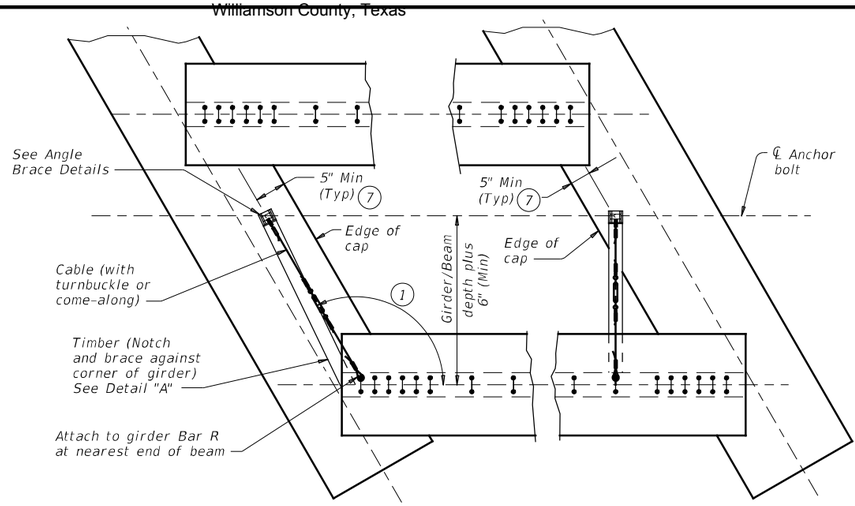

PLAN

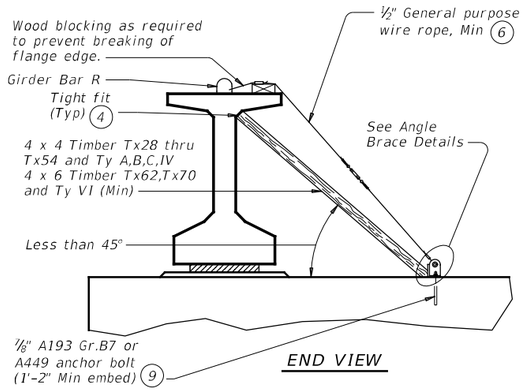

END VIEW

DIAGONAL BRACING DETAILS (5)

(To be used on both ends of the first girder/beam erected in the span in each phase.)

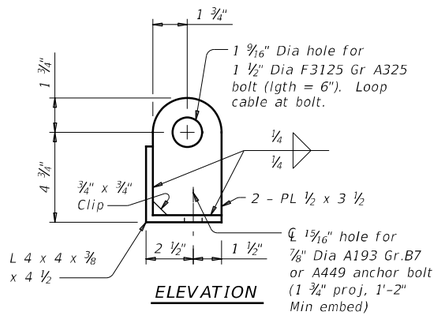

ELEVATION

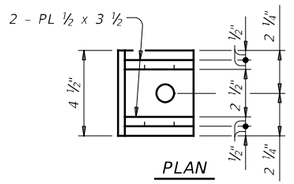

PLAN

ANGLE BRACE DETAILS

HAULING & ERECTION:

The Contractor's attention is directed to the possible lateral instability of prestressed concrete girders and beams over 130' long, especially during hauling and erection. The use of the following methods to improve stability is encouraged: Locate lifting devices at the maximum practical distance from girder ends; use external lateral stiffening devices during hauling and erection; lift with vertical lines using two machines; and take care in handling to minimize inertial and impact forces.

ERECTION BRACING:

Erection bracing details shown are considered the minimum for fulfilling the bracing requirements of Item 425.

Required erection bracing must be placed immediately after erection of each girder and remain in place until additional bracing as required for slab placement is in place. This standard is needed in all cases to meet requirements for Slab Placement Bracing.

PHASED CONSTRUCTION:

Place erection and slab placement bracing for all girders in a phase as shown in these details. For phases after first, also place erection and slab placement bracing between outer girder of completed phase and adjacent girder of current phase. When the phase construction joint is between girders, top bracing can be omitted.

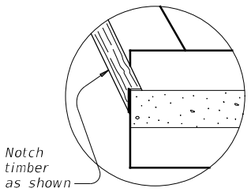

DETAIL "A"

(1) If angle shown exceeds 120 degrees, move diagonal brace to other side of girder/beam and place square to girder/beam. This may prevent exterior girder from being erected first.

(2) Place and weld #5 bars as shown during erection. If forming deck with prestressed panels, bars can be temporarily removed, one at a time, during panel erection. Re-install bar prior to additional panel erection. Bars can rest on panels and be bent down and welded to girder Bars R (See Sheet 2 of 2).

(3) Clear distance between spacers must not exceed 3'. Nail together with 16d nails.

(4) Use wedges as necessary to obtain tight fit. Nail wedges to timbers.

(5) Pressure treated landscape timbers can not be used.

(6) All hardware used with cable must be able to develop a minimum 25 kips breaking strength. Use thimbles at all loops in cable. Install cable clamps with saddles bearing against the live end and U-bolts bearing aginst the dead end.

(7) It is acceptable to tie anchor bolts to cap reinforcement.

(8) Prior to installing, field bend strap to lay flush on both girders' top flange and slope between flange tips.

(9) Anchor bolt may be drilled and epoxied in place. Provide 25k minimum pullout. Core drill hole.

SHEET 1 OF 2

Texas Department of Transportation | Bridge Division Standard

MINIMUM ERECTION AND BRACING REQUIREMENTS
PRESTRESSED CONCRETE I-GIRDERS AND I-BEAMS

MEBR(C)

FILE: mebcsts1-17.dgn	DN: TxDOT	CK: TxDOT	DW: TxDOT	CK: TxDOT
©TxDOT August 2017 REVISIONS	CONT	SECT	JOB	HIGHWAY
	2103	01	034	
	DIST	COUNTY		SHEET NO.
	AUS	WILLIAMSON		152

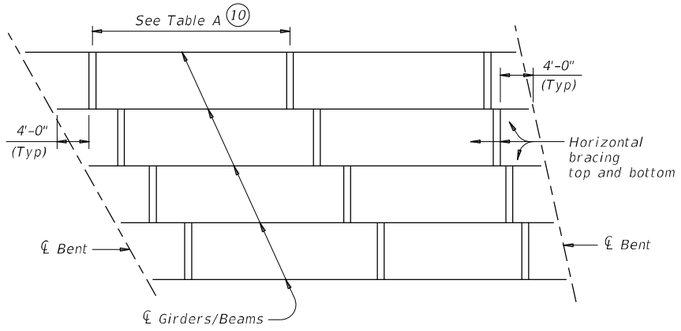

SLAB PLACEMENT BRACING

TABLE A

OPTION 1-RIGID BRACING (STEEL STRAP)		
Girder or Beam Type	Maximum Bracing Spacing	
	Slab Overhang less than 4'-0" (11)	Slab Overhang 4'-0" and greater (11)
Tx28	¼ points	¼ points
Tx34	¼ points	¼ points
Tx40	¼ points	⅛ points
Tx46	¼ points	⅛ points
Tx54	¼ points	⅛ points
Tx62	¼ points	⅛ points
Tx70	¼ points	⅛ points
A	⅛ points	⅛ points
B	⅛ points	⅛ points
C	⅛ points	⅛ points
IV	¼ points	⅛ points
VI	¼ points	⅛ points

OPTION 2-FLEXIBLE BRACING (NO. 5 OVER PCP)		
Girder or Beam Type	Maximum Bracing Spacing	
	Slab Overhang less than 4'-0" (11)	Slab Overhang 4'-0" and greater (11)
Tx28	¼ points	⅛ points
Tx34	¼ points	⅛ points
Tx40	¼ points	⅛ points
Tx46	¼ points	⅛ points
Tx54	¼ points	⅛ points
Tx62	¼ points	⅛ points
Tx70	¼ points	⅛ points
A	2.0 ft	1.5 ft
B	3.0 ft	2.0 ft
C	4.5 ft	2.0 ft
IV	¼ points	4.0 ft
VI	¼ points	4.0 ft

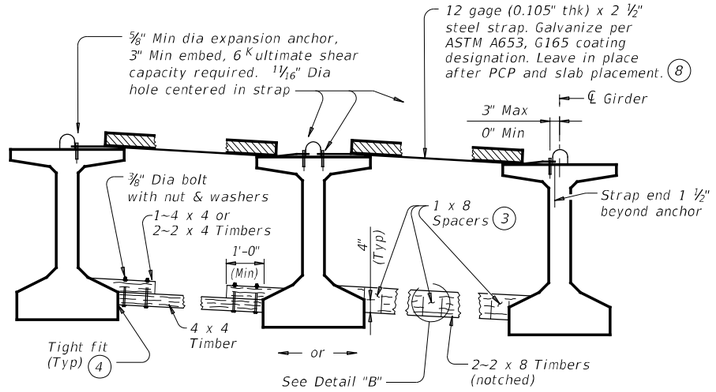

FOR SLAB PLACEMENT BRACING, OPTION 1 - RIGID

(Showing slab formed with PCP. This option is not allowed when slab is formed with PMDF or plywood.)

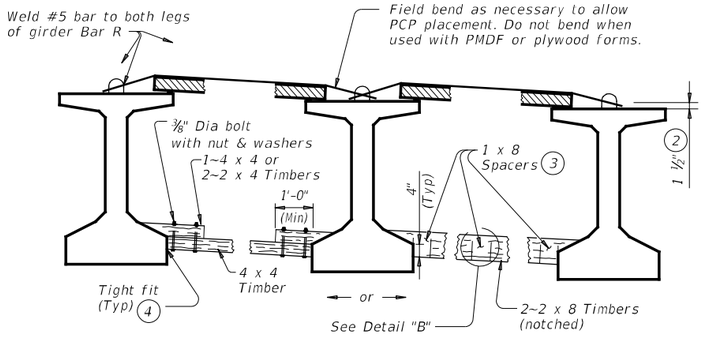

FOR SLAB PLACEMENT BRACING, OPTION 2 - FLEXIBLE

(Showing slab formed with PCP.)

HORIZONTAL BRACING DETAILS (5)

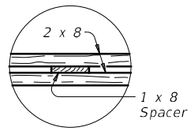

PLAN

DETAIL "B"

(2) Place and weld #5 bars as shown during erection. If forming deck with prestressed panels, bars can be temporarily removed, one at a time, during panel erection. Re-install bar prior to additional panel erection. Bars can rest on panels and be bent down and welded to girder Bars R.

(3) Clear distance between spacers must not exceed 3'. Nail together with 16d nails.

(4) Use wedges as necessary to obtain tight fit. Nail wedges to timbers.

(5) Pressure treated landscape timbers can not be used.

(8) Prior to installing, field bend strap to lay flush on both girders' top flange and slope between flange tips.

(10) Bracing spacing (¼ and ⅛ points) measured between first and last typical brace location.

(11) Measure slab overhang from centerline of girder or beam. When overhang varies in span, determine bracing spacing based on largest overhang.

SLAB PLACEMENT BRACING:

The details for slab placement bracing are considered minimum for fulfilling the requirements of Specification Items 422 and 425.

Required slab placement bracing must remain in place until slab concrete has attained a compressive strength of 3000 psi.

GENERAL NOTES:

Bracing details for spans longer than 150' are not provided. The Contractor must submit proposed bracing details for such conditions to the Engineer for approval prior to erection.

Systems equal to or better than those shown may be used provided details of such systems are submitted to and approved by the Engineer prior to erection.

Use of these systems or details does not relieve the Contractor of the responsibility for the adequacy of the bracing and the safety of the structure.

Removal of bracing for short periods of time to align girders and beams is permissible.

All turn-buckles, come-alongs, anchors and other connections must be capable of developing the full strength of the cable shown.

Furnish anchor bolts and nuts in accordance with Item 449, "Anchor Bolts".

DISCLAIMER:
The use of this standard is governed by the "Texas Engineering Practice Act". No warranty of any kind is made by TxDOT for any purpose whatsoever. TxDOT assumes no responsibility for the conversion of this standard to other formats or for incorrect results or damages resulting from its use.

DATE: 3/22/2018 10:15:02 AM
FILE: c:\pwworking\dot\d0911849\mebcsts1.dgn

SHEET 2 OF 2

Texas Department of Transportation — Bridge Division Standard

MINIMUM ERECTION AND BRACING REQUIREMENTS

PRESTRESSED CONCRETE I-GIRDERS AND I-BEAMS

MEBR(C)

FILE: mebcsts1-17.dgn	DN: TxDOT	CK: TxDOT	DW: TxDOT	CK: TxDOT
©TxDOT August 2017	CONT	SECT	JOB	HIGHWAY
REVISIONS	2103	01	034	
	DIST	COUNTY		SHEET NO.
	AUS	WILLIAMSON		153

DISCLAIMER:
The use of this standard is governed by the "Texas Engineering Practice Act". No warranty of any kind is made by TxDOT for any purpose whatsoever. TxDOT assumes no responsibility for the conversion of this standard to other formats or for incorrect results or damages resulting from its use.

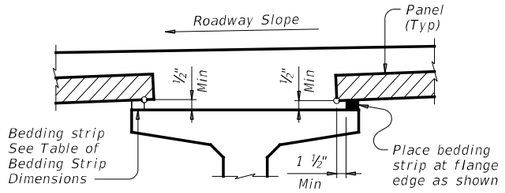

NORMAL GRADING DETAIL (1)

Showing Prestressed Concrete I-Girders.
(Other Beam Types Similar)

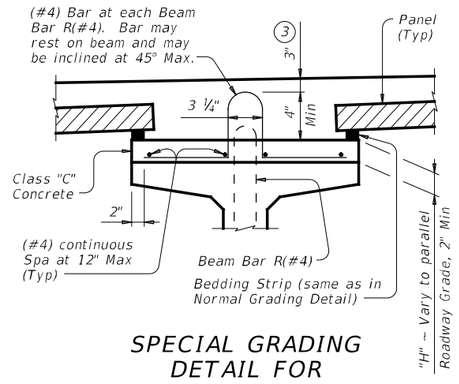

SPECIAL GRADING DETAIL FOR CONCRETE BEAMS

Showing Prestressed Concrete I-Girders.
(Other Beam Types Similar)

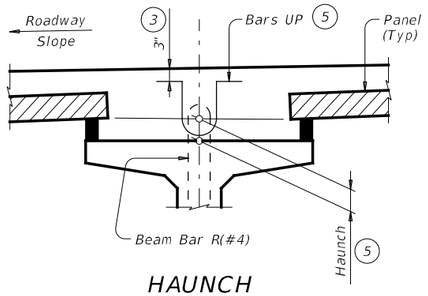

HAUNCH REINFORCING DETAIL

Showing Prestressed Concrete I-Girders.
(Other Beam Types Similar)

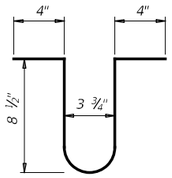

BARS UP (#4) (5)

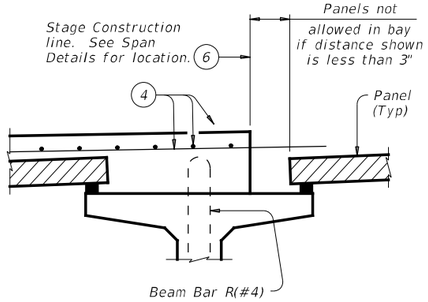

PRESTR CONC I-GIRDERS

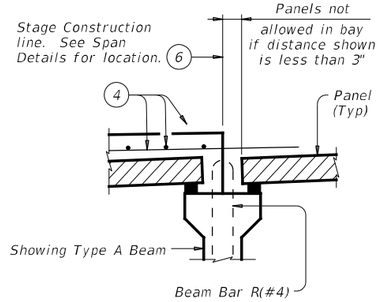

PRESTR CONC I-BEAMS

STAGE CONSTRUCTION LIMITATIONS

(Other Beam Types Similar)

TABLE OF BEDDING STRIP DIMENSIONS		
WIDTH	HEIGHT (2)	
	Min	Max
1" (Min)	½"	2"
1 ¼"	½"	2 ½"
1 ½"	½"	3"
1 ¾"	½"	3 ½"
2" (Max)	½"	4"

(1) To reduce the quantity of cast-in-place concrete, bedding strip thickness may be increased in ¼" increments. Bedding strips must be comprised of one layer. Bond bedding strips to the beams with an adhesive compatible with bedding strips. Bedding strips over 2.5" high may need to be bonded to panels. The same thickness strip must be used under any one panel edge and the maximum change in thickness between adjacent panels is ¼". Alternatively, bedding strips may be cut to grade. Panels may be supported by an alternate method, using a commercial product, if approved by the Engineer of Bridge Design, Bridge Division. If bedding strips exceed 4" high, use Special Grading Detail for Concrete Beams or submit an alternate method to the Bridge Division for approval.

(2) Height must not exceed twice the width.

(3) Provide clear cover as indicated unless otherwise shown on Span Details.

(4) See Span Details and Thickened Slab End Details for top slab reinforcement and clear cover. Transverse top slab reinforcement may rest on top of prestressed concrete panels if necessary to maintain clear cover.

(5) Space Bars UP(#4) with Beam Bars R(#4) in all areas where measured haunch exceeds 3" or 3 ½" with Prestressed Concrete I-Girders. Epoxy coating for Bars UP is not required.

(6) Do not locate construction Joints on top of a panel.

(7) Butt adjacent bedding strips together with adhesive. Cut v-notches, approx ¼" deep, in the top of the bedding strips at 8' o.c..

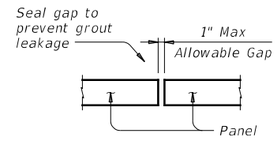

TYPICAL SECTION AT PANEL JOINT

(Panel reinforcing not shown for clarity.)
The gap cannot be considered as a panel fabrication tolerance.

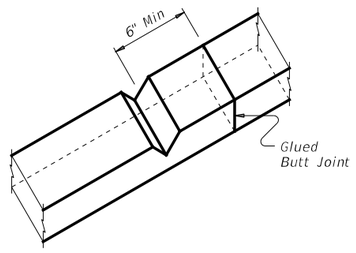

BEDDING STRIP DETAIL (7)

CONSTRUCTION NOTES:

Erected panels must bear uniformly on bedding strips of extruded polystyrene placed along top flange edges.

If additional blocking is needed, special grading details for supporting the panels and extra reinforcing between beam and slab will be considered subsidiary to deck construction.

Bars U, shown on PCP-FAB, may be bent over or cut off if necessary.

Care must be taken to ensure proper cleaning of construction debris and consolidation of concrete mortar under the edges of the panels. Bedding strips must be placed at beam flange edges so that adequate space is provided for the mortar to flow a minimum of 1 ½" under the panels as the slab concrete is placed.

To allow the proper amount of mortar to flow between beam and panel, the minimum vertical opening must be at least ½". Roadway cross-slope reduces the opening available for entry of the mortar. Bedding strips varying in thickness across the beam are therefore required.

For clear span between U-beams less than or equal to 18", see Permissible Slab Forming Detail on Miscellaneous Slab Detail sheets, UBMS.

MATERIAL NOTES:

Provide Grade 60 reinforcing steel in the cast-in-place slab. See Table of Reinforcing Steel for size and spacing of reinforcement.

If the top and bottom layer of reinforcing steel is shown on the Span Details to be epoxy coated, then the D, E, P, & Z bars must be epoxy coated.

Provide bar Laps, where required, as follows:

Uncoated ~ #4 = 1'-5"
Epoxy Coated ~ #4 = 2'-1"

GENERAL NOTES:

Designed according to AASHTO LRFD Specifications.

Panel placement may follow either Option 1 or Option 2 except Option 1 must be used if the skew exceeds 45 degrees.

Use of Prestressed Concrete Panels is not permitted for horizontally curved steel plate or tub girders. See Span Details for other possible restrictions on their use.

These details are to be used in conjunction with the Span Details, PCP-FAB and other applicable Standard drawings.

Any additional reinforcement or concrete required on this standard is considered subsidiary to the bid Item "Reinforced Concrete Slab".

Cover dimensions are clear dimensions, unless noted otherwise.

Reinforcing bar dimensions shown are out-to-out of bar.

HL93 LOADING SHEET 1 OF 4

Texas Department of Transportation | Bridge Division Standard

PRESTRESSED CONCRETE PANELS
DECK DETAILS

PCP

FILE: pcpstde1.dgn	DN: TxDOT	CK: TxDOT	DW: JTR	CK: JMH
©TxDOT January 2015	CONT	SECT	JOB	HIGHWAY
REVISIONS	2103	01	034	
	DIST	COUNTY		SHEET NO.
	AUS	WILLIAMSON		154

DATE: 3/22/2018 10:15:04 AM
FILE: e:\pwworking\dal\d0911849\pcpstde1.dgn

DISCLAIMER:
The use of this standard is governed by the "Texas Engineering Practice Act". No warranty of any kind is made by TxDOT for any purpose whatsoever. TxDOT assumes no responsibility for the conversion of this standard to other formats or for incorrect results or damages resulting from its use.

DATE: 3/22/2018 10:15:05 AM
FILE: c:\pwworking\dot\d0911849\pcpstdel.dgn

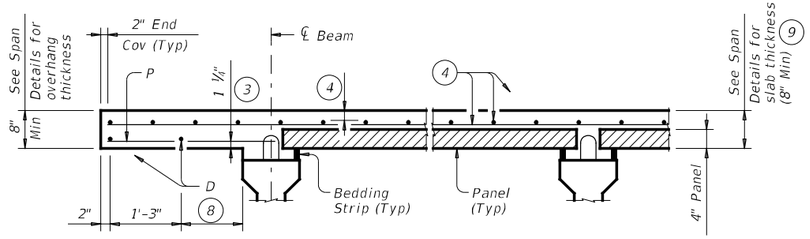

PRESTRESSED CONCRETE I-BEAMS

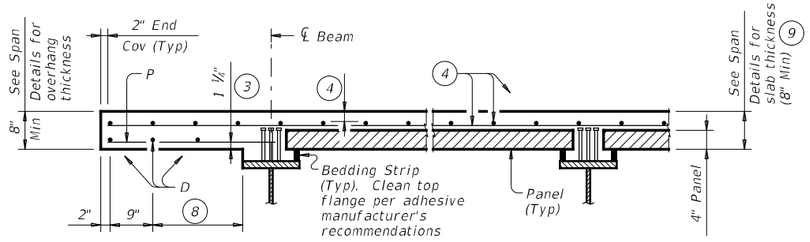

STEEL BEAMS

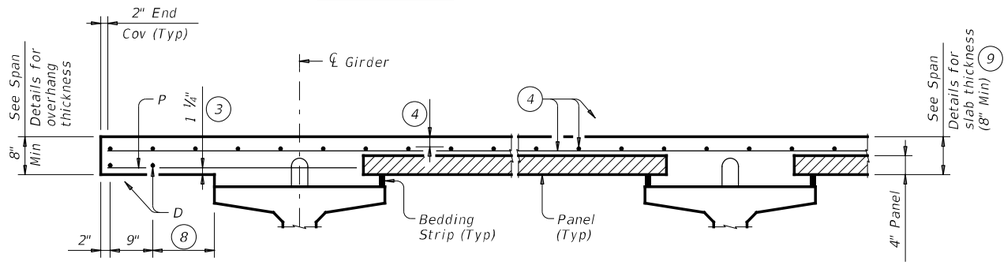

PRESTRESSED CONCRETE I-GIRDERS

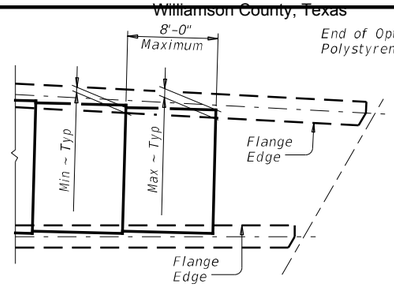

AT FLARED BEAMS OR GIRDERS

See PCP-FAB standard for Min and Max dimensions based on Bm/Girder type.

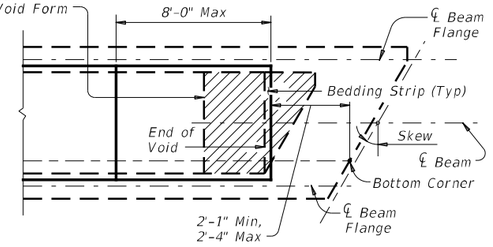

OVER CONC U-BEAMS

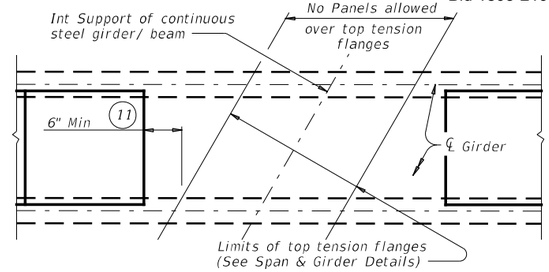

AT INT SUPPORTS OF CONTINUOUS STEEL GIRDERS

PART PLANS OF PANEL PLACEMENT

(3) Provide clear cover as indicated unless otherwise shown on Span Details.

(4) See Span Details and Thickened Slab End Details for top slab reinforcement and clear cover. Transverse top slab reinforcement may rest on top of prestressed concrete panels if necessary to maintain clear cover.

(7) Butt adjacent bedding strips together with adhesive. Cut v-notches, approx ¼" deep, in the top of the bedding strips at 8' o.c..

(8) Equally space additional bar if more than 1'-3" Max.

(9) The actual thickness constructed may exceed the slab thickness shown on the Span Details but the extra thickness may be no more than 2" (1" for Prestressed Concrete U-Beams and Steel Beams). Bearing Seat Elevations or finished grade may be adjusted.

(10) Field adjust Bars Z1(#4) to match actual slope of slab overhangs. Width of slab overhang will vary along span with curved slab edges. Adjust Bar Z1(#4) dimensions to maintain proper cover. Bars Z2(#4) are located at Inv-T stems only.

(11) Location of concrete placement sequence boundaries and bolted field splices should be considered by the contractor in determining panel limits.

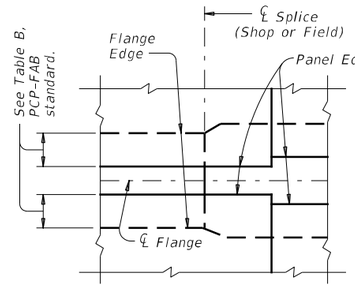

PLAN AT SPLICE

(Showing Steel Bms with flange width transition)

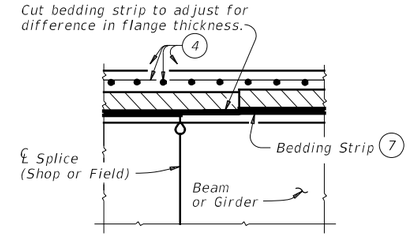

ELEVATION AT SPLICE

(Showing Steel Bms with different flange thickness)

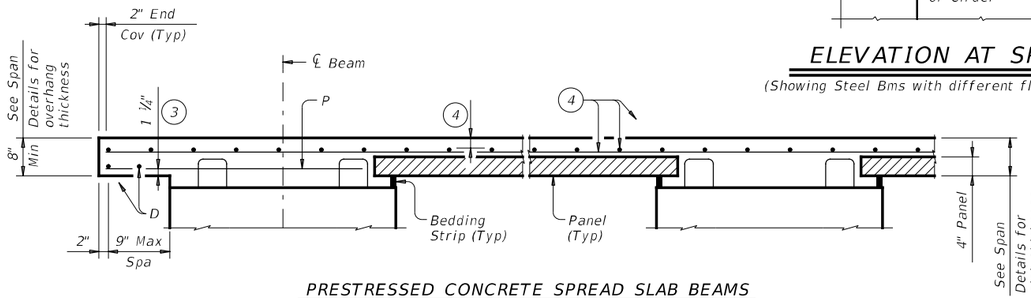

PRESTRESSED CONCRETE SPREAD SLAB BEAMS

Bars P over exterior beams are still required when no overhang is used. In this case, only one Bar D, 2" from slab edge, is required.

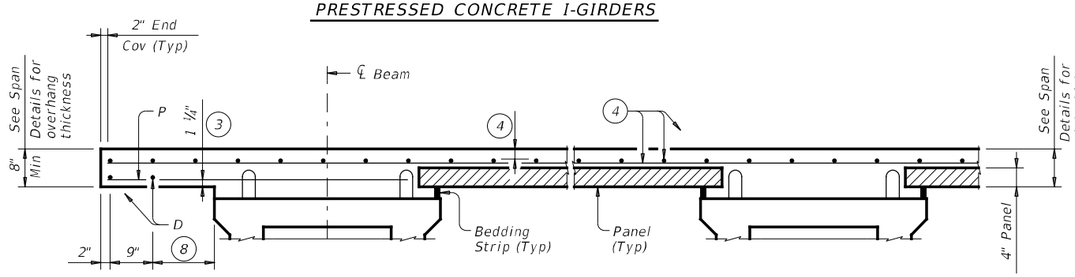

NORMAL OVERHANG WITH PRESTR CONC U-BEAMS

SLOPED OVERHANG WITH PRESTR CONC U-BEAMS

TYPICAL PART TRANSVERSE SECTIONS

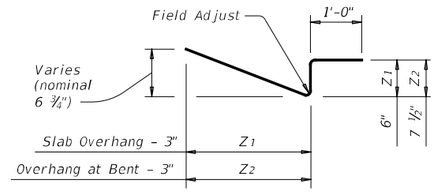

BARS Z (#4) (10)

HL93 LOADING SHEET 2 OF 4

Texas Department of Transportation | Bridge Division Standard

PRESTRESSED CONCRETE PANELS
DECK DETAILS

PCP

FILE: pcpstdel.dgn	DN: TxDOT	CK: TxDOT	DW: JTR	CK: JMH
©TxDOT January 2015	CONT	SECT	JOB	HIGHWAY
REVISIONS	2103	01	034	
	DIST	COUNTY		SHEET NO.
	AUS	WILLIAMSON		155

DISCLAIMER:
The use of this standard is governed by the "Texas Engineering Practice Act". No warranty of any kind is made by TxDOT for any purpose whatsoever. TxDOT assumes no responsibility for the conversion of this standard to other formats or for incorrect results or damages resulting from its use.

DATE: 3/22/2018 10:15:07 AM
FILE: c:\pwworking\d01\d0911849\pcpstde1.dgn

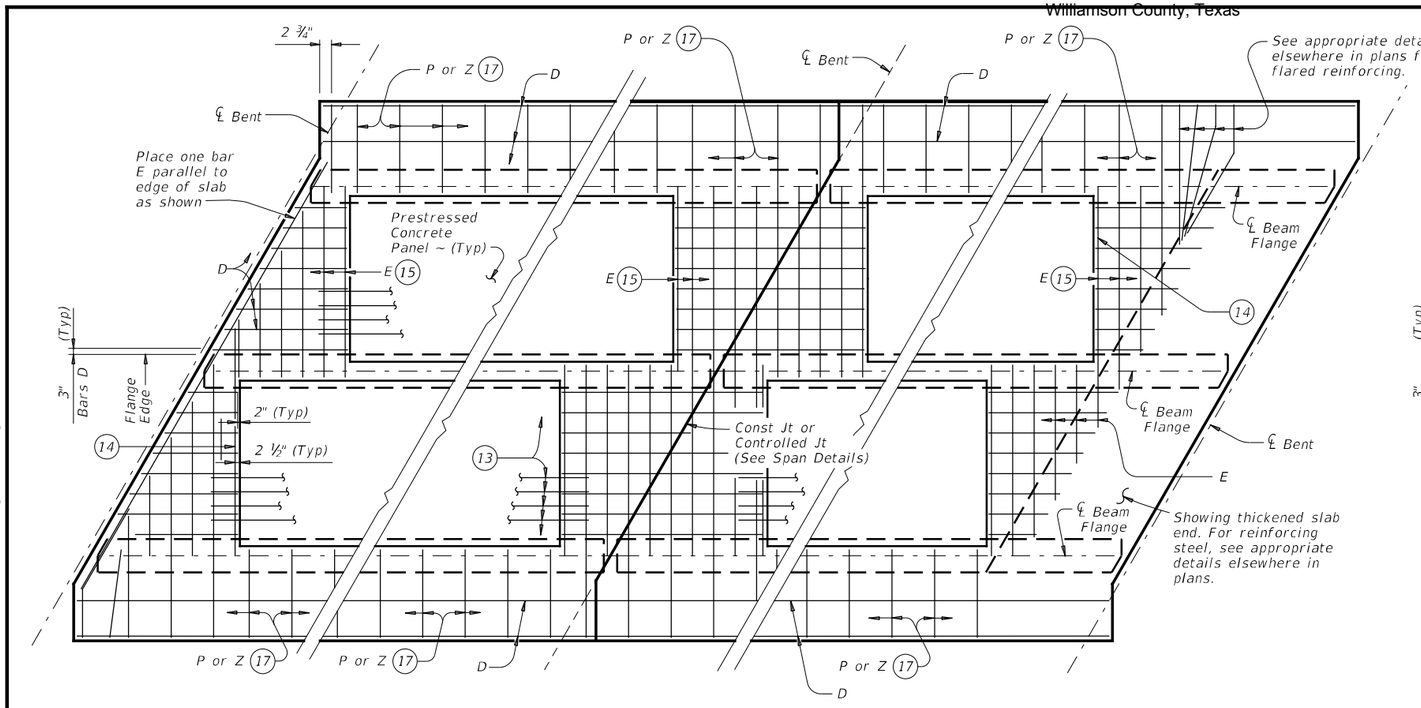

AT ALL SPAN ENDS UNLESS NOTED OTHERWISE | AT INTERIOR BENTS | AT THICKENED END SLABS

OPTION 1 ~ PLAN OF SLABS WITH NORMAL REINFORCEMENT

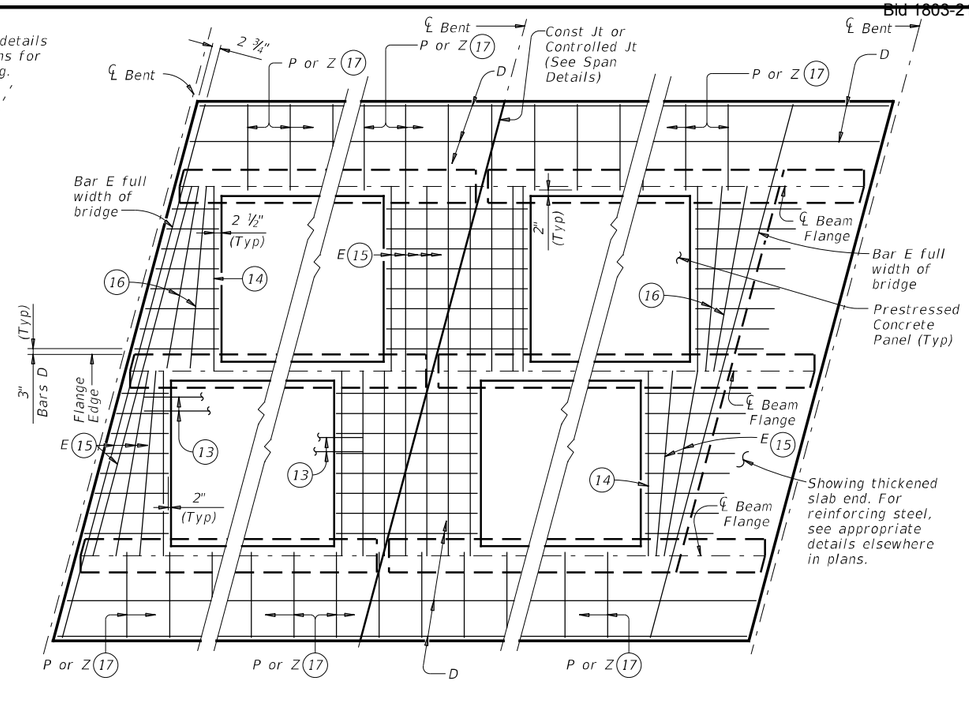

AT ALL SPAN ENDS UNLESS NOTED OTHERWISE | AT INTERIOR BENTS | AT THICKENED END SLABS

OPTION 1 ~ PLAN OF SLABS WITH SKEWED REINFORCEMENT

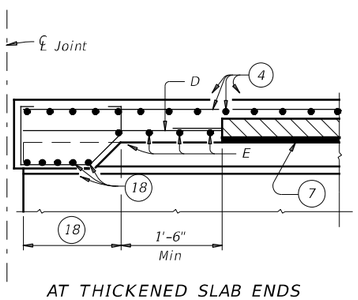

AT THICKENED SLAB ENDS FOR PRESTR CONC U-BMS

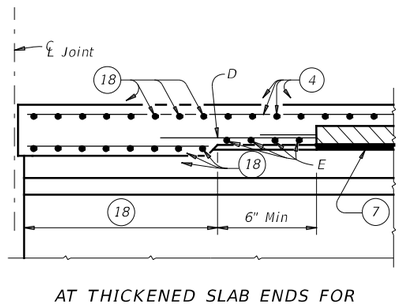

AT THICKENED SLAB ENDS FOR PRESTR CONC I-BMS AND STEEL BMS

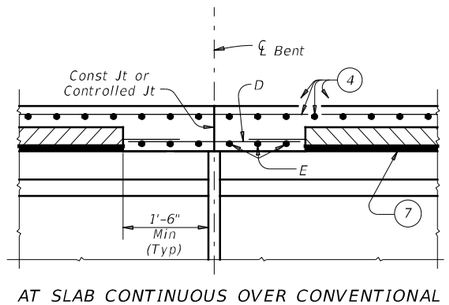

AT SLAB CONTINUOUS OVER CONVENTIONAL INTERIOR BENTS FOR ALL SIMPLE SPAN BMS

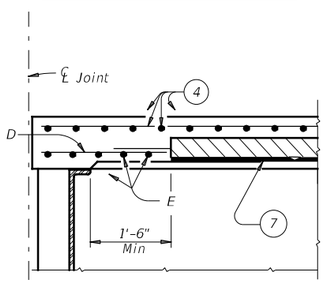

AT CONVENTIONAL END DIAPHRAGMS FOR STEEL BMS

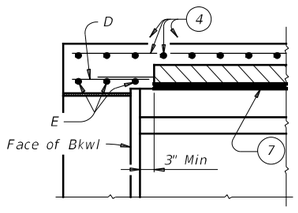

AT SLAB OVER ABUTMENT BACKWALL FOR ALL BMS

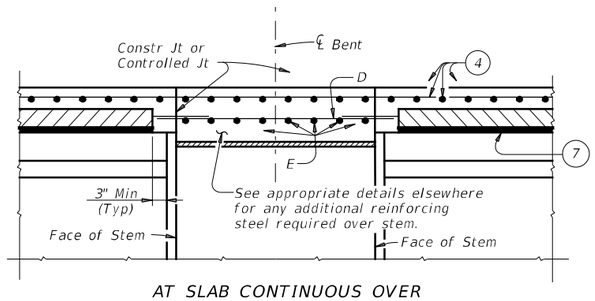

AT SLAB CONTINUOUS OVER INVERTED-T BENTS FOR ALL BMS

OPTION 1 ~ ELEVATIONS AT BEAM ENDS

(4) See Span Details and Thickened Slab End Details for top slab reinforcement and clear cover. Transverse top slab reinforcement may rest on top of prestressed concrete panels if necessary to maintain clear cover.

(7) Butt adjacent bedding strips together with adhesive. Cut v-notches, approx ¼" deep, in the top of the bedding strips at 8' o.c.

(12) Max Spacing as listed unless otherwise shown.

(13) At connection with cast-in-place slab, extend longitudinal panel reinforcement. See PCP-FAB for details.

(14) Maintain one Bar E(#4) parallel to panel ends (Typ).

(15) Bars E(#4) not continuous over beam flanges must overlap beam flange 6" Min.

(16) Add flared Bars E(#4) (Min Spa = 6", Max Spa = 12") as required at panel ends.

(17) Where possible, Bars E(#4) may be extended into overhangs to replace Bars P(#4). Bars Z(#4) are required for sloped overhangs with U-Beams.

(18) See appropriate thickened slab end details for reinforcing and limits of thickened slab end.

TABLE OF REINFORCING STEEL (12)

BAR	SIZE	Max Spa (in.)
D	#4	9
E	#4	9
P	#4	18
UP	#4	~
Z	#4	18

HL93 LOADING SHEET 3 OF 4

Texas Department of Transportation | Bridge Division Standard

PRESTRESSED CONCRETE PANELS
DECK DETAILS

PCP

FILE: pcpstde1.dgn	DN: TxDOT	CK: TxDOT	DW: JTR	CK: JMH
©TxDOT January 2015 REVISIONS	CONT	SECT	JOB	HIGHWAY
	2103	01	034	
	DIST	COUNTY		SHEET NO.
	AUS	WILLIAMSON		156

DISCLAIMER:
The use of this standard is governed by the "Texas Engineering Practice Act". No warranty of any kind is made by TxDOT for any purpose whatsoever. TxDOT assumes no responsibility for the conversion of this standard to other formats or for incorrect results or damages resulting from its use.

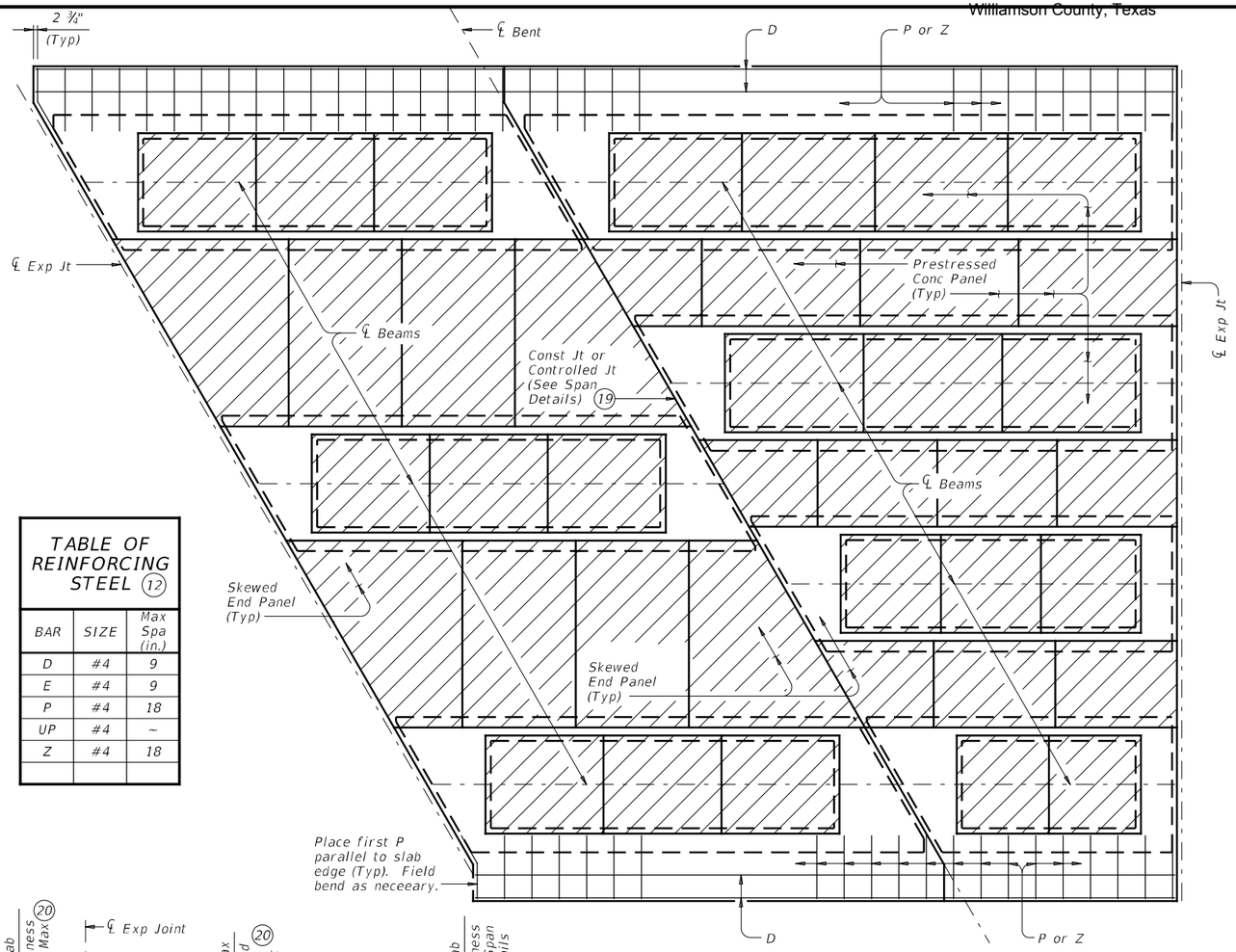

OPTION 2 ~ PLAN OF SLAB

(Showing U-Beams; other beams similar)

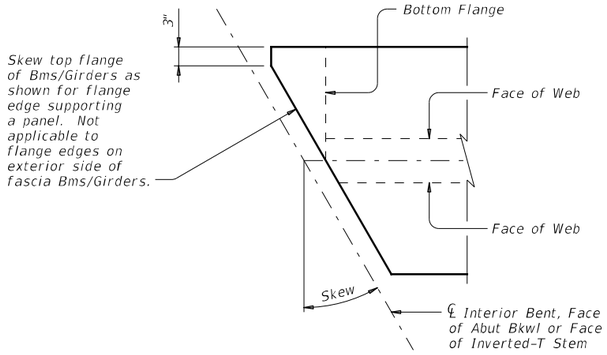

OPTION 2 ~ SHOWING MODIFICATION TO BEAM/GIRDER TOP FLANGE FOR SKEWS OVER 5°

Showing I-Bm/I-Girder, U-Bms and Steel Bms similar.

TABLE OF REINFORCING STEEL (12)		
BAR	SIZE	Max Spa (in.)
D	#4	9
E	#4	9
P	#4	18
UP	#4	~
Z	#4	18

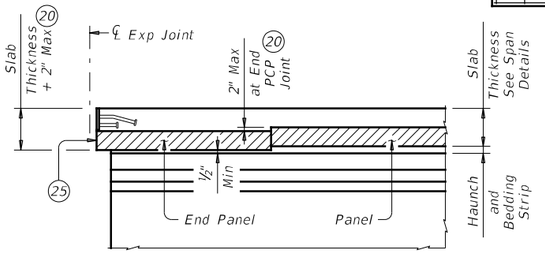

JOINTS (BETWEEN BEAMS/GIRDERS OR AT INV-T STEM)

For SEJ-A, SEJ-S(0), AJ and Type A Expansion Joints only.

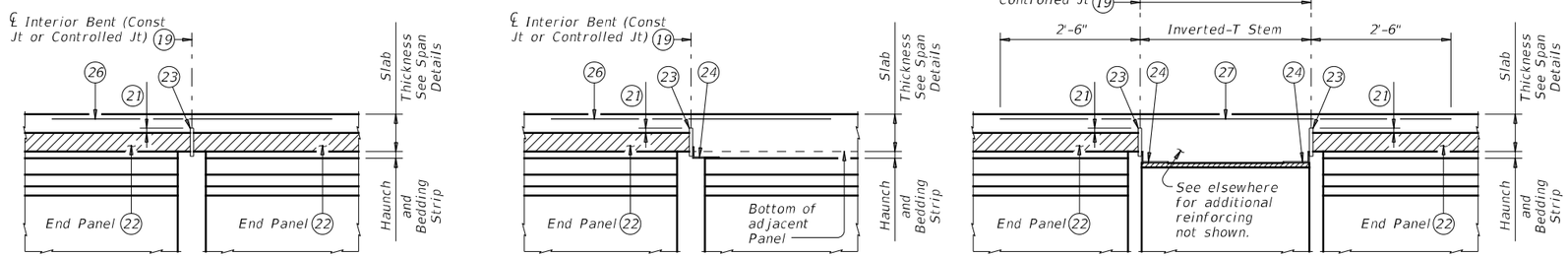

CONVENTIONAL INTERIOR BENT

Panel against Panel between Bms/Girders.

CONVENTIONAL INTERIOR BENT

Panel against Bm/Girder End in Adacent Span.

INVERTED-T BENT

Panels against Inverted-T Stem

OPTION 2 ~ ELEVATIONS AT BEAM ENDS (4)

(4) See Span Details and Thickened Slab End Details for top slab reinforcement and clear cover. Transverse top slab reinforcement may rest on top of prestressed concrete panels if necessary to maintain clear cover.

(12) Max Spacing as listed unless otherwise shown.

(19) Top Plastic Joint Former at Controlled Joints (Stress Cap, Zip Strip, Stress Lock, etc.) is not required with these Details.

(20) End panel may be set up to 2" lower to accommodate expansion joint hardware, provided bedding strip is not less than ½" thick.

(21) 1" Min, 1 ½" Max, support as necessary.

(22) Place panel within ½" of ¾" thick board.

(23) ¾" thick timber board, leave in place. Place straight, within ¼" of Centerline of Bent or face of Invt-T, across bridge width and end board at exterior flange edge of fascia beams/girders. Do not extend into overhang.

(24) Permanent galvanized steel sheet form. Removable formwork is acceptable.

(25) Place end panel within ½" of expansion joint opening. End panel cannot encroach on required expansion joint opening.

(26) Place additional (#4) bar 5'-0" in length between every slab bars T. Center (#4) bar on Joint.

(27) Place additional (#4) bar continuous 2'-6" beyond each side of Inverted-T Stem between every slab bars T.

SPECIAL OPTION 2 CONSTRUCTION NOTES:

Placing panels adjacent to expansion joints and bent centerlines prior to completing interior panel placement is recommended. Saw cutting panels to fit is acceptable when approved by the Engineer. Minimum distance from a saw cut edge to a panel strand is 1 ½".

Do not extend the longitudinal panel reinforcement into the cast-in-place slab.

Top flanges of beams and girders on skewed bridges must be modified as shown on this drawing. The Contractor is responsible for coordinating this modification with the beam fabricator prior to submitting shop drawings for approval.

Fabricator may optionally skew the whole end. When electing to skew whole end, girder end details and bearing type at conventional interior bent must be changed to use condition at abutment. Fabricator must coordinate change in bearing type, bearing centerline location, and dowel location with Engineer and Contractor. Show appropriate changes on girder and bearing shop drawings.

Bending of anchor studs of expansion joints shown on standards AJ, SEJ-A and SEJ-S(0) is permissible if necessary to clear top of end panels. The Contractor is responsible for coordinating modifications with the joint fabricator. Submit shop drawings for approval when modifications to expansion joint hardware are made.

Bedding strips under skewed end panels must conform to the requirements of Item 425 except their minimum compressive strength must be 60 psi.

Provide Bars AA, G, K and OA from standard IGTS(MOD) in the slab.

HL93 LOADING SHEET 4 OF 4

Texas Department of Transportation — Bridge Division Standard

PRESTRESSED CONCRETE PANELS DECK DETAILS

PCP

FILE: pcpstde1.dgn	DN: TxDOT	CK: TxDOT	DW: JTR	CK: JMH
©TxDOT January 2015	CONT	SECT	JOB	HIGHWAY
REVISIONS	2103	01	034	
	DIST	COUNTY		SHEET NO.
	AUS	WILLIAMSON		127

DATE: 3/22/2018 10:15:08 AM
FILE: e:\pwworking\dal\d0911849\pcpstde1.dgn

DISCLAIMER:
The use of this standard is governed by the "Texas Engineering Practice Act". No warranty of any kind is made by TxDOT for any purpose whatsoever. TxDOT assumes no responsibility for the conversion of this standard to other formats or for incorrect results or damages resulting from its use.

DATE: 3/22/2018 10:15:10 AM
FILE: c:\pwworking\ddi\d0911849\pcpstde2.dgn

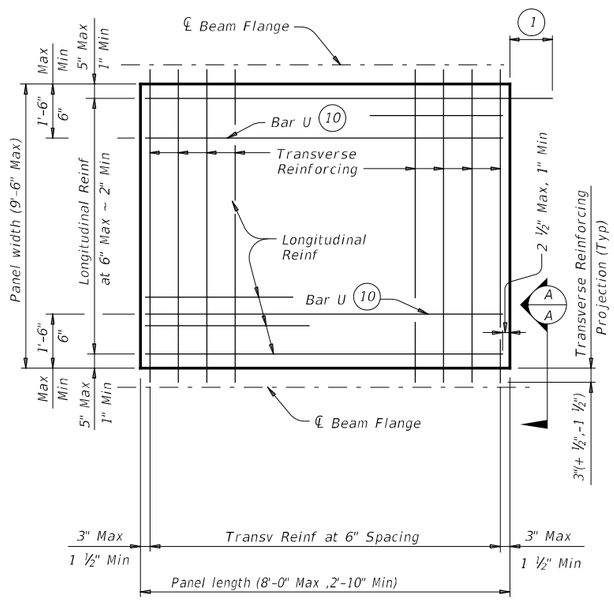

TYPICAL NON-SKEWED PANEL PLAN

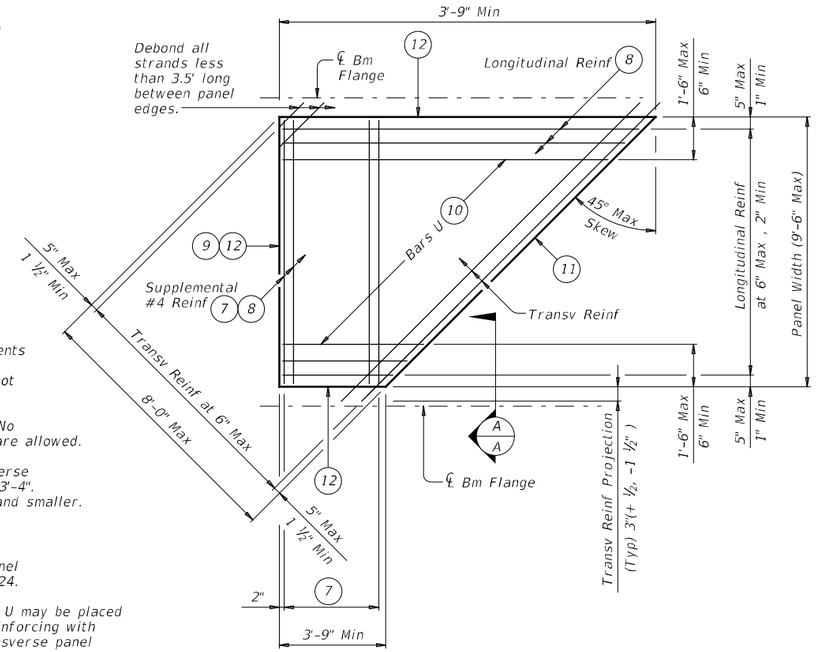

TYPICAL SKEWED END PANEL PLAN

(Only to be used with details shown elsewhere in the plans.)

1. At connection with cast-in-place slab, extend longitudinal panel reinforcement 1'-0" (+2",-0") past panel end. Alternatively, provide (#3) x 2'-0" dowels at 6" Max Spacing and extend dowels 1'-0" past panel end.
2. Four loops required per panel.
3. Four loops required per panel. ⅜" or ½" strands may be used.
4. Normal dimensions must be used on spans with parallel beams. Maximum and Minimum dimensions apply only to spans with flared beams.
5. See Normal Grading Detail on PCP standard for lap requirements and bedding strip dimensions. Some laps shown in tables cannot utilize all bedding strip widths.
6. One Splice allowed per panel. No more than two sheets of WWR are allowed.
7. Provide (#4) bars under transverse reinforcing, 10 Spaces at 4" = 3'-4". Omit for 5 degree (1:12) skew and smaller.
8. End Cover 2 ½" Max, 1" Min.
9. Recess strands on indicated panel edge in accordance with Item 424.
10. At the fabricator's option, Bars U may be placed parallel to transverse panel reinforcing with horizontal legs in plane of transverse panel reinforcing.
11. Use length of indicated panel edge as panel width for purpose of determining type of transverse reinforcing.
12. Timber form work permissible this edge.

TABLE A (4) (5)			
Beam Type	Normal (In.)	Min (In.)	Max (In.)
A	3	2 ½	3 ½
B	3	2 ½	3 ½
C	4	3	4 ½
IV	6	4	7 ½
VI	6 ½	4 ½	8 ½
U40 - 54	5 ½	5 ½	7
Tx28-70	6	4	7 ½
XB20 - 40	4	3	4 ½
XSB12 - 15	4	3	4 ½

TABLE B (4) (5)			
Top Flange Width	Normal (In.)	Min (In.)	Max (In.)
11" to 12"	2 ¾	2 ½	2 ¾
Over 12" to 15"	3 ¼	3	3 ¼
Over 15" to 18"	4	3	4 ¾
Over 18"	5	3 ½	6 ¼

GENERAL NOTES:

Provide Class H concrete for panels. Release strength f'ci=3500 psi. Minimum 28 day strength f'c=5000 psi.

Do not use epoxy-coated reinforcing steel bar or strand in panels.

Remove laitance from top panel surface.

Finish top of panel to a roughness between a No.6 and No.9 concrete surface profile, inclusive, as specified by the International Concrete Repair Institute (ICRI).

Shop drawings for the fabrication of panels will not require the Engineer's approval if fabrication is in accordance with the details shown on this standard.

A panel layout which identifies location of each panel must be developed by the Fabricator. Permanently mark each panel in accordance with the panel layout. A copy of the layout is to be provided to the Engineer.

TRANSVERSE PANEL REINFORCEMENT:

For panel widths over 5', use ⅜" or ½" Dia (270k) prestressing strands with a tension of 14.4 kips per strand.

For panel widths over 3'-6" up to and including 5', use ⅜" or ½" Dia (270k) prestressing strands with a tension of 14.4 kip per strand. Optionally, #4 Grade 60 reinforcing bars may be used in lieu of prestressed strands.

For panel widths up to 3'-6", use #4 Grade 60 reinforcing bars (prestressed strands alone are not allowed).

Place transverse panel reinforcement at panel centroid and space at 6" Max.

LONGITUDINAL PANEL REINFORCEMENT:

Any of the following options may be used for longitudinal panel reinforcement:

1. (#3) Grade 60 reinforcing steel at 6" Max Spacing. No splices allowed.
2. ⅜" Dia prestressing strands at 4 ½" Max Spacing (unstressed). No splices allowed.
3. ½" Dia prestressing strands at 6" Max Spacing (unstressed). No splices allowed.
4. Deformed Welded Wire Reinforcement (WWR) (ASTM A1064) providing 0.22 sq in per foot of panel width. Wires larger than D11 not permitted. Provide transverse wires to ensure proper handling of reinforcing. One splice per panel is allowed. See WWR Splice Detail.

No combination of longitudinal reinforcement options in a panel is allowed.

Place longitudinal panel reinforcement above or below transverse panel reinforcement. Must be placed above transverse panel reinforcement for skewed end panels with supplemental #4 reinforcement.

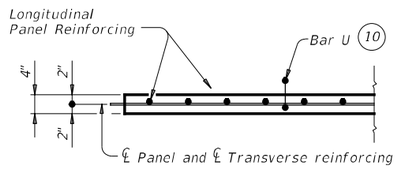

SECTION A-A

(Not Showing supplemental #4 bars for Skewed End Panels.)

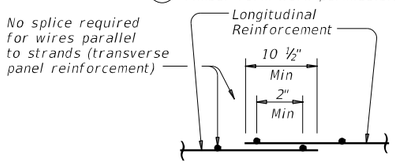

WELDED WIRE REINFORCEMENT (WWR) SPLICE DETAIL (6)

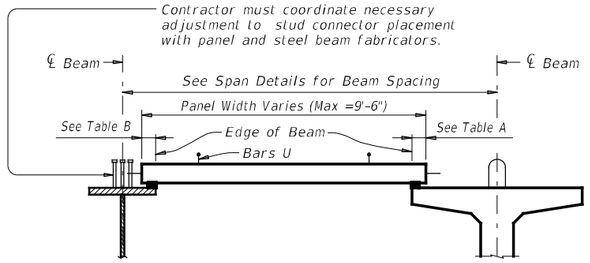

STEEL BEAMS

PRESTRESSED CONCRETE BEAMS OR GIRDERS

Typ unless noted otherwise

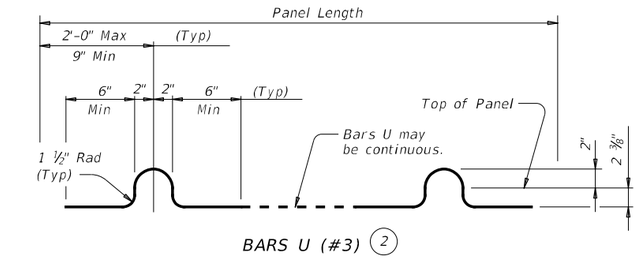

BARS U (#3) (2)

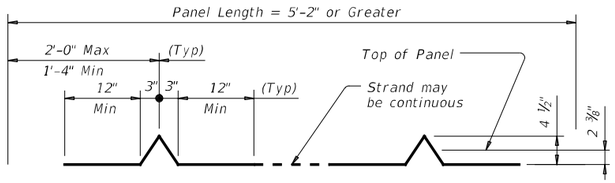

OPTIONAL STRAND FOR BARS U (3)

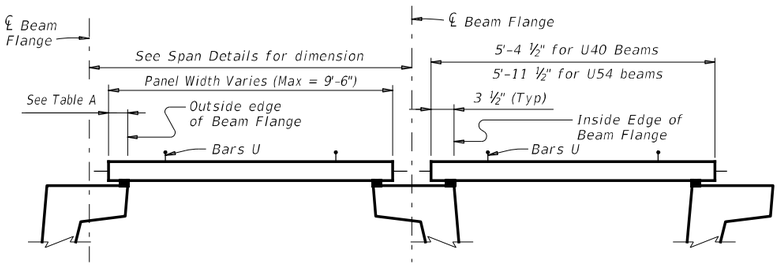

PRESTRESSED CONCRETE U-BEAMS

TYPICAL SECTIONS FOR DETERMINING PANEL WIDTH

HL93 LOADING

Texas Department of Transportation

Bridge Division Standard

PRESTRESSED CONCRETE PANEL FABRICATION DETAILS

PCP-FAB

FILE: pcpstde2.dgn	DN: TxDOT	CK: TxDOT	DW: JTR	CK: AES
©TxDOT January 2015 REVISIONS	CONT	SECT	JOB	HIGHWAY
	2103	01	034	
	DIST	COUNTY		SHEET NO.
	AUS	WILLIAMSON		158

DISCLAIMER:
The use of this standard is governed by the "Texas Engineering Practice Act". No warranty of any kind is made by TxDOT for any purpose whatsoever. TxDOT assumes no responsibility for the conversion of this standard to other formats or for incorrect results or damages resulting from its use.

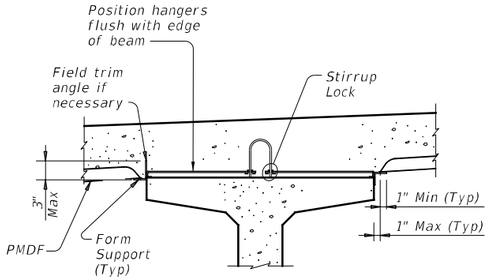

PRESTR CONC I-BEAMS AND I-GIRDERS WITH STIRRUP LOCKS

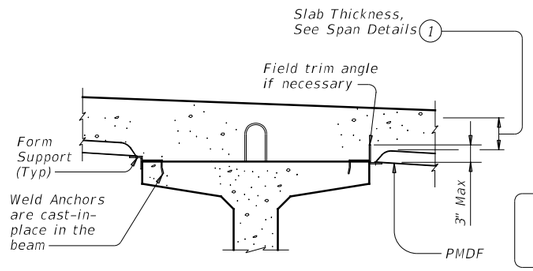

PRESTR CONC I-BEAMS AND I-GIRDERS WITH WELD ANCHORS

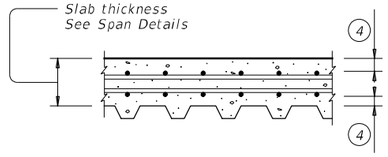

TYP LONGITUDINAL SLAB SECTION

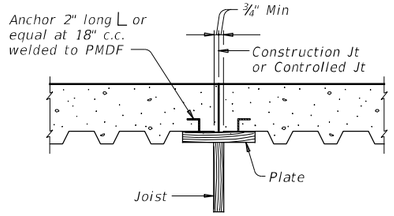

Note: In spans where PMD forms are used, timber forms must be used at construction joints. Adequate provision must be made to support edge of metal form and to provide anchorage of metal form to slab concrete where joined to wood forms.

SECTION THRU CONSTRUCTION JOINT

DESIGN NOTES:

As a minimum, PMDF and support angles must be designed for the dead load of the form, reinforcement and concrete plus 50 psf for construction loads. Flexural stresses due to these design loads must not exceed 75 percent of the yield strength of the steel. Allowable stress for weld metal must be 12,400 psi.

Maximum deflection under the weight of forms, reinforcement and concrete or 120 psf, whichever is greater, shall not exceed the following:

1/180 of the form design span, but not more than 0.50", for design spans of 10' or less.

1/240 of the form design span, but not more than 0.75", for design spans greater than 10'.

The form design span must not be less than the clear distance between beam flanges, measured parallel to the form flutes, minus 2".

CONSTRUCTION NOTES:

Form sheets must not be permitted to rest directly on the top of beam flanges. Form sheets must be securely fastened to form supports and must have a minimum bearing length of one inch at each end. Form supports must be placed in direct contact with beam flanges.

All attachments must be made by permissible welds, screws, bolts, clips or other means shown on the the forming plans. All sheet metal assembly screws must be installed with torque-limiting devices to prevent stripping. Only welds or bolts must be used to support vertical loads.

Welding and welds must be in accordance with the provisions of Item 448, "Structural Field Welding", pertaining to fillet welds. All welds must be made by a qualified welder in accordance with Item 448.

All permanently exposed form metal, where the galvanized coating has been damaged, must be thoroughly cleaned and repaired in accordance with Item 445, "Galvanizing". Minor heat discoloration in areas of welds need not be touched up.

Flutes must line up uniformly across the entire width of the structure where main reinforcing steel is located in the flute.

Construction joints will not be permitted unless shown on the plans. The location of and forming details for any construction joint used must be shown on the forming plans. Forms below a construction joint must be removed after curing of the slab.

A sequence for uniform vibration of concrete must be approved by the Engineer prior to concrete placement. Attention must be given to prevent damage to the forms, yet provide proper vibration to prevent voids or honeycomb in the flutes and at headers and/or construction joints.

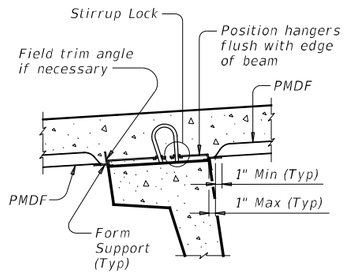

U-BEAMS WITH STIRRUP LOCKS

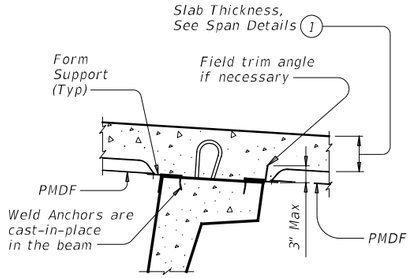

U-BEAMS WITH WELD ANCHORS

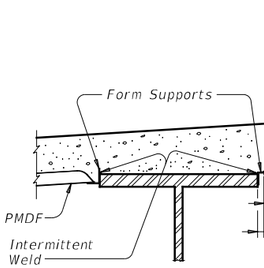

STEEL BEAMS AT COMPRESSION FLANGES

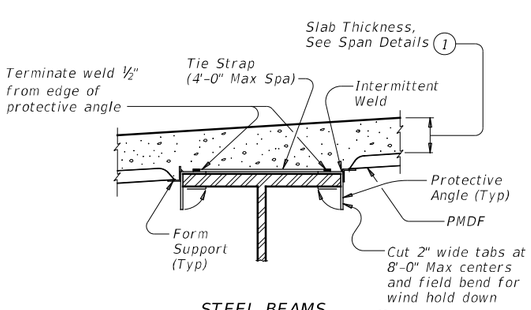

STEEL BEAMS AT TENSION FLANGES (2)

TYPICAL TRANSVERSE SECTIONS

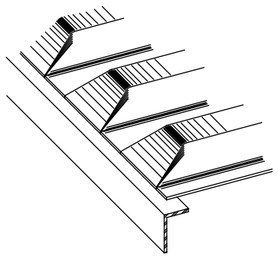

PRECLOSED

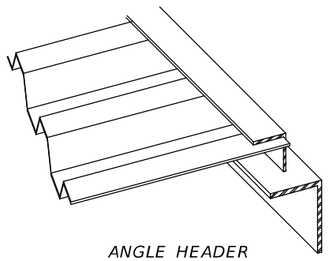

ANGLE HEADER

NOTE: This type is to be used for skewed ends only.

TYPES OF END CLOSURES

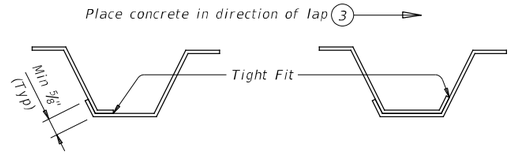

SIDE LAP DETAILS

(1) Slab thickness minus 5/8" if corrugations match reinforcing bars.

(2) Welding of form supports to tension flanges will not be permitted. Other methods of providing wind hold down resistance for PMDF in tension flange zones will be considered. At least one layer of sheet metal must be provided between the flange and the weld joint.

(3) The direction of concrete placement will be such that the upper layer of the form overlap is loaded first.

(4) See Span details for cover requirements.

GENERAL NOTES:

Steel for Permanent Metal Deck Forms (PMDF) and support angles shall conform to ASTM A653, Structural Steel (SS), with coating designation G165. Steel must have a minimum yield strength of 33 ksi. Minimum thickness of PMDF is 20 gage and that of support angles and protective angles is 12 gage.

Submit two copies of forming plans for PMDF to the Engineer. These plans must show all essential details of proposed form sheets, closures, fasteners, supports, connectors, special conditions and size and location of welds. These plans must clearly show areas of tension flanges for steel beams and provisions for protecting the tension flanges from welding notch effects by inclusion of separating sheet metal or other positive method. These plans must be designed, signed, and sealed by a licensed professional engineer. Department approval of these plans is not required, but the Department reserves the right to require modifications to the plans. The Contractor is responsible for the adequacy of these plans.

The details and notes shown on this standard are to be used as a guide in preparation of the forming plans.

All material, labor, tools and incidentals necessary to form a bridge deck with Permanent Metal Deck Forms is considered subsidiary to Item 422, "Concrete Superstructures".

FOR PRESTR CONC U-BEAM BRIDGES:

Size, spacing, and orientation of bottom mat of slab reinforcement must match the top mat of reinforcing shown on the span details except all bottom mat bars are to be #5.

SHEET 1 OF 2

Texas Department of Transportation

Bridge Division Standard

PERMANENT METAL DECK FORMS

PMDF

FILE: pmdfste1.dgn	DN: TxDOT	CK: TxDOT	DW: TxDOT	CK: TxDOT
©TxDOT January 2015	CONT	SECT	JOB	HIGHWAY
REVISIONS	2103	01	034	
	DIST	COUNTY		SHEET NO.
	AUS	WILLIAMSON		158

DATE: 3/22/2018 10:15:12 AM
FILE: c:\pwworking\dot\d0911849\pmdfste1.dgn

DISCLAIMER:
The use of this standard is governed by the "Texas Engineering Practice Act". No warranty of any kind is made by TxDOT for any purpose whatsoever. TxDOT assumes no responsibility for the conversion of this standard to other formats or for incorrect results or damages resulting from its use.

DATE: 3/22/2018 10:15:13 AM
FILE: c:\pwworking\dot\d0911849\pmdfste1.dgn

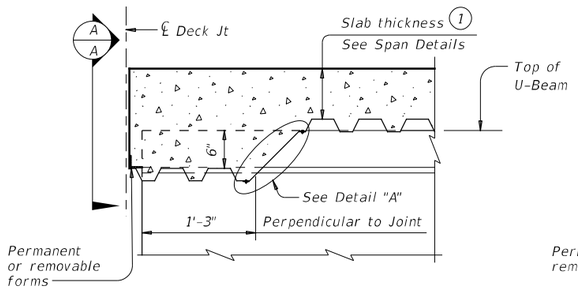

AT THICKENED SLAB END FOR U-BEAMS

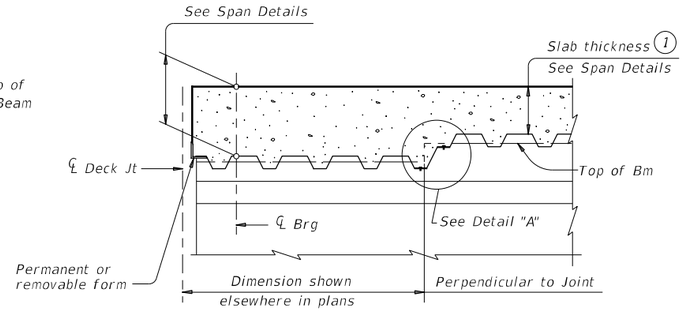

AT THICKENED SLAB END FOR PRESTRESSED I-BEAMS, I-GIRDERS AND STEEL BEAMS

Showing I-Beam block-out. No block-out for I-Girders or Steel Beams.

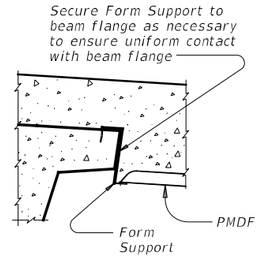

SECTION A-A

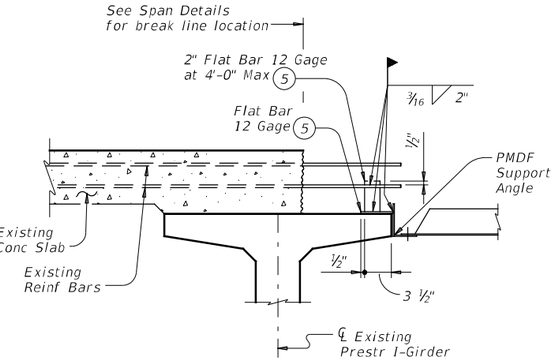

SHOWING PRESTRESSED CONCRETE I-BEAMS, I-GIRDERS AND U-BEAMS

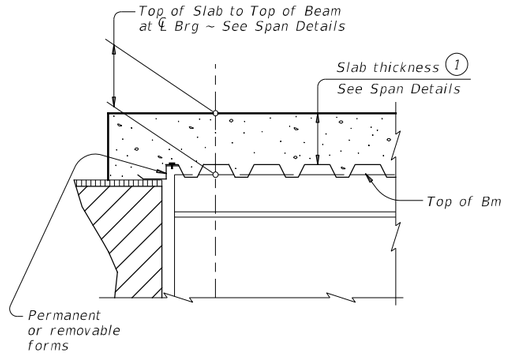

AT SLAB OVER ABUT BKWL OR INV TEE STEM FOR CONC BEAMS WITHOUT THICKENED SLAB END

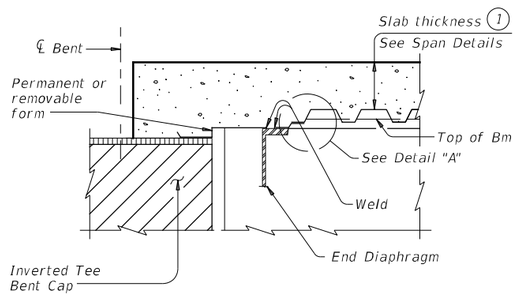

AT SLAB OVER INV TEE STEM FOR STEEL BEAMS WITHOUT THICKENED SLAB END

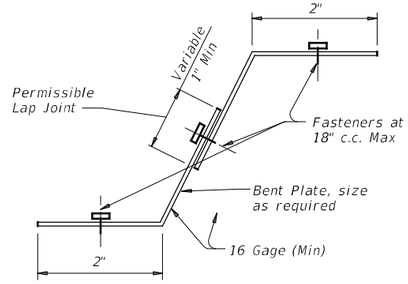

DETAIL "A"

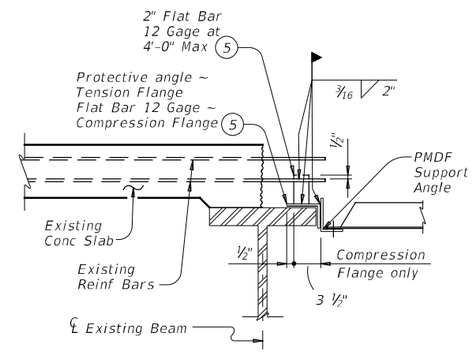

SHOWING STEEL BEAMS

WIDENING DETAILS

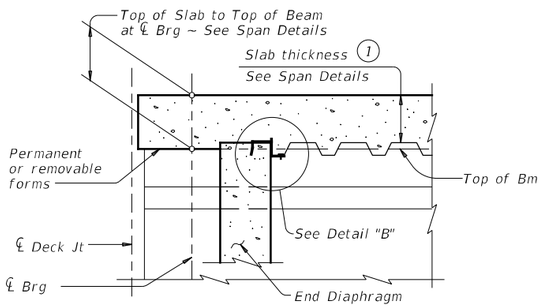

AT CONC END DIAPHRAGM FOR PRESTRESSED I-BEAMS AND STEEL BEAMS

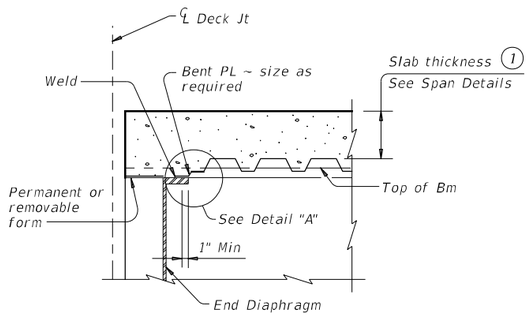

AT END DIAPHRAGM FOR STEEL BEAMS WITHOUT THICKENED SLAB END

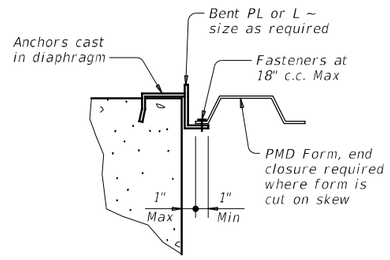

DETAIL "B"

(1) Slab thickness minus 5/8" if corrugations match reinforcing bars

(5) Minimum yield stress of 12 Gage bars shall be 40 ksi

DETAILS AT ENDS OF BEAMS

SHEET 2 OF 2

Texas Department of Transportation | Bridge Division Standard

PERMANENT METAL DECK FORMS

PMDF

FILE: pmdfste1.dgn	DN: TxDOT	CK: TxDOT	DW: TxDOT	CK: TxDOT
©TxDOT January 2015 REVISIONS	CONT	SECT	JOB	HIGHWAY
	2103	01	034	
	DIST	COUNTY		SHEET NO.
	AUS	WILLIAMSON		160

DISCLAIMER:
The use of this standard is governed by the "Texas Engineering Practice Act". No warranty of any kind is made by TxDOT for any purpose whatsoever. TxDOT assumes no responsibility for the conversion of this standard to other formats or for incorrect results or damages resulting from its use.

DATE: 3/22/2018 10:15:15 AM
FILE: c:\pwworking\ddi\d0911849\sejaste1.dgn

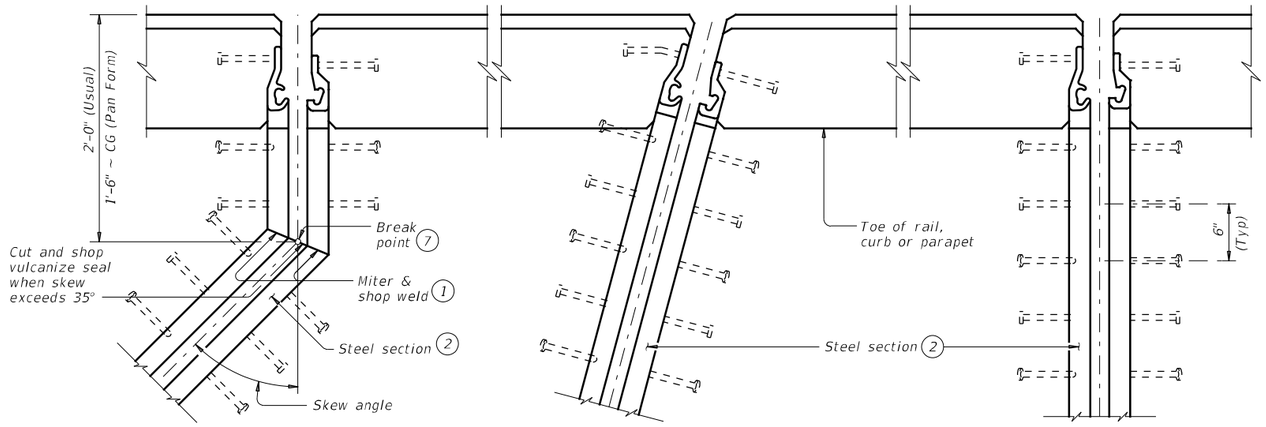

SHOWING SKEWS WITH SLAB BREAKBACKS

SHOWING SKEWS WITHOUT SLAB BREAKBACKS

SHOWING WITHOUT SKEWS AND SLAB BREAKBACKS

PLANS OF END CONDITIONS

Used for Watson Bowman Acme (SE-400 or SE-500) and D.S. Brown (A2R-400 or A2R-XTRA) joint systems.
Shown with upturns

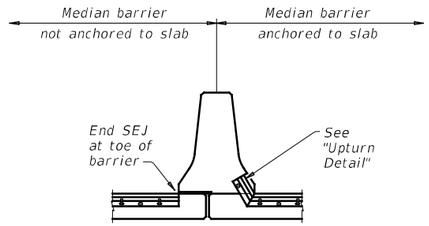

WITH OPEN DECK JOINT BELOW MEDIAN BARRIER

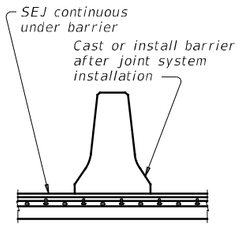

AT MEDIAN BARRIER

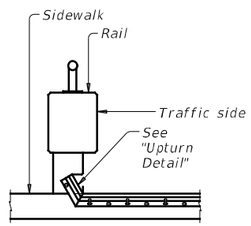

AT SIDEWALK BEHIND BRIDGE RAIL

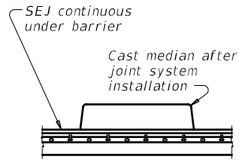

AT RAISED MEDIAN

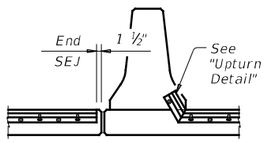

WITH OPEN DECK JOINT ADJACENT TO MEDIAN BARRIER

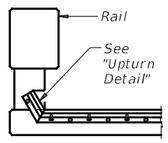

AT CONCRETE BRIDGE RAIL

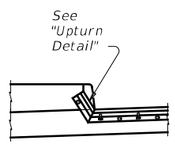

AT SIDEWALK

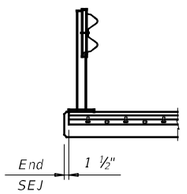

AT STEEL POST BRIDGE RAIL

TYPICAL SECTIONS (5)

Used for Watson Bowman Acme (SE-400 or SE-500) and D.S. Brown (A2R-400 or A2R-XTRA) joint systems.

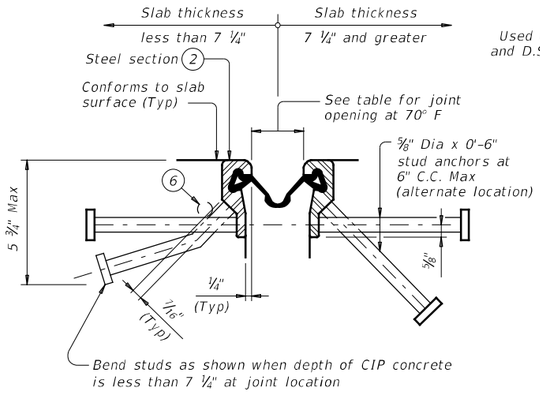

SECTION THRU WATSON BOWMAN ACME (SE-400 OR SE-500) JOINTS

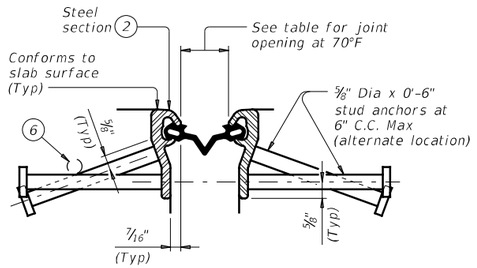

SECTION THRU D.S. BROWN (A2R-400 OR A2R-XTRA) JOINTS

TABLE OF SEALED EXPANSION JOINT INFORMATION

MANUFACTURER	STEEL SECTION (2)	STRIP SEAL			
		4" JOINT		5" JOINT	
		Seal Type	Joint Opening (3)	Seal Type	Joint Opening (3)
D.S. Brown	Type SSCM2	A2R-400	1 ¾"	A2R-XTRA	2"
Watson Bowman Acme	Type R	SE-400	1 ¾"	SE-500	2"
Watson Bowman Acme	As Shown	SPS-400	2"	N/A	N/A
R.J. Watson	As Shown	SF-400	2 ½"	N/A	N/A

REDUCED LONGITUDINAL MOVEMENT RANGE

SKEW (deg)	JOINT SIZE	
	4"	5"
0	4.0"	5.0"
15	4.0"	5.0"
30	3.5"	4.3"
45	2.8"	3.5"

DESIGN NOTES:

Joints installed on a skew have reduced ability to accommodate longitudinal movement. Use table values to determine the correct joint size for skewed installations.

For other skews over 25 degrees, calculate reduced movement range by multiplying joint size by cosine (skew).

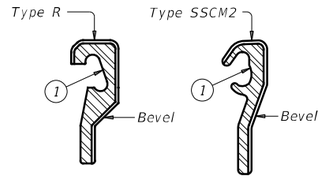

WELD LIMITS

WELD LIMITS

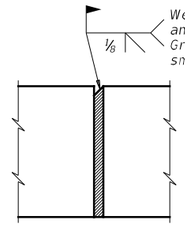

REAR VIEW

FIELD SPLICE DETAIL

Used for Watson Bowman Acme (SE-400 or SE-500) and D.S. Brown (A2R-400 or A2R-XTRA) joint systems.

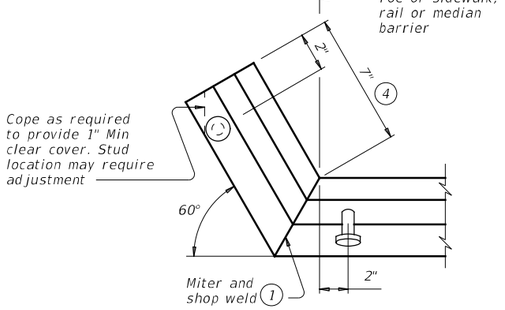

UPTURN DETAIL

Used for Watson Bowman Acme (SE-400 or SE-500) and D.S. Brown (A2R-400 or A2R-XTRA) joint systems.

FABRICATION NOTES:

Temporarily shop assemble corresponding sections of Sealed Expansion Joints, check for fit, and match mark for shipment. Secure corresponding sections together for shipment with shipping angle. Do not use erection bolts.

The seal must be continuous and included in the price bid for Sealed Expansion Joint.

Ship steel sections in convenient lengths of 10'-0" Min and 24'-0" Max unless necessary for staged construction or widenings. One shop splice is permitted in each shipping length provided no piece is less than 2'-0" long and sufficient studs are added to limit the stud to shop splice distance to 2" Min and 4" Max.

Weld studs in accordance with AWS D1.1.

Butt weld all shop and field splices and grind smooth areas in contact with seal. Make all necessary field splice joint preparations in the shop.

Paint portions of steel sections not in contact with concrete with the primer specified for System II paint.

Shop drawings for the fabrication of Sealed Expansion Joints will not require the Engineer's approval if fabrication is in accordance with the details shown on this standard.

CONSTRUCTION NOTES:

Secure the Sealed Expansion Joint in position and place to the proper grade and alignment by welding braces to adjacent reinforcing steel, to prestressed beam stirrups, or to anchors cast in concrete diaphragms. Include cost of temporary bracing in the price bid for Sealed Expansion Joint.

Remove shipping angle immediately after each joint half is secured in place. Grind smooth, and touch up with organic zinc-rich paint.

Clean and prepare seal cavity for seal installation as per the Manufacturer's installation procedures.

GENERAL NOTES:

Provide Sealed Expansion Joints in the size and at locations shown on the plans.

Minimum slab and overhang thickness required for the use of SEJ-A is 6 ½".

(1) Remove all burrs which will be in contact with seal prior to making splice.

(2) Shape of steel section shown is typical. Variations in sections must be approved by the Engineer.

(3) These openings are also the recommended minimum installation openings.

(4) Reduce for sidewalk or parapet heights less than 6".

(5) Other conditions affecting the joint profile should be noted elsewhere.

(6) Move transverse bars that are in conflict with SEJ studs, in either the bridge slab or approach slab, to rest at the junction of the studs.

(7) See span details for location of break point.

SHEET 1 OF 2

Texas Department of Transportation — Bridge Division Standard

SEALED EXPANSION JOINT TYPE A WITHOUT OVERLAY

SEJ-A

FILE: sejaste1.dgn	DN: TxDOT	CK: TxDOT	DW: JTR	CK: JMH
©TxDOT January 2015	CONT	SECT	JOB	HIGHWAY
REVISIONS	2103	01	034	
01-16: Addition of strip seal type, dimension armor plate, Joint Seal splice note.	DIST	COUNTY		SHEET NO.
	AUS	WILLIAMSON		161

DISCLAIMER:
The use of this standard is governed by the "Texas Engineering Practice Act". No warranty of any kind is made by TxDOT for any purpose whatsoever. TxDOT assumes no responsibility for the conversion of this standard to other formats or for incorrect results or damages resulting from its use.

DATE: 3/22/2018 10:15:17 AM
FILE: c:\pwworking\dal\d0911849\sejastel.dgn

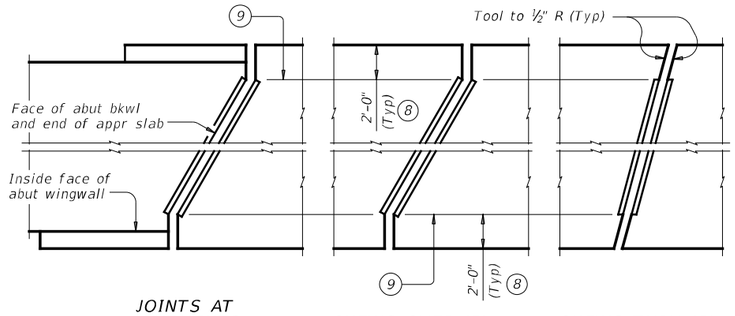

JOINTS AT ABUTMENTS — SKEWS OVER 15° — SKEWS THRU 15°

PLANS OF ARMOR PLATES

Used for R.J. Watson (SF-400) and Watson Bowman Acme (SPS-400) joint systems

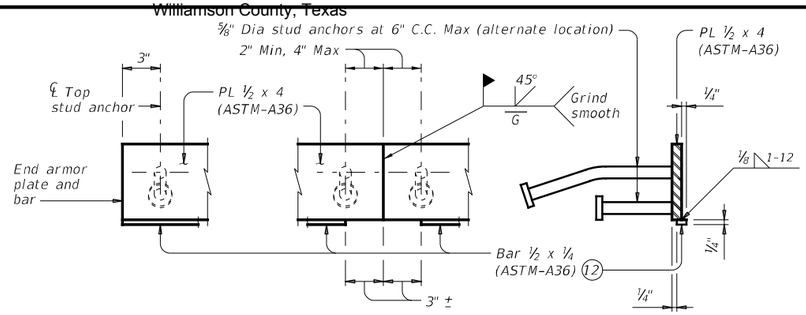

END VIEW — FIELD SPLICE (Studs not shown for clarity) — SECTION

ELEVATION OF ARMOR PLATE

Used for R.J. Watson (SF-400) and Watson Bowman Acme (SPS-400) joint systems

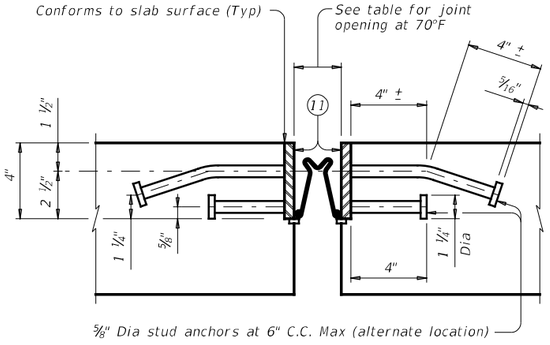

SECTION THRU R J WATSON (SF-400) JOINT

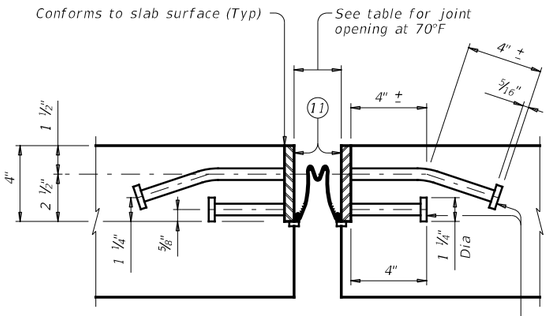

SECTION THRU WATSON BOWMAN ACME (SPS-400) JOINT

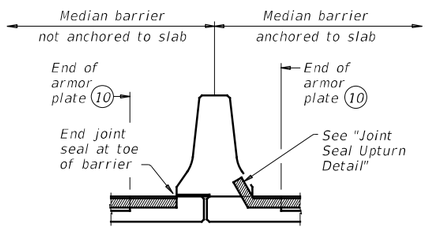

WITH OPEN DECK JOINT BELOW MEDIAN BARRIER

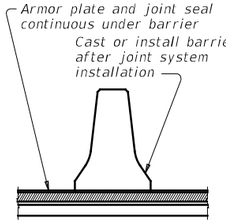

AT MEDIAN BARRIER

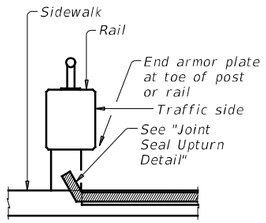

AT SIDEWALK BEHIND BRIDGE RAIL

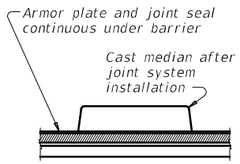

AT RAISED MEDIAN

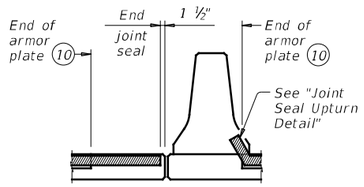

WITH OPEN DECK JOINT ADJACENT TO MEDIAN BARRIER

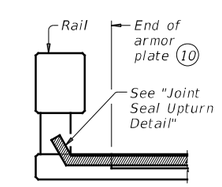

AT CONCRETE BRIDGE RAIL

AT SIDEWALK

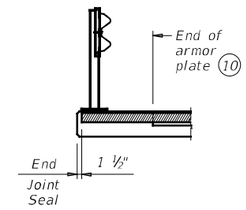

AT STEEL POST BRIDGE RAIL

TYPICAL SECTIONS OF ARMOR PLATES & SEALS (5)

Used for R.J. Watson (SF-400) and Watson Bowman Acme (SPS-400) joint systems

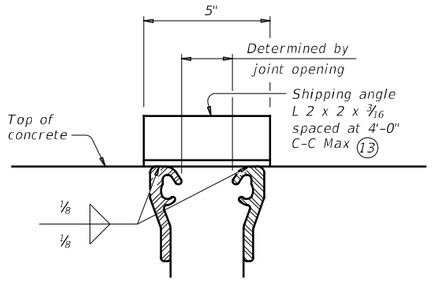

SHOWING D.S. BROWN (Ty SSCM2)
All joints similar

SHIPPING ANGLE

An alternate method of securing joint sections may be used if approved by the Bridge Division. Erection bolts are not allowed.

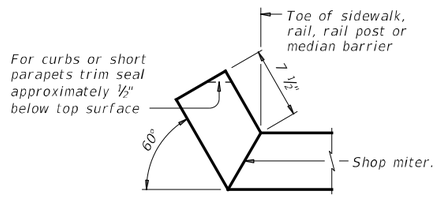

JOINT SEAL UPTURN DETAIL

Used for R.J. Watson (SF-400) and Watson Bowman Acme (SPS-400) joint systems. Upturn seal only. Terminate armor plates as shown in "Plans of Armor Plates" and "Typical Sections of Armor Plates & Seals."

(5) Other conditions affecting the joint profile should be noted elsewhere.

(8) Unless shown otherwise, terminate armor plate at slab break point if break is more than 2'-0" from slab edge.

(9) At Fabricator's option, armor plate may extend up to 6" beyond this point for skews through 15°.

(10) See "Plans of Armor Plates".

(11) Coat with Manufacturer's supplied epoxy primer above bar before installing sealant.

(12) In lieu of bar, use ¾", 16 gauge, stainless steel strap. Attach to armor plate with a fastener for attaching steel to steel base material, such as Hilti X-EGN or X-S13.

(13) Align shipping angle perpendicular to joint.

CONSTRUCTION NOTE FOR R.J. WATSON (SF-400) AND WATSON BOWMAN ACME (SPS-400) JOINTS:
Splice and install seal in accordance with the Manufacturer's directions and with the adhesive provided by the Manufacturer. Splice in joint seal may be performed in the field.

Texas Department of Transportation — Bridge Division Standard

SEALED EXPANSION JOINT TYPE A WITHOUT OVERLAY

SEJ-A

FILE: sejastel.dgn	DN: TxDOT	CK: TxDOT	DW: JTR	CK: JMH
©TxDOT January 2015	CONT	SECT	JOB	HIGHWAY
REVISIONS	2103	01	034	
01-16: Addition of strip seal type, dimension armor plate, Joint Seal splice note.	DIST	COUNTY		SHEET NO.
	AUS	WILLIAMSON		162

DISCLAIMER:
The use of this standard is governed by the "Texas Engineering Practice Act". No warranty of any kind is made by TxDOT for any purpose whatsoever. TxDOT assumes no responsibility for the conversion of this standard to other formats or for incorrect results or damages resulting from its use.

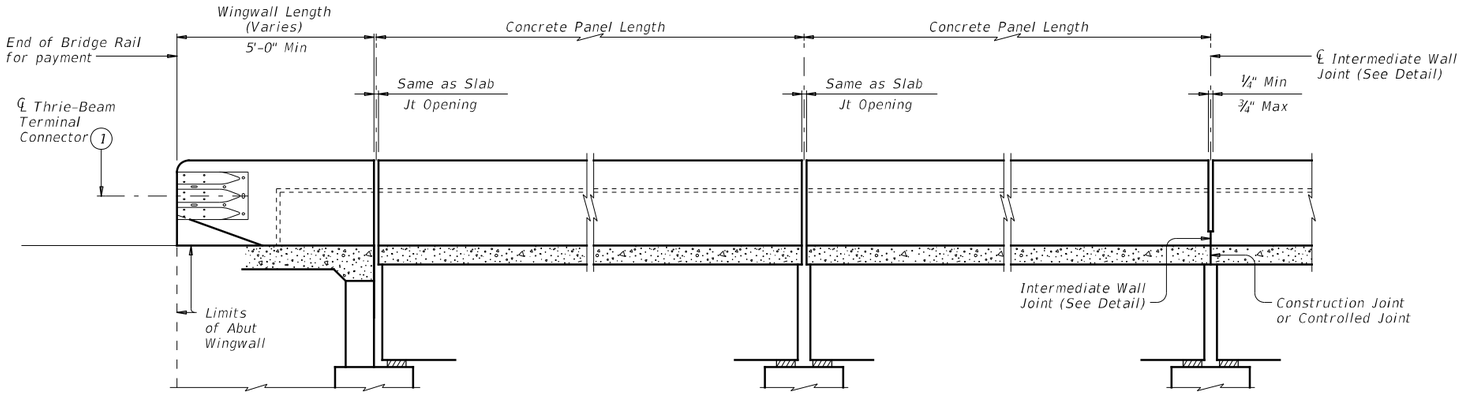

AT ABUTMENTS | AT BENTS WITH SLAB EXP JOINTS | AT BENTS WITHOUT SLAB EXP JOINTS

ROADWAY ELEVATION OF RAIL

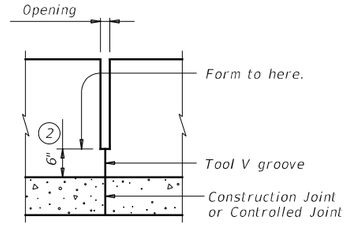

INTERMEDIATE WALL JOINT DETAIL

Provide at all interior bents without slab expansion joints.

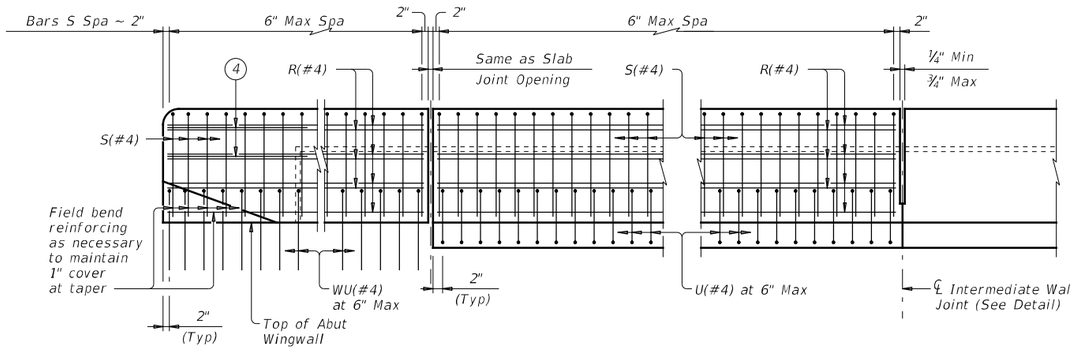

ELEVATION SHOWING TYPICAL REINFORCING PLACEMENT

℄ 5 ~ ⅞" Dia A325 Bolts with two 1 ¾" O.D. washers. Place washer under each head and nut. Tighten the 5 Terminal Connection Bolts in a well distributed pattern so to prevent damage or distortion of the Thrie-Beam Connection and the MBGF Transition. Cut bolts off after installation so as to extend no more than ¾" beyond nut. Paint ends of cut-off bolts with Zinc-rich paint. (1)

℄ 5 ~ 1" Dia holes and 2 ½" Dia x 2" deep recesses. Form or core holes and recesses. Percussion drilling is not permitted. Adjust placement of reinforcing steel as necessary to avoid bolt holes and recesses. (5)

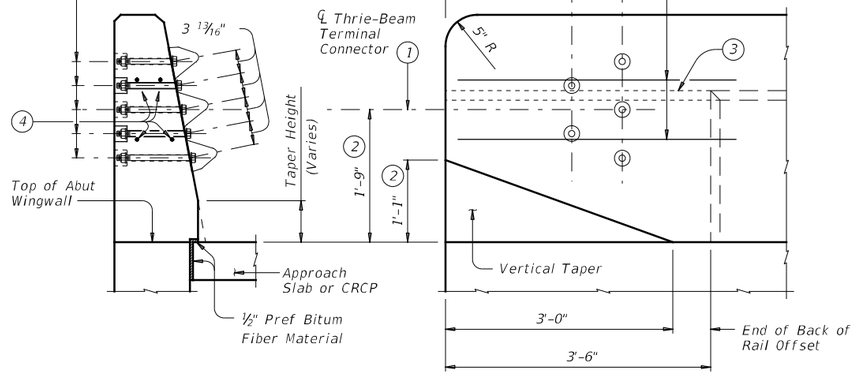

SECTION | ELEVATION

TERMINAL CONNECTION DETAILS

(1) Terminal Connectors and associated hardware are to be paid for under the Item "Metal Beam Guard Fence". Attach Metal Beam Guard Fence Transitions to the bridge rail and extend along the embankment unless otherwise shown in the plans.

(2) Increase 2" for structures with Overlay.

(3) Back of rail offset may, with Engineer's approval, be continued to the end of the railing.

(4) Place 4 additional Bars R(#4) 3'-8" in length inside Bars S(#4) and centered 2'-0" from end of rail when Terminal Connections are required.

(5) Bolt recesses are only required when pedestrian sidewalks are adjacent to back of rail.

SHEET 1 OF 2

Texas Department of Transportation | Bridge Division Standard

TRAFFIC RAIL SINGLE SLOPE

TYPE SSTR

FILE: rlstd014.dgn	DN: TxDOT	CK: TxDOT	DW: JTR	CK: TxDOT
©TxDOT July 2014	CONT	SECT	JOB	HIGHWAY
REVISIONS	2103	01	034	
	DIST	COUNTY		SHEET NO.
	AUS	WILLIAMSON		163

DATE: 3/22/2018 10:15:18 AM
FILE: c:\pwworking\dot\d0911849\rlstd014.dgn

DISCLAIMER:
The use of this standard is governed by the "Texas Engineering Practice Act". No warranty of any kind is made by TxDOT for any purpose whatsoever. TxDOT assumes no responsibility for the conversion of this standard to other formats or for incorrect results or damages resulting from its use.

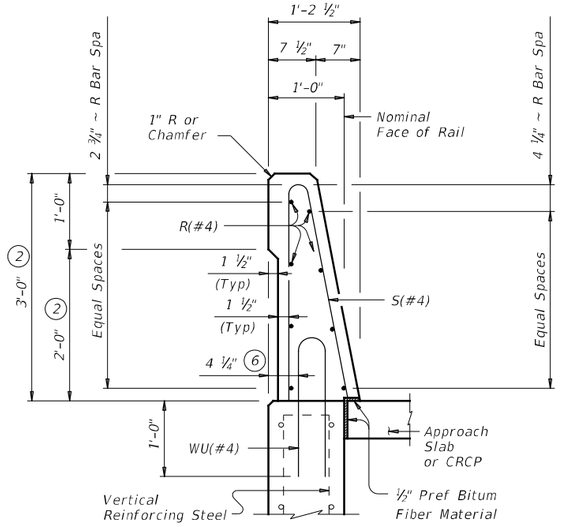

ON ABUTMENT WINGWALLS OR CIP RETAINING WALLS

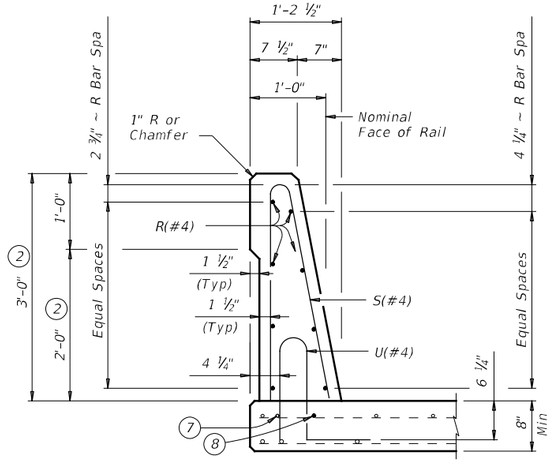

ON BRIDGE SLAB

SECTIONS THRU RAIL

(2) Increase 2" for structures with Overlay.

(6) 5 ¼" when vertical reinforcing has closer clear cover over horizontal reinforcing in abutment wingwalls or retaining walls on traffic side of wall.

(7) As an aid in supporting reinforcement, additional longitudinal bars may be used in the slab with the approval of the Engineer. Such bars must be furnished at the Contractor's expense.

(8) Top longitudinal slab bar may be adjusted laterally 3" plus or minus to tie reinforcing.

(9) No longitudinal wires may be within upper bend.

(10) Bend or cut as required to clear drain slots.

(11) Space U(#4) bars at 4" Max when end region of panel length is less than 6'-0" to side slot drain. Space U(#4) bars at 6" Max when end region of panel length is 6'-0" and greator to side slot drain.

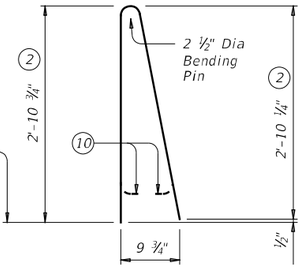

BARS S (#4)

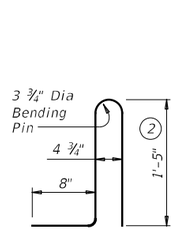

BARS U (#4)

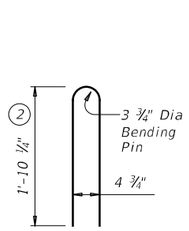

BARS WU (#4)

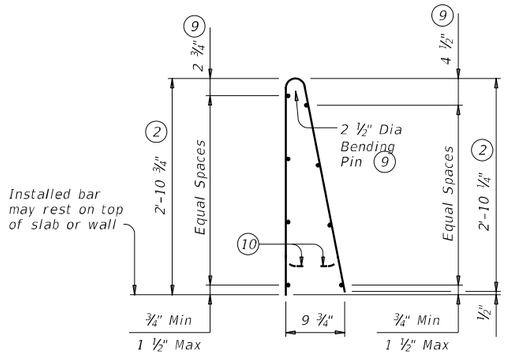

OPTIONAL WELDED WIRE REINFORCEMENT (WWR)

DESCRIPTION	LONGITUDINAL WIRES	VERTICAL WIRES
Minimum (Cumulative Total) Wire Area	1.067 Sq In.	0.267 Sq In. per Ft
	No. of Wires	Spacing
Minimum	8	4"
Maximum	10	8"
Maximum Wire Size Differential	The smaller wire must have an area of 40% or more of the larger wire.	

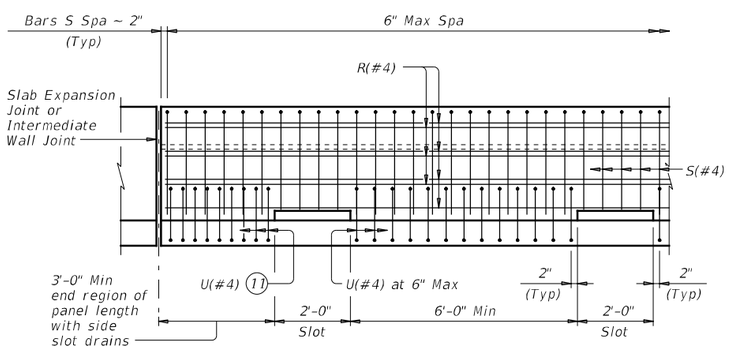

OPTIONAL SIDE SLOT DRAIN DETAIL

Note: Side Slot Drains may be used where shown elsewhere on the plans or as directed by the Engineer. Drains should not be placed over railroad tracks, lower roadways, or sidewalks. When this rail is used as a separator between a roadway surface and a sidewalk surface, side drain slots will not be permitted.

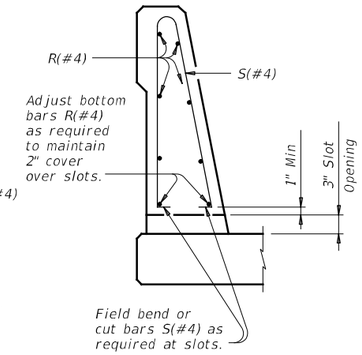

SECTION THRU OPTIONAL SIDE SLOT DRAIN

CONSTRUCTION NOTES:

This railing may be constructed with slip-forms when approved by the Engineer, with equipment approved by the Engineer. Provide sensor control for both line and grade. Tack welding to provide bracing for slip-form operations is acceptable. Welding can be performed at a minimum spacing of 3 ft between the cage and the anchorage. It is permissible to weld to U, WU and S bars at any location on the cage. If increased bracing is needed, provide additional anchorage devices and weld in the upper two thirds of the cage.

The back of railing must be vertical unless otherwise shown in the plans or approved by the Engineer.

MATERIAL NOTES:

Galvanize all steel components except reinforcing unless otherwise shown in plans.

Provide Class "C" concrete. Provide Class "C" (HPC) if required elsewhere.

Provide Grade 60 reinforcing steel.

Epoxy coat all rail reinforcement if slab bars are epoxy coated.

Deformed Welded Wire Reinforcement (WWR) (ASTM A1064) of equal size and spacing may be substituted for Bars U and WU unless noted otherwise. Deformed WWR (ASTM A1064) may be substituted for Bars R and S, as shown. Combinations of reinforcing steel and WWR or configurations of WWR other than shown are permitted if conditions in the table are satisfied. Provide the same laps as required for reinforcing bars.

Provide bar laps, where required, as follows:

Uncoated ~ #4 = 1'-5"
Epoxy coated ~ #4 = 2'-1"

GENERAL NOTES:

This rail has been successfully evaluated by full-scale crash test to meet MASH TL-4 criteria. This rail can be used for speeds of 50 mph and greater when a TL-3 rated guard fence transition is used. When a TL-2 rated guard fence transition is used, this rail can only be used for speeds of 45 mph and less.

Do not use this railing on bridges with expansion joints providing more than 5" movement.

Rail anchorage details shown on this standard may require modification for select structure types. See appropriate details elsewhere in plans for these modifications.

Shop drawings will not be required for this rail.

Average weight of railing with no overlay is 376 plf.

Cover dimensions are clear dimensions, unless noted otherwise.

Reinforcing bar dimensions shown are out-to-out of bar.

Texas Department of Transportation

Bridge Division Standard

TRAFFIC RAIL SINGLE SLOPE

TYPE SSTR

FILE: rlstd014.dgn	DN: TxDOT	CK: TxDOT	DW: JTR	CK: TxDOT
©TxDOT July 2014	CONT	SECT	JOB	HIGHWAY
REVISIONS	2103	01	034	
	DIST	COUNTY		SHEET NO.
	AUS	WILLIAMSON		164

DATE: 3/22/2018 10:15:20 AM
FILE: c:\pwworking\dal\d0911849\rlstd014.dgn

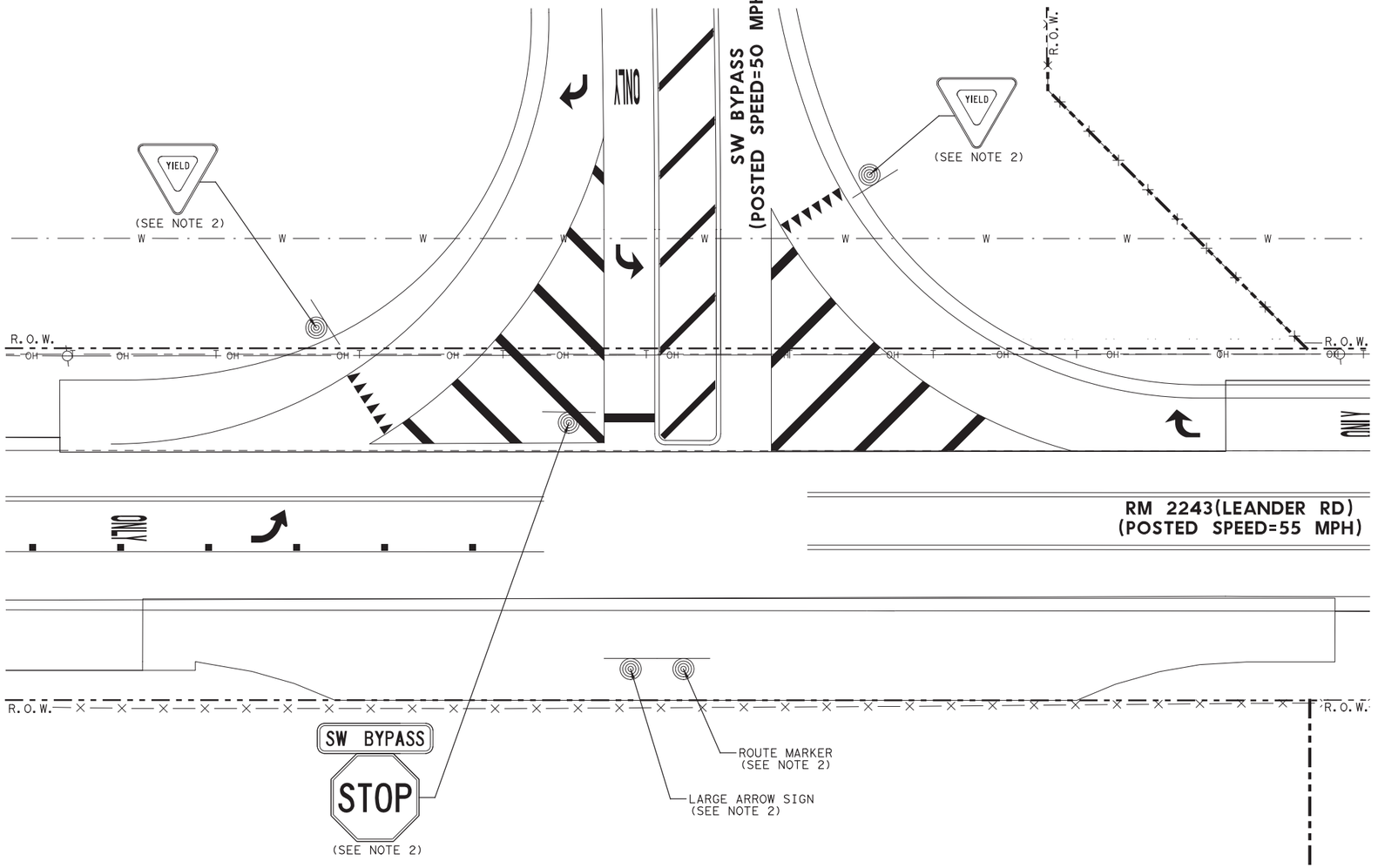

LEGEND

- EXIST. GROUND MOUNTED SIGN
- EXIST. UTILITY POLE
- EXIST. OVERHEAD TELEPHONE LINE
- EXIST. TELEPHONE LINE
- EXIST. WATER LINE
- EXIST. FENCE
- EXIST. RIGHT OF WAY
- PROP. RIGHT OF WAY

0 15 30 45 60
SCALE IN FEET

NOTES

1. THE EXISTENCE AND LOCATION OF UTILITIES, EITHER UNDERGROUND OR OVERHEAD, INDICATED ON THE PLANS ARE TAKEN FROM THE BEST RECORDS AVAILABLE AND ARE APPROXIMATE. IT IS THE CONTRACTOR'S RESPONSIBILITY TO LOCATE ALL UTILITIES (PRIVATE/PUBLIC AND SHOWN/NOT SHOWN) PRIOR TO COMMENCING WORK. THE CONTRACTOR IS FULLY RESPONSIBLE FOR ANY DAMAGES CAUSED BY HIS FAILURE TO LOCATE, PRESERVE, AND PROTECT THESE UTILITIES.
2. REFER TO SIGNING AND STRIPING PLANS FOR REMOVAL AND RELOCATION OF EXISTING SIGNS.
3. NORTH LEG OF SW BYPASS IS CURRENTLY UNDER CONSTRUCTION. EXISTING FEATURES SHOWN HERE REPRESENT EXPECTED CONDITIONS AT COMPLETION OF SW BYPASS NORTH SEGMENT CONSTRUCTION.

TIMOTHY GRIMES
100107
LICENSED PROFESSIONAL ENGINEER
STATE OF TEXAS
3.23.2018

NO.	DATE	REVISION	APPROVED

WILLIAMSON COUNTY

HDR Engineering, Inc.
810 Hesters Crossing, Suite 120
Round Rock, Texas 78681
Texas Registered Engineering Firm F-754

SOUTHWEST BYPASS SEGMENT 2
SW BYPASS AND RM 2243 EXISTING INTERSECTION LAYOUT

SCALE: 1"=30'

DESIGN	FED. RD. DIV. NO.	FEDERAL AID PROJECT NO.		HIGHWAY NO.
TG	6			
GRAPHICS AF	STATE	DISTRICT	COUNTY	SHEET NO.
CHECK KK	TEXAS	AUS	WILLIAMSON	165
CHECK TG	CONTROL 2103	SECTION 01	JOB 034	

PLOT DRIVER: TXDOT_PDF_BW.pltcfg PENTABLE: S2-0000020IT0718.tbl
USER: AFAZ DATE: 3/22/2018 TIME: 3:32:34 PM SCALE: 1:30
FILE: Williamson_County\SH29_SW_Bypass_2243_to_IH35_\6.0_CAD_BIM\6.2_Work_In_Progress\6.2.2_Contract_Files\Sheet_Files\06_WA_5_Segment_2\Signals\SWB-S2-SGNL02.dgn

SIGN LEGEND

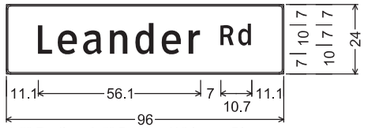

1.5" Radius, 0.5" Border, White on Blue;
[Leander] ClearviewHwy-3-W;
[Rd] ClearviewHwy-3-W;

S1
ILSN SIGN(DOUBLE SIDED)
(CITY OF GEORGETOWN)
(2 EA)

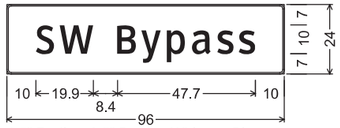

1.5" Radius, 0.5" Border, White on Blue;
[SW Bypass] ClearviewHwy-3-W;

S2
ILSN SIGN(DOUBLE SIDED)
(CITY OF GEORGETOWN)
(2 EA)



S4
R9-3
(18"X18")
(4 EA)

CAUTION

UTILITY LOCATIONS ARE APPROXIMATE. CONTRACTOR MUST LOCATE ALL UTILITIES PRIOR TO DRILLING AND BORING. CONTRACTOR IS FULLY RESPONSIBLE FOR ANY DAMAGED UTILITIES.



LEGEND

- PROP. SIGNAL POLE
- PROP. LUMINAIRE
- PROP. GROUND BOX W/ APRON
- PROP. CONDUIT(BORED)
- PROP. CONDUIT(TRENCHED)
- PROP. SIGN
- PROP. ILSN SIGN
- PROP. SERVICE METER
- PROP. CONTROLLER FOUNDATION
- EXIST. UTILITY POLE
- EXIST. OVERHEAD TELEPHONE LINE
- EXIST. TELEPHONE LINE
- EXIST. WATER LINE
- EXIST. FENCE
- EXIST. RIGHT OF WAY
- PROP. RIGHT OF WAY
- (X) CONDUIT RUN NO.

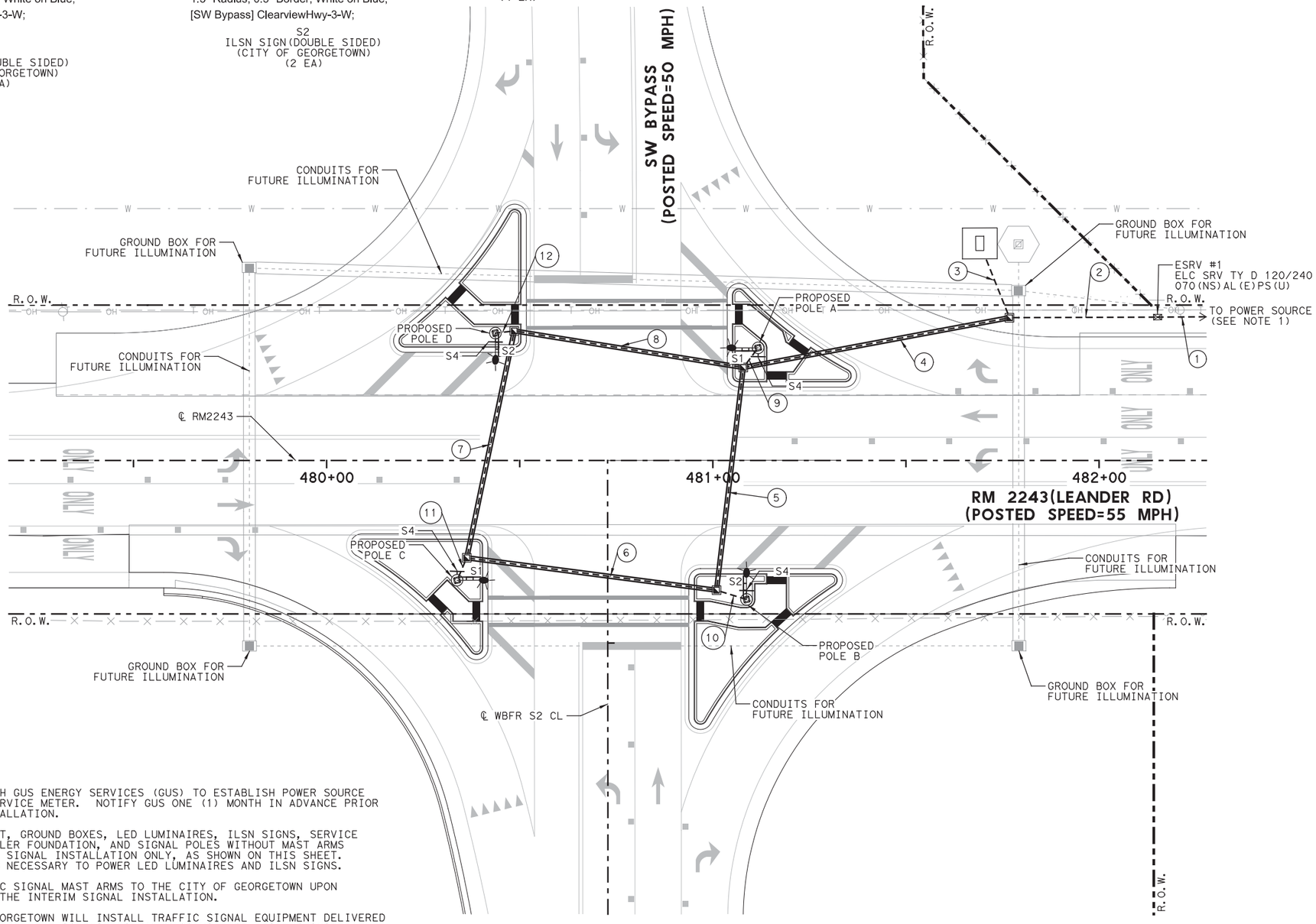

0 15 30 45 60
SCALE IN FEET

NOTES

1. COORDINATE WITH GUS ENERGY SERVICES (GUS) TO ESTABLISH POWER SOURCE AND INSTALL SERVICE METER. NOTIFY GUS ONE (1) MONTH IN ADVANCE PRIOR TO SIGNAL INSTALLATION.
2. INSTALL CONDUIT, GROUND BOXES, LED LUMINAIRES, ILSN SIGNS, SERVICE METER, CONTROLLER FOUNDATION, AND SIGNAL POLES WITHOUT MAST ARMS DURING INTERIM SIGNAL INSTALLATION ONLY, AS SHOWN ON THIS SHEET. PROVIDE WIRING NECESSARY TO POWER LED LUMINAIRES AND ILSN SIGNS.
3. DELIVER TRAFFIC SIGNAL MAST ARMS TO THE CITY OF GEORGETOWN UPON COMPLETION OF THE INTERIM SIGNAL INSTALLATION.
4. THE CITY OF GEORGETOWN WILL INSTALL TRAFFIC SIGNAL EQUIPMENT DELIVERED BY THE CONTRACTOR ONCE TRAFFIC SIGNAL WARRANTS ARE MET FOR THIS INTERSECTION, AS SHOWN IN THE PROPOSED (ULTIMATE) SIGNAL LAYOUT. INSTALLATION OF THIS EQUIPMENT WILL BE BID AND PAID FOR SEPARATELY.
5. EXACT LOCATION OF POLES, ELECTRICAL SERVICES, AND GROUND BOXES SHALL BE DETERMINED IN THE FIELD AND SUBJECT TO FINAL APPROVAL BY ENGINEER IN THE FIELD. IT IS THE CONTRACTOR'S RESPONSIBILITY TO VERIFY THE EXACT LOCATIONS FROM THE ENGINEER, PRIOR TO CONSTRUCTION.

PROPOSED POLE OFFSETS			
POLE	ALIGNMENT	STATION	OFFSET
A	℄ RM2243	STA 481+11.7	29.2 LT
B	℄ RM2243	STA 481+8.7	36.0 RT
C	℄ RM2243	STA 480+33.8	31.0 RT
D	℄ RM2243	STA 480+43.7	33.0 LT

STATE OF TEXAS
TIMOTHY GRIMES
100107
LICENSED
PROFESSIONAL ENGINEER

3.23.2018

NO.	DATE	REVISION	APPROVED

WILLIAMSON COUNTY TEXAS

HDR Engineering, Inc.
810 Hesters Crossing, Suite 120
Round Rock, Texas 78681
Texas Registered Engineering Firm F-754

SOUTHWEST BYPASS SEGMENT 2
SW BYPASS AND RM 2243 PROPOSED (INTERIM) SIGNAL LAYOUT

SCALE: 1"=30'

DESIGN	FED.RD. DIV.NO.	FEDERAL AID PROJECT NO.		HIGHWAY NO.
TG	6			
GRAPHICS	STATE	DISTRICT	COUNTY	SHEET NO.
AF	TEXAS	AUS	WILLIAMSON	
CHECK	CONTROL	SECTION	JOB	166
KK	2103	01	034	
CHECK				
TG				

PLOT DRIVER: TXDOT_PDF_BW.pltcfg PENTABLE: S2-000002017071B.tbl
USER: AFAZ DATE: 3/22/2018 TIME: 3:33:05 PM SCALE: 1:30
FILE: Williamson_County\SH29_SW_Bypass_2243_to_IH35_16.0_CAD_BIM\6.2_Work_In_Progress\6.2.2_Contract_Files\Sheet_Files\06_WA_5_Segment_2\Signals\SWB-S2-SGNL03.dgn
4/12/2018 7:20 AM

CONDUIT AND CONDUCTOR SCHEDULE

RUN NO.	LENGTH LF	PROPOSED CONDUITS 2" PVC EA	2" PVC (LUM'S) EA	3" PVC (TRAFFIC) EA	3" PVC (RADAR) EA	2" PVC (LUM'S) (BORED) EA	3" PVC (TRAFFIC) (BORED) EA	3" PVC (RADAR) (BORED) EA	NO. 8 BARE EA	NO. 8 XHHW (LUM'S) EA	TRAY CABLE 3/C 12 AWG (ILSN) EA
1*	265	1									
2**	40	1	1						2	8	4
3**	20	1		2	1				4		
4	70					1	2	1	4	8	4
5	65					1	1	1	3	4	2
6	70					1	1	1	3	2	1
7	65					1	1	1	3		
8	65					1	1	1	3	2	1
9	10		1	1	1				3	2	1
10	10		1	1	1				3	2	1
11	10		1	1	1				3	2	1
12	5		1	1	1				3	2	1
TOTAL (LF)		325	75	75	55	335	405	335	1340	1480	740

NOTES
1. * PROVIDE CONDUIT FOR USE BY UTILITY COMPANY. COORDINATE WITH GUS ENERGY SERVICES TO ESTABLISH POWER SOURCE AND INSTALL SERVICE METER.
2. ** INSTALL 1-2" FOR #6 INSULATED AND #6 BARE. KEEP THESE CABLES SEPARATE FROM OTHER CABLES.

POLE DETALS AND WIRING INSIDE POLES

POLE	TYPE	CONDUCTORS/CABLE IN POLES (LF) NO. 8 XHHW (LUM'S)	TRAY CABLE 3/C 12 AWG (ILSN)
A	STEEL POLE (30' TALL) WITH LUM + ILSN**	80	30
B	STEEL POLE (30' TALL) WITH LUM + ILSN**	80	30
C	STEEL POLE (30' TALL) WITH LUM + ILSN**	80	30
D	STEEL POLE (30' TALL) WITH LUM + ILSN**	80	30
TOTALS (LF)		320	120

** SEE ULTIMATE CONDITIONS POLE SCHEDULE FOR MAST ARM LENGTHS. MAST ARMS TO BE FURNISHED BY CONTRACTOR AND DELIVERED TO CITY OF GEORGETOWN FOR FUTURE INSTALLATION.

ELECTRICAL SERVICE DATA

ELECTRICAL SERVICE DATA											
SERVICE POLE NO.	SERVICE POLE DESCRIPTION	SERVICE CONDUIT SIZE	SERVICE CONDUCTORS NO/SIZE	SAFETY SWITCH AMPS	MAIN DISCONNECT CKT. BKR. POLE/AMP	TWO-POLE CONTACTOR AMPS	PANELBOARD/ LOAD CENTER AMP RATING	CIRCUIT NO.	BRANCH CKT. BKR. POLE/AMPS	CIRCUIT AMP LOAD	SERVICE KVA LOAD
1	ELC SRV TY D 120/240 070 (NS)AL(E)PS(U)	2"	3/#4	N/A	2P/70	30	100	SIGNAL	1P/50	40	6.8
								LUMINAIRE	2P/15	6	
								ILSN	1P/15	5	

STATE OF TEXAS
TIMOTHY GRIMES
100107
LICENSED
PROFESSIONAL ENGINEER
3.23.2018

NO.	DATE	REVISION	APPROVED

WILLIAMSON COUNTY

HDR Engineering, Inc.
810 Hesters Crossing, Suite 120
Round Rock, Texas 78681
Texas Registered Engineering Firm F-754

SOUTHWEST BYPASS SEGMENT 2
SW BYPASS AND RM 2243 CONDUIT AND CONDUCTOR SCHEDULES (INTERIM)

DESIGN	FED.RD. DIV.NO.	FEDERAL AID PROJECT NO.		HIGHWAY NO.
TG	6			
GRAPHICS AF	STATE	DISTRICT	COUNTY	SHEET NO.
CHECK KK	TEXAS	AUS	WILLIAMSON	
CHECK TG	CONTROL	SECTION	JOB	167
	2103	01	034	

PLOT DRIVER: TXDOT_PDF_BW.pltcfg PENTABLE: S2-0000020170718.tbl
USER: AFAZ DATE: 3/22/2018 TIME: 3:33:22 PM SCALE: 1:1
FILE: Williamson_County\SH29_SW_Bypass_2243_to_IH35_\6.0_CAD_BIM\6.2_Work_In_Progress\6.2.2_Contract_Files\Sheet_Files\06_WA_5_Segment_2\Signals\SWB-S2-SGNL04.dgn
4/12/2018 7:20 AM

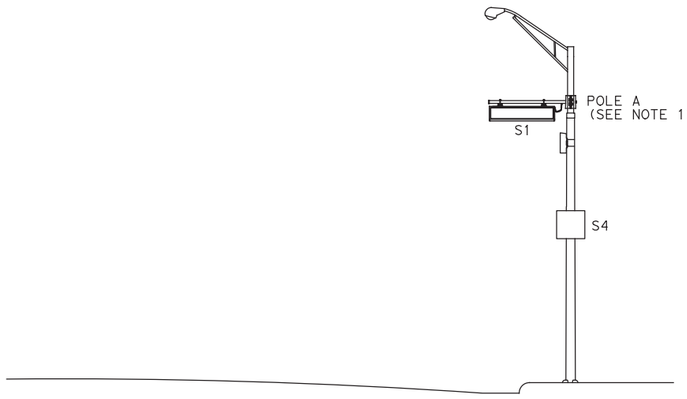

LOOKING NORTH ON SW BYPASS AT RM 2243(LEANDER RD)

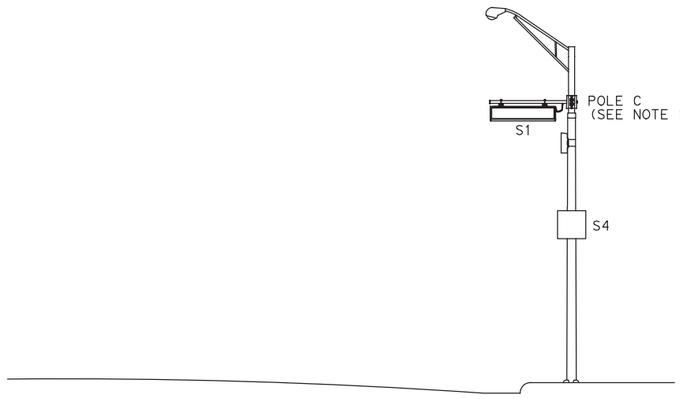

LOOKING SOUTH ON SW BYPASS AT RM 2243(LEANDER RD)

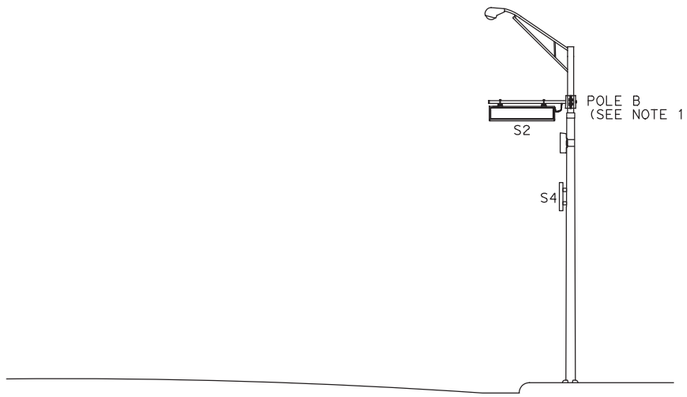

LOOKING EAST ON RM 2243(LEANDER RD) AT SW BYPASS

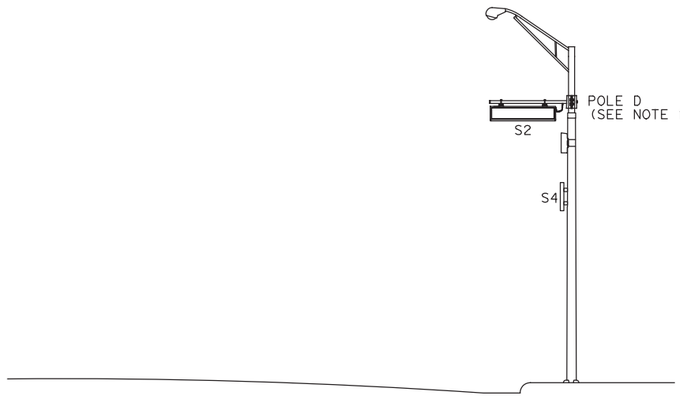

LOOKING WEST ON RM 2243(LEANDER RD) AT SW BYPASS

NOTES

1. SIGNAL POLES, LUMINAIRES, AND ILSNS INSTALLED DURING INTERIM CONDITION. MAST ARMS, SIGNAL HEADS, SIGNAL RELATED SIGNS, RADAR UNITS, AND CONFIRMATION LIGHTS TO BE INSTALLED DURING ULTIMATE CONDITION BY CITY OF GEORGETOWN.

NOT TO SCALE

STATE OF TEXAS
TIMOTHY GRIMES
100107
LICENSED
PROFESSIONAL ENGINEER

3.23.2018

NO.	DATE	REVISION	APPROVED

WILLIAMSON COUNTY

HDR Engineering, Inc.
810 Hesters Crossing, Suite 120
Round Rock, Texas 78681
Texas Registered Engineering Firm F-754

SOUTHWEST BYPASS SEGMENT 2
SW BYPASS AND RM 2243 ELEVATIONS (INTERIM)

DESIGN	FED.RD. DIV.NO.	FEDERAL AID PROJECT NO.		HIGHWAY NO.
TG	6			
GRAPHICS	STATE	DISTRICT	COUNTY	SHEET NO.
AF	TEXAS	AUS	WILLIAMSON	
CHECK	CONTROL	SECTION	JOB	168
KK	2103	01	034	
CHECK				
TG				

PLOT DRIVER: TXDOT_PDF_BW.pltcfg PENTABLE: S2-0000020170718.tbl
USER: AFAZ DATE: 3/22/2018 TIME: 3:33:30 PM SCALE: 1:1
FILE: Williamson_County\SH29_SW_Bypass_2243_to_IH35_\6.0_CAD_BIM\6.2_Work_In_Progress\6.2.2_Contract_Files\Sheet_Files\06_WA_5_Segment_2\Signals\SWB-S2-SGNL02.dgn

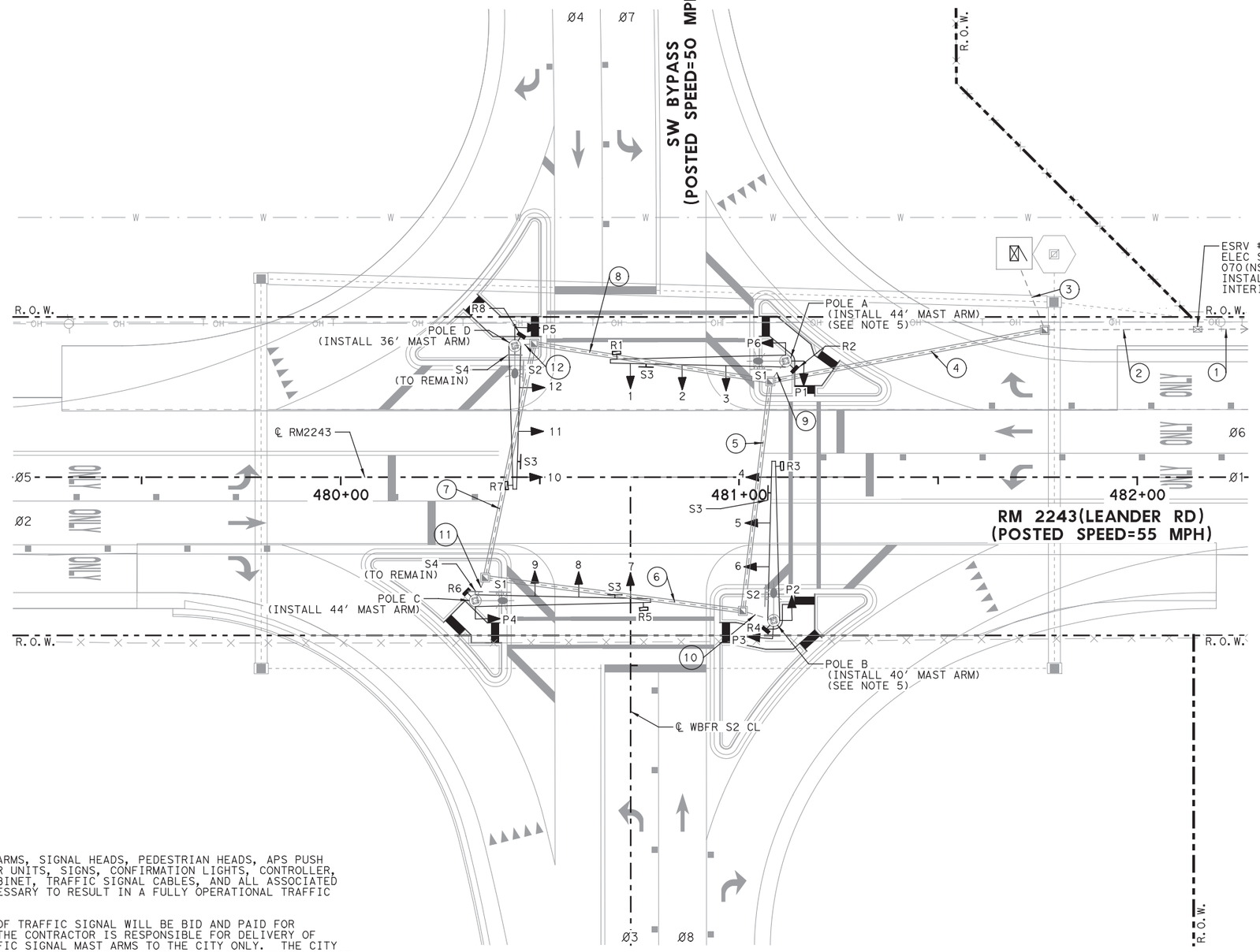

LEGEND

- PROP. MAST ARM
- PROP. SIGNAL HEAD
- PROP. PEDESTRIAN SIGNAL HEAD
- PROP. SIGN ON MAST ARM
- PROP. RADAR (PRESENCE DETECTION)
- PROP. RADAR (ADVANCE DETECTION)
- PROP. CONTROLLER W/ BBU
- EXIST. SIGNAL POLE
- EXIST. LUMINAIRE
- EXIST. GROUND BOX W/ APRON
- EXIST. CONDUIT (BORED)
- EXIST. CONDUIT (TRENCHED)
- EXIST. SIGN
- EXIST. ILSN SIGN
- EXIST. SERVICE METER
- EXIST. UTILITY POLE
- EXIST. OVERHEAD TELEPHONE LINE
- EXIST. TELEPHONE LINE
- EXIST. WATER LINE
- EXIST. FENCE
- EXIST. RIGHT OF WAY
- PROP. RIGHT OF WAY
- (X) CONDUIT RUN NO.

0 15 30 45 60
SCALE IN FEET

NOTES

1. INSTALL MAST ARMS, SIGNAL HEADS, PEDESTRIAN HEADS, APS PUSH BUTTONS, RADAR UNITS, SIGNS, CONFIRMATION LIGHTS, CONTROLLER, CONTROLLER CABINET, TRAFFIC SIGNAL CABLES, AND ALL ASSOCIATED EQUIPMENT NECESSARY TO RESULT IN A FULLY OPERATIONAL TRAFFIC SIGNAL.
2. INSTALLATION OF TRAFFIC SIGNAL WILL BE BID AND PAID FOR SEPARATELY. THE CONTRACTOR IS RESPONSIBLE FOR DELIVERY OF ULTIMATE TRAFFIC SIGNAL MAST ARMS TO THE CITY ONLY. THE CITY WILL STOCKPILE THIS EQUIPMENT UNTIL TRAFFIC SIGNAL WARRANTS ARE MET FOR THIS INTERSECTION.
3. EXACT LOCATION OF SIGNAL HEADS, PEDESTRIAN HEADS, AND RADAR EQUIPMENT SHALL BE DETERMINED IN THE FIELD AND SUBJECT TO FINAL APPROVAL BY ENGINEER IN THE FIELD.
4. SIGNAL HEADS SHALL NOT BE PLACED OVER THE ROADWAY UNTIL ALL NECESSARY MATERIALS ARE AT HAND AS APPROVED BY THE ENGINEER IN THE FIELD.
5. REMOVE R9-3 SIGNS INSTALLED DURING INTERIM CONDITIONS, EXCEPT AS NOTED.

STATE OF TEXAS
TIMOTHY GRIMES
100107
LICENSED
PROFESSIONAL ENGINEER
3.23.2018

NO.	DATE	REVISION	APPROVED

WILLIAMSON COUNTY TEXAS

HDR Engineering, Inc.
810 Hesters Crossing, Suite 120
Round Rock, Texas 78681
Texas Registered Engineering Firm F-754

SOUTHWEST BYPASS SEGMENT 2
SW BYPASS AND RM 2243 PROPOSED (ULTIMATE) SIGNAL LAYOUT

SCALE: 1"=30'

DESIGN	FED.RD. DIV.NO.	FEDERAL AID PROJECT NO.		HIGHWAY NO.
TG	6			
GRAPHICS AF	STATE	DISTRICT	COUNTY	SHEET NO.
CHECK KK	TEXAS	AUS	WILLIAMSON	
CHECK TG	CONTROL 2103	SECTION 01	JOB 034	169

PLOT DRIVER: TXDOT_PDF_BW.pltcfg PENTABLE: S2-000002017018.tbl
USER: AFAZ DATE: 3/22/2018 TIME: 3:33:44 PM SCALE: 1:30
FILE: Williamson_County\SH29_SW_Bypass_2243_to_IH35_\6.0_CAD_BIM\6.2_Work_In_Progress\6.2.2_Contract_Files\Sheet_Files\06_WA_5_Segment_2\Signals\SWB-S2-SGNL06.dgn
4/12/2018 7:20 AM

SIGN LEGEND



S1
ILSN SIGN
(INSTALLED WITH INTERIM SIGNAL)



S2
ILSN SIGN
(INSTALLED WITH INTERIM SIGNAL)



S3
R10-17T
(36"X42")
(4 EA)



S4
(INSTALLED WITH
INTERIM SIGNAL)

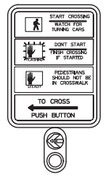

S5*
(APS PUSH
BUTTONS)
(3 EA)



S6*
(APS PUSH
BUTTONS)
(3 EA)

(* SHOWN ON ELEVATION SHEET ONLY)

SIGNAL HEAD LEGEND

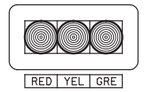

HEADS: 2,3,5,6,8
9,11,12

3 SECTION SIGNAL
HEAD AND BACKPLATE

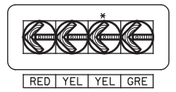

HEADS: 1,4,7,10

4 SECTION SIGNAL
HEAD AND BACKPLATE

*FLASHING YELLOW ARROW



HEADS: P1-P6

COUNTDOWN
PEDESTRIAN HEAD

PHASE RING DIAGRAM

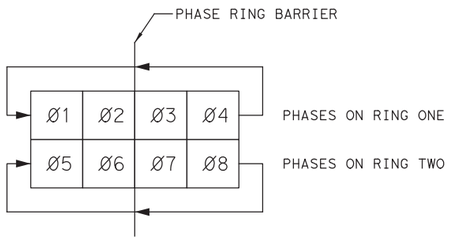

NOTE: COORDINATE WITH CITY OF
GEORGETOWN FOR PROGRAMMING
SIGNAL TIMING AND PHASING.

PHASING DIAGRAM

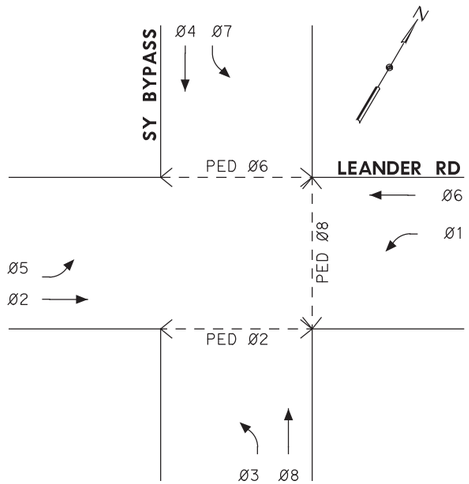

OL M = Ø2
OL N = Ø4
OL O = Ø6
OL P = Ø8

STATE OF TEXAS
TIMOTHY GRIMES
100107
LICENSED
PROFESSIONAL ENGINEER

3.23.2018

NO.	DATE	REVISION	APPROVED

WILLIAMSON COUNTY

HDR Engineering, Inc.
810 Hesters Crossing, Suite 120
Round Rock, Texas 78681
Texas Registered Engineering Firm F-754

SOUTHWEST BYPASS
SEGMENT 2
SW BYPASS AND RM 2243
SIGNING AND PHASING
(ULTIMATE)

DESIGN	FED.RD. DIV.NO.	FEDERAL AID PROJECT NO.		HIGHWAY NO.
TG	6			
GRAPHICS	STATE	DISTRICT	COUNTY	SHEET NO.
AF	TEXAS	AUS	WILLIAMSON	
CHECK	CONTROL	SECTION	JOB	170
KK	2103	01	034	
CHECK				
TG				

PLOT DRIVER: TXDOT_PDF_BW.pltcfg PENTABLE: S2-0000020170718.tbl
USER: AFAZ DATE: 3/22/2018 TIME: 3:33:56 PM SCALE: 1:1
FILE: Williamson_County\SH29_SW_Bypass_2243_to_IH35_16.0.CAD_BIM\6.2_Work_In_Progress\6.2.2_Contract_Files\Sheet_Files\V06_WA_5_Segment_2\Signals\SWB-S2-SGNL07.dgn

CONDUIT AND CONDUCTOR SCHEDULE

RUN	LENGTH	EXISTING CONDUITS							EXISTING WIRING			NO. 6 BARE	NO. 6 XHHW	TY A 14 AWG			
		2" PVC	2" PVC (LUM'S)	3" PVC (TRAFFIC)	3" PVC (RADAR)	2" PVC (LUM'S) (BORED)	3" PVC (TRAFFIC) (BORED)	3" PVC (RADAR) (BORED)	NO. 8 BARE	NO. 8 XHHW (LUM'S)	TRAY CABLE 3/C 12 AWG (ILSN)			5/C SIGNAL CABLE	7/C SIGNAL CABLE	2/C PUSH BUTTON	6/C (RADAR)
NO.	LF	EA	EA	EA	EA	EA	EA	EA	EA	EA	EA	EA	EA	EA	EA	EA	EA
1	265	1															
2**	40	1	1						2	8	4	1	2				
3**	20	1		2	1				4			1	2	10	4	6	8
4	70					1	2	1	4	8	4			10	4	6	8
5	65					1	1	1	3	4	2			5	2	3	4
6	70					1	1	1	3	2	1			2	1	1	2
7	65					1	1	1	3								
8	65					1	1	1	3	2	1			2	1	1	2
9	10		1	1	1				3	2	1			3	1	2	2
10	10		1	1	1				3	2	1			3	1	2	2
11	10		1	1	1				3	2	1			2	1	1	2
12	5		1	1	1				3	2	1			2	1	1	2
A	5											1	2	10	4	6	8
TOTAL (LF)												65	130	1635	680	955	1360

NOTES
1. RUN A IS SLACK (5') FOR EACH CABLE.
2. ** MAINTAIN 1-2" CONDUIT FOR #6 INSULATED AND #6 BARE. KEEP THESE CABLES SEPARATE FROM OTHER CABLES.

POLE DETAILS & WIRING INSIDE POLES AND ARMS

POLE	TYPE	CONDUCTORS/CABLE IN POLES (LF)				
		5/C (SIGNAL)	7/C (SIGNAL)	2/C (PUSH BUTTON)	6/C (RADAR)	TY A 16 AWG 3/C (CONF. LIGHT)
A	STEEL POLE WITH 44' MA ILSN & LUM (30' TALL)	99	69	20	138	45
B	STEEL POLE WITH 40' MA ILSN & LUM (30' TALL)	95	65	20	130	45
C	STEEL POLE WITH 44' MA ILSN & LUM (30' TALL)	84	69	10	138	45
D	STEEL POLE WITH 36' MA ILSN & LUM (30' TALL)	76	61	10	122	45
TOTALS (LF)		354	264	60	528	180

NOTES:
1. TOTAL LENGTH INCLUDES ADDITIONAL SLACK (5') FOR EACH CABLE. RADAR CABLE ASSUMES FULL LENGTH OF MAST ARM FOR MOUNTING UNITS.
2. ILLUMINATION AND ILSN TRAY CABLE INSTALLED DURING INTERIM CONDITIONS TO REMAIN.

INSIDE CABINET CHART

CONDUCTORS/CABLE IN CABINET (LF)					
NO. 6 BARE	NO. 6 XHHW	5/C (SIGNAL)	7/C (SIGNAL)	2/C (PUSH BUTTON)	6/C (RADAR)
LF	LF	LF	LF	LF	LF
5	10	50	20	30	40

CABLE TERMINATION CHART

CONDUCTOR CABLE	CABLE 1 POLE A 7/C 14 AWG	CABLE 2 POLE A 5/C 14 AWG	CABLE 3 POLE A 5/C 14 AWG	CABLE 4 POLE A 5/C 14 AWG	CABLE 5 POLE B 7/C 14 AWG	CABLE 6 POLE B 5/C 14 AWG	CABLE 7 POLE B 5/C 14 AWG	CABLE 8 POLE B 5/C 14 AWG	CABLE 9 POLE C 7/C 14 AWG	CABLE 10 POLE C 5/C 14 AWG	CABLE 11 POLE C 5/C 14 AWG	CABLE 12 POLE D 7/C 14 AWG	CABLE 13 POLE D 5/C 14 AWG	CABLE 14 POLE D 5/C 14 AWG
BLACK	SH 1 Y ARW PH 3	SH 2,3 Y PH 8	PED P6 DNW PED PH 6	SPARE	SH 4 Y ARW PH 5	SH 5,6 Y PH 2	SPARE	PED P3 DNW PED PH 2	SH 7 Y ARW PH 7	SH 8,9 Y PH 4	PED P4 DNW PED PH 2	SH 10 Y ARW PH 1	SH 11,12 Y PH 6	PED P5 DNW PED PH 6
WHITE	SIGNAL COMMON	SIGNAL COMMON	SIGNAL COMMON	SIGNAL COMMON	SIGNAL COMMON	SIGNAL COMMON	SIGNAL COMMON	SIGNAL COMMON	SIGNAL COMMON	SIGNAL COMMON	SIGNAL COMMON	SIGNAL COMMON	SIGNAL COMMON	SIGNAL COMMON
RED	SH 1 R ARW PH 3	SH 2,3 R PH 8	SPARE	PED P1 DNW PED PH 8	SH 4 R ARW PH 5	SH 5,6 R PH 2	PED P2 DNW PED PH 8	SPARE	SH 7 R ARW PH 7	SH 8,9 R PH 4	SPARE	SH 10 R ARW PH 1	SH 11,12 R PH 6	SPARE
GREEN	SH 1 G ARW PH 3	SH 2,3 G PH 8	SPARE	PED P1 W PED PH 8	SH 4 G ARW PH 5	SH 5,6 G PH 2	PED P2 W PED PH 8	SPARE	SH 7 G ARW PH 7	SH 8,9 G PH 4	SPARE	SH 10 G ARW PH 1	SH 11,12 G PH 6	SPARE
ORANGE	SH 1 FYA OL N	SPARE	PED P6 W PED PH 6	SPARE	SH 4 FYA OL O	SPARE	SPARE	PED P3 W PED PH 2	SH 7 FYA OL P	SPARE	PED P4 W PED PH 2	SH 10 FYA OL M	SPARE	PED P5 W PED PH 6
BLUE	SPARE	N/A			SPARE	N/A			SPARE	N/A		SPARE	N/A	
WHITE/BLACK	SPARE	N/A			SPARE	N/A			SPARE	N/A		SPARE	N/A	

APS MESSAGE INFORMATION

APS UNIT #	ACKNOWLEDGEMENT DEFAULT "WAIT"	EXTENDED PRESS MESSAGE	WALK PHASE MESSAGE
		WAIT TO CROSS (STREET NAME) AT (CROSS STREET NAME)"	(STREET NAME) WALK SIGN IS ON TO CROSS, (STREET NAME)" OR TONE
P1	YES	LEANDER ROAD AT SOUTHWEST BYPASS	LEANDER ROAD
P2	YES	LEANDER ROAD AT SOUTHWEST BYPASS	LEANDER ROAD
P3	YES	SOUTHWEST BYPASS AT LEANDER ROAD	SOUTHWEST BYPASS
P4	YES	SOUTHWEST BYPASS AT LEANDER ROAD	SOUTHWEST BYPASS
P5	YES	SOUTHWEST BYPASS AT LEANDER ROAD	SOUTHWEST BYPASS
P6	YES	SOUTHWEST BYPASS AT LEANDER ROAD	SOUTHWEST BYPASS

STATE OF TEXAS
TIMOTHY GRIMES
100107
LICENSED PROFESSIONAL ENGINEER
3.23.2018

NO.	DATE	REVISION	APPROVED

WILLIAMSON COUNTY

HDR Engineering, Inc.
810 Hesters Crossing, Suite 120
Round Rock, Texas 78681
Texas Registered Engineering Firm F-754

SOUTHWEST BYPASS SEGMENT 2
SW BYPASS AND RM 2243 CONDUIT AND CONDUCTOR SCHEDULES (ULTIMATE)

DESIGN	FED.RD. DIV.NO.	FEDERAL AID PROJECT NO.		HIGHWAY NO.
TG	6			
GRAPHICS	STATE	DISTRICT	COUNTY	SHEET NO.
AF	TEXAS	AUS	WILLIAMSON	
CHECK	CONTROL	SECTION	JOB	171
KK	2103	01	034	
CHECK				
TG				

PLOT DRIVER: TXDOT_PDF_BW.pltcfg PENTABLE: S2-0000020170718.tbl
USER: AFAZ DATE: 3/22/2018 TIME: 3:34:4 PM SCALE: 1:1
FILE: Williamson_County\SH29_SW_Bypass_2243_to_IH35_\6.0.CAD_BIM\6.2_Work_In_Progress\6.2.2_Contract_Files\Sheet_Files\V06_WA_5_Segment_2\Signals\SWB-S2-SGNL08.dgn

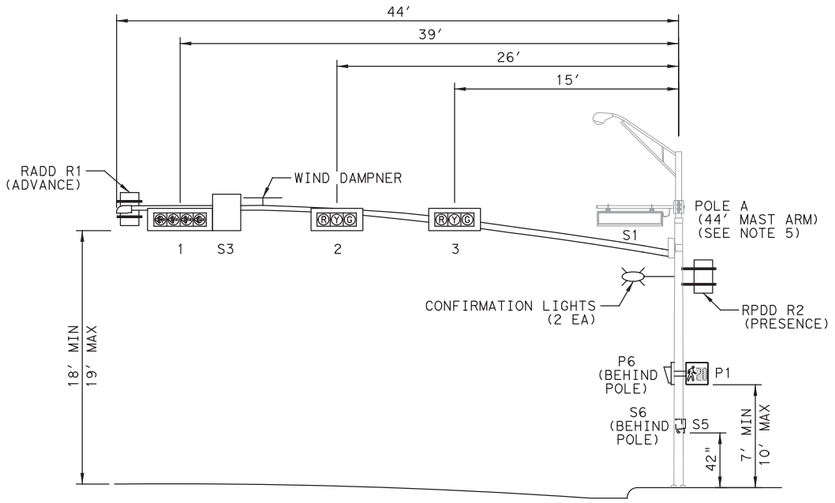

LOOKING NORTH ON SW BYPASS AT RM 2243(LEANDER RD)

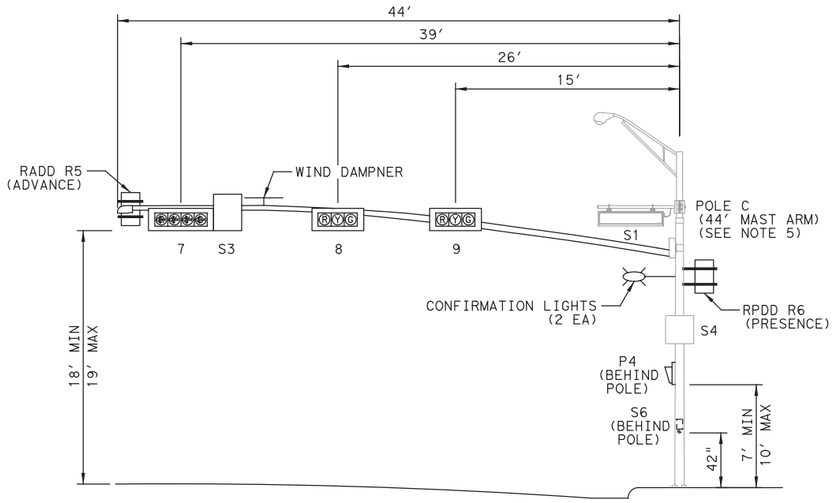

LOOKING SOUTH ON SW BYPASS AT RM 2243(LEANDER RD)

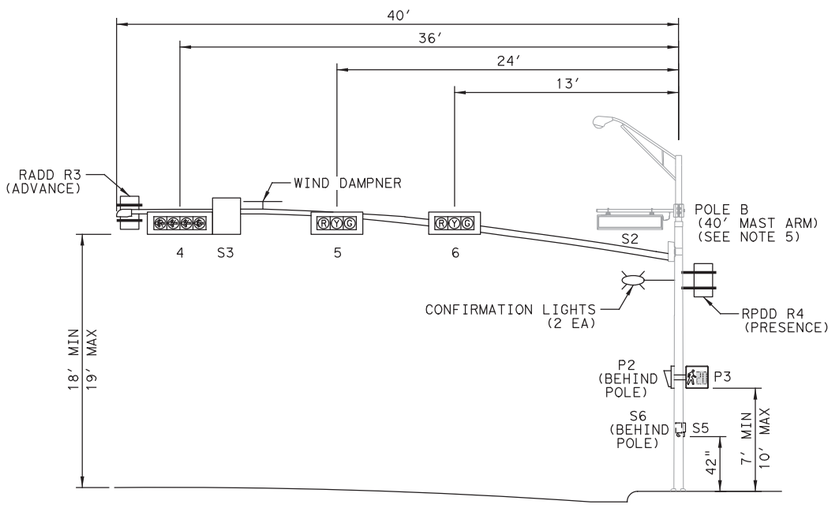

LOOKING EAST ON RM 2243(LEANDER RD) AT SW BYPASS

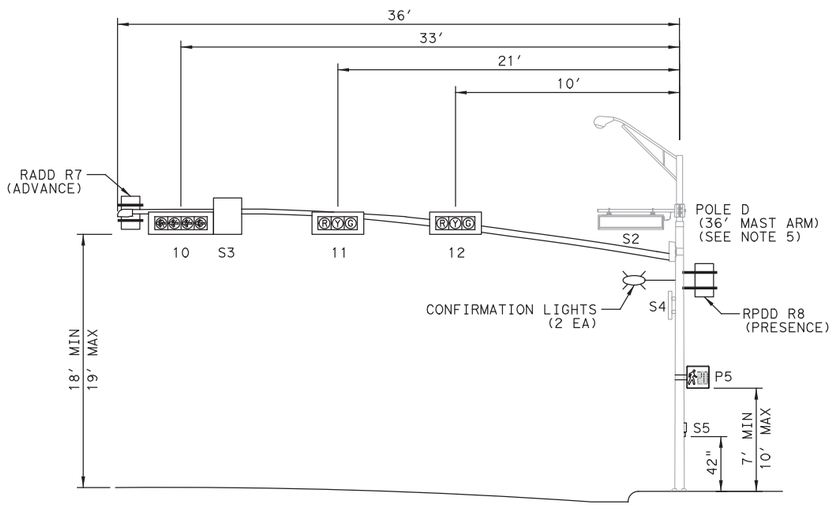

LOOKING WEST ON RM 2243(LEANDER RD) AT SW BYPASS

NOTES

1. CENTER HEADS OVER THE LANES OR AS DIRECTED BY THE ENGINEER. DISTANCES SHOWN ALONG MAST ARMS ARE APPROXIMATE AND MUST BE ADJUSTED IN FIELD AS NEEDED.
2. CALCULATE MAST ARM ATTACHMENT HEIGHT IN THE FIELD FOR APPROVAL BY THE ENGINEER.
3. INSTALL WIND DAMPNERS ON MAST ARMS 40′ OR LONGER.
4. INSTALL RADAR LOCATIONS AS DIRECTED BY THE ENGINEER.
5. SIGNAL POLES, LUMINAIRES, AND ILSNS INSTALLED DURING INTERIM CONDITION. MAST ARMS, SIGNAL HEADS, PEDESTRIAN HEADS, APS PUSH BUTTONS, SIGNAL RELATED SIGNS, RADAR UNITS, AND CONFIRMATION LIGHTS TO BE INSTALLED DURING ULTIMATE CONDITION.
6. MOUNT PUSH BUTTONS ADJACENT TO PEDESTRIAN LANDING AREA ACCESSIBLE TO MEET ADA AND TMUTCD REQUIREMENTS. SEE TXDOT STANDARD PED-18.

NOT TO SCALE

STATE OF TEXAS
TIMOTHY GRIMES
100107
LICENSED
PROFESSIONAL ENGINEER
3.23.2018

NO.	DATE	REVISION	APPROVED

WILLIAMSON COUNTY TEXAS

HDR Engineering, Inc.
810 Hesters Crossing, Suite 120
Round Rock, Texas 78681
Texas Registered Engineering Firm F-754

SOUTHWEST BYPASS SEGMENT 2
SW BYPASS AND RM 2243 ELEVATIONS (ULTIMATE)

DESIGN	FED.RD. DIV.NO.	FEDERAL AID PROJECT NO.		HIGHWAY NO.
TG	6			
GRAPHICS	STATE	DISTRICT	COUNTY	SHEET NO.
AF	TEXAS	AUS	WILLIAMSON	
CHECK	CONTROL	SECTION	JOB	172
KK	2103	01	034	
CHECK				
TG				

PLOT DRIVER: TXDOT_PDF_BW.pltcfg PENTABLE: S2-0000020170718.tbl
USER: AFAZ DATE: 3/22/2018 TIME: 3:34:3 PM SCALE: 1:1
FILE: Williamson_County\SH29_SW_Bypass_2243_to_IH35_\6.0_CAD_BIM\6.2_Work_In_Progress\6.2.2_Contract_Files\Sheet_Files\06_WA_5_Segment_2\Signals\SWB-S2-SGNL09.dgn

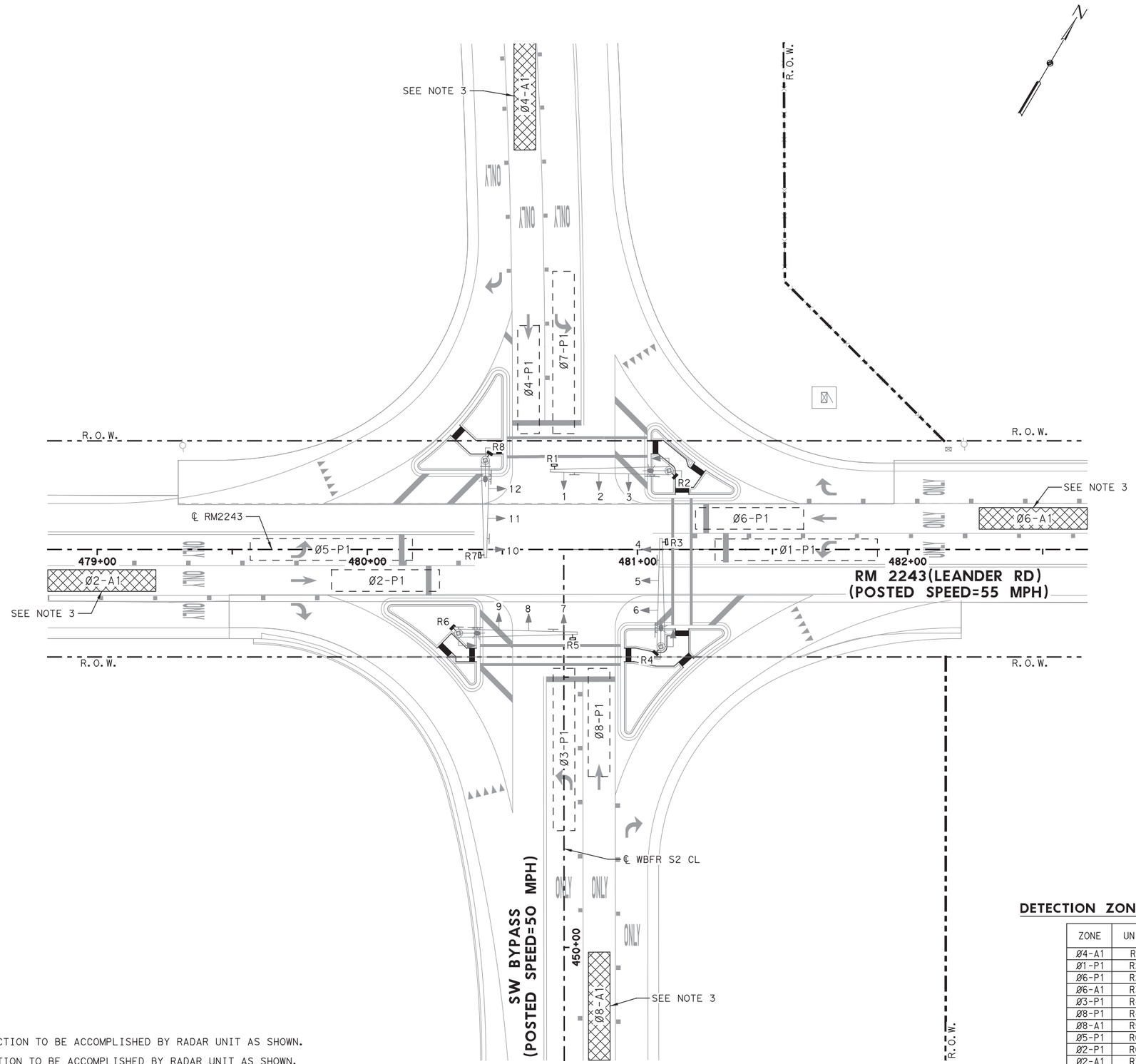

LEGEND

- MAST ARM
- SIGNAL HEAD
- PEDESTRIAN SIGNAL HEAD
- SIGN ON MAST ARM
- ILSN SIGN
- RADAR (PRESENCE DETECTION)
- RADAR (ADVANCE DETECTION)
- SIGNAL POLE
- LUMINAIRE
- CONTROLLER
- SERVICE METER
- RIGHT OF WAY
- PROP. RIGHT OF WAY

0 20 40 60 80
SCALE IN FEET

NOTES

1. PRESENCE DETECTION TO BE ACCOMPLISHED BY RADAR UNIT AS SHOWN.
2. ADVANCE DETECTION TO BE ACCOMPLISHED BY RADAR UNIT AS SHOWN.
3. ADVANCE DETECTION ZONE BEGINS 100 FEET FROM STOP BAR AND EXTENDS TO 400 FEET.

DETECTION ZONE INFORMATION

ZONE	UNIT	SIZE (L'XW')
Ø4-A1	R1	300'X8'
Ø1-P1	R2	60'X8'
Ø6-P1	R2	40'X8'
Ø6-A1	R3	300'X8'
Ø3-P1	R4	60'X8'
Ø8-P1	R4	40'X8'
Ø8-A1	R5	300'X8'
Ø5-P1	R6	60'X8'
Ø2-P1	R6	40'X8'
Ø2-A1	R7	300'X8'
Ø7-P1	R8	60'X8'
Ø4-P1	R8	40'X8'

STATE OF TEXAS
TIMOTHY GRIMES
100107
LICENSED
PROFESSIONAL ENGINEER

3.23.2018

NO.	DATE	REVISION	APPROVED

WILLIAMSON COUNTY TEXAS

HDR Engineering, Inc.
810 Hesters Crossing, Suite 120
Round Rock, Texas 78681
Texas Registered Engineering Firm F-754

SOUTHWEST BYPASS SEGMENT 2
SW BYPASS AND RM 2243 VEHICLE DETECTION DETAILS (ULTIMATE)

SCALE: 1"=40'

DESIGN	FED.RD. DIV.NO.	FEDERAL AID PROJECT NO.		HIGHWAY NO.
TG	6			
GRAPHICS AF	STATE	DISTRICT	COUNTY	SHEET NO.
CHECK KK	TEXAS	AUS	WILLIAMSON	173
CHECK TG	CONTROL 2103	SECTION 01	JOB 034	

PLOT DRIVER: TXDOT_PDF_BW.pltcfg PENTABLE: S2-0000020170718.tbl
USER: AFAZ DATE: 3/22/2018 TIME: 3:34:50 PM SCALE: 1:40
FILE: Williamson_County\SH29_SW_Bypass_2243_to_IH35_16.0_CAD_BIM\6.2_Work_In_Progress\6.2.2_Contract_Files\Sheet_Files\06_WA_5_Segment_2\Signals\SWB-S2-SGNL10.dgn
4/12/2018 7:20 AM

DISCLAIMER: The use of this standard is governed by the "Texas Engineering Practice Act". No warranty of any kind is made by TxDOT for any purpose whatsoever. TxDOT assumes no responsibility for the conversion of this standard to other formats or for incorrect results or damages resulting from its use.

FOUNDATION DESIGN TABLE

FDN TYPE	DRILLED SHAFT DIA	REINFORCING STEEL		EMBEDDED DRILLED SHAFT LENGTH-ft ④, ⑤, ⑥			ANCHOR BOLT DESIGN ①				FOUNDATION DESIGN LOAD ②		TYPICAL APPLICATION
		VERT BARS	SPIRAL & PITCH	TEXAS CONE PENETROMETER N blows/ft			ANCHOR BOLT DIA	Fy (ksi)	BOLT CIR DIA	ANCHOR TYPE	MOMENT K-ft	SHEAR Kips	
				10	15	40							
24-A	24"	4- #5	#2 at 12"	5.7	5.3	4.5	¾"	36	12 ¾"	1	10	1	Pedestal pole, pedestal mounted controller.
30-A	30"	8- #9	#3 at 6"	11.3	10.3	8.0	1 ½"	55	17"	2	87	3	Mast arm assembly. (see Selection Table)
36-A	36"	10- #9	#3 at 6"	13.2	12.0	9.4	1 ¾"	55	19"	2	131	5	Mast arm assembly. (see Selection Table) 30' strain pole with or without luminaire.
36-B	36"	12- #9	#3 at 6"	15.2	13.6	10.4	2"	55	21"	2	190	7	Mast arm assembly. (see Selection Table) Strain pole taller than 30' & strain pole with mast arm
42-A	42"	14- #9	#3 at 6"	17.4	15.6	11.9	2 ¼"	55	23"	2	271	9	Mast arm assembly. (see Selection Table)

NOTES:

① Anchor bolt design develops the foundation capacity given under Foundation Design Loads.

② Foundation Design Loads are the allowable moments and shears at the base of the structure.

③ Foundations may be listed separately or grouped according to similarity of location and type. Quantities are for the Contractor's information only.

④ Field Penetrometer readings at a depth of approximately 3 to 5 feet may be used to adjust shaft lengths.

⑤ If rock is encountered, the Drilled Shaft shall extend a minimum of two diameters into solid rock.

⑥ Decimal lengths in Design Table are to allow interpolation for other penetrometer values. Round to nearest foot for entry into Summary Table.

FOUNDATION SUMMARY TABLE ③

LOCATION IDENTIFICATION	AVG. N BLOW /ft.	FDN TYPE	NO. EA	DRILLED SHAFT LENGTH ⑥ (FEET)				
				24-A	30-A	36-A	36-B	42-A
POLE A	10	36-A	1			13		
POLE B	10	36-A	1			13		
POLE C	10	36-A	1			13		
POLE D	10	36-A	1			13		
TOTAL DRILLED SHAFT LENGTHS						52		

FOUNDATION SELECTION TABLE FOR STANDARD MAST ARM PLUS ILSN SUPPORT ASSEMBLIES (ft)

		FDN 30-A	FDN 36-A	FDN 36-B	FDN 42-A
80 MPH DESIGN WIND SPEED	MAX SINGLE ARM LENGTH	32'	48'		
	MAXIMUM DOUBLE ARM LENGTH COMBINATIONS	24' X 24'			
		28' X 28'			
		32' X 28'	32' X 32'		
			36' X 36'		
			40' X 36'		
			44' X 28'	44' X 36'	
100 MPH DESIGN WIND SPEED	MAX SINGLE ARM LENGTH		36'	44'	
	MAXIMUM DOUBLE ARM LENGTH COMBINATIONS		24' X 24'		
			28' X 28'		
			32' X 24'	32' X 32'	
				36' X 36'	
				40' x24'	40' X 36'
					44' x 36'

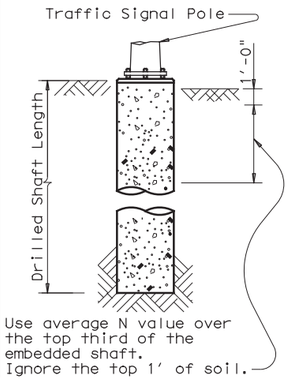

ANCHOR BOLT & TEMPLATE SIZES

BOLT DIA IN.	⑦ BOLT LENGTH	TOP THREAD	BOTTOM THREAD	BOLT CIRCLE	R2	R1
¾"	1'-6"	3"	—	12 ¾"	7 ⅛"	5 ⅝"
1 ½"	3'-4"	6"	4"	17"	10"	7"
1 ¾"	3'-10"	7"	4 ½"	19"	11 ¼"	7 ¾"
2"	4'-3"	8"	5"	21"	12 ½"	8 ½"
2 ¼"	4'-9"	9"	5 ½"	23"	13 ¾"	9 ¼"

⑦ Min dimensions given, longer bolts are acceptable.

EXAMPLE:
1. For 80mph design wind speed, foundation 30-A can support up to a 32' arm with another arm up to 28'
2. For 100mph design wind speed, foundation 36-A can support a single 36' mast arm.

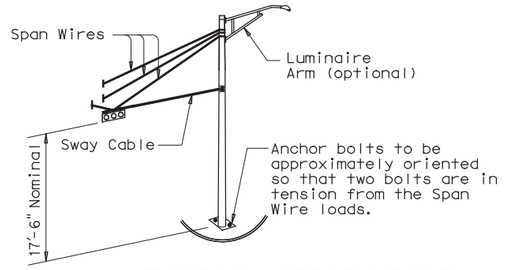

TYPICAL STRAIN POLE ASSEMBLY

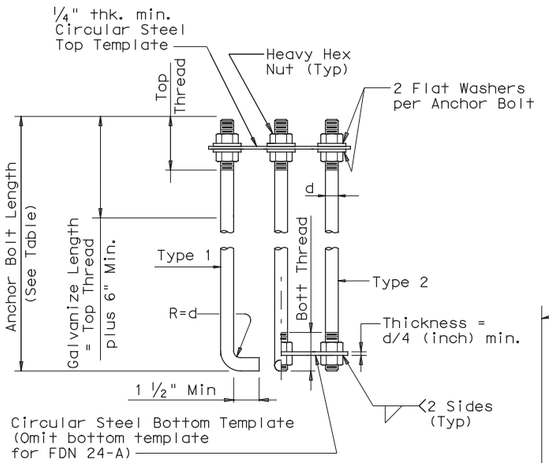

HOOKED ANCHOR (TYPE 1) NUT ANCHOR (TYPE 2)

ANCHOR BOLT ASSEMBLY

⑧ Orient anchor bolts orthogonal with the fixed arm direction to ensure that two bolts are in tension under dead load.

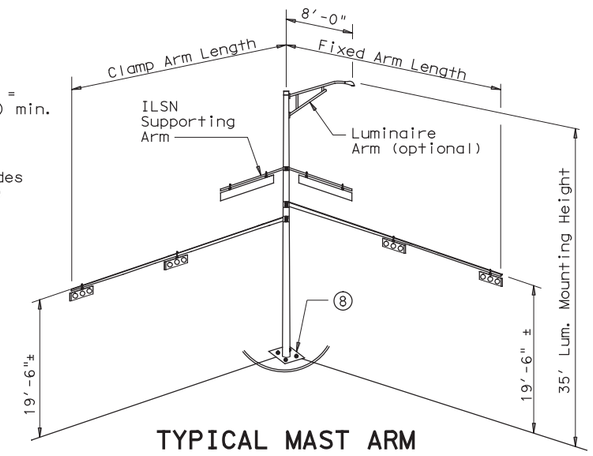

TYPICAL MAST ARM ASSEMBLY

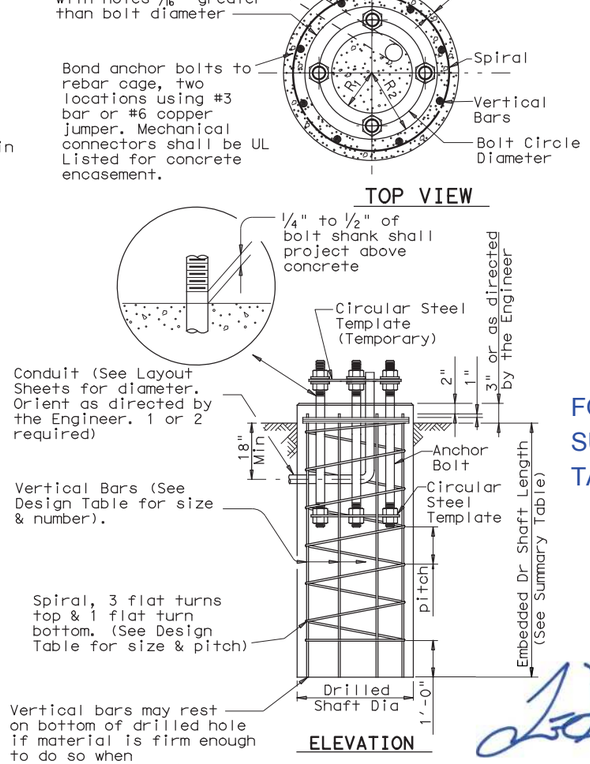

FOUNDATION DETAILS

GENERAL NOTES:

Design conforms to 1994 AASHTO Standard Specifications for Structural Supports for Highway Signs, Luminaires and Traffic Signals and interim revisions thereto.

Reinforcing steel shall conform to Item 440, "Reinforcing Steel".

Concrete shall be Class "C".

Threads for anchor bolts and nuts shall be rolled or cut threads of 8UN series up to 2" in diameter or UNC series for all sizes. Bolts and nuts shall have Class 2A and 2B fit tolerances. Galvanized nuts shall be tapped after galvanizing.

Anchor bolts that are larger than 1" in diameter shall conform to "alloy steel" or "medium-strength mild steel" per Item 449, "Anchor Bolts". Anchor bolts that are 1" in diameter or less shall conform to ASTM A36. Galvanize a minimum of the top end thread length plus 6" for all anchor bolts unless otherwise noted. Exposed washers and exposed nuts shall be galvanized. All galvanizing shall be in accordance with Item 445, "Galvanizing".

Templates and embedded nuts need not be galvanized. Lubricate and tighten anchor bolts when erecting the structure in accordance with Item 449, "Anchor Bolts".

FOUNDATION SUMMARY TABLE

3.23.2018

Texas Department of Transportation
Traffic Operations Division

SW BYPASS AND RM 2243 TRAFFIC SIGNAL POLE FOUNDATION

TS-FD-12

© TxDOT August 1995

REVISIONS	DN: MS	CK: JSY	DW: MAO/MMF	CK: JSY/TEB
5-96 11-98 1-12	CONT	SECT	JOB	HIGHWAY
	2103	01	034	
	DIST	COUNTY		SHEET NO.
	AUS	WILLIAMSON		174

DATE: 3/22/2018 3:35:05 PM
FILE: c:\pworking\dal\d0910663\SWB-S2-SGNL05.dgn

DISCLAIMER: The use of this standard is governed by the "Texas Engineering Practice Act". No warranty of any kind is made by TxDOT for any purpose whatsoever. TxDOT assumes no responsibility for the conversion of this standard to other formats or for incorrect results or damages resulting from its use.

Arm Length	ROUND POLES					POLYGONAL POLES					Foundation Type
	D_B	D_{19}	D_{24}	D_{30}	① thk	D_B	D_{19}	D_{24}	D_{30}	① thk	
ft.	in.	in.	in.	in.	in.	in.	in.	in.	in.	in.	
20	10.5	7.8	7.1	6.3	.179	11.5	8.5	7.7	6.8	.179	30-A
24	11.0	8.3	7.6	6.8	.179	12.0	9.0	8.2	7.3	.179	30-A
28	11.5	8.8	8.1	7.3	.179	12.5	9.5	8.7	7.8	.179	30-A
32	12.5	9.8	9.1	8.3	.179	12.0	9.0	8.2	7.3	.239	30-A
36	12.0	9.3	8.6	7.8	.239	12.5	9.5	8.7	7.8	.239	36-A
40	12.0	9.3	8.6	7.8	.239	13.5	10.5	9.7	8.8	.239	36-A
44	12.5	9.8	9.1	8.3	.239	14.0	11.0	10.2	9.3	.239	36-A
48	13.0	10.3	9.6	8.8	.239	15.0	12.0	11.2	10.3	.239	36-A

Arm Length	ROUND ARMS					POLYGONAL ARMS				
	L_1	D_1	D_2	① thk	Rise	L_1	D_1	② D_2	① thk	Rise
ft.	ft.	in.	in.	in.		ft.	in.	in.	in.	
20	19.1	6.5	3.8	.179	1′-9"	19.1	7.0	3.5	.179	1′-8"
24	23.1	7.5	4.3	.179	1′-10"	23.1	7.5	3.5	.179	1′-9"
28	27.1	8.0	4.2	.179	1′-11"	27.1	8.0	3.5	.179	1′-10"
32	31.0	9.0	4.7	.179	2′-1"	31.0	9.0	3.5	.179	2′-0"
36	35.0	9.5	4.6	.179	2′-4"	35.0	10.0	3.5	.179	2′-1"
40	39.0	9.5	4.1	.239	2′-8"	39.0	9.5	3.5	.239	2′-3"
44	43.0	10.0	4.1	.239	2′-11"	43.0	10.0	3.5	.239	2′-6"
48	47.0	10.5	4.1	.239	3′-4"	47.0	11.0	3.5	.239	2′-9"

D_B = Pole Base O.D.
D_{19} = Pole Top O.D. with no Luminaire and no ILSN
D_{24} = Pole Top O.D. with ILSN w/out Luminaire
D_{30} = Pole Top O.D. with Luminaire
D_1 = Arm Base O.D.
D_2 = Arm End O.D.
L_1 = Shaft Length
L = Nominal Arm Length

① Thickness shown are minimums, thicker materials may be used.

② D_2 may be increased by up to 1" for polygonal arms.

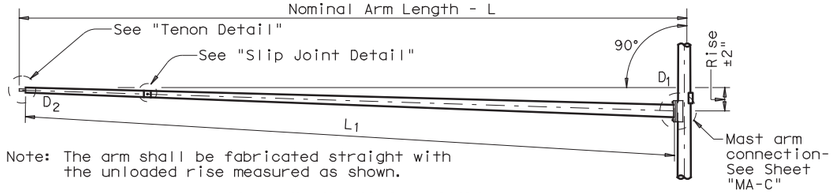

Note: The arm shall be fabricated straight with the unloaded rise measured as shown.

TRAFFIC SIGNAL ARM

(Fixed Mount)

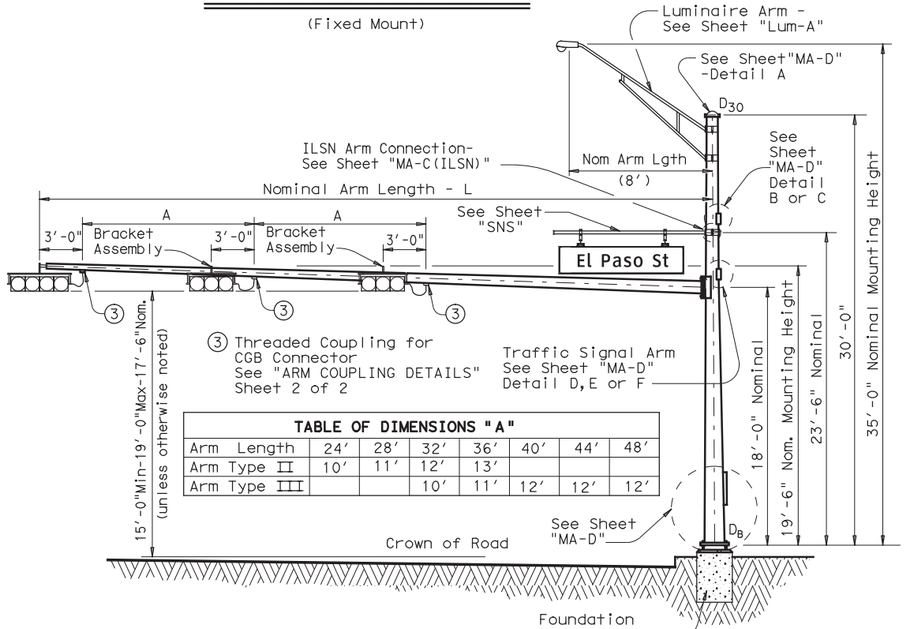

TABLE OF DIMENSIONS "A"

Arm Length	24′	28′	32′	36′	40′	44′	48′
Arm Type II	10′	11′	12′	13′			
Arm Type III			10′	11′	12′	12′	12′

STRUCTURE ASSEMBLY

SHIPPING PARTS LIST

Ship each pole with the following attached: enlarged hand hole, pole cap, fixed-arm connection bolts and washers and any additional hardware listed in the table.

Nominal Arm Length	30′ Poles With Luminaire		24′ Poles With ILSN		19′ Poles With No Luminaire and No ILSN	
	Above hardware plus: One (or two if ILSN attached) small hand hole, clamp-on simplex		Above hardware plus one small hand hole		See note above	
ft	Designation	Quantity	Designation	Quantity	Designation	Quantity
20	20L-80		20S-80		20-80	
24	24L-80		24S-80		24-80	
28	28L-80		28S-80		28-80	
32	32L-80		32S-80		32-80	
36	36L-80	1	36S-80		36-80	
40	40L-80	1	40S-80		40-80	
44	44L-80	2	44S-80		44-80	
48	48L-80		48S-80		48-80	

Traffic Signal Arms (1 per Pole) Ship each arm with the listed equipment attached

Nominal Arm Length	Type I Arm (1 Signal)		Type II Arm (2 Signals)		Type III Arm (3 Signals)	
	1 CGB connector		1 Bracket Assembly and 2 CGB Connectors		2 Bracket Assemblies and 3 CGB Connectors	
ft	Designation	Quantity	Designation	Quantity	Designation	Quantity
20	20I-80					
24	24I-80		24II-80			
28	28I-80		28II-80			
32			32II-80		32III-80	
36			36II-80		36III-80	1
40					40III-80	1
44					44III-80	2
48					48III-80	

Luminaire Arms (1 per 30′ pole)

Nominal Arm Length	Quantity
8′ Arm	4

ILSN Arm (Max. 2 per pole) Ship with clamps, bolts and washers

Nominal Arm Length	Quantity
7′ Arm	
9′ Arm	4

Anchor Bolt Assemblies (1 per pole)

Anchor Bolt Diameter	Anchor Bolt Length	Quantity
1 ½"	3′-4"	
1 ¾"	3′-10"	4

Each anchor bolt assembly consists of the following: Top and Bottom templates, 4 anchor bolts, 8 nuts, 8 flat washers, and 4 nut anchor devices (Type 2) per Standard Drawing "TS-FD".

Templates may be removed for shipment.

SHEET 1 OF 2

SHIPPING PARTS LIST

STATE OF TEXAS
TIMOTHY GRIMES
100107
LICENSED
PROFESSIONAL ENGINEER

3.23.2018

Texas Department of Transportation
Traffic Operations Division

SW BYPASS AND RM 2243
TRAFFIC SIGNAL SUPPORT STRUCTURES
SINGLE MAST ARM ASSEMBLY (80 MPH WIND ZONE)
SMA-80(1)-12

© TxDOT August 1995

DN: MS	CK: JSY	DW: MMF	CK: JSY

REVISIONS
5-96
11-99
1-12

CONT	SECT	JOB	HIGHWAY
2103	01	034	
DIST	COUNTY		SHEET NO.
AUS	WILLIAMSON		175

122A

DATE: 3/22/2018 3:35:22 PM
FILE: c:\pwworking\dal\d0910663\SWB-S2-SGNL11.dgn
4/12/2018 7:20 AM

DISCLAIMER:
The use of this standard is governed by the "Texas Engineering Practice Act". No warranty of any kind is made by TxDOT for any purpose whatsoever. TxDOT assumes no responsibility for the conversion of this standard to other formats or for incorrect results or damages resulting from its use.

DATE: 3/22/2018 3:35:37 PM
FILE: c:\pwworking\dal\d0918769\windice.dgn

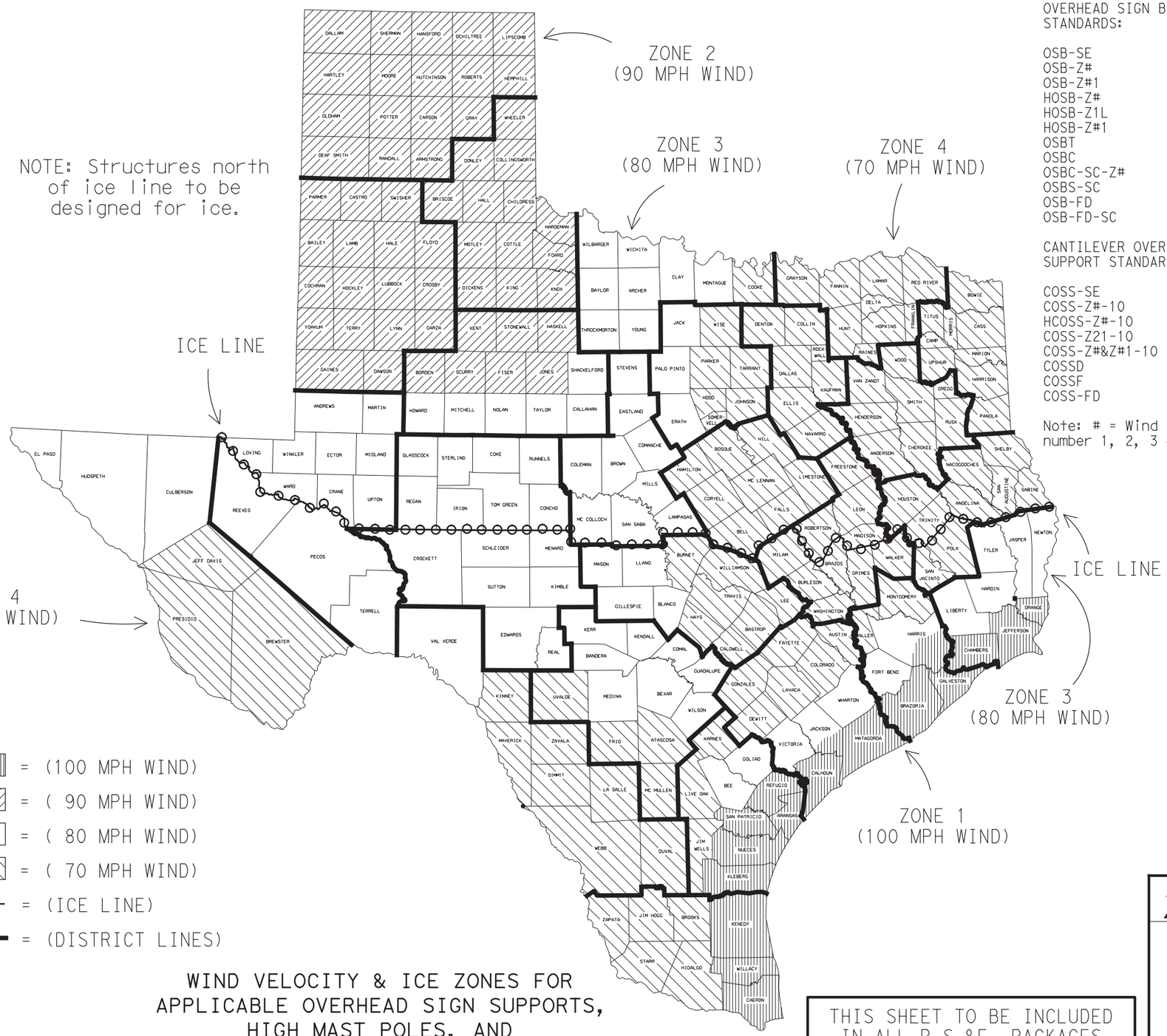

LEGEND

ZONE 1 - = (100 MPH WIND)
ZONE 2 - = (90 MPH WIND)
ZONE 3 - = (80 MPH WIND)
ZONE 4 - = (70 MPH WIND)
= (ICE LINE)
= (DISTRICT LINES)

WIND VELOCITY & ICE ZONES FOR APPLICABLE OVERHEAD SIGN SUPPORTS, HIGH MAST POLES, AND TRAFFIC SIGNAL POLES

Based on 50 Year Mean Recurrence Interval of Fastest Mile Wind Velocity at 33 feet height.

APPLICABLE STANDARDS SHEETS

OVERHEAD SIGN BRIDGE STANDARDS:

OSB-SE
OSB-Z#
OSB-Z#1
HOSB-Z#
HOSB-Z1L
HOSB-Z#1
OSBT
OSBC
OSBC-SC-Z#
OSBS-SC
OSB-FD
OSB-FD-SC

CANTILEVER OVERHEAD SIGN SUPPORT STANDARDS:

COSS-SE
COSS-Z#-10
HCOSS-Z#-10
COSS-Z21-10
COSS-Z#&Z#1-10
COSSD
COSSF
COSS-FD

Note: # = Wind Zone number 1, 2, 3 or 4

HIGH MAST ILLUMINATION POLE STANDARDS:

HMIP-98
HMIF-98

WALKWAYS AND BRACKETS STANDARDS:

SWW
SB(SWL-1)

TRAFFIC SIGNAL POLE STANDARDS:

SP-80
SP-100
SMA-80
SMA-100
DMA-80
DMA-100
MA-C
MAC(ILSN)
MAD-D
TS-FD
LUM-A
CFA
LMA
TS-C
MA-DPD

FOR HARRIS CO. ONLY
Zone line is just North of US 90, around on the North, West and South sides of IH 610 and down the West side of SH 288.

FOR JACKSON CO. ONLY
Zone line is just North of SH 616.

THIS SHEET TO BE INCLUDED IN ALL P.S.&E. PACKAGES CONTAINING ONE OR MORE OF THE APPLICABLE STANDARD SHEETS LISTED HEREON

Texas Department of Transportation

Traffic Operations Division Standard

WIND VELOCITY AND ICE ZONES

WV & IZ-14

FILE: windice.dgn	DN: TxDOT	CK: TxDOT	DW: TxDOT	CK: TxDOT
© TxDOT April 1996	CONT	SECT	JOB	HIGHWAY
REVISIONS	2103	01	034	
8-14-Added list of applicable standards, restricting use to structures designed for Fastest Mile wind speeds.	DIST	COUNTY		SHEET NO.
	AUS	WILLIAMSON		176

30

DISCLAIMER:
The use of this standard is governed by the "Texas Engineering Practice Act". No warranty of any kind is made by TxDOT for any purpose whatsoever. TxDOT assumes no responsibility for the conversion of this standard to other formats or for incorrect results or damages resulting from its use.

GENERAL NOTES FOR ALL ELECTRICAL WORK

1. The location of all conduits, junction boxes, ground boxes, and electrical services is diagrammatic and may be shifted to accommodate field conditions.

2. Provide new and unused materials. Ensure that all materials and installations comply with the applicable articles of the National Electrical Code (NEC), TxDOT standards and specifications, National Electrical Manufacturers Association (NEMA), and are listed by Underwriters Laboratories (UL) or a Nationally Recognized Testing Lab (NRTL). NRTLs such as Canadian Standard Association (CSA), Intertek Testing Services NA Inc., or FM Approvals LLC can be considered equivalent to UL. Where reference is made to NEMA listed devices, International Electrotechnical Commission (IEC) listed devices will not be considered an acceptable equal to a NEMA listed device. Acceptable devices may have both a NEMA and IEC listing. Faulty fabrication or poor workmanship in any material, equipment, or installation is justification for rejection. Replace or reinstall rejected material or equipment at no additional cost to the Department.

3. Miscellaneous nuts, bolts and hardware, except for high strength bolts, may be stainless steel when plans specify galvanized, provided the bolt size is ½ in. or less in diameter.

4. Provide the following test equipment as required by the Engineer to confirm compliance with the contract and the NEC: voltmeter, ammeter, megohm meter (1000 volt DC), ground resistance tester, torque wrenches, and torque screwdrivers. Ensure all equipment has been properly calibrated within the last year. Provide calibration certification to the Engineer upon request. Operate test equipment during inspection as requested by the Engineer.

5. Install grounding as shown on the plans and in accordance with the NEC. Ensure all metallic conduits; metal poles; luminaires; and metal enclosures are bonded to the equipment grounding conductor. Provide stranded bare copper or green insulated grounding conductors. Ground rods, connectors, and bonding jumpers are subsidiary to the various bid items.

6. When required by the Engineer, notify the Department in writing of materials from the Material Producers List (MPL) intended for use on each project. Prequalified materials are listed on the MPL on TxDOT's website under "Roadway Illumination and Electrical Supplies." No substitutions will be allowed for materials on this list.

CONDUIT

A. MATERIALS

1. Provide conduit, junction boxes, fittings, and hardware as per TxDOT Departmental Material Specification (DMS) 11030 "Conduit" and Item 618 "Conduit" of TxDOT's "Standard Specifications For Construction And Maintenance Of Highways, Streets, And Bridges," latest edition. Provide conduits listed under Item 618 on the MPL under "Roadway Illumination and Electrical Supplies." Provide conduit types according to the descriptive code or as shown on the plans. Do not substitute other types of conduits for those shown. Provide liquidtight flexible metal conduit (LFMC) when flexible conduit is called for on galvanized steel rigid metallic conduit (RMC) systems. Provide liquidtight flexible nonmetallic conduit (LFNC) when flexible conduit is called for on polyvinyl chloride (PVC) systems.

2. Provide galvanized steel RMC for all exposed conduits, unless otherwise shown on the plans. Properly bond all metal conduits.

3. Unless otherwise shown on the plans, provide junction boxes with a minimum size as shown in the following table, which applies to the greatest number of conductors entering the box through one conduit with no more than four conduits per box. When a mixture of conductor sizes is present, count the conductors as if all are of the larger size. For situations not applicable to the table, size junction boxes in accordance with NEC.

AWG	3 CONDUCTORS	5 CONDUCTORS	7 CONDUCTORS
#1	10" x 10" x 4"	12" x 12" x 4"	16" x 16" x 4"
#2	8" x 8" x 4"	10" x 10" x 4"	12" x 12" x 4"
#4	8" x 8" x 4"	10" x 10" x 4"	10" x 10" x 4"
#6	8" x 8" x 4"	8" x 8" x 4"	10" x 10" x 4"
#8	8" x 8" x 4"	8" x 8" x 4"	8" x 8" x 4"

4. Junction boxes with an internal volume of less than 100 cu. in. and supported by entering raceways must have threaded entries or hubs identified for the intended purpose and supported by connection of two or more rigid metal conduits. Secure conduit within 3 ft. of the enclosure or within 18 in. of the enclosure if all conduit entries are on the same side. Mechanically secure all junction boxes with an internal volume greater than 100 cu. inches.

5. Provide hot dipped galvanized cast iron or sand cast aluminum outlet boxes for junction boxes containing only 10 AWG or 12 AWG conductors. Do not use die cast aluminum boxes. Size outlet boxes according to the NEC.

6. Do not use intermediate metal conduit (IMC) or electrical metallic tubing (EMT) unless specifically required by the plan sheets. When EMT is called for, provide junction boxes made from galvanized steel sheeting, listed and approved for outdoor use, unless otherwise noted on the plans. Size all galvanized steel junction boxes in accordance with the NEC. Provide junction boxes for IMC conduit systems that meet the same requirements for junction boxes used with RMC systems.

7. Provide PVC junction boxes intended for outdoor use on PVC conduit systems, unless otherwise noted on the plans.

8. Provide PVC elbows in PVC conduit systems, unless otherwise shown on the plans. Use only a flat, high tensile strength polyester fiber pull tape for pulling conductors through the PVC conduit system. When galvanized steel RMC elbows are specifically called for in the plans and any portion of the RMC elbow is buried less than 18 in., ground the RMC elbow by means of a grounding bushing on a rigid metal extension. Grounding of the rigid metal elbow is not required if the entire RMC elbow is encased in a minimum of 2 in. of concrete. PVC extensions are allowed on these concrete encased rigid metal elbows. RMC or PVC elbows are subsidiary to various bid items.

9. When required, provide High-Density Polyethylene (HDPE) conduit with factory installed internal conductors according to Item 622 "Duct Cable." At the Contractor's request and with approval by the Engineer, substitute HDPE conduit with no conductors for bored schedule 40 or schedule 80 PVC conduit bid under Item 618. Ensure bored HDPE substituted for PVC is schedule 40 and of the same size PVC called for in the plans. Ensure the substituted HDPE meets the requirements of Item 622, except that the conduit is supplied without factory-installed conductors. Make the transition of the HDPE conduit to PVC (or RMC elbow when required) at the bore pit. Provide conduit of the size and schedule as shown on the plans. Do not extend substituted conduit into ground boxes or foundations. Provide PVC or galvanized steel RMC elbows as called for at all ground boxes and foundations.

10. Use two-hole straps when supporting 2 in. and larger conduits. On electrical service poles, properly sized stainless steel or hot dipped galvanized one-hole standoff straps are allowed on the service riser conduit.

B. CONSTRUCTION METHODS

1. Provide and install expansion joint conduit fittings on all structure-mounted conduits at the structure's expansion joints to allow for movement of the conduit. In addition, provide and install expansion joint fittings on all continuous runs of galvanized steel RMC conduit externally exposed on structures such as bridges at maximum intervals of 150 ft. When requested by the project Engineer, supply manufacturer's specification sheet for expansion joint conduit fittings. Repair or replace expansion joint fittings that do not allow for movement at no additional cost to the Department. Provide the method of determining the amount of expansion to the Engineer upon request. Do not use LFMC or LFNC as a substitute for the required expansion conduit fittings.

2. Space all conduit supports at maximum intervals of 5 ft. Install conduit spacers when attaching metal conduit to surface of concrete structures. See "Conduit Mounting Options" on ED(2). Install conduit support within 3 ft. of all enclosures and conduit terminations.

3. Do not attach conduit supports directly to pre-stressed concrete beams except as shown specifically in the plans or as approved by the Engineer.

4. Unless otherwise shown on the plans, jack or bore conduit placed beneath existing roadways, driveways, sidewalks, or after the base or surfacing operation has begun. Backfill and compact the bore pits below the conduit per Item 476 "Jacking, Boring, or Tunneling Pipe or Box" prior to installing conduit or duct cable to prevent bending of the connections.

5. When placing conduit in the sub-grade of new roadways, backfill all trenches with excavated material unless otherwise noted on the plans. When placing conduit in the sub-base of new roadways, backfill all trenches with cement-stabilized base as per requirements of Items 110 "Excavation", 400 "Excavation and Backfill for Structures", 401 "Flowable Backfill", 402 "Trench Excavation Protection", and 403 "Temporary Special Shoring."

6. Provide and place warning tape approximately 10 in. above all trenched conduit as per Item 618.

7. During construction, temporarily cap or plug open ends of all conduit and raceways immediately after installation to prevent entry of dirt, debris and animals. Temporary caps constructed of durable duct tape are allowed. Tightly fix the tape to the conduit opening. Clean out the conduit and prove it clear in accordance with Item 618 prior to installing any conductors.

8. Ensure conduit entry into the top of any enclosure is waterproof by installing conduit sealing hubs or using boxes with threaded bosses. This includes surface mounted safety switches, meter cans, service enclosures, auxiliary enclosures and junction boxes. Grounding bushings on water tight sealing hubs are not required.

9. Fit the ends of all PVC conduit terminations with bushings or bell end fittings. Provide and install a grounding type bushing on all metal conduit terminations.

10. Install a bonding jumper from each grounding bushing to the nearest ground rod, grounding lug, or equipment grounding conductor. Ensure all bonding jumpers are the same size as the equipment grounding conductor. Bonding of conduit used as a casing under roadways for duct cable is not required, if the duct extends the full length through the casing.

11. At all electrical services, install a 6 AWG solid copper grounding electrode conductor.

12. Place conduits entering ground boxes so that the conduit openings are between 3 in. and 6 in. from the bottom of the box. See the ground box detail on sheet ED(4).

13. Seal ends of all conduits with duct seal, expandable foam, or by other methods approved by the Engineer. Seal conduit immediately after completion of conductor installation and pull tests. Do not use duct tape as a permanent conduit sealant. Do not use silicone caulk as a conduit sealant.

14. File smooth the cut ends of all mounting strut and conduit. Before installing, paint the field cut ends of all mounting strut and RMC (threaded or non-threaded) with zinc rich paint (94% or more zinc content) to alleviate overspray. Use zinc rich paint to touch up galvanized material as allowed under Item 445 "Galvanizing." Do not paint non-galvanized material with a zinc rich paint as an alternative for materials required to be galvanized.

Texas Department of Transportation

Traffic Operations Division Standard

ELECTRICAL DETAILS CONDUITS & NOTES

ED(1)-14

FILE:	ed1-14.dgn	DN:	CK:	DW:	CK:
© TxDOT	October 2014	CONT	SECT	JOB	HIGHWAY
REVISIONS		2103	01	034	
		DIST	COUNTY		SHEET NO.
		AUS	WILLIAMSON		p.177

71A

DATE: 3/22/2018 3:35:51 PM
FILE: c:\pwworking\ddi\d0918769\ed1-14.dgn

DISCLAIMER:
The use of this standard is governed by the "Texas Engineering Practice Act". No warranty of any kind is made by TxDOT for any purpose whatsoever. TxDOT assumes no responsibility for the conversion of this standard to other formats or for incorrect results or damages resulting from its use.

DATE: 3/22/2018 3:36:07 PM
FILE: c:\pwworking\ddi\d0918769\ed2-14.dgn

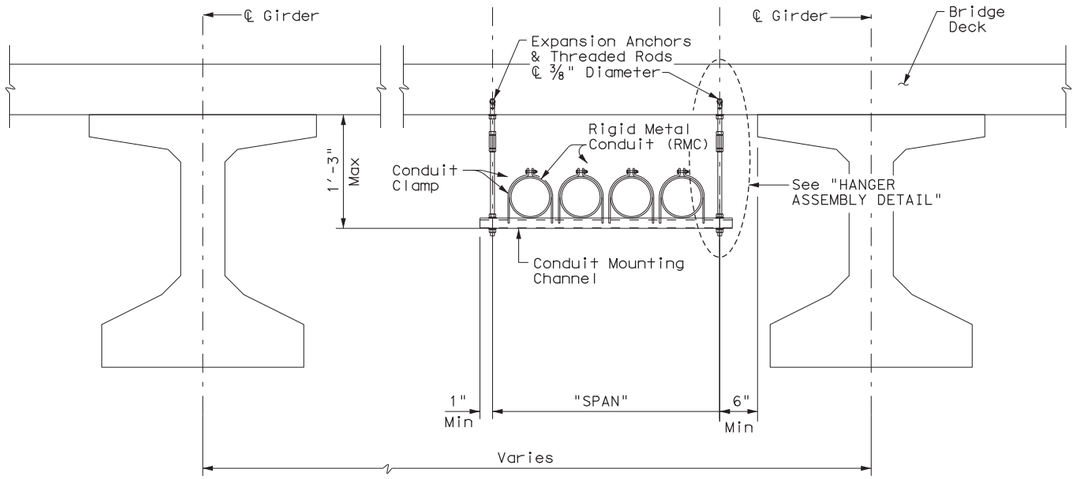

CONDUIT HANGING DETAIL

CONDUIT MOUNTING CHANNEL		
"SPAN"	"W" x "H"	"T"
less than 2'	1 5/8" x 1 3/8"	12 Ga.
2'-0" to 2'-6"	1 5/8" x 1 5/8"	12 Ga.
>2'-6" to 3'-0"	1 5/8" x 2 7/16"	12 Ga.

Channels with round or short slotted hole patterns are allowed, if the load carrying capacity is not reduced by more than 15%.

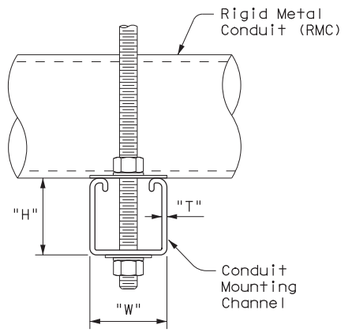

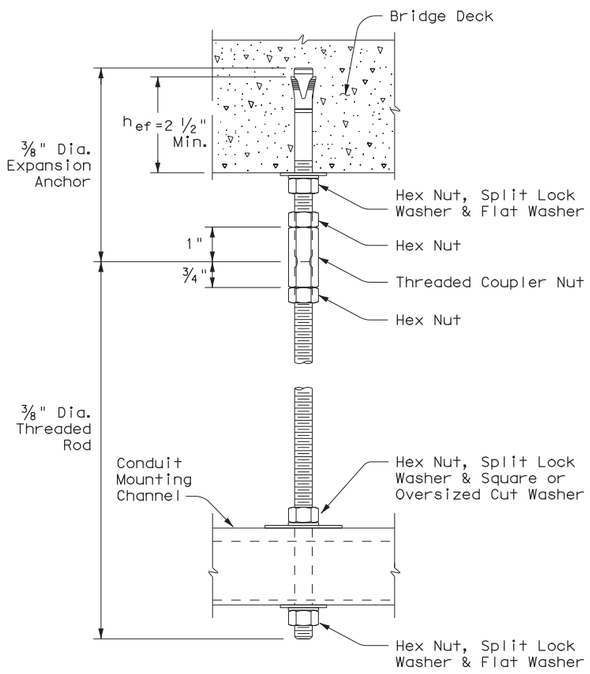

HANGER ASSEMBLY DETAIL

ELECTRIC CONDUIT TO BRIDGE DECK ATTACHMENT

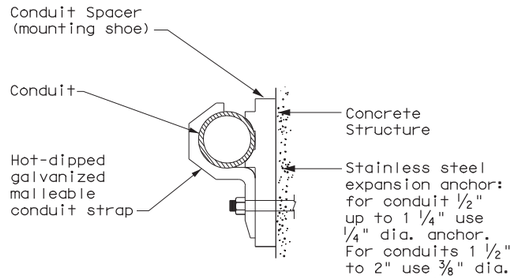

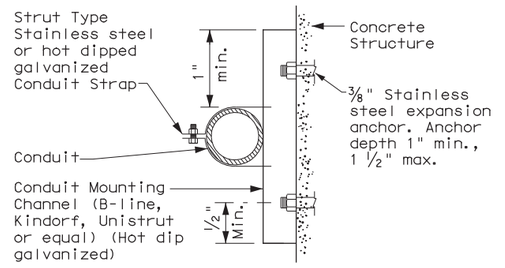

CONDUIT MOUNTING OPTIONS

Attachment to concrete surfaces
See ED(1)B.2

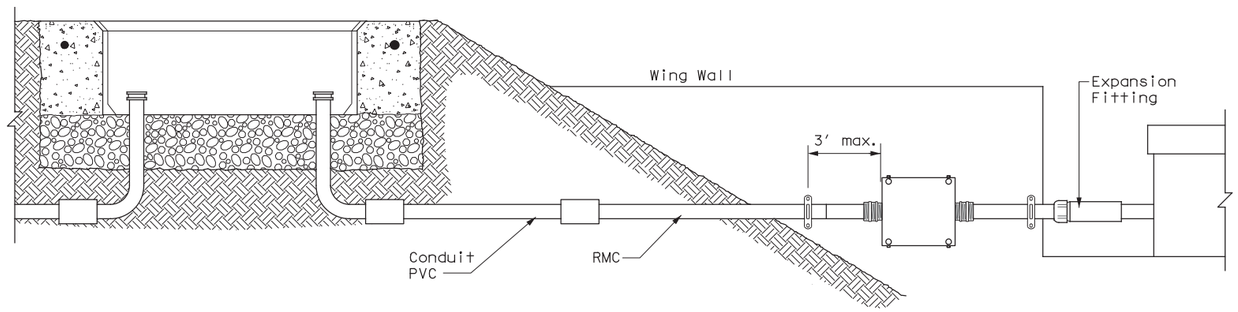

TYPICAL CONDUIT ENTRY TO BRIDGE STRUCTURE DETAIL

EXPANSION ANCHOR NOTES FOR BRIDGE DECK ATTACHMENT

1. Use torque controlled mechanical expansion anchors that are approved for use in cracked concrete by the International Code Council, Evaluation Service (ICC-ES). The chosen anchor product shall have a designated ICC-ES Evaluation Report number, and its approval status shall be maintained on the ICC-ES website under Division 031600 for Concrete Anchors.

2. Unless otherwise approved by the Engineer: do not use adhesive anchors; do not use expansion anchors that are not included in the ICC-ES approval list; and do not use expansion anchors that are only approved for use in uncracked concrete.

3. Use anchors manufactured with stainless steel expansion wedges. Anchors manufactured with carbon steel expansion wedges are not allowed. Anchor bodies can be either zinc-plated carbon steel or stainless steel. For application in marine environment, both the anchor body and expansion wedge shall be stainless steel.

4. Install anchors as shown on the plans and in accordance with the anchor manufacturer's published installation instructions. Arrange a field demonstration test to evaluate the procedures and tools. The test shall be witnessed and approved by the Engineer prior to furnishing anchors on the structure.

5. Prior to hole drilling, use rebar locator to ensure clearing of existing deck strands or reinforcement. Install anchors to ensure a minimum effective embedment depth, (h_{ef}), as shown. Increase (h_{ef})as needed to ensure sufficient thread length for proper torqueing and tightening of anchors.

6. Use anchors of minimum 1600 Lbs tensile capacity (minimum of steel, concrete breakout, and concrete pullout strengths as determined by ACI 318 Appendix D) at the required minimum embedment depth (h_{ef}). No lateral loads shall be introduced after conduit installation.

Texas Department of Transportation

Traffic Operations Division Standard

ELECTRICAL DETAILS CONDUIT SUPPORTS

ED(2)-14

FILE: ed2-14.dgn	DN: TxDOT	CK: TxDOT	DW: TxDOT	CK: TxDOT
©TxDOT October 2014	CONT	SECT	JOB	HIGHWAY
REVISIONS	2103	01	034	
	DIST	COUNTY		SHEET NO.
	AUS	WILLIAMSON		p.178

71B

DISCLAIMER:
The use of this standard is governed by the "Texas Engineering Practice Act". No warranty of any kind is made by TxDOT for any purpose whatsoever. TxDOT assumes no responsibility for the conversion of this standard to other formats or for incorrect results or damages resulting from its use.

ELECTRICAL CONDUCTORS

A. MATERIAL INFORMATION

1. Provide Type XHHW insulated conductors in accordance with Departmental Material Specification (DMS)11040 "Conductors" and Item 620 "Electrical Conductors." Provide conductors as listed on the Material Producers List (MPL) on the Department web site under "Roadway Illumination and Electrical Supplies" Item 620. Color code insulated conductors in conformance with the NEC. Identify grounded (neutral) conductors with white insulation. Identify grounding conductors (ground wires) with green insulation or bare conductors. Identify ungrounded (hot) conductors with any color insulation except green, white, or gray. Keep color scheme consistent throughout the wiring system. Identify conductors 6 American Wire Gauge (AWG) and smaller by continuous color jacket. Identify electrical conductors 4 AWG and larger by continuous color jacket or by colored tape. When identifying conductors with colored tape, mark at least 6 in. of the conductor's insulation with half laps of tape.

2. Provide a solid copper 6 AWG grounding electrode conductor to bond the electrical service equipment to the concrete encased grounding electrode or the ground rod at the service location. Connect the grounding electrode conductor to the ground rod with a UL listed connector in accordance with DMS 11040. Connect the grounding electrode conductor to the concrete encased grounding electrode as shown in the plans.

3. Where two or more circuits are present in one conduit or enclosure, permanently identify the conductors of each branch circuit by attaching a non-metallic tag around both circuit conductors at each accessible location. Provide tags with two straps, large enough to indicate circuit number, letter, or other identification as shown in the plans. Print circuit identification on the tag with a permanent marker.

4. Use listed compression or screw type pressure connectors, terminal blocks, or split bolt connectors for splicing as specified in DMS 11040. Use hot melt adhesive tape to fill the gap and seal the ends of heat shrink tubing. Provide UL listed gel-filled insulating splice covers. Splicing materials, insulating materials, breakaway disconnects, splice covers, and fuse holders are subsidiary to various bid items.

B. CONSTRUCTION METHODS

1. Use only a flat, high tensile strength polyester fiber pull tape for pulling conductors through the conduit system. After installing conductors in conduit, perform conductor pull test. If a conductor cannot be freely pulled, make any needed alterations or repairs at no additional cost to the department. Perform insulation resistance tests in accordance with Item 620. Coordinate with the Engineer to witness the tests.

2. Leave 2 ft. minimum, 3 ft. maximum length for each conductor up to the splice in ground boxes. Leave 3 ft. minimum, 4 ft. maximum length of conductor in ground boxes when pulled through with no splice. Leave 1 ft. minimum, 1.5 ft. maximum length of conductor at enclosures, weatherheads and pole bases.

3. Make splices only in junction boxes, ground boxes, pole bases, or electrical enclosures and use only listed compression or screw type pressure connectors, terminal blocks, or split bolt connectors. Insulate splices with heavy wall heat shrink tubing or gel-filled insulating splice covers to provide a watertight splice. Overlap conductor insulation with heat shrink tubing a minimum of 2 in. past both sides of the splice. Where heat shrink tubing may not shrink sufficiently to provide a watertight seal around the individual conductors, prior to heating the tubing, increase the diameter of the conductor insulation using hot melt adhesive tape to provide a watertight seal between the individual conductors and the heat shrink tubing. Ensure the tape extends past the heat shrink tubing. Use hot melt adhesive tape to fill the gap and seal the ends of heat shrink tubing. Heat shrink tubing that appears to have been burned, or overheated, is considered defective and must be replaced.

4. Size and install gel-filled insulating splice covers according to manufacturer's specifications when used in place of heat shrink tubing.

5. Wire nuts with factory applied waterproof sealant may be used for 8 AWG or smaller conductors in above ground junction boxes, but not in pole bases or ground boxes. Install wire nuts in an upright position to prevent the accumulation of water.

6. Support conductors in illumination poles with a J-hook at the top of the pole.

7. When terminating conductors, remove the insulation and jacketing material without nicking the individual strands of the conductor. Conductors with nicked individual conductor strands or removed strands will be considered damaged.

8. Replace conductors and cables that are damaged beyond repair or that fail an insulation resistance test at no additional cost to the department.

9. Do not repair damaged conductors with duct tape, electrical tape, or wire nuts. Use only approved splicing methods.

10. Do not terminate more than one conductor under a single connector, unless the connector is rated for multiple conductors. Do not exceed the pressure connector's listing for maximum number and size of conductors allowed.

11. Install breakaway connectors on conductors bid under Item 620 whenever those conductors pass through a breakaway support device. Follow manufacturer's instructions when terminating conductors to breakaway connectors. Properly torque threaded connections. Proper terminations are critical to the safe operation of breakaway devices. Trim waterproofing boots on breakaway connectors to fit snugly around the conductor to ensure waterproof connection. Only one conductor may enter a single opening in a boot. Provide waterproof boots with the correct number of openings. Leave unused openings factory sealed. Use prequalified breakaway connectors as shown on the MPL.

12. Provide and install a separate stranded equipment grounding conductor (EGC) in all conduits that contain circuit wiring of 50 volts or more. Unless shown elsewhere, size the EGC to be the same size as the largest current carrying conductor contained in the conduit. Ensure all EGCs are bonded together at every accessible location. For traffic signal installations, provide a minimum size 8 AWG EGC. The EGC is paid for under Item 620.

C. TEMPORARY WIRING

1. Install temporary conductors and electrical equipment in accordance with the NEC article "Temporary Installations" and Department standard sheets.

2. Provide a ground fault circuit interrupter (GFCI) for power outlets for portable electrical equipment, power tools, ice machines, ice storage bins and refrigerators located outdoors at grade. GFCI may be any one of the following: molded cord and plug set, receptacle, or circuit breaker type.

3. Use listed wire nuts with factory applied sealant for temporary wiring where approved.

4. Enclose conductor splices within a listed enclosure or ground box, or ensure the splices are more than 10 ft. above grade vertically and more than 5 ft. horizontally from any metal structure. Where installing temporary conductors in areas subject to vehicle traffic or mobile construction equipment, ensure the vertical clearance to ground is at least 18 ft. when measured at the lowest point. Ground messenger wires that support power conductors in conformance with the NEC.

5. Protect and when necessary repair any existing electrical conduits uncovered during the construction process in a timely manner and in conformance with the NEC.

GROUND RODS & GROUNDING ELECTRODES

A. MATERIAL INFORMATION

1. Provide and install a grounding electrode at electrical services. Provide ground rods according to DMS 11040 and the plans. Larger diameter or longer length rods may be called for in some specific locations, see the individual plans sheets. Concrete encased grounding electrodes may be called for in specific locations including electrical service, see individual plan sheets.

B. CONSTRUCTION METHODS

1. Furnish auxiliary ground rods for lightning protection and install in soil, concrete, or both, as called for in the plans. For ground rods installed in concrete, ensure the connection of the conductor to the ground rod is readily accessible for inspection or repairs. For ground rods installed in soil, ensure that the upper end is between 2 to 4 in. below finished grade.

2. Do not place ground rods in the same drilled hole as a timber pole.

3. Install ground rods so the imprinted part number is at the upper end of the rod.

4. Remove all non-conductive coatings such as concrete splatter from the rod at the clamp location.

5. Route all conductors as short and straight as possible for connection to lightning protection ground rods. When a bend is required, ensure a minimum radius bend of four inches for these conductors.

6. Unless otherwise called for in the plans, protect grounding electrode conductors with non-metallic conduit. When protecting grounding electrode conductors with metal conduit, provide and install a grounding type bushing and properly sized bonding jumper on each end of the metal conduit.

7. Written authorization is required before installing a ground rod in a horizontal trench for rocky soil or a solid rock bottom.

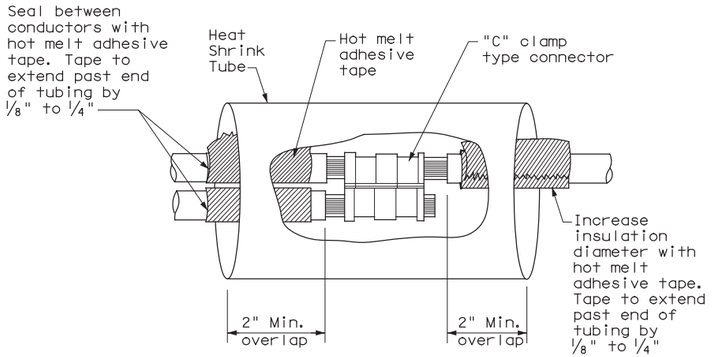

SPLICE OPTION 1
Compression Type

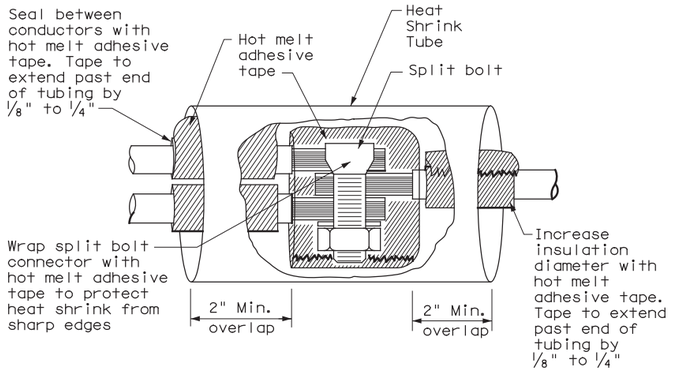

SPLICE OPTION 2
Split Bolt Type

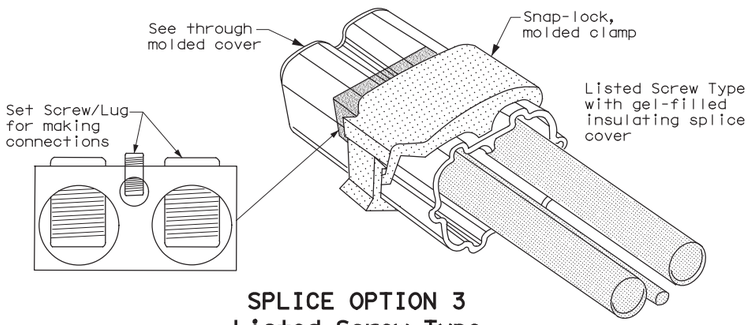

SPLICE OPTION 3
Listed Screw Type

Texas Department of Transportation | **Traffic Operations Division Standard**

ELECTRICAL DETAILS CONDUCTORS

ED(3)-14

FILE: ed3-14.dgn	DN: TxDOT	CK: TxDOT	DW: TxDOT	CK: TxDOT
©TxDOT October 2014	CONT	SECT	JOB	HIGHWAY
REVISIONS	2103	01	034	
	DIST	COUNTY		SHEET NO.
	AUS	WILLIAMSON		179

71C

DATE: 3/22/2018 3:36:25 PM
FILE: c:\pw\working\dal\d0918769\ed3-14.dgn

DISCLAIMER:
The use of this standard is governed by the "Texas Engineering Practice Act". No warranty of any kind is made by TxDOT for any purpose whatsoever. TxDOT assumes no responsibility for the conversion of this standard to other formats or for incorrect results or damages resulting from its use.

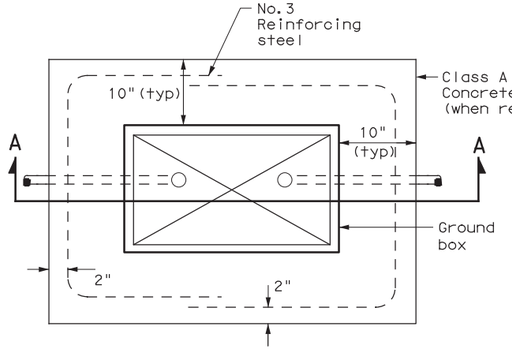

PLAN VIEW

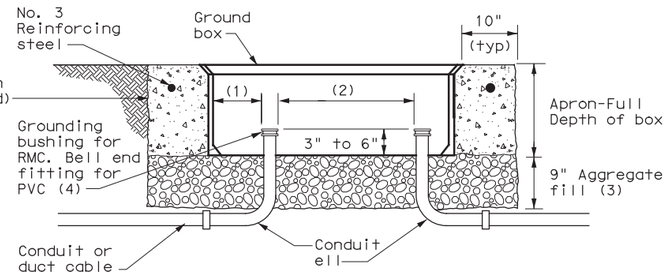

SECTION A - A

APRON FOR GROUND BOX

(1) Uniformly space ends of conduits within the ground box. Position ends of conduits so that ground box walls do not interfere with the installation of grounding bushings or bell end fittings.

(2) Maintain sufficient space between conduits to allow for proper installation of bushing.

(3) Place aggregate under the box, not in the box. Aggregate should not encroach on the interior volume of the box.

(4) Install a grounding bushing on the upper end of all RMC terminating in a ground box. Ground RMC elbows when any part of the elbow is less than 18 in. below the bottom of the ground box. Install a PVC bushing or bell end fitting on the upper end of all PVC conduits terminating in a ground box.

GROUND BOX DIMENSIONS	
TYPE	OUTSIDE DIMENSIONS (INCHES) (Width x Length X Depth)
A	12 X 23 X 11
B	12 X 23 X 22
C	16 X 29 X 11
D	16 X 29 X 22
E	12 X 23 X 17

GROUND BOX COVER DIMENSIONS								
TYPE	DIMENSIONS (INCHES)							
	H	I	J	K	L	M	N	P
A, B & E	23 1/4	23	13 3/4	13 1/2	9 7/8	5 1/8	1 3/8	2
C & D	30 1/2	30 1/4	17 1/2	17 1/4	13 1/4	6 3/4	1 3/8	2

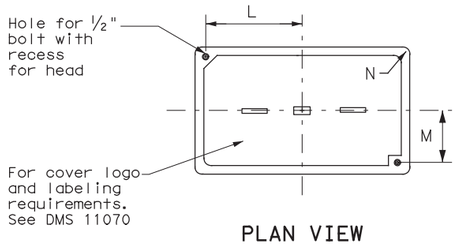

PLAN VIEW

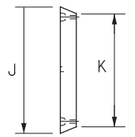

END

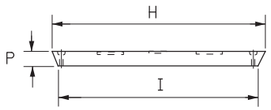

SIDE

GROUND BOX COVER

GROUND BOXES

A. MATERIALS

1. Provide polymer concrete ground boxes measuring 16x30x24 in. (WxLxD) or smaller in accordance with Departmental Material Specification (DMS) 11070 "Ground Boxes" and Item 624 "Ground Boxes."

2. Provide Type A, B, C, D, and E ground boxes as shown in the plans, and as listed on the Material Producers List (MPL) on the Department web site under "Roadway Illumination and Electrical Supplies," Item 624.

3. Ensure ground box cover is correctly labeled in accordance with DMS 11070.

4. Provide larger ground boxes in accordance with Item 624 and as shown in the plans.

B. CONSTRUCTION METHODS

1. Remove all gravel and dirt from conduit. Cap all conduits prior to placing aggregate and setting ground box. Provide Grade 3 or 4 coarse aggregate as shown on Table 2 of Item 302 "Aggregates for Surface Treatments." Ensure aggregate bed is in place and at least 9 inches deep, prior to setting the ground box. Install ground box on top of aggregate.

2. Cast ground box aprons in place. Reinforcing steel may be field bent. Ensure the depth of concrete for the apron extends from finished grade to the top of the aggregate bed under the box. Ground box aprons, including concrete and reinforcing steel, are subsidiary to ground boxes when called for by descriptive code.

3. Keep bolt holes in the box clear of dirt. Bolt covers down when not working in ground boxes.

4. Install all conduits and ells in a neat and workmanlike manner. Uniformly space conduits so grounding bushings and bell end fittings can easily be installed.

5. Temporarily seal all conduits in the ground box until conductors are installed.

6. Permanently seal conduits immediately after the completion of conductor installation and pull tests. Permanently seal the ends of all conduits with duct seal, expandable foam, or other method as approved. Do not use duct tape as a permanent conduit sealant. Do not use silicone caulk as a sealant.

7. When a ground rod is present in a ground box, bond all equipment grounding conductors together and to the ground rod with listed connectors.

8. When a type B or D ground box is stacked to meet volume requirements, it is allowable to cut an appropriately sized hole for conduit entry in the side wall at least 18 inches below grade.

9. If an existing ground box in the contract has a metal cover, bond the cover to the equipment grounding conductor with a 3 ft. long stranded bonding jumper the same size as the grounding conductor. The bonding jumper is subsidiary to various bid items. Verify existing ground boxes with metal covers are shown on the plans, with notes fully describing the work required.

10. If other ground boxes with metal covers are within the project limits but are not part of the contract, the Engineer may direct the Contractor to bond the metal covers, identifying the specific boxes in writing. This work will be paid for separately.

11. Bond metal ground box covers to the grounding conductor with a tank ground type lug.

Texas Department of Transportation

Traffic Operations Division Standard

ELECTRICAL DETAILS GROUND BOXES

ED(4)-14

FILE: ed4-14.dgn	DN: TxDOT	CK: TxDOT	DW: TxDOT	CK: TxDOT
©TxDOT October 2014	CONT	SECT	JOB	HIGHWAY
REVISIONS	2103	01	034	
	DIST	COUNTY		SHEET NO.
	AUS	WILLIAMSON		180

71D

DATE: 3/22/2018 3:36:40 PM
FILE: c:\pwworking\dal\d0918769\ed4-14.dgn

DISCLAIMER:
The use of this standard is governed by the "Texas Engineering Practice Act". No warranty of any kind is made by TxDOT for any purpose whatsoever. TxDOT assumes no responsibility for the conversion of this standard to other formats or for incorrect results or damages resulting from its use.

ELECTRICAL SERVICES NOTES

1. Provide new materials. Ensure installation and materials comply with the applicable provisions of the National Electrical Code (NEC) and National Electrical Manufacturers Association (NEMA) standards. Ensure material is Underwriters Laboratories (UL) listed. Provide and install electrical service conduits, conductors, disconnects, contactors, circuit breaker panels, and branch circuit breakers as shown on the Electrical Service Data chart in the plans. Faulty fabrication or poor workmanship in material, equipment, or installation is justification for rejection. Where manufacturers provide warranties and guarantees as a customary trade practice, furnish these to the State.

2. Provide electrical services in accordance with Electrical Details standard sheets, Departmental Material Specification (DMS) 11080 "Electrical Services,"DMS 11081 "Electrical Services-Type A," DMS 11082 "Electrical Services-Type C," DMS 11083 "Electrical Services-Type D," DMS 11084 "Electrical Services-Type T," DMS 11085 "Electrical Services-Pedestal (PS)", and Item 628 "Electrical Services" of the Standard Specifications. Provide electrical service types A, C, and D, as listed on the Material Producers List (MPL) on the Department web site under "Roadway Illumination and Electrical Supplies," Item 628. Provide other service types as detailed on the plans.

3. Provide all work, materials, services, and any incidentals needed to install a complete electrical service as specified in the plans.

4. Coordinate with the Engineer and the utility provider for metering and compliance with utility requirements. Primary line extensions, connection charges, meter charges, and other charges by the utility company to provide power to the location are paid for in accordance with Item 628. Get approval for the costs associated with these charges prior to engaging the utility company to do the work. Consult with the utility provider to determine costs and requirements, and coordinate the work as approved.

5. The enclosure manufacturer will provide Master Lock Type 2 with brass tumblers keyed #2195 for all custom electrical enclosures. Installing Contractor is to provide Master Lock #2195 Type 2 with brass tumblers for "off the shelf" enclosures. Master Lock #2195 keys and locks become property of the State. Unless otherwise approved, do not energize electrical service equipment until locks are installed.

6. Enclosures with external disconnects that de-energize all equipment inside the enclosure do not need a dead front trim. Protect incoming line terminations from incidental contact as required by the NEC.

7. When galvanized is specified for nuts, screws, bolts or miscellaneous hardware, stainless steel may be used.

8. Provide wiring and electrical components rated for 75°C. Provide red, black, and white colored XHHW service entrance conductors of minimum size 6 American Wire Gauge (AWG). Identify size 6 AWG conductors by continuous color jacket. Identify electrical conductors sized 4 AWG and larger by continuous color jacket or by colored tape. Mark at least 6 inches of the conductor's insulation with half laps of colored tape, when identifying conductors. Ensure each service entrance conductor exits through a separately bushed non-metallic opening in the weatherhead. The lengths of the conductors outside the weatherhead are to be 12 inches minimum, 18 inches maximum, or as required by utility.

9. All electrical service conduit and conductors attached to the electrical service including the riser or the elbow below ground are subsidiary to the electrical service. For an underground utility feed, all service conduit and conductors after the elbow, including service conduit and conductors for the utility pole riser when furnished by the Contractor, will be paid for separately.

10. Provide rigid metal conduit (RMC) for all conduits on service, except for the ½ in. PVC conduit containing the electrical service grounding electrode conductor. Size the service entrance conduit as shown in the plans. Ensure conduit for branch circuit entry to enclosure is the same size as that shown on the layout sheets for branch circuit conduit. Extend all rigid metal conduits a minimum of 6 inches underground and then couple to the type and schedule of the conduit shown on the layout for that particular branch circuit. Install a grounding bushing on the RMC where it terminates in the service enclosure.

11. Use of liquidtight flexible metal conduit (LFMC) is allowed between the meter and service enclosure when they are mounted 90 to 180 degrees to each other. Size the LFMC the same size as service entrance conduit. LFMC must not exceed 3 feet in length. Strap LFMC within 1 foot of each end. LFMC less than 12 inches in length need not be strapped. Each end of LFMC must have a grounding bushing or be terminated with a grounding fitting. The LFMC must contain a grounded (neutral) conductor. Ensure any bend in LFMC never exceeds 180 degrees. A pull test is required on all installed conductors, with at least six inches of free conductor movement demonstrated to the satisfaction of the Engineer.

12. Ensure all mounting hardware and installation details of services conform to utility company specifications.

13. For all electrical service enclosures listed under Item 628 on the MPL, the UL 508 enclosure manufacturers will prepare and submit a schematic drawing unique to each service. Before shipment to the job site, place the applicable laminated schematic drawings and the laminated plan sheet showing the electrical service data chart used to build the enclosure in the enclosure's data pocket. The installing contractor will copy and laminate the actual project plan sheets detailing all equipment and branch circuits supplied by that service. The laminated plan sheets are to be placed in the service enclosure's document pocket. Reduce 11 in. x 17 in. plan sheets to 8 ½ in. x 11 in. before laminating. If the installation differs from the plan sheets, the installing contractor is to redline plan sheets before laminating.

14. When providing an "Off The Shelf" Type D or Type T service, provide laminated plan sheets detailing equipment and branch circuits supplied by that service. Reduce 11 in. x 17 in. plan sheets to 8 ½ in. x 11 in before laminating. Deliver these drawings before completion of the work to the Engineer, instead of placing in enclosure that has no door pocket.

15. Do not install conduit in the back wall of a service enclosure where it would penetrate the equipment mounting panel inside the enclosure. Provide grounding bushings on all metal conduits, and terminate bonding jumpers to grounding bus. Grounding bushings are not required when the end of the metal conduit is fitted with a conduit sealing hub or threaded boss, such as a meter base hub.

SERVICE ASSEMBLY ENCLOSURE

1. Provide threaded hub for all conduit entries into the top of enclosure.

2. Type galvanized steel (GS) enclosures may be used for Type C panelboards and for Type D and T services that do not use an enclosure mounted photocell or lighting contactor. Provide GS enclosures in accordance with DMS 11080, 11082, 11083, and 11084.

3. Provide aluminum (AL) and stainless steel (SS) enclosures for Types A, C, and D in accordance with DMS 11080, 11081, 11082, 11083, and 11084. Do not paint stainless steel.

4. Provide pedestal service (PS) enclosures in accordance with ED(9) and DMS 11080 and 11085. Do not provide GS pedestal services. If GS is shown in the PS descriptive code, provide an AL enclosure.

MAIN DISCONNECT & BRANCH CIRCUIT BREAKERS

1. Field drill flange-mounted remote operator handle if needed, to ensure handle is lockable in both the "On" and "Off" positions.

2. When the utility company provides a transformer larger than 50 KVA, verify that the available fault current is less than the circuit breaker's ampere interrupting capacity (AIC) rating and provide documentation from the electric utility provider to the Engineer.

PHOTOELECTRIC CONTROL

1. Provide photocell as listed on the MPL. Move, adjust, or shield the photocell from stray or ambient night time light to ensure proper operation. Mount photocell facing north when practical. Mount top of pole photocells as shown on Top Mounted Photocell Detail.

* ELECTRICAL SERVICE DATA

Elec. Service ID	Plan Sheet Number	Electrical Service Description	Service Conduit **Size	Service Conductors No./Size	Safety Switch Amps	Main Ckt. Bkr. Pole/Amps	Two-Pole Contractor Amps	Panelbd/ Loadcenter Amp Rating	Branch Circuit ID	Branch Ckt. Bkr. Pole/Amps	Branch Circuit Amps	KVA Load
SB 183	289	ELC SRV TY A 240/480 100(SS)AL(E)SF(U)	2"	3/#2	100	2P/100	100	N/A	Lighting NB	2P/40	26	28.1
									Lighting SB	2P/40	25	
									Underpass	1P/20	15	
NB Access	30	ELC SRV TY D 120/240 060(NS)SS(E)TS(O)	1 ¼"	3/#6	N/A	2P/60		100	Sig. Controller	1P/30	23	5.3
							30		Luminaires	2P/20	9	
									CCTV	1P/20	3	
2nd & Main	58	ELC SRV TY T 120/240 000(NS)GS(N)SP(O)	1 ¼"	3/#6	N/A	N/A	N/A	70	Flashing Beacon 1	1P/20	4	1.0
									Flashing Beacon 2	1P/20	4	

* Example only, not for construction. All new electrical services must have electrical service data chart specific to that service as shown in the plans.

** Verify service conduit size with utility. Size may change due to utility meter requirements. Ensure conduit size meets the National ELectrical Code.

EXPLANATION OF ELECTRICAL SERVICE DESCRIPTIVE CODE

ELEC SERV TY X XXX/XXX XXX (XX) XX (X) XX (X)

- Schematic Type
- Service Voltage V / V
- Disconnect Amp Rating
  000 indicates main lug only/
  Typically Type T
- (SS)= Safety Switch Ahead of Meter-Check with Utility
  (NS)= No safety Switch Ahead of Meter-Check with Utility
- Enclosure Type
  GS= Galvanized steel("off the shelf")
  SS= Stainless steel(Custom Enclosure)See MPL
  AL= Aluminum (Custom Enclosure)See MPL
- Photocell Mounting Location
  (E)= Inside Service/Enclosure Mounted
  (T)= Top of pole
  (L)= Luminaire mounted
  (N)= None/No Photocell or Lighting Contactor Required
- Service Support Type
  GC= Granite concrete
  OC= Other concrete
  TP= Timber pole
  SP= Steel pole
  SF= Steel frame
  OT= Pole by others or paid for separately
  EX= Existing pole
  TS= Service on traffic signal pole
  PS= Pedestal Service
- O= Overhead Service Feed from Utility
  U= Underground Service Feed from Utility

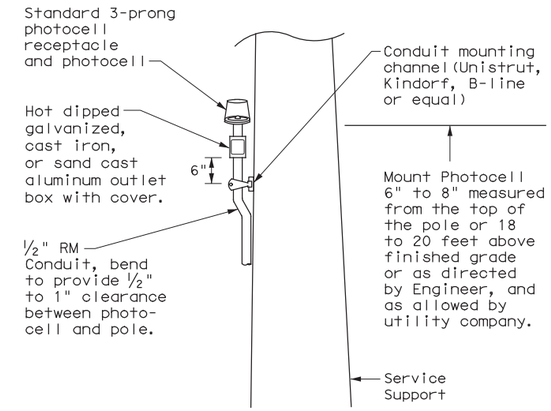

TOP MOUNTED PHOTOCELL

Install conduit strap maximum 3 feet from box. 5 foot maximum spacing between straps supporting conduit.

Texas Department of Transportation

Traffic Operations Division Standard

ELECTRICAL DETAILS SERVICE NOTES & DATA

ED(5)-14

FILE: ed5-14.dgn	DN: TxDOT	CK: TxDOT	DW: TxDOT	CK: TxDOT
© TxDOT October 2014	CONT	SECT	JOB	HIGHWAY
REVISIONS	2103	01	034	
	DIST	COUNTY		SHEET NO.
	AUS	WILLIAMSON		181

71E

DISCLAIMER:
The use of this standard is governed by the "Texas Engineering Practice Act". No warranty of any kind is made by TxDOT for any purpose whatsoever. TxDOT assumes no responsibility for the conversion of this standard to other formats or for incorrect results or damages resulting from its use.

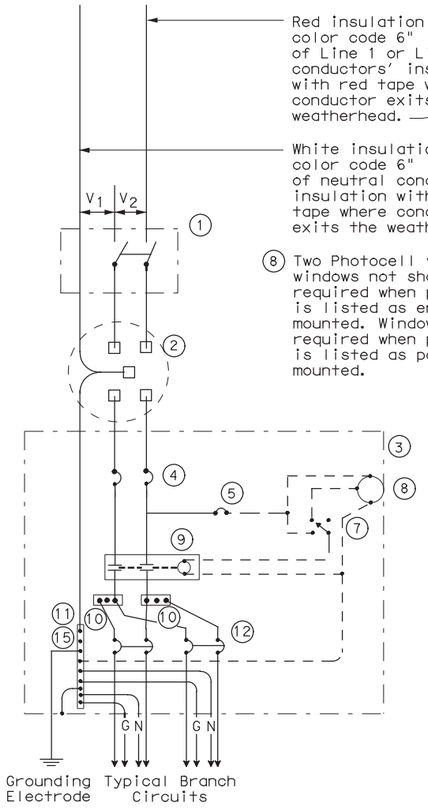

SCHEMATIC TYPE A
THREE WIRE

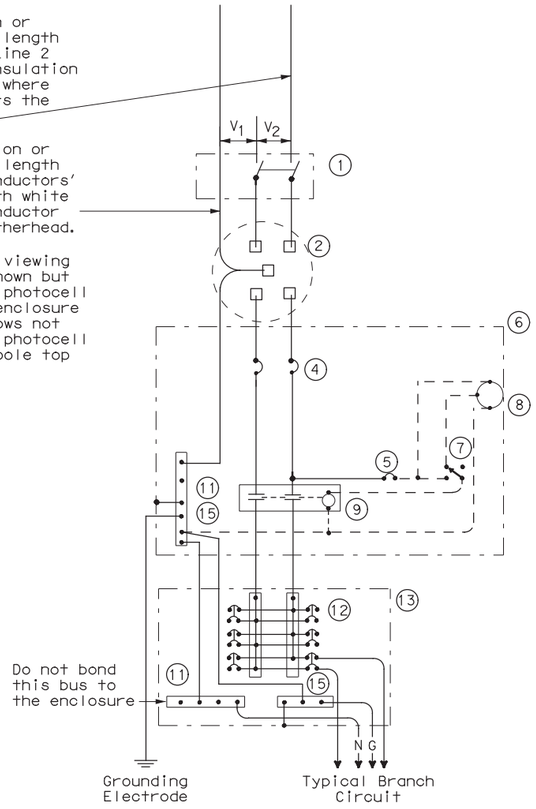

SCHEMATIC TYPE C
THREE WIRE

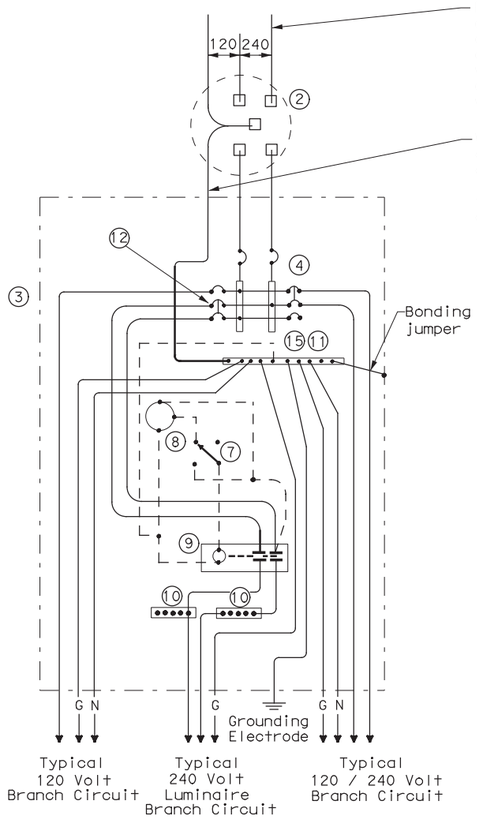

SCHEMATIC TYPE D - CUSTOM
120/240 VOLTS - THREE WIRE

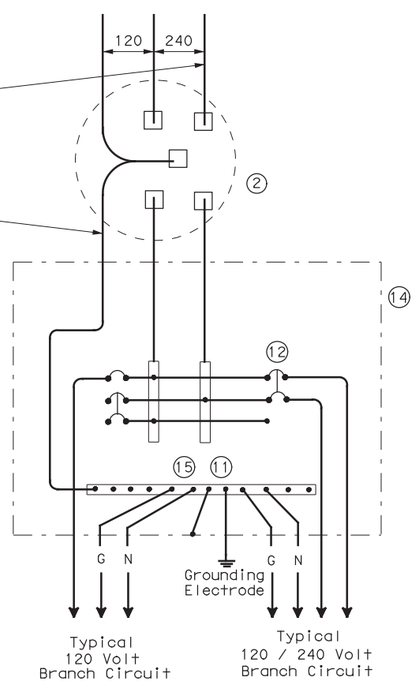

SCHEMATIC TYPE T
120/240 VOLTS - THREE WIRE

Galvanized steel-"Buy Off The Shelf" only. When required install photocell top of the pole or on luminaire only, no lighting contractor will be installed.

WIRING LEGEND	
———	Power Wiring
- - - -	Control Wiring
——N——	Neutral Conductor
——G——	Equipment grounding conductor-always required

SCHEMATIC LEGEND	
1	Safety Switch (when required)
2	Meter (when required-verify with electric utility provider)
3	Service Assembly Enclosure
4	Main Disconnect Breaker (See Electrical Service Data)
5	Circuit Breaker, 15 Amp (Control Circuit)
6	Auxiliary Enclosure
7	Control Station ("H-O-A" Switch)
8	Photo Electric Control (enclosure-mounted shown)
9	Lighting Contactor
10	Power Distribution Terminal Blocks
11	Neutral Bus
12	Branch Circuit Breaker (See Electrical Service Data)
13	Separate Circuit Breaker Panelboard
14	Load Center
15	Ground Bus

Texas Department of Transportation

Traffic Operations Division Standard

ELECTRICAL DETAILS SERVICE ENCLOSURE AND NOTES

ED(6)-14

FILE: ed6-14.dgn	DN: TxDOT	CK: TxDOT	DW: TxDOT	CK: TxDOT
©TxDOT October 2014	CONT	SECT	JOB	HIGHWAY
REVISIONS	2103	01	034	
	DIST	COUNTY		SHEET NO.
	AUS	WILLIAMSON		J 82

71F

DATE: 3/22/2018 3:37:12 PM
FILE: c:\pwworking\dal\d0918769\ed6-14.dgn

DISCLAIMER:
The use of this standard is governed by the "Texas Engineering Practice Act". No warranty of any kind is made by TxDOT for any purpose whatsoever. TxDOT assumes no responsibility for the conversion of this standard to other formats or for incorrect results or damages resulting from its use.

TRAFFIC SIGNAL NOTES

1. Do not pass luminaire conductors through the signal controller cabinet.
2. Include an equipment grounding conductor in all conduits throughout the electrical system. Bond all exposed metal parts to the grounding conductor.
3. Provide roadway luminaires, when required, in accordance with the material and construction sections of Item 610, "Roadway Illumination Assemblies," except for performance testing of luminaires. Test installed roadway luminaires for proper operation as a part of the associated traffic signal system test.
4. If internally illuminated street name signs are approved for use, ground the fixture to the pole with a 12 AWG green XHHW conductor.
5. Bond anchor bolts to rebar cage in two locations using #3 bars or 6 AWG stranded copper conductors. Use listed mechanical connectors rated for embedment in concrete. See TXDOT standard TS-FD for further details.
6. Drill and tap signal poles for ½ in. X 13 UNC tank ground fitting. Provide and install tank ground fitting 4 in. to 6 in. directly below electrical service enclosure. Provide properly sized hole through the bottom of the enclosure for the service grounding electrode conductor. Connect the electrical service grounding electrode conductor to the tank ground fitting. Ensure electrical service grounding electrode conductor is as short and straight as possible from the enclosure to the tank ground fitting. See Inset A detail for further information. Size service entrance conduit and branch circuit conduit as shown in the plans.
7. Mount electrical service enclosure and meter to signal pole with stainless steel bands. Ensure bands are a minimum width of ¾ in. Secure enclosures to bands using two-bolt brackets. Install brackets near top and bottom of each enclosure. Install properly sized stainless steel washers on each bolt in the enclosure. Band or drill and tap properly sized stand-off straps to signal pole for attaching conduit.
8. Conduct pull tests and insulation resistance tests on all illumination and power conductors as required in Item 620 "Electrical Conductors" and ED(3). To prevent electronics damage, do not conduct insulation resistance tests on traffic signal cables after termination.
9. Lock all enclosures and bolt down all ground box covers before applying power to the signal installation.
10. Terminate conduits entering the top of enclosures with a conduit-sealing hub or threaded boss such as meter hub. Install a grounding bushing on all metal conduits not connected to conduit-sealing hub or threaded boss. Bond the grounding bushing to the ground bus with a bonding jumper. Seal all conduits entering enclosures with duct seal or expanding foam. Do not use silicone to seal conduit ends.
11. For all conduits, ensure the burial depth is a minimum of 18". Ensure the minimum burial depth for conduit placed under a roadway is 24".

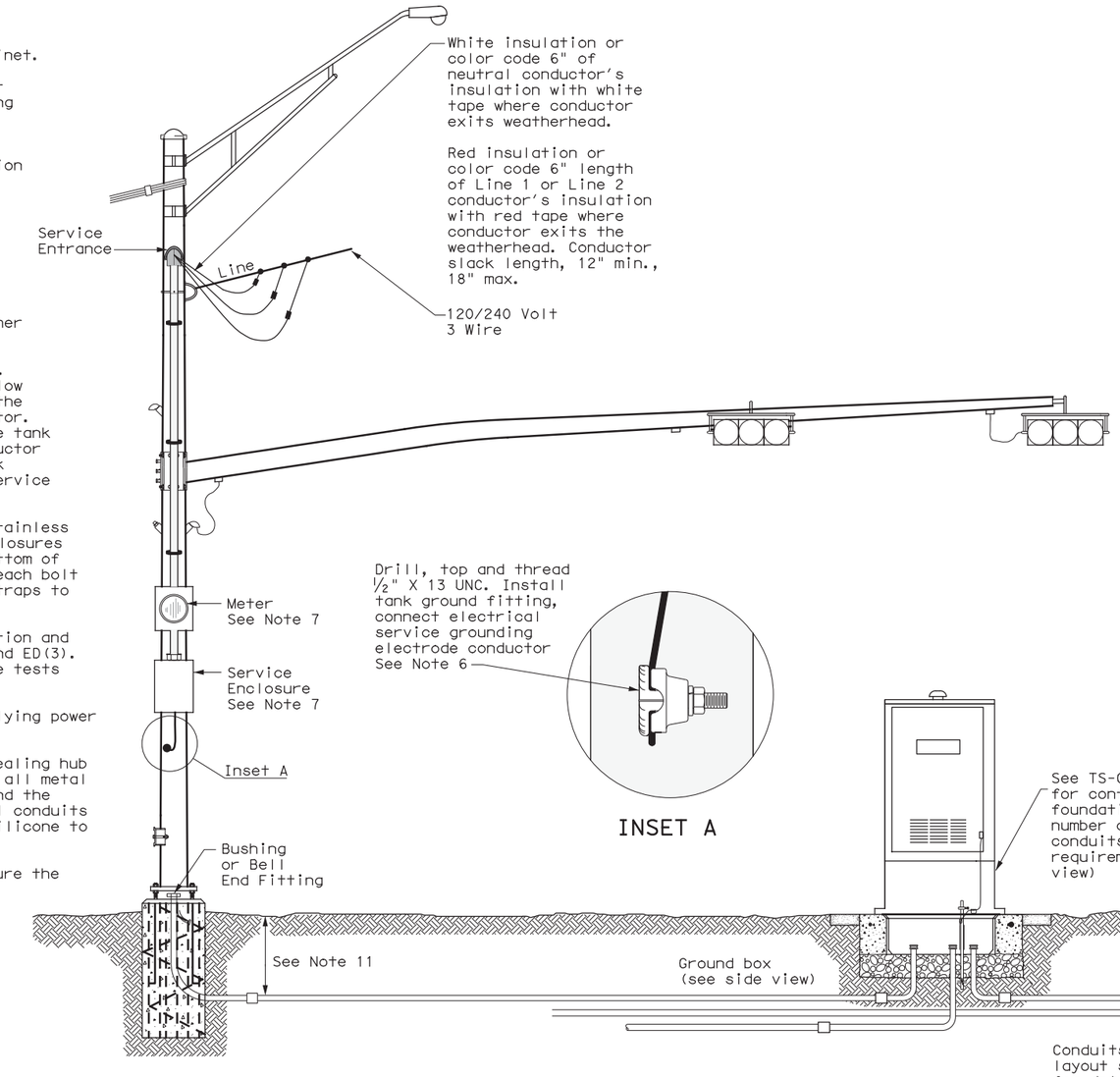

SIGNAL POLE WITH SERVICE

Type T electrical service mounted on signal pole shown as an example. See electrical details, layout sheets, and electrical service data chart for additional details.

INSET A

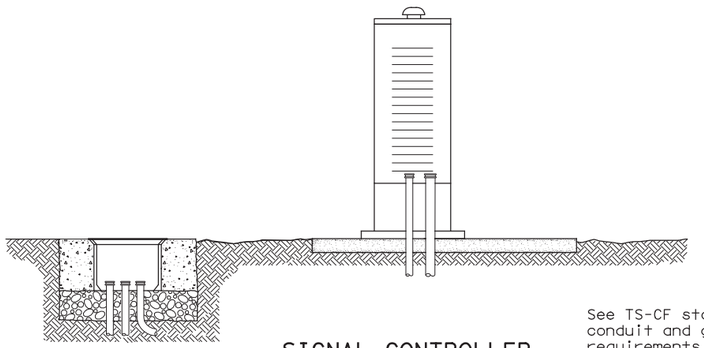

SIGNAL CONTROLLER SIDE VIEW

See TS-CF standard for conduit and grounding requirements. See layout sheets for ground box locations and any additional conduits that are required.

SIGNAL CONTROLLER FRONT VIEW

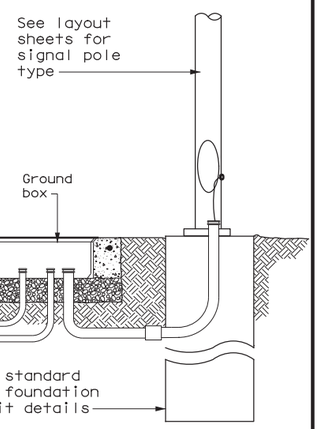

SIGNAL POLE

Texas Department of Transportation

Traffic Operations Division Standard

ELECTRICAL DETAILS TYPICAL TRAFFIC SIGNAL SYSTEM DETAILS

ED(8)-14

FILE: ed8-14.dgn	DN: TxDOT	CK: TxDOT	DW: TxDOT	CK: TxDOT
©TxDOT October 2014	CONT	SECT	JOB	HIGHWAY
REVISIONS	2103	01	034	
	DIST	COUNTY		SHEET NO.
	AUS	WILLIAMSON		183

71H

PEDESTAL SERVICE NOTES

1. Manufacture pedestal electrical services in accordance with Departmental Material Specifications (DMS)11080 "Electrical Services", 11085 "Electrical Services-Pedestal (PS)" and Item 628 "Electrical Services. "Provide pedestal electrical services as listed on the Material Producers list (MPL) on the Department's web site under "Roadway Illumination and Electrical Supplies," Item 628. Ensure all mounting hardware and installation details of services meet utility company specifications. Contact the local utility company for approval of pedestal details prior to installing the electrical pedestal service. Submit any changes required by the utility company prior to manufacturing the pedestal enclosure.

2. When a meter socket is required, provide a socket with a minimum 100 amp rating that complies with local utility requirements.

3. Provide Class A or C concrete for pedestal service foundations in accordance with Item 420, "Concrete Substructures," except that concrete will not be paid for directly but is considered subsidiary to Item 628.

4. Provide #4 reinforcing steel for foundations in accordance with Item 440, "Reinforcement for Concrete."

5. Install ½ in. X 2 1/16 in. minimum length concrete single expansion type anchors for mounting pedestal enclosure to foundation. Anchor location to match mounting holes in each corner of enclosure. Secure each of the four corners of the pedestal enclosure to the anchors in the foundation with a ½ in. galvanized or stainless steel machine thread bolt, a properly sized locknut and a flat washer.

6. Finish top of concrete foundation in a neat and workmanlike manner. If leveling washers are used, ensure no more than ⅛ in. gap at any corner. Do not exceed a maximum dip or rise in the foundation of ⅛ in. per foot. When properly installed, ensure the top of the service enclosure is level front to back and side to side within ¼ in. Repair rocking or movement of the service enclosure at no additional cost to the department.

7. Do not use liquidtight flexible metal conduit (LFMC) on pedestal type services.

8. Ensure all elbows in the foundation are sized as per utility provider's conduit requirements for underground conduit and feeders. PVC extensions may be installed provided the ends of the rigid metal conduits are more than 2 in. below the top of the concrete foundation. Where extension conduits are metal, grounding bushings must be installed with a bonding jumper properly terminated.

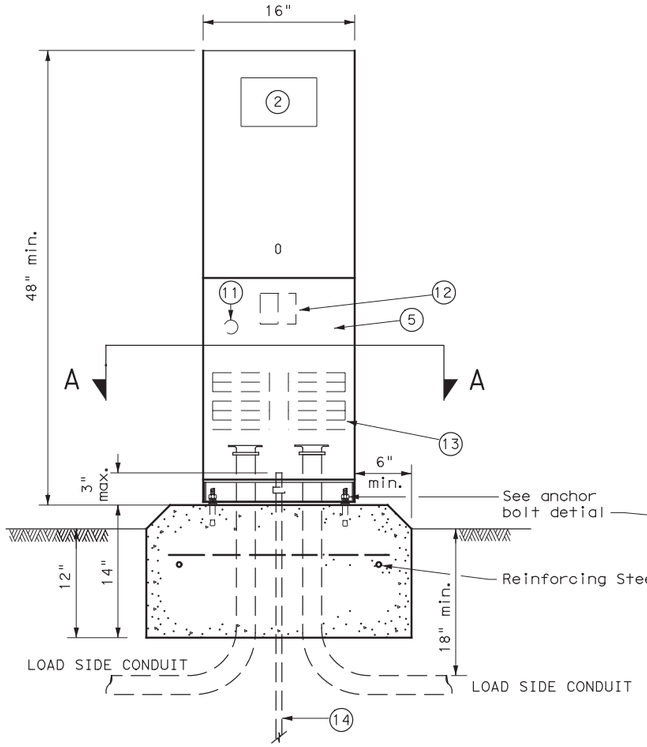

FRONT VIEW

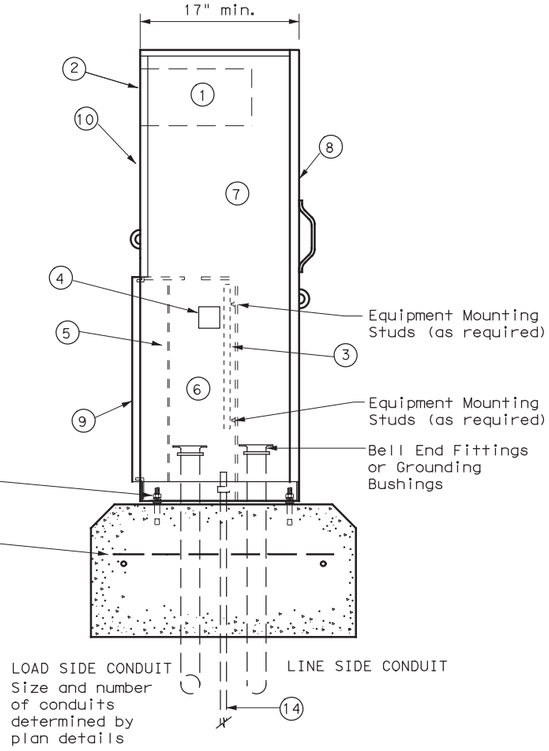

SIDE VIEW

TYPE C shown, TYPE A similar except that TYPE A shall have individual circuit breakers (CB) mounted on an equipment mounting panel. CB Handles shall protrude through hinged deadfront trim.

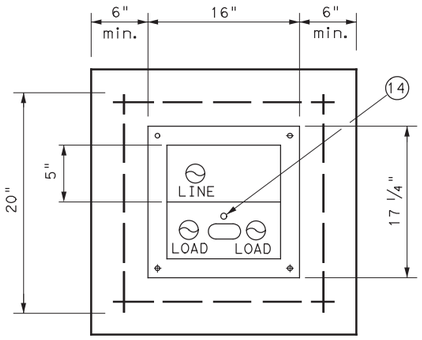

SECTION A-A

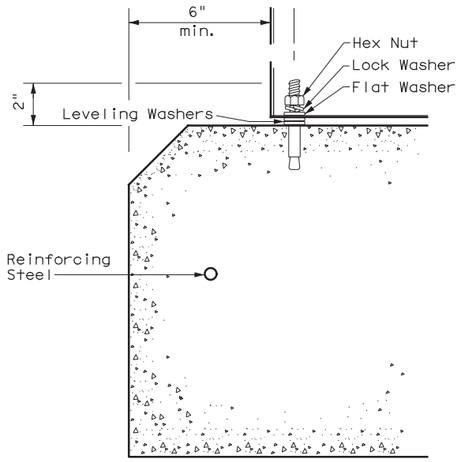

ANCHOR BOLT DETAIL

LEGEND	
1	Meter Socket, (when required)
2	Meter Socket Window, (when required)
3	Equipment Mounting Panel
4	Photo Electric Control Window, (When required)
5	Hinged Deadfront Trim
6	Load Side Conduit Trim
7	Line Side Conduit Area
8	Utility Access Door, with handle
9	Pedestal Door
10	Hinged Meter Access
11	Control Station (H-O-A Switch)
12	Main Disconnect
13	Branch Circuit Breakers
14	Copper Clad Ground Rod - 5/8" X 10'

Texas Department of Transportation

Traffic Operations Division Standard

ELECTRICAL DETAILS
ELECTRICAL SERVICE SUPPORT
PEDESTAL SERVICE TYPE PS

ED(9)-14

FILE: ed9-14.dgn	DN: TxDOT	CK: TxDOT	DW: TxDOT	CK: TxDOT
©TxDOT October 2014	CONT	SECT	JOB	HIGHWAY
REVISIONS	2103	01	034	
	DIST	COUNTY		SHEET NO.
	AUS	WILLIAMSON		184

71J

DISCLAIMER:
The use of this standard is governed by the "Texas Engineering Practice Act". No warranty of any kind is made by TxDOT for any purpose whatsoever. TxDOT assumes no responsibility for the conversion of this standard to other formats or for incorrect results or damages resulting from its use.

DATE: 3/22/2018, 3:37:41 PM
FILE: c:\pworking\dot\d0918769\ed9-14.dgn

DISCLAIMER:
The use of this standard is governed by the "Texas Engineering Practice Act". No warranty of any kind is made by TxDOT for any purpose whatsoever. TxDOT assumes no responsibility for the conversion of this standard to other formats or for incorrect results or damages resulting from its use.

BATTERY BOX GROUND BOXES NOTES

A. MATERIALS

1. Provide polymer concrete or fiberglass reinforced plastic (FRP) battery box ground box and cover in accordance with Departmental Material Specification (DMS) 11071 "Battery Box Ground Boxes." Battery box will accommodate up to 4 batteries, each measuring 8 in. x 13.5 in. x 10 in. (W x L x D). Label battery box ground box cover in accordance with DMS 11071.

2. Supply a marine grade batteries with covers. Secure the marine grade batteries with covers to the stainless steel rack in the bottom of the ground box with tie down straps.

B. CONSTRUCTION METHODS

1. Ensure conduit entry will not interfere with placement of the batteries in the battery box ground box.

2. Remove all gravel and dirt from conduit. Cap all conduits prior to placing aggregate and setting battery box ground box. Provide Grade 3 or 4 coarse aggregate as shown on Table 2 of Item 302 "Aggregates for Surface Treatments." Ensure the aggregate bed is in place and is a minimum of 9 in. deep prior to setting the box. Install battery box ground box on top of aggregate.

3. Cast battery box aprons in place. Reinforcing steel may be field bent. Ensure the depth of concrete for the apron extends from finished grade to the top of the aggregate bed under the box. Battery box ground box aprons, including concrete and reinforcing steel, are subsidiary to battery box ground boxes when called for by descriptive code.

4. Bolt covers down when not working in battery box ground boxes. Keep bolt holes in the box clear of dirt.

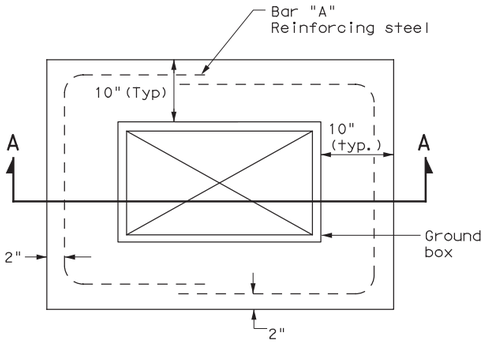

PLAN VIEW

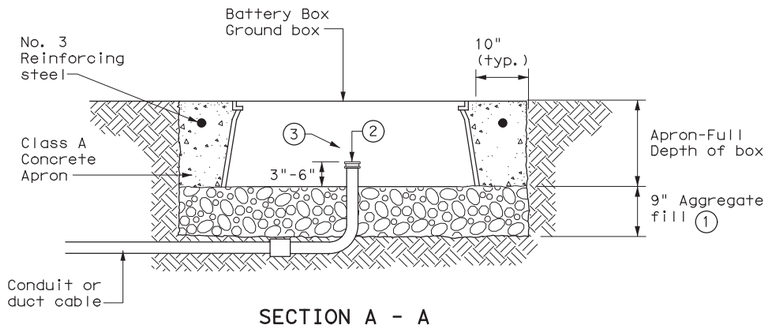

SECTION A - A

APRON FOR BATTERY BOX GROUND BOXES

(1) Place aggregate under the box and not in the box. Aggregate should not encroach on the interior volume of the box.

(2) Install bushing or bell end fitting on the upper end of all ells.

(3) Install all conduits in a neat and workmanlike manner.

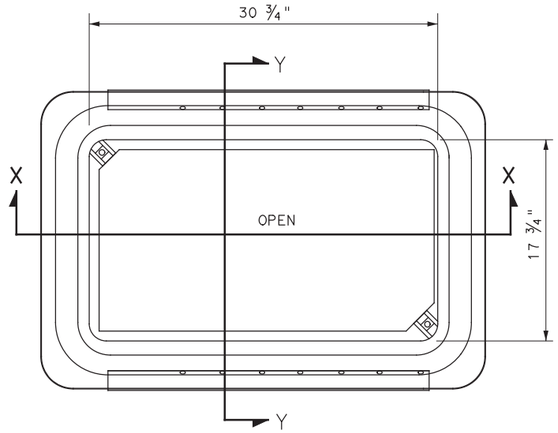

BATTERY BOX TOP VIEW

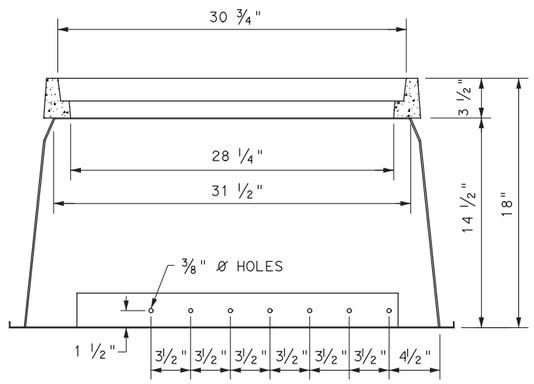

SECTION X-X

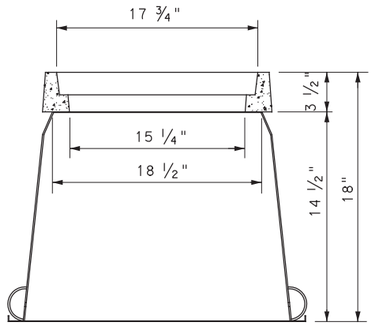

SECTION Y-Y

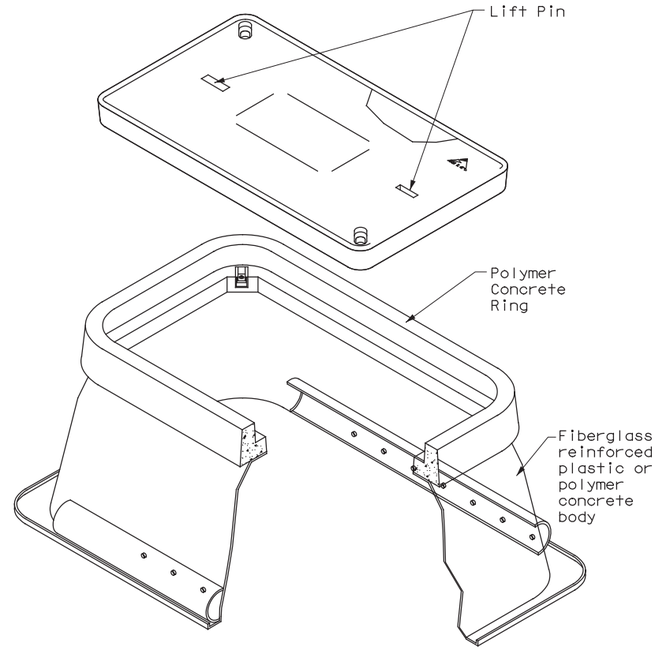

Texas Department of Transportation | Traffic Operations Division Standard

ELECTRICAL DETAILS BATTERY BOX GROUND BOXES

ED(12)-14

FILE: ed12-14.dgn	DN: TxDOT	CK: TxDOT	DW: TxDOT	CK: TxDOT			
©TxDOT October 2014	CONT	SECT	JOB		HIGHWAY		
REVISIONS	2103	01	034				
	DIST	COUNTY			SHEET NO.		
	AUS	WILLIAMSON			185		

71M

DATE: 3/22/2018 3:37:48 PM
FILE: c:\pwworking\ddi\d0918769\ed12-14.dgn

INTERNALLY LIGHTED STREET NAME SIGN DETAILS

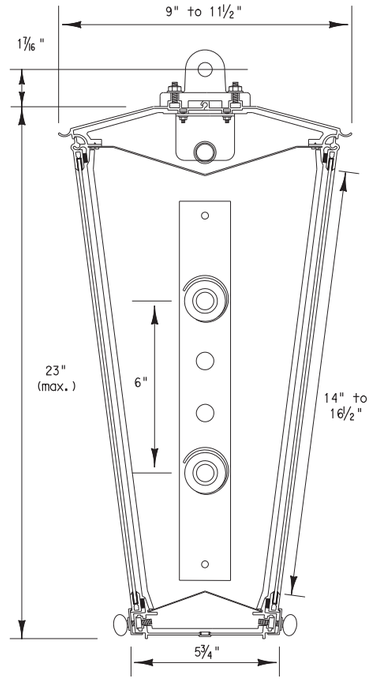

Section A-A

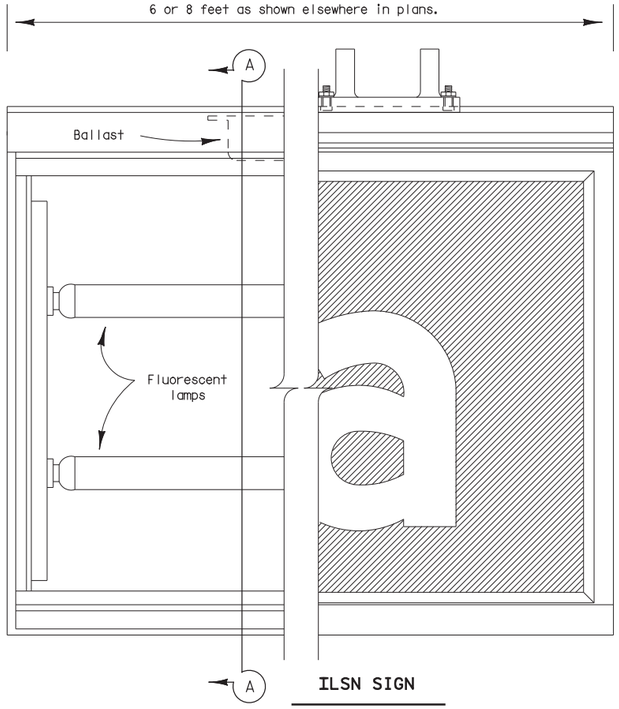

ILSN SIGN

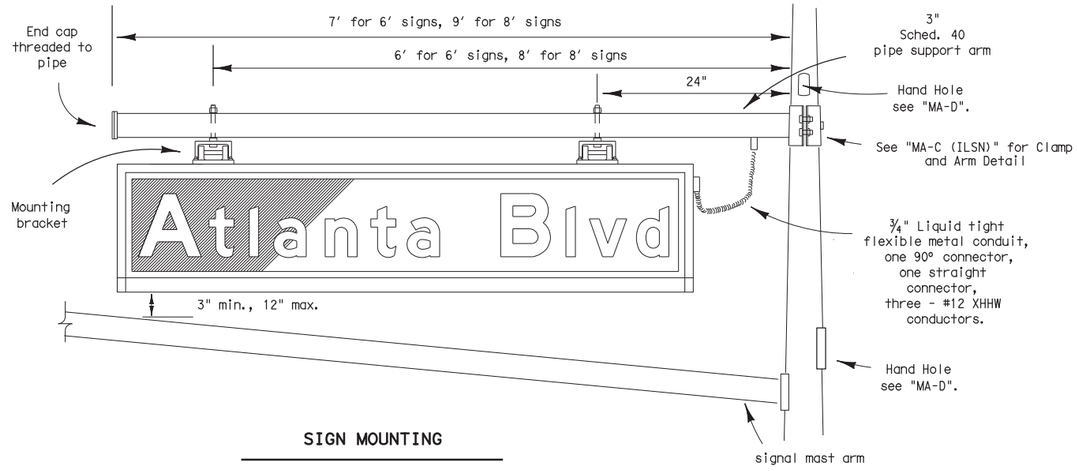

SIGN MOUNTING

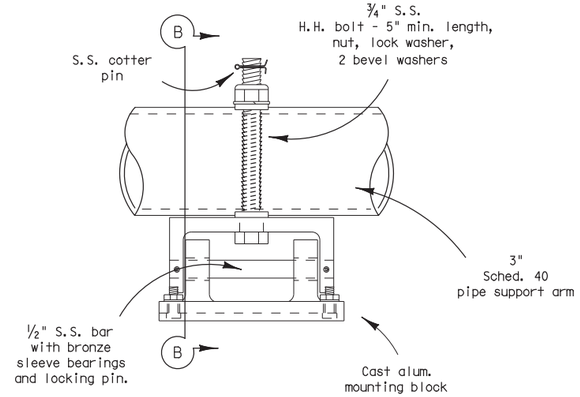

MOUNTING BRACKET

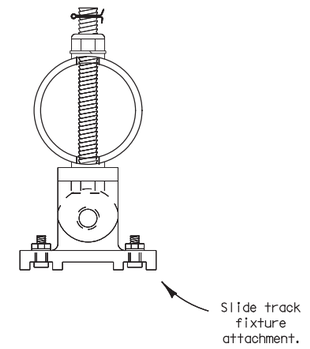

Section B-B

ILSN SIGN NOTES:

1. Eight foot ILSN sign shall not exceed 11.5 sq.ft. effective projected area (EPA) and shall not exceed a weight of 85 lbs.
   Six foot ILSN sign shall not exceed 8.7 sq.ft. EPA and shall not exceed a weight of 70 lbs.
2. Sign message shall be as shown elsewhere in the plans.
3. See Special Specification, "internally Lighted Street Name Signs" for additional details.

EXPLANATION OF DESCRIPTION

ILSN Sign 6 S

- ILSN Sign: Internally lighted street name sign
- 6: Sign length; 6 or 8 ft.
- S: Single or double face

Texas Department of Transportation
Traffic Operations Division

STREET NAME SIGN DETAILS (ILLUMINATED)

SNS-95

DISCLAIMER: The use of this standard is governed by the "Texas Engineering Practice Act". No warranty of any kind is made by TxDOT for any purpose whatsoever. TxDOT assumes no responsibility for the conversion of this standard to other formats or for incorrect results or damages resulting from its use.

DATE: 3/22/2018 3:37:57 PM
FILE: c:\pwworking\dal\d0918769\sns-95.dgn

© TxDOT August 1995	DN: TXDOT	CK: TXDOT	DW: TXDOT	CK: TXDOT
REVISIONS	CONT	SECT	JOB	HIGHWAY
	2103	01	034	
	DIST	COUNTY		SHEET NO.
	AUS	WILLIAMSON		186

DISCLAIMER: The use of this standard is governed by the "Texas Engineering Practice Act". No warranty of any kind is made by TxDOT for any purpose whatsoever. TxDOT assumes no responsibility for the conversion of this standard to other formats or for incorrect results or damages resulting from its use.

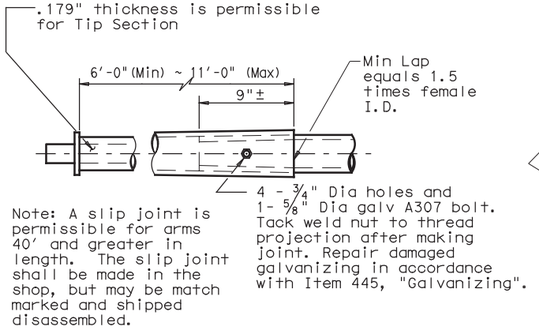

SLIP JOINT DETAIL

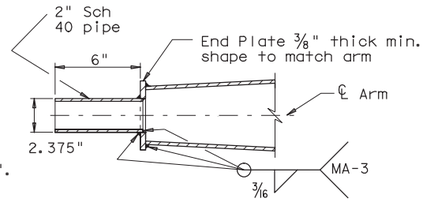

TENON DETAIL

Stainless steel bands (or Cables) and cast bracket as in "Astro-Brac", "Sky Bracket" or "Easy Bracket" with 1 ½" Dia Threaded Coupling.

BRACKET ASSEMBLY

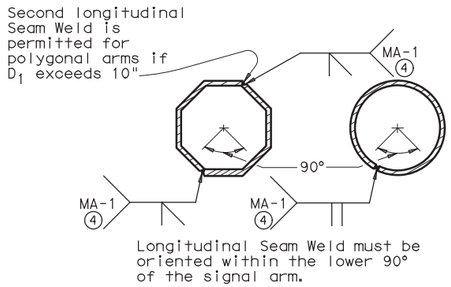

ARM WELD DETAIL

④ 60% Min. penetration 100% pemetration within 6" of circumferential base welds.

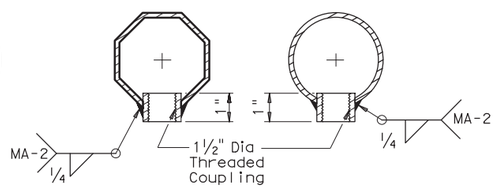

ARM COUPLING DETAILS

VIBRATION WARNING

Mast Arms of SMA and DMA structures and clamp-on Arms of LMA structures of approximately 40 ft or longer are subject to harmonic vertical vibrations in light wind conditions due to the aeroelastic characteristics of a few of the myriads of possible combinations of the following: signal numbers, weights and positions; existence/solidity of backplates; presence of additional attachments to the arm, such as signs and cameras; arm-wind orientation; and arm-pole stiffness.

Such vibrations may cause fatigue damage to the structure and may lead to galloping in moderate wind conditions which may further damage the structure and alarm the public. Tests have indicated that when wind is blowing toward the back side of signal heads having un-vented backplates attached the probability of unacceptable harmonic vibration and/or galloping is rather high.

If backplates are not required for improved visibility they should not be applied to the signal heads or, if they must be applied, they should be vented as a first and inexpensive measure to mitigate vibrations.

The traffic signal mast arms shall be visually inspected in 5 to 20 mph wind conditions after installation of signal heads and any attachments, including any required backpates. If vertical movements with a total excursion (maximum upward excursion to maximum downward excursion) of more than approximately 8" are observed at the arm tip, a damping plate shall be fitted to the arm. See "Damping Plate Mounting Details" on standard sheet, MA-DPD-10.

This visual inspection shall be repeated after each modification of the structure that could affect its aeroelastic response. Excessive vibrations shall not be allowed to continue for more than two days.

GENERAL NOTES:

Design conforms to 1994 AASHTO Standard Specifications for Structural Supports for Highway Signs, Luminaires, and Traffic Signals and Interim Specifications thereto. Design Wind Speed equals 80 mph plus a 1.3 gust factor.

Poles are designed to support one 8'-0" luminaire arm, one 9'-0" internally lighted street name sign and one traffic signal arm with a length as tabulated. The specified luminaire load applied at the end of the luminaire arm equals 60 lbs vertical dead load plus the horizontal wind load on an effective projected area of 1.6 sq ft. The specified internally lighted street name sign load applied 4.5 ft from the centerline of the pole equals 85 lbs vertical dead load plus horizontal wind load on an effective projected area of 11.5 sq ft. The specified signal load applied at the end of the traffic signal arm equals 180 lbs vertical dead load plus the horizontal wind load on an effective projected area of 32.4 sq ft (actual area times drag coefficient).

See Standard Sheet "MA-D" for pole details, "MA-C" for traffic signal arm connection details, "MA-C (ILSN)" for internally lighted street name sign arm connection details, "LUM-A" for luminaire arm and connection details, "SNS" for internally lighted street name sign details, and "TS-FD" for anchor bolt and foundation details. See "MA-C" for material specifications.

Fabrication shall be in accordance with Item 686, "Traffic Signal Pole Assemblies (Steel)" and with the details, dimensions, and weld procedures shown herein. Weld references call for preapproved weld procedures which the Fabricator must obtain prior to fabrication. Materials, fabrication tolerances, and shipping practices shall meet the requirements of this sheet and Item 686, "Traffic Signal Pole Assemblies (Steel)".

Unless otherwise noted, all parts shall be galvanized in accordance with Item 445, "Galvanizing", after fabrication.

Deviation from the details and dimensions shown herein require submission of shop drawings in accordance with Item 441, "Steel Structures". Alternate designs are not acceptable.

Texas Department of Transportation
Traffic Operations Division

TRAFFIC SIGNAL SUPPORT STRUCTURES

SINGLE MAST ARM ASSEMBLY

(80 MPH WIND ZONE)

SMA-80(2)-12

© TxDOT August 1995

DN: MS	CK: JSY	DW: MWF	CK: JSY

REVISIONS
5-96
1-12

CONT	SECT	JOB	HIGHWAY
2103	01	034	

DIST	COUNTY	SHEET NO.
AUS	WILLIAMSON	187

122B

DATE: 3/22/2018 3:38:05 PM
FILE: c:\pworking\dal\d0910663\SWB-S2-SGNL11.dgn

DISCLAIMER: The use of this standard is governed by the "Texas Engineering Practice Act". No warranty of any kind is made by TxDOT for any purpose whatsoever. TxDOT assumes no responsibility for the conversion of this standard to other formats or for incorrect results or damages resulting from its use.

ARM SIZE D_1 in.	ARM SIZE ℄ in.	A in.	B in.	C in.	D in.	E in.	CONN BOLT DIA in.
6.5	.179	12	9	9	6	1 ¾	1
7.5	.179	13	9	10	6	1 ¾	1
8.0	.179	14	10	11	7	2	1 ¼
9.0	.179	16	11	13	8	2	1 ¼
9.5	.179	17	12	14	9	2	1 ¼
9.5	.239	18	12	15	9	2	1 ¼
10.0	.239	18	12	15	9	2	1 ¼
10.5	.239	18	13	15	10	3	1 ½
11.0	.239	18	13	15	10	3	1 ½

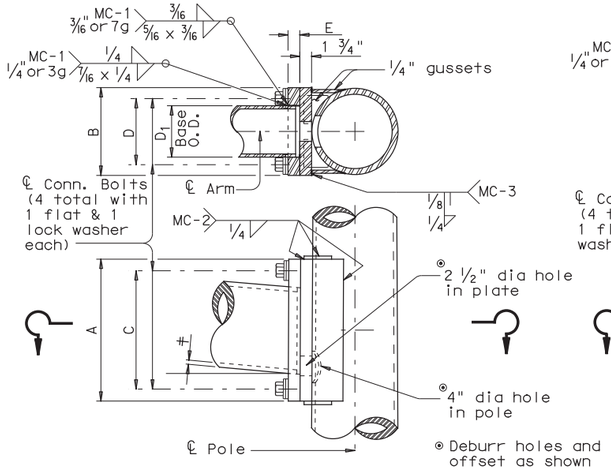

FIXED MOUNT DETAIL 1

ARM SIZE D_1 in.	ARM SIZE ℄ in.	A in.	F in.	CONN. BOLTS No. ea.	CONN. BOLTS Dia in.	PIN BOLTS No. ea.	PIN BOLTS Dia in.
6.5	.179	12	6	4	1	2	5/8
7.5	.179	14	8	4	1	2	5/8
8.0	.179	14	8	4	1	2	5/8
9.0	.179	16	10	4	1	2	5/8
9.5	.179	18	12	4	1 ¼	3	5/8
9.5	.239	18	12	4	1 ¼	3	5/8
10.0	.239	18	12	4	1 ¼	3	5/8

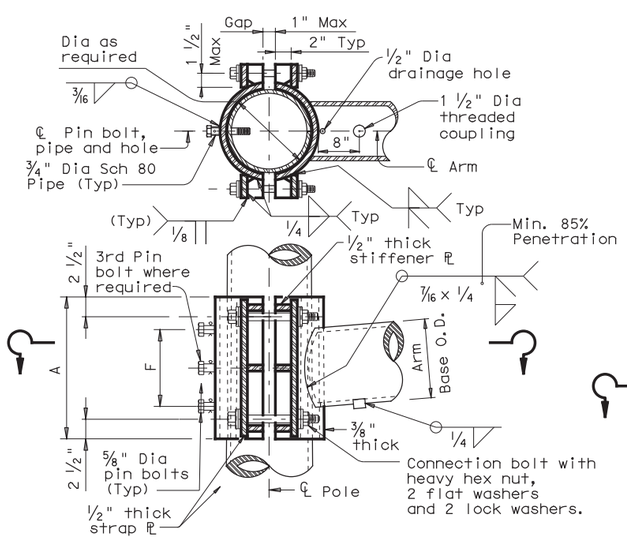

CLAMP-ON DETAIL 1

ARM SIZE D_1 in.	ARM SIZE ℄ in.	A in.	F in.	T in.	CONN. BOLTS No. ea.	CONN. BOLTS Dia in.	PIN BOLTS No. ea.	PIN BOLTS Dia in.
7.0	.179	12	6	¾	4	¾	2	5/8
7.5	.179	14	8	¾	4	¾	2	5/8
8.0	.179	14	8	¾	4	¾	2	5/8
9.0	.179	16	10	⅞	4	1	2	5/8
10.0	.179	18	10	⅞	4	1	2	5/8
9.5	.239	18	10	1	6	1	3	5/8
10.0	.239	18	10	1	6	1	3	5/8

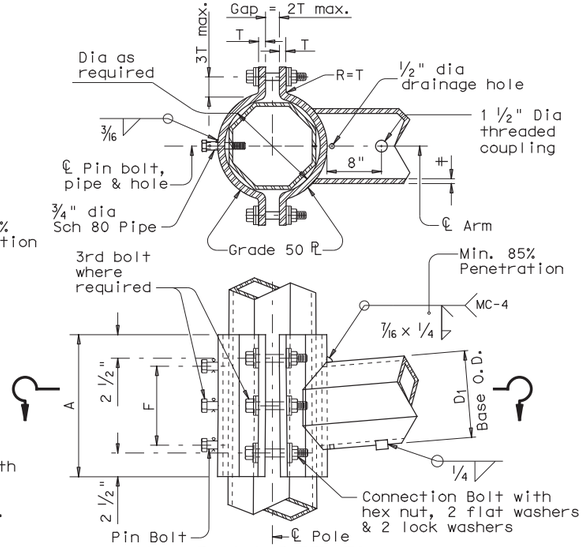

CLAMP-ON DETAIL 2

ARM SIZE D_1 in.	ARM SIZE ℄ in.	A in.	F in.	CONN. BOLTS No. ea.	CONN. BOLTS Dia in.	PIN BOLTS No. ea.	PIN BOLTS Dia in.
6.5	.179	12	6	4	1	2	5/8
7.5	.179	14	8	4	1	2	5/8
8.0	.179	14	8	4	1	2	5/8
9.0	.179	16	10	4	1	2	5/8
9.5	.179	18	12	6	1	3	5/8
9.5	.239	18	12	6	1	3	5/8
10.0	.239	18	12	6	1	3	5/8

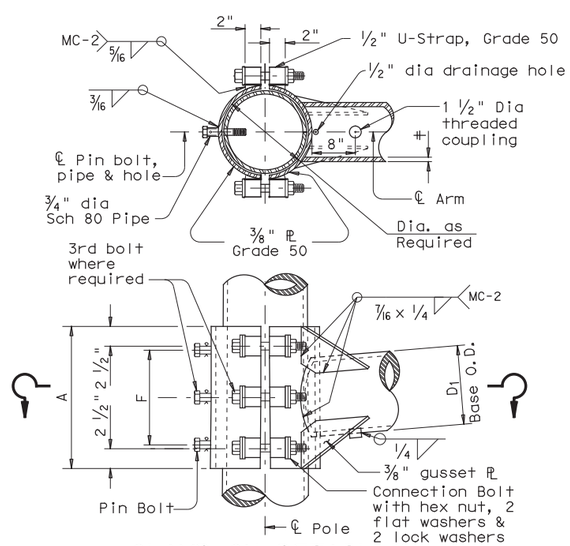

CLAMP-ON DETAIL 3

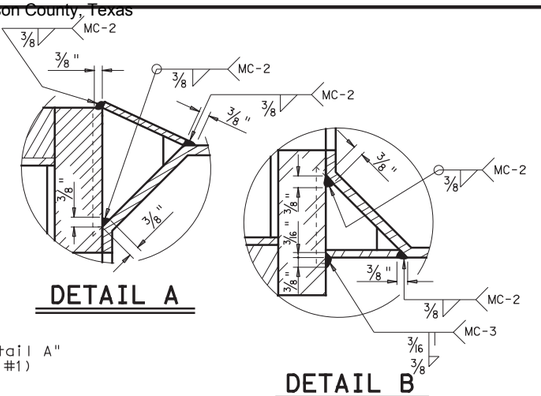

DETAIL A

DETAIL B

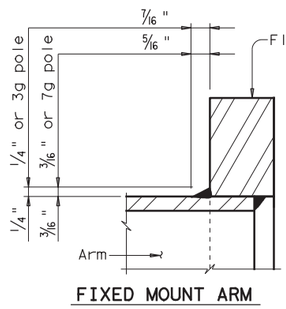

FIXED MOUNT ARM

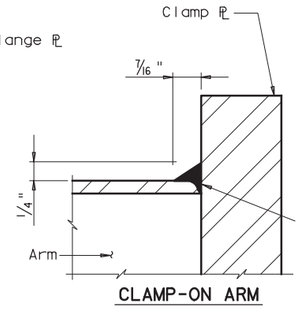

CLAMP-ON ARM

ARM BASE WELD DETAILS

ARM SIZE D_1 in.	ARM SIZE ℄ in.	A in.	F in.	CONN. BOLTS No. ea.	CONN. BOLTS Dia in.	PIN BOLTS No. ea.	PIN BOLTS Dia in.
6.5	.179	12	6	4	1	2	5/8
7.5	.179	14	8	4	1	2	5/8
8.0	.179	14	8	4	1	2	5/8
9.0	.179	16	10	4	1	2	5/8
9.5	.179	18	12	6	1	3	5/8
9.5	.239	18	12	6	1	3	5/8
10.0	.239	18	12	6	1	3	5/8

MATERIALS	
Round Shafts or Polygonal Shafts ①	ASTM A595 Gr.A, A588, A1008 HSLAS Gr.50 Class 2, A1011 HSLAS Gr.50 Class 2, A572 Gr.50 or A1011 SS Gr.50 ②
Plates ①	ASTM A36, A588, or A572 Gr.50
Connection Bolts	ASTM A325 or A449, except where noted
Pin Bolts	ASTM A325
Pipe ①	ASTM A53 Gr.B, A501, A1008 HSLAS-F Gr.50, A1011 HSLAS-F Gr.50
Misc. Hardware	Galvanized steel or stainless steel or as noted

① ASTM A572, A1008 HSLAS, A1011 HSLAS, A1008 HSLAS-F, A1011 HSLAS-F or A1011 SS may have higher yield strengths but shall not have less elongation than the grade indicated.

② ASTM A1011 SS Gr.50 material shall also have a minimum elongation of 18 percent in 8 inches or 23 percent in 2 inches. Material thickness in excess of those stipulated under A1011 SS will be acceptable providing the material meets all other A1011 SS requirements and the requirements of this item.

GENERAL NOTES:

Clamp-on details are used for the second arm on dual mast arm assemblies. A Maximum 1 ½" wide vertical slotted hole shall be cut in the front clamp plate to facilitate drainage during galvanizing. The slot shall be centered behind the arm and shall be no longer than the arm diameter minus 1"

Fixed mount details are used for single mast arm assemblies and for the first arm on dual mast arm assemblies.

Where duplicate parts occur on a detail, welds shown for one part shall apply to all similar parts on the detail.

Pin bolts are required to prevent rotation of clamp-on arms under design wind forces.

NOTE:

Pin bolts shall be A325 with threads excluded from the shear plane. Pin bolt and ¾" dia pipe shall have 5/16" dia holes for a 1/8" dia galvanized cotter pin. Back clamp plate shall be furnished with a ¾" dia hole for each pin bolt. An 11/16" dia hole for each pin bolt shall be field drilled through the pole after arm orientations have been approved by the Engineer.

Texas Department of Transportation
Traffic Operations Division

STANDARD ASSEMBLY FOR TRAFFIC SIGNAL SUPPORT STRUCTURES

MAST ARM CONNECTIONS

MA-C-12

© TxDOT August 1995

REVISIONS	DN: MS	CK: JSY	DW: MMF	CK: JSY
5-96	CONT	SECT	JOB	HIGHWAY
5-09	2103	01	034	
1-12	DIST	COUNTY		SHEET NO.
	AUS	WILLIAMSON		188

126A

DATE: 3/22/2018 3:38:15 PM
FILE: c:\pwworking\dal\d0918769\mac.dgn

DISCLAIMER: The use of this standard is governed by the "Texas Engineering Practice Act". No warranty of any kind is made by TxDOT for any purpose whatsoever. TxDOT assumes no responsibility for the conversion of this standard to other formats or for incorrect results or damages resulting from its use.

TABLE OF DIMENSIONS for ILSN Support Arm Clamp-on Details 1, 2 and 3						
ILSN ARM SIZE	A	F	CONN. BOLTS		PIN BOLTS	
			No.	Dia	No.	Dia
	in.	in.	ea.	in.	ea.	in.
3 in. dia Schedule 40 Pipe	10	4	4	¾	2	⅝

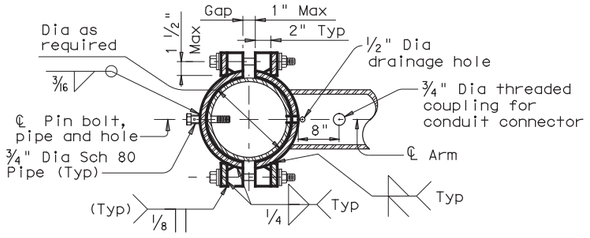

SECTION A-A

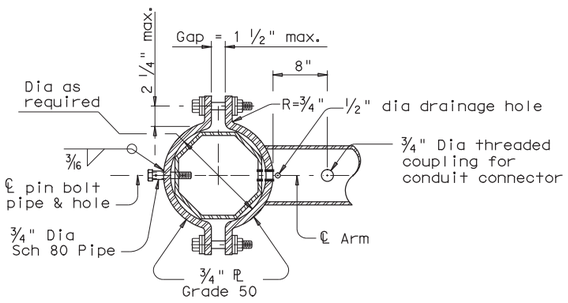

SECTION B-B

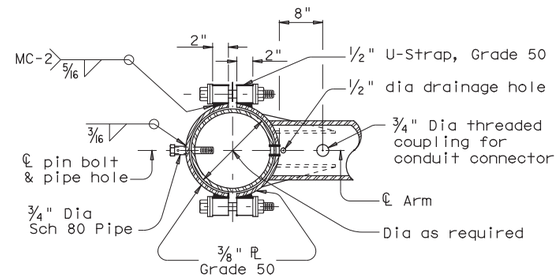

SECTION C-C

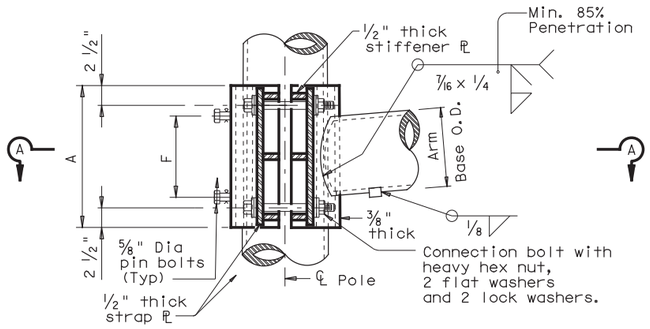

ILSN CLAMP-ON DETAIL 1

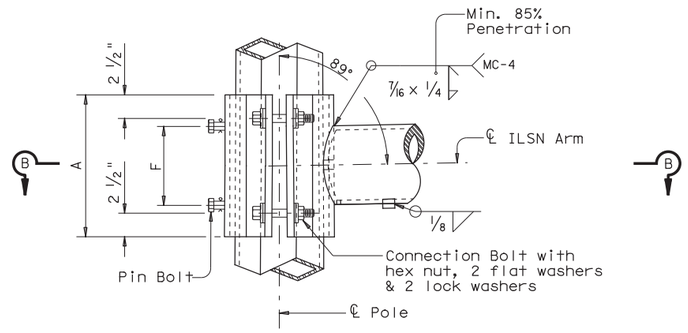

ILSN CLAMP-ON DETAIL 2

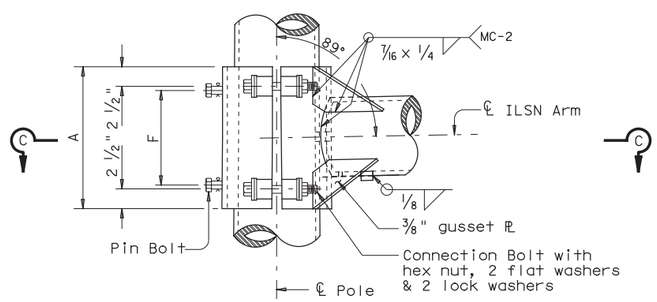

ILSN CLAMP-ON DETAIL 3

GENERAL NOTES:

Clamp-on details shall be used for ILSN support arm assemblies. A 1 ½" inch diameter hole shall be cut in the front clamp plate for wiring access. A matched hole shall be field drilled through the pole to provide wire access after arm is oriented. Deburr both holes.

Where duplicate parts occur on a detail, welds shown for one part shall apply to all similar parts on the details.

Pin bolts are required to prevent rotation of clamp-on arms under design wind forces.

NOTE:

Pin bolts shall be A325 with threads excluded from the shear plane. Pin bolt and ¾" dia pipe shall have 9/16" dia holes for a ⅛" dia galvanized cotter pin. Back clamp plate shall be furnished with a ¾" dia hole for each pin bolt. An 11/16" dia hole for each pin bolt shall be field drilled through the pole after arm orientations have been approved by the Engineer.

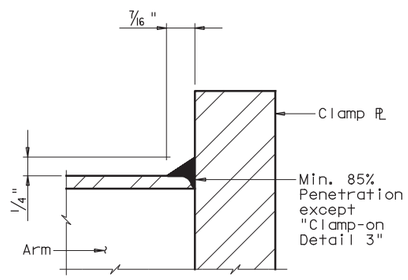

CLAMP-ON ARM

ARM BASE WELD DETAILS

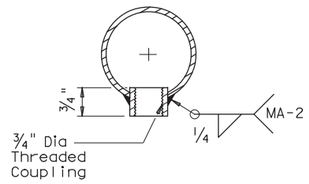

ILSN ARM COUPLING DETAIL

Texas Department of Transportation
Traffic Operations Division

STANDARD ASSEMBLY FOR TRAFFIC SIGNAL SUPPORT STRUCTURES

MAST-ARM CONNECTIONS

MA-C(ILSN)-12

© TxDOT August 1995

DN: MS	CK: JSY	DW: MMF	CK: JSY
REVISIONS	CONT	SECT	JOB	HIGHWAY
5-96 1-12	2103	01	034	
	DIST	COUNTY		SHEET NO.
	AUS	WILLIAMSON		189

126B

DISCLAIMER: The use of this standard is governed by the "Texas Engineering Practice Act". No warranty of any kind is made by TxDOT for any purpose whatsoever. TxDOT assumes no responsibility for the conversion of this standard to other formats or for incorrect results or damages resulting from its use.

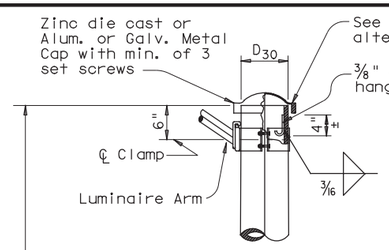

DETAIL A

(for pole with luminaire)

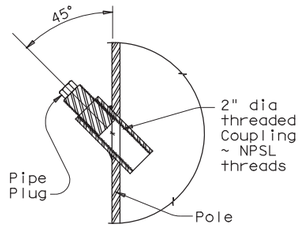

POLE COUPLING DETAIL

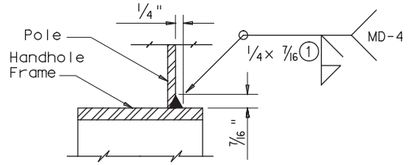

DETAIL G

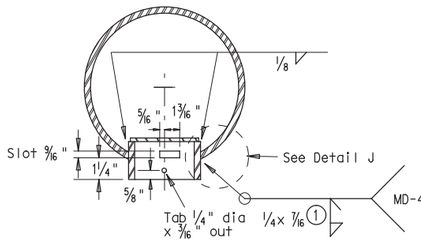

SECTION X-X

Opening for access compartment shall be no more than 1/16 inch wider than the access compartment itself.

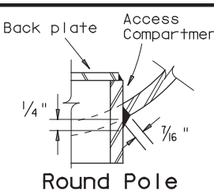

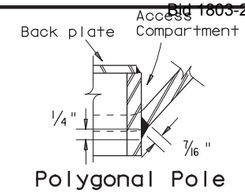

DETAIL J

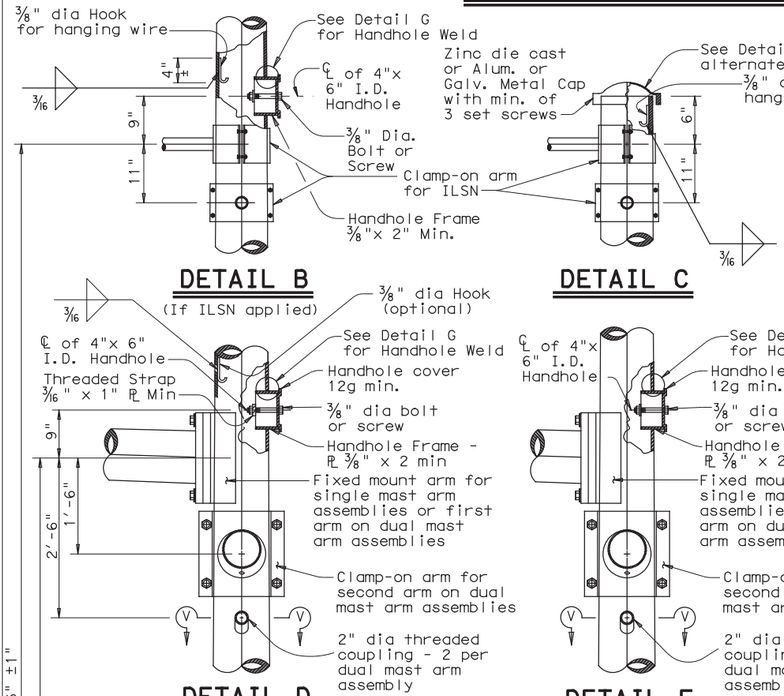

DETAIL B

(If ILSN applied)

DETAIL C

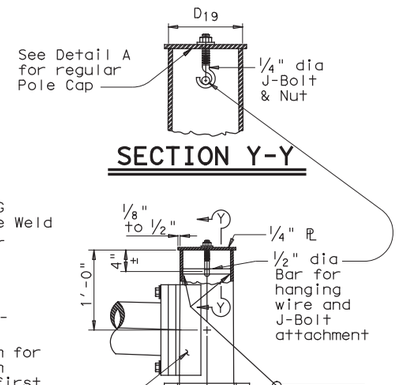

SECTION Y-Y

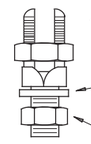

COPPER GROUND CONNECTOR

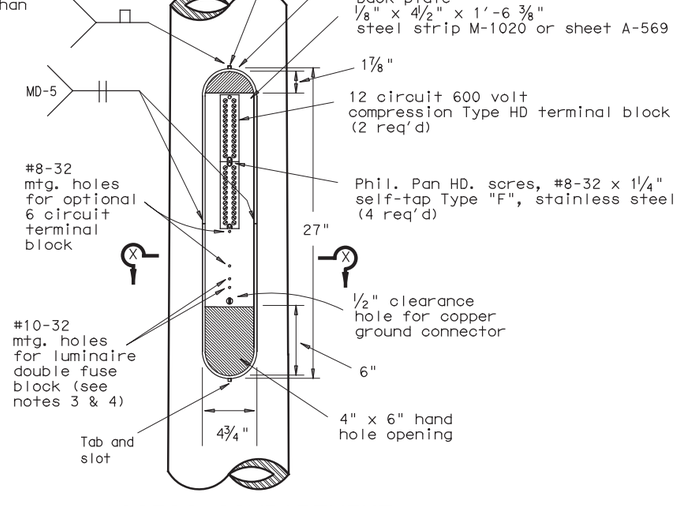

ACCESS COMPARTMENT

DETAIL D

(for 30' pole with luminaire and ILSN sign)

DETAIL E

(for 24' pole with ILSN sign and no luminaire)

DETAIL F

(for 19' pole with no ILSN sign and no luminaire)

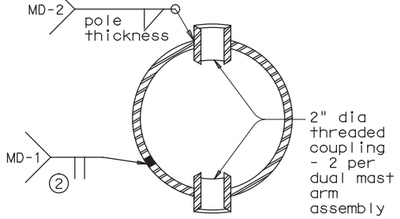

SECTION V-V

Anchor Bolt Diameter	Bolt Hole Diameter	Slot Length	Bolt Circle Diameter	Base ℞ Dim. L x T	Adjust. Range
1 1/2"	1 3/4"	3 1/2"	17"	18" x 1 1/2"	13.4°
1 3/4"	2"	4"	19"	20" x 1 3/4"	13.5°
2"	2 1/4"	4 1/2"	21"	22" x 2"	13.6°
2 1/4"	2 1/2"	5"	23"	24" x 2 1/4"	13.7°

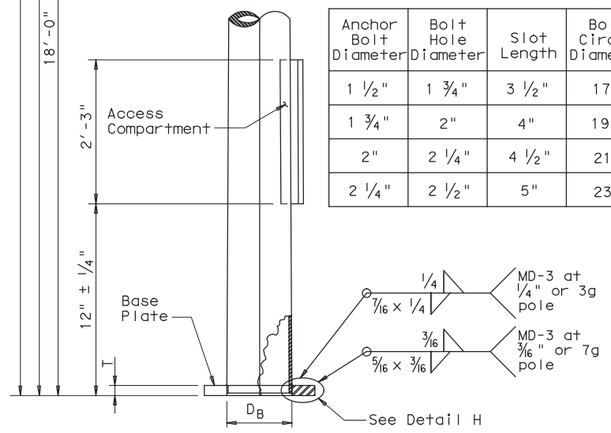

POLE ELEVATION

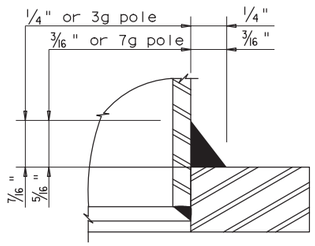

DETAIL H

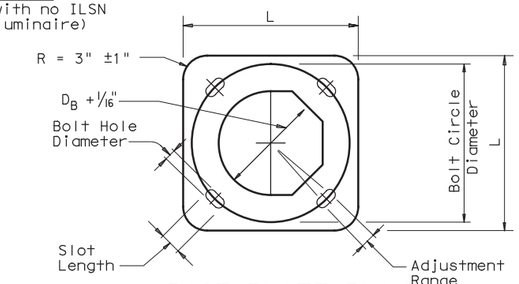

BASE PLATE PLAN

(1) 85% Min. penetration

(2) 60% Min. penetration 100% pemetration within 6" of circumferential base welds.

NOTES:

1. The cover shall be one piece formed from ABS plastic, shall be a pearl gray color, and shall be suitable for exposure to harsh sunlight and extreme weather. Cover shall latch with two screw latches and shall fit tightly to the enclosure ring to create a rainproof seal. Latch screws shall be 1/4-20 stainless flat socket head screws with tamper proof feature.
2. The pole manufacturer shall provide with each pole a separate kit consisting of: one cover with two latching assemblies, two terminal strips (Marathon #985GP12CU or approved equal), four #8-32 x 1 1/4" self tapping type "F" stainless steel pan head screws, and one ground connector (Blackburn TTC, Burndy KC22J12T13, or Ilsco SSS-5). The traffic signal contractor shall install the kit items in the field.
3. The screw hole spacing on the enclosure back plate shall be for two Marathon #985GP12 terminal strips, one Marathon #985GP06CU terminal strip, and one Bussmann #BM6032B fuse block.
4. Install one Bussmann #BM6032B, Littelfuse #L60030M-2C, or Ferraz-Shawmut #30352 fuse block for poles where luminaires are to be installed.

Texas Department of Transportation
Traffic Operations Division

TRAFFIC SIGNAL SUPPORT STRUCTURES MAST ARM POLE DETAILS

MA-D-12

© TxDOT August 1995

DN: MS	CK: JSY	DW: FDN	CK: CAL

REVISIONS
8-99
1-12

CONT	SECT	JOB	HIGHWAY
2103	01	034	

DIST	COUNTY	SHEET NO.
AUS	WILLIAMSON	190

DATE: 3/22/2018 3:38:41 PM
FILE: c:\pwworking\dal\d0918769\mad.dgn

4/12/2018 7:20 AM

DISCLAIMER: The use of this standard is governed by the "Texas Engineering Practice Act". No warranty of any kind is made by TxDOT for any purpose whatsoever. TxDOT assumes no responsibility for the conversion of this standard to other formats or for incorrect results or damages resulting from its use.

DATE: 3/22/2018 3:38:54 PM
FILE: c:\pwworking\dal\d0918769\lum-a.dgn

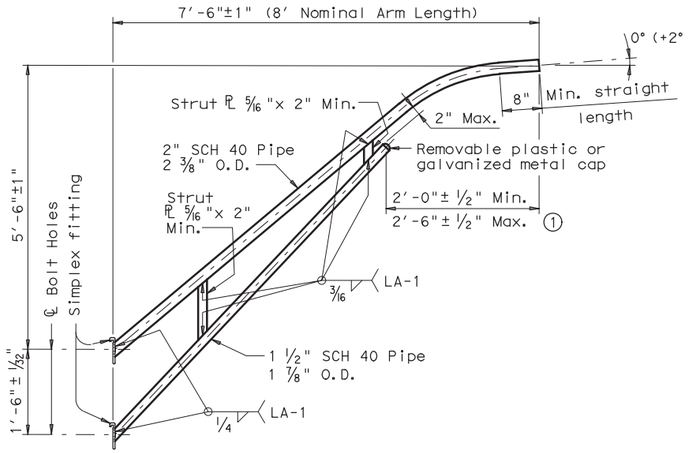

8-FOOT LUMINAIRE ARM

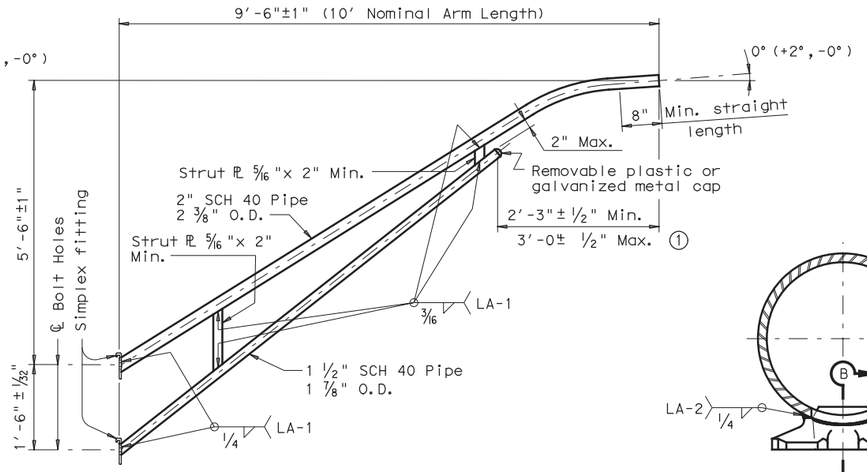

10-FOOT LUMINAIRE ARM

DIRECT ATTACHMENT DETAIL

MATERIALS	
Pole or Arm Simplex	ASTM A27 Gr.65-35 or A148 Gr.80-50, A576 Gr.1021 (3), or A36 (Arm only)
Arm Pipes	ASTM A53 Gr.B, A501, A1008 HSLAS-F Gr.50 (4), or A1011 HSLAS-F Gr.50 (4)
Arm Strut Plates (2)	ASTM A36, A572 Gr.50 (4), or A588
Misc.	ASTM designations as noted

(1) Dimensional limits are given to show acceptable variation in design. All of a Fabricator's production of a particular arm length shall have the same dimensions within specified tolerances.

(2) Any of the materials listed for plates may be used where the drawings do not specify a particular ASTM designation.

(3) A576 must be suitable for forging and also meet minimum tensile strength of 65 ksi, minimum yield of 35 ksi, and elongation in 2 inches of 22 percent.

(4) ASTM A572, A1008 HSLAS-F, and A1011 HSLAS-F may have higher yield strengths but shall not have less elongation than the grade indicated.

GENERAL NOTES:

Design conforms to 1994 AASHTO Standard Specifications for Structural Supports for Highway Signs, Luminaires, and Traffic Signals and Interim Revisions thereto. Design Wind Speed equals 90 mph plus a 1.3 gust factor. Arms are designed to support a 60 lb. luminaire having an effective projected area (actual area times drag coefficient) of 1.6 sq. ft.

Materials and fabrication shall be in accordance with Item 686, "Traffic Signal Pole Assemblies (Steel)" and with the details, dimensions, and weld procedures shown herein. Weld references call for preapproved weld procedures which the Fabricator must obtain prior to fabrication. In the absense of specified Fabricaton tolerances, dimensions shall be within the tolerances generally obtainable in normal fabrication practice.

Unless otherwise noted, all parts shall be galvanized after fabrication in accordance with Item 445, "Galvanizing".

Deviation from the details and dimensions shown herein require submission of shop drawings in accordance with Item 441, "Steel Structures". Alternate designs are not acceptable.

Each pole simplex fitting shall be supplied with 2 ASTM A325 bolts and 2 lock washers of the size specified. The bolts and lock washers shall be secured to the pole with the other hardware items called for in the plans. When clamp attachment is specified, the Fabricator shall ship the clamp assembly securely attached to the pole at the location shown on the plans.

If clamp assemblies are ordered without poles, the Fabricator shall ship one upper and one lower clamp assembly together in a single package, including all nuts and washers required for the clamps and simplex fittings.

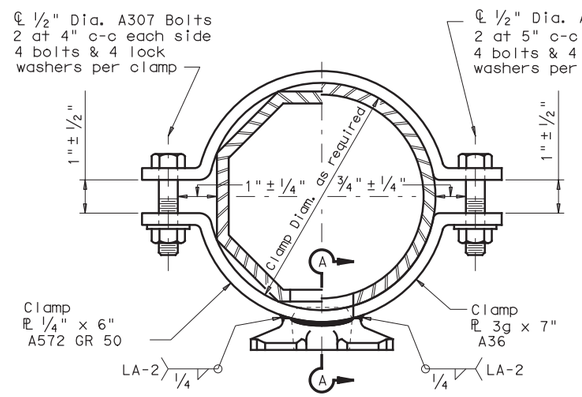

CLAMP ATTACHMENT DETAIL NO. 1 (HALF SECTION)

CLAMP ATTACHMENT DETAIL NO. 2 (HALF SECTION)

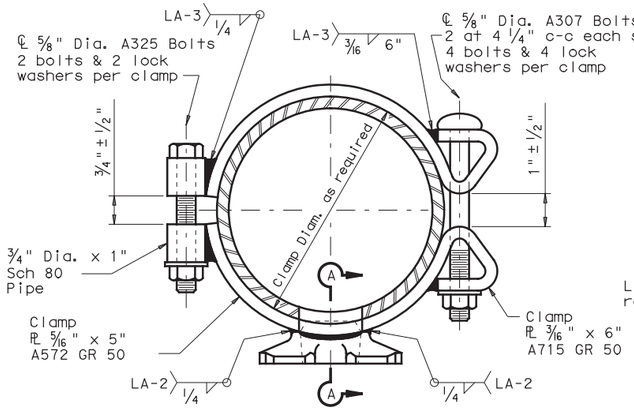

CLAMP ATTACHMENT DETAIL NO. 3 (HALF SECTION)

CLAMP ATTACHMENT DETAIL NO. 4 (HALF SECTION)

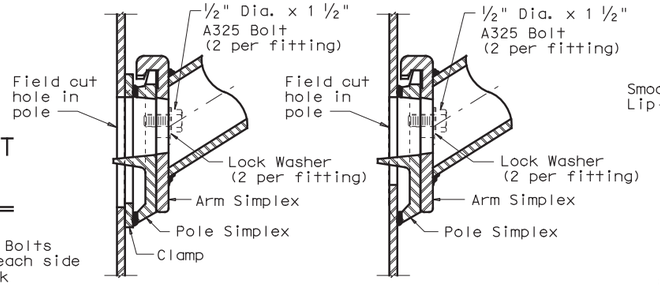

UPPER SIMPLEX FITTING

UPPER SIMPLEX FITTING

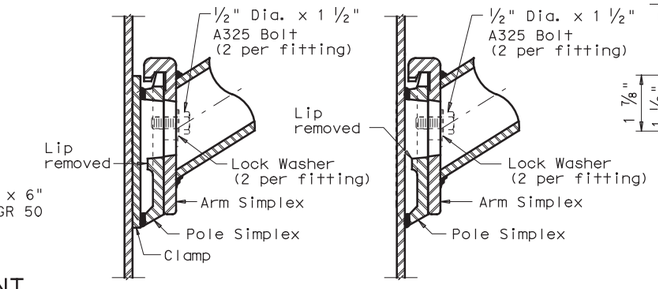

LOWER SIMPLEX FITTING

LOWER SIMPLEX FITTING

SECTON A-A

SECTON B-B

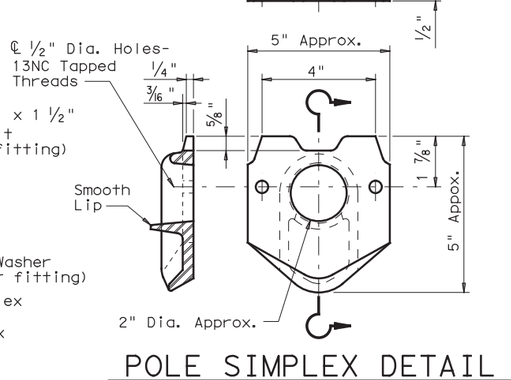

POLE SIMPLEX DETAIL

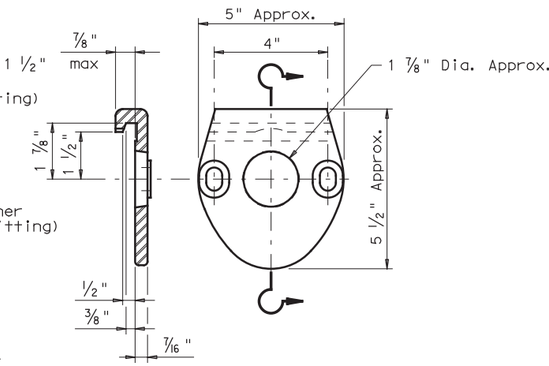

ARM SIMPLEX DETAIL

Texas Department of Transportation
Traffic Operations Division

STANDARD ASSEMBLY DRAWINGS FOR LUMINAIRE SUPPORT STRUCTURES

ARM DETAILS

LUM-A-12

© TxDOT August 1995

DN: LEH	CK: JSY	DW: LTT	CK: TEB

REVISIONS: 5-96, 1-99, 1-12

CONT	SECT	JOB	HIGHWAY
2103	01	034	

DIST	COUNTY	SHEET NO.
AUS	WILLIAMSON	191

DISCLAIMER:
The use of this standard is governed by the "Texas Engineering Practice Act". No warranty of any kind is made by TxDOT for any purpose whatsoever. TxDOT assumes no responsibility for the conversion of this standard to other formats or for incorrect results or damages resulting from its use.

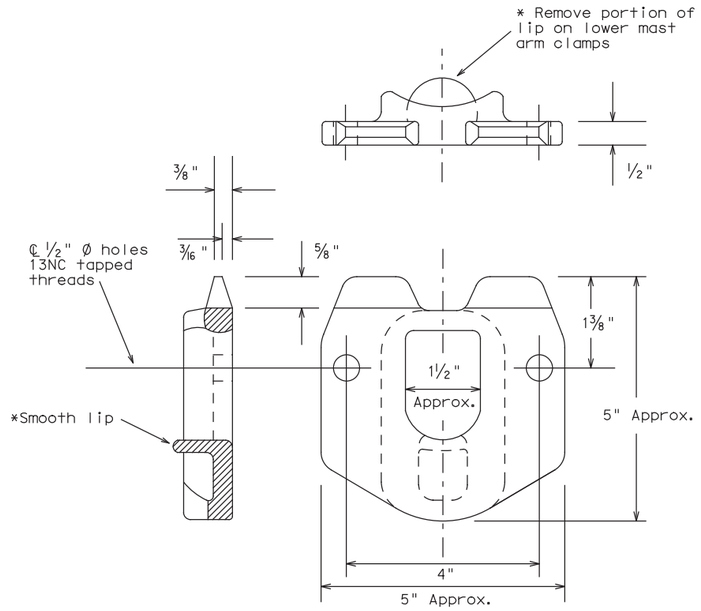

POLE SIMPLEX DETAILS

OTHER MATERIALS:

1. Pole simplex shall be ASTM A27 GR65-35 or A148 GR80-50 or A576 GR1021. ASTM A576 must be suitable for forging and also meet minimum tensile of 65ksi, minimum yield of 35ksi, and a minimum elongation of 22 percent in 2 inches.
2. Welded tabs and backplates shall be ASTM A-36 steel or better.
3. Nylon insert locknuts shall conform to ASTM A563.

GENERAL NOTES:

1. Materials and fabrication shall be in accordance with Standard Sheet "MA-C" and with the details, dimensions, and weld procedures shown herein. Weld references call for preapproved weld procedures which the Fabricator must obtain prior to fabrication. In the absence of specified fabrication tolerances, dimensions shall be within the tolerances generally obtainable in normal fabrication practice.
2. All parts shall be galvanized after fabrication in accordance with Item 445, "Galvanizing". The throat of the Simplex shall be made free of all rough or sharp edges resulting from the galvanizing process.
3. Each simplex fitting shall be supplied with 2 ASTM A325 bolts, ½in. X 1½in. and 2 lock washers. The bolts and lock washers shall be secured to the clamp with the other hardware items. The Fabricator shall ship clamp assembly together in a single package, including all bolts, nuts, and washers required for the clamp and simplex fitting.
4. Design conforms to 1994 AASHTO "Standard Specifications for Structural Supports for Highway Signs, Luminaires, and Traffic Signals" and interim revisions thereto. Design Wind Speed equals 80 mph plus a 1.3 gust factor. Clamps are designed to support a 60 lb. luminaire having an effective projected area (actual area times drag coefficient) of 1.6 sq.ft.,12 ft. maximum arm length.
5. Each assembly shall consist of one upper piece simplex fitting having a smooth lip and one lower piece simplex fitting with the lip removed.
6. Approximately 2 in. diameter hole in upper mast arm clamp.

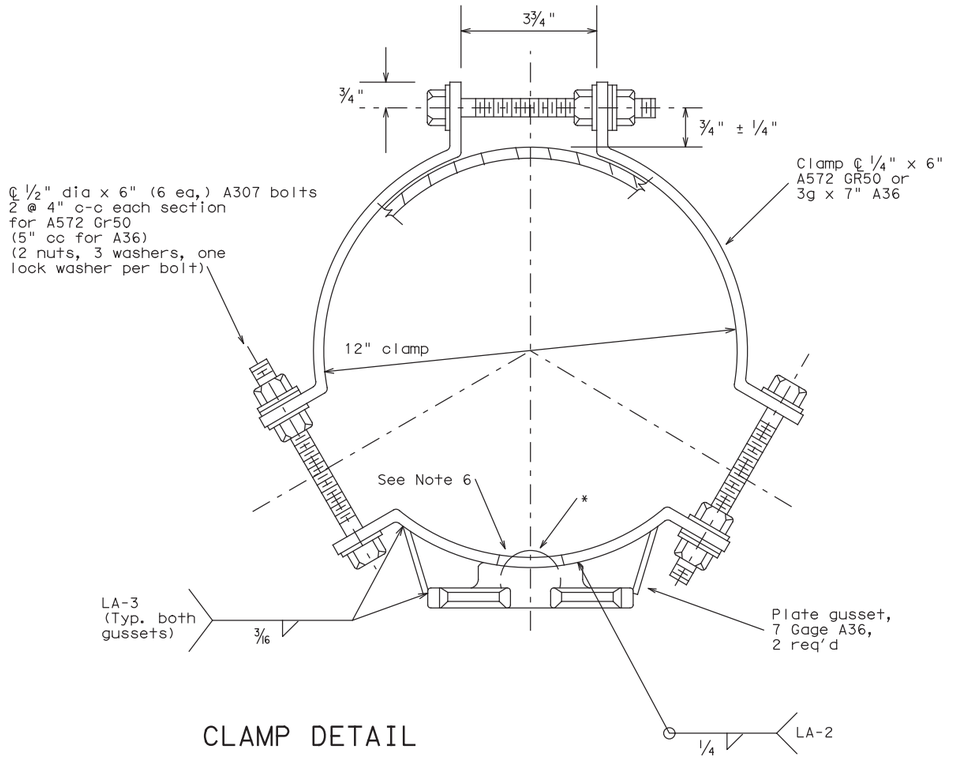

CLAMP DETAIL

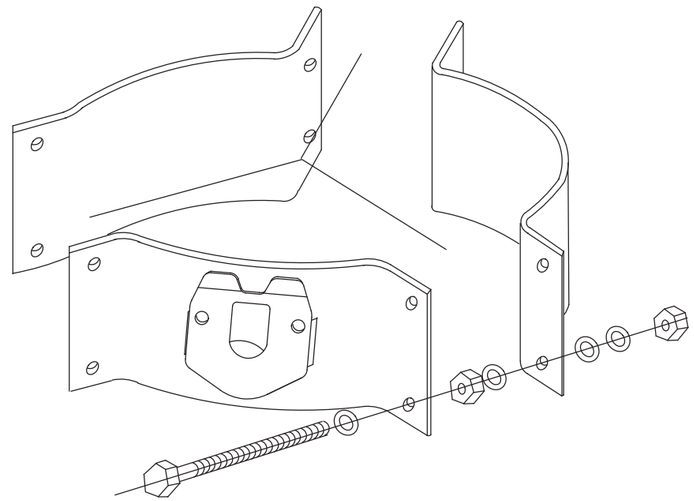

PROJECTION

For 8.9 - 12 inch diameter Signal Poles
(Two req'd for each mast arm)

Texas Department of Transportation
Traffic Operations Division

CLAMP ON FITTING ASSEMBLY FOR LUMINAIRE MAST ARM

CFA-12

©TxDOT	DN: KAB	CK: RES	DW: FDN	CK: CAL
REVISIONS	CONT	SECT	JOB	HIGHWAY
11-99	2103	01	034	
1-12	DIST	COUNTY		SHEET NO.
	AUS	WILLIAMSON		130

DATE: 3/22/2018 3:39:09 PM
FILE: c:\pwworking\dal\d0918769\cfa.dgn

DISCLAIMER:
The use of this standard is governed by the "Texas Engineering Practice Act". No warranty of any kind is made by TxDOT for any purpose whatsoever. TxDOT assumes no responsibility for the conversion of this standard to other formats or for incorrect results or damages resulting from its use.

TOP VIEW
(Slab & Base)

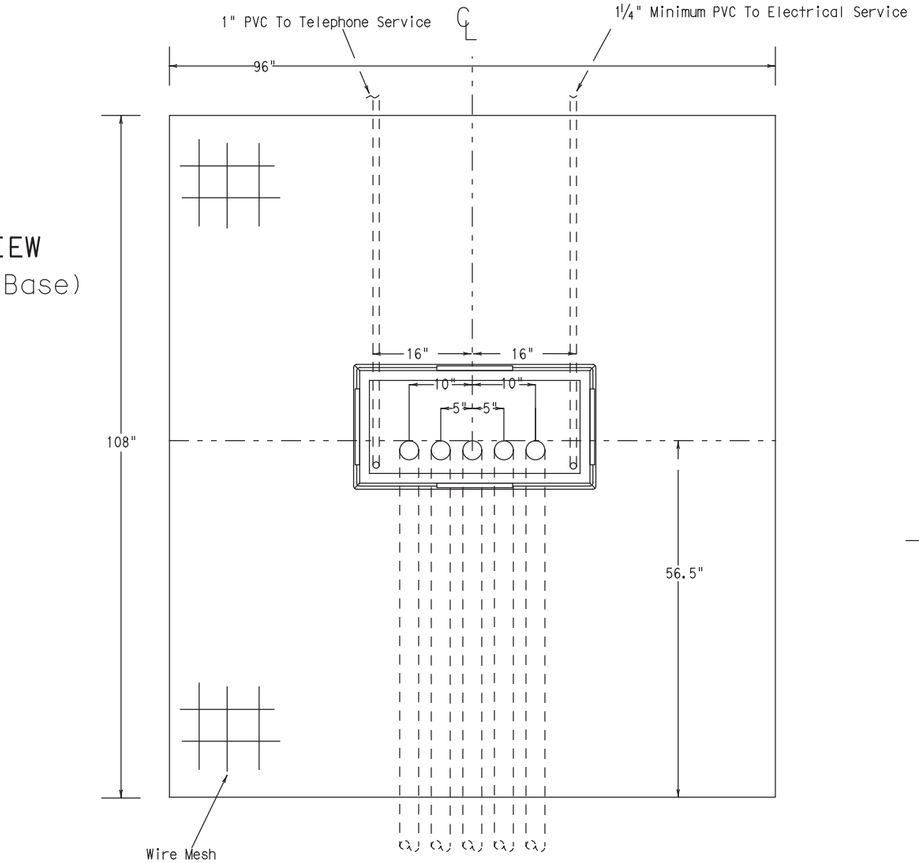

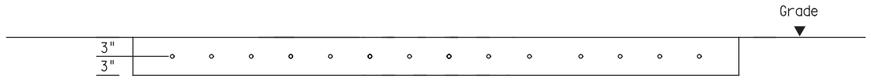

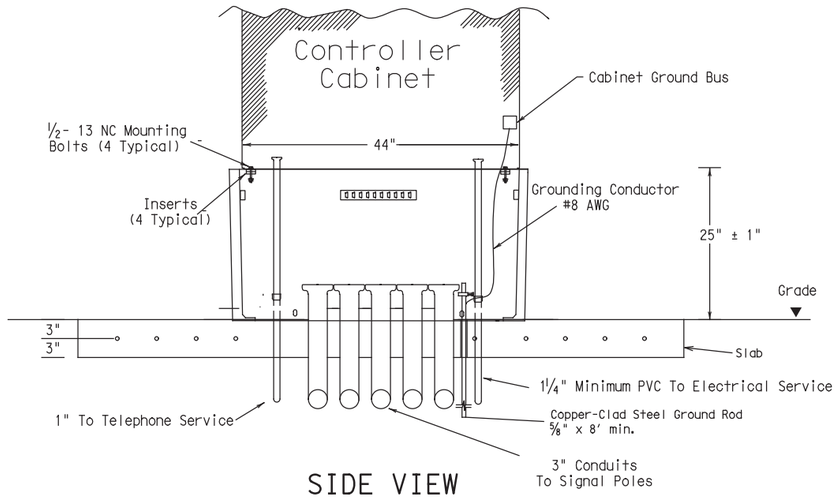

SIDE VIEW
(Slab & Base)

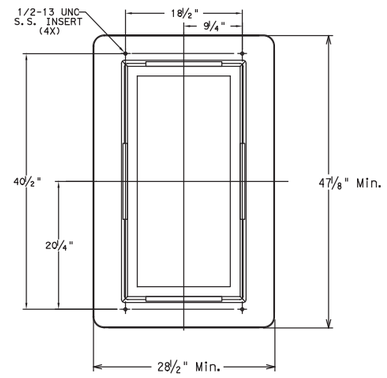

CABINET BASE

TRAFFIC SIGNAL CONTROLLER BASE:

1. Provide a traffic signal controller base (cabinet base) manufactured of polymer concrete material consisting of calcareous and siliceous stone; glass fibers and thermoset polyester resin. The polymer concrete cabinet base must be reinforced on the inside of the cabinet base with fiberglass matting. Provide one of the following bases: Armorcast Part # A6001848X24, Quazite Model # PG3048Z709, or other as approved by TxDOT Traffic Operation Division.
2. The polymer concrete material must have a minimum compressive strength of 10,300 pounds per square inch (psi), minimum flexural strength of 3600 psi, and minimum shear strength of 3600 psi.
3. The polymer concrete cabinet base must conform to the dimensions shown and must accommodate a standard TxDOT basemount cabinet.
4. Supply the cabinet base with four ½"-13 UNC stainless steel inserts for attachment of the cabinet to the base. Inserts must withstand a minimum torque of 50 ft-lb and a minimum straight pull out strength of 750 lbs.
5. Provide the cabinet base with 4 cable racks mounted one on each side of the base 2" to 7 " from the top edge of the base. Unless approved otherwise, cable racks must be 1-1/2 x ⅜ x ⅜ inch steel channel with eight T-slots spaced at 1-1/2 inches. The cable racks must easily accommodate the insertion of tie wraps to attach field wiring to the racks to serve as strain relief. Secure cable racks to the base using ½"-13 UNC stainless steel screws and inserts.
6. The cabinet base, when secured to the concrete slab with controller cabinet attached, must withstand a minimum wind load of 125 mph or a 850 lb force applied at 49" above the bottom of the base without causing the base or cabinet to come out of their anchored position or cause any permanent deformation. The manufacturer must supply certification by an independent testing laboratory or sealed by a Texas Licensed Professional Engineer. Provide the cabinet base with hardware for attachment to a concrete slab.
7. The traffic signal base must be permanently marked either by impress or by permanent ink with the manufacturer's model number and name or logo.
8. Seal the base to the concrete with a silicone caulk bead and fastened to the slab per manufacturer's instructions.

CONCRETE SLAB:

9. Traffic signal controller pad must be a portland cement concrete slab poured in place, must conform to the dimensions shown, and must be level.
10. Bond a #8 AWG copper ground wire and an 8 ft ground rod bonded to the reinforcing mesh by a suitable UL Listed clamp and terminated to the cabinet grounding bus for the purpose of providing a local ground for the electrical grounding conductor. The electrical grounding conductor specified in Item 680-3.A.4 is required and must be terminated to the cabinet ground bus.
11. Install a PVC sleeve to prevent the ground rod from direct embedment in the slab.
12. Provide welded wire mesh 6X6-W2.9 X W2.9 for reinforcement. Provide joints and splices in the mesh with a minimum 6-inch overlap. Center the mesh between top and bottom and provide a minimum 3 inch cover on the edges.
13. Provide Class B concrete minimum for the slab in accordance with Item 421. Construct the slab in accordance with Item 531.

CONDUITS:

14. Stub up and run 3-inch conduits through the slab to the various traffic signal poles and ground boxes as shown on the layouts. Install the number of conduits as shown on layouts plus two additional 3 inch conduits for future use. Terminate the conduits with a bushing between 2 and 4-inches above the slab.
15. Extend conduits for future use at least 18-inches from the edge of the slab, terminate underground with a coupling, and cap and seal so that the seal can be removed without damaging the coupling. This must also apply to unused telephone conduit.
16. Stub up two separate conduits through the slab from the electrical and telephone services. Run the conduit for the electrical feed directly to the electrical service enclosure. Run the conduit for the telephone line directly to the telephone service, usually located on the same pole as the electrical service. Telephone must not under any circumstance share a conduit with any other function.
17. Terminate electric and telephone conduits above the slab with a coupling. After the base is installed, extend the conduits above the top of the base and secure to the base using a steel one-hole strap or similar suitable substitute.

CONTROLLER CABINET:

18. Anchor the controller cabinet to the base using four stainless steel 1/2-13 NC bolts.
19. The silicone caulk bead specified in Item 680.3.B must be RTV 133.

PAYMENT:

20. Bid TS-CF as subsidiary to Item 680.

Texas Department of Transportation
Traffic Operations Division

TRAFFIC SIGNAL CONTROLLER CABINET BASE AND PAD

TS-CF-04

© TxDOT October 2000

DN: TXDOT	CK: TXDOT	DW: TXDOT	CK: TXDOT

12-04 REVISIONS

CONT	SECT	JOB	HIGHWAY
2103	01	034	

DIST	COUNTY	SHEET NO.
AUS	WILLIAMSON	193

DATE: 3/22/2018 3:39:21 PM
FILE: c:\pwworking\dal\d0918769\tscf04.dgn

DISCLAIMER: The use of this standard is governed by the "Texas Engineering Practice Act". No warranty of any kind is made by TxDOT for any purpose whatsoever. TxDOT assumes no responsibility for the conversion of this standard to other formats or for incorrect results or damages resulting from its use.

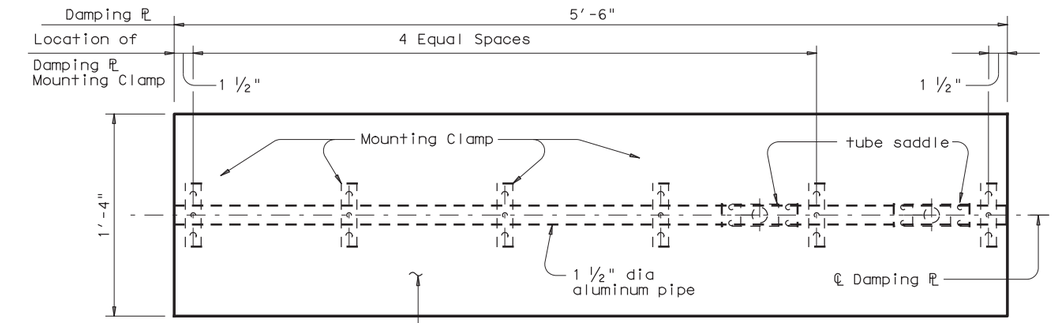

PLAN

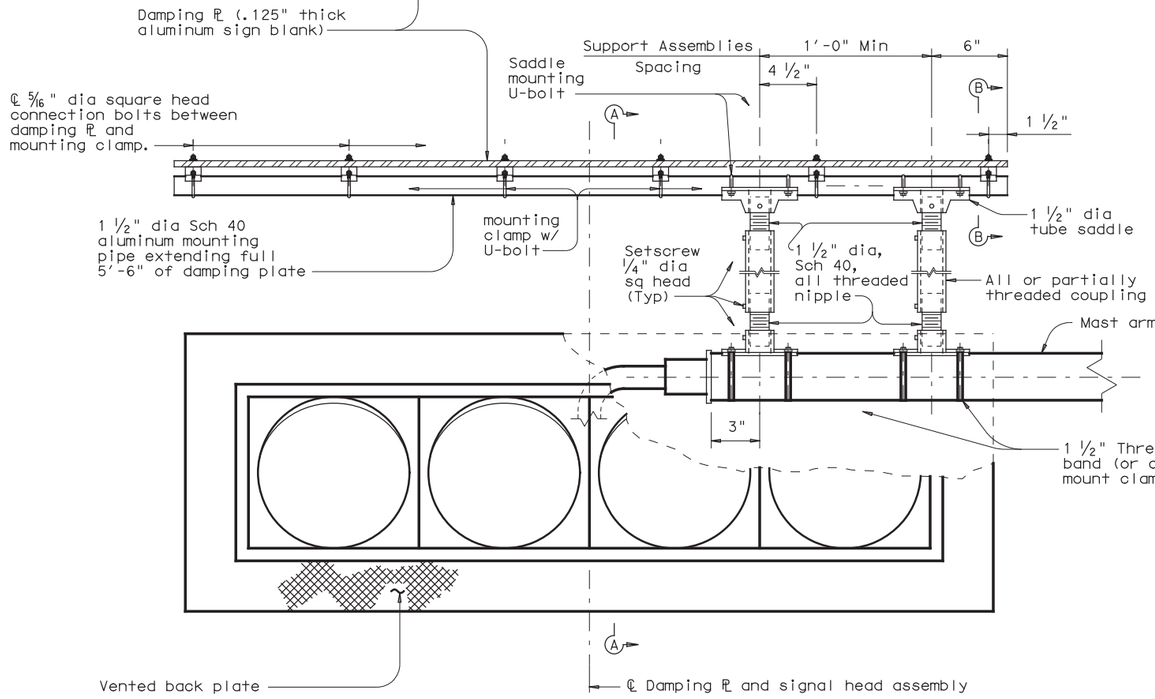

ELEVATION

DAMPING PLATE MOUNTING DETAILS

(Showing alternate placement of signal head)

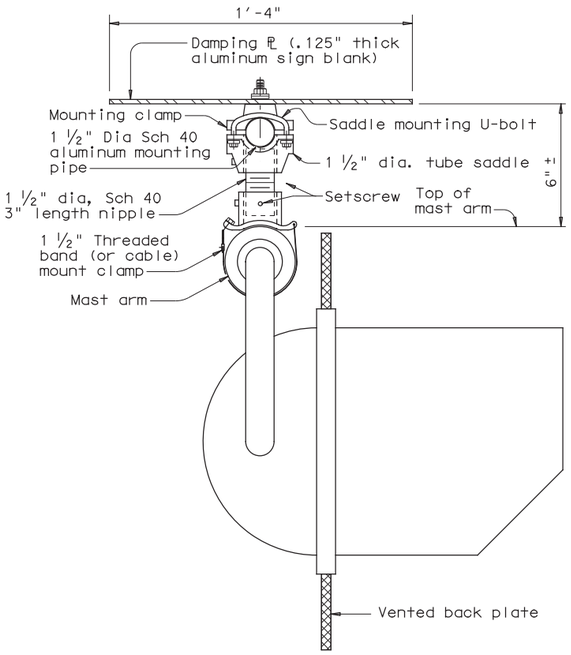

SECTION A-A

(Showing standard placement of signal head)
(Mounting clamp U-bolt is not shown for clarity)

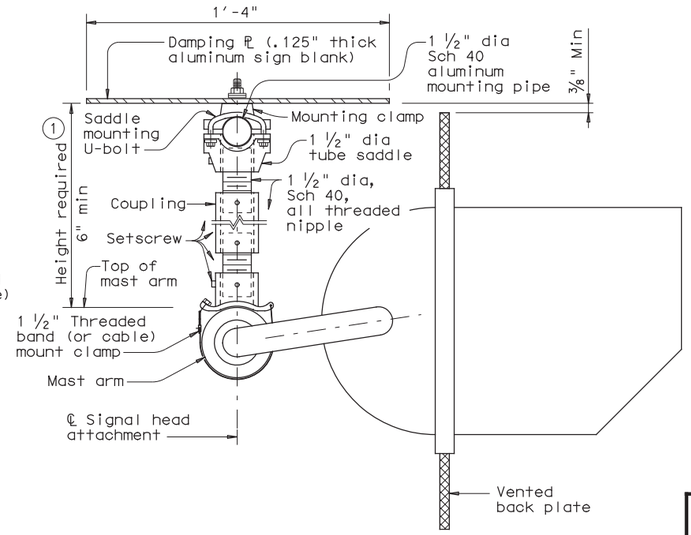

SECTION A-A

(Showing alternate placement of signal head)
(Mounting clamp U-bolt is not shown for clarity)

1 Recommended supporting assemblies to achieve required height			
Height required	One nipple each length	Two nipples each length plus	One coupling each length
6"-6 ¾"	3"	-	-
7"-8 ½"	4"	-	-
9"-10 ½"	6"	-	-
11"-15 ½"	-	4"	5"
16"-24"	-	6"	10"

GENERAL NOTES:

In accordance with the findings of TxDOT sponsored research, the installation of a damping plate in accordance with the details shown here at the end of signal mast arms of SMA and DMA standard structures reduces excessive harmonic vertical vibration, and thus fatigue damage. Any deviation from these details may reduce the effectiveness of this damping device.

Aluminum sign blank for damping plate shall conform to Departmental Material Specifications DMS-7110. Materials for mast arm mounting clamp and tube saddle shall be aluminum castings or aluminum alloys as in accordance with manufacturers' stipulations. Mounting pipe, pipe nipple and coupling shall be aluminum alloy 6061-T6 or 6063-T6. Damping plate mounting clamp and u-bolt assemblies shall conform to Standard sheet SMD(GEN)-08. U-bolts for saddle mounting shall have a minimum yield strength of 36 ksi.

Damping plate shall be mounted horizontally. Position centerline of damping plate to align with centerline of signal head assembly. Vertical clearance between signal head (with or without backing plate) and bottom of damping plate shall be maintained as shown. The attachments shown here are examples only, other supporting details which meet both alignment and vertical clearance requirements are also acceptable.

Unless stipulated by the manufacturers, all steel parts shall be galvanized finish in accordance with Standard Specification Item 445, "Galvanizing".

Contractor shall verify applicable field dimensions before the installation.

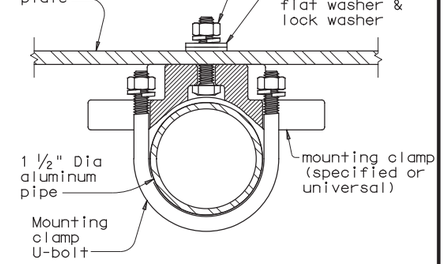

SECTION B-B

(Showing damping plate attachment)

Texas Department of Transportation
Traffic Operations Division

MAST ARM DAMPING PLATE DETAILS

MA-DPD-12

©TxDOT January 2012	DN: JSY	CK: ARC	DW: TGG	CK: JSY
REVISIONS	CONT	SECT	JOB	HIGHWAY
	2103	01	034	
	DIST	COUNTY		SHEET NO.
	AUS	WILLIAMSON		134

DATE: 3/22/2018 3:39:34 PM
FILE: c:\pwworking\dal\d0918769\ma-dpd.dgn

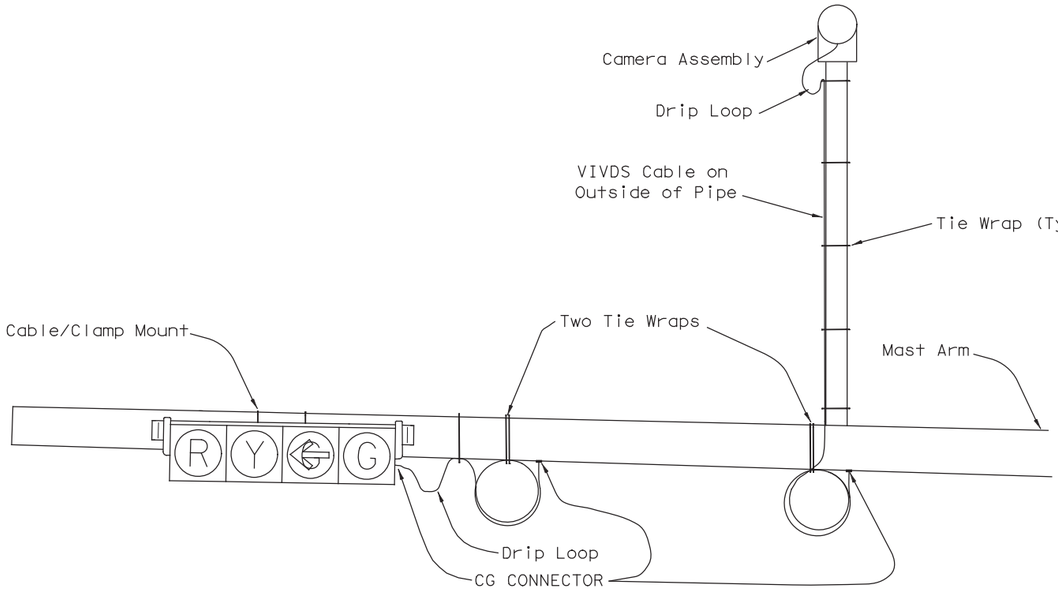

MAST ARM
ELEVATION VIEW

Backplate Not Shown

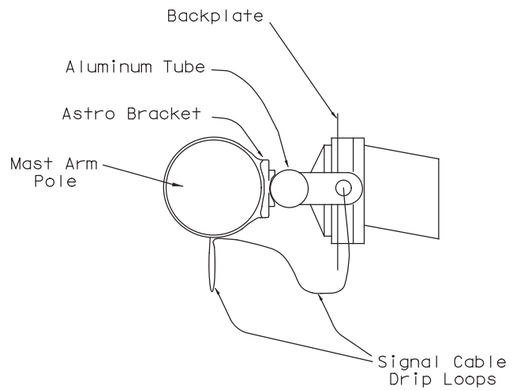

MAST ARM
SECTION VIEW(SIDE)

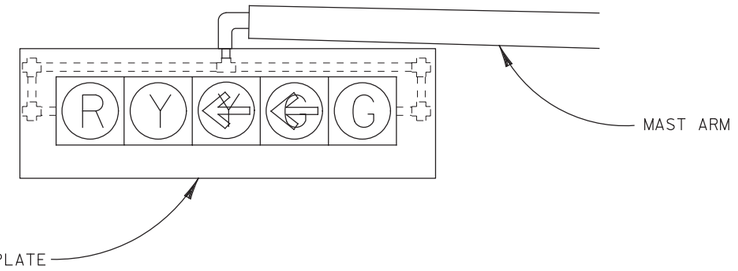

ELEVATION VIEW

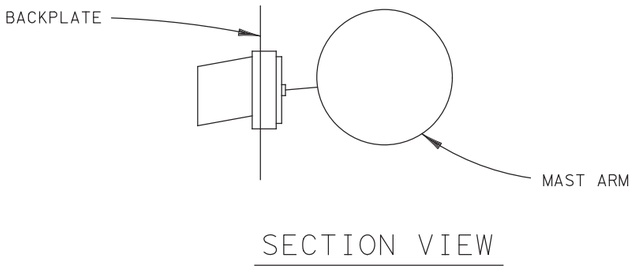

SECTION VIEW

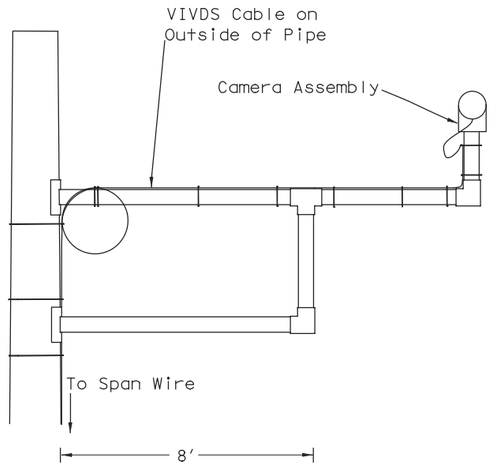

ELEVATION VIEW - CAMERA BRACKET

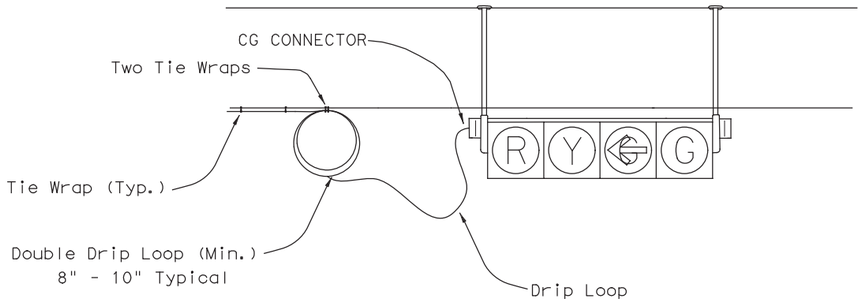

ELEVATION VIEW - SPAN WIRE

Backplate Not Shown

NO SCALE

Texas Department of Transportation | Austin District Standard

Austin District Traffic

MISC. ATTACHMENT DETAILS

MAD-14(AUS)

©SYEAR® REVISIONS	CONT	SECT	JOB	HIGHWAY
	2103	01	034	
	DIST	COUNTY		SHEET NO.
	AUS	WILLIAMSON		195

DATE: 3/22/2018 3:39:46 PM
FILE: c:\pwworking\dal\d0918769\MAD-14(AUS).dgn

4/12/2018 7:20 AM

NOTES:
1. INSTALL 1½" FITTING WITH SIX # 6 AWG CONDUCTORS AND 6 EA OF ½"-1½" BOLTS BETWEEN THE TWO CABINETS.
2. CAULK BETWEEN THE CABINETS OF THE EXISTING CONTROLLER AND BBU UNIT.
3. ABOVE WORK PERFORMED AND MATERIALS FURNISHED WILL NOT BE PAID FOR DIRECTLY, BUT SUBSIDIARY TO THE ITEM OF BBU.
4. INSTALL A 5' X 5' CONCRETE PAD (REFER TO CURRENT TS-CF STANDARD, 6" SLAB) UNDER THE BBU AND NEXT TO THE 6" SLAB OF SIGNAL CABINET BASE AS DIRECTED.
5. THE INSTALLATION OF BBU IS FOR REFERENCE ONLY. BBU SYSTEM WILL BE APPROVED ACCORDING TO THE SPECIAL SPECIFICATIONS.

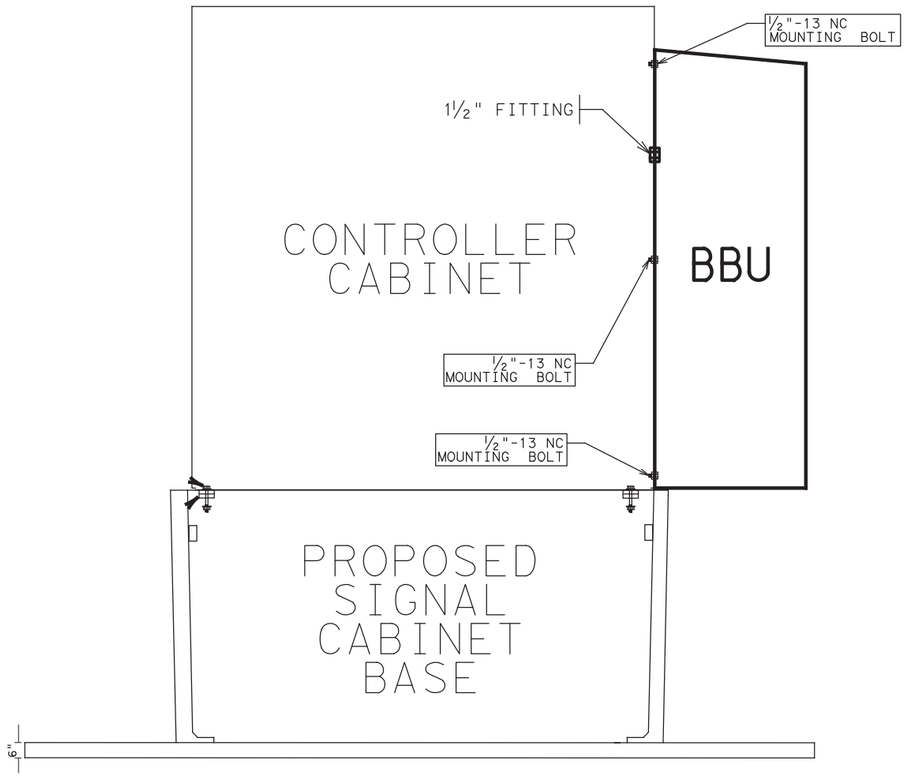

ELEVATION VIEW

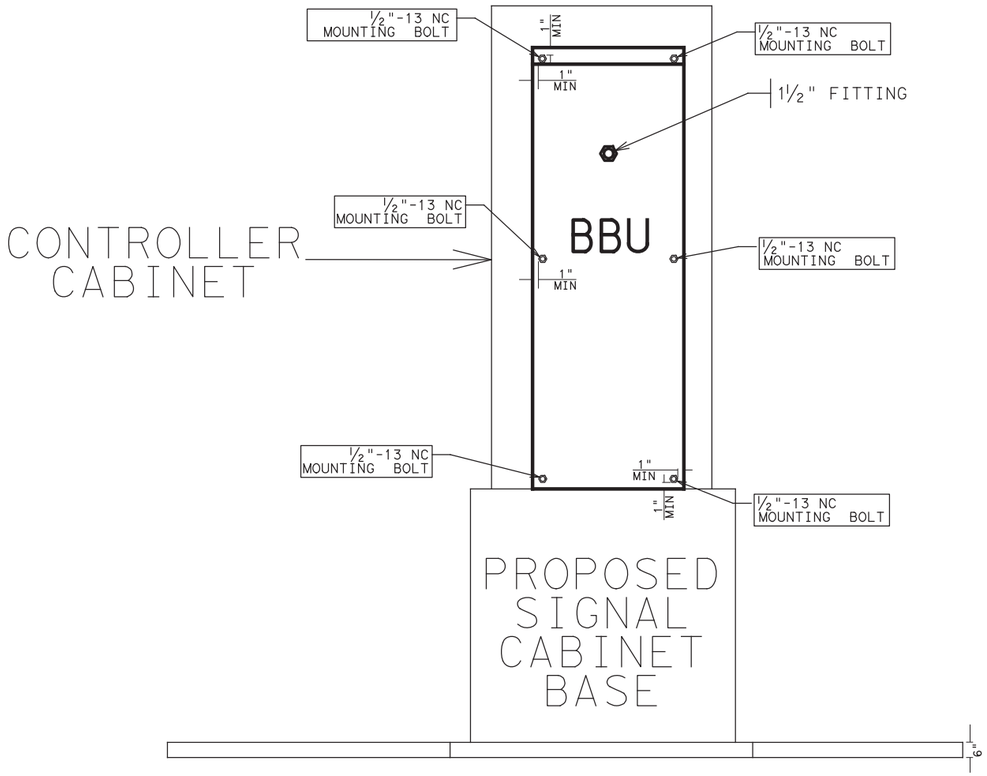

SIDE VIEW

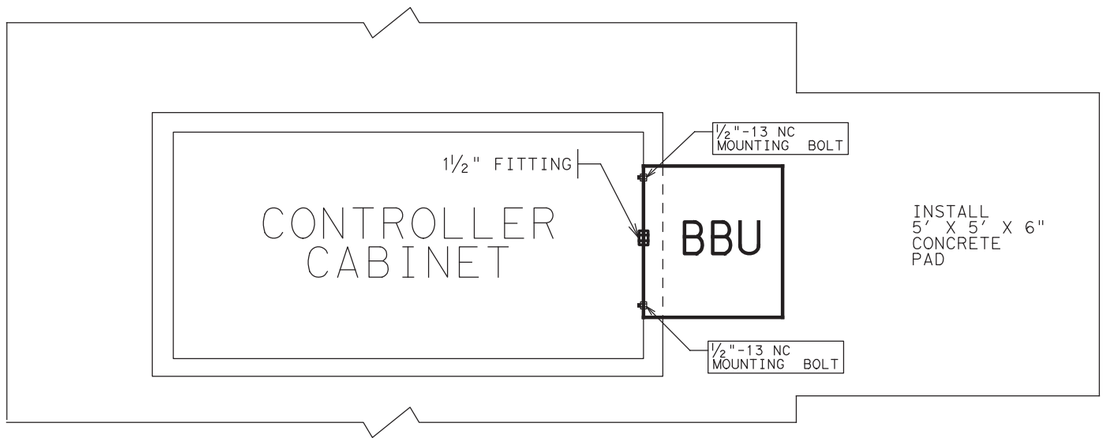

PLAN VIEW

NO SCALE

Texas Department of Transportation | Austin District Standard

Austin District Traffic

BATTERY BACK-UP EXTERNAL BATTERY CABINET (SIDE MOUNT)

BBU-14 (AUS)

©YEAR®	CONT	SECT	JOB	HIGHWAY
REVISIONS	2103	01	034	
	DIST	COUNTY		SHEET NO.
	AUS	WILLIAMSON		196

DATE: 3/22/2018 3:39:59 PM
FILE: c:\pwworking\dal\d0918769\BBU-14(AUS)New Title Block 2016.dgn

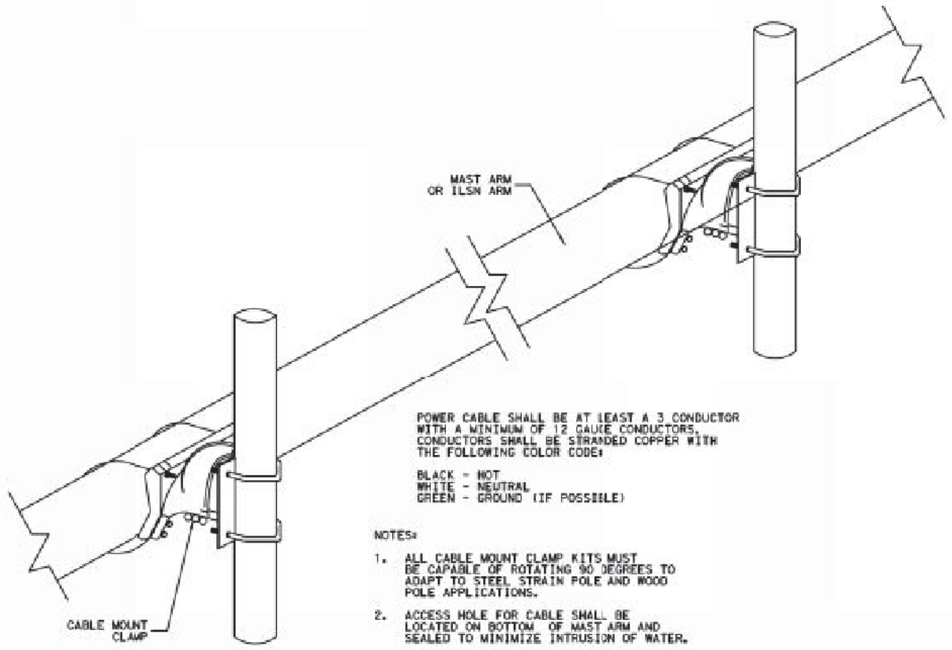

POWER CABLE SHALL BE AT LEAST A 3 CONDUCTOR WITH A MINIMUM OF 12 GAUGE CONDUCTORS. CONDUCTORS SHALL BE STRANDED COPPER WITH THE FOLLOWING COLOR CODE:

BLACK - HOT
WHITE - NEUTRAL
GREEN - GROUND (IF POSSIBLE)

NOTES:

1. ALL CABLE MOUNT CLAMP KITS MUST BE CAPABLE OF ROTATING 90 DEGREES TO ADAPT TO STEEL STRAIN POLE AND WOOD POLE APPLICATIONS.
2. ACCESS HOLE FOR CABLE SHALL BE LOCATED ON BOTTOM OF MAST ARM AND SEALED TO MINIMIZE INTRUSION OF WATER.

RIGID MAST ARM FOR ILSN SIGNS

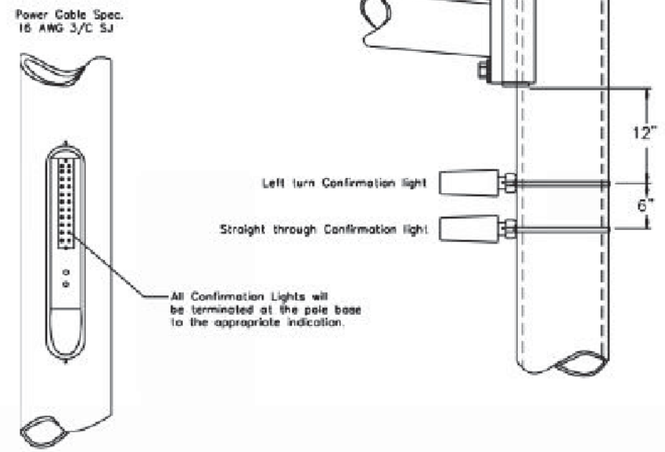

CONFIRMATION LIGHT INSTALLATION

STATE OF TEXAS
TIMOTHY GRIMES
100107
LICENSED
PROFESSIONAL ENGINEER

3.23.2018

NO.	DATE	REVISION	APPROVED

WILLIAMSON COUNTY

HDR Engineering, Inc.
810 Hesters Crossing, Suite 120
Round Rock, Texas 78681
Texas Registered Engineering Firm F-754

SOUTHWEST BYPASS SEGMENT 2

CITY OF GEORGETOWN SIGNAL DETAILS

DESIGN	FED.RD. DIV.NO.	FEDERAL AID PROJECT NO.		HIGHWAY NO.
TG	6			
GRAPHICS	STATE	DISTRICT	COUNTY	SHEET NO.
AG	TEXAS	AUS	WILLIAMSON	
CHECK	CONTROL	SECTION	JOB	197
KK	2103	01	034	
CHECK				
TG				

PLOT DRIVER: TXDOT_PDF_BW.pltcfg PENTABLE: S2-0000020170718.tbl
USER: AFAZ DATE: 3/22/2018 TIME: 3:40:13 PM SCALE: 1:1
FILE: Williamson_County\SH29_SW_Bypass_2243_to_IH35_V6.0_CAD_BIM\6.2_Work_In_Progress\6.2.2_Contract_Files\Sheet_Files\V06_WA_5_Segment_2\Standards\Signals\COG-STD.dgn

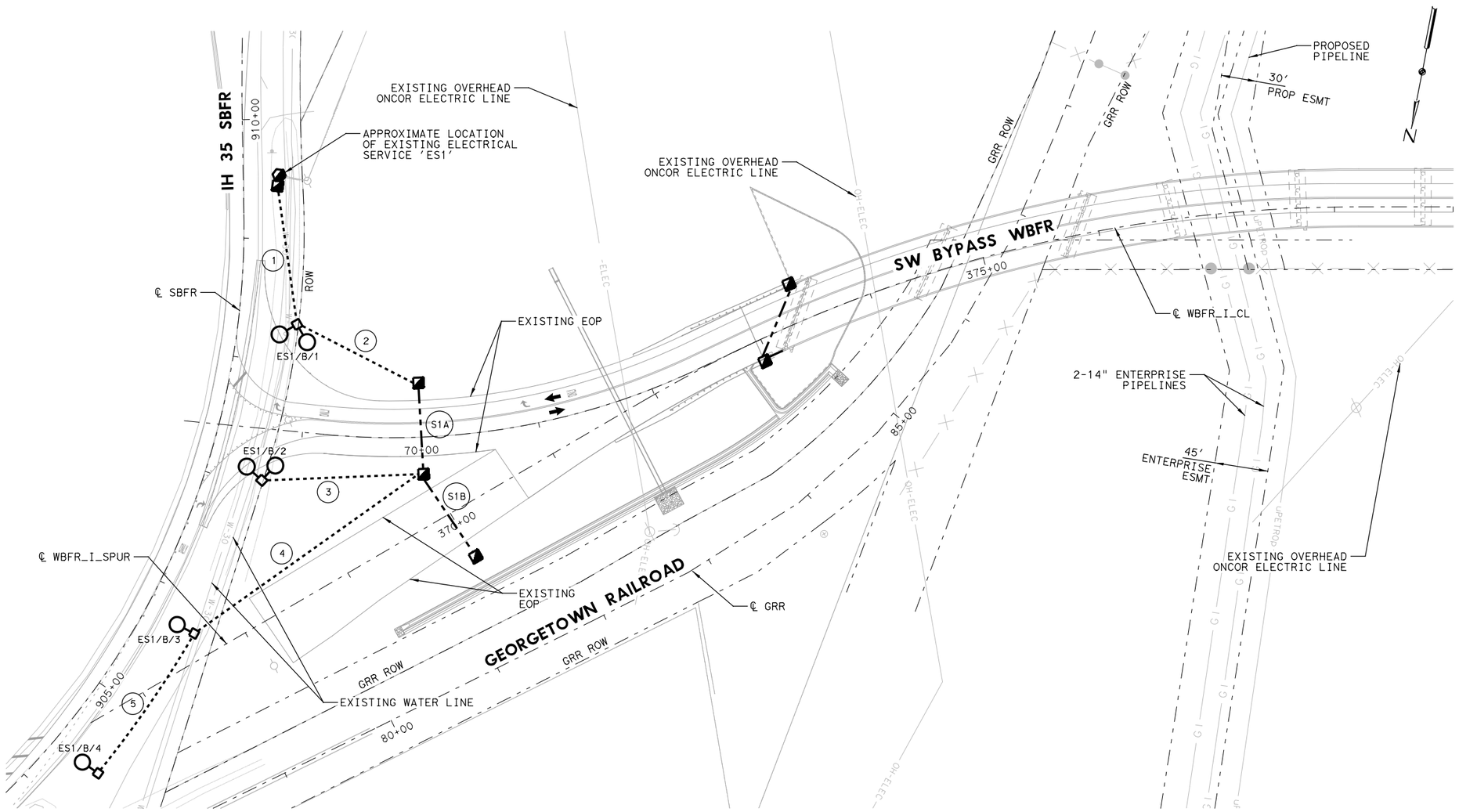

LEGEND

- EXISTING ELECTRIAL SERVICE ASSEMBLY TYPE A, 120/240 VOLT, 1 PHASE STEEL POLE TYPE SERVICE
- ELECTRIAL SERVICE ASSEMBLY TYPE A, 240/480 VOLT, 1 PHASE PEDESTAL TYPE SERVICE
- TxDOT STANDARD ILLUMINATION ASSEMBLY, 50' MOUNTING HEIGHT, TRANSFORMER BASE, TYPE IV DISTRIBUTION, (1) LED LUMINAIRE HEAD
- TxDOT STANDARD ILLUMINATION ASSEMBLY, 50' MOUNTING HEIGHT, TRANSFORMER BASE, TYPE IV DISTRIBUTION, (2) LED LUMINAIRE HEADS
- TxDOT STANDARD UNDERPASS ILLUMINATION ASSEMBLY, TYPE III DISTRIBUTION, (1) LED LUMINAIRE, 3000K LUMINAIRE TEMPERATURE
- 30A/2P DISCONNECT SWITCH (NEMA 3R)
- EXISTING BELOW GRADE GROUND BOX (TY A) (NEMA 3R)
- BELOW GRADE GROUND BOX (TY A) (NEMA 3R)
- ABOVE GRADE JUNCTION BOX (NEMA 3R)
- CONDUCTORS IN CONDUIT SEGMENT (SURFACE)
- CONDUCTORS IN CONDUIT SEGMENT (TRENCHED)
- CONDUCTORS IN CONDUIT SEGMENT (BORED)
- CONDUCTORS IN CONDUIT SEGMENT (INSTALLED IN SEGMENT #1 CONSTRUCTION)
- CONDUCTORS IN CONDUIT SEGMENT (EMBEDDED IN STRUCTURE)
- (XX) CONDUCTOR/ CONDUIT SEGMENT NO.
- X/X/X — ILLUMINATION ASSEMBLY DESIGNATION; CIRCUIT DESIGNATION; ELECTRICAL SERVICE DESIGNATION

0 50 100 150 200
SCALE IN FEET

ROADWAY ILLUMINATION ASSEMBLY SUMMARY

SERVICE	CIRCUIT	POLE NO.	STATION	OFFSET	ASSEMBLY TYPE	NOTES
ES1	B	1	369+68.50	202.65 LT (WBFR_I_SPUR)	IN RD IL (TYPE SA) 50T-12-12 (400W EQ) LED	1,2
ES1	B	2	368+83.25	98.75 LT (WBFR_I_SPUR)	IN RD IL (TYPE SA) 50T-12-12 (400W EQ) LED	1,2
ES1	B	3	367+62.50	21.00 LT (WBFR_I_SPUR)	IN RD IL (TYPE SA) 50T-12 (400W EQ) LED	2
ES1	B	4	366+33.25	40.00 RT (WBFR_I_SPUR)	IN RD IL (TYPE SA) 50T-12 (400W EQ) LED	2

NOTE:
1) POLE MOUNT ILLUMINATION ASSEMBLY MAST ARMS AT 90 DEGREES. REFER TO ILLUMINATION ASSEMBLY DETAILS FOR ADDITIONAL INFORMATION.
2) PROVIDE ROADWAY ILLUMINATION ASSEMBLY WITH TYPE IV OPTIC DISTRIBUTION, 3000K TEMPERATURE LEDs, AND 17,600 LUMEN OUTPUT (PER LUMINAIRE HEAD).

CONDUCTORS AND CONDUIT SUMMARY

SERVICE	CIRCUIT	SEGMENT NO.	SEGMENT LENGTH (LF)	CONDUIT (LF) 0618-6023 CONDT (PVC) (SCH 40) (2")	CONDUCTORS (LF) 0620-6007 ELEC CONDR (NO. 8) BARE	CONDUCTORS (LF) 0620-6008 ELEC CONDR (NO. 8) INSULATED	NOTES
ES1	B	1	128	1 X 128 = 128	1 X 133 = 133	2 X 133 = 266	
ES1	B	2	114	1 X 114 = 114	1 X 119 = 119	2 X 119 = 238	
ES1	B	3	137	1 X 137 = 137	1 X 142 = 142	2 X 142 = 284	
ES1	B	4	236	1 X 236 = 236	1 X 241 = 241	2 X 241 = 482	
ES1	B	5	140	1 X 140 = 140	1 X 145 = 145	2 X 145 = 290	
ES1	B	S1A	78		1 X 83 = 83	2 X 83 = 166	1
	SPARE						1
ES1	B	S1B	83		1 X 88 = 88	2 X 88 = 176	1
	SPARE						1
SHEET TOTAL				755	951	1902	

NOTE:
1) SEGMENT RUN UNDERGROUND CONDUIT INFRASTRUCTURE WAS INSTALLED DURING SEGMENT 1 CONSTRUCTION.

SHEET SUMMARY OF ESTIMATED QUANTITIES

ITEM#	DESCRIPTION	UNIT	QTY
0416	DRILL SHAFT (RDWY ILL POLE) (30 IN)	LF	32
0432	RIPRAP (CONC)(4 IN)	CY	2.0
0610	IN RD IL (TY SA) 50T-12 (400W EQ) LED	EA	2
0610	IN RD IL (TY SA) 50T-12-12(400W EQ)LED	EA	2
0618	CONDT (PVC) (SCH 40) (2")	LF	755
0620	ELEC CONDR (NO.8) BARE	LF	951
0620	ELEC CONDR (NO.8) INSULATED	LF	1902

GENERAL NOTES:
1. LOCATION OF ILLUMINATION EQUIPMENT MAY BE FIELD ADJUSTED AS DIRECTED BY THE INSPECTING ENGINEER TO ACCOMODATE ROADWAY FEATURES AND AVOID UTILITY CONFLICTS.
2. CONTACT POWER CO. WITH 2-WEEKS NOTICE FOR ELECTRICAL SERVICE CONNECTIONS.
3. THE CONSTRUCTION OF ILLUMINATION SHALL MEET ALL TxDOT STANDARDS/ SPECS, POWER COMPANY STANDARDS, N.E.C., CITY OF GEORGETOWN STANDARDS, UNLESS OTHERWISE NOTED.
4. VERIFY WITH THE UTILITY COMPANY(S) THE EXACT LOCATION OF EXISTING UNDERGROUND UTILITIES PRIOR TO CONSTRUCTION TO AVOID CONFLICT OR DAMAGE TO THE UTILITIES.
5. ABOVE GRADE NEMA 3R JUNCTION BOXES SHALL NOT BE PAID FOR DIRECTLY, BUT SHALL BE SUBSIDIARY TO ITEM 618, "CONDUIT" BID ITEM.
6. PROVIDE CONDUIT EXPANSION AND DEFLECTION COUPLING WHERE UNDERGROUND CONDUIT SEGMENT ENTERS THE BRIDGE STRUCTURE AND TRANSITIONS TO A BRIDGE EMBEDDED CONDUIT SEGMENTS. COUPLING SHALL ALLOW FOR A MAXIMUM OF 4" HORIZONTAL AND VERTICAL MOVEMENT.

STATE OF TEXAS
PAUL K. DAVILA
101043
LICENSED
PROFESSIONAL ENGINEER
22 MAR 2018

NO.	DATE	REVISION	APPROVED

WILLIAMSON COUNTY

HDR Engineering, Inc.
810 Hesters Crossing, Suite 120
Round Rock, Texas 78681
Texas Registered Engineering Firm F-754

SOUTHWEST BYPASS SEGMENT 2

ILLUMINATION LAYOUT BEGIN TO STA 379+00

SCALE: 1"=100' SHEET 1 OF 4

DESIGN	FED. RD. DIV. NO.	FEDERAL AID PROJECT NO.		HIGHWAY NO.
GM	6			
GRAPHICS				
GM	STATE	DISTRICT	COUNTY	SHEET NO.
CHECK	TEXAS	AUS	WILLIAMSON	
PD	CONTROL	SECTION	JOB	198
CHECK	2103	01	034	
PD				

PLOT DRIVER: TXDOT_PDF_BW.pltcfg PENTABLE: S2-0000020I7018.tbl
USER: GUMARTIN DATE: 3/22/2018 TIME: 3:26:23 PM SCALE: 1:100
FILE: \

4/12/2018 7:20 AM

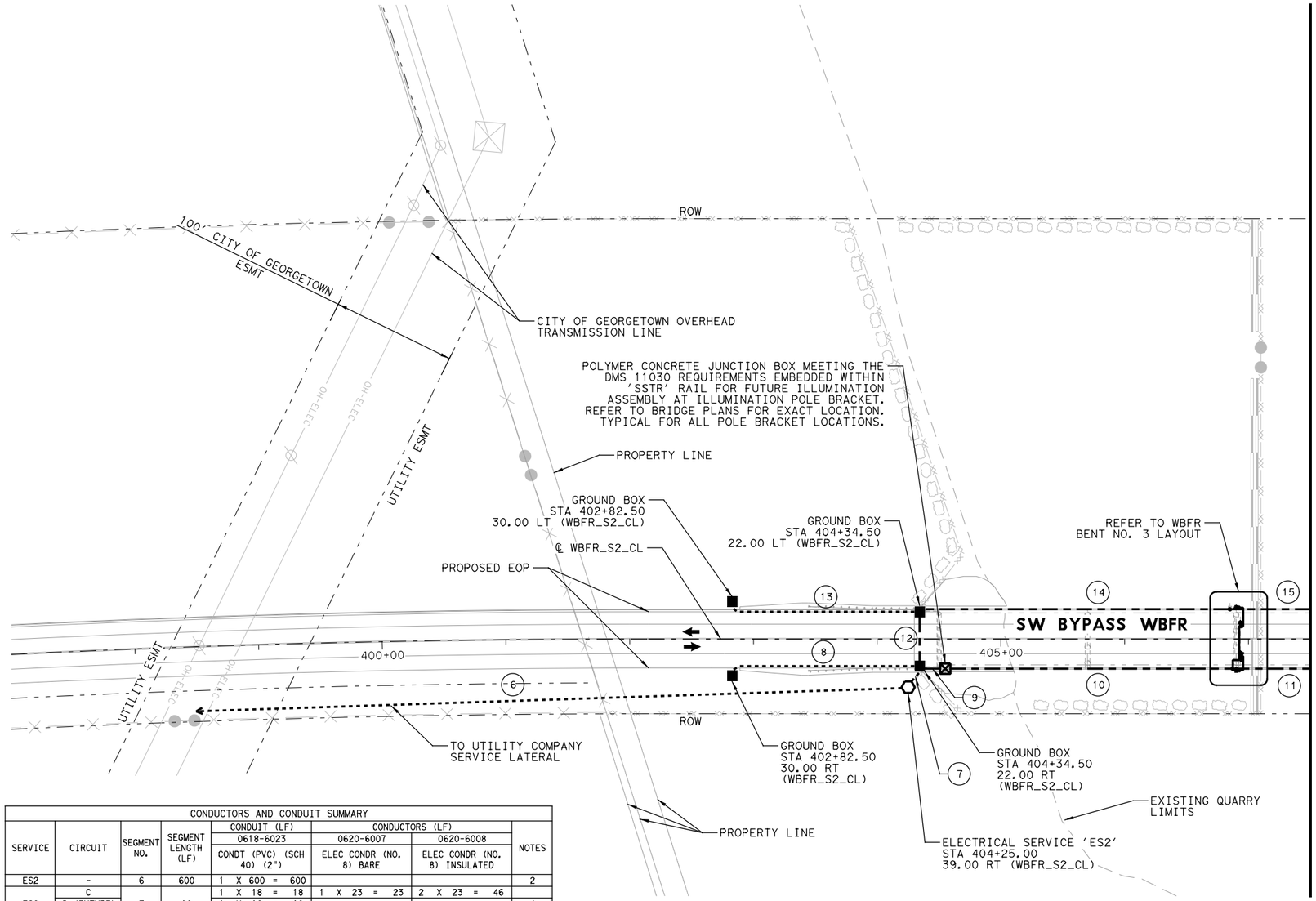

LEGEND

- EXISTING ELECTRIAL SERVICE ASSEMBLY TYPE A, 120/240 VOLT, 1 PHASE STEEL POLE TYPE SERVICE
- ELECTRIAL SERVICE ASSEMBLY TYPE A, 240/480 VOLT, 1 PHASE PEDESTAL TYPE SERVICE
- TxDOT STANDARD ILLUMINATION ASSEMBLY, 50' MOUNTING HEIGHT, TRANSFORMER BASE, TYPE IV DISTRIBUTION, (1) LED LUMINAIRE HEAD
- TxDOT STANDARD ILLUMINATION ASSEMBLY, 50' MOUNTING HEIGHT, TRANSFORMER BASE, TYPE IV DISTRIBUTION, (2) LED LUMINAIRE HEADS
- TxDOT STANDARD UNDERPASS ILLUMINATION ASSEMBLY, TYPE III DISTRIBUTION, (1) LED LUMINAIRE, 3000K LUMINAIRE TEMPERATURE
- 30A/2P DISCONNECT SWITCH (NEMA 3R)
- EXISTING BELOW GRADE GROUND BOX (TY A) (NEMA 3R)
- BELOW GRADE GROUND BOX (TY A) (NEMA 3R)
- ABOVE GRADE JUNCTION BOX (NEMA 3R)
- CONDUCTORS IN CONDUIT SEGMENT (SURFACE)
- CONDUCTORS IN CONDUIT SEGMENT (TRENCHED)
- CONDUCTORS IN CONDUIT SEGMENT (BORED)
- CONDUCTORS IN CONDUIT SEGMENT (INSTALLED IN SEGMENT #1 CONSTRUCTION)
- CONDUCTORS IN CONDUIT SEGMENT (EMBEDDED IN STRUCTURE)
- (XX) CONDUCTOR/ CONDUIT SEGMENT NO.
- X/X/X — ILLUMINATION ASSEMBLY DESIGNATION; CIRCUIT DESIGNATION; ELECTRICAL SERVICE DESIGNATION

CONDUCTORS AND CONDUIT SUMMARY

SERVICE	CIRCUIT	SEGMENT NO.	SEGMENT LENGTH (LF)	CONDUIT (LF) 0618-6023	CONDUCTORS (LF) 0620-6007	CONDUCTORS (LF) 0620-6008	NOTES
				CONDT (PVC) (SCH 40) (2")	ELEC CONDR (NO. 8) BARE	ELEC CONDR (NO. 8) INSULATED	
ES2	-	6	600	1 X 600 = 600			2
ES2	C	7	18	1 X 18 = 18	1 X 23 = 23	2 X 23 = 46	
	D (FUTURE)			1 X 18 = 18			1
	SPARE			1 X 18 = 18			1
ES2	D (FUTURE)	8	157	1 X 157 = 157			1
	SPARE			1 X 157 = 157			1
ES2	C	9	21	1 X 21 = 21	1 X 26 = 26	2 X 26 = 52	3
	D (FUTURE)			1 X 21 = 21			1,3
	SPARE			1 X 21 = 21			1,3
ES2	C	10	236	1 X 236 = 236	1 X 241 = 241	2 X 241 = 482	3
	D (FUTURE)			1 X 236 = 236			1,3
	SPARE			1 X 236 = 236			1,3
ES2	C	11	66	1 X 66 = 66	1 X 71 = 71	2 X 71 = 142	3
	D (FUTURE)			1 X 66 = 66			1,3
	SPARE			1 X 66 = 66			1,3
ES2	D (FUTURE)	12	44	1 X 44 = 44			1,3
	SPARE			1 X 44 = 44			1,3
ES2	D (FUTURE)	13	157	1 X 157 = 157			1
	SPARE			1 X 157 = 157			1
ES2	D (FUTURE)	14	254	1 X 254 = 254			1,3
	SPARE			1 X 254 = 254			1,3
ES2	D (FUTURE)	15	69	1 X 69 = 69			1,3
	SPARE			1 X 69 = 69			1,3
SHEET TOTAL				2985	361	722	

NOTES:
1) PROVIDE EMPTY CONDUIT SEGMENT WITH PULLSTRING.
2) SERVICE CONDUCTORS PROVIDED BY UTILITY COMPANY. COORDINATE WITH UTILITY COMPANY.
3) SEGMENT RUN TO BE INSTALLED EMBEDDED WITHIN BRIDGE STRUCTURE. REFER TO BRIDGE DRAWINGS FOR ADDITIONAL INFORMATION. COORDINATE INSTALLATION WITH BRIDGE CONTRACTOR.

SHEET SUMMARY OF ESTIMATED QUANTITIES

ITEM#	DESCRIPTION	UNIT	QTY
0618	CONDT (PVC) (SCH 40) (2")	LF	2985
0620	ELEC CONDR (NO.8) BARE	LF	361
0620	ELEC CONDR (NO.8) INSULATED	LF	722
0624	GROUND BOX TY A (122311)W/APRON	EA	4
0628	ELC SRV TY A 240/480 060(NS)SS(E)PS(U)	EA	1

GENERAL NOTES:
1. LOCATION OF ILLUMINATION EQUIPMENT MAY BE FIELD ADJUSTED AS DIRECTED BY THE INSPECTING ENGINEER TO ACCOMODATE ROADWAY FEATURES AND AVOID UTILITY CONFLICTS.
2. CONTACT POWER CO. WITH 2-WEEKS NOTICE FOR ELECTRICAL SERVICE CONNECTIONS.
3. THE CONSTRUCTION OF ILLUMINATION SHALL MEET ALL TxDOT STANDARDS/ SPECS, POWER COMPANY STANDARDS, N.E.C., CITY OF GEORGETOWN STANDARDS, UNLESS OTHERWISE NOTED.
4. VERIFY WITH THE UTILITY COMPANY(S) THE EXACT LOCATION OF EXISTING UNDERGROUND UTILITIES PRIOR TO CONSTRUCTION TO AVOID CONFLICT OR DAMAGE TO THE UTILITIES.
5. ABOVE GRADE NEMA 3R JUNCTION BOXES SHALL NOT BE PAID FOR DIRECTLY, BUT SHALL BE SUBSIDIARY TO ITEM 618, "CONDUIT" BID ITEM.
6. PROVIDE CONDUIT EXPANSION AND DEFLECTION COUPLING WHERE UNDERGROUND CONDUIT SEGMENT ENTERS THE BRIDGE STRUCTURE AND TRANSITIONS TO A BRIDGE EMBEDDED CONDUIT SEGMENTS. COUPLING SHALL ALLOW FOR A MAXIMUM OF 4" HORIZONTAL AND VERTICAL MOVEMENT.

STATE OF TEXAS
PAUL K. DAVILA
101043
LICENSED
PROFESSIONAL ENGINEER
22 MAR 2018

NO.	DATE	REVISION	APPROVED

WILLIAMSON COUNTY, TEXAS

HDR Engineering, Inc.
810 Hesters Crossing, Suite 120
Round Rock, Texas 78681
Texas Registered Engineering Firm F-754

SOUTHWEST BYPASS SEGMENT 2

ILLUMINATION LAYOUT STA 396+00 TO 407+50

SCALE: 1"=100' SHEET 2 OF 4

DESIGN	FED.RD. DIV.NO.	FEDERAL AID PROJECT NO.		HIGHWAY NO.
GM	6			
GRAPHICS GM	STATE	DISTRICT	COUNTY	SHEET NO.
CHECK PD	TEXAS	AUS	WILLIAMSON	199
CHECK PD	CONTROL 2103	SECTION 01	JOB 034	

PLOT DRIVER: TXDOT_PDF_BW.pltcfg USER: GUMARTIN DATE: 3/22/2018 FILE: \
PENTABLE: S2-0000020170718.tbl TIME: 3:26:30 PM SCALE: 1:00
4/12/2018 7:20 AM

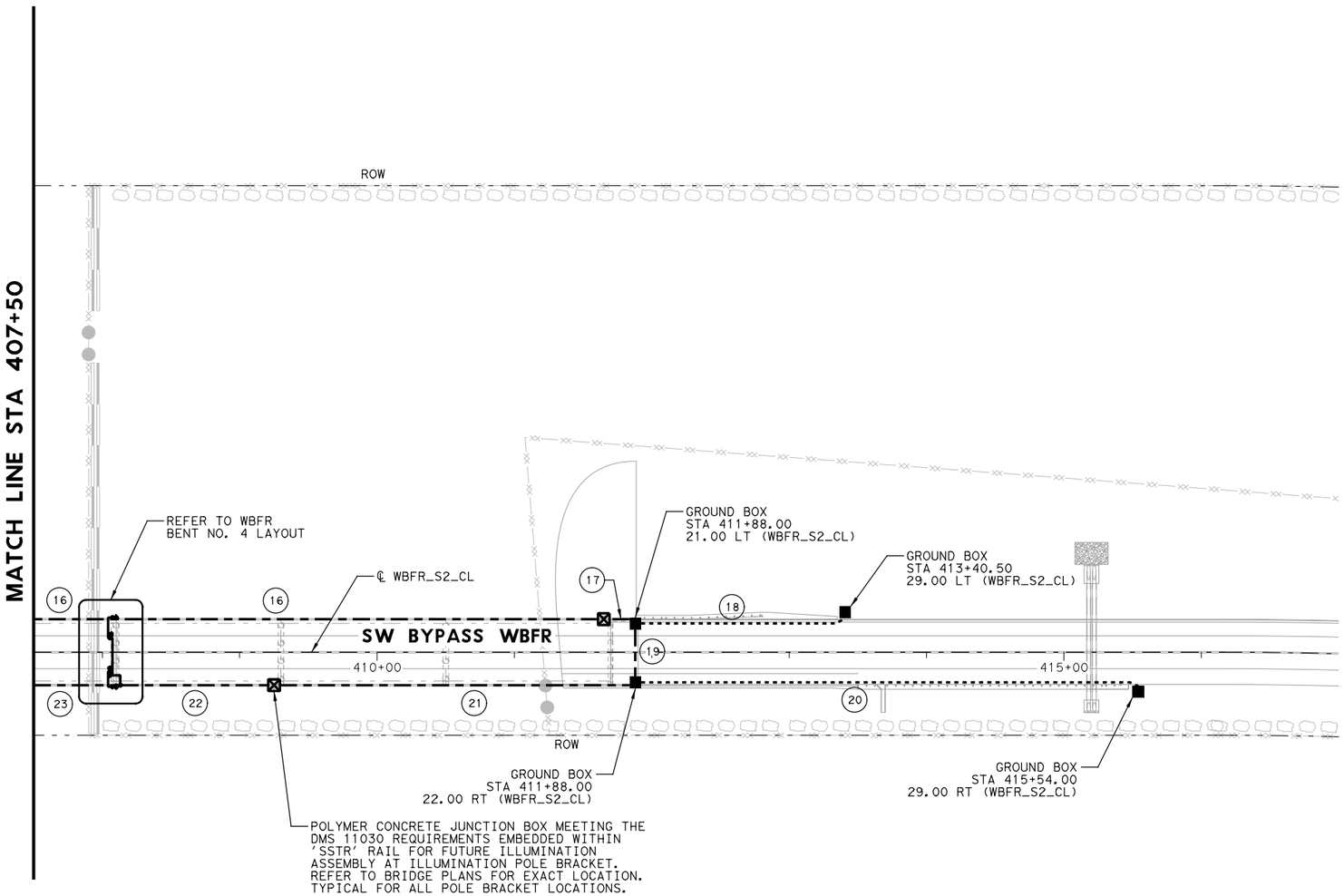

LEGEND

- EXISTING ELECTRIAL SERVICE ASSEMBLY TYPE A, 120/240 VOLT, 1 PHASE STEEL POLE TYPE SERVICE
- ELECTRIAL SERVICE ASSEMBLY TYPE A, 240/480 VOLT, 1 PHASE PEDESTAL TYPE SERVICE
- TxDOT STANDARD ILLUMINATION ASSEMBLY, 50' MOUNTING HEIGHT, TRANSFORMER BASE, TYPE IV DISTRIBUTION, (1) LED LUMINAIRE HEAD
- TxDOT STANDARD ILLUMINATION ASSEMBLY, 50' MOUNTING HEIGHT, TRANSFORMER BASE, TYPE IV DISTRIBUTION, (2) LED LUMINAIRE HEADS
- TxDOT STANDARD UNDERPASS ILLUMINATION ASSEMBLY, TYPE III DISTRIBUTION, (1) LED LUMINAIRE, 3000K LUMINAIRE TEMPERATURE
- 30A/2P DISCONNECT SWITCH (NEMA 3R)
- EXISTING BELOW GRADE GROUND BOX (TY A) (NEMA 3R)
- BELOW GRADE GROUND BOX (TY A) (NEMA 3R)
- ABOVE GRADE JUNCTION BOX (NEMA 3R)
- CONDUCTORS IN CONDUIT SEGMENT (SURFACE)
- CONDUCTORS IN CONDUIT SEGMENT (TRENCHED)
- CONDUCTORS IN CONDUIT SEGMENT (BORED)
- CONDUCTORS IN CONDUIT SEGMENT (INSTALLED IN SEGMENT #1 CONSTRUCTION)
- CONDUCTORS IN CONDUIT SEGMENT (EMBEDDED IN STRUCTURE)
- (XX) CONDUCTOR/ CONDUIT SEGMENT NO.
- X/X/X — ILLUMINATION ASSEMBLY DESIGNATION / CIRCUIT DESIGNATION / ELECTRICAL SERVICE DESIGNATION

0 50 100 150 200
SCALE IN FEET

CONDUCTORS AND CONDUIT SUMMARY

SERVICE	CIRCUIT	SEGMENT NO.	SEGMENT LENGTH (LF)	CONDUIT (LF) 0618-6023 CONDT (PVC) (SCH 40) (2")	CONDUCTORS (LF) 0620-6007 ELEC CONDR (NO. 8) BARE	CONDUCTORS (LF) 0620-6008 ELEC CONDR (NO. 8) INSULATED	NOTES
ES1	D (FUTURE)	16	415	1 X 415 = 415			1,2
	SPARE			1 X 415 = 415			1,2
ES1	D (FUTURE)	17	23	1 X 23 = 23			1,2
	SPARE			1 X 23 = 23			1,2
ES1	D (FUTURE)	18	158	1 X 158 = 158			1
	SPARE			1 X 158 = 158			1
ES1	D (FUTURE)	19	43	1 X 43 = 43			1,2
	SPARE			1 X 43 = 43			1,2
ES1	D (FUTURE)	20	371	1 X 371 = 371			1
	SPARE			1 X 371 = 371			1
ES1	D (FUTURE)	21	263	1 X 263 = 263			1,2
	SPARE			1 X 263 = 263			1,2
ES1	D (FUTURE)	22	115	1 X 115 = 115			1,2
	SPARE			1 X 115 = 115			1,2
ES1	C	23	67	1 X 67 = 67	1 X 72 = 72	2 X 72 = 144	2
	D (FUTURE)			1 X 67 = 67			1,2
	SPARE			1 X 67 = 67			1,2
SHEET TOTAL				2977	72	144	

NOTES:
1) PROVIDE EMPTY CONDUIT SEGMENT WITH PULLSTRING.
2) SEGMENT RUN TO BE INSTALLED EMBEDDED WITHIN BRIDGE STRUCTURE. REFER TO BRIDGE DRAWINGS FOR ADDITIONAL INFORMATION. COORDINATE INSTALLATION WITH BRIDGE CONTRACTOR.

SHEET SUMMARY OF ESTIMATED QUANTITIES

ITEM#	DESCRIPTION	UNIT	QTY
0618	CONDT (PVC) (SCH 40) (2")	LF	2977
0620	ELEC CONDR (NO.8) BARE	LF	72
0620	ELEC CONDR (NO.8) INSULATED	LF	144
0624	GROUND BOX TY A (122311)W/APRON	EA	4

GENERAL NOTES:
1. LOCATION OF ILLUMINATION EQUIPMENT MAY BE FIELD ADJUSTED AS DIRECTED BY THE INSPECTING ENGINEER TO ACCOMODATE ROADWAY FEATURES AND AVOID UTILITY CONFLICTS.
2. CONTACT POWER CO. WITH 2-WEEKS NOTICE FOR ELECTRICAL SERVICE CONNECTIONS.
3. THE CONSTRUCTION OF ILLUMINATION SHALL MEET ALL TxDOT STANDARDS/ SPECS, POWER COMPANY STANDARDS, N.E.C., CITY OF GEORGETOWN STANDARDS, UNLESS OTHERWISE NOTED.
4. VERIFY WITH THE UTILITY COMPANY(S) THE EXACT LOCATION OF EXISTING UNDERGROUND UTILITIES PRIOR TO CONSTRUCTION TO AVOID CONFLICT OR DAMAGE TO THE UTILITIES.
5. ABOVE GRADE NEMA 3R JUNCTION BOXES SHALL NOT BE PAID FOR DIRECTLY, BUT SHALL BE SUBSIDIARY TO ITEM 618, "CONDUIT" BID ITEM.
6. PROVIDE CONDUIT EXPANSION AND DEFLECTION COUPLING WHERE UNDERGROUND CONDUIT SEGMENT ENTERS THE BRIDGE STRUCTURE AND TRANSITIONS TO A BRIDGE EMBEDDED CONDUIT SEGMENTS. COUPLING SHALL ALLOW FOR A MAXIMUM OF 4" HORIZONTAL AND VERTICAL MOVEMENT.

STATE OF TEXAS
PAUL K. DAVILA
101043
LICENSED
PROFESSIONAL ENGINEER
22 MAR 2018

NO.	DATE	REVISION	APPROVED

WILLIAMSON COUNTY

HDR Engineering, Inc.
810 Hesters Crossing, Suite 120
Round Rock, Texas 78681
Texas Registered Engineering Firm F-754

SOUTHWEST BYPASS SEGMENT 2

ILLUMINATION LAYOUT STA 407+50 TO 417+00

SCALE: 1"=100' SHEET 3 OF 4

DESIGN	FED.RD. DIV.NO.	FEDERAL AID PROJECT NO.		HIGHWAY NO.
GM	6			
GRAPHICS	STATE	DISTRICT	COUNTY	SHEET NO.
GM	TEXAS	AUS	WILLIAMSON	200
CHECK	CONTROL	SECTION	JOB	
PD	2103	01	034	
CHECK				
PD				

PLOT DRIVER: TXDOT_PDF_BW.pltcfg PENTABLE: S2-0000020170718.tbl
USER: GUMARTIN DATE: 3/22/2018 TIME: 3:26:37 PM SCALE: 1:100
FILE: \

4/12/2018 7:20 AM

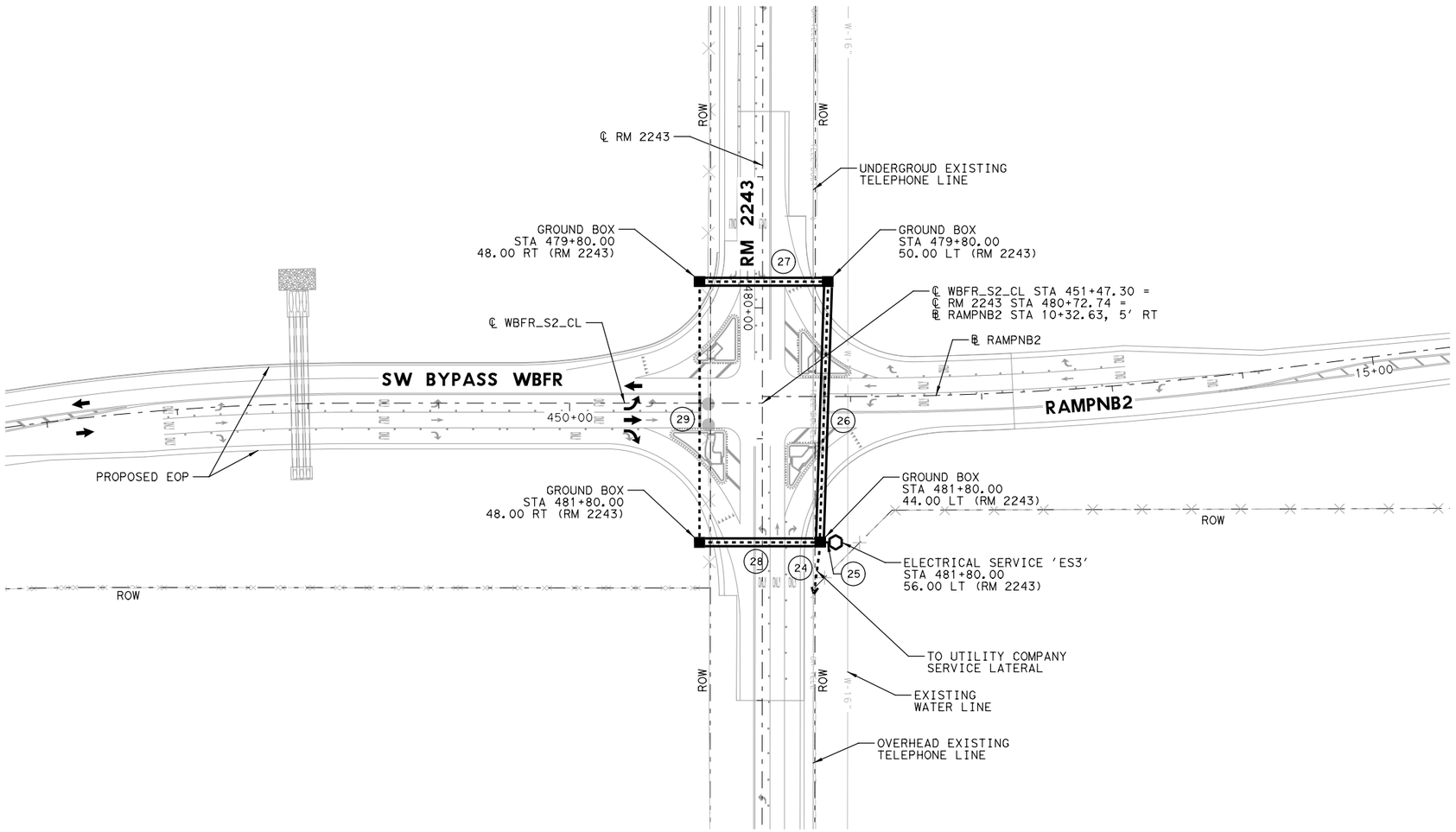

LEGEND

- EXISTING ELECTRIAL SERVICE ASSEMBLY TYPE A, 120/240 VOLT, 1 PHASE STEEL POLE TYPE SERVICE
- ELECTRIAL SERVICE ASSEMBLY TYPE A, 240/480 VOLT, 1 PHASE PEDESTAL TYPE SERVICE
- TxDOT STANDARD ILLUMINATION ASSEMBLY, 50' MOUNTING HEIGHT, TRANSFORMER BASE, TYPE IV DISTRIBUTION, (1) LED LUMINAIRE HEAD
- TxDOT STANDARD ILLUMINATION ASSEMBLY, 50' MOUNTING HEIGHT, TRANSFORMER BASE, TYPE IV DISTRIBUTION, (2) LED LUMINAIRE HEADS
- TxDOT STANDARD UNDERPASS ILLUMINATION ASSEMBLY, TYPE III DISTRIBUTION, (1) LED LUMINAIRE, 3000K LUMINAIRE TEMPERATURE
- 30A/2P DISCONNECT SWITCH (NEMA 3R)
- EXISTING BELOW GRADE GROUND BOX (TY A) (NEMA 3R)
- BELOW GRADE GROUND BOX (TY A) (NEMA 3R)
- ABOVE GRADE JUNCTION BOX (NEMA 3R)
- CONDUCTORS IN CONDUIT SEGMENT (SURFACE)
- CONDUCTORS IN CONDUIT SEGMENT (TRENCHED)
- CONDUCTORS IN CONDUIT SEGMENT (BORED)
- CONDUCTORS IN CONDUIT SEGMENT (INSTALLED IN SEGMENT #1 CONSTRUCTION)
- CONDUCTORS IN CONDUIT SEGMENT (EMBEDDED IN STRUCTURE)
- (XX) CONDUCTOR/ CONDUIT SEGMENT NO.
- X/X/X — ILLUMINATION ASSEMBLY DESIGNATION; CIRCUIT DESIGNATION; ELECTRICAL SERVICE DESIGNATION

0 50 100 150 200
SCALE IN FEET

CONDUCTORS AND CONDUIT SUMMARY							
SERVICE	CIRCUIT	SEGMENT NO.	SEGMENT LENGTH (LF)	CONDUIT (LF) 0618-6023 CONDT (PVC) (SCH 40) (2")	0618-6024 CONDT (PVC) (SCH 40) (2") (BORE)	0618-6025 CONDT (PVC) (SCH 40) (2") (CONC ENCSE)	NOTES
ES3	-	24	100	1 X 100 = 100			2
ES3	-	25	15	1 X 15 = 15			2
	E (FUTURE)			1 X 0 = 0			1
	F (FUTURE)			1 X 0 = 0			1
ES3	E (FUTURE)	26	199		1 X 199 = 199		1
ES3	F (FUTURE)				1 X 199 = 199		1
ES3	E (FUTURE)	27	98		1 X 98 = 98		1
ES3	F (FUTURE)				1 X 98 = 98		1
ES3	E (FUTURE)	28	92		1 X 92 = 92		1
ES3	F (FUTURE)				1 X 92 = 92		1
ES3	E (FUTURE)	29	199			1 X 199 = 199	1
ES3	F (FUTURE)					1 X 199 = 199	1
SHEET TOTAL				115	778	398	

NOTES:
1) PROVIDE EMPTY CONDUIT SEGMENT WITH PULLSTRING.
2) SERVICE CONDUCTORS PROVIDED BY UTILITY COMPANY. COORDINATE WITH UTILITY COMPANY.

SHEET SUMMARY OF ESTIMATED QUANTITIES			
ITEM#	DESCRIPTION	UNIT	QTY
0618	CONDT (PVC) (SCH 40) (2")	LF	115
0618	CONDT (PVC) (SCH 40) (2") (BORE)	LF	778
0618	CONDT (PVC) (SCH 40) (2") (CONC ENCSE)	LF	398
0624	GROUND BOX TY A (122311)W/APRON	EA	4
0628	ELC SRV TY A 240/480 060(NS)SS(E)PS(U)	EA	1

GENERAL NOTES:
1. LOCATION OF ILLUMINATION EQUIPMENT MAY BE FIELD ADJUSTED AS DIRECTED BY THE INSPECTING ENGINEER TO ACCOMODATE ROADWAY FEATURES AND AVOID UTILITY CONFLICTS.
2. CONTACT POWER CO. WITH 2-WEEKS NOTICE FOR ELECTRICAL SERVICE CONNECTIONS.
3. THE CONSTRUCTION OF ILLUMINATION SHALL MEET ALL TxDOT STANDARDS/ SPECS, POWER COMPANY STANDARDS, N.E.C., CITY OF GEORGETOWN STANDARDS, UNLESS OTHERWISE NOTED.
4. VERIFY WITH THE UTILITY COMPANY(S) THE EXACT LOCATION OF EXISTING UNDERGROUND UTILITIES PRIOR TO CONSTRUCTION TO AVOID CONFLICT OR DAMAGE TO THE UTILITIES.
5. ABOVE GRADE NEMA 3R JUNCTION BOXES SHALL NOT BE PAID FOR DIRECTLY, BUT SHALL BE SUBSIDIARY TO ITEM 618, "CONDUIT" BID ITEM.
6. PROVIDE CONDUIT EXPANSION AND DEFLECTION COUPLING WHERE UNDERGROUND CONDUIT SEGMENT ENTERS THE BRIDGE STRUCTURE AND TRANSITIONS TO A BRIDGE EMBEDDED CONDUIT SEGMENTS. COUPLING SHALL ALLOW FOR A MAXIMUM OF 4" HORIZONTAL AND VERTICAL MOVEMENT.

STATE OF TEXAS
PAUL K. DAVILA
101043
LICENSED
PROFESSIONAL ENGINEER
22 MAR 2018

NO.	DATE	REVISION	APPROVED

WILLIAMSON COUNTY TEXAS

HDR Engineering, Inc.
810 Hesters Crossing, Suite 120
Round Rock, Texas 78681
Texas Registered Engineering Firm F-754

SOUTHWEST BYPASS SEGMENT 2

ILLUMINATION LAYOUT STA 445+68 TO END

SCALE: 1"=100' SHEET 4 OF 4

DESIGN	FED.RD. DIV.NO.	FEDERAL AID PROJECT NO.		HIGHWAY NO.
GM	6			
GRAPHICS	STATE	DISTRICT	COUNTY	SHEET NO.
GM	TEXAS	AUS	WILLIAMSON	
CHECK	CONTROL	SECTION	JOB	201
PD	2103	01	034	
CHECK				
PD				

PLOT DRIVER: TXDOT_PDF_BW.pltcfg PENTABLE: S2-000002017018.tbl
USER: GMARTIN DATE: 3/22/2018 TIME: 3:26:43 PM SCALE: 1:00
FILE: \
4/12/2018 7:20 AM

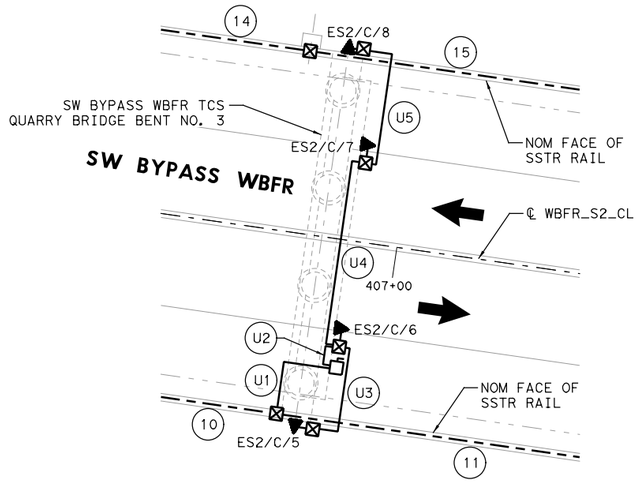

REFER TO WBFR BENT NO. 3 DETAIL FOR ADDITIONAL INFORMATION

WBFR BENT NO. 3 LAYOUT

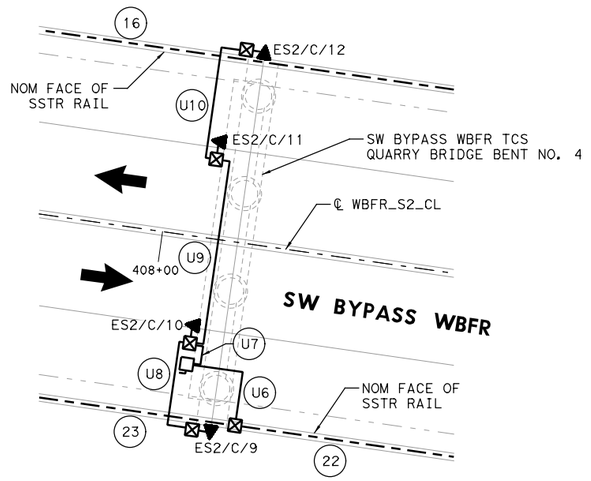

REFER TO WBFR BENT NO. 4 DETAIL FOR ADDITIONAL INFORMATION

WBFR BENT NO. 4 LAYOUT



LEGEND

- TxDOT STANDARD UNDERPASS ILLUMINATION ASSEMBLY, TYPE III DISTRIBUTION, (1) LED LUMINAIRE HEAD
- 30A/2P DISCONNECT SWITCH (NEMA 3R)
- ABOVE GRADE JUNCTION BOX (NEMA 3R)
- CONDUCTORS IN CONDUIT SEGMENT (SURFACE)
- CONDUCTORS IN CONDUIT SEGMENT (EMBEDDED IN STRUCTURE)
- (XX) CONDUCTOR/ CONDUIT SEGMENT NO.
- X/X/X — ILLUMINATION ASSEMBLY DESIGNATION; CIRCUIT DESIGNATION; ELECTRICAL SERVICE DESIGNATION

GENERAL NOTES:

1. LOCATION OF ILLUMINATION EQUIPMENT MAY BE FIELD ADJUSTED AS DIRECTED BY THE INSPECTING ENGINEER TO ACCOMODATE ROADWAY FEATURES AND AVOID UTILITY CONFLICTS.
2. CONTACT POWER CO. WITH 2-WEEKS NOTICE FOR ELECTRICAL SERVICE CONNECTIONS.
3. THE CONSTRUCTION OF ILLUMINATION SHALL MEET ALL TxDOT STANDARDS/ SPECS, POWER COMPANY STANDARDS, N.E.C., CITY OF GEORGETOWN STANDARDS, UNLESS OTHERWISE NOTED.
4. VERIFY WITH THE UTILITY COMPANY(S) THE EXACT LOCATION OF EXISTING UNDERGROUND UTILITIES PRIOR TO CONSTRUCTION TO AVOID CONFLICT OR DAMAGE TO THE UTILITIES.
5. ABOVE GRADE NEMA 3R JUNCTION BOXES SHALL NOT BE PAID FOR DIRECTLY, BUT SHALL BE SUBSIDIARY TO ITEM 618, "CONDUIT" BID ITEM.
6. PROVIDE CONDUIT EXPANSION AND DEFLECTION COUPLING WHERE UNDERGROUND CONDUIT SEGMENT ENTERS THE BRIDGE STRUCTURE AND TRANSITIONS TO A BRIDGE EMBEDDED CONDUIT SEGMENTS. COUPLING SHALL ALLOW FOR A MAXIMUM OF 4" HORIZONTAL AND VERTICAL MOVEMENT.

0 20 40 60 80
SCALE IN FEET

ROADWAY ILLUMINATION ASSEMBLY SUMMARY

SERVICE	CIRCUIT	POLE NO.	STATION	OFFSET	ASSEMBLY TYPE	NOTES
ES2	C	5	-	-	IN RD IL (U/P) (TY 1) (250W EQ) LED	1,3
ES2	C	6	-	-	IN RD IL (U/P) (TY 1) (250W EQ) LED	1,3
ES2	C	7	-	-	IN RD IL (U/P) (TY 1) (250W EQ) LED	1,3
ES2	C	8	-	-	IN RD IL (U/P) (TY 1) (250W EQ) LED	1,3
ES2	C	9	-	-	IN RD IL (U/P) (TY 1) (250W EQ) LED	2,3
ES2	C	10	-	-	IN RD IL (U/P) (TY 1) (250W EQ) LED	2,3
ES2	C	11	-	-	IN RD IL (U/P) (TY 1) (250W EQ) LED	2,3
ES2	C	12	-	-	IN RD IL (U/P) (TY 1) (250W EQ) LED	2,3

NOTE:
1) REFER TO WBFR BENT NO. 3 ILLUMINATION DETAIL FOR ADDITIONAL INFORMATION.
2) REFER TO WBFR BENT NO. 4 ILLUMINATION DETAIL FOR ADDITIONAL INFORMATION.
3) PROVIDE UNDERPASS ILLUMINATION ASSEMBLY WITH TYPE III OPTIC DISTRIBUTION AND 3000K TEMPERATURE LEDs.

SHEET SUMMARY OF ESTIMATED QUANTITIES

ITEM#	DESCRIPTION	UNIT	QTY
0610	IN RD IL (U/P) (TY 1) (250W EQ) LED	EA	8
0618	CONDT (RM) (1 1/4")	LF	161
0620	ELEC CONDR (NO.8) BARE	LF	240
0620	ELEC CONDR (NO.8) INSULATED	LF	480
**	CONDT (LFMC) (1-1/4")	LF	24

CONDUCTORS AND CONDUIT SUMMARY

SERVICE	CIRCUIT	SEGMENT NO.	SEGMENT LENGTH (LF)	CONDUIT (LF)		CONDUCTORS (LF)		NOTES
				**	0618-6066	0620-6007	0620-6008	
				CONDT (LFMC) (1-1/4")	CONDT (RM) (1-1/4")	ELEC CONDR (NO. 8) BARE	ELEC CONDR (NO. 8) INSULATED	
ES2	C	U1	12		1 X 12 = 12	1 X 17 = 17	2 X 17 = 34	1
ES2	C	U2	5		1 X 5 = 5	1 X 10 = 10	2 X 10 = 20	1
ES2	C	U3	15		1 X 15 = 15	1 X 20 = 20	2 X 20 = 40	1
ES2	C	U4	27		1 X 27 = 27	1 X 32 = 32	2 X 32 = 64	1
ES2	C	U5	19		1 X 19 = 19	1 X 24 = 24	2 X 24 = 48	1
ES2	C	U6	12		1 X 12 = 12	1 X 17 = 17	2 X 17 = 34	1
ES2	C	U7	5		1 X 5 = 5	1 X 10 = 10	2 X 10 = 20	1
ES2	C	U8	15		1 X 20 = 20	1 X 20 = 20	2 X 20 = 40	1
ES2	C	U9	27		1 X 27 = 27	1 X 32 = 32	2 X 32 = 64	1
ES2	C	U10	19		1 X 19 = 19	1 X 24 = 24	2 X 24 = 48	1
ES2	C	U11	12	1 X 12 = 12		1 X 17 = 17	2 X 17 = 34	2
ES2	C	U12	12	1 X 12 = 12		1 X 17 = 17	2 X 17 = 34	2
SHEET TOTAL				24	161	240	480	

NOTES:
1) SEGMENT RUN SHALL BE INSTALLED SURFACE MOUNTED TO BRIDGE STRUCTURE. COORDINATE INSTALLATION WITH BRIDGE CONTRACTOR.
2) LIQUID-TIGHT FLEXIBLE STEEL CONDUIT (TYPE LFMC) SHALL NOT BE PAID FOR DIRECTLY, BUT SHALL BE SUBSIDIARY TO ITEM 618, "CONDUIT" BID ITEM.

STATE OF TEXAS
PAUL K. DAVILA
101043
LICENSED PROFESSIONAL ENGINEER
22 MAR 2018

NO.	DATE	REVISION	APPROVED

WILLIAMSON COUNTY

HDR Engineering, Inc.
810 Hesters Crossing, Suite 120
Round Rock, Texas 78681
Texas Registered Engineering Firm F-754

SOUTHWEST BYPASS SEGMENT 2

ILLUMINATION UNDERPASS LAYOUT TCS QUARRY BRIDGE

SCALE: 1"=20' SHEET 1 OF 1

DESIGN	FED.RD. DIV.NO.	FEDERAL AID PROJECT NO.		HIGHWAY NO.
GM	6			
GRAPHICS	STATE	DISTRICT	COUNTY	SHEET NO.
GM	TEXAS	AUS	WILLIAMSON	
CHECK	CONTROL	SECTION	JOB	202
PD	2103	01	034	
CHECK				
PD				

PLOT DRIVER: TXDOT_PDF_BW.pltcfg PENTABLE: S2-00000201710718.tbl
USER: GUMARTIN DATE: 3/22/2018 TIME: 3:26:49 PM SCALE: 1:20
FILE: \

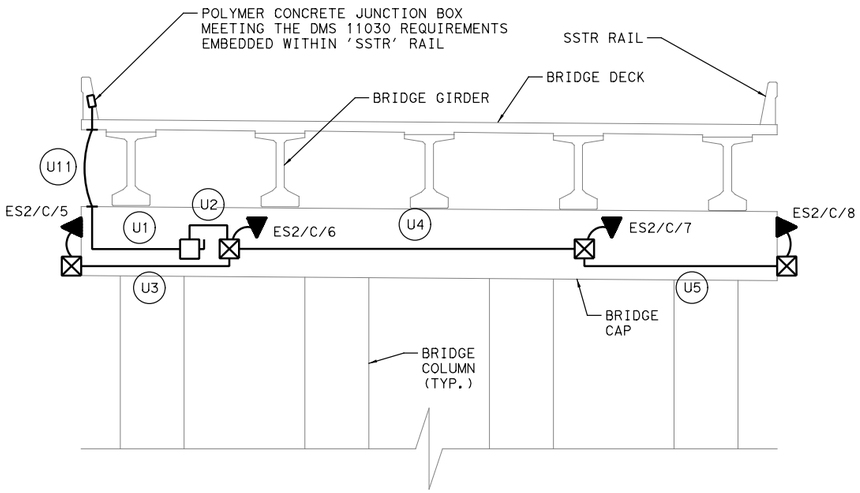

WBFR BENT NO. 3 DETAIL

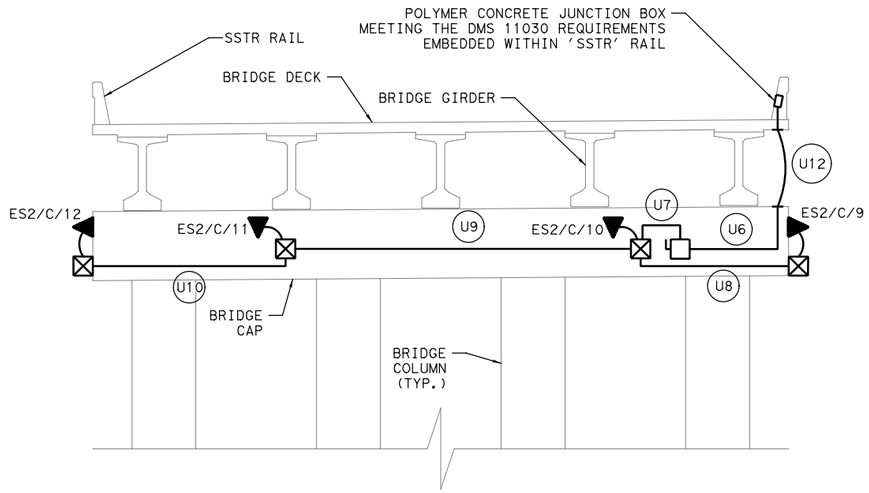

WBFR BENT NO. 4 DETAIL

LEGEND

- TxDOT STANDARD UNDERPASS ILLUMINATION ASSEMBLY, TYPE III DISTRIBUTION, (1) LED LUMINAIRE HEAD
- 30A/2P DISCONNECT SWITCH (NEMA 3R)
- ABOVE GRADE JUNCTION BOX (NEMA 3R)
- CONDUCTORS IN CONDUIT SEGMENT (SURFACE)
- CONDUCTORS IN CONDUIT SEGMENT (EMBEDDED IN STRUCTURE)
- (XX) CONDUCTOR/ CONDUIT SEGMENT NO.
- X/X/X — ILLUMINATION ASSEMBLY DESIGNATION
  - CIRCUIT DESIGNATION
  - ELECTRICAL SERVICE DESIGNATION

GENERAL NOTES:

1. LOCATION OF ILLUMINATION EQUIPMENT MAY BE FIELD ADJUSTED AS DIRECTED BY THE INSPECTING ENGINEER TO ACCOMODATE ROADWAY FEATURES AND AVOID UTILITY CONFLICTS.
2. CONTACT POWER CO. WITH 2-WEEKS NOTICE FOR ELECTRICAL SERVICE CONNECTIONS.
3. THE CONSTRUCTION OF ILLUMINATION SHALL MEET ALL TxDOT STANDARDS/ SPECS, POWER COMPANY STANDARDS, N.E.C., CITY OF GEORGETOWN STANDARDS, UNLESS OTHERWISE NOTED.
4. VERIFY WITH THE UTILITY COMPANY(S) THE EXACT LOCATION OF EXISTING UNDERGROUND UTILITIES PRIOR TO CONSTRUCTION TO AVOID CONFLICT OR DAMAGE TO THE UTILITIES.
5. ABOVE GRADE NEMA 3R JUNCTION BOXES SHALL NOT BE PAID FOR DIRECTLY, BUT SHALL BE SUBSIDIARY TO ITEM 618, "CONDUIT" BID ITEM.
6. PROVIDE CONDUIT EXPANSION AND DEFLECTION COUPLING WHERE UNDERGROUND CONDUIT SEGMENT ENTERS THE BRIDGE STRUCTURE AND TRANSITIONS TO A BRIDGE EMBEDDED CONDUIT SEGMENTS. COUPLING SHALL ALLOW FOR A MAXIMUM OF 4" HORIZONTAL AND VERTICAL MOVEMENT.

STATE OF TEXAS
PAUL K. DAVILA
101043
LICENSED
PROFESSIONAL ENGINEER
22 MAR 2018

NO.	DATE	REVISION	APPROVED

WILLIAMSON COUNTY

HDR Engineering, Inc.
810 Hesters Crossing, Suite 120
Round Rock, Texas 78681
Texas Registered Engineering Firm F-754

SOUTHWEST BYPASS
SEGMENT 2

ILLUMINATION DETAILS

SHEET 1 OF 2

DESIGN	FED.RD. DIV.NO.	FEDERAL AID PROJECT NO.		HIGHWAY NO.
GM	6			
GRAPHICS	STATE	DISTRICT	COUNTY	SHEET NO.
GM	TEXAS	AUS	WILLIAMSON	
CHECK	CONTROL	SECTION	JOB	203
PD	2103	01	034	
CHECK				
PD				

PLOT DRIVER: TXDOT_PDF_BW.pltcfg PENTABLE: S2-0000020170718.tbl
USER: GUMARTIN DATE: 3/22/2018 TIME: 3:26:54 PM SCALE: 1:1
FILE: \

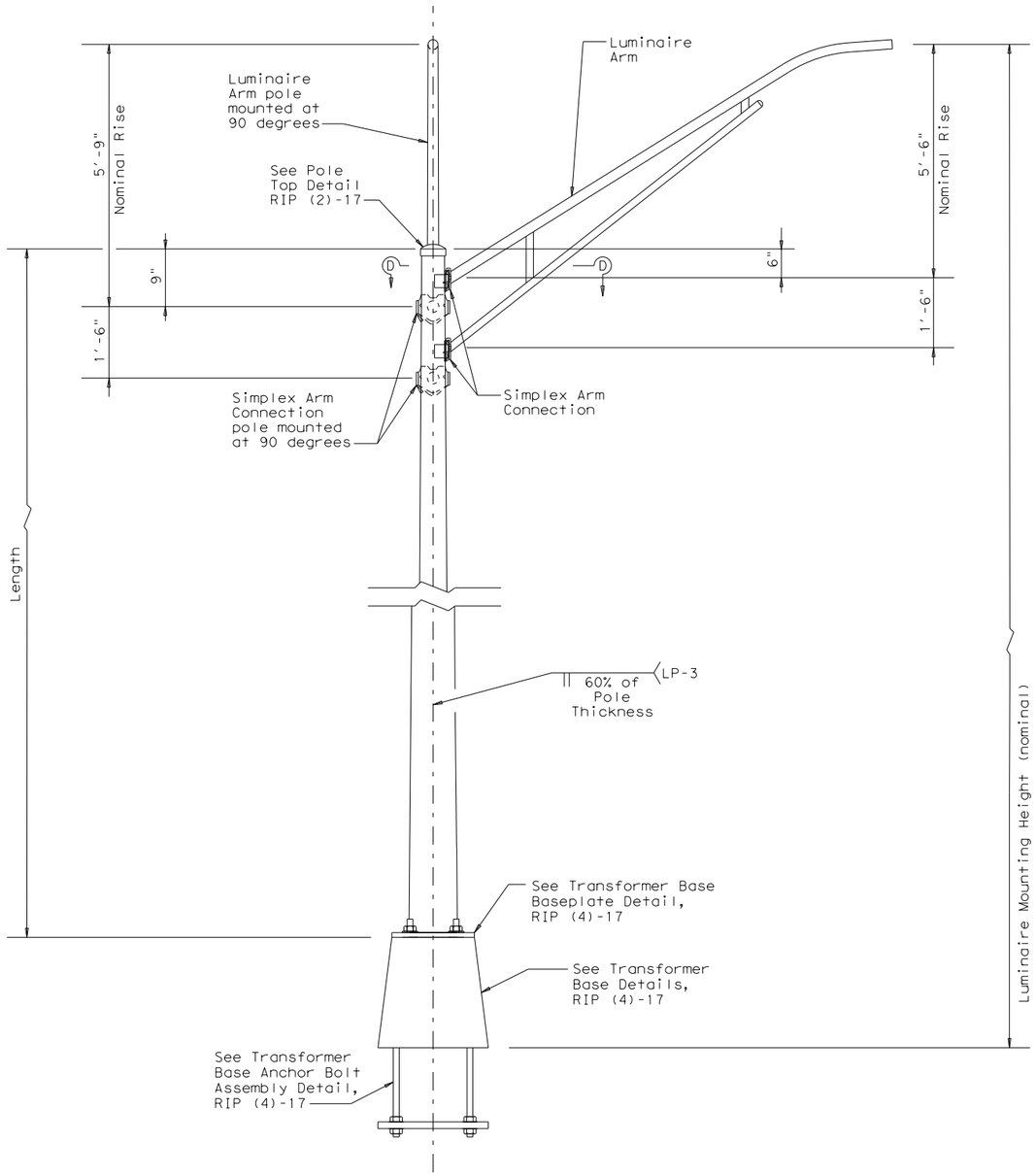

TRANSFORMER BASE POLE WITH TWO LUMINAIRE HEADS MOUNTED AT 90 DEGREES

TRANSFORMER BASE POLE					
Luminaire Mounting Height (Nominal) (ft)	Base Diameter (in)	Top Diameter (in)	Length (ft)	Pole Thickness (in)	Design Moment (K-ft)
50.00	10.00	3.41	43.50	0.1196	30.3

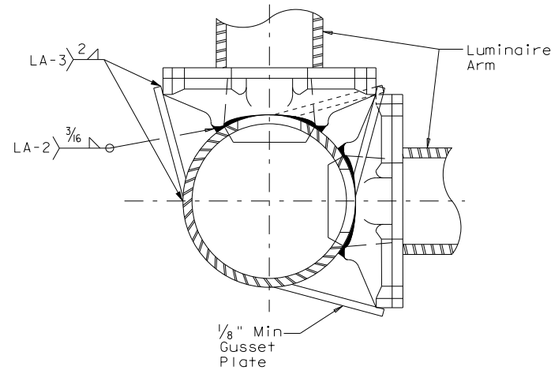

SECTION D-D

GENERAL NOTES:

1. Refer to TxDOT Roadway Illumination Poles Standards RIP (1)-17, RIP (2)-17, RIP (3)-17, and RIP (4)-17 for additional design conformance requirements.

STATE OF TEXAS
PAUL K. DAVILA
101043
LICENSED
PROFESSIONAL ENGINEER
22 MAR 2018

NO.	DATE	REVISION	APPROVED

WILLIAMSON COUNTY TEXAS

HDR Engineering, Inc.
810 Hesters Crossing, Suite 120
Round Rock, Texas 78681
Texas Registered Engineering Firm F-754

SOUTHWEST BYPASS SEGMENT 2

ILLUMINATION DETAILS

SHEET 2 OF 2

DESIGN	FED.RD. DIV.NO.	FEDERAL AID PROJECT NO.		HIGHWAY NO.
GM	6			
GRAPHICS	STATE	DISTRICT	COUNTY	SHEET NO.
GM	TEXAS	AUS	WILLIAMSON	
CHECK	CONTROL	SECTION	JOB	204
PD	2103	01	034	
CHECK				
PD				

PLOT DRIVER: TXDOT_PDF_BW.pltcfg PENTABLE: S2-000002017018.tbl
USER: GMARTIN DATE: 3/22/2018 TIME: 3:26:59 PM SCALE: 1:1
FILE: \

ELECTRICAL SERVICES DATA SHEET											
ELEC. SERVICE NO.	ELECTRICAL SERVICE DESCRIPTION (SEE ED (5),(6), & (9) - 14)	SERVICE CONDUIT SIZE	SERVICE CONDUCTORS NO./SIZE	SAFETY SWITCH AMPS	MAIN CKT. BKR. POLE/AMP	TWO-POLE CONTACTOR AMPS	PANELBD/ LOADCENTER AMP RATING	CIRCUIT NO.	BRANCH CKT. BKR. POLE/AMPS	BRANCH CIRCUIT AMPS	KVA LOAD
'ES1' (EXISTING)	ELC SRV TY A (120/240) 060 (NS) GS (E) SP (O)	EXISTING	EXISTING	N/A	2P/60 (EXISTING)	60 (EXISTING)	N/A	A (EXISTING) B	2P/20 (*) 2P/20 (**)	5.84 3.13	2.15
'ES2'	ELC SRV TY A (240/480) 060 (NS) SS (E) PS (U)	2"	3/#6	N/A	2P/60	60	N/A	C D (FUTURE) SPARE	2P/20 2P/20 2P/20	1.57 5.84	3.56
'ES3'	ELC SRV TY A (240/480) 060 (NS) SS (E) PS (U)	2"	3/#6	N/A	2P/60	60	N/A	E (FUTURE) F (FUTURE) SPARE	2P/20 2P/20 2P/20	5.84 5.84	5.61

(*) DENOTES EXISTING CIRCUIT BREAKER WITH EXISTING CONNECTED LOAD TO REMAIN.
(**) DENOTES NEW CIRCUIT BREAKER WITH NEW CONNECTED LOAD.

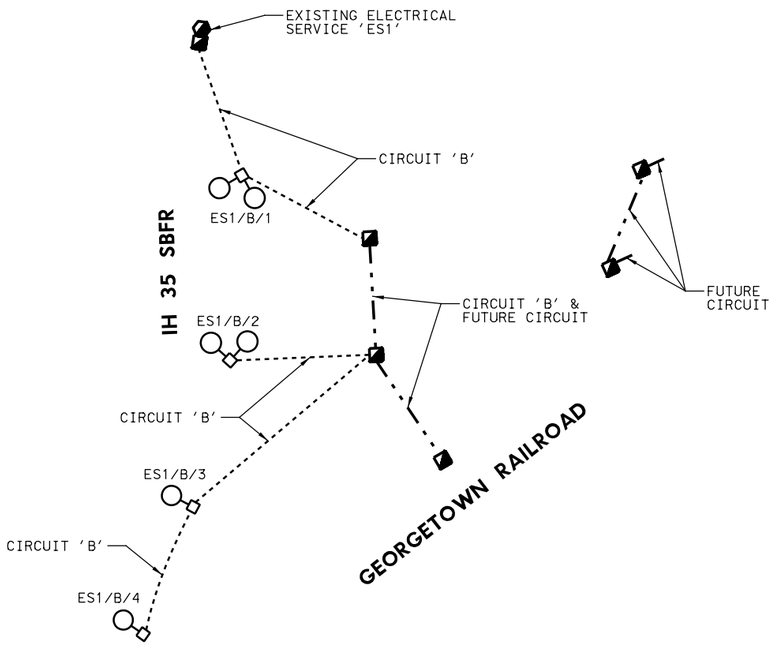

SCHEMATICS - EXISTING ELECTRICAL SERVICE 'ES1'

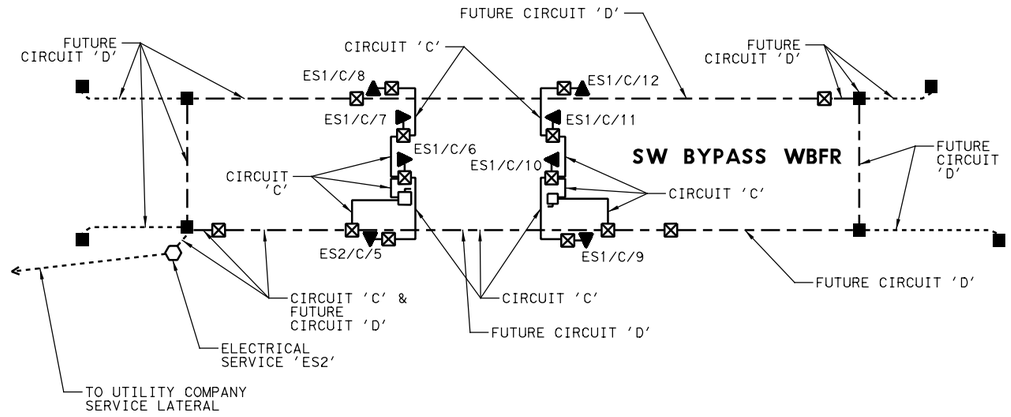

SCHEMATICS - ELECTRICAL SERVICE 'ES2'

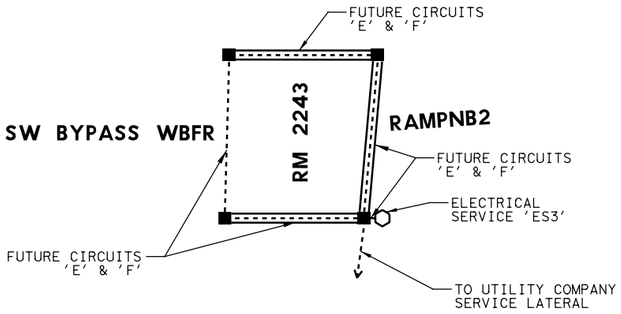

SCHEMATICS - ELECTRICAL SERVICE 'ES3'

LEGEND

- EXISTING ELECTRIAL SERVICE ASSEMBLY TYPE A, 120/240 VOLT, 1 PHASE STEEL POLE TYPE SERVICE
- ELECTRIAL SERVICE ASSEMBLY TYPE A, 240/480 VOLT, 1 PHASE PEDESTAL TYPE SERVICE
- TxDOT STANDARD ILLUMINATION ASSEMBLY, 50' MOUNTING HEIGHT, TRANSFORMER BASE, TYPE IV DISTRIBUTION, (1) LED LUMINAIRE HEAD
- TxDOT STANDARD ILLUMINATION ASSEMBLY, 50' MOUNTING HEIGHT, TRANSFORMER BASE, TYPE IV DISTRIBUTION, (2) LED LUMINAIRE HEADS
- TxDOT STANDARD UNDERPASS ILLUMINATION ASSEMBLY, TYPE III DISTRIBUTION, (1) LED LUMINAIRE, 3000K LUMINAIRE TEMPERATURE
- 30A/2P DISCONNECT SWITCH (NEMA 3R)
- EXISTING BELOW GRADE GROUND BOX (TY A) (NEMA 3R)
- BELOW GRADE GROUND BOX (TY A) (NEMA 3R)
- ABOVE GRADE JUNCTION BOX (NEMA 3R)
- CONDUCTORS IN CONDUIT SEGMENT (SURFACE)
- CONDUCTORS IN CONDUIT SEGMENT (TRENCHED)
- CONDUCTORS IN CONDUIT SEGMENT (BORED)
- CONDUCTORS IN CONDUIT SEGMENT (INSTALLED IN SEGMENT #1 CONSTRUCTION)
- CONDUCTORS IN CONDUIT SEGMENT (EMBEDDED IN STRUCTURE)
- (XX) CONDUCTOR/ CONDUIT SEGMENT NO.
- X/X/X — ILLUMINATION ASSEMBLY DESIGNATION / CIRCUIT DESIGNATION / ELECTRICAL SERVICE DESIGNATION

STATE OF TEXAS
PAUL K. DAVILA
101043
LICENSED PROFESSIONAL ENGINEER
22 MAR 2018

NO.	DATE	REVISION	APPROVED

WILLIAMSON COUNTY

HDR Engineering, Inc.
810 Hesters Crossing, Suite 120
Round Rock, Texas 78681
Texas Registered Engineering Firm F-754

SOUTHWEST BYPASS SEGMENT 2

ILLUMINATION SCHEMATICS

SHEET 1 OF 1

DESIGN	FED.RD. DIV.NO.	FEDERAL AID PROJECT NO.		HIGHWAY NO.
GM	6			
GRAPHICS GM	STATE	DISTRICT	COUNTY	SHEET NO.
CHECK PD	TEXAS	AUS	WILLIAMSON	
CHECK PD	CONTROL 2103	SECTION 01	JOB 034	205

PLOT DRIVER: TXDOT_PDF_BW.pltcfg PENTABLE: S2-0000020170718.tbl
USER: GUMARTIN DATE: 3/22/2018 TIME: 3:27:44 PM SCALE: 1:100
FILE: \

ROADWAY ILLUMINATION ASSEMBLY NOTES

1. Details apply to roadway lighting installations bid or referenced under Item 610, "Roadway Illumination Assemblies." Provide, furnish, and install all other materials not shown on the plans which may be necessary for complete and proper construction. Where manufacturers provide warranties or guarantees as a customary trade practice, furnish to the State such warranties or guarantees.

2. The locations of poles and fixtures may be shifted by the Engineer to accommodate local conditions. Install or remove poles and luminaires located near overhead electrical lines using established industry and utility safety practices and in accordance with laws governing such work. Consult with the appropriate utility company prior to beginning such work.

3. Provide new and unused materials. Ensure that all materials and installations comply with the applicable articles of the National Electrical Code (NEC),TxDOT standards and specifications, National Electrical Manufacturers Association (NEMA),and are listed by Underwriters Laboratories (UL) or a Nationally Recognized Testing Lab (NRTL). NRTLs such as Canadian Standard Association, Intertek Testing Services NA Inc., or FM Approvals LLC can be considered equivalent to UL. Faulty fabrication or poor workmanship in any material, equipment, or installation is justification for rejection.

4. Provide Roadway Illumination Light Fixtures as per TxDOT Departmental Material Specification (DMS) 11010, Item 610, and as shown on the Material Producers List (MPL) for Roadway Illumination and Electrical Supplies.

5. Fabricate steel roadway illumination poles in accordance with Roadway Illumination Poles (RIP) standards and Item 610. Poles fabricated according to RIP standards do not require shop drawing submittals.

   a. Alternate designs to RIP standards or the use of aluminum to fabricate poles will require the submission of shop drawings electronically. For instructions on submitting shop drawings electronically see "Guide to Electronic Shop Drawing Submittal" on the TxDOT web site.

   b. Limitations on use of the RIP standard: The RIP standard details were developed for installations in locations where the 3-second gust basic maximum wind speed is 110 mph, and where the elevation of the base of the pole is less than (i.e. not more than) 25′ above the elevation of the surrounding terrain, in accordance with the "AASHTO Standard Specifications for Structural Supports for Highway Signs, Luminaires and Traffic Signals," 4th Edition (2001) (AASHTO Design Specifications). For poles to be installed in regions where the maximum basic wind speed exceeds 110 mph or to be mounted more than 25′ above the surrounding terrain, provide poles meeting the following requirements:

      i. Submittals. Following the electronic shop drawing submittal process (see Guide to Electronic Shop Drawing Submittal on the TxDOT web site), submit to the Engineer for approval fabrication drawings and calculations for the poles, sealed by a Texas licensed professional engineer (P.E.).

      ii. Luminaire Structural Support Requirements. Provide light poles, arms, and anchor bolt assemblies with a 25 year design life to safely resist dead loads, ice loads and the required basic wind speeds at the location of installation in accordance with the 6th edition (2013) of the AASHTO Design Specifications. For transformer base poles, include transformer base and connecting hardware in calculations and shop drawing submittals. Structurally test all transformer bases to resist the theoretical plastic moment capacity of the pole. Submit certification of the plastic moment load test and FHWA breakaway requirement test of the model of base being furnished with the shop drawings. Show breakaway base model number, manufacturer's name, and logo on shop drawings. Include on manufacturer's shop drawings the ASTM designations for all materials to be used.

6. For both transformer and shoe-base type illumination poles, provide and install double-pole breakaway fuse holders as specified by DMS-11040. Breakaway fuse holders are listed on the MPL for Roadway Illumination and Electrical Supplies under Items 610 & 620. Provide 10 amp time delay fuses for breakaway connectors in light poles, or inside the light fixture for underpass luminaires. In each pole, connect luminaires to the breakaway connector with continuous stranded 12 AWG copper conductors as listed on the MPL. Bond all equipment grounding conductors together and to the ground lug in the transformer base or hand hole.

7. Tighten anchor bolts for shoe base, concrete traffic barrier base, and bridge mount roadway illumination poles, in accordance with Item 449.

8. Install T-Base with following procedure:

   a. Anchor Bolt Tightening.

      i. Coat the threads of the anchor bolts with electrically conductive lubricant.

      ii. Place the T-base over the anchor bolts. Foundation must be level and flat. The maximum permissible gap under any one corner of the t-base is 1/8" before nuts are tightened.

      iii. Coat the bearing surfaces of the nuts and washers with electrically conductive lubricant. Install (1) 1/2" hold down washer, (1) lock washer, and (1) nut on each anchor bolt. Turn the nuts onto the bolts so that each is hand-tight against the washer.

      iv. Using a torque wrench, tighten each nut to 150 ft-lb. Uniform contact is required between the foundation and the T-base in the corner regions of the T-base, and all corner gaps must be closed after applying torque. If a gap still exists after torquing to 150 ft-lbs, continue torquing each bolt incrementally until gap is closed or maximum allowable torque of 250 ft. pound is reached, whichever comes first. If 250 ft-lbs is not enough to close the gap the foundation must be leveled. Gaps along the straight sides of the T-bases and the foundation are permissible. Ensure that no high point of contact occurs between the straight sides of the T-base and the foundation.

      v. Check top of T-base for level. If not level then foundation must be leveled.

   b. Top Bolt Procedure

      i. Erect pole over T-base with crane. Coat bolts, nuts, washers, and lock washers with electrically conductive lubricant.

      ii. Install bolts and 1/2" connecting washers from the inside of the T-base, thread up through the pole base. Install flat washers, lock washers and nuts snug tight according to Item 447, "Structural Bolting."

      iii. Tighten each nut to 150 ft-lb. using a torque wrench.

   c. Level and Plumb

      i. Ensure pole is plumb and mast arm is perpendicular to the roadway according to plans to within 5 degrees.

9. Construct luminaire pole foundations in accordance with Item 416, "Drilled Shaft Foundations," and TxDOT standard sheet RID(2).

10. Provide and install underpass luminaires in accordance with Item 610, DMS-11010, and TxDOT standard sheet RID(3). Typical luminaire size for underpass luminaires is 150W HPS or 150W EQ LED.

11. Mount luminaires on arms level as shown by the luminaire level indicator.

12. Orient luminaires perpendicular to the roadway intended to be lit unless otherwise shown on the plans.

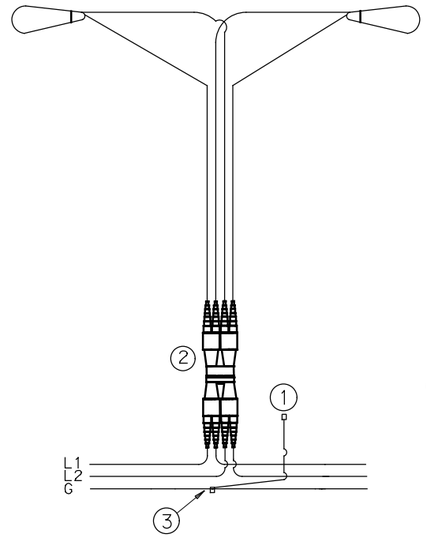

L1,L2 = Hot Conductors
G = Grounding Conductor

TYPICAL WIRING DIAGRAM

LUMINAIRES SERVED AT 480V ON 240/480 VOLT SERVICE OR LUMINAIRES SERVED AT 240V FOR 120/240 VOLT SERVICE.

NOTES:

(1) Use 1/2 in.-13 UNC threaded, copper or tin-plated copper, pole bonding connector, sized appropriately for conductors, bonded to T-base, or use ground lug in handhole as available.

(2) Use pre-qualified two-pole breakaway connectors for all luminaire pole installations. For luminaires fed by a circuit with a neutral conductor, use double pole breakaway connectors with the neutral side unfused and marked white.

(3) Split Bolt or other connector.

Texas Department of Transportation — Traffic Operations Division Standard

ROADWAY ILLUMINATION DETAILS

RID(1)-17

FILE: rid1-17.dgn	DN:	CK:	DW:	CK:
©TxDOT January 2007	CONT	SECT	JOB	HIGHWAY
REVISIONS	2103	01	034	
7-17	DIST	COUNTY		SHEET NO.
	AUS	WILLIAMSON		266

72A

DISCLAIMER:
The use of this standard is governed by the "Texas Engineering Practice Act". No warranty of any kind is made by TxDOT for any purpose whatsoever. TxDOT assumes no responsibility for the conversion of this standard to other formats or for incorrect results or damages resulting from its use.

DATE: 3/22/2018 3:28:10 PM
FILE: c:\pwworking\d01\d0916357\RID(1)-17.dgn

DISCLAIMER:
The use of this standard is governed by the "Texas Engineering Practice Act". No warranty of any kind is made by TxDOT for any purpose whatsoever. TxDOT assumes no responsibility for the conversion of this standard to other formats or for incorrect results or damages resulting from its use.

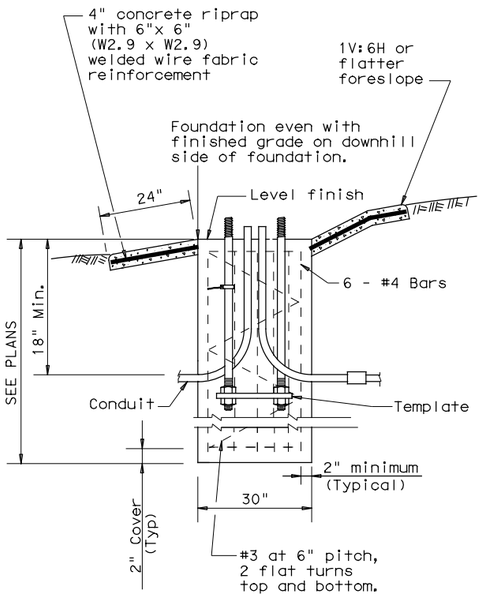

SECTION A-A
SHOWING SLOPED GRADE

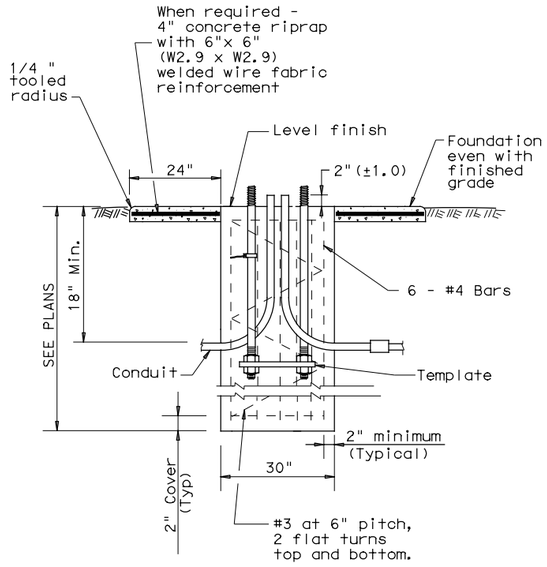

SECTION A-A
SHOWING CONSTANT GRADE

TABLE 1
ANCHOR BOLTS

POLE MOUNTING HEIGHT	BOLT CIRCLE		ANCHOR BOLT SIZE
	Shoe Base	T-Base	
<40 ft.	13 in.	14 in.	1 in. x 30 in.
40-50 ft.	15 in.	17 ¼ in.	1 ¼ in. x 30 in.

TABLE 2
RECOMMENDED FOUNDATION LENGTHS (See note 1)

MOUNTING HEIGHT	TEXAS CONE PENETROMETER N Blows/ft		
	10	15	40
≤20 ft.	6′	6′	6′
>20 ft. to 30 ft.	8′	6′	6′
>30 ft. to 40 ft.	8′	8′	6′
>40 ft. to 50 ft.	10′	8′	6′

TABLE 3
PAY QUANTITY OF RIPRAP PER FOUNDATION (Install only when shown on the plans)

Foundation Diameter	RIPRAP DIAMETER	RIPRAP (CONC) (CL B)
30 in.	78 in.	0.35 CY

GENERAL NOTES:

1. "Recommended Foundation Lengths" table is for information purposes only. Foundation lengths shall be as shown on the plans, or as directed by the Engineer. Foundations will be paid for under Item 416, "Drilled Shaft Foundations," unless otherwise shown on the plans.
2. Erect roadway illumination assembly poles plumb and true. Form and level the top 6" of the foundation so the pole will be plumb. Use leveling nuts to plumb shoe base poles. Do not use shims or leveling nuts under transformer bases. Do not grout between baseplate and the foundation.
3. Ensure Class 2A and 2B fit for anchor bolts and nuts. Tap and chase nuts after galvanizing. Anchor bolt body with rolled threads need not be full size.
4. Use appropriate class of concrete as specified in Items 416 and 432. Concrete for riprap may be upgraded to Class C at no extra cost to the Department.
5. Place riprap around the foundation when called for elsewhere in the plans. Riprap will be paid for under Item 432.
6. Locate breakaway roadway illumination assemblies as shown in the placement table, unless otherwise dimensioned on the plans. Protect non-breakaway illumination assemblies from vehicular impact (i.e. 2.5 ft. behind guard rail or mounted on traffic barrier), or located outside the clear zone, except that 2.5 ft. from curb face is minimum desired for light poles on city streets, 45 mph or less. See Roadway Design Manual for further information.
7. Use 4 hold down and 4 connecting washers on transformer base poles as recommended by the manufacturer and supplied with base.
8. Install a minimum of 2 conduits in each foundation. See lighting layout sheets for locations of foundations with more than 2 conduits. Cap unused conduits in foundations on both ends.
9. Conduit location in foundations is critical for breakaway devices. Place conduits 2 in. apart on centerline as shown.
10. Bond anchor bolt to rebar cage with #6 bare stranded copper conductor. Use listed mechanical connectors rated for embedment in concrete. The bonded steel in the foundation creates a concrete encased grounding electrode which replaces the ground rod.
11. Use riprap on T-base foundations that are located on sloped grades.

TABLE 4
BREAKAWAY POLE PLACEMENT (See note 6)

ROADWAY FUNCTIONAL CLASSIFICATION	** POLE OFFSET (DISTANCE TO FACE OF TRANSFORMER BASE)
Freeway Mainlanes (roadway with full control of access)	15 ft. (minimum and typical) from lane edge
All curbed, 45 mph or less design speed	2.5 ft. minimum (15 ft. desirable) from curb face
All others	10 ft. minimum*(15 ft. desirable) from lane edge

* or as close to ROW line as is practical

** provide 2/5 of the luminaire mounting height behind the pole for "falling area" to prevent encroachment on the other travel lanes. See design guidelines.

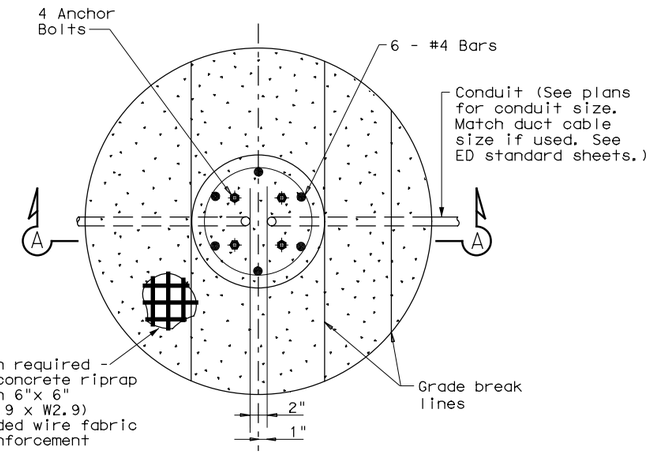

FOUNDATION DETAIL

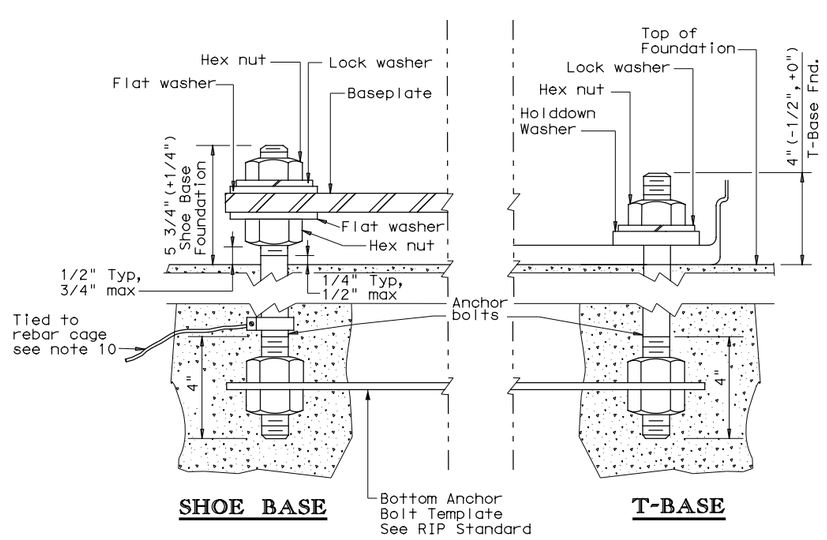

ANCHOR BOLT DETAIL

Texas Department of Transportation

Traffic Operations Division Standard

ROADWAY ILLUMINATION DETAILS
(RDWY ILLUM FOUNDATIONS)
RID(2)-17

FILE: rid2-17.dgn	DN:	CK:	DW:	CK:
© TxDOT January 2007	CONT	SECT	JOB	HIGHWAY
REVISIONS 1-11 7-17	2103	01	034	
	DIST	COUNTY		SHEET NO.
	AUS	WILLIAMSON		207

72B

DATE: 3/22/2018 3:28:13 PM
FILE: c:\pwworking\dal\d0916357\RID(2)-17.dgn

DISCLAIMER:
The use of this standard is governed by the "Texas Engineering Practice Act". No warranty of any kind is made by TxDOT for any purpose whatsoever. TxDOT assumes no responsibility for the conversion of this standard to other formats or for incorrect results or damages resulting from its use.

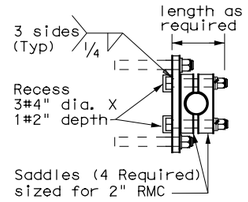

SECTION A-A

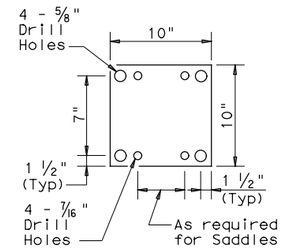

MOUNTING PLATE
(ASTM A-36 or better)

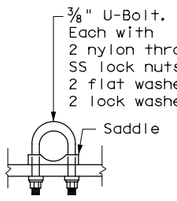

CLAMP DETAIL
(2 Req'd)

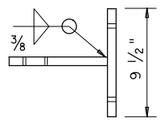

PLAN VIEW

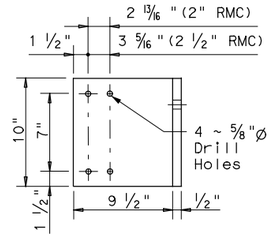

FRONT

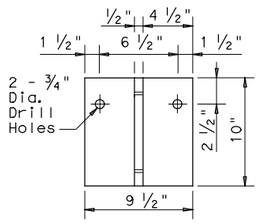

SIDE

BRACKET DETAIL
Make from 1/2" plate (ASTM A-36 or better)

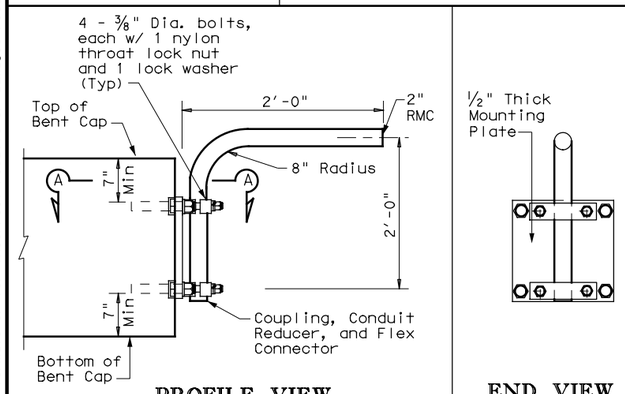

PROFILE VIEW
Or as Required
(See Note A.3)

END VIEW

UNDERPASS LIGHTING ARM

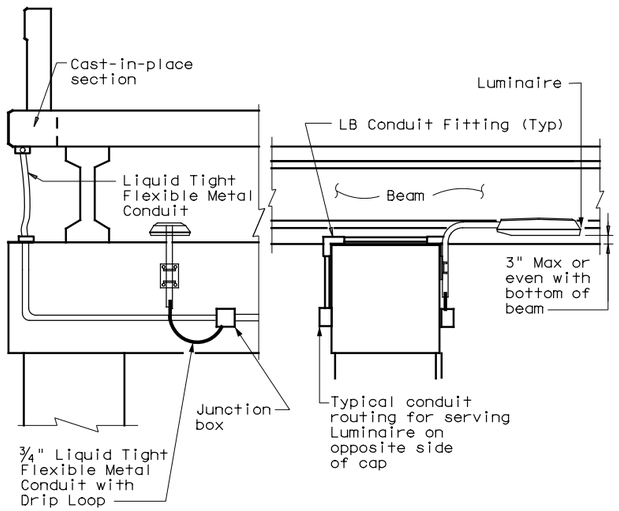

IN RD IL AM (U/P)(TY 1)
If bridge has pre-cast panels under deck, run circuit under deck edge.

UNDERPASS LIGHTING TYPE 1

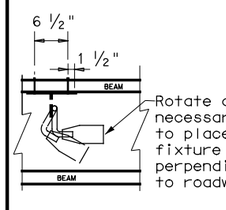

PLAN VIEW

FIXTURE ORIENTATION

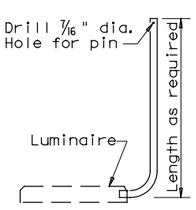

SIDE

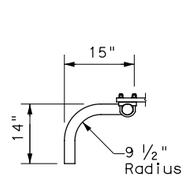

PLAN VIEW

ARM DETAIL

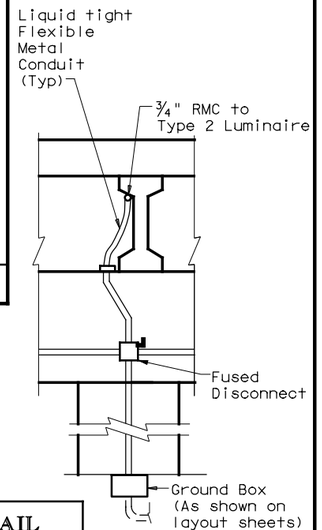

3 - No. 12 XHHW in 3/4" RMC for Branch Circuit runs from fused disconnect to underpass Luminaires

CONDUIT DETAIL

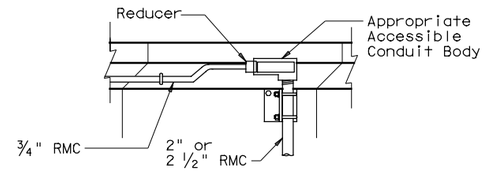

CONDUIT CONNECTION PROFILE

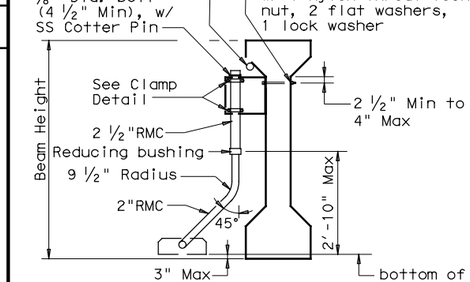

FRONT
(Beam height greater than 54")

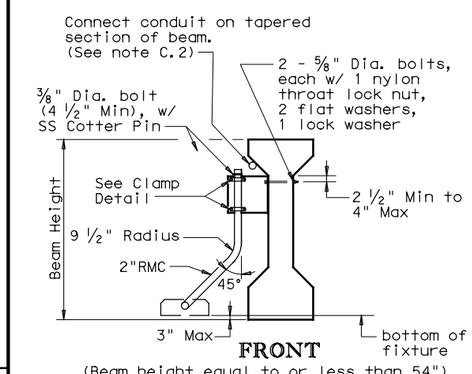

FRONT
(Beam height equal to or less than 54")

IN RD IL AM (U/P)(TY 2)

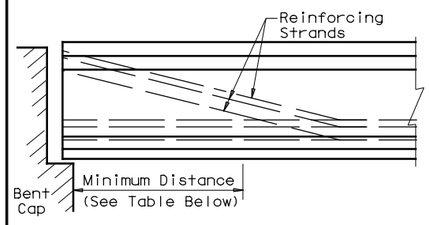

LOCATION OF UNDERPASS LIGHT MOUNTING BRACKET

TABLE 5
LOCATION OF UNDERPASS LIGHT MOUNTING BRACKET TABLE

SPAN LENGTH	MINIMUM DISTANCE
≤ 50'	10'-0"
50'- 70'	15'-0"
70'- 90'	20'-0"
> 90'	25'-0"

UNDERPASS LIGHTING TYPE 2

GENERAL NOTES:

A. ALL 150 watt HPS and 150 watt equivalent LED Luminaires

1. Luminaire locations, conduit and conductor sizes and routing are typical and diagrammatic only. See project layout sheets for specific details.
2. Conduit will be paid for under Item 618, "Conduit" and conductors will be paid for under Item 620, "Electrical Conductors," unless otherwise shown on the plans.
3. Adjust conduit in saddles to place fixture height and orientation as required. See fixture orientation detail and plans. Where practicable, place luminaires so the bottom of luminaire is above the bottom of the beam, maximum of 3 in. (See detail UNDERPASS LIGHTING ARM TYPE 2)
4. Except as noted, galvanize all structural steel and exposed bolts, nuts, and washers in accordance with Item 445 "Galvanizing".
5. Fabrication of brackets and support arms will not be paid for directly but is subsidiary to Item 610, "Roadway Illumination Assemblies."
6. Install a heavy duty NEMA 3R fused disconnect or breaker enclosure rated at 30 amps and 480 volts to switch underpass luminaires as shown on plans, with at least one per bridge circuit. Install 20 amp time-delay fuses or inverse-time circuit breakers. Mount disconnect or breaker enclosure 10 ft.(min) above grade on columns or bent caps as approved by the Department. Modify disconnect to allow padlocking in the "ON" and "OFF" positions. Padlocks and disconnect switches or circuit breakers for underpass fixtures will not be paid for directly but are subsidiary to the various bid items of the contract.
7. Conduit on columns, caps, and slab is shown surface mounted. For new columns and caps, embed PVC conduit in concrete. Bond and ground metal junction boxes and conduit.

B. TYPE 1

1. Provide 2 in. rigid metal conduit (2.375" O.D., 0.146" wall) for Type 1 arm shaft.
2. Use 3/8 in. stainless steel bolt or stud non-epoxy type expansion anchors for concrete for Type 1 mounting. Except as noted, provide an allowable 2650 lbs minimum pull-out force (after consideration of adjustment factors for edge distance and bolt spacing) for each anchor. Install each anchor to the embedment depth recommended by the manufacturer.
3. Attach conduit to plate with 4 saddles, four - 3/8 in. diameter bolts, nylon throat lock nuts, and lock washers.

C. TYPE 2

1. Provide 2 in. rigid metal conduit (2.375" O.D., 0.146" wall) or provide a combination of 2 1/2 in. (2.875" O.D., 0.193" wall) and 2 in. (2.375" O.D., 0.146" wall) rigid metal conduits with a reducing bushing as beam height stipulated for Type 2 arm shaft. Field cutting and threading will be permitted. Paint cut and threaded areas with zinc rich paint after conduit is connected to adjacent fitting.
2. Connecting conduit may be strapped to tapered section only of precast beams as shown. Anchor as approved by the Engineer. Maximum anchor depth is 1 in.
3. Indiscriminate drilling into precast concrete beams may result in reduced beam strength. Use drilling location and method as directed by the Engineer. See Location of Underpass Lighting Mounting Bracket detail. The locations shown in the table are such that reinforcing strands will not be damaged.

Texas Department of Transportation — Traffic Operations Division Standard

ROADWAY ILLUMINATION DETAILS
(UNDERPASS LIGHT FIXTURES)

RID(3)-17

FILE: rid3-17.dgn	DN: TxDOT	CK: TxDOT	DW: TxDOT	CK: TxDOT
©TxDOT May 2013	CONT	SECT	JOB	HIGHWAY
REVISIONS	2103	01	034	
2-14 7-17	DIST	COUNTY		SHEET NO.
	AUS	WILLIAMSON		288

72C

DATE: 3/22/2018 3:28:17 PM
FILE: c:\pwworking\dal\d0916357\RID(3)-17.dgn

4/12/2018 7:20 AM

DISCLAIMER:
The use of this standard is governed by the "Texas Engineering Practice Act". No warranty of any kind is made by TxDOT for any purpose whatsoever. TxDOT assumes no responsibility for the conversion of this standard to other formats or for incorrect results or damages resulting from its use.

SHIPPING PARTS LIST - POLES AND LUMINAIRE ARMS

Nominal Mounting Ht. (ft)	Shoe Base Designation Pole	A1	A2	Luminaire	Quantity	T-Base Designation Pole	A1	A2	Luminaire	Quantity	CSB/SSCB Mounted Designation Pole	A1	A2	Luminaire	Quantity
20	(Type SA 20 S - 4)			(150W EQ) LED		(Type SA 20 T - 4)			(150W EQ) LED						
	(Type SA 20 S - 4 - 4)			(150W EQ) LED		(Type SA 20 T - 4 - 4)			(150W EQ) LED						
30	(Type SA 30 S - 4)			(250W EQ) LED		(Type SA 30 T - 4)			(250W EQ) LED		(Type SP 28 S - 4)			(250W EQ) LED	
	(Type SA 30 S - 4 - 4)			(250W EQ) LED		(Type SA 30 T - 4 - 4)			(250W EQ) LED		(Type SP 28 S - 4 - 4)			(250W EQ) LED	
	(Type SA 30 S - 8)			(250W EQ) LED		(Type SA 30 T - 8)			(250W EQ) LED		(Type SP 28 S - 8)			(250W EQ) LED	
	(Type SA 30 S - 8 - 8)			(250W EQ) LED		(Type SA 30 T - 8 - 8)			(250W EQ) LED		(Type SP 28 S - 8 - 8)			(250W EQ) LED	
40	(Type SA 40 S - 4)			(250W EQ) LED		(Type SA 40 T - 4)			(250W EQ) LED		(Type SP 38 S - 4)			(250W EQ) LED	
	(Type SA 40 S - 4 - 4)			(250W EQ) LED		(Type SA 40 T - 4 - 4)			(250W EQ) LED		(Type SP 38 S - 4 - 4)			(250W EQ) LED	
	(Type SA 40 S - 8)			(250W EQ) LED		(Type SA 40 T - 8)			(250W EQ) LED		(Type SP 38 S - 8)			(250W EQ) LED	
	(Type SA 40 S - 8 - 8)			(250W EQ) LED		(Type SA 40 T - 8 - 8)			(250W EQ) LED		(Type SP 38 S - 8 - 8)			(250W EQ) LED	
	(Type SA 40 S - 10)			(250W EQ) LED		(Type SA 40 T - 10)			(250W EQ) LED		(Type SP 38 S - 10)			(250W EQ) LED	
	(Type SA 40 S - 10 - 10)			(250W EQ) LED		(Type SA 40 T - 10 - 10)			(250W EQ) LED		(Type SP 38 S - 10 - 10)			(250W EQ) LED	
	(Type SA 40 S - 12)			(250W EQ) LED		(Type SA 40 T - 12)			(250W EQ) LED		(Type SP 38 S - 12)			(250W EQ) LED	
	(Type SA 40 S - 12 - 12)			(250W EQ) LED		(Type SA 40 T - 12 - 12)			(250W EQ) LED		(Type SP 38 S - 12 - 12)			(250W EQ) LED	
50	(Type SA 50 S - 4)			(400W EQ) LED		(Type SA 50 T - 4)			(400W EQ) LED		(Type SP 48 S - 4)			(400W EQ) LED	
	(Type SA 50 S - 4 - 4)			(400W EQ) LED		(Type SA 50 T - 4 - 4)			(400W EQ) LED		(Type SP 48 S - 4 - 4)			(400W EQ) LED	
	(Type SA 50 S - 8)			(400W EQ) LED		(Type SA 50 T - 8)			(400W EQ) LED		(Type SP 48 S - 8)			(400W EQ) LED	
	(Type SA 50 S - 8 - 8)			(400W EQ) LED		(Type SA 50 T - 8 - 8)			(400W EQ) LED		(Type SP 48 S - 8 - 8)			(400W EQ) LED	
	(Type SA 50 S - 10)			(400W EQ) LED		(Type SA 50 T - 10)			(400W EQ) LED		(Type SP 48 S - 10)			(400W EQ) LED	
	(Type SA 50 S - 10 - 10)			(400W EQ) LED		(Type SA 50 T - 10 - 10)			(400W EQ) LED		(Type SP 48 S - 10 - 10)			(400W EQ) LED	
	(Type SA 50 S - 12)			(400W EQ) LED		(Type SA 50 T - 12)			(400W EQ) LED		(Type SP 48 S - 12)			(400W EQ) LED	
	(Type SA 50 S - 12 - 12)			(400W EQ) LED		(Type SA 50 T - 12 - 12)			(400W EQ) LED		(Type SP 48 S - 12 - 12)			(400W EQ) LED	

OTHER Designation Pole	A1	A2	Luminaire	Quantity

DISCLAIMER:
The use of this standard is governed by the "Texas Engineering Practice Act". No warranty of any kind is made by TxDOT for any purpose whatsoever. TxDOT assumes no responsibility for the conversion of this standard to other formats or for incorrect results or damages resulting from its use.

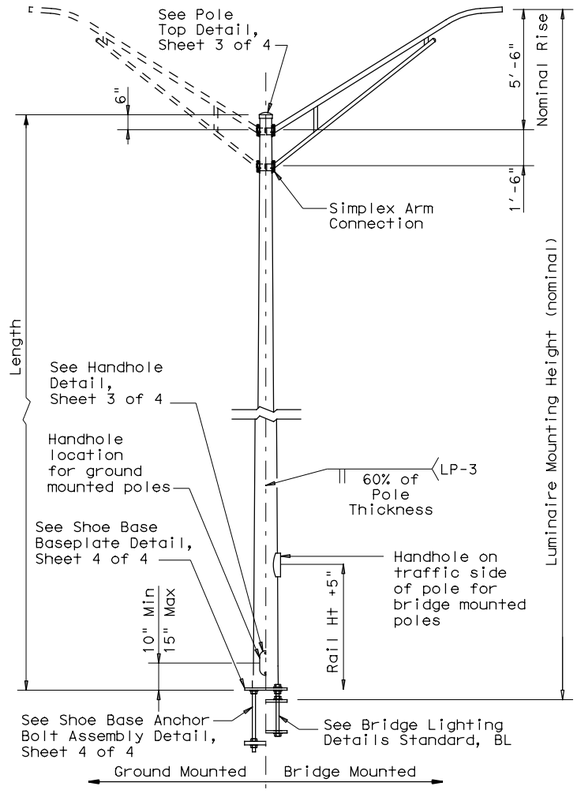

SHOE BASE POLE

SHOE BASE POLE					
Luminaire Mounting Height (Nominal) (ft)	Base Diameter (in)	Top Diameter (in)	Length (ft)	Pole Thickness (in)	Design Moment (K-ft)
20.00	7.00	4.90	15.00	0.1196	7.1
30.00	7.50	4.00	25.00	0.1196	13.2
31.00-39.00	8.00	4.36-3.24	26.00-34.00	0.1196	20.7
40.00	8.50	3.60	35.00	0.1196	20.7
50.00	10.50	4.20	45.00	0.1196	30.3

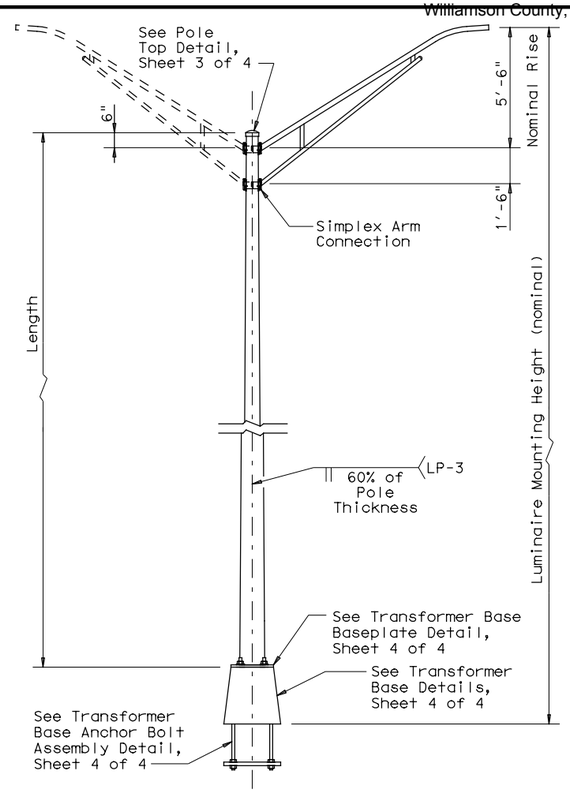

TRANSFORMER BASE POLE

TRANSFORMER BASE POLE					
Luminaire Mounting Height (Nominal) (ft)	Base Diameter (in)	Top Diameter (in)	Length (ft)	Pole Thickness (in)	Design Moment (K-ft)
20.00	7.00	5.11	13.50	0.1196	7.1
30.00	7.50	4.21	23.50	0.1196	13.2
31.00-39.00	8.00	4.57-3.45	24.50-32.50	0.1196	20.7
40.00	8.50	3.81	33.50	0.1196	20.7
50.00	10.00	3.41	43.50	0.1196	30.3

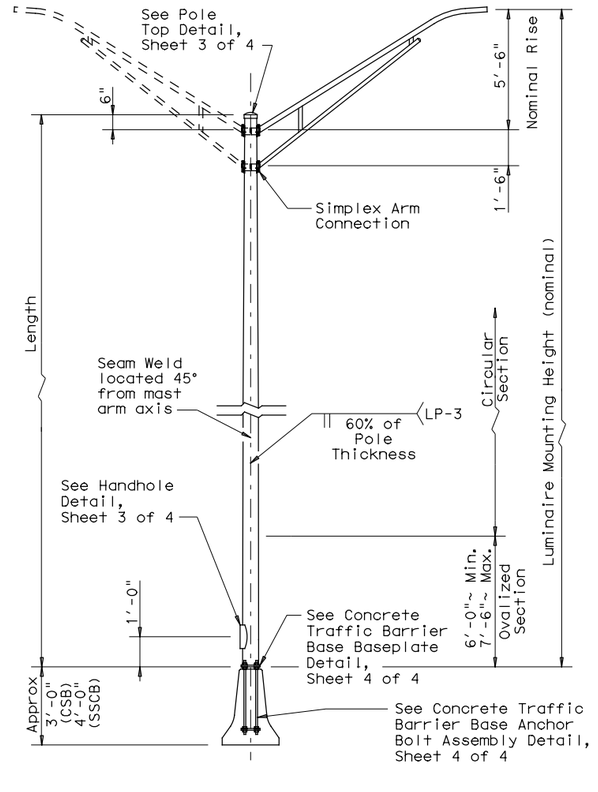

CONCRETE TRAFFIC BARRIER BASE POLE

CONCRETE TRAFFIC BARRIER BASE POLE (CSB/SSCB)						
Luminaire Mounting Height (Nominal) (ft)	Base ② Diameter (in)	Top Diameter (in)	Length (ft)	Pole Thickness (in)	Design Moment (K-ft)	
					About ℄ of Rail	Perp. to Rail
28.00	9.00	5.78	23.00	0.1196	10.3	13.2
38.00	9.00	4.38	33.00	0.1196	16.6	20.8
48.00	10.50	4.48	43.00	0.1345	25.1	30.5

MATERIAL DATA

COMPONENT	ASTM DESIGNATION	MIN. YIELD (ksi)
Pole Shaft (0.14"/ft. Taper)	A572 Gr 50, A595 Gr A, A1011 HSLAS Gr 50 Cl 2 ③, or A1008 HSLAS Gr 50 Cl 2	50
Base Plate and Handhole Frame	A572 Gr.50, or A36	36
T-Base Connecting Bolts	A325 ①	92
Anchor Bolts	F1554 Gr 55, A193-B7 or A321	55 105
Anchor Bolt Templates	A36	36
Heavy Hex (H.H.) Nuts	A194 Gr 2H, or A563 Gr DH	
Flat Washers	F436	

NOTES:

① Lubricate in the field if necessary instead of the requirements in ASTM A325.

② Before ovalized as shown on Concrete Traffic Barrier Base Baseplate details, Sheet 4 of 4.

③ A1011 SS Gr 50 may be used instead of HSLAS, provided the material meets the elongation requirements for HSLAS.

POLE ASSEMBLY FABRICATION TOLERANCES TABLE

DIMENSION	TOLERANCE
Shaft length	+1"
I.D. of outside piece of slip fitting pieces	+1/8", -1/16"
O.D. of inside piece of slip fitting pieces	+1/32", -1/8"
Shaft diameter: other	+3/16"
Out of "round"	1/4"
Straightness of shaft	±1/4" in 10 ft
Twist in shaft	4° in 50 ft
Perpendicular to baseplate	1/8" in 24"
Pole centered on baseplate	±1/4"
Location of Attachments	±1/4"
Bolt hole spacing	±1/16"

GENERAL NOTES:

1. Designs conform to 2001 AASHTO Standard Specifications for Structural Supports for Highway Signs, Luminaires, and Traffic Signals and Interim Specifications. Design 3-Second Gust Wind Speed equal 110 mph with a 1.14 gust factor. A wind importance factor of 0.80 is applied to adjust the wind speed to a 25 year recurrence interval. Design moments listed in tables assume base of pole is less than 25' above natural ground level.
2. Design structures to support two 12' luminaire mast arms and luminaires. Design mast arms for a 60-pound luminaire having an effective projected area of 1.6 square feet.
3. Fabrication shall be in accordance with the Specifications and with the details, dimensions, and weld procedures shown herein. Do not submit shop drawings for roadway illumination pole assemblies fabricated in accordance with the details, dimensions, and weld procedures shown herein. Weld references call for preapproved weld procedures which the Fabricator must obtain prior to fabrication. Materials, fabrication tolerances, and shipping practices shall meet the requirements of these sheets and the Specifications. In the absence of specified fabrication tolerances, dimensions shall be within the tolerances generally obtainable in normal fabrication practice.
4. For mounting heights between values shown in the tables, use base diameter and thickness values for the larger pole.
5. Unless otherwise noted, all steel parts shall be galvanized in accordance with Item 445, "Galvanizing."
6. Steel poles shall be fabricated in accordance with Item 441, "Steel Structures." Longitudinal seam welds for pole sections shall have 60% minimum penetration. All welding shall be in accordance with the ANSI/AWS Structural Welding Code D1.1.
7. Two-section poles joined by circumferential welds will not be permitted, unless otherwise shown on the plans. Poles may be fabricated in two sections and field-assembled by the lap-joint method. The two sections shall telescope together with a lap length of not less than 1-1/2 times the shaft diameter at the lap joint.
8. Alternate material equal to or better than material specified may be substituted with the approval of the Engineer.
9. Lubricate and tighten anchor bolts, when erecting shoe base poles and concrete traffic barrier base poles, in accordance with Item 449, "Anchor Bolts."
10. All poles, except Transformer Base Poles, shall have hand holes with reinforcing frames and covers. Except for poles mounted on a concrete traffic barrier or bridge bracket, hand holes shall be placed 90 degrees to mast arm unless otherwise noted on the plans. For poles mounted on a concrete traffic barrier with one luminaire arm, hand holes shall be located 180 degrees from luminaire arm. For poles mounted on a concrete traffic barrier with two luminaire arms, all hand holes shall be on the same side of the barrier. For poles mounted on a bridge bracket, hand hole shall be on traffic side of the pole, at a height that will clear the barrier.
11. The finished pole shall have a smooth, uniform finish free of pits, blisters, or other defects. Scratched, chipped, and other damaged galvanized areas on poles and mast arms shall be repaired in accordance with Item 445, "Galvanizing."
12. Pole length is based on a 5'-6" luminaire arm rise. 4 ft. luminaire arms have a 2'-6" rise. A pole with 4 ft. luminaire arms will have an actual mounting height 3'-0" less than the nominal mounting height. Increasing the pole length to meet the nominal mounting height is allowed, but unnecessary unless otherwise directed by the engineer.

Texas Department of Transportation

Traffic Operations Division Standard

ROADWAY ILLUMINATION POLES

RIP(2)-17

FILE: rip-17.dgn	DN:	CK:	DW:	CK:
©TxDOT January 2007 REVISIONS	CONT	SECT	JOB	HIGHWAY
7-17	2103	01	034	
	DIST	COUNTY		SHEET NO.
	AUS	WILLIAMSON		210

73B

DATE: 3/22/2018 3:28:21 PM
FILE: c:\pwworking\ddi\d0916357\RIP(1,2,3,4)-17.dgn

DISCLAIMER:
The use of this standard is governed by the "Texas Engineering Practice Act". No warranty of any kind is made by TxDOT for any purpose whatsoever. TxDOT assumes no responsibility for the conversion of this standard to other formats or for incorrect results or damages resulting from its use.

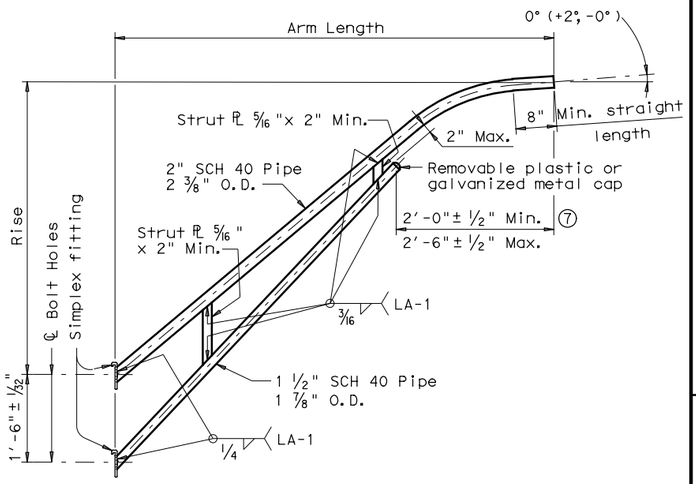

LUMINAIRE ARM

LUMINAIRE ARM DIMENSIONS		
Nominal Arm Length	Arm Length	Rise
4'-0"	3'-6"	2'-6" ⑩
6'-0"	5'-6"	5'-6"
8'-0"	7'-6"	5'-6"
10'-0"	9'-6"	5'-6"
12'-0"	11'-6"	5'-6"

ARM ASSEMBLY FABRICATION TOLERANCES TABLE	
DIMENSION	TOLERANCE
Arm Length	±3"
Arm Rise	+1 3/4" in 10 ft
Arm Diameter	+3/16"
Overall length or width	+1/4"
Thickness	+1/4", -1/16"
Deviation from flat	1/8" in 12"
Spacing between holes	+3/32"
Bolt hole size	±1/16"
Strut location in truss arms	±1 1/2"

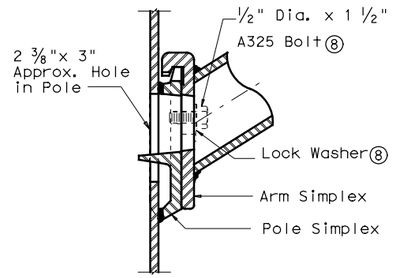

UPPER SIMPLEX FITTING
(Gusset not shown for clarity)

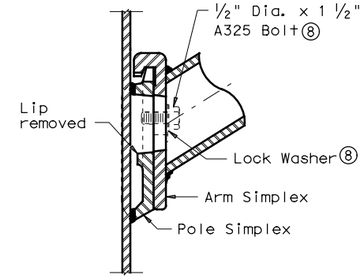

LOWER SIMPLEX FITTING
(Gusset not shown for clarity)

SECTION B-B

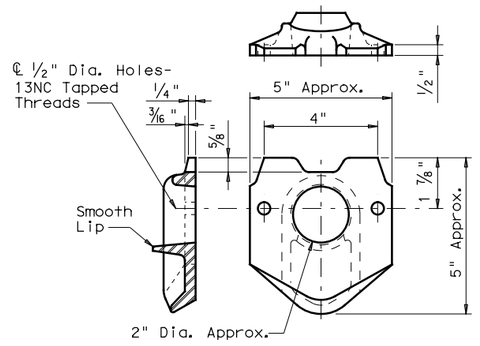

POLE SIMPLEX DETAIL ⑨

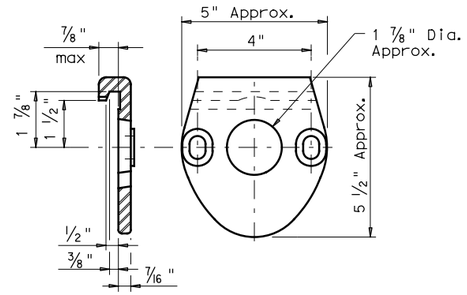

ARM SIMPLEX DETAIL ⑨

NOTES:

④ Any of the materials listed for plates may be used where the drawings do not specify a particular ASTM designation.

⑤ A576 must be suitable for forging and also meet minimum tensile strength of 65 ksi, minimum yield of 35 ksi, and elongation in 2 inches of 22 percent.

⑥ A572, A1008 HSLAS-F, and A1011 HSLAS-F materials may have higher yield strengths but shall not have less elongation than the grade indicated.

⑦ Dimensional limits are given to show acceptable variation in design. All of a Fabricator's production of a particular arm length shall have the same dimensions within specified tolerances.

⑧ Each pole simplex fitting shall be supplied with 2 bolts and 2 lock washers of the size specified. The bolts and lock washers shall be secured to the pole with the other hardware items called for in the plans.

⑨ Proposed deviations in arm simplex dimensions or materials must be submitted to the Department for approval.

⑩ Luminaire mounting heights are based on assumed 5'-6" luminaire arm rise.

MATERIALS	
Pole or Arm Simplex	ASTM A27 Gr 65-35, A148 Gr 80-50, A576 Gr 1021 ⑤, or A36 (Arm only)
Arm Pipes	ASTM A53 Gr A or B, A500 Gr B, A501, A 1008 HSLAS-F Gr 50 ⑥, or A1011 HSLAS-F Gr 50 ⑥
Arm Struts and Gusset Plates ④	ASTM A36, A572 Gr 50 ⑥, or A588
Misc.	ASTM designations as noted

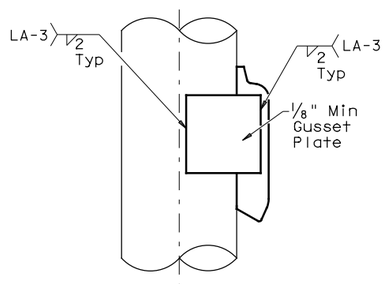

SIDE

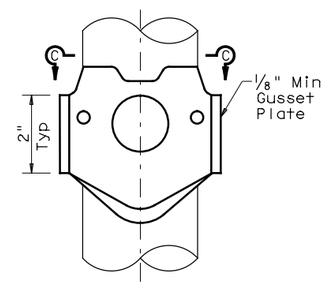

ELEVATION

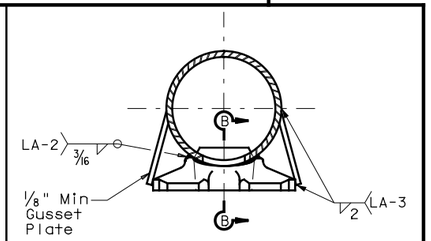

SECTION C-C

SIMPLEX ATTACHMENT DETAIL

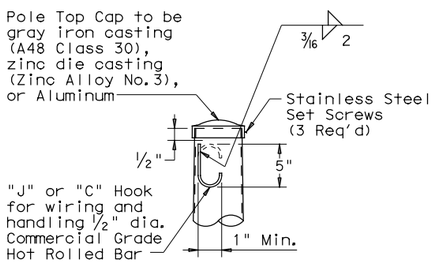

POLE TOP

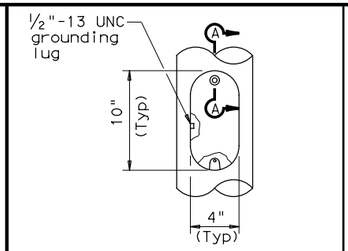

ELEVATION

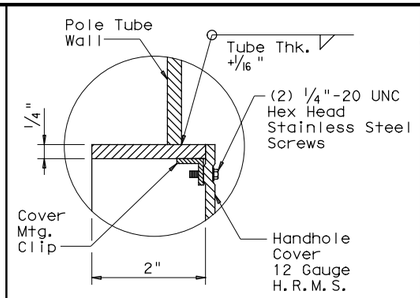

SECTION A-A

HANDHOLE

SHEET 3 OF 4

Texas Department of Transportation

Traffic Operations Division Standard

ROADWAY ILLUMINATION POLES

RIP(3)-17

FILE: rip-17.dgn	DN:	CK:	DW:	CK:
©TxDOT January 2007	CONT	SECT	JOB	HIGHWAY
REVISIONS 7-17	2103	01	034	
	DIST	COUNTY		SHEET NO.
	AUS	WILLIAMSON		211

73C

DISCLAIMER:
The use of this standard is governed by the "Texas Engineering Practice Act". No warranty of any kind is made by TxDOT for any purpose whatsoever. TxDOT assumes no responsibility for the conversion of this standard to other formats or for incorrect results or damages resulting from its use.

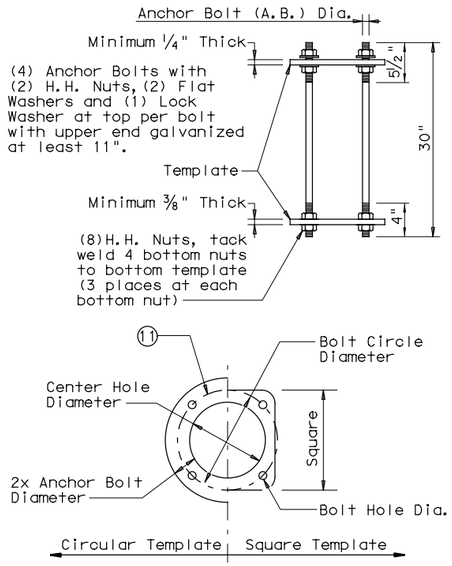

SHOE BASE ANCHOR BOLT ASSEMBLY

SHOE BASE ANCHOR BOLT ASSEMBLY TABLE					
MOUNTING HEIGHTS (nominal)	A.B. Dia.	BOLT CIRCLE DIAMETER	SQUARE	CTR. HOLE DIAMETER	BOLT HOLE DIAMETER
20′-39′	1"	13"	13"	11"	1 1/16"
40′-50′	1 1/4"	15"	14 1/2"	12 1/2"	1 5/16"

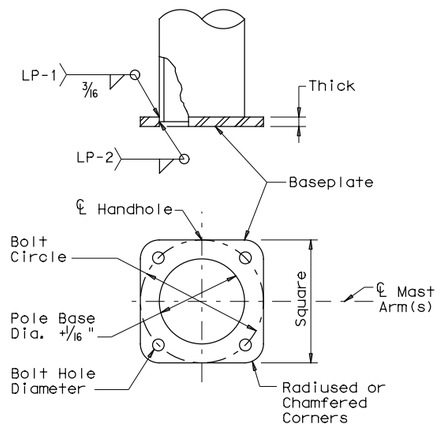

SHOE BASE BASEPLATE

SHOE BASE BASEPLATE TABLE				
MOUNTING HEIGHTS (nominal)	BOLT CIRCLE	SQUARE	THICK	BOLT HOLE DIAMETER
20′- 39′	13"	13"	1 1/4"	1 1/4"
40′	15"	15"	1 1/4"	1 1/2"
50′	15"	15"	1 1/2"	1 1/2"

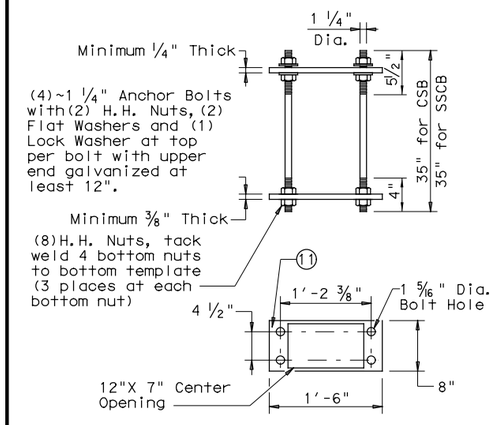

CONCRETE TRAFFIC BARRIER BASE ANCHOR BOLT ASSEMBLY

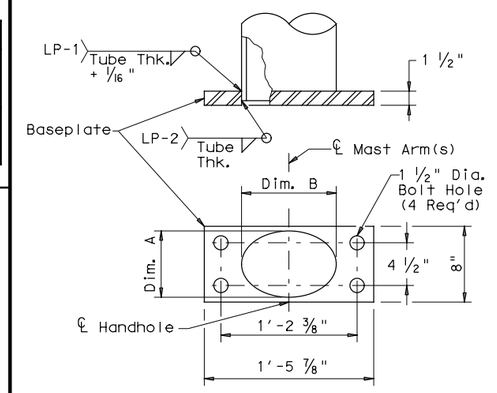

CONCRETE TRAFFIC BARRIER BASE BASEPLATE

CONCRETE TRAFFIC BARRIER BASE BASEPLATE TABLE			
MOUNTING HEIGHTS (nominal)	POLE DIA.(12)	DIM. A	DIM. B
28′- 38′	9"	7"± 1/4"	10"± 1/4"
48′	10 1/2"	7"± 1/4"	13"± 1/4"

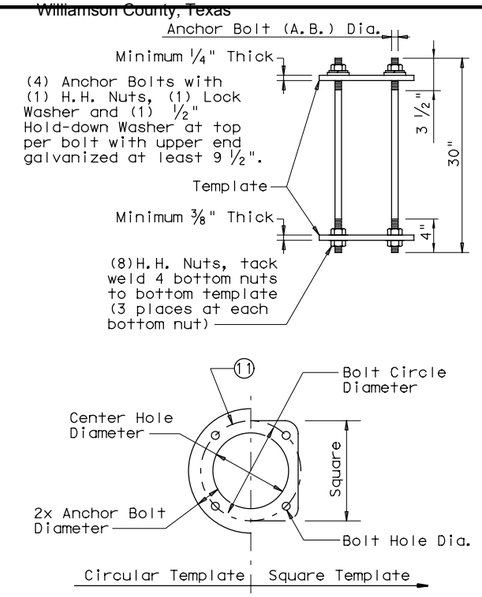

TRANSFORMER BASE ANCHOR BOLT ASSEMBLY

TRANSFORMER BASE ANCHOR BOLT ASSEMBLY TABLE					
MOUNTING HEIGHTS (nominal)	A.B. Dia.	BOLT CIRCLE DIAMETER	SQUARE	CTR. HOLE DIAMETER	BOLT HOLE DIAMETER
20′- 39′	1"	14"	14"	12"	1 1/16"
40′- 50′	1 1/4"	17 1/4"	16 3/4"	14 3/4"	1 5/16"

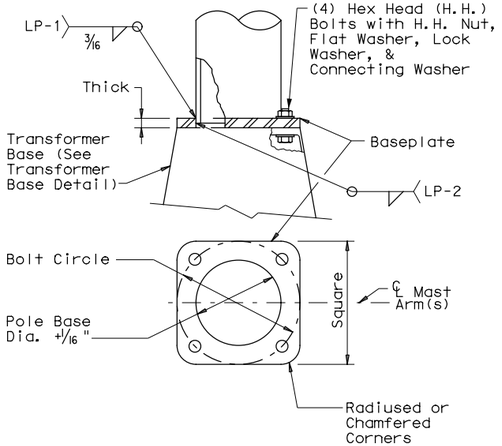

TRANSFORMER BASE BASEPLATE

TRANSFORMER BASE BASEPLATE TABLE						
MOUNTING HEIGHTS (nominal)	BOLT CIRCLE	SQUARE	THICK	CONNECTING BOLT DIA.	BOLT HOLE DIAMETER	TRANSFOMER BASE TYPE
20′- 39′	13"	13"	1 1/4"	1"	1 1/4"	A
40′	15"	15"	1 1/4"	1 1/4"	1 1/2"	B
50′	15"	15"	1 1/2"	1 1/4"	1 1/2"	B

TRANSFORMER BASE TABLE		
TYPE	TOP B.C.	BTM. B.C.
A	13"	14"
B	15"	17 1/4"

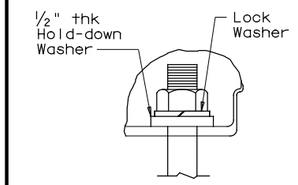

DETAIL A

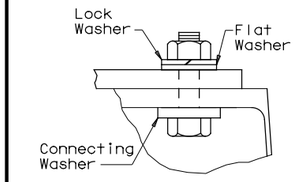

DETAIL B

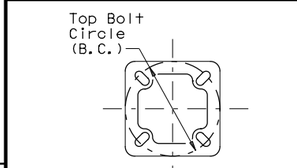

TOP PLAN

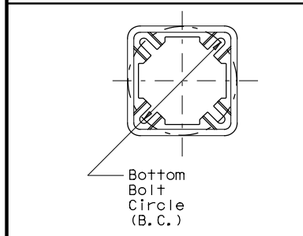

BOTTOM PLAN

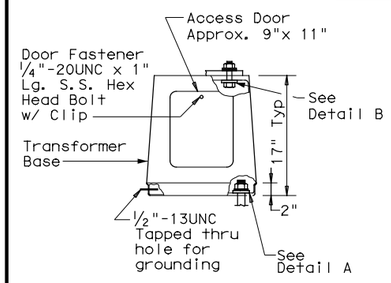

ELEVATION

TRANSFORMER BASE DETAILS

GENERAL NOTES:

1. For mounting heights between those shown in the table, use the values in he table for the larger mounting height.
2. All breakaway bases shall meet the breakaway requirements of the 2001 Edition of the AASHTO "Standard Specifications for Structural Supports for Highway Signs, Luminaires and Traffic Signals," and shall have been tested by FHWA-approved methods. All bases shall have been structurally tested to resist 150% of the design moment.
3. Transformer bases shall be cast from aluminum, ASTM B108 or B26 Alloy 356.0-T6, or other material approved by the Engineer. Four Hex Head (H.H.) bolts with four H.H. nuts, four lock washers, four flat washers, and connecting and hold-down washers as recommended by the manufacturer, galvanized to ASTM A153 Class C or D, or B695 Class 50, shall be provided with each transformer base for connecting the pole. Bolts shall be ASTM A325 or approved equal. Nuts shall be ASTM A563 grade DH galvanized.
4. Bases shall be stamped, incised or by other approved permanent means, marked to show fabricator's name or logo, and model number. Such information shall be placed in a readily seen location, inside or outside the base, but shall not be placed on the door.
5. Doors for transformer bases shall be made of plastic, fiberglass or other non-metallic material approved by the Engineer and shall be attached with stainless steel screws or bolts. Transformer bases shall be cleaned by grit blast cleaning after heat treatment. Certification by the manufacturer of heat treatment shall be furnished with transformer bases. The certification shall show the metal alloy and temper and that the base meets those requirements, chemical and physical. The certification shall also show the material ASTM specification. Transformer bases shall be cast with a removable tab bar for material testing. Some bars may have been removed by the manufacturer for testing.

NOTES:

(11) Anchor Bolt Templates do not need to be galvanized.

(12) Pole diameter before ovalized.

ANCHOR BOLT FABRICATION TOLERANCES TABLE	
DIMENSION	TOLERANCE
Length	± 1/2"
Threaded length	± 1/2"
Galvanized length (if required)	- 1/4"

SHEET 4 OF 4

Texas Department of Transportation — Traffic Operations Division Standard

ROADWAY ILLUMINATION POLES

RIP(4)-17

FILE: rip-17.dgn	DN:	CK:	DW:	CK:
©TxDOT January 2007	CONT	SECT	JOB	HIGHWAY
REVISIONS 7-17	2103	01	034	
	DIST	COUNTY		SHEET NO.
	AUS	WILLIAMSON		243

DATE: 3/22/2018 3:28:23 PM
FILE: c:\pwworking\dal\d0916357\RIP(1,2,3,4)-17.dgn

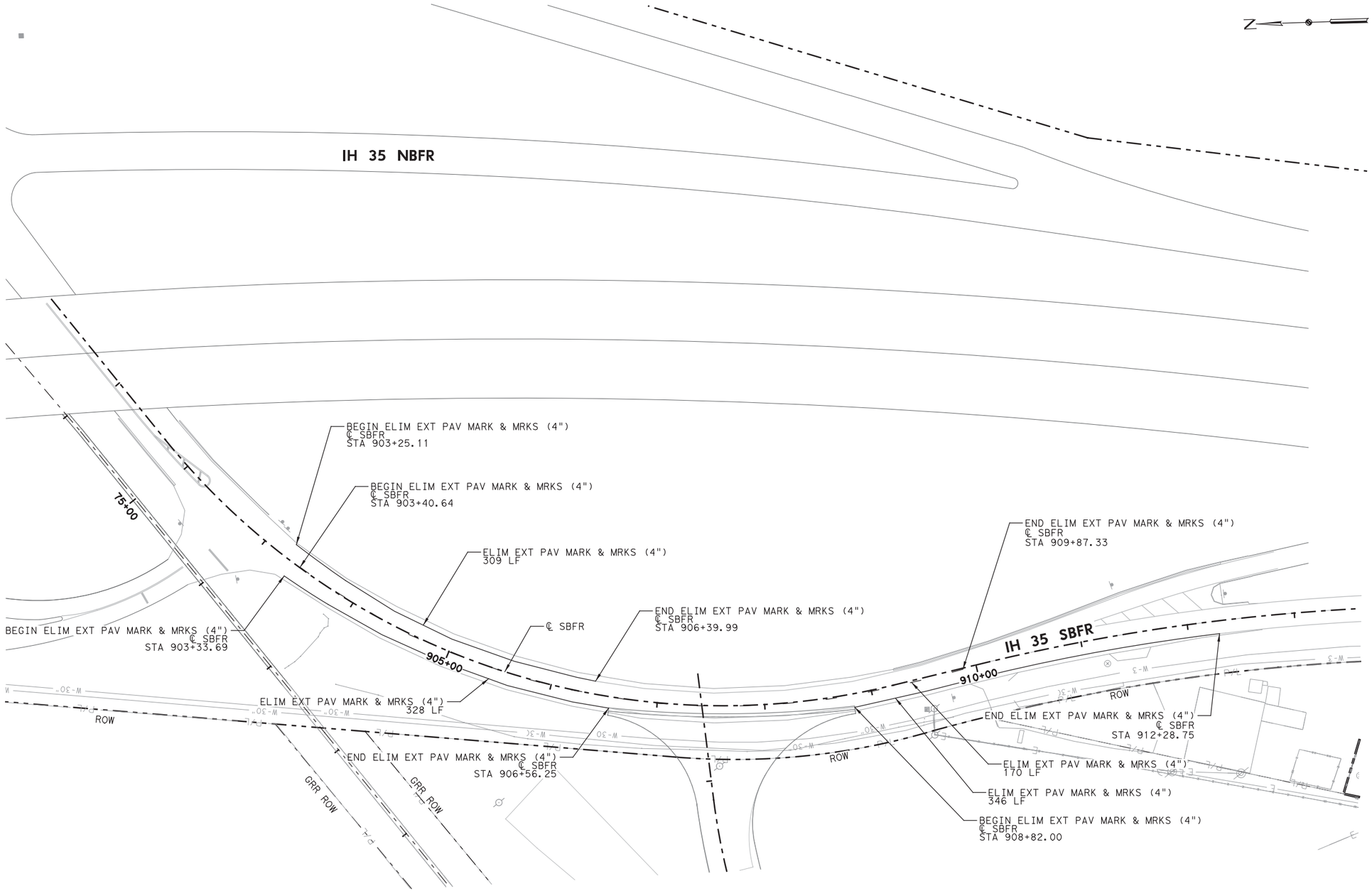

NOTES:

1. REMOVAL OF RPMS SHALL BE CONSIDERED SUBSIDIARY TO ELIM PAV MARK & MARKS (4").
2. EXISTING STRIPING WITHIN THE LIMITS OF MILL AND OVERLAY IS NOT DIRECTLY CALLED OUT FOR REMOVAL. ANY NECESSARY REMOVAL OF THESE STRIPES IS CONSIDERED SUBSIDIARY TO PERTINENT ITEMS. FLAIL MILLING IS NOT REQUIRED IN THIS CASE.

0 50 100 150 200

SCALE IN FEET

STATE OF TEXAS
JUSTIN D. CARLTON
127593
LICENSED
PROFESSIONAL ENGINEER
03/23/2018

NO.	DATE	REVISION	APPROVED

WILLIAMSON COUNTY

HDR Engineering, Inc.
810 Hesters Crossing, Suite 120
Round Rock, Texas 78681
Texas Registered Engineering Firm F-754

SOUTHWEST BYPASS SEGMENT 2

STRIPING REMOVAL PLAN SBFR I-35

SCALE: 1"=100' SHEET 1 OF 1

DESIGN	FED.RD. DIV.NO.	FEDERAL AID PROJECT NO.		HIGHWAY NO.
JC	6			
GRAPHICS LG	STATE	DISTRICT	COUNTY	SHEET NO.
CHECK JW	TEXAS	AUS	WILLIAMSON	213
CHECK JC	CONTROL 2103	SECTION 01	JOB 034	

PLOT DRIVER: TXDOT_PDF_BW.pltcfg
USER: lgomezgonz DATE: 3/23/2018
FILE: \
PENTABLE: S2-000002017018.tbl
TIME: 10:57:48 AM SCALE: 1:100

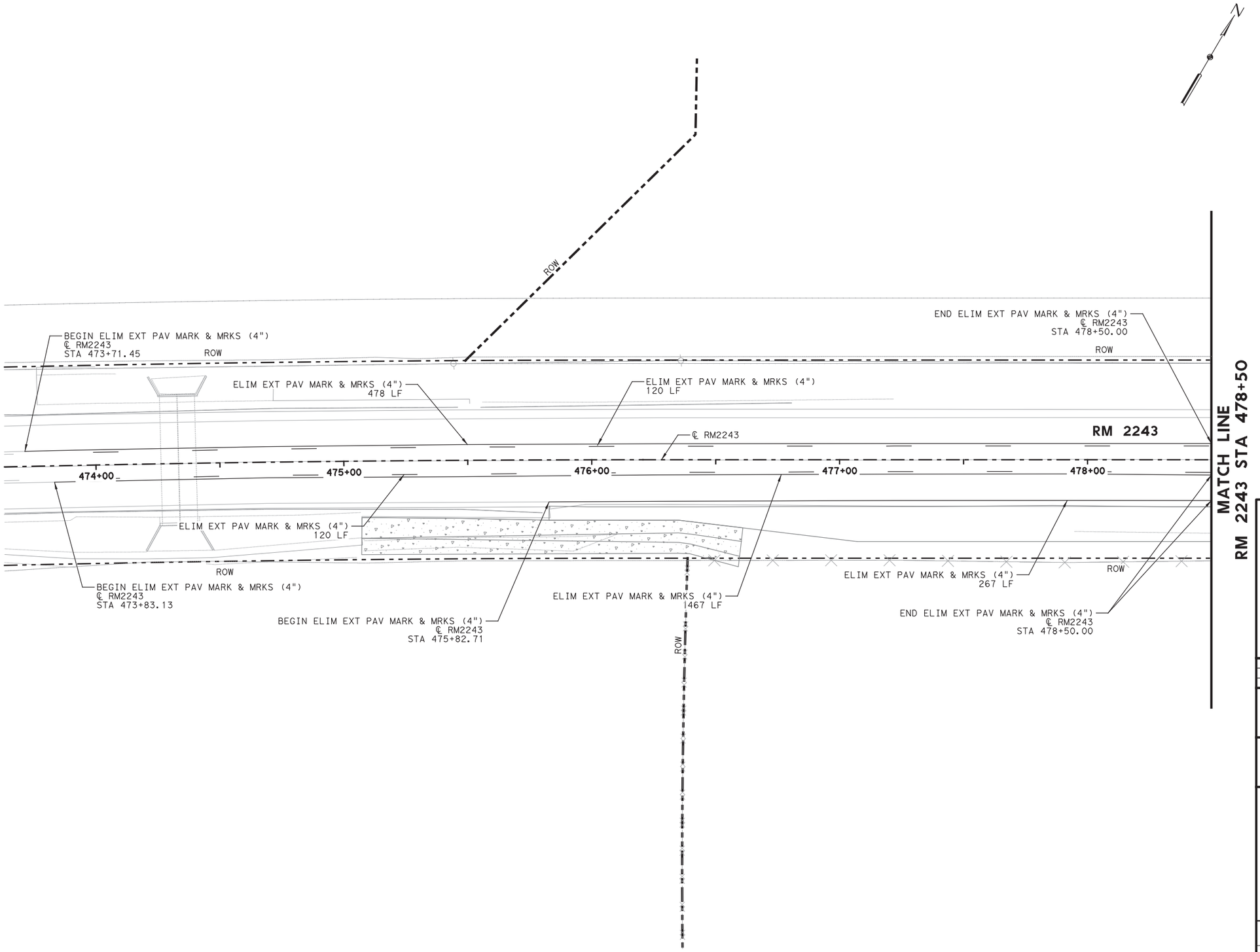

NOTES:

1. REMOVAL OF RPMS SHALL BE CONSIDERED SUBSIDIARY TO ELIM PAV MARK & MARKS (4").
2. EXISTING STRIPING WITHIN THE LIMITS OF MILL AND OVERLAY IS NOT DIRECTLY CALLED OUT FOR REMOVAL. ANY NECESSARY REMOVAL OF THESE STRIPES IS CONSIDERED SUBSIDIARY TO PERTINENT ITEMS. FLAIL MILLING IS NOT REQUIRED IN THIS CASE.

0 20 40 60 80

SCALE IN FEET

STATE OF TEXAS
JUSTIN D. CARLTON
127593
LICENSED
PROFESSIONAL ENGINEER

03/23/2018

NO.	DATE	REVISION	APPROVED

WILLIAMSON COUNTY TEXAS

HDR Engineering, Inc.
810 Hesters Crossing, Suite 120
Round Rock, Texas 78681
Texas Registered Engineering Firm F-754

SOUTHWEST BYPASS SEGMENT 2

STRIPING REMOVAL PLAN RM 2243 BEGIN TO STA 478+50

SCALE: 1"=40' SHEET 1 OF 3

DESIGN	FED.RD. DIV.NO.	FEDERAL AID PROJECT NO.		HIGHWAY NO.
JC	6			
GRAPHICS	STATE	DISTRICT	COUNTY	SHEET NO.
LG	TEXAS	AUS	WILLIAMSON	
CHECK	CONTROL	SECTION	JOB	
JW	2103	01	034	214
CHECK				
JC				

PLOT DRIVER: TXDOT_PDF_BW.pltcfg USER: lgomezgon2 FILE: \ PENTABLE: S2-0000020170718.tbl
DATE: 3/23/2018 TIME: 10:57:51 AM SCALE: 1:40

4/12/2018 7:20 AM

MATCH LINE
RAMPNB2 STA 12+00

SEE NOTE 2
ONLY
RAMPNB2
℄ RAMPNB2
SEE NOTE 2
ONLY
SEE NOTE 2
ROW
ELIM EXT PAV MARK & MRKS (4")
10 LF
ELIM EXT PAV MARK & MRKS (4")
25 LF
BEGIN ELIM EXT PAV MARK & MRKS (4")
℄ RM2243
STA 483+00.00
11+00
SEE NOTE 2
SEE NOTE 2
ROW
ROW
RM 2243
SEE NOTE 2
SEE NOTE 2
SEE NOTE 2
ONLY
SEE NOTE 2

MATCH LINE
RM 2243 STA 478+50

MATCH LINE
RM 2243 STA 483+25

479+00 480+00 481+00 482+00 483+00

SEE NOTE 2
℄ RM2243
SEE NOTE 2
ROW
ROW
BEGIN ELIM EXT PAV MARK & MRKS (4")
℄ RM2243
STA 483+00.00
ELIM EXT PAV MARK & MRKS (4")
25 LF
ELIM EXT PAV MARK & MRKS (4")
10 LF

SW BYPASS WBFR
℄ WBFR_S2_CL
450+00
ROW

NOTES:

1. REMOVAL OF RPMS SHALL BE CONSIDERED SUBSIDIARY TO ELIM PAV MARK & MARKS (4").
2. EXISTING STRIPING WITHIN THE LIMITS OF MILL AND OVERLAY IS NOT DIRECTLY CALLED OUT FOR REMOVAL. ANY NECESSARY REMOVAL OF THESE STRIPES IS CONSIDERED SUBSIDIARY TO PERTINENT ITEMS. FLAIL MILLING IS NOT REQUIRED IN THIS CASE.

0 20 40 60 80
SCALE IN FEET

STATE OF TEXAS
JUSTIN D. CARLTON
127593
LICENSED
PROFESSIONAL ENGINEER
03/23/2018

NO.	DATE	REVISION	APPROVED

WILLIAMSON COUNTY TEXAS

HDR Engineering, Inc.
810 Hesters Crossing, Suite 120
Round Rock, Texas 78681
Texas Registered Engineering Firm F-754

SOUTHWEST BYPASS
SEGMENT 2

STRIPING REMOVAL PLAN
RM 2243
STA 478+50 TO STA 483+25

SCALE: 1"=40' SHEET 2 OF 3

DESIGN	FED.RD. DIV.NO.	FEDERAL AID PROJECT NO.		HIGHWAY NO.
JC	6			
GRAPHICS LG	STATE	DISTRICT	COUNTY	SHEET NO.
CHECK JW	TEXAS	AUS	WILLIAMSON	215
CHECK JC	CONTROL 2103	SECTION 01	JOB 034	

PLOT DRIVER: TXDOT_PDF_BW.pltcfg PENTABLE: S2-0000020170718.tbl
USER: lgomezgonz DATE: 3/23/2018 TIME: 10:57:54 AM SCALE: 1:40
FILE: \

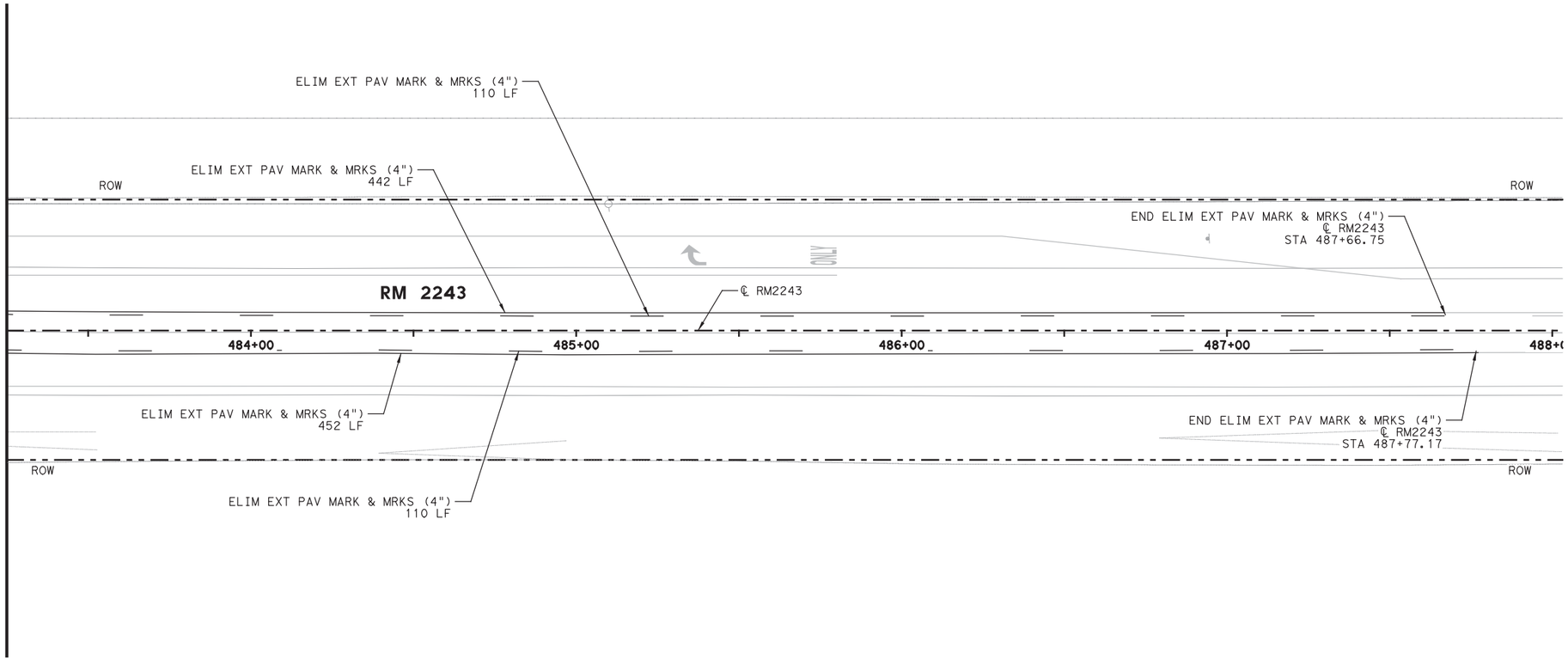

NOTES:

1. REMOVAL OF RPMS SHALL BE CONSIDERED SUBSIDIARY TO ELIM PAV MARK & MARKS (4").
2. EXISTING STRIPING WITHIN THE LIMITS OF MILL AND OVERLAY IS NOT DIRECTLY CALLED OUT FOR REMOVAL. ANY NECESSARY REMOVAL OF THESE STRIPES IS CONSIDERED SUBSIDIARY TO PERTINENT ITEMS. FLAIL MILLING IS NOT REQUIRED IN THIS CASE.

0 20 40 60 80
SCALE IN FEET

STATE OF TEXAS
JUSTIN D. CARLTON
127593
LICENSED
PROFESSIONAL ENGINEER
03/23/2018

NO.	DATE	REVISION	APPROVED

WILLIAMSON COUNTY

HDR Engineering, Inc.
810 Hesters Crossing, Suite 120
Round Rock, Texas 78681
Texas Registered Engineering Firm F-754

SOUTHWEST BYPASS SEGMENT 2

STRIPING REMOVAL PLAN RM 2243 STA 483+25 TO END

SCALE: 1"=40' SHEET 3 OF 3

DESIGN	FED.RD. DIV.NO.	FEDERAL AID PROJECT NO.		HIGHWAY NO.
JC	6			
GRAPHICS LG	STATE	DISTRICT	COUNTY	SHEET NO.
CHECK JW	TEXAS	AUS	WILLIAMSON	216
CHECK JC	CONTROL 2103	SECTION 01	JOB 034	

PLOT DRIVER: TXDOT_PDF_BW.pltcfg PENTABLE: S2-000002017018.tbl
USER: lgomezgonz DATE: 3/23/2018 TIME: 10:57:58 AM SCALE: 1:40
FILE: \

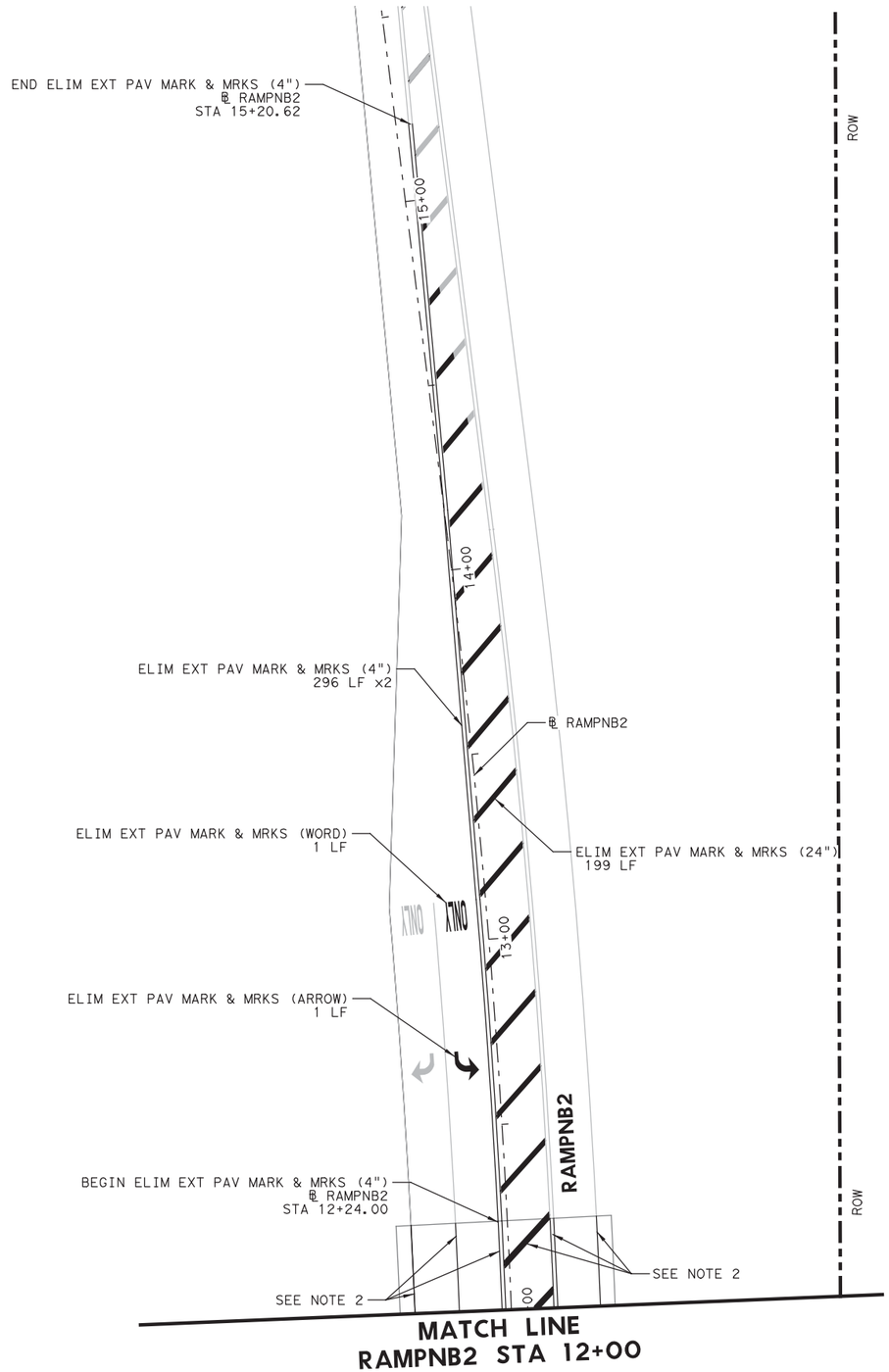



NOTES:

1. REMOVAL OF RPMS SHALL BE CONSIDERED SUBSIDIARY TO ELIM PAV MARK & MARKS (4").
2. EXISTING STRIPING WITHIN THE LIMITS OF MILL AND OVERLAY IS NOT DIRECTLY CALLED OUT FOR REMOVAL. ANY NECESSARY REMOVAL OF THESE STRIPES IS CONSIDERED SUBSIDIARY TO PERTINENT ITEMS. FLAIL MILLING IS NOT REQUIRED IN THIS CASE.

0 20 40 60 80
SCALE IN FEET



03/23/2018

NO.	DATE	REVISION	APPROVED

WILLIAMSON COUNTY

HDR Engineering, Inc.
810 Hesters Crossing, Suite 120
Round Rock, Texas 78681
Texas Registered Engineering Firm F-754

SOUTHWEST BYPASS SEGMENT 2

STRIPING REMOVAL PLAN RAMPNB2 STA 12+00 TO END

SCALE: 1"=40' SHEET 1 OF 1

DESIGN	FED.RD. DIV.NO.	FEDERAL AID PROJECT NO.		HIGHWAY NO.
JC	6			
GRAPHICS	STATE	DISTRICT	COUNTY	SHEET NO.
LG	TEXAS	AUS	WILLIAMSON	
CHECK	CONTROL	SECTION	JOB	217
JW	2103	01	034	
CHECK				
JC				

PLOT DRIVER: TXDOT_PDF_BW.pltcfg PENTABLE: S2-000002017018.tbl
USER: lgomezgon2 DATE: 3/23/2018 TIME: 10:58:02 AM SCALE: 1:40
FILE: \

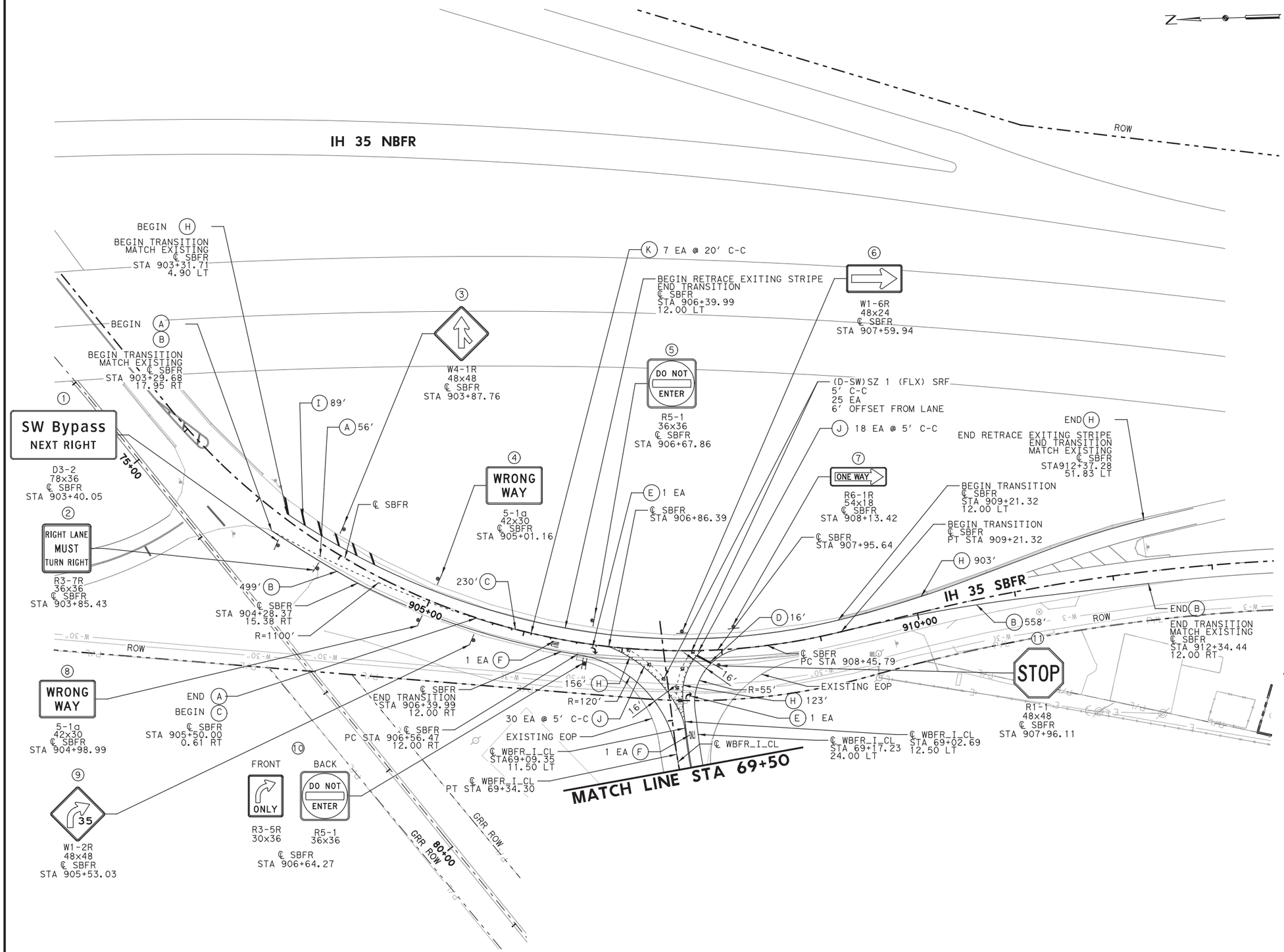

LEGEND

- (A) REFL PAV MRK TY I (W)4"(DOT)(100MIL)
- (B) RE PM W/RET REQ TY I (W)4"(SLD)(100MIL)
- (C) REFL PAV MRK TY I (W)8"(SLD)(100MIL)
- (D) REFL PAV MRK TY I (W)24"(SLD)(100MIL)
- (E) REFL PAV MRK TY I (W)(ARROW)(100MIL)
- (F) REFL PAV MRK TY I (W)(WORD)(100MIL)
- (G) REFL PAV MRK TY I (W)36"(YLD TRI)(100MIL)
- (H) RE PM W/RET REQ TY I (Y)4"(SLD)(100MIL)
- (I) REFL PAV MRK TY I (Y)24"(SLD)(100MIL)
- (J) REFL PAV MRK TY II-A-A
- (K) REFL PAV MRK TY I-C
- (L) REFL PAV MRK TY II-C-R
- (M) REF PROF PAV MRK TY I (W)4"(SLD)(060MIL)
- (N) REF PROF PAV MRK TY I (Y)4"(SLD)(090MIL)

SIGN (1 SIDE)
SIGN (2 SIDE)
DELINEATOR
DELINEATOR (BI)
ASSM (OM-2Y)(WC)GND
EXISTING SIGN TO BE REMOVED
EXISTING SIGN TO REMAIN
PROPOSED SIGN

NOTES:

1. REFER TO SUMMARY OF SMALL SIGNS FOR SIGN QUANTITIES.
2. ALL PAVEMENT MARKINGS AND SIGNAGE SHALL BE IN ACCORDANCE WITH THE LATEST EDITION OF THE TEXAS MANUAL ON UNIFORM TRAFFIC CONTROL DEVICES (TMUTCD).
3. ALL PAVEMENT MARKINGS ARE TY I (100MIL) UNLESS OTHERWISE SPECIFIED.
4. RESPECTIVE "REFL PAV MRK TY II" ITEM INCLUDED IN QUANTITIES AS SEALER FOR TY I MARKINGS APPLIED TO ALL CONCRETE SURFACES AS WELL AS ASPHALT SURFACES OLDER THEN 3 YEARS.
5. ALL STATIONS AND OFFSETS REFER TO WBFR_S2_CL UNLESS OTHERWISE NOTED.

0 50 100 150 200
SCALE IN FEET

STATE OF TEXAS
JUSTIN D. CARLTON
127593
LICENSED
PROFESSIONAL ENGINEER
03/23/2018

NO.	DATE	REVISION	APPROVED

WILLIAMSON COUNTY

HDR Engineering, Inc.
810 Hesters Crossing, Suite 120
Round Rock, Texas 78681
Texas Registered Engineering Firm F-754

SOUTHWEST BYPASS SEGMENT 2

SIGNING AND STRIPING SBFR I-35 STA 901+00 TO STA 913+00

SCALE: 1"=100' SHEET 1 OF 1

DESIGN	FED.RD. DIV.NO.	FEDERAL AID PROJECT NO.		HIGHWAY NO.
JC	6			
GRAPHICS	STATE	DISTRICT	COUNTY	SHEET NO.
LG	TEXAS	AUS	WILLIAMSON	
CHECK	CONTROL	SECTION	JOB	218
JW	2103	01	034	
CHECK				
JC				

PLOT DRIVER: TXDOT_PDF_BW.pltcfg USER: lgomezgonz DATE: 3/23/2018 TIME: 10:58:07 AM SCALE: 1:100 PENTABLE: S2-0000020I7018.tbl FILE: \

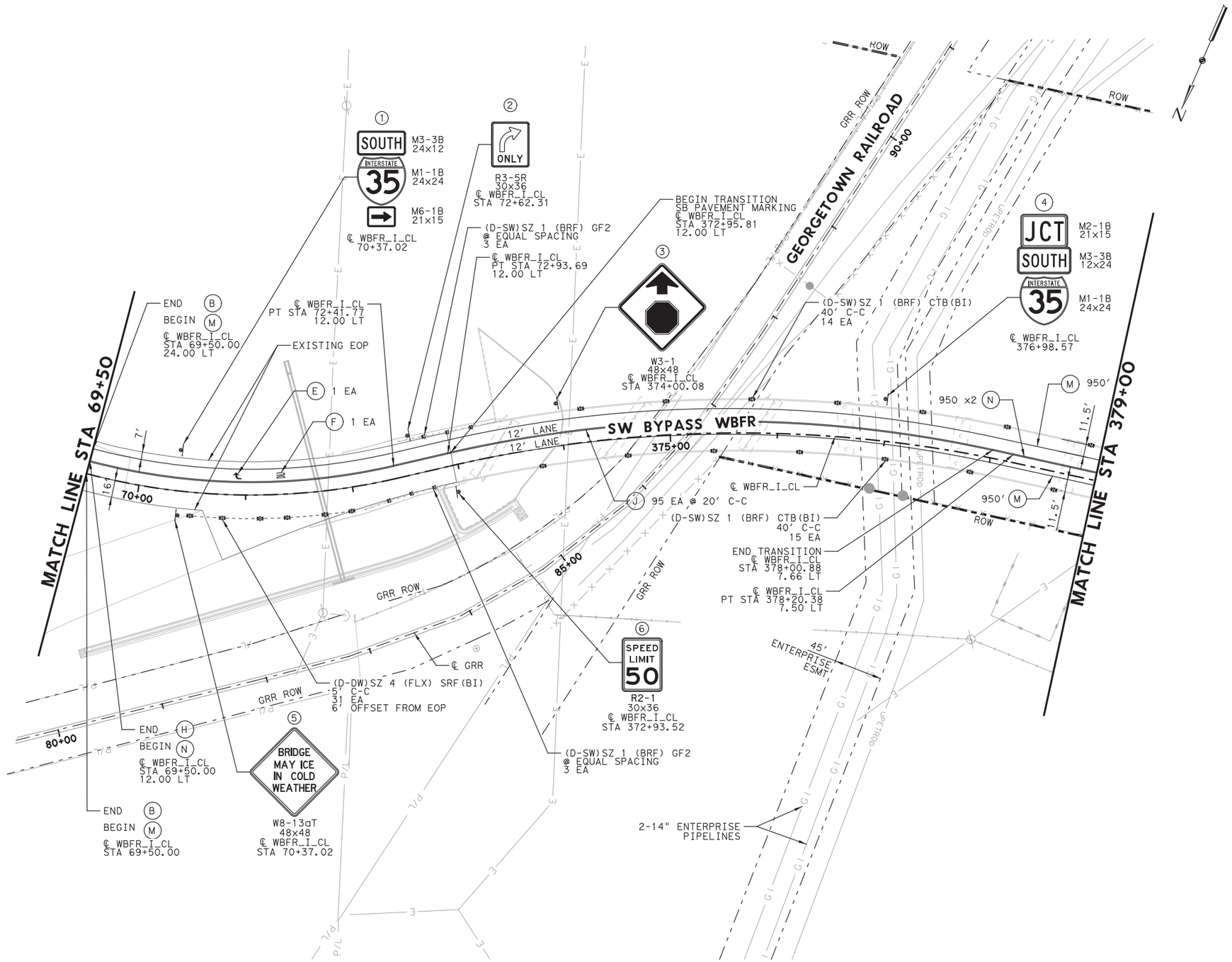

LEGEND

- (A) REFL PAV MRK TY I (W)4"(DOT)(100MIL)
- (B) RE PM W/RET REQ TY I (W)4"(SLD)(100MIL)
- (C) REFL PAV MRK TY I (W)8"(SLD)(100MIL)
- (D) REFL PAV MRK TY I (W)24"(SLD)(100MIL)
- (E) REFL PAV MRK TY I (W)(ARROW)(100MIL)
- (F) REFL PAV MRK TY I (W)(WORD)(100MIL)
- (G) REFL PAV MRK TY I (W)36"(YLD TRI)(100MIL)
- (H) RE PM W/RET REQ TY I (Y)4"(SLD)(100MIL)
- (I) REFL PAV MRK TY I (Y)24"(SLD)(100MIL)
- (J) REFL PAV MRK TY II-A-A
- (K) REFL PAV MRK TY I-C
- (L) REFL PAV MRK TY II-C-R
- (M) REF PROF PAV MRK TY I (W)4"(SLD)(060MIL)
- (N) REF PROF PAV MRK TY I (Y)4"(SLD)(090MIL)

SIGN (1 SIDE) — EXISTING SIGN TO BE REMOVED
SIGN (2 SIDE) — EXISTING SIGN TO REMAIN
DELINEATOR — PROPOSED SIGN
DELINEATOR (BI)
ASSM (OM-2Y)(WC)GND

NOTES:

1. REFER TO SUMMARY OF SMALL SIGNS FOR SIGN QUANTITIES.
2. ALL PAVEMENT MARKINGS AND SIGNAGE SHALL BE IN ACCORDANCE WITH THE LATEST EDITION OF THE TEXAS MANUAL ON UNIFORM TRAFFIC CONTROL DEVICES (TMUTCD).
3. ALL PAVEMENT MARKINGS ARE TY I (100MIL) UNLESS OTHERWISE SPECIFIED.
4. RESPECTIVE "REFL PAV MRK TY II" ITEM INCLUDED IN QUANTITIES AS SEALER FOR TY I MARKINGS APPLIED TO ALL CONCRETE SURFACES AS WELL AS ASPHALT SURFACES OLDER THEN 3 YEARS.
5. ALL STATIONS AND OFFSETS REFER TO WBFR_S2_CL UNLESS OTHERWISE NOTED.

0 50 100 150 200
SCALE IN FEET

STATE OF TEXAS
JUSTIN D. CARLTON
127593
LICENSED
PROFESSIONAL ENGINEER
03/23/2018

NO.	DATE	REVISION	APPROVED

WILLIAMSON COUNTY

HDR Engineering, Inc.
810 Hesters Crossing, Suite 120
Round Rock, Texas 78681
Texas Registered Engineering Firm F-754

SOUTHWEST BYPASS SEGMENT 2

SIGNING AND STRIPING WBFR STA 69+50 TO STA 379+00

SCALE: 1"=100' SHEET 1 OF 8

DESIGN	FED.RD. DIV.NO.	FEDERAL AID PROJECT NO.		HIGHWAY NO.
JC	6			
GRAPHICS	STATE	DISTRICT	COUNTY	SHEET NO.
LG	TEXAS	AUS	WILLIAMSON	
CHECK	CONTROL	SECTION	JOB	219
JW	2103	01	034	
CHECK				
JC				

PLOT DRIVER: TXDOT_PDF_BW.pltcfg USER: lgomezgonz DATE: 3/23/2018 TIME: 10:58:11 AM SCALE: 1:00 PENTABLE: S2-00000201071B.tbl FILE: \

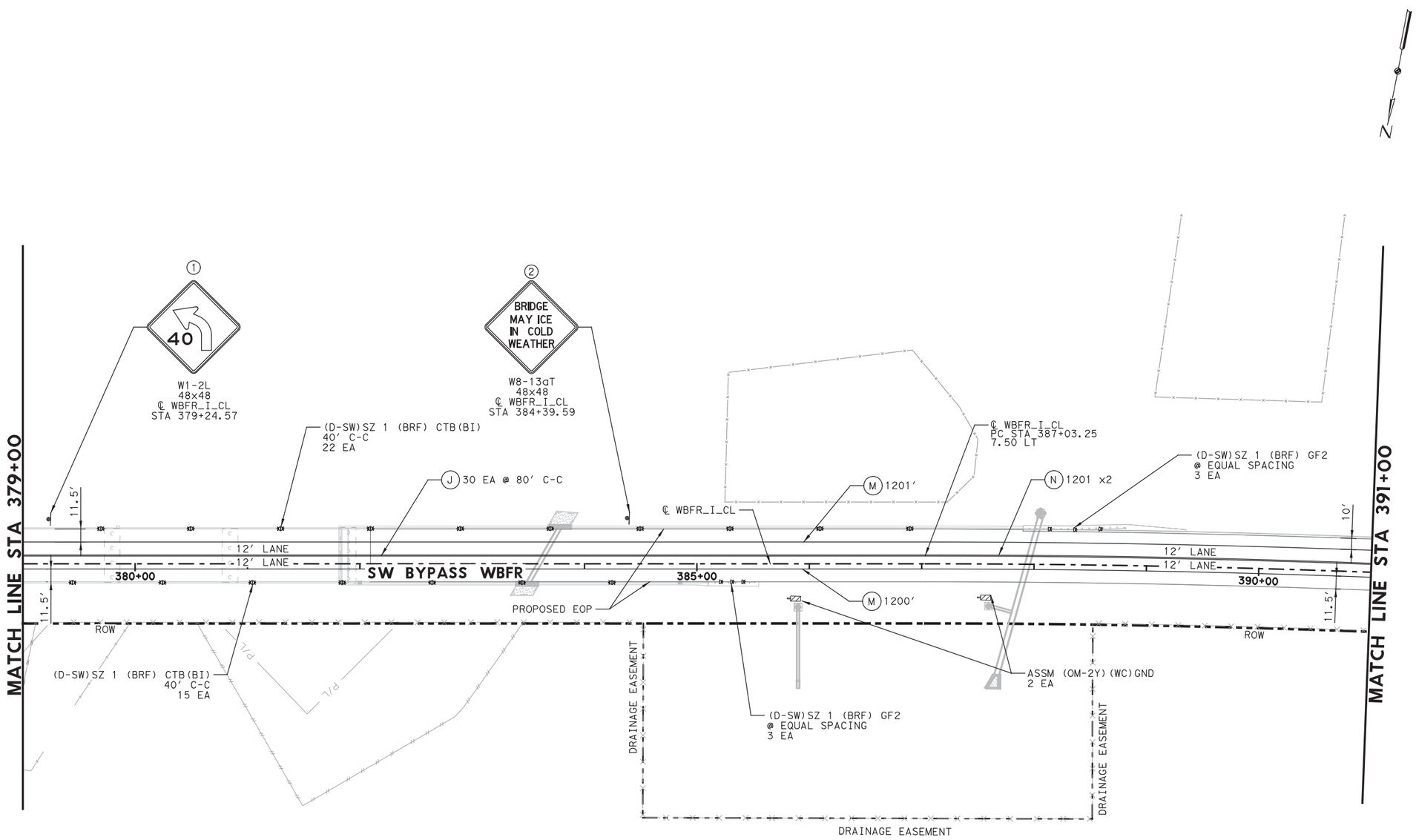

LEGEND

- (A) REFL PAV MRK TY I (W)4"(DOT)(100MIL)
- (B) RE PM W/RET REQ TY I (W)4"(SLD)(100MIL)
- (C) REFL PAV MRK TY I (W)8"(SLD)(100MIL)
- (D) REFL PAV MRK TY I (W)24"(SLD)(100MIL)
- (E) REFL PAV MRK TY I (W)(ARROW)(100MIL)
- (F) REFL PAV MRK TY I (W)(WORD)(100MIL)
- (G) REFL PAV MRK TY I (W)36"(YLD TRI)(100MIL)
- (H) RE PM W/RET REQ TY I (Y)4"(SLD)(100MIL)
- (I) REFL PAV MRK TY I (Y)24"(SLD)(100MIL)
- (J) REFL PAV MRK TY II-A-A
- (K) REFL PAV MRK TY I-C
- (L) REFL PAV MRK TY II-C-R
- (M) REF PROF PAV MRK TY I (W)4"(SLD)(060MIL)
- (N) REF PROF PAV MRK TY I (Y)4"(SLD)(090MIL)

SIGN (1 SIDE)
SIGN (2 SIDE)
DELINEATOR
DELINEATOR (BI)
ASSM (OM-2Y)(WC)GND
EXISTING SIGN TO BE REMOVED
EXISTING SIGN TO REMAIN
PROPOSED SIGN

NOTES:

1. REFER TO SUMMARY OF SMALL SIGNS FOR SIGN QUANTITIES.
2. ALL PAVEMENT MARKINGS AND SIGNAGE SHALL BE IN ACCORDANCE WITH THE LATEST EDITION OF THE TEXAS MANUAL ON UNIFORM TRAFFIC CONTROL DEVICES (TMUTCD).
3. ALL PAVEMENT MARKINGS ARE TY I (100MIL) UNLESS OTHERWISE SPECIFIED.
4. RESPECTIVE "REFL PAV MRK TY II" ITEM INCLUDED IN QUANTITIES AS SEALER FOR TY I MARKINGS APPLIED TO ALL CONCRETE SURFACES AS WELL AS ASPHALT SURFACES OLDER THEN 3 YEARS.
5. ALL STATIONS AND OFFSETS REFER TO WBFR_S2_CL UNLESS OTHERWISE NOTED.

0 50 100 150 200
SCALE IN FEET

STATE OF TEXAS
JUSTIN D. CARLTON
127593
LICENSED
PROFESSIONAL ENGINEER
03/23/2018

NO.	DATE	REVISION	APPROVED

WILLIAMSON COUNTY

HDR Engineering, Inc.
810 Hesters Crossing, Suite 120
Round Rock, Texas 78681
Texas Registered Engineering Firm F-754

SOUTHWEST BYPASS SEGMENT 2

SIGNING AND STRIPING WBFR STA 379+00 TO STA 391+00

SCALE: 1"=100' SHEET 2 OF 8

DESIGN	FED.RD. DIV.NO.	FEDERAL AID PROJECT NO.		HIGHWAY NO.
JC	6			
GRAPHICS	STATE	DISTRICT	COUNTY	SHEET NO.
LG	TEXAS	AUS	WILLIAMSON	
CHECK	CONTROL	SECTION	JOB	220
JW	2103	01	034	
CHECK				
JC				

PLOT DRIVER: TXDOT_PDF_BW.pltcfg PENTABLE: S2-0000020707IB.tbl
USER: lgomezgon2 DATE: 3/23/2018 TIME: 10:58:15 AM SCALE: 1:00
FILE: \

4/12/2018 7:20 AM

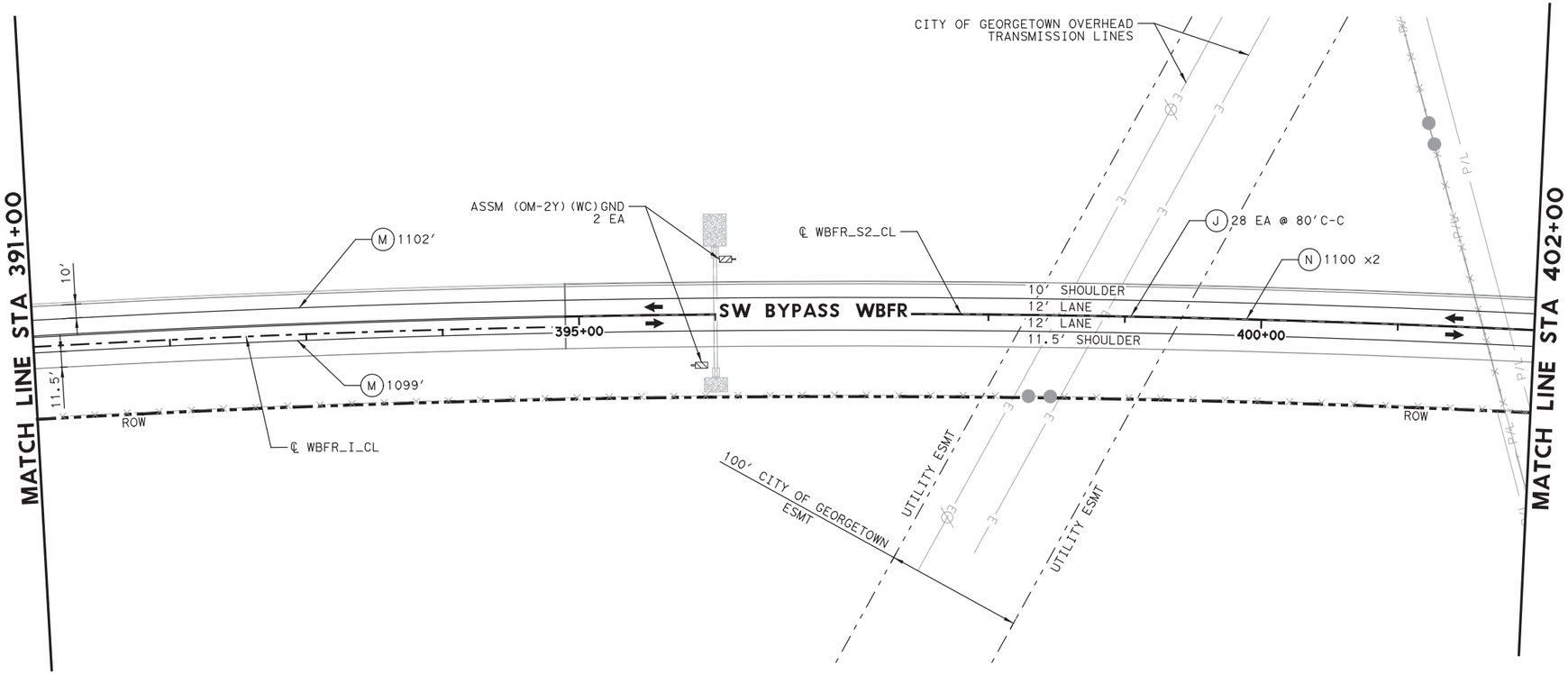

N

LEGEND

- (A) REFL PAV MRK TY I (W)4"(DOT)(100MIL)
- (B) RE PM W/RET REQ TY I (W)4"(SLD)(100MIL)
- (C) REFL PAV MRK TY I (W)8"(SLD)(100MIL)
- (D) REFL PAV MRK TY I (W)24"(SLD)(100MIL)
- (E) REFL PAV MRK TY I (W)(ARROW)(100MIL)
- (F) REFL PAV MRK TY I (W)(WORD)(100MIL)
- (G) REFL PAV MRK TY I (W)36"(YLD TRI)(100MIL)
- (H) RE PM W/RET REQ TY I (Y)4"(SLD)(100MIL)
- (I) REFL PAV MRK TY I (Y)24"(SLD)(100MIL)
- (J) REFL PAV MRK TY II-A-A
- (K) REFL PAV MRK TY I-C
- (L) REFL PAV MRK TY II-C-R
- (M) REF PROF PAV MRK TY I (W)4"(SLD)(060MIL)
- (N) REF PROF PAV MRK TY I (Y)4"(SLD)(090MIL)

SIGN (1 SIDE)
SIGN (2 SIDE)
DELINEATOR
DELINEATOR (BI)
ASSM (OM-2Y)(WC)GND

EXISTING SIGN TO BE REMOVED
EXISTING SIGN TO REMAIN
PROPOSED SIGN

NOTES:

1. REFER TO SUMMARY OF SMALL SIGNS FOR SIGN QUANTITIES.
2. ALL PAVEMENT MARKINGS AND SIGNAGE SHALL BE IN ACCORDANCE WITH THE LATEST EDITION OF THE TEXAS MANUAL ON UNIFORM TRAFFIC CONTROL DEVICES (TMUTCD).
3. ALL PAVEMENT MARKINGS ARE TY I (100MIL) UNLESS OTHERWISE SPECIFIED.
4. RESPECTIVE "REFL PAV MRK TY II" ITEM INCLUDED IN QUANTITIES AS SEALER FOR TY I MARKINGS APPLIED TO ALL CONCRETE SURFACES AS WELL AS ASPHALT SURFACES OLDER THEN 3 YEARS.
5. ALL STATIONS AND OFFSETS REFER TO WBFR_S2_CL UNLESS OTHERWISE NOTED.

0 50 100 150 200
SCALE IN FEET

STATE OF TEXAS
JUSTIN D. CARLTON
127593
LICENSED
PROFESSIONAL ENGINEER
03/23/2018

NO.	DATE	REVISION	APPROVED

WILLIAMSON COUNTY

HDR Engineering, Inc.
810 Hesters Crossing, Suite 120
Round Rock, Texas 78681
Texas Registered Engineering Firm F-754

SOUTHWEST BYPASS SEGMENT 2

SIGNING AND STRIPING WBFR STA 391+00 TO 402+00

SCALE: 1"=100′ SHEET 3 OF 8

DESIGN	FED.RD. DIV.NO.	FEDERAL AID PROJECT NO.		HIGHWAY NO.
JC	6			
GRAPHICS	STATE	DISTRICT	COUNTY	SHEET NO.
LG	TEXAS	AUS	WILLIAMSON	
CHECK	CONTROL	SECTION	JOB	221
JW				
CHECK	2103	01	034	
JC				

PLOT DRIVER: TXDOT_PDF_BW.pltcfg PENTABLE: S2-0000020/7018.tbl
USER: lgomezgonz DATE: 3/23/2018 TIME: 10:58:20 AM SCALE: 1:00
FILE: \

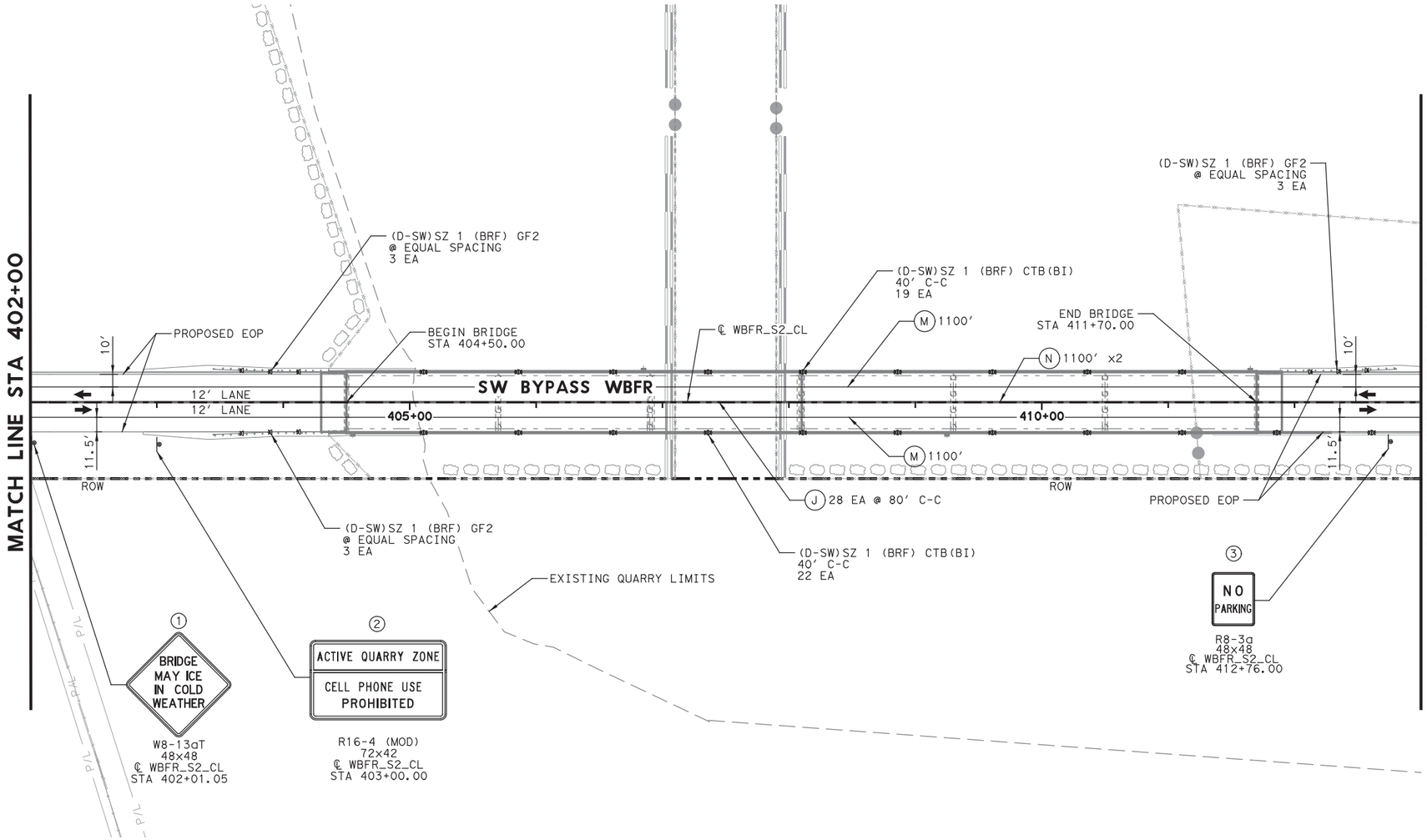

LEGEND

- (A) REFL PAV MRK TY I (W)4"(DOT)(100MIL)
- (B) RE PM W/RET REQ TY I (W)4"(SLD)(100MIL)
- (C) REFL PAV MRK TY I (W)8"(SLD)(100MIL)
- (D) REFL PAV MRK TY I (W)24"(SLD)(100MIL)
- (E) REFL PAV MRK TY I (W)(ARROW)(100MIL)
- (F) REFL PAV MRK TY I (W)(WORD)(100MIL)
- (G) REFL PAV MRK TY I (W)36"(YLD TRI)(100MIL)
- (H) RE PM W/RET REQ TY I (Y)4"(SLD)(100MIL)
- (I) REFL PAV MRK TY I (Y)24"(SLD)(100MIL)
- (J) REFL PAV MRK TY II-A-A
- (K) REFL PAV MRK TY I-C
- (L) REFL PAV MRK TY II-C-R
- (M) REF PROF PAV MRK TY I (W)4"(SLD)(060MIL)
- (N) REF PROF PAV MRK TY I (Y)4"(SLD)(090MIL)

SIGN (1 SIDE)
SIGN (2 SIDE)
DELINEATOR
DELINEATOR (BI)
ASSM (OM-2Y)(WC)GND
EXISTING SIGN TO BE REMOVED
EXISTING SIGN TO REMAIN
PROPOSED SIGN

NOTES:

1. REFER TO SUMMARY OF SMALL SIGNS FOR SIGN QUANTITIES.
2. ALL PAVEMENT MARKINGS AND SIGNAGE SHALL BE IN ACCORDANCE WITH THE LATEST EDITION OF THE TEXAS MANUAL ON UNIFORM TRAFFIC CONTROL DEVICES (TMUTCD).
3. ALL PAVEMENT MARKINGS ARE TY I (100MIL) UNLESS OTHERWISE SPECIFIED.
4. RESPECTIVE "REFL PAV MRK TY II" ITEM INCLUDED IN QUANTITIES AS SEALER FOR TY I MARKINGS APPLIED TO ALL CONCRETE SURFACES AS WELL AS ASPHALT SURFACES OLDER THEN 3 YEARS.
5. ALL STATIONS AND OFFSETS REFER TO WBFR_S2_CL UNLESS OTHERWISE NOTED.

0 50 100 150 200
SCALE IN FEET

STATE OF TEXAS
JUSTIN D. CARLTON
127593
LICENSED
PROFESSIONAL ENGINEER
03/23/2018

NO.	DATE	REVISION	APPROVED

WILLIAMSON COUNTY

HDR Engineering, Inc.
810 Hesters Crossing, Suite 120
Round Rock, Texas 78681
Texas Registered Engineering Firm F-754

SOUTHWEST BYPASS SEGMENT 2

SIGNING AND STRIPING WBFR STA 402+00TO STA 413+00

SCALE: 1"=100' SHEET 4 OF 8

DESIGN	FED.RD. DIV.NO.	FEDERAL AID PROJECT NO.		HIGHWAY NO.
JC	6			
GRAPHICS	STATE	DISTRICT	COUNTY	SHEET NO.
LG	TEXAS	AUS	WILLIAMSON	
CHECK	CONTROL	SECTION	JOB	222
JW	2103	01	034	
CHECK				
JC				

PLOT DRIVER: TXDOT_PDF_BW.pltcfg USER: lgomezgonz DATE: 3/23/2018 FILE: \
PENTABLE: S2-0000020170718.tbl TIME: 10:58:24 AM SCALE: 1:100

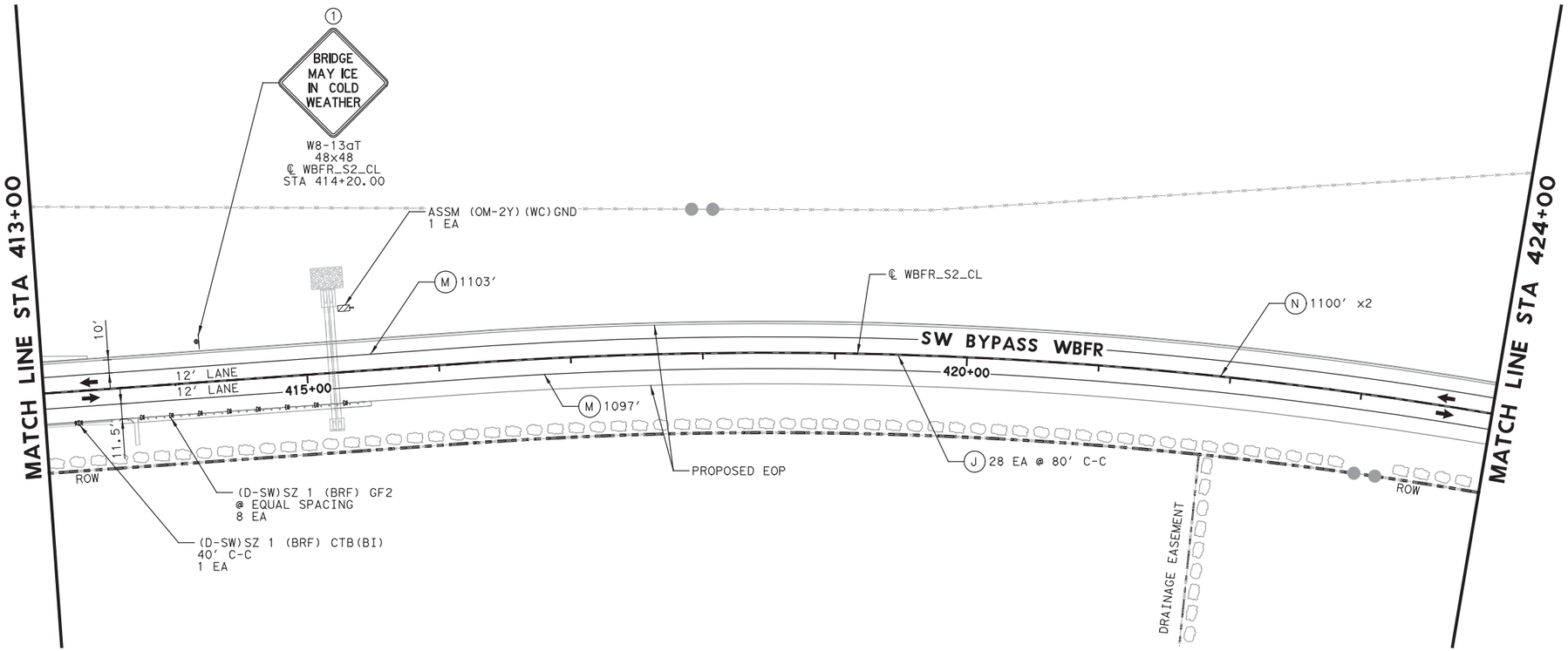

LEGEND

- (A) REFL PAV MRK TY I (W)4"(DOT)(100MIL)
- (B) RE PM W/RET REQ TY I (W)4"(SLD)(100MIL)
- (C) REFL PAV MRK TY I (W)8"(SLD)(100MIL)
- (D) REFL PAV MRK TY I (W)24"(SLD)(100MIL)
- (E) REFL PAV MRK TY I (W)(ARROW)(100MIL)
- (F) REFL PAV MRK TY I (W)(WORD)(100MIL)
- (G) REFL PAV MRK TY I (W)36"(YLD TRI)(100MIL)
- (H) RE PM W/RET REQ TY I (Y)4"(SLD)(100MIL)
- (I) REFL PAV MRK TY I (Y)24"(SLD)(100MIL)
- (J) REFL PAV MRK TY II-A-A
- (K) REFL PAV MRK TY I-C
- (L) REFL PAV MRK TY II-C-R
- (M) REF PROF PAV MRK TY I (W)4"(SLD)(060MIL)
- (N) REF PROF PAV MRK TY I (Y)4"(SLD)(090MIL)

SIGN (1 SIDE)
SIGN (2 SIDE)
DELINEATOR
DELINEATOR (BI)
ASSM (OM-2Y)(WC)GND
EXISTING SIGN TO BE REMOVED
EXISTING SIGN TO REMAIN
PROPOSED SIGN

NOTES:

1. REFER TO SUMMARY OF SMALL SIGNS FOR SIGN QUANTITIES.
2. ALL PAVEMENT MARKINGS AND SIGNAGE SHALL BE IN ACCORDANCE WITH THE LATEST EDITION OF THE TEXAS MANUAL ON UNIFORM TRAFFIC CONTROL DEVICES (TMUTCD).
3. ALL PAVEMENT MARKINGS ARE TY I (100MIL) UNLESS OTHERWISE SPECIFIED.
4. RESPECTIVE "REFL PAV MRK TY II" ITEM INCLUDED IN QUANTITIES AS SEALER FOR TY I MARKINGS APPLIED TO ALL CONCRETE SURFACES AS WELL AS ASPHALT SURFACES OLDER THEN 3 YEARS.
5. ALL STATIONS AND OFFSETS REFER TO WBFR_S2_CL UNLESS OTHERWISE NOTED.

0 50 100 150 200
SCALE IN FEET

STATE OF TEXAS
JUSTIN D. CARLTON
127593
LICENSED PROFESSIONAL ENGINEER
03/23/2018

NO.	DATE	REVISION	APPROVED

WILLIAMSON COUNTY

HDR Engineering, Inc.
810 Hesters Crossing, Suite 120
Round Rock, Texas 78681
Texas Registered Engineering Firm F-754

SOUTHWEST BYPASS SEGMENT 2

SIGNING AND STRIPING WBFR STA 413+00 TO STA 424+00

SCALE: 1"=100′ SHEET 5 OF 8

DESIGN	FED.RD. DIV.NO.	FEDERAL AID PROJECT NO.		HIGHWAY NO.
JC	6			
GRAPHICS	STATE	DISTRICT	COUNTY	SHEET NO.
LG	TEXAS	AUS	WILLIAMSON	
CHECK	CONTROL	SECTION	JOB	223
JW	2103	01	034	
CHECK				
JC				

PLOT DRIVER: TXDOT_PDF_BW.pltcfg USER: lgomezgonz DATE: 3/23/2018 FILE: \
PENTABLE: S2-0000220/T0718.tbl TIME: 10:58:28 AM SCALE: 1:100

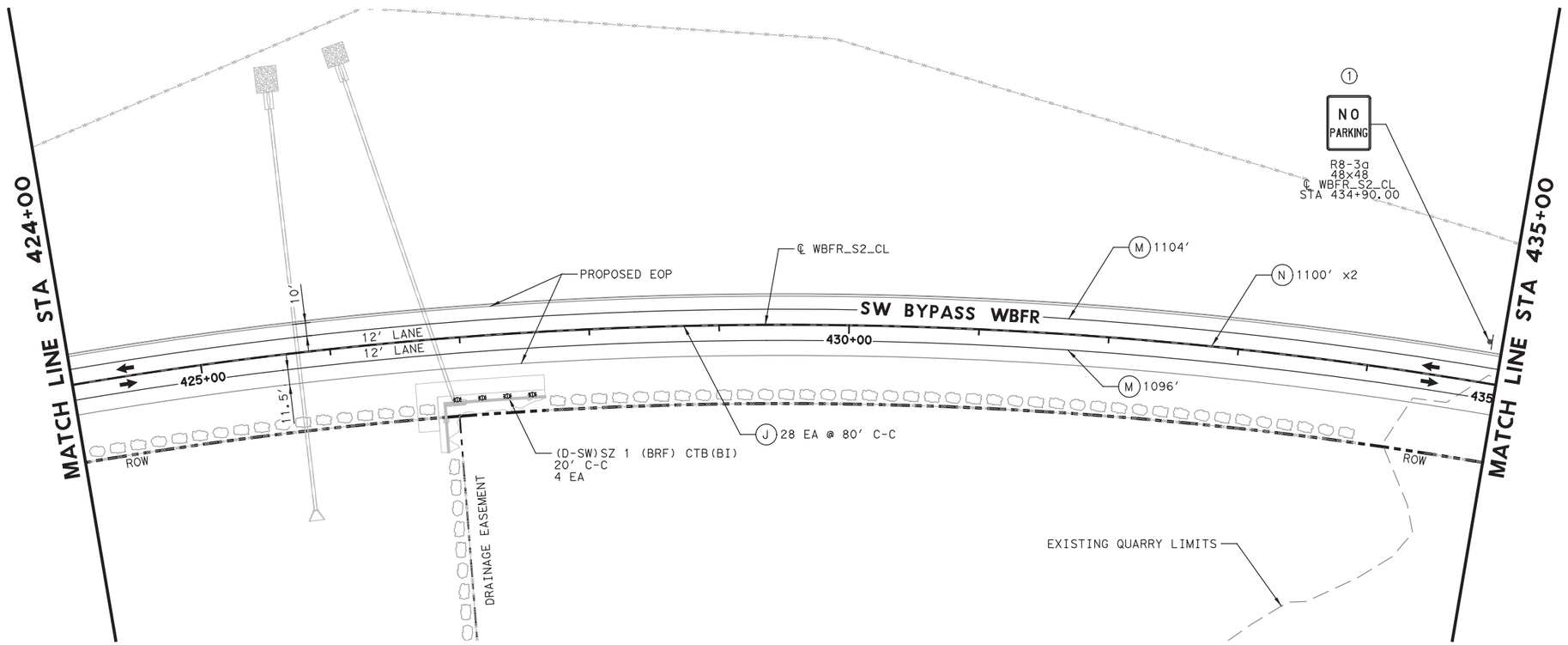

LEGEND

- (A) REFL PAV MRK TY I (W)4"(DOT)(100MIL)
- (B) RE PM W/RET REQ TY I (W)4"(SLD)(100MIL)
- (C) REFL PAV MRK TY I (W)8"(SLD)(100MIL)
- (D) REFL PAV MRK TY I (W)24"(SLD)(100MIL)
- (E) REFL PAV MRK TY I (W)(ARROW)(100MIL)
- (F) REFL PAV MRK TY I (W)(WORD)(100MIL)
- (G) REFL PAV MRK TY I (W)36"(YLD TRI)(100MIL)
- (H) RE PM W/RET REQ TY I (Y)4"(SLD)(100MIL)
- (I) REFL PAV MRK TY I (Y)24"(SLD)(100MIL)
- (J) REFL PAV MRK TY II-A-A
- (K) REFL PAV MRK TY I-C
- (L) REFL PAV MRK TY II-C-R
- (M) REF PROF PAV MRK TY I (W)4"(SLD)(060MIL)
- (N) REF PROF PAV MRK TY I (Y)4"(SLD)(090MIL)

SIGN (1 SIDE)
SIGN (2 SIDE)
DELINEATOR
DELINEATOR (BI)
ASSM (OM-2Y)(WC)GND
EXISTING SIGN TO BE REMOVED
EXISTING SIGN TO REMAIN
PROPOSED SIGN

NOTES:

1. REFER TO SUMMARY OF SMALL SIGNS FOR SIGN QUANTITIES.
2. ALL PAVEMENT MARKINGS AND SIGNAGE SHALL BE IN ACCORDANCE WITH THE LATEST EDITION OF THE TEXAS MANUAL ON UNIFORM TRAFFIC CONTROL DEVICES (TMUTCD).
3. ALL PAVEMENT MARKINGS ARE TY I (100MIL) UNLESS OTHERWISE SPECIFIED.
4. RESPECTIVE "REFL PAV MRK TY II" ITEM INCLUDED IN QUANTITIES AS SEALER FOR TY I MARKINGS APPLIED TO ALL CONCRETE SURFACES AS WELL AS ASPHALT SURFACES OLDER THEN 3 YEARS.
5. ALL STATIONS AND OFFSETS REFER TO WBFR_S2_CL UNLESS OTHERWISE NOTED.

0 50 100 150 200
SCALE IN FEET

STATE OF TEXAS
JUSTIN D. CARLTON
127593
LICENSED
PROFESSIONAL ENGINEER
03/23/2018

NO.	DATE	REVISION	APPROVED

WILLIAMSON COUNTY

HDR Engineering, Inc.
810 Hesters Crossing, Suite 120
Round Rock, Texas 78681
Texas Registered Engineering Firm F-754

SOUTHWEST BYPASS SEGMENT 2

SIGNING AND STRIPING WBFR STA 424+00 TO STA 435+00

SCALE: 1"=100' SHEET 6 OF 8

DESIGN	FED.RD. DIV.NO.	FEDERAL AID PROJECT NO.		HIGHWAY NO.
JC	6			
GRAPHICS LG	STATE	DISTRICT	COUNTY	SHEET NO.
CHECK JW	TEXAS	AUS	WILLIAMSON	224
CHECK JC	CONTROL 2103	SECTION 01	JOB 034	

PLOT DRIVER: TXDOT_PDF_BW.pltcfg PENTABLE: S2-0000020170718.tbl
USER: lgomezgonz DATE: 3/23/2018 TIME: 10:58:33 AM SCALE: 1:00
FILE: \

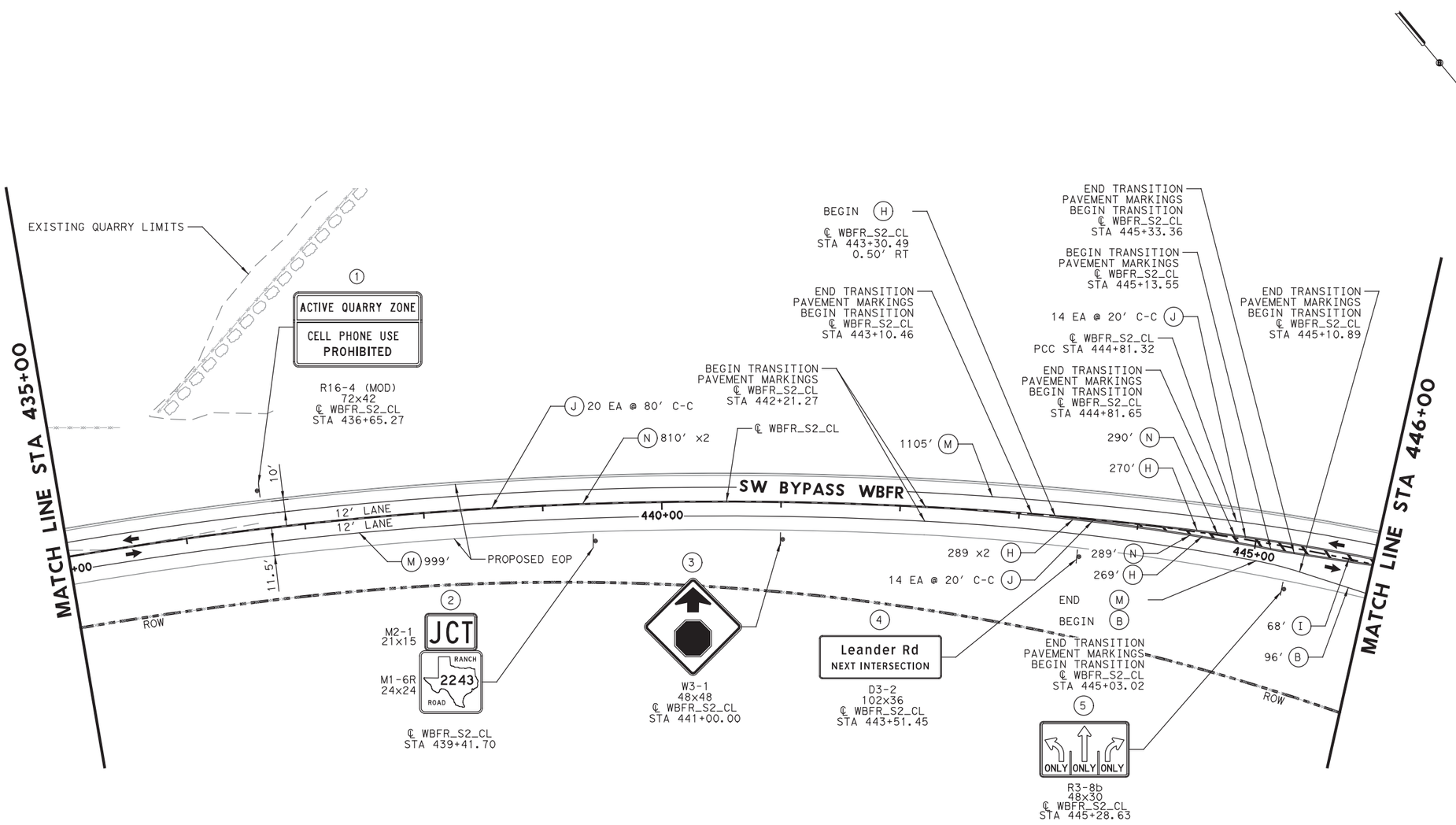

LEGEND

- (A) REFL PAV MRK TY I (W)4"(DOT)(100MIL)
- (B) RE PM W/RET REQ TY I (W)4"(SLD)(100MIL)
- (C) REFL PAV MRK TY I (W)8"(SLD)(100MIL)
- (D) REFL PAV MRK TY I (W)24"(SLD)(100MIL)
- (E) REFL PAV MRK TY I (W)(ARROW)(100MIL)
- (F) REFL PAV MRK TY I (W)(WORD)(100MIL)
- (G) REFL PAV MRK TY I (W)36"(YLD TRI)(100MIL)
- (H) RE PM W/RET REQ TY I (Y)4"(SLD)(100MIL)
- (I) REFL PAV MRK TY I (Y)24"(SLD)(100MIL)
- (J) REFL PAV MRK TY II-A-A
- (K) REFL PAV MRK TY I-C
- (L) REFL PAV MRK TY II-C-R
- (M) REF PROF PAV MRK TY I (W)4"(SLD)(060MIL)
- (N) REF PROF PAV MRK TY I (Y)4"(SLD)(090MIL)

SIGN (1 SIDE) — EXISTING SIGN TO BE REMOVED
SIGN (2 SIDE) — EXISTING SIGN TO REMAIN
DELINEATOR — PROPOSED SIGN
DELINEATOR (BI)
ASSM (OM-2Y)(WC)GND

NOTES:

1. REFER TO SUMMARY OF SMALL SIGNS FOR SIGN QUANTITIES.
2. ALL PAVEMENT MARKINGS AND SIGNAGE SHALL BE IN ACCORDANCE WITH THE LATEST EDITION OF THE TEXAS MANUAL ON UNIFORM TRAFFIC CONTROL DEVICES (TMUTCD).
3. ALL PAVEMENT MARKINGS ARE TY I (100MIL) UNLESS OTHERWISE SPECIFIED.
4. RESPECTIVE "REFL PAV MRK TY II" ITEM INCLUDED IN QUANTITIES AS SEALER FOR TY I MARKINGS APPLIED TO ALL CONCRETE SURFACES AS WELL AS ASPHALT SURFACES OLDER THEN 3 YEARS.
5. ALL STATIONS AND OFFSETS REFER TO WBFR_S2_CL UNLESS OTHERWISE NOTED.

0 50 100 150 200
SCALE IN FEET

STATE OF TEXAS
JUSTIN D. CARLTON
127593
LICENSED
PROFESSIONAL ENGINEER
03/23/2018

NO.	DATE	REVISION	APPROVED

WILLIAMSON COUNTY TEXAS

HDR Engineering, Inc.
810 Hesters Crossing, Suite 120
Round Rock, Texas 78681
Texas Registered Engineering Firm F-754

SOUTHWEST BYPASS SEGMENT 2

SIGNING AND STRIPING WBFR STA 435+00 TO STA 446+00

SCALE: 1"=100' SHEET 7 OF 8

DESIGN	FED.RD. DIV.NO.	FEDERAL AID PROJECT NO.		HIGHWAY NO.
JC	6			
GRAPHICS	STATE	DISTRICT	COUNTY	SHEET NO.
LG	TEXAS	AUS	WILLIAMSON	
CHECK	CONTROL	SECTION	JOB	225
JW	2103	01	034	
CHECK				
JC				

PLOT DRIVER: TXDOT_PDF_BW.pltcfg PENTABLE: S2-000002070718.tbl
USER: lgomezgon2 DATE: 3/23/2018 TIME: 10:58:38 AM SCALE: 1:00
FILE: \

4/12/2018 7:20 AM

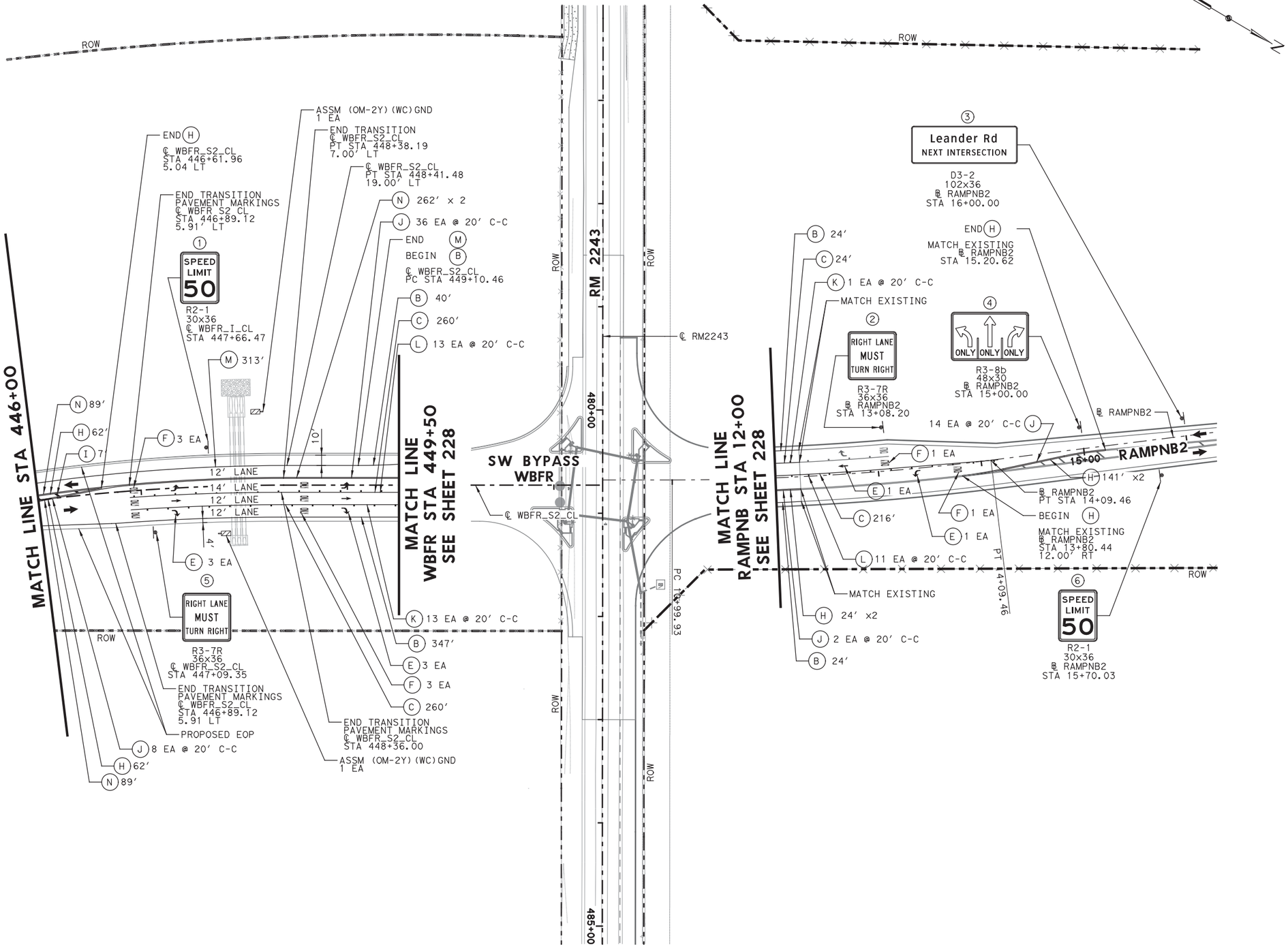

LEGEND

- (A) REFL PAV MRK TY I (W)4"(DOT)(100MIL)
- (B) RE PM W/RET REQ TY I (W)4"(SLD)(100MIL)
- (C) REFL PAV MRK TY I (W)8"(SLD)(100MIL)
- (D) REFL PAV MRK TY I (W)24"(SLD)(100MIL)
- (E) REFL PAV MRK TY I (W)(ARROW)(100MIL)
- (F) REFL PAV MRK TY I (W)(WORD)(100MIL)
- (G) REFL PAV MRK TY I (W)36"(YLD TRI)(100MIL)
- (H) RE PM W/RET REQ TY I (Y)4"(SLD)(100MIL)
- (I) REFL PAV MRK TY I (Y)24"(SLD)(100MIL)
- (J) REFL PAV MRK TY II-A-A
- (K) REFL PAV MRK TY I-C
- (L) REFL PAV MRK TY II-C-R
- (M) REF PROF PAV MRK TY I (W)4"(SLD)(060MIL)
- (N) REF PROF PAV MRK TY I (Y)4"(SLD)(090MIL)

SIGN (1 SIDE) — EXISTING SIGN TO BE REMOVED
SIGN (2 SIDE) — EXISTING SIGN TO REMAIN
DELINEATOR — PROPOSED SIGN
DELINEATOR (BI)
ASSM (OM-2Y)(WC)GND

NOTES:

1. REFER TO SUMMARY OF SMALL SIGNS FOR SIGN QUANTITIES.
2. ALL PAVEMENT MARKINGS AND SIGNAGE SHALL BE IN ACCORDANCE WITH THE LATEST EDITION OF THE TEXAS MANUAL ON UNIFORM TRAFFIC CONTROL DEVICES (TMUTCD).
3. ALL PAVEMENT MARKINGS ARE TY I (100MIL) UNLESS OTHERWISE SPECIFIED.
4. RESPECTIVE "REFL PAV MRK TY II" ITEM INCLUDED IN QUANTITIES AS SEALER FOR TY I MARKINGS APPLIED TO ALL CONCRETE SURFACES AS WELL AS ASPHALT SURFACES OLDER THEN 3 YEARS.
5. ALL STATIONS AND OFFSETS REFER TO WBFR_S2_CL UNLESS OTHERWISE NOTED.

0 50 100 150 200
SCALE IN FEET

STATE OF TEXAS
JUSTIN D. CARLTON
127593
LICENSED
PROFESSIONAL ENGINEER
03/23/2018

NO.	DATE	REVISION	APPROVED

WILLIAMSON COUNTY

HDR Engineering, Inc.
810 Hesters Crossing, Suite 120
Round Rock, Texas 78681
Texas Registered Engineering Firm F-754

SOUTHWEST BYPASS SEGMENT 2

SIGNING AND STRIPING WBFR STA 446+00 TO END

SCALE: 1"=100' SHEET 8 OF 8

DESIGN	FED.RD. DIV.NO.	FEDERAL AID PROJECT NO.		HIGHWAY NO.
JC	6			
GRAPHICS	STATE	DISTRICT	COUNTY	SHEET NO.
LG	TEXAS	AUS	WILLIAMSON	
CHECK	CONTROL	SECTION	JOB	226
JW	2103	01	034	
CHECK				
JC				

PLOT DRIVER: TXDOT_PDF_BW.pltcfg PENTABLE: S2-0000020170718.tbl
USER: lgomezgonz DATE: 3/23/2018 TIME: 10:58:43 AM SCALE: 1:100
FILE: \

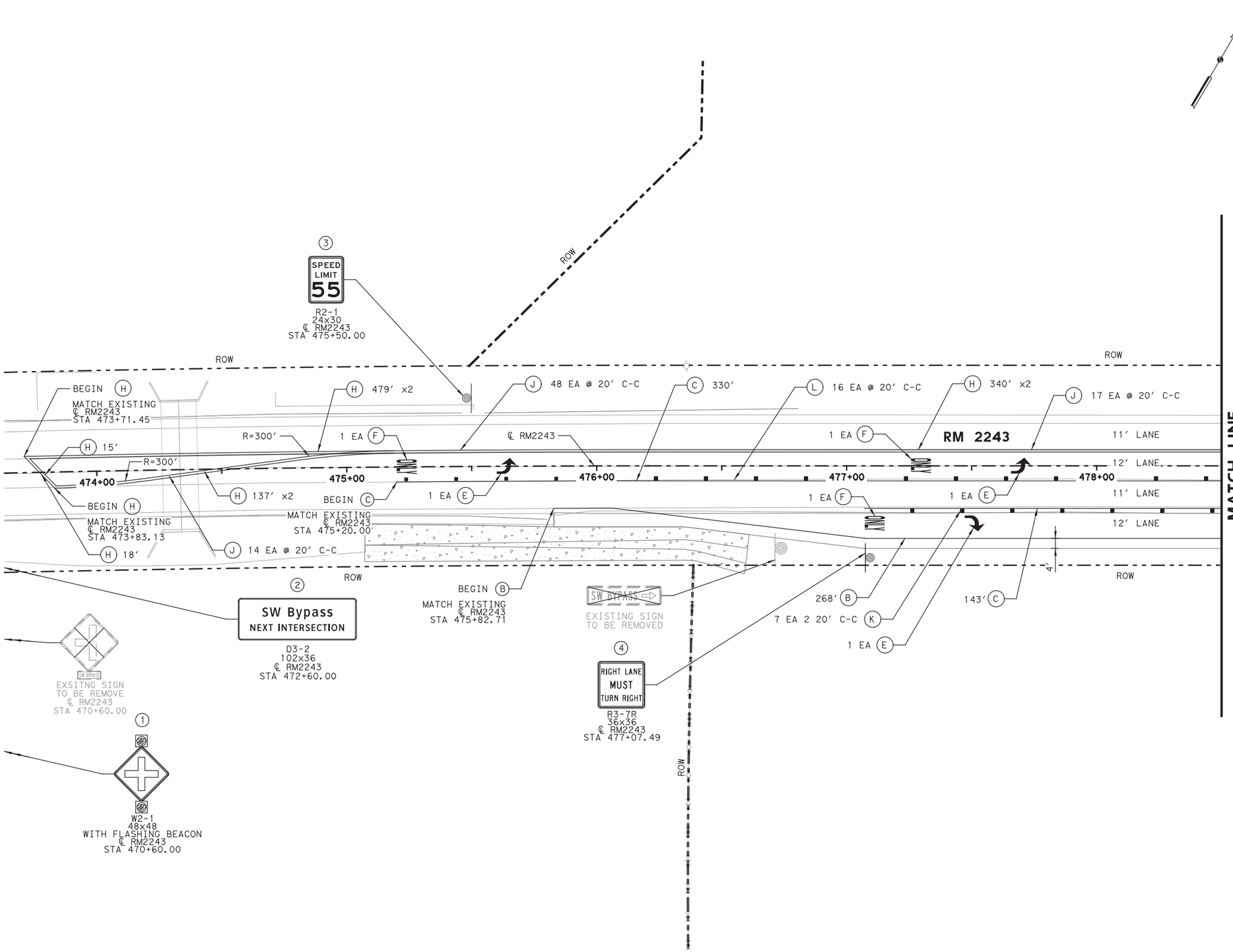

LEGEND

- (A) REFL PAV MRK TY I (W)4"(DOT)(100MIL)
- (B) RE PM W/RET REQ TY I (W)4"(SLD)(100MIL)
- (C) REFL PAV MRK TY I (W)8"(SLD)(100MIL)
- (D) REFL PAV MRK TY I (W)24"(SLD)(100MIL)
- (E) REFL PAV MRK TY I (W)(ARROW)(100MIL)
- (F) REFL PAV MRK TY I (W)(WORD)(100MIL)
- (G) REFL PAV MRK TY I (W)36"(YLD TRI)(100MIL)
- (H) RE PM W/RET REQ TY I (Y)4"(SLD)(100MIL)
- (I) REFL PAV MRK TY I (Y)24"(SLD)(100MIL)
- (J) REFL PAV MRK TY II-A-A
- (K) REFL PAV MRK TY I-C
- (L) REFL PAV MRK TY II-C-R
- (M) REF PROF PAV MRK TY I (W)4"(SLD)(060MIL)
- (N) REF PROF PAV MRK TY I (Y)4"(SLD)(090MIL)

SIGN (1 SIDE)
SIGN (2 SIDE)
DELINEATOR
DELINEATOR (BI)
ASSM (OM-2Y)(WC)GND
EXISTING SIGN TO BE REMOVED
EXISTING SIGN TO REMAIN
PROPOSED SIGN

NOTES:

1. REFER TO SUMMARY OF SMALL SIGNS FOR SIGN QUANTITIES.
2. ALL PAVEMENT MARKINGS AND SIGNAGE SHALL BE IN ACCORDANCE WITH THE LATEST EDITION OF THE TEXAS MANUAL ON UNIFORM TRAFFIC CONTROL DEVICES (TMUTCD).
3. ALL PAVEMENT MARKINGS ARE TY I (100MIL) UNLESS OTHERWISE SPECIFIED.
4. RESPECTIVE "REFL PAV MRK TY II" ITEM INCLUDED IN QUANTITIES AS SEALER FOR TY I MARKINGS APPLIED TO ALL CONCRETE SURFACES AS WELL AS ASPHALT SURFACES OLDER THEN 3 YEARS.
5. ALL STATIONS AND OFFSETS REFER TO WBFR_S2_CL UNLESS OTHERWISE NOTED.

0 20 40 60 80
SCALE IN FEET

STATE OF TEXAS
JUSTIN D. CARLTON
127593
LICENSED
PROFESSIONAL ENGINEER
03/23/2018

NO.	DATE	REVISION	APPROVED

WILLIAMSON COUNTY

HDR Engineering, Inc.
810 Hesters Crossing, Suite 120
Round Rock, Texas 78681
Texas Registered Engineering Firm F-754

SOUTHWEST BYPASS SEGMENT 2

SIGNING AND STRIPING RM 2243 BEGIN TO STA 478+50

SCALE: 1"=40′ SHEET 1 OF 3

DESIGN	FED.RD. DIV.NO.	FEDERAL AID PROJECT NO.		HIGHWAY NO.
JC	6			
GRAPHICS LG	STATE	DISTRICT	COUNTY	SHEET NO.
CHECK JW	TEXAS	AUS	WILLIAMSON	227
CHECK JC	CONTROL	SECTION	JOB	
	2103	01	034	

PLOT DRIVER: TXDOT_PDF_BW.pltcfg PENTABLE: S2-000002017018.tbl
USER: lgomezgonz DATE: 3/23/2018 TIME: 10:58:47 AM SCALE: 1:40
FILE: \

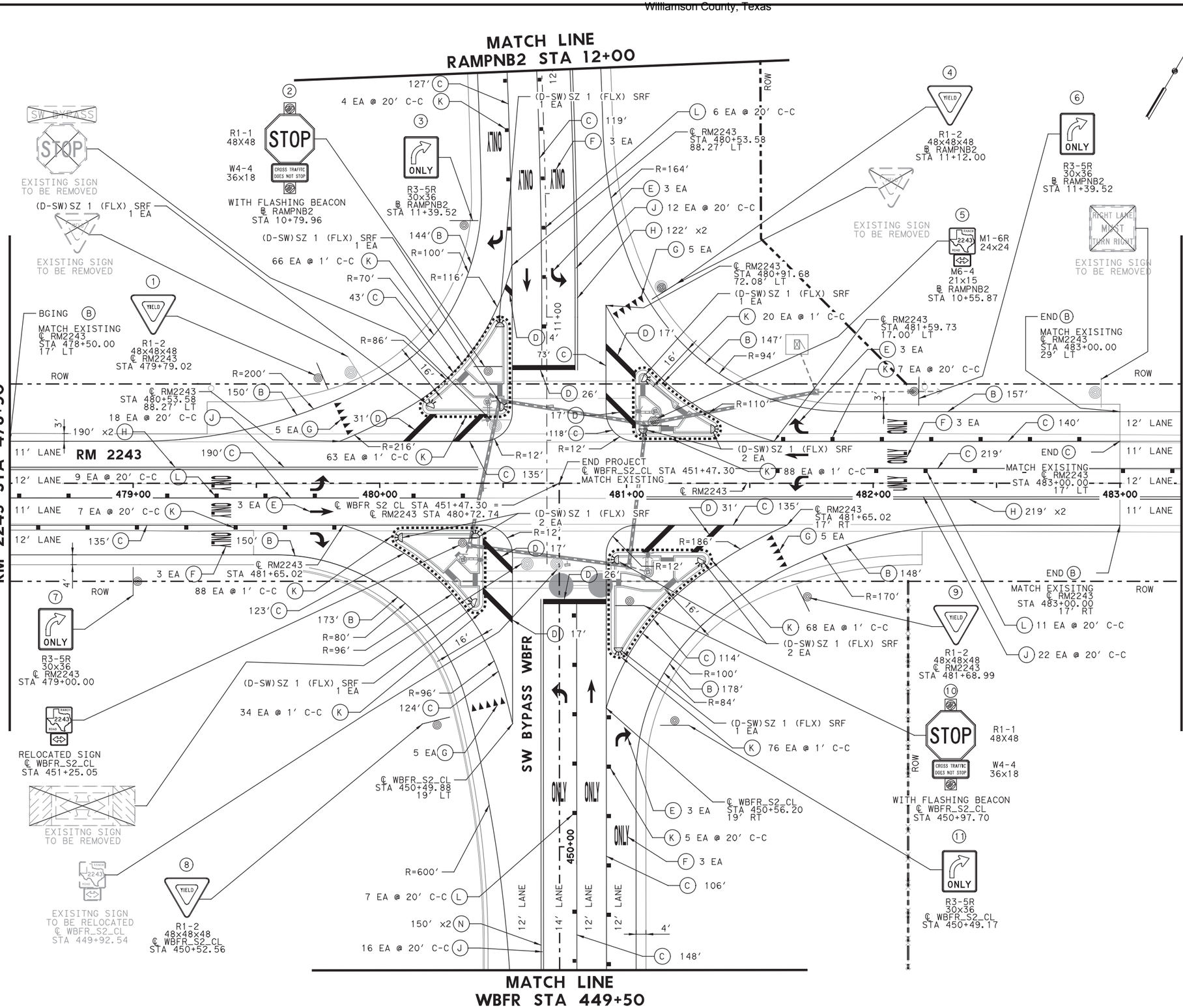

LEGEND

- (A) REFL PAV MRK TY I (W)4"(DOT)(100MIL)
- (B) RE PM W/RET REQ TY I (W)4"(SLD)(100MIL)
- (C) REFL PAV MRK TY I (W)8"(SLD)(100MIL)
- (D) REFL PAV MRK TY I (W)24"(SLD)(100MIL)
- (E) REFL PAV MRK TY I (W)(ARROW)(100MIL)
- (F) REFL PAV MRK TY I (W)(WORD)(100MIL)
- (G) REFL PAV MRK TY I (W)36"(YLD TRI)(100MIL)
- (H) RE PM W/RET REQ TY I (Y)4"(SLD)(100MIL)
- (I) REFL PAV MRK TY I (Y)24"(SLD)(100MIL)
- (J) REFL PAV MRK TY II-A-A
- (K) REFL PAV MRK TY I-C
- (L) REFL PAV MRK TY II-C-R
- (M) REF PROF PAV MRK TY I (W)4"(SLD)(060MIL)
- (N) REF PROF PAV MRK TY I (Y)4"(SLD)(090MIL)

SIGN (1 SIDE)
SIGN (2 SIDE)
DELINEATOR
DELINEATOR (BI)
ASSM (OM-2Y)(WC)GND
EXISTING SIGN TO BE REMOVED
EXISTING SIGN TO REMAIN
PROPOSED SIGN

NOTES:

1. REFER TO SUMMARY OF SMALL SIGNS FOR SIGN QUANTITIES.
2. ALL PAVEMENT MARKINGS AND SIGNAGE SHALL BE IN ACCORDANCE WITH THE LATEST EDITION OF THE TEXAS MANUAL ON UNIFORM TRAFFIC CONTROL DEVICES (TMUTCD).
3. ALL PAVEMENT MARKINGS ARE TY I (100MIL) UNLESS OTHERWISE SPECIFIED.
4. RESPECTIVE "REFL PAV MRK TY II" ITEM INCLUDED IN QUANTITIES AS SEALER FOR TY I MARKINGS APPLIED TO ALL CONCRETE SURFACES AS WELL AS ASPHALT SURFACES OLDER THEN 3 YEARS.
5. ALL STATIONS AND OFFSETS REFER TO WBFR_S2_CL UNLESS OTHERWISE NOTED.

0 20 40 60 80
SCALE IN FEET

STATE OF TEXAS
JUSTIN D. CARLTON
127593
LICENSED
PROFESSIONAL ENGINEER
03/23/2018

NO.	DATE	REVISION	APPROVED

WILLIAMSON COUNTY

HDR Engineering, Inc.
810 Hesters Crossing, Suite 120
Round Rock, Texas 78681
Texas Registered Engineering Firm F-754

SOUTHWEST BYPASS SEGMENT 2

SIGNING AND STRIPING RM 2243 STA 478+50 TO STA 483+25

SCALE: 1"=40'
SHEET 2 OF 3

DESIGN	FED. RD. DIV. NO.	FEDERAL AID PROJECT NO.		HIGHWAY NO.
JC	6			
GRAPHICS	STATE	DISTRICT	COUNTY	SHEET NO.
LG	TEXAS	AUS	WILLIAMSON	228
CHECK	CONTROL	SECTION	JOB	
JW	2103	01	034	
CHECK				
JC				

PLOT DRIVER: TXDOT_PDF_BW.pltcfg PENTABLE: S2-00000201707l8.tbl
USER: lgomezgonz DATE: 3/23/2018 TIME: 10:58:51 AM SCALE: 1:40
FILE: \

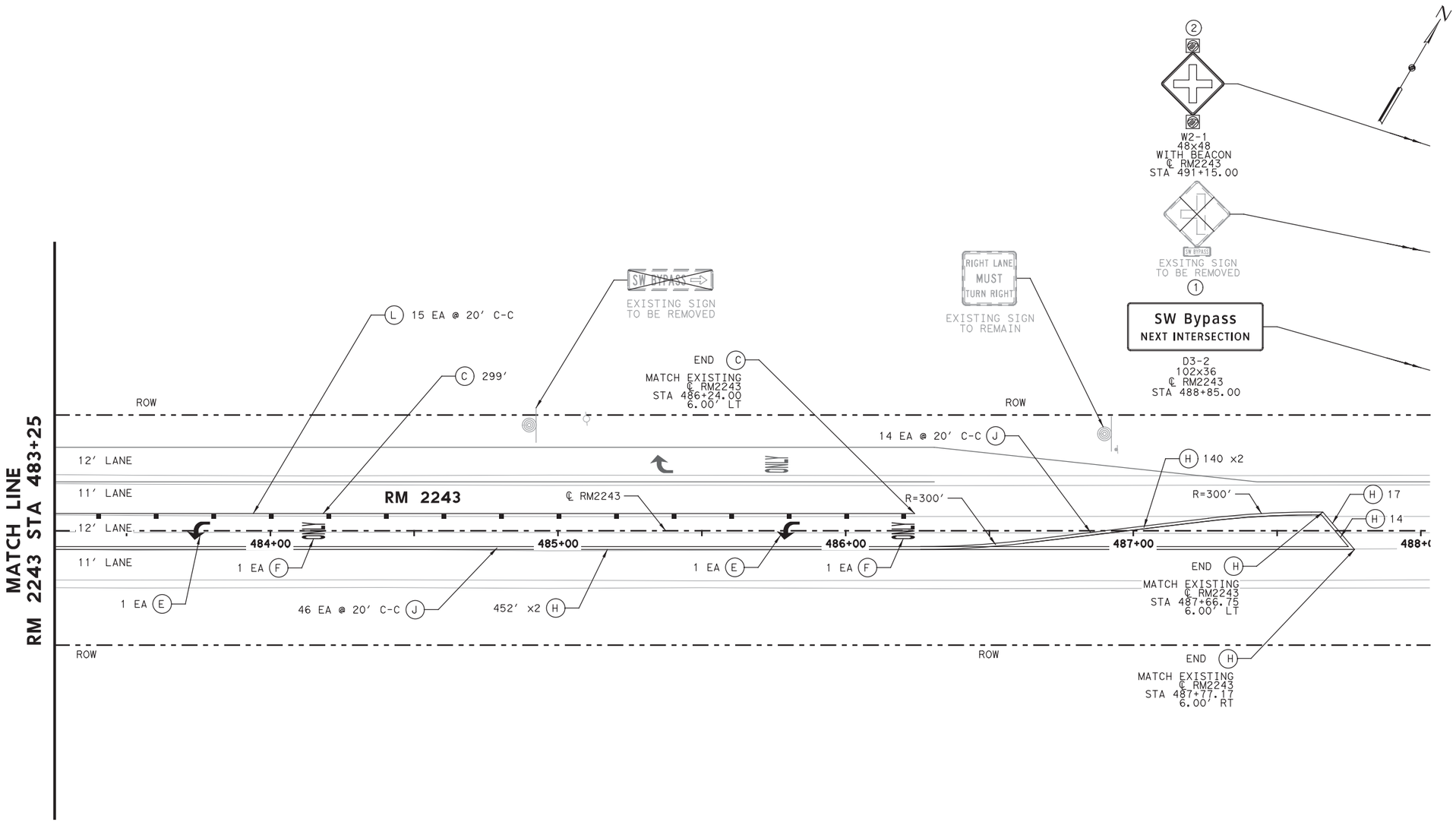

LEGEND

- (A) REFL PAV MRK TY I (W)4"(DOT)(100MIL)
- (B) RE PM W/RET REQ TY I (W)4"(SLD)(100MIL)
- (C) REFL PAV MRK TY I (W)8"(SLD)(100MIL)
- (D) REFL PAV MRK TY I (W)24"(SLD)(100MIL)
- (E) REFL PAV MRK TY I (W)(ARROW)(100MIL)
- (F) REFL PAV MRK TY I (W)(WORD)(100MIL)
- (G) REFL PAV MRK TY I (W)36"(YLD TRI)(100MIL)
- (H) RE PM W/RET REQ TY I (Y)4"(SLD)(100MIL)
- (I) REFL PAV MRK TY I (Y)24"(SLD)(100MIL)
- (J) REFL PAV MRK TY II-A-A
- (K) REFL PAV MRK TY I-C
- (L) REFL PAV MRK TY II-C-R
- (M) REF PROF PAV MRK TY I (W)4"(SLD)(060MIL)
- (N) REF PROF PAV MRK TY I (Y)4"(SLD)(090MIL)

SIGN (1 SIDE)
SIGN (2 SIDE)
DELINEATOR
DELINEATOR (BI)
ASSM (OM-2Y)(WC)GND
EXISTING SIGN TO BE REMOVED
EXISTING SIGN TO REMAIN
PROPOSED SIGN

NOTES:

1. REFER TO SUMMARY OF SMALL SIGNS FOR SIGN QUANTITIES.
2. ALL PAVEMENT MARKINGS AND SIGNAGE SHALL BE IN ACCORDANCE WITH THE LATEST EDITION OF THE TEXAS MANUAL ON UNIFORM TRAFFIC CONTROL DEVICES (TMUTCD).
3. ALL PAVEMENT MARKINGS ARE TY I (100MIL) UNLESS OTHERWISE SPECIFIED.
4. RESPECTIVE "REFL PAV MRK TY II" ITEM INCLUDED IN QUANTITIES AS SEALER FOR TY I MARKINGS APPLIED TO ALL CONCRETE SURFACES AS WELL AS ASPHALT SURFACES OLDER THEN 3 YEARS.
5. ALL STATIONS AND OFFSETS REFER TO WBFR_S2_CL UNLESS OTHERWISE NOTED.

0 20 40 60 80
SCALE IN FEET

STATE OF TEXAS
JUSTIN D. CARLTON
127593
LICENSED
PROFESSIONAL ENGINEER
03/23/2018

NO.	DATE	REVISION	APPROVED

WILLIAMSON COUNTY

HDR Engineering, Inc.
810 Hesters Crossing, Suite 120
Round Rock, Texas 78681
Texas Registered Engineering Firm F-754

SOUTHWEST BYPASS SEGMENT 2

SIGNING AND STRIPING RM 2243 STA 483+25 TO END

SCALE: 1"=40'
SHEET 3 OF 3

DESIGN	FED. RD. DIV. NO.	FEDERAL AID PROJECT NO.		HIGHWAY NO.
JC	6			
GRAPHICS	STATE	DISTRICT	COUNTY	SHEET NO.
LG	TEXAS	AUS	WILLIAMSON	229
CHECK	CONTROL	SECTION	JOB	
JW	2103	01	034	
CHECK				
JC				

PLOT DRIVER: TXDOT_PDF_BW.pltcfg PENTABLE: S2-0000020170718.tbl
USER: lgomezgonz DATE: 3/23/2018 TIME: 10:58:56 AM SCALE: 1:40
FILE: \

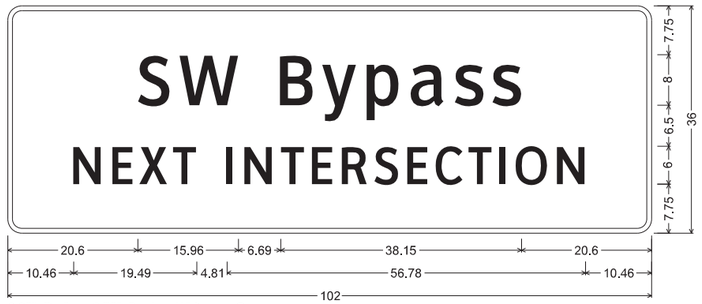

2.25" Radius, 0.75" Border, White on Green;
[SW Bypass] ClearviewHwy-3-W; [NEXT INTERSECTION] ClearviewHwy-3-W;

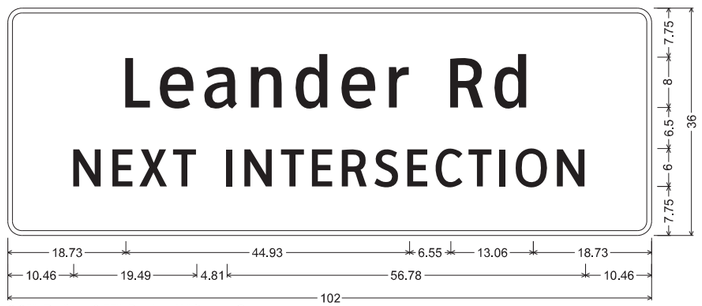

2.25" Radius, 0.75" Border, White on Green;
[Leander RD] ClearviewHwy-3-W; [NEXT INTERSECTION] ClearviewHwy-3-W;

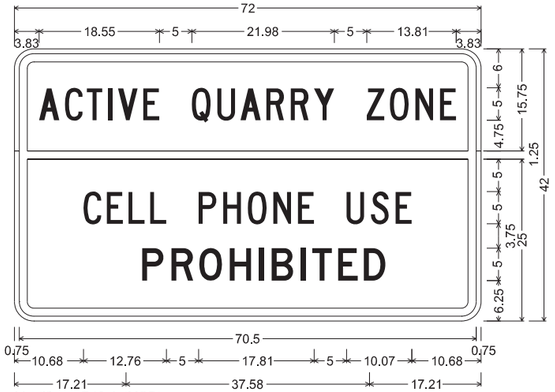

Identifier : R16-4 (MOD);
3.00" Radius, 1.25" Border, 0.75" Indent, Black on Yellow;
[ACTIVE QUARRY ZONE] C;
3.00" Radius, 1.25" Border, 0.75" Indent, Black on White;
[CELL PHONE USE] C; [PROHIBITED] D;

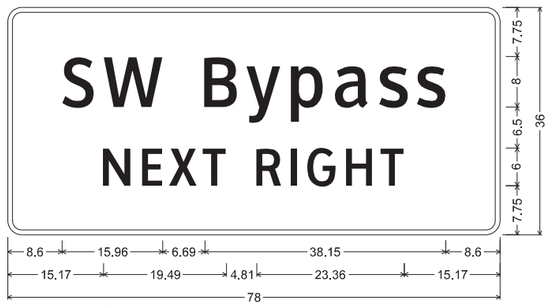

2.25" Radius, 0.75" Border, White on Green;
[SW Bypass] ClearviewHwy-3-W; [NEXT RIGHT] ClearviewHwy-3-W;

PLOT DRIVER: TXDOT_PDF_BW.pltcfg PENTABLE: S2-0000020170718.tbl
USER: lgomezgonz DATE: 3/23/2018 TIME: 10:58:58 AM SCALE: 1:100
FILE: \



03/23/2018

NO.	DATE	REVISION	APPROVED

WILLIAMSON COUNTY

HDR Engineering, Inc.
810 Hesters Crossing, Suite 120
Round Rock, Texas 78681
Texas Registered Engineering Firm F-754

SOUTHWEST BYPASS SEGMENT 2

SIGNING DETAILS WBFR

NTS SHEET 1 OF 1

DESIGN	FED.RD. DIV.NO.	FEDERAL AID PROJECT NO.		HIGHWAY NO.
JC	6			
GRAPHICS	STATE	DISTRICT	COUNTY	SHEET NO.
LG	TEXAS	AUS	WILLIAMSON	230
CHECK	CONTROL	SECTION	JOB	
JW	2103	01	034	
CHECK				
JC				

DISCLAIMER:
The use of this standard is governed by the "Texas Engineering Practice Act". No warranty of any kind is made by TxDOT for any purpose whatsoever. TxDOT assumes no responsibility for the conversion of this standard to other formats or for incorrect results or damages resulting from its use.

USE OF WARNING DEVICES AT CURVES WITH ADVISORY SPEED LIMITS

Amount by which Advisory Speed Is less than Posted Speed	Warning Devices Needed
5 MPH & 10 MPH	RPMs
15 MPH & 20 MPH	RPMs, and Delineators or RPMs and ONE DIRECTION LARGE ARROW (W1-6) or (W1-9T) sign
25 MPH & Greater	RPMs and Chevrons

SUGGESTED SPACING FOR DELINEATORS ON HORIZONTAL CURVES

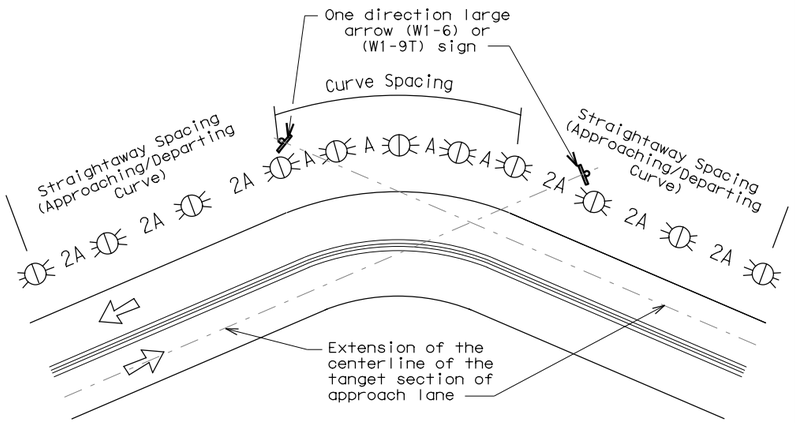

Curves less than 1 degree do not normally require delineators.

NOTE

ONE DIRECTIONAL LARGE ARROW (W1-6) or(W1-9T) sign should be located at approximately and perpendicular to the extension of the centerline of the tangent section of approach lane.

SUGGESTED SPACING FOR CHEVRONS ON HORIZONTAL CURVES

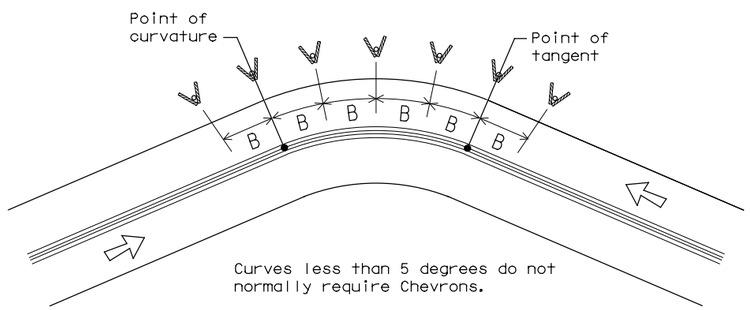

Curves less than 5 degrees do not normally require Chevrons.

DELINEATOR AND CHEVRON SPACING

WHEN DEGREE OF CURVE OR RADIUS IS KNOWN

Degree of Curve	FEET Radius of Curve	Spacing in Curve	Spacing in Straightaway	Chevron Spacing in Curve
		A	2A	B
1	5730	225	450	——
2	2865	160	320	——
3	1910	130	260	200
4	1433	110	220	160
5	1146	100	200	160
6	955	90	180	160
7	819	85	170	160
8	716	75	150	160
9	637	75	150	120
10	573	70	140	120
11	521	65	130	120
12	478	60	120	120
13	441	60	120	120
14	409	55	110	80
15	382	55	110	80
16	358	55	110	80
19	302	50	100	80
23	249	40	80	80
29	198	35	70	40
38	151	30	60	40
57	101	20	40	40

Curve delineator approach and departure spacing should include 3 delineators spaced at 2A. This spacing should be used during design preparation or when the degree of curve is known.

DELINEATOR AND CHEVRON SPACING

WHEN DEGREE OF CURVE OR RADIUS IS NOT KNOWN

Advisory Speed (MPH)	Spacing in Curve	Spacing in Straightaway	Chevron Spacing in Curve
	A	2xA	B
65	130	260	200
60	110	220	160
55	100	200	160
50	85	170	160
45	75	150	120
40	70	140	120
35	60	120	120
30	55	110	80
25	50	100	80
20	40	80	80
15	35	70	40

If the degree of curve is not known, delineator spacing may be determined based on the Advisory Speed of the curve. Use the delineator curve spacing for each Advisory Speed (MPH).

DELINEATOR AND OBJECT MARKER APPLICATION AND SPACING

CONDITION	REQUIRED TREATMENT	MINIMUM SPACING
Frwy./Exp. Tangent	RPMs	See PM-series and FPM-series standard sheets
Frwy./Exp. Curve[1]	Single delineators on right side	See delineator spacing table
FRWY/EXP. Ramp	Single delineators on at least one side of ramp (should be on outside of curves) (see Detail 4 on D&OM(4))	100 feet on ramp tangents. Use delineator spacing table for ramp curves ("straightway spacing" does not apply to ramp curves).
Acceleration/Deceleration Lane	Double delineators (see Detail 4 on D&OM(4))	100 feet (See Detail 4 on D & OM (4))
Truck Escape Ramp	Single red delineators on both sides	50 feet
Bridge Rail (steel or concrete)and Metal Beam Guard Fence or CTB	Bi-Directional Delineators when undivided with one lane each direction Single Delineators when multiple lanes each direction	Equal spacing (100'max) but not less than 3 delineators
Guard Rail Terminus/Impact Head	Divided highway - Object marker on approach end. Undivided 2-lane highways - Object marker on approach and departure end.	Requires Type 3 Object Marker or reflective sheeting provided by manufacturer per D & OM(VIA).
Bridges with no Approach Rail	Type 3 Object Marker at end of rail and 3 single delineators approaching rail.	See Detail 2 on D & OM(4)
Reduced Width Approaches to Bridge Rail	Type 2 Object Markers and 3 single delineators approaching bridge.	See Detail 1 on D & OM(4)
Culverts without MBGF	Type 2 Object Markers	See Detail 3 on D & OM(4)
Crossovers	Double yellow delineators or RPM's	See Detail 5 on D & OM (4)
Pavement Narrowing (lane merge) on Freeways/Expressway	Single delineators adjacent to affected lane for full length of transition	100 feet

NOTES

1. Delineators not required in urban areas with continuous illumination.
2. Unless indicated otherwise, the delineator or barrier reflector color shall conform to the color of the pavement edge line on the side of the road where the delineators or barrier reflectors are placed.
3. Barrier reflectors may be used to replace required delineators.
4. Single red delineators may be mounted on the back side of delineator posts for wrong way driver applications

LEGEND

	Bi-directional Delineator
	Delineator
	Sign

Texas Department of Transportation

Traffic Operations Division Standard

DELINEATOR & OBJECT MARKER PLACEMENT DETAILS

D & OM(3)-15B

FILE: dom3-15b.dgn	DN: TXDOT	CK: TXDOT	DW: TXDOT	CK: TXDOT
©TxDOT August 2004	CONT	SECT	JOB	HIGHWAY
REVISIONS	2103	01	034	
3-15	DIST	COUNTY		SHEET NO.
8-15	AUS	WILLIAMSON		231

20C

DATE: 3/23/2018 10:52:06 AM
FILE: c:\pwworking\dal\d0911857\dom3-15b.dgn

DISCLAIMER:
The use of this standard is governed by the "Texas Engineering Practice Act". No warranty of any kind is made by TxDOT for any purpose whatsoever. TxDOT assumes no responsibility for the conversion of this standard to other formats or for incorrect results or damages resulting from its use.

DATE: 3/23/2018 10:52:08 AM
FILE: c:\pwworking\dal\d0911857\dom5-15.dgn

TWO-WAY, TWO LANE ROADWAY WITH REDUCED WIDTH APPROACH RAIL

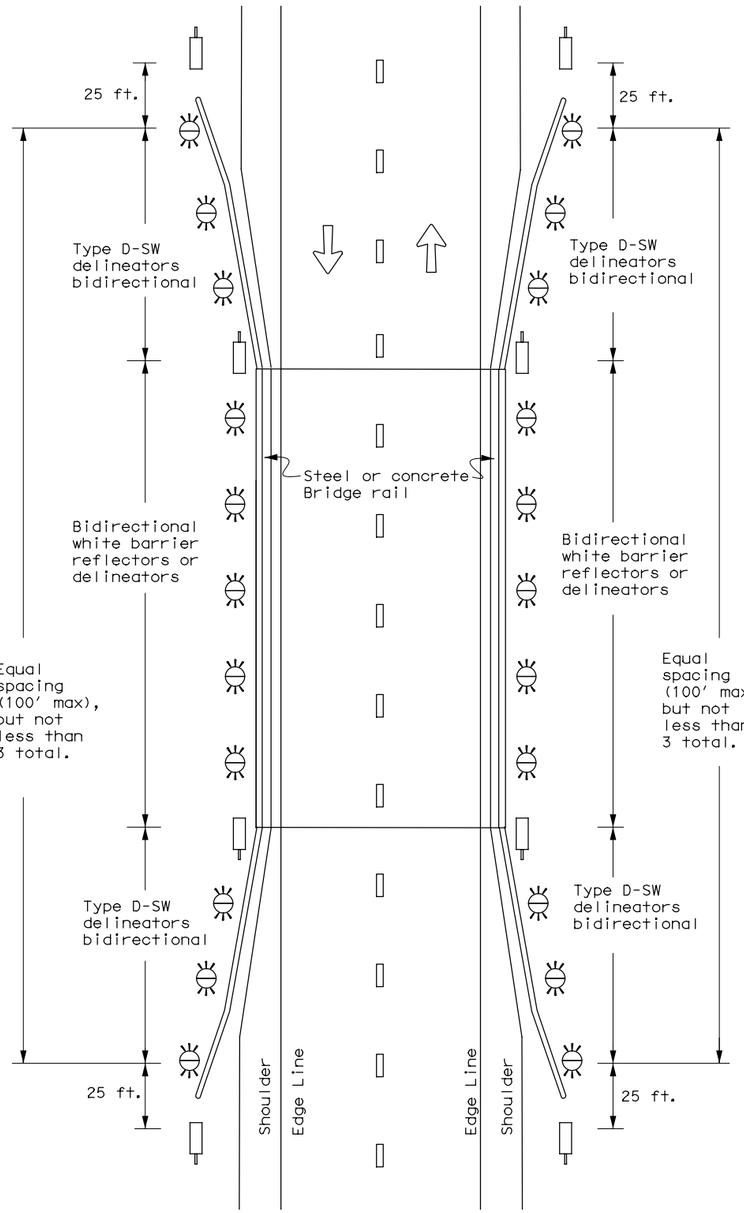

TWO-WAY, TWO LANE ROADWAY WITH METAL BEAM GUARD FENCE (MBGF)

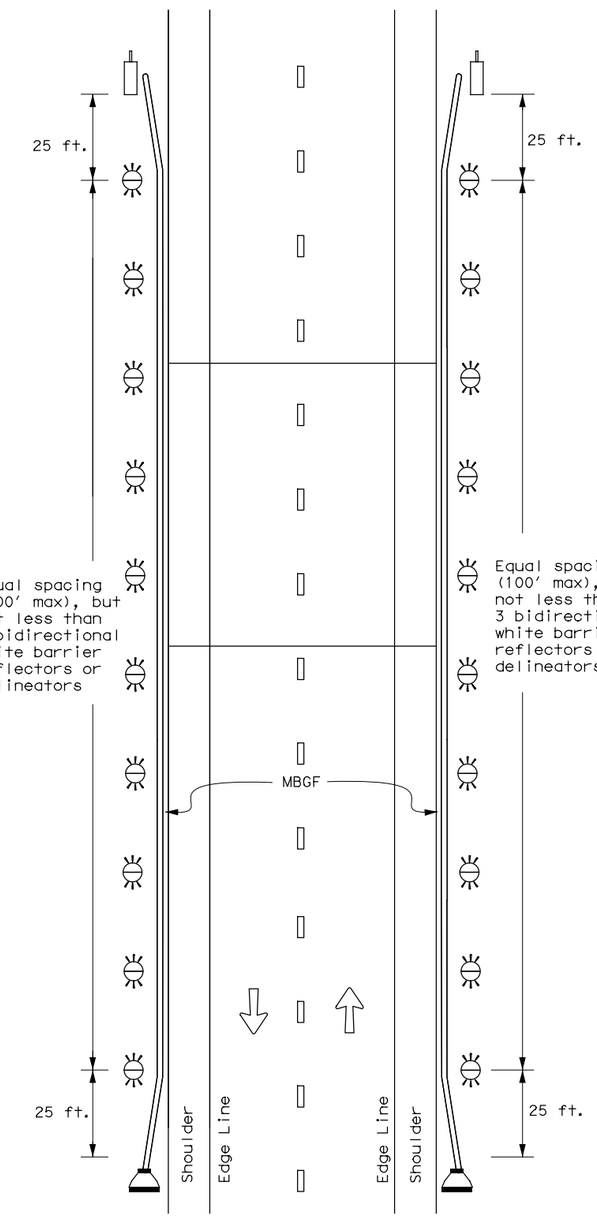

NOTE:

If terminal ends include an object marker, there is no need to install an OM-2 in front of terminal.

TWO-WAY, TWO LANE ROADWAY BRIDGE WITH NO APPROACH RAIL

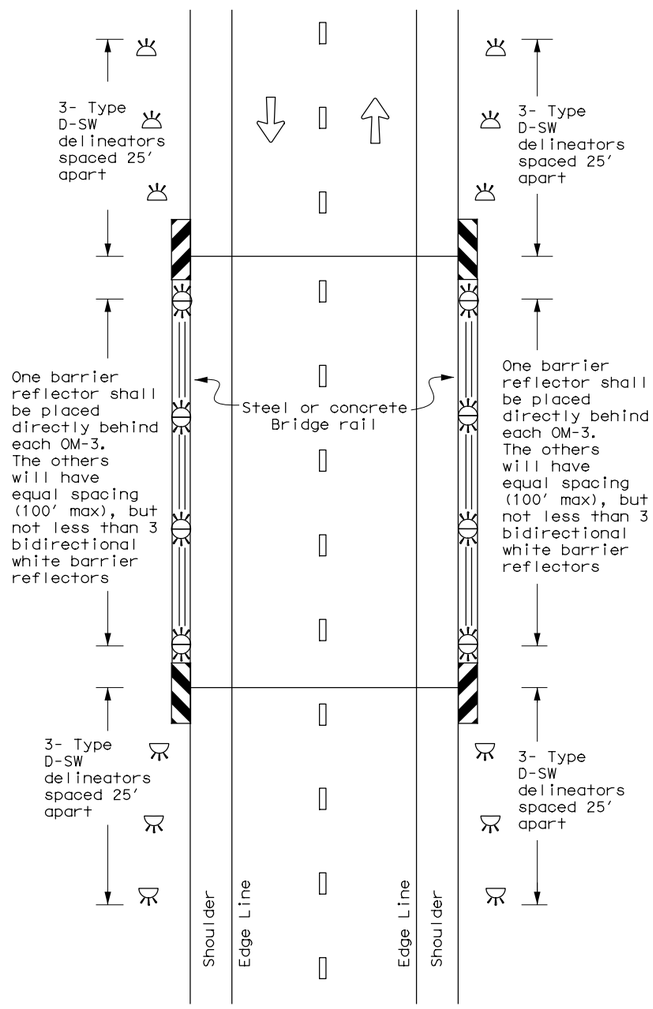

LEGEND

	Bidirectional Delineator
	Delineator
	OM-3
	OM-2
	Terminal End
	TRAFFIC FLOW

Texas Department of Transportation

Traffic Operations Division Standard

DELINEATOR & OBJECT MARKER PLACEMENT DETAILS

D & OM(5)-15

FILE: dom5-15.dgn	DN: TxDOT	CK: TxDOT	DW: TxDOT	CK: TxDOT
©TxDOT August 2015	CONT	SECT	JOB	HIGHWAY
REVISIONS	2103	01	034	
	DIST	COUNTY		SHEET NO.
	AUS	WILLIAMSON		232

20E

DISCLAIMER:
The use of this standard is governed by the "Texas Engineering Practice Act". No warranty of any kind is made by TxDOT for any purpose whatsoever. TxDOT assumes no responsibility for the conversion of this standard to other formats or for incorrect results or damages resulting from its use.

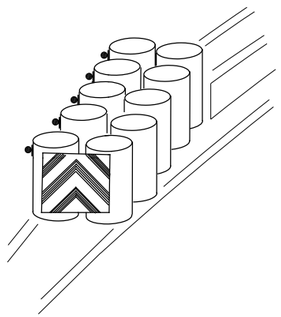

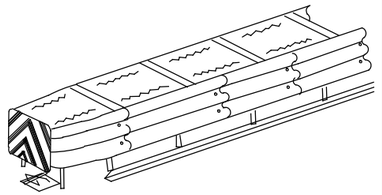

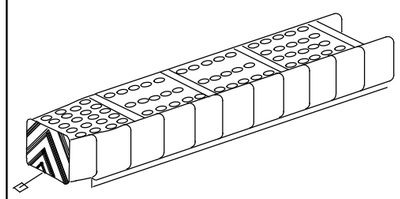

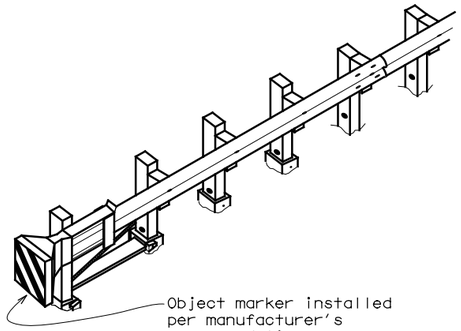

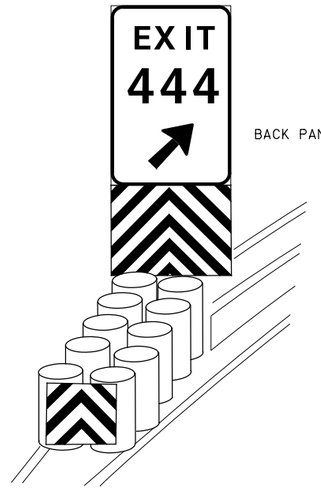

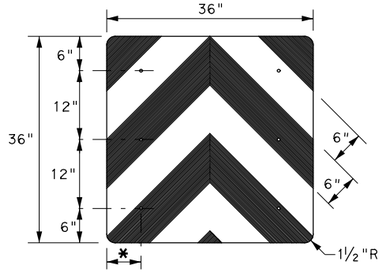

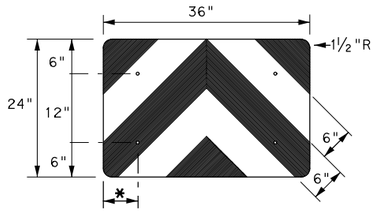

* Adjust to fit attenuator per manufacturer's recommendation, or as directed by the Engineer

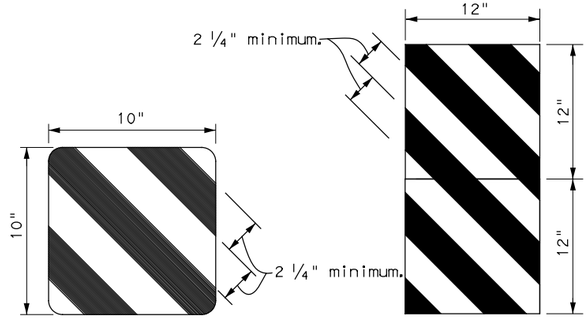

OBJECT MARKERS SMALLER THAN 3 FT^2

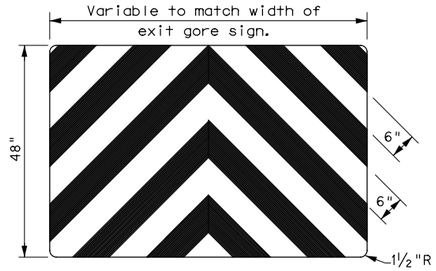

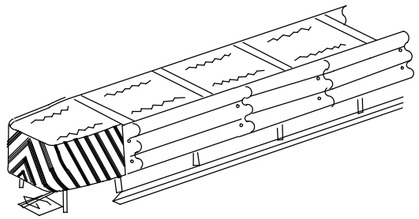

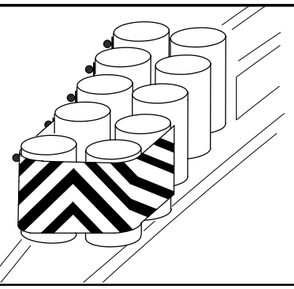

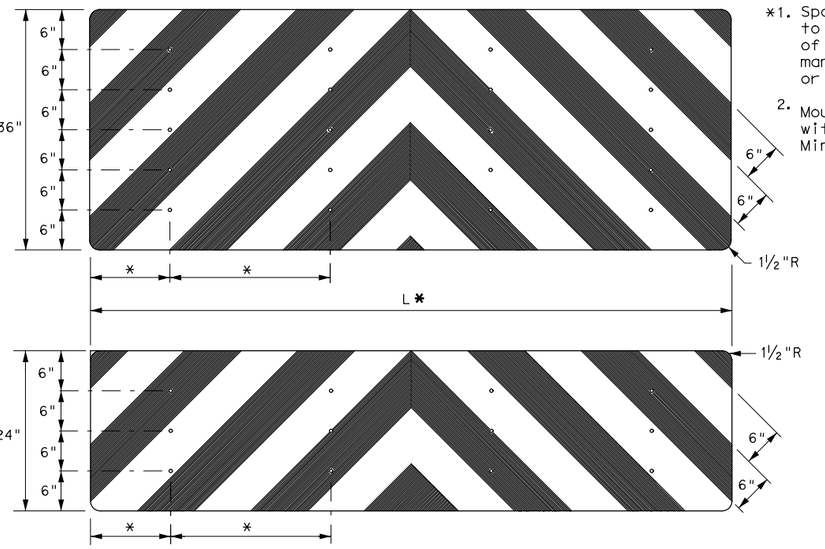

NOTES

*1. Spacing should be adjusted to attach through centerline of drum, per attenuator manufacturers recommendation, or as directed by the Engineer.

2. Mounting should be flush with top of attenuator. Minimum size 96" x 24".

NOTES

1. Object Markers shall conform to the Texas MUTCD and meet the color and reflectivity requirement of Department Material Specification DMS 8300. Background shall be yellow reflective sheeting (Type B or C) and Chevron shall be black.

2. Object Markers may be fabricated from adhesive backed reflective sheeting applied directly to guardrail end treatment, or applied directly to an "end cap" as per the manufacturer's recommendation. Direct applied sheeting shall provide a smooth surface and have no wrinkles, air bubbles, cuts or tears. A radius at the corners is not required for direct applied sheeting.

3. Object Marker size may be reduced to fit smaller devices. Width of alternating black and yellow stripes are typically 6". Object Markers smaller than 3ft may have reduced width stripes of a minimum of 2 ¼".

4. Pop rivets, screws, or nuts and bolts may be used to attach object markers and reflectors. Holes, slots or other openings may be cut or drilled through object markers to allow cable or other attachments.

5. Object Marker at nose of attenuator is subsidiary to the attenuator.

6. See D & OM (1-4) for required barrier reflectors.

Texas Department of Transportation — Traffic Operations Division Standard

DELINEATOR & OBJECT MARKER FOR VEHICLE IMPACT ATTENUATORS

D & OM(VIA)-15

FILE: domvia15.dgn	DN: TXDOT	CK: TXDOT	DW: TXDOT	CK: TXDOT
©TxDOT December 1989	CONT	SECT	JOB	HIGHWAY
REVISIONS	2103	01	034	
4-92 8-04	DIST	COUNTY		SHEET NO.
8-95 3-15	AUS	WILLIAMSON		233
4-98				
20G				

DATE: 3/23/2018 10:52:09 AM
FILE: c:\pwworking\dal\d0911857\domvia-15.dgn

DISCLAIMER: The use of this standard is governed by the "Texas Engineering Practice Act". No warranty of any kind is made by TxDOT for any purpose whatsoever. TxDOT assumes no responsibility for the conversion of this standard to other formats or for incorrect results or damages resulting from its use.

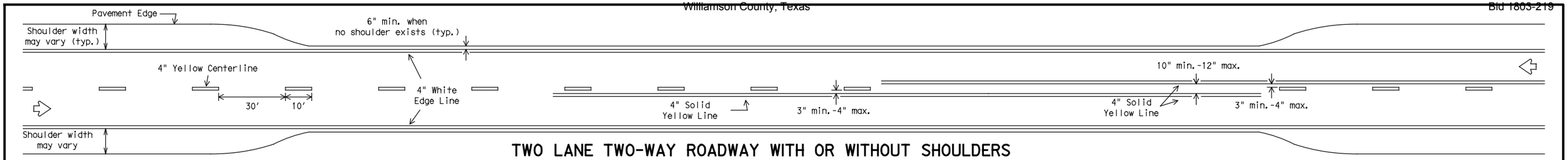

TWO LANE TWO-WAY ROADWAY WITH OR WITHOUT SHOULDERS

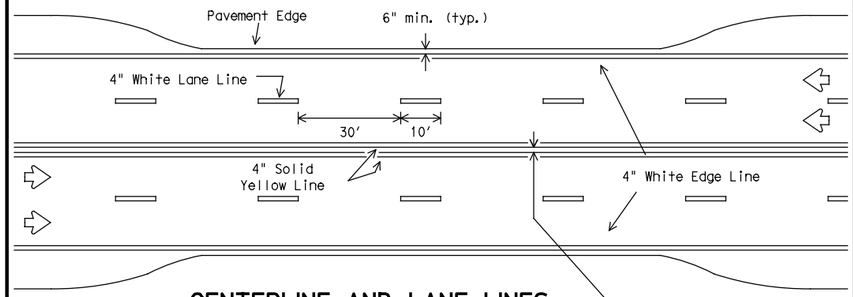

CENTERLINE AND LANE LINES FOUR LANE TWO-WAY ROADWAY WITH OR WITHOUT SHOULDERS

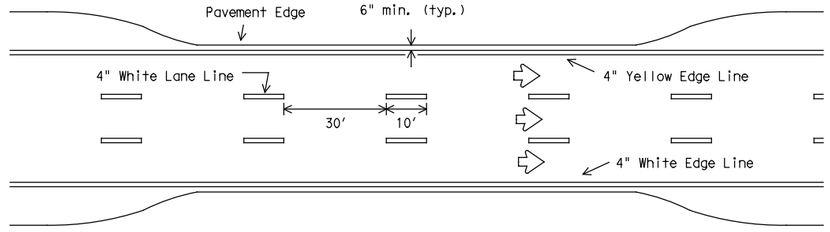

EDGE LINE AND LANE LINES ONE-WAY ROADWAY WITH OR WITHOUT SHOULDERS

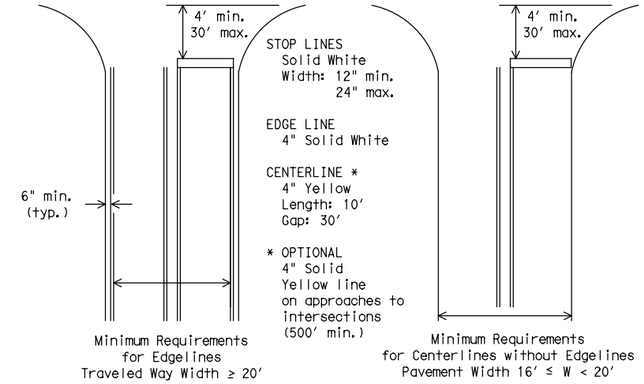

GUIDE FOR PLACEMENT OF STOP LINES, EDGE LINE & CENTERLINE

Based on Traveled Way and Pavement Widths for Undivided Highways

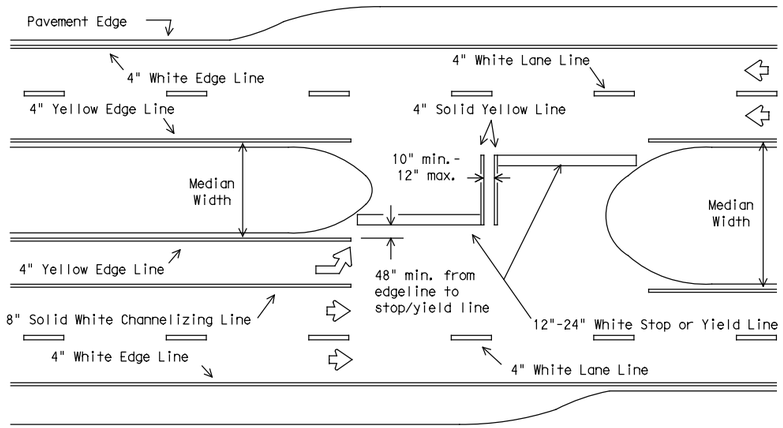

All medians shall be field measured to determine the location of necessary striping. Stop/Yield bars and centerlines shall be placed when the median width is greater than 30 ft. The median width is defined as the area between two roadways of a divided highway measured from edge of traveled way to edge of traveled way. The median excludes turn lanes. The median width might be different between intersections, interchanges and of opposite approaches of the same intersection. The narrow median width will be the controlling width to determine if markings are required.

FOUR LANE DIVIDED ROADWAY INTERSECTIONS

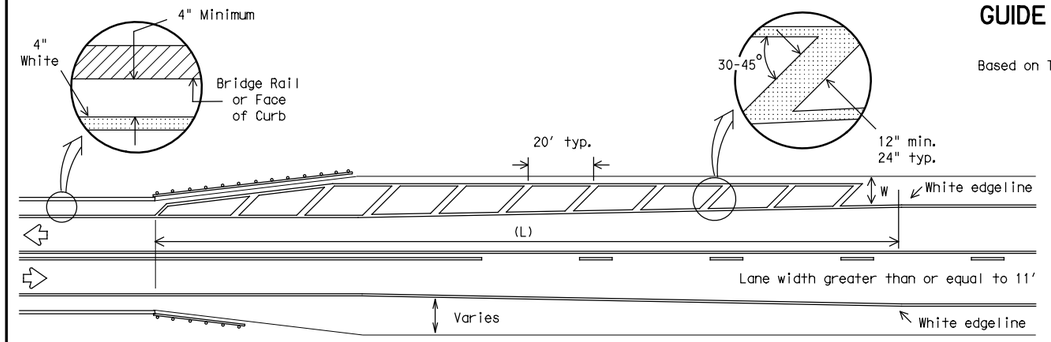

NOTES:

1. No-passing zone on bridge approach is optional but if used, it shall be a minimum 500 feet long.
2. For crosshatching length (L) see Table 1.
3. The width of the offset (W) and the required crosshatching width is the full shoulder width in advance of the bridge.
4. The crosshatching is not required if delineators or barrier reflectors are used along the structure.
5. For guard fence details, refer elsewhere in the plans.

ROADWAYS WITH REDUCED SHOULDER WIDTHS ACROSS BRIDGE OR CULVERT

TABLE 1 - TYPICAL LENGTH (L)

Posted Speed *	Formula
≤ 40	$L = \frac{WS^2}{60}$
≥ 45	L=WS

* 85th Percentile Speed may be used on roads where traffic speeds normally exceed the posted speed limit. Crosshatching length should be rounded up to nearest 5 foot increment.

L=Length of Crosshatching (FT.) W=Width of Offset (FT.)
S=Posted Speed (MPH)

EXAMPLES:

An 8 foot shoulder in advance of a bridge reduces to 4 feet on a 70 MPH roadway. The length of the crosshatching should be:

$L = 8 \times 70 = 560$ ft.

A 4 foot shoulder in advance of a bridge reduces to 2 feet on a 40 MPH roadway. The length of the crosshatching should be:

$L = 4(40)^2 / 60 = 106.67$ ft. rounded to 110 ft.

GENERAL NOTES

1. Edgeline striping shall be as shown in the plans or as directed by the Engineer. The edgeline should typically be placed a minimum of 6 inches from the edge of pavement. This distance may vary due to pavement raveling or other conditions. Edgelines are not required in curb and gutter sections of roadways.
2. The traveled way includes only that portion of the roadway used for vehicular travel and not the parking lanes, sidewalks, berms and shoulders. The traveled ways shall be measured from the inside of edgeline to inside of edgeline of a two lane roadway.

MATERIAL SPECIFICATIONS	
PAVEMENT MARKERS (REFLECTORIZED)	DMS-4200
EPOXY AND ADHESIVES	DMS-6100
BITUMINOUS ADHESIVE FOR PAVEMENT MARKERS	DMS-6130
TRAFFIC PAINT	DMS-8200
HOT APPLIED THERMOPLASTIC	DMS-8220
PERMANENT PREFABRICATED PAVEMENT MARKINGS	DMS-8240

All pavement marking materials shall meet the required Departmental Material Specifications as specified by the plans.

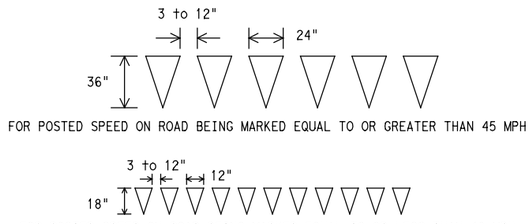

YIELD LINES

Texas Department of Transportation
Traffic Operations Division

TYPICAL STANDARD PAVEMENT MARKINGS

PM(1)-12

© TxDOT November 1978

REVISIONS	DN: TXDOT	CK: TXDOT	DW: TXDOT	CK: TXDOT
8-95 2-12	CONT	SECT	JOB	HIGHWAY
5-00	2103	01	034	
8-00	DIST	COUNTY		SHEET NO.
3-03	AUS	WILLIAMSON		234

22A

DATE: 3/23/2018 10:52:11 AM
FILE: c:\pwworking\vdal\d0911857\PM1-12.dgn
4/12/2018 7:20 AM

DISCLAIMER: The use of this standard is governed by the "Texas Engineering Practice Act". No warranty of any kind is made by TxDOT for any purpose whatsoever. TxDOT assumes no responsibility for the conversion of this standard to other formats or for incorrect results or damages resulting from its use.

REFLECTIVE RAISED PAVEMENT MARKERS FOR VEHICLE POSITIONING GUIDANCE

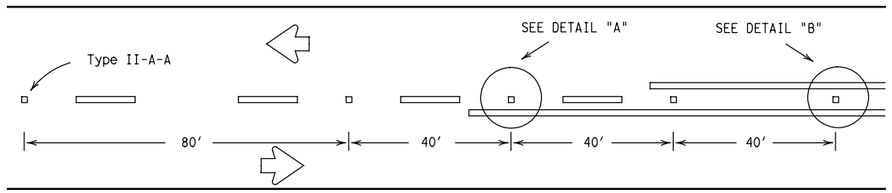

CENTERLINE FOR ALL TWO LANE ROADWAYS

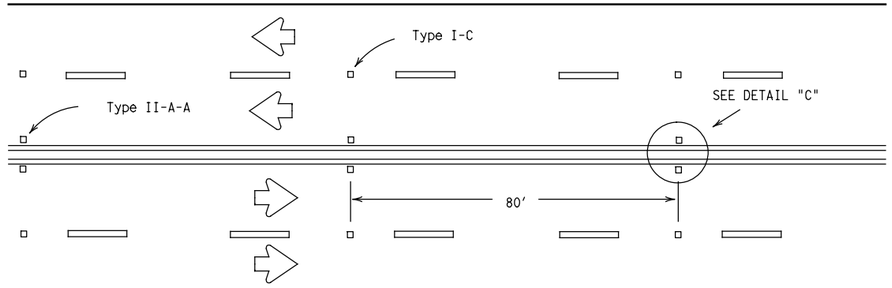

CENTERLINE & LANE LINES FOR FOUR LANE TWO-WAY HIGHWAYS

Raised pavement marker Type I-C, clear face toward normal traffic, shall be placed on 80-foot centers.

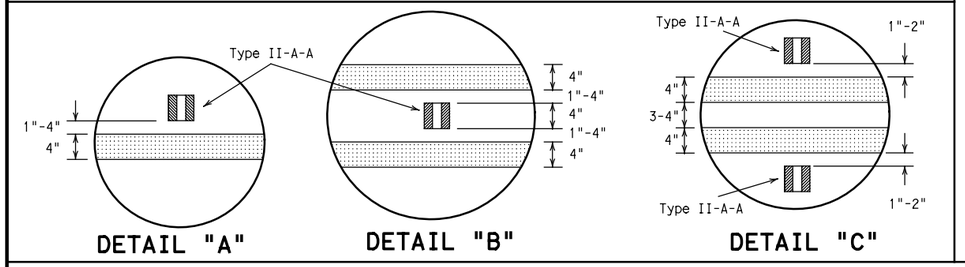

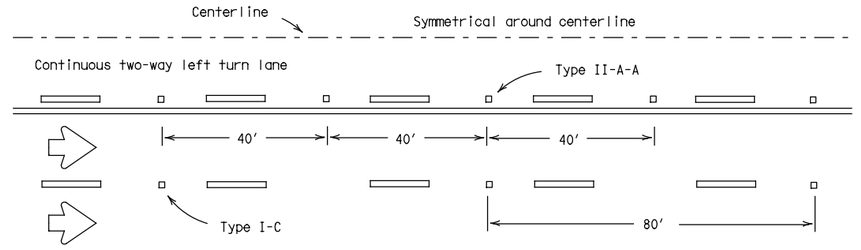

CENTERLINE AND LANE LINES FOR TWO-WAY LEFT TURN LANE

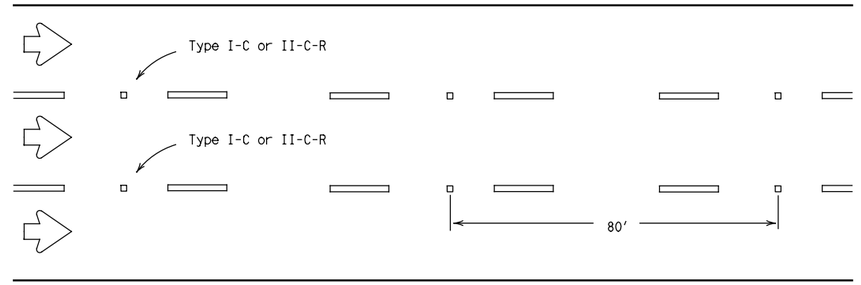

LANE LINES FOR ONE-WAY ROADWAY (NON-FREEWAY FACILITIES)

Raised pavement markers Type II-C-R shall have clear face toward normal traffic and red face toward wrong-way traffic.

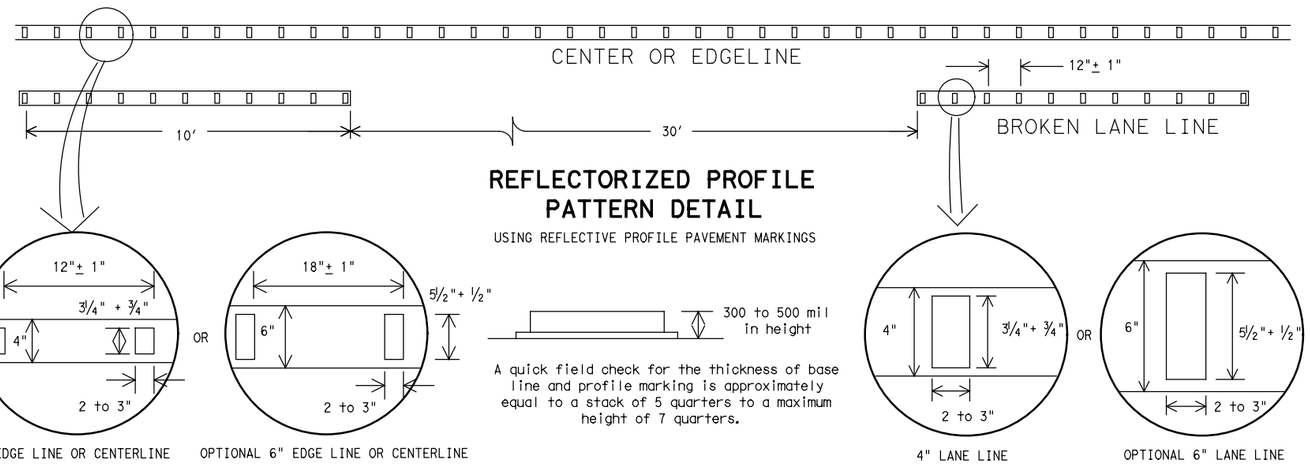

NOTE:
Profile markings shall not be placed on roadways with a posted speed limit of 45 MPH or less.

GENERAL NOTES

1. All raised pavement markers placed in broken lines shall be placed in line with and midway between the stripes.
2. On concrete pavements the raised pavement markers should be placed to one side of the longitudinal joints.

MATERIAL SPECIFICATIONS	
PAVEMENT MARKERS (REFLECTORIZED)	DMS-4200
EPOXY AND ADHESIVES	DMS-6100
BITUMINOUS ADHESIVE FOR PAVEMENT MARKERS	DMS-6130
TRAFFIC PAINT	DMS-8200
HOT APPLIED THERMOPLASTIC	DMS-8220
PERMANENT PREFABRICATED PAVEMENT MARKINGS	DMS-8240

All pavement marking materials shall meet the required Departmental Material Specifications as specified by the plans.

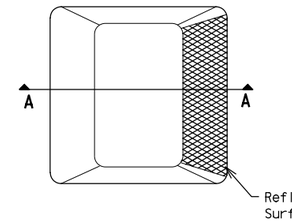

Type I (Top View)

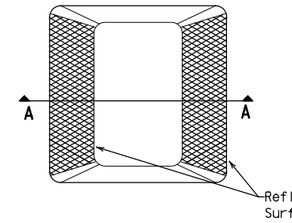

Type II (Top View)

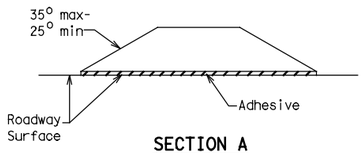

SECTION A

RAISED PAVEMENT MARKERS

Texas Department of Transportation
Traffic Operations Division

POSITION GUIDANCE USING RAISED MARKERS
REFLECTORIZED PROFILE MARKINGS
PM(2)-12

© TxDOT April 1977

REVISIONS		DN: TXDOT	CK: TXDOT	DW: TXDOT	CK: TXDOT
4-92	2-10	CONT	SECT	JOB	HIGHWAY
5-00	2-12	2103	01	034	
8-00		DIST	COUNTY		SHEET NO.
2-08		AUS	WILLIAMSON		225

22B

DATE: 3/23/2018 10:52:12 AM
FILE: c:\pwworking\dal\d0911857\PM2-12.DGN

4/12/2018 7:20 AM

DISCLAIMER: The use of this standard is governed by the "Texas Engineering Practice Act". No warranty of any kind is made by TxDOT for any purpose whatsoever. TxDOT assumes no responsibility for the conversion of this standard to other formats or for incorrect results or damages resulting from its use.

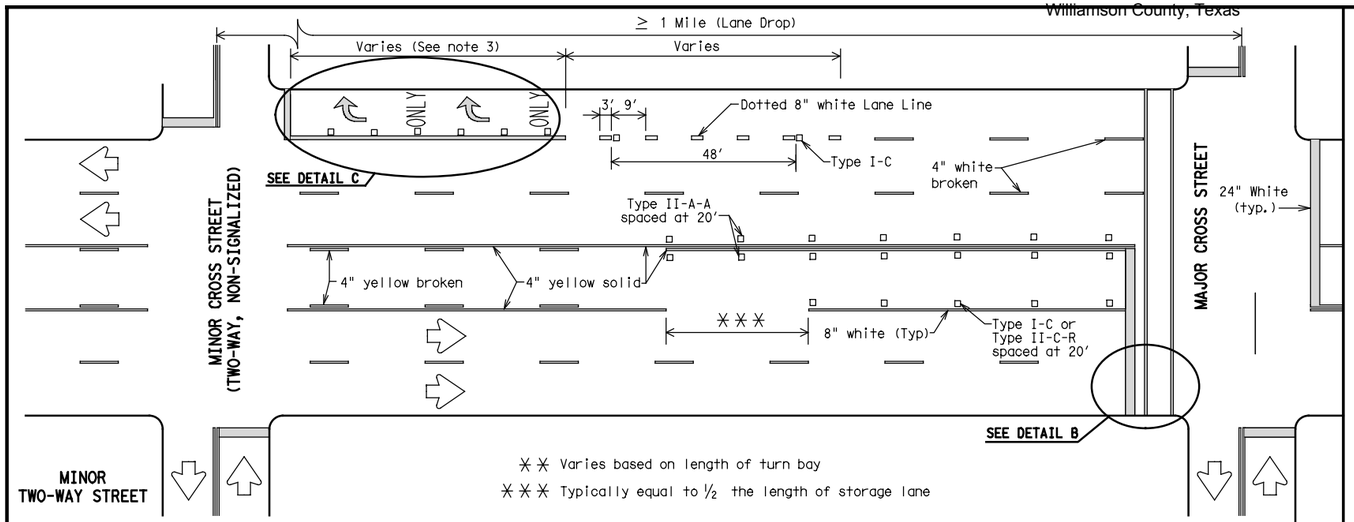

TYPICAL TWLTL AT TWO-WAY CROSS STREET AND RIGHT TURN LANE DROP

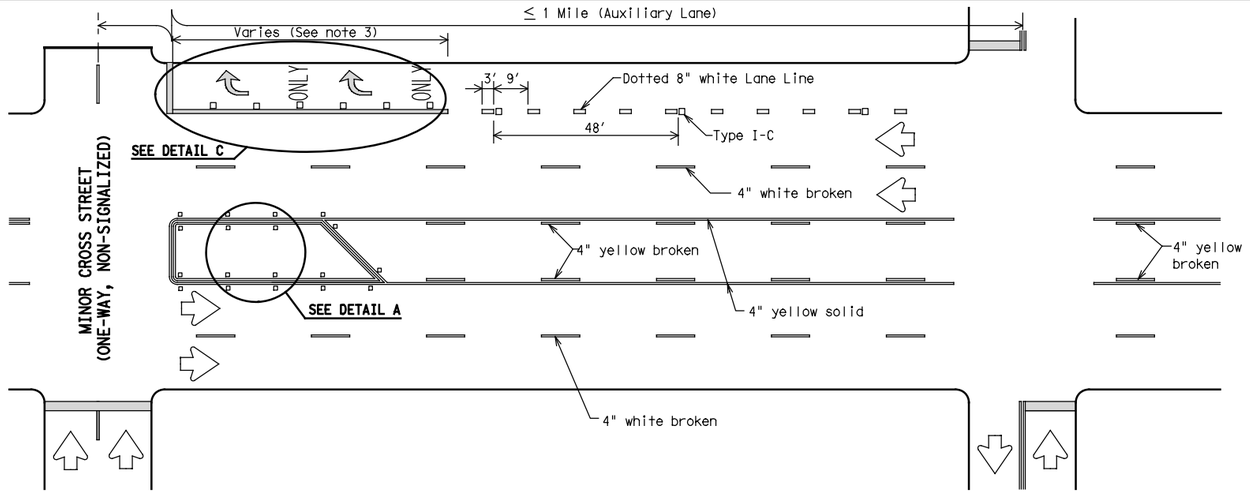

TYPICAL TWLTL AT ONE-WAY STREET AND RIGHT TURN AUXILIARY LANE

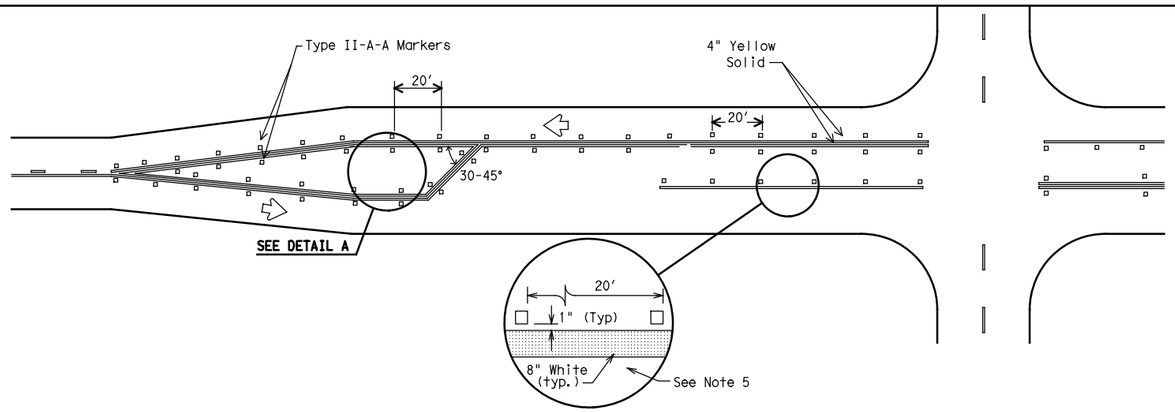

TYPICAL TWO-LANE HIGHWAY INTERSECTION WITH LEFT TURN BAYS

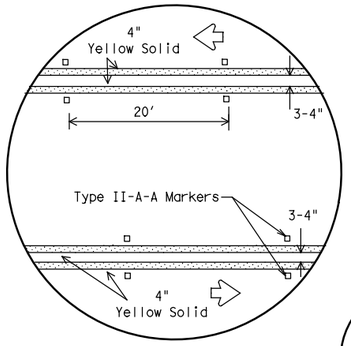

DETAIL A

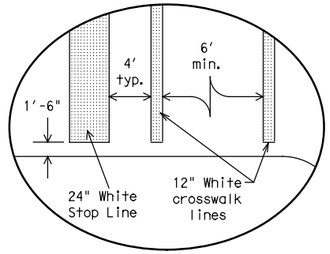

Final placement of Stop Bar and Crosswalk shall be approved by the Engineer in the field.

DETAIL B

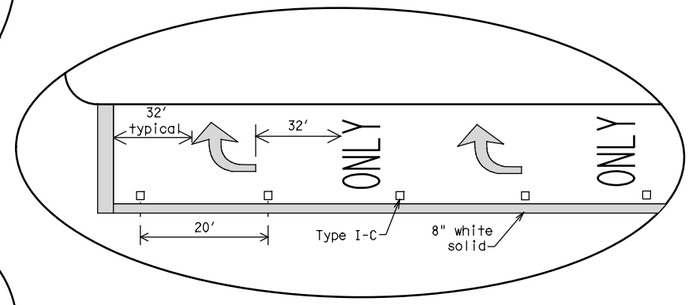

DETAIL C

MATERIAL SPECIFICATIONS	
PAVEMENT MARKERS (REFLECTORIZED)	DMS-4200
EPOXY AND ADHESIVES	DMS-6100
BITUMINOUS ADHESIVE FOR PAVEMENT MARKERS	DMS-6130
TRAFFIC PAINT	DMS-8200
HOT APPLIED THERMOPLASTIC	DMS-8220
PERMANENT PREFABRICATED PAVEMENT MARKINGS	DMS-8240

All pavement marking materials shall meet the required Departmental Material Specifications as specified by the plans.

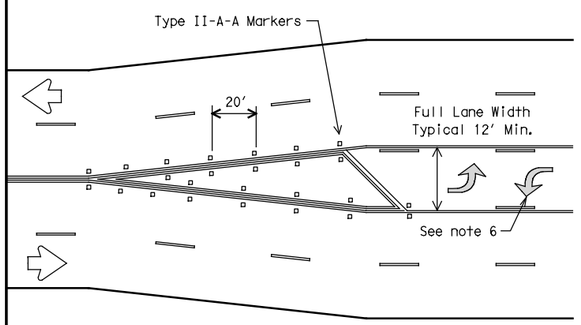

TYPICAL TRANSITION FOR TWLTL AND DIVIDED HIGHWAY

GENERAL NOTES

1. Refer elsewhere in plans for additional RPM placement and details.
2. Lane use word and arrow markings shall be used where through lanes approaching an intersection become mandatory turn lanes. Lane use word and arrow markings should be used in auxiliary lanes of substantial length. Lane use arrow markings or word and arrow markings may be used in other lanes and turn bays for emphasis. Details for words and arrows as shown in the Standard Highway Sign Designs for Texas.
3. When lane used word and arrow markings are used, two sets of arrows should be used if the length of the bay is greater than 180 feet. When a single lane use arrow or word and arrow marking is used for a short turn lane, it should be located at or near the upstream end of the full-width turn lane.
4. Other crosswalk paterns as shown in the "Texas Manual on Uniform Traffic Control Devices" may be used.
5. Raised pavement marker Type I-C with undivided highways, flush medians and two way left turn lanes. Raised pavement marker Type II-C-R with divided highways and raised medians.
6. A two-way left-turn (TWLT) lane-use arrow pavement marking should be used at or just downstream from the beginning of a two-way left-turn lane within a corridor. Repeating the marking after each intersection or dedicated turn bay is not required unless stated elsewhere in the plans.

Texas Department of Transportation
Traffic Operations Division

PAVEMENT MARKINGS FOR TWO-WAY LEFT TURN LANES DIVIDED HIGHWAYS AND RURAL LEFT TURN BAYS

PM(3)-12

© TxDOT April 1998

DN: TXDOT	CK: TXDOT	DW: TXDOT	CK: TXDOT

REVISIONS
5-00 2-12
8-00
3-03
2-10

CONT	SECT	JOB	HIGHWAY
2103	01	034	

DIST	COUNTY	SHEET NO.
AUS	WILLIAMSON	236

22C

DATE: 3/23/2018 10:52:14 AM
FILE: c:\pwworking\dal\d0911857\PM3-12.DGN

DISCLAIMER: The use of this standard is governed by the "Texas Engineering Practice Act". No warranty of any kind is made by TxDOT for any purpose whatsoever. TxDOT assumes no responsibility for the conversion of this standard to other formats or for incorrect results or damages resulting from its use.

SIGN SUPPORT DESCRIPTIVE CODES

(Descriptive Codes correspond to project estimate and quantities sheets)

SM RD SGN ASSM TY XXXXX(X)XX(X-XXXX)

Post Type

FRP = Fiberglass Reinforced Plastic Pipe (see SMD(FRP))
TWT = Thin-Walled Tubing (see SMD(TWT))
10BWG = 10 BWG Tubing (see SMD(SLIP-1) to (SLIP-3))
S80 = Schedule 80 Pipe (see SMD(SLIP-1) to (SLIP-3))

Number of Posts (1 or 2)

Anchor Type

UA = Universal Anchor - Concreted (see SMD(FRP) and (TWT))
UB = Universal Anchor - Bolted down (see SMD(FRP) and (TWT))
WS = Wedge Anchor Steel - (see SMD(TWT))
WP = Wedge Anchor Plastic (see SMD(TWT))
SA = Slipbase - Concreted (see SMD(SLIP-1) to (SLIP-3))
SB = Slipbase - Bolted Down (see SMD(SLIP-1) to (SLIP-3))

Sign Mounting Designation

P = Prefab. "Plain" (see SMD(SLIP-1) to (SLIP-3), (TWT), (FRP))
T = Prefab. "T" (see SMD(SLIP-1) to (SLIP-3), (TWT))
U = Prefab. "U" (see SMD(SLIP-1) to (SLIP-3))
IF REQUIRED
1EXT or 2EXT = Number of Extensions (see SMD(SLIP-1) to (SLIP-3), (TWT))
BM = Extruded Wind Beam (see SMD(SLIP-1) to (SLIP-3))
WC = 1.12 #/ft Wing Channel (see SMD(SLIP-1) to (SLIP-3))
EXAL = Extruded Aluminum Sign Panels (see SMD(SLIP-1))

REQUIRED CLEARANCE FOR BREAKAWAY SUPPORT

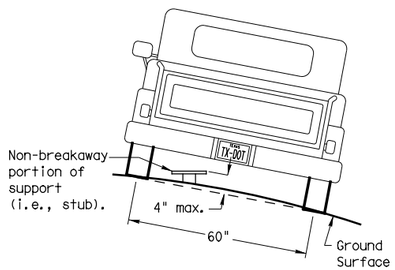

To avoid vehicle undercarriage snagging, any substantial remains of a breakaway support, when it is broken away, should not project more than 4 inches above a 60-inch chord (i.e., typical space between wheel paths).

SIGN LOCATION

PAVED SHOULDERS

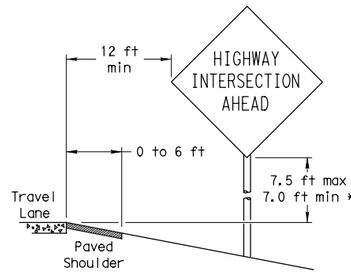

LESS THAN 6 FT. WIDE

When the shoulder is 6 ft. or less in width, the sign must be placed at least 12 ft. from the edge of the travel lane.

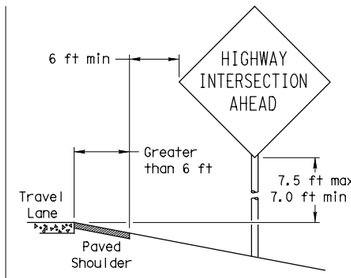

GREATER THAN 6 FT. WIDE

When the shoulder is greater than 6 ft in width, the sign must be placed at least 6 ft. from the edge of the shoulder.

BEHIND BARRIER

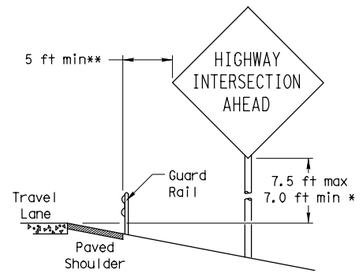

BEHIND GUARDRAIL

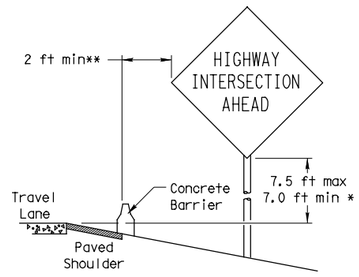

BEHIND CONCRETE BARRIER

**Sign clearance based on distance required for proper guard rail or concrete barrier performance.

T-INTERSECTION

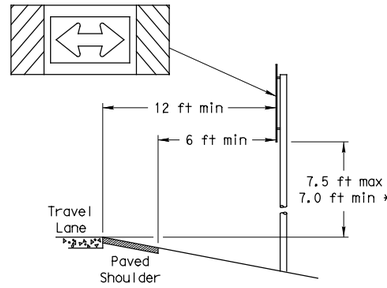

When this sign is needed at the end of a two-lane, two way roadway, the right edge of the sign should be in line with the centerline of the roadway. Place as close to ROW as practical.

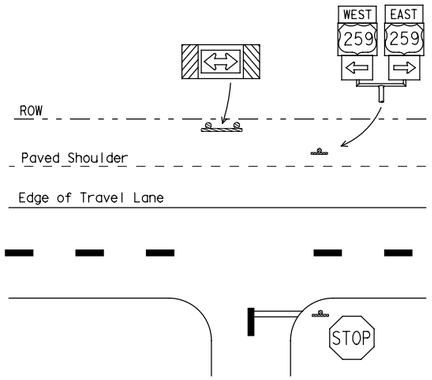

* Signs shall be mounted using the following condition that results in the greatest sign elevation:

(1) a minimum of 7 to a maximum of 7.5 feet above the edge of the travel lane or

(2) a minimum of 7 to a maximum of 7.5 feet above the grade at the base of the support when sign is installed on the backslope.

The maximum values may be increased when directed by the Engineer.

See the Traffic Operations Division website for detailed drawings of sign clamps, Triangular Slipbase System components and Wedge Anchor System components.

The website address is:
http://www.txdot.gov/publications/traffic.htm

No more than 2 sign posts should be located within a 7 ft. circle.

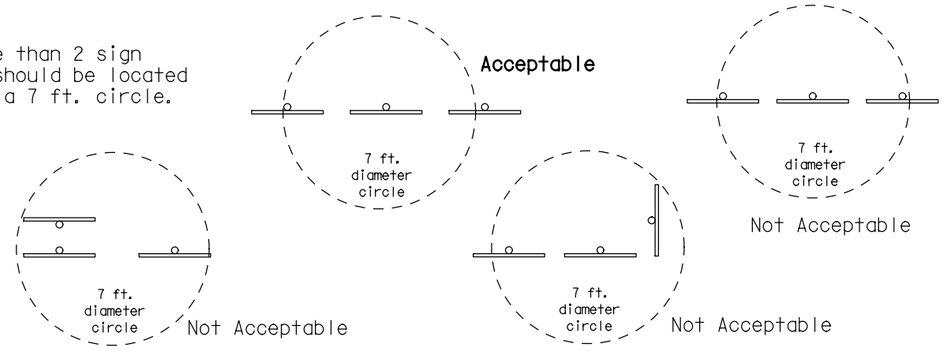

TYPICAL SIGN ATTACHMENT DETAIL

Single Signs

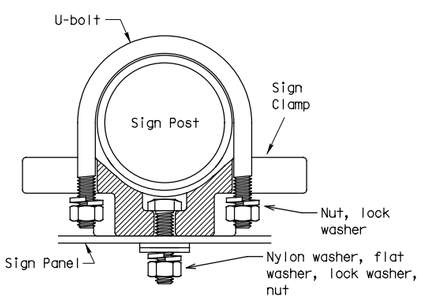

Back-to-Back Signs

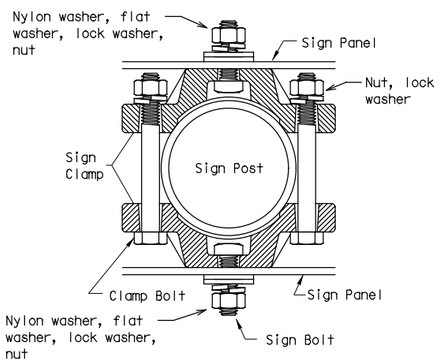

Bolts used to mount sign panels to the clamp are 5/16-18 UNC galvanized square head with nut, nylon washer, flat washer and lock washer. The bolt length is 1 inch for aluminum.

When two sign clamps are used to mount signs back-to-back, use a 5/16-18 UNC galvanized hex head per ASTM A307 with nut and helical-spring lock washer. The approximate bolt lengths for various post sizes and sign clamp types are given in the table at right. The bolt length may need to be adjusted depending upon field conditions.

Sign clamps may be either the specific size clamp or the universal clamp.

Pipe Diameter	Approximate Bolt Length	
	Specific Clamp	Universal Clamp
2" nominal	3"	3 or 3 1/2"
2 1/2" nominal	3 or 3 1/2"	3 1/2 or 4"
3" nominal	3 1/2 or 4"	4 1/2"

SIGNS WITH PLAQUES

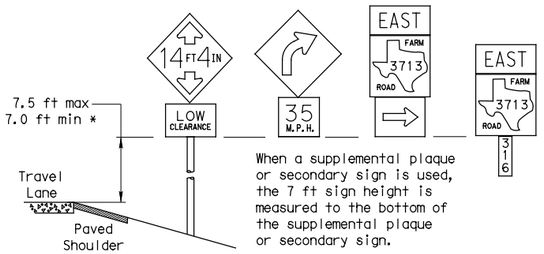

When a supplemental plaque or secondary sign is used, the 7 ft sign height is measured to the bottom of the supplemental plaque or secondary sign.

CURB & GUTTER OR RAISED ISLAND

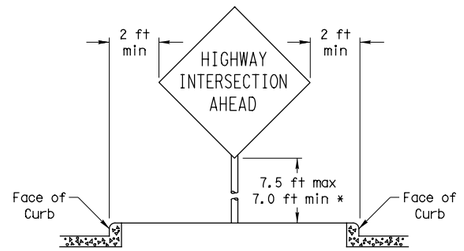

RESTRICTED RIGHT-OF-WAY

(When 6 ft min. is not possible.)

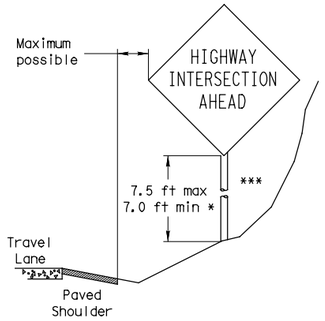

Right-of-way restrictions may be created by rocks, water, vegetation, forest, buildings, a narrow island, or other factors.

In situations where a lateral restriction prevents the minimum horizontal clearance from the edge of the travel lane, signs should be placed as far from the travel lane as practical.

*** Post may be shorter if protected by guardrail or if Engineer determines the post could not be hit due to extreme slope.

Texas Department of Transportation
Traffic Operations Division

SIGN MOUNTING DETAILS SMALL ROADSIDE SIGNS GENERAL NOTES & DETAILS

SMD(GEN)-08

© TxDOT July 2002

9-08 REVISIONS

DN: TXDOT	CK: TXDOT	DW: TXDOT	CK: TXDOT

CONT	SECT	JOB	HIGHWAY
2103	01	034	

DIST	COUNTY	SHEET NO.
AUS	WILLIAMSON	237

26A

DATE: 3/23/2018 10:52:16 AM
FILE: c:\pwworking\dal\d0911857\smdgen.dgn

4/12/2018 7:20 AM

DISCLAIMER: The use of this standard is governed by the "Texas Engineering Practice Act". No warranty of any kind is made by TxDOT for any purpose whatsoever. TxDOT assumes no responsibility for the conversion of this standard to other formats or for incorrect results or damages resulting from its use.

TRIANGULAR SLIPBASE INSTALLATION GENERAL REQUIREMENTS

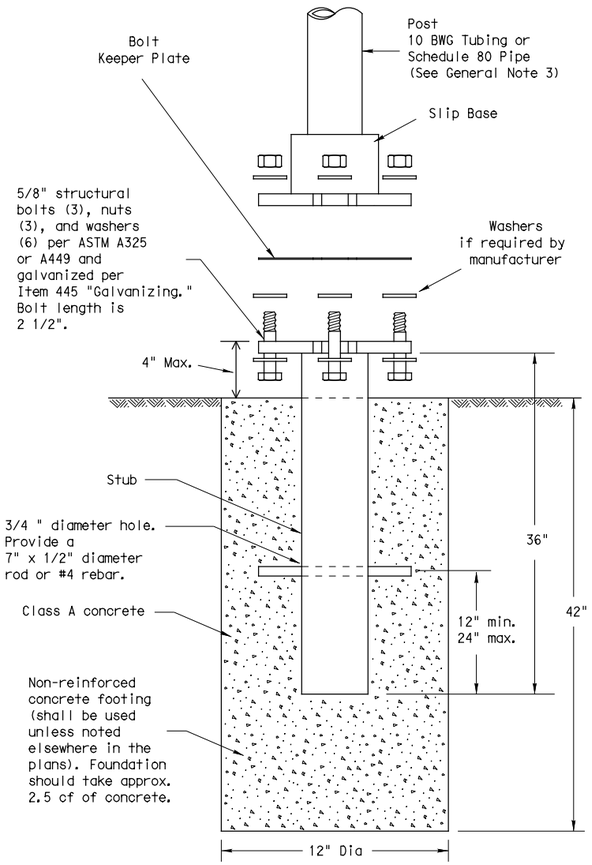

SM RD SGN ASSM TY XXXXX(X)SA(X-XXXX)

NOTE

There are various devices approved for the Triangular Slipbase System. Please reference the Material Producer List for approved slip base systems. http://www.txdot.gov/business/producer_list.htm The devices shall be installed per manufacturers' recommendations. Installation procedures shall be provided to the Engineer by Contractor.

GENERAL NOTES:

1. Slip base shall be permanently marked to indicate manufacturer. Method, design, and location of marking are subject to approval of the TxDOT Traffic Standards Engineer.
2. Material used as post with this system shall conform to the following specifications:
   10 BWG Tubing (2.875" outside diameter)
   - 0.134" nominal wall thickness
   - Seamless or electric-resistance welded steel tubing or pipe
   - Steel shall be HSLAS Gr 55 per ASTM A1011 or ASTM A1008
   - Other steels may be used if they meet the following:
     - 55,000 PSI minimum yield strength
     - 70,000 PSI minimum tensile strength
     - 20% minimum elongation in 2"
   - Wall thickness (uncoated) shall be within the range of 0.122" to 0.138"
   - Outside diameter (uncoated) shall be within the range of 2.867" to 2.883"
   - Galvanization per ASTM A123 or ASTM A653 G210. For precoated steel tubing (ASTM A653), recoat tube outside diameter weld seam by metallizing with zinc wire per ASTM B833.

   Schedule 80 Pipe (2.875" outside diameter)
   - 0.276" nominal wall thickness
   - Steel tubing per ASTM A500 Gr C
   - Other seamless or electric-resistance welded steel tubing or pipe with equivalent outside diameter and wall thickness may be used if they meet the following:
     - 46,000 PSI minimum yield strength
     - 62,000 PSI minimum tensile strength
     - 21% minimum elongation in 2"
   - Wall thickness (uncoated) shall be within the range of 0.248" to 0.304"
   - Outside diameter (uncoated) shall be within the range of 2.855" to 2.895"
   - Galvanization per ASTM A123
3. See the Traffic Operations Division website for detailed drawings of sign clamps and Texas Universal Triangular Slipbase System components. The website address is: http://www.txdot.gov/publications/traffic.htm
4. Sign supports shall not be spliced except where shown. Sign support posts shall not be spliced.

ASSEMBLY PROCEDURE

Foundation
1. Prepare 12-inch diameter by 42-inch deep hole. If solid rock is encountered, the depth of the foundation may be reduced such that it is embedded a minimum of 18 inches into the solid rock.
2. The Engineer may permit batches of concrete less than 2 cubic yards to be mixed with a portable, motor-driven concrete mixer. For small placements less than 0.5 cubic yards, hand mixing in a suitable container may be allowed by Engineer. Concrete shall be Class A.
3. Push the pipe end of the slip base stub into the center of the concrete. Rotate the stub back and forth while pushing it down into the concrete to assure good contact between the concrete and stub. Continue to work the stub into the concrete until it is between 2 to 4 inches above the ground.
4. Plumb the stub. Allow a minimum of 4 days to set, unless otherwise directed by the Engineer.
5. The triangular slipbase system is multidirectional and is designed to release when struck from any direction.

Support
1. Cut support so that the bottom of the sign will be 7 to 7.5 feet above the edge of the travelway (i.e., edge of the closest lane) when slip plate is below the edge of pavement or 7 to 7.5 feet above slip plate when the slip plate is above the edge of the travelway. The cut shall be plumb and straight.
2. Attach sign to support using connections shown. When multiple signs are installed on the same support, ensure the minimum clearance between each sign is maintained. See SMD(SLIP-2) for clearances based on sign types.

CONCRETE ANCHOR

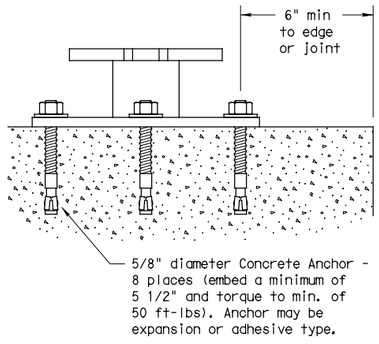

SM RD SGN ASSM TY XXXXX(X)SB(X-XXXX)

Concrete anchor consists of 5/8" diameter stud bolt with UNC series bolt threads on the upper end. Heavy hex nut per ASTM A563, and hardened washer per ASTM F436. The stud bolt shall have a minimum yield and ultimate tensile strength of 50 and 75 KSI, respectively. Nuts, bolts and washers shall be galvanized per Item 445, "Galvanizing." Adhesive type anchors shall have stud bolts installed with Type III epoxy per DMS-6100, "Epoxies and Adhesives." Adhesive anchors may be loaded after adequate epoxy cure time per the manufacturer's recommendations. Top of bolt shall extend at least flush with top of the nut when installed. The anchor, when installed in 4000 psi normal-weight concrete with a 5 1/2" minimum embedment, shall have a minimum allowable tension and shear of 3900 and 3100 psi, respectively.

Texas Department of Transportation
Traffic Operations Division

SIGN MOUNTING DETAILS
SMALL ROADSIDE SIGNS
TRIANGULAR SLIPBASE SYSTEM

SMD(SLIP-1)-08

© TxDOT July 2002	DN: TXDOT	CK: TXDOT	DW: TXDOT	CK: TXDOT
9-08 REVISIONS	CONT	SECT	JOB	HIGHWAY
	2103	01	034	
	DIST	COUNTY		SHEET NO.
	AUS	WILLIAMSON		228

26B

DATE: 3/23/2018 10:52:17 AM
FILE: c:\pwworking\dal\d0911857\smds1.dgn

DISCLAIMER: The use of this standard is governed by the "Texas Engineering Practice Act". No warranty of any kind is made by TxDOT for any purpose whatsoever. TxDOT assumes no responsibility for the conversion of this standard to other formats or for incorrect results or damages resulting from its use.

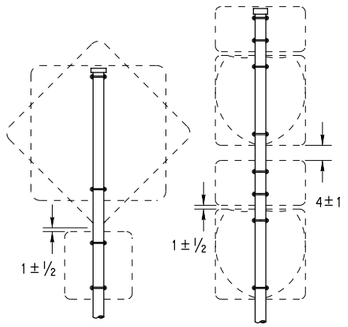

SM RD SGN ASSM TY XXXXX(1)XX(P)

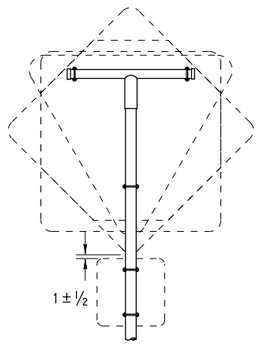

SM RD SGN ASSM TY XXXXX(1)XX(T)

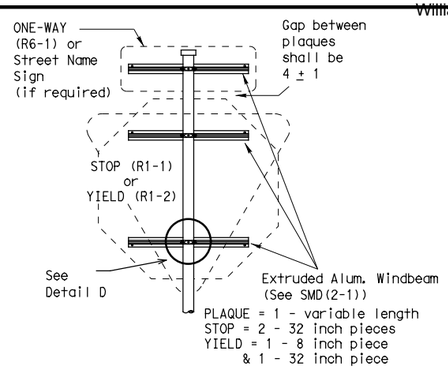

SM RD SGN ASSM TY XXXXX(1)XX(P-BM)

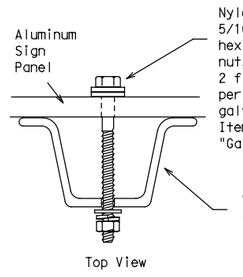

Detail A

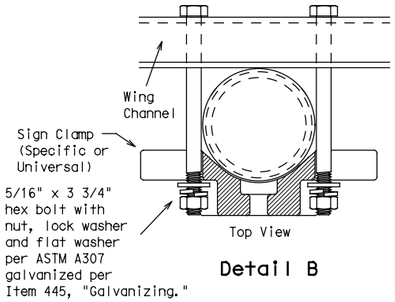

Detail B

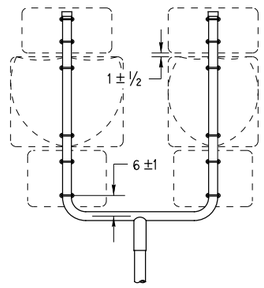

SM RD SGN ASSM TY XXXXX(1)XX(U)

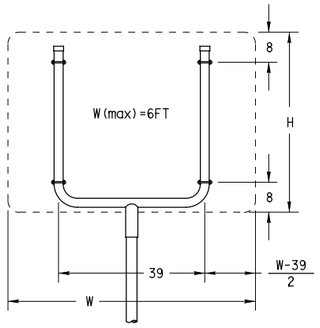

SM RD SGN ASSM TY XXXXX(1)XX(U)

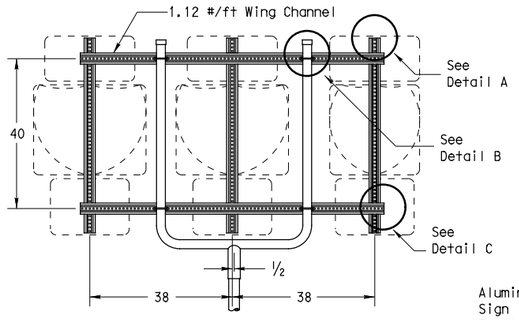

SM RD SGN ASSM TY XXXXX(1)XX(U-WC)
(See Note 11)

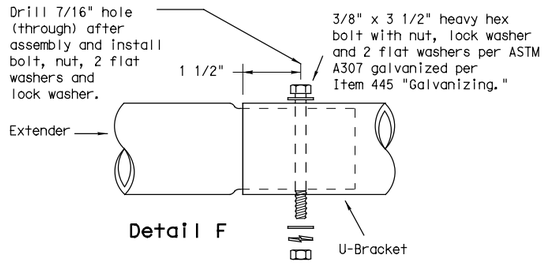

Detail F

Splices shall only be allowed behind the sign substrate.

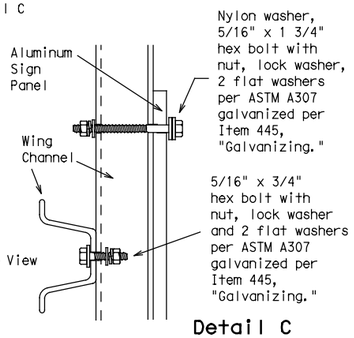

Detail C

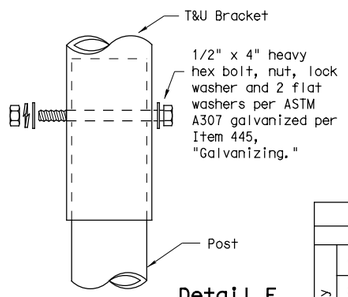

Detail E

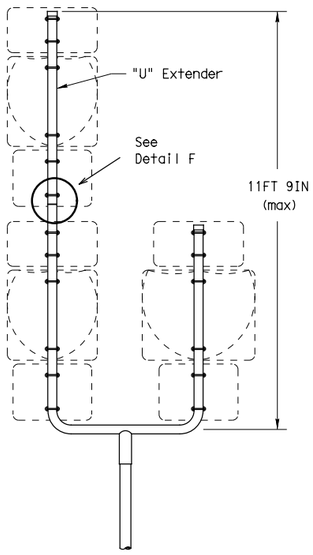

SM RD SGN ASSM TY S80(1)XX(U-1EXT)

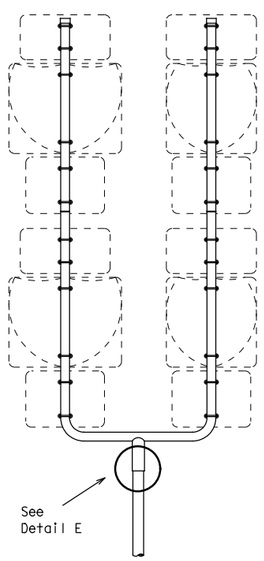

SM RD SGN ASSM TY S80(1)XX(U-2EXT)

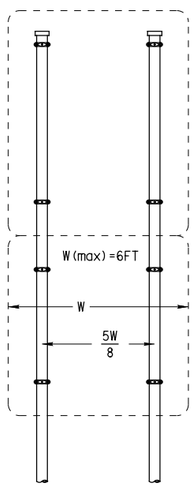

SM RD SGN ASSYM TY XXXXX(2)XX(P)

SIDE VIEW

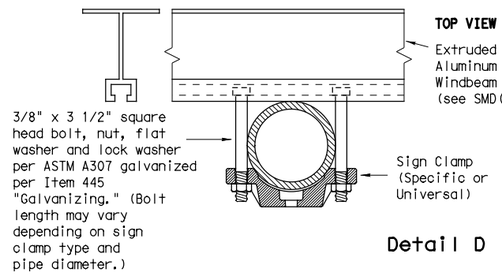

Detail D

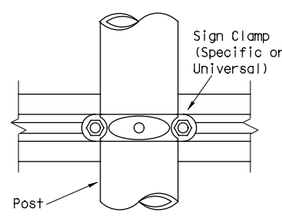

GENERAL NOTES:

1.

SIGN SUPPORT	# OF POSTS	MAX. SIGN AREA
10 BWG	1	16 SF
10 BWG	2	32 SF
Sch 80	1	32 SF
Sch 80	2	64 SF

2. The Engineer may require that a Schedule 80 post be used in place of a 10 BWG where a sign height is abnormally high due to a fill slope.
3. Sign supports shall not be spliced except where shown. Sign support posts shall not be spliced.
4. Aluminum sign blanks shall conform to Departmental Material Specifications DMS-7110 and shall have the following minimum thicknesses: 0.080 for signs less than 7.5 sq. ft., 0.100 for signs 7.5 to 15 sq. ft., and 0.125 for signs greater than 15 sq. ft.
5. Signs that require specific supports due to reasons in addition to windloading are indicated on the "REQUIRED SUPPORT" table on this sheet.
6. For horizontal rectangular signs fabricated from flat aluminum, T-brackets are used for signs 24 inches or less in height. U-brackets are used for signs of greater height.
7. When two triangular slipbase supports are used to support a single sign, they shall not be "rigidly" connected to each other except through the sign panel. This will allow each support to act independently when impacted by an errant vehicle.
8. Wing channel shall meet ASTM A 1011 SS Gr 50 and be galvanized per ASTM A 123.
9. Excess pipe, wing channel, or windbeam shall be cut off so that it does not extend beyond the sign panel (i.e., excess support shall not be visible when the sign is viewed from the front.) Repair galvanized coating at cut support ends per Item 445, "Galvanizing."
10. Additional route markers may be added vertically, provided the total sign area does not exceed the maximum allowable amount per Note 1.
11. Additional sign clamp required on the "T-bracket" post for 24 inch height signs. Place the clamp 3 inches above bottom of sign when possible.
12. Post open ends shall be fitted with Friction Caps.
13. Sign blanks shall be the sizes and shapes shown on the plans.

REQUIRED SUPPORT		
	SIGN DESCRIPTION	SUPPORT
Regulatory	48-inch STOP sign (R1-1)	TY 10BWG(1)XX(T) TY 10BWG(1)XX(P-BM)
	60-inch YIELD sign (R1-2)	TY 10BWG(1)XX(T) TY 10BWG(1)XX(P-BM)
	48x16-inch ONE-WAY sign (R6-1)	TY 10BWG(1)XX(T) TY 10BWG(1)XX(P-BM)
	36x48, 48x36, and 48x48-inch signs	TY 10BWG(1)XX(T)
	48x60-inch signs	TY S80(1)XX(T)
Warning	48x48-inch signs (diamond or square)	TY 10BWG(1)XX(T)
	48x60-inch signs	TY S80(1)XX(T)
	48-inch Advance School X-ing sign (S1-1)	TY 10BWG(1)XX(T)
	48-inch School X-ing sign (S2-1)	TY 10BWG(1)XX(T)
	Large Arrow sign (W1-6 & W1-7)	TY 10BWG(1)XX(T)

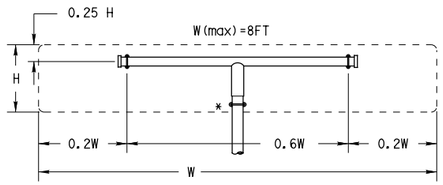

SM RD SGN ASSM TY XXXXX(1)XX(T)
(* - See Note 12)

All dimensions are in english unless detailed otherwise.

FRICTION CAP DETAIL

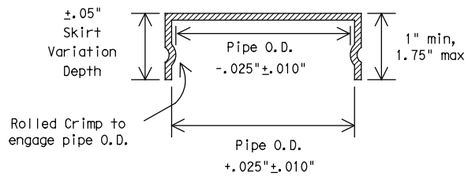

Friction caps may be manufactured from hot rolled or cold rolled steel sheets. The minimum sheet metal thickness shall be 24 gauge for all cap sizes.

The rim edges shall be reasonably straight and smooth. Caps shall be sized and formed in such a manner as to produce a drive-on friction fit and have no tendency to rock when seated on the pipe. The depth shall be sufficient to give positive protection against entrance of rainwater. They shall be free of sharp creases or indentations and show no evidence of metal fracture.

Caps shall have an electrodeposited coating of zinc in accordance with the requirements of ASTM B633 Class FE/ZN 8.

Texas Department of Transportation
Traffic Operations Division

SIGN MOUNTING DETAILS SMALL ROADSIDE SIGNS TRIANGULAR SLIPBASE SYSTEM

SMD(SLIP-2)-08

©TxDOT July 2002

DN: TXDOT	CK: TXDOT	DW: TXDOT	CK: TXDOT

9-08 REVISIONS

CONT	SECT	JOB	HIGHWAY
2103	01	034	

DIST	COUNTY	SHEET NO.
AUS	WILLIAMSON	239

26C

DATE: 3/23/2018 10:52:19 AM
FILE: c:\pwworking\dal\d0911857\smds2.dgn

DISCLAIMER:
The use of this standard is governed by the "Texas Engineering Practice Act". No warranty of any kind is made by TxDOT for any purpose whatsoever. TxDOT assumes no responsibility for the conversion of this standard to other formats or for incorrect results or damages resulting from its use.

REQUIREMENTS FOR RED BACKGROUND REGULATORY SIGNS

(STOP, YIELD, DO NOT ENTER AND WRONG WAY SIGNS)

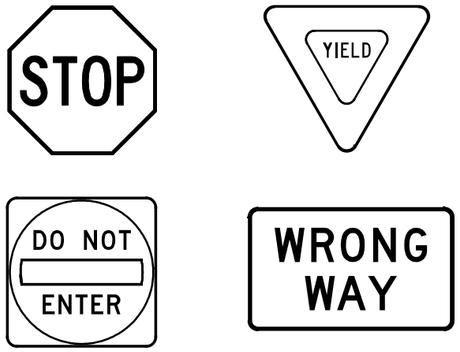

REQUIREMENTS FOR FOUR SPECIFIC SIGNS ONLY

SHEETING REQUIREMENTS		
USAGE	COLOR	SIGN FACE MATERIAL
BACKGROUND	RED	TYPE B OR C SHEETING
BACKGROUND	WHITE	TYPE B OR C SHEETING
LEGEND & BORDERS	WHITE	TYPE B OR C SHEETING
LEGEND	RED	TYPE B OR C SHEETING

REQUIREMENTS FOR WHITE BACKGROUND REGULATORY SIGNS

(EXCLUDING STOP, YIELD, DO NOT ENTER AND WRONG WAY SIGNS)



TYPICAL EXAMPLES

SHEETING REQUIREMENTS		
USAGE	COLOR	SIGN FACE MATERIAL
BACKGROUND	WHITE	TYPE A SHEETING
BACKGROUND	ALL OTHERS	TYPE B OR C SHEETING
LEGEND, BORDERS AND SYMBOLS	BLACK	ACRYLIC NON-REFLECTIVE FILM
LEGEND, BORDERS AND SYMBOLS	ALL OTHER	TYPE B OR C SHEETING

REQUIREMENTS FOR WARNING SIGNS

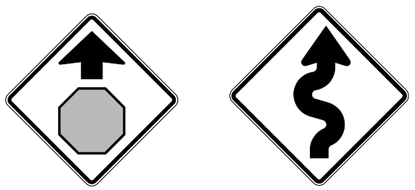

TYPICAL EXAMPLES

SHEETING REQUIREMENTS		
USAGE	COLOR	SIGN FACE MATERIAL
BACKGROUND	FLOURESCENT YELLOW	TYPE B_{FL} OR C_{FL} SHEETING
LEGEND & BORDERS	BLACK	ACRYLIC NON-REFLECTIVE FILM
LEGEND & SYMBOLS	ALL OTHER	TYPE B OR C SHEETING

REQUIREMENTS FOR SCHOOL SIGNS



TYPICAL EXAMPLES

SHEETING REQUIREMENTS		
USAGE	COLOR	SIGN FACE MATERIAL
BACKGROUND	WHITE	TYPE A SHEETING
BACKGROUND	FLOURESCENT YELLOW GREEN	TYPE B_{FL} OR C_{FL} SHEETING
LEGEND, BORDERS AND SYMBOLS	BLACK	ACRYLIC NON-REFLECTIVE FILM
SYMBOLS	RED	TYPE B OR C SHEETING

GENERAL NOTES

1. Signs to be furnished shall be as detailed elsewhere in the plans and/or as shown on sign tabulation sheet. Standard sign designs and arrow dimensions can be found in the "Standard Highway Sign Designs for Texas" (SHSD).
2. Sign legend shall use the Federal Highway Administration (FHWA) Standard Highway Alphabets (B, C, D, E, Emod or F).
3. Lateral spacing between letters and numerals shall conform with the SHSD, and any approved changes thereto. Lateral spacing of legend shall provide a balanced appearance when spacing is not shown.
4. Black legend and borders shall be applied by screening process or cut-out acrylic non-reflective black film to background sheeting, or combination thereof.
5. White legend and borders shall be applied by screening process with transparent colored ink, transparent colored overlay film to white background sheeting or cut-out white sheeting to colored background sheeting, or combination thereof.
6. Colored legend shall be applied by screening process with transparent colored ink, transparent colored overlay film or colored sheeting to background sheeting, or combination thereof.
7. Sign substrate shall be any material that meets the Departmental Material Specification requirements of DMS-7110 or approved alternative.
8. Mounting details for roadside mounted signs are shown in the "SMD series" Standard Plan Sheets.

ALUMINUM SIGN BLANKS THICKNESS	
Square Feet	Minimum Thickness
Less than 7.5	0.080
7.5 to 15	0.100
Greater than 15	0.125

DEPARTMENTAL MATERIAL SPECIFICATIONS	
ALUMINUM SIGN BLANKS	DMS-7110
SIGN FACE MATERIALS	DMS-8300

The Standard Highway Sign Designs for Texas (SHSD) can be found at the following website.

http://www.txdot.gov/

Texas Department of Transportation

Traffic Operations Division Standard

TYPICAL SIGN REQUIREMENTS

TSR(4)-13

FILE: tsr4-13.dgn	DN: TxDOT	CK: TxDOT	DW: TxDOT	CK: TxDOT
© TxDOT October 2003	CONT	SECT	JOB	HIGHWAY
REVISIONS 12-03 7-13 9-08	2103	01	034	
	DIST	COUNTY		SHEET NO.
	AUS	WILLIAMSON		240

4

DATE: 3/23/2018 10:52:21 AM
FILE: c:\pwworking\dal\d0911857\tsr4-13.dgn

DISCLAIMER:
The use of this standard is governed by the "Texas Engineering Practice Act". No warranty of any kind is made by TxDOT for any purpose whatsoever. TxDOT assumes no responsibility for the conversion of this standard to other formats or for incorrect results or damages resulting from its use.

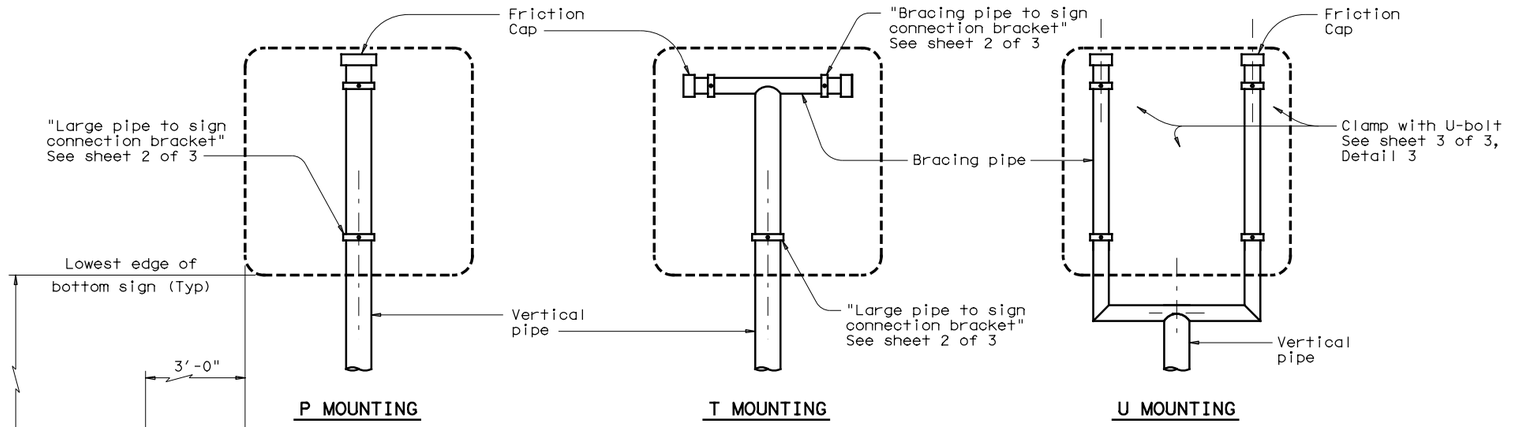

VARIOUS SIGN ATTACHMENTS

(Mounting NOT deviated from SHSD)

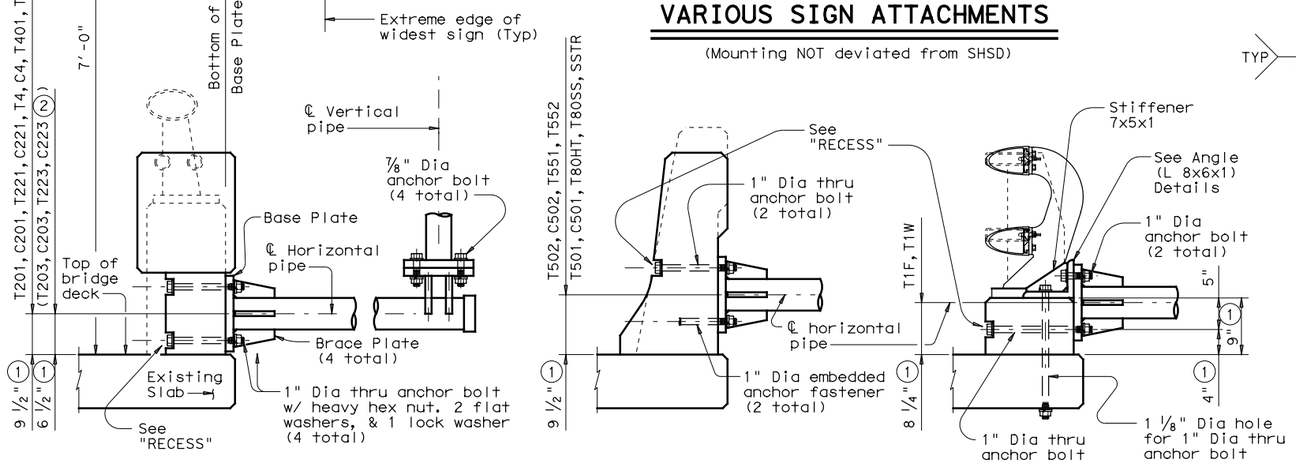

LONGITUDINAL SECTION THROUGH RAILING & SIGN MOUNT

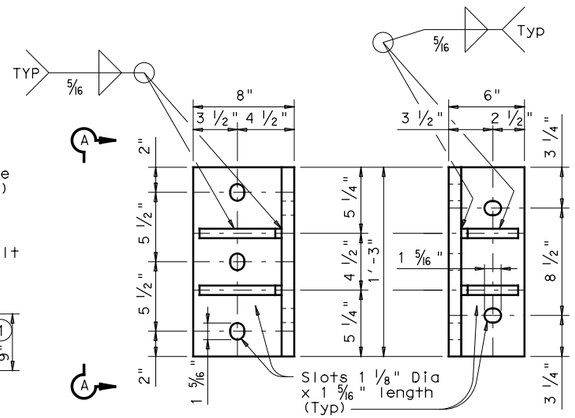

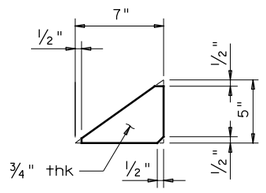

STIFFENER

ANGLE (L 8x6x1) DETAILS

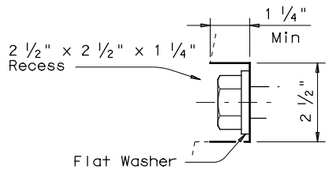

RECESS

(1) Increase 2" for structure with overlay.

(2) Attached at ℄ post.

PIPE SIZE AND THICKNESS			
Pipe Placement / Design Wind Speed	Horizontal	Vertical	Bracing
90 mph	5" X-Strong (.375")	4" X-Strong (.337")	2 ½" Standard (.203")
130 mph	6" X-Strong (.432")	5" X-Strong (.375")	3" X-Strong (.300")

GENERAL NOTES:

Design conforms to 2013 AASHTO Standard Specifications for Highway Signs, Luminaires, and Traffic Signals and Interim Specifications thereto. Design 3-second gust wind speeds of 90 mph and 130 mph with a 1.14 gust factor, and a wind importance factor of 1.0 (50-year mean recurrence interval) for the supporting structures. For mounting connection between sign panel and pipe, wind importance factors of 0.71 and 0.54, for 90 mph and 130 mph winds, respectively, are applied to adjust the wind speeds to a 10-year mean recurrence interval.

See standard sheet WV & IZ(LTS2013) for the boundaries of each design wind zone. All mounting shall be based on 130 mph wind speed design except when located in 90 mph wind zone. Maximum panel area is 30 sq. ft. Maximum design height is 50 ft, with design height defined as the distance between natural ground (average elevation of surrounding terrain) and the center of sign(s) at the mounting location.

Material for pipe shall be ASTM A53 Grade B, or A501. Structural steel plates shall be ASTM A36, A572 Grade 50, or A588. Bolts used to connect pipe and mounting bracket, and wind beam to sign panel shall be ASTM A307. Anchor bolts shall be ASTM A325 or A193 B7. Each anchor bolt shall be provided with 2 flat washers, 1 lock washer, and 1 heavy hex nut. All parts shall be galvanized in accordance with Standard Specifications Item 445, "Galvanizing".

Attach horizontal pipe at least 2'-0" from the edge of any nearby drain slot.

Contractor shall verify applicable field dimensions before fabrication. Holes drilled through the railing parapet wall shall be drilled with rotary (coring or masonry drill) type equipment. Percussion (star) drilling shall not be allowed. Anchorage for pipe attached to rail shall be placed using an anchoring system approved by the engineer. Installation of anchor fasteners including hole depth, diameter and material shall be in accordance with the manufacturers' recommendation.

Each embedded anchor fastener shall resist an allowable design loading (after applying the reduction factors of bolt spacing and bolt edge distance) of:

	130 mph	90 mph
Tension	12.5 kips	7.5 kips
Shear	9.0 kips	5.0 kips

Each anchoring system shall provide a capacity to resist the required tension and shear acting simultaneously.

For sign connection to mounting, shop drill holes on sign blank in accordance with the current Standard Highway Sign Designs for Texas (SHSD). Additional hole(s) needed to meet a stipulated-type mounting may be field drilled. For multi-sign or back-to-back signs mounting, the engineer shall determine the proper type which ensures each individual mounting meets requirements.

Refer to Standard sheets SMD(GEN), SMD(SLIP-2 and SMD(2-1) for details not covered here.

SHEET 1 OF 3

Texas Department of Transportation

Traffic Operations Division Standard

BRIDGE RAILING SIGN MOUNT DETAILS

SMD(BR-1)-14

FILE: smdbr-14.dgn	DN: TxDOT	CK: TxDOT	DW: TxDOT	CK: TxDOT
©TxDOT August 2014	CONT	SECT	JOB	HIGHWAY
REVISIONS	2103	01	034	
	DIST	COUNTY		SHEET NO.
	AUS	WILLIAMSON		241

DATE: 3/23/2018 10:52:23 AM
FILE: c:\pwworking\dal\d0911857\smdbr-14.dgn

DISCLAIMER:
The use of this standard is governed by the "Texas Engineering Practice Act". No warranty of any kind is made by TxDOT for any purpose whatsoever. TxDOT assumes no responsibility for the conversion of this standard to other formats or for incorrect results or damages resulting from its use.

DATE: 3/23/2018 10:52:24 AM
FILE: c:\pwworking\dal\d0911857\smdbr-14.dgn

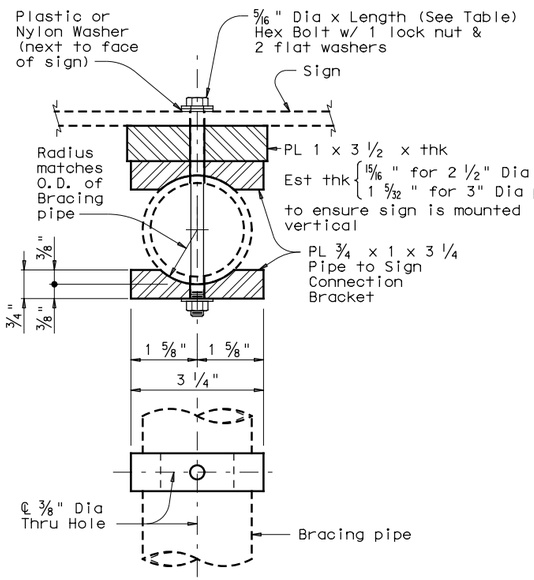

BRACING PIPE TO SIGN CONNECTION BRACKET DETAILS

(Showing T Mounting)

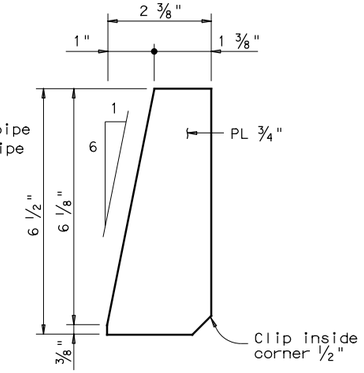

BRACE PLATE DETAILS

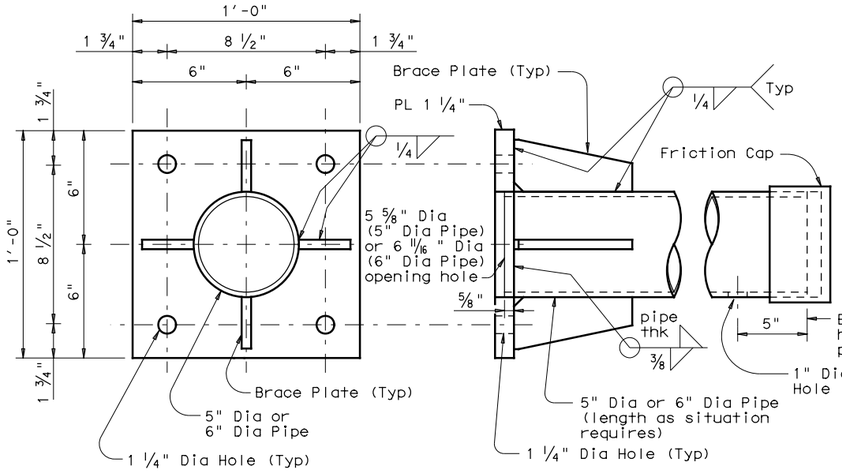

BASE PLATE DETAILS

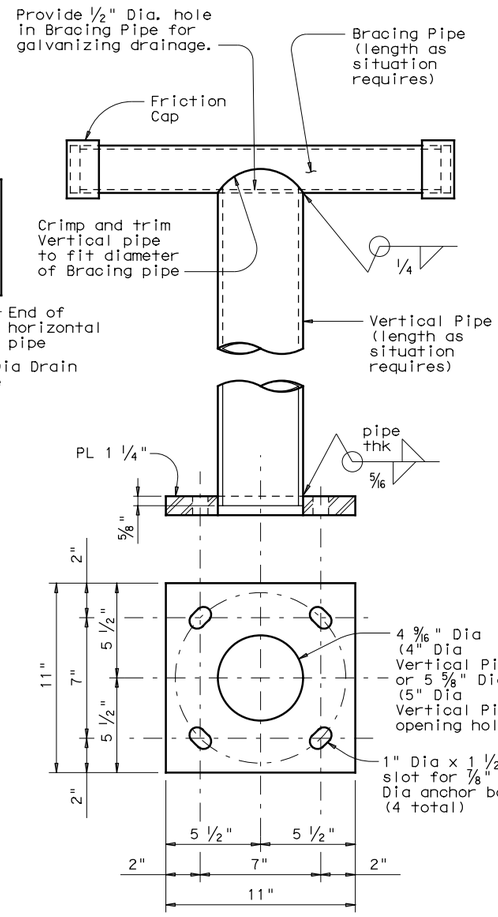

SIGN POLE & POLE BASE PLATE DETAILS

(Showing only T Mounting)

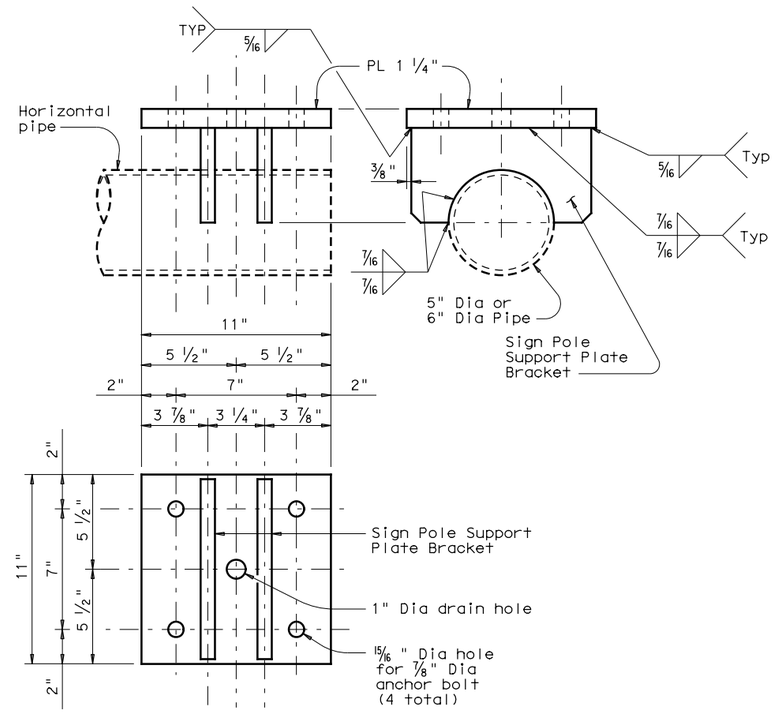

SIGN POLE SUPPORT PLATE DETAILS

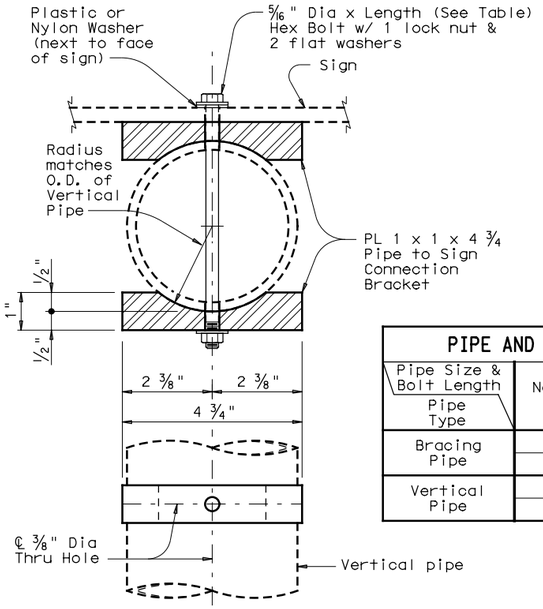

LARGE PIPE TO SIGN CONNECTION BRACKET DETAILS

(Showing P or T Mounting)

PIPE AND BOLT SPECIFICATIONS		
Pipe Size & Bolt Length / Pipe Type	Nominal Pipe Dia (in.)	Bolt Length (in.)
Bracing Pipe	2 1/2	6
	3	7
Vertical Pipe	4	7
	5	8

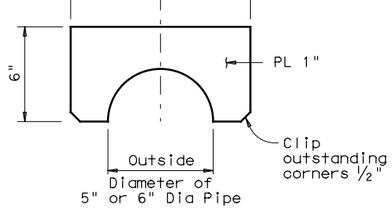

SIGN POLE SUPPORT PLATE BRACKET DETAILS

SHEET 2 OF 3

Texas Department of Transportation

Traffic Operations Division Standard

BRIDGE RAILING SIGN MOUNT DETAILS

SMD(BR-2)-14

FILE: smdbr-14.dgn	DN: TxDOT	CK: TxDOT	DW: TxDOT	CK: TxDOT
© TxDOT August 2014	CONT	SECT	JOB	HIGHWAY
REVISIONS	2103	01	034	
	DIST	COUNTY		SHEET NO.
	AUS	WILLIAMSON		242

26H

DISCLAIMER:
The use of this standard is governed by the "Texas Engineering Practice Act". No warranty of any kind is made by TxDOT for any purpose whatsoever. TxDOT assumes no responsibility for the conversion of this standard to other formats or for incorrect results or damages resulting from its use.

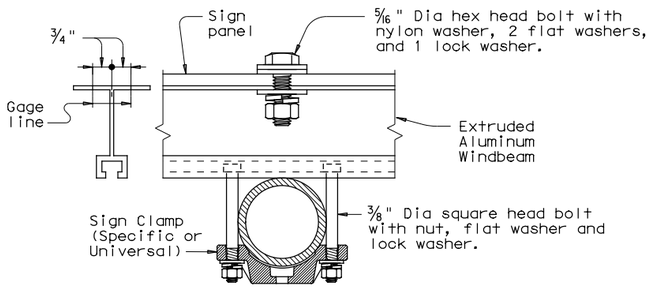

DETAIL 1

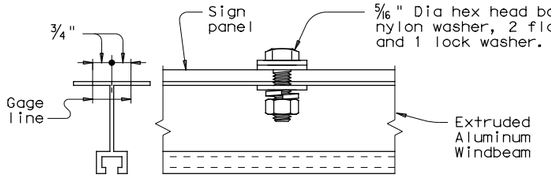

DETAIL 2

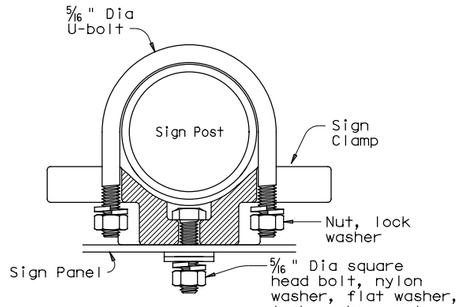

DETAIL 3

SIGN SHAPE	SQUARE			HORIZONTAL RECTANGLE			VERTICAL RECTANGLE			DIAMOND			OCTAGON			EQUILATERAL TRIANGLE			INTERSTATE SHIELD	PENTAGON (SCHOOL)	
Type of Sign Mounting on SHSD / Design Wind Speed	P	T	U	P	T	U	P	T	U	P	T	U	P	T	U	P	T	U	P	P	T
90 mph					(Type 23) 60"x48"	(Type 3) 72"x36" 78"x36" (Type 23) 72"x30" 84"x24"		(Type 2) 36"x48" (Type 32) 36"x60" 36"x72" 42"x60" 48"x54" 48"x60" 48"x72" (Type 3) 48"x84"			(Type 3) 60"x60"									(Type Special) 45"x36"		
130 mph	(Type 1) 30"x30" 36"x36"	(Type 3) 48"x48"		(Type 1) 36"x24" 36"x30"	(Type 23) 48"x42" 54"x42" 60"x30" 66"x36" 84"x24" (Type 3) 60"x48"	(Type 3) 72"x36" 78"x36" (Type 23) 72"x30" 84"x24"	(Type 1) 30"x36" 30"x42"	(Type 3) 36"x48" 36"x60" 36"x72" 42"x60" 48"x54" 48"x60" (Type 4) 48"x72" 48"x84"	(Type 3) 48"x60"	(Type 1) 36"x36"	(Type 3) 48"x48" 60"x60"					(Type 1) 48"x48"			(Type Special) 36"x36" 45"x36"		

Notes:
1. Drill holes in addition to the hole pattern of the Standard Highway Sign Designs for Texas (SHSD) at specified locations to meet a stipulated-type mounting indicated in the parenthesis ( ).
2. "Blank" in the above table indicates all other signs excluded from stipulated mounting shall be mounted in accordance with SHSD.

(1) In lieu of welding, the Fabricator may bend bracing pipe elbows if the following conditions are met:
a. Spacing between vertical bracing pipes is equal to or greater than 2'-6".
b. Bending radius is 12".
c. The distance between the lowest clamp and centerline of horizontal bent pipe is 13" max.

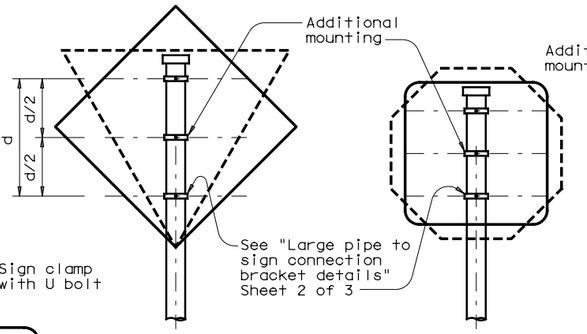

TYPE 1

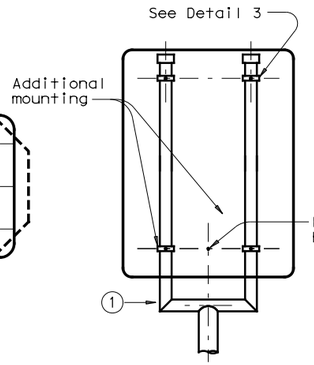

TYPE 2

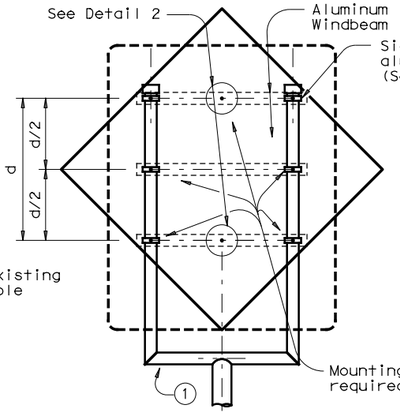

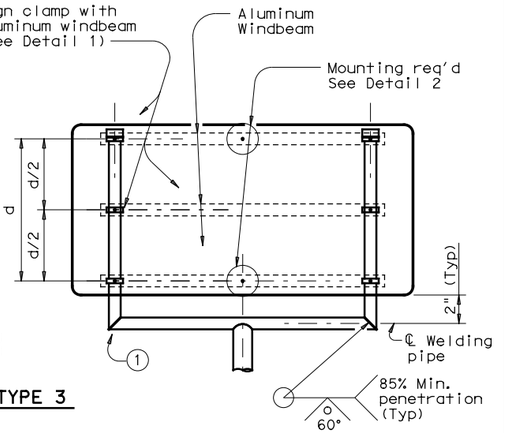

TYPE 3

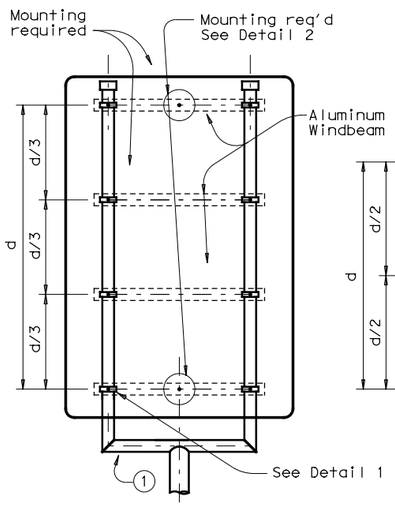

TYPE 4

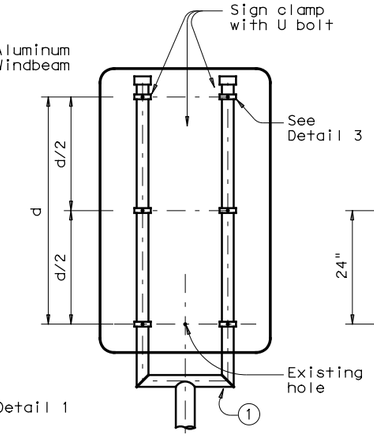

TYPE 32

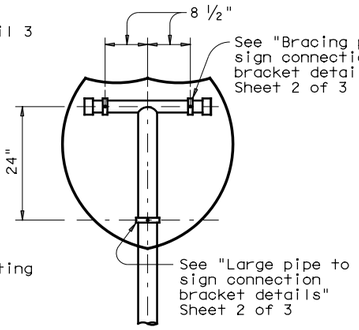

TYPE SPECIAL

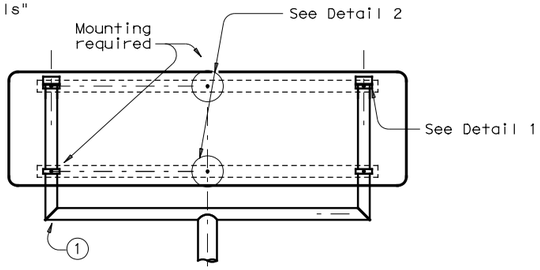

TYPE 23

Texas Department of Transportation

Traffic Operations Division Standard

BRIDGE RAILING SIGN MOUNT DETAILS

SMD(BR-3)-14

FILE: smdbr-14.dgn	DN: TxDOT	CK: TxDOT	DW: TxDOT	CK: TxDOT
©TxDOT August 2014	CONT	SECT	JOB	HIGHWAY
REVISIONS	2103	01	034	
	DIST	COUNTY		SHEET NO.
	AUS	WILLIAMSON		243

DATE: 3/23/2018 10:52:25 AM
FILE: c:\pwworking\dal\d0911857\smdbr-14.dgn

DISCLAIMER:
The use of this standard is governed by the "Texas Engineering Practice Act". No warranty of any kind is made by TxDOT for any purpose whatsoever. TxDOT assumes no responsibility for the conversion of this standard to other formats or for incorrect results or damages resulting from its use.

GENERAL NOTES:

1. Details show a typical warning sign with two flashing beacon heads, other arrangements are possible. When only one beacon is required, install the upper beacon.
2. See Item 685, "Roadside Flashing Beacon Assemblies" for further requirements.
3. See SMD standard sheets for lateral and vertical clearances and sign mounting details. Install signs as shown on the sign layout sheets.
4. Use either a Screw-In Type Anchor Foundation or a Drilled Shaft Foundation as shown elsewhere in the plans. When plans require a Drilled Shaft Foundation, see standard sheet TS-FD. Install the Screw-In Type Anchor Foundation as per manufacturer's recommendations. On a slope, install one edge at ground level. Screw-In/Drilled Shaft Foundation is subsidiary to Item 685. Installation of a ground rod is not required for solar powered flashing beacon assemblies.
5. When used, provide Screw-In Type Anchor Foundations as shown on TxDOT's Material Producer List (MPL) in the file "Highway Traffic Signals".
6. Use materials specifically designed for attaching cabinets, beacon heads, solar panels, etc., to poles.
7. Install beacon heads as shown here, as shown elsewhere on the plans, or as directed. Use hardware specifically designed for mounting beacon heads on poles.
8. Conduit in foundation and within 6 in. of foundation is subsidiary to the Item 685, "Roadside Flashing Beacon Assemblies."
9. Per manufacturer's recommendations, engage all threads on the pedestal pole base and pipe unless the pipe is fully seated into base. In high winds, use a pole and base collar assembly to add strength and prevent loosening on connection.
10. Provide single pole non-fused watertight breakaway electrical connectors for frangible pedestal pole bases, as shown on TxDOT's MPL in the file "Roadway Illumination and Electrical Supplies." Approved models are listed under Item 685. For ungrounded (hot) conductors, install a breakaway connector with a dummy fuse slug). For grounded (neutral) conductors, install a breakaway connector with a white colored marking and a permanently installed dummy fuse (slug).
11. Install the batteries in a battery box. Place the batteries on a 3/16" thick plastic sheet and connect together. Place a plastic cover (battery bell jar) over the top of each battery and secure the battery bell jar to the battery with a strap. The batteries, bell jars, straps and 3/16" plastic sheet are subsidiary to the Item 685, "Roadside Flashing Beacon Assemblies." When required, install batteries in the flasher cabinet. Wire batteries according to manufacturers recommendations. Provide the number of batteries as required by the manufacturer.
12. See standard sheet Electrical Details (ED) for additional requirements regarding the installation of ground boxes/battery boxes, conduit, and cabinets.
13. Provide clearance as shown above the sidewalk or pavement grade at the edge of the road. When a bottom beacon is not used, mount the bottom of the sign at least 7 ft. above the sidewalk or pavement grade at the edge of the road.
14. Unless otherwise shown on the plans, pole shaft shall be one piece, Schedule 40 Aluminum pipe, ASTM B429 or B221 (Alloy 6061-T6 only). Aluminum conduit will not develop the necessary strength and will not be allowed.
15. Orient solar panel for optimum exposure to sunlight (face to the south). Prior to installation, check the location to ensure there is no overhead obstruction that would block the solar panel from receiving full sunlight. Unless specified elsewhere, mount a minimum of 14' above grade.
16. Ensure height of conduit is below top of anchor bolts.

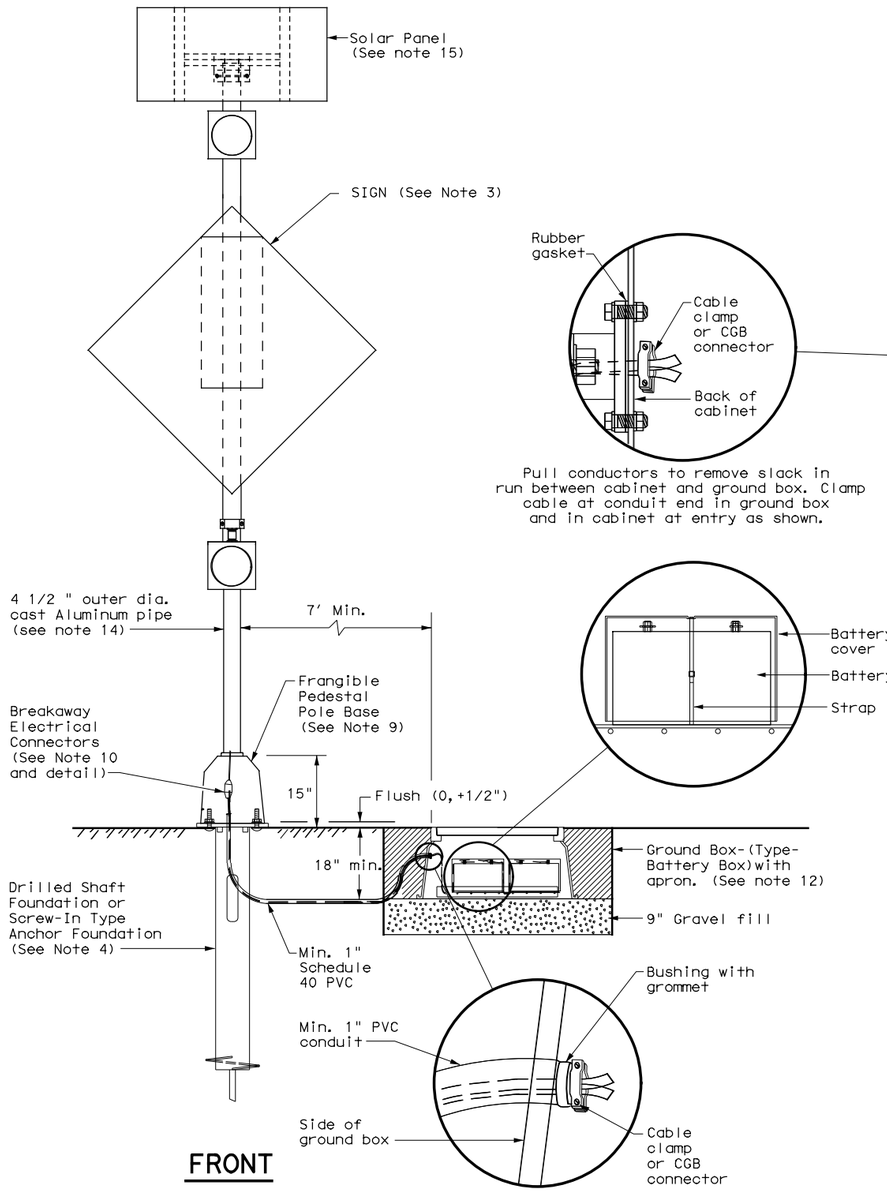

Pull conductors to remove slack in run between cabinet and ground box. Clamp cable at conduit end in ground box and in cabinet at entry as shown.

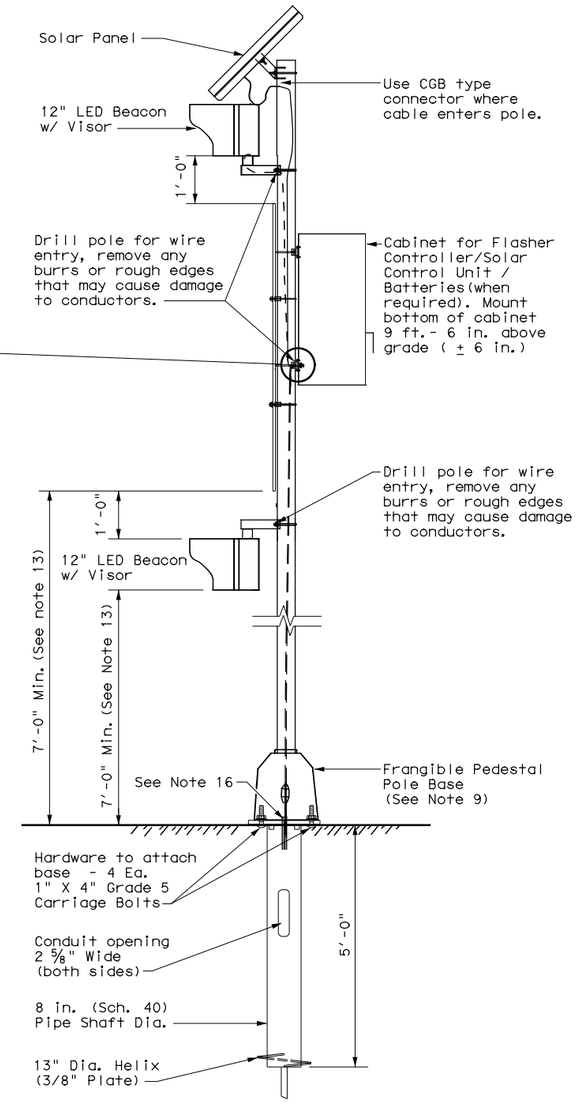

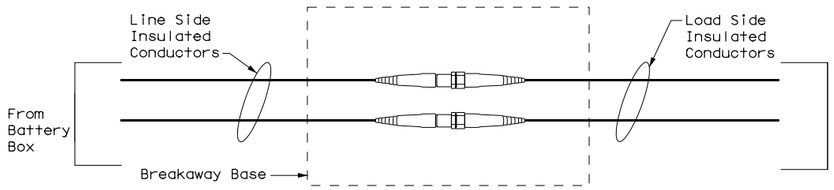

NON-FUSED BREAKAWAY ELECTRICAL CONNECTORS

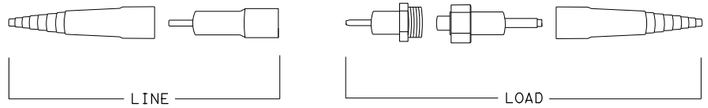

NON-FUSED BREAKAWAY ELECTRICAL CONNECTORS EXPLODED VIEW

Texas Department of Transportation

Traffic Operations Division Standard

SOLAR POWERED ROADSIDE FLASHING BEACON ASSEMBLY DETAILS

SPRFBA(1)-13

FILE: spb1-13.dgn	DN: TxDOT	CK: TxDOT	DW: TxDOT	CK: TxDOT
©TxDOT May 2003	CONT	SECT	JOB	HIGHWAY
REVISIONS	2103	01	034	
12-04	DIST	COUNTY		SHEET NO.
3-13	AUS	WILLIAMSON		244

75A

DATE: 3/23/2018 10:52:26 AM
FILE: c:\pwworking\aal\d0911857\spb1-13.dgn

A. GENERAL SITE DATA

1. PROJECT LIMITS: *SOUTHWEST BYPASS FROM IH 35 SBFR TO RM 2243 (LEANDER ROAD)*

Begin Project Coordinates : Latitude (N): A. 30° 36' 29"N Longitude (W): -A. 97° 42' 13"W

2. PROJECT SITE MAPS:

* *Project Location Map: The Title Sheet*
* *Drainage Patterns: Shown on Proposed Drainage Area Maps*
* *Slopes Anticipated After Major Gradings or Areas of Soil Disturbance: Shown on Fencing and Grading Layout*
* *Location of Erosion and Sediment Controls: Shown on Erosion Control Sheets*
* *Surface Waters and Discharge Locations: Shown on Proposed Area Maps*
* *Project Specific Location(s) (PSL): To be determined by the project Construction Personnel. Location(s) shown on SW3P Site Map (If PSL location(s) is within one mile of project) and information located in project SW3P Binder (Reference Item #10 below).*

3. PROJECT DESCRIPTION:

For the construction of a new facility (principal collector) consisting of grading, flex base, asphalt pavment, culverts, bridge, and erosion control.

4. MAJOR SOIL DISTURBING ACTIVITIES:

1. Install control down-slope of work area and initiate inspection and maintenance activities.
2. Begin phased construciton with interim stabilizzation practices. Adjust erosion and sedimentation controls during construction to meet requirements and changeing conditions and as directed/approved by the Engineer.
3. Major soil disturbing activites may include but are not limited to: right-of-way preparation, cut and/or fill to improve roadway profile, final grading and placement of topsoil and the following (if marked):

- *X Placement of road base*
- *X Extensive ditch grading*
- *___ Upgrading or replacing culverts or bridges*
- *___ Temporary detour road(s)*
- *X Other: Site grading and rock cut excavations*

5. EXISTING CONDITION OF SOIL & VEGETATIVE COVER AND % OF EXISTING VEGETATIVE COVER:

Description of existing vegetation cover: (Primarily Grass, with exposed rock within quarry limits)
Percentage of existing vegetative cover: (51%)
Existing vegetative cover:

- *___ Thick or uniformly established*
- *X Thin and Patchy*
- *___ None or minimal cover*

6. TOTAL PROJECT AREA: *98.53* Acres

7. TOTAL AREA TO BE DISTURBED: *56.07* Acres (57 %)

8. WEIGHTED RUNOFF COEFFICIENT

BEFORE CONSTRUCTION: *0.435*
AFTER CONSTRUCTION: *0.444*

9. NAME OF RECEIVING WATERS:

- *X A classified stream does not pass through project.*
- *___ A classified stream passes through project. Name _____ Segment Number _____*

Name of receiving waters that will receive discharges from disturbed areas of the project: _____

Site is in a Municipal Seperate Storm Sewer System (MS4).
MS4 Operator (name): CITY OF GEORGETOWN

- *X USACE Wetlands are not located on project. (One isolated wetland exists)*
- *___ USACE Wetlands are present. Contractor shall not disturb without specific authorization.*
  Location/Plan Sheet Info.: _____
- *___ No Water Pollution Abatement Plan or Contributing Zone Plan required.*
- *X A Water Pollution Abatement Plan or Contributing Zone Plan applies to project.*

10. PROJECT SW3P Binder:

A. For projects disturbing one to five acres, The Contractor will maintain a SW3P Binder at the project field office (if there is not a project field office, should be kept on the Job Site at all times) which contains the following: Index Sheet, TCEQ Signature Authority, TCEQ Small Construction Site Notice, Contractor Certification of Compliance, SW3P Inspector Qualification Statements, Inspection and Maintenance Reports (Form 2118), SW3P Sheet, Site Location Maps, Stored Material Lists specifying associated control measures and the Appendix which contains the TPDES Construction General Permit, MS4 Operator Notification(s) and the Construction PSL Permits per all applicable requirements.

B. For projects disturbing 5 acres or more, the Contractor will follow the actions listed in (10.A.) above with the addition of the following: Notice Of Intent (N.O.I.) and Fee Payment Form, TCEQ Large Construction Site Notice (to be used instead of Small Site Notice), and TPDES Permit Coverage Notice.

C. For projects disturbing less than one acre, actions described in (10.A.) and (10.B.) above are not required. Acreage is calculated by adding Total Area To Be Disturbed Acres on project (See #7 above) and the PSL(s) acreage located within one mile of project.

B. EROSION AND SEDIMENT CONTROLS

1. SOIL STABILIZATION PRACTICES: (Select T = Temporary or P = Permanent, as applicable)

- *T* TEMPORARY SEEDING
- ___ MULCHING (Hay or Straw)
- ___ BUFFER ZONES
- ___ PLANTING
- *P* SEEDING
- ___ SODDING
- *P* PRESERVATION OF NATURAL RESOURCES
- ___ FLEXIBLE CHANNEL LINER
- ___ RIGID CHANNEL LINER
- *P* SOIL RETENTION BLANKET
- *P* COMPOST MANUFACTURED TOPSOIL
- ___ VERTICAL TRACKING
- ___ OTHER: *Disturbed areas on which construction activity has ceased, either temporarily or permanently, shall be stabilized within 14 days unless activities are scheduled to resume and do so within 21 days.*

2. STRUCTURAL PRACTICES:
(T = Temporary or P = Permanent)

- *T* SILT FENCES
- ___ EROSION CONTROL LOGS
- ___ EROSION CONTROL COMPOST BERMS (Low Velocity)
- *T* ROCK FILTER DAMS
- ___ DIVERSION, INTERCEPTOR, OR PERIMETER DIKES
- ___ DIVERSION, INTERCEPTOR, OR PERIMETER SWALES
- ___ DIVERSION DIKE AND SWALE COMBINATIONS
- ___ PIPE SLOPE DRAINS
- *P* PAVED FLUMES
- *T* ROCK BEDDING AT CONSTRUCTION EXIT
- ___ TIMBER MATTING AT CONSTRUCTION EXIT
- ___ CHANNEL LINERS
- *T, P* SEDIMENT TRAPS (Existing low points inside ROW will function as sediment traps in smaller stroms)
- ___ SEDIMENT BASINS
- ___ STORM INLET SEDIMENT TRAP
- *P* STONE OUTLET STRUCTURES
- *P* CURBS AND GUTTERS
- ___ STORM SEWERS
- ___ VELOCITY CONTROL DEVICES
- *P* OTHER: *(WPAP Facilities - Vegetative Filter Strips) (Stone riprap on side slopes within quarry)*

NOTE: TOP OF BMP'S SHOULD NOT BE HIGHER THAN ROADWAY ELEVATION AS NOT TO FLOOD ROADWAY UNLESS PRIOR APPROVAL FROM ENGINEER IS OBTAINED.

3. STORM WATER MANAGEMENT:

The proposed facility was designed in consideration of hydraulic design standards to convey stormwater in a manner that is protective of public safety and property. The control of erosion from the facility is inherent to the design. Additional factors affecting post-construction stormwater at the project location include: (mark all that apply)

- *X Existing or new vegetation provides natural filtration.*
- *X The design includes provisions for permanent erosion controls provided by strategically placed pervious and impervious surfaces.*
- *___ Project includes permanent sedimentation controls (other than grass).*
- *X Velocities do not require dissipation devices.*
- *___ Velocity-dissipation devices included in the design.*
- *___ Other : _____*

4. NON-STORM WATER DISCHARGES:

Filter non-storm water discharges, or hold in retention basins, before being allowed to mix with storm water. These discharges consist of, but not limited to, non-polluted ground water, spring water, foundation or footing drain water, water used for dust control or pavement washing and vehicle washwater containing no detergents.

Off-site discharges are prohibited except as follows:

1. *Discharges from fire fighting activities and/or fire hydrant flushings.*
2. *Vehicle, external building, and pavement wash water where detergents and soaps are not used and where spills or leaks of toxic or hazardous materials have not occurred (unless all spilled material has been removed).*
3. *Plain water used to control dust.*
4. *Plain water originating from potable water sources.*
5. *Uncontaminated groundwater, spring water or accumulated stormwater.*
6. *Foundation or footing drains where flows are not contaminated with process materials such as solvents.*
7. *Other: _____*

Concrete truck wash water discharges on the site should be prohibited or minimized. If allowed by the Engineer, they must be managed in a manner so as not to contaminate surface water. They must not be located in areas of concentrated flow. Concrete truck wash-out locations shall be as directed by the Engineer and will be included in the inspections.

Hazardous material spill/leak shall be prevented or minimized. At a minimum, this includes asphalt products, fuels, oils, lubricants, solvents, paints, acids, concrete curing compounds and chemical additives for soil stabilization. BMPs shall be implemented to the storage areas of these products. All spills must be cleaned and disposed properly and reported to the Engineer. Report any release at or above the reportable quantity during a 24 hour period to the National Response Center at 1-800-424-8802.

C. OTHER REQUIREMENTS & PRACTICES

1. MAINTENANCE:

Maintain all erosion and sediment controls in good working order. Perform any necessary cleaning/repairs/replacements at the earliest possible date prior to next rain event, but no later than 7 calendar days, Ensure the surrounding ground has dried sufficiently to prevent damage from equipment. "Too Wet" is the only reason for not adhering to time frames described. When construction activities permanently or temporarily cease and are not expected to resume for 14 or more days on a disturbed portion of the site, stabilization measures must be initiated immediately.

2. INSPECTION:

A Construction Observer will perform a regularly scheduled SW3P inspection every 7 calendar days. An inspection and Maintenance Report, signed by the Construction Observer and the Contractor, will be filed for each inspection. Revise/clean/repair/replace each BMP control device in accordance with the current Field Inspection and Maintenance Report (Form 2118) and item 1 (Maintenance) above.

3. WASTE MATERIALS:

On a daily basis, or as may be directed, collect all waste materials, trash and debris from the construction site and deposit into a metal dumpster having a secure cover and which meets all state and local city solid waste management requirements. Empty the dumpster as required by regulation, or as may be directed, at a local approved landfill site. Do not bury construction waste on the construction project site.

4. HAZARDOUS WASTE & SPILL REPORTING:

As a minimum, any products in the following categories are considered to be hazardous: Paints, Acids, Solvents, Fuels, Asphalt Products, Chemical Additives for Soil Stabilization, and Concrete Curing Compounds or Additives. When storing hazardous material on the project site, or at a Project Specific Location, take all practicable precaution to prevent and/or contain any spillage of these materials. In the event of a spill, contact the spill coordinator immediately.

5. SANITARY WASTE:

Use a licensed sanitary waste management contractor to collect all sanitary waste from portable units as may be required by local regulation, or as directed.

6. CONSTRUCTION VEHICLE TRACKING:

On a regular basis, or as may be directed, dampen haul roads for dust control and stabilize construction entrances/exits. Provide for a motorized broom or vacuum type sweeper to be available on a daily basis, or as may be directed, to remove sediment from paved roadways abutting or traversing the project site.

7. MANAGEMENT PRACTICES:

A. Construct disposal areas, stockpiles, haul roads and PSL's in a manner that will minimize and control the amount of sediment that may enter receiving waters. Do not locate disposal areas in any wetland, waterbody or streambed.
B. Locate construction staging areas, vehicle maintenance and PSL's areas in a manner to minimize the runoff of pollutants.
C. When working in or near a wetland, install and maintain operating soil erosion and sediment controls at all times during construction and isolate the work from the wetland.
D. Clear all waterways as soon as practicable of temporary embankment, temporary bridges, matting, falsework, piling, debris or other obstructions placed during construction operations that are not a part of the finished work.
E. Procedures and/or practices should be taken to control dust.
F. Sediment to be removed from roadways daily or when work begins after weather events if construction activities have ceased due to weather event.
G. The Contractor will be required to contain wash water from concrete trucks in a manner that will prevent same from entering any waterway.
H. The Contractor is responsible for insuring that all Subcontractors are aware and comply with all components of the Temporary Erosion Control Plans.

STATE OF TEXAS
JUSTIN D. CARLTON
127593
LICENSED
PROFESSIONAL ENGINEER
03/23/2018

WILLIAMSON COUNTY

HDR Engineering, Inc.
810 Hesters Crossing, Suite 120
Round Rock, Texas 78681
Texas Registered Engineering Firm F-754

WILLIAMSON COUNTY

STORM WATER POLLUTION PREVENTION PLAN (SW3P)

TEMPLATE REVISION DATE: 06/12/2015

DESIGN	FED.RD. DIV.NO.	FEDERAL AID PROJECT NO.		HIGHWAY NO.
JC	6			
GRAPHICS	STATE	DISTRICT	COUNTY	SHEET NO.
LG	TEXAS	AUS	WILLIAMSON	
CHECK	CONTROL	SECTION	JOB	245
JW	2103	01	034	
CHECK				
JC				

PLOT DRIVER: TXDOT_PDF_BW.pltcfg PENTABLE: S2-0000020I0718.tbl
USER: lgomezgonz DATE: 3/23/2018 TIME: 11:03:16 AM SCALE: 1:200
FILE: \

4/12/2018 7:20 AM

DISCLAIMER:
The use of this standard is governed by the "Texas Engineering Practice Act". No warranty of any kind is made by TxDOT for any purpose whatsoever. TxDOT assumes no responsibility for the conversion of this standard to other formats or for incorrect results or damages resulting from its use.

DATE: 3/23/2018
FILE: c:\pwworking\dal\d0910675\SWBP-EPIC.dgn

I. STORMWATER POLLUTION PREVENTION-CLEAN WATER ACT SECTION 402

TPDES TXR 150000: Stormwater Discharge Permit or Construction General Permit required for projects with 1 or more acres disturbed soil. Projects with any disturbed soil must protect for erosion and sedimentation in accordance with Item 506.

List MS4 Operator(s) that may receive discharges from this project. They may need to be notified prior to construction activities.

1. City of Georgetown

2.

☐ No Action Required ■ Required Action

Action No.

1. Prevent stormwater pollution by controlling erosion and sedimentation in accordance with TPDES Permit TXR 150000
2. Comply with the SW3P and revise when necessary to control pollution or required by the Engineer.
3. Post Construction Site Notice (CSN) with SW3P information on or near the site, accessible to the public and TCEQ, EPA or other inspectors.
4. When Contractor project specific locations (PSL's) increase disturbed soil area to 5 acres or more, submit NOI to TCEQ and the Engineer.

II. WORK IN OR NEAR STREAMS, WATERBODIES AND WETLANDS CLEAN WATER ACT SECTIONS 401 AND 404

USACE Permit required for filling, dredging, excavating or other work in any water bodies, rivers, creeks, streams, wetlands or wet areas.

The Contractor must adhere to all of the terms and conditions associated with the following permit(s):

■ No Permit Required
☐ Nationwide Permit 14 - PCN not Required (less than 1/10th acre waters or wetlands affected)
☐ Nationwide Permit 14 - PCN Required (1/10 to <1/2 acre, 1/3 in tidal waters)
☐ Individual 404 Permit Required
☐ Other Nationwide Permit Required: NWP# _____

Required Actions: List waters of the US permit applies to, location in project and check Best Management Practices planned to control erosion, sedimentation and post-project TSS.

1.

2.

3.

4.

The elevation of the ordinary high water marks of any areas requiring work to be performed in the waters of the US requiring the use of a nationwide permit can be found on the Bridge Layouts.

Best Management Practices:

Erosion	Sedimentation	Post-Construction TSS
■ Temporary Vegetation	■ Silt Fence	■ Vegetative Filter Strips
■ Blankets/Matting	■ Rock Berm	☐ Retention/Irrigation Systems
☐ Mulch	☐ Triangular Filter Dike	☐ Extended Detention Basin
☐ Sodding	☐ Sand Bag Berm	☐ Constructed Wetlands
☐ Interceptor Swale	☐ Straw Bale Dike	☐ Wet Basin
☐ Diversion Dike	☐ Brush Berms	☐ Erosion Control Compost
☐ Erosion Control Compost	☐ Erosion Control Compost	☐ Mulch Filter Berm and Socks
☐ Mulch Filter Berm and Socks	☐ Mulch Filter Berm and Socks	☐ Compost Filter Berm and Socks
☐ Compost Filter Berm and Socks	☐ Compost Filter Berm and Socks	☐ Vegetation Lined Ditches
	☐ Stone Outlet Sediment Traps	☐ Sand Filter Systems
	■ Sediment Basins	☐ Grassy Swales

III. CULTURAL RESOURCES

Refer to TxDOT Standard Specifications in the event historical issues or archeological artifacts are found during construction. Upon discovery of archeological artifacts (bones, burnt rock, flint, pottery, etc.) cease work in the immediate area and contact the Engineer immediately.

■ No Action Required ☐ Required Action

Action No.

1.

2.

3.

4.

IV. VEGETATION RESOURCES

Preserve native vegetation to the extent practical.
Contractor must adhere to Construction Specification Requirements Specs 162, 164, 192, 193, 506, 730, 751, 752 in order to comply with requirements for invasive species, beneficial landscaping, and tree/brush removal commitments.

☐ No Action Required ■ Required Action

Action No.

1. ITEM 164 AUSTIN DISTRICT PERMANENT RURAL SEEDMIX CLAY IS SPECIFIED FOR USE ON THE PROJECT.
2.
3.
4.

V. FEDERAL LISTED, PROPOSED THREATENED, ENDANGERED SPECIES, CRITICAL HABITAT, STATE LISTED SPECIES, CANDIDATE SPECIES AND MIGRATORY BIRDS.

☐ No Action Required ■ Required Action

Action No.

1. THE CONTRACTOR'S ATTENTION IS DIRECTED TO THE FACT THAT THERE IS THE POSSIBILITY THAT MIGRATORY BIRDS MAY BE NESTING IN ANY WOODY VEGETATION OR EXISTING STRUCTURES WITHIN THE PROJECT LIMITS. THE CONTRACTOR SHALL REMOVAL ALL WOODY VEGETATION, AND OLD MIGRATORY BIRD NESTS FROM ANY STRUCTURES, BETWEEN SEPTEMBER 1 AND JANUARY 31 WHILE ANY NESTS ARE NOT OCCUPIED BY A BIRD. IN ADDITION, THE CONTRACTOR MUST BE PREPARED TO PREVENT MIGRATORY BIRDS FROM RE-NESTING ON ANY STRUCTURES BETWEEN FEBRUARY 1 AND AUGUST 31. ALL METHODS MUST BE APPROVED BY A QUALIFIED PROFESSIONAL WELL IN ADVANCE OF THE PLANNED USE.
2.

If any of the listed species are observed, cease work in the immediate area, do not disturb species or habitat and contact the Engineer immediately. The work may not remove active nests from bridges and other structures during nesting season of the birds associated with the nests. If caves or sinkholes are discovered, cease work in the immediate area, and contact the Engineer immediately.

LIST OF ABBREVIATIONS

BMP:	Best Management Practice	SPCC:	Spill Prevention Control and Countermeasure
CGP:	Construction General Permit	SW3P:	Storm Water Pollution Prevention Plan
DSHS:	Texas Department of State Health Services	PCN:	Pre-Construction Notification
FHWA:	Federal Highway Administration	PSL:	Project Specific Location
MOA:	Memorandum of Agreement	TCEQ:	Texas Commission on Environmental Quality
MOU:	Memorandum of Understanding	TPDES:	Texas Pollutant Discharge Elimination System
MS4:	Municipal Separate Stormwater Sewer System	TPWD:	Texas Parks and Wildlife Department
MBTA:	Migratory Bird Treaty Act	TxDOT:	Texas Department of Transportation
NOT:	Notice of Termination	T&E:	Threatened and Endangered Species
NWP:	Nationwide Permit	USACE:	U.S. Army Corps of Engineers
NOI:	Notice of Intent	USFWS:	U.S. Fish and Wildlife Service

VI. HAZARDOUS MATERIALS OR CONTAMINATION ISSUES

General (applies to all projects):

Comply with the Hazard Communication Act (the Act) for personnel who will be working with hazardous materials by conducting safety meetings prior to beginning construction and making workers aware of potential hazards in the workplace. Ensure that all workers are provided with personal protective equipment appropriate for any hazardous materials used.

Obtain and keep on-site Material Safety Data Sheets (MSDS) for all hazardous products used on the project, which may include, but are not limited to the following categories: Paints, acids, solvents, asphalt products, chemical additives, fuels and concrete curing compounds or additives. Provide protected storage, off bare ground and covered, for products which may be hazardous. Maintain product labelling as required by the Act.

Maintain an adequate supply of on-site spill response materials, as indicated in the MSDS. In the event of a spill, take actions to mitigate the spill as indicated in the MSDS, in accordance with safe work practices, and contact the District Spill Coordinator immediately. The Contractor shall be responsible for the proper containment and cleanup of all product spills.

Contact the Engineer if any of the following are detected:
* Dead or distressed vegetation (not identified as normal)
* Trash piles, drums, canister, barrels, etc.
* Undesirable smells or odors
* Evidence of leaching or seepage of substances

Does the project involve any bridge class structure rehabilitation or replacements (bridge class structures not including box culverts)?

☐ Yes ■ No

If "No", then no further action is required.
If "Yes", then TxDOT is responsible for completing asbestos assessment/inspection.

Are the results of the asbestos inspection positive (is asbestos present)?

☐ Yes ☐ No

If "Yes", then TxDOT must retain a DSHS licensed asbestos consultant to assist with the notification, develop abatement/mitigation procedures, and perform management activities as necessary. The notification form to DSHS must be postmarked at least 15 working days prior to scheduled demolition.

If "No", then TxDOT is still required to notify DSHS 15 working days prior to any scheduled demolition.

In either case, the Contractor is responsible for providing the date(s) for abatement activities and/or demolition with careful coordination between the Engineer and asbestos consultant in order to minimize construction delays and subsequent claims.

Any other evidence indicating possible hazardous materials or contamination discovered on site. Hazardous Materials or Contamination Issues Specific to this Project:

■ No Action Required ☐ Required Action

Action No.

1.

2.

3.

VII. OTHER ENVIRONMENTAL ISSUES

(includes regional issues such as Edwards Aquifer District, etc.)

☐ No Action Required ■ Required Action

Action No.

1. WATER POLLUTION ABATEMENT PLAN (WPAP) RN109538439
2.
3.

STATE OF TEXAS
JUSTIN D. CARLTON
127593
LICENSED
PROFESSIONAL ENGINEER
03/23/2018

Texas Department of Transportation — Design Division Standard

ENVIRONMENTAL PERMITS, ISSUES AND COMMITMENTS

EPIC

FILE: epic.dgn	DN: TxDOT	CK: RG	DW: VP	CK: AR
©TxDOT: February 2015	CONT	SECT	JOB	HIGHWAY
REVISIONS 12-12-2011 (DS) 05-07-14 ADDED NOTE SECTION IV. 01-23-2015 SECTION I (CHANGED ITEM 1122 TO ITEM 506, ADDED GRASSY SWALES.	2103	01	034	
	DIST	COUNTY		SHEET NO.
	AUS	WILLIAMSON		246

The following TCEQ requirements (Form TCEQ-0592, Rev. 3/15/07) are applicable to all work in the recharge zone of the Edwards Aquifer in Hays, Travis and/or Williamson Counties and must be adhered to by the Contractor and all Subcontractors:

1. Written construction notification must be given to the appropriate TCEQ regional office no later than 48 hours prior to commencement of the regulated activity. Information must include the date on which the regulated activity will commence, the name of the approved plan for the regulated activity, and the name of the prime contractor and the name and telephone number of the contact person.

2. All contractors conducting regulated activities associated with this project must be provided with complete copies of the approved Water Pollution Abatement Plan and the TCEQ letter indicating the specific conditions of its approval. During the course of these regulated activities, the contractors are required to keep on-site copies of the approved plan and approval letter.

3. If any sensitive feature is discovered during construction, all regulated activities near the sensitive feature must be suspended immediately. The appropriate TCEQ regional office must be immediately notified of any sensitive features encountered during construction. The regulated activities near the sensitive feature may not proceed until the TCEQ has reviewed and approved the methods proposed to protect the sensitive feature and the Edwards Aquifer from any potentially adverse impacts to water quality.

4. No temporary aboveground hydrocarbon and hazardous substance storage tank system is installed within 150 feet of a domestic, industrial, irrigation, or public water supply well, or other sensitive feature.

5. Prior to commencement of construction, all temporary erosion and sedimentation (E&S) control measures must be properly selected, installed, and maintained in accordance with the manufacturers specifications and good engineering practices. Controls specified in the temporary storm water section of the approved Edwards Aquifer Protection Plan are required during construction. If inspections indicate a control has been used inappropriately, or incorrectly, the applicant must replace or modify the control for site situations. The controls must remain in place until disturbed areas are revegetated and the areas have become permanently stabilized.

6. If sediment escapes the construction site, off-site accumulations of sediment must be removed at a frequency sufficient to minimize offsite impacts to water quality (e.g., fugitive sediment in street being washed into surface streams or sensitive features by the next rain).

7. Sediment must be removed from sediment traps or sedimentation ponds not later than when design capacity has been reduced by 50%. A permanent stake must be provided that can indicate when the sediment occupies 50% of the basin volume.

8. Litter, construction debris, and construction chemicals exposed to stormwater shall be prevented from becoming a pollutant source for stormwater discharges (e.g., screening outfalls, picked up daily).

9. All spoils (excavated material) generated from the project site must be stored on-site with proper E&S controls. For storage or disposal of spoils at another site on the Edwards Aquifer Recharge Zone, the owner of the site must receive approval of a water pollution abatement plan for the placement of fill material or mass grading prior to the placement of spoils at the other site.

10. Stabilization measures shall be initiated as soon as practicable in portions of the site where construction activities have temporarily or permanently ceased, but in no case more than 14 days after the construction activity in that portion of the site has temporarily or permanently ceased. Where the initiation of stabilization measures by the 14th day after construction activity temporary or permanently cease is precluded by weather conditions, stabilization measures shall be initiated as soon as practicable. Where construction activity on a portion of the site is temporarily ceased, and earth disturbing activities will be resumed within 21 days, temporary stabilization measures do not have to be initiated on that portion of site. In areas experiencing droughts where the initiation of stabilization measures by the 14th day after construction activity has temporarily or permanently ceased is precluded by seasonal arid conditions, stabilization measures shall be initiated as soon as practicable.

11. The following records shall be maintained and made available to the TCEQ upon request: the dates when major grading activities occur; the dates when construction activities temporarily or permanently cease on a portion of the site; and the dates when stabilization measures are initiated.

12. The holder of any approved Edward Aquifer protection plan must notify the appropriate regional office in writing and obtain approval from the executive director prior to initiating any of the following:

    A. any physical or operational modification of any water pollution abatement structure(s), including but not limited to ponds, dams, berms, sewage treatment plants, and diversionary structures;

    B. any change in the nature or character of the regulated activity from that which was originally approved or a change which would significantly impact the ability of the plan to prevent pollution of the Edwards Aquifer;

    C. any development of land previously identified as undeveloped in the original water pollution abatement plan.

TCEQ Regional Offices

Austin Regional Office
12100 Park 35 Circle
Bldg A, Room 179
Austin, Texas 78753
Phone (512)339-2929
Fax (512)339-3795

San Antonio Regional Office
14250 Judson Road
San Antonio, Texas 78233-4480
Phone (210)490-3096
Fax (210)545-4329

Texas Department of Transportation®
Austin District Design

TCEQ Requirements for Recharge Zone of the Edwards Aquifer

Austin District Standard

© TxDOT 2003	DIST	FED REG	FEDERAL AID PROJECT #			SHEET
REVISIONS 01/10/14 REQUIREMENTS AND ADDRESS UPDATED	AUS	6				247
	COUNTY		CONTROL	SECT	JOB	HIGHWAY
	WILLIAMSON		2103	01	034	

FILE: TCEQ-03.dgn

SW BYPASS TEMPORARY EROSION CONTROL NOTES:

1. CONTRACTOR MUST APPLY FOR A TPDES CONSTRUCTION GENERAL PERMIT NO LESS THAN TWO DAYS PRIOR TO THE START OF CONSTRUCTION. A CONSTRUCTION STORM WATER POLLUTION PREVENTION PLAN (SWPPP) HAS BEEN PREPARED FOR THIS PROJECT PURSUANT TO THE GENERAL PERMIT REGULATIONS. THE SWPPP MUST BE COMPLIED WITH, RETAINED ON SITE, AND KEPT CURRENT IN ACCORDANCE WITH THE REGULATIONS.

2. GRUB ONLY THOSE AREAS ESSENTIAL FOR COMPLETING SITE CONSTRUCTION. CONSTRUCTION TRAFFIC SHOULD TRAVEL OVER THE AREAS THAT MUST BE DISTURBED FOR OTHER CONSTRUCTION ACTIVITY. RESTRICT CONSTRUCTION VEHICLES FROM TRAVERSING UNPROTECTED CONSTRUCTION AREAS WITH VEGETATIVE COVER.

3. CLEAR ALL TREES AND BRUSH (INCLUDING STUMPS) WITHIN THE ROW BETWEEN I-35 AND RM 2243 (ESTIMATED AT 27.2 AC) WITH THE FOLLOWING TWO EXCEPTIONS:

   A. ALL TREES THAT HAVE A DIAMETER AT BREAST HEIGHT (DBH) OF 12 INCHES OR LARGER (EXCLUDING HACKBERRY, CHINABERRY, ASHE JUNIPER (CEDAR), CHINESE TALLOW, AND MESQUITE) ARE TO REMAIN.

   B. ALL CLEARING OF TREES AND BRUSH WITHIN THE LIMITS OF THE PERMANENT PROTECTION FENCE (TWO AREAS) INSTALLED NEAR KARST FEATURES IN SEGMENT 1 MUST BE ACCOMPLISHED WITH HAND METHODS ONLY. GRIND STUMPS 2" BELOW GRADE WITH HAND OPERATED GRINDER. DO NOT PULL STUMPS.

   DO NOT GRUB (REMOVE OR SCRAPE THE EXISING GROUND COVER/GRASSES) WITH THE EXCEPTION OF STUMPS. RE-VEGETATE ALL AREAS DISTURBED BY CLEARING ACTIVITY OUTSIDE OF THE CONSTRUCTION LIMITS. DISTURBED AREAS MUST BE SEEDED OR SODDED WITHIN 14 DAYS OF LAST CLEARING ACTIVITY. SEED AREAS WITHIN THE PERMANENT PROTECTIOIN FENCE DEVOID OF VEGETATION EVEN IF THEY WERE NOT IMPACTED BY CLEARING ACTIVITIES. SUBSIDIARY TO ITEM 100 "PREPARING RIGHT OF WAY".

4. CONSTRUCTION EXITS/ENTRANCES TO BE PLACED IN THE FIELD WITH APPROVAL FROM THE ENGINEER STABILIZED CONSTRUCTION EXITS SHALL BE CONSTRUCTED AT ALL ACCESS POINTS AND MAINTAINED IN A CONDITION THAT WILL PREVENT TRACKING OR FLOWING OF SEDIMENT OFF SITE. THIS MAY REQUIRE PERIODIC TOP DRESSING WITH CRUSHED STONE OR CLEAN OUT OF THE EXISTING STONE.

5. ON-SITE STAGING AREAS TO BE PLACED IN THE FIELD WITH APPROVAL FROM THE ENGINEER. STAGING AREAS MUST NOT BE LOCATED INSIDE THE 100 YEAR FLOODPLAIN, UP SLOPE OF GEOLOGICALLY SENSITIVE FEATURES, ON STEEP SLOPES, OR ERODIBLE SOILS. SEDIMENT CONTROL FENCE SHALL BE PLACED AROUND THE PERIMETER. TYPE II ROCK FILTER DAMS SHALL BE PLACED AT ANY LOCATION OF CONCENTRATED FLOW DOWN SLOPE OF THE STAGING AREA.

6. SHOULD THE CONTRACTOR DESIRE A STAGING AREA OFF-SITE, INFORMATION INDICATING THE PROPOSED LOCATION AND PLACEMENT OF APPROPRIATE TEMPORARY EROSION AND SEDIMENTATION CONTROLS MUST BE SUBMITTED TO THE TCEQ FOR REVIEW AND APPROVAL PRIOR TO ITS INSTALLATION. CONTRACTOR SHALL BEAR COST OF ANY FEES REQUIRED FOR THE REVIEW PROCESS.

7. DETAILED INFORMATION FOR SENSITIVE FEATURES IS PROVIDED IN THE GEOLOGIC ASSESSMENT SECTION OF THE WPAP, RN109538439.

8. RETAIN SEDIMENT ON-SITE. WHEN REMOVING TEMPORARY CONTROLS, REMOVE ACCUMULATED SEDIMENT.

9. SEDIMENT CONTROL FENCE (SCF) MUST BE REPAIRED IF BLOWOUTS HAVE OCCURRED OR A WEAK SPOT HAS DEVELOPED.

10. SEDIMENT SHALL BE REMOVED FROM BEHIND SEDIMENT CONTROL WHEN IT REACHES 1/3 THE HEIGHT OF THE STRUCTURE, OR SIX INCHES (SCF) / ONE FOOT (RFD), WHICHEVER IS LESS.

11. INSPECTIONS

   A. VISUAL INSPECTIONS OF DISTURBED AREAS THAT HAVE NOT BEEN STABILIZED, AREAS USED FOR STORAGE OF EXPOSED MATERIALS, CONSTRUCTION EXITS, AND STORM WATER CONTROL SYSTEMS AND BMPS SHALL BE PERFORMED AT LEAST ONCE EVERY 14 DAYS AND WITHIN 24 HOURS OF THE END OF A STORM EVENT OF 0.5 INCHES OR GREATER.

   B. AREAS THAT HAVE BEEN FINALLY OR TEMPORARILY STABILIZED MUST BE INSPECTED AT LEAST ONCE PER MONTH.

   C. ALL AREAS EXPOSED TO PRECIPITATION MUST BE VISUALLY INSPECTED FOR EVIDENCE OF OR POTENTIAL FOR POLLUTANTS ENTERING THE DRAINAGE SYSTEM.

   D. SEDIMENT AND EROSION CONTROLS MUST BE EVALUATED TO DETERMINE WHETHER THEY ARE ADEQUATE AND OPERATING PROPERLY OR WHETHER ADDITIONAL CONTROL MEASURES ARE NEEDED.

   E. CONSTRUCTION EXITS MUST BE INSPECTED FOR EVIDENCE OF OFF-SITE SEDIMENT TRACKING.

   F. IF AN INSPECTION SHOWS THAT ADDITIONAL CONTROLS OR MODIFIED BMPS ARE NEEDED TO CORRECT PROBLEMS IDENTIFIED, THE SW3P MUST BE MODIFIED WITHIN SEVEN CALENDAR DAYS FOLLOWING THE INSPECTION. THE ADDITIONAL OR MODIFIED BMPS MUST BE IMPLEMENTED PRIOR TO THE NEXT ANTICIPATED STORM EVENT.

12. PLUG ALL EXISTING BORE HOLES IN ACCORDANCE WITH 30 TAC 213.7 "PLUGGING OF ABANDONED WELLS AND BORINGS":

   "(C) ALL BORINGS WITH DEPTHS GREATER THAN OR EQUAL TO 20 FEET MUST BE PLUGGED WITH A NON-SHRINK GROUT FROM THE BOTTOM OF THE HOLE TO WITHIN THREE FEET OF THE SURFACE. THE REMAINDER OF THE HOLE MUST BE BACKFILLED WITH CUTTINGS FROM THE BORING OR GRAVEL. ALL BORINGS LESS THAN 20 FEET MUST BE BACKFILLED WITH CUTTINGS FROM THE BORING OR GRAVEL. ALL BORINGS MUST BE BACKFILLED OR PLUGGED WITHIN FOUR DAYS OF COMPLETION OF THE DRILLING OPERATION. VOIDS MAY BE FILLED WITH GRAVEL."

   CONSIDERED SUBSIDIARY TO ITEM 100 "PREPARING RIGHT OF WAY".

13. SPRINKLING FOR THE CONTROL OF DUST, AS DIRECTED, WILL BE REQUIRED ON THIS PROJECT. SPRINKLE FOR DUST CONTROL ON PRIMARY ENTRY AND EXIT TO THE QUARRY LIMITS AS WELL AS ANY OTHER AREA SUBJECT TO CONSTRUCTION TRAFFIC. SPRINKLING IS NOT REQIURED, UNLESS OTHERWISE DIRECTED BY THE ENGINEER, FOR ANY PARTS OF THE EXISING QUARRY FLOOR LEFT UNDISTRURBED BY CONSTRUCTION ACTIVITY. THIS WORK SHALL BE CONSIDERED SUBSIDIARY TO PERTINENT ITEMS.

14. EXISTING HAUL ROAD, INSTALLED BY OTHERS, TO BE REMOVED PRIOR TO PROJECT COMPLETION. EXISTING 3IN-5IN ROCK MAY BE REUSED FOR EMBANKMENT OR RIPRAP, PROVIDED IT MEETS PROJECT SPECIFICATIONS (OR AS APPROVED BY THE ENGINEER). SUBSIDIARY TO ITEM 506 "TEMPORARY EROSION, SEDIMENTATION, AND ENVIRONMENTAL CONTROLS".

15. PROVIDE TREE PROTECTION FOR ALL TREES LOCATED ADJACENT TO THE CONSTRUCTION AREA NOT DESIGNATED FOR REMOVAL BY NOTE 3, OR AS DIRECTED BY THE ENGINEER. ESTIMATED AT 20 TREES.

16. ANY DISCHARGE FROM DEWATERING OPERATIONS MUST BE CONTAINED ON-SITE. OTHERWISE, SPREAD UPSTREAM OF SILT CONTROL FENCE OR ROCK FILTER DAMS.

17. CONCRETE WASHOUT LOCATION TO BE DETERMINED IN THE FIELD AND APPROVED BY THE ENGINEER. WASHOUTS MUST NOT BE LOCATED INSIDE THE 100 YEAR FLOODPLAIN, UP SLOPE OF GEOLOGICALLY SENSITIVE FEATURES, OR ON STEEP SLOPES.

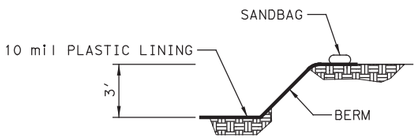

SECTION A-A
NOT TO SCALE

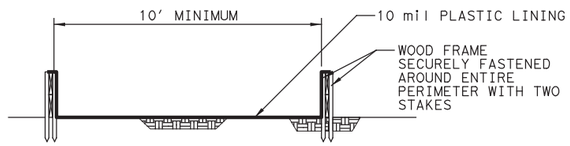

SECTION B-B
NOT TO SCALE

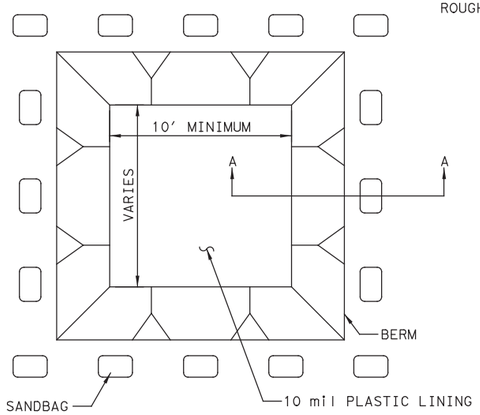

PLAN
NOT TO SCALE

TYPE "BELOW GRADE"

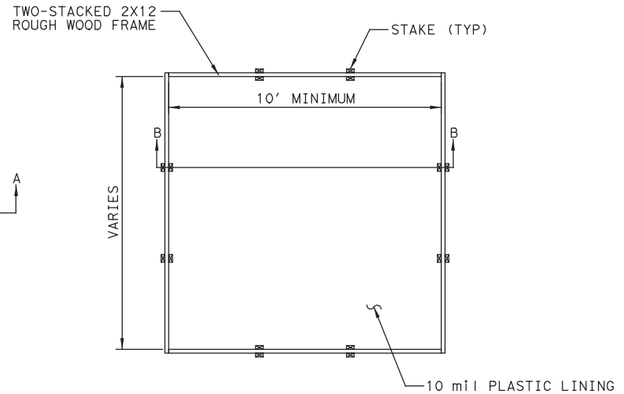

PLAN
NOT TO SCALE

TYPE "ABOVE GRADE" WITH WOOD PLANKS

CONCRETE WASHOUT DETAIL

STATE OF TEXAS
JUSTIN D. CARLTON
127593
LICENSED
PROFESSIONAL ENGINEER

03/23/2018

NO.	DATE	REVISION	APPROVED

WILLIAMSON COUNTY

HDR Engineering, Inc.
810 Hesters Crossing, Suite 120
Round Rock, Texas 78681
Texas Registered Engineering Firm F-754

SOUTHWEST BYPASS SEGMENT 2

TEMPORARY EROSION
GENERAL NOTES

SHEET 1 OF 1

DESIGN	FED.RD. DIV.NO.	FEDERAL AID PROJECT NO.		HIGHWAY NO.
JC	6			
GRAPHICS	STATE	DISTRICT	COUNTY	SHEET NO.
LG	TEXAS	AUS	WILLIAMSON	
CHECK	CONTROL	SECTION	JOB	
JW	2103	01	034	248
CHECK				
JC				

PLOT DRIVER: TXDOT_PDF_BW.pltcfg PENTABLE: S2-000002020707l8.tbl
USER: lgomezgon2 DATE: 3/23/2018 TIME: 11:03:22 AM SCALE: 1:100
FILE: \

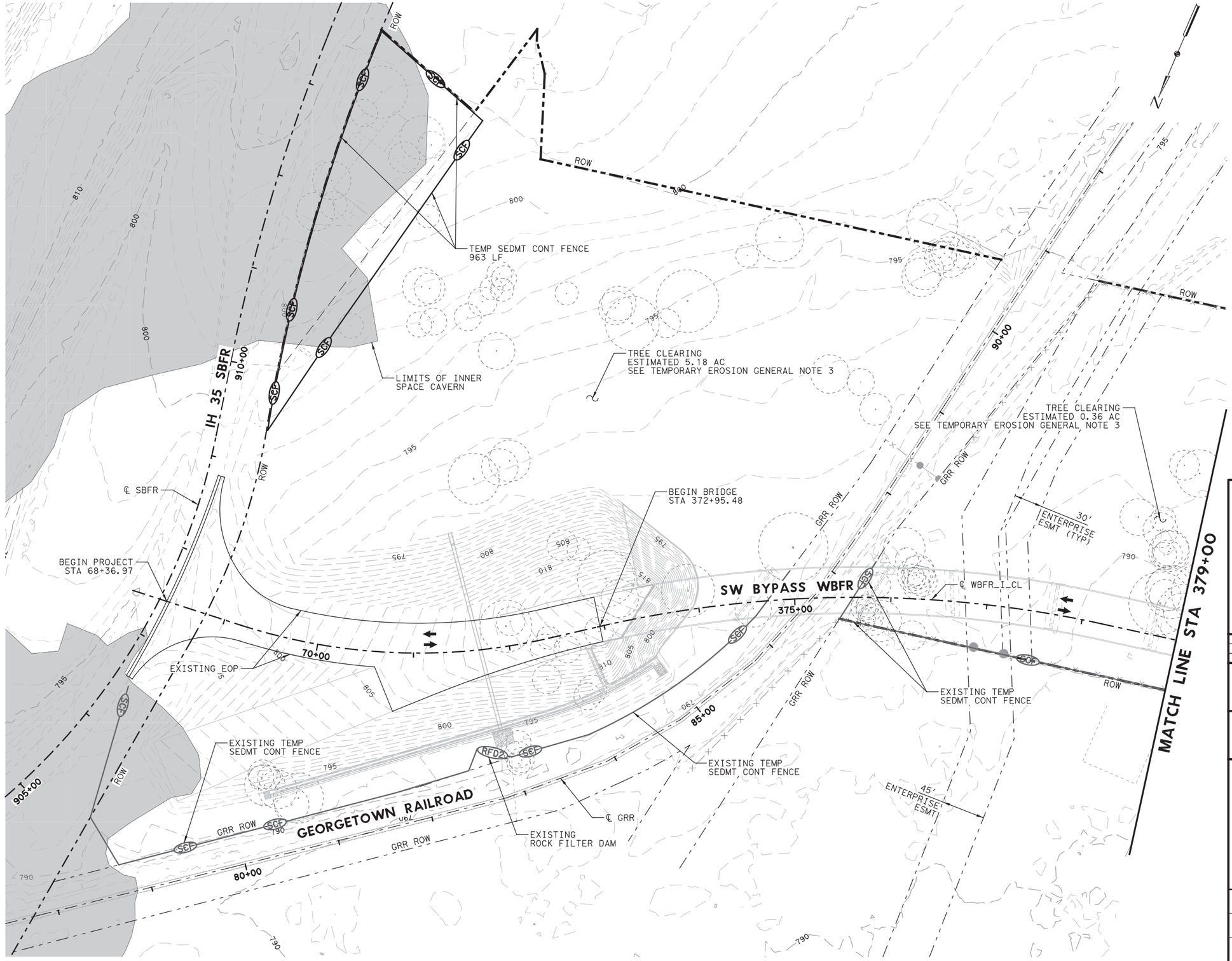

LEGEND

- SCF — SEDIMENT CONTROL FENCE
- RFD2 — ROCK FILTER DAM (TY II)
- PERMANENT PROTECTION FENCE
- ROCK (3"-5")

0 50 100 150 200

SCALE IN FEET

STATE OF TEXAS
JUSTIN D. CARLTON
127593
LICENSED
PROFESSIONAL ENGINEER

03/23/2018

NO.	DATE	REVISION	APPROVED

WILLIAMSON COUNTY

HDR Engineering, Inc.
810 Hesters Crossing, Suite 120
Round Rock, Texas 78681
Texas Registered Engineering Firm F-754

SOUTHWEST BYPASS SEGMENT 2

TEMPORARY EROSION CONTROL PLAN BEGIN PROJECT TO STA 379+00

SCALE: 1"=100' SHEET 1 OF 8

DESIGN	FED.RD. DIV.NO.	FEDERAL AID PROJECT NO.		HIGHWAY NO.
JC	6			
GRAPHICS LG	STATE	DISTRICT	COUNTY	SHEET NO.
CHECK JW	TEXAS	AUS	WILLIAMSON	249
CHECK JC	CONTROL	SECTION	JOB	
	2103	01	034	

PLOT DRIVER: TXDOT_PDF_BW.pltcfg PENTABLE: S2-0000020170718.tbl
USER: lgomezgonz DATE: 3/23/2018 TIME: 11:03:30 AM SCALE: 1:100
FILE: \

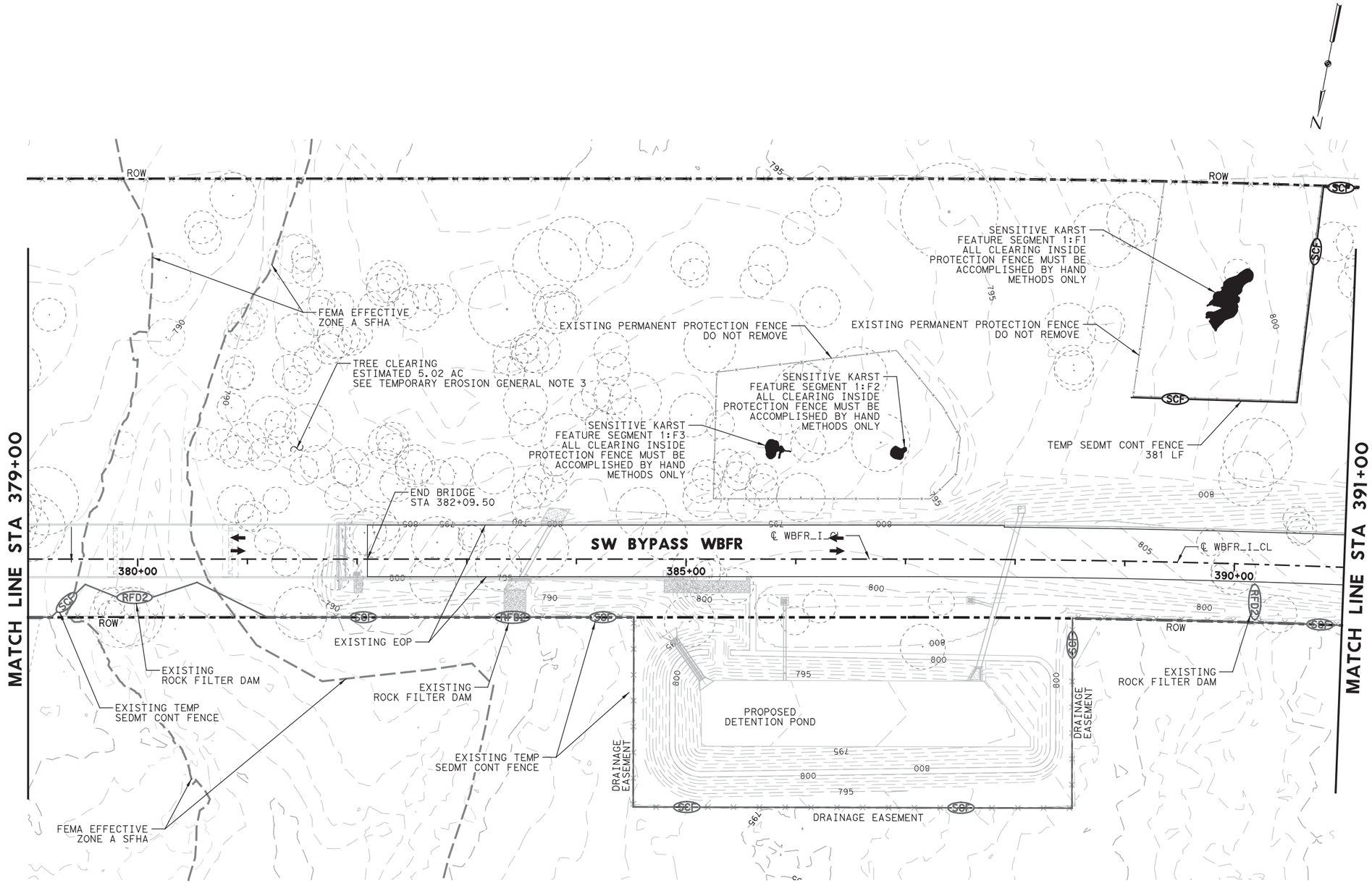

LEGEND

- SCF — SEDIMENT CONTROL FENCE
- RFD2 — ROCK FILTER DAM (TY II)
- PERMANENT PROTECTION FENCE
- ROCK (3"-5")

0 50 100 150 200
SCALE IN FEET

STATE OF TEXAS
JUSTIN D. CARLTON
127593
LICENSED
PROFESSIONAL ENGINEER
03/23/2018

NO.	DATE	REVISION	APPROVED

WILLIAMSON COUNTY

HDR Engineering, Inc.
810 Hesters Crossing, Suite 120
Round Rock, Texas 78681
Texas Registered Engineering Firm F-754

SOUTHWEST BYPASS SEGMENT 2 TEMPORARY EROSION CONTROL PLAN

STA 379+00 TO STA 391+00

SCALE: 1"=100' SHEET 2 OF 8

DESIGN	FED.RD. DIV.NO.	FEDERAL AID PROJECT NO.		HIGHWAY NO.
JC	6			
GRAPHICS LG	STATE	DISTRICT	COUNTY	SHEET NO.
CHECK JW	TEXAS	AUS	WILLIAMSON	250
CHECK JC	CONTROL	SECTION	JOB	
	2103	01	034	

PLOT DRIVER: TXDOT_PDF_BW.pltcfg PENTABLE: S2-0000020170718.tbl
USER: lgomezgonz DATE: 3/23/2018 TIME: 11:03:33 AM SCALE: 1:00
FILE: \

4/12/2018 7:20 AM

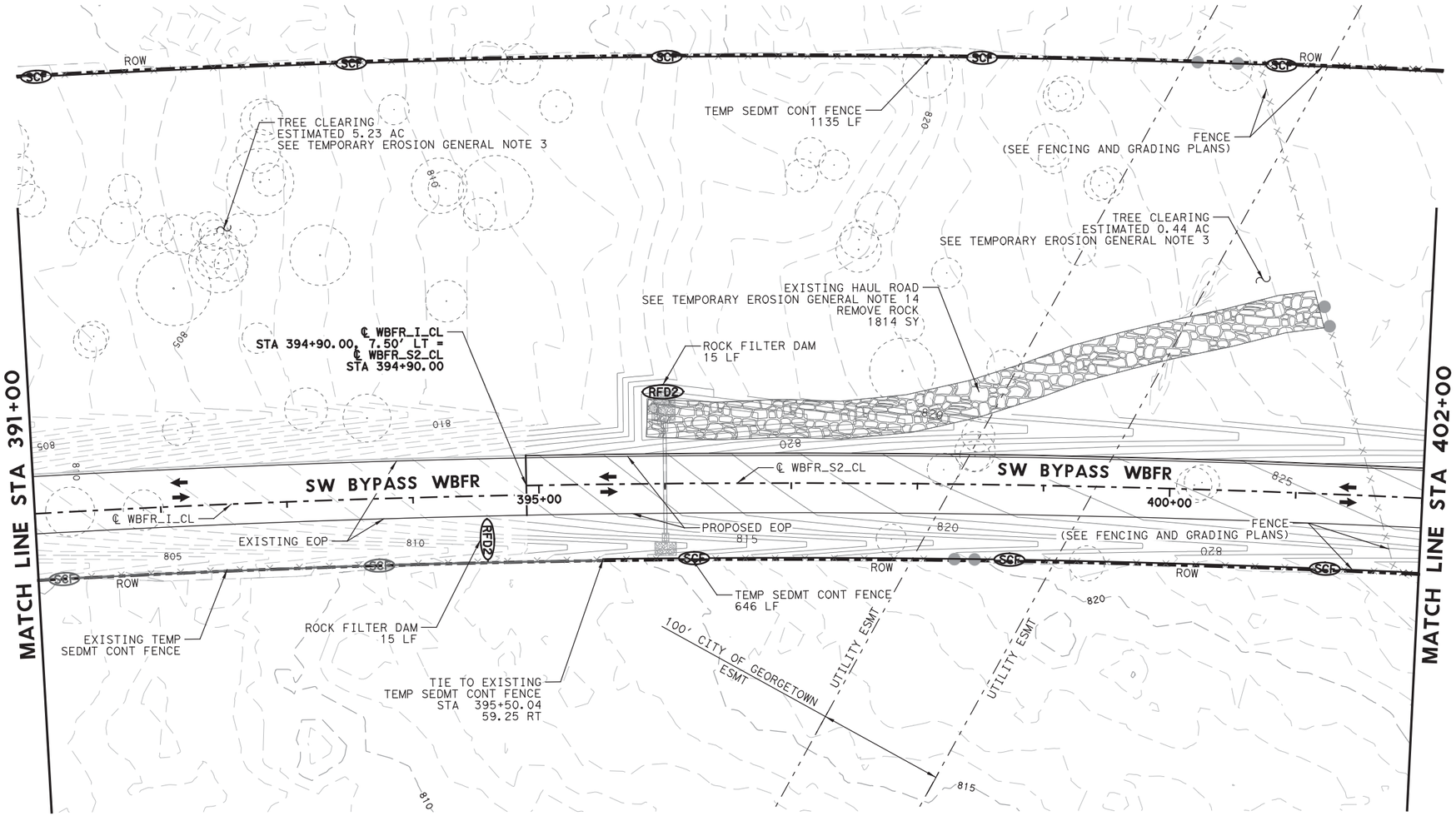



LEGEND

- SCF — SEDIMENT CONTROL FENCE
- RFD2 — ROCK FILTER DAM (TY II)
- PERMANENT PROTECTION FENCE
- ROCK (3"-5")

0 50 100 150 200
SCALE IN FEET

STATE OF TEXAS
JUSTIN D. CARLTON
127593
LICENSED
PROFESSIONAL ENGINEER

03/23/2018

NO.	DATE	REVISION	APPROVED

WILLIAMSON COUNTY

HDR Engineering, Inc.
810 Hesters Crossing, Suite 120
Round Rock, Texas 78681
Texas Registered Engineering Firm F-754

SOUTHWEST BYPASS SEGMENT 2 TEMPORARY EROSION CONTROL PLAN

STA 391+00 TO STA 402+00

SCALE: 1"=100' SHEET 3 OF 8

DESIGN	FED. RD. DIV. NO.	FEDERAL AID PROJECT NO.		HIGHWAY NO.
JC	6			
GRAPHICS	STATE	DISTRICT	COUNTY	SHEET NO.
LG	TEXAS	AUS	WILLIAMSON	
CHECK	CONTROL	SECTION	JOB	251
JW	2103	01	034	
CHECK				
JC				

PLOT DRIVER: TXDOT_PDF_BW.pltcfg
USER: lgomezgonz DATE: 3/23/2018
FILE: \
PENTABLE: S2-0000020/T0718.tbl
TIME: 11:03:37 AM SCALE: 1:100

4/12/2018 7:20 AM

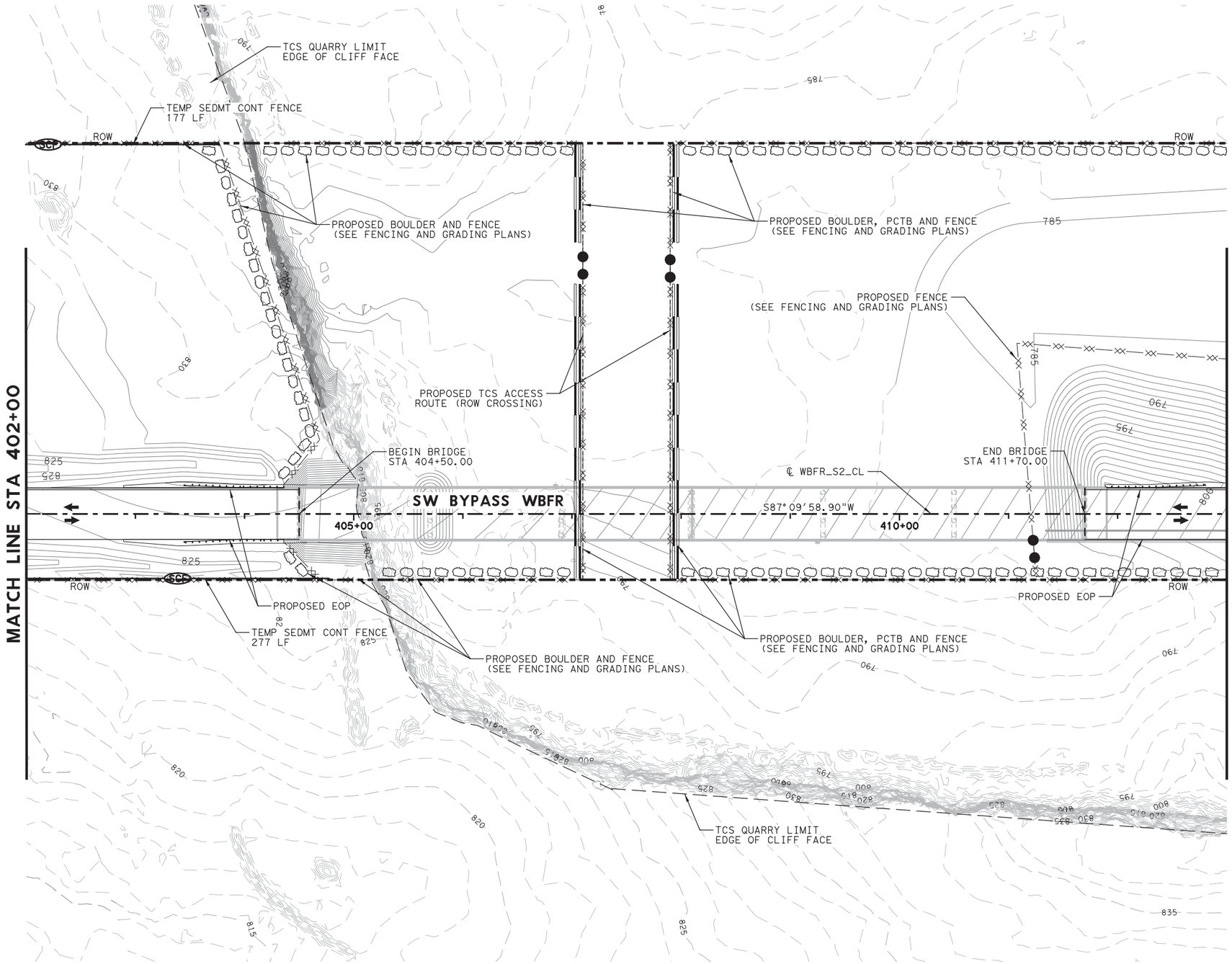

N

LEGEND

- SCF — SEDIMENT CONTROL FENCE
- RFD2 — ROCK FILTER DAM (TY II)
- PERMANENT PROTECTION FENCE
- ROCK (3"-5")

0 50 100 150 200
SCALE IN FEET

STATE OF TEXAS
JUSTIN D. CARLTON
127593
LICENSED
PROFESSIONAL ENGINEER
03/23/2018

NO.	DATE	REVISION	APPROVED

WILLIAMSON COUNTY

HDR Engineering, Inc.
810 Hesters Crossing, Suite 120
Round Rock, Texas 78681
Texas Registered Engineering Firm F-754

SOUTHWEST BYPASS SEGMENT 2 TEMPORARY EROSION CONTROL PLAN

STA 402+00 TO STA 413+00

SCALE: 1"=100' SHEET 4 OF 8

DESIGN	FED.RD. DIV.NO.	FEDERAL AID PROJECT NO.		HIGHWAY NO.
JC	6			
GRAPHICS LG	STATE	DISTRICT	COUNTY	SHEET NO.
CHECK JW	TEXAS	AUS	WILLIAMSON	
CHECK JC	CONTROL	SECTION	JOB	252
	2103	01	034	

PLOT DRIVER: TXDOT_PDF_BW.pltcfg PENTABLE: S2-00000201707l8.tbl
USER: lgomezgonz DATE: 3/23/2018 TIME: 11:03:43 AM SCALE: 1:100
FILE: \

4/12/2018 7:20 AM

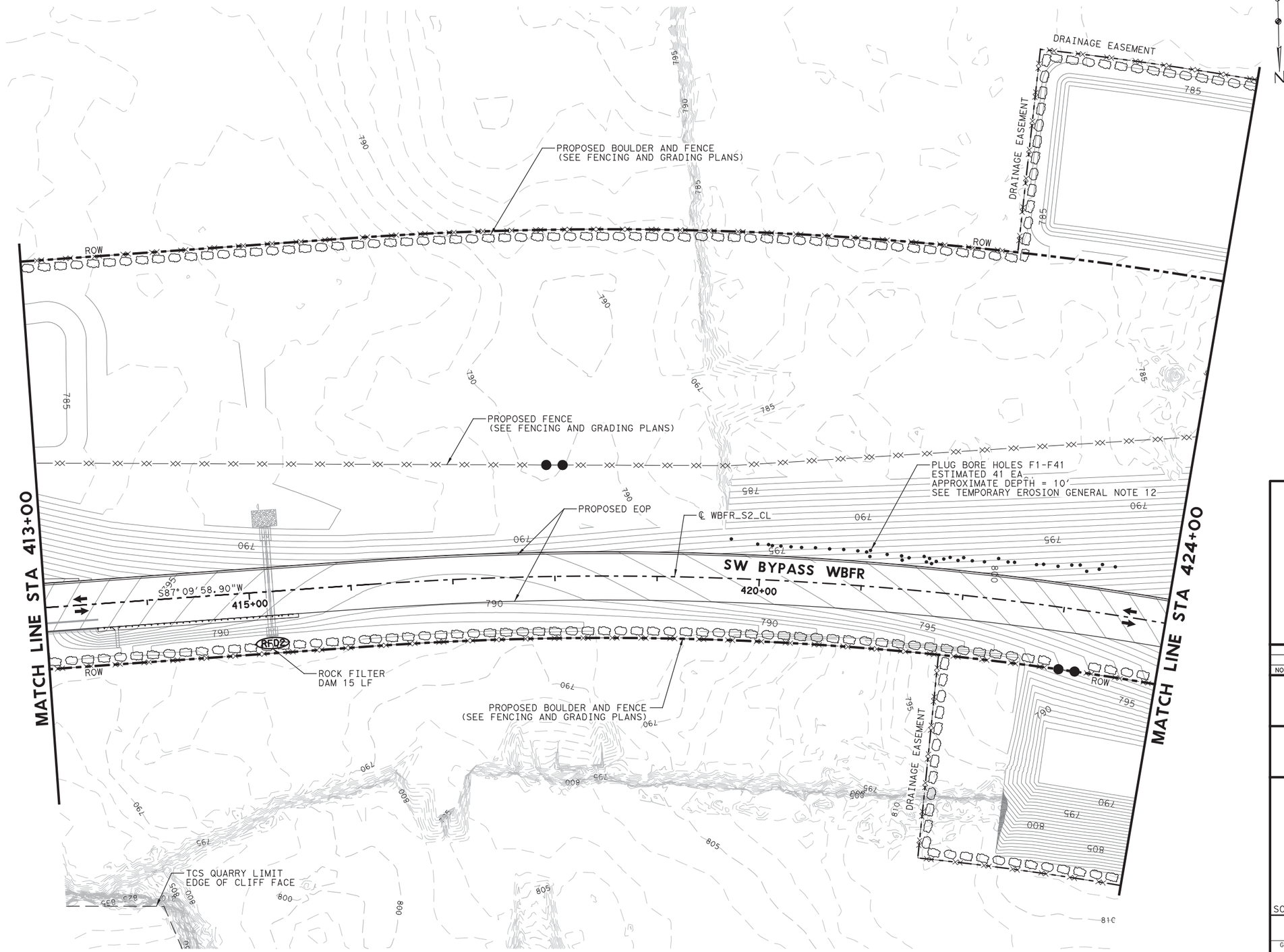

LEGEND

- SCF — SEDIMENT CONTROL FENCE
- RFD2 — ROCK FILTER DAM (TY II)
- PERMANENT PROTECTION FENCE
- ROCK (3"-5")

0 50 100 150 200
SCALE IN FEET

STATE OF TEXAS
JUSTIN D. CARLTON
127593
LICENSED
PROFESSIONAL ENGINEER
03/23/2018

NO.	DATE	REVISION	APPROVED

WILLIAMSON COUNTY

HDR Engineering, Inc.
810 Hesters Crossing, Suite 120
Round Rock, Texas 78681
Texas Registered Engineering Firm F-754

SOUTHWEST BYPASS SEGMENT 2 TEMPORARY EROSION CONTROL PLAN

STA 413+00 TO STA 424+00

SCALE: 1"=100' SHEET 5 OF 8

DESIGN	FED.RD. DIV.NO.	FEDERAL AID PROJECT NO.		HIGHWAY NO.
JC	6			
GRAPHICS	STATE	DISTRICT	COUNTY	SHEET NO.
LG	TEXAS	AUS	WILLIAMSON	
CHECK	CONTROL	SECTION	JOB	253
JW	2103	01	034	
CHECK				
JC				

PLOT DRIVER: TXDOT_PDF_BW.pltcfg PENTABLE: S2-0000020170718.tbl
USER: lgomezgonz DATE: 3/23/2018 TIME: 11:03:49 AM SCALE: 1:100
FILE: \

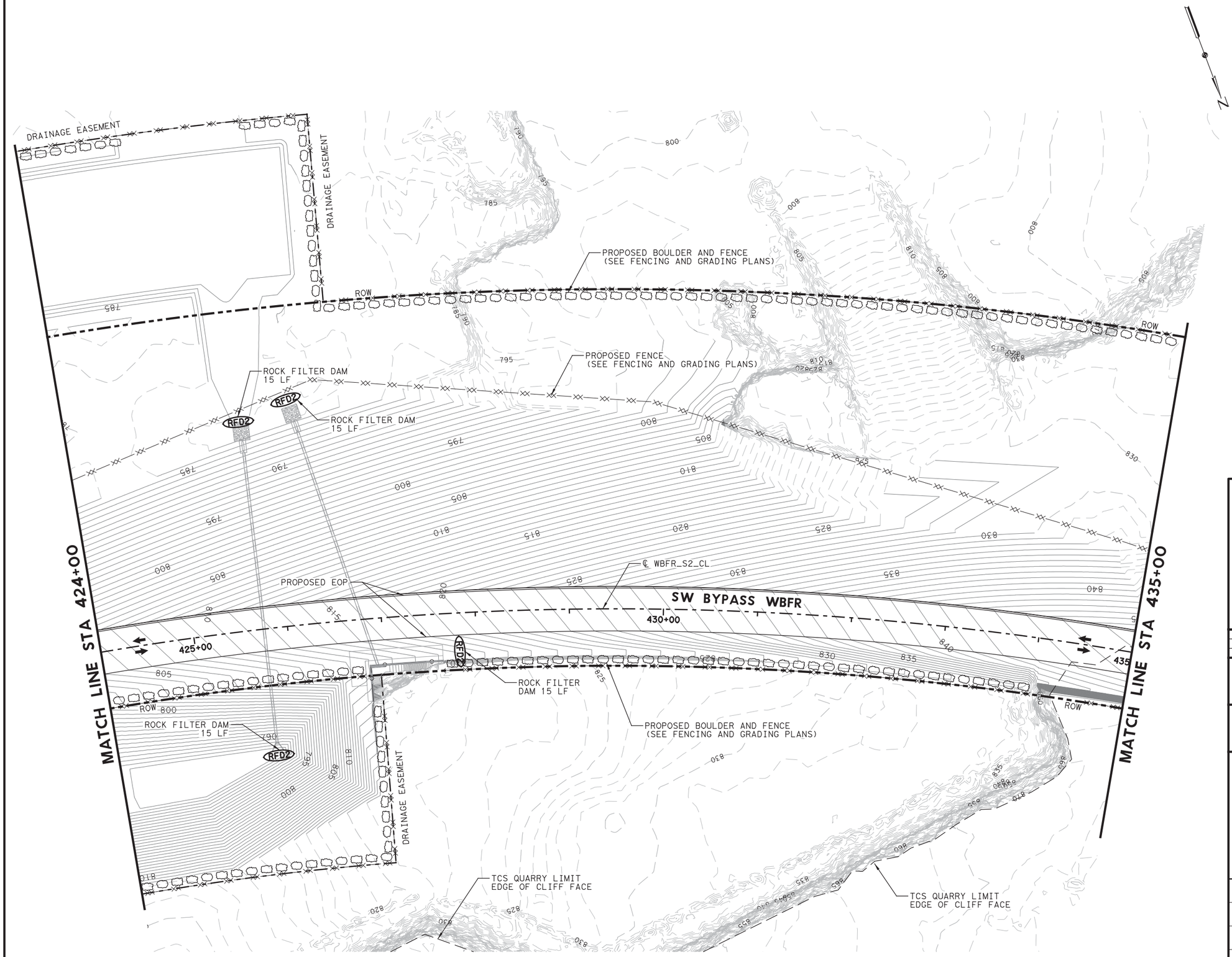

N

LEGEND

- SCF — SEDIMENT CONTROL FENCE
- RFD2 — ROCK FILTER DAM (TY II)
- PERMANENT PROTECTION FENCE
- ROCK (3"-5")

0 50 100 150 200
SCALE IN FEET

STATE OF TEXAS
JUSTIN D. CARLTON
127593
LICENSED
PROFESSIONAL ENGINEER

03/23/2018

NO.	DATE	REVISION	APPROVED

WILLIAMSON COUNTY

HDR Engineering, Inc.
810 Hesters Crossing, Suite 120
Round Rock, Texas 78681
Texas Registered Engineering Firm F-754

SOUTHWEST BYPASS SEGMENT 2 TEMPORARY EROSION CONTROL PLAN

STA 424+00 TO STA 435+00

SCALE: 1"=100' SHEET 6 OF 8

DESIGN	FED.RD. DIV.NO.	FEDERAL AID PROJECT NO.		HIGHWAY NO.
JC	6			
GRAPHICS	STATE	DISTRICT	COUNTY	SHEET NO.
LG	TEXAS	AUS	WILLIAMSON	
CHECK	CONTROL	SECTION	JOB	254
JW	2103	01	034	
CHECK				
JC				

PLOT DRIVER: TXDOT_PDF_BW.pltcfg PENTABLE: S2-0000020170718.tbl
USER: lgomezgon2 DATE: 3/23/2018 TIME: 11:03:56 AM SCALE: 1:100
FILE: \

4/12/2018 7:20 AM

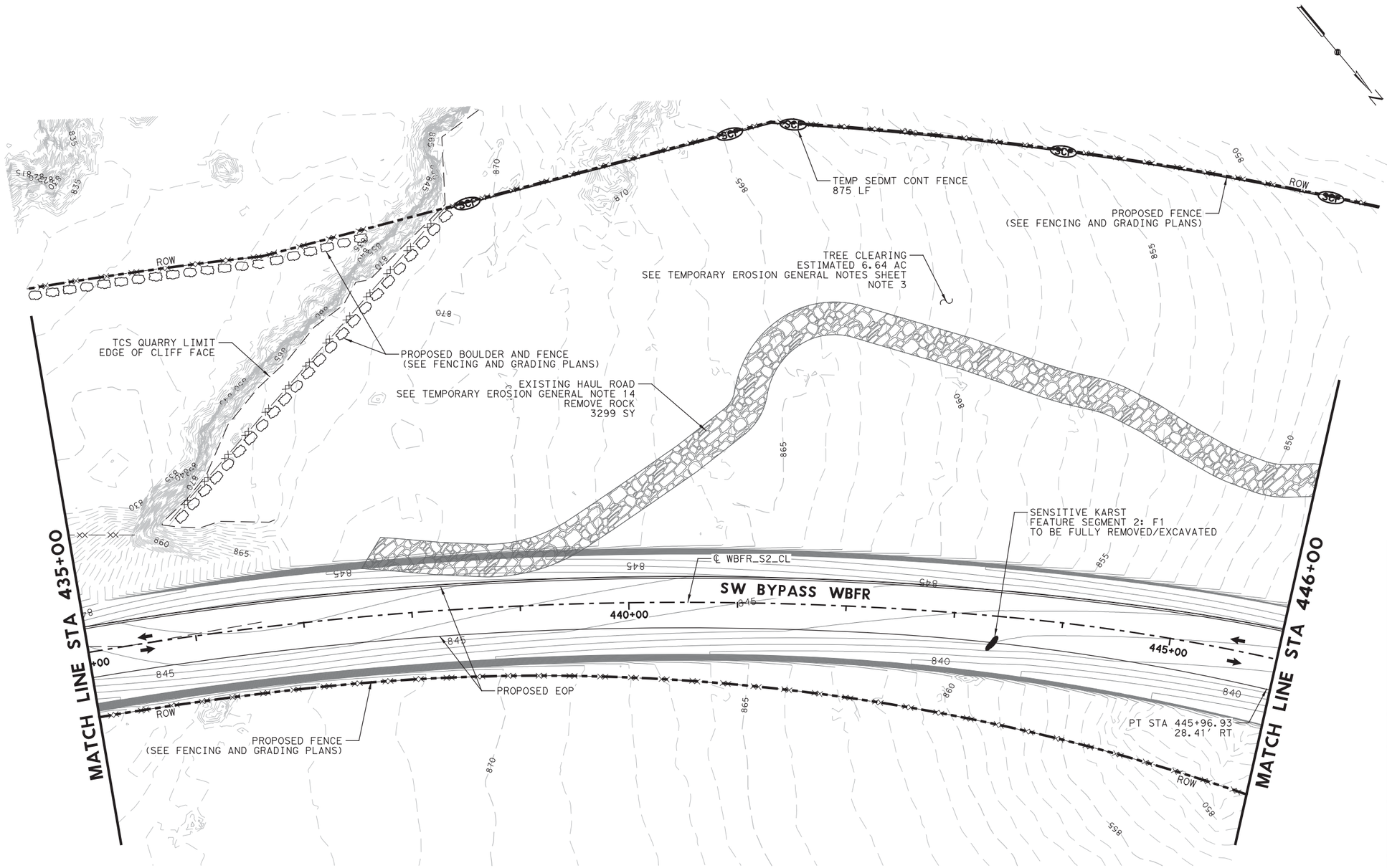

LEGEND

- SCF — SEDIMENT CONTROL FENCE
- RFD2 — ROCK FILTER DAM (TY II)
- PERMANENT PROTECTION FENCE
- ROCK (3"-5")

0 50 100 150 200
SCALE IN FEET

STATE OF TEXAS
JUSTIN D. CARLTON
127593
LICENSED
PROFESSIONAL ENGINEER

03/23/2018

NO.	DATE	REVISION	APPROVED

WILLIAMSON COUNTY

HDR Engineering, Inc.
810 Hesters Crossing, Suite 120
Round Rock, Texas 78681
Texas Registered Engineering Firm F-754

SOUTHWEST BYPASS SEGMENT 2 TEMPORARY EROSION CONTROL PLAN

STA 435+00 TO STA 446+00

SCALE: 1"=100'

SHEET 7 OF 8

DESIGN	FED. RD. DIV. NO.	FEDERAL AID PROJECT NO.		HIGHWAY NO.
JC	6			
GRAPHICS	STATE	DISTRICT	COUNTY	SHEET NO.
LG	TEXAS	AUS	WILLIAMSON	255
CHECK	CONTROL	SECTION	JOB	
JW	2103	01	034	
CHECK				
JC				

PLOT DRIVER: TXDOT_PDF_BW.pltcfg PENTABLE: S2-0000020170718.tbl
USER: lgomezgonz DATE: 3/23/2018 TIME: 11:04:02 AM SCALE: 1:100
FILE: \

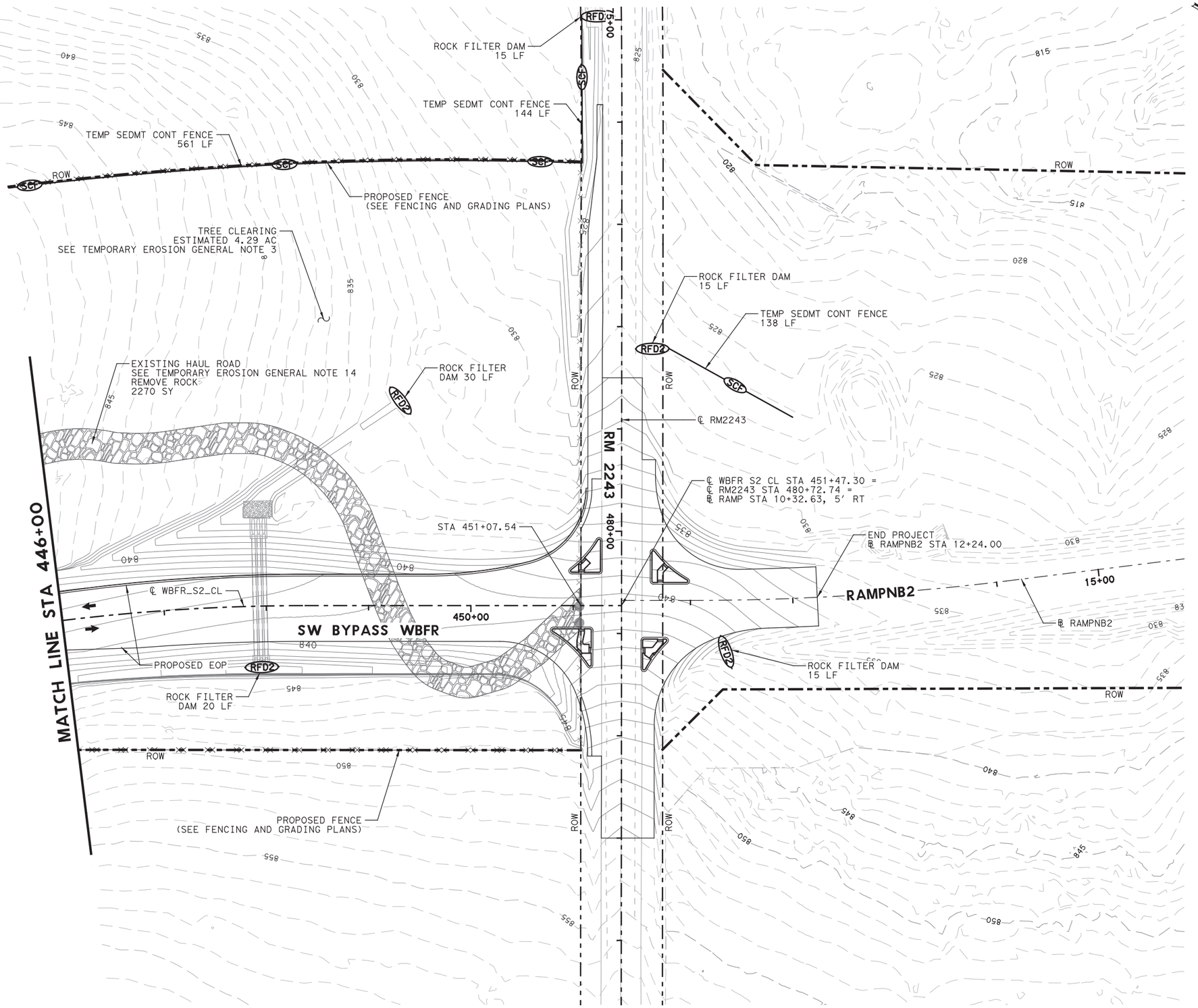

LEGEND

- SCF — SEDIMENT CONTROL FENCE
- RFD2 — ROCK FILTER DAM (TY II)
- PERMANENT PROTECTION FENCE
- ROCK (3"-5")

0 50 100 150 200
SCALE IN FEET

STATE OF TEXAS
JUSTIN D. CARLTON
127593
LICENSED
PROFESSIONAL ENGINEER
03/23/2018

NO.	DATE	REVISION	APPROVED

WILLIAMSON COUNTY

HDR Engineering, Inc.
810 Hesters Crossing, Suite 120
Round Rock, Texas 78681
Texas Registered Engineering Firm F-754

SOUTHWEST BYPASS SEGMENT 2 TEMPORARY EROSION CONTROL PLAN

STA 446+00 TO END

SCALE: 1"=100' SHEET 8 OF 8

DESIGN	FED. RD. DIV. NO.	FEDERAL AID PROJECT NO.		HIGHWAY NO.
JC	6			
GRAPHICS	STATE	DISTRICT	COUNTY	SHEET NO.
LG	TEXAS	AUS	WILLIAMSON	
CHECK	CONTROL	SECTION	JOB	256
JW	2103	01	034	
CHECK				
JC				

PLOT DRIVER: TXDOT_PDF_BW.pltcfg PENTABLE: S2-00000201T07B.tbl
USER: lgomezgon2 DATE: 3/23/2018 TIME: 11:04:07 AM SCALE: 1:100
FILE: \

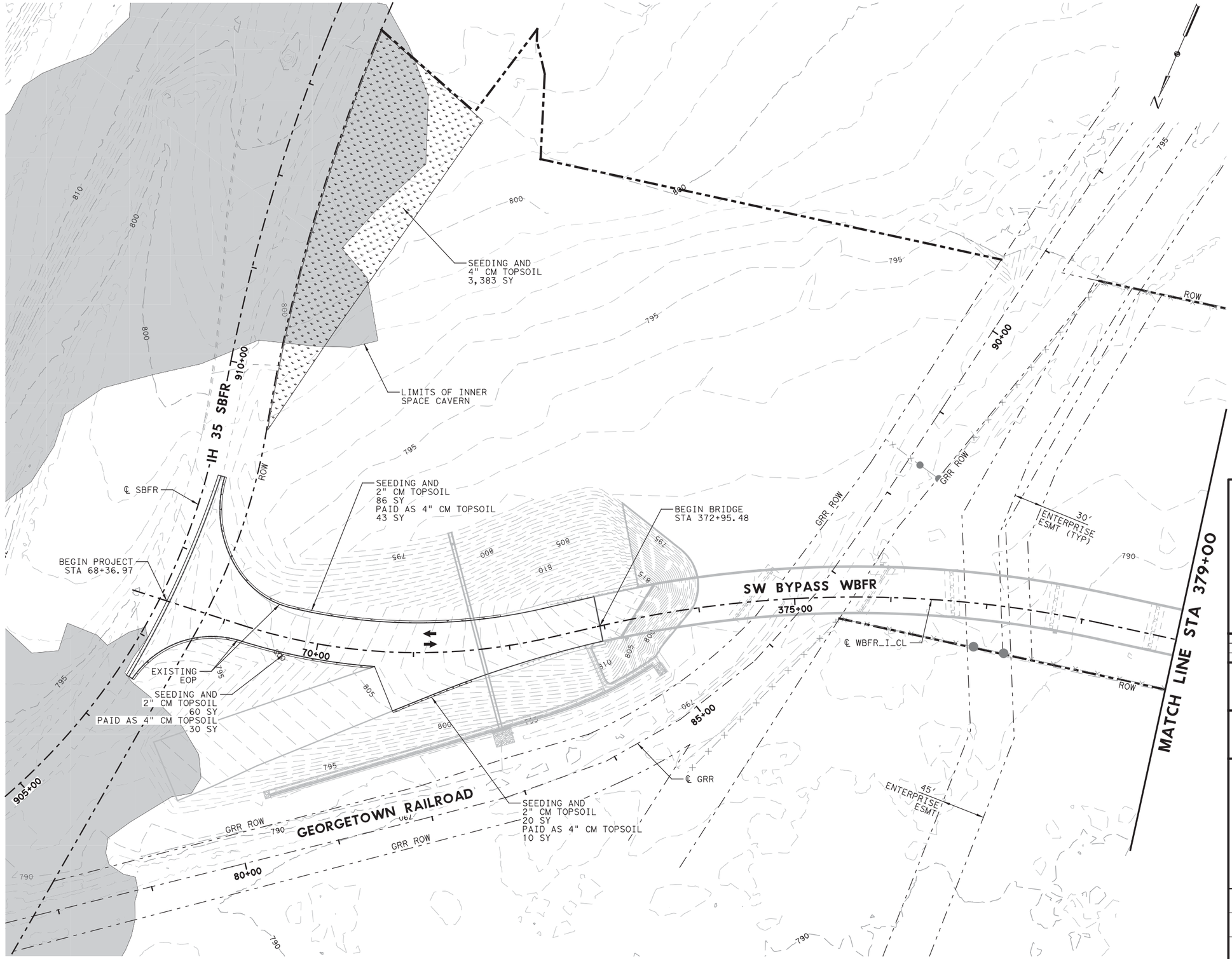

LEGEND

- PROPOSED CONSTRUCTION
- VEGETATIVE FILTER STRIP
- SOIL RETENTION BLANKET (CL 1)(TY A) SEEDING AND 4" COMPOST MANUF TOPSOIL
- SEEDING AND 4" COMPOST MANUF TOPSOIL
- RIPRAP (STONE PROTECTION)(8IN)TY I
- RIPRAP (STONE PROTECTION)(8IN)TY II

NOTES:

1. DETAILED INFORMATION FOR SENSITIVE FEATURES IS PROVIDED IN THE GEOLOGIC ASSESSMENT SECTION OF THE WPAP.
2. THE MINIMUM VEGETATIVE COVER FOR ALL VEGETATIVE FILTER STRIPS IS 95% PRIOR TO PROJECT ACCEPTANCE.
3. CONTRACTOR TO NOTIFY INSPECTOR OR ENGINEER PRIOR TO PLACING BLANKETS, SEEDING, OR TOPSOIL ON SOLID ROCK OR UNDISTURBED AREAS.
4. QUANTITY FOR VEGETATIVE FILTER STRIPS ARE INCLUDED IN SOIL RETENTION BLANKET, SEEDING, AND TOPSOIL QUANTITIES.
5. CONTRACTOR RESPONSIBLE TO VEGETATE ANY ADDITIONAL DISTURBED AREAS NOT CALLED OUT IN PLANS. PROVIDE SEEDING AND TOPSOIL FOR THESE AREAS. SUBSIDIARY TO PERTINENT ITEMS.
6. ALL 8" RIPRAP SHALL HAVE A THICKNESS OF 8" UNLESS OTHERWISE SPECIFIED. SEE GENERAL NOTES FOR GRADATION REQUIREMENTS.

0 50 100 150 200
SCALE IN FEET

STATE OF TEXAS
JUSTIN D. CARLTON
127593
LICENSED
PROFESSIONAL ENGINEER
03/23/2018

NO.	DATE	REVISION	APPROVED

WILLIAMSON COUNTY

HDR Engineering, Inc.
810 Hesters Crossing, Suite 120
Round Rock, Texas 78681
Texas Registered Engineering Firm F-754

SOUTHWEST BYPASS SEGMENT 2 PERMANENT EROSION CONTROL PLAN

BEGIN PROJECT TO STA 379+00

SCALE: 1"=100' SHEET 1 OF 8

DESIGN	FED.RD. DIV.NO.	FEDERAL AID PROJECT NO.		HIGHWAY NO.
JC	6			
GRAPHICS	STATE	DISTRICT	COUNTY	SHEET NO.
LG	TEXAS	AUS	WILLIAMSON	
CHECK	CONTROL	SECTION	JOB	257
JW	2103	01	034	
CHECK				
JC				

PLOT DRIVER: TXDOT_PDF_BW.pltcfg USER: lgomezgonz FILE: \
PENTABLE: S2-0000020\T0T18.tbl TIME: 11:04:13 AM DATE: 3/23/2018 SCALE: 1:100

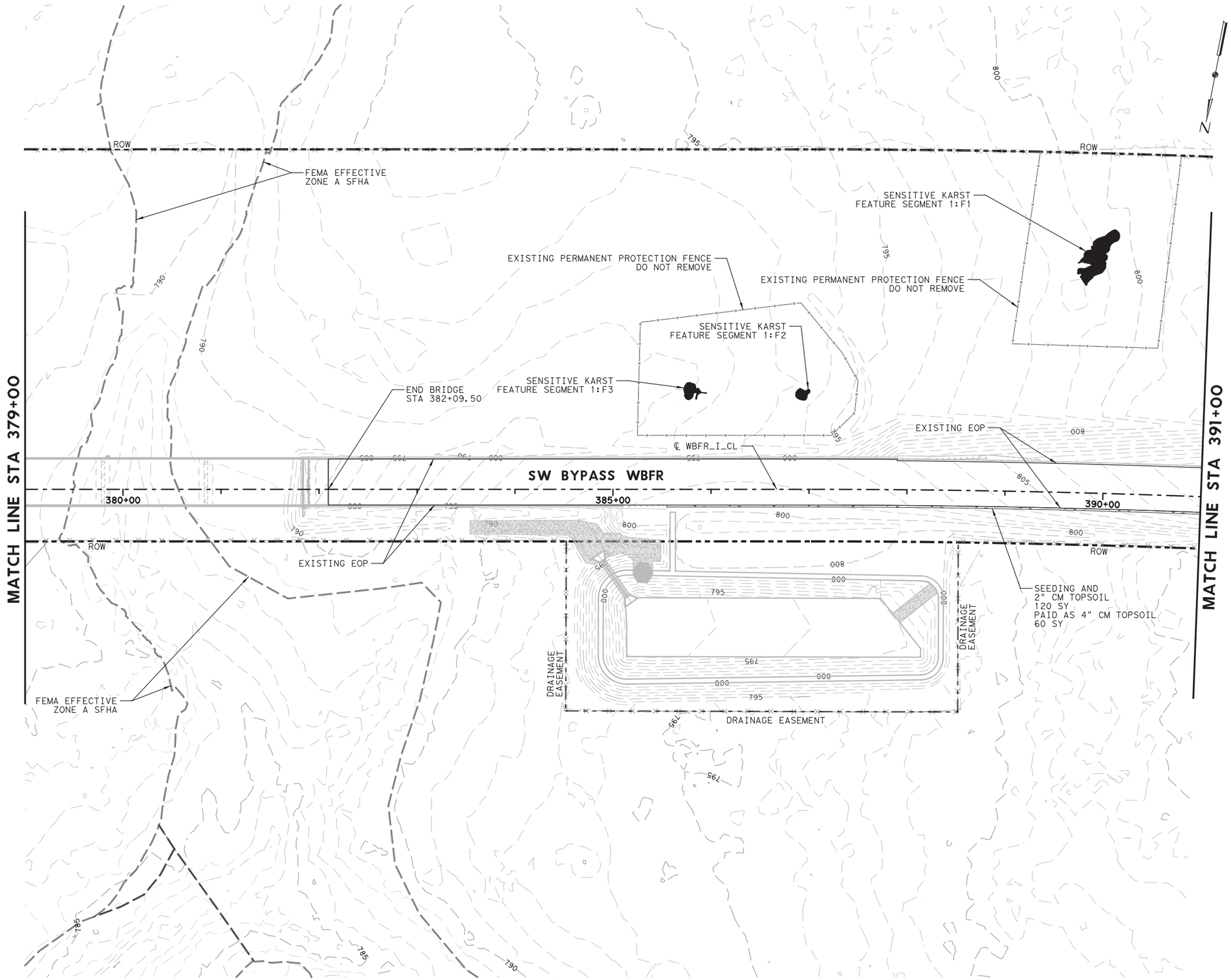

LEGEND

- PROPOSED CONSTRUCTION
- VEGETATIVE FILTER STRIP
- SOIL RETENTION BLANKET (CL 1)(TY A) SEEDING AND 4" COMPOST MANUF TOPSOIL
- SEEDING AND 4" COMPOST MANUF TOPSOIL
- RIPRAP (STONE PROTECTION)(8IN)TY I
- RIPRAP (STONE PROTECTION)(8IN)TY II

NOTES:

1. DETAILED INFORMATION FOR SENSITIVE FEATURES IS PROVIDED IN THE GEOLOGIC ASSESSMENT SECTION OF THE WPAP.
2. THE MINIMUM VEGETATIVE COVER FOR ALL VEGETATIVE FILTER STRIPS IS 95% PRIOR TO PROJECT ACCEPTANCE.
3. CONTRACTOR TO NOTIFY INSPECTOR OR ENGINEER PRIOR TO PLACING BLANKETS, SEEDING, OR TOPSOIL ON SOLID ROCK OR UNDISTURBED AREAS.
4. QUANTITY FOR VEGETATIVE FILTER STRIPS ARE INCLUDED IN SOIL RETENTION BLANKET, SEEDING, AND TOPSOIL QUANTITIES.
5. CONTRACTOR RESPONSIBLE TO VEGETATE ANY ADDITIONAL DISTURBED AREAS NOT CALLED OUT IN PLANS. PROVIDE SEEDING AND TOPSOIL FOR THESE AREAS. SUBSIDIARY TO PERTINENT ITEMS.
6. ALL 8" RIPRAP SHALL HAVE A THICKNESS OF 8" UNLESS OTHERWISE SPECIFIED. SEE GENERAL NOTES FOR GRADATION REQUIREMENTS.

0 50 100 150 200
SCALE IN FEET

STATE OF TEXAS
JUSTIN D. CARLTON
127593
LICENSED
PROFESSIONAL ENGINEER
03/23/2018

NO.	DATE	REVISION	APPROVED

WILLIAMSON COUNTY

HDR Engineering, Inc.
810 Hesters Crossing, Suite 120
Round Rock, Texas 78681
Texas Registered Engineering Firm F-754

SOUTHWEST BYPASS SEGMENT 2 PERMANENT EROSION CONTROL PLAN

STA 379+00 TO STA 391+00

SCALE: 1"=100' SHEET 2 OF 8

DESIGN	FED.RD. DIV.NO.	FEDERAL AID PROJECT NO.		HIGHWAY NO.
JC	6			
GRAPHICS LG	STATE	DISTRICT	COUNTY	SHEET NO.
CHECK JW	TEXAS	AUS	WILLIAMSON	258
CHECK JC	CONTROL	SECTION	JOB	
	2103	01	034	

PLOT DRIVER: TXDOT_PDF_BW.pltcfg PENTABLE: S2-0000020170718.tbl
USER: lgomezgonz DATE: 3/23/2018 TIME: 11:04:9 AM SCALE: 1:00
FILE: \

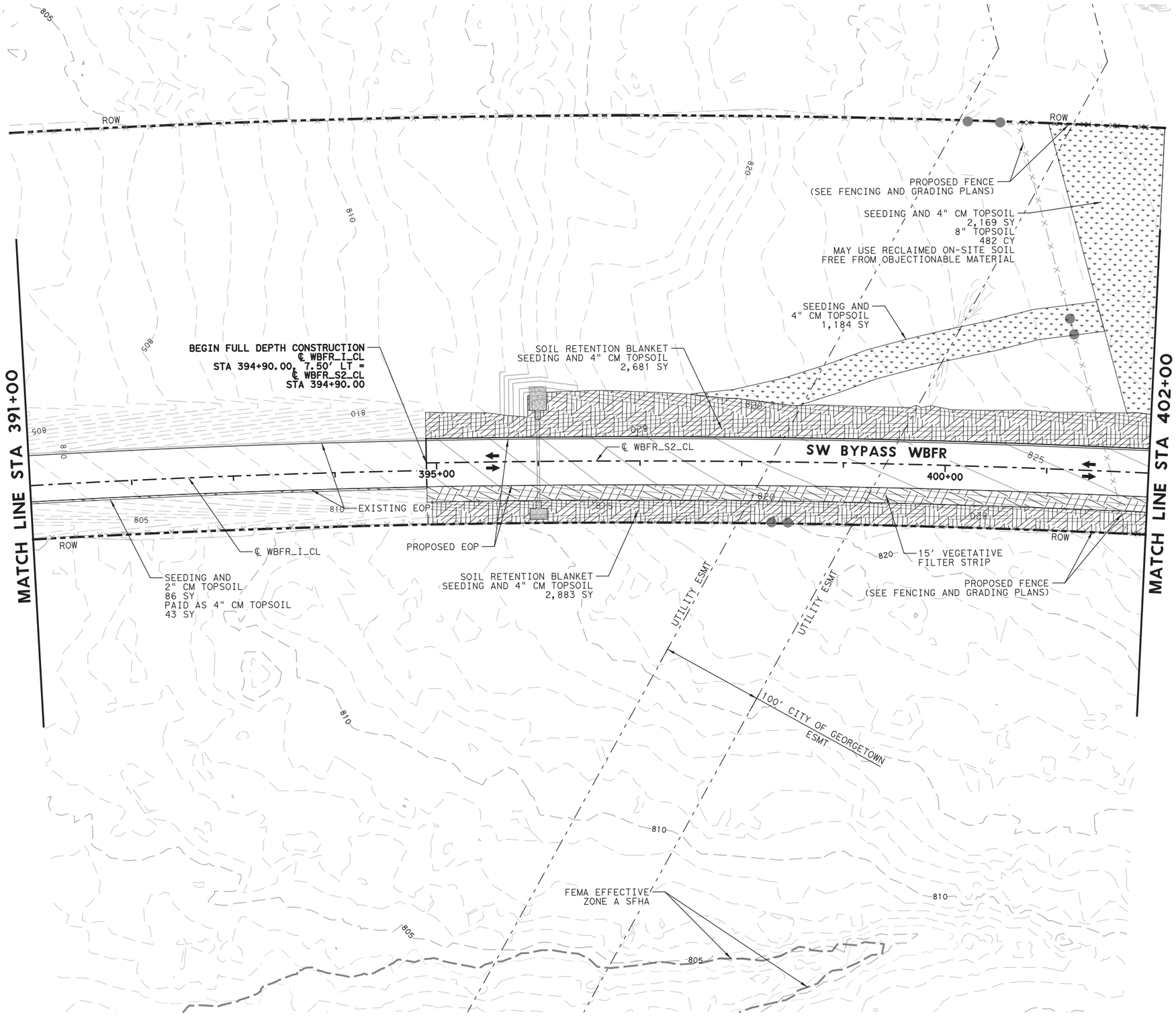

LEGEND

- PROPOSED CONSTRUCTION
- VEGETATIVE FILTER STRIP
- SOIL RETENTION BLANKET (CL 1)(TY A) SEEDING AND 4" COMPOST MANUF TOPSOIL
- SEEDING AND 4" COMPOST MANUF TOPSOIL
- RIPRAP (STONE PROTECTION)(8IN)TY I
- RIPRAP (STONE PROTECTION)(8IN)TY II

NOTES:

1. DETAILED INFORMATION FOR SENSITIVE FEATURES IS PROVIDED IN THE GEOLOGIC ASSESSMENT SECTION OF THE WPAP.
2. THE MINIMUM VEGETATIVE COVER FOR ALL VEGETATIVE FILTER STRIPS IS 95% PRIOR TO PROJECT ACCEPTANCE.
3. CONTRACTOR TO NOTIFY INSPECTOR OR ENGINEER PRIOR TO PLACING BLANKETS, SEEDING, OR TOPSOIL ON SOLID ROCK OR UNDISTURBED AREAS.
4. QUANTITY FOR VEGETATIVE FILTER STRIPS ARE INCLUDED IN SOIL RETENTION BLANKET, SEEDING, AND TOPSOIL QUANTITIES.
5. CONTRACTOR RESPONSIBLE TO VEGETATE ANY ADDITIONAL DISTURBED AREAS NOT CALLED OUT IN PLANS. PROVIDE SEEDING AND TOPSOIL FOR THESE AREAS. SUBSIDIARY TO PERTINENT ITEMS.
6. ALL 8" RIPRAP SHALL HAVE A THICKNESS OF 8" UNLESS OTHERWISE SPECIFIED. SEE GENERAL NOTES FOR GRADATION REQUIREMENTS.

0 50 100 150 200
SCALE IN FEET

STATE OF TEXAS
JUSTIN D. CARLTON
127593
LICENSED
PROFESSIONAL ENGINEER
03/23/2018

NO.	DATE	REVISION	APPROVED

WILLIAMSON COUNTY TEXAS

HDR Engineering, Inc.
810 Hesters Crossing, Suite 120
Round Rock, Texas 78681
Texas Registered Engineering Firm F-754

SOUTHWEST BYPASS SEGMENT 2 PERMANENT EROSION CONTROL PLAN

STA 391+00 TO STA 402+00

SCALE: 1"=100' SHEET 3 OF 8

DESIGN	FED.RD. DIV.NO.	FEDERAL AID PROJECT NO.		HIGHWAY NO.
JC	6			
GRAPHICS	STATE	DISTRICT	COUNTY	SHEET NO.
LG	TEXAS	AUS	WILLIAMSON	
CHECK	CONTROL	SECTION	JOB	259
JW	2103	01	034	
CHECK				
JC				

PLOT DRIVER: TXDOT_PDF_BW.pltcfg PENTABLE: S2-0000020170718.tbl
USER: lgomezgonz DATE: 3/23/2018 TIME: 11:04:25 AM SCALE: 1:100
FILE: \

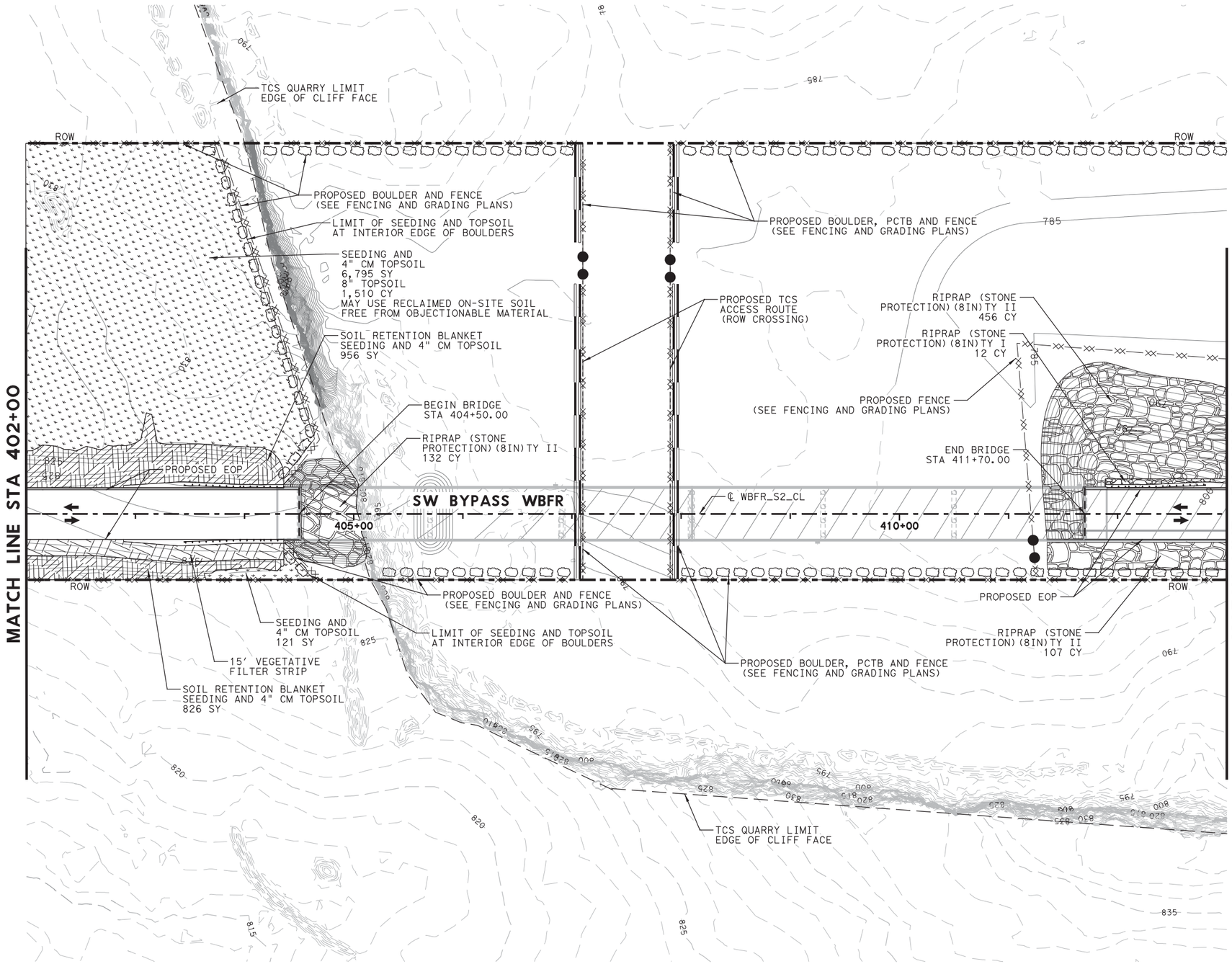

LEGEND

- PROPOSED CONSTRUCTION
- VEGETATIVE FILTER STRIP
- SOIL RETENTION BLANKET (CL 1) (TY A)
  SEEDING AND 4" COMPOST MANUF TOPSOIL
- SEEDING AND 4" COMPOST MANUF TOPSOIL
- RIPRAP (STONE PROTECTION) (8IN) TY I
- RIPRAP (STONE PROTECTION) (8IN) TY II

NOTES:

1. DETAILED INFORMATION FOR SENSITIVE FEATURES IS PROVIDED IN THE GEOLOGIC ASSESSMENT SECTION OF THE WPAP.
2. THE MINIMUM VEGETATIVE COVER FOR ALL VEGETATIVE FILTER STRIPS IS 95% PRIOR TO PROJECT ACCEPTANCE.
3. CONTRACTOR TO NOTIFY INSPECTOR OR ENGINEER PRIOR TO PLACING BLANKETS, SEEDING, OR TOPSOIL ON SOLID ROCK OR UNDISTURBED AREAS.
4. QUANTITY FOR VEGETATIVE FILTER STRIPS ARE INCLUDED IN SOIL RETENTION BLANKET, SEEDING, AND TOPSOIL QUANTITIES.
5. CONTRACTOR RESPONSIBLE TO VEGETATE ANY ADDITIONAL DISTURBED AREAS NOT CALLED OUT IN PLANS. PROVIDE SEEDING AND TOPSOIL FOR THESE AREAS. SUBSIDIARY TO PERTINENT ITEMS.
6. ALL 8" RIPRAP SHALL HAVE A THICKNESS OF 8" UNLESS OTHERWISE SPECIFIED. SEE GENERAL NOTES FOR GRADATION REQUIREMENTS.

0 50 100 150 200
SCALE IN FEET

STATE OF TEXAS
JUSTIN D. CARLTON
127593
LICENSED
PROFESSIONAL ENGINEER
03/23/2018

NO.	DATE	REVISION	APPROVED

WILLIAMSON COUNTY

HDR Engineering, Inc.
810 Hesters Crossing, Suite 120
Round Rock, Texas 78681
Texas Registered Engineering Firm F-754

SOUTHWEST BYPASS SEGMENT 2 PERMANENT EROSION CONTROL PLAN

STA 402+00 TO STA 413+00

SCALE: 1"=100' SHEET 4 OF 8

DESIGN	FED. RD. DIV. NO.	FEDERAL AID PROJECT NO.		HIGHWAY NO.
JC	6			
GRAPHICS	STATE	DISTRICT	COUNTY	SHEET NO.
LG	TEXAS	AUS	WILLIAMSON	
CHECK	CONTROL	SECTION	JOB	260
JW	2103	01	034	
CHECK				
JC				

PLOT DRIVER: TXDOT_PDF_BW.pltcfg PENTABLE: S2-0000020170718.tbl
USER: lgomezgonz DATE: 3/23/2018 TIME: 11:04:31 AM SCALE: 1:00
FILE: \



LEGEND

- PROPOSED CONSTRUCTION
- VEGETATIVE FILTER STRIP
- SOIL RETENTION BLANKET (CL 1)(TY A) SEEDING AND 4" COMPOST MANUF TOPSOIL
- SEEDING AND 4" COMPOST MANUF TOPSOIL
- RIPRAP (STONE PROTECTION)(8IN)TY I
- RIPRAP (STONE PROTECTION)(8IN)TY II

NOTES:

1. DETAILED INFORMATION FOR SENSITIVE FEATURES IS PROVIDED IN THE GEOLOGIC ASSESSMENT SECTION OF THE WPAP.
2. THE MINIMUM VEGETATIVE COVER FOR ALL VEGETATIVE FILTER STRIPS IS 95% PRIOR TO PROJECT ACCEPTANCE.
3. CONTRACTOR TO NOTIFY INSPECTOR OR ENGINEER PRIOR TO PLACING BLANKETS, SEEDING, OR TOPSOIL ON SOLID ROCK OR UNDISTURBED AREAS.
4. QUANTITY FOR VEGETATIVE FILTER STRIPS ARE INCLUDED IN SOIL RETENTION BLANKET, SEEDING, AND TOPSOIL QUANTITIES.
5. CONTRACTOR RESPONSIBLE TO VEGETATE ANY ADDITIONAL DISTURBED AREAS NOT CALLED OUT IN PLANS. PROVIDE SEEDING AND TOPSOIL FOR THESE AREAS. SUBSIDIARY TO PERTINENT ITEMS.
6. ALL 8" RIPRAP SHALL HAVE A THICKNESS OF 8" UNLESS OTHERWISE SPECIFIED. SEE GENERAL NOTES FOR GRADATION REQUIREMENTS.

0 50 100 150 200
SCALE IN FEET

STATE OF TEXAS
JUSTIN D. CARLTON
127593
LICENSED
PROFESSIONAL ENGINEER
03/23/2018

NO.	DATE	REVISION	APPROVED

WILLIAMSON COUNTY TEXAS

HDR Engineering, Inc.
810 Hesters Crossing, Suite 120
Round Rock, Texas 78681
Texas Registered Engineering Firm F-754

SOUTHWEST BYPASS SEGMENT 2 PERMANENT EROSION CONTROL PLAN

STA 413+00 TO STA 424+00

SCALE: 1"=100' SHEET 5 OF 8

DESIGN	FED.RD. DIV.NO.	FEDERAL AID PROJECT NO.		HIGHWAY NO.
JC	6			
GRAPHICS LG	STATE	DISTRICT	COUNTY	SHEET NO.
CHECK JW	TEXAS	AUS	WILLIAMSON	
CHECK JC	CONTROL	SECTION	JOB	261
	2103	01	034	

PLOT DRIVER: TXDOT_PDF_BW.pltcfg PENTABLE: S2-0000020170718.tbl
USER: lgomezgonz DATE: 3/23/2018 TIME: 11:04:38 AM SCALE: 1:00
FILE: \

4/12/2018 7:20 AM

DRAINAGE EASEMENT

RIPRAP (STONE PROTECTION)(8IN)TY II
125 CY

DRAINAGE EASEMENT

ROW

PROPOSED BOULDER AND FENCE
(SEE FENCING AND GRADING PLANS)

PROPOSED FENCE
(SEE FENCING AND GRADING PLANS)

RIPRAP (STONE PROTECTION)(8IN)TY II
3,808 CY

RIPRAP (STONE PROTECTION)(8IN)TY I
219 CY

MATCH LINE STA 424+00

℄ WBFR_S2_CL

SW BYPASS WBFR

430+00

425+00

435

PROPOSED EOP

ROW

RIPRAP (STONE PROTECTION)(8IN)TY II
1711 CY

RIPRAP (STONE PROTECTION)(8IN)TY I
210 CY

15' VEGETATIVE FILTER STRIP

ROW

ROW 800

PROPOSED BOULDER AND FENCE
(SEE FENCING AND GRADING PLANS)

INCLUDE IF RETAINING WALL RW-06 IS NOT CONSTRUCTED
RIPRAP (STONE PROTECTION)(8IN)TY II
38 CY

DRAINAGE EASEMENT

SOIL RETENTION BLANKET
SEEDING AND 4" CM TOPSOIL
218 SY

TOPSOIL (DEPTH VARIES)
SEE TYPICAL SECTIONS
31 CY

MATCH LINE STA 435+00

DRAINAGE EASEMENT

TCS QUARRY LIMIT
EDGE OF CLIFF FACE

TCS QUARRY LIMIT
EDGE OF CLIFF FACE

N

LEGEND

- PROPOSED CONSTRUCTION
- VEGETATIVE FILTER STRIP
- SOIL RETENTION BLANKET (CL 1)(TY A)
  SEEDING AND 4" COMPOST MANUF TOPSOIL
- SEEDING AND 4" COMPOST MANUF TOPSOIL
- RIPRAP (STONE PROTECTION)(8IN)TY I
- RIPRAP (STONE PROTECTION)(8IN)TY II

NOTES:

1. DETAILED INFORMATION FOR SENSITIVE FEATURES IS PROVIDED IN THE GEOLOGIC ASSESSMENT SECTION OF THE WPAP.
2. THE MINIMUM VEGETATIVE COVER FOR ALL VEGETATIVE FILTER STRIPS IS 95% PRIOR TO PROJECT ACCEPTANCE.
3. CONTRACTOR TO NOTIFY INSPECTOR OR ENGINEER PRIOR TO PLACING BLANKETS, SEEDING, OR TOPSOIL ON SOLID ROCK OR UNDISTURBED AREAS.
4. QUANTITY FOR VEGETATIVE FILTER STRIPS ARE INCLUDED IN SOIL RETENTION BLANKET, SEEDING, AND TOPSOIL QUANTITIES.
5. CONTRACTOR RESPONSIBLE TO VEGETATE ANY ADDITIONAL DISTURBED AREAS NOT CALLED OUT IN PLANS. PROVIDE SEEDING AND TOPSOIL FOR THESE AREAS. SUBSIDIARY TO PERTINENT ITEMS.
6. ALL 8" RIPRAP SHALL HAVE A THICKNESS OF 8" UNLESS OTHERWISE SPECIFIED. SEE GENERAL NOTES FOR GRADATION REQUIREMENTS.

0 50 100 150 200
SCALE IN FEET

STATE OF TEXAS
JUSTIN D. CARLTON
127593
LICENSED
PROFESSIONAL ENGINEER
04/10/2018

NO.	DATE	REVISION	APPROVED

WILLIAMSON COUNTY

HDR Engineering, Inc.
810 Hesters Crossing, Suite 120
Round Rock, Texas 78681
Texas Registered Engineering Firm F-754

SOUTHWEST BYPASS SEGMENT 2 PERMANENT EROSION CONTROL PLAN

STA 424+00 TO STA 435+00

SCALE: 1"=100' SHEET 6 OF 8

DESIGN	FED.RD. DIV.NO.	FEDERAL AID PROJECT NO.		HIGHWAY NO.
JC	6			
GRAPHICS	STATE	DISTRICT	COUNTY	SHEET NO.
LG	TEXAS	AUS	WILLIAMSON	
CHECK	CONTROL	SECTION	JOB	262
JW	2103	01	034	
CHECK				
JC				

PLOT DRIVER: TXDOT_PDF_BW.pltcfg PENTABLE: S2-0000020170718.tbl
USER: lgomezgonz DATE: 4/10/2018 TIME: 9:48:04 AM SCALE: 1:00
FILE: \

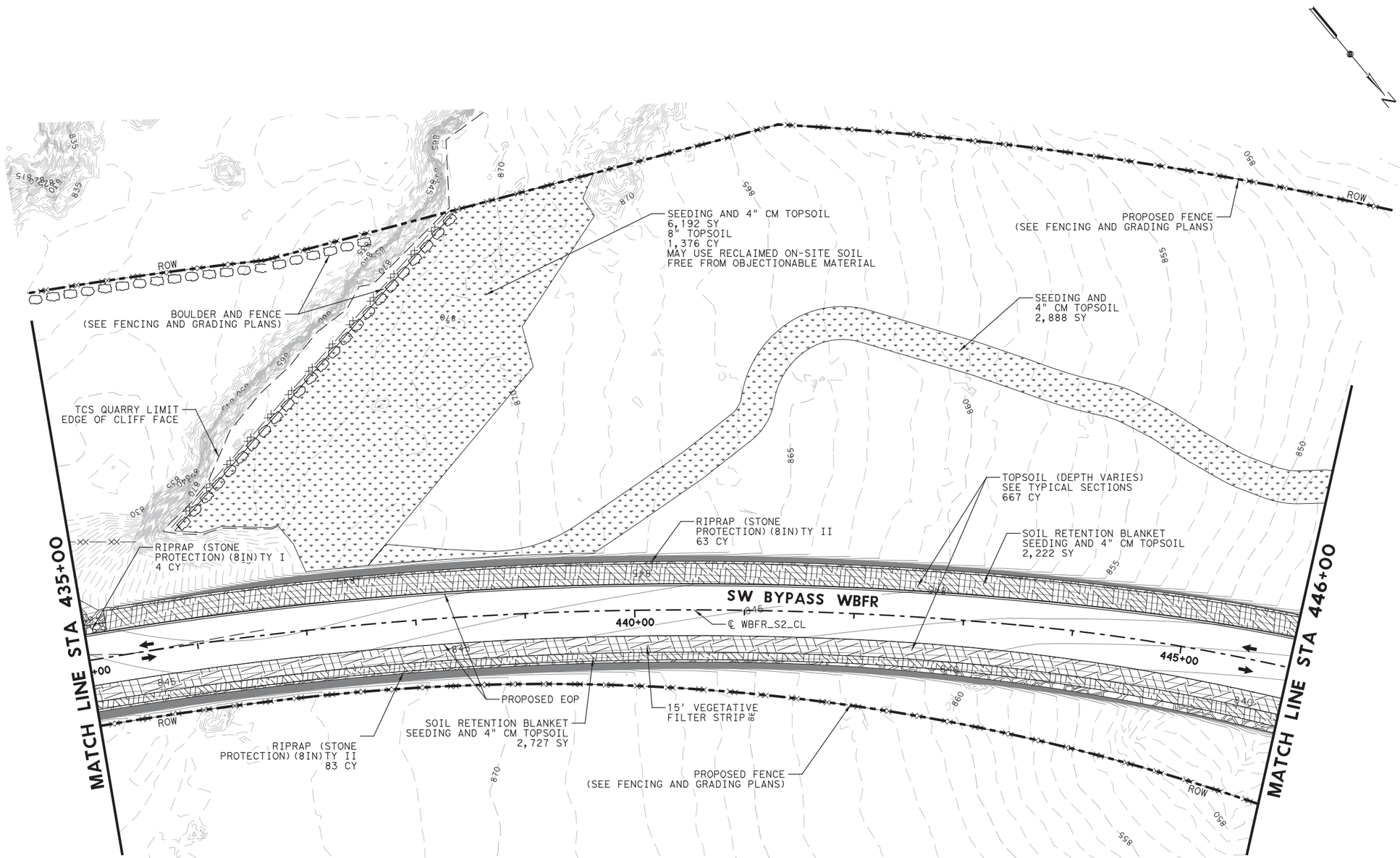

LEGEND

- PROPOSED CONSTRUCTION
- VEGETATIVE FILTER STRIP
- SOIL RETENTION BLANKET (CL 1)(TY A) SEEDING AND 4" COMPOST MANUF TOPSOIL
- SEEDING AND 4" COMPOST MANUF TOPSOIL
- RIPRAP (STONE PROTECTION)(8IN)TY I
- RIPRAP (STONE PROTECTION)(8IN)TY II

NOTES:

1. DETAILED INFORMATION FOR SENSITIVE FEATURES IS PROVIDED IN THE GEOLOGIC ASSESSMENT SECTION OF THE WPAP.
2. THE MINIMUM VEGETATIVE COVER FOR ALL VEGETATIVE FILTER STRIPS IS 95% PRIOR TO PROJECT ACCEPTANCE.
3. CONTRACTOR TO NOTIFY INSPECTOR OR ENGINEER PRIOR TO PLACING BLANKETS, SEEDING, OR TOPSOIL ON SOLID ROCK OR UNDISTURBED AREAS.
4. QUANTITY FOR VEGETATIVE FILTER STRIPS ARE INCLUDED IN SOIL RETENTION BLANKET, SEEDING, AND TOPSOIL QUANTITIES.
5. CONTRACTOR RESPONSIBLE TO VEGETATE ANY ADDITIONAL DISTURBED AREAS NOT CALLED OUT IN PLANS. PROVIDE SEEDING AND TOPSOIL FOR THESE AREAS. SUBSIDIARY TO PERTINENT ITEMS.
6. ALL 8" RIPRAP SHALL HAVE A THICKNESS OF 8" UNLESS OTHERWISE SPECIFIED. SEE GENERAL NOTES FOR GRADATION REQUIREMENTS.

0 50 100 150 200
SCALE IN FEET

STATE OF TEXAS
JUSTIN D. CARLTON
127593
LICENSED
PROFESSIONAL ENGINEER
03/23/2018

NO.	DATE	REVISION	APPROVED

WILLIAMSON COUNTY

HDR Engineering, Inc.
810 Hesters Crossing, Suite 120
Round Rock, Texas 78681
Texas Registered Engineering Firm F-754

SOUTHWEST BYPASS SEGMENT 2 PERMANENT EROSION CONTROL PLAN

STA 435+00 TO STA 446+00

SCALE: 1"=100' SHEET 7 OF 8

DESIGN	FED. RD. DIV. NO.	FEDERAL AID PROJECT NO.		HIGHWAY NO.
JC	6			
GRAPHICS	STATE	DISTRICT	COUNTY	SHEET NO.
LG	TEXAS	AUS	WILLIAMSON	
CHECK	CONTROL	SECTION	JOB	263
JW	2103	01	034	
CHECK				
JC				

PLOT DRIVER: TXDOT_POF_BW.pltcfg
USER: lgomezgonz DATE: 3/23/2018
FILE: \
PENTABLE: S2-0000020\T0718.tbl
TIME: 11:04:53 AM SCALE: 1\100

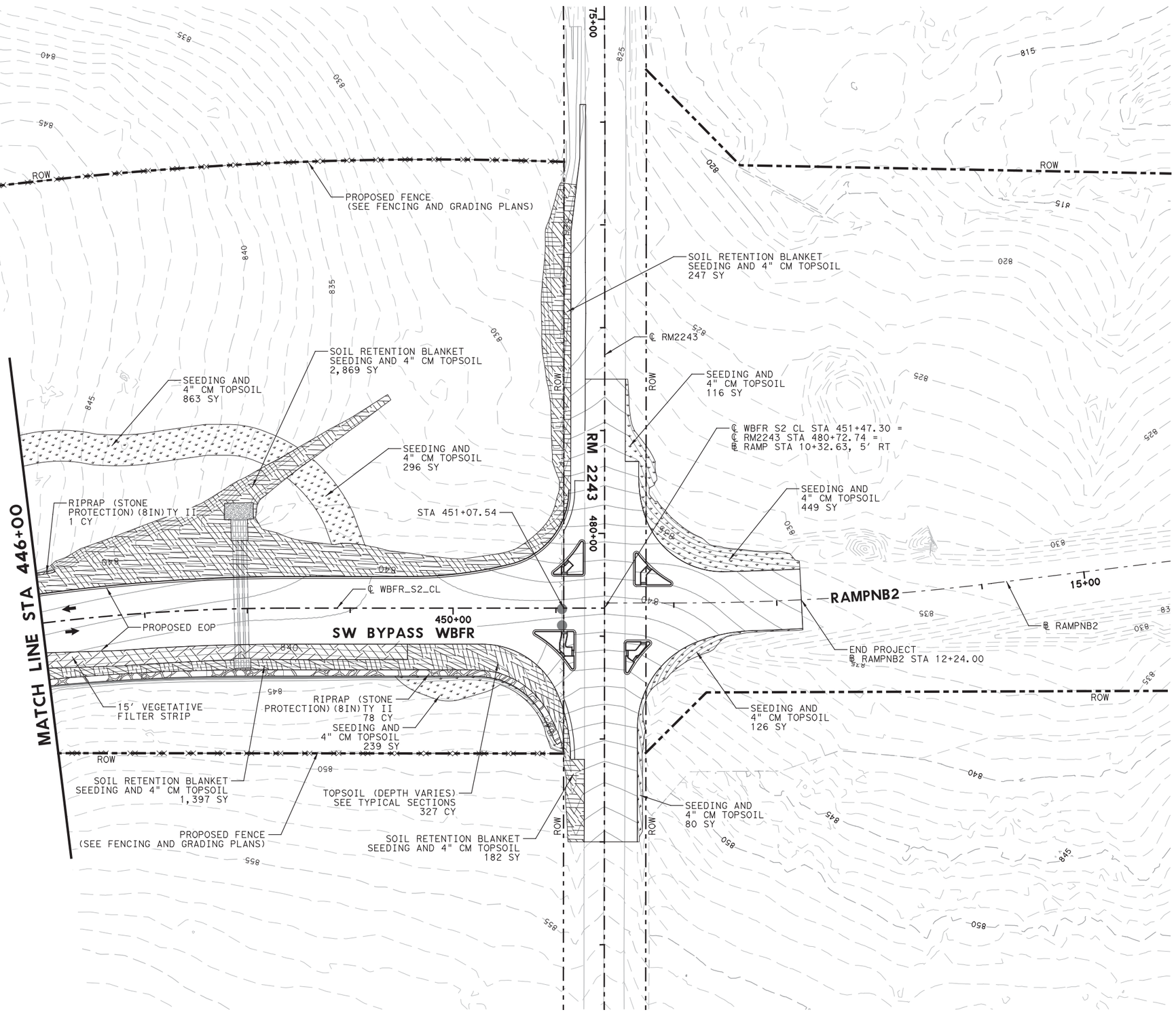

LEGEND

- PROPOSED CONSTRUCTION
- VEGETATIVE FILTER STRIP
- SOIL RETENTION BLANKET (CL 1)(TY A) SEEDING AND 4" COMPOST MANUF TOPSOIL
- SEEDING AND 4" COMPOST MANUF TOPSOIL
- RIPRAP (STONE PROTECTION)(8IN)TY I
- RIPRAP (STONE PROTECTION)(8IN)TY II

NOTES:

1. DETAILED INFORMATION FOR SENSITIVE FEATURES IS PROVIDED IN THE GEOLOGIC ASSESSMENT SECTION OF THE WPAP.
2. THE MINIMUM VEGETATIVE COVER FOR ALL VEGETATIVE FILTER STRIPS IS 95% PRIOR TO PROJECT ACCEPTANCE.
3. CONTRACTOR TO NOTIFY INSPECTOR OR ENGINEER PRIOR TO PLACING BLANKETS, SEEDING, OR TOPSOIL ON SOLID ROCK OR UNDISTURBED AREAS.
4. QUANTITY FOR VEGETATIVE FILTER STRIPS ARE INCLUDED IN SOIL RETENTION BLANKET, SEEDING, AND TOPSOIL QUANTITIES.
5. CONTRACTOR RESPONSIBLE TO VEGETATE ANY ADDITIONAL DISTURBED AREAS NOT CALLED OUT IN PLANS. PROVIDE SEEDING AND TOPSOIL FOR THESE AREAS. SUBSIDIARY TO PERTINENT ITEMS.
6. ALL 8" RIPRAP SHALL HAVE A THICKNESS OF 8" UNLESS OTHERWISE SPECIFIED. SEE GENERAL NOTES FOR GRADATION REQUIREMENTS.

0 50 100 150 200
SCALE IN FEET

STATE OF TEXAS
JUSTIN D. CARLTON
127593
LICENSED
PROFESSIONAL ENGINEER
03/23/2018

NO.	DATE	REVISION	APPROVED

WILLIAMSON COUNTY TEXAS

HDR Engineering, Inc.
810 Hesters Crossing, Suite 120
Round Rock, Texas 78681
Texas Registered Engineering Firm F-754

SOUTHWEST BYPASS SEGMENT 2 PERMANENT EROSION CONTROL PLAN

STA 446+00 TO END

SCALE: 1"=100' SHEET 8 OF 8

DESIGN	FED.RD. DIV.NO.	FEDERAL AID PROJECT NO.		HIGHWAY NO.
JC	6			
GRAPHICS	STATE	DISTRICT	COUNTY	SHEET NO.
LG	TEXAS	AUS	WILLIAMSON	
CHECK	CONTROL	SECTION	JOB	264
JW	2103	01	034	
CHECK				
JC				

PLOT DRIVER: TXDOT_PDF_BW.pltcfg PENTABLE: S2-0000020170718.tbl
USER: lgomezgonz TIME: 11:04:59 AM SCALE: 1:00
DATE: 3/23/2018
FILE: \
4/12/2018 7:20 AM

DISCLAIMER:
The use of this standard is governed by the "Texas Engineering Practice Act". No warranty of any kind is made by TxDOT for any purpose whatsoever. TxDOT assumes no responsibility for the conversion of this standard to other formats or for incorrect results or damages resulting from its use.

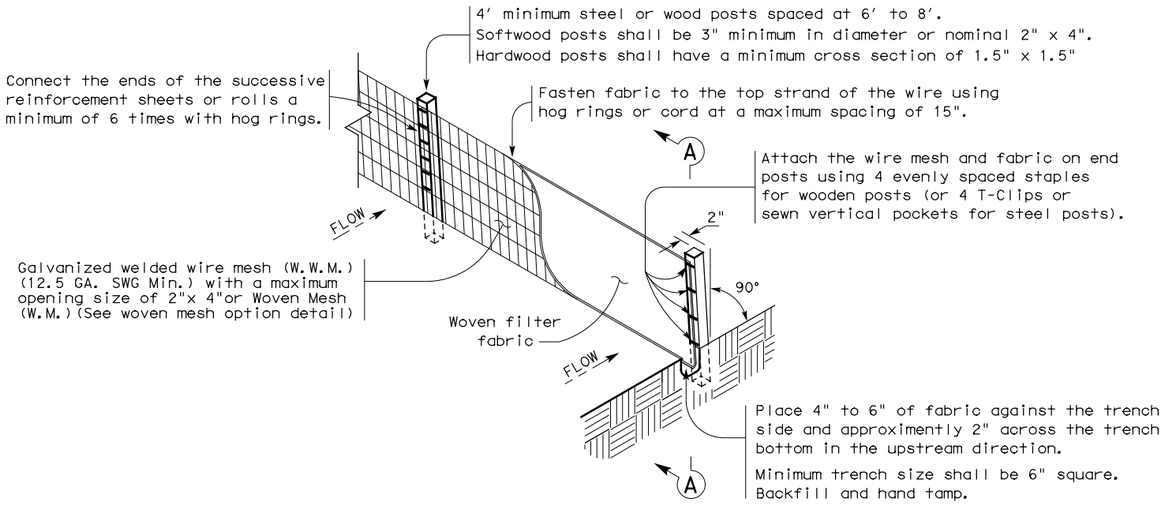

TEMPORARY SEDIMENT CONTROL FENCE

SCF

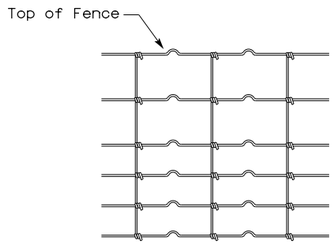

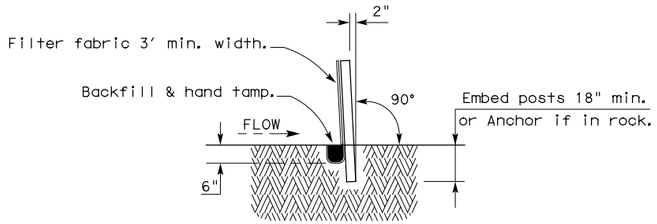

SECTION A-A

HINGE JOINT KNOT WOVEN MESH (OPTION) DETAIL

Galvanized hinge joint knot woven mesh (12.5 GA.SWG Min.) requires a minimum of five horizontal wires spaced at a maximum of 12 inches apart and all vertical wires spaced at a maximum of 12 inches apart.

SEDIMENT CONTROL FENCE USAGE GUIDELINES

A sediment control fence may be constructed near the downstream perimeter of a disturbed area along a contour to intercept sediment from overland runoff. A 2 year storm frequency may be used to calculate the flow rate to be filtered.

Sediment control fence should be sized to filter a maximum flow through rate of 100 GPM/FT^2. Sediment control fence is not recommended to control erosion from a drainage area larger than 2 acres.

LEGEND

Sediment Control Fence

SCF

GENERAL NOTES

1. Vertical tracking is required on projects where soil distributing activities have occurred unless otherwise approved.
2. Perform vertical tracking on slopes to temporarily stabilize soil.
3. Provide equipment with a track undercarriage capable of producing linear soil impressions measuring a minimum of 12" in length by 2" to 4" in width by 1/2" to 2" in depth.
4. Do not exceed 12" between track impressions.
5. Install continous linear track impressions where the minimum 12" length impressions are perpendicular to the slope or direction of water flow.

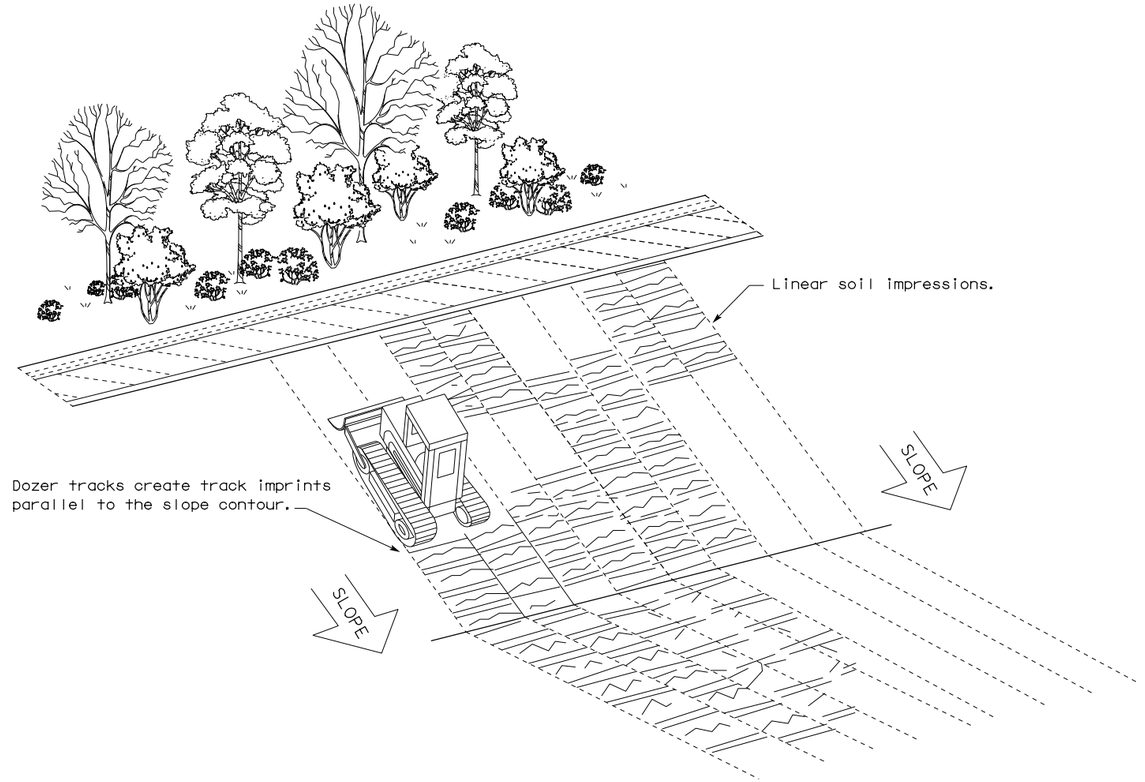

VERTICAL TRACKING

Texas Department of Transportation

Design Division Standard

TEMPORARY EROSION, SEDIMENT AND WATER POLLUTION CONTROL MEASURES

FENCE & VERTICAL TRACKING

EC(1)-16

FILE: ec116	DN: TxDOT	CK: KM	DW: VP	DN/CK: LS
© TxDOT: JULY 2016	CONT	SECT	JOB	HIGHWAY
REVISIONS	2103	01	034	
	DIST	COUNTY		SHEET NO.
	AUS	WILLIAMSON		265

DISCLAIMER:
The use of this standard is governed by the "Texas Engineering Practice Act". No warranty of any kind is made by TxDOT for any purpose whatsoever. TxDOT assumes no responsibility for the conversion of this standard to other formats or for incorrect results or damages resulting from its use.

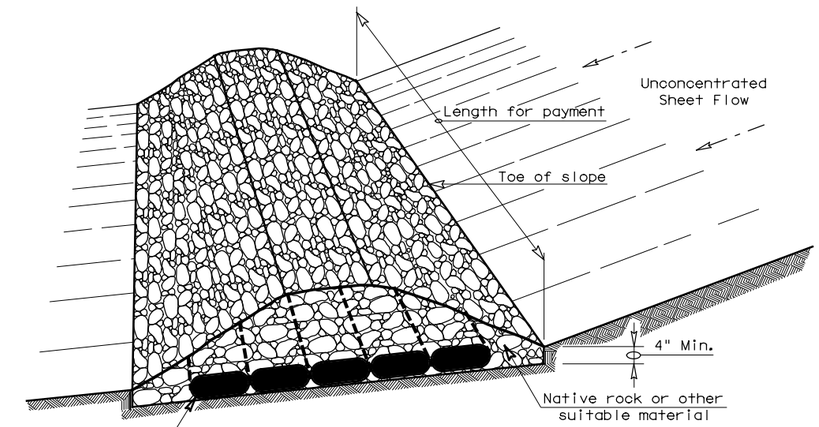

FILTER DAM AT TOE OF SLOPE

RFD1

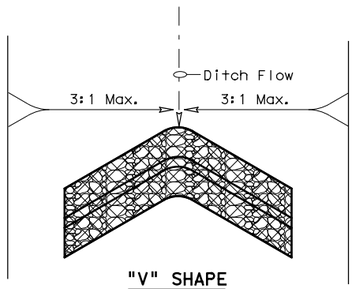

"V" SHAPE
PLAN VIEW

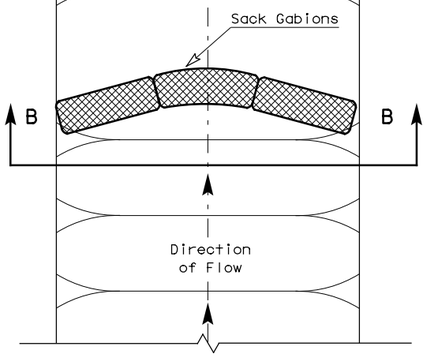

PLAN VIEW

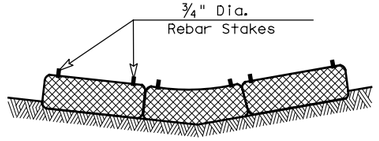

SECTION B-B

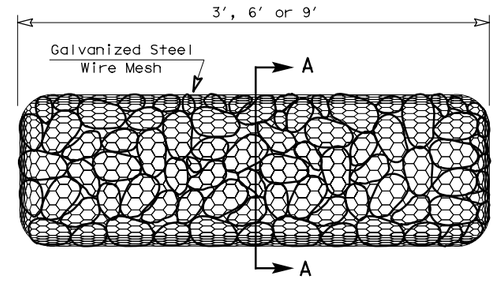

TYPE 4 (SACK GABIONS)

RFD4

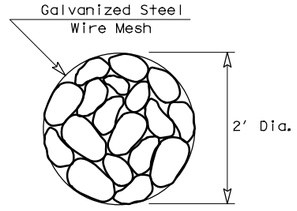

SECTION A-A

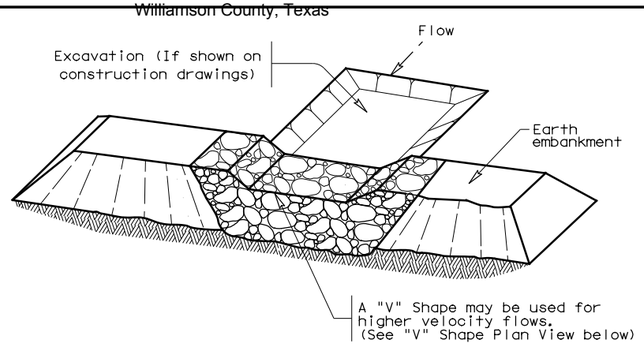

FILTER DAM AT SEDIMENT TRAP

RFD1 — OR — RFD2

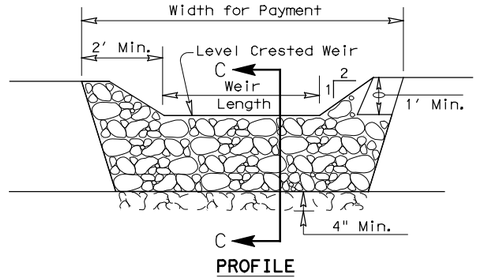

PROFILE

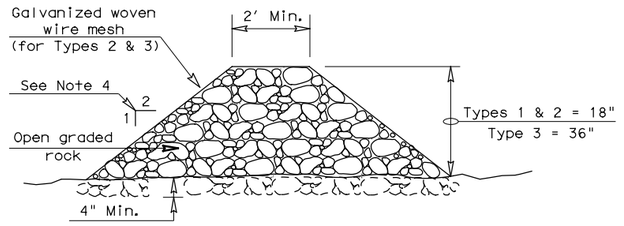

SECTION C-C

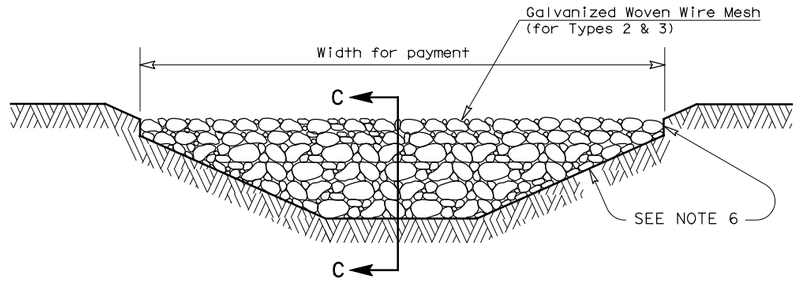

FILTER DAM AT CHANNEL SECTIONS

RFD1 — OR — RFD2 — OR — RFD3

ROCK FILTER DAM USAGE GUIDELINES

Rock Filter Dams should be constructed downstream from disturbed areas to intercept sediment from overland runoff and/or concentrated flow. The dams should be sized to filter a maximum flow through rate of 60 GPM/FT^2 of cross sectional area. A 2 year storm frequency may be used to calculate the flow rate.

Type 1 (18" high with no wire mesh) (3" to 6" aggregate): Type 1 may be used at the toe of slopes, around inlets, in small ditches, and at dike or swale outlets. This type of dam is recommended to control erosion from a drainage area of 5 acres or less. Type 1 may not be used in concentrated high velocity flows (approximently 8 Ft/Sec or more) in which aggregate wash out may occur. Sandbags may be used at the embedded foundation (4" deep min.) for better filtering efficiency of low flows if called for on the plans or directed by the Engineer.

Type 2 (18" high with wire mesh) (3" to 6" aggregate): Type 2 may be used in ditches and at dike or swale outlets.

Type 3 (36" high with wire mesh) (4" to 8" aggregate): Type 3 may be used in stream flow and should be secured to the stream bed.

Type 4 (Sack gabions) (3" to 6" aggregate): Type 4 May be used in ditches and smaller channels to form an erosion control dam.

Type 5: Provide rock filter dams as shown on plans.

GENERAL NOTES

1. If shown on the plans or directed by the Engineer, filter dams should be placed near the toe of slopes where erosion is anticipated, upstream and/or downstream at drainage structures, and in roadway ditches and channels to collect sediment.
2. Materials (aggregate, wire mesh, sandbags, etc.) shall be as indicated by the specification for "Rock Filter Dams for Erosion and Sedimentation Control".
3. The rock filter dam dimensions shall be as indicated on the SW3P plans.
4. Side slopes should be 2:1 or flatter. Dams within the safety zone shall have sideslopes of 6:1 or flatter.
5. Maintain a minimum of 1' between top of rock filter dam weir and top of embankment for filter dams at sediment traps.
6. Filter dams should be embedded a minimum of 4" into existing ground.
7. The sediment trap for ponding of sediment laden runoff shall be of the dimensions shown on the plans.
8. Rock filter dam types 2 & 3 shall be secured with 20 gauge galvanized woven wire mesh with 1" diameter hexagonal openings. The aggregate shall be placed on the mesh to the height & slopes specified. The mesh shall be folded at the upstream side over the aggregate and tightly secured to itself on the downstream side using wire ties or hog rings. For in stream use, the mesh should be secured or staked to the stream bed prior to aggregate placement.
9. Sack Gabions should be staked down with ¾" dia. rebar stakes, and have a double-twisted hexagonal weave with a nominal mesh opening of 2 ½" x 3 ¼"
10. Flow outlet should be onto a stabilized area (vegetation, rock, etc.).
11. The guidelines shown hereon are suggestions only and may be modified by the Engineer.

PLAN SHEET LEGEND

Type 1 Rock Filter Dam — RFD1
Type 2 Rock Filter Dam — RFD2
Type 3 Rock Filter Dam — RFD3
Type 4 Rock Filter Dam — RFD4

Texas Department of Transportation | Design Division Standard

TEMPORARY EROSION, SEDIMENT AND WATER POLLUTION CONTROL MEASURES

ROCK FILTER DAMS

EC(2)-16

FILE: ec216	DN: TxDOT	CK: KM	DW: VP	DN/CK: LS
© TxDOT: JULY 2016	CONT	SECT	JOB	HIGHWAY
REVISIONS	2103	01	034	
	DIST	COUNTY		SHEET NO.
	AUS	WILLIAMSON		266

DATE: 3/23/2018 10:56:22 AM
FILE: c:\pwworking\dal\d0911852\ec216.dgn

4/12/2018 7:20 AM

DISCLAIMER:
The use of this standard is governed by the "Texas Engineering Practice Act". No warranty of any kind is made by TxDOT for any purpose whatsoever. TxDOT assumes no responsibility for the conversion of this standard to other formats or for incorrect results or damages resulting from its use.

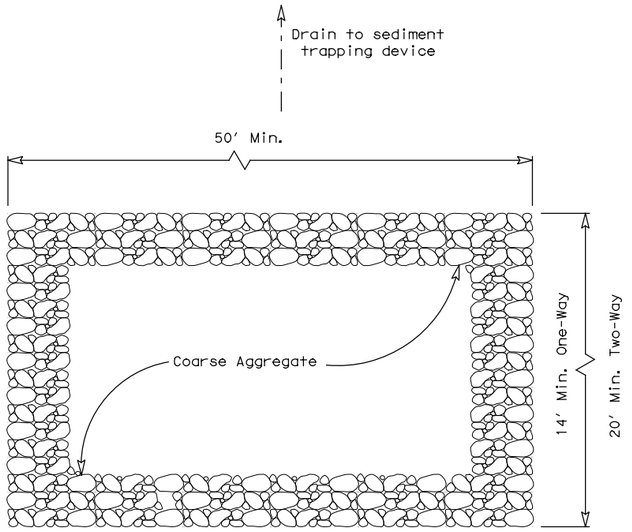

PLAN VIEW

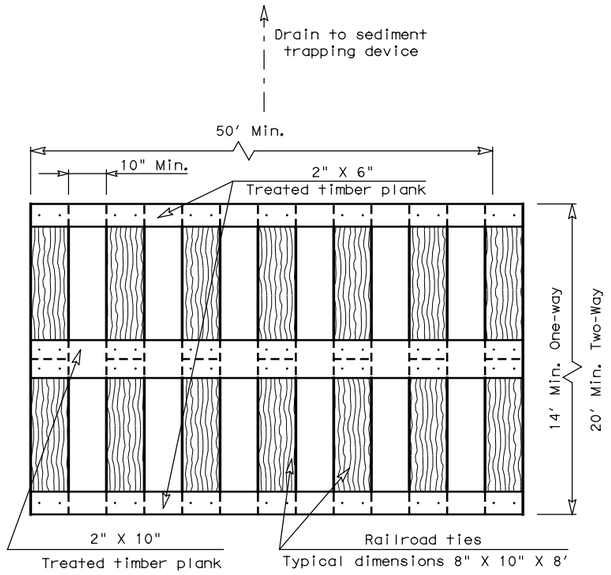

PLAN VIEW

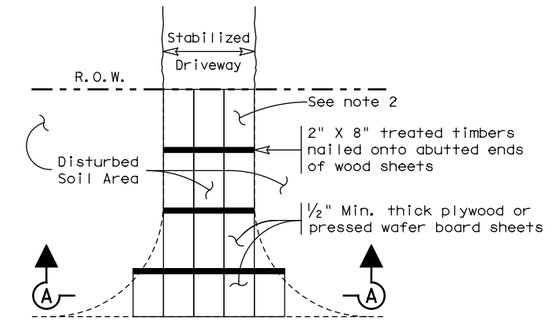

PLAN VIEW

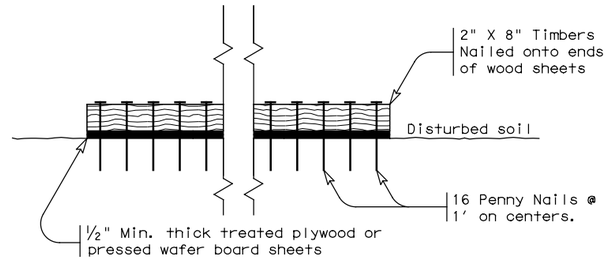

SECTION A-A

CONSTRUCTION EXIT (TYPE 3)

SHORT TERM

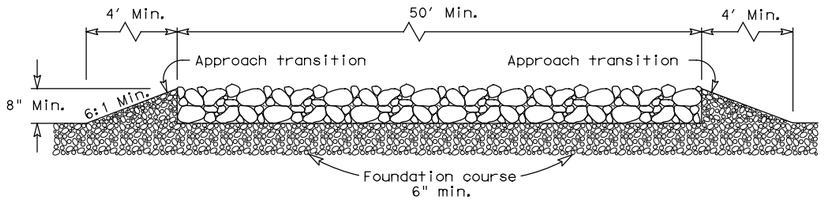

ELEVATION VIEW

CONSTRUCTION EXIT (TYPE 1)

ROCK CONSTRUCTION (LONG TERM)

GENERAL NOTES (TYPE 1)

1. The length of the type 1 construction exit shall be as indicated on the plans, but not less than 50′.
2. The coarse aggregate should be open graded with a size of 4" to 8".
3. The approach transitions should be no steeper than 6:1 and constructed as directed by the Engineer.
4. The construction exit foundation course shall be flexible base, bituminous concrete, portland cement concrete or other materialas approved by the Engineer.
5. The construction exit shall be graded to allow drainage to a sediment trapping device.
6. The guidelines shown hereon are suggestions only and may be modified by the Engineer.
7. Construct exits with a width of at least 14 ft. for one-way and 20 ft. for two-way traffic for the full width of the exit, or as directed by the engineer.

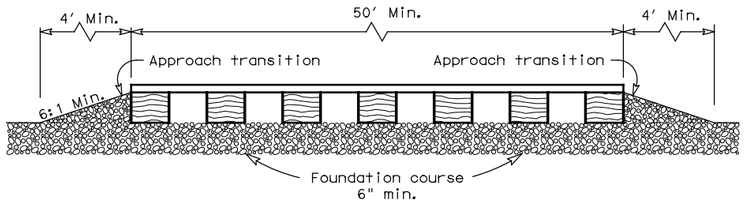

ELEVATION VIEW

CONSTRUCTION EXIT (TYPE 2)

TIMBER CONSTRUCTION (LONG TERM)

GENERAL NOTES (TYPE 2)

1. The length of the type 2 construction exit shall be as indicated on the plans, but not less than 50′.
2. The treated timber planks shall be attached to the railroad ties with ½"x 6" min. lag bolts. Other fasteners may be used as approved by the Engineer.
3. The treated timber planks shall be #2 grade min., and should be free from large and loose knots.
4. The approach transitions shall be no steeper than 6:1 and constructed as directed by the Engineer.
5. The construction exit foundation course shall be flexible base, bituminous concrete, portland cement concrete or other material as approved by the Engineer.
6. The construction exit should be graded to allow drainage to a sediment trapping device.
7. The guidelines shown hereon are suggestions only and may be modified by the Engineer.
8. Construct exits with a width of at least 14 ft. for one-way and 20 ft. for two-way traffic for the full width of the exit, or as directed by the engineer.

GENERAL NOTES (TYPE 3)

1. The length of the type 3 construction exit shall be as shown on the plans, or as directed by the Engineer.
2. The type 3 construction exit may be constructed from open graded crushed stone with a size of two to four inches spread a min. of 4" thick to the limits shown on the plans.
3. The treated timber planks shall be #2 grade min., and should be free from large and loose knots.
4. The guidelines shown hereon are suggestions only and may be modified by the Engineer.

Texas Department of Transportation

Design Division Standard

TEMPORARY EROSION, SEDIMENT AND WATER POLLUTION CONTROL MEASURES

CONSTRUCTION EXITS

EC(3)-16

FILE: ec316	DN: TxDOT	CK: KM	DW: VP	DN/CK: LS
©TxDOT: JULY 2016	CONT	SECT	JOB	HIGHWAY
REVISIONS	2103	01	034	
	DIST	COUNTY		SHEET NO.
	AUS	WILLIAMSON		267

DATE: 3/23/2018 10:56:24 AM
FILE: c:\pwworking\dal\d0911852\ec316.dgn

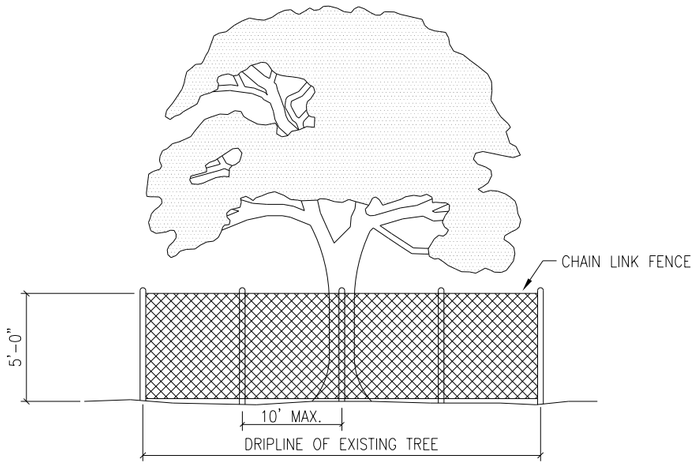

NOTES:

1. TREE PROTECTION FENCES SHALL BE INSTALLED PRIOR TO THE COMMENCEMENT OF ANY SITE PREPARATION WORK (CLEARING, GRUBBING OR GRADING).
2. FENCES SHALL COMPLETELY SURROUND THE TREE, OR CLUSTERS OF TREES; WILL BE LOCATED AT THE OUTERMOST LIMIT OF THE TREE BRANCHES (DRIPLINE), AND WILL BE MAINTAINED THROUGHOUT THE CONSTRUCTION PROJECT IN ORDER TO PREVENT THE FOLLOWING:
   A. SOIL COMPACTION IN THE ROOT ZONE AREA RESULTING FROM VEHICULAR TRAFFIC, OR STORAGE OF EQUIPMENT OR MATERIALS.
   B. ROOT ZONE DISTURBANCES DUE TO GRADE CHANGES (GREATER THAN SIX INCHES (6") CUT OR FILL, OR TRENCHING NOT REVIEWED AND AUTHORIZED BY THE CITY.
   C. WOUNDS TO EXPOSED ROOTS, TRUNKS OR LIMBS BY MECHANICAL EQUIPMENT.
   D. OTHER ACTIVITIES DETRIMENTAL TO TREES, SUCH AS CHEMICAL STORAGE, CEMENT TRUCK CLEANING AND FIRE.
3. EXCEPTIONS TO INSTALLING FENCES AT TREE DRIPLINES MAY BE PERMITTED IN THE FOLLOWING CASES:
   A. WHERE PERMEABLE PAVING IS TO BE INSTALLED, ERECT THE FENCE AT THE OUTER LIMITS OF THE PERMEABLE PAVING AREA.
   B. WHERE TREES ARE CLOSE TO PROPOSED BUILDINGS, ERECT THE FENCE NO CLOSER THAN SIX FEET (6'-0") TO BUILDING.

The Architect/Engineer assumes responsibility for appropriate use of this standard.

REVISION NOTE: ADOPTED 6/21/2006

Georgetown Utility Systems — Your Community Owned Utility

CITY OF GEORGETOWN
CONSTRUCTION STANDARDS AND DETAILS
TREE PROTECTION – CHAIN LINK FENCE

DRAWING NAME: EC09

SCALE:	DATE:
NTS	1/2003
DRAWN BY:	APPROVED BY:
MRS	TRB

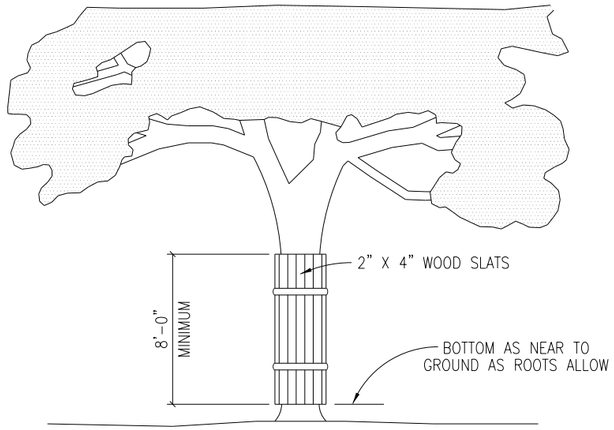

NOTES:

1. WHERE ANY EXCEPTIONS RESULT IN A FENCE BEING CLOSER THAN FOUR FEET (4'-0") TO A TREE TRUNK; PROTECT THE TRUNK WITH STRAPPED-ON-PLANKING TO A HEIGHT OF EIGHT FEET (8'-0"), OR TO THE LIMITS OF LOWER BRANCHING IN ADDITION TO THE REDUCED FENCING PROVIDED.
2. ANY ROOTS EXPOSED BY CONSTRUCTION ACTIVITY SHALL BE PRUNED FLUSH WITH THE SOIL. BACKFILL ROOT AREAS WITH GOOD QUALITY TOP SOIL AS SOON AS POSSIBLE. IF EXPOSED ROOT AREAS ARE NOT BACKFILLED WITHIN TWO (2) DAYS, COVER THEM WITH ORGANIC MATERIAL IN A MANNER WHICH REDUCES SOIL TEMPERATURE, AND MINIMIZES WATER LOSS DUE TO EVAPORATION.
3. PRIOR EXCAVATION OR GRADE CUTTING WITHIN TREE DRIPLINE. MAKE A CLEAN CUT BETWEEN THE DISTURBED AND UNDISTURBED ROOT ZONES WITH A ROCK SAW OR SIMILAR EQUIPMENT, TO MINIMIZE DAMAGE TO REMAINING ROOTS.
4. TREES MOST HEAVILY IMPACTED BY CONSTRUCTION ACTIVITIES SHOULD BE WATERED DEEPLY ONCE A WEEK DURING PERIODS OF HOT, DRY WEATHER. TREE CROWNS SHOULD BE SPRAYED WITH WATER PERIODICALLY TO REDUCE DUST ACCUMULATION ON THE LEAVES.
5. ANY TRENCHING REQUIRED FOR THE INSTALLATION OF LANDSCAPE IRRIGATION SHALL BE PLACED AS FAR FROM EXISTING TREE TRUNKS AS POSSIBLE.
6. NO LANDSCAPE TOPSOIL DRESSING GREATER THE FOUR INCHES (4") SHALL BE PERMITTED WITHIN THE DRIPLINE OF A TREE. NO SOIL IS PERMITTED ON THE ROOT FLARE OF ANY TREE.
7. PRUNING TO PROVIDE CLEARANCE FOR STRUCTURES, VEHICULAR TRAFFIC AND EQUIPMENT SHALL TAKE PLACE BEFORE CONSTRUCTION BEGINS.

The Architect/Engineer assumes responsibility for appropriate use of this standard.

REVISION NOTE: ADOPTED 6/21/2006

Georgetown Utility Systems — Your Community Owned Utility

CITY OF GEORGETOWN
CONSTRUCTION STANDARDS AND DETAILS
TREE PROTECTION – WOOD SLATS

DRAWING NAME: EC10

SCALE:	DATE:
NTS	1/2003
DRAWN BY:	APPROVED BY:
MRS	TRB

NO.	DATE	REVISION	APPROVED

WILLIAMSON COUNTY

HDR Engineering, Inc.
810 Hesters Crossing, Suite 120
Round Rock, Texas 78681
Texas Registered Engineering Firm F-754

SOUTHWEST BYPASS SEGMENT 2

TREE PROTECTION STANDARD

SHEET 1 OF 1

DESIGN	FED.RD. DIV.NO.	FEDERAL AID PROJECT NO.		HIGHWAY NO.
JC	6			
GRAPHICS	STATE	DISTRICT	COUNTY	SHEET NO.
LG	TEXAS	AUS	WILLIAMSON	
CHECK	CONTROL	SECTION	JOB	268
JW	2103	01	034	
CHECK				
JC				

PLOT DRIVER: TXDOT_PDF_BW.pltcfg PENTABLE: S2-0000020170718.tbl
USER: lgomezgonz DATE: 3/23/2018 TIME: 10:56:27 AM SCALE: 1:1
FILE: \

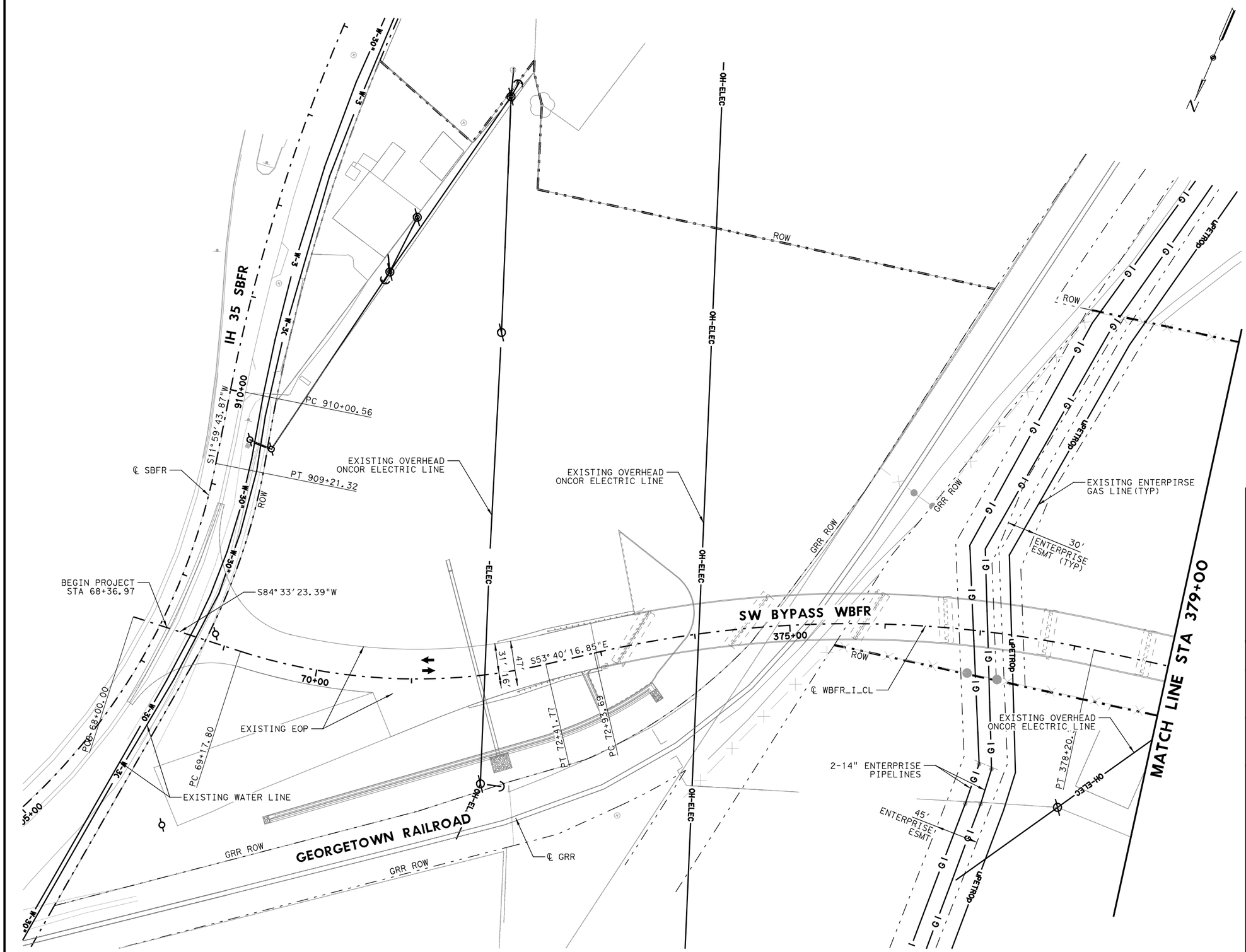

LEGEND

- W-30" — EXISTING 30" WATER LINE
- W-16" — EXISTING 16" WATER LINE
- E — EXISTING OVERHEAD ELECTRIC LINE
- UG-TELE — EXISTING UNDERGROUND TELEPHONE LINE
- OH-TELE — EXISTING OVERHEAD TELEPHONE LINE
- I G — ENTERPRISED PIPELINE
- UPETROp — PROPOSED PIPELINE

0 50 100 150 200

SCALE IN FEET

STATE OF TEXAS
JACOB E. WALKER
122057
LICENSED
PROFESSIONAL ENGINEER

03/23/2018

NO.	DATE	REVISION	APPROVED

WILLIAMSON COUNTY TEXAS

HDR Engineering, Inc.
810 Hesters Crossing, Suite 120
Round Rock, Texas 78681
Texas Registered Engineering Firm F-754

SOUTHWEST BYPASS SEGMENT 2

UTILITY LAYOUT BEGIN TO 379+00

SCALE: 1"=100' SHEET 1 OF 8

DESIGN	FED.RD. DIV.NO.	FEDERAL AID PROJECT NO.		HIGHWAY NO.
JC	6			
GRAPHICS	STATE	DISTRICT	COUNTY	SHEET NO.
LG	TEXAS	AUS	WILLIAMSON	
CHECK	CONTROL	SECTION	JOB	269
JW	2103	01	034	
CHECK				
JC				

PLOT DRIVER: TXDOT_PDF_BW.pltcfg PENTABLE: S2-000002070718.tbl
USER: lgomezgon2 DATE: 3/23/2018 TIME: 1:53:44 PM SCALE: 1:00
FILE: \

4/12/2018 7:20 AM

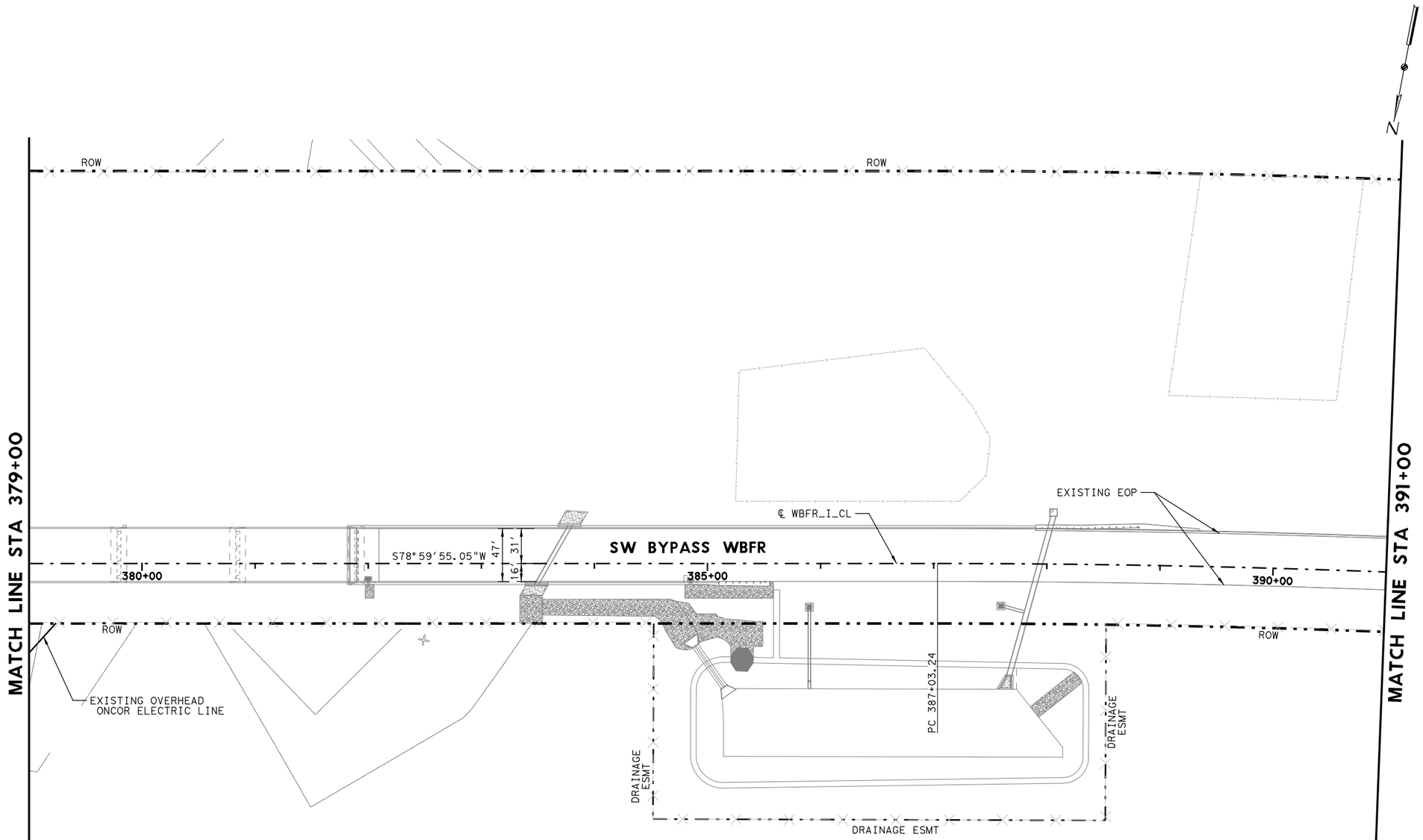

LEGEND

- W-30" — EXISTING 30" WATER LINE
- W-16" — EXISTING 16" WATER LINE
- E — EXISTING OVERHEAD ELECTRIC LINE
- UG-TELE — EXISTING UNDERGROUND TELEPHONE LINE
- OH-TELE — EXISTING OVERHEAD TELEPHONE LINE
- I G — ENTERPRISED PIPELINE
- uPETROp — PROPOSED PIPELINE

0 50 100 150 200

SCALE IN FEET

STATE OF TEXAS
JACOB E. WALKER
122057
LICENSED
PROFESSIONAL ENGINEER

03/23/2018

NO.	DATE	REVISION	APPROVED

WILLIAMSON COUNTY

HDR Engineering, Inc.
810 Hesters Crossing, Suite 120
Round Rock, Texas 78681
Texas Registered Engineering Firm F-754

SOUTHWEST BYPASS SEGMENT 2

UTILITY LAYOUT STA 379+00 TO STA 391+00

SCALE: 1"=100' SHEET 2 OF 8

DESIGN	FED.RD. DIV.NO.	FEDERAL AID PROJECT NO.		HIGHWAY NO.
JC	6			
GRAPHICS LG	STATE	DISTRICT	COUNTY	SHEET NO.
CHECK JW	TEXAS	AUS	WILLIAMSON	270
CHECK JC	CONTROL	SECTION	JOB	
	2103	01	034	

PLOT DRIVER: TXDOT_PDF_BW.pltcfg PENTABLE: S2-000002017018.tbl
USER: lgomezgonz DATE: 3/23/2018 TIME: 1:53:48 PM SCALE: 1:100
FILE: \

4/12/2018 7:20 AM

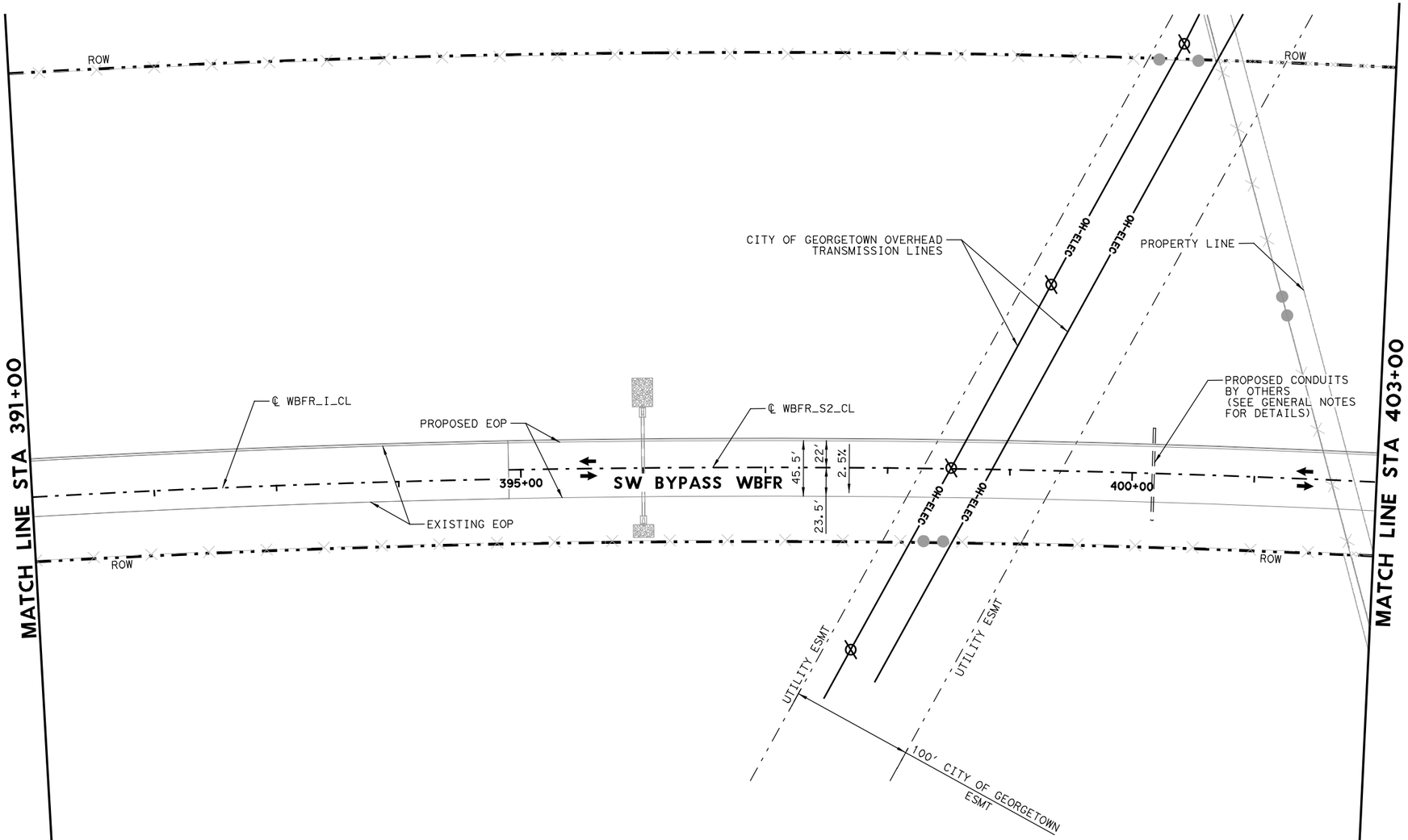

LEGEND

- W-30" — EXISTING 30" WATER LINE
- W-16" — EXISTING 16" WATER LINE
- E — EXISTING OVERHEAD ELECTRIC LINE
- UG-TELE — EXISTING UNDERGROUND TELEPHONE LINE
- OH-TELE — EXISTING OVERHEAD TELEPHONE LINE
- IG — ENTERPRISED PIPELINE
- uPETROp — PROPOSED PIPELINE

N

0 50 100 150 200

SCALE IN FEET

STATE OF TEXAS
JACOB E. WALKER
122057
LICENSED
PROFESSIONAL ENGINEER

03/23/2018

NO.	DATE	REVISION	APPROVED

WILLIAMSON COUNTY

HDR Engineering, Inc.
810 Hesters Crossing, Suite 120
Round Rock, Texas 78681
Texas Registered Engineering Firm F-754

SOUTHWEST BYPASS SEGMENT 2

UTILITY LAYOUT STA 391+00 TO STA 403+00

SCALE: 1"=100' SHEET 3 OF 8

DESIGN	FED.RD. DIV.NO.	FEDERAL AID PROJECT NO.		HIGHWAY NO.
JC	6			
GRAPHICS	STATE	DISTRICT	COUNTY	SHEET NO.
LG	TEXAS	AUS	WILLIAMSON	
CHECK	CONTROL	SECTION	JOB	271
JW	2103	01	034	
CHECK				
JC				

PLOT DRIVER: TXDOT_PDF_BW.pltcfg PENTABLE: S2-0000020170718.tbl
USER: lgomezgonz DATE: 3/23/2018 TIME: 1:53:50 PM SCALE: 1:100
FILE: \

4/12/2018 7:20 AM

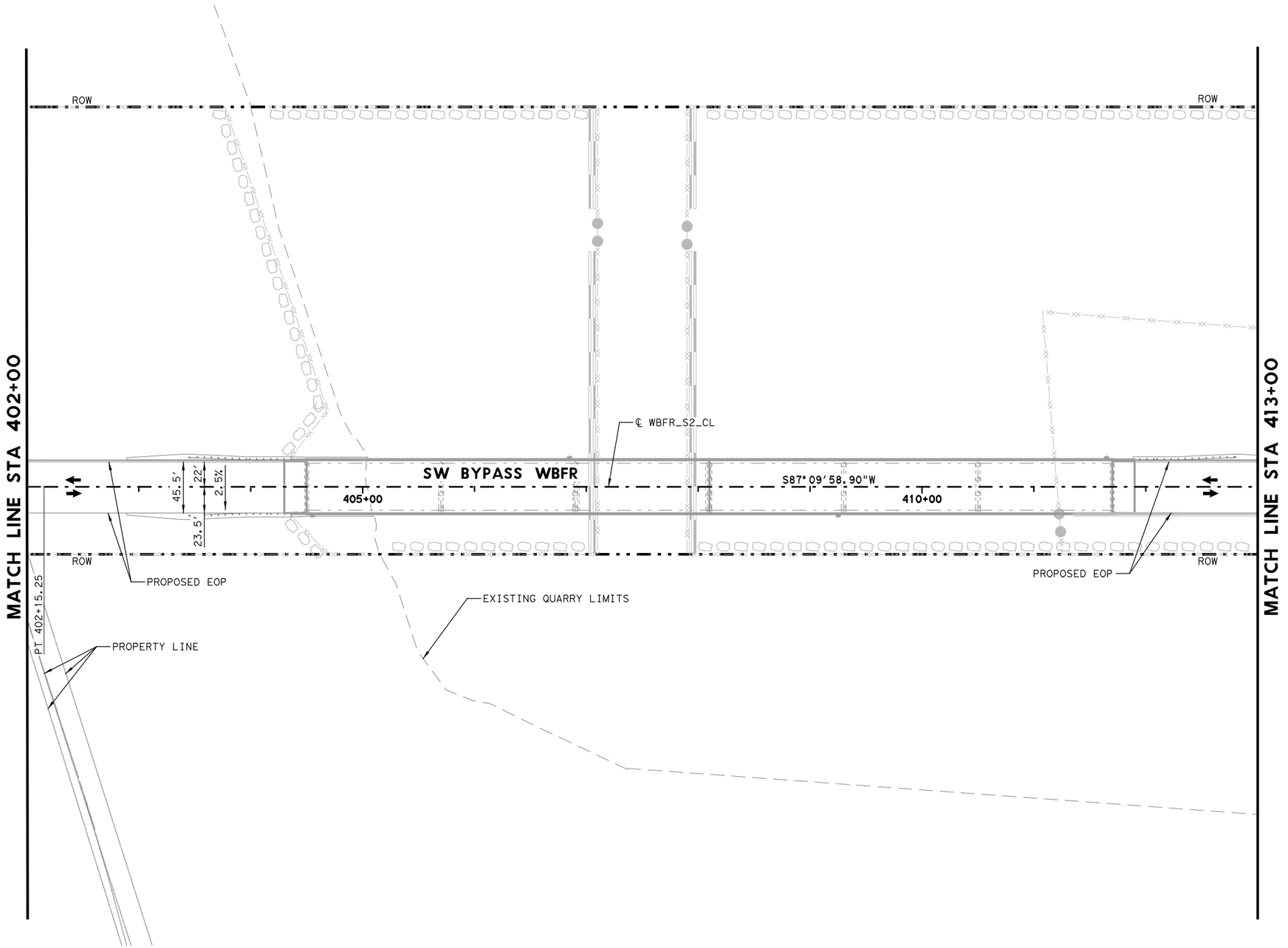

LEGEND

- W-30" — EXISTING 30" WATER LINE
- W-16" — EXISTING 16" WATER LINE
- E — EXISTING OVERHEAD ELECTRIC LINE
- UG-TELE — EXISTING UNDERGROUND TELEPHONE LINE
- OH-TELE — EXISTING OVERHEAD TELEPHONE LINE
- IG — ENTERPRISED PIPELINE
- uPETROp — PROPOSED PIPELINE

N

0 50 100 150 200

SCALE IN FEET

STATE OF TEXAS
JACOB E. WALKER
122057
LICENSED
PROFESSIONAL ENGINEER

03/23/2018

NO.	DATE	REVISION	APPROVED

WILLIAMSON COUNTY

HDR Engineering, Inc.
810 Hesters Crossing, Suite 120
Round Rock, Texas 78681
Texas Registered Engineering Firm F-754

SOUTHWEST BYPASS SEGMENT 2

UTILITY LAYOUT STA 402+00 TO STA 413+00

SCALE: 1"=100' SHEET 4 OF 8

DESIGN	FED.RD. DIV.NO.	FEDERAL AID PROJECT NO.		HIGHWAY NO.
JC	6			
GRAPHICS LG	STATE	DISTRICT	COUNTY	SHEET NO.
CHECK JW	TEXAS	AUS	WILLIAMSON	272
CHECK JC	CONTROL 2103	SECTION 01	JOB 034	

PLOT DRIVER: TXDOT_PDF_BW.pltcfg PENTABLE: S2-0000020170718.tbl
USER: lgomezgonz DATE: 3/23/2018 TIME: 1:53:55 PM SCALE: 1:100
FILE: \

4/12/2018 7:20 AM

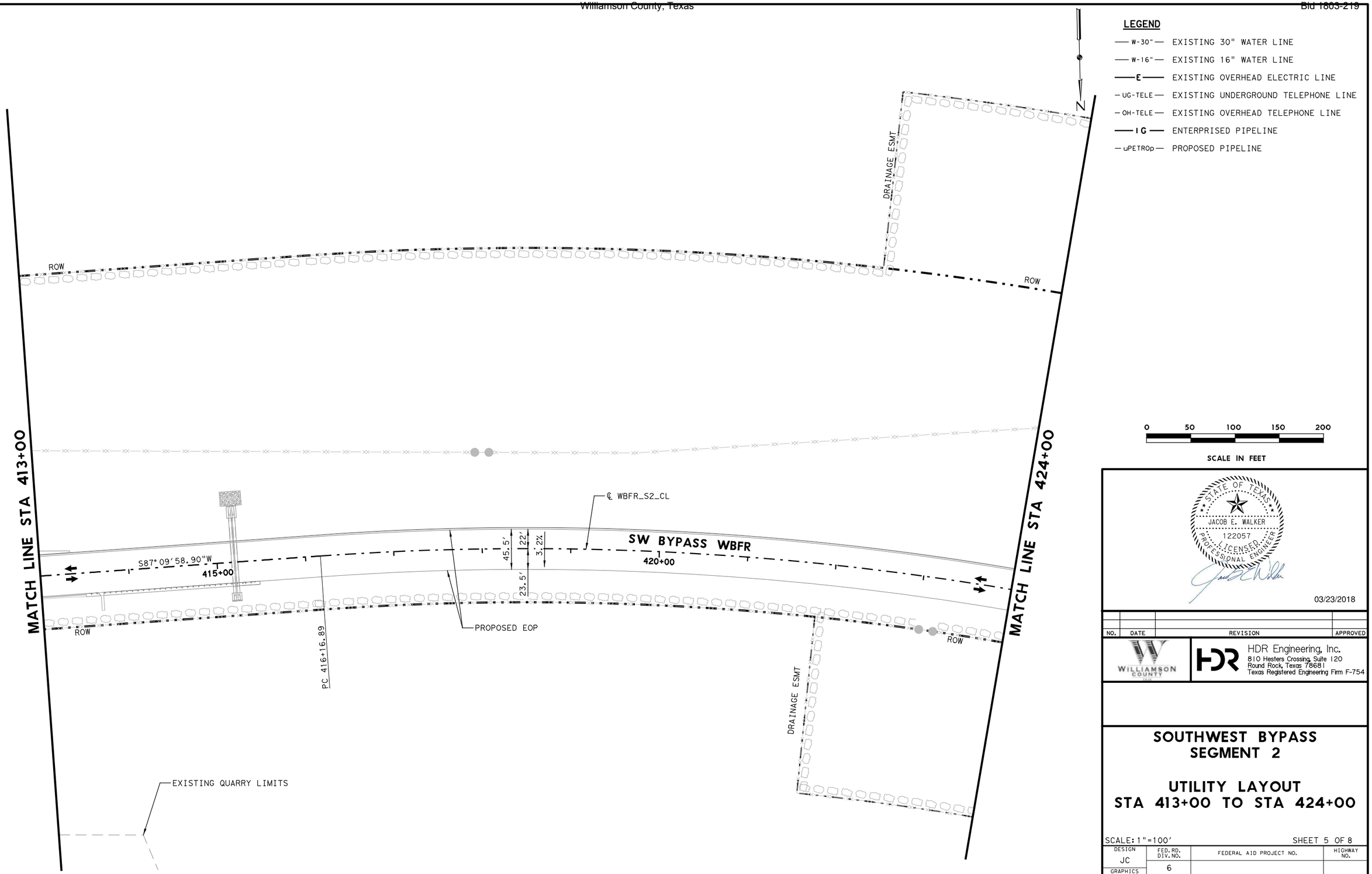

LEGEND

- W-30" — EXISTING 30" WATER LINE
- W-16" — EXISTING 16" WATER LINE
- E — EXISTING OVERHEAD ELECTRIC LINE
- UG-TELE — EXISTING UNDERGROUND TELEPHONE LINE
- OH-TELE — EXISTING OVERHEAD TELEPHONE LINE
- I G — ENTERPRISED PIPELINE
- uPETROp — PROPOSED PIPELINE

0 50 100 150 200

SCALE IN FEET

STATE OF TEXAS
JACOB E. WALKER
122057
LICENSED
PROFESSIONAL ENGINEER

03/23/2018

NO.	DATE	REVISION	APPROVED

WILLIAMSON COUNTY

HDR Engineering, Inc.
810 Hesters Crossing, Suite 120
Round Rock, Texas 78681
Texas Registered Engineering Firm F-754

SOUTHWEST BYPASS SEGMENT 2

UTILITY LAYOUT STA 413+00 TO STA 424+00

SCALE: 1"=100' SHEET 5 OF 8

DESIGN	FED. RD. DIV. NO.	FEDERAL AID PROJECT NO.		HIGHWAY NO.
JC	6			
GRAPHICS	STATE	DISTRICT	COUNTY	SHEET NO.
LG	TEXAS	AUS	WILLIAMSON	
CHECK	CONTROL	SECTION	JOB	273
JW	2103	01	034	
CHECK				
JC				

PLOT DRIVER: TXDOT_PDF_BW.pltcfg PENTABLE: S2-0000020f07f8.tbl
USER: lgomezgon2 TIME: 1:54:03 PM SCALE: 1:100
FILE: \ DATE: 3/23/2018

LEGEND

- W-30" — EXISTING 30" WATER LINE
- W-16" — EXISTING 16" WATER LINE
- E — EXISTING OVERHEAD ELECTRIC LINE
- UG-TELE — EXISTING UNDERGROUND TELEPHONE LINE
- OH-TELE — EXISTING OVERHEAD TELEPHONE LINE
- I G — ENTERPRISED PIPELINE
- uPETROp — PROPOSED PIPELINE

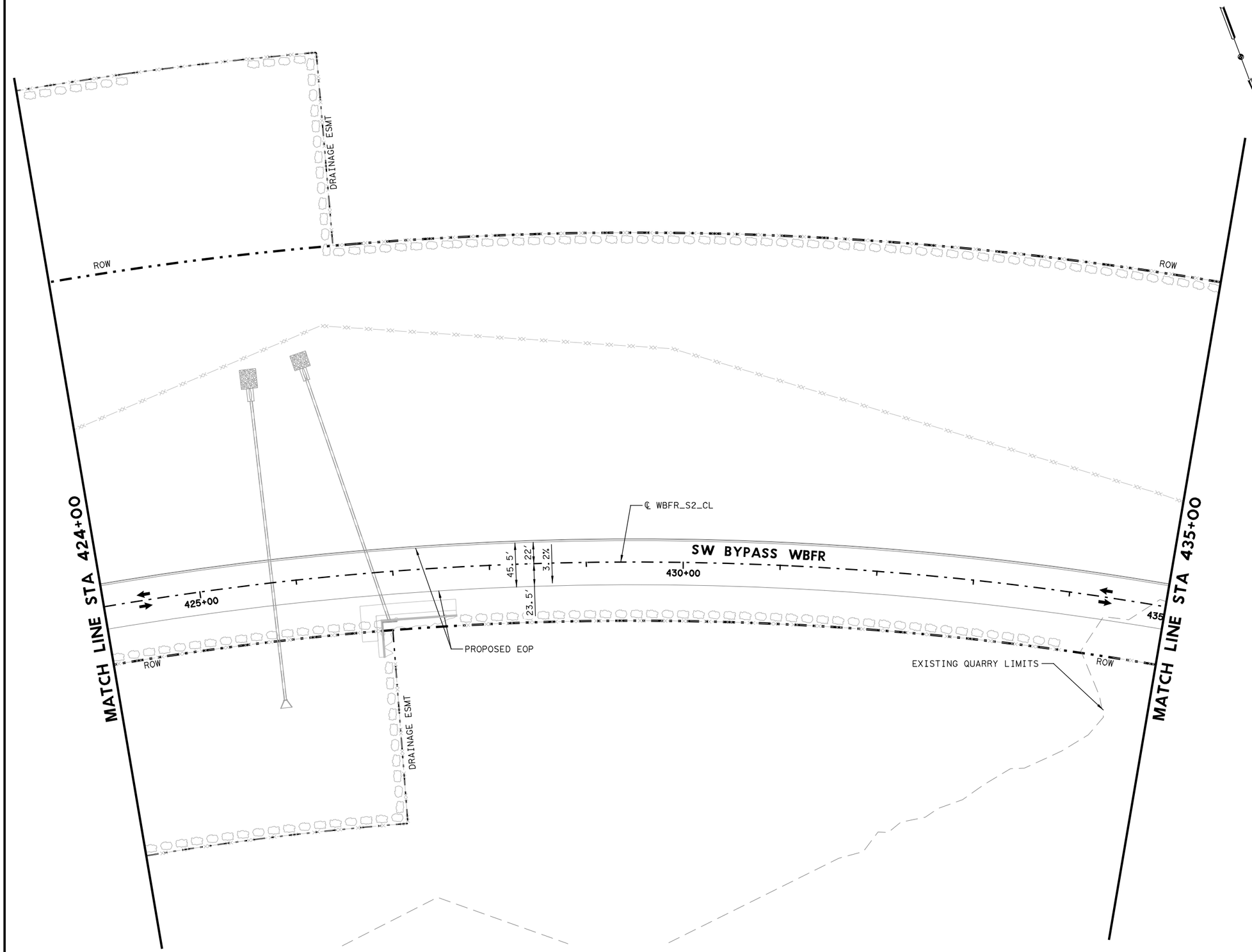

0 50 100 150 200

SCALE IN FEET

STATE OF TEXAS
JACOB E. WALKER
122057
LICENSED
PROFESSIONAL ENGINEER

03/23/2018

NO.	DATE	REVISION	APPROVED

WILLIAMSON COUNTY

HDR Engineering, Inc.
810 Hesters Crossing, Suite 120
Round Rock, Texas 78681
Texas Registered Engineering Firm F-754

SOUTHWEST BYPASS SEGMENT 2

UTILITY LAYOUT STA 424+00 TO STA 435+00

SCALE: 1"=100' SHEET 6 OF 8

DESIGN	FED.RD. DIV.NO.	FEDERAL AID PROJECT NO.		HIGHWAY NO.
JC	6			
GRAPHICS	STATE	DISTRICT	COUNTY	SHEET NO.
LG	TEXAS	AUS	WILLIAMSON	
CHECK	CONTROL	SECTION	JOB	274
JW	2103	01	034	
CHECK				
JC				

PLOT DRIVER: TXDOT_PDF_BW.pltcfg PENTABLE: S2-0000020170718.tbl
USER: lgomezgonz DATE: 3/23/2018 TIME: 15412 PM SCALE: 1:100
FILE: \

LEGEND

- W-30" EXISTING 30" WATER LINE
- W-16" EXISTING 16" WATER LINE
- E EXISTING OVERHEAD ELECTRIC LINE
- UG-TELE EXISTING UNDERGROUND TELEPHONE LINE
- OH-TELE EXISTING OVERHEAD TELEPHONE LINE
- IG ENTERPRISED PIPELINE
- uPETROp PROPOSED PIPELINE

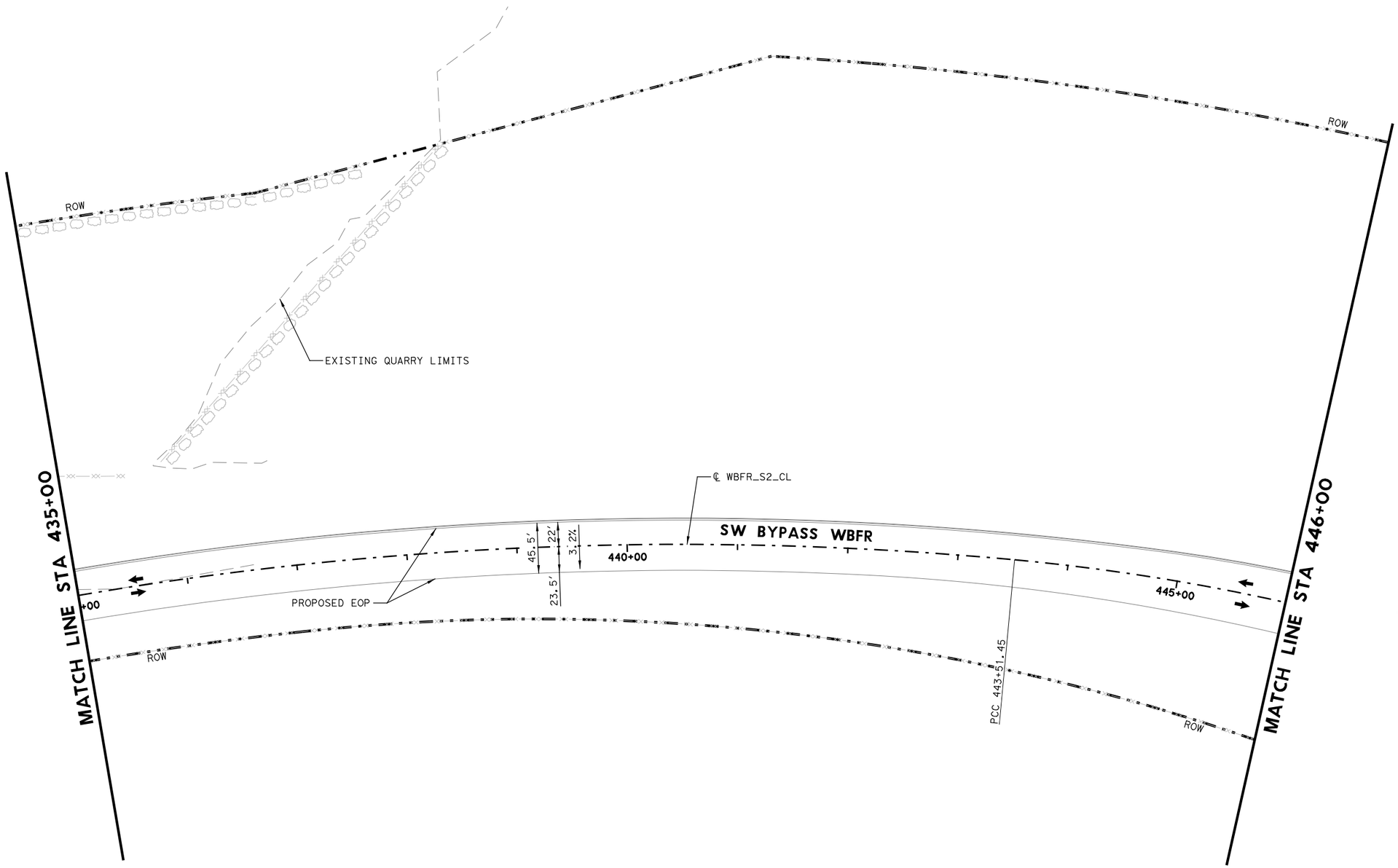

0 50 100 150 200

SCALE IN FEET

STATE OF TEXAS
JACOB E. WALKER
122057
LICENSED
PROFESSIONAL ENGINEER

03/23/2018

NO.	DATE	REVISION	APPROVED

WILLIAMSON COUNTY

HDR Engineering, Inc.
810 Hesters Crossing, Suite 120
Round Rock, Texas 78681
Texas Registered Engineering Firm F-754

SOUTHWEST BYPASS SEGMENT 2

UTILITY LAYOUT STA 435+00 TO STA 446+00

SCALE: 1"=100' SHEET 7 OF 8

DESIGN	FED.RD. DIV.NO.	FEDERAL AID PROJECT NO.		HIGHWAY NO.
JC	6			
GRAPHICS LG	STATE	DISTRICT	COUNTY	SHEET NO.
CHECK JW	TEXAS	AUS	WILLIAMSON	275
CHECK JC	CONTROL 2103	SECTION 01	JOB 034	

PLOT DRIVER: TXDOT_PDF_BW.pltcfg PENTABLE: S2-0000020170718.tbl
USER: lgomezgonz DATE: 3/23/2018 TIME: 1:54:19 PM SCALE: 1:100
FILE: \

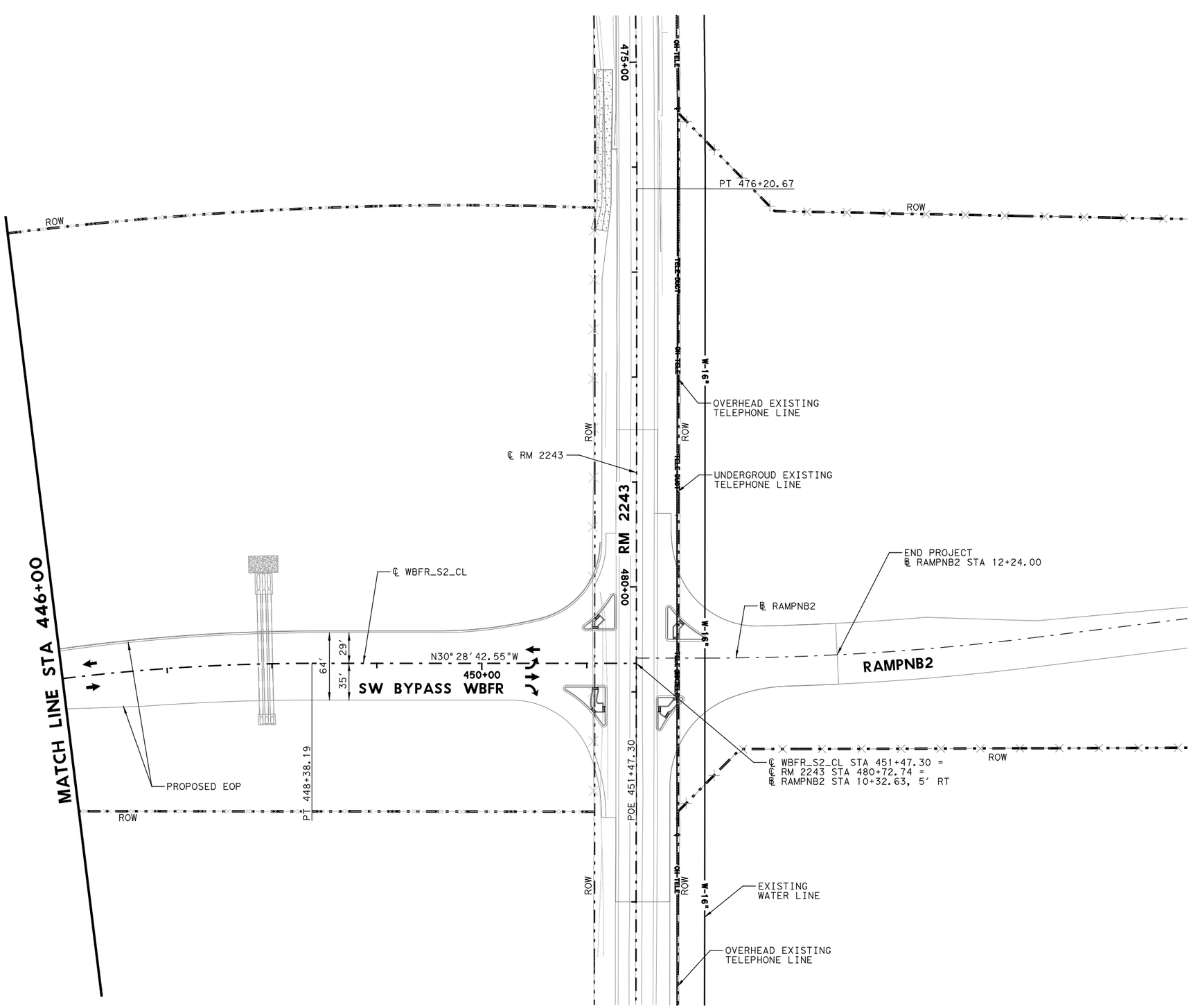

LEGEND

- W-30" — EXISTING 30" WATER LINE
- W-16" — EXISTING 16" WATER LINE
- E — EXISTING OVERHEAD ELECTRIC LINE
- UG-TELE — EXISTING UNDERGROUND TELEPHONE LINE
- OH-TELE — EXISTING OVERHEAD TELEPHONE LINE
- IG — ENTERPRISED PIPELINE
- uPETROp — PROPOSED PIPELINE

0 50 100 150 200

SCALE IN FEET

STATE OF TEXAS
JACOB E. WALKER
122057
LICENSED
PROFESSIONAL ENGINEER

03/23/2018

NO.	DATE	REVISION	APPROVED

WILLIAMSON COUNTY

HDR Engineering, Inc.
810 Hesters Crossing, Suite 120
Round Rock, Texas 78681
Texas Registered Engineering Firm F-754

SOUTHWEST BYPASS SEGMENT 2

UTILITY LAYOUT STA 446+00 TO END

SCALE: 1"=100' SHEET 8 OF 8

DESIGN	FED.RD. DIV.NO.	FEDERAL AID PROJECT NO.		HIGHWAY NO.
JC	6			
GRAPHICS LG	STATE	DISTRICT	COUNTY	SHEET NO.
CHECK JW	TEXAS	AUS	WILLIAMSON	276
CHECK JC	CONTROL	SECTION	JOB	
	2103	01	034	

PLOT DRIVER: TXDOT_PDF_BW.pltcfg PENTABLE: S2-0000020170718.tbl
USER: lgomezgonz DATE: 3/23/2018 TIME: 1:54:28 PM SCALE: 1:100
FILE: \

4/12/2018 7:20 AM

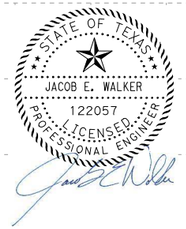

03/26/2018

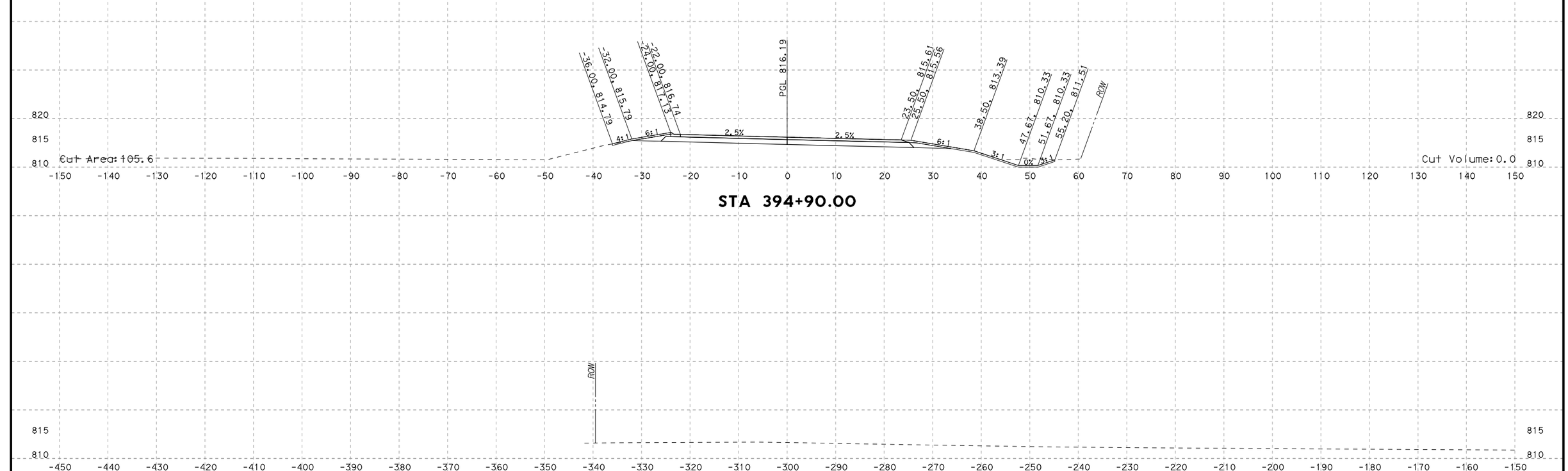

NO.	DATE	REVISION	APPROVED

WILLIAMSON COUNTY

HDR Engineering, Inc.
810 Hesters Crossing, Suite 120
Round Rock, Texas 78681
Texas Registered Engineering Firm F-754

STA 394+90.00

SCALE: HORIZ: 1"=20'
VERT: 1"=20'

SOUTHWEST BYPASS SEGMENT 2 - WBFR

SHEET NO.
XS-01

PLOT DRIVER: TXDOT_PDF_BW.pltcfg
USER: lgomezgonz DATE: 3/26/2018
FILE: \
PENTABLE: S2-0000020/T0718.tbl
TIME: 11:19:4 AM
SCALE: 1:20

4/12/2018 7:20 AM

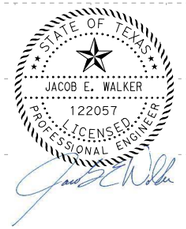

03/26/2018

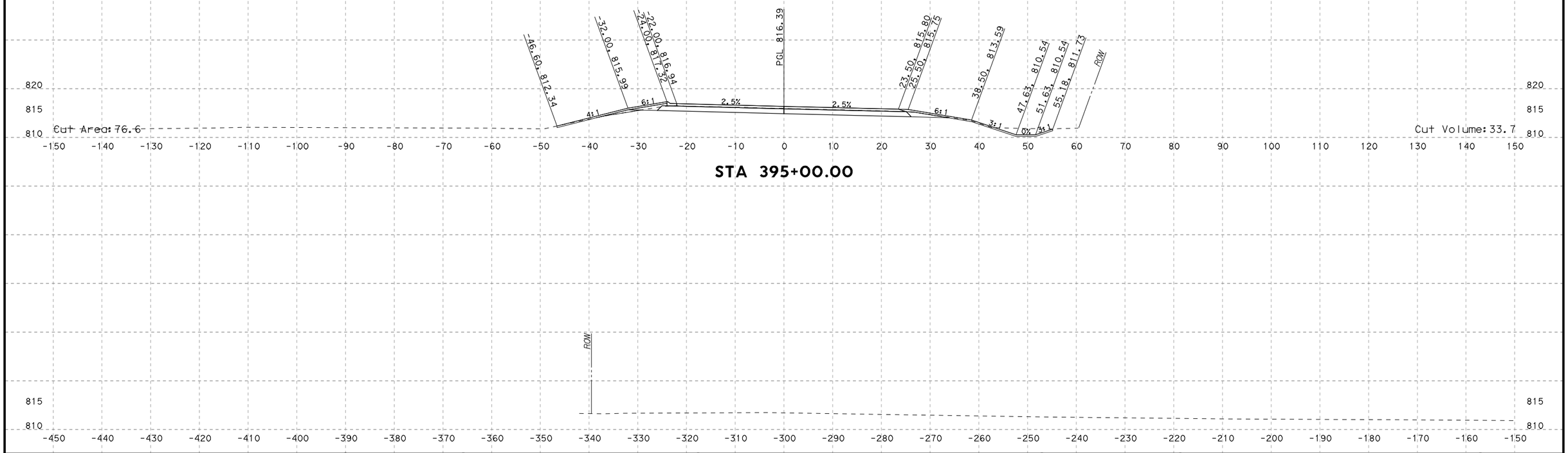

NO.	DATE	REVISION	APPROVED

HDR Engineering, Inc.
810 Hesters Crossing, Suite 120
Round Rock, Texas 78681
Texas Registered Engineering Firm F-754

STA 395+00.00

SCALE: HORIZ: 1"=20'
VERT: 1"=20'

SOUTHWEST BYPASS SEGMENT 2 - WBFR

SHEET NO.
XS-02

PLOT DRIVER: TXDOT_PDF_BW.pltcfg
USER: lgomezgonz
FILE: \
DATE: 3/26/2018
TIME: 11:19:8 AM
PENTABLE: S2-0000020I0718.tbl
SCALE: 1:20

4/12/2018 7:20 AM

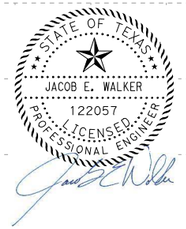

03/26/2018

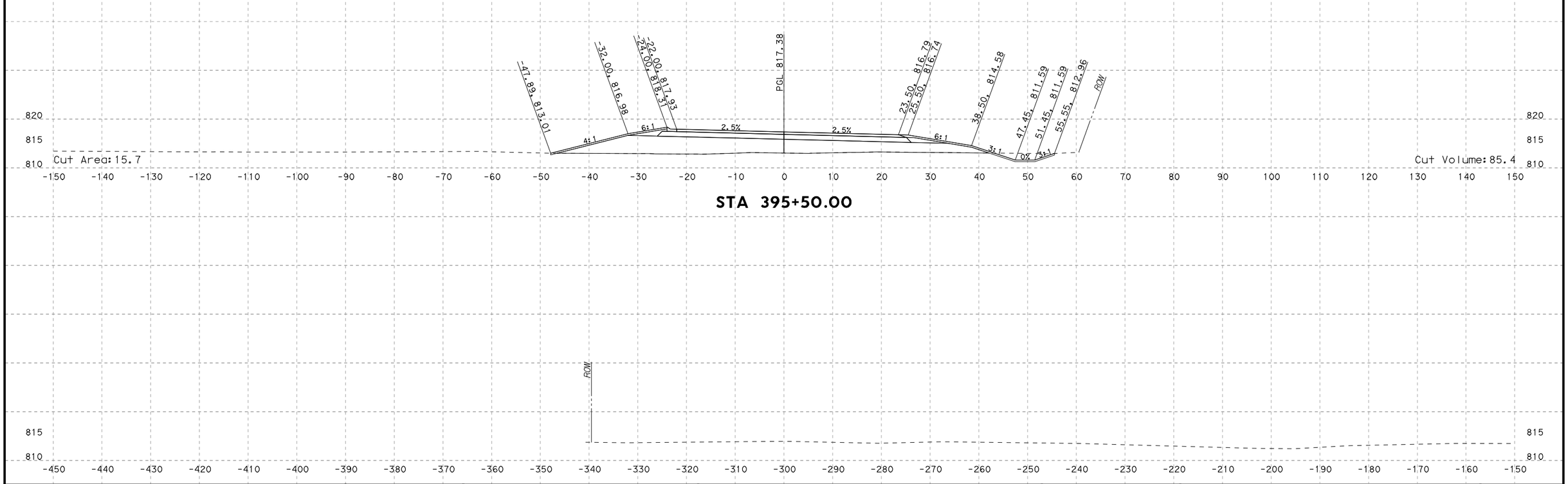

STA 395+50.00

NO.	DATE	REVISION	APPROVED

HDR Engineering, Inc.
810 Hesters Crossing, Suite 120
Round Rock, Texas 78681
Texas Registered Engineering Firm F-754

STA 395+50.00

SCALE: HORIZ: 1"=20'
VERT: 1"=20'

SOUTHWEST BYPASS SEGMENT 2 - WBFR

SHEET NO.
XS-03

PLOT DRIVER: TXDOT_PDF_BW.pltcfg
USER: lgomezgonz
FILE: \
DATE: 3/26/2018
TIME: 11:19:21 AM
PENTABLE: S2-0000020/T0718.tbl
SCALE: 1:20

4/12/2018 7:20 AM

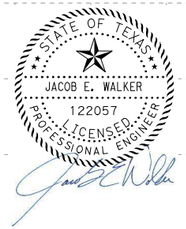

03/26/2018

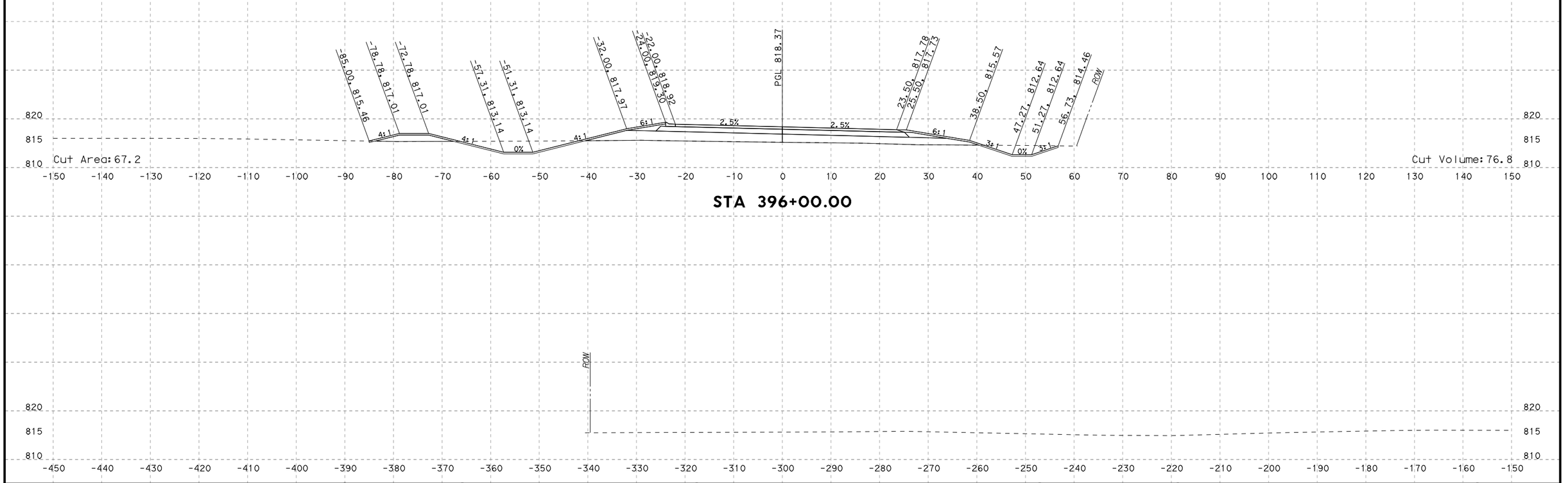

NO.	DATE	REVISION	APPROVED

HDR Engineering, Inc.
810 Hesters Crossing, Suite 120
Round Rock, Texas 78681
Texas Registered Engineering Firm F-754

STA 396+00.00

SCALE: HORIZ: 1"=20'
VERT: 1"=20'

SOUTHWEST BYPASS
SEGMENT 2 - WBFR

SHEET NO.
XS-04

PLOT DRIVER: TXDOT_PDF_BW.pltcfg
USER: lgomezgonz
FILE: \
DATE: 3/26/2018
TIME: 11:19:24 AM
PENTABLE: S2-0000020/T0718.tbl
SCALE: 1:20

4/12/2018 7:20 AM

STATE OF TEXAS
JACOB E. WALKER
122057
LICENSED
PROFESSIONAL ENGINEER

03/26/2018

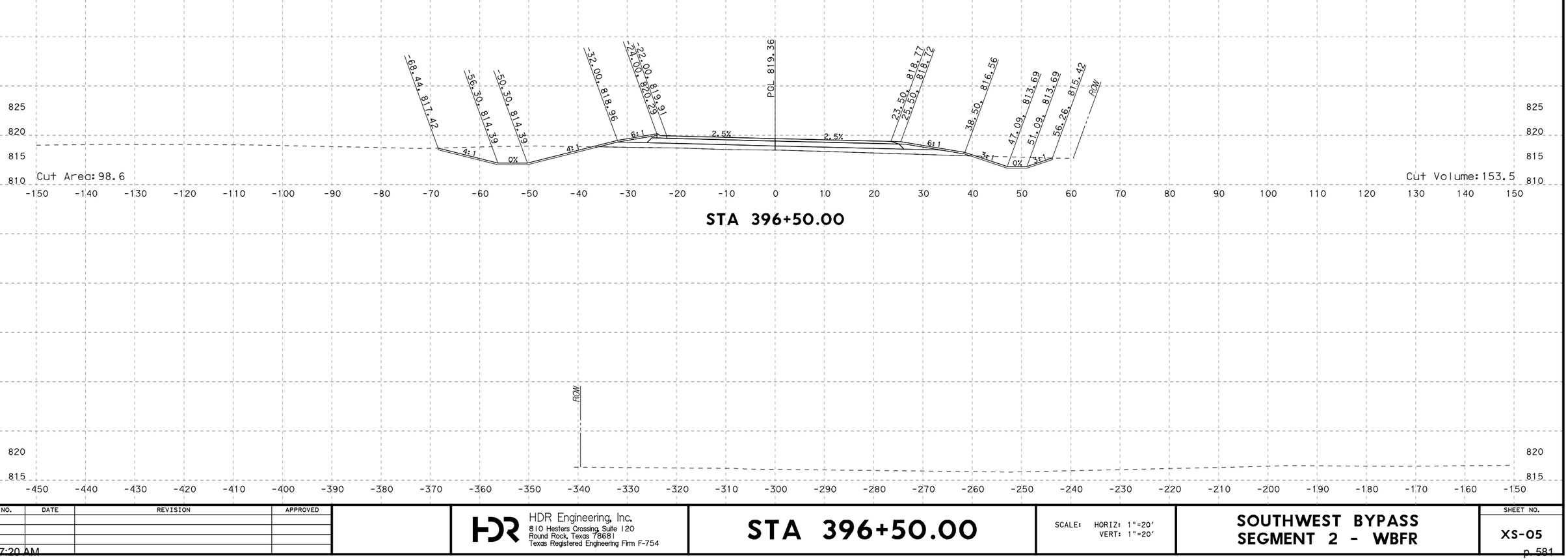

STA 396+50.00

PLOT DRIVER: TXDOT_PDF_BW.pltcfg
USER: lgomezgonz
FILE: \
PENTABLE: S2-0000020I7018.tbl
TIME: 11:19:27 AM
DATE: 3/26/2018
SCALE: 1:20

NO.	DATE	REVISION	APPROVED

HDR Engineering, Inc.
810 Hesters Crossing, Suite 120
Round Rock, Texas 78681
Texas Registered Engineering Firm F-754

STA 396+50.00

SCALE: HORIZ: 1"=20'
VERT: 1"=20'

SOUTHWEST BYPASS SEGMENT 2 - WBFR

SHEET NO.
XS-05

STATE OF TEXAS
JACOB E. WALKER
122057
LICENSED
PROFESSIONAL ENGINEER

03/26/2018

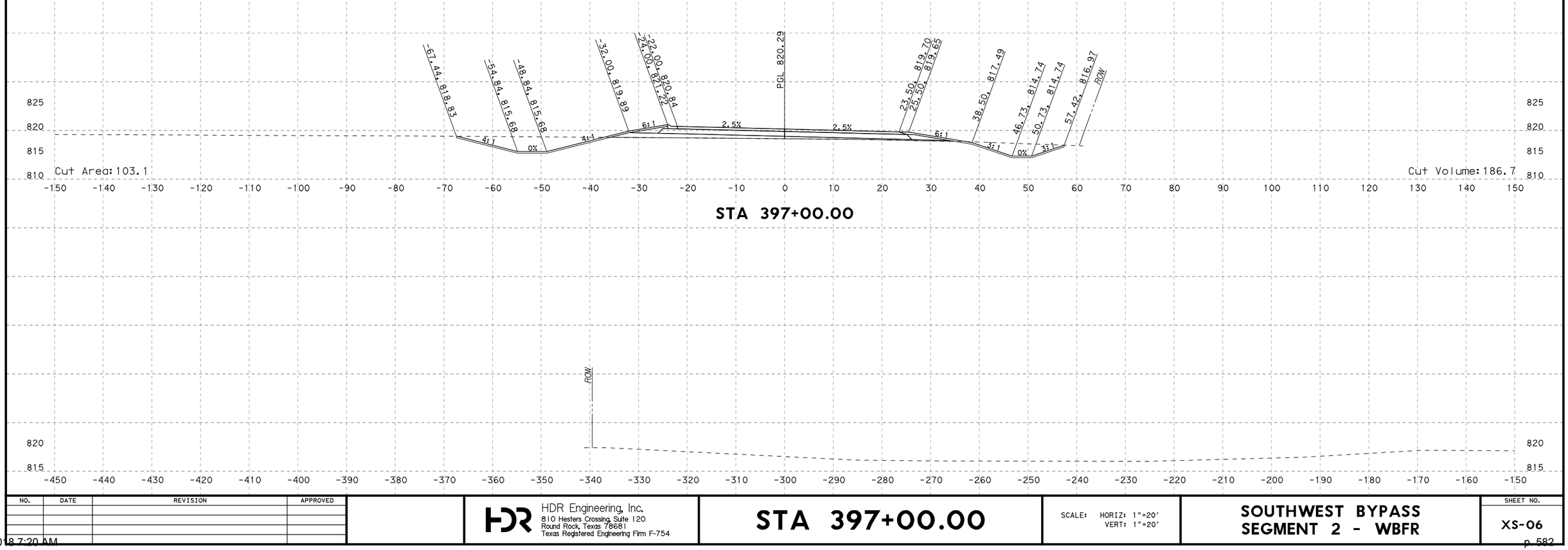

NO.	DATE	REVISION	APPROVED

HDR Engineering, Inc.
810 Hesters Crossing, Suite 120
Round Rock, Texas 78681
Texas Registered Engineering Firm F-754

STA 397+00.00

SCALE: HORIZ: 1"=20'
VERT: 1"=20'

SOUTHWEST BYPASS
SEGMENT 2 - WBFR

SHEET NO.
XS-06

PLOT DRIVER: TXDOT_PDF_BW.pltcfg
USER: lgomezgonz
FILE: \
PENTABLE: S2-00000201707l8.tbl
DATE: 3/26/2018
TIME: 11:09:30 AM
SCALE: 1:20

4/12/2018 7:20 AM

STATE OF TEXAS
JACOB E. WALKER
122057
LICENSED
PROFESSIONAL ENGINEER

03/26/2018

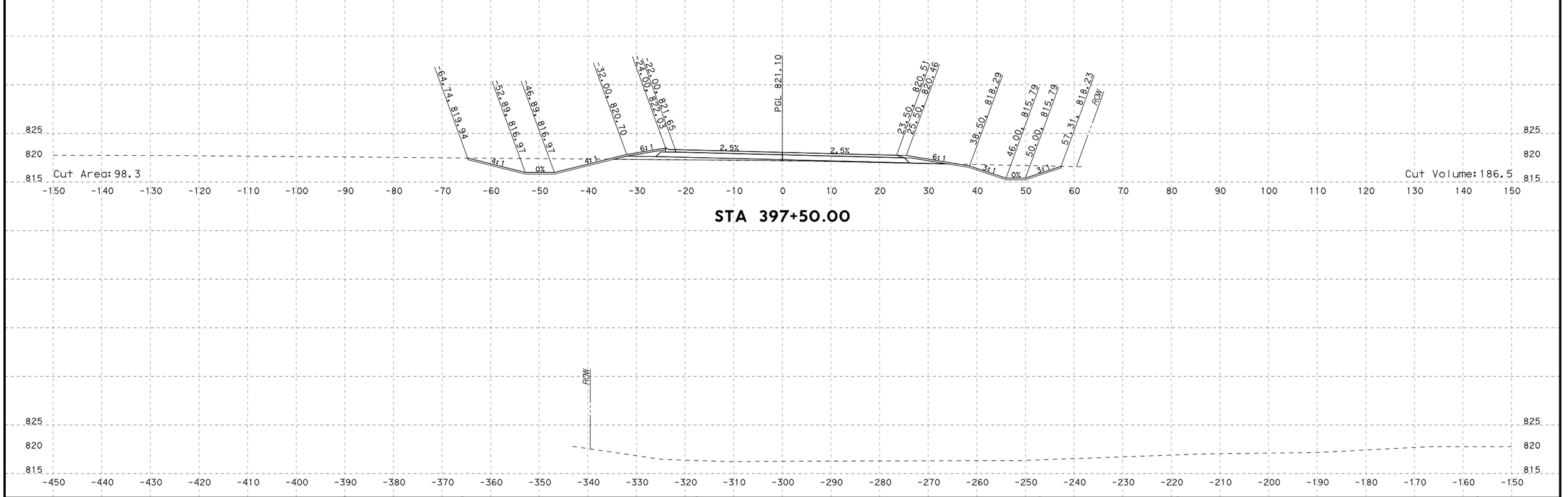

NO.	DATE	REVISION	APPROVED

HDR Engineering, Inc.
810 Hesters Crossing, Suite 120
Round Rock, Texas 78681
Texas Registered Engineering Firm F-754

STA 397+50.00

SCALE: HORIZ: 1"=20'
VERT: 1"=20'

SOUTHWEST BYPASS SEGMENT 2 - WBFR

SHEET NO.
XS-07

PLOT DRIVER: TXDOT_PDF_BW.pltcfg
USER: lgomezgonz
FILE: \
DATE: 3/26/2018
TIME: 11:19:34 AM
PENTABLE: S2-0000020I0718.tbl
SCALE: 1:20

4/12/2018 7:20 AM

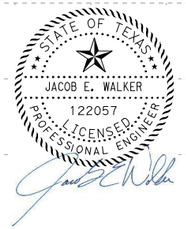

03/26/2018

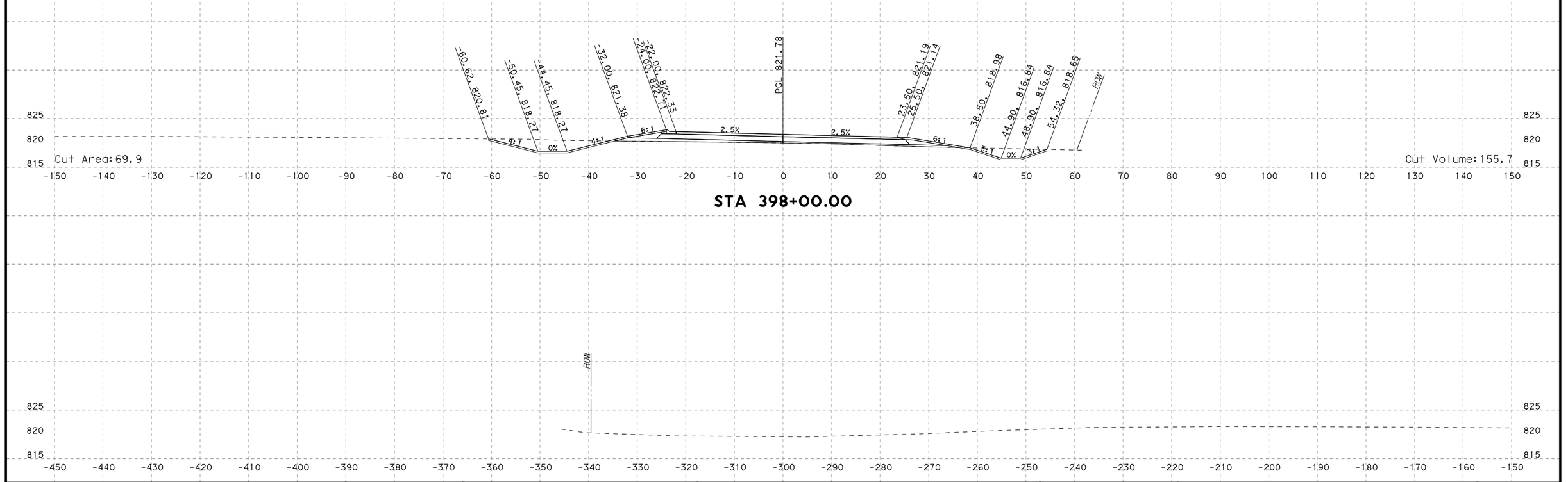

NO.	DATE	REVISION	APPROVED

HDR Engineering, Inc.
810 Hesters Crossing, Suite 120
Round Rock, Texas 78681
Texas Registered Engineering Firm F-754

STA 398+00.00

SCALE: HORIZ: 1"=20'
VERT: 1"=20'

SOUTHWEST BYPASS SEGMENT 2 - WBFR

SHEET NO.
XS-08

PLOT DRIVER: TXDOT_PDF_BW.pltcfg
USER: lgomezgonz DATE: 3/26/2018
FILE: \
PENTABLE: S2-0000020/T0718.tbl
TIME: 11:19:37 AM
SCALE: 1:20

4/12/2018 7:20 AM

STATE OF TEXAS
JACOB E. WALKER
122057
LICENSED
PROFESSIONAL ENGINEER

03/26/2018

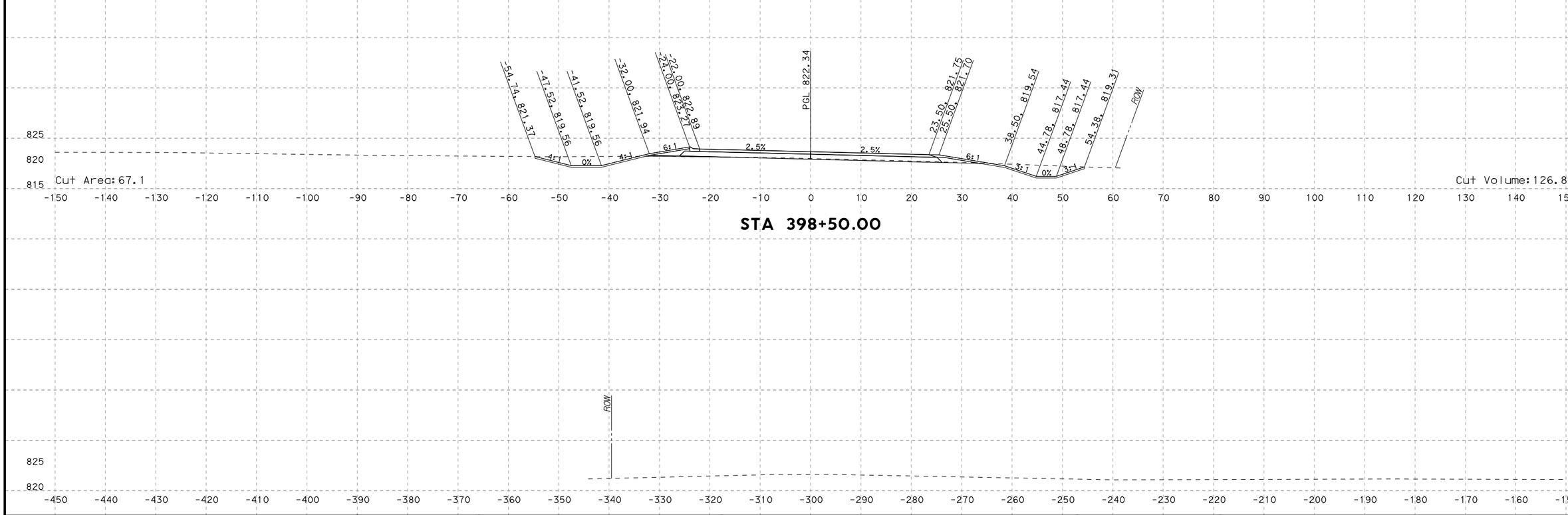

NO.	DATE	REVISION	APPROVED

HDR Engineering, Inc.
810 Hesters Crossing, Suite 120
Round Rock, Texas 78681
Texas Registered Engineering Firm F-754

STA 398+50.00

SCALE: HORIZ: 1"=20'
VERT: 1"=20'

SOUTHWEST BYPASS
SEGMENT 2 - WBFR

SHEET NO.
XS-09

PLOT DRIVER: TXDOT_PDF_BW.pltcfg
USER: lgomezgonz DATE: 3/26/2018
FILE: \
TIME: 11:19:40 AM
PENTABLE: S2-0000020I0718.tbl
SCALE: 1:20

4/12/2018 7:20 AM

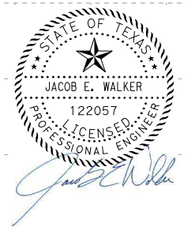

03/26/2018

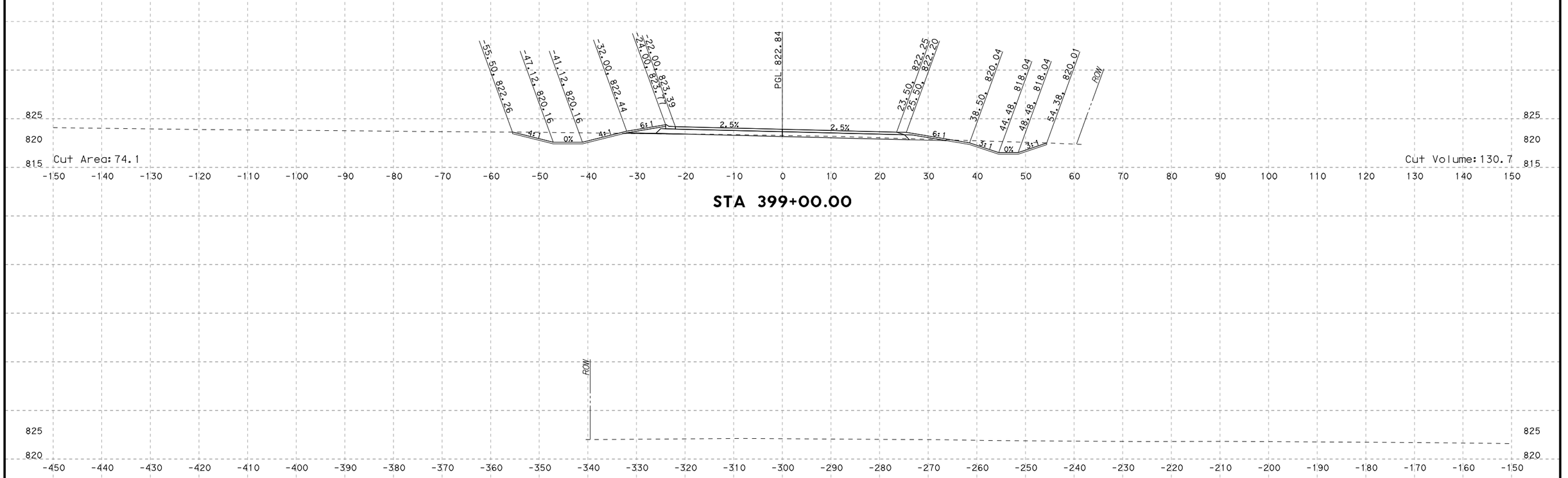

NO.	DATE	REVISION	APPROVED

HDR Engineering, Inc.
810 Hesters Crossing, Suite 120
Round Rock, Texas 78681
Texas Registered Engineering Firm F-754

STA 399+00.00

SCALE: HORIZ: 1"=20'
VERT: 1"=20'

SOUTHWEST BYPASS
SEGMENT 2 - WBFR

SHEET NO.
XS-10

PLOT DRIVER: TXDOT_PDF_BW.pltcfg
USER: lgomezgonz
FILE: \
PENTABLE: S2-0000020I0718.tbl
DATE: 3/26/2018
TIME: 11:19:43 AM
SCALE: 1:20

4/12/2018 7:20 AM

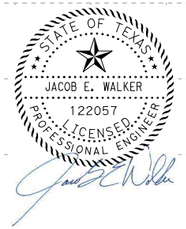

03/26/2018

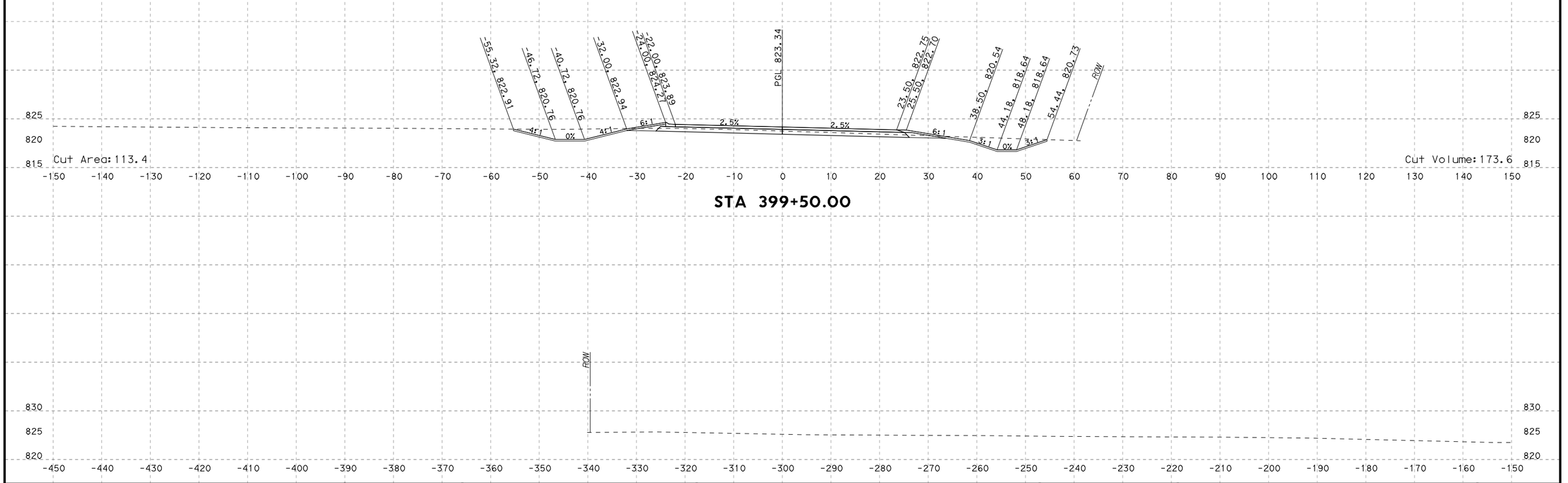

NO.	DATE	REVISION	APPROVED

HDR Engineering, Inc.
810 Hesters Crossing, Suite 120
Round Rock, Texas 78681
Texas Registered Engineering Firm F-754

STA 399+50.00

SCALE: HORIZ: 1"=20'
VERT: 1"=20'

SOUTHWEST BYPASS SEGMENT 2 - WBFR

SHEET NO.
XS-11

PLOT DRIVER: TXDOT_PDF_BW.pltcfg PENTABLE: S2-0000020/T0718.tbl
USER: lgomezgonz DATE: 3/26/2018 TIME: 11:19:47 AM SCALE: 1:20
FILE: \

4/12/2018 7:20 AM

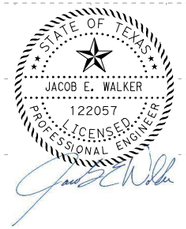

03/26/2018

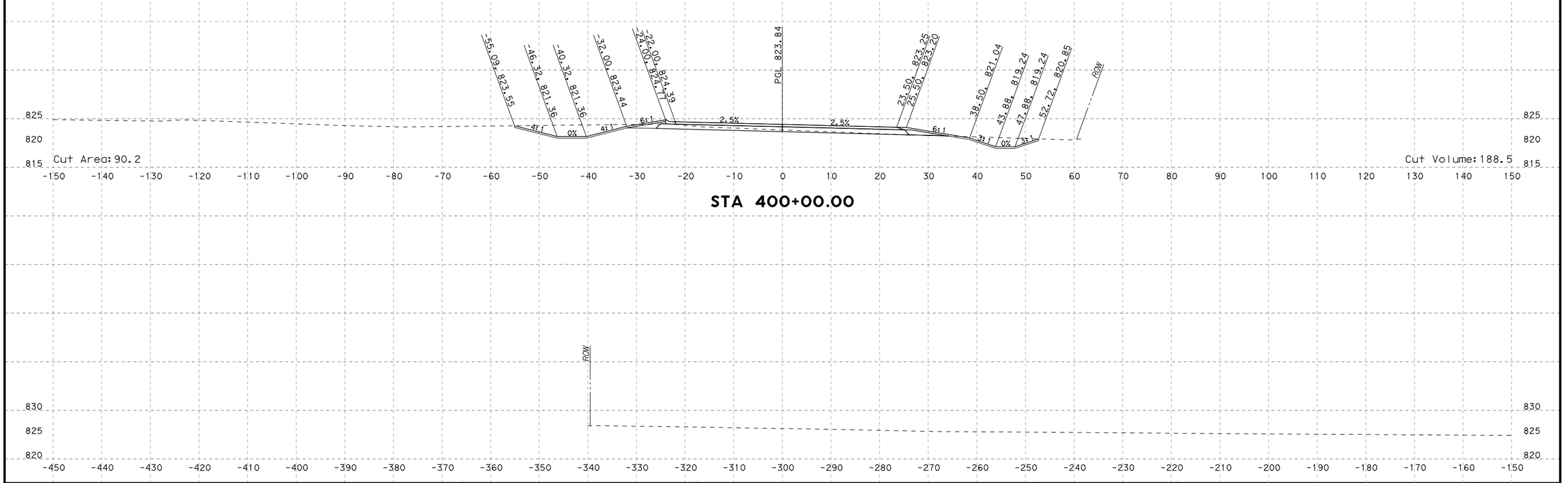

STA 400+00.00

NO.	DATE	REVISION	APPROVED

HDR Engineering, Inc.
810 Hesters Crossing, Suite 120
Round Rock, Texas 78681
Texas Registered Engineering Firm F-754

STA 400+00.00

SCALE: HORIZ: 1"=20'
VERT: 1"=20'

SOUTHWEST BYPASS
SEGMENT 2 - WBFR

SHEET NO.
XS-12

PLOT DRIVER: TXDOT_PDF_BW.pltcfg
USER: lgomezgonz DATE: 3/26/2018
FILE: \
PENTABLE: S2-0000020I0718.tbl
TIME: 11:9:50 AM SCALE: 1:20

4/12/2018 7:20 AM

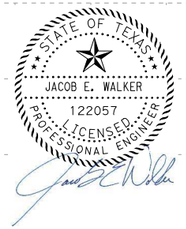

03/26/2018

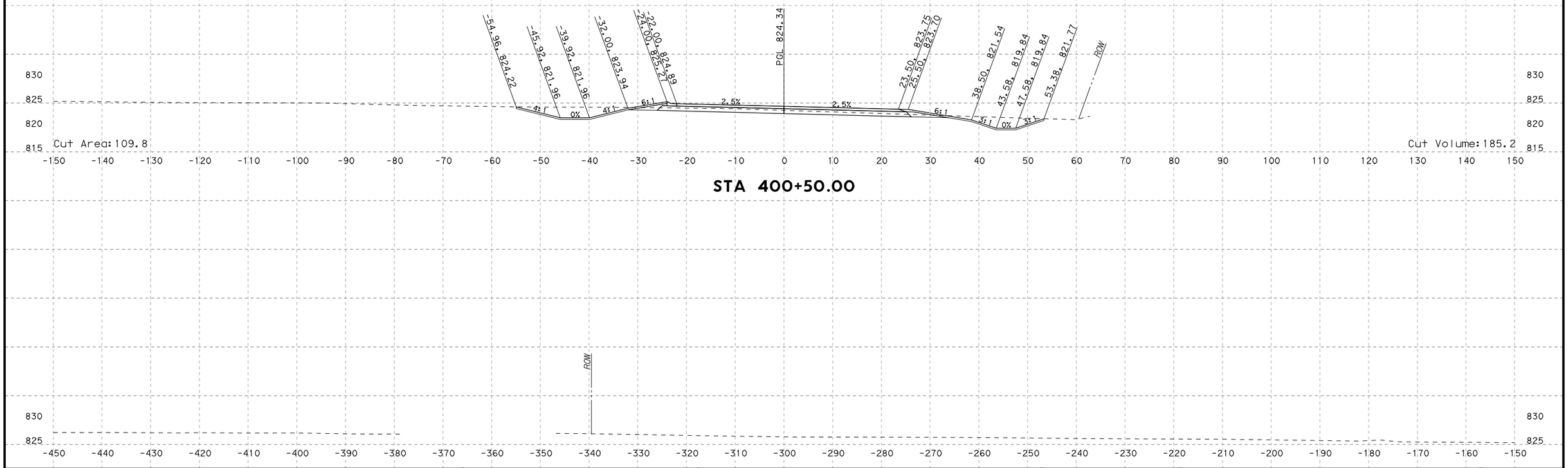

NO.	DATE	REVISION	APPROVED

HDR Engineering, Inc.
810 Hesters Crossing, Suite 120
Round Rock, Texas 78681
Texas Registered Engineering Firm F-754

STA 400+50.00

SCALE: HORIZ: 1"=20'
VERT: 1"=20'

SOUTHWEST BYPASS
SEGMENT 2 - WBFR

SHEET NO.
XS-13

PLOT DRIVER: TXDOT_PDF_BW.pltcfg
USER: lgomezgonz
FILE: \
PENTABLE: S2-0000020I0718.tbl
DATE: 3/26/2018
TIME: 11:9:53 AM
SCALE: h:20

4/12/2018 7:20 AM

STATE OF TEXAS
JACOB E. WALKER
122057
LICENSED
PROFESSIONAL ENGINEER

03/26/2018

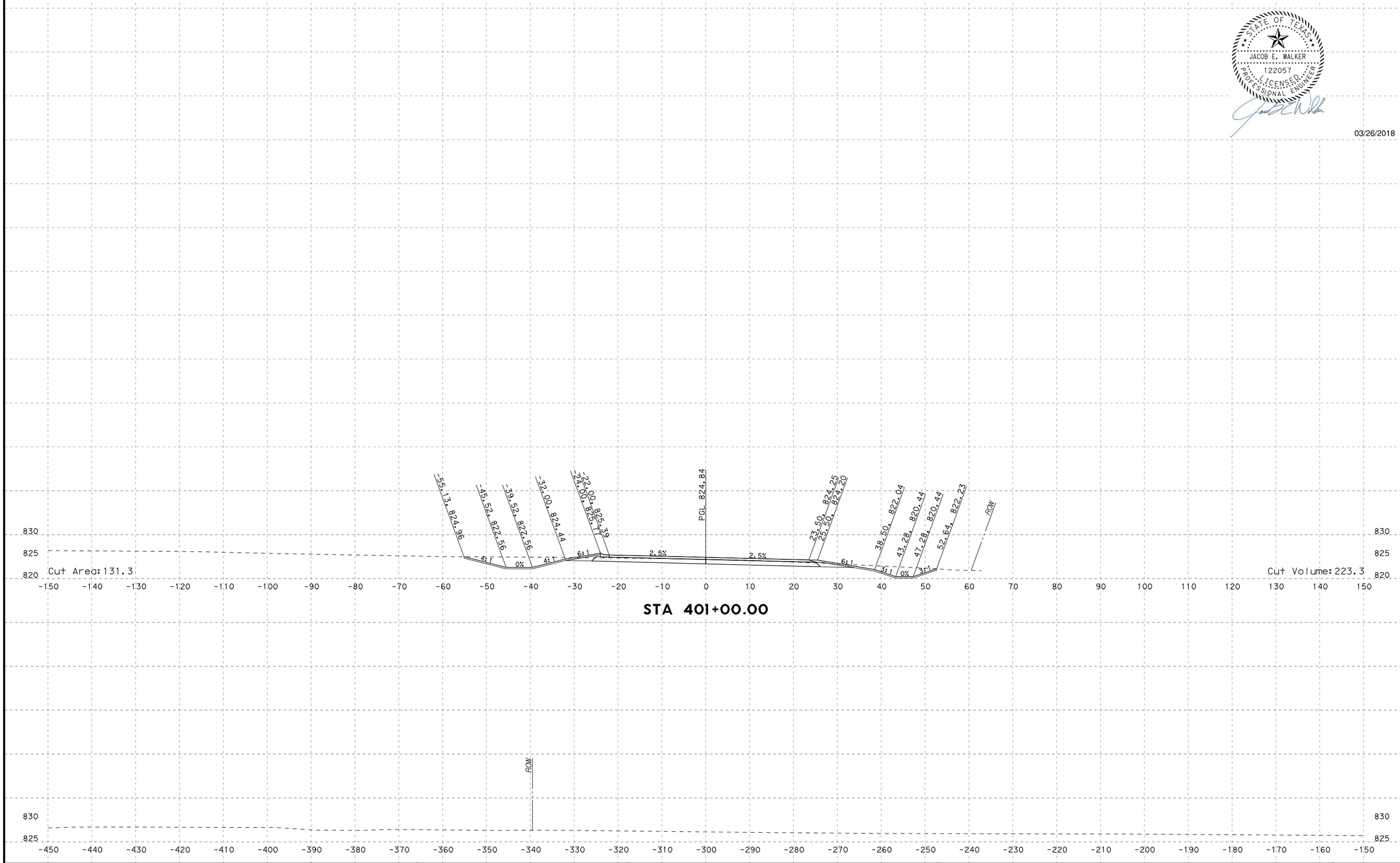

STA 401+00.00

NO.	DATE	REVISION	APPROVED

HDR Engineering, Inc.
810 Hesters Crossing, Suite 120
Round Rock, Texas 78681
Texas Registered Engineering Firm F-754

STA 401+00.00

SCALE: HORIZ: 1"=20'
VERT: 1"=20'

SOUTHWEST BYPASS
SEGMENT 2 - WBFR

SHEET NO.
XS-14

PLOT DRIVER: TXDOT_PDF_BW.pltcfg
USER: lgomezgonz
FILE: \
DATE: 3/26/2018
TIME: 11:19:57 AM
PENTABLE: S2-0000020/T0718.tbl
SCALE: 1:20

4/12/2018 7:20 AM

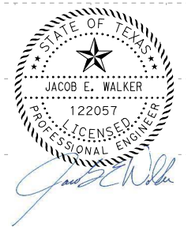

03/26/2018

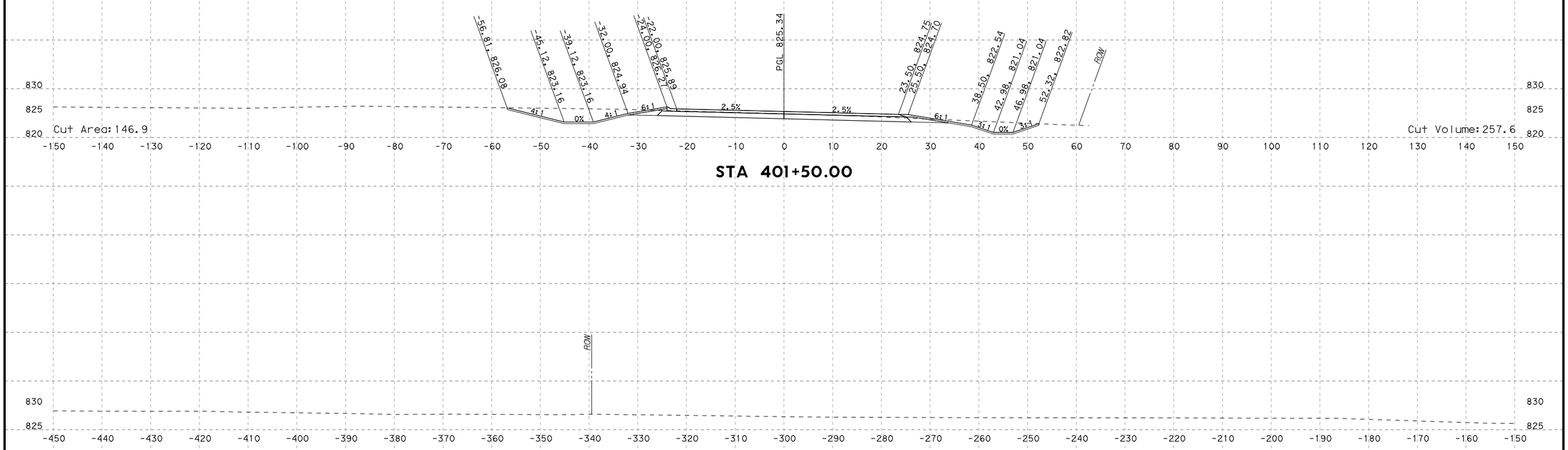

NO.	DATE	REVISION	APPROVED

HDR Engineering, Inc.
810 Hesters Crossing, Suite 120
Round Rock, Texas 78681
Texas Registered Engineering Firm F-754

STA 401+50.00

SCALE: HORIZ: 1"=20'
VERT: 1"=20'

SOUTHWEST BYPASS
SEGMENT 2 - WBFR

SHEET NO.
XS-15

PLOT DRIVER: TXDOT_PDF_BW.pltcfg
USER: lgomezgonz
FILE: \
DATE: 3/26/2018
TIME: 11:20:00 AM
PENTABLE: S2-0000020I0718.tbl
SCALE: 1:20

4/12/2018 7:20 AM

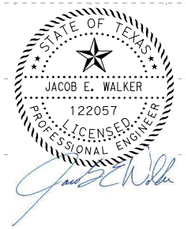

03/26/2018

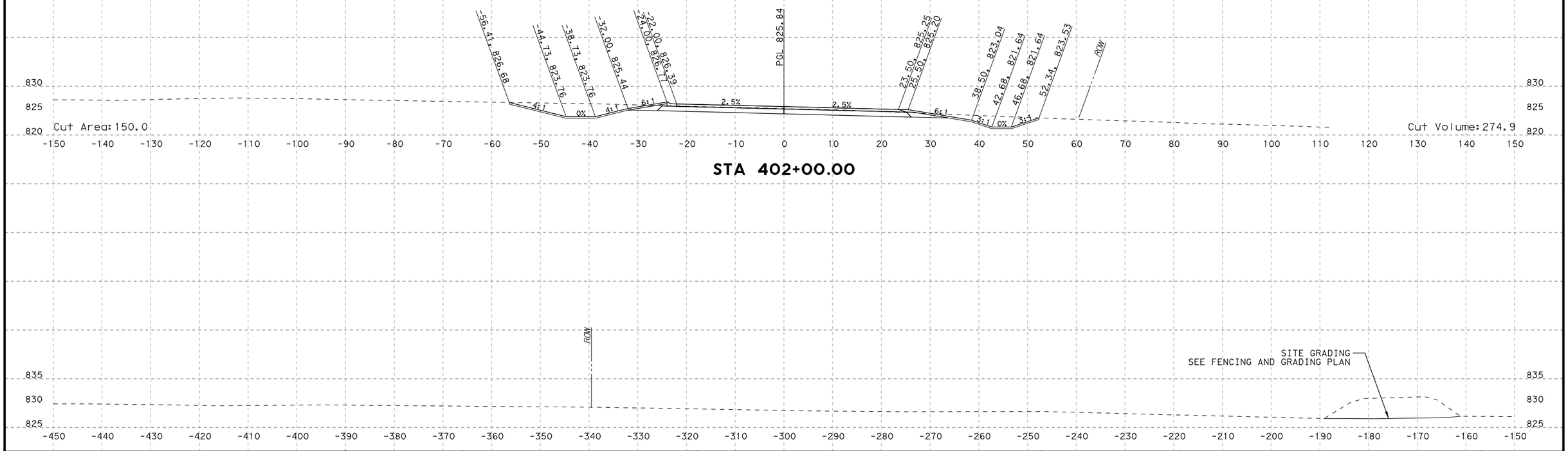

STA 402+00.00

NO.	DATE	REVISION	APPROVED

HDR Engineering, Inc.
810 Hesters Crossing, Suite 120
Round Rock, Texas 78681
Texas Registered Engineering Firm F-754

STA 402+00.00

SCALE: HORIZ: 1"=20'
VERT: 1"=20'

SOUTHWEST BYPASS SEGMENT 2 - WBFR

SHEET NO.
XS-16

PLOT DRIVER: TXDOT_PDF_BW.pltcfg
USER: lgomezgonz
FILE: \
DATE: 3/26/2018
TIME: 11:20:04 AM
PENTABLE: S2-0000020I0718.tbl
SCALE: 1:20

4/12/2018 7:20 AM

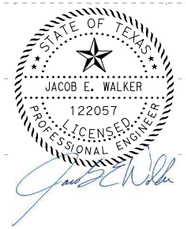

03/26/2018

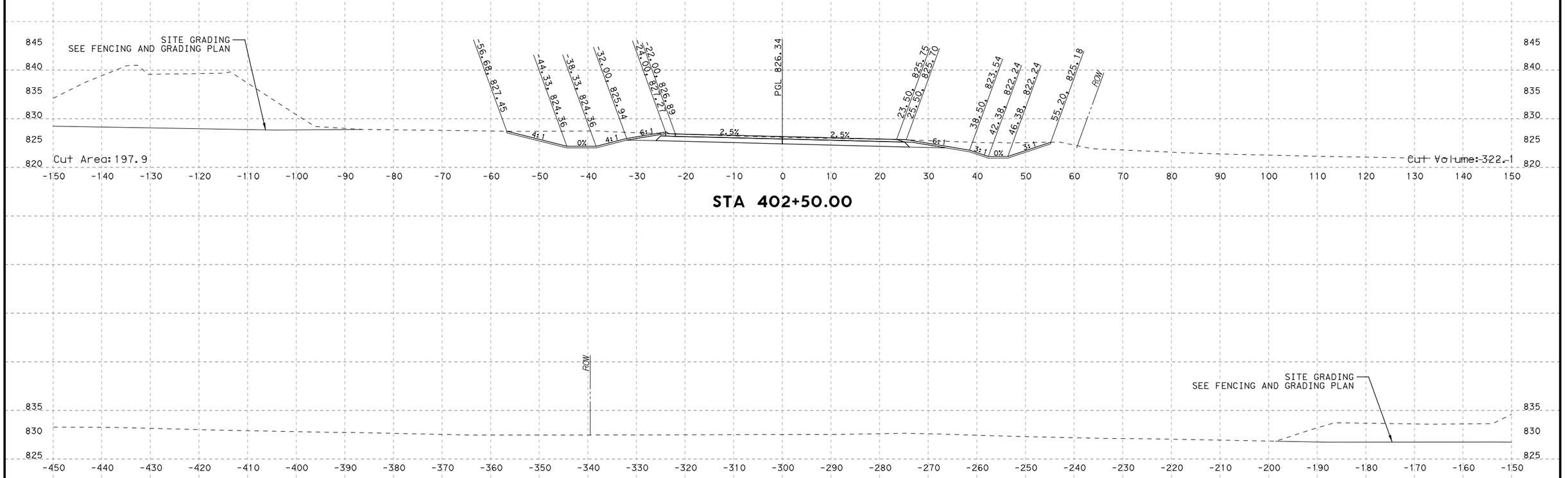

PLOT DRIVER: TXDOT_PDF_BW.pltcfg
USER: lgomezgonz
FILE: \
PENTABLE: S2-0000020/0718.tbl
TIME: 11:20:07 AM
DATE: 3/26/2018
SCALE: h:20

NO.	DATE	REVISION	APPROVED

HDR Engineering, Inc.
810 Hesters Crossing, Suite 120
Round Rock, Texas 78681
Texas Registered Engineering Firm F-754

STA 402+50.00

SCALE: HORIZ: 1"=20'
VERT: 1"=20'

SOUTHWEST BYPASS SEGMENT 2 - WBFR

SHEET NO.
XS-17

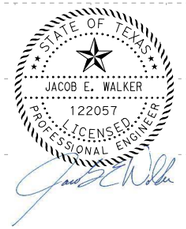

03/26/2018

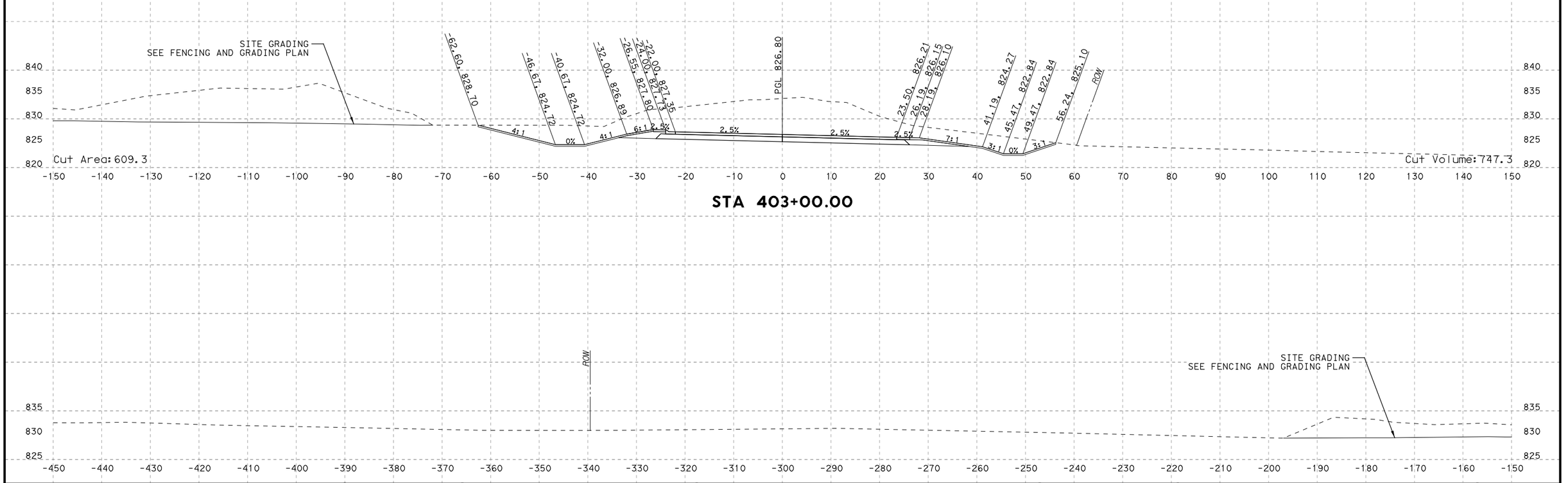

STA 403+00.00

PLOT DRIVER: TXDOT_PDF_BW.pltcfg
USER: lgomezgonz
FILE: \
DATE: 3/26/2018
TIME: 11:20:10 AM
PENTABLE: S2-0000020I0718.tbl
SCALE: 1:20

NO.	DATE	REVISION	APPROVED

HDR Engineering, Inc.
810 Hesters Crossing, Suite 120
Round Rock, Texas 78681
Texas Registered Engineering Firm F-754

STA 403+00.00

SCALE: HORIZ: 1"=20'
VERT: 1"=20'

SOUTHWEST BYPASS
SEGMENT 2 - WBFR

SHEET NO.
XS-18

4/12/2018 7:20 AM

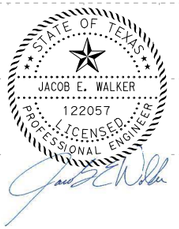

03/26/2018

NO.	DATE	REVISION	APPROVED

HDR Engineering, Inc.
810 Hesters Crossing, Suite 120
Round Rock, Texas 78681
Texas Registered Engineering Firm F-754

STA 403+50.00

SCALE: HORIZ: 1"=20'
VERT: 1"=20'

SOUTHWEST BYPASS
SEGMENT 2 - WBFR

SHEET NO.
XS-19

PLOT DRIVER: TXDOT_PDF_BW.pltcfg
USER: lgomezgonz DATE: 3/26/2018
FILE: \
TIME: 11:20:4 AM
PENTABLE: S2-0000020I0718.tbl
SCALE: 1:20

4/12/2018 7:20 AM

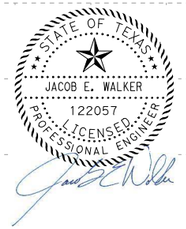

03/26/2018

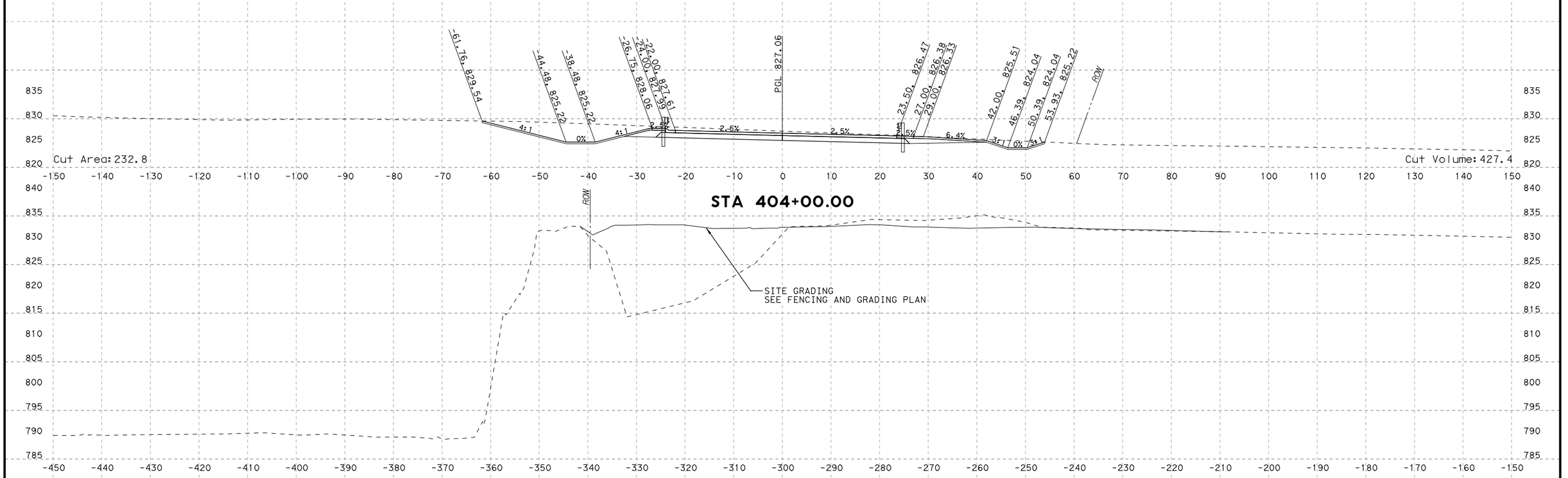

PLOT DRIVER: TXDOT_PDF_BW.pltcfg
USER: lgomezgonz
FILE: \
DATE: 3/26/2018
TIME: 11:20:17 AM
PENTABLE: S2-0000020I0718.tbl
SCALE: 1:20

NO.	DATE	REVISION	APPROVED

HDR Engineering, Inc.
810 Hesters Crossing, Suite 120
Round Rock, Texas 78681
Texas Registered Engineering Firm F-754

STA 404+00.00

SCALE: HORIZ: 1"=20'
VERT: 1"=20'

SOUTHWEST BYPASS
SEGMENT 2 - WBFR

SHEET NO.
XS-20

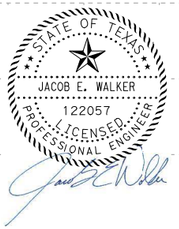

03/26/2018

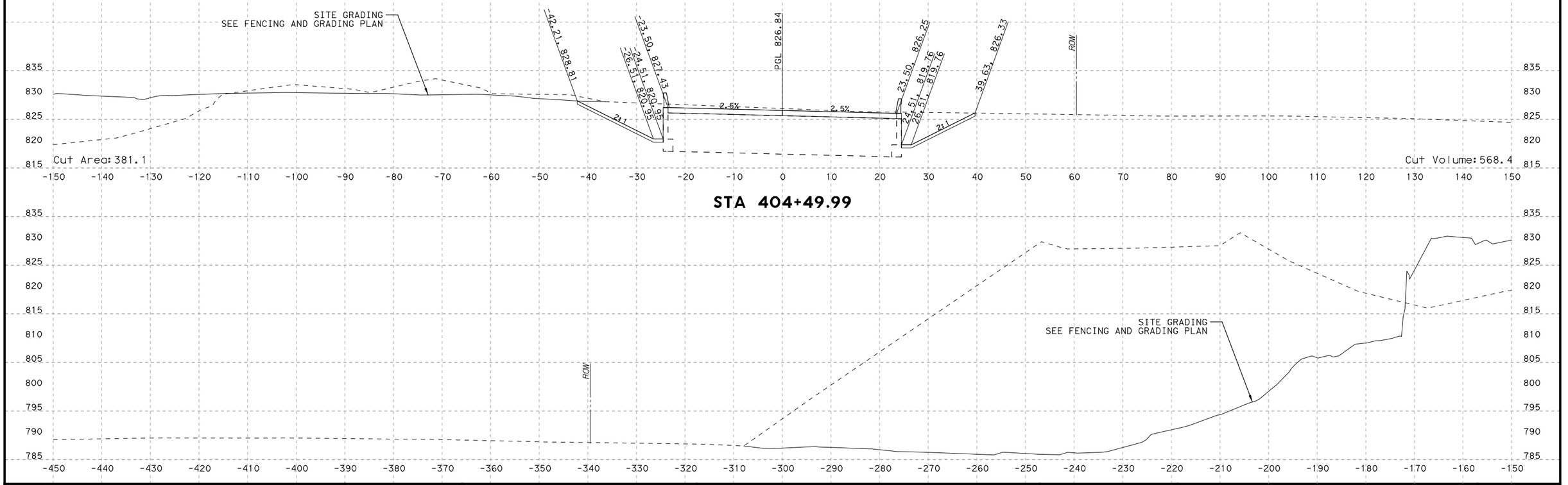

NO.	DATE	REVISION	APPROVED

HDR Engineering, Inc.
810 Hesters Crossing, Suite 120
Round Rock, Texas 78681
Texas Registered Engineering Firm F-754

STA 404+49.99

SCALE: HORIZ: 1"=20'
VERT: 1"=20'

SOUTHWEST BYPASS SEGMENT 2 - WBFR

SHEET NO.
XS-21

PLOT DRIVER: TXDOT_PDF_BW.pltcfg
USER: lgomezgonz
FILE: \
DATE: 3/26/2018
TIME: 11:20:21 AM
PENTABLE: S2-0000020170718.tbl
SCALE: 1:20

4/12/2018 7:20 AM

STATE OF TEXAS
JACOB E. WALKER
122057
LICENSED
PROFESSIONAL ENGINEER

03/26/2018

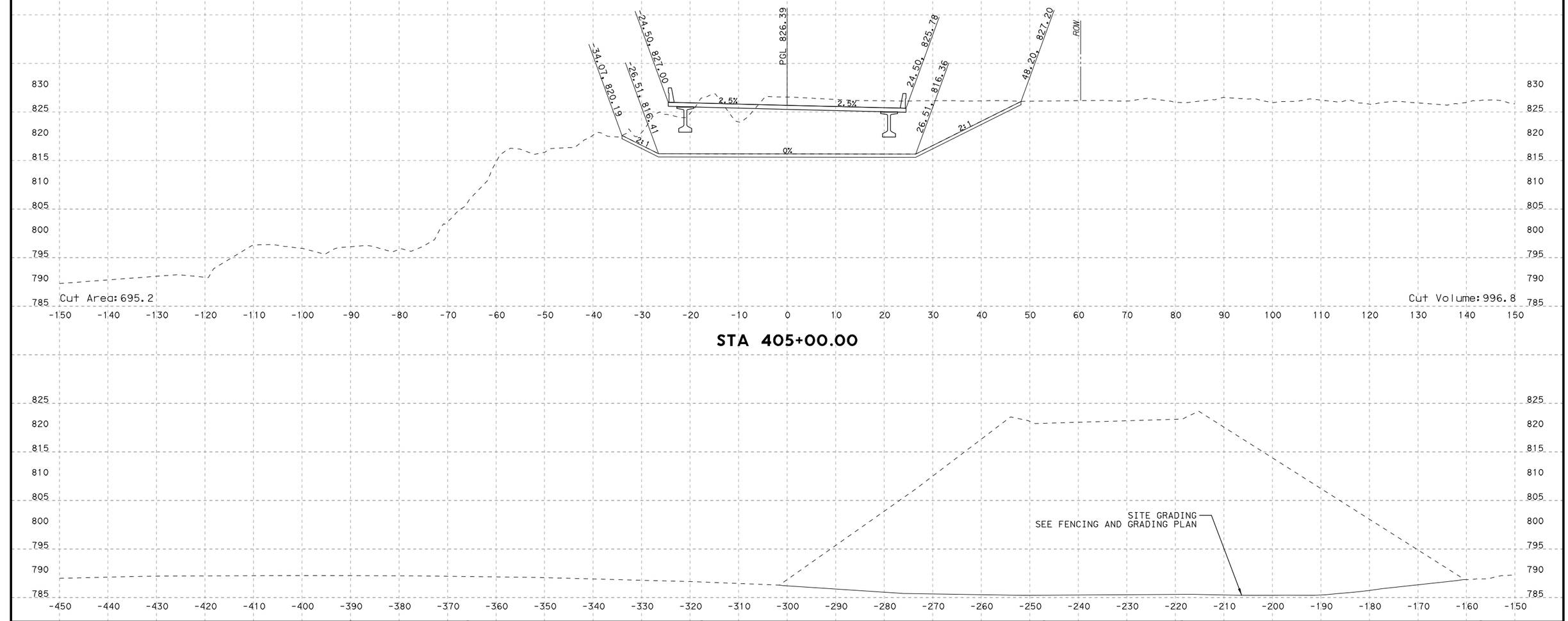

PLOT DRIVER: TXDOT_PDF_BW.pltcfg USER: lgomezgonz FILE: \
PENTABLE: S2-0000020I0718.tbl TIME: 11:20:24 AM DATE: 3/26/2018 SCALE: 1:20

NO.	DATE	REVISION	APPROVED

HDR Engineering, Inc.
810 Hesters Crossing, Suite 120
Round Rock, Texas 78681
Texas Registered Engineering Firm F-754

STA 405+00.00

SCALE: HORIZ: 1"=20'
VERT: 1"=20'

SOUTHWEST BYPASS SEGMENT 2 - WBFR

SHEET NO.
XS-22



03/26/2018

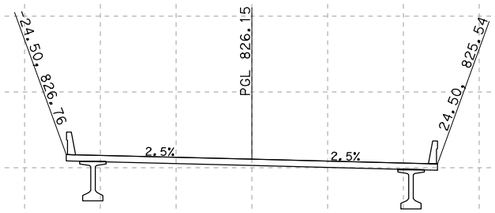

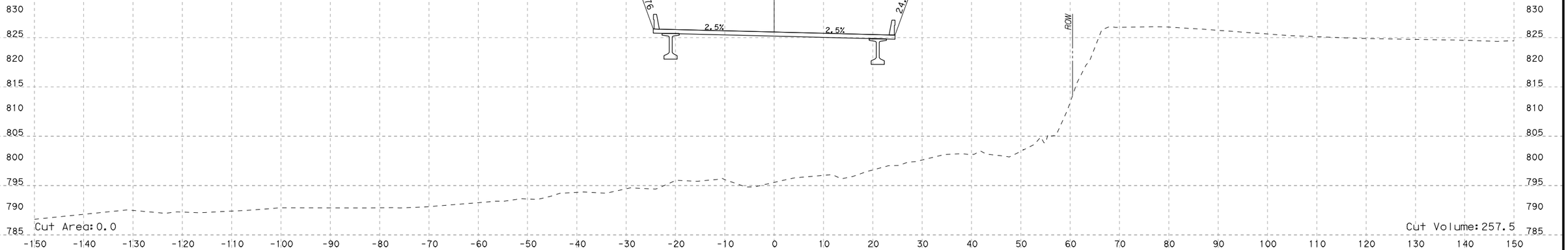

STA 405+20.00

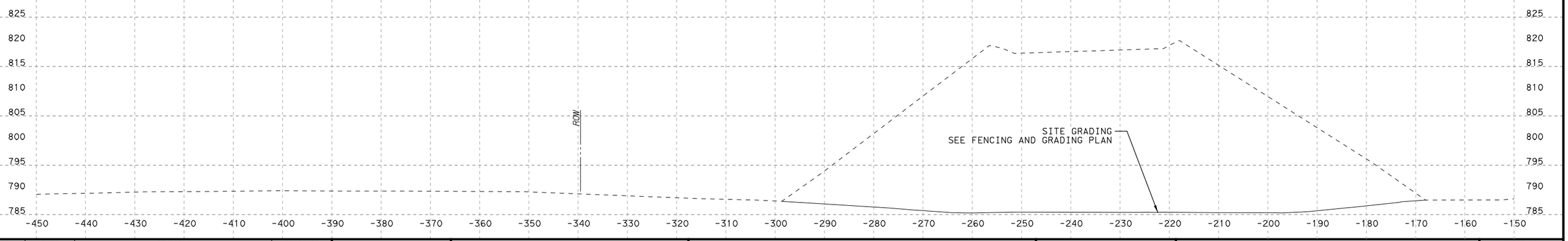

NO.	DATE	REVISION	APPROVED

HDR Engineering, Inc.
810 Hesters Crossing, Suite 120
Round Rock, Texas 78681
Texas Registered Engineering Firm F-754

STA 405+20.00

SCALE: HORIZ: 1"=20'
VERT: 1"=20'

SOUTHWEST BYPASS
SEGMENT 2 - WBFR

SHEET NO.
XS-23

PLOT DRIVER: TXDOT_PDF_BW.pltcfg
USER: lgomezgonz
FILE: \
DATE: 3/26/2018
TIME: 11:20:27 AM
PENTABLE: S2-0000020170718.tbl
SCALE: 1:20

4/12/2018 7:20 AM

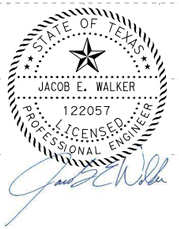

03/26/2018

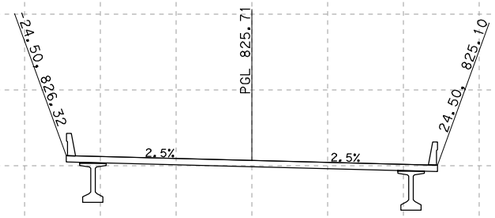

STA 405+50.00

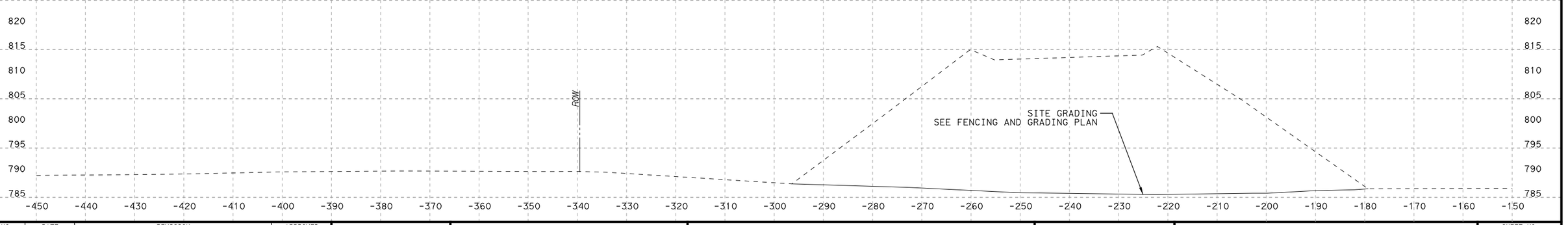

NO.	DATE	REVISION	APPROVED

HDR Engineering, Inc.
810 Hesters Crossing, Suite 120
Round Rock, Texas 78681
Texas Registered Engineering Firm F-754

STA 405+50.00

SCALE: HORIZ: 1"=20'
VERT: 1"=20'

SOUTHWEST BYPASS SEGMENT 2 - WBFR

SHEET NO.
XS-24

PLOT DRIVER: TXDOT_PDF_BW.pltcfg PENTABLE: S2-0000020170718.tbl
USER: lgomezgon2 DATE: 3/26/2018 TIME: 11:20:31 AM SCALE: 1:20
FILE: \

4/12/2018 7:20 AM

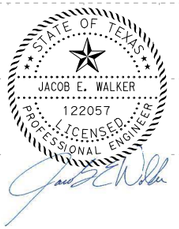

03/26/2018

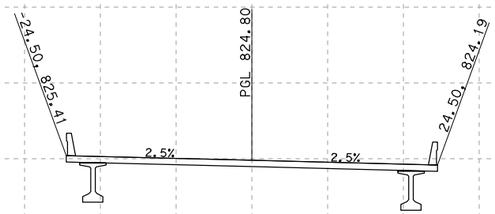

STA 406+00.00

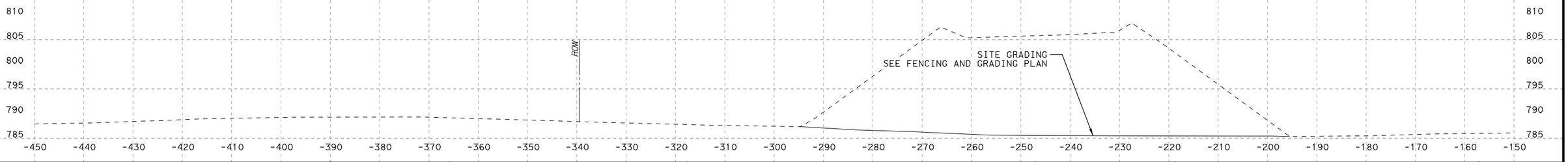

NO.	DATE	REVISION	APPROVED

HDR Engineering, Inc.
810 Hesters Crossing, Suite 120
Round Rock, Texas 78681
Texas Registered Engineering Firm F-754

STA 406+00.00

SCALE: HORIZ: 1"=20'
VERT: 1"=20'

SOUTHWEST BYPASS
SEGMENT 2 - WBFR

SHEET NO.
XS-25

PLOT DRIVER: TXDOT_PDF_BW.pltcfg
USER: lgomezgonz
FILE: \
PENTABLE: S2-0000020I0718.tbl
DATE: 3/26/2018
TIME: 11:20:34 AM
SCALE: 1:20

4/12/2018 7:20 AM

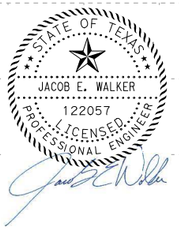

03/26/2018

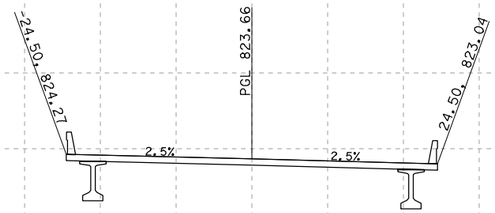

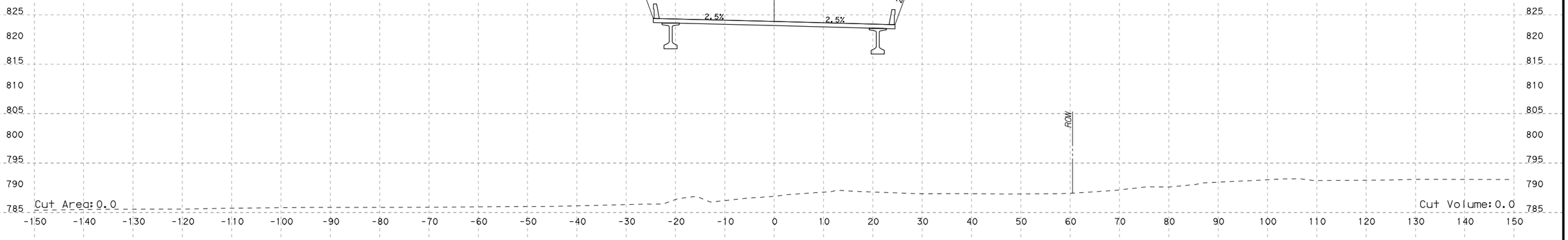

STA 406+50.00

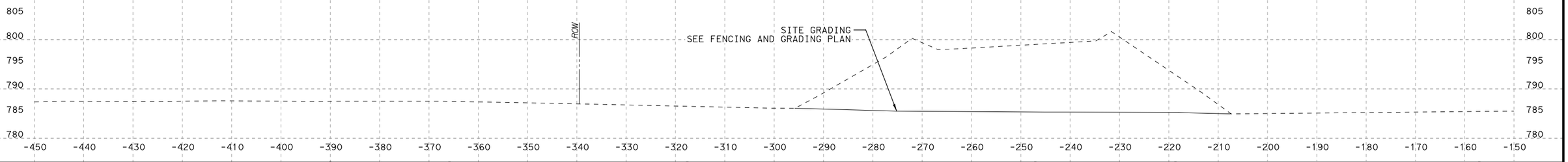

NO.	DATE	REVISION	APPROVED

HDR Engineering, Inc.
810 Hesters Crossing, Suite 120
Round Rock, Texas 78681
Texas Registered Engineering Firm F-754

STA 406+50.00

SCALE: HORIZ: 1"=20'
VERT: 1"=20'

SOUTHWEST BYPASS SEGMENT 2 - WBFR

SHEET NO.
XS-26

PLOT DRIVER: TXDOT_PDF_BW.pltcfg
USER: lgomezgonz
FILE: \
DATE: 3/26/2018
TIME: 11:20:38 AM
PENTABLE: S2-0000020I0718.tbl
SCALE: 1:20

4/12/2018 7:20 AM

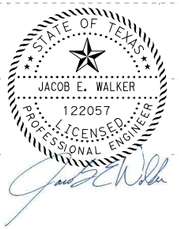

03/26/2018

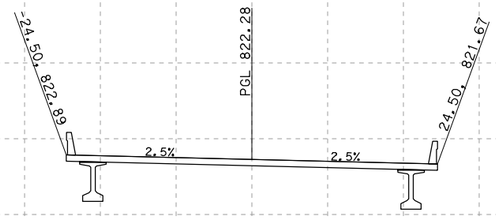

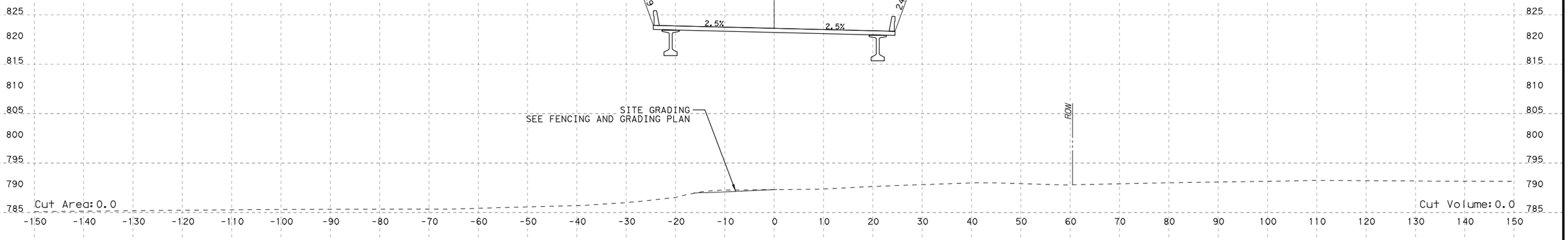

STA 407+00.00

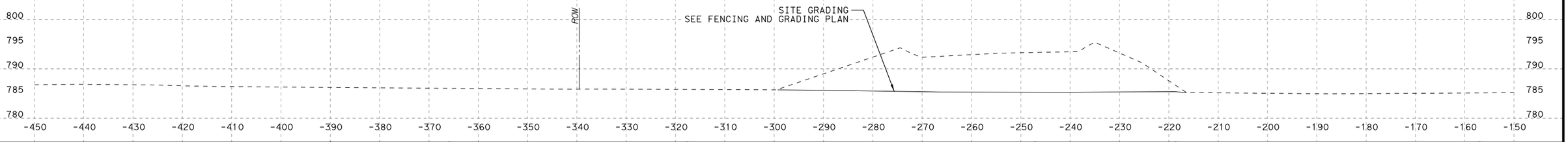

NO.	DATE	REVISION	APPROVED

HDR Engineering, Inc.
810 Hesters Crossing, Suite 120
Round Rock, Texas 78681
Texas Registered Engineering Firm F-754

STA 407+00.00

SCALE: HORIZ: 1"=20'
VERT: 1"=20'

SOUTHWEST BYPASS SEGMENT 2 - WBFR

SHEET NO.
XS-27

PLOT DRIVER: TXDOT_PDF_BW.pltcfg
USER: lgomezgonz
FILE: \
DATE: 3/26/2018
TIME: 11:20:41 AM
PENTABLE: S2-0000020I0718.tbl
SCALE: 1:20

4/12/2018 7:20 AM

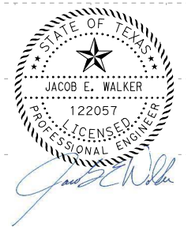

03/26/2018

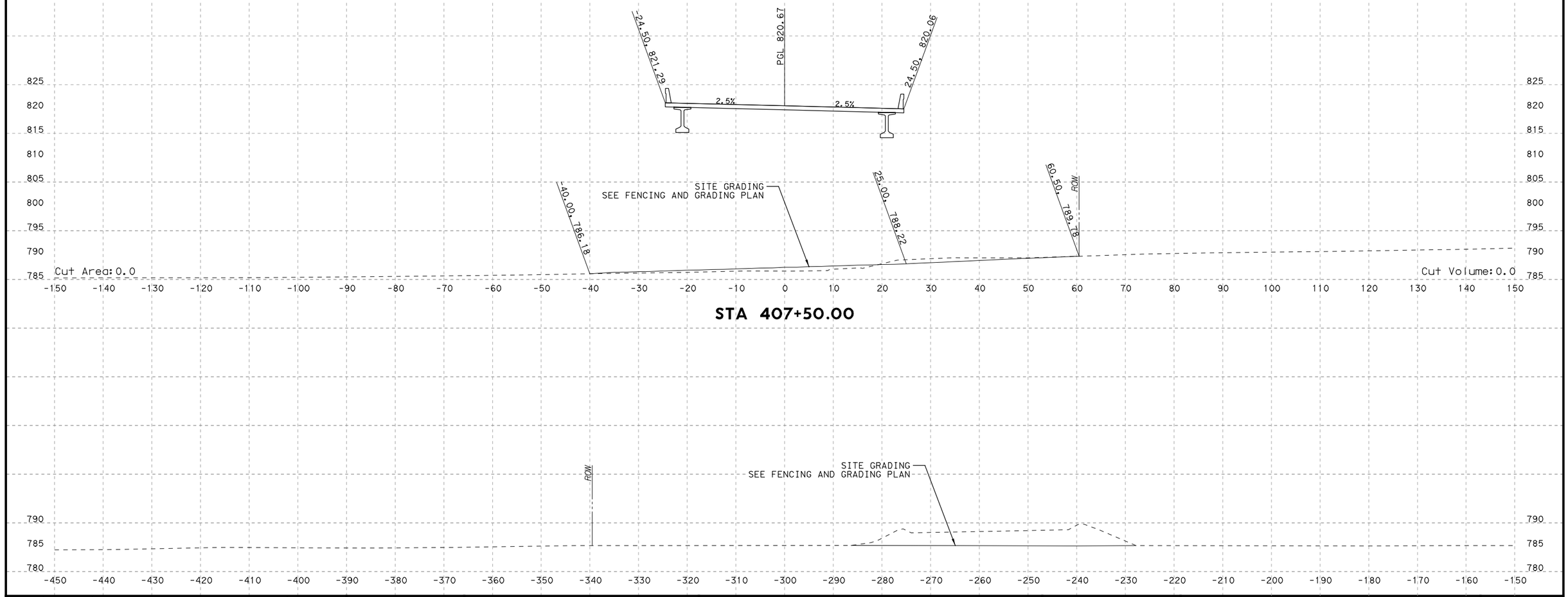

NO.	DATE	REVISION	APPROVED

HDR Engineering, Inc.
810 Hesters Crossing, Suite 120
Round Rock, Texas 78681
Texas Registered Engineering Firm F-754

STA 407+50.00

SCALE: HORIZ: 1"=20'
VERT: 1"=20'

SOUTHWEST BYPASS SEGMENT 2 - WBFR

SHEET NO.
XS-28

PLOT DRIVER: TXDOT_PDF_BW.pltcfg
USER: lgomezgonz
FILE: \
PENTABLE: S2-00000201707018.tbl
TIME: 11:20:44 AM
DATE: 3/26/2018
SCALE: 1:20

4/12/2018 7:20 AM

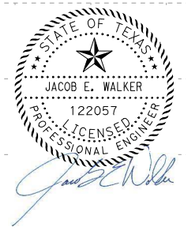

03/26/2018

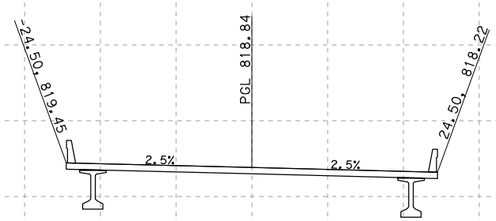

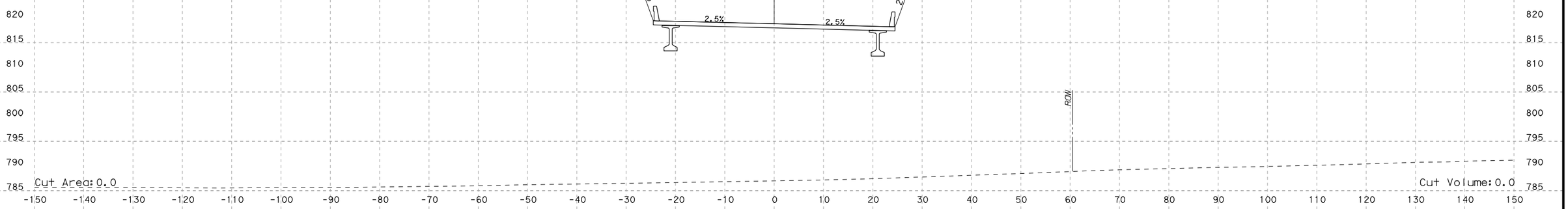

STA 408+00.00

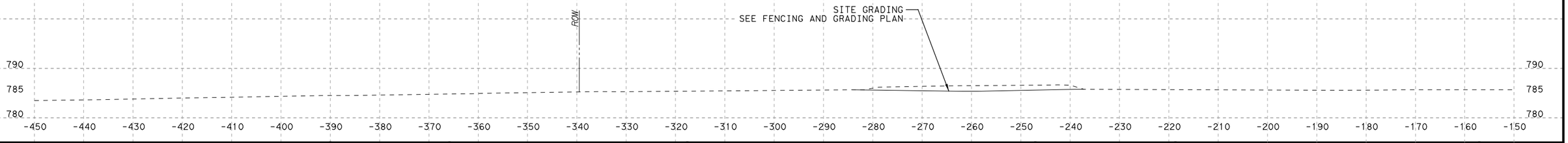

NO.	DATE	REVISION	APPROVED

HDR Engineering, Inc.
810 Hesters Crossing, Suite 120
Round Rock, Texas 78681
Texas Registered Engineering Firm F-754

STA 408+00.00

SCALE: HORIZ: 1"=20'
VERT: 1"=20'

SOUTHWEST BYPASS
SEGMENT 2 - WBFR

SHEET NO.
XS-29

PLOT DRIVER: TXDOT_PDF_BW.pltcfg
USER: lgomezgonz DATE: 3/26/2018
FILE: \
TIME: 11:20:48 AM
PENTABLE: S2-0000020170718.tbl
SCALE: 1:20

4/12/2018 7:20 AM

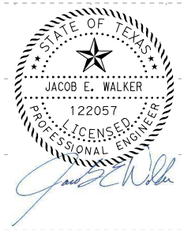

03/26/2018

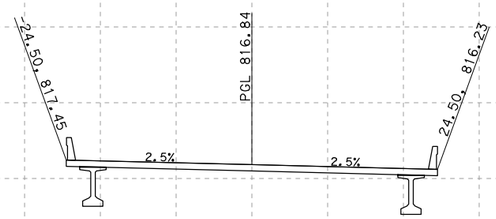

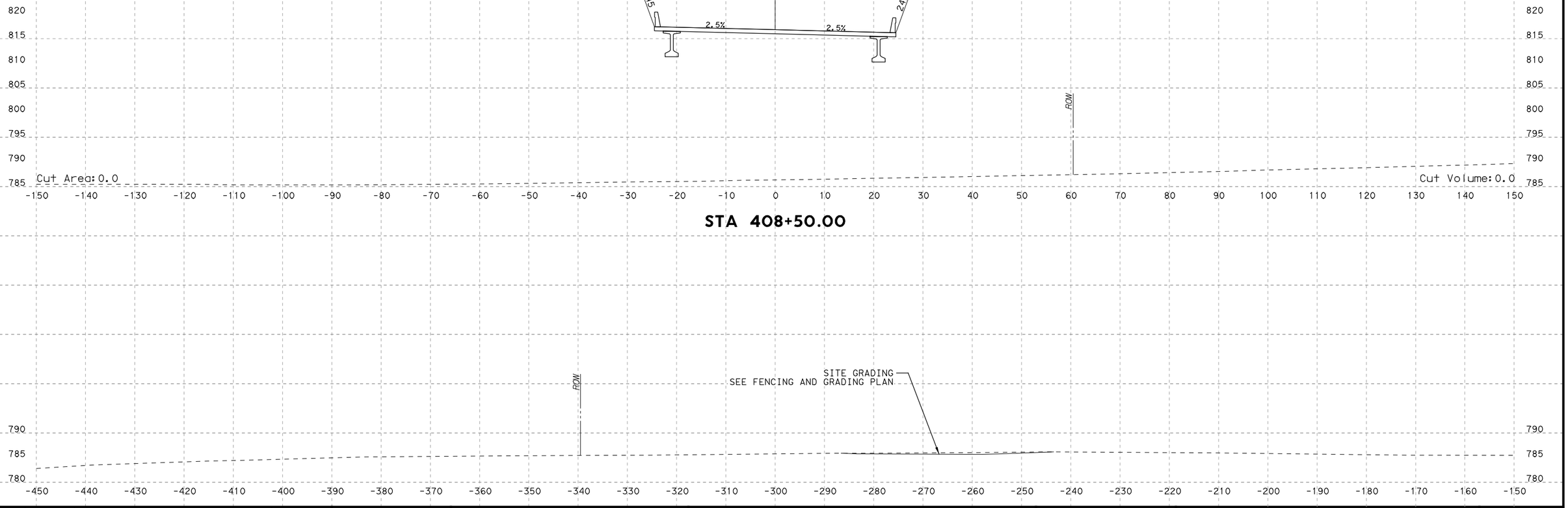

STA 408+50.00

NO.	DATE	REVISION	APPROVED

HDR Engineering, Inc.
810 Hesters Crossing, Suite 120
Round Rock, Texas 78681
Texas Registered Engineering Firm F-754

STA 408+50.00

SCALE: HORIZ: 1"=20'
VERT: 1"=20'

SOUTHWEST BYPASS SEGMENT 2 - WBFR

SHEET NO.
XS-30

PLOT DRIVER: TXDOT_PDF_BW.pltcfg
USER: lgomezgonz
FILE: \
DATE: 3/26/2018
TIME: 11:20:51 AM
PENTABLE: S2-0000020170718.tbl
SCALE: 1:20

4/12/2018 7:20 AM

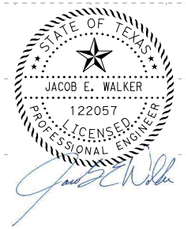

03/26/2018

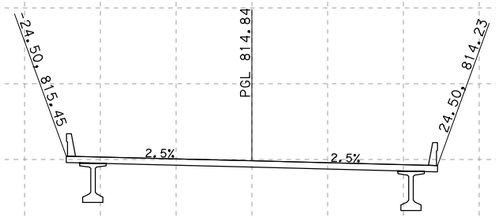

NO.	DATE	REVISION	APPROVED

HDR Engineering, Inc.
810 Hesters Crossing, Suite 120
Round Rock, Texas 78681
Texas Registered Engineering Firm F-754

STA 409+00.00

SCALE: HORIZ: 1"=20'
VERT: 1"=20'

SOUTHWEST BYPASS
SEGMENT 2 - WBFR

SHEET NO.
XS-31

PLOT DRIVER: TXDOT_PDF_BW.pltcfg
USER: lgomezgonz DATE: 3/26/2018
FILE: \
PENTABLE: S2-0000020\T0718.tbl
TIME: 11:20:54 AM SCALE: 1:20

4/12/2018 7:20 AM

STATE OF TEXAS
JACOB E. WALKER
122057
LICENSED
PROFESSIONAL ENGINEER

03/26/2018

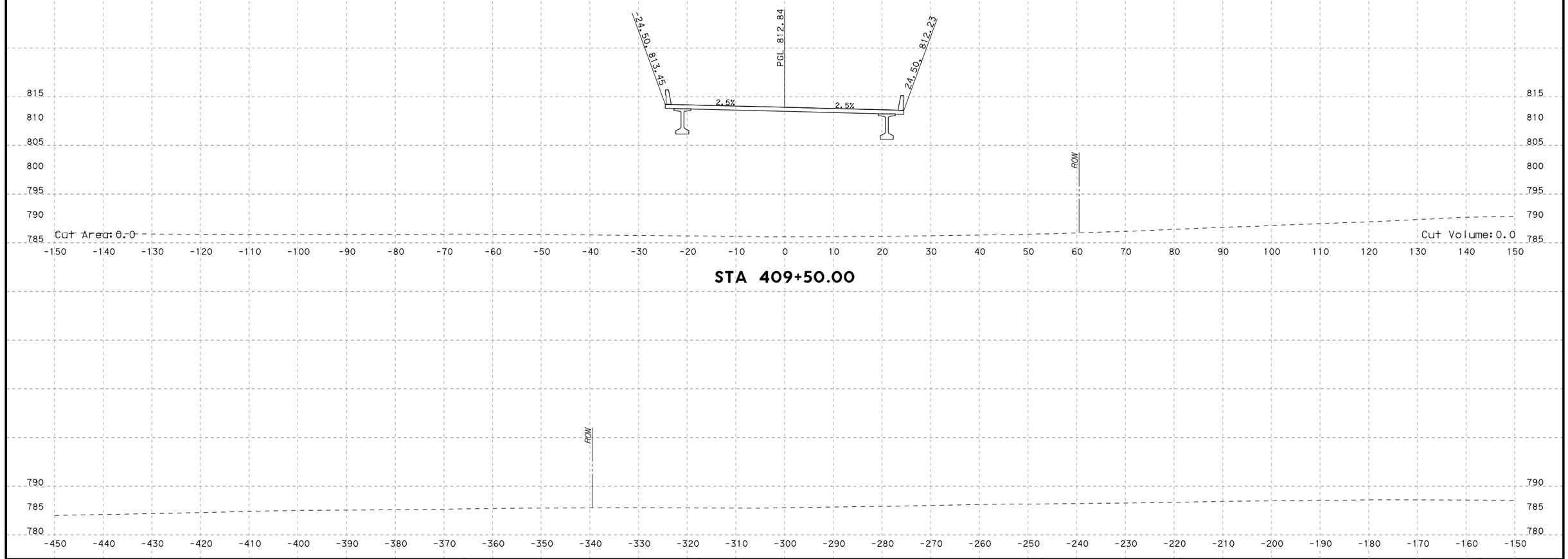

STA 409+50.00

NO.	DATE	REVISION	APPROVED

HDR Engineering, Inc.
810 Hesters Crossing, Suite 120
Round Rock, Texas 78681
Texas Registered Engineering Firm F-754

STA 409+50.00

SCALE: HORIZ: 1"=20'
VERT: 1"=20'

SOUTHWEST BYPASS
SEGMENT 2 - WBFR

SHEET NO.
XS-32

PLOT DRIVER: TXDOT_PDF_BW.pltcfg
USER: lgomezgonz
FILE: \
DATE: 3/26/2018
TIME: 11:20:58 AM
PENTABLE: S2-0000020170718.tbl
SCALE: 1:20

4/12/2018 7:20 AM

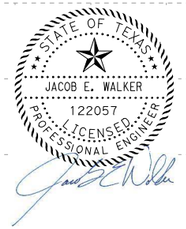

03/26/2018

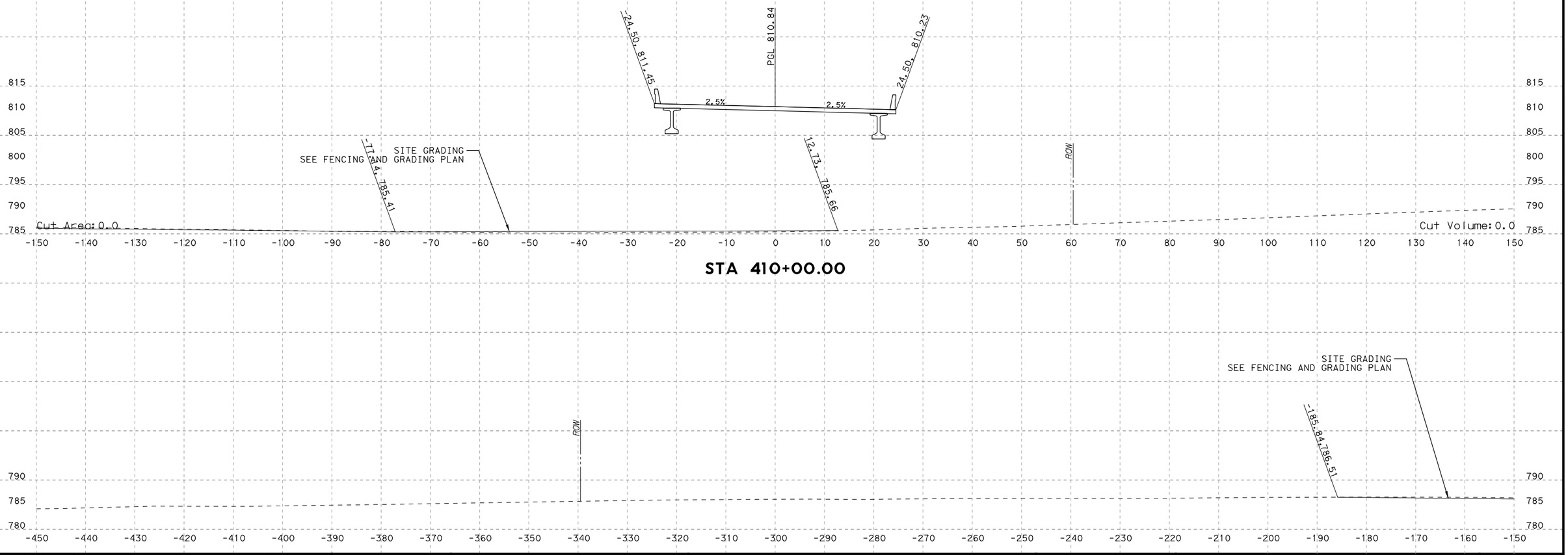

PLOT DRIVER: TXDOT_PDF_BW.pltcfg USER: lgomezgonz DATE: 3/26/2018 FILE: \
PENTABLE: S2-0000020170718.tbl TIME: 11:21:01 AM SCALE: 1:20

NO.	DATE	REVISION	APPROVED

HDR Engineering, Inc.
810 Hesters Crossing, Suite 120
Round Rock, Texas 78681
Texas Registered Engineering Firm F-754

STA 410+00.00

SCALE: HORIZ: 1"=20'
VERT: 1"=20'

SOUTHWEST BYPASS SEGMENT 2 - WBFR

SHEET NO.
XS-33

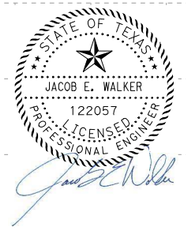

03/26/2018

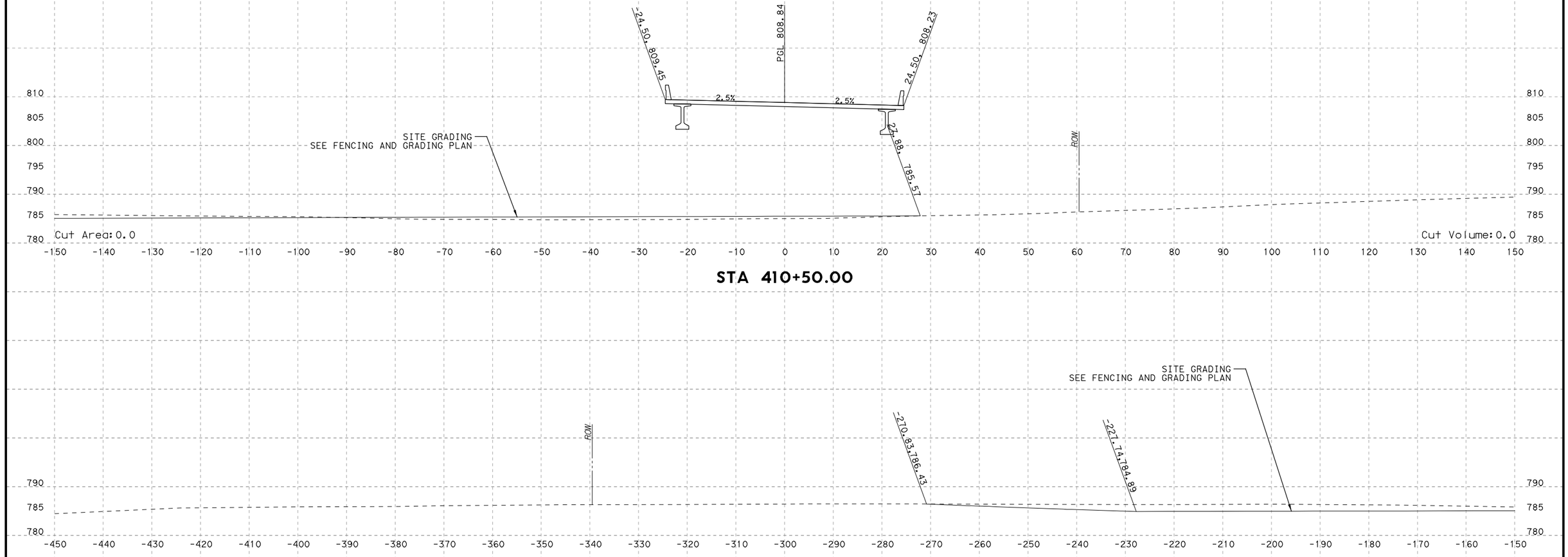

PLOT DRIVER: TXDOT_PDF_BW.pltcfg PENTABLE: S2-0000020170718.tbl
USER: lgomezgonz DATE: 3/26/2018 TIME: 11:21:05 AM SCALE: 1:20
FILE: \

NO.	DATE	REVISION	APPROVED

HDR Engineering, Inc.
810 Hesters Crossing, Suite 120
Round Rock, Texas 78681
Texas Registered Engineering Firm F-754

STA 410+50.00

SCALE: HORIZ: 1"=20'
VERT: 1"=20'

SOUTHWEST BYPASS SEGMENT 2 - WBFR

SHEET NO.
XS-34

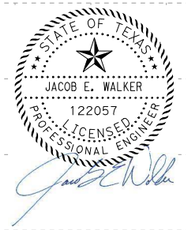

03/26/2018

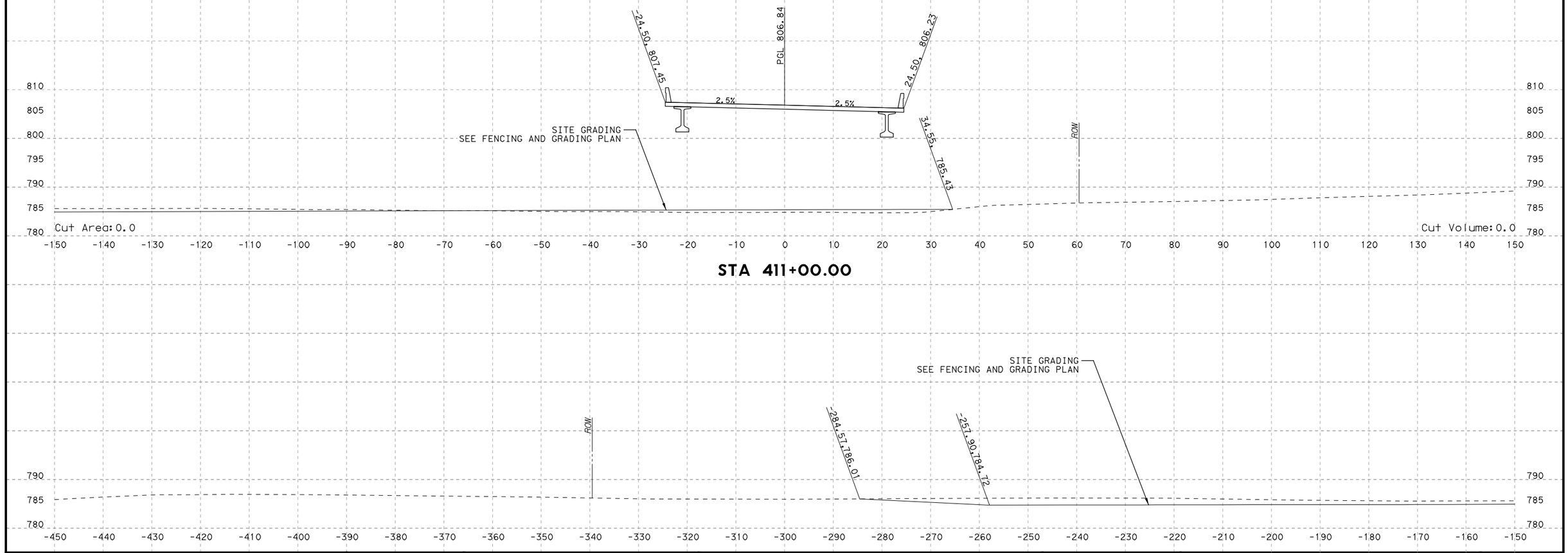

STA 411+00.00

NO.	DATE	REVISION	APPROVED

HDR Engineering, Inc.
810 Hesters Crossing, Suite 120
Round Rock, Texas 78681
Texas Registered Engineering Firm F-754

STA 411+00.00

SCALE: HORIZ: 1"=20'
VERT: 1"=20'

SOUTHWEST BYPASS
SEGMENT 2 - WBFR

SHEET NO.
XS-35

PLOT DRIVER: TXDOT_PDF_BW.pltcfg
USER: lgomezgonz DATE: 3/26/2018
FILE: \
TIME: 11:21:08 AM
PENTABLE: S2-0000020170718.tbl
SCALE: 1:20

4/12/2018 7:20 AM

STATE OF TEXAS
JACOB E. WALKER
122057
LICENSED
PROFESSIONAL ENGINEER

03/26/2018

PLOT DRIVER: TXDOT_PDF_BW.pltcfg USER: lgomezgonz PENTABLE: S2-0000020170718.tbl
DATE: 3/26/2018 TIME: 11:21:11 AM FILE: \ SCALE: 1:20

NO.	DATE	REVISION	APPROVED

HDR Engineering, Inc.
810 Hesters Crossing, Suite 120
Round Rock, Texas 78681
Texas Registered Engineering Firm F-754

STA 411+30.00

SCALE: HORIZ: 1"=20'
VERT: 1"=20'

SOUTHWEST BYPASS SEGMENT 2 - WBFR

SHEET NO.
XS-36

4/12/2018 7:20 AM

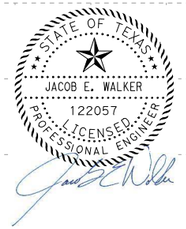

03/26/2018

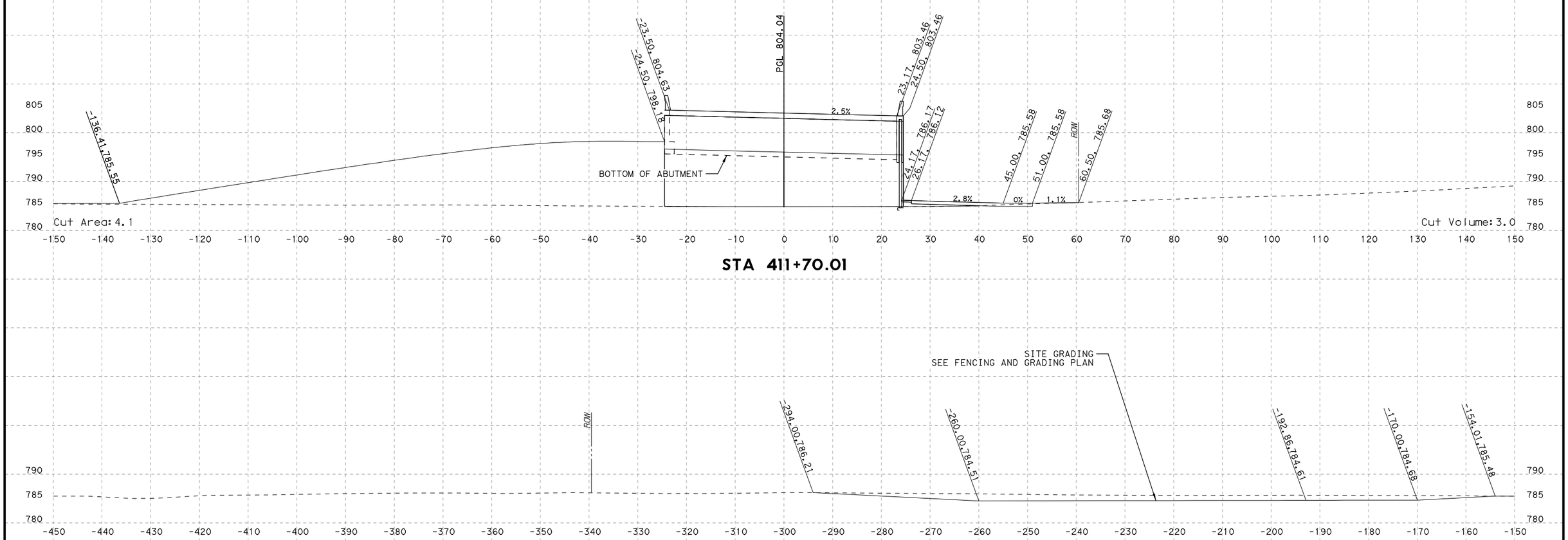

STA 411+70.01

NO.	DATE	REVISION	APPROVED

HDR Engineering, Inc.
810 Hesters Crossing, Suite 120
Round Rock, Texas 78681
Texas Registered Engineering Firm F-754

STA 411+70.01

SCALE: HORIZ: 1"=20'
VERT: 1"=20'

SOUTHWEST BYPASS
SEGMENT 2 - WBFR

SHEET NO.
XS-37

PLOT DRIVER: TXDOT_PDF_BW.pltcfg
USER: lgomezgon2
FILE: \
PENTABLE: S2-00000201f0718.tbl
TIME: 11:21:15 AM
DATE: 3/26/2018
SCALE: 1:20

4/12/2018 7:20 AM

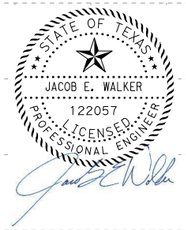

03/26/2018

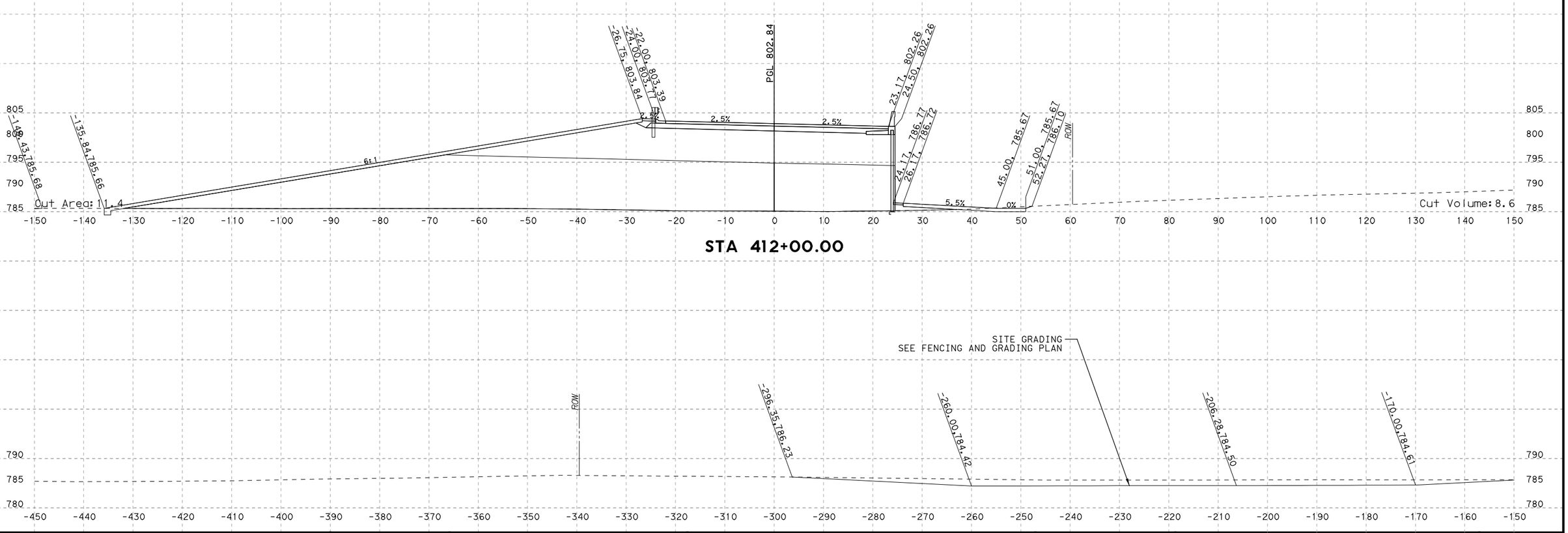

NO.	DATE	REVISION	APPROVED

HDR Engineering, Inc.
810 Hesters Crossing, Suite 120
Round Rock, Texas 78681
Texas Registered Engineering Firm F-754

STA 412+00.00

SCALE: HORIZ: 1"=20'
VERT: 1"=20'

SOUTHWEST BYPASS
SEGMENT 2 - WBFR

SHEET NO.
XS-38

PLOT DRIVER: TXDOT_PDF_BW.pltcfg PENTABLE: S2-0000020170718.tbl
USER: lgomezgonz TIME: 11:21:18 AM SCALE: 1:20
DATE: 3/26/2018
FILE: \

4/12/2018 7:20 AM

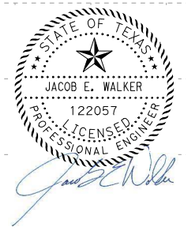

03/26/2018

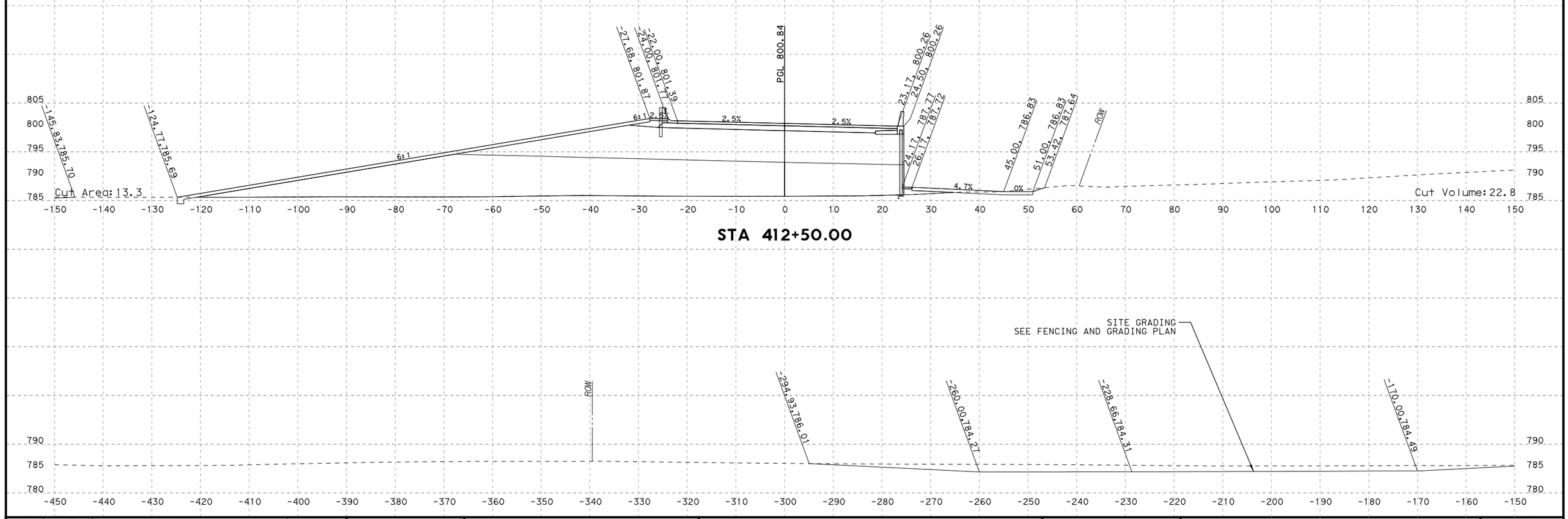

NO.	DATE	REVISION	APPROVED

HDR Engineering, Inc.
810 Hesters Crossing, Suite 120
Round Rock, Texas 78681
Texas Registered Engineering Firm F-754

STA 412+50.00

SCALE: HORIZ: 1"=20'
VERT: 1"=20'

SOUTHWEST BYPASS SEGMENT 2 - WBFR

SHEET NO.
XS-39

PLOT DRIVER: TXDOT_PDF_BW.pltcfg PENTABLE: S2-0000020170718.tbl
USER: lgomezgonz DATE: 3/26/2018 TIME: 11:21:21 AM SCALE: 1:20
FILE: \

4/12/2018 7:20 AM

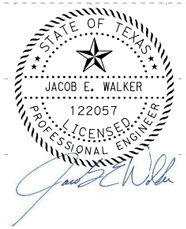

03/26/2018

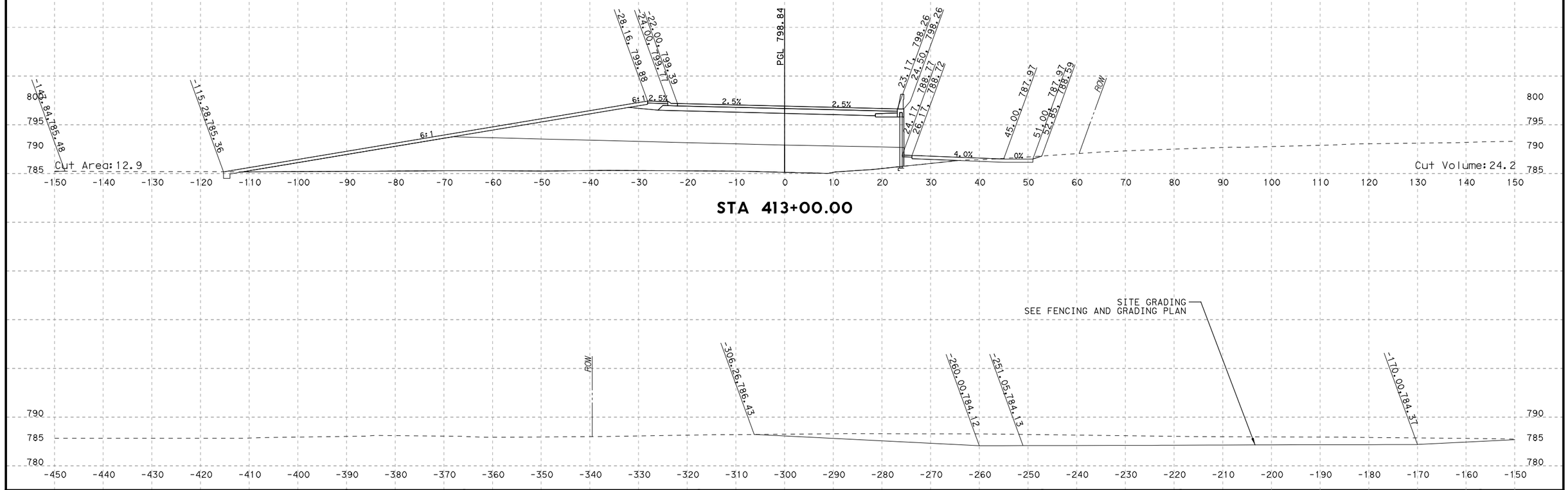

NO.	DATE	REVISION	APPROVED

HDR Engineering, Inc.
810 Hesters Crossing, Suite 120
Round Rock, Texas 78681
Texas Registered Engineering Firm F-754

STA 413+00.00

SCALE: HORIZ: 1"=20'
VERT: 1"=20'

SOUTHWEST BYPASS
SEGMENT 2 - WBFR

SHEET NO.
XS-40

PLOT DRIVER: TXDOT_PDF_BW.pltcfg PENTABLE: S2-0000020170718.tbl
USER: lgomezgonz DATE: 3/26/2018 TIME: 11:21:25 AM SCALE: 1:20
FILE: \

4/12/2018 7:20 AM

STATE OF TEXAS
JACOB E. WALKER
122057
LICENSED
PROFESSIONAL ENGINEER

03/26/2018

NO.	DATE	REVISION	APPROVED

HDR Engineering, Inc.
810 Hesters Crossing, Suite 120
Round Rock, Texas 78681
Texas Registered Engineering Firm F-754

STA 413+50.00

SCALE: HORIZ: 1"=20'
VERT: 1"=20'

SOUTHWEST BYPASS SEGMENT 2 - WBFR

SHEET NO.
XS-41

PLOT DRIVER: TXDOT_PDF_BW.pltcfg
USER: lgomezgonz
FILE: \
PENTABLE: S2-00000207/0718.tbl
DATE: 3/26/2018
TIME: 11:21:28 AM
SCALE: 1:20

4/12/2018 7:20 AM

STATE OF TEXAS
JACOB E. WALKER
122057
LICENSED
PROFESSIONAL ENGINEER

03/26/2018

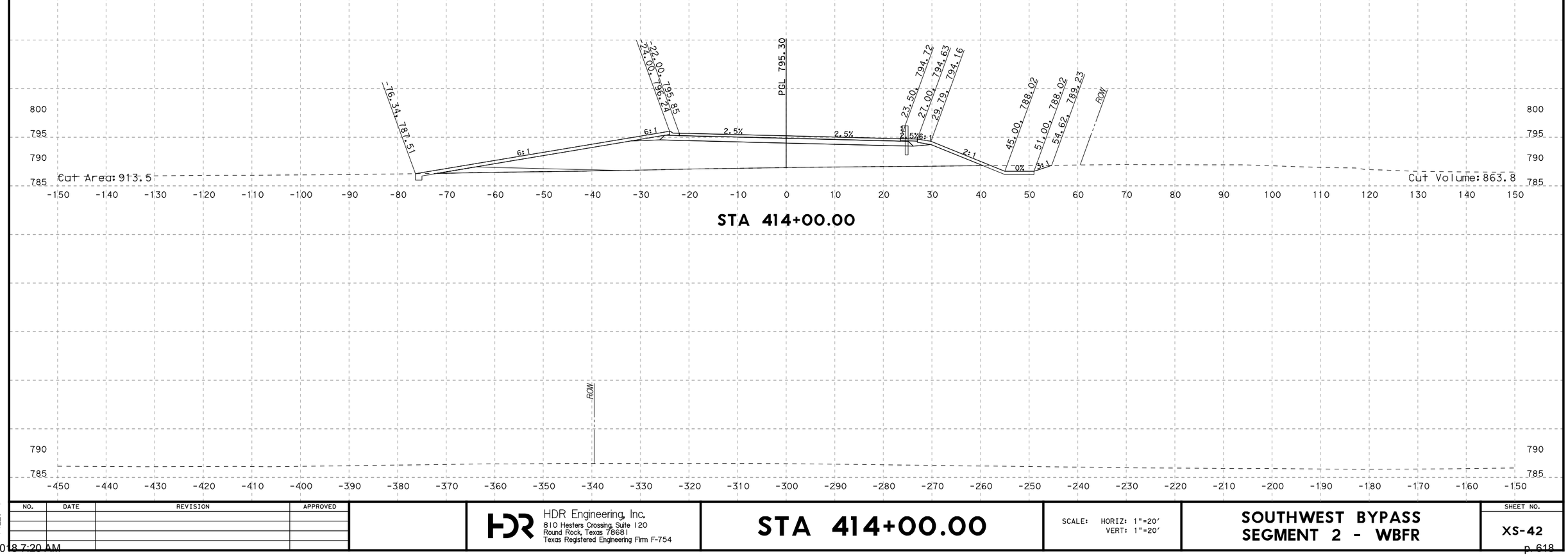

STA 414+00.00

NO.	DATE	REVISION	APPROVED

HDR Engineering, Inc.
810 Hesters Crossing, Suite 120
Round Rock, Texas 78681
Texas Registered Engineering Firm F-754

STA 414+00.00

SCALE: HORIZ: 1"=20'
VERT: 1"=20'

SOUTHWEST BYPASS
SEGMENT 2 - WBFR

SHEET NO.
XS-42

PLOT DRIVER: TXDOT_PDF_BW.pltcfg
USER: lgomezgonz DATE: 3/26/2018
FILE: \
PENTABLE: S2-0000020170718.tbl
TIME: 11:29:31 AM SCALE: 1:20

4/12/2018 7:20 AM

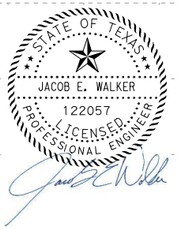

03/26/2018

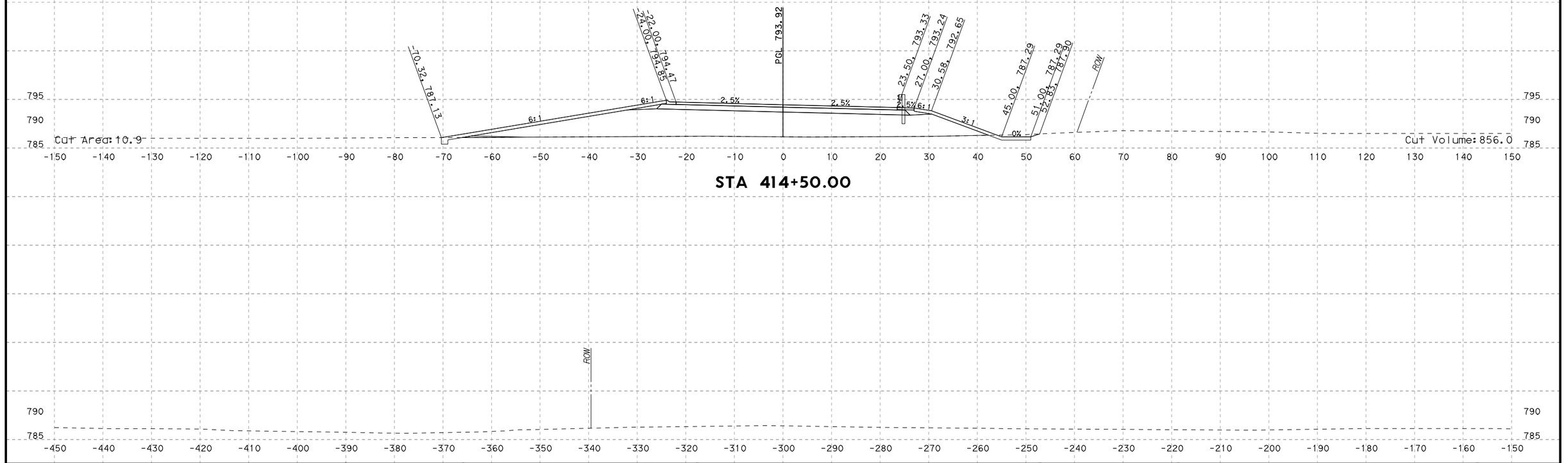

STA 414+50.00

PLOT DRIVER: TXDOT_PDF_BW.pltcfg
USER: lgomezgonz
FILE: \
PENTABLE: S2-0000020/T0718.tbl
TIME: 11:21:34 AM
DATE: 3/26/2018
SCALE: 1:20

NO.	DATE	REVISION	APPROVED

HDR Engineering, Inc.
810 Hesters Crossing, Suite 120
Round Rock, Texas 78681
Texas Registered Engineering Firm F-754

STA 414+50.00

SCALE: HORIZ: 1"=20'
VERT: 1"=20'

SOUTHWEST BYPASS SEGMENT 2 - WBFR

SHEET NO.
XS-43

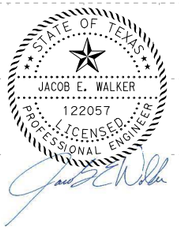

03/26/2018

NO.	DATE	REVISION	APPROVED

HDR Engineering, Inc.
810 Hesters Crossing, Suite 120
Round Rock, Texas 78681
Texas Registered Engineering Firm F-754

STA 415+00.00

SCALE: HORIZ: 1"=20'
VERT: 1"=20'

SOUTHWEST BYPASS
SEGMENT 2 - WBFR

SHEET NO.
XS-44

PLOT DRIVER: TXDOT_PDF_BW.pltcfg
USER: lgomezgonz
FILE: \
DATE: 3/26/2018
TIME: 11:21:38 AM
PENTABLE: S2-0000020/T0718.tbl
SCALE: 1:20

4/12/2018 7:20 AM

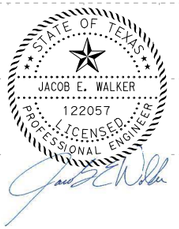

03/26/2018

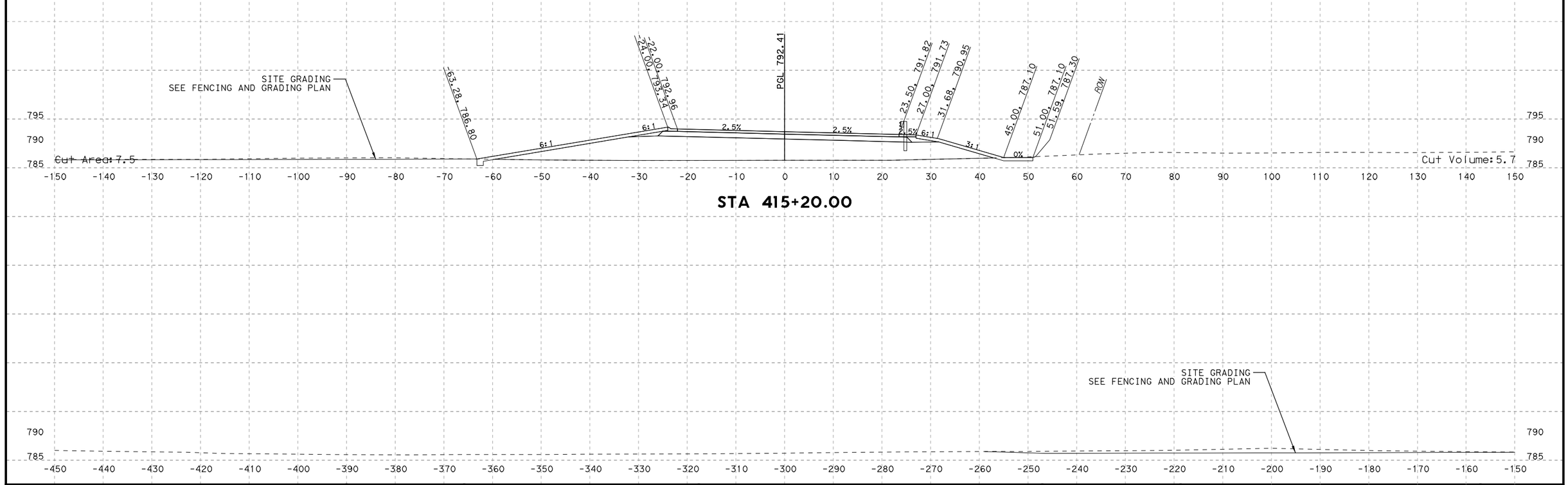

NO.	DATE	REVISION	APPROVED

HDR Engineering, Inc.
810 Hesters Crossing, Suite 120
Round Rock, Texas 78681
Texas Registered Engineering Firm F-754

STA 415+20.00

SCALE: HORIZ: 1"=20'
VERT: 1"=20'

SOUTHWEST BYPASS
SEGMENT 2 - WBFR

SHEET NO.
XS-45

PLOT DRIVER: TXDOT_PDF_BW.pltcfg
USER: lgomezgonz
FILE: \
DATE: 3/26/2018
TIME: 11:21:41 AM
PENTABLE: S2-0000020I0718.tbl
SCALE: 1:20

4/12/2018 7:20 AM

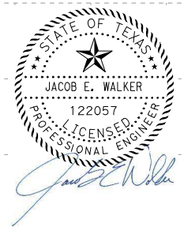

03/26/2018

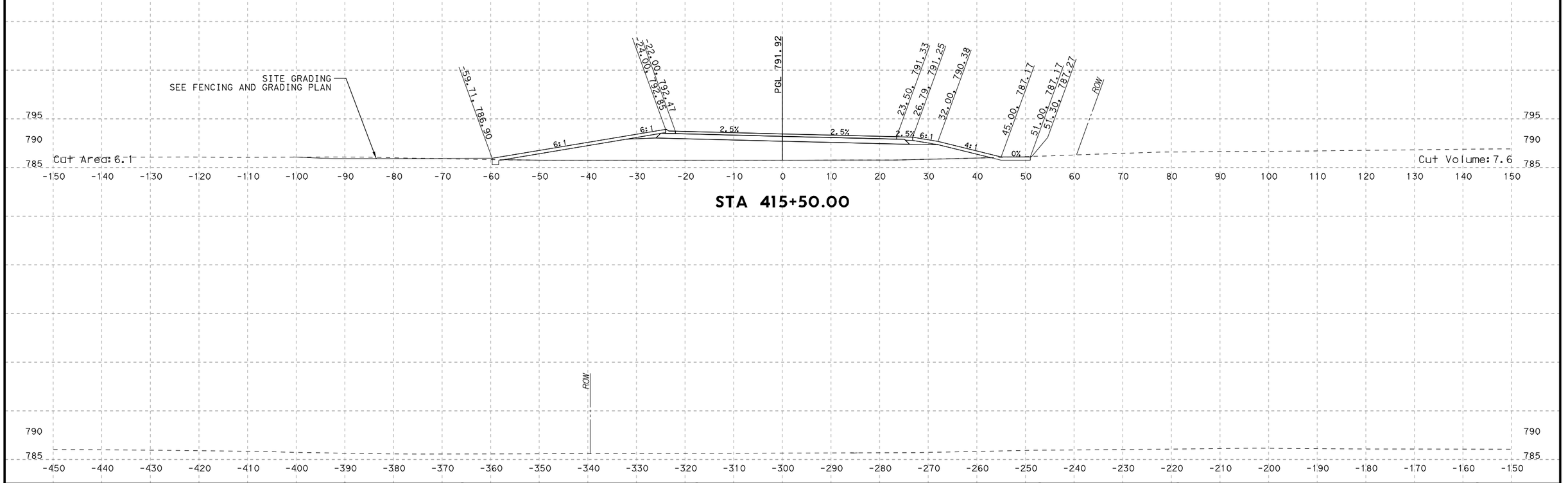

NO.	DATE	REVISION	APPROVED

HDR Engineering, Inc.
810 Hesters Crossing, Suite 120
Round Rock, Texas 78681
Texas Registered Engineering Firm F-754

STA 415+50.00

SCALE: HORIZ: 1"=20'
VERT: 1"=20'

SOUTHWEST BYPASS
SEGMENT 2 - WBFR

SHEET NO.
XS-46

PLOT DRIVER: TXDOT_PDF_BW.pltcfg
USER: lgomezgonz
FILE: \
DATE: 3/26/2018
TIME: 11:21:44 AM
PENTABLE: S2-0000020/T0718.tbl
SCALE: 1:20

4/12/2018 7:20 AM

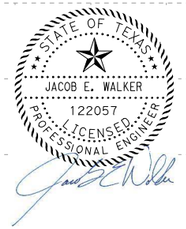

03/26/2018

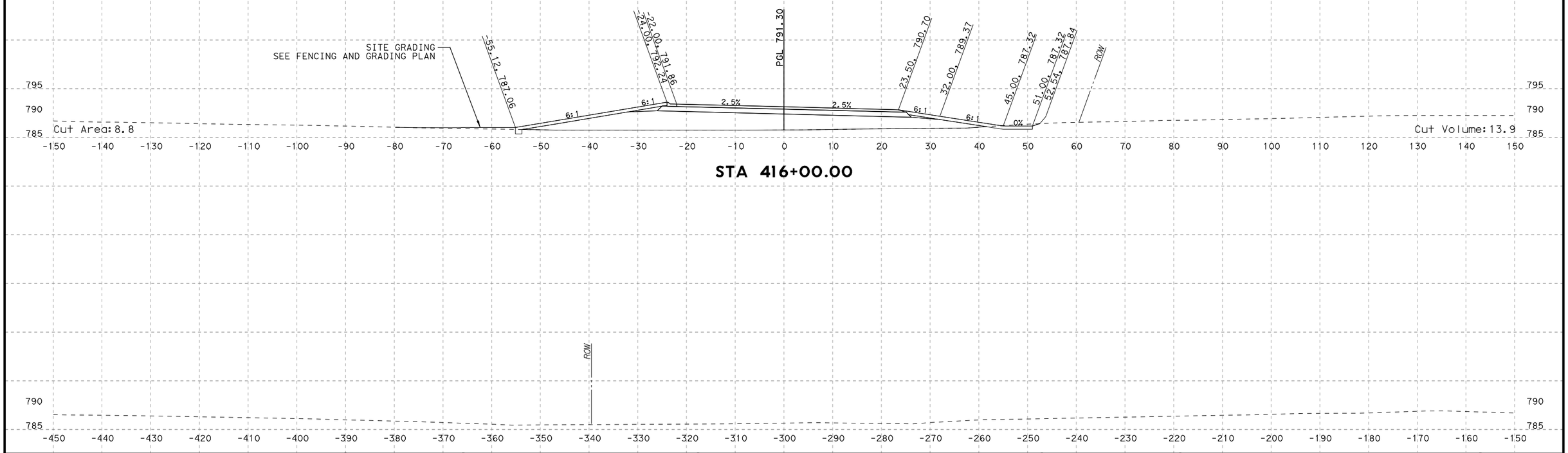

STA 416+00.00

PLOT DRIVER: TXDOT_PDF_BW.pltcfg
USER: lgomezgonz
FILE: \
PENTABLE: S2-0000020/T0718.tbl
TIME: 11:21:48 AM
DATE: 3/26/2018
SCALE: 1:20

NO.	DATE	REVISION	APPROVED

HDR Engineering, Inc.
810 Hesters Crossing, Suite 120
Round Rock, Texas 78681
Texas Registered Engineering Firm F-754

STA 416+00.00

SCALE: HORIZ: 1"=20'
VERT: 1"=20'

SOUTHWEST BYPASS
SEGMENT 2 - WBFR

SHEET NO.
XS-47

4/12/2018 7:20 AM

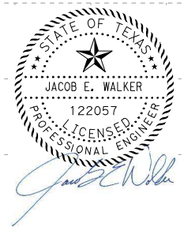

03/26/2018

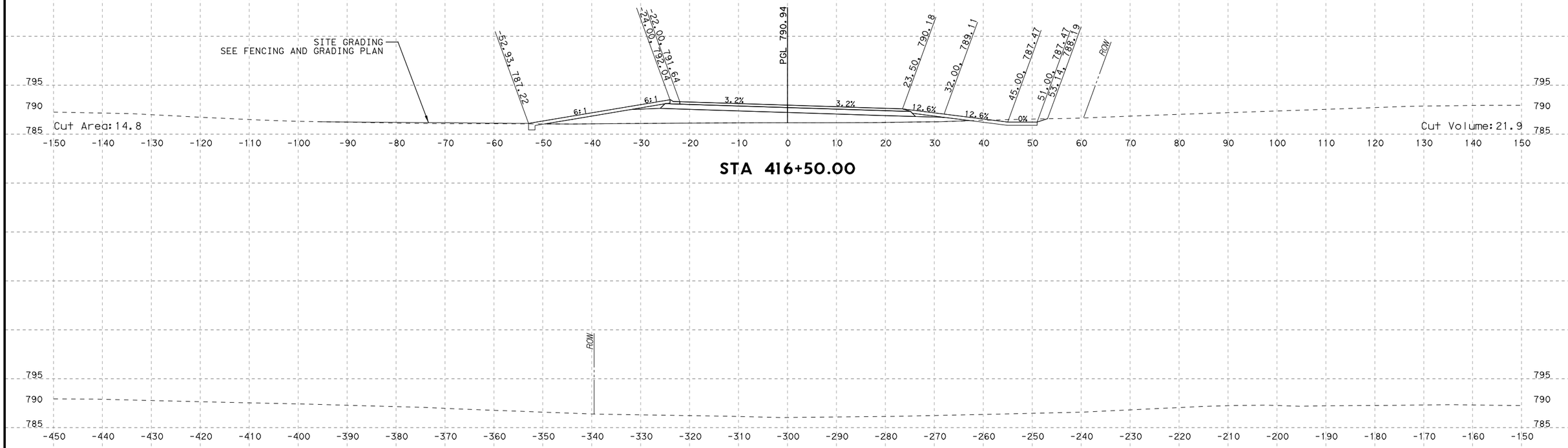

STA 416+50.00

NO.	DATE	REVISION	APPROVED

HDR Engineering, Inc.
810 Hesters Crossing, Suite 120
Round Rock, Texas 78681
Texas Registered Engineering Firm F-754

STA 416+50.00

SCALE: HORIZ: 1"=20'
VERT: 1"=20'

SOUTHWEST BYPASS SEGMENT 2 - WBFR

SHEET NO.
XS-48

PLOT DRIVER: TXDOT_PDF_BW.pltcfg
USER: lgomezgonz
FILE: \
PENTABLE: S2-0000020/T0718.tbl
DATE: 3/26/2018
TIME: 11:21:51 AM
SCALE: 1:20

4/12/2018 7:20 AM

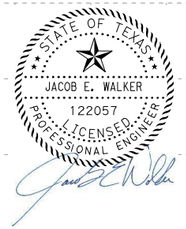

03/26/2018

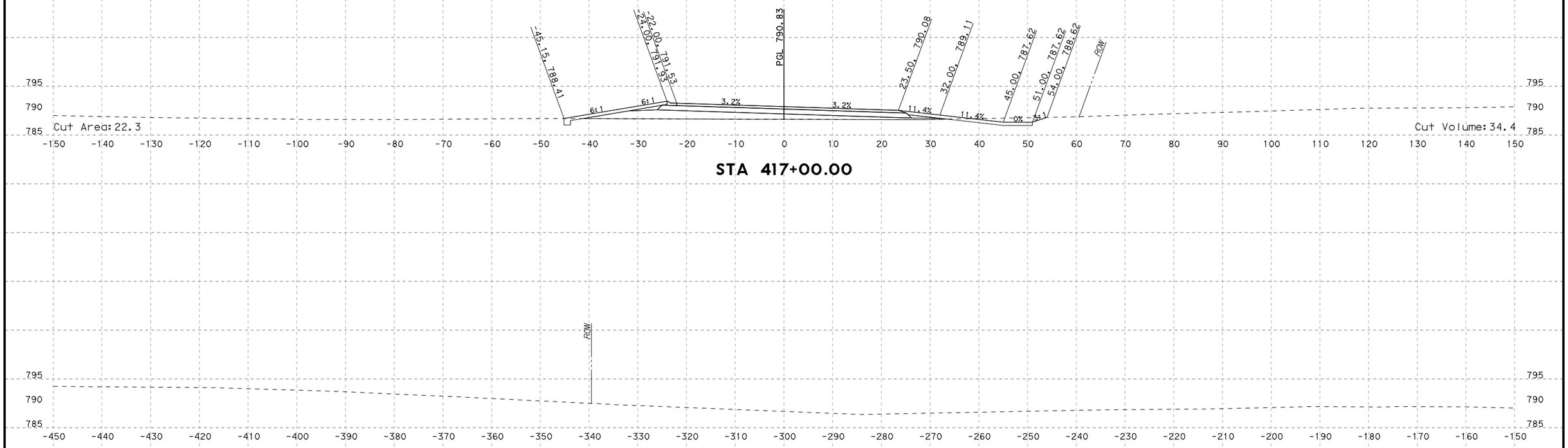

NO.	DATE	REVISION	APPROVED

HDR Engineering, Inc.
810 Hesters Crossing, Suite 120
Round Rock, Texas 78681
Texas Registered Engineering Firm F-754

STA 417+00.00

SCALE: HORIZ: 1"=20'
VERT: 1"=20'

SOUTHWEST BYPASS SEGMENT 2 - WBFR

SHEET NO.
XS-49

PLOT DRIVER: TXDOT_PDF_BW.pltcfg
USER: lgomezgonz
FILE: \
DATE: 3/26/2018
TIME: 11:21:54 AM
PENTABLE: S2-0000020I0718.tbl
SCALE: 1:20

4/12/2018 7:20 AM

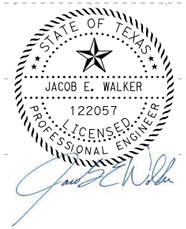

03/26/2018

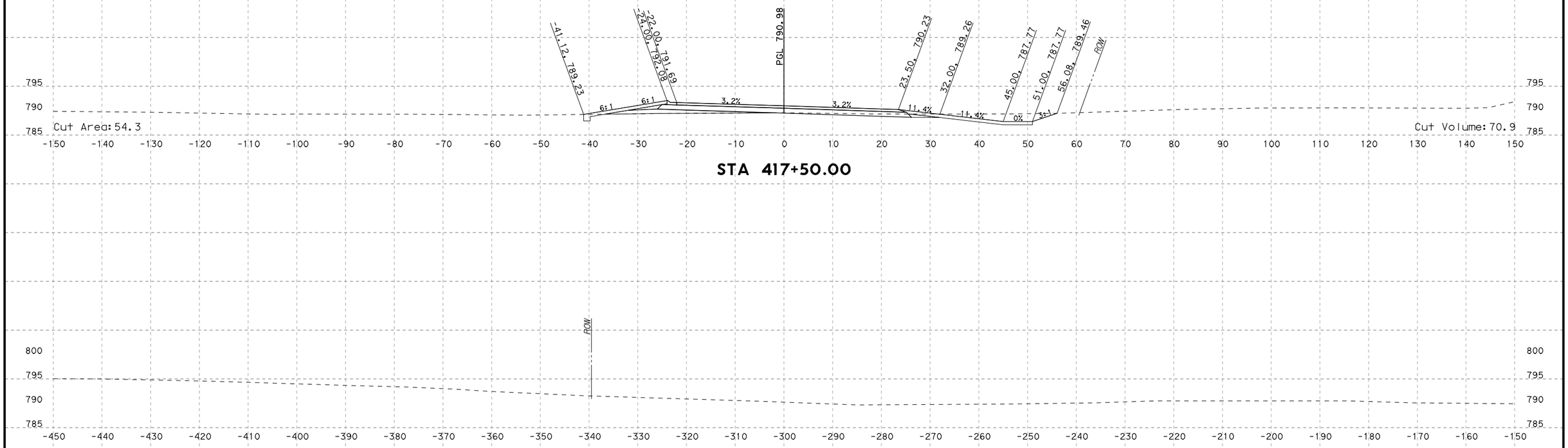

STA 417+50.00

PLOT DRIVER: TXDOT_PDF_BW.pltcfg
USER: lgomezgonz
FILE: \
PENTABLE: S2-0000020/T0718.tbl
DATE: 3/26/2018
TIME: 11:21:57 AM
SCALE: 1:20

NO.	DATE	REVISION	APPROVED

HDR Engineering, Inc.
810 Hesters Crossing, Suite 120
Round Rock, Texas 78681
Texas Registered Engineering Firm F-754

STA 417+50.00

SCALE: HORIZ: 1"=20'
VERT: 1"=20'

SOUTHWEST BYPASS SEGMENT 2 - WBFR

SHEET NO.
XS-50

STATE OF TEXAS
JACOB E. WALKER
122057
LICENSED
PROFESSIONAL ENGINEER

03/26/2018

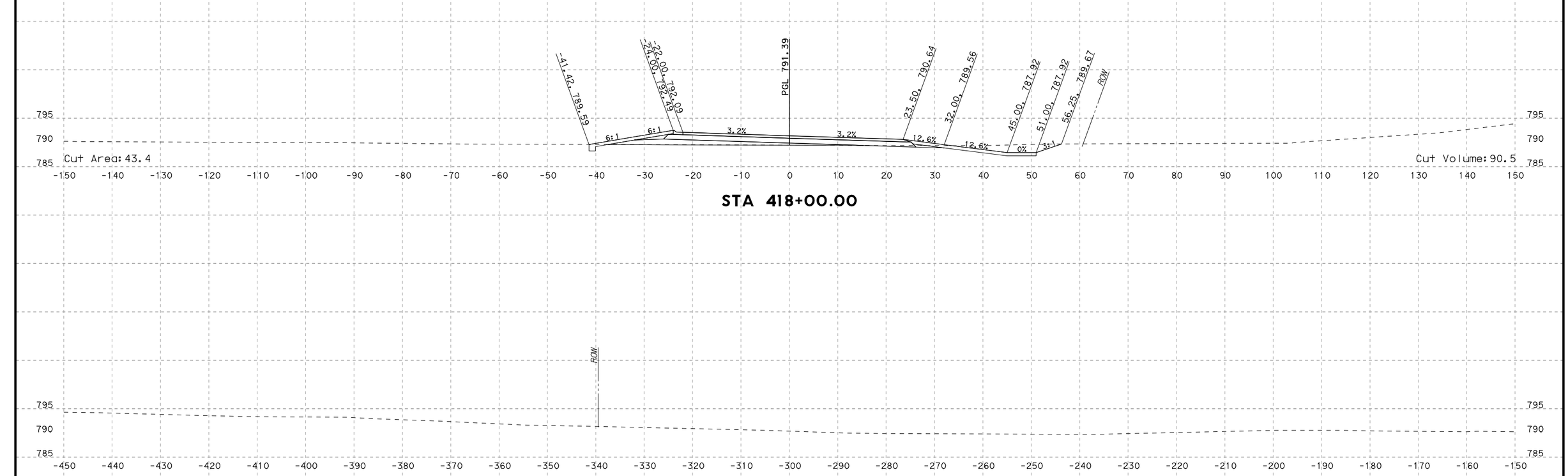

NO.	DATE	REVISION	APPROVED

HDR Engineering, Inc.
810 Hesters Crossing, Suite 120
Round Rock, Texas 78681
Texas Registered Engineering Firm F-754

STA 418+00.00

SCALE: HORIZ: 1"=20'
VERT: 1"=20'

SOUTHWEST BYPASS SEGMENT 2 - WBFR

SHEET NO.
XS-51

PLOT DRIVER: TXDOT_PDF_BW.pltcfg
USER: lgomezgonz
FILE: \
DATE: 3/26/2018
TIME: 11:22:01 AM
PENTABLE: S2-0000020/T0718.tbl
SCALE: 1:20

4/12/2018 7:20 AM

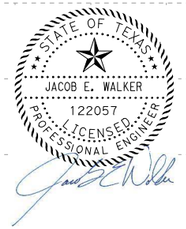

03/26/2018

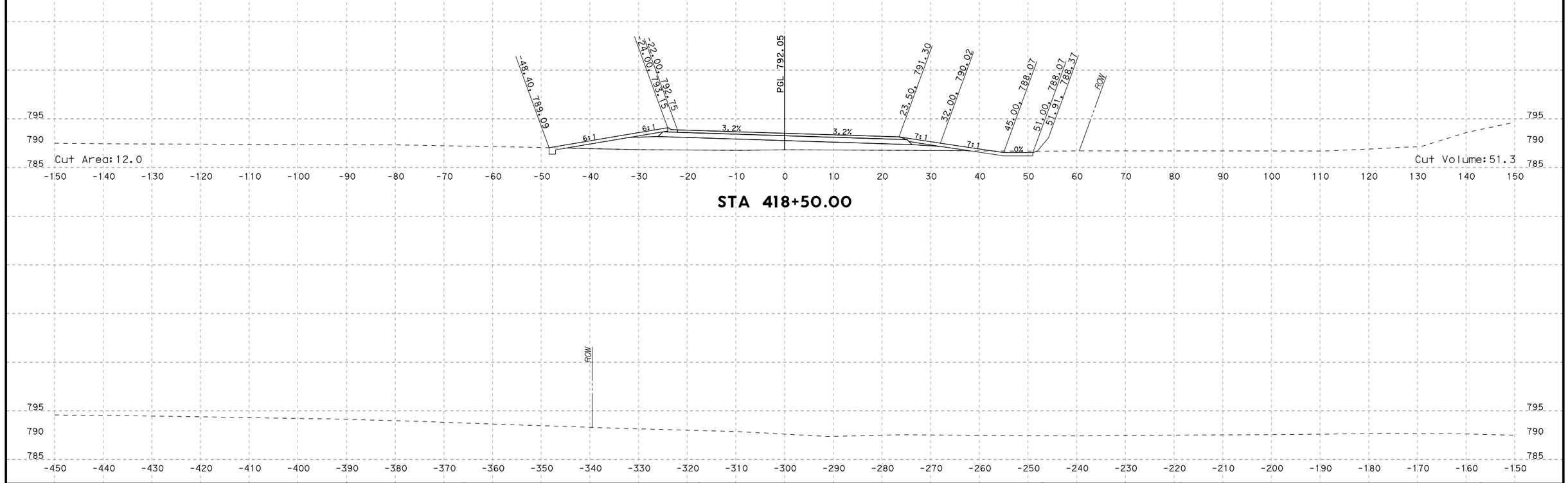

NO.	DATE	REVISION	APPROVED

HDR Engineering, Inc.
810 Hesters Crossing, Suite 120
Round Rock, Texas 78681
Texas Registered Engineering Firm F-754

STA 418+50.00

SCALE: HORIZ: 1"=20'
VERT: 1"=20'

SOUTHWEST BYPASS SEGMENT 2 - WBFR

SHEET NO.
XS-52

PLOT DRIVER: TXDOT_PDF_BW.pltcfg
USER: lgomezgonz
FILE: \
DATE: 3/26/2018
TIME: 11:22:04 AM
PENTABLE: S2-0000020I0718.tbl
SCALE: 1:20

4/12/2018 7:20 AM

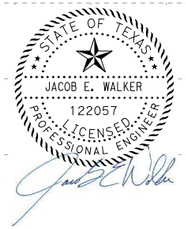

03/26/2018

PLOT DRIVER: TXDOT_PDF_BW.pltcfg
USER: lgomezgonz
FILE: \
PENTABLE: S2-0000020/T0718.tbl
TIME: 11:22:07 AM
DATE: 3/26/2018
SCALE: 1:20

NO.	DATE	REVISION	APPROVED

HDR Engineering, Inc.
810 Hesters Crossing, Suite 120
Round Rock, Texas 78681
Texas Registered Engineering Firm F-754

STA 419+00.00

SCALE: HORIZ: 1"=20'
VERT: 1"=20'

SOUTHWEST BYPASS
SEGMENT 2 - WBFR

SHEET NO.
XS-53

4/12/2018 7:20 AM

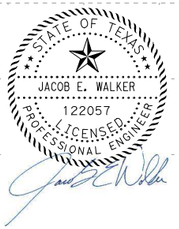

03/26/2018

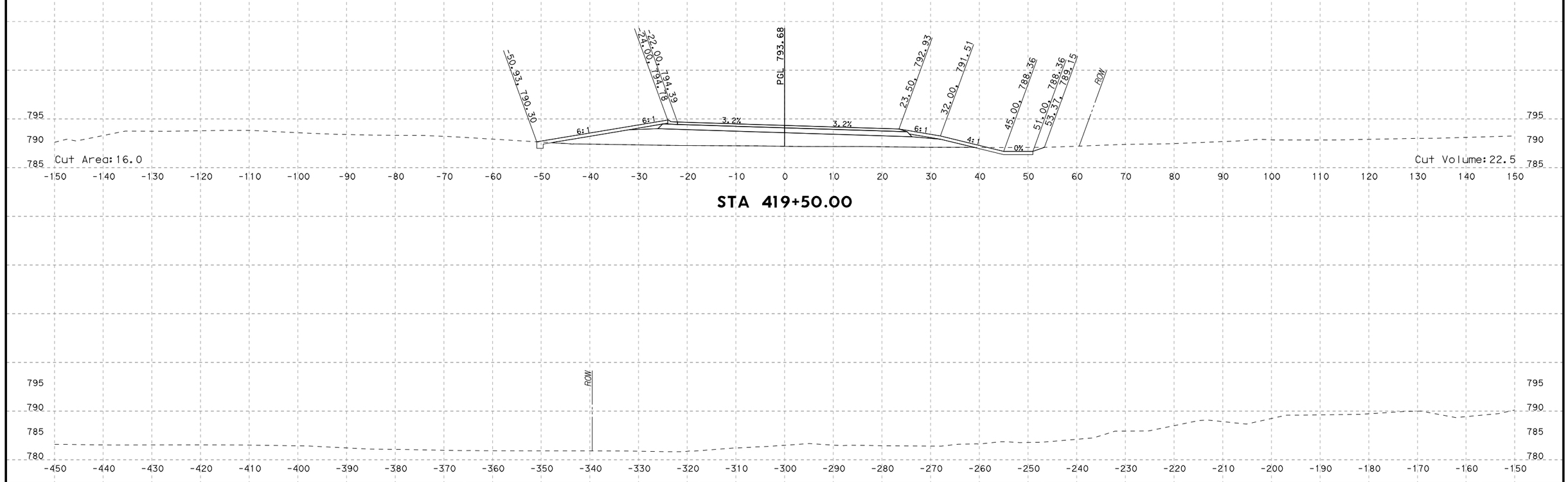

STA 419+50.00

PLOT DRIVER: TXDOT_PDF_BW.pltcfg
USER: lgomezgonz DATE: 3/26/2018
FILE: \
PENTABLE: S2-0000020/T0718.tbl
TIME: 11:22:10 AM SCALE: 1:20

NO.	DATE	REVISION	APPROVED

HDR Engineering, Inc.
810 Hesters Crossing, Suite 120
Round Rock, Texas 78681
Texas Registered Engineering Firm F-754

STA 419+50.00

SCALE: HORIZ: 1"=20'
VERT: 1"=20'

SOUTHWEST BYPASS SEGMENT 2 - WBFR

SHEET NO.
XS-54

4/12/2018 7:20 AM

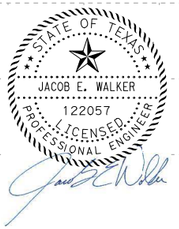

03/26/2018

STA 420+00.00

NO.	DATE	REVISION	APPROVED

HDR Engineering, Inc.
810 Hesters Crossing, Suite 120
Round Rock, Texas 78681
Texas Registered Engineering Firm F-754

STA 420+00.00

SCALE: HORIZ: 1"=20'
VERT: 1"=20'

SOUTHWEST BYPASS
SEGMENT 2 - WBFR

SHEET NO.
XS-55

PLOT DRIVER: TXDOT_PDF_BW.pltcfg PENTABLE: S2-0000020I7018.tbl
USER: lgomezgonz TIME: 11:22:4 AM SCALE: 1:20
DATE: 3/26/2018
FILE: \

4/12/2018 7:20 AM

STATE OF TEXAS
JACOB E. WALKER
122057
LICENSED
PROFESSIONAL ENGINEER

03/26/2018

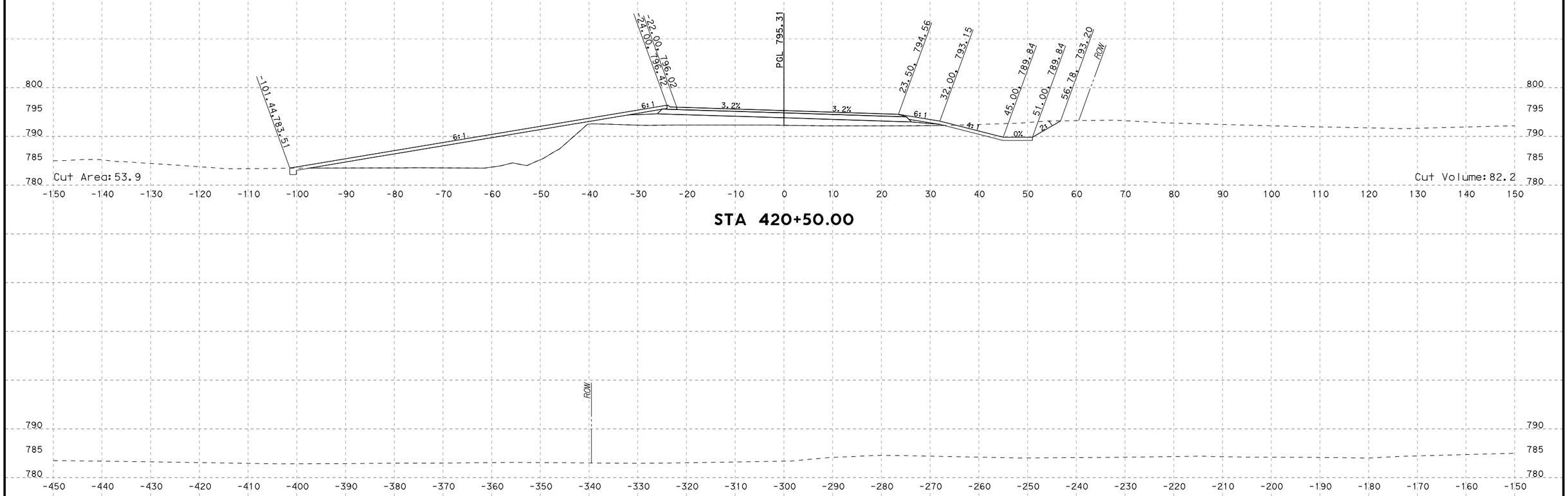

STA 420+50.00

PLOT DRIVER: TXDOT_PDF_BW.pltcfg
USER: lgomezgonz DATE: 3/26/2018
FILE: \
PENTABLE: S2-0000020\T0718.tbl
TIME: 11:22:17 AM
SCALE: 1:20

NO.	DATE	REVISION	APPROVED

HDR Engineering, Inc.
810 Hesters Crossing, Suite 120
Round Rock, Texas 78681
Texas Registered Engineering Firm F-754

STA 420+50.00

SCALE: HORIZ: 1"=20'
VERT: 1"=20'

SOUTHWEST BYPASS
SEGMENT 2 - WBFR

SHEET NO.
XS-56

STATE OF TEXAS
JACOB E. WALKER
122057
LICENSED
PROFESSIONAL ENGINEER

03/26/2018

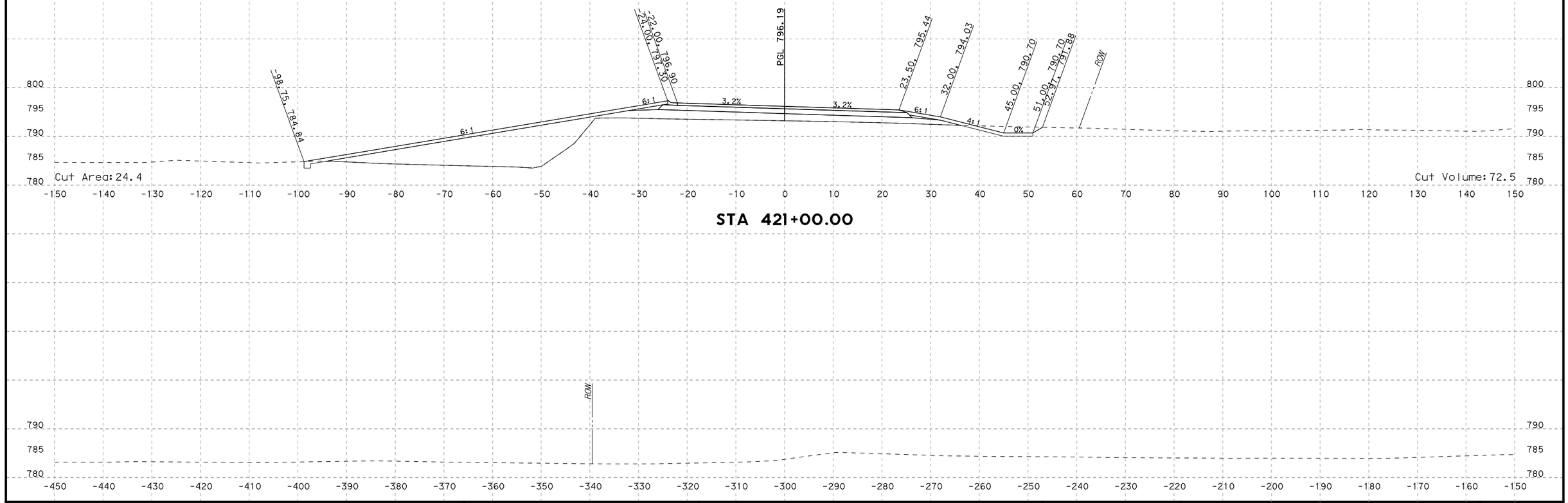

STA 421+00.00

PLOT DRIVER: TXDOT_PDF_BW.pltcfg PENTABLE: S2-0000020I70718.tbl
USER: lgomezgonz TIME: 11:22:20 AM SCALE: 1:20
DATE: 3/26/2018
FILE: \

NO.	DATE	REVISION	APPROVED

HDR Engineering, Inc.
810 Hesters Crossing, Suite 120
Round Rock, Texas 78681
Texas Registered Engineering Firm F-754

STA 421+00.00

SCALE: HORIZ: 1"=20'
VERT: 1"=20'

SOUTHWEST BYPASS SEGMENT 2 - WBFR

SHEET NO.
XS-57

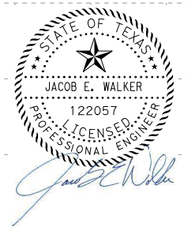

03/26/2018

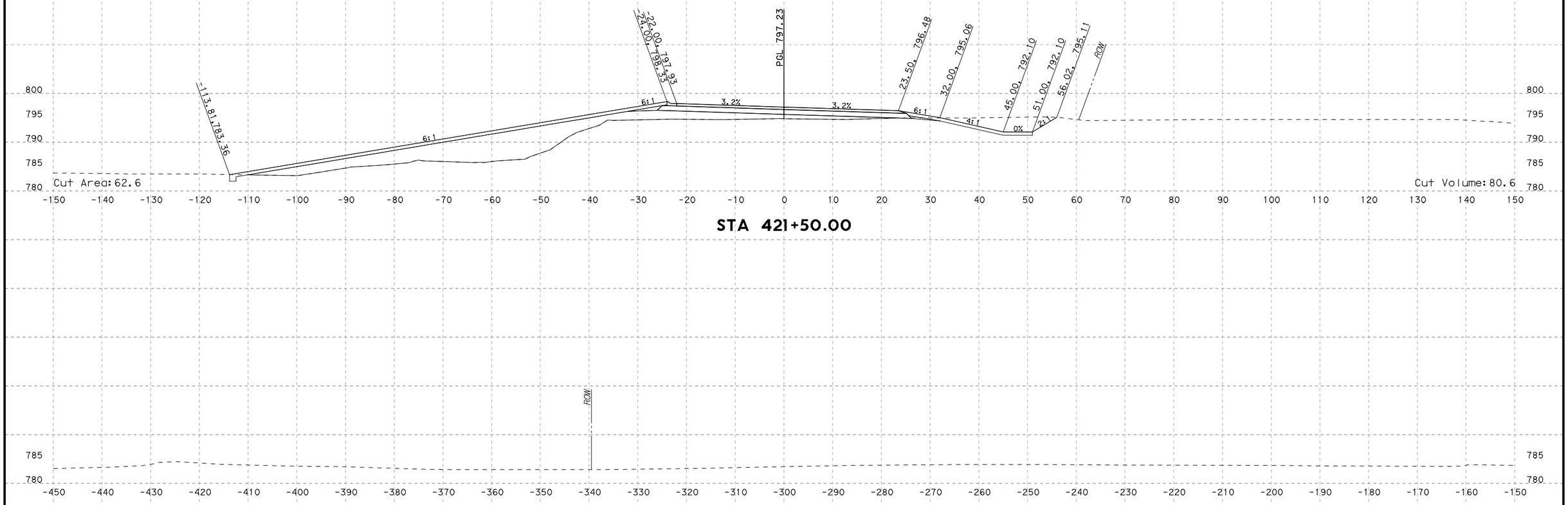

STA 421+50.00

PLOT DRIVER: TXDOT_PDF_BW.pltcfg
USER: lgomezgonz
FILE: \
PENTABLE: S2-0000020170718.tbl
TIME: 11:22:24 AM
DATE: 3/26/2018
SCALE: 1:20

NO.	DATE	REVISION	APPROVED

HDR Engineering, Inc.
810 Hesters Crossing, Suite 120
Round Rock, Texas 78681
Texas Registered Engineering Firm F-754

STA 421+50.00

SCALE: HORIZ: 1"=20'
VERT: 1"=20'

SOUTHWEST BYPASS
SEGMENT 2 - WBFR

SHEET NO.
XS-58

4/12/2018 7:20 AM

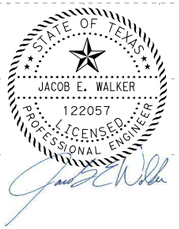

03/26/2018

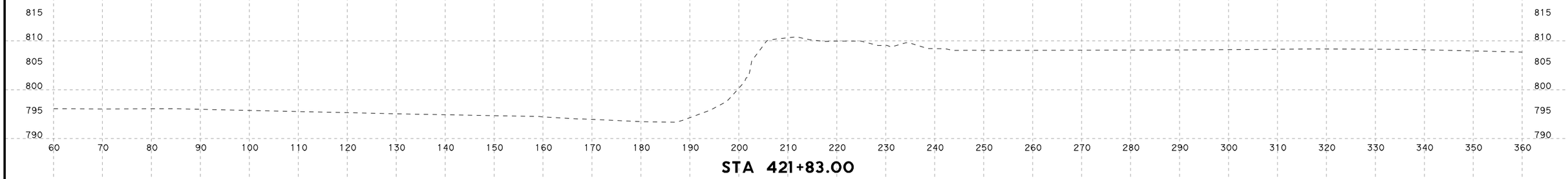

STA 421+83.00

STA 421+83.00

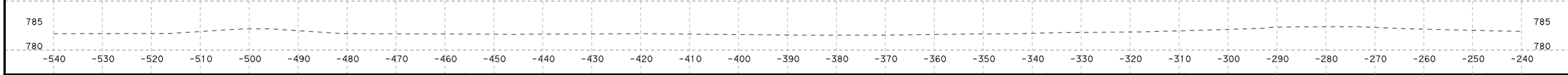

NO.	DATE	REVISION	APPROVED

HDR Engineering, Inc.
810 Hesters Crossing, Suite 120
Round Rock, Texas 78681
Texas Registered Engineering Firm F-754

STA 421+83.00

SCALE: HORIZ: 1"=20'
VERT: 1"=20'

SOUTHWEST BYPASS
SEGMENT 2 - WBFR

SHEET NO.
XS-59

PLOT DRIVER: TXDOT_PDF_BW.pltcfg PENTABLE: S2-0000020170718.tbl
USER: lgomezgonz TIME: 11:22:27 AM SCALE: 1:20
DATE: 3/26/2018
FILE: \

4/12/2018 7:20 AM

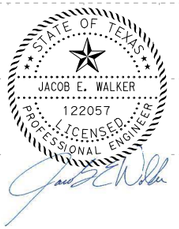

03/26/2018

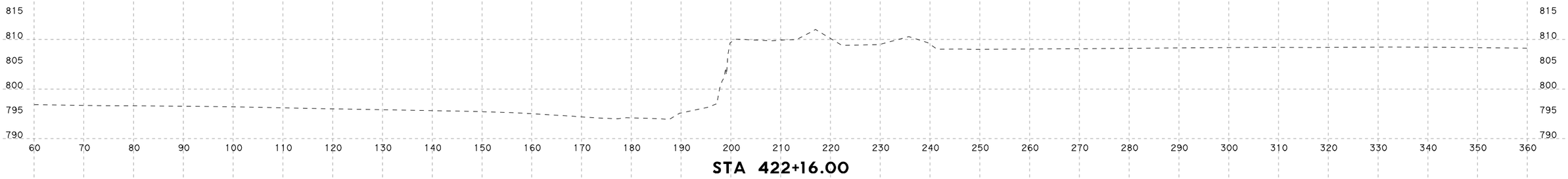

STA 422+16.00

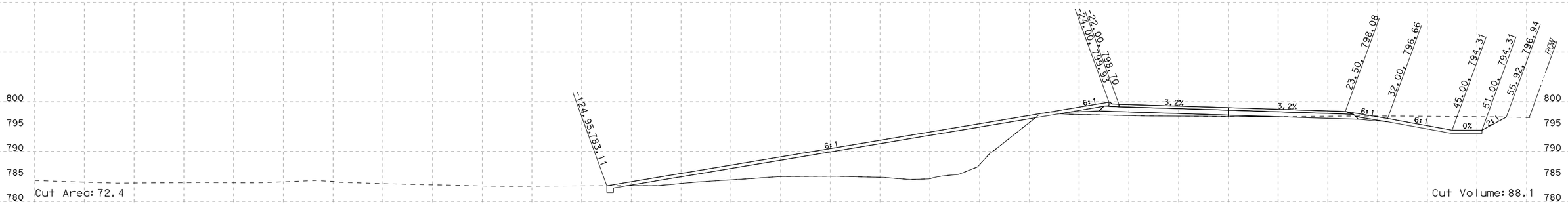

STA 422+16.00

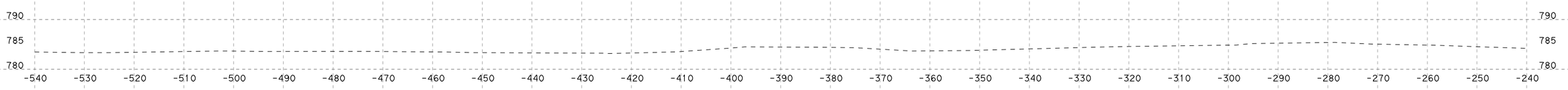

NO.	DATE	REVISION	APPROVED

HDR Engineering, Inc.
810 Hesters Crossing, Suite 120
Round Rock, Texas 78681
Texas Registered Engineering Firm F-754

STA 422+16.00

SCALE: HORIZ: 1"=20'
VERT: 1"=20'

SOUTHWEST BYPASS
SEGMENT 2 - WBFR

SHEET NO.
XS-60

PLOT DRIVER: TXDOT_PDF_BW.pltcfg
USER: lgomezgonz DATE: 3/26/2018
FILE: \
TIME: 11:22:30 AM
PENTABLE: S2-0000020170718.tbl
SCALE: 1:20

4/12/2018 7:20 AM

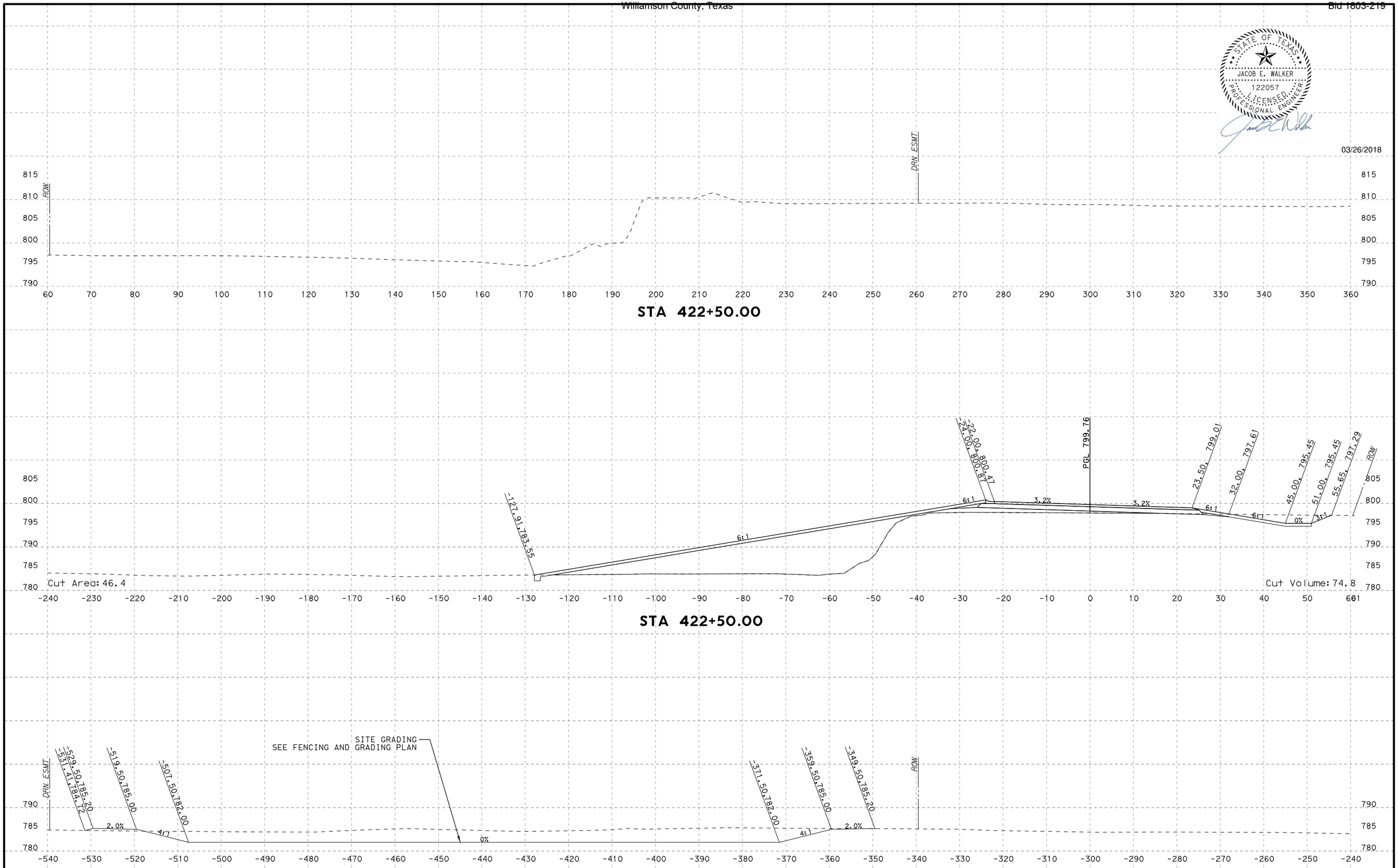

PLOT DRIVER: TXDOT_PDF_BW.pltcfg PENTABLE: S2-0000020170718.tbl
USER: lgomezgonz DATE: 3/26/2018 TIME: 11:22:34 AM SCALE: 1:20
FILE: \

4/12/2018 7:20 AM

NO.	DATE	REVISION	APPROVED

HDR Engineering, Inc.
810 Hesters Crossing, Suite 120
Round Rock, Texas 78681
Texas Registered Engineering Firm F-754

STA 422+50.00

SCALE: HORIZ: 1"=20'
VERT: 1"=20'

SOUTHWEST BYPASS
SEGMENT 2 - WBFR

SHEET NO.
XS-61

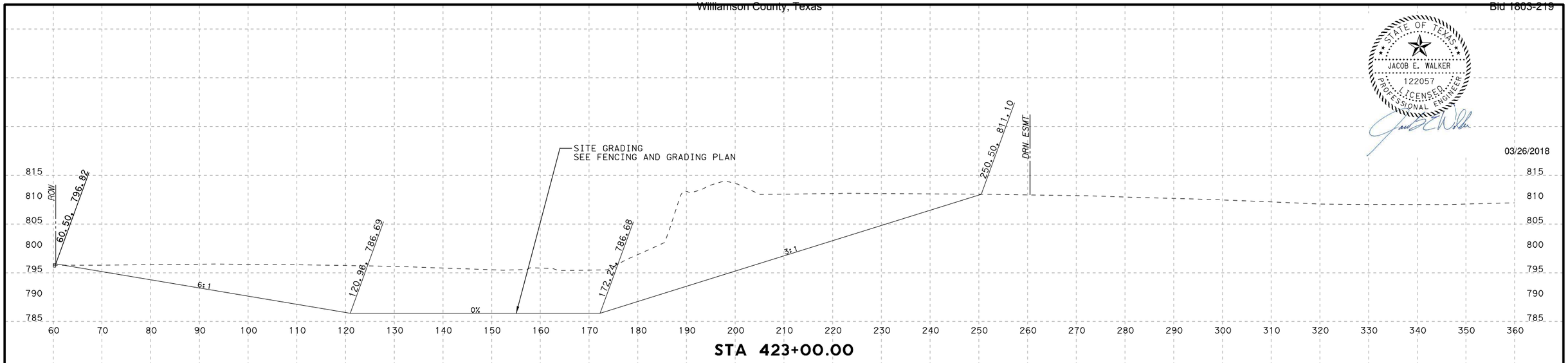

STA 423+00.00

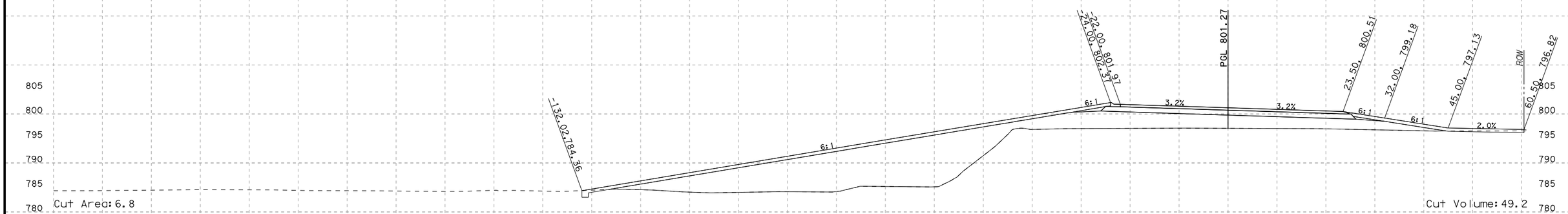

STA 423+00.00

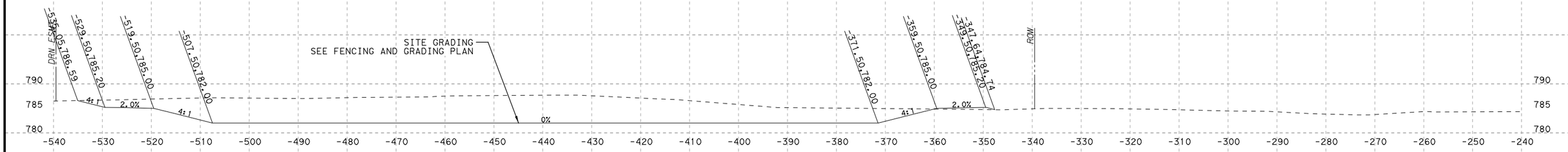

NO.	DATE	REVISION	APPROVED

HDR Engineering, Inc.
810 Hesters Crossing, Suite 120
Round Rock, Texas 78681
Texas Registered Engineering Firm F-754

STA 423+00.00

SCALE: HORIZ: 1"=20'
VERT: 1"=20'

SOUTHWEST BYPASS
SEGMENT 2 - WBFR

SHEET NO.
XS-62

PLOT DRIVER: TXDOT_PDF_BW.pltcfg PENTABLE: S2-0000020170718.tbl
USER: lgomezgonz DATE: 3/26/2018 TIME: 11:22:37 AM SCALE: 1:20
FILE: \
4/12/2018 7:20 AM

JACOB E. WALKER
122057
LICENSED
PROFESSIONAL ENGINEER
STATE OF TEXAS
03/26/2018

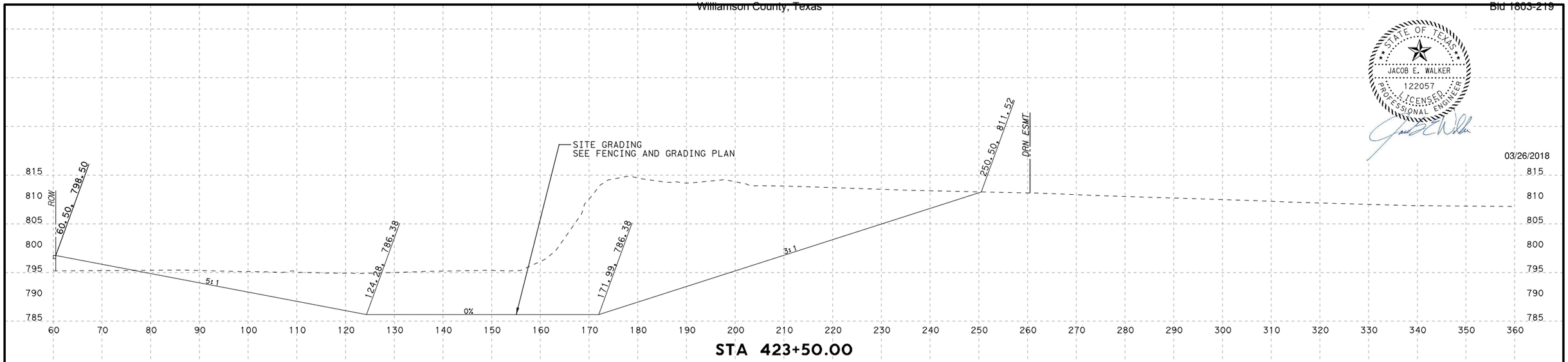

STA 423+50.00

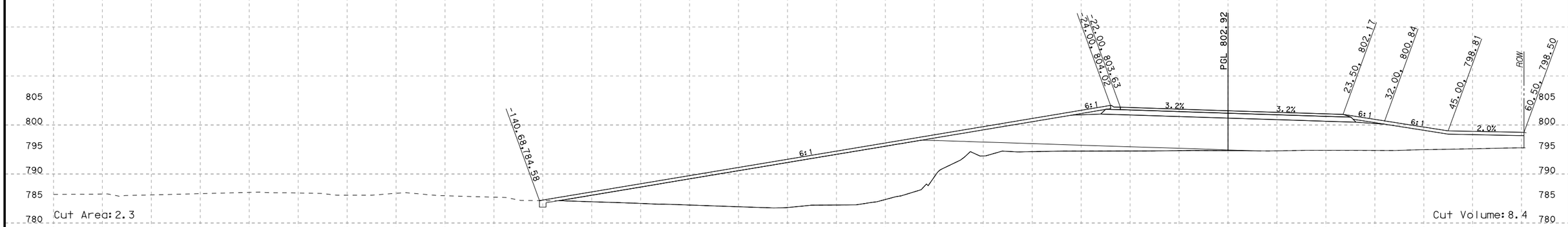

STA 423+50.00

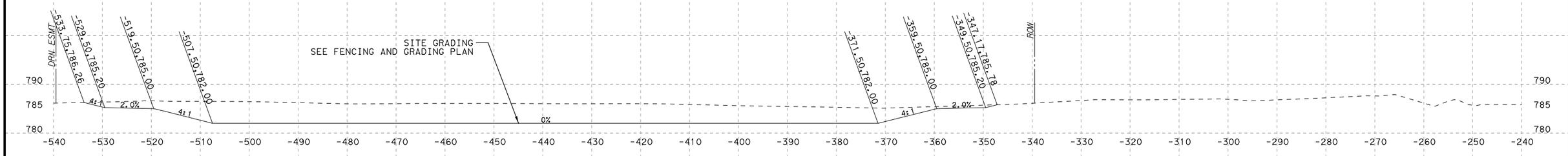

NO.	DATE	REVISION	APPROVED

HDR Engineering, Inc.
810 Hesters Crossing, Suite 120
Round Rock, Texas 78681
Texas Registered Engineering Firm F-754

STA 423+50.00

SCALE: HORIZ: 1"=20'
VERT: 1"=20'

SOUTHWEST BYPASS
SEGMENT 2 - WBFR

SHEET NO.
XS-63

PLOT DRIVER: TXDOT_PDF_BW.pltcfg PENTABLE: S2-0000020170718.tbl
USER: lgomezgonz DATE: 3/26/2018 TIME: 11:22:40 AM SCALE: 1:20
FILE: \
4/12/2018 7:20 AM

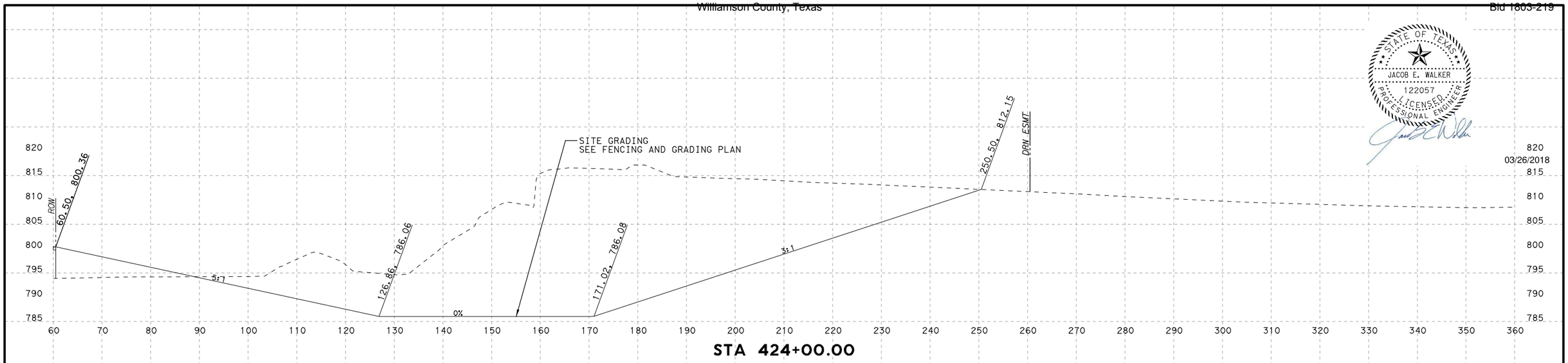

STA 424+00.00

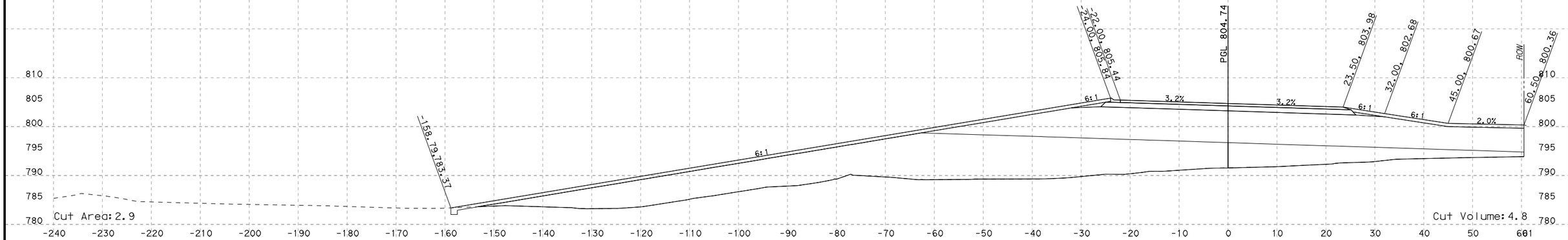

STA 424+00.00

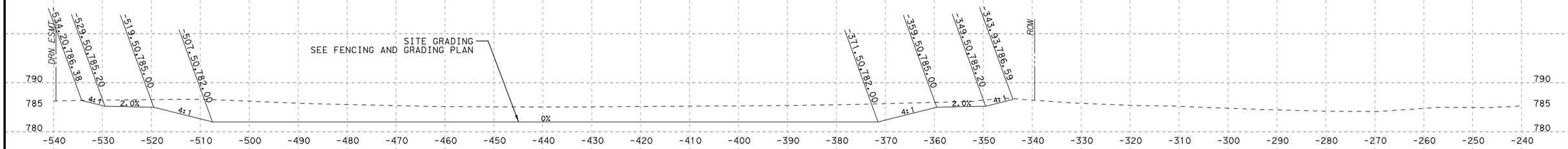

NO.	DATE	REVISION	APPROVED

HDR Engineering, Inc.
810 Hesters Crossing, Suite 120
Round Rock, Texas 78681
Texas Registered Engineering Firm F-754

STA 424+00.00

SCALE: HORIZ: 1"=20'
VERT: 1"=20'

SOUTHWEST BYPASS
SEGMENT 2 - WBFR

SHEET NO.
XS-64

PLOT DRIVER: TXDOT_POF_BW.pltcfg PENTABLE: S2-0000020\T0718.tbl
USER: lgomezgonz DATE: 3/26/2018 TIME: 11:22:44 AM SCALE: 1:20
FILE: \

4/12/2018 7:20 AM

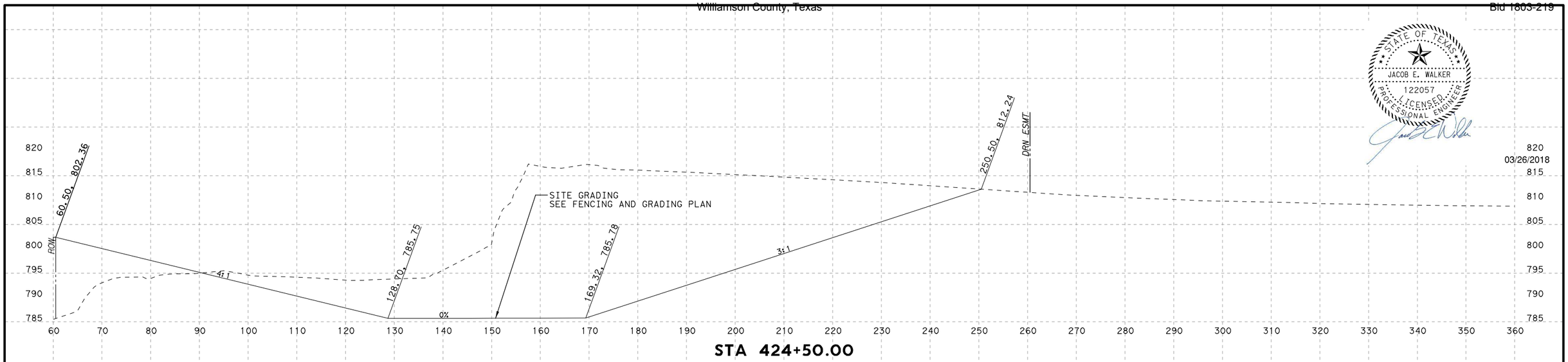

STA 424+50.00

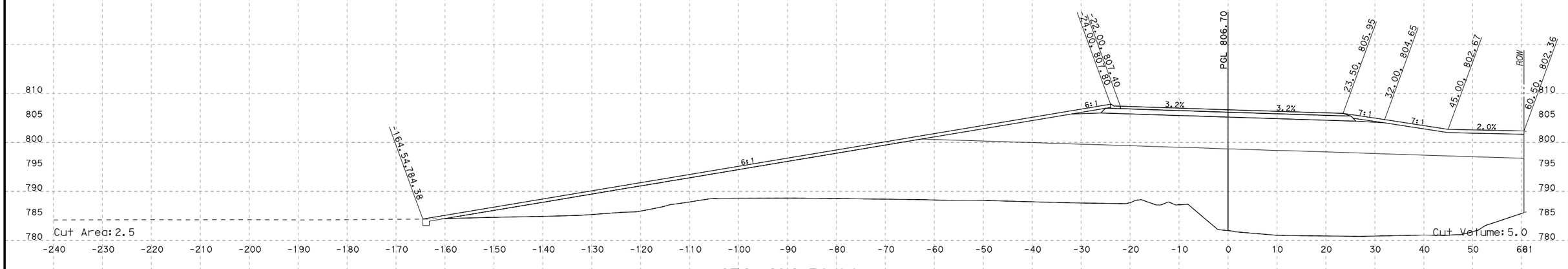

STA 424+50.00

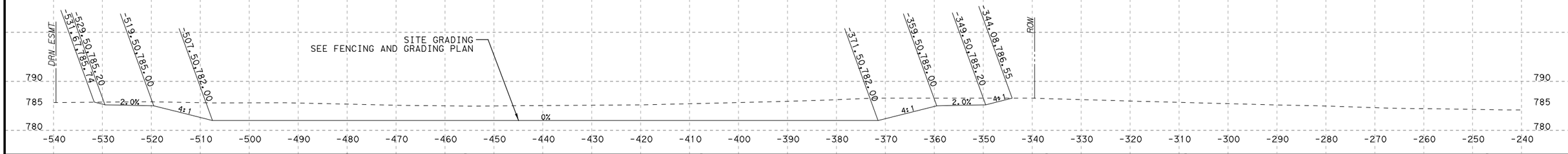

NO.	DATE	REVISION	APPROVED

HDR Engineering, Inc.
810 Hesters Crossing, Suite 120
Round Rock, Texas 78681
Texas Registered Engineering Firm F-754

STA 424+50.00

SCALE: HORIZ: 1"=20'
VERT: 1"=20'

SOUTHWEST BYPASS SEGMENT 2 - WBFR

SHEET NO.
XS-65

PLOT DRIVER: TXDOT_PDF_BW.pltcfg PENTABLE: S2-0000020170718.tbl
USER: lgomezgon2 DATE: 3/26/2018 TIME: 11:22:47 AM SCALE: 1:20
FILE: \

4/12/2018 7:20 AM

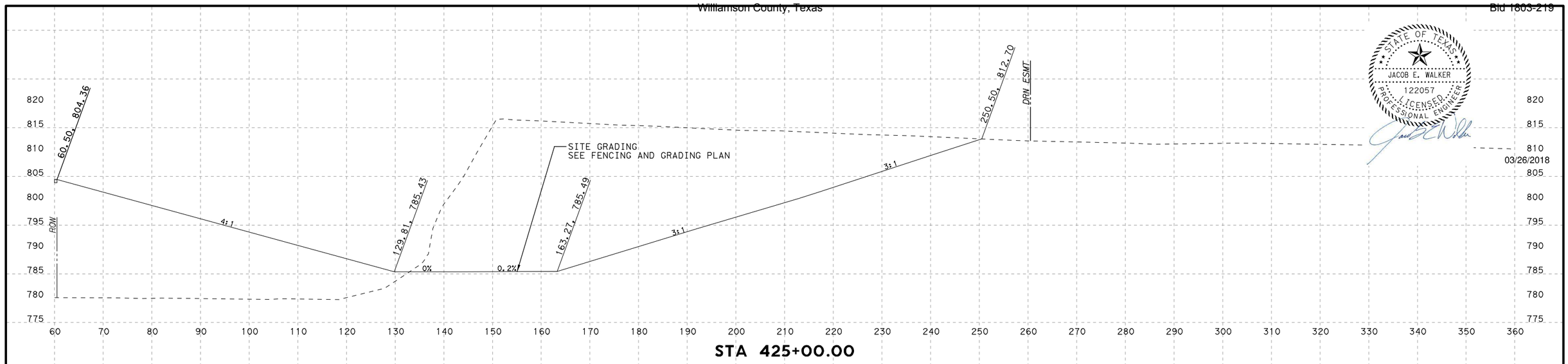

STA 425+00.00

JACOB E. WALKER
122057
LICENSED
PROFESSIONAL ENGINEER
STATE OF TEXAS
03/26/2018

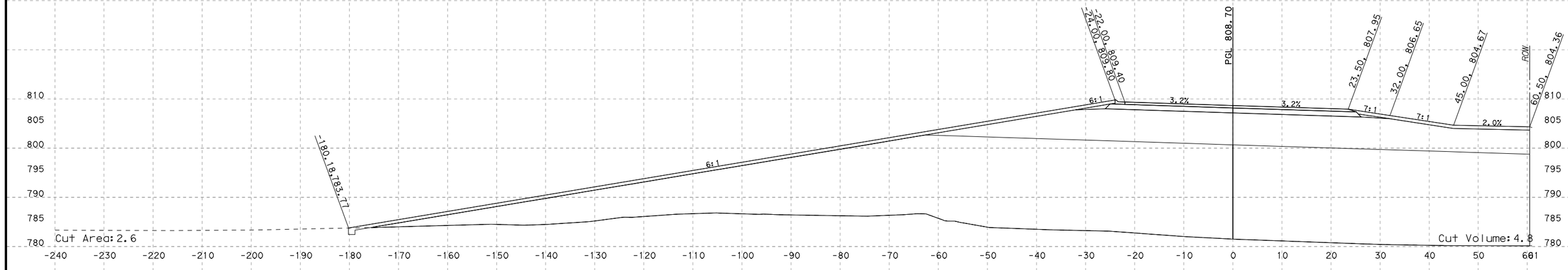

STA 425+00.00

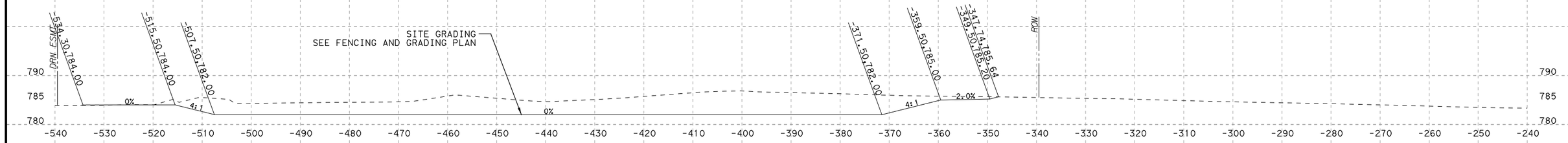

NO.	DATE	REVISION	APPROVED

HDR Engineering, Inc.
810 Hesters Crossing, Suite 120
Round Rock, Texas 78681
Texas Registered Engineering Firm F-754

STA 425+00.00

SCALE: HORIZ: 1"=20'
VERT: 1"=20'

SOUTHWEST BYPASS SEGMENT 2 - WBFR

SHEET NO.
XS-66
p. 642

PLOT DRIVER: TXDOT_PDF_BW.pltcfg PENTABLE: S2-00000207/7018.tbl
USER: lgomezgonz DATE: 3/26/2018 TIME: 11:22:50 AM SCALE: 1:20
FILE: \
4/12/2018 7:20 AM

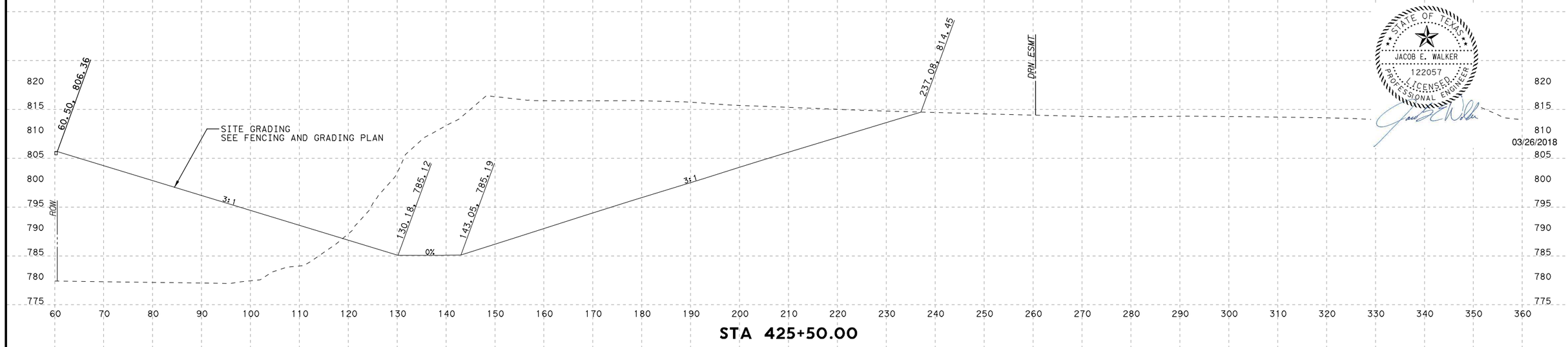

STA 425+50.00

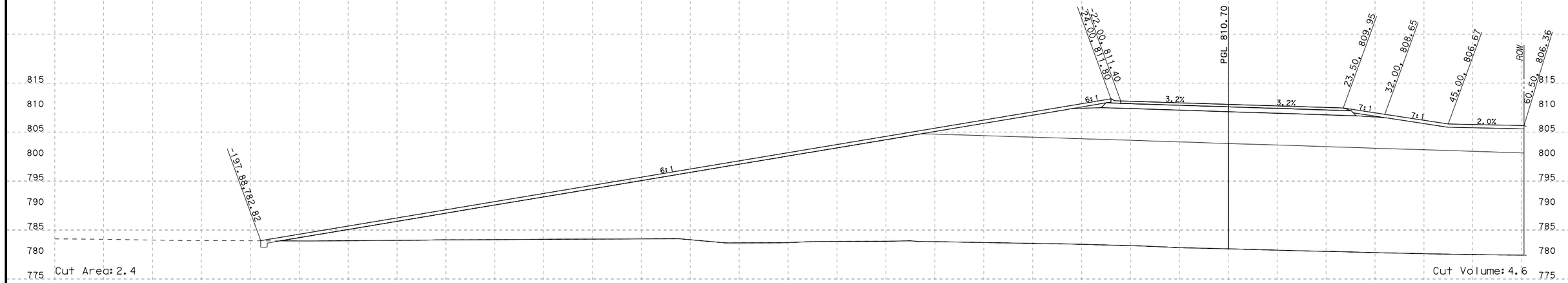

STA 425+50.00

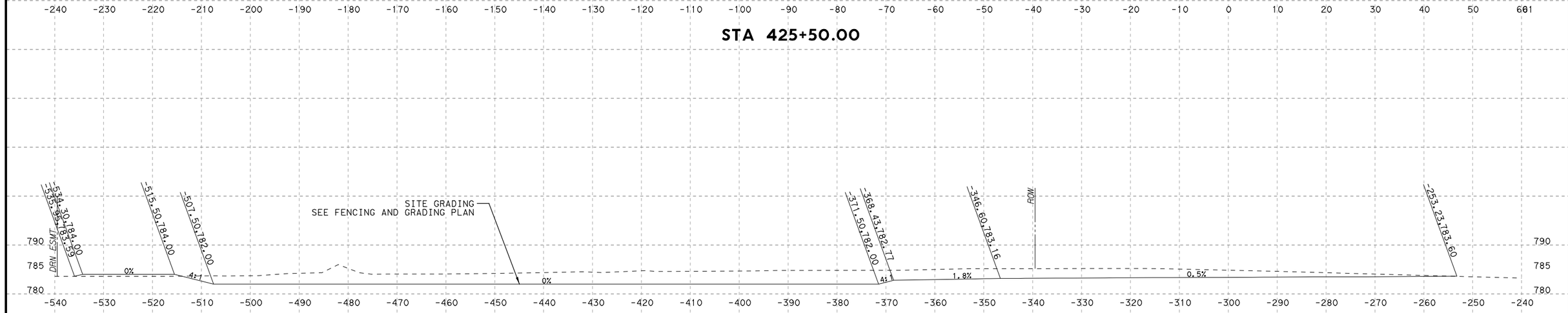

NO.	DATE	REVISION	APPROVED

HDR Engineering, Inc.
810 Hesters Crossing, Suite 120
Round Rock, Texas 78681
Texas Registered Engineering Firm F-754

STA 425+50.00

SCALE: HORIZ: 1"=20'
VERT: 1"=20'

SOUTHWEST BYPASS
SEGMENT 2 - WBFR

SHEET NO.
XS-67

PLOT DRIVER: TXDOT_PDF_BW.pltcfg PENTABLE: S2-0000020170718.tbl
USER: lgomezgonz TIME: 11:22:54 AM SCALE: 1:20
DATE: 3/26/2018
FILE: \

4/12/2018 7:20 AM



STATE OF TEXAS
JACOB E. WALKER
122057
LICENSED
PROFESSIONAL ENGINEER
03/26/2018

STA 425+75.00

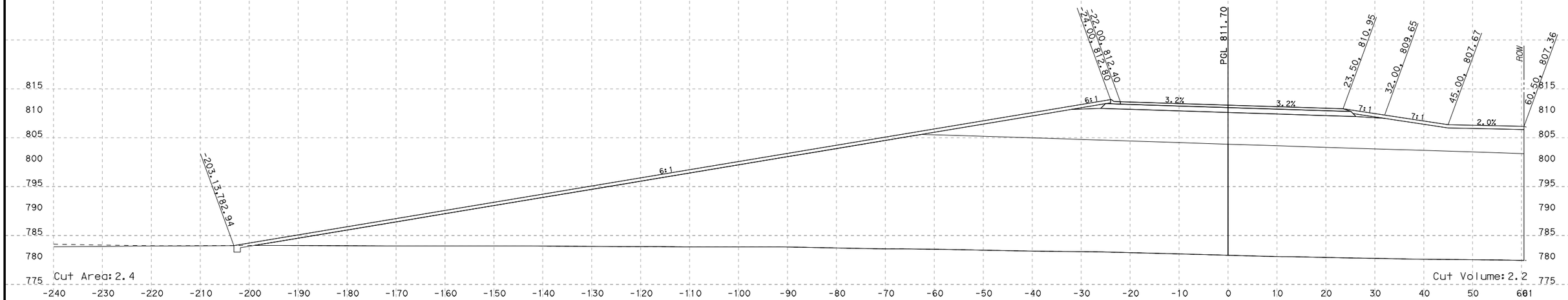

STA 425+75.00

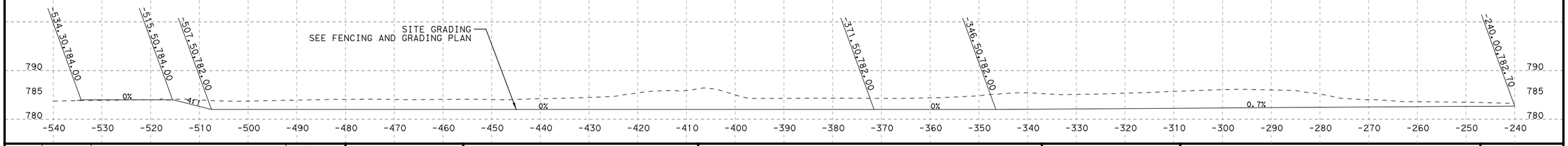

NO.	DATE	REVISION	APPROVED

HDR Engineering, Inc.
810 Hesters Crossing, Suite 120
Round Rock, Texas 78681
Texas Registered Engineering Firm F-754

STA 425+75.00

SCALE: HORIZ: 1"=20'
VERT: 1"=20'

SOUTHWEST BYPASS SEGMENT 2 - WBFR

SHEET NO.
XS-68

PLOT DRIVER: TXDOT_PDF_BW.pltcfg PENTABLE: S2-0000020I7018.tbl
USER: lgomezgonz DATE: 3/26/2018 TIME: 11:22:57 AM SCALE: 1:20
FILE: \

4/12/2018 7:20 AM

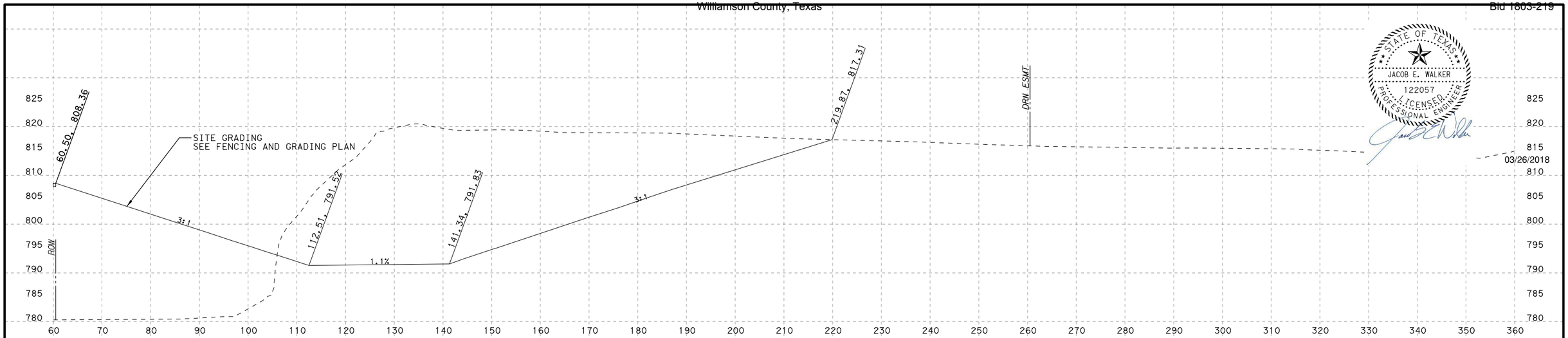

STATE OF TEXAS
JACOB E. WALKER
122057
LICENSED
PROFESSIONAL ENGINEER
03/26/2018

STA 426+00.00



STA 426+00.00

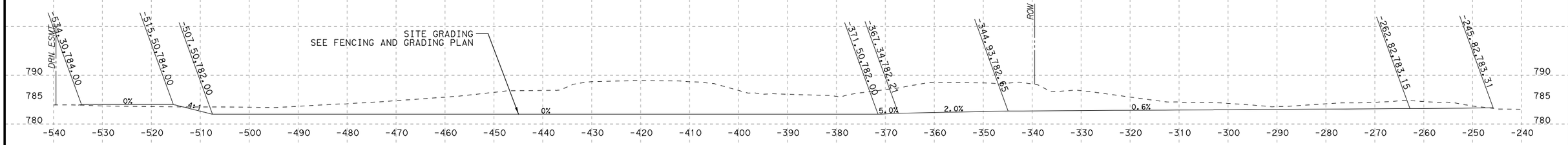

NO.	DATE	REVISION	APPROVED

HDR Engineering, Inc.
810 Hesters Crossing, Suite 120
Round Rock, Texas 78681
Texas Registered Engineering Firm F-754

STA 426+00.00

SCALE: HORIZ: 1"=20'
VERT: 1"=20'

SOUTHWEST BYPASS
SEGMENT 2 - WBFR

SHEET NO.
XS-69

PLOT DRIVER: TXDOT_PDF_BW.pltcfg PENTABLE: S2-0000020I0718.tbl
USER: lgomezgonz TIME: 11:23:00 AM SCALE: 1:20
DATE: 3/26/2018
FILE: \

4/12/2018 7:20 AM

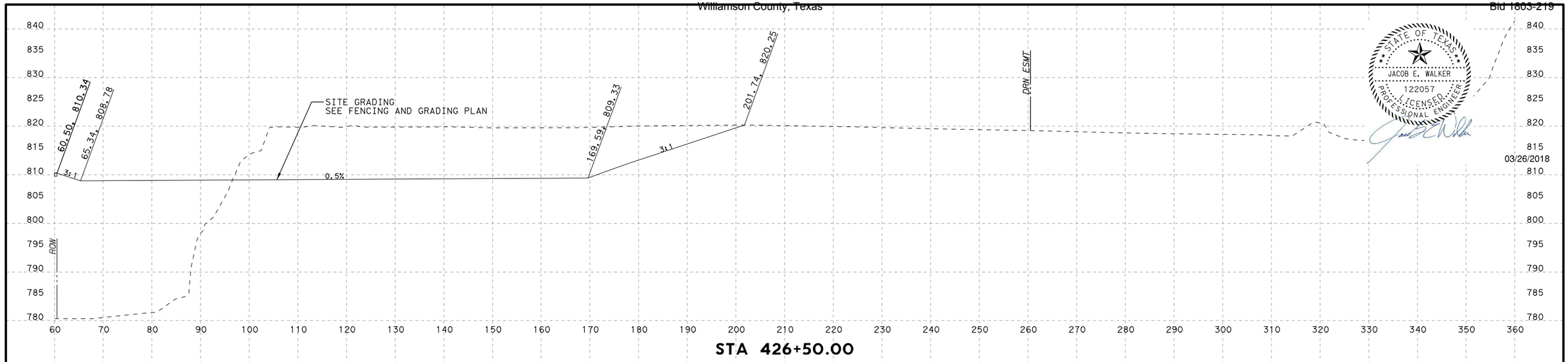

STA 426+50.00

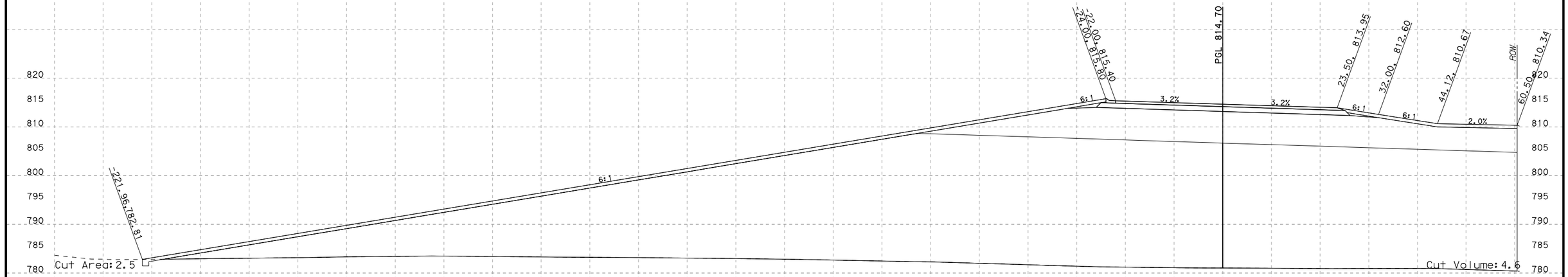

STA 426+50.00

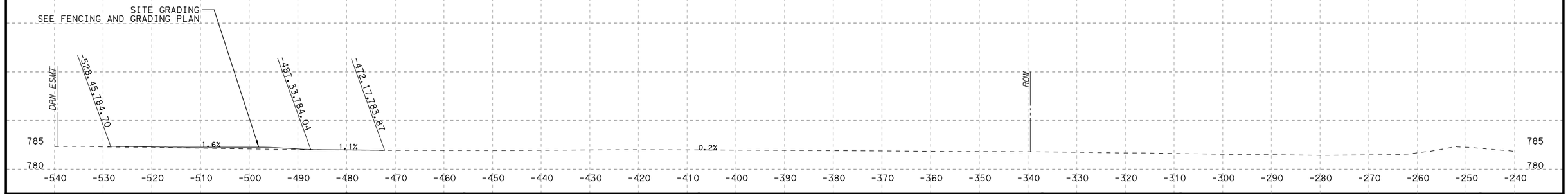

NO.	DATE	REVISION	APPROVED

HDR Engineering, Inc.
810 Hesters Crossing, Suite 120
Round Rock, Texas 78681
Texas Registered Engineering Firm F-754

STA 426+50.00

SCALE: HORIZ: 1"=20'
VERT: 1"=20'

SOUTHWEST BYPASS
SEGMENT 2 - WBFR

SHEET NO.
XS-70

PLOT DRIVER: TXDOT_PDF_BW.pltcfg PENTABLE: S2-0000020170718.tbl
USER: lgomezgonz DATE: 3/26/2018 TIME: 11:23:04 AM SCALE: 1:20
FILE: \

4/12/2018 7:20 AM

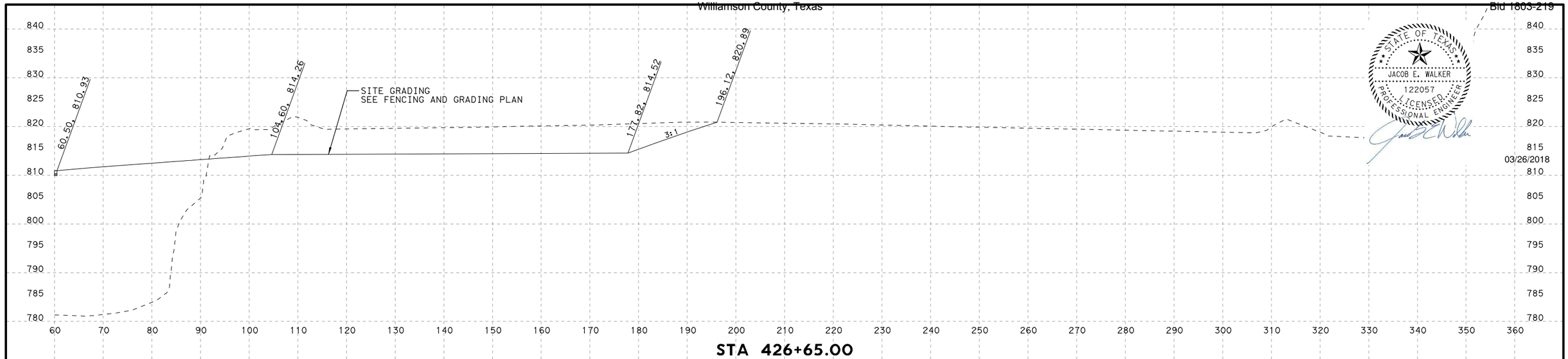

STATE OF TEXAS
JACOB E. WALKER
122057
LICENSED
PROFESSIONAL ENGINEER
03/26/2018

STA 426+65.00

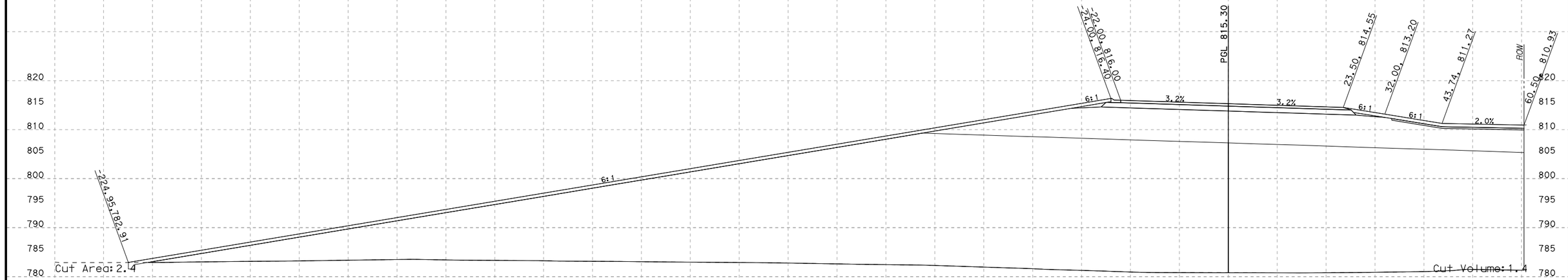

STA 426+65.00

NO.	DATE	REVISION	APPROVED

HDR Engineering, Inc.
810 Hesters Crossing, Suite 120
Round Rock, Texas 78681
Texas Registered Engineering Firm F-754

STA 426+65.00

SCALE: HORIZ: 1"=20'
VERT: 1"=20'

SOUTHWEST BYPASS
SEGMENT 2 - WBFR

SHEET NO.
XS-71
p. 647

PLOT DRIVER: TXDOT_PDF_BW.pltcfg
USER: lgomezgonz
FILE: \
DATE: 3/26/2018
TIME: 11:23:07 AM
PENTABLE: S2-0000020170718.tbl
SCALE: 1:20

4/12/2018 7:20 AM

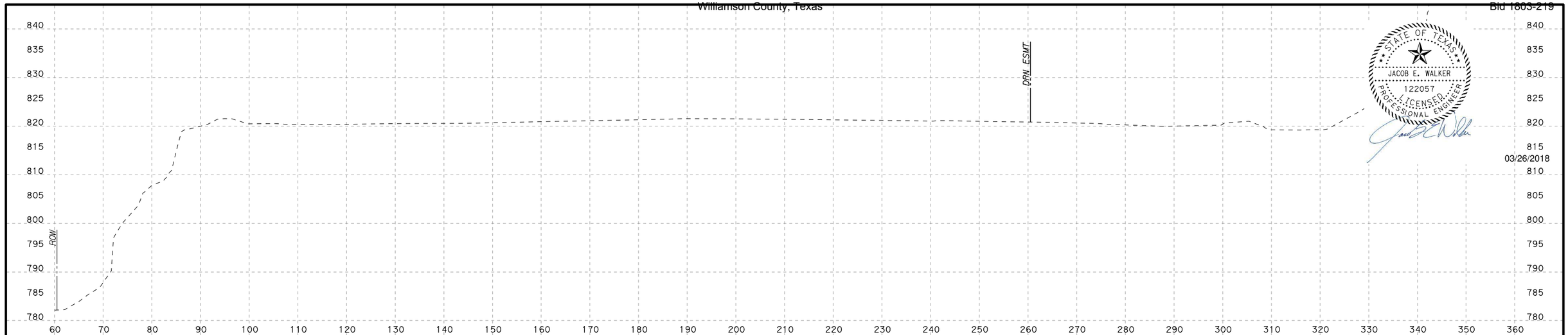

STA 426+95.00

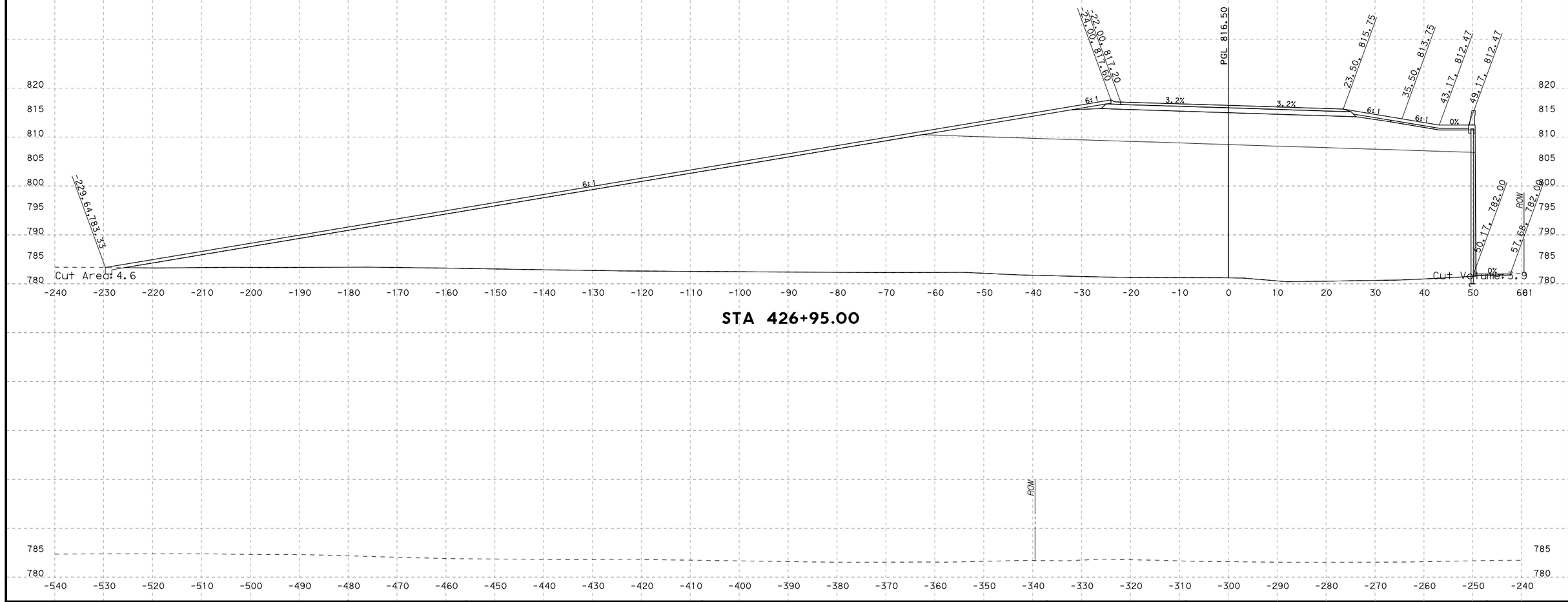

STA 426+95.00

NO.	DATE	REVISION	APPROVED

HDR Engineering, Inc.
810 Hesters Crossing, Suite 120
Round Rock, Texas 78681
Texas Registered Engineering Firm F-754

STA 426+95.00

SCALE: HORIZ: 1"=20'
VERT: 1"=20'

SOUTHWEST BYPASS
SEGMENT 2 - WBFR

SHEET NO.
XS-72

PLOT DRIVER: TXDOT_PDF_BW.pltcfg
USER: lgomezgonz
FILE: \
DATE: 3/26/2018
TIME: 11:23:10 AM
PENTABLE: S2-0000020170718.tbl
SCALE: 1:20

4/12/2018 7:20 AM

STATE OF TEXAS
JACOB E. WALKER
122057
LICENSED
PROFESSIONAL ENGINEER

03/26/2018

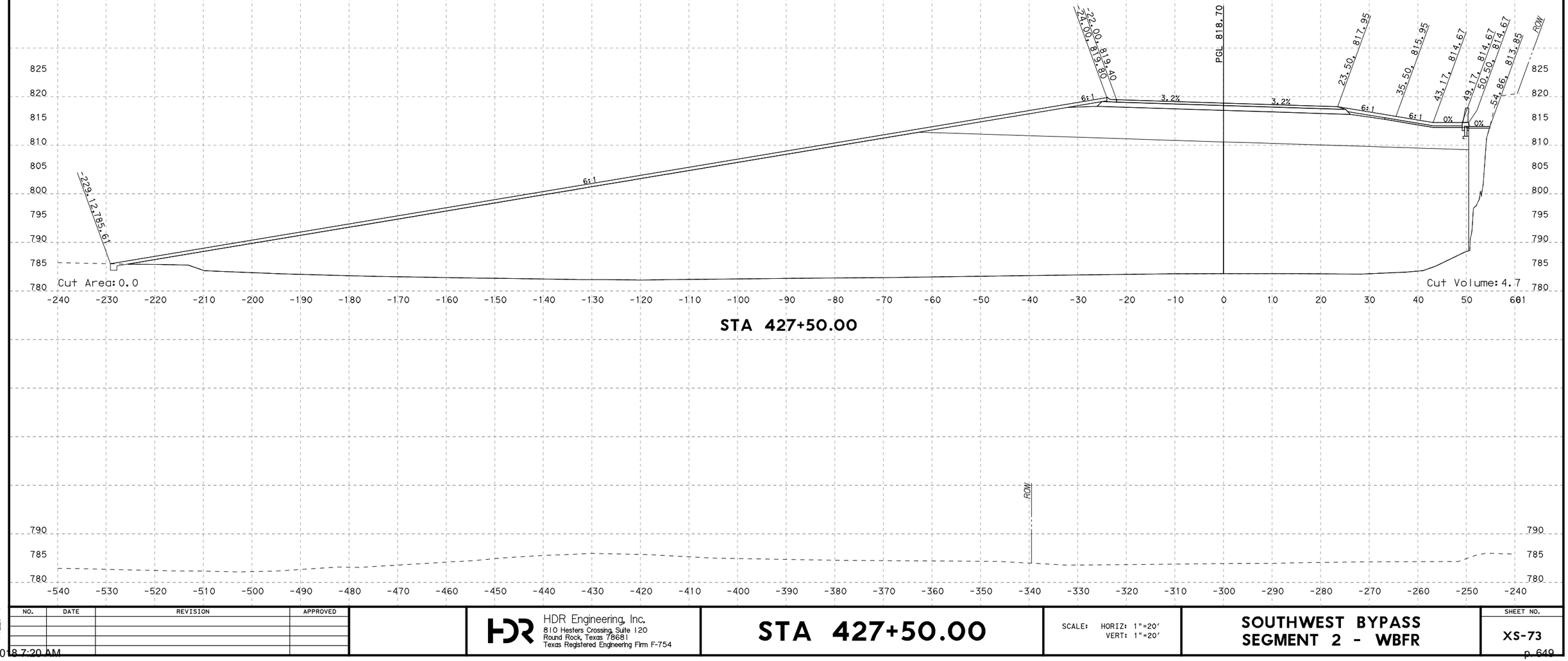

STA 427+50.00

NO.	DATE	REVISION	APPROVED

HDR Engineering, Inc.
810 Hesters Crossing, Suite 120
Round Rock, Texas 78681
Texas Registered Engineering Firm F-754

STA 427+50.00

SCALE: HORIZ: 1"=20'
VERT: 1"=20'

SOUTHWEST BYPASS SEGMENT 2 - WBFR

SHEET NO.
XS-73

PLOT DRIVER: TXDOT_PDF_BW.pltcfg
USER: lgomezgonz DATE: 3/26/2018
FILE: \
TIME: 11:23:4 AM
PENTABLE: S2-0000020ROT018.tbl
SCALE: 1:20

4/12/2018 7:20 AM

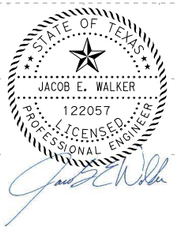

03/26/2018

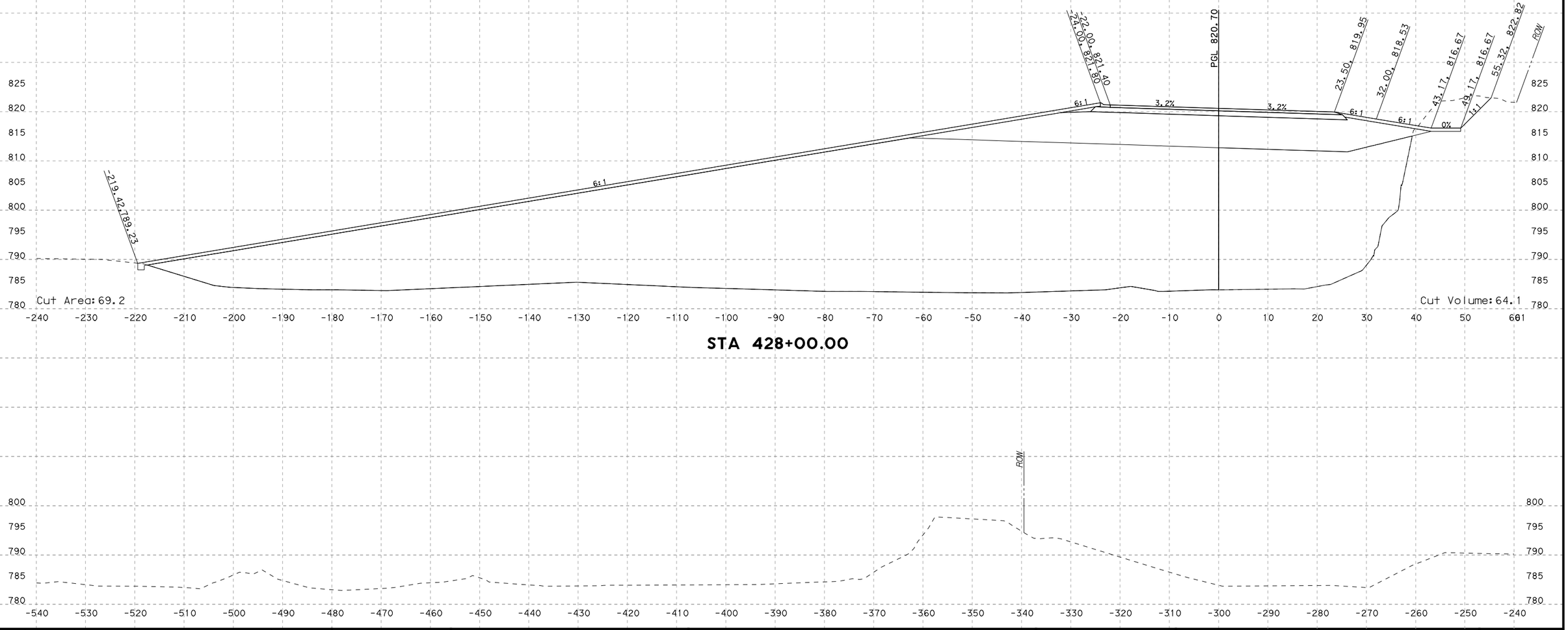

STA 428+00.00

NO.	DATE	REVISION	APPROVED

HDR Engineering, Inc.
810 Hesters Crossing, Suite 120
Round Rock, Texas 78681
Texas Registered Engineering Firm F-754

STA 428+00.00

SCALE: HORIZ: 1"=20'
VERT: 1"=20'

SOUTHWEST BYPASS SEGMENT 2 - WBFR

SHEET NO.
XS-74

PLOT DRIVER: TXDOT_PDF_BW.pltcfg PENTABLE: S2-0000020070718.tbl
USER: lgomezgon2 DATE: 3/26/2018 TIME: 11:23:17 AM SCALE: 1:20
FILE: \

4/12/2018 7:20 AM

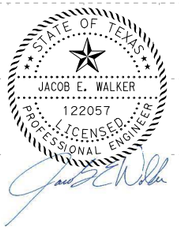

03/26/2018

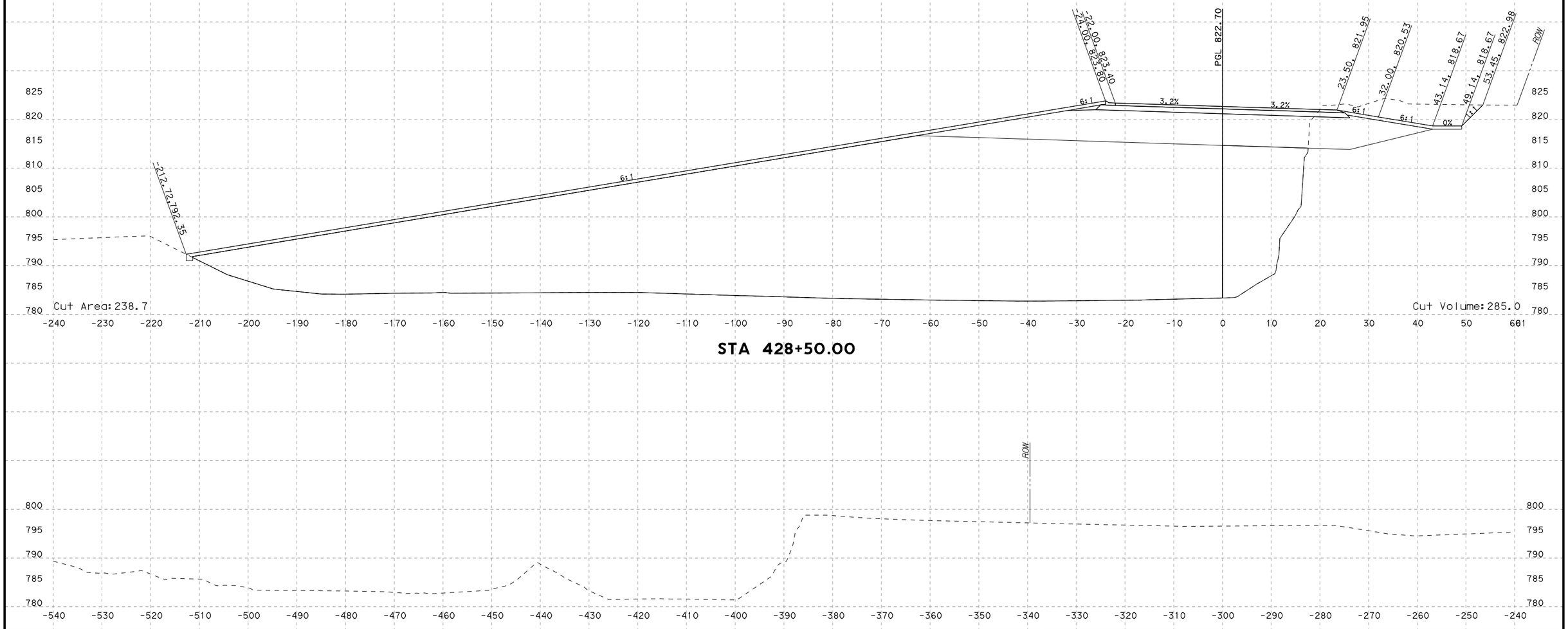

NO.	DATE	REVISION	APPROVED

HDR Engineering, Inc.
810 Hesters Crossing, Suite 120
Round Rock, Texas 78681
Texas Registered Engineering Firm F-754

STA 428+50.00

SCALE: HORIZ: 1"=20'
VERT: 1"=20'

SOUTHWEST BYPASS
SEGMENT 2 - WBFR

SHEET NO.
XS-75

PLOT DRIVER: TXDOT_PDF_BW.pltcfg
USER: lgomezgonz
FILE: \
DATE: 3/26/2018
TIME: 11:23:20 AM
PENTABLE: S2-0000020/7018.tbl
SCALE: 1:20

4/12/2018 7:20 AM

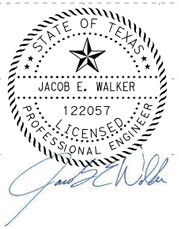

03/26/2018

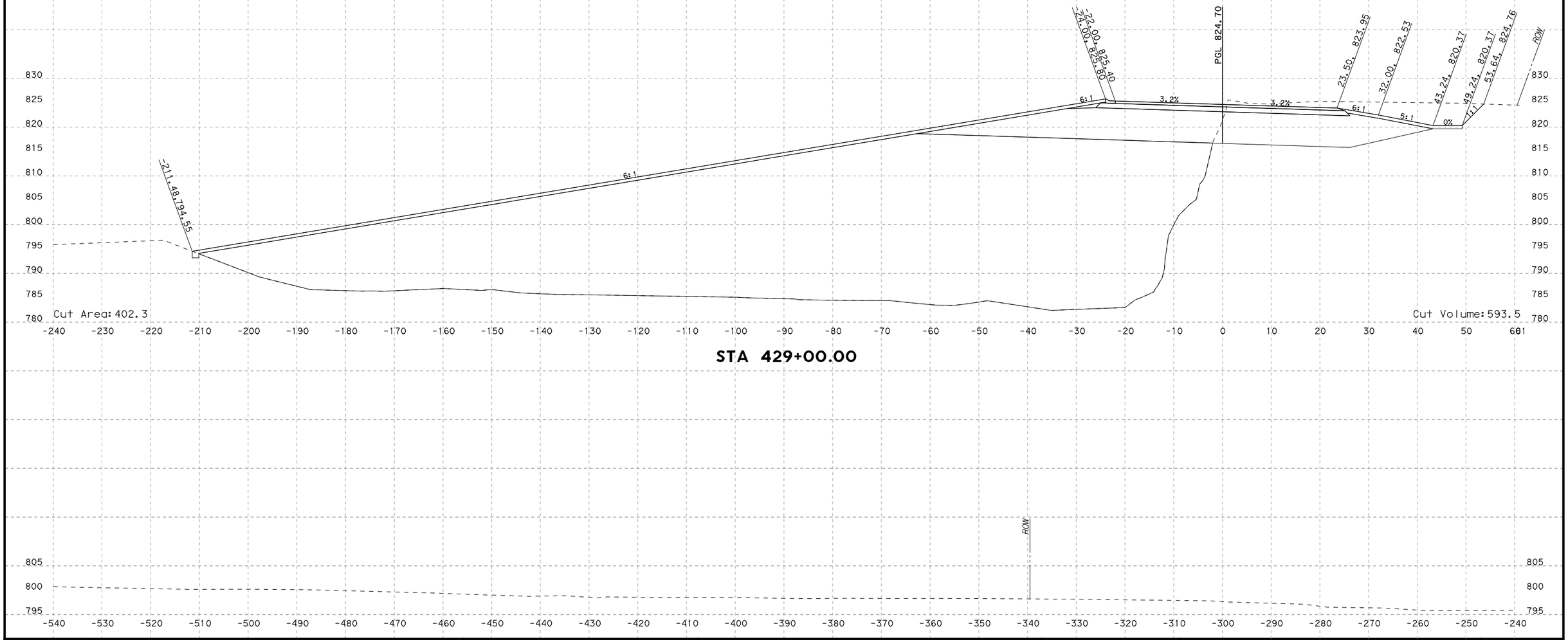

NO.	DATE	REVISION	APPROVED

HDR Engineering, Inc.
810 Hesters Crossing, Suite 120
Round Rock, Texas 78681
Texas Registered Engineering Firm F-754

STA 429+00.00

SCALE: HORIZ: 1"=20'
VERT: 1"=20'

SOUTHWEST BYPASS SEGMENT 2 - WBFR

SHEET NO.
XS-76

PLOT DRIVER: TXDOT_PDF_BW.pltcfg
USER: lgomezgonz DATE: 3/26/2018
FILE: \
TIME: 11:23:24 AM
PENTABLE: S2-0000020170718.tbl
SCALE: 1:20

STATE OF TEXAS
JACOB E. WALKER
122057
LICENSED
PROFESSIONAL ENGINEER

03/26/2018

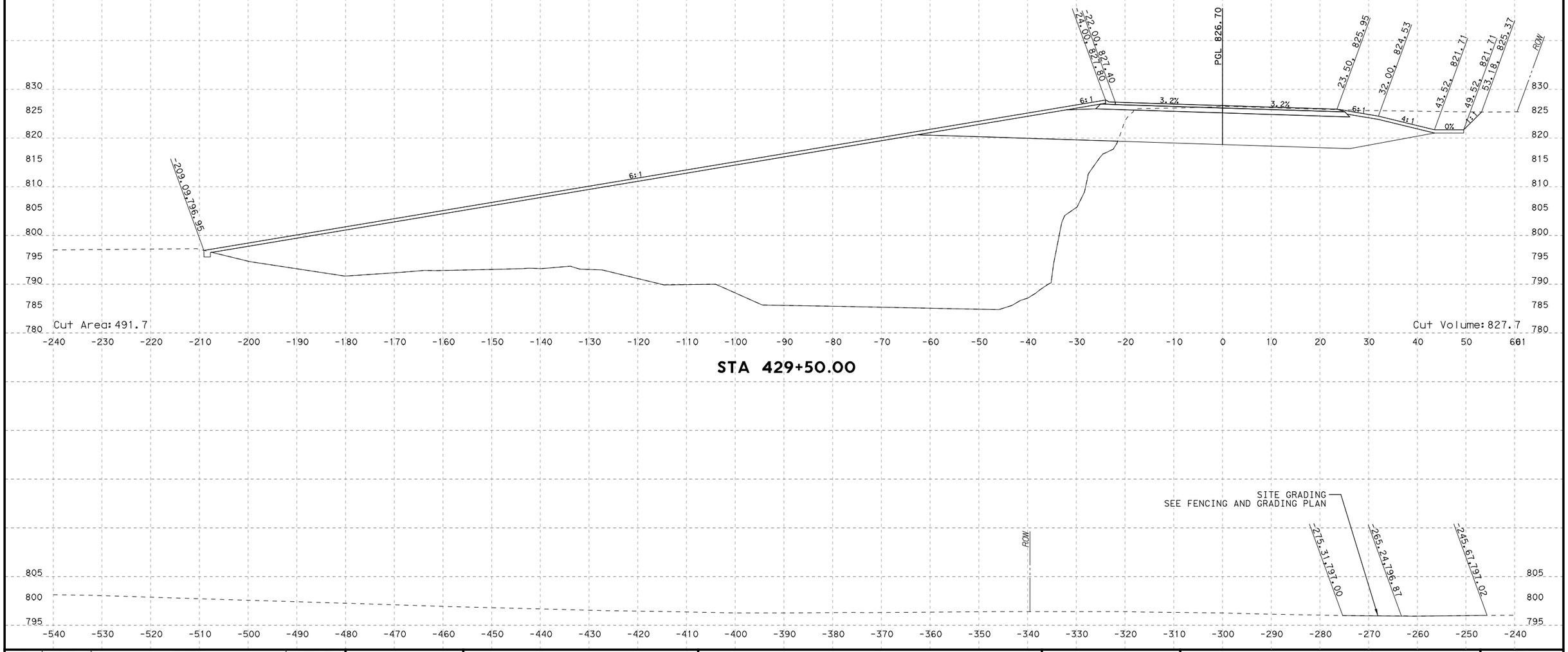

NO.	DATE	REVISION	APPROVED

HDR Engineering, Inc.
810 Hesters Crossing, Suite 120
Round Rock, Texas 78681
Texas Registered Engineering Firm F-754

STA 429+50.00

SCALE: HORIZ: 1"=20'
VERT: 1"=20'

SOUTHWEST BYPASS
SEGMENT 2 - WBFR

SHEET NO.
XS-77

PLOT DRIVER: TXDOT_PDF_BW.pltcfg USER: lgomezgonz FILE: \
DATE: 3/26/2018 TIME: 11:23:27 AM PENTABLE: S2-0000020170718.tbl SCALE:1:20
4/12/2018 7:20 AM

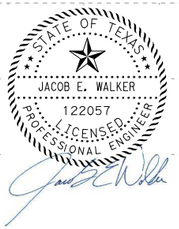

03/26/2018

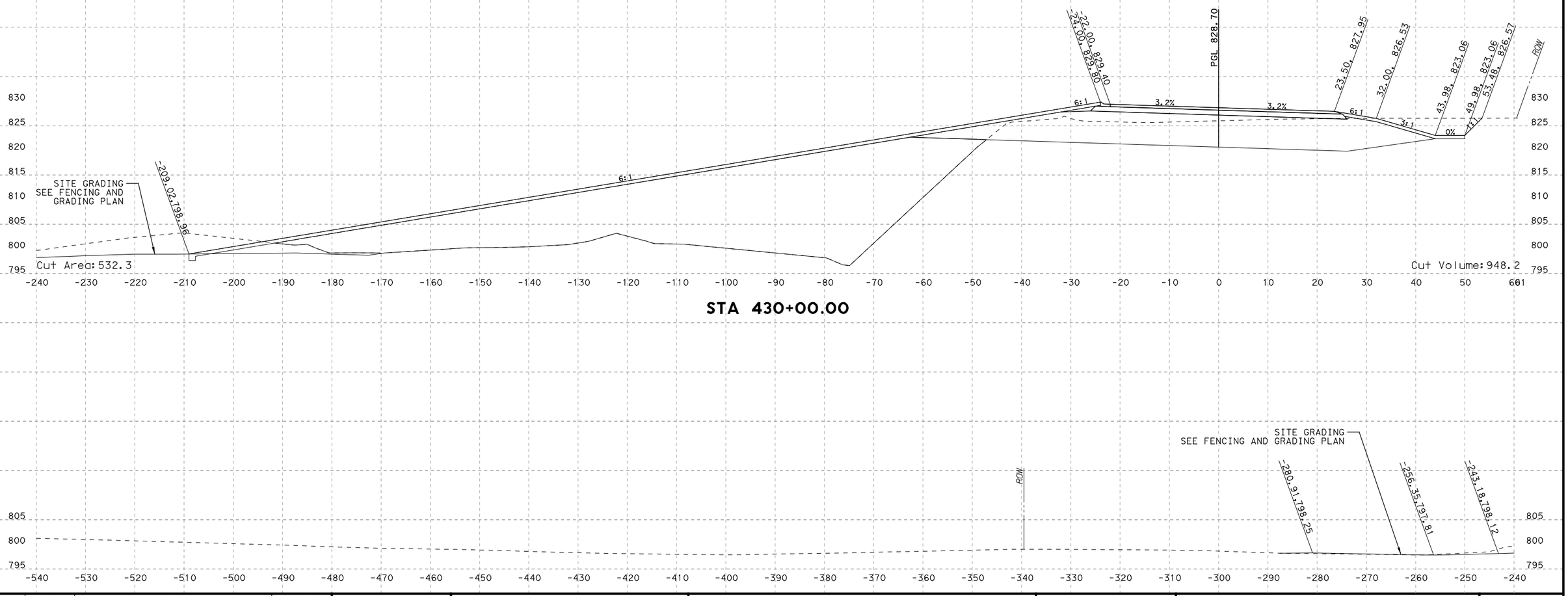

NO.	DATE	REVISION	APPROVED

HDR Engineering, Inc.
810 Hesters Crossing, Suite 120
Round Rock, Texas 78681
Texas Registered Engineering Firm F-754

STA 430+00.00

SCALE: HORIZ: 1"=20'
VERT: 1"=20'

SOUTHWEST BYPASS
SEGMENT 2 - WBFR

SHEET NO.
XS-78

PLOT DRIVER: TXDOT_PDF_BW.pltcfg
USER: lgomezgonz DATE: 3/26/2018
FILE: \
TIME: 11:23:30 AM
PENTABLE: S2-00000201707 18.tbl
SCALE: 1:20

4/12/2018 7:20 AM



03/26/2018

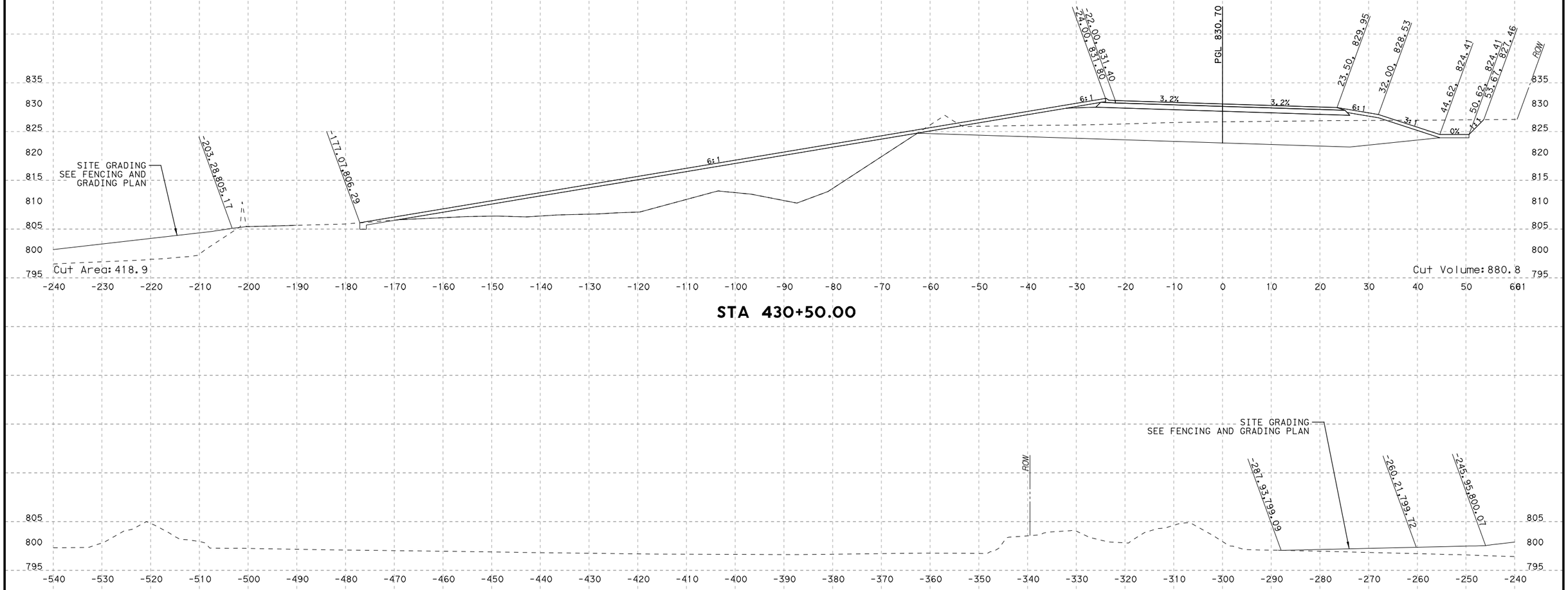

STA 430+50.00

NO.	DATE	REVISION	APPROVED

HDR Engineering, Inc.
810 Hesters Crossing, Suite 120
Round Rock, Texas 78681
Texas Registered Engineering Firm F-754

STA 430+50.00

SCALE: HORIZ: 1"=20'
VERT: 1"=20'

SOUTHWEST BYPASS
SEGMENT 2 - WBFR

SHEET NO.
XS-79

PLOT DRIVER: TXDOT_PDF_BW.pltcfg
USER: lgomezgonz DATE: 3/26/2018
FILE: \
PENTABLE: S2-00000201710718.tbl
TIME: 11:23:34 AM SCALE: 1:20

4/12/2018 7:20 AM

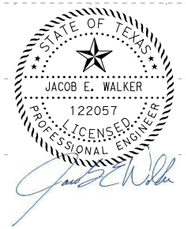

03/26/2018

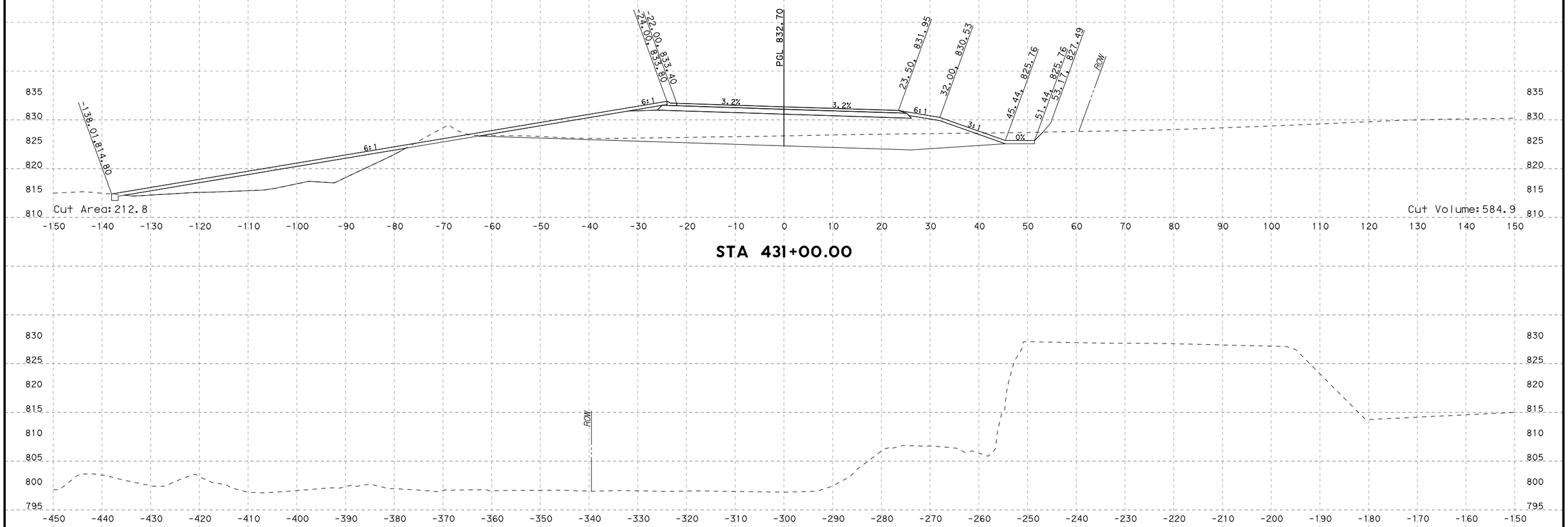

PLOT DRIVER: TXDOT_PDF_BW.pltcfg USER: lgomezgon2 FILE: \
PENTABLE: S2-00000201707IB.tbl TIME: 11:23:37 AM DATE: 3/26/2018 SCALE: 1:20

NO.	DATE	REVISION	APPROVED

HDR Engineering, Inc.
810 Hesters Crossing, Suite 120
Round Rock, Texas 78681
Texas Registered Engineering Firm F-754

STA 431+00.00

SCALE: HORIZ: 1"=20'
VERT: 1"=20'

SOUTHWEST BYPASS SEGMENT 2 - WBFR

SHEET NO.
XS-80

4/12/2018 7:20 AM

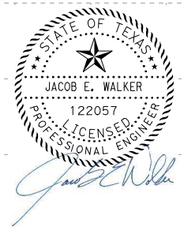

03/26/2018

NO.	DATE	REVISION	APPROVED

HDR Engineering, Inc.
810 Hesters Crossing, Suite 120
Round Rock, Texas 78681
Texas Registered Engineering Firm F-754

STA 431+50.00

SCALE: HORIZ: 1"=20'
VERT: 1"=20'

SOUTHWEST BYPASS
SEGMENT 2 - WBFR

SHEET NO.
XS-81

PLOT DRIVER: TXDOT_PDF_BW.pltcfg
USER: lgomezgonz
FILE: \
DATE: 3/26/2018
TIME: 11:23:40 AM
PENTABLE: S2-0000020I7018.tbl
SCALE: 1:20

4/12/2018 7:20 AM

STATE OF TEXAS
JACOB E. WALKER
122057
LICENSED
PROFESSIONAL ENGINEER

03/26/2018

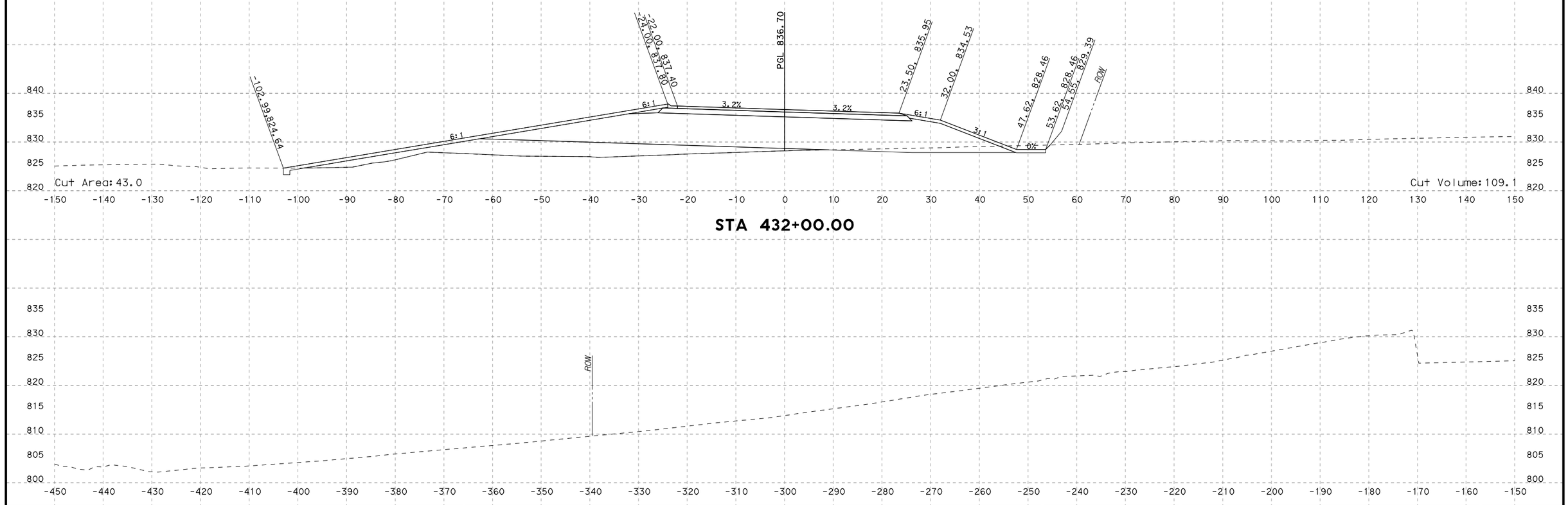

STA 432+00.00

PLOT DRIVER: TXDOT_PDF_BW.pltcfg PENTABLE: S2-0000020170718.tbl
USER: lgomezgon2 TIME: 11:23:44 AM SCALE: 1:20
DATE: 3/26/2018
FILE: \

NO.	DATE	REVISION	APPROVED

HDR Engineering, Inc.
810 Hesters Crossing Suite 120
Round Rock, Texas 78681
Texas Registered Engineering Firm F-754

STA 432+00.00

SCALE: HORIZ: 1"=20'
VERT: 1"=20'

SOUTHWEST BYPASS SEGMENT 2 - WBFR

SHEET NO.
XS-82

4/12/2018 7:20 AM

STATE OF TEXAS
JACOB E. WALKER
122057
LICENSED
PROFESSIONAL ENGINEER

03/26/2018

NO.	DATE	REVISION	APPROVED

HDR Engineering, Inc.
810 Hesters Crossing, Suite 120
Round Rock, Texas 78681
Texas Registered Engineering Firm F-754

STA 432+50.00

SCALE: HORIZ: 1"=20'
VERT: 1"=20'

SOUTHWEST BYPASS
SEGMENT 2 - WBFR

SHEET NO.
XS-83

PLOT DRIVER: TXDOT_PDF_BW.pltcfg PENTABLE: S2-0000020170718.tbl
USER: lgomezgonz TIME: 11:23:47 AM SCALE: 1:20
DATE: 3/26/2018
FILE: \

4/12/2018 7:20 AM

STATE OF TEXAS
JACOB E. WALKER
122057
LICENSED
PROFESSIONAL ENGINEER

03/26/2018

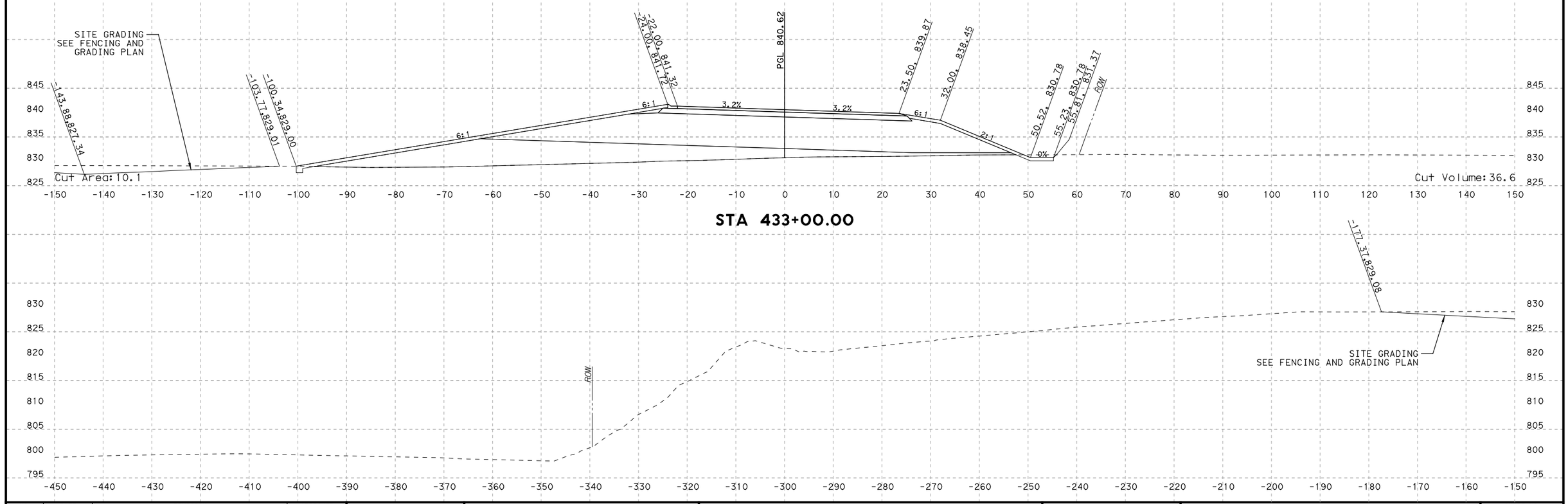

PLOT DRIVER: TXDOT_PDF_BW.pltcfg PENTABLE: S2-0000020170718.tbl
USER: lgomezgonz TIME: 11:23:50 AM SCALE: 1:20
DATE: 3/26/2018
FILE: \

NO.	DATE	REVISION	APPROVED

HDR Engineering, Inc.
810 Hesters Crossing, Suite 120
Round Rock, Texas 78681
Texas Registered Engineering Firm F-754

STA 433+00.00

SCALE: HORIZ: 1"=20'
VERT: 1"=20'

SOUTHWEST BYPASS SEGMENT 2 - WBFR

SHEET NO.
XS-84

4/12/2018 7:20 AM

STATE OF TEXAS
JACOB E. WALKER
122057
LICENSED
PROFESSIONAL ENGINEER

03/26/2018

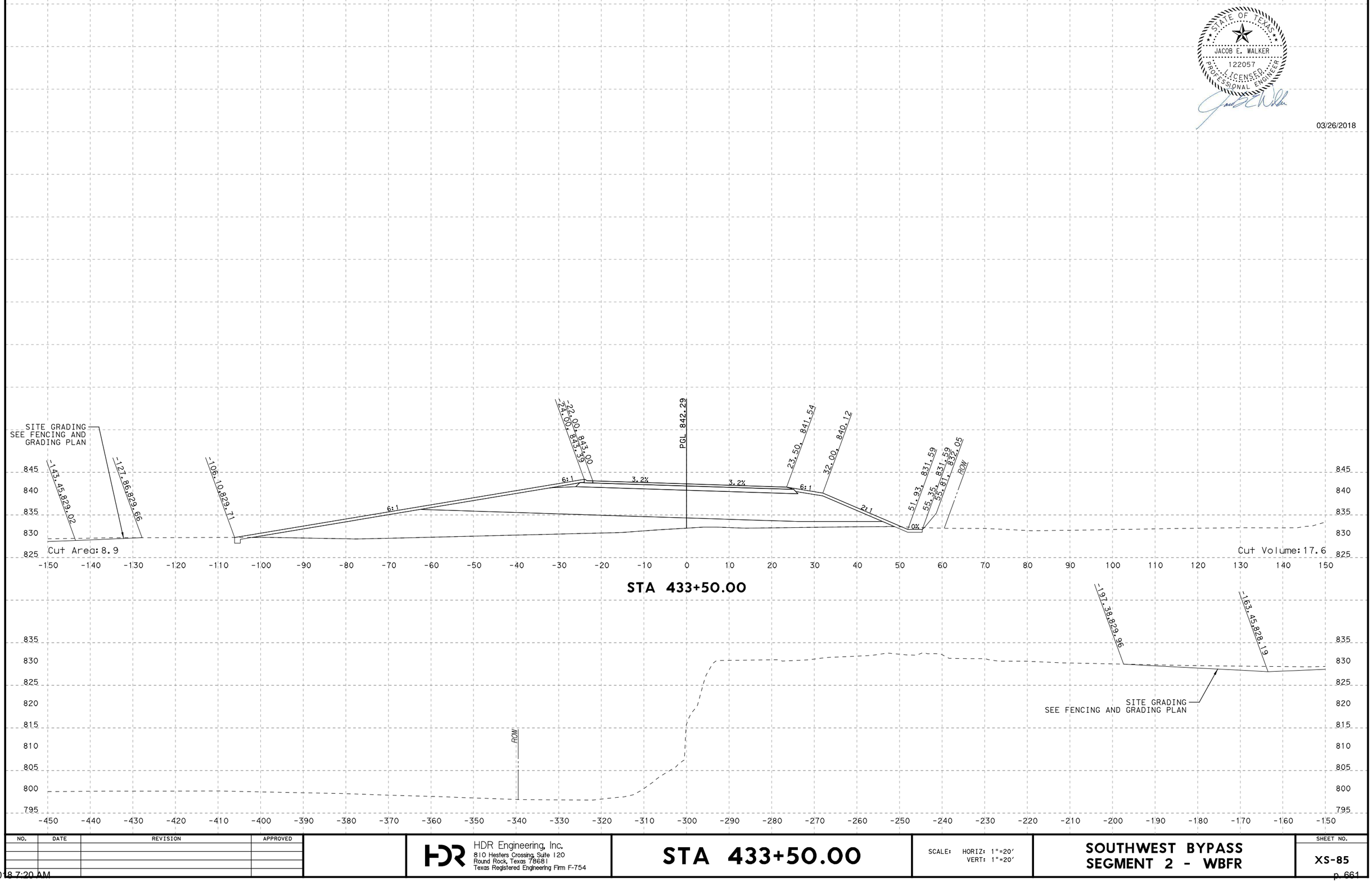

NO.	DATE	REVISION	APPROVED

HDR Engineering, Inc.
810 Hesters Crossing, Suite 120
Round Rock, Texas 78681
Texas Registered Engineering Firm F-754

STA 433+50.00

SCALE: HORIZ: 1"=20'
VERT: 1"=20'

SOUTHWEST BYPASS
SEGMENT 2 - WBFR

SHEET NO.
XS-85

PLOT DRIVER: TXDOT_PDF_BW.pltcfg
USER: lgomezgonz
FILE: \
DATE: 3/26/2018
TIME: 11:23:53 AM
PENTABLE: S2-00000201707018.tbl
SCALE: 1:20

4/12/2018 7:20 AM

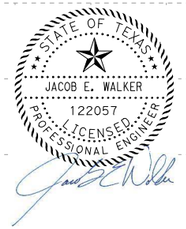

03/26/2018

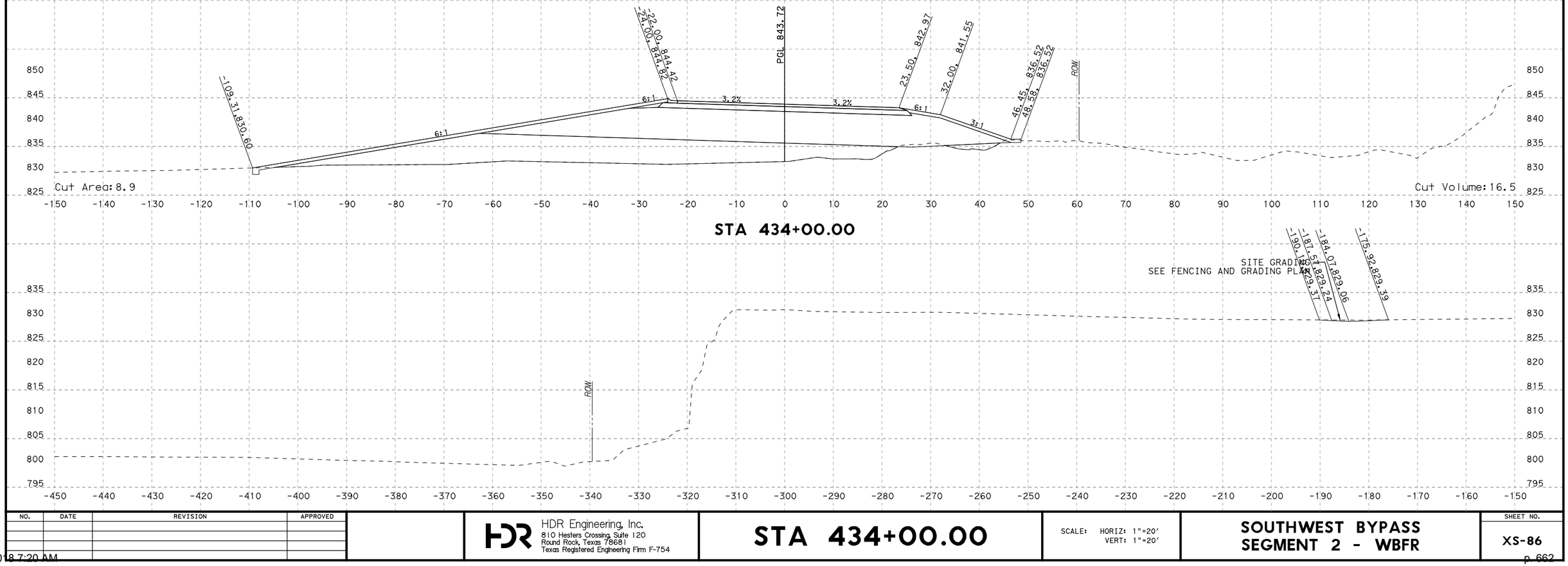

PLOT DRIVER: TXDOT_PDF_BW.pltcfg PENTABLE: S2-0000020170718.tbl
USER: lgomezgonz DATE: 3/26/2018 TIME: 11:23:57 AM SCALE: 1:20
FILE: \

NO.	DATE	REVISION	APPROVED

HDR Engineering, Inc.
810 Hesters Crossing, Suite 120
Round Rock, Texas 78681
Texas Registered Engineering Firm F-754

STA 434+00.00

SCALE: HORIZ: 1"=20'
VERT: 1"=20'

SOUTHWEST BYPASS
SEGMENT 2 - WBFR

SHEET NO.
XS-86

STATE OF TEXAS
JACOB E. WALKER
122057
LICENSED
PROFESSIONAL ENGINEER

03/26/2018

STA 434+50.00

NO.	DATE	REVISION	APPROVED

HDR Engineering, Inc.
810 Hesters Crossing, Suite 120
Round Rock, Texas 78681
Texas Registered Engineering Firm F-754

STA 434+50.00

SCALE: HORIZ: 1"=20'
VERT: 1"=20'

SOUTHWEST BYPASS
SEGMENT 2 - WBFR

SHEET NO.
XS-87

PLOT DRIVER: TXDOT_PDF_BW.pltcfg
USER: lgomezgonz
FILE: \
PENTABLE: S2-00000201707018.tbl
TIME: 11:24:00 AM
DATE: 3/26/2018
SCALE: 1:20

4/12/2018 7:20 AM

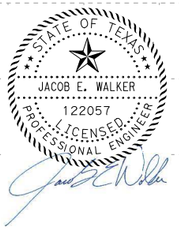

03/26/2018

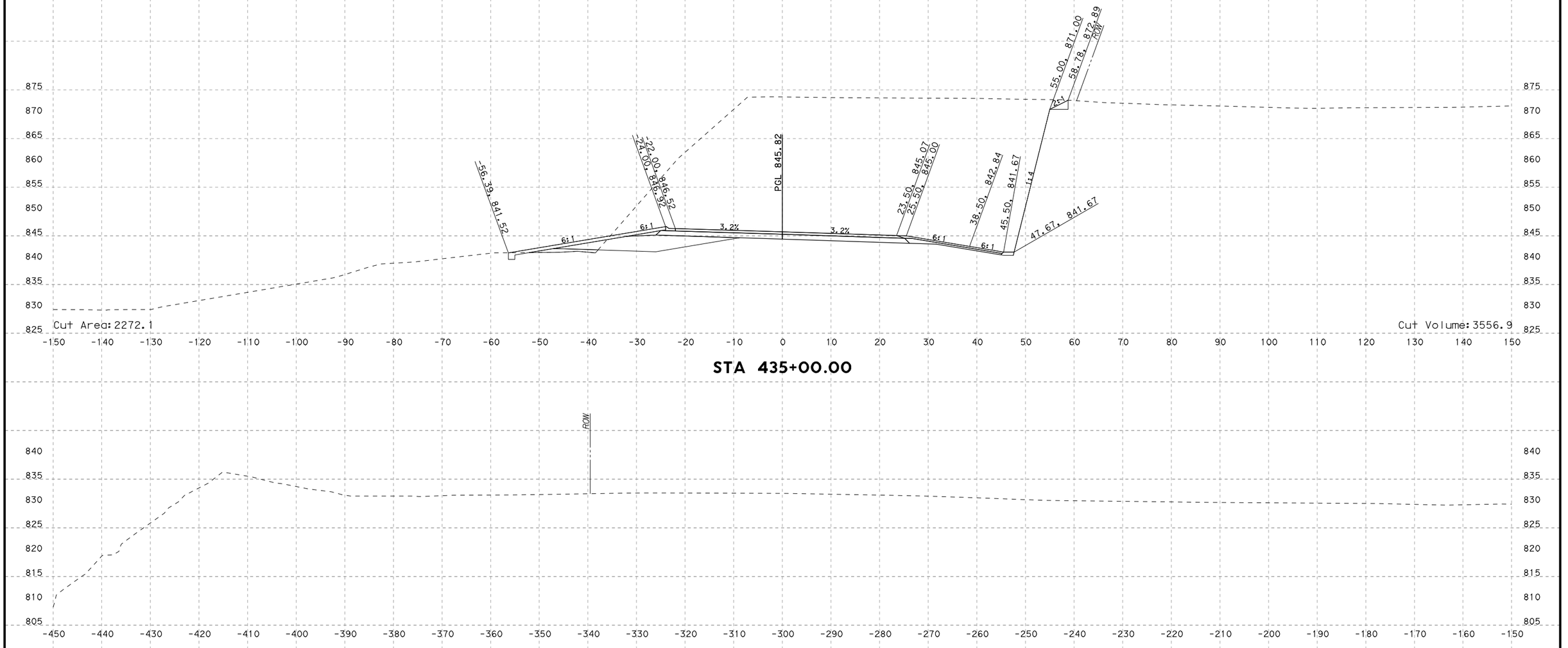

PLOT DRIVER: TXDOT_PDF_BW.pltcfg
USER: lgomezgon2
FILE: \
DATE: 3/26/2018
TIME: 11:24:03 AM
PENTABLE: S2-0000020I7018.tbl
SCALE: 1:20

NO.	DATE	REVISION	APPROVED

HDR Engineering, Inc.
810 Hesters Crossing, Suite 120
Round Rock, Texas 78681
Texas Registered Engineering Firm F-754

STA 435+00.00

SCALE: HORIZ: 1"=20'
VERT: 1"=20'

SOUTHWEST BYPASS
SEGMENT 2 - WBFR

SHEET NO.
XS-88

4/12/2018 7:20 AM

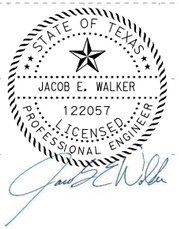

03/26/2018

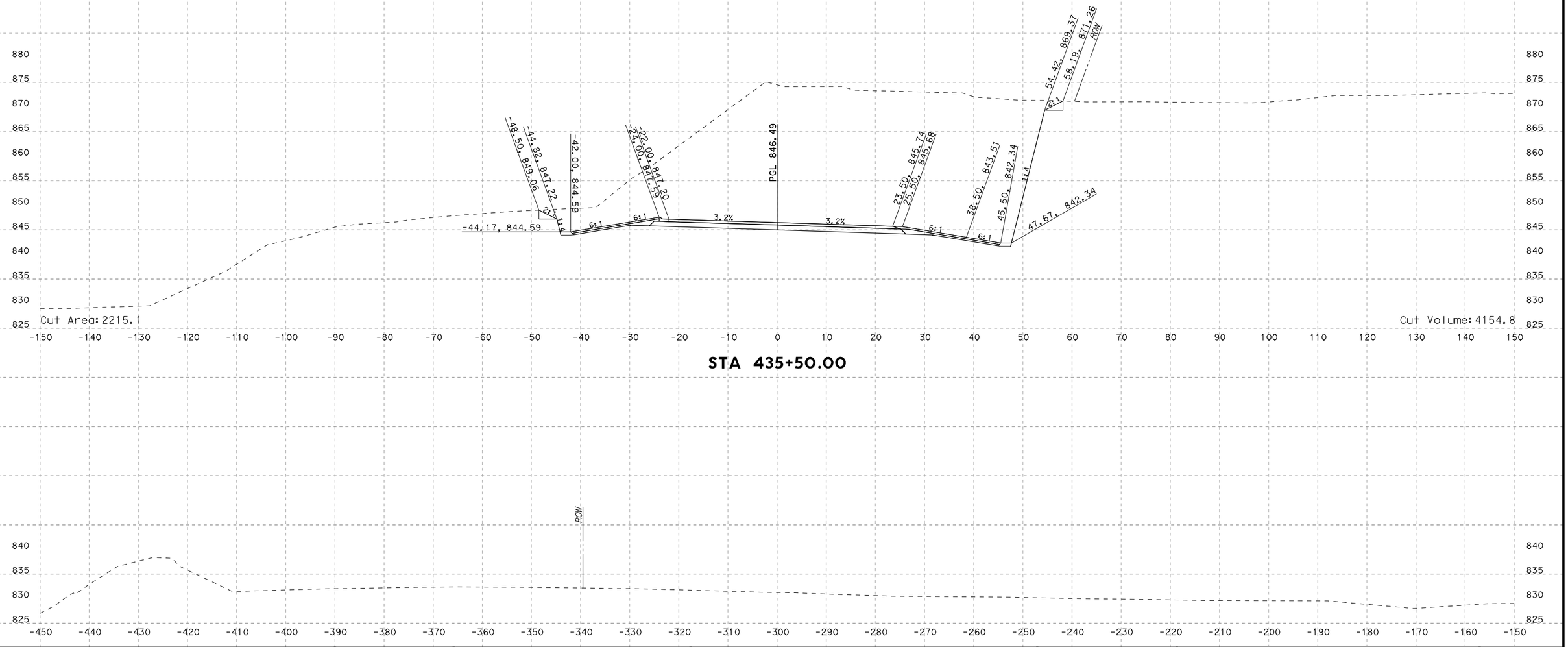

PLOT DRIVER: TXDOT_PDF_BW.pltcfg USER: lgomezgon2 FILE: \
PENTABLE: S2-00000201707IB.tbl TIME: 11:24:07 AM DATE: 3/26/2018 SCALE: 1:20

NO.	DATE	REVISION	APPROVED

HDR Engineering, Inc.
810 Hesters Crossing, Suite 120
Round Rock, Texas 78681
Texas Registered Engineering Firm F-754

STA 435+50.00

SCALE: HORIZ: 1"=20'
VERT: 1"=20'

SOUTHWEST BYPASS SEGMENT 2 - WBFR

SHEET NO.
XS-89

STATE OF TEXAS
JACOB E. WALKER
122057
LICENSED
PROFESSIONAL ENGINEER

03/26/2018

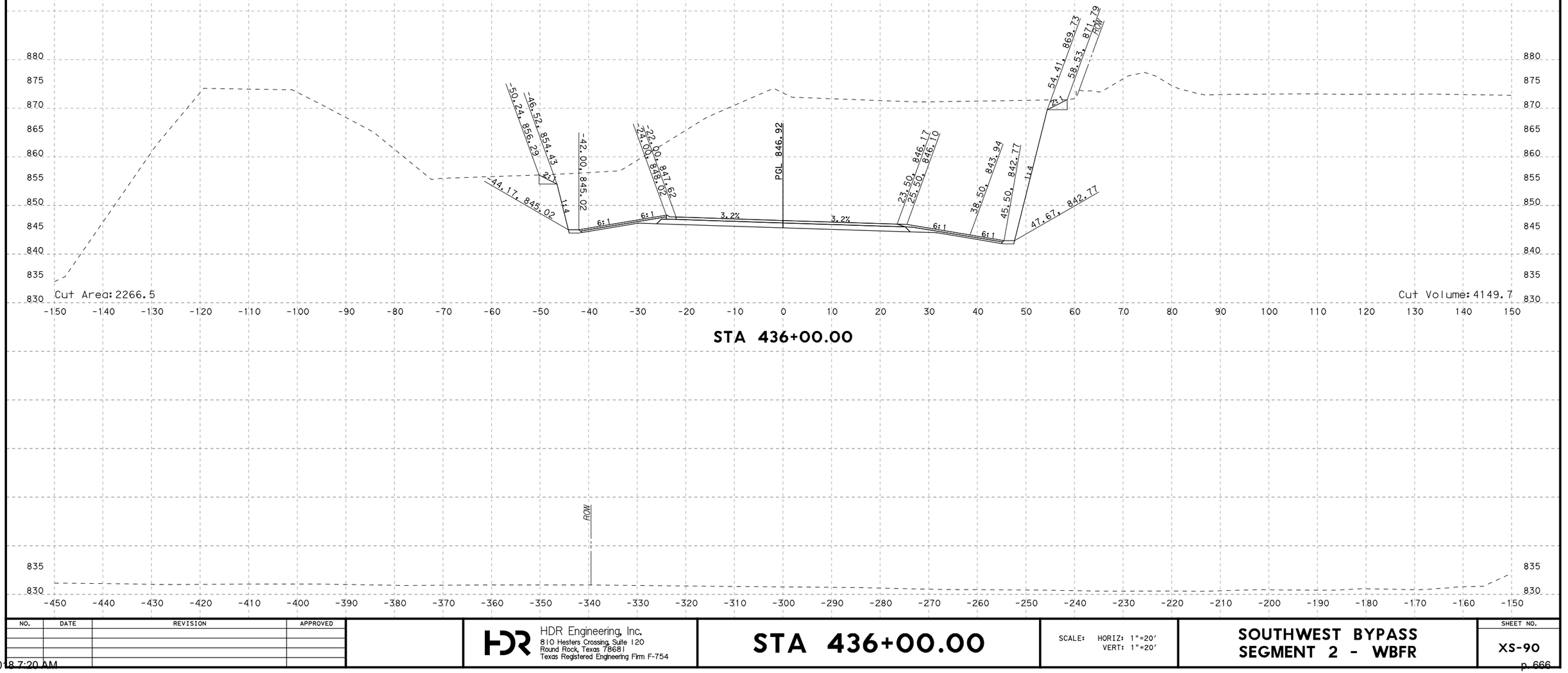

STA 436+00.00

NO.	DATE	REVISION	APPROVED

HDR Engineering, Inc.
810 Hesters Crossing, Suite 120
Round Rock, Texas 78681
Texas Registered Engineering Firm F-754

STA 436+00.00

SCALE: HORIZ: 1"=20'
VERT: 1"=20'

SOUTHWEST BYPASS
SEGMENT 2 - WBFR

SHEET NO.
XS-90

PLOT DRIVER: TXDOT_PDF_BW.pltcfg
USER: lgomezgonz
FILE: \
DATE: 3/26/2018
TIME: 11:24:10 AM
PENTABLE: S2-0000020170718.tbl
SCALE: 1:20

4/12/2018 7:20 AM

STATE OF TEXAS
JACOB E. WALKER
122057
LICENSED
PROFESSIONAL ENGINEER

03/26/2018

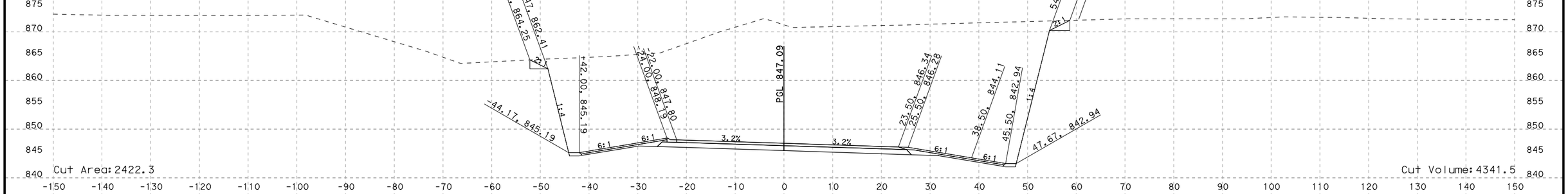

STA 436+50.00

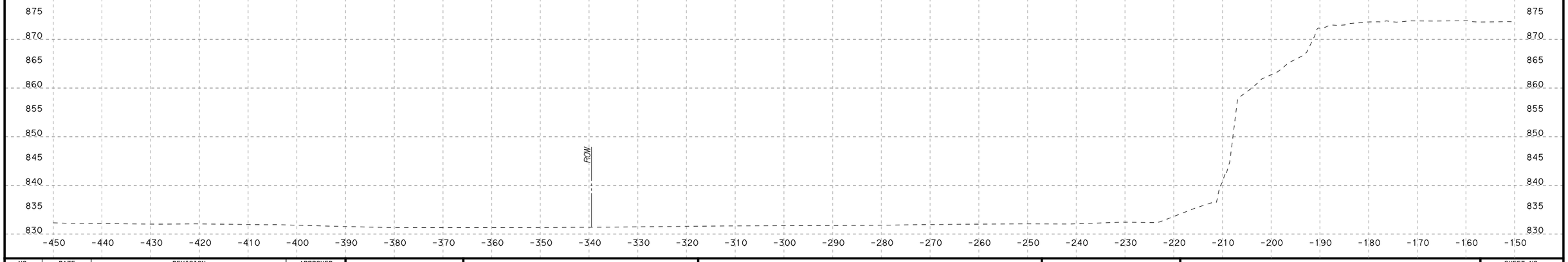

NO.	DATE	REVISION	APPROVED

HDR Engineering, Inc.
810 Hesters Crossing, Suite 120
Round Rock, Texas 78681
Texas Registered Engineering Firm F-754

STA 436+50.00

SCALE: HORIZ: 1"=20'
VERT: 1"=20'

SOUTHWEST BYPASS
SEGMENT 2 - WBFR

SHEET NO.
XS-91

PLOT DRIVER: TXDOT_PDF_BW.pltcfg PENTABLE: S2-0000020170718.tbl
USER: lgomezgonz DATE: 3/26/2018 TIME: 11:24:13 AM SCALE: 1:20
FILE: \

4/12/2018 7:20 AM

STATE OF TEXAS
JACOB E. WALKER
122057
LICENSED
PROFESSIONAL ENGINEER

03/26/2018

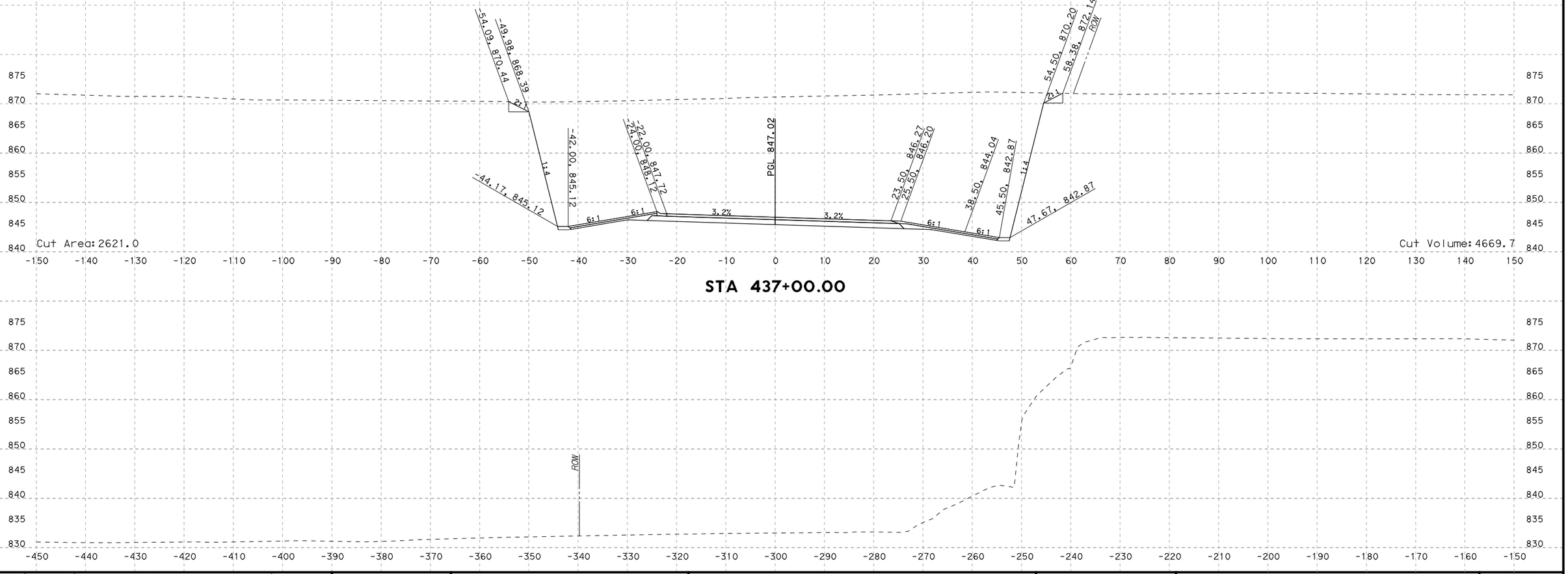

STA 437+00.00

NO.	DATE	REVISION	APPROVED

HDR Engineering, Inc.
810 Hesters Crossing, Suite 120
Round Rock, Texas 78681
Texas Registered Engineering Firm F-754

STA 437+00.00

SCALE: HORIZ: 1"=20'
VERT: 1"=20'

SOUTHWEST BYPASS
SEGMENT 2 - WBFR

SHEET NO.
XS-92

PLOT DRIVER: TXDOT_PDF_BW.pltcfg
USER: lgomezgon2
FILE: \
DATE: 3/26/2018
TIME: 11:24:16 AM
PENTABLE: S2-0000020170718.tbl
SCALE: 1:20

4/12/2018 7:20 AM

STATE OF TEXAS
JACOB E. WALKER
122057
LICENSED
PROFESSIONAL ENGINEER

03/26/2018

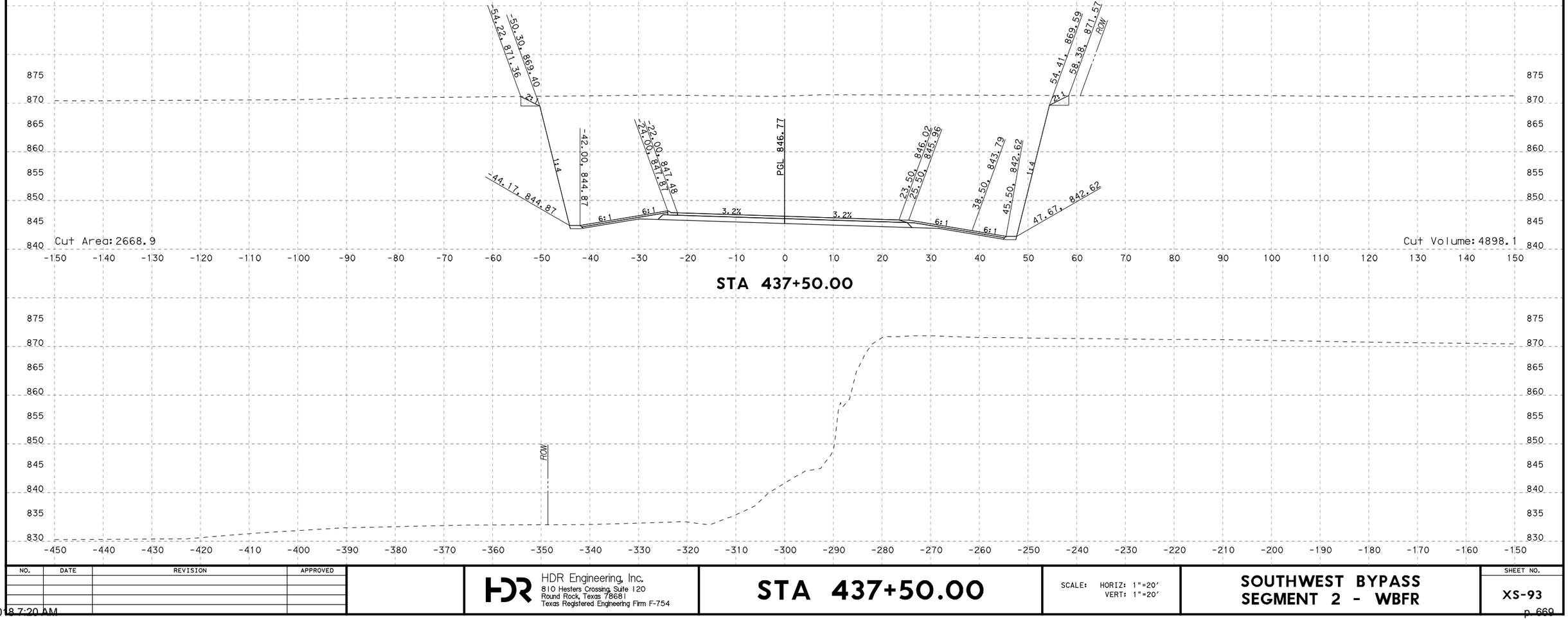

PLOT DRIVER: TXDOT_PDF_BW.pltcfg
USER: lgomezgonz DATE: 3/26/2018
FILE: \
PENTABLE: S2-00000201707018.tbl
TIME: 11:24:20 AM SCALE: 1:20

NO.	DATE	REVISION	APPROVED

HDR Engineering, Inc.
810 Hesters Crossing, Suite 120
Round Rock, Texas 78681
Texas Registered Engineering Firm F-754

STA 437+50.00

SCALE: HORIZ: 1"=20'
VERT: 1"=20'

SOUTHWEST BYPASS SEGMENT 2 - WBFR

SHEET NO.
XS-93

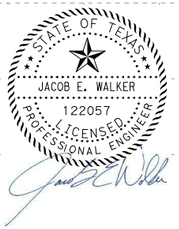

03/26/2018

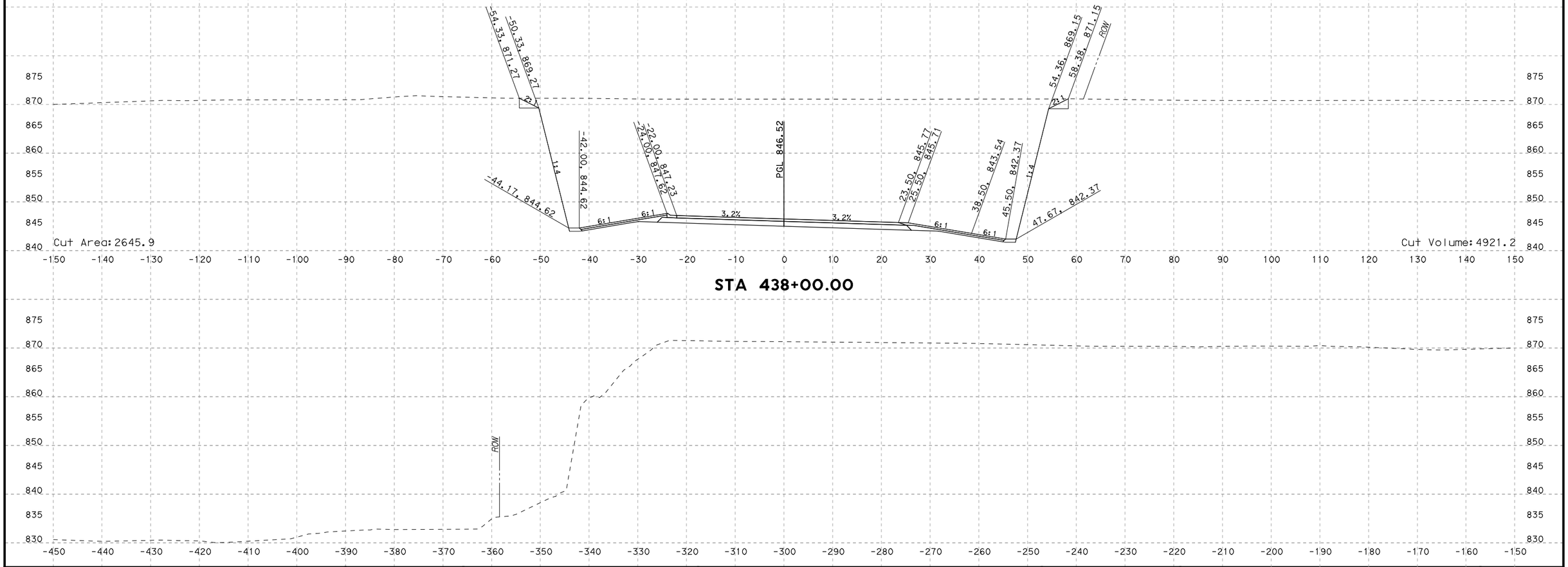

PLOT DRIVER: TXDOT_PDF_BW.pltcfg USER: lgomezgonz DATE: 3/26/2018 FILE: \
PENTABLE: S2-0000020\T0718.tbl TIME: 11:24:23 AM SCALE: 1:20

NO.	DATE	REVISION	APPROVED

HDR Engineering, Inc.
810 Hesters Crossing, Suite 120
Round Rock, Texas 78681
Texas Registered Engineering Firm F-754

STA 438+00.00

SCALE: HORIZ: 1"=20'
VERT: 1"=20'

SOUTHWEST BYPASS SEGMENT 2 - WBFR

SHEET NO.
XS-94

STATE OF TEXAS
JACOB E. WALKER
122057
LICENSED
PROFESSIONAL ENGINEER

03/26/2018

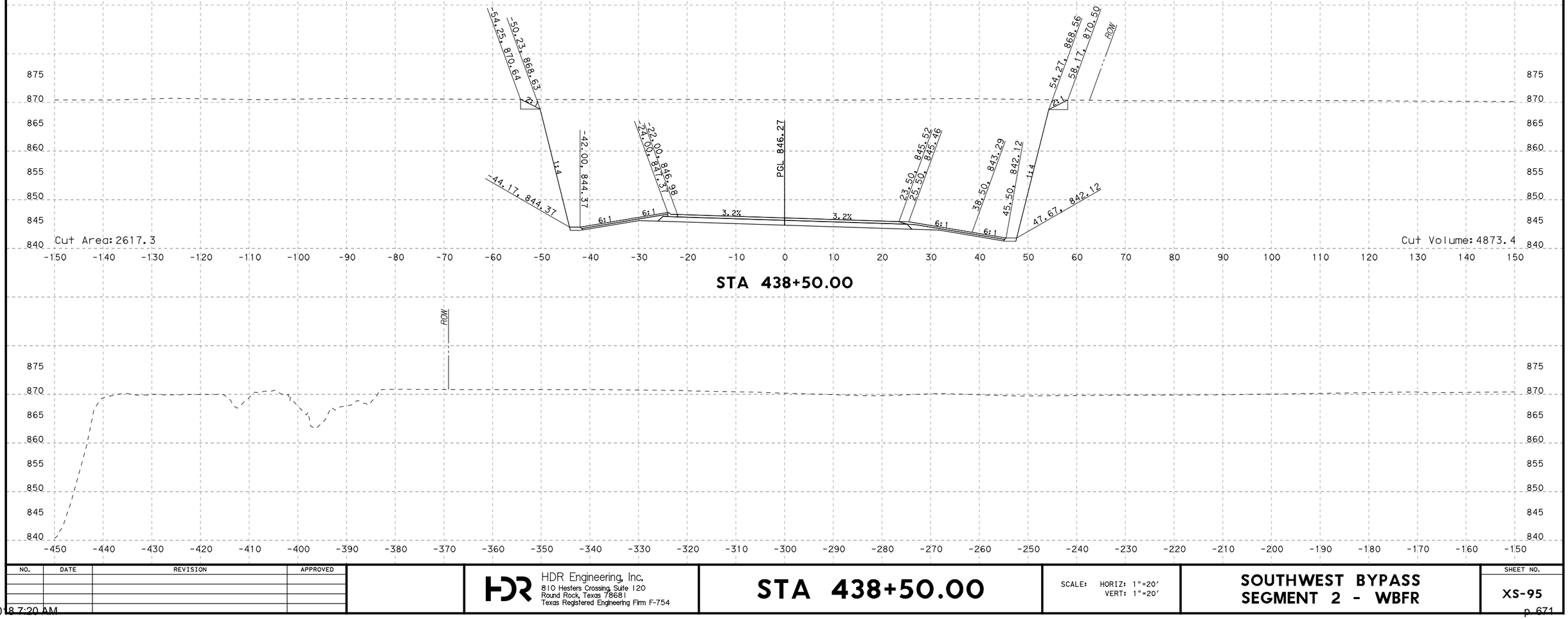

STA 438+50.00

NO.	DATE	REVISION	APPROVED

HDR Engineering, Inc.
810 Hesters Crossing, Suite 120
Round Rock, Texas 78681
Texas Registered Engineering Firm F-754

STA 438+50.00

SCALE: HORIZ: 1"=20'
VERT: 1"=20'

SOUTHWEST BYPASS
SEGMENT 2 - WBFR

SHEET NO.
XS-95

PLOT DRIVER: TXDOT_PDF_BW.pltcfg
USER: lgomezgonz
FILE: \
DATE: 3/26/2018
TIME: 11:24:26 AM
PENTABLE: S2-0000020170718.tbl
SCALE: 1:20

4/12/2018 7:20 AM

STATE OF TEXAS
JACOB E. WALKER
122057
LICENSED
PROFESSIONAL ENGINEER

03/26/2018

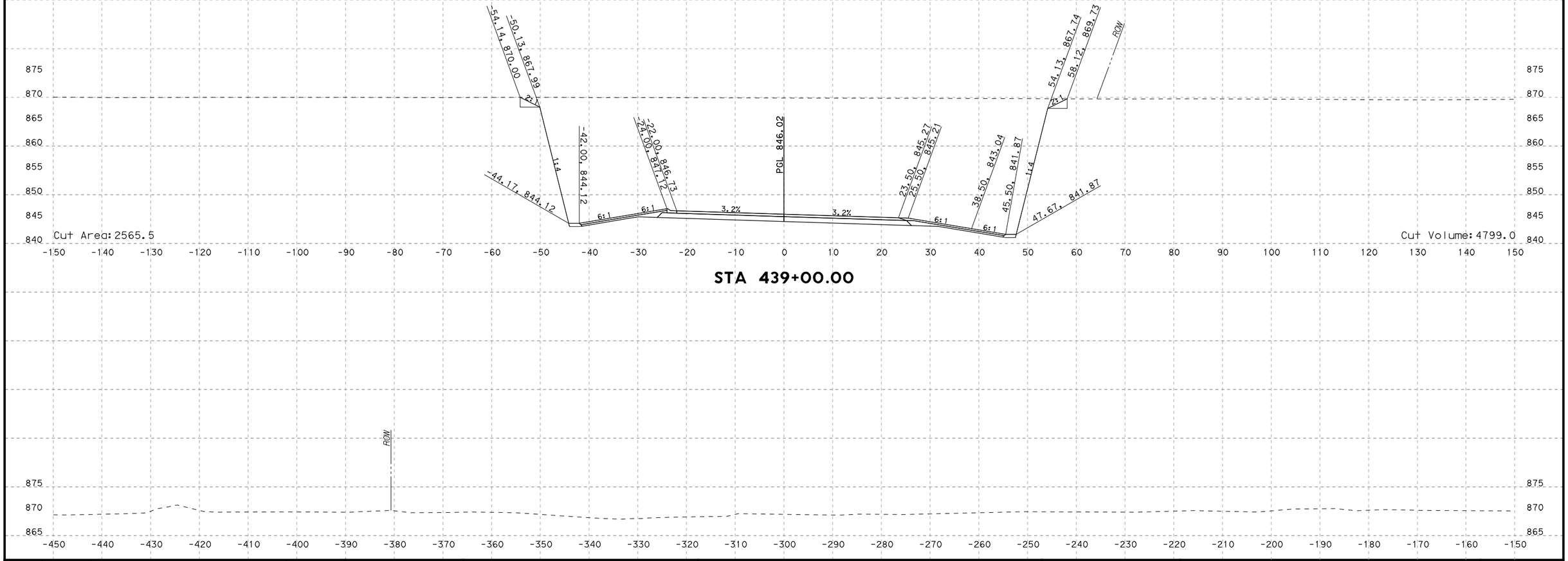

NO.	DATE	REVISION	APPROVED

HDR Engineering, Inc.
810 Hesters Crossing, Suite 120
Round Rock, Texas 78681
Texas Registered Engineering Firm F-754

STA 439+00.00

SCALE: HORIZ: 1"=20'
VERT: 1"=20'

SOUTHWEST BYPASS
SEGMENT 2 - WBFR

SHEET NO.
XS-96

PLOT DRIVER: TXDOT_PDF_BW.pltcfg
USER: lgomezgonz DATE: 3/26/2018
FILE: \
PENTABLE: S2-00000201707018.tbl
TIME: 11:24:30 AM SCALE: 1:20

4/12/2018 7:20 AM

STATE OF TEXAS
JACOB E. WALKER
122057
LICENSED
PROFESSIONAL ENGINEER

03/26/2018

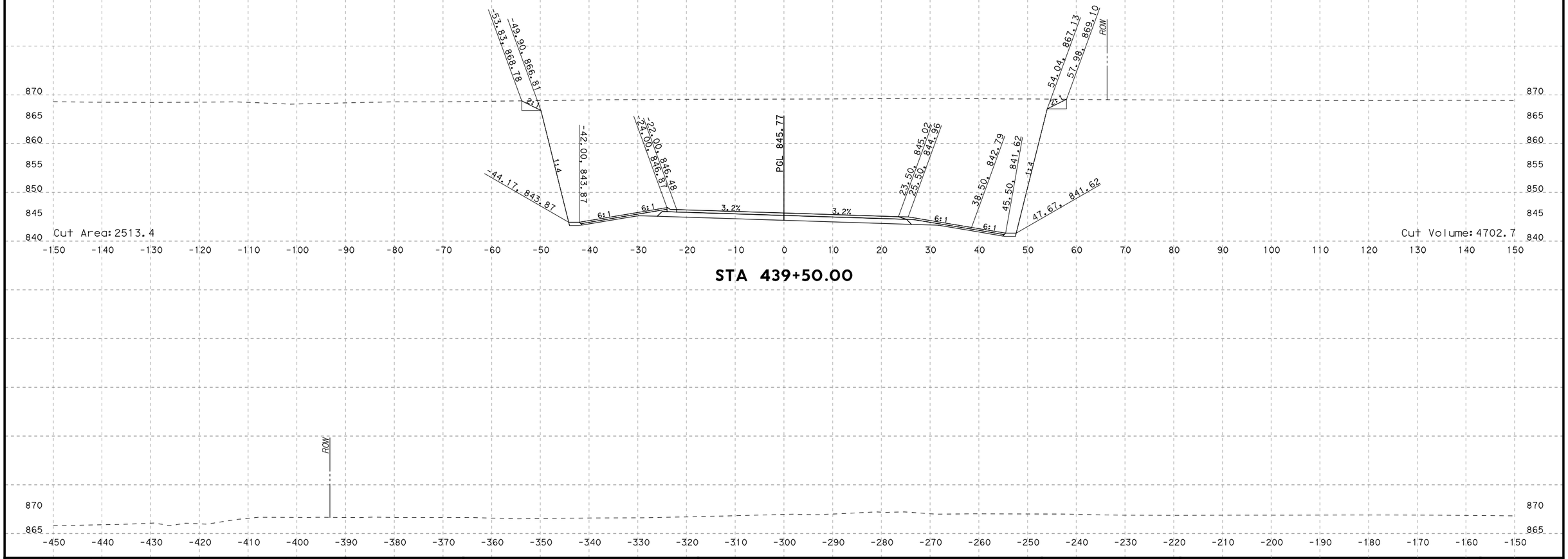

STA 439+50.00

NO.	DATE	REVISION	APPROVED

HDR Engineering, Inc.
810 Hesters Crossing, Suite 120
Round Rock, Texas 78681
Texas Registered Engineering Firm F-754

STA 439+50.00

SCALE: HORIZ: 1"=20'
VERT: 1"=20'

SOUTHWEST BYPASS
SEGMENT 2 - WBFR

SHEET NO.
XS-97

PLOT DRIVER: TXDOT_PDF_BW.pltcfg
USER: lgomezgonz
FILE: \
DATE: 3/26/2018
TIME: 11:24:33 AM
PENTABLE: S2-0000020170718.tbl
SCALE: 1:20

4/12/2018 7:20 AM

STATE OF TEXAS
JACOB E. WALKER
122057
LICENSED
PROFESSIONAL ENGINEER

03/26/2018

STA 440+00.00

PLOT DRIVER: TXDOT_PDF_BW.pltcfg PENTABLE: S2-00000201707IB.tbl
USER: lgomezgon2 DATE: 3/26/2018 TIME: 11:24:36 AM SCALE: 1:20
FILE: \

NO.	DATE	REVISION	APPROVED

HDR Engineering, Inc.
810 Hesters Crossing, Suite 120
Round Rock, Texas 78681
Texas Registered Engineering Firm F-754

STA 440+00.00

SCALE: HORIZ: 1"=20'
VERT: 1"=20'

SOUTHWEST BYPASS SEGMENT 2 - WBFR

SHEET NO.
XS-98

4/12/2018 7:20 AM

STATE OF TEXAS
JACOB E. WALKER
122057
LICENSED
PROFESSIONAL ENGINEER

03/26/2018

STA 440+50.00

PLOT DRIVER: TXDOT_PDF_BW.pltcfg PENTABLE: S2-0000020170718.tbl
USER: lgomezgonz TIME: 11:24:40 AM SCALE: 1:20
DATE: 3/26/2018
FILE: \

NO.	DATE	REVISION	APPROVED

HDR Engineering, Inc.
810 Hesters Crossing, Suite 120
Round Rock, Texas 78681
Texas Registered Engineering Firm F-754

STA 440+50.00

SCALE: HORIZ: 1"=20'
VERT: 1"=20'

SOUTHWEST BYPASS SEGMENT 2 - WBFR

SHEET NO.
XS-99

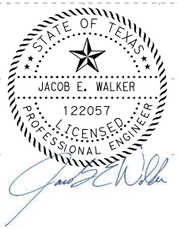

03/26/2018

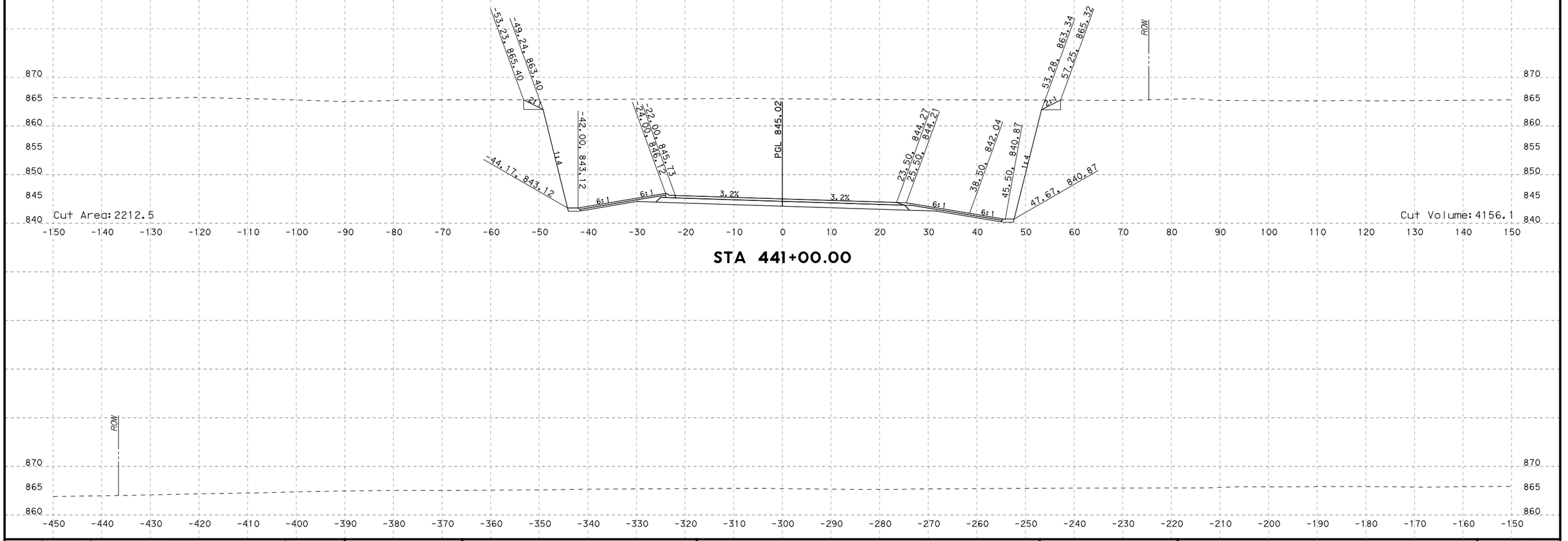

STA 441+00.00

NO.	DATE	REVISION	APPROVED

HDR Engineering, Inc.
810 Hesters Crossing, Suite 120
Round Rock, Texas 78681
Texas Registered Engineering Firm F-754

STA 441+00.00

SCALE: HORIZ: 1"=20'
VERT: 1"=20'

SOUTHWEST BYPASS
SEGMENT 2 - WBFR

SHEET NO.
XS-100

PLOT DRIVER: TXDOT_PDF_BW.pltcfg
USER: lgomezgonz
FILE: \
DATE: 3/26/2018
TIME: 11:24:43 AM
PENTABLE: S2-0000020170718.tbl
SCALE: 1:20

4/12/2018 7:20 AM



03/26/2018

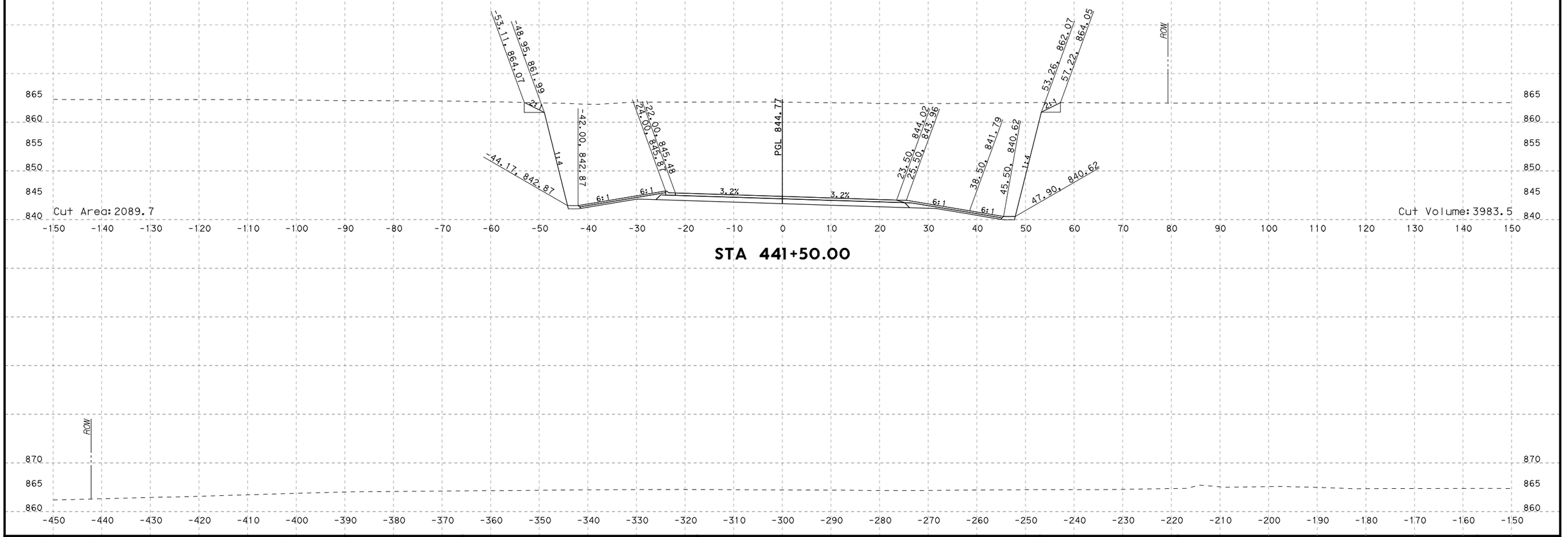

NO.	DATE	REVISION	APPROVED

HDR Engineering, Inc.
810 Hesters Crossing, Suite 120
Round Rock, Texas 78681
Texas Registered Engineering Firm F-754

STA 441+50.00

SCALE: HORIZ: 1"=20'
VERT: 1"=20'

SOUTHWEST BYPASS SEGMENT 2 - WBFR

SHEET NO.
XS-101

PLOT DRIVER: TXDOT_PDF_BW.pltcfg
USER: lgomezgonz DATE: 3/26/2018
FILE: \
PENTABLE: S2-0000020170718.tbl
TIME: 11:24:54 AM SCALE: 1:20

4/12/2018 7:20 AM

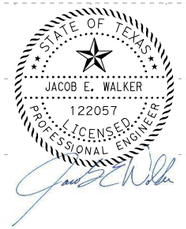

03/26/2018

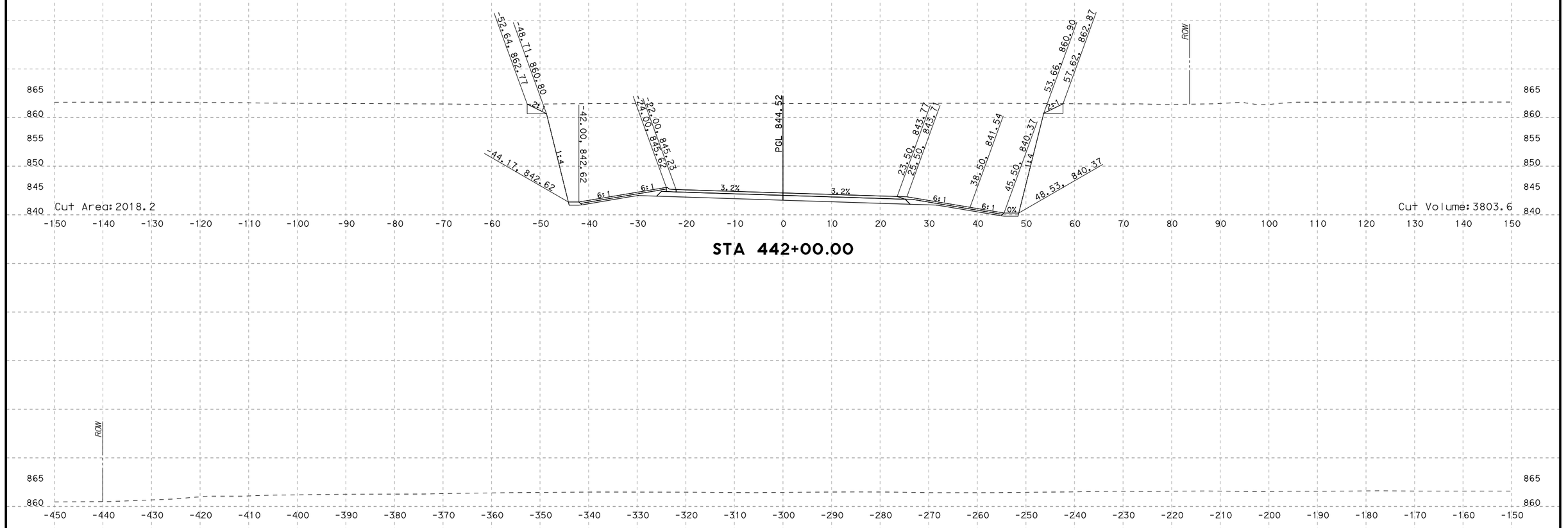

NO.	DATE	REVISION	APPROVED

HDR Engineering, Inc.
810 Hesters Crossing, Suite 120
Round Rock, Texas 78681
Texas Registered Engineering Firm F-754

STA 442+00.00

SCALE: HORIZ: 1"=20'
VERT: 1"=20'

SOUTHWEST BYPASS
SEGMENT 2 - WBFR

SHEET NO.
XS-102

PLOT DRIVER: TXDOT_PDF_BW.pltcfg
USER: lgomezgonz
FILE: \
PENTABLE: S2-0000020I0718.tbl
DATE: 3/26/2018
TIME: 11:24:58 AM
SCALE: 1:20

4/12/2018 7:20 AM

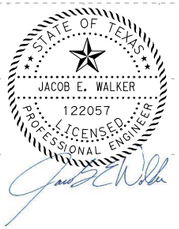

03/26/2018

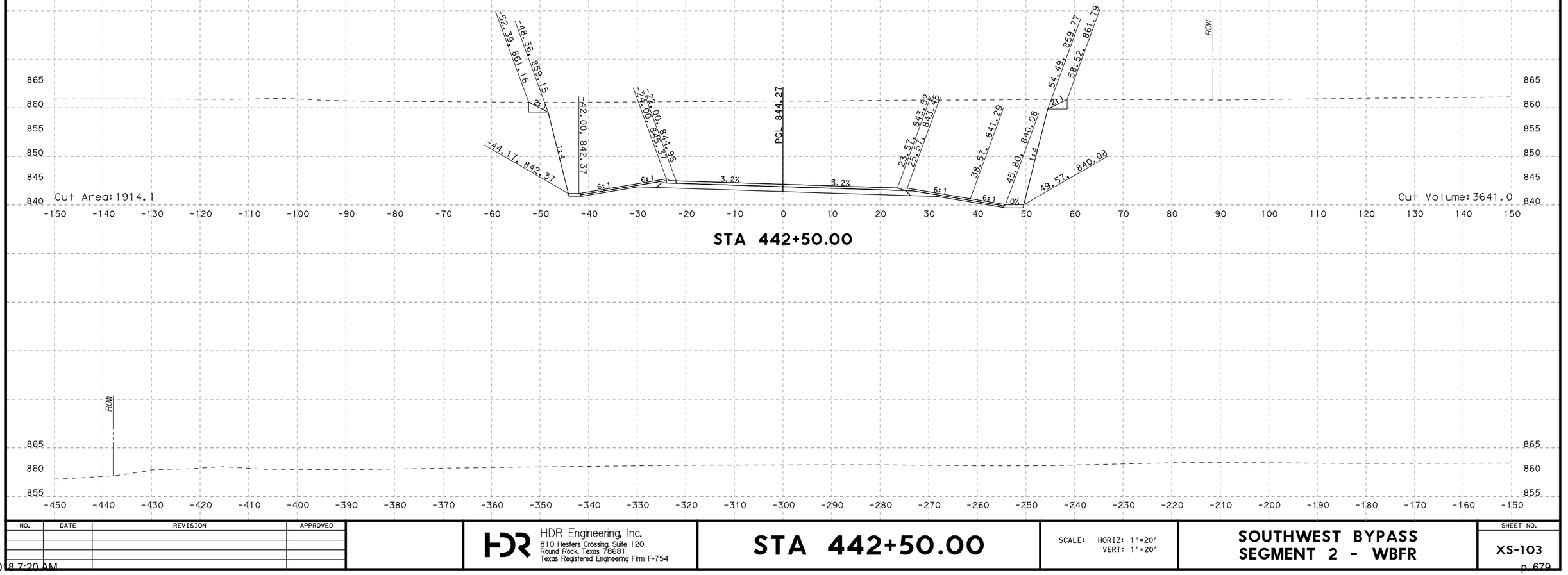

NO.	DATE	REVISION	APPROVED

HDR Engineering, Inc.
810 Hesters Crossing, Suite 120
Round Rock, Texas 78681
Texas Registered Engineering Firm F-754

STA 442+50.00

SCALE: HORIZ: 1"=20'
VERT: 1"=20'

SOUTHWEST BYPASS
SEGMENT 2 - WBFR

SHEET NO.
XS-103

PLOT DRIVER: TXDOT_PDF_BW.pltcfg USER: lgomezgonz FILE: \
DATE: 3/26/2018 TIME: 11:25:01 AM PENTABLE: S2-0000020170718.tbl SCALE: 1:20

4/12/2018 7:20 AM

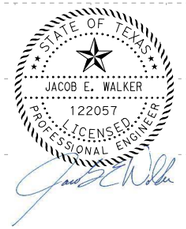

03/26/2018

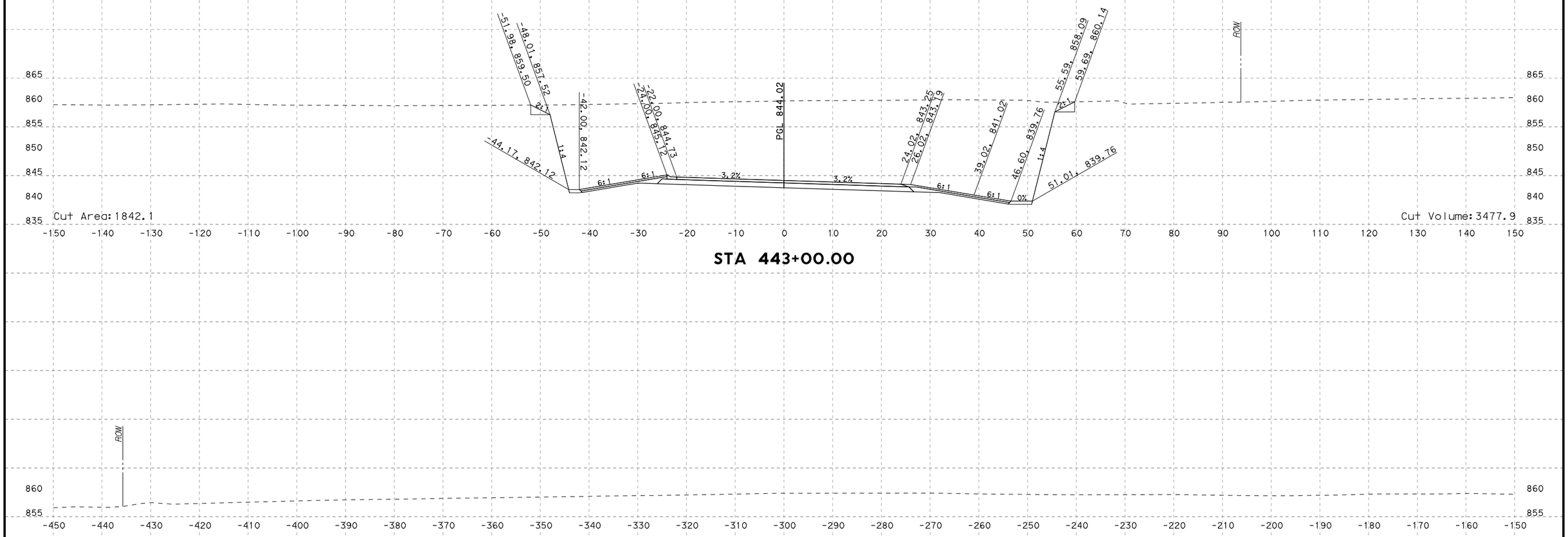

STA 443+00.00

NO.	DATE	REVISION	APPROVED

HDR Engineering, Inc.
810 Hesters Crossing, Suite 120
Round Rock, Texas 78681
Texas Registered Engineering Firm F-754

STA 443+00.00

SCALE: HORIZ: 1"=20'
VERT: 1"=20'

SOUTHWEST BYPASS SEGMENT 2 - WBFR

SHEET NO.
XS-104
p. 680

PLOT DRIVER: TXDOT_PDF_BW.pltcfg
USER: lgomezgonz DATE: 3/26/2018
FILE: \
PENTABLE: S2-0000020\T0718.tbl
TIME: 11:25:04 AM SCALE: 1:20

4/12/2018 7:20 AM

STATE OF TEXAS
JACOB E. WALKER
122057
LICENSED
PROFESSIONAL ENGINEER

03/26/2018

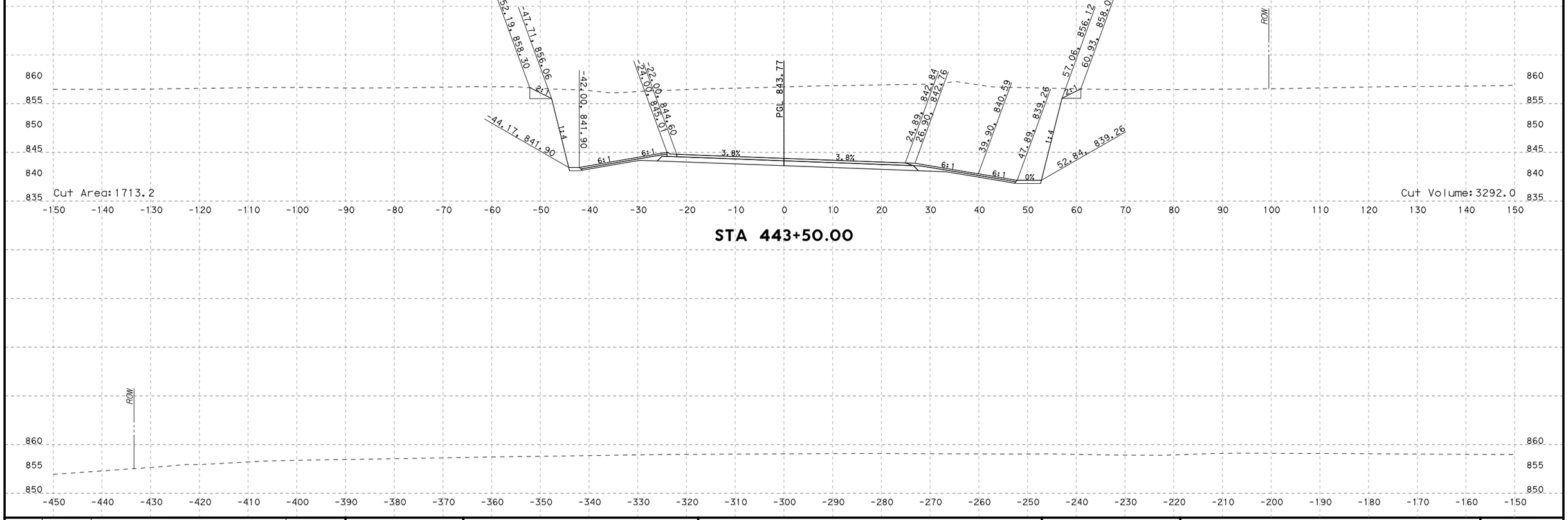

STA 443+50.00

NO.	DATE	REVISION	APPROVED

HDR Engineering, Inc.
810 Hesters Crossing, Suite 120
Round Rock, Texas 78681
Texas Registered Engineering Firm F-754

STA 443+50.00

SCALE: HORIZ: 1"=20'
VERT: 1"=20'

SOUTHWEST BYPASS
SEGMENT 2 - WBFR

SHEET NO.
XS-105

PLOT DRIVER: TXDOT_PDF_BW.pltcfg
USER: lgomezgonz DATE: 3/26/2018
FILE: \
PENTABLE: S2-00000201I0718.tbl
TIME: 11:25:07 AM SCALE: 1:20

4/12/2018 7:20 AM

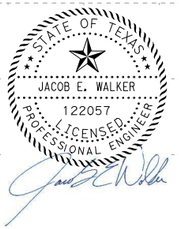

03/26/2018

STA 444+00.00

NO.	DATE	REVISION	APPROVED

HDR Engineering, Inc.
810 Hesters Crossing, Suite 120
Round Rock, Texas 78681
Texas Registered Engineering Firm F-754

STA 444+00.00

SCALE: HORIZ: 1"=20'
VERT: 1"=20'

SOUTHWEST BYPASS
SEGMENT 2 - WBFR

SHEET NO.
XS-106

PLOT DRIVER: TXDOT_PDF_BW.pltcfg PENTABLE: S2-0000020170718.tbl
USER: lgomezgonz DATE: 3/26/2018 TIME: 11:25:11 AM SCALE: 1:20
FILE: \

4/12/2018 7:20 AM

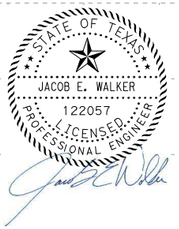

03/26/2018

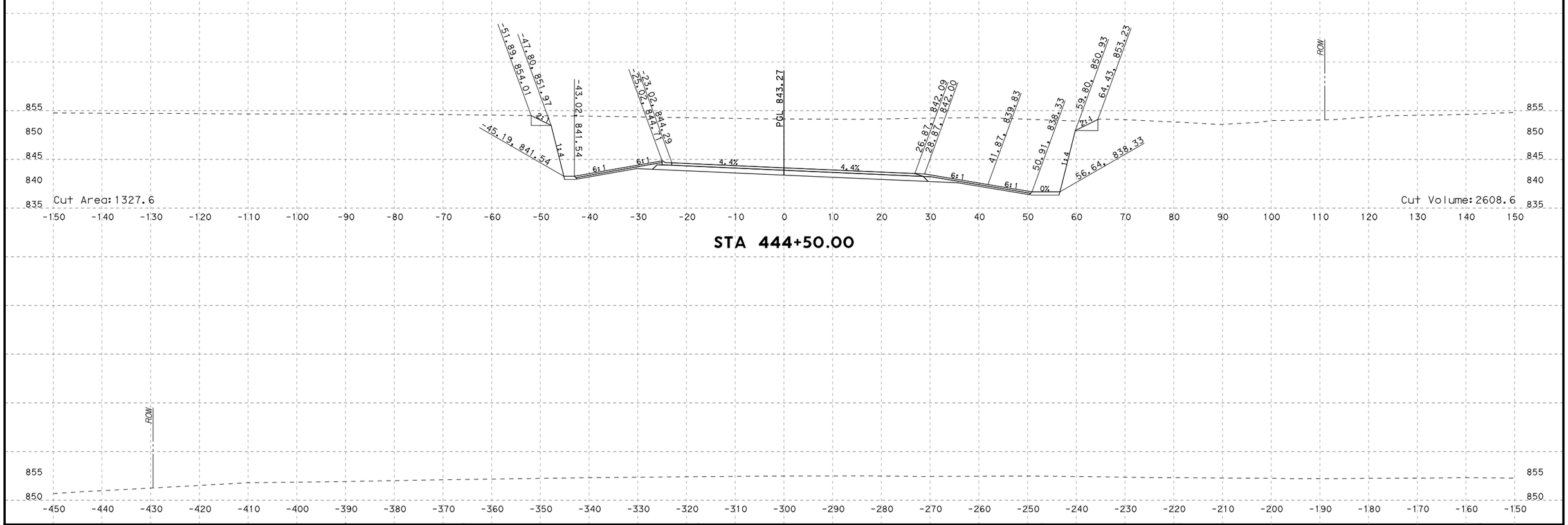

STA 444+50.00

PLOT DRIVER: TXDOT_PDF_BW.pltcfg USER: lgomezgonz FILE: \
PENTABLE: S2-0000020I0718.tbl TIME: 11:25:14 AM DATE: 3/26/2018 SCALE: 1:20

NO.	DATE	REVISION	APPROVED

HDR Engineering, Inc.
810 Hesters Crossing, Suite 120
Round Rock, Texas 78681
Texas Registered Engineering Firm F-754

STA 444+50.00

SCALE: HORIZ: 1"=20'
VERT: 1"=20'

SOUTHWEST BYPASS
SEGMENT 2 - WBFR

SHEET NO.
XS-107

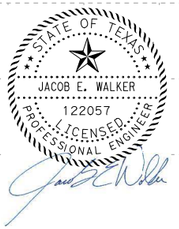

03/26/2018

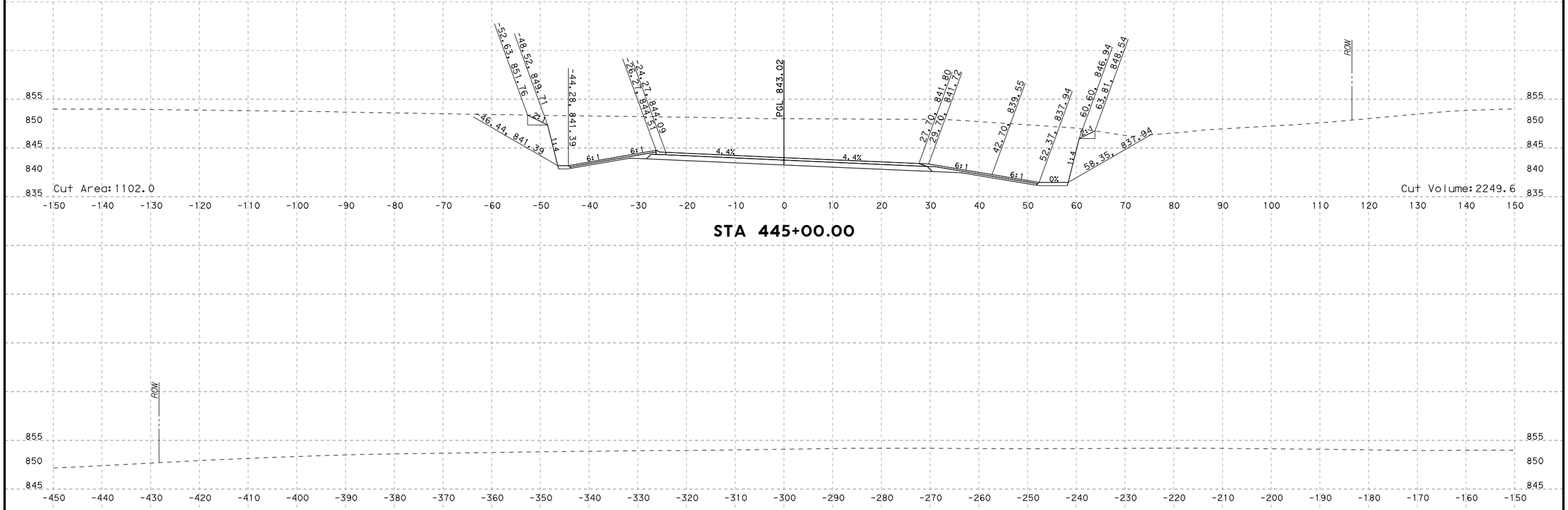

PLOT DRIVER: TXDOT_PDF_BW.pltcfg PENTABLE: S2-0000020\T0718.tbl
USER: lgomezgonz TIME: 11:25:17 AM SCALE: 1:20
DATE: 3/26/2018
FILE: \

NO.	DATE	REVISION	APPROVED

HDR Engineering, Inc.
810 Hesters Crossing, Suite 120
Round Rock, Texas 78681
Texas Registered Engineering Firm F-754

STA 445+00.00

SCALE: HORIZ: 1"=20'
VERT: 1"=20'

SOUTHWEST BYPASS SEGMENT 2 - WBFR

SHEET NO.
XS-108

STATE OF TEXAS
JACOB E. WALKER
122057
LICENSED
PROFESSIONAL ENGINEER

03/26/2018

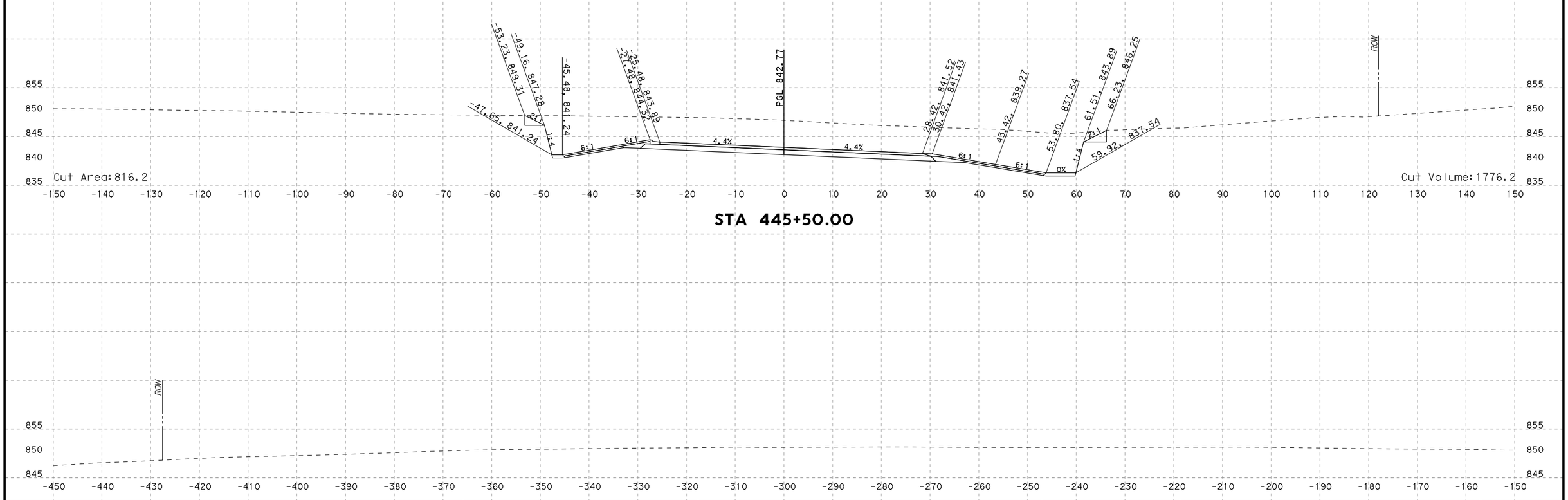

PLOT DRIVER: TXDOT_PDF_BW.pltcfg PENTABLE: S2-0000020170718.tbl
USER: lgomezgonz DATE: 3/26/2018 TIME: 11:25:21 AM SCALE: 1:20
FILE: \

NO.	DATE	REVISION	APPROVED

HDR Engineering, Inc.
810 Hesters Crossing, Suite 120
Round Rock, Texas 78681
Texas Registered Engineering Firm F-754

STA 445+50.00

SCALE: HORIZ: 1"=20'
VERT: 1"=20'

SOUTHWEST BYPASS
SEGMENT 2 - WBFR

SHEET NO.
XS-109

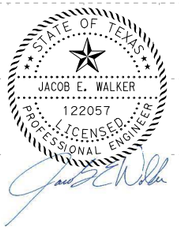

03/26/2018

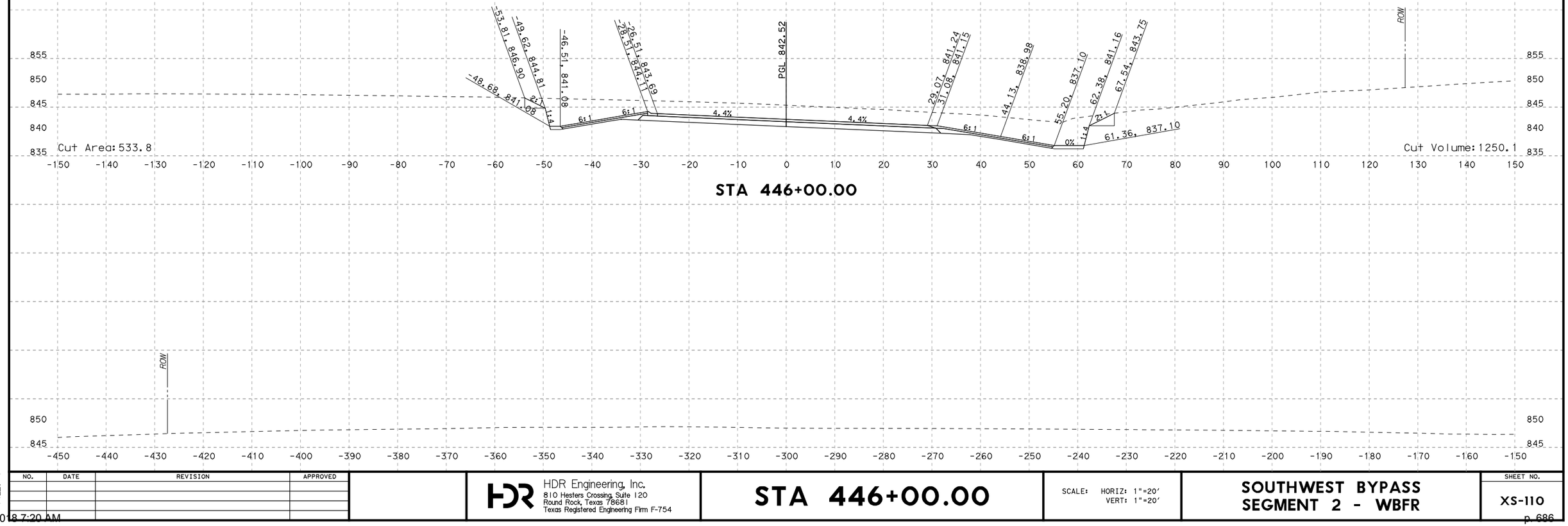

PLOT DRIVER: TXDOT_PDF_BW.pltcfg PENTABLE: S2-0000020170718.tbl
USER: lgomezgonz TIME: 11:25:24 AM SCALE: 1:20
DATE: 3/26/2018
FILE: \

NO.	DATE	REVISION	APPROVED

HDR Engineering, Inc.
810 Hesters Crossing, Suite 120
Round Rock, Texas 78681
Texas Registered Engineering Firm F-754

STA 446+00.00

SCALE: HORIZ: 1"=20'
VERT: 1"=20'

SOUTHWEST BYPASS
SEGMENT 2 - WBFR

SHEET NO.
XS-110

4/12/2018 7:20 AM

STATE OF TEXAS
JACOB E. WALKER
122057
LICENSED
PROFESSIONAL ENGINEER

03/26/2018

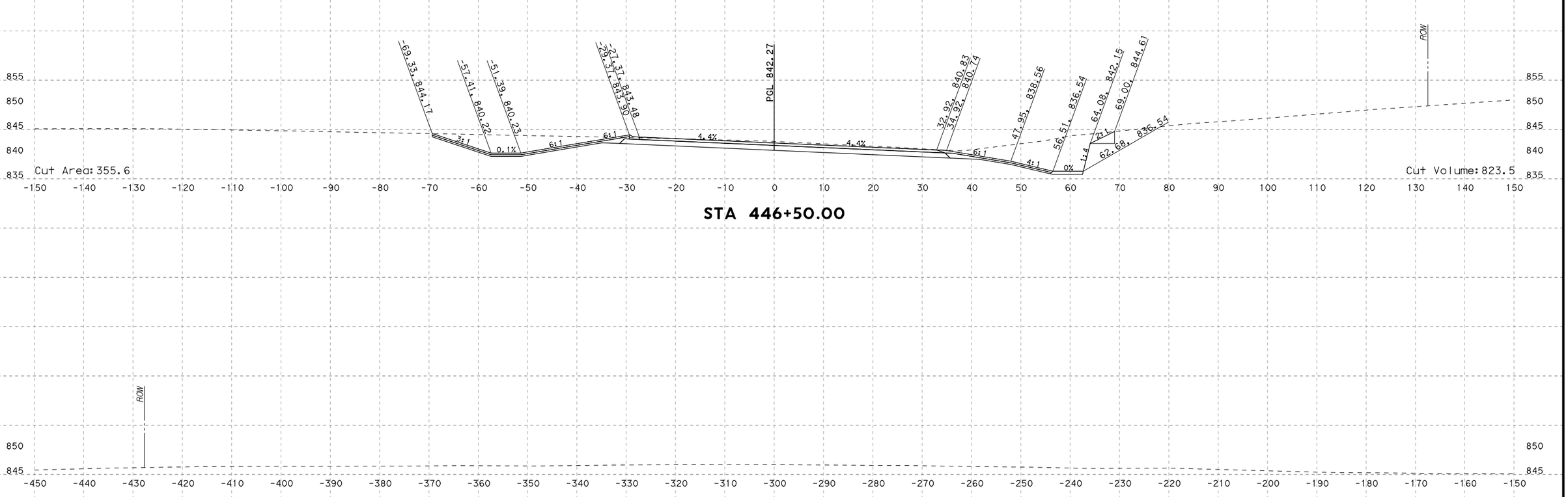

STA 446+50.00

NO.	DATE	REVISION	APPROVED

HDR Engineering, Inc.
810 Hesters Crossing, Suite 120
Round Rock, Texas 78681
Texas Registered Engineering Firm F-754

STA 446+50.00

SCALE: HORIZ: 1"=20'
VERT: 1"=20'

SOUTHWEST BYPASS
SEGMENT 2 - WBFR

SHEET NO.
XS-111

PLOT DRIVER: TXDOT_PDF_BW.pltcfg
USER: lgomezgonz DATE: 3/26/2018
FILE: \
PENTABLE: S2-0000020I0718.tbl
TIME: 11:25:27 AM SCALE: 1:20

4/12/2018 7:20 AM

STATE OF TEXAS
JACOB E. WALKER
122057
LICENSED
PROFESSIONAL ENGINEER

03/26/2018

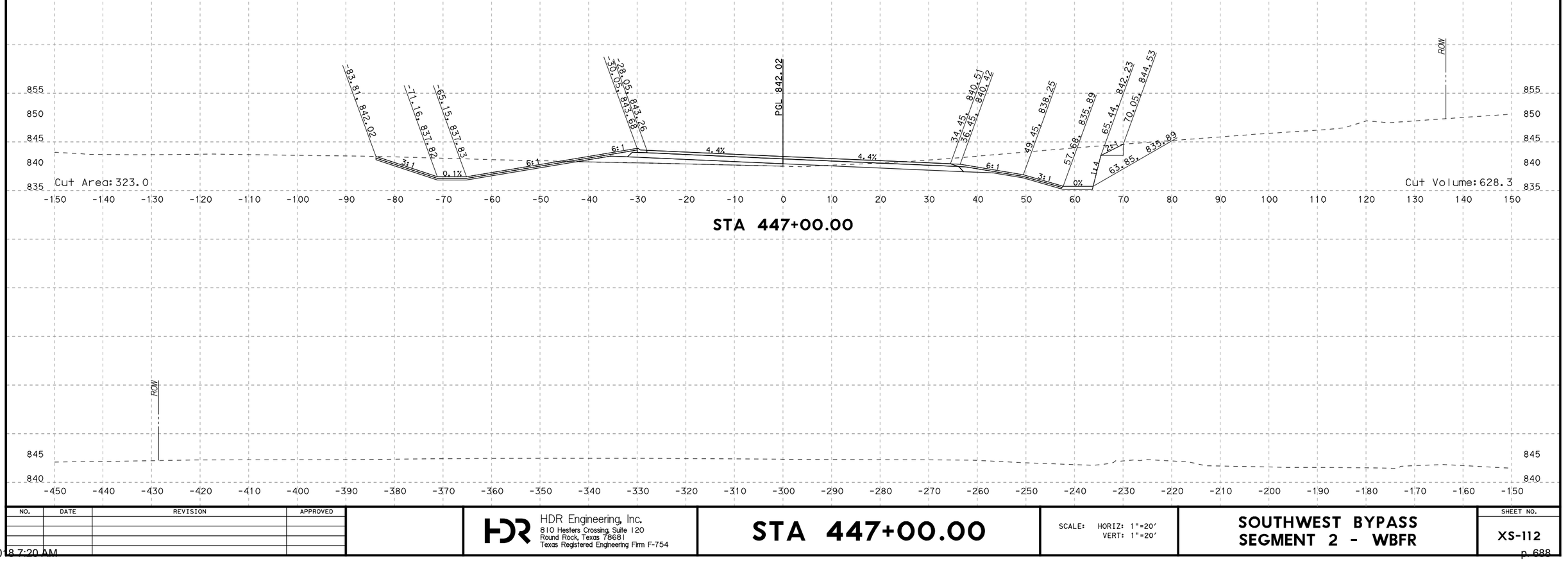

STA 447+00.00

NO.	DATE	REVISION	APPROVED

HDR Engineering, Inc.
810 Hesters Crossing, Suite 120
Round Rock, Texas 78681
Texas Registered Engineering Firm F-754

STA 447+00.00

SCALE: HORIZ: 1"=20'
VERT: 1"=20'

SOUTHWEST BYPASS
SEGMENT 2 - WBFR

SHEET NO.
XS-112

PLOT DRIVER: TXDOT_PDF_BW.pltcfg
USER: \gomezgonz
FILE: \
DATE: 3/26/2018
TIME: 11:25:31 AM
PENTABLE: S2-0000020I0718.tbl
SCALE: 1:20

4/12/2018 7:20 AM

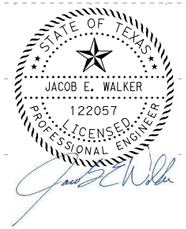

03/26/2018

STA 447+50.00

NO.	DATE	REVISION	APPROVED

HDR Engineering, Inc.
810 Hesters Crossing, Suite 120
Round Rock, Texas 78681
Texas Registered Engineering Firm F-754

STA 447+50.00

SCALE: HORIZ: 1"=20'
VERT: 1"=20'

SOUTHWEST BYPASS
SEGMENT 2 - WBFR

SHEET NO.
XS-113

PLOT DRIVER: TXDOT_PDF_BW.pltcfg
USER: lgomezgonz
FILE: \
DATE: 3/26/2018
TIME: 11:25:34 AM
PENTABLE: S2-0000020I0718.tbl
SCALE: 1:20

4/12/2018 7:20 AM

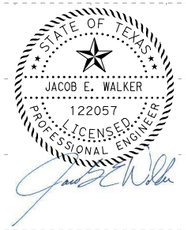

03/26/2018

STA 448+00.00

PLOT DRIVER: TXDOT_PDF_BW.pltcfg PENTABLE: S2-0000020170718.tbl
USER: lgomezgonz DATE: 3/26/2018 TIME: 11:25:37 AM SCALE: 1:20
FILE: \

NO.	DATE	REVISION	APPROVED

HDR Engineering, Inc.
810 Hesters Crossing, Suite 120
Round Rock, Texas 78681
Texas Registered Engineering Firm F-754

STA 448+00.00

SCALE: HORIZ: 1"=20'
VERT: 1"=20'

SOUTHWEST BYPASS SEGMENT 2 - WBFR

SHEET NO.
XS-114

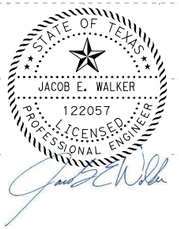

03/26/2018

STA 448+50.00

NO.	DATE	REVISION	APPROVED

HDR Engineering, Inc.
810 Hesters Crossing, Suite 120
Round Rock, Texas 78681
Texas Registered Engineering Firm F-754

STA 448+50.00

SCALE: HORIZ: 1"=20'
VERT: 1"=20'

SOUTHWEST BYPASS
SEGMENT 2 - WBFR

SHEET NO.
XS-115

PLOT DRIVER: TXDOT_PDF_BW.pltcfg PENTABLE: S2-0000020\T0718.tbl
USER: lgomezgonz TIME: 11:25:40 AM SCALE: 1:20
DATE: 3/26/2018
FILE: \

4/12/2018 7:20 AM

STATE OF TEXAS
JACOB E. WALKER
122057
LICENSED
PROFESSIONAL ENGINEER

03/26/2018

PLOT DRIVER: TXDOT_PDF_BW.pltcfg PENTABLE: S2-0000020170718.tbl
USER: lgomezgonz TIME: 11:25:44 AM SCALE: 1:20
DATE: 3/26/2018
FILE: \

NO.	DATE	REVISION	APPROVED

HDR Engineering, Inc.
810 Hesters Crossing, Suite 120
Round Rock, Texas 78681
Texas Registered Engineering Firm F-754

STA 449+00.00

SCALE: HORIZ: 1"=20'
VERT: 1"=20'

SOUTHWEST BYPASS SEGMENT 2 - WBFR

SHEET NO.
XS-116

STATE OF TEXAS
JACOB E. WALKER
122057
LICENSED
PROFESSIONAL ENGINEER

03/26/2018

STA 449+50.00

NO.	DATE	REVISION	APPROVED

HDR Engineering, Inc.
810 Hesters Crossing, Suite 120
Round Rock, Texas 78681
Texas Registered Engineering Firm F-754

STA 449+50.00

SCALE: HORIZ: 1"=20'
VERT: 1"=20'

SOUTHWEST BYPASS SEGMENT 2 - WBFR

SHEET NO.
XS-117

PLOT DRIVER: TXDOT_PDF_BW.pltcfg
USER: lgomezgonz
FILE: \
PENTABLE: S2-0000020\T0T18.tbl
TIME: 11:25:47 AM
DATE: 3/26/2018
SCALE: 1:20

4/12/2018 7:20 AM

STATE OF TEXAS
JACOB E. WALKER
122057
LICENSED
PROFESSIONAL ENGINEER

03/26/2018

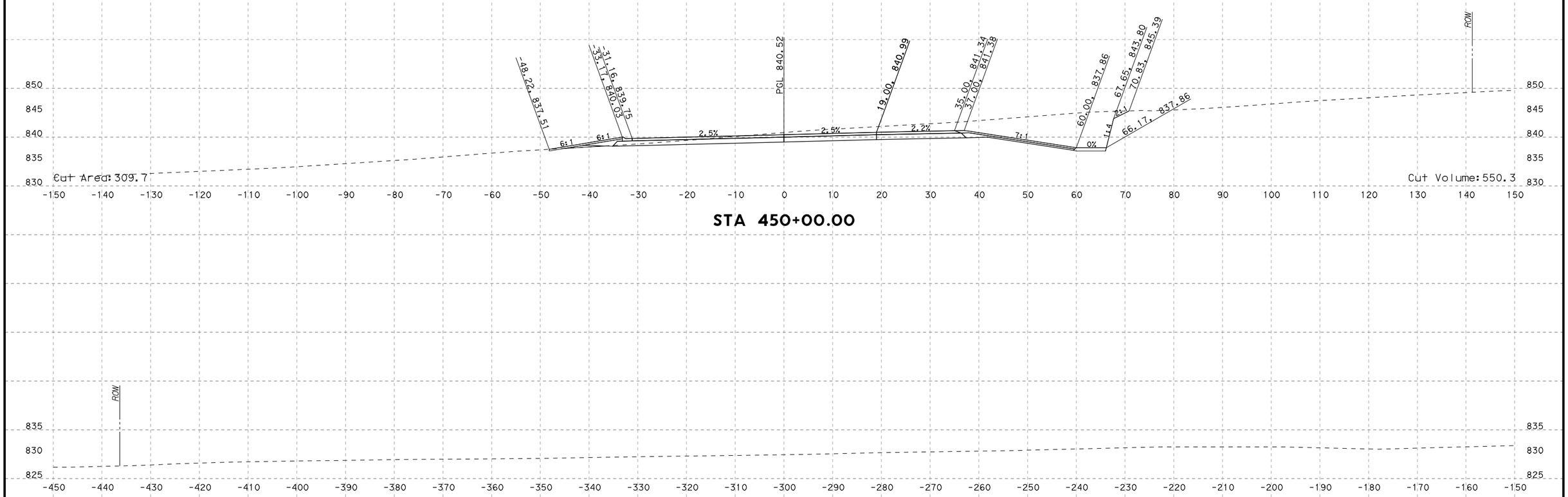

STA 450+00.00

PLOT DRIVER: TXDOT_PDF_BW.pltcfg PENTABLE: S2-0000020170718.tbl
USER: lgomezgonz TIME: 11:25:50 AM SCALE: 1:20
DATE: 3/26/2018
FILE: \

NO.	DATE	REVISION	APPROVED

HDR Engineering, Inc.
810 Hesters Crossing, Suite 120
Round Rock, Texas 78681
Texas Registered Engineering Firm F-754

STA 450+00.00

SCALE: HORIZ: 1"=20'
VERT: 1"=20'

SOUTHWEST BYPASS SEGMENT 2 - WBFR

SHEET NO.
XS-118

STATE OF TEXAS
JACOB E. WALKER
122057
LICENSED
PROFESSIONAL ENGINEER

03/26/2018

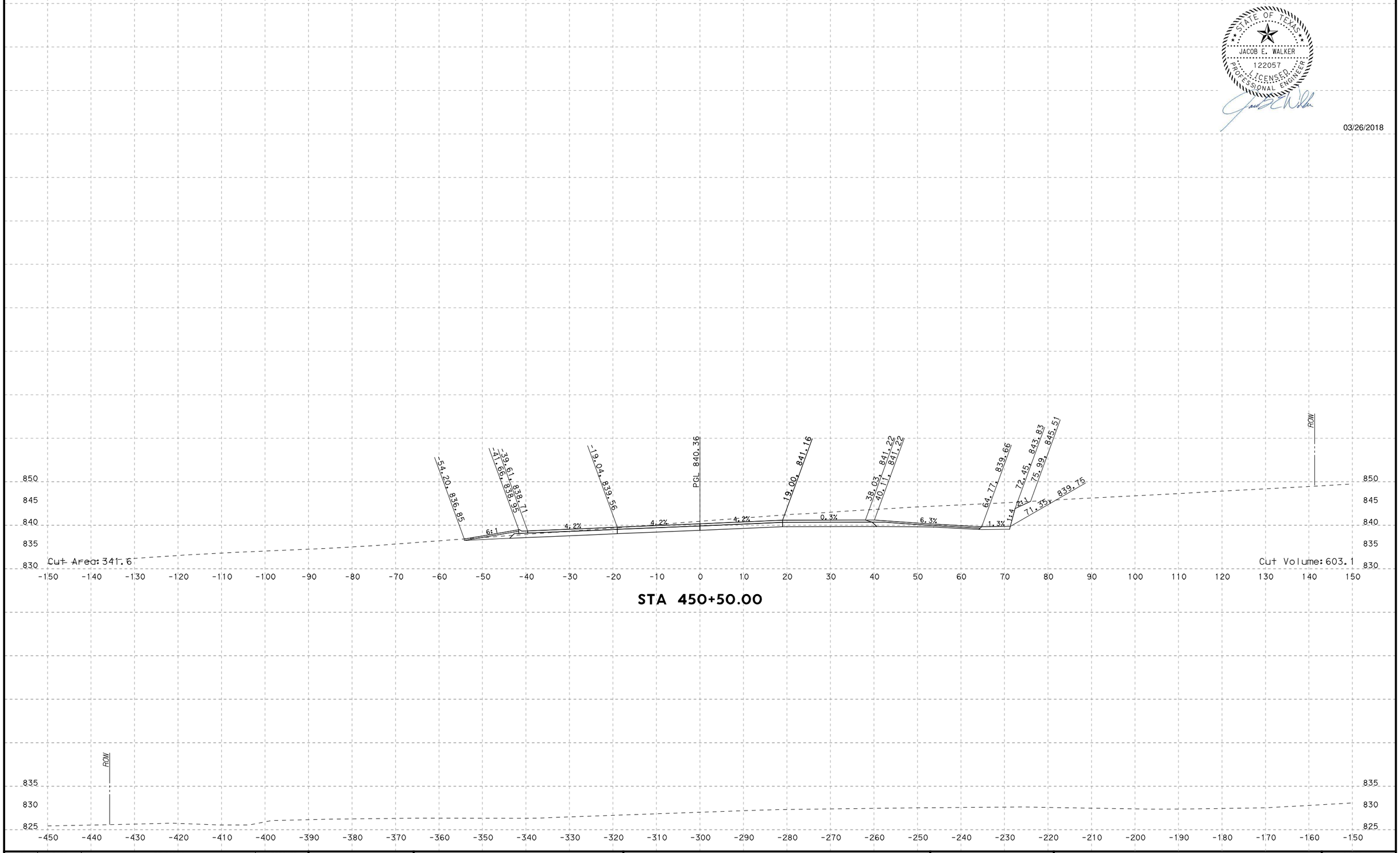

STA 450+50.00

PLOT DRIVER: TXDOT_PDF_BW.pltcfg PENTABLE: S2-0000020170718.tbl
USER: lgomezgonz TIME: 11:25:54 AM SCALE: 1:20
DATE: 3/26/2018
FILE: \

NO.	DATE	REVISION	APPROVED

HDR Engineering, Inc.
810 Hesters Crossing, Suite 120
Round Rock, Texas 78681
Texas Registered Engineering Firm F-754

STA 450+50.00

SCALE: HORIZ: 1"=20'
VERT: 1"=20'

SOUTHWEST BYPASS SEGMENT 2 - WBFR

SHEET NO.
XS-119

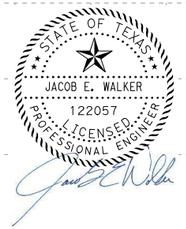

03/26/2018

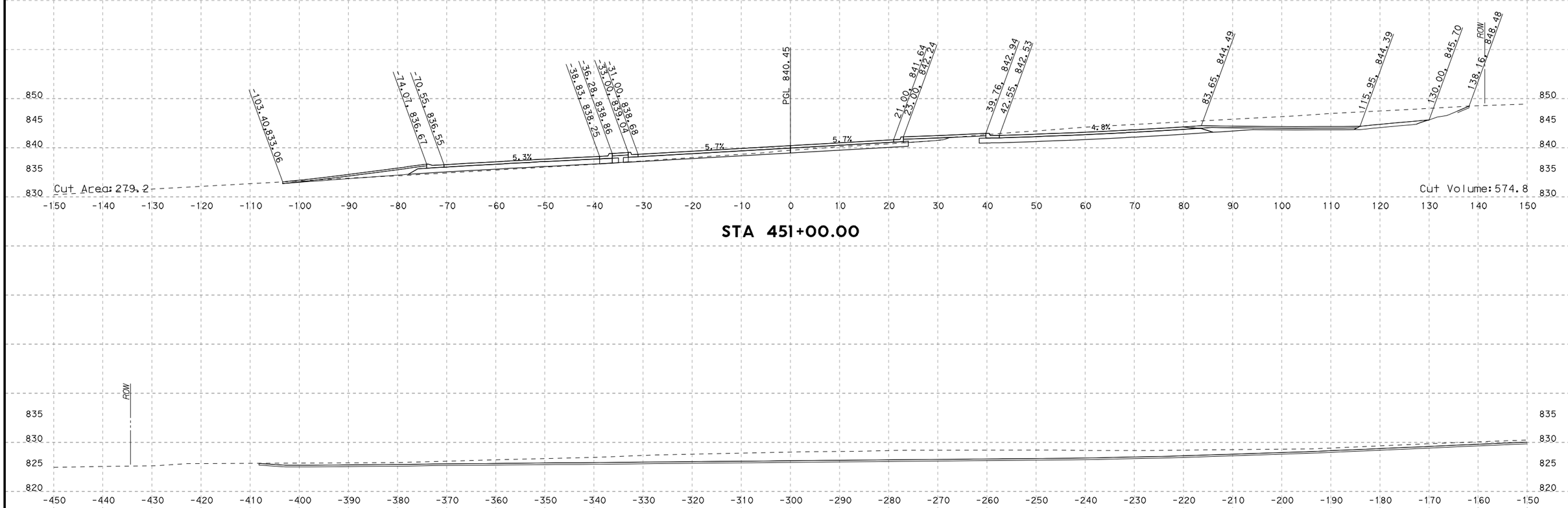

STA 451+00.00

NO.	DATE	REVISION	APPROVED

HDR Engineering, Inc.
810 Hesters Crossing, Suite 120
Round Rock, Texas 78681
Texas Registered Engineering Firm F-754

STA 451+00.00

SCALE: HORIZ: 1"=20'
VERT: 1"=20'

SOUTHWEST BYPASS
SEGMENT 2 - WBFR

SHEET NO.
XS-120

PLOT DRIVER: TXDOT_PDF_BW.pltcfg PENTABLE: S2-0000020170718.tbl
USER: lgomezgonz DATE: 3/26/2018 TIME: 11:25:57 AM SCALE: 1:20
FILE: \

4/12/2018 7:20 AM

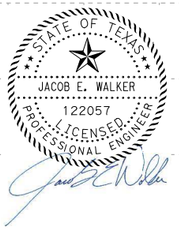

03/26/2018

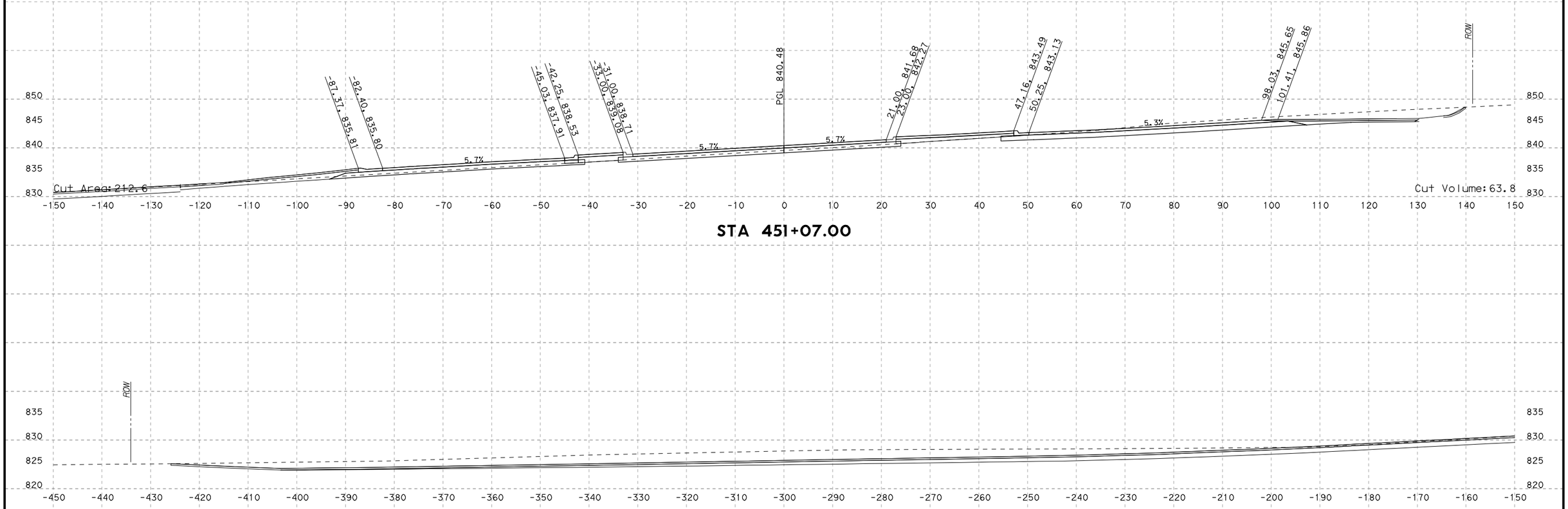

STA 451+07.00

NO.	DATE	REVISION	APPROVED

HDR Engineering, Inc.
810 Hesters Crossing, Suite 120
Round Rock, Texas 78681
Texas Registered Engineering Firm F-754

STA 451+07.00

SCALE: HORIZ: 1"=20'
VERT: 1"=20'

SOUTHWEST BYPASS SEGMENT 2 - WBFR

SHEET NO.
XS-121

PLOT DRIVER: TXDOT_PDF_BW.pltcfg PENTABLE: S2-0000020\T0718.tbl
USER: lgomezgonz TIME: 11:26:00 AM SCALE: 1:20
DATE: 3/26/2018
FILE: \

4/12/2018 7:20 AM



03/26/2018

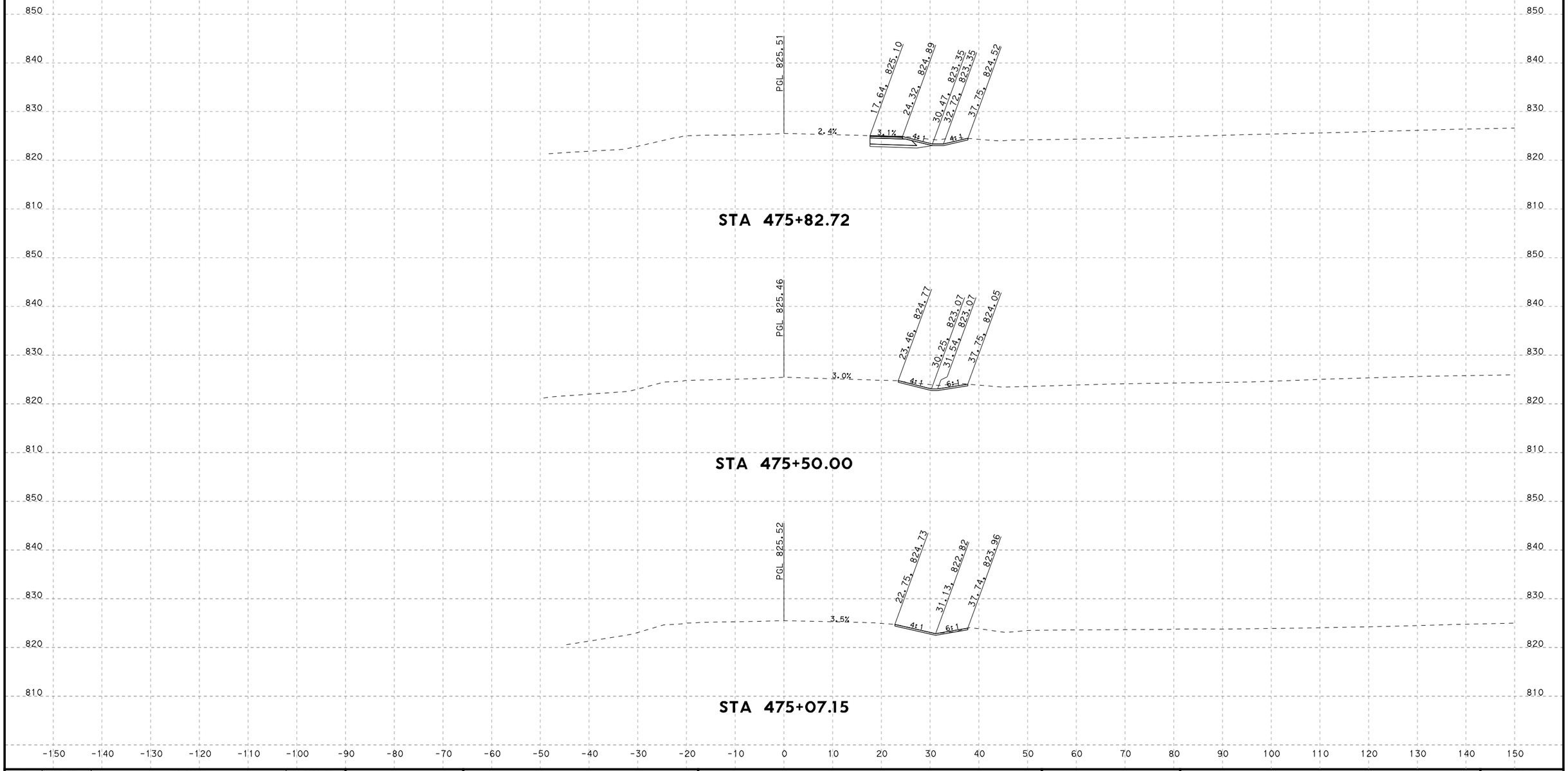

NO.	DATE	REVISION	APPROVED

HDR Engineering, Inc.
810 Hesters Crossing, Suite 120
Round Rock, Texas 78681
Texas Registered Engineering Firm F-754

STA 475+07.15 TO STA 475+82.72

SCALE: HORIZ: 1"=20'
VERT: 1"=20'

SOUTHWEST BYPASS
SEGMENT 2 - RM 2243

SHEET NO.
XS-122

PLOT DRIVER: TXDOT_PDF_BW.pltcfg PENTABLE: S2-0000020170718.tbl
USER: lgomezgonz TIME: 11:26:03 AM SCALE: 1:20
DATE: 3/26/2018
FILE: \

4/12/2018 7:20 AM

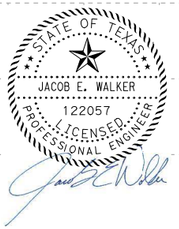

03/26/2018

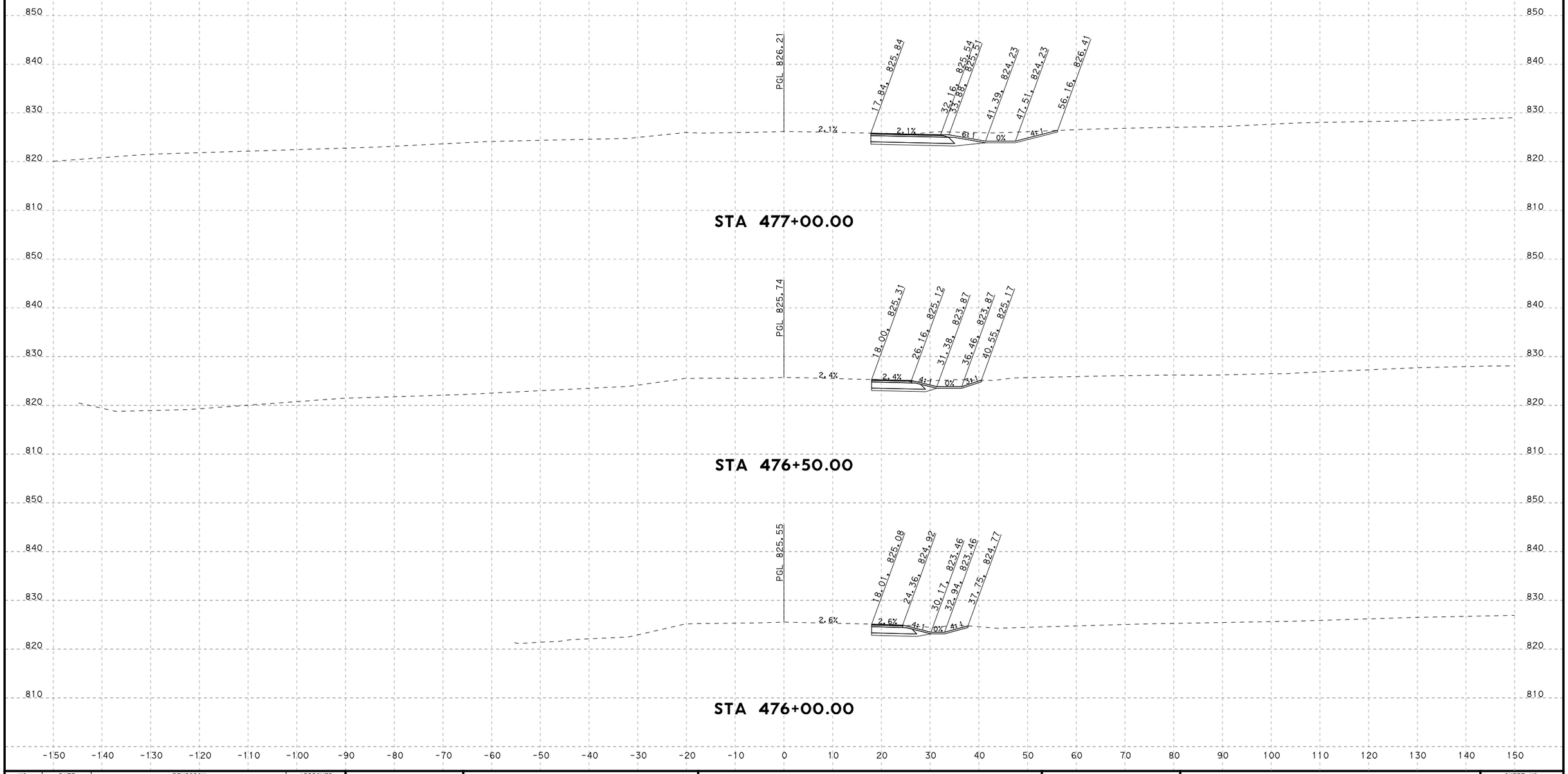

NO.	DATE	REVISION	APPROVED

HDR Engineering, Inc.
810 Hesters Crossing, Suite 120
Round Rock, Texas 78681
Texas Registered Engineering Firm F-754

STA 476+00.00 TO STA 477+00.00

SCALE: HORIZ: 1"=20'
VERT: 1"=20'

SOUTHWEST BYPASS SEGMENT 2 - RM 2243

SHEET NO.
XS-123

PLOT DRIVER: TXDOT_PDF_BW.pltcfg PENTABLE: S2-0000020170718.tbl
USER: lgomezgonz DATE: 3/26/2018 TIME: 11:26:07 AM SCALE: 1:20
FILE: \

4/12/2018 7:20 AM

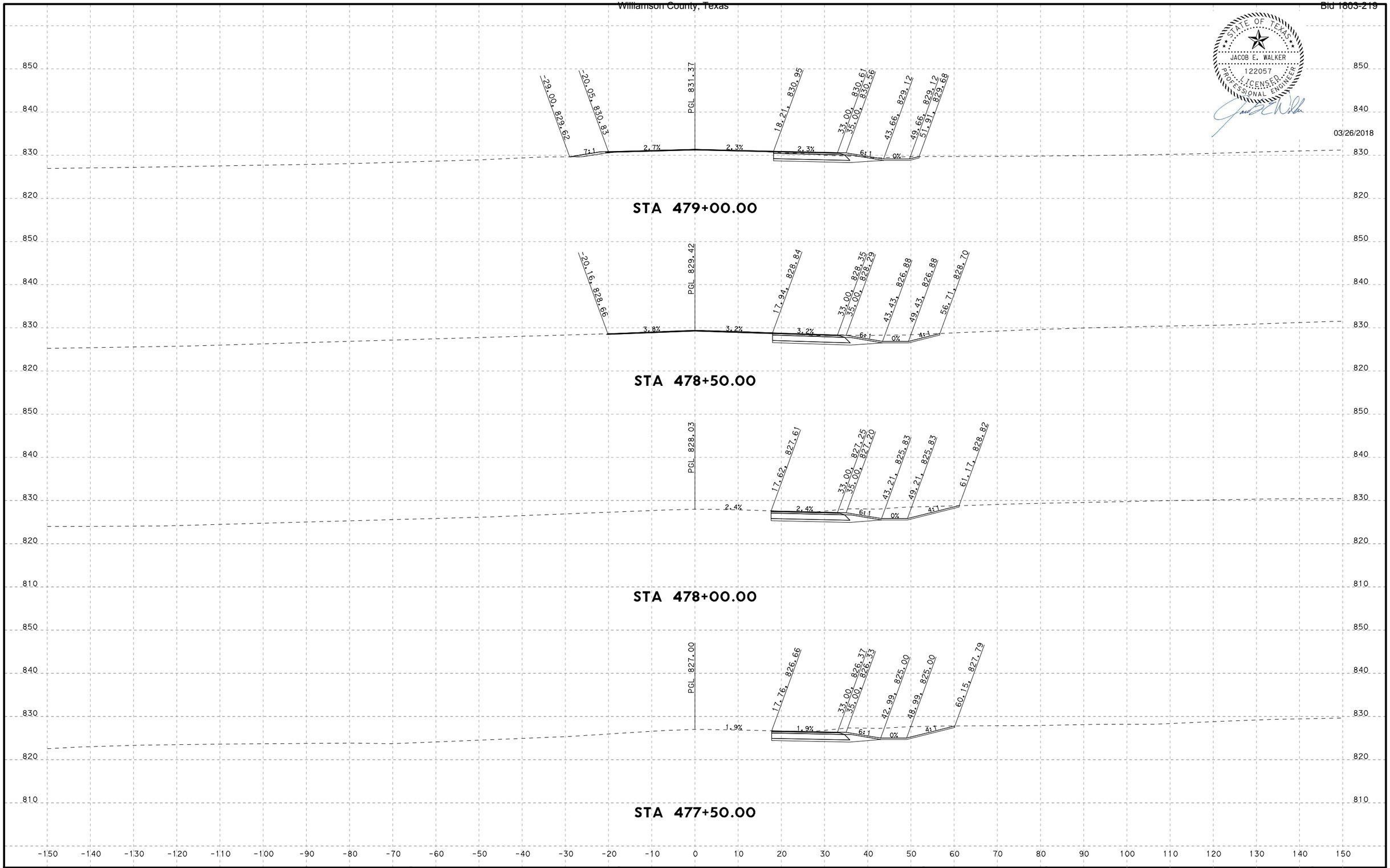

STATE OF TEXAS
JACOB E. WALKER
122057
LICENSED
PROFESSIONAL ENGINEER

03/26/2018

NO.	DATE	REVISION	APPROVED

HDR Engineering, Inc.
810 Hesters Crossing, Suite 120
Round Rock, Texas 78681
Texas Registered Engineering Firm F-754

STA 477+50.00 TO STA 479+00.00

SCALE: HORIZ: 1"=20'
VERT: 1"=20'

SOUTHWEST BYPASS
SEGMENT 2 - RM 2243

SHEET NO.
XS-124

PLOT DRIVER: TXDOT_PDF_BW.pltcfg PENTABLE: S2-0000020170718.tbl
USER: lgomezgonz TIME: 11:26:10 AM SCALE: 1:20
DATE: 3/26/2018
FILE: \

4/12/2018 7:20 AM

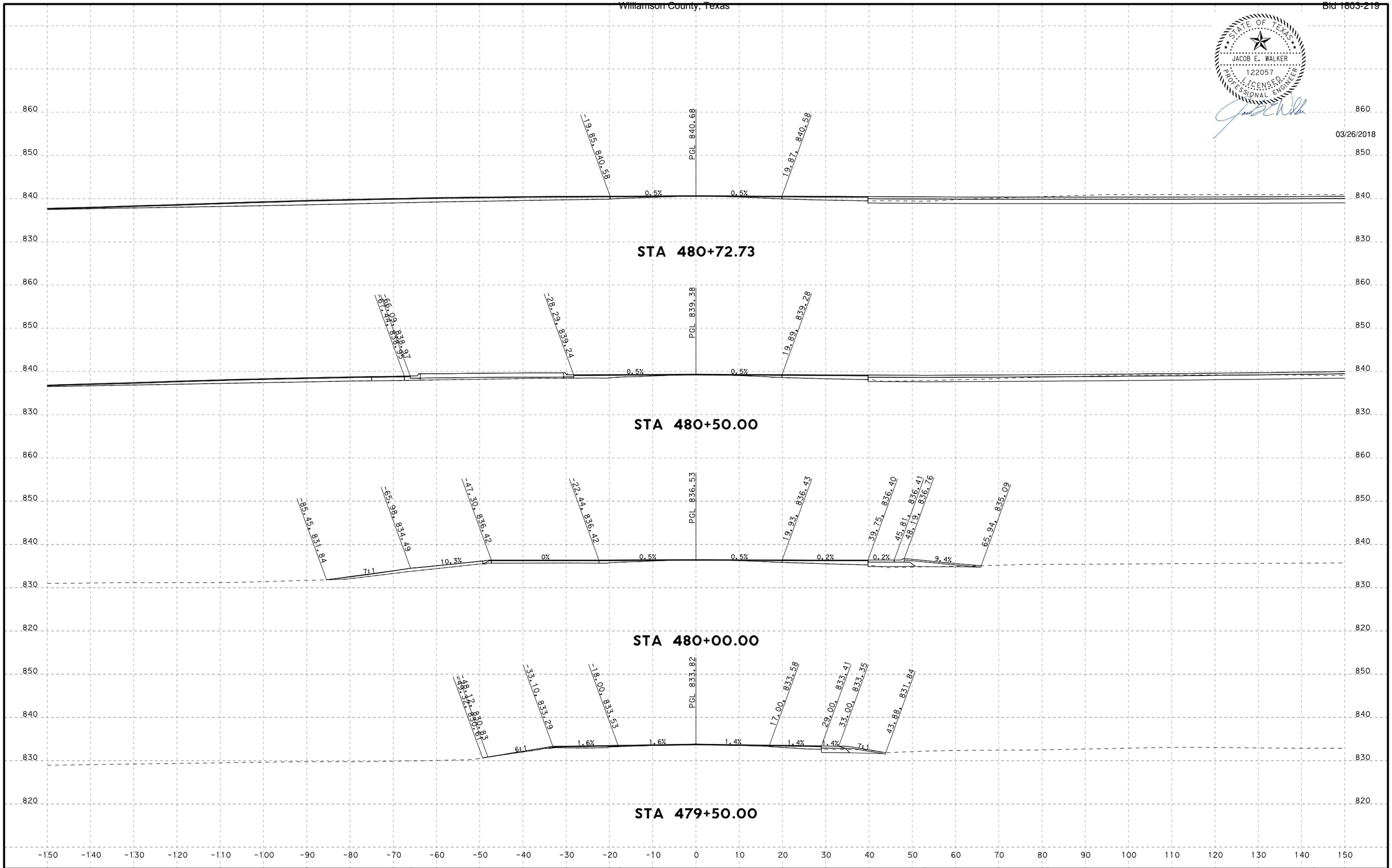

STATE OF TEXAS
JACOB E. WALKER
122057
LICENSED
PROFESSIONAL ENGINEER

03/26/2018

PLOT DRIVER: TXDOT_PDF_BW.pltcfg PENTABLE: S2-0000020/0718.tbl
USER: lgomezgonz DATE: 3/26/2018 TIME: 11:26:13 AM SCALE: 1:20
FILE: \

NO.	DATE	REVISION	APPROVED

WILLIAMSON COUNTY TEXAS

HDR Engineering, Inc.
810 Hesters Crossing, Suite 120
Round Rock, Texas 78681
Texas Registered Engineering Firm F-754

STA 479+50.00 TO STA 480+72.73

SCALE: HORIZ: 1"=20'
VERT: 1"=20'

SOUTHWEST BYPASS
SEGMENT 2 - RM 2243

SHEET NO.
XS-125

4/12/2018 7:20 AM

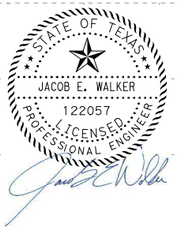

03/26/2018

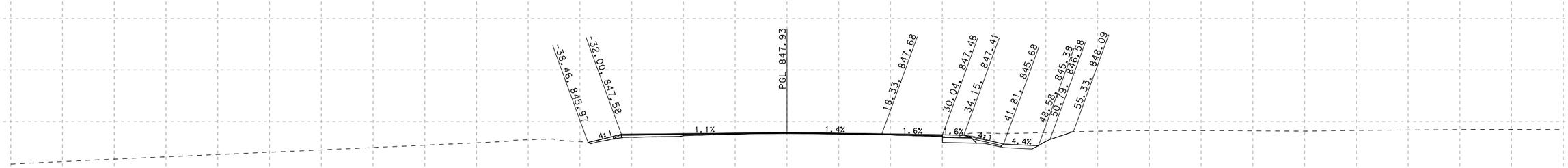

STA 482+00.00

STA 481+50.00

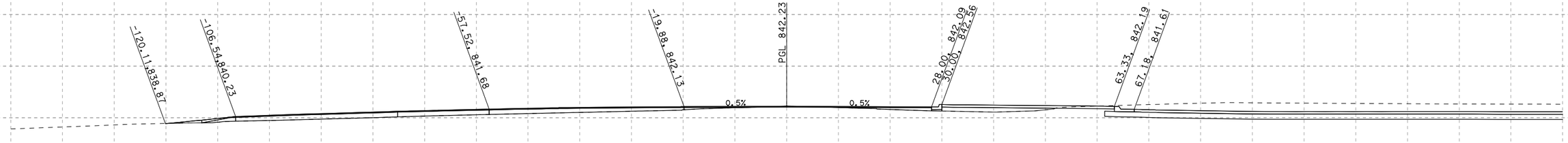

STA 481+00.00

-150 -140 -130 -120 -110 -100 -90 -80 -70 -60 -50 -40 -30 -20 -10 0 10 20 30 40 50 60 70 80 90 100 110 120 130 140 150

NO.	DATE	REVISION	APPROVED

WILLIAMSON COUNTY

HDR Engineering, Inc.
810 Hesters Crossing, Suite 120
Round Rock, Texas 78681
Texas Registered Engineering Firm F-754

STA 481+00.00 TO STA 482+00.00

SCALE: HORIZ: 1"=20'
VERT: 1"=20'

SOUTHWEST BYPASS
SEGMENT 2 - RM 2243

SHEET NO.
XS-126

PLOT DRIVER: TXDOT_PDF_BW.pltcfg PENTABLE: S2-0000020I0718.tbl
USER: lgomezgonz DATE: 3/26/2018 TIME: 11:26:17 AM SCALE: 1:20
FILE: \

4/12/2018 7:20 AM

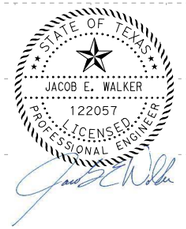

03/26/2018

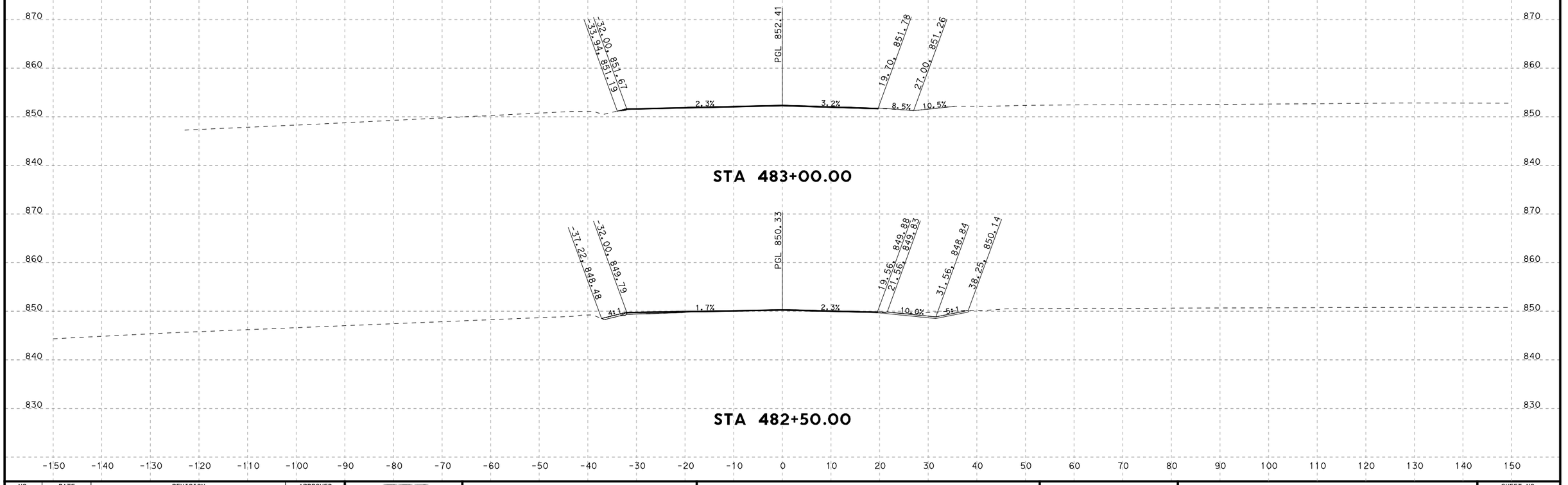

NO.	DATE	REVISION	APPROVED

WILLIAMSON COUNTY TEXAS

HDR Engineering, Inc.
810 Hesters Crossing, Suite 120
Round Rock, Texas 78681
Texas Registered Engineering Firm F-754

STA 482+50.00 TO STA 483+00.00

SCALE: HORIZ: 1"=20'
VERT: 1"=20'

SOUTHWEST BYPASS
SEGMENT 2 - RM 2243

SHEET NO.
XS-127

PLOT DRIVER: TXDOT_PDF_BW.pltcfg PENTABLE: S2-0000020170718.tbl
USER: lgomezgonz DATE: 3/26/2018 TIME: 11:26:20 AM SCALE: 1:20
FILE: \

4/12/2018 7:20 AM

Question and Answers for Bid #1803-219 - Southwest Bypass Segment 2

Overall Bid Questions
There are no questions associated with this bid.

Commissioners Court - Regular Session **46.**

Meeting Date: 04/17/2018

Economic Development

Submitted For: Charlie Crossfield **Submitted By:** Charlie Crossfield, Road Bond

Department: Road Bond

Agenda Category: Executive Session

Information

Agenda Item

Discussion regarding economic development negotiations pursuant to Texas Government Code, Section 551.087:
a) Business prospect(s) that may locate or expand within Williamson County.
b) Discuss North Woods Road District.
c) Project Amazon
d) Wolf Lakes
e) Project Capston

Background

Fiscal Impact

From/To	Acct No.	Description	Amount

Attachments

No file(s) attached.

Form Review

Inbox	Reviewed By	Date
County Judge Exec Asst.	Wendy Coco	04/12/2018 09:25 AM
Form Started By: Charlie Crossfield		Started On: 04/12/2018 09:21 AM
Final Approval Date: 04/12/2018		

Commissioners Court - Regular Session **47.**

Meeting Date: 04/17/2018

Executive Session

Submitted For: Charlie Crossfield **Submitted By:** Charlie Crossfield, Road Bond

Department: Road Bond

Agenda Category: Executive Session

Information

Agenda Item

Discuss real estate matters (EXECUTIVE SESSION as per VTCA Govt. Code sec. 551.072 Deliberation Regarding Real Estate Property if deliberation in an open meeting would have a detrimental effect on the position of the governmental body in negotiations with third person.)

A. Real Estate Owned by Third Parties

Preliminary discussions relating to proposed or potential purchase or lease of property owned by third parties

a) Discuss the acquisition of real property for right-of-way for N. Mays St. Extension

b) Discuss the acquisition of real property for SW 183 and SH 29 Loop.

c) Discuss the acquisition of real property for CR 176 at RM 2243

d) Discuss the acquisition of real property: CR 101

e) Discuss the acquisition of real property: CR 200

f) Discuss the acquisition of real property for CR 278 at Bagdad Rd.

g) Discuss the acquisition of real property for SH 29 LTP.

h) Discuss the acquisition of real property for County Facilities.

i) Discuss the acquisition of Easement interests for the Brushy Creek Trail Project.

j) Discuss the acquisition of real property and easements from San Gabriel River Ranch Subdivision.

k) Discuss the acquisition of real property for CR 278 @ Bagdad Rd.

l) Discuss the acquisition of real property for Seward Junction SE Loop.

m) Discuss the acquisition of real property for SH 29 @ DB Wood.

n) Discuss the acquisition of real property for Hairy Man Rd.

o) Discuss the acquisition of real property for SW Bypass.

p) Discuss Somerset Road Districts No. 3 & 4 reimbursements for acquisition & construction of Reagan Blvd.

q) Discuss Cedar Hollow low water crossings and Lost River.

B. Property or Real Estate owned by Williamson County

Preliminary discussions relating to proposed or potential sale or lease of property owned by the County

a) Discuss County owned real estate containing underground water rights and interests.

b) Discuss wastewater easements in Berry Springs Park

c) Discuss sale of County property on Ronald Reagan Blvd.

d) Discuss possible sale of +/- 10 acres located on Chandler Road near the County Sheriff's Office Training Facility

e) Potential governmental uses for 8th Street downtown parking lot

C. Consider intervention in lawsuit regarding de-listing of Bone Cave harvestman.

D. Discuss the possible placement of agricultural-related monuments at the Williamson County Exposition Center with the participation of third parties.

E. Discuss the San Gabriel River trail easements.

Background

Fiscal Impact

From/To	Acct No.	Description	Amount

Attachments

No file(s) attached.

Form Review

Inbox	Reviewed By	Date
County Judge Exec Asst.	Wendy Coco	04/12/2018 09:25 AM
Form Started By: Charlie Crossfield		Started On: 04/12/2018 09:20 AM
Final Approval Date: 04/12/2018		